Dist	COUNTY	ROUTE	POST MILES TOTAL PROJECT	SHEET No.	TOTAL SHEETS
02	Sis	5	R10.7/R19.5	123	327

Brett Ditzler 06-23-15
REGISTERED CIVIL ENGINEER DATE

06-23-15
PLANS APPROVAL DATE

REGISTERED PROFESSIONAL ENGINEER BRETT DITZLER No. C74085 Exp. 6-30-17 CIVIL STATE OF CALIFORNIA

THE STATE OF CALIFORNIA OR ITS OFFICERS OR AGENTS SHALL NOT BE RESPONSIBLE FOR THE ACCURACY OR COMPLETENESS OF SCANNED COPIES OF THIS PLAN SHEET.

NOTES:

1. FOR DETAILS NOT SHOWN SEE Std PLANS.
2. OUTLET, VENT, AND/OR CLEANOUT PIPE SIZE TO MATCH EDGE DRAIN PIPE SIZE. SEE DRAINAGE PLANS FOR EDGE DRAIN PIPE SIZE.

2 **REPLACED PER ADDENDUM No. 2 DATED OCTOBER 30, 2015**

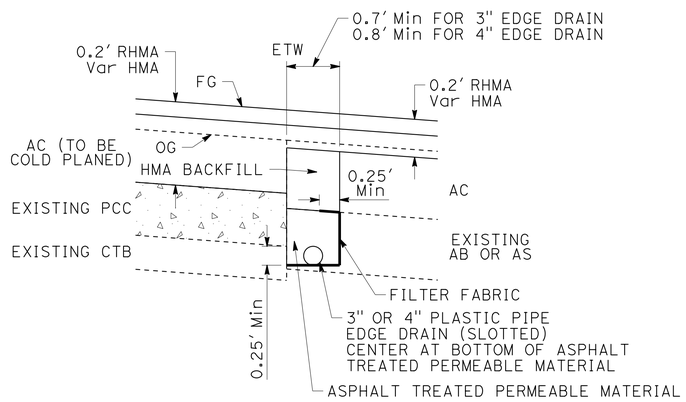

NOTE: SEE TYPICAL CROSS SECTIONS FOR STRUCTURAL SECTION THICKNESSES

SECTION
DETAIL A
2

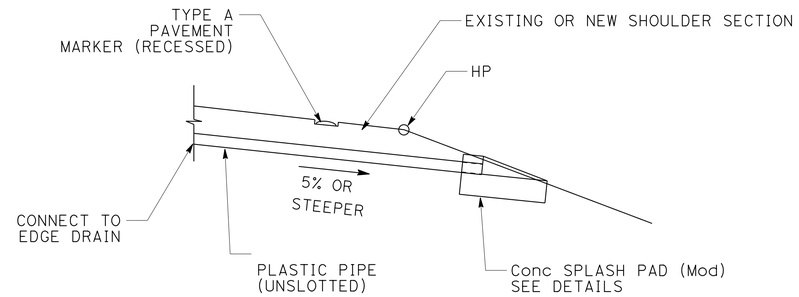

ELEVATION
TYPE A (Mod) OUTLET AND/OR VENT

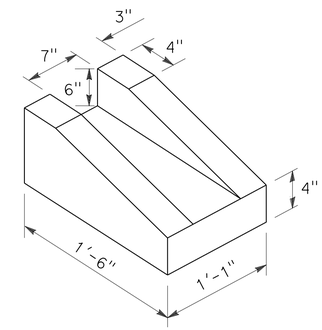

CONCRETE SPLASH PAD (Mod)

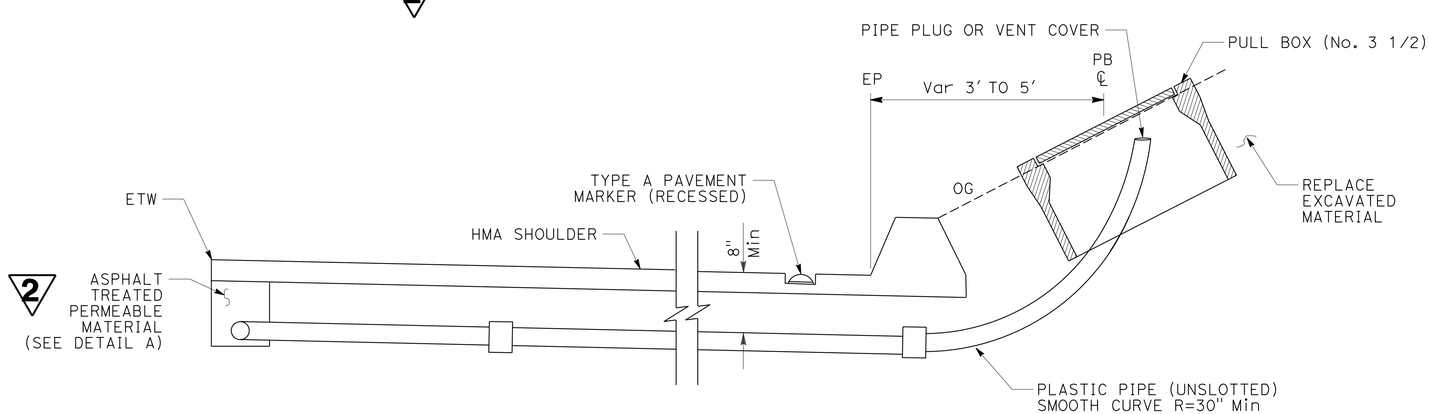

ELEVATION
TYPE 1 (Mod) CLEANOUT OR VENT

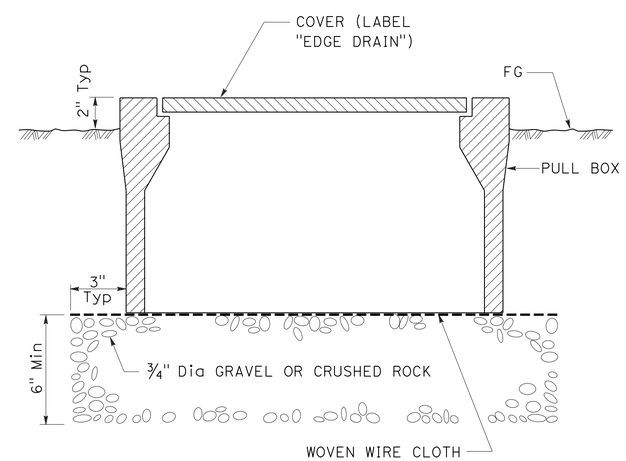

SECTION
PULL BOX

DRAINAGE DETAILS

NO SCALE

DD-1

REVISED BY | DATE REVISED
KERRY MOLZ | BRETT DITZLER
CALCULATED-DESIGNED BY | CHECKED BY
FUNCTIONAL SUPERVISOR | STEVE THORNE

STATE OF CALIFORNIA - DEPARTMENT OF TRANSPORTATION
Caltrans® HYDRAULICS DESIGN

P:\proj1\02\4G820_plans\pse\Addendum 2_10-30-15\24g820ic001.dgn

LAST REVISION 05-26-15 | DATE PLOTTED => 30-OCT-2015 | TIME PLOTTED => 10:22

Dist	COUNTY	ROUTE	POST MILES TOTAL PROJECT	SHEET No.	TOTAL SHEETS
02	Sis	5	R10.7/R19.5	161	327

Russell Flood 06-23-15
REGISTERED CIVIL ENGINEER DATE

06-23-15
PLANS APPROVAL DATE

REGISTERED PROFESSIONAL ENGINEER
RUSSELL P. FLOOD
No. C72261
Exp. 6-30-16
CIVIL
STATE OF CALIFORNIA

THE STATE OF CALIFORNIA OR ITS OFFICERS OR AGENTS SHALL NOT BE RESPONSIBLE FOR THE ACCURACY OR COMPLETENESS OF SCANNED COPIES OF THIS PLAN SHEET.

NOTES:

1. GRIND EXISTING SURFACES TO ACCOMODATE A MINIMUM TAPER THICKNESS OF 0.10′ WHEN EITHER:
   A. HMA MATERIAL SUCH AS RUBBERIZED, POLYMER MODIFIED OR OPEN GRADED IS UNSUITABLE FOR RAKING TO A MAXIMUM 0.02′ THICKNESS AT THE CONFORM.
   B. TEMPORARY TAPER WILL BE IN PLACE FOR MORE THAN 14 DAYS.
2. PERMANENT SURFACE MAY BE EXISTING OR NEW PAVEMENT.
3. ROADWAY SURFACE IS THE TOP OF EXISTING SURFACE OR THE TOP OF THE PLANED SURFACE.
4. FOR TEMPORARY TAPERS ON BRIDGE DECKS AND APPROACH SLABS, CONSTRUCT TEMPORARY TAPERS WITH POLYESTER CONCRETE.
5. IF AUTHORIZED, YOU MAY USE ALTERNATIVE MATERIALS OR METHODS TO PRODUCE THE REQUIRED TAPER.
6. PROTECTS SHIFTED TRAFFIC FROM COLLISION WITH EXPOSED BRIDGE RAILING OR METAL BEAM GUARD RAILING.
7. SEE MANUFACTURERS SPECIFICATIONS FOR CONNECTION TO BRIDGE RAILING OR METAL BEAM GUARD RAILING.

LEGEND

- OBJECT MARKER (TYPE P)
- HMA MATERIAL (TEMPORARY TAPER) (SEE NOTE 4)
- IF NECESSARY, COLD PLANE ASPHALT CONCRETE PAVEMENT AND PLACE HMA MATERIAL (SEE NOTE 1)
- 2 ROADWAY EXCAVATION
- 2 EMBANKMENT

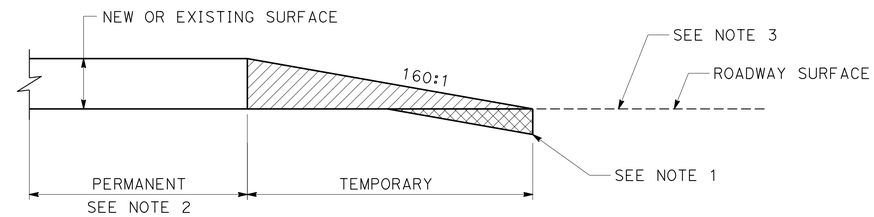

TYPICAL PAVING CONFORM FOR TEMPORARY CONSTRUCTION TAPERS

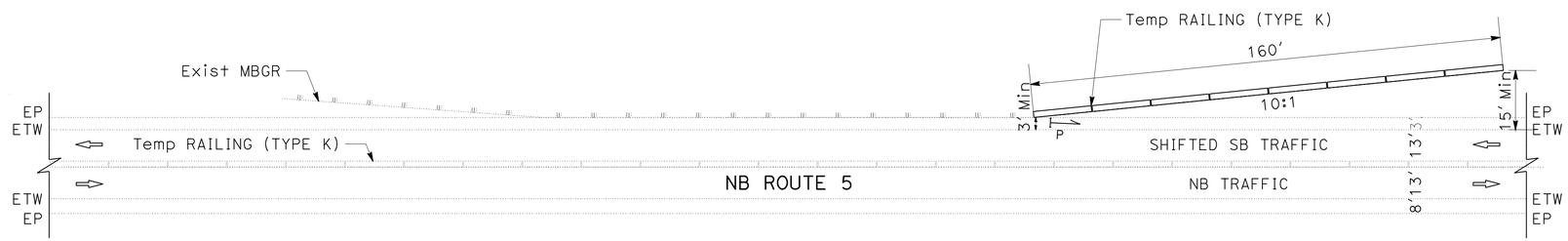

METAL BEAM GUARD RAILING END PROTECTION

STAGE 4
NORTH MT SHASTA OC (2-91)

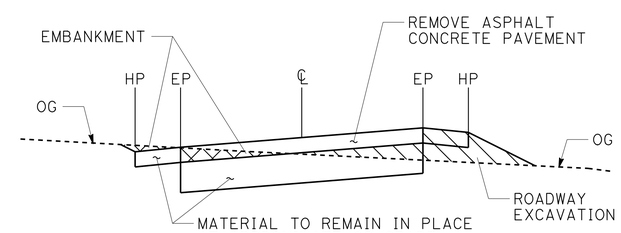

TYPICAL FOR CROSSOVER REMOVAL

2

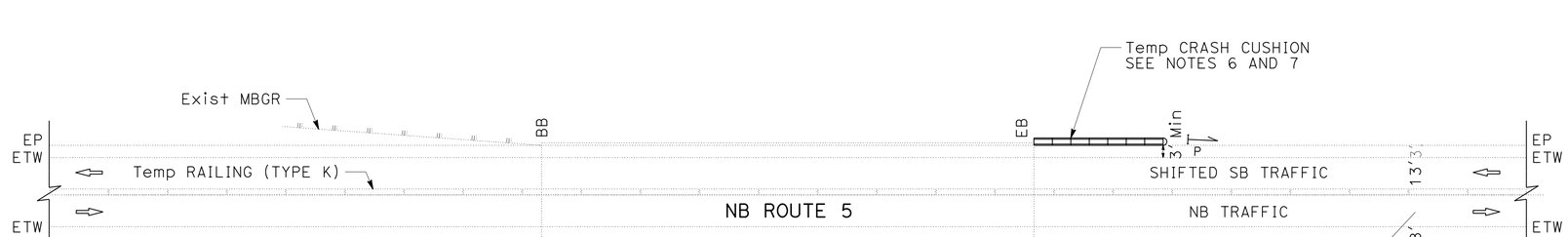

BRIDGE RAILING END PROTECTION

STAGE 3
DEETZ ROAD UC (2-161R)
BLACK BUTTE OH (2-04R)

2 **REPLACED PER ADDENDUM No. 2 DATED OCTOBER 30, 2015**

APPROVED FOR STAGE CONSTRUCTION WORK ONLY

STAGE CONSTRUCTION DETAILS

NO SCALE

SCD-20

REVISED BY | DATE REVISED
RUSSELL FLOOD | TOBY CRAWFORD
CALCULATED-DESIGNED BY | CHECKED BY
FUNCTIONAL SUPERVISOR | STEVE TOPAL

STATE OF CALIFORNIA - DEPARTMENT OF TRANSPORTATION
Caltrans
DESIGN

P:\proj1\02\4G820_plans\pse\Addendum 2_10-30-15\24g820mb020.dgn

LAST REVISION 10-30-15 | DATE PLOTTED => 30-OCT-2015 | TIME PLOTTED => 10:22

Dist	COUNTY	ROUTE	POST MILES TOTAL PROJECT	SHEET No.	TOTAL SHEETS
02	Sis	5	R10.7/R19.5	164	327

Russell Flood 06-23-15
REGISTERED CIVIL ENGINEER DATE

06-23-15
PLANS APPROVAL DATE

REGISTERED PROFESSIONAL ENGINEER RUSSELL P. FLOOD No. C72261 Exp. 6-30-16 CIVIL STATE OF CALIFORNIA

THE STATE OF CALIFORNIA OR ITS OFFICERS OR AGENTS SHALL NOT BE RESPONSIBLE FOR THE ACCURACY OR COMPLETENESS OF SCANNED COPIES OF THIS PLAN SHEET.

NOTE:

1. (N) - NOT A SEPARATE PAY ITEM, FOR INFORMATION ONLY.
2. GRINDING ON BRIDGE DECKS IS NOT ALLOWED. QUANTITY INCLUDES THE REMOVAL OF ETW STRIPE BOTH LEFT AND RIGHT.
3. GRINDING IS ALLOWED AT GORES. QUANTITY INCLUDES REMOVAL OF GORE STRIPES AND RAMP OUTSIDE EDGE STRIPE WITHIN GORE LIMITS.

2 **REPLACED PER ADDENDUM No. 2 DATED OCTOBER 30, 2015**

STAGE CONSTRUCTION AND TRAFFIC HANDLING QUANTITIES

STATION	NORTHBOUND	SOUTHBOUND	TEMPORARY TRAFFIC STRIPE (TAPE)			TEMPORARY PAVEMENT MARKING (TAPE)	TEMPORARY TRAFFIC STRIPE (PAINT)				CHANNELIZER (SURFACE MOUNTED)	TEMPORARY RAILING (TYPE K)	TEMPORARY CRASH CUSHION	REMOVE YELLOW THERMO-PLASTIC TRAFFIC STRIPE (HAZARDOUS WASTE)	REMOVE THERMOPLASTIC TRAFFIC STRIPE	REMOVE PAVEMENT MARKER	**** REMOVE ASPHALT CONCRETE PAVEMENT	*** ROADWAY EXCAVATION	(N) EMBANKMENT	** SHOULDER BACKING	DITCH EXCAVATION	*** CLASS 2 AGGREGATE BASE (CY)	REPLACE ASPHALT CONCRETE SURFACING	* HOT MIX ASPHALT (TYPE A)	* TACK COAT	12" TEMPORARY CULVERT	REMARKS
			WHITE DETAIL 11	YELLOW DETAIL 24	WHITE DETAIL 27B		WHITE 4" DETAIL 11	YELLOW 4" DETAIL 24	WHITE 4" DETAIL 27B	WHITE 8" DETAIL 38A																	
			LF	LF	LF	SQFT	LF	LF	LF	LF	EA	LF	EA	LF	LF	EA	SQFT	CY	CY	TON	CY	CY	CY	TON	TON	LF	
STAGE 3																											
"C31" 30+00 TO 47+72.20				1775	1770						14							873	146	266	4.6	778		840	0.5	61.1	CROSSOVER 3 (MAINLINE)
"TR1" 50+00 TO 83+86.10			400	2148	3380				910		30							1326	641	506	3.3	1673		1807	1.1	62.6	CROSSOVER 3 (RAMP)
"C22" 60+00 TO 76+18.98				1371	1619													402	1354	100		624		673	0.4		CROSSOVER 2
"SB1" 737+50 TO 743+00		X																					25		0.1		REPLACE AC SURFACING
"NB1" 752+00 TO 809+81	X																						268		0.7		REPLACE AC SURFACING
"NB1" 809+81 TO 811+39	X													158	158												STRIPE ON BRIDGE DECK (NOTE 2)
"NB1" 753+00 TO 800+00	X																						218		0.6		REPLACE AC SURFACING
"NB1" 800+00 TO 803+00	X														900												STRIPE AT GORE (NOTE 3)
"NB1" 803+00 TO 809+82	X																						32		0.1		REPLACE AC SURFACING
"NB1" 811+39 TO 841+69	X																						140		0.4		REPLACE AC SURFACING
"NB1" 811+40 TO 824+37	X																						60		0.2		REPLACE AC SURFACING
"NB1" 824+37 TO 826+00	X														489												STRIPE AT GORE (NOTE 3)
"NB1" 826+00 TO 841+62	X																						72		0.2		REPLACE AC SURFACING
"NB1" 909+90 TO 912+00	X																	48									REMOVE 210' OF PAVED DITCH
"NB1" 707+00 TO 755+00	X			3800		252					87				750	64											TYPICAL LANE CLOSURE (NB)
"NB1" 752+36 TO 908+00	X											15,560															Temp RAILING (TYPE K)
"NB1" 752+85 TO 910+00	X						2102	16,049	1292						4562												NB TRAFFIC STRIPES
"NB1" 755+11 TO 880+78		X						12,596					2														SB TRAFFIC STRIPES
"SB1" 919+77 TO 965+00		X			3995	252					85				750	64											TYPICAL LANE CLOSURE (SB)
"C31" 30+00 TO 47+72.20																	21,366										REMOVE PRIOR TO NEXT STAGE
"TR1" 50+00 TO 83+86.10																	42,140										REMOVE PRIOR TO NEXT STAGE
"C22" 60+00 TO 76+18.98																	15,775										REMOVE PRIOR TO NEXT STAGE
"C31" 30+00 TO 47+72.20																		103									DETOUR REMOVAL
"TR1" 50+00 TO 83+86.10	2																	1238	2							2	DETOUR REMOVAL
"C22" 60+00 TO 76+18.98																		1675									DETOUR REMOVAL
SUBTOTAL -- STAGE 3			400	9094	10,764	504		2102	29,555	1292	216	15,560	2	158	7609	128	79,281	5665	2141	872	7.9	3075	815	3320	4.3	123.7	

* INCLUDED IN HOT MIX ASPHALT QUANTITIES TABLE (SHEET Q-2)
** INCLUDED IN ROADWAY QUANTITIES TABLE (SHEET Q-1)
*** INCLUDED IN RAMP QUANTITIES TABLE (SHEET Q-3)
**** INCLUDED IN HMA (Misc AREA) & DIKE QUANTITIES TABLE (SHEET Q-1)

2

STAGE CONSTRUCTION AND TRAFFIC HANDLING QUANTITIES

SCQ-2

REVISED BY | DATE REVISED
RUSSELL FLOOD | GINNY SEIBERT
CALCULATED-DESIGNED BY | CHECKED BY
FUNCTIONAL SUPERVISOR: STEVE TOPAL

STATE OF CALIFORNIA - DEPARTMENT OF TRANSPORTATION
Caltrans® DESIGN

P:\proj1\02\4G820_plans\pse\Addendum 2_10-30-15\24g820mc002.dgn

LAST REVISION | DATE PLOTTED => 30-OCT-2015 | TIME PLOTTED => 10:22
10-30-15

Dist	COUNTY	ROUTE	POST MILES TOTAL PROJECT	SHEET No.	TOTAL SHEETS
02	Sis	5	R10.7/R19.5	165	327

Russell Flood 06-23-15
REGISTERED CIVIL ENGINEER DATE

06-23-15
PLANS APPROVAL DATE

REGISTERED PROFESSIONAL ENGINEER RUSSELL P. FLOOD No. C72261 Exp. 6-30-16 CIVIL STATE OF CALIFORNIA

THE STATE OF CALIFORNIA OR ITS OFFICERS OR AGENTS SHALL NOT BE RESPONSIBLE FOR THE ACCURACY OR COMPLETENESS OF SCANNED COPIES OF THIS PLAN SHEET.

NOTE:

1. (N) - NOT A SEPARATE PAY ITEM, FOR INFORMATION ONLY.
2. GRINDING ON BRIDGE DECKS IS NOT ALLOWED. QUANTITY INCLUDES THE REMOVAL OF ETW STRIPE BOTH LEFT AND RIGHT.
3. GRINDING IS ALLOWED AT GORES. QUANTITY INCLUDES REMOVAL OF GORE STRIPES AND RAMP OUTSIDE EDGE STRIPE WITHIN GORE LIMITS.

2 **REPLACED PER ADDENDUM No. 2 DATED OCTOBER 30, 2015**

STAGE CONSTRUCTION AND TRAFFIC HANDLING QUANTITIES

STATION	NORTHBOUND	SOUTHBOUND	TEMPORARY TRAFFIC STRIPE (TAPE) WHITE DETAIL 11	TEMPORARY TRAFFIC STRIPE (TAPE) YELLOW DETAIL 24	TEMPORARY TRAFFIC STRIPE (TAPE) WHITE DETAIL 27B	TEMPORARY PAVEMENT MARKING (TAPE)	TEMPORARY TRAFFIC STRIPE (PAINT) WHITE 4" DETAIL 11	TEMPORARY TRAFFIC STRIPE (PAINT) YELLOW 4" DETAIL 24	TEMPORARY TRAFFIC STRIPE (PAINT) WHITE 4" DETAIL 27B	TEMPORARY TRAFFIC STRIPE (PAINT) WHITE 8" DETAIL 38A	CHANNELIZER (SURFACE MOUNTED)	TEMPORARY RAILING (TYPE K)	TEMPORARY CRASH CUSHION	REMOVE YELLOW THERMO-PLASTIC TRAFFIC STRIPE (HAZARDOUS WASTE)	REMOVE THERMOPLASTIC TRAFFIC STRIPE	REMOVE PAVEMENT MARKER	REMOVE ASPHALT CONCRETE PAVEMENT ****	ROADWAY EXCAVATION ***	EMBANKMENT (N)	SHOULDER BACKING **	DITCH EXCAVATION	CLASS 2 AGGREGATE BASE (CY) ***	REPLACE ASPHALT CONCRETE SURFACING	HOT MIX ASPHALT (TYPE A) *	TACK COAT *	12" TEMPORARY CULVERT	REMARKS
			LF	LF	LF	SQFT	LF	LF	LF	LF	EA	LF	EA	LF	LF	EA	SQFT	CY	CY	TON	CY	CY	CY	TON	TON	LF	
STAGE 4																											
"C21" 20+00 TO 35+34.76				1536	1534													498	804	186		556		600	0.4		CROSSOVER 2
"C11" 10+00 TO 19+27.74				628	928													306	74	98	14.9	312		337	0.2	60.6	CROSSOVER 1
"SB1" 580+00 TO 584+00		X																					19		0.0		REPLACE AC SURFACING
"NB1" 585+00 TO 744+00	X																						736		1.9		REPLACE AC SURFACING
"NB1" 587+00 TO 643+00	X																						259		0.7		REPLACE AC SURFACING
"NB1" 643+00 TO 645+33	X														699												STRIPE AT GORE (NOTE 3)
"NB1" 645+33 TO 680+50	X																						163		0.4		REPLACE AC SURFACING
"NB1" 680+50 TO 683+00	X														750												STRIPE AT GORE (NOTE 3)
"NB1" 683+00 TO 706+85	X																						110		0.3		REPLACE AC SURFACING
"NB1" 706+85 TO 711+80	X														1485												STRIPE AT GORE (NOTE 3)
"NB1" 711+80 TO 746+00	X																						158		0.4		REPLACE AC SURFACING
"NB1" 567+00 TO 589+57	X			1257		126					33				375	32											TYPICAL LANE CLOSURE
"NB1" 589+57 TO 741+19		X							15,161			160															SB TRAFFIC STRIPES
"NB1" 586+58 TO 743+90	X											15,760															Temp RAILING (TYPE K)
"NB1" 587+00 TO 746+00	X								16,459	1175					2419												NB TRAFFIC STRIPES
"NB1" 622+86 TO 744+00	X						12,126								3032	248											TRUCK CLIMBING LANE
"SB1" 755+29 TO 801+00		X			3685	252					85				750	64											TYPICAL LANE CLOSURE
"C21" 20+00 TO 35+34.76																	14,991	2									REMOVE AFTER STAGE
"C11" 10+00 TO 19+27.74																	8199										REMOVE AFTER STAGE
"C21" 20+00 TO 35+34.76	2																	960								2	DETOUR REMOVAL
"C11" 10+00 TO 19+27.74																		129									DETOUR REMOVAL
SUBTOTAL -- STAGE 4				3421	6147	378	12,126		31,620	1175	118	15,920			9510	344	23,190	1893	878	284	14.9	868	1445	937	4.3	60.6	
SUBTOTAL -- STAGE 1				1000	1000	252					748	4720		928	3715	32							691		1.8		
SUBTOTAL -- STAGE 2				1000	1000	252					480	4360		574	3249	32							388		0.9		
SUBTOTAL -- STAGE 3			400	9094	10,764	504		2102	29,555	1292	216	15,560	2	158	7609	128	79,281	5665	2141	872	7.9	3075	815	3320	4.3	123.7	
SUBTOTAL -- STAGE 4				3421	6147	378	12,126		31,620	1175	118	15,920			9510	344	23,190	1893	878	284	14.9	868	1445	937	4.3	60.6	
SUBTOTAL			400	14,515	18,911		12,126	2102	61,175	2467																	
TOTAL				33,826		1386			77,870		1562	40,560	2	1660	24,083	536	102,471	7558	3019	1156	22.8	3943	3339	4257	11.3	184.3	

2

* INCLUDED IN HOT MIX ASPHALT QUANTITIES TABLE (SHEET Q-2)
** INCLUDED IN ROADWAY QUANTITIES TABLE (SHEET Q-1)
*** INCLUDED IN RAMP QUANTITIES TABLE (SHEET Q-3)
**** INCLUDED IN HMA (Misc AREA) & DIKE QUANTITIES TABLE (SHEET Q-1)

STAGE CONSTRUCTION AND TRAFFIC HANDLING QUANTITIES

SCQ-3

REVISED BY | DATE REVISED
RUSSELL FLOOD | GINNY SEIBERT
CALCULATED-DESIGNED BY | CHECKED BY
FUNCTIONAL SUPERVISOR | STEVE TOPAL
STATE OF CALIFORNIA - DEPARTMENT OF TRANSPORTATION
Caltrans DESIGN
P:\proj1\02\4G820_plans\pse\Addendum 2_10-30-15\24g820mc003.dgn

LAST REVISION 10-30-15 | DATE PLOTTED => 30-OCT-2015 | TIME PLOTTED => 10:22

Dist	COUNTY	ROUTE	POST MILES TOTAL PROJECT	SHEET No.	TOTAL SHEETS
02	Sis	5	R10.7/R19.5	241	327

Russell Flood 06-23-15
REGISTERED CIVIL ENGINEER DATE

06-23-15
PLANS APPROVAL DATE

REGISTERED PROFESSIONAL ENGINEER RUSSELL P. FLOOD No. C72261 Exp. 6-30-16 CIVIL STATE OF CALIFORNIA

THE STATE OF CALIFORNIA OR ITS OFFICERS OR AGENTS SHALL NOT BE RESPONSIBLE FOR THE ACCURACY OR COMPLETENESS OF SCANNED COPIES OF THIS PLAN SHEET.

NOTE:
1. (N) - NOT A SEPARATE PAY ITEM, FOR INFORMATION ONLY.

2 **REPLACED PER ADDENDUM No. 2 DATED OCTOBER 30, 2015**

RAMP QUANTITIES

INTERCHANGE	STATION	NORTHBOUND	SOUTHBOUND	ENTRANCE	EXIT	*** COLD PLANE ASPHALT CONCRETE PAVEMENT SQYD	*** SHOULDER BACKING TON	ROADWAY EXCAVATION CY	* REMOVE ASPHALT CONCRETE PAVEMENT SQFT	CLASS 2 AGGREGATE BASE (CY) CY	LEAN CONCRETE BASE CY	(N) HMA (TYPE A) DEPTH FT	** HOT MIX ASPHALT (TYPE A) TON	(N) RHMA (GAP GRADED) DEPTH FT	** RUBBERIZED HOT MIX ASPHALT (GAP GRADED) TON	** TACK COAT TON	* PLACE HOT MIX ASPHALT DIKE (TYPE A) LF	* PLACE HOT MIX ASPHALT (MISCELLANEOUS AREA) SQYD	JOINTED PLAIN CONCRETE PAVEMENT CY	MINOR CONCRETE (TEXTURED PAVING) CY
N MT SHASTA	"NMS1" 47+00 TO 51+50		X		X		21	725		347		0.30	250	0.2	161	1.2				26
ABRAMS LAKE	"AL1" 86+68 TO 95+00		X	X		2212	127	60		30		0.2	319	0.2	309	1.5				30
	"AL1" 95+00 TO 97+97		X	X		1010	49							0.2	141	0.5				
	"AL2" 97+73 TO 101+50		X		X	942	61							0.2	131	0.4				
	"AL2" 101+50 TO 108+56		X		X	1810	102	87		44		0.2	261	0.2	252	1.2				44
TRUCK VILLAGE	"TV1" 104+73 TO 111+18		X	X		1941	52	57	3435	29		0.2	417	0.2	271	1.3		382		29
	"TV2" 111+37 TO 125+00		X		X	3416	222							0.2	477	1.6				
	"TV2" 125+00 TO 128+42		X		X	870	43	88		44		0.2	125	0.2	121	0.6				44
SOUTH WEED	"SW1" 10+70 TO 14+50		X	X		950	52	56		28		0.6	410	0.2	132	1.0				28
	"SW1" 14+50 TO 15+50		X	X		294	8		1045			0.4	126	0.2	41	0.3		116		
	"SW1" 15+50 TO 17+69		X	X		691	18		2185				87	0.2	96	0.3		243		
	"SW2" 20+68 TO 24+28		X		X		58	539			180								359	
	"SW2" 24+28 TO 27+50		X		X	839	43							0.2	117	0.4				
	"SW2" 27+50 TO 32+19		X		X	1211	65	78		39		0.2	174	0.2	169	0.8				39
	"SW3" 8+08 TO 9+61	X			X	409	12	88		44		0.4	118	0.2	57	0.4				44
	"SW3" 9+61 TO 18+22	X			X	2452	85		4846				194	0.2	342	1.1		538		
	"SW4" 22+13 TO 25+69	X		X			61	746			249								497	
	"SW4" 25+69 TO 29+50	X		X		1075	103					0.4	310	0.2	150	0.9				
	"SW4" 29+50 TO 31+19	X		X		443	19	56		28		0.4	128	0.2	62	0.4				28
CENTRAL WEED	"CW1" 97+71 TO 98+77		X	X		305	8	59		29				0.2	43	0.1				29
	"CW2" 98+96 TO 102+00	X			X	1164	17	51		25		0.4	346	0.2	162	1.0	353			25
	"CW2" 102+00 TO 103+00	X			X	292	16					0.6	126	0.2	41	0.3				
	"CW2" 103+00 TO 105+00	X			X	723	33					0.8	416	0.2	101	0.9				
	"CW2" 105+00 TO 105+50	X			X	195	8					0.4	56	0.2	27	0.2				
	"CW2" 105+50 TO 105+85	X			X	142	6							0.2	20	0.1				
FROM STAGE CONSTRUCTION & TRAFFIC HANDLING (SCQ-3)								7558		3943										
FROM SHOULDER EARTHWORK QUANTITIES (Q-5)								2306												
FROM UTILITY WALKWAY PAD QUANTITIES (Q-5)										24										
FROM CONFORM QUANTITIES (Q-5)								11,028		10,875	199								398	
FROM GUARDRAIL QUANTITIES (Q-4)										38										
TOTAL						23,386	1289	23,582	11,511	15,564	628		3863		3423	16.5	353	1279	1252	366

* INCLUDED IN HMA (Misc AREA) & DIKE QUANTITIES TABLE (Q-1)
** INCLUDED IN HOT MIX ASPHALT QUANTITIES TABLE (Q-2)
*** INCLUDED IN ROADWAY QUANTITIES TABLE (Q-1)

2

SUMMARY OF QUANTITIES
Q-3

REVISED BY | DATE REVISED
RUSSELL FLOOD | GINNY SEIBERT
CALCULATED-DESIGNED BY | CHECKED BY
FUNCTIONAL SUPERVISOR: STEVE TOPAL
STATE OF CALIFORNIA - DEPARTMENT OF TRANSPORTATION
Caltrans® DESIGN

P:\proj1\02\46820_plans\pse\Addendum 2_10-30-15\24g820pa003.dgn

LAST REVISION 10-30-15 | DATE PLOTTED => 30-OCT-2015 | TIME PLOTTED => 10:22

Dist	COUNTY	ROUTE	POST MILES TOTAL PROJECT	SHEET No.	TOTAL SHEETS
02	Sis	5	R10.7/R19.5	243	327

Russell Flood 06-23-15
REGISTERED CIVIL ENGINEER DATE

06-23-15
PLANS APPROVAL DATE

REGISTERED PROFESSIONAL ENGINEER RUSSELL P. FLOOD No. C72261 Exp. 6-30-16 CIVIL STATE OF CALIFORNIA

THE STATE OF CALIFORNIA OR ITS OFFICERS OR AGENTS SHALL NOT BE RESPONSIBLE FOR THE ACCURACY OR COMPLETENESS OF SCANNED COPIES OF THIS PLAN SHEET.

NOTE:
1. (N) - NOT A SEPARATE PAY ITEM, FOR INFORMATION ONLY.

2 REPLACED PER ADDENDUM No. 2 DATED OCTOBER 30, 2015

WATER POLLUTION CONTROL

	TEMPORARY FIBER ROLL	TEMPORARY DRAINAGE INLET PROTECTION	TEMPORARY HYDRAULIC MULCH (BONDED FIBER MATRIX)	TEMPORARY FENCE (TYPE ESA)
	LF	EA	SQYD	LF
TOTAL	4320	40	11,000	120

2

SHOULDER EARTHWORK QUANTITIES

LOCATION	*** ROADWAY EXCAVATION	(N) EMBANKMENT
	CY	CY
RAMPS	370	380
NORTHBOUND MAINLINE	186	640
SOUTHBOUND MAINLINE	1750	890
TOTAL	2306	1910

*** INCLUDED IN RAMP QUANTITIES (Q-3)

UTILITY WALKWAY PAD QUANTITIES

STATION	OFFSET	(N) AREA	**** CLASS 2 AGGREGATE BASE (CY)	MINOR CONCRETE (MISCELLANEOUS CONSTRUCTION)	4' CHAIN LINK GATE (TYPE CL-6, EXTENSION ARM)	CHAIN LINK FENCE (TYPE CL-6)	DESCRIPTION
		SQFT	CY	CY	EA	LF	
"SB1" 696+00	552' Rt	189	3.5	3.50			Abrams Lake CCTV
"SB1" 697+61	101' Rt	252	4.7	4.67			Abrams Lake OC
"SB1" 698+24	240' Lt	378	7.0	7.00			Abrams Lake HAR
"SB1" 698+35	81' Lt	21	0.4	0.39			Abrams Lake CMS
"SB1" 744+21	201' Lt	72	1.3	1.33			Black Butte Utility Walkway
"SB1" 744+80	101' Lt	357	6.6	6.61	1	48	Black Butte RWIS
TOTAL			23.5	23.50	1	48	

**** INCLUDED IN RAMP QUANTITIES TABLE (Q-3)

CONFORM QUANTITIES

STATION	LAYOUT SHEET	NORTHBOUND	SOUTHBOUND	*** ROADWAY EXCAVATION	*** CLASS 2 AGGREGATE BASE	*** LEAN CONCRETE BASE	*** JOINTED PLAIN CONCRETE PAVEMENT	STRUCTURAL Conc APPROACH SLAB (TYPE R)	JOINT SEAL (MR 1")	DESCRIPTION
				CY	CY	CY	CY	CY	LF	
"SB1" 808+65 TO 810+65	L-8		X	649	433					DEETZ ROAD UC
"SB1" 812+24 TO 814+24	L-8		X	650	434					DEETZ ROAD UC
"SB1" 839+86 TO 841+86	L-9		X	649	433					BLACK BUTTE OH
"SB1" 843+80 TO 845+80	L-9		X	648	432					BLACK BUTTE OH
"NB1" 844+32 TO 846+32	L-9	X		908	605					BLACK BUTTE OH
"SB1" 918+58 TO 920+58	L-14		X	850	567					SOUTH WEED UC
"NB1" 918+81 TO 920+81	L-14	X		651	868					SOUTH WEED UC
"SB1" 922+14 TO 924+14	L-14		X	850	1134					SOUTH WEED UC
"NB1" 922+42 TO 924+42	L-14	X		650	866					SOUTH WEED UC
"NB1" 985+87 TO 988+35	L-17	X		645	860			44	58	SISKIYOU WAY UC
"SB1" 986+85 TO 988+85	L-17		X	1031	1374					SISKIYOU WAY UC
"SB1" 990+87 TO 992+87	L-17		X	836	1115					SISKIYOU WAY UC
"NB1" 989+79 TO 992+75	L-17	X		696		199	398	44	52	SISKIYOU WAY UC
"SB1" 1003+75 TO 1005+75	L-18		X	657	876					ROUTE 5/97 Sep
"NB1" 1003+86 TO 1005+86	L-18	X		658	878					ROUTE 5/97 Sep
TOTAL				11,028	10,875	199	398	88	110	

* INCLUDED IN ROADWAY QUANTITIES (Q-1) & HMA QUANTITIES (Q-2)
** HMA AND TACK COAT QUANTITIES INCLUDED IN HMA QUANTITIES (Q-2)
*** INCLUDED IN RAMP QUANTITIES (Q-3)

PROFILE SMOOTHING QUANTITIES

STATION	SHEET	** COLD PLANE ASPHALT CONCRETE PAVEMENT	* HOT MIX ASPHALT (TYPE A)	* TACK COAT	GRIND EXISTING BRIDGE DECK	DESCRIPTION
		SQYD	TON	TON	SQYD	
"SB1" 841+48 TO 844+31	C-2	800	141	0.3	818	BLACK BUTTE OH

* INCLUDED IN HOT MIX ASPHALT QUANTITIES TABLE (Q-2)
** INCLUDED IN ROADWAY QUANTITIES TABLE (Q-1)

SUMMARY OF QUANTITIES

Q-5

REVISED BY | DATE REVISED
RUSSELL FLOOD | GINNY SEIBERT
CALCULATED-DESIGNED BY | CHECKED BY
FUNCTIONAL SUPERVISOR | STEVE TOPAL
STATE OF CALIFORNIA - DEPARTMENT OF TRANSPORTATION
Caltrans DESIGN
P:\proj1\02\40820_plans\pse\Addendum 2_10-30-15\24g820pa005.dgn

LAST REVISION 10-30-15 | DATE PLOTTED => 30-OCT-2015 | TIME PLOTTED => 10:22