Dist	COUNTY	ROUTE	POST MILES TOTAL PROJECT	SHEET No.	TOTAL SHEETS
02	Sha	299	88.7/89.2	1	23

INDEX OF PLANS

SHEET No.	DESCRIPTION
1	TITLE AND LOCATION MAP
2	TYPICAL CROSS SECTION
3	LAYOUT
4	PROFILE AND SUPERELEVATION DIAGRAM
5-8	CONSTRUCTION DETAILS
9	CONSTRUCTION AREA SIGNS
10-12	PAVEMENT DELINEATION AND SIGN PLANS
13	SUMMARY OF QUANTITIES
14	EROSION CONTROL PLAN AND QUANTITIES SHEET
15-23	REVISED STANDARD PLANS

THE STANDARD PLANS LIST APPLICABLE TO THIS CONTRACT IS INCLUDED IN THE NOTICE TO BIDDERS AND SPECIAL PROVISIONS BOOK.

STATE OF CALIFORNIA

DEPARTMENT OF TRANSPORTATION

PROJECT PLANS FOR CONSTRUCTION ON

STATE HIGHWAY

IN SHASTA COUNTY
NEAR FALL RIVER MILLS
2.1 MILES TO 1.5 MILES WEST OF FALL RIVER GOLF ROAD

TO BE SUPPLEMENTED BY STANDARD PLANS DATED 2010

LOCATION MAP

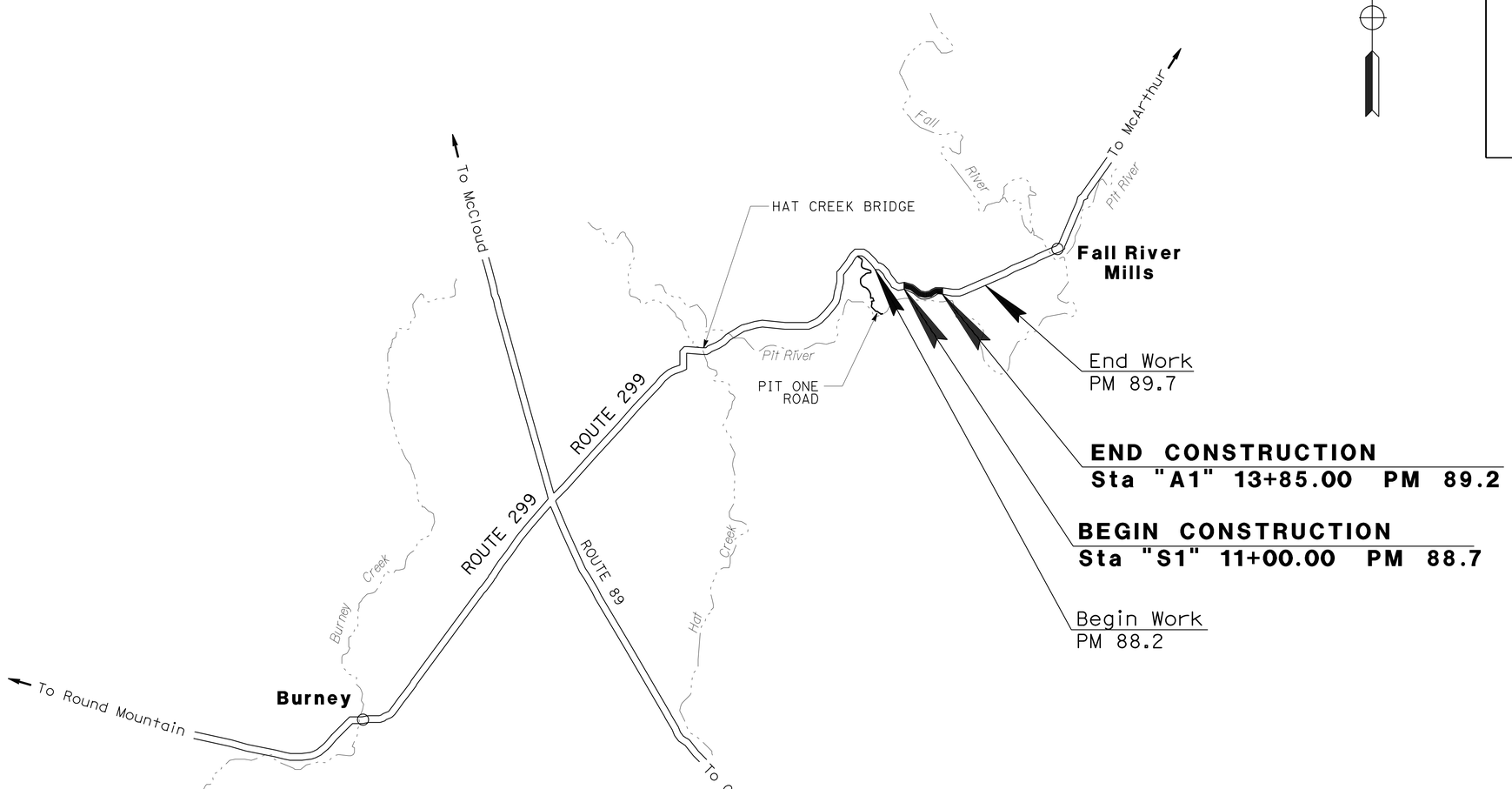

THE CONTRACTOR SHALL POSSESS THE CLASS (OR CLASSES) OF LICENSE AS SPECIFIED IN THE "NOTICE TO BIDDERS."

NO SCALE

Zidan M. Zhang 10-29-15
PROJECT ENGINEER DATE
REGISTERED CIVIL ENGINEER

November 5, 2015
PLANS APPROVAL DATE

REGISTERED PROFESSIONAL ENGINEER Z. M. ZHANG No. C69054 Exp. 6-30-16 CIVIL STATE OF CALIFORNIA

THE STATE OF CALIFORNIA OR ITS OFFICERS OR AGENTS SHALL NOT BE RESPONSIBLE FOR THE ACCURACY OR COMPLETENESS OF ELECTRONIC COPIES OF THIS PLAN SHEET.

CONTRACT No.	02-4G6504
PROJECT ID	0214000039

PROJECT MANAGER: ERIC AKANA
DESIGN ENGINEER: ERIC ORR

P:\proj1\02\46650_plans\pse\24g650ab001.dgn

LAST REVISION 10-29-15 | DATE PLOTTED => 25-NOV-2015 | TIME PLOTTED => 08:22

Dist	COUNTY	ROUTE	POST MILES TOTAL PROJECT	SHEET No.	TOTAL SHEETS
02	Sha	299	88.7/89.2	2	23

Zidan M. Zhang 10-29-15
REGISTERED CIVIL ENGINEER DATE

11-05-15
PLANS APPROVAL DATE

REGISTERED PROFESSIONAL ENGINEER Z. M. ZHANG No. C69054 Exp. 6-30-16 CIVIL STATE OF CALIFORNIA

THE STATE OF CALIFORNIA OR ITS OFFICERS OR AGENTS SHALL NOT BE RESPONSIBLE FOR THE ACCURACY OR COMPLETENESS OF SCANNED COPIES OF THIS PLAN SHEET.

NOTES:

1. DIMENSIONS OF THE PAVEMENT STRUCTURES (STRUCTURAL SECTIONS) ARE SUBJECT TO TOLERANCES SPECIFIED IN THE STANDARD SPECIFICATIONS.
2. SUPERELEVATIONS ARE SHOWN ON THE SUPERELEVATION DIAGRAM.

DESIGN DESIGNATION (ROUTE 299)

ADT (2016)	2600	D	60%
ADT (2026)	3000	T	8%
DHV (2016)	350	TI20	9.5
EAL20	1,270,000		

PAVEMENT CLIMATE REGION

HIGH MOUNTAIN

ABBREVIATIONS:

(E) EXISTING

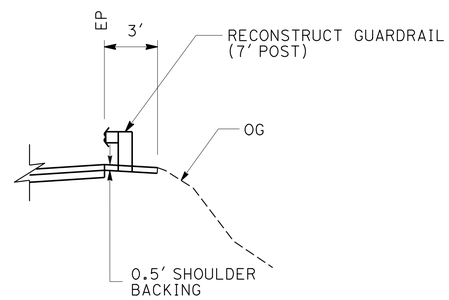

ROUTE 299

"A1" 2+75.00 TO "A1" 5+75.00
"A1" 10+25.00 TO "A1" 11+00.00

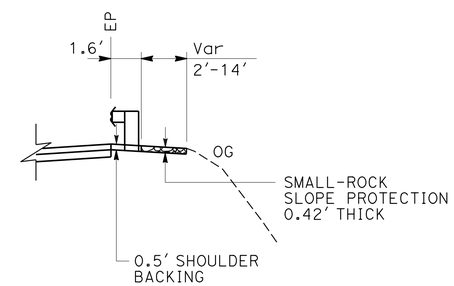

ROUTE 299

"A1" 11+00.00 TO "A1" 12+91.00

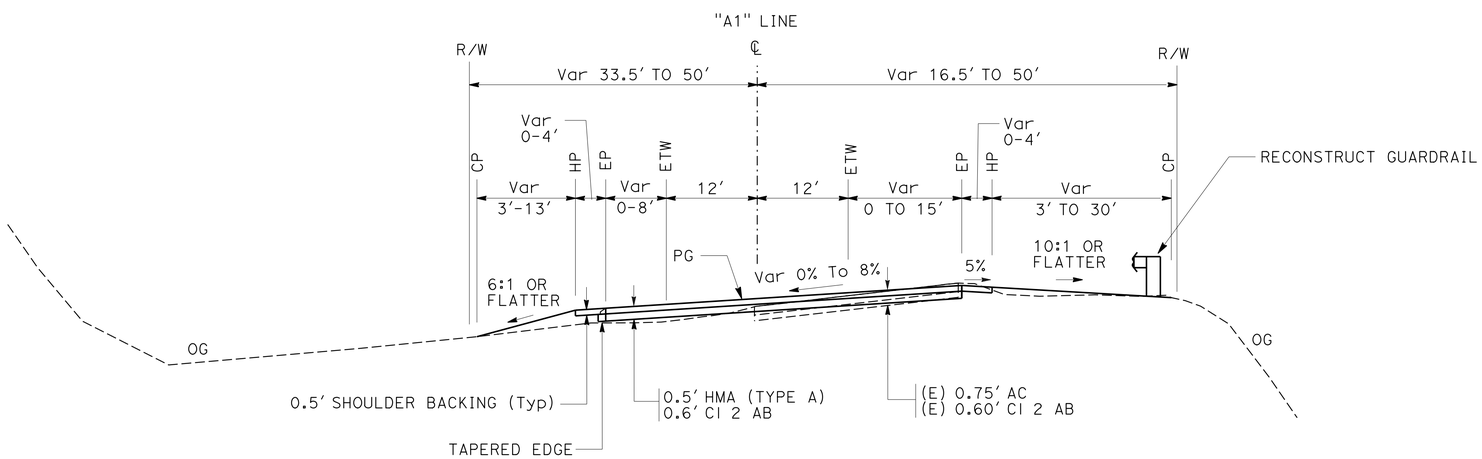

ROUTE 299

"A1" 5+75.00 TO "A1" 10+25.00

TYPICAL CROSS SECTIONS

NO SCALE

X-1

REVISED BY	DATE REVISED

CALCULATED-DESIGNED BY: ZIDAN M. ZHANG
CHECKED BY: WILLIAM C. LEHMAN
FUNCTIONAL SUPERVISOR: ERIC ORR

STATE OF CALIFORNIA - DEPARTMENT OF TRANSPORTATION
Caltrans
DESIGN

P:\proj1\02\4G650_plans\pse\24g650ca001.dgn

LAST REVISION
DATE PLOTTED => 25-NOV-2015
TIME PLOTTED => 08:22

Dist	COUNTY	ROUTE	POST MILES TOTAL PROJECT	SHEET No.	TOTAL SHEETS
02	Sha	299	88.7/89.2	3	23

Zidan M. Zhang 10-29-15
REGISTERED CIVIL ENGINEER DATE

11-05-15
PLANS APPROVAL DATE

REGISTERED PROFESSIONAL ENGINEER Z. M. ZHANG No. C69054 Exp. 6-30-16 CIVIL STATE OF CALIFORNIA

THE STATE OF CALIFORNIA OR ITS OFFICERS OR AGENTS SHALL NOT BE RESPONSIBLE FOR THE ACCURACY OR COMPLETENESS OF SCANNED COPIES OF THIS PLAN SHEET.

NOTE:

1. FOR ACCURATE RIGHT OF WAY DATA, CONTACT RIGHT OF WAY ENGINEERING AT THE DISTRICT OFFICE.

LEGEND:

TCE
CPACP

ABBREVIATIONS;

TCE TEMPORARY CONSTRUCTION EASEMENT
CPACP COLD PLANE ASPHALT CONCRETE PAVEMENT
SHB SHOULDER BACKING
TE TAPERED EDGE

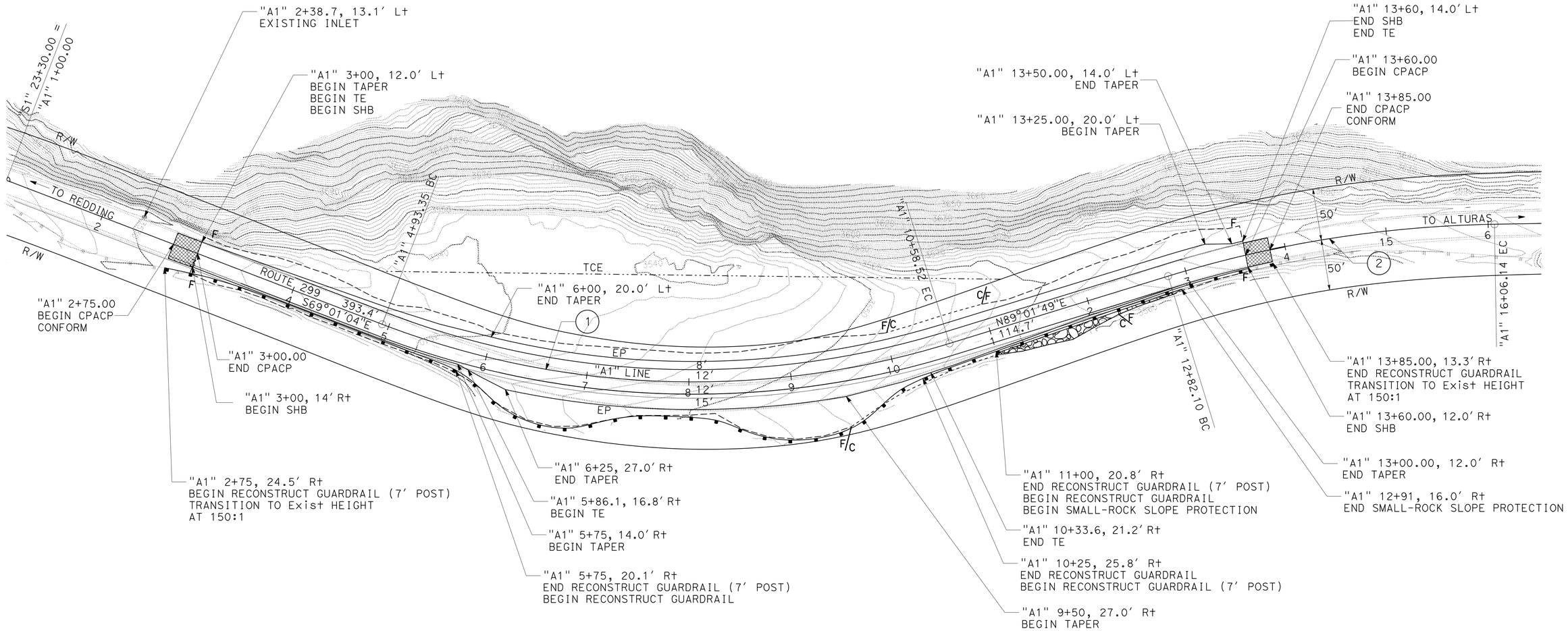

CURVE DATA

No. ⊕	R	Δ	T	L
1	850	38°05′47″	293.48	565.17
2	1150	16°08′41″	163.10	324.05

LAYOUT

SCALE: 1" = 50′

L-1

STATE OF CALIFORNIA - DEPARTMENT OF TRANSPORTATION
Caltrans DESIGN

FUNCTIONAL SUPERVISOR: ERIC ORR
CALCULATED-DESIGNED BY: WILLIAM C. LEHMAN
CHECKED BY: ZIDAN M. ZHANG
REVISED BY
DATE REVISED

P:\proj1\02\4G650_plans\pse\24g650ea001.dgn

LAST REVISION 10-29-15
DATE PLOTTED => 25-NOV-2015
TIME PLOTTED => 08:22

Dist	COUNTY	ROUTE	POST MILES TOTAL PROJECT	SHEET No.	TOTAL SHEETS
02	Sha	299	88.7/89.2	4	23

Zidan M. Zhang 10-29-15
REGISTERED CIVIL ENGINEER DATE

11-05-15
PLANS APPROVAL DATE

REGISTERED PROFESSIONAL ENGINEER Z. M. ZHANG No. C69054 Exp. 6-30-16 CIVIL STATE OF CALIFORNIA

THE STATE OF CALIFORNIA OR ITS OFFICERS OR AGENTS SHALL NOT BE RESPONSIBLE FOR THE ACCURACY OR COMPLETENESS OF SCANNED COPIES OF THIS PLAN SHEET.

ABBREVIATIONS:
TW TRAVELED WAY

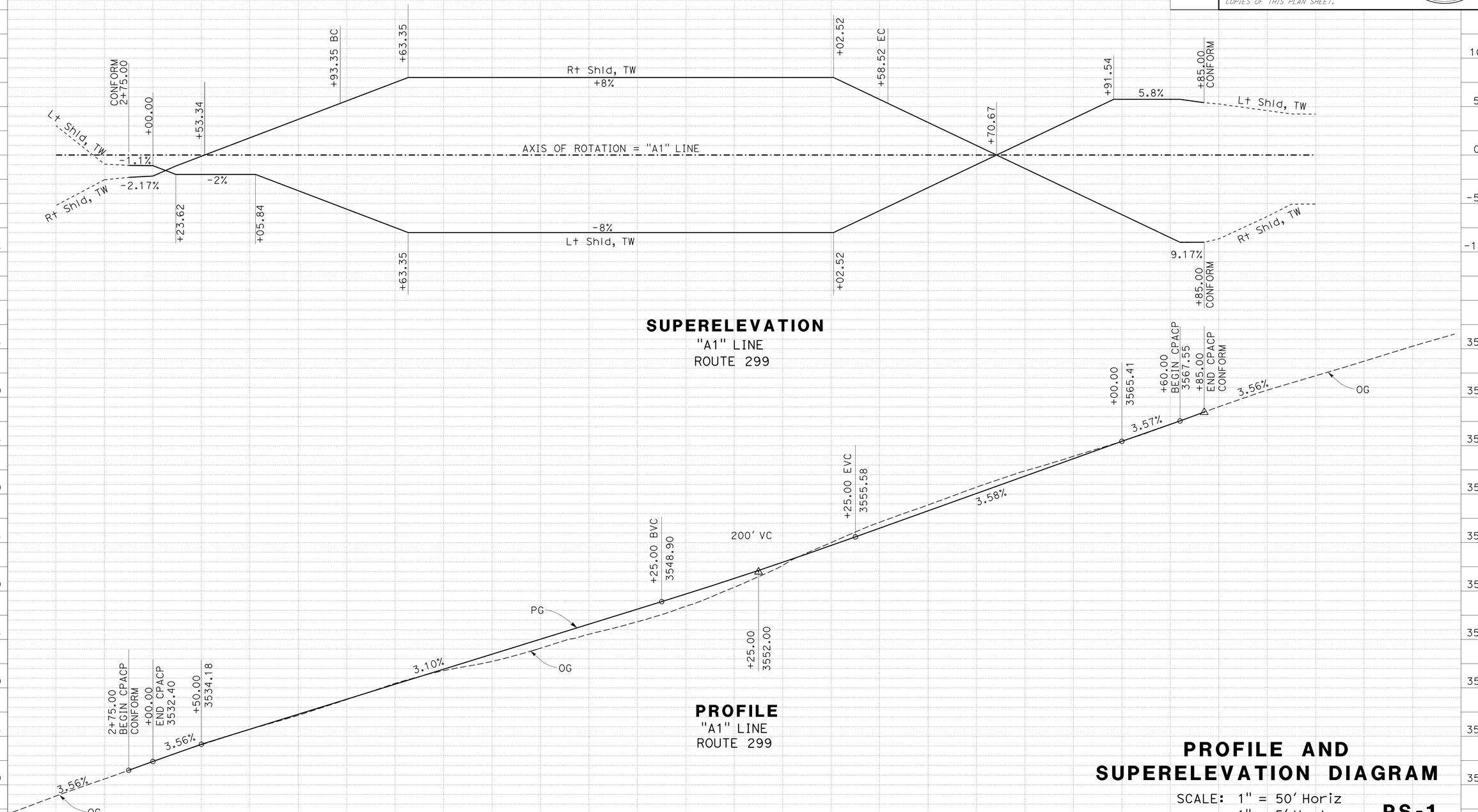

PROFILE AND SUPERELEVATION DIAGRAM

SCALE: 1" = 50' Horiz
1" = 5' Vert

PS-1

REVISED BY	DATE REVISED
ZIDAN M. ZHANG	
WILLIAM C. LEHMAN	

CALCULATED-DESIGNED BY
CHECKED BY

FUNCTIONAL SUPERVISOR
ERIC ORR

STATE OF CALIFORNIA - DEPARTMENT OF TRANSPORTATION
DESIGN

P:\proj1\02\4G650_plans\pse\24g650fb001.dgn

LAST REVISION 10-29-15
DATE PLOTTED => 25-NOV-2015
TIME PLOTTED => 08:22

Dist	COUNTY	ROUTE	POST MILES TOTAL PROJECT	SHEET No.	TOTAL SHEETS
02	Sha	299	88.7/89.2	5	23

Zidan M. Zhang 10-29-15
REGISTERED CIVIL ENGINEER DATE

11-05-15
PLANS APPROVAL DATE

REGISTERED PROFESSIONAL ENGINEER Z. M. ZHANG No. C69054 Exp. 6-30-16 CIVIL STATE OF CALIFORNIA

THE STATE OF CALIFORNIA OR ITS OFFICERS OR AGENTS SHALL NOT BE RESPONSIBLE FOR THE ACCURACY OR COMPLETENESS OF SCANNED COPIES OF THIS PLAN SHEET.

LEGEND

CPACP

ABBREVIATIONS

CPACP COLD PLANE ASPHALT CONCRETE PAVEMENT

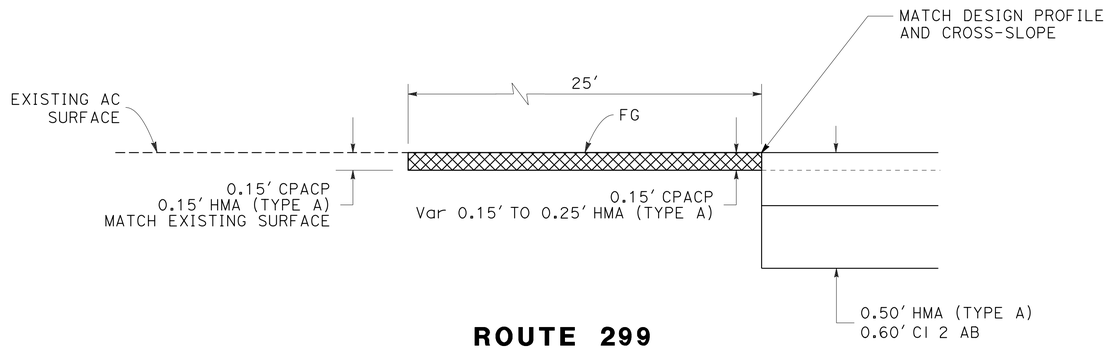

ROUTE 299
HMA PAVING CONFORM
"A1" 2+75.00 TO "A1" 3+00.00

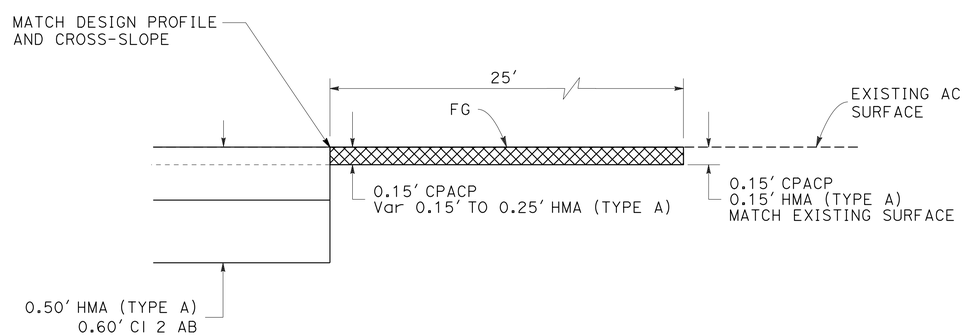

ROUTE 299
HMA PAVING CONFORM
"A1" 13+60.00 TO "A1" 13+85.00

CONSTRUCTION DETAILS

NO SCALE

C-1

REVISED BY | DATE REVISED
ZIDAN M. ZHANG | WILLIAM C. LEHMAN
CALCULATED-DESIGNED BY | CHECKED BY
FUNCTIONAL SUPERVISOR: ERIC ORR

STATE OF CALIFORNIA - DEPARTMENT OF TRANSPORTATION
Caltrans® DESIGN

P:\proj1\02\4G650_plans\pse\24g650ga001.dgn

LAST REVISION 10-29-15 | DATE PLOTTED => 25-NOV-2015 | TIME PLOTTED => 08:22

Dist	COUNTY	ROUTE	POST MILES TOTAL PROJECT	SHEET No.	TOTAL SHEETS
02	Sha	299	88.7/89.2	6	23

Zidan M. Zhang 10-29-15
REGISTERED CIVIL ENGINEER DATE

11-05-15
PLANS APPROVAL DATE

REGISTERED PROFESSIONAL ENGINEER Z. M. ZHANG No. C69054 Exp. 6-30-16 CIVIL STATE OF CALIFORNIA

THE STATE OF CALIFORNIA OR ITS OFFICERS OR AGENTS SHALL NOT BE RESPONSIBLE FOR THE ACCURACY OR COMPLETENESS OF SCANNED COPIES OF THIS PLAN SHEET.

NOTES:

1. GRIND EXISTING SURFACES TO ACCOMODATE A MINIMUM TAPER THICKNESS OF 0.10′ WHEN EITHER:
   A. HMA MATERIAL SUCH AS RUBBERIZED, POLYMER MODIFIED OR OPEN GRADED IS UNSUITABLE FOR RAKING TO A MAXIMUM 0.02′ THICKNESS AT THE CONFORM.
   B. TEMPORARY TAPER WILL BE IN PLACE FOR MORE THAN 14 DAYS.
2. PERMANENT SURFACE MAY BE EXISTING OR NEW PAVEMENT.
3. ROADWAY SURFACE IS THE TOP OF EXISTING SURFACE OR THE TOP OF THE PLANED SURFACE.
4. FOR TEMPORARY TAPERS ON BRIDGE DECKS AND APPROACH SLABS, CONSTRUCT TEMPORARY TAPERS WITH POLYESTER CONCRETE.
5. IF AUTHORIZED, YOU MAY USE ALTERNATIVE MATERIALS OR METHODS TO PRODUCE THE REQUIRED TAPER.

LEGEND:

HMA MATERIAL (TEMPORARY TAPER) (SEE NOTE 4)

IF NECESSARY, COLD PLANE ASPHALT CONCRETE PAVEMENT AND PLACE HMA MATERIAL (SEE NOTE 1)

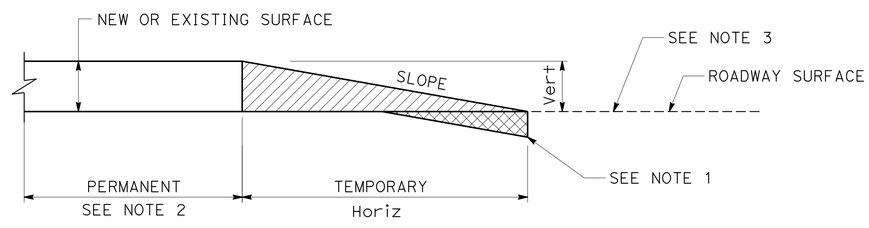

Vert	SLOPE RATIO Horiz/Vert
0-0.10′	70:1
GREATER THAN 0.10′	160:1

TYPICAL PAVING CONFORM FOR TEMPORARY CONSTRUCTION TAPERS

CONSTRUCTION DETAILS

NO SCALE

C-2

REVISED BY | DATE REVISED
ZIDAN M. ZHANG | WILLIAM C. LEHMAN
CALCULATED-DESIGNED BY | CHECKED BY
FUNCTIONAL SUPERVISOR: ERIC ORR

STATE OF CALIFORNIA - DEPARTMENT OF TRANSPORTATION
Caltrans DESIGN

P:\proj1\02\4G650_plans\pse\24g650ga002.dgn

LAST REVISION 10-29-15 | DATE PLOTTED => 25-NOV-2015 TIME PLOTTED => 08:22

Dist	COUNTY	ROUTE	POST MILES TOTAL PROJECT	SHEET No.	TOTAL SHEETS
02	Sha	299	88.7/89.2	7	23

John Hart 10-29-15
REGISTERED CIVIL ENGINEER DATE

11-05-15
PLANS APPROVAL DATE

REGISTERED PROFESSIONAL ENGINEER
JOHN HART
No. C69586
Exp. 6-30-16
CIVIL
STATE OF CALIFORNIA

THE STATE OF CALIFORNIA OR ITS OFFICERS OR AGENTS SHALL NOT BE RESPONSIBLE FOR THE ACCURACY OR COMPLETENESS OF SCANNED COPIES OF THIS PLAN SHEET.

NOTES:

1. A SINGLE LINE POST MAY BE OFFSET UP TO 12" ALONG THE GUARDRAIL. DO NOT CUT OR DRILL HOLE IN ELEMENT TO ATTACH ELEMENT TO POST AND BLOCK IF THERE IS NO HOLE. BOLT BLOCK TO POST ONLY.
2. FOR POST AND BLOCK DETAILS SEE RSP A77N2. FOR RAIL ELEMENT AND HARDWARE DETAILS, USE MGS DETAILS SHOWN ON RSP A77L2 AND RSP A77M1.
3. BOLT THE BLOCK TO THE POST ON THE APPROACH SIDE OF THE STEEL POST FLANGE.
4. WHEN THERE IS A BREAK POINT IN FRONT OF GUARDRAIL BETWEEN 4′-8′ THE HEIGHT WILL BE DETERMINED BY THE ENGINEER.
5. PLACE RUB RAIL (GUARDRAIL ELEMENT) AND ATTACH TO POST WITH NO BLOCK WHEN HEIGHT OF GUARDRAIL IS MORE THAN 31" ABOVE FINISH GRADE UNDER FACE OF RAIL.
6. BLOCKS MUST HAVE MEANS TO RESIST ROTATION OTHER THAN THROUGH BOLT.
7. FOR PARABOLIC FLARE OFFSETS, SEE RSP A77P1. DO NOT FLARE GUARDRAIL AT MORE THAN 15:1 AWAY FROM THE ETW UNLESS SHOWN.
8. FOR CURB AND DIKE DETAILS, SEE REVISED STANDARD PLANS RSP A87A. AND RSP A87B.
9. ONLY TYPE C DIKE MAY BE USED UNDER OR IN FRONT OF TERMINAL SYSTEMS, OR WHEN DIKE IS PLACED MORE THAN 2" IN FRONT OF FACE OF MBGR.
10. THE MAXIMUM HEIGHT OF THE DIKE OR CURB SHALL BE 4" FOR MBGR.
11. IF THE WIDTH OF THE PAVED SHOULDER IS REDUCED APPROACHING A FIXED OBJECT, PLACE A "P" MARKER INSTEAD OF THE L-1 MARKER.
12. IF THE L-1 MARKER IS WITHIN 50′ OF THE END OF A STRUCTURE AND NOT IN SNOW COUNTRY, THE G-11 BRIDGE SIGN AND L-1 MARKER CAN BE COMBINED AND PLACE AT THE L-1 MARKER LOCATION.
13. EXISTING UTILITY FACILITIES HAVE NOT BEEN INCLUDED ON THESE PLANS

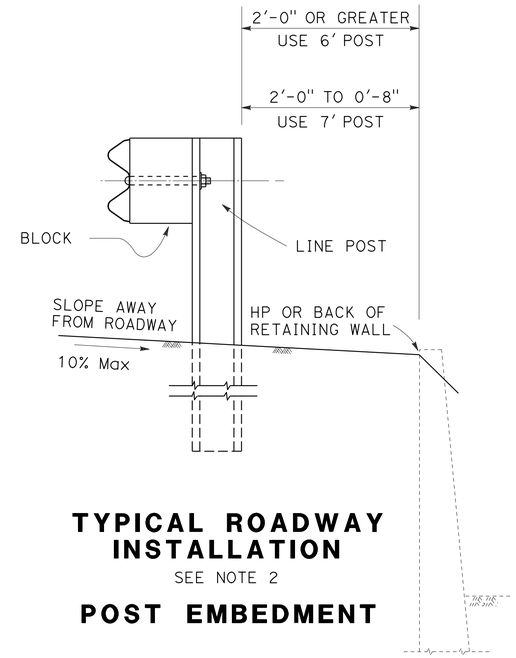

TYPICAL ROADWAY INSTALLATION

SEE NOTE 2

POST EMBEDMENT

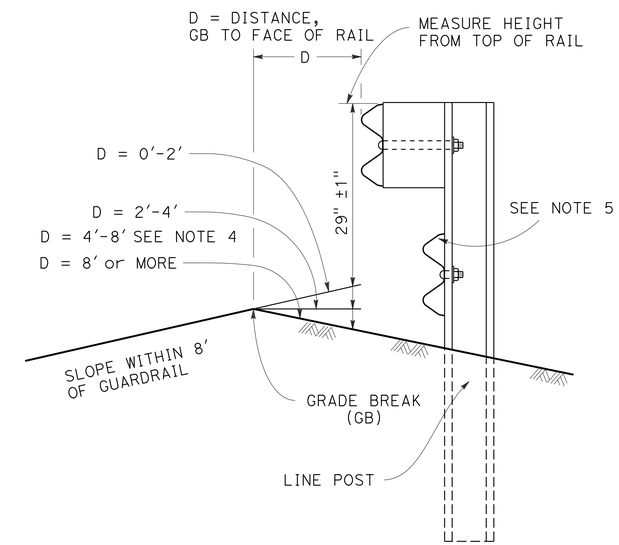

MEASURE HEIGHT DETAIL AT GRADE BREAK (GB)

WHEN THERE IS A GRADE BREAK IN FRONT OF GUARDRAIL MEASURE HEIGHT OF GUARDRAIL BASED ON DISTANCE FROM GRADE BREAK TO ADJUST FOR TRAJECTORY.

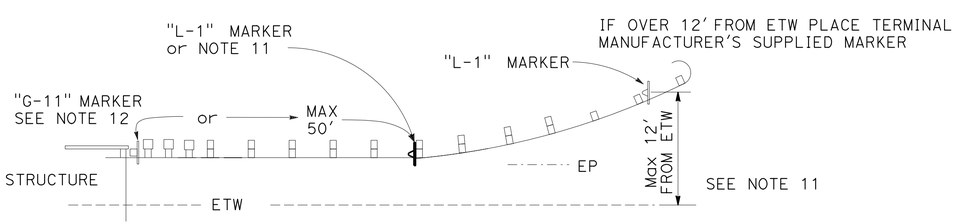

GUARDRAIL DELINEATION

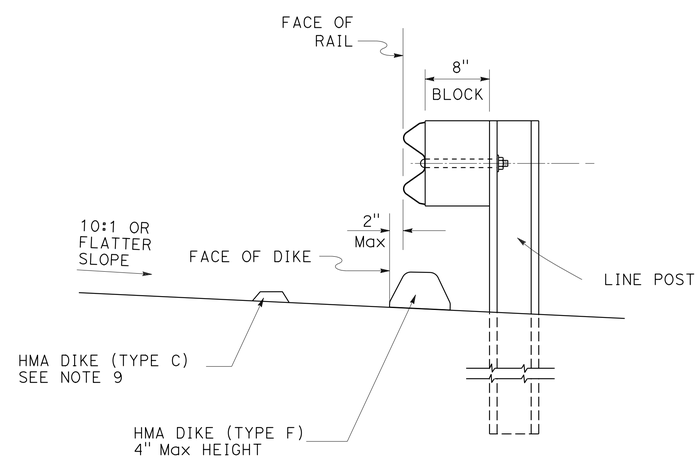

MBGR DIKE POSITIONING

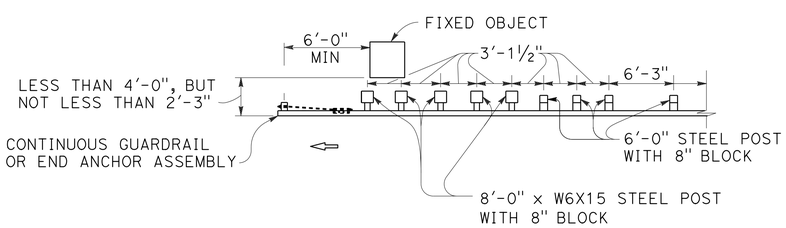

FOR A SERIES OF FIXED OBJECTS (BRIDGE COLUMNS, OVERHEAD SIGN SUPPORTS, ETC.) ADDITIONAL 8′-0" POST WITH BLOCKS AT 3′-1 ½" CENTER TO CENTER SPACING ARE TO BE USED BETWEEN FIXED OBJECTS.

STRENGTHENED RAILING SECTIONS FOR FIXED OBJECT

CONSTRUCTON DETAILS METAL BEAM GUARD RAILING

NO SCALE

C-3

REVISED BY	DATE REVISED
ZIDAN M ZHANG	JOHN HART

CALCULATED-DESIGNED BY / CHECKED BY

FUNCTIONAL SUPERVISOR: ERIC ORR

STATE OF CALIFORNIA - DEPARTMENT OF TRANSPORTATION
Caltrans
DESIGN

P:\proj1\02\4G650_plans\pse\24g650ga003.dgn

LAST REVISION 10-29-15 | DATE PLOTTED => 25-NOV-2015 | TIME PLOTTED => 08:22

Dist	COUNTY	ROUTE	POST MILES TOTAL PROJECT	SHEET No.	TOTAL SHEETS
02	Sha	299	88.7/89.2	8	23

REGISTERED CIVIL ENGINEER 10-29-15 DATE

11-05-15
PLANS APPROVAL DATE

REGISTERED PROFESSIONAL ENGINEER JOHN HART No. C69586 Exp. 6-30-16 CIVIL STATE OF CALIFORNIA

THE STATE OF CALIFORNIA OR ITS OFFICERS OR AGENTS SHALL NOT BE RESPONSIBLE FOR THE ACCURACY OR COMPLETENESS OF SCANNED COPIES OF THIS PLAN SHEET.

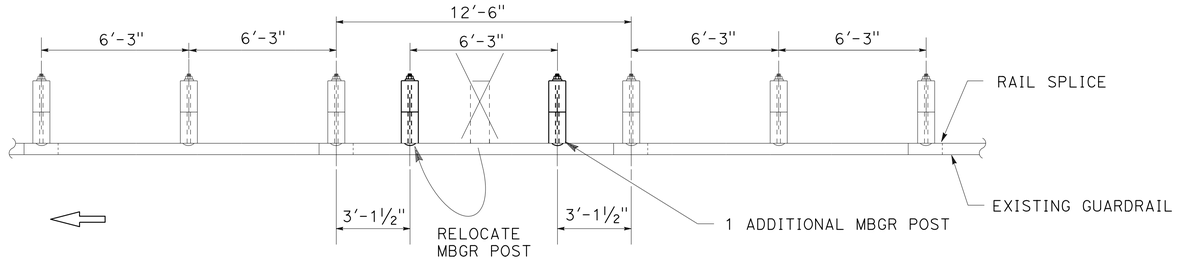

CASE 1
(ONE POST CONFLICT, MOVE THE POST and ADD ONE POST)
(NO NESTED RAIL REQUIRED)

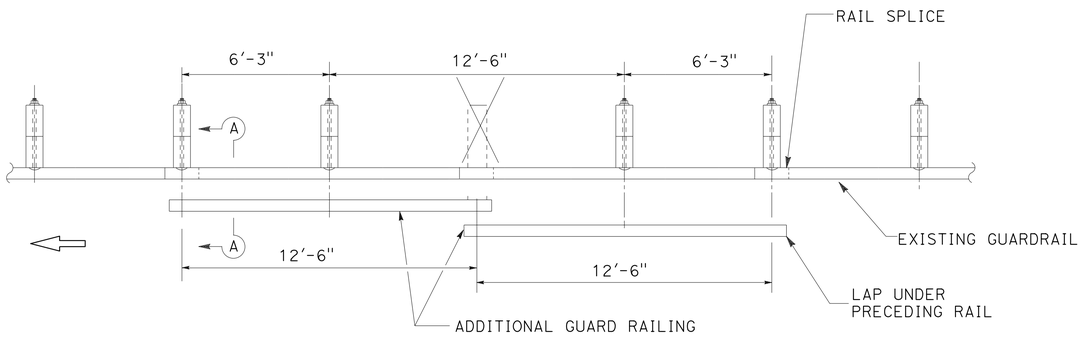

CASE 2
(ONE POST OMITTED AT JUNCTION OF TWO ELEMENTS)
(NEST TWO LENGTHS OF RAIL REQUIRED)

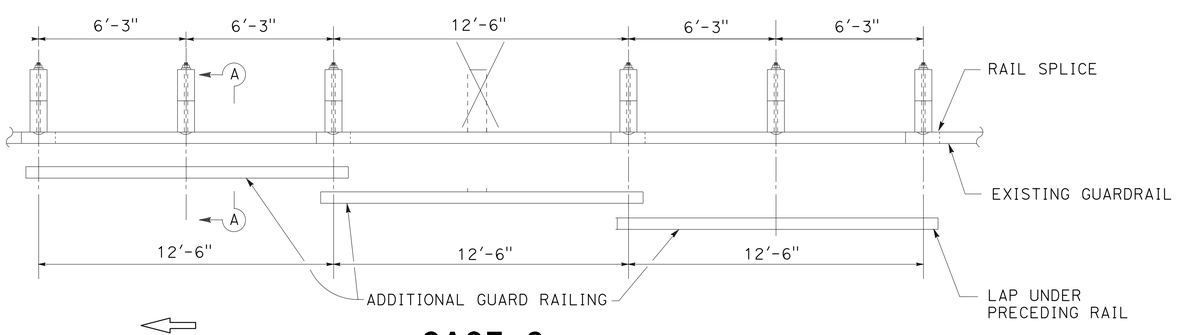

CASE 3
(ONE POST OMITTED AT CENTER OF OF ELEMENT)
(NEST THREE LENGTHS OF RAIL REQUIRED)
(ONE ADDITIONAL POST MAY BE OMITTED SEE NOTE 3)

NOTES:

1. NEST ALL RAILS AT EXISTING RAIL LAPS
2. WHEN A POST IS REMOVED AND THE RAIL ELEMENTS ARE NESTED, THE NESTED ELEMENTS MUST BE SUPPORTED BY A MIN OF 2 POSTS EACH SIDE OF THE OMITTED POST.
3. USING CASE 3, A SECOND ADJACENT POST CAN BE REMOVED IF THE NESTED RAIL ELEMENTS ARE SUPPORTED BY A MIN OF 2 POSTS EACH SIDE OF THE MISSING POSTS. THE 2-POST OPTION USES CASE 3 BUT NOT SHOWN.

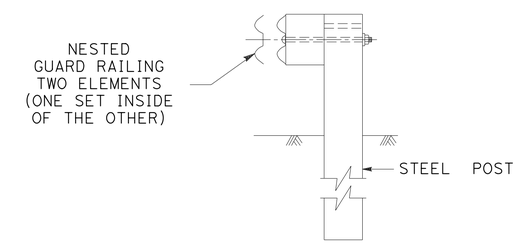

SECTION A-A

TYPICAL RAILING OVERLAP INSTALLATION AT POST

CONSTRUCTION DETAILS
MBGR-OMIT POST OPTIONS
LONG SPAN NESTED GUARD RAILING

NO SCALE

C-4

REVISED BY	DATE REVISED

CALCULATED-DESIGNED BY	CHECKED BY
ZIDAN M ZHANG	JOHN HART

FUNCTIONAL SUPERVISOR: ERIC ORR

STATE OF CALIFORNIA - DEPARTMENT OF TRANSPORTATION
Caltrans® **DESIGN**

P:\proj\02\4G650_plans\pse\24g650ga004.dgn

LAST REVISION 10-29-15 | DATE PLOTTED => 25-NOV-2015 | TIME PLOTTED => 08:22

Dist	COUNTY	ROUTE	POST MILES TOTAL PROJECT	SHEET No.	TOTAL SHEETS
02	Sha	299	88.7/89.2	9	23

Zidan M. Zhang 10-29-15
REGISTERED CIVIL ENGINEER DATE

11-05-15
PLANS APPROVAL DATE

REGISTERED PROFESSIONAL ENGINEER Z. M. ZHANG No. C69054 Exp. 6-30-16 CIVIL STATE OF CALIFORNIA

THE STATE OF CALIFORNIA OR ITS OFFICERS OR AGENTS SHALL NOT BE RESPONSIBLE FOR THE ACCURACY OR COMPLETENESS OF SCANNED COPIES OF THIS PLAN SHEET.

NOTES:

1. EXACT SIGN LOCATIONS WILL BE DETERMINED BY THE ENGINEER.
2. CALIFORNIA CODES ARE DESIGNATED BY (CA), OTHERWISE FEDERAL CODES ARE SHOWN.
3. ALL CONSTRUCTION AREA SIGNS SHALL BE BLACK ON ORANGE.

LEGEND

SIGN, STATIONARY MOUNTED, SINGLE POST

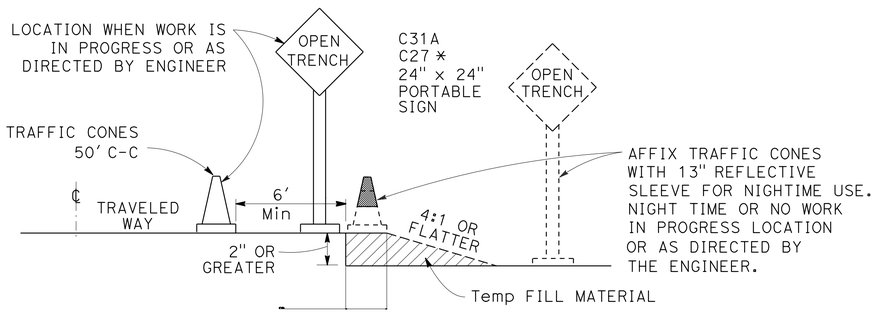

OPEN TRENCH SIGNING AND MARKING

* PLACE AT 250' INTERVALS THROUGH THE OPEN TRENCH AREA, ALTERNATE C27 (OPEN TRENCH) AND C31A (NO SHOULDER) SIGNS

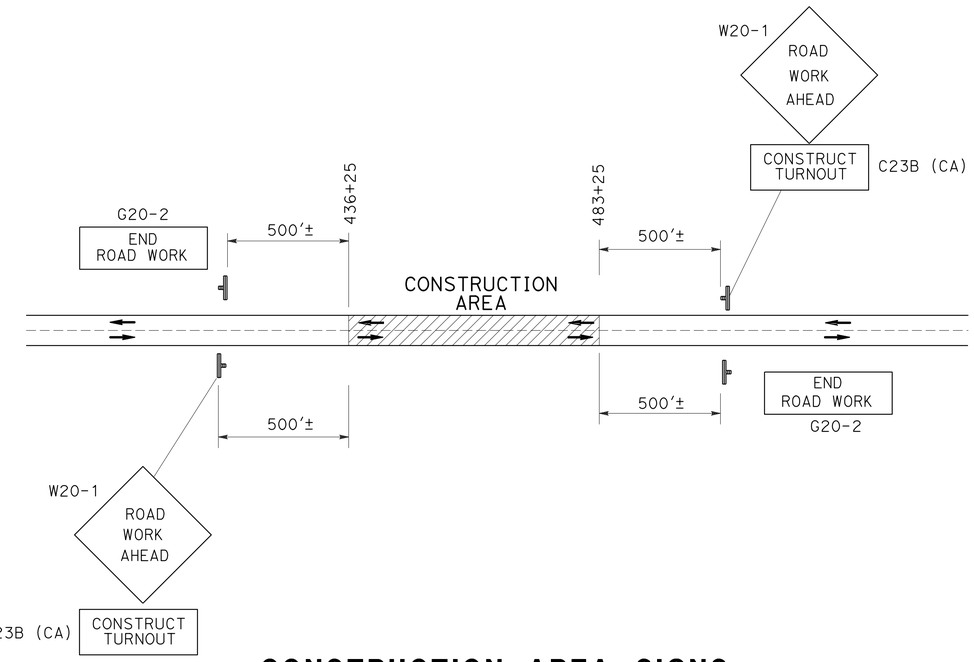

CONSTRUCTION AREA SIGNS (TYPICAL)

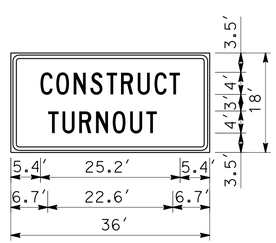

1.5" Radius, 0.6" Border, 0.4" Indent, Black on Orange;
[CONSTRUCT] C;
[TURNOUT] C;

CONSTRUCTION AREA SIGNS (STATIONARY MOUNTED)

CODE	PANEL SIZE	SIGN MESSAGE	No. AND SIZE OF POSTS	EACH
W20-1	48" x 48"	ROAD WORK AHEAD	1-4" x 6"	2
C23B (CA)	36" x 18"	CONSTRUCT TURNOUT		2
G20-2	36" x 18"	END ROAD WORK	1-4" x 4"	2
TOTAL				6

CONSTRUCTION AREA SIGNS

NO SCALE

CS-1

STATE OF CALIFORNIA - DEPARTMENT OF TRANSPORTATION
Caltrans® DESIGN
FUNCTIONAL SUPERVISOR: ERIC ORR
CALCULATED-DESIGNED BY: ZIDAN M. ZHANG
CHECKED BY: WILLIAM C. LEHMAN
REVISED BY / DATE REVISED
P:\proj1\02\4G650_plans\pse\24g650la001.dgn
LAST REVISION 10-29-15 | DATE PLOTTED => 25-NOV-2015 | TIME PLOTTED => 08:22

Dist	COUNTY	ROUTE	POST MILES TOTAL PROJECT	SHEET No.	TOTAL SHEETS
02	Sha	299	88.7/89.2	10	23

Zidan M. Zhang 10-29-15
REGISTERED CIVIL ENGINEER DATE

11-05-15
PLANS APPROVAL DATE

REGISTERED PROFESSIONAL ENGINEER Z. M. ZHANG No. C69054 Exp. 6-30-16 CIVIL STATE OF CALIFORNIA

THE STATE OF CALIFORNIA OR ITS OFFICERS OR AGENTS SHALL NOT BE RESPONSIBLE FOR THE ACCURACY OR COMPLETENESS OF SCANNED COPIES OF THIS PLAN SHEET.

NOTE:

1. EXACT LOCATION OF SIGNS TO BE DETERMINED BY THE ENGINEER.

LEGEND:

- XX — PAVEMENT DELINEATION STRIPE DETAIL No.
- X-X — ROADSIDE SIGN
- WOOD SIGN (1-POST)
- WOOD SIGN (2-POST)
- MILEPOST MARKER
- SINGLE STRIPE MARKER
- OBJECT MARKER (TYPE L-1)
- DELINEATOR (TYPE E)
- RESET ROADSIDE SIGN (ONE POST)
- RESET ROADSIDE SIGN (TWO POST)

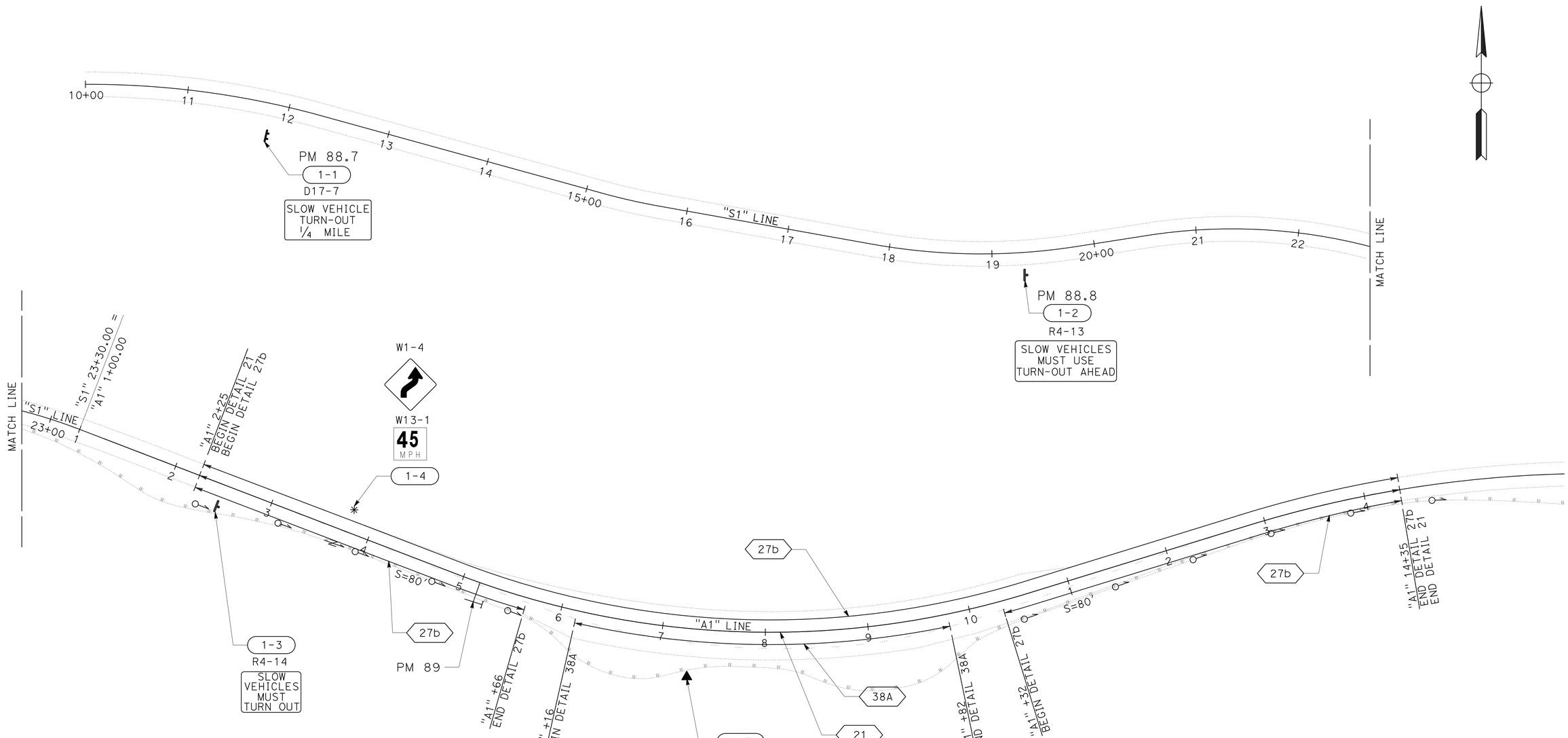

PAVEMENT DELINEATION AND SIGN PLAN

SCALE: 1" = 50' **PD-1**

APPROVED FOR PAVEMENT DELINEATION AND SIGN WORK ONLY

REVISED BY	DATE REVISED

CALCULATED-DESIGNED BY: ZIDAN M. ZHANG
CHECKED BY: WILLIAM C. LEHMAN
FUNCTIONAL SUPERVISOR: ERIC ORR

STATE OF CALIFORNIA - DEPARTMENT OF TRANSPORTATION
Caltrans
DESIGN

P:\proj1\02\4G650_plans\pse\24g650na001.dgn

LAST REVISION 10-29-15
DATE PLOTTED => 25-NOV-2015
TIME PLOTTED => 08:22

Dist	COUNTY	ROUTE	POST MILES TOTAL PROJECT	SHEET No.	TOTAL SHEETS
02	Sha	299	88.7/89.2	11	23

Zidan M. Zhang 10-29-15
REGISTERED CIVIL ENGINEER DATE

11-05-15
PLANS APPROVAL DATE

REGISTERED PROFESSIONAL ENGINEER Z. M. ZHANG No. C69054 Exp. 6-30-16 CIVIL STATE OF CALIFORNIA

THE STATE OF CALIFORNIA OR ITS OFFICERS OR AGENTS SHALL NOT BE RESPONSIBLE FOR THE ACCURACY OR COMPLETENESS OF SCANNED COPIES OF THIS PLAN SHEET.

NOTES:

1. USE A 2¼" SQUARE TUBE x 30" LONG, 3/16" THICK ANCHOR FOR 2" POSTS. USE A 3" SQUARE TUBE x 3' LONG, 3/16" THICK ANCHOR FOR 2-1/2 " POSTS.
2. USE A 5/16" CORNER BOLT OR TWO DRIVE RIVETS TO FASTEN ASSEMBLED SIGN AND POST INTO ANCHOR. INSTALL CORNER BOLT OR DRIVE RIVETS INTO THE SIDES FACING TRAFFIC.
3. REMOVE EXISTING AC OR PCC, DRIVE ANCHOR SLEEVE INTO SOIL AND RECAP WITH LIKE MATERIAL, MATCHING EXISTING THICKNESS.
4. 2" POSTS ARE TO BE 1/8" THICK, PERFORATIONS OF 7/16" IN DIAMETER ARE 1" ON CENTER ON ALL SIDES, LENGTHS ARE 10' AND 12'.
5. 2-1/2" POSTS ARE TO BE 1/8" THICK, PERFORATIONS OF 7/16" IN DIAMETER ARE 1" ON CENTER ON ALL SIDES, 2-1/2" POSTS ARE 12' AND 14' IN LENGTH.
6. FOR DETAILS NOT SHOWN, REFER TO THE STANDARD PLANS.
7. ALL ANCHOR SLEEVES SHALL BE EMBEDDED IN MINOR CONCRETE.
8. THE MARKER SHALL BE WHITE (NON-REFLECTIVE) TARGET PLATE WITH BLACK SERIES D NUMERALS AND LETTERS. STENCILED IN BLACK ENAMEL.
9. A POST MILE PREFIX, SUCH AS "R", SHALL APPLY ONLY WHEN DIRECTED BY THE ENGINEER.
10. "BK" (BACK), "AH" (AHEAD), OR A BLANK SPACE SHALL APPLY AS DIRECTED BY THE ENGINEER.
11. ALL INFORMATION SHALL BE IN ENGLISH UNITS (MILES).

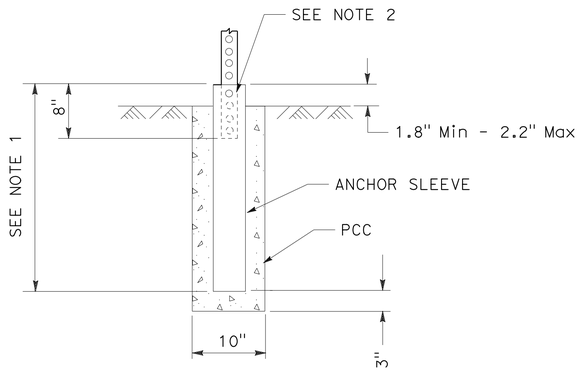

INSTALLATION IN SOIL (PCC)
(SEE NOTE 7)

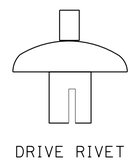

DRIVE RIVET

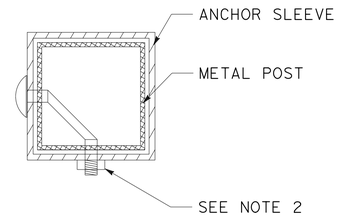

FASTENER DETAILS

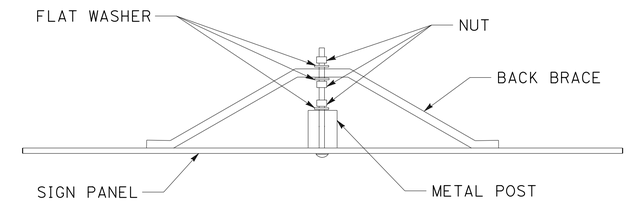

BACK BRACE MOUNTING DETAIL

METAL SIGN POST INSTALLATION DETAILS

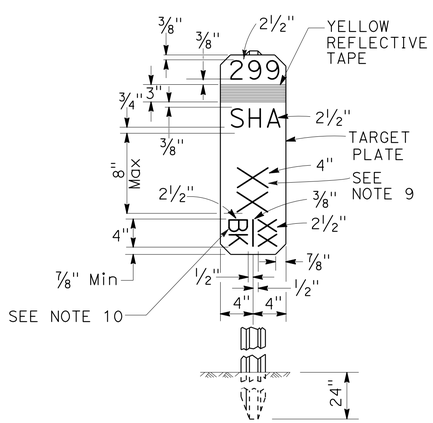

FRONT
BACK

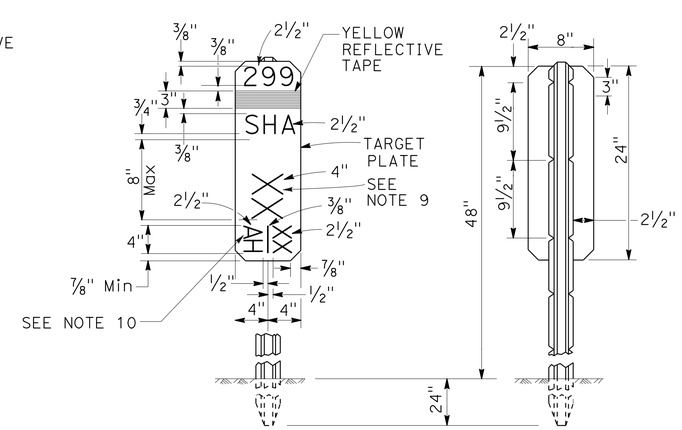

FRONT REAR

AHEAD

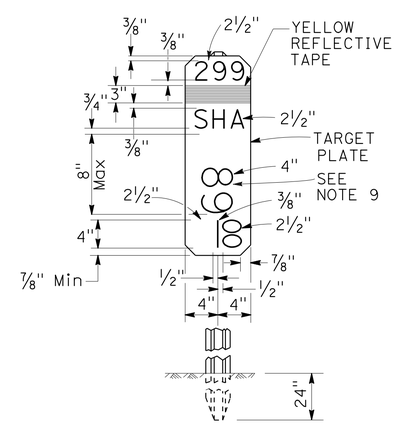

MILEPOST MARKER DETAIL

PAVEMENT DELINEATION AND SIGN DETAILS

NO SCALE

PDD-1

STATE OF CALIFORNIA - DEPARTMENT OF TRANSPORTATION
Caltrans® DESIGN

FUNCTIONAL SUPERVISOR: ERIC ORR
CALCULATED-DESIGNED BY: ZIDAN M. ZHANG
CHECKED BY: WILLIAM C. LEHMAN
REVISED BY
DATE REVISED

P:\proj1\02\4G650_plans\pse\24g650nb001.dgn

LAST REVISION 10-29-15
DATE PLOTTED => 25-NOV-2015
TIME PLOTTED => 08:22

Dist	COUNTY	ROUTE	POST MILES TOTAL PROJECT	SHEET No.	TOTAL SHEETS
02	Sha	299	88.7/89.2	12	23

Zidan M. Zhang 10-29-15
REGISTERED CIVIL ENGINEER DATE

11-05-15
PLANS APPROVAL DATE

REGISTERED PROFESSIONAL ENGINEER Z. M. ZHANG No. C69054 Exp. 6-30-16 CIVIL STATE OF CALIFORNIA

THE STATE OF CALIFORNIA OR ITS OFFICERS OR AGENTS SHALL NOT BE RESPONSIBLE FOR THE ACCURACY OR COMPLETENESS OF SCANNED COPIES OF THIS PLAN SHEET.

NOTE:

1. (N) - NOT A SEPARATE PAY ITEM, FOR INFORMATION ONLY

MATERIAL SUMMARY CONTRACTOR FURNISHED SIGNS

SIGN No.	SIGN CODE	SIGN SIZE (L x D)	SINGLE FACED	BACKGROUND		LEGEND		DESCRIPTION (REMARKS)
				SHEETING COLOR	RETROREFLECTIVE ASTM TYPE	SHEETING COLOR	RETROREFLECTIVE ASTM TYPE	
1-1	D17-7	72" x 42"	X	GREEN	XI	WHITE	XI	SLOW VEHICLE TURN-OUT 1/4 MILE
1-2	R4-13	42" x 24"	X	WHITE	IX	BLACK		SLOW VEHICLES MUST USE TURN-OUT AHEAD
1-3	R4-14	30" x 42"	X	WHITE	IX	BLACK		SLOW VEHICLES MUST TURN OUT

MARKERS AND DELINEATORS

SHEET No.	MILEPOST MARKER	DELINEATOR (CLASS 1)	OBJECT MARKER
		TYPE E	TYPE L-1
	EA	EA	EA
PD-1	1	11	1
TOTAL	1	11	1

ROADSIDE SIGNS

SHEET No.	SIGN No.	SIGN CODE	PANEL SIZE (in x in)	RESET ROADSIDE SIGN (ONE POST)	RESET ROADSIDE SIGN (TWO POST)	FURNISH SINGLE SHEET ALUMINUM SIGN (0.080"-UNFRAMED) FOR RETROREFLECTIVE SHEETING (TYPE XI)	REFLECTIVE SHEETING (TYPE XI)	FURNISH SINGLE SHEET ALUMINUM SIGN (0.063"-UNFRAMED)	ROADSIDE SIGN - ONE POST	ROADSIDE SIGN - TWO POST	(N) POST LENGTH METAL POST 2.5" x 2.5"	SIGN PANEL DESCRIPTION
				EA	EA	SQFT	SQFT	SQFT	EA	EA	LF	
PD-1	1-1	D17-7	72" x 42"			21.0	21.0			1	10, 14	SLOW VEHICLE TURN-OUT 1/4 MILE
	1-2	R4-13	42" x 24"					9.0	1		10	SLOW VEHICLES MUST USE TURN-OUT AHEAD
	1-3	R4-14	30" x 42"					8.8	1		10	SLOW VEHICLES MUST TURN OUT
	1-4	W1-4		1								REVERSING CURVE
		W13-1										45 MPH
	1-5	G79			1							VISTA POINT 1/2 MILE
TOTAL				1	1	21.0	21.0	17.8	2	1		

PAVEMENT DELINEATION

STATION	THERMOPLASTIC TRAFFIC STRIPE (SPRAYABLE)		
	DETAIL 27B	DETAIL 21	DETAIL 38A
	LF	LF	LF
"A1" 2+25 TO 14+35 L†	1204		
"A1" 2+25 TO 14+35 CENTER		1210	
"A1" 2+25 TO 5+66 R†	342		
"A1" 6+16 TO 9+78 R†			366
"A1" 10+32 TO 14+35 R†	402		
SUBTOTAL	1948	1210	366
TOTAL	3524		

PAVEMENT DELINEATION AND SIGN QUANTITIES

PDQ-1

REVISED BY | DATE REVISED
ZIDAN M. ZHANG | WILLIAM C. LEHMAN
CALCULATED-DESIGNED BY | CHECKED BY
FUNCTIONAL SUPERVISOR: ERIC ORR

STATE OF CALIFORNIA - DEPARTMENT OF TRANSPORTATION
Caltrans DESIGN

P:\proj1\02\4G650_plans\pse\24g650nc001.dgn

LAST REVISION 10-29-15 | DATE PLOTTED => 25-NOV-2015 | TIME PLOTTED => 08:22

Dist	COUNTY	ROUTE	POST MILES TOTAL PROJECT	SHEET No.	TOTAL SHEETS
02	Sha	299	88.7/89.2	13	23

Zidan M. Zhang 10-29-15
REGISTERED CIVIL ENGINEER DATE

11-05-15
PLANS APPROVAL DATE

REGISTERED PROFESSIONAL ENGINEER Z. M. ZHANG No. C69054 Exp. 6-30-16 CIVIL STATE OF CALIFORNIA

THE STATE OF CALIFORNIA OR ITS OFFICERS OR AGENTS SHALL NOT BE RESPONSIBLE FOR THE ACCURACY OR COMPLETENESS OF SCANNED COPIES OF THIS PLAN SHEET.

NOTE:

1. (N) - NOT A SEPARATE PAY ITEM, FOR INFORMATION ONLY

RECONSTRUCT GUARDRAIL

STATION	RECONSTRUCT GUARDRAIL	RECONSTRUCT GUARDRAIL (7' POST)
	LF	LF
"A1" 2+75 TO 5+75		315
"A1" 5+75 TO 10+25	496	
"A1" 10+25 TO 11+00		76
"A1" 11+00 TO 13+85	285	
TOTAL	781	391

SMALL-ROCK SLOPE PROTECTION

STATION	CY
"A1" 11+00 TO 12+91	15

TREATED WOOD WASTE

STATION	LB
"A1" 2+75 TO 13+85	17,263

ROADWAY QUANTITIES

STATION	ROADWAY EXCAVATION	COLD PLANE ASPHALT CONCRETE PAVEMENT	SHOULDER BACKING	CLASS 2 AGGREGATE BASE	HOT MIX ASPHALT (TYPE A)	TACK COAT	(N) EMBANKMENT	COMMENTS
	CY	SQYD	TON	CY	TON	TON	CY	
"A1" 2+75 TO 3+00		75			10.7	0.02		
"A1" 3+00 TO 13+60	1461			906.2	1631.1	0.54	171	
"A1" 13+60 TO 13+85		65			9.4	0.02		
"A1" 5+86.1 TO 10+33.6 R+				16.6	9.0			TAPERED EDGE
"A1" 3+00 TO 13+60 L+			154.8	39.3	21.2			TAPERED EDGE
"A1" 3+00 TO 13+60 R+			154.8					
TOTAL	1461	140	309.6	962.1	1681.4	0.58	171	

TEMPORARY WATER POLLUTION CONTROL

	Temp DRAINAGE INLET PROTECTION	Temp SILT FENCE	Temp GRAVEL BAG BERM	Temp COVER
	EA	LF	LF	SQYD
TOTAL	1	1100	110	8000

SUMMARY OF QUANTITIES

Q-1

REVISED BY	DATE REVISED

ZIDAN M. ZHANG — WILLIAM C. LEHMAN

CALCULATED-DESIGNED BY — CHECKED BY

FUNCTIONAL SUPERVISOR: ERIC ORR

STATE OF CALIFORNIA - DEPARTMENT OF TRANSPORTATION — DESIGN

P:\proj1\02\4G650_plans\pse\24g650pa001.dgn

LAST REVISION 10-29-15 — DATE PLOTTED => 25-NOV-2015 — TIME PLOTTED => 08:22

Dist	COUNTY	ROUTE	POST MILES TOTAL PROJECT	SHEET No.	TOTAL SHEETS
02	Sha	299	88.7/89.2	14	23

LICENSED LANDSCAPE ARCHITECT

11-05-15
PLANS APPROVAL DATE

LICENSED LANDSCAPE ARCHITECT J. PATRICK SULLIVAN #3125 Signature 07/31/16 Renewal Date 10/29/15 Date STATE OF CALIFORNIA

THE STATE OF CALIFORNIA OR ITS OFFICERS OR AGENTS SHALL NOT BE RESPONSIBLE FOR THE ACCURACY OR COMPLETENESS OF SCANNED COPIES OF THIS PLAN SHEET.

NOTE:

1. FOR ACCURATE RIGHT OF WAY DATA, CONTACT RIGHT OF WAY ENGINEERING AT THE DISTRICT OFFICE.

LEGEND:

WOOD MULCH (EROSION CONTROL)

WOOD MULCH TOTALS

WOOD MULCH LOCATION(S)	WOOD MULCH
	CY
EC-1	35.0
TOTAL	35.0

NOTES:

1. PLACE 4" DEPTH OF MULCH ON DISTURBED SOILS AS SHOWN ON THE PLANS, COVERING EXPOSED SOIL.
2. WOOD MULCH TYPE MUST BE TREE TRIMMING MULCH.

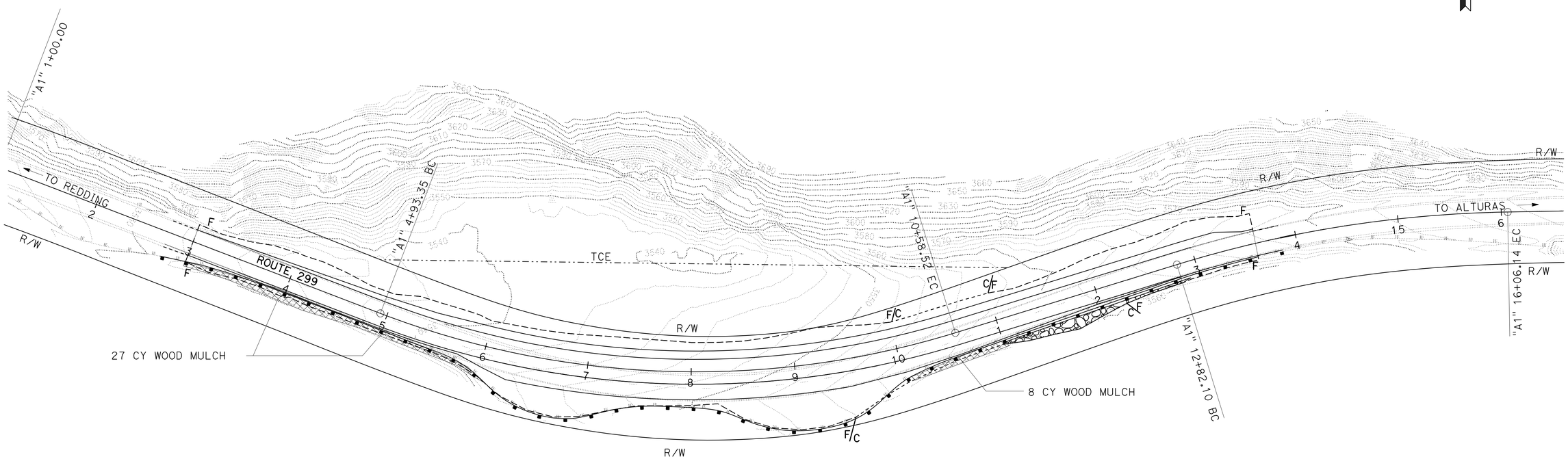

EROSION CONTROL PLAN & QUANTITIES SHEET

SCALE: 1" = 50'

EC-1

APPROVED FOR EROSION CONTROL WORK ONLY

REVISED BY | DATE REVISED

J. PATRICK SULLIVAN | RON FLORY

CALCULATED-DESIGNED BY | CHECKED BY

SENIOR LANDSCAPE ARCHITECT | RON FLORY

STATE OF CALIFORNIA - DEPARTMENT OF TRANSPORTATION
Caltrans® LANDSCAPE ARCHITECTURE

P:\proj\02\4G650_plans\pse\24g650te001.dgn

LAST REVISION 10-29-15 | DATE PLOTTED => 25-NOV-2015 TIME PLOTTED => 08:22

M

Maint	MAINTENANCE
Max	MAXIMUM
MB	METAL BEAM
MBB	METAL BEAM BARRIER
MBGR	METAL BEAM GUARD RAILING
Med	MEDIAN
MGS	MIDWEST GUARDRAIL SYSTEM
MH	MANHOLE
Min	MINIMUM
Misc	MISCELLANEOUS
Misc I & S	MISCELLANEOUS IRON AND STEEL
Mkr	MARKER
Mod	MODIFIED,
	MODIFY
Mon	MONUMENT
MP	METAL PLATE
MPGR	METAL PLATE GUARD RAILING
MR	MOVEMENT RATING
MSE	MECHANICALLY STABILIZED EMBANKMENT
Mt	MOUNTAIN, MOUNT
Mtl	MATERIAL
MVP	MAINTENANCE VEHICLE PULLOUT

N

N	NORTH
NB	NORTHBOUND
No.	NUMBER (MUST HAVE PERIOD)
Nos.	NUMBERS (MUST HAVE PERIOD)
NPS	NOMINAL PIPE SIZE
NS	NEAR SIDE
NSP	NEW STANDARD PLAN
NTS	NOT TO SCALE

O

Oblr	OBLITERATE
OC	OVERCROSSING
OD	OUTSIDE DIAMETER
OF	OUTSIDE FACE
OG	ORIGINAL GROUND
OGAC	OPEN GRADED ASPHALT CONCRETE
OGFC	OPEN GRADED FRICTION COURSE
OH	OVERHEAD
OHWM	ORDINARY HIGH WATER MARK
O-O	OUT TO OUT
Opp	OPPOSITE
OSD	OVERSIDE DRAIN

P

P	PAGE
PAP	PERFORATED ALUMINUM PIPE
PB	PULL BOX
PC	POINT OF CURVATURE,
	PRECAST
PCC	POINT OF COMPOUND CURVE,
	PORTLAND CEMENT CONCRETE
PCMS	PORTABLE CHANGEABLE MESSAGE SIGN
PCP	PERFORATED CONCRETE PIPE,
	PRESTRESSED CONCRETE PIPE
PCVC	POINT OF COMPOUND VERTICAL CURVE
PEC	PERMIT TO ENTER AND CONSTRUCT
Ped	PEDESTRIAN
Ped OC	PEDESTRIAN OVERCROSSING
Ped UC	PEDESTRIAN UNDERCROSSING
Perm Mtl	PERMEABLE MATERIAL

P continued

PG	PROFILE GRADE
PI	POINT OF INTERSECTION
PJP	PARTIAL JOINT PENETRATION
Pkwy	PARKWAY
ℙ,PL	PLATE
P/L	PROPERTY LINE
PM	POST MILE,
	TIME FROM NOON TO MIDNIGHT
PN	PAVING NOTCH
POC	POINT OF HORIZONTAL CURVE
POT	POINT OF TANGENT
POVC	POINT OF VERTICAL CURVE
PP	PIPE PILE,
	PLASTIC PIPE,
	POWER POLE
PPL	PREFORMED PERMEABLE LINER
PPP	PERFORATED PLASTIC PIPE
PRC	POINT OF REVERSE CURVE
PRF	PAVEMENT REINFORCING FABRIC
PRVC	POINT OF REVERSE VERTICAL CURVE
PS&E	PLANS, SPECIFICATIONS AND ESTIMATES
PS, P/S	PRESTRESSED
PSP	PERFORATED STEEL PIPE
PT	POINT OF TANGENCY
PVC	POLYVINYL CHLORIDE
Pvmt	PAVEMENT

Q

Qty	QUANTITY

R

R	RADIUS
R & D	REMOVE AND DISPOSE
R & S	REMOVE AND SALVAGE
R/C	RATE OF CHANGE
RCA	REINFORCED CONCRETE ARCH
RCB	REINFORCED CONCRETE BOX
RCP	REINFORCED CONCRETE PIPE
RCPA	REINFORCED CONCRETE PIPE ARCH
Rd	ROAD
Reinf	REINFORCED,
	REINFORCEMENT,
	REINFORCING
Rel	RELOCATE
Repl	REPLACEMENT
Ret	RETAINING
Rev	REVISED, REVISION
Rdwy	ROADWAY
RHMA	RUBBERIZED HOT MIX ASPHALT
Riv	RIVER
RM	ROAD-MIXED
RP	RADIUS POINT,
	REFERENCE POINT
RR	RAILROAD
RSP	ROCK SLOPE PROTECTION,
	REVISED STANDARD PLAN
Rt	RIGHT
Rte	ROUTE
RW	REDWOOD,
	RETAINING WALL
R/W	RIGHT OF WAY
Rwy	RAILWAY

S

S	SOUTH,
	SUPPLEMENT
SAE	STRUCTURE APPROACH EMBANKMENT
Salv	SALVAGE
SAPP	STRUCTURAL ALUMINUM PLATE PIPE
SB	SOUTHBOUND
SC	SAND CUSHION
SCSP	SLOTTED CORRUGATED STEEL PIPE
SD	STORM DRAIN
Sec	SECOND,
	SECTION
Sep	SEPARATION
SG	SUBGRADE
Shld	SHOULDER
Sht	SHEET
Sim	SIMILAR
℄	STATION LINE
SM	SELECTED MATERIAL
Spec	SPECIAL,
	SPECIFICATIONS
SPP	SLOTTED PLASTIC PIPE
SS	SLOPE STAKE
SSBM	STRAP AND SADDLE BRACKET METHOD
SSD	STRUCTURAL SECTION DRAIN
SSPA	STRUCTURAL STEEL PLATE ARCH
SSPP	STRUCTURAL STEEL PLATE PIPE
SSPPA	STRUCTURAL STEEL PLATE PIPE ARCH
SSRP	STEEL SPIRAL RIB PIPE
St	STREET
Sta	STATION
STBB	SINGLE THRIE BEAM BARRIER
Std	STANDARD
Str	STRUCTURE
Surf	SURFACING
SW	SIDEWALK,
	SOUND WALL
Swr	SEWER
Sym	SYMMETRICAL
S4S	SURFACE 4 SIDES

T

T	SEMI-TANGENT
Tan	TANGENT
TBB	THRIE BEAM BARRIER
Tbr	TIMBER
TC	TOP OF CURB
TCB	TRAFFIC CONTROL BOX
TCE	TEMPORARY CONSTRUCTION EASEMENT
Tel	TELEPHONE
Temp	TEMPORARY
TG	TOP OF GRADE
Tot	TOTAL
TP	TELEPHONE POLE
TPB	TREATED PERMEABLE BASE
TPM	TREATED PERMEABLE MATERIAL
Trans	TRANSITION

T continued

TS	TRANSVERSE,
	TRAFFIC SIGNAL,
	TUBULAR STEEL
Typ	TYPICAL

U

UC	UNDERCROSSING
UD	UNDERDRAIN
UG	UNDERGROUND
UON	UNLESS OTHERWISE NOTED
UP	UNDERPASS

V

V	VALVE,
	DESIGN SPEED
Var	VARIABLE,
	VARIES
VC	VERTICAL CURVE
VCP	VITRIFIED CLAY PIPE
Vert	VERTICAL
Via	VIADUCT
Vol	VOLUME

W

W	WEST,
	WIDTH
WB	WESTBOUND
WH	WEEP HOLE
WM	WIRE MESH
WS	WATER SURFACE
WSP	WELDED STEEL PIPE
Wt	WEIGHT
WV	WATER VALVE
WW	WINGWALL
WWLOL	WINGWALL LAYOUT LINE

X

X Sec	CROSS SECTION
Xing	CROSSING

Y

Yr	YEAR
Yrs	YEARS

Dist	COUNTY	ROUTE	POST MILES TOTAL PROJECT	SHEET No.	TOTAL SHEETS
02	Sha	299	88.9/89.2	15	23

Grace M. Tsushima
REGISTERED CIVIL ENGINEER

July 19, 2013
PLANS APPROVAL DATE

REGISTERED PROFESSIONAL ENGINEER
Grace M. Tsushima
No. C49814
Exp. 9-30-14
CIVIL
STATE OF CALIFORNIA

THE STATE OF CALIFORNIA OR ITS OFFICERS OR AGENTS SHALL NOT BE RESPONSIBLE FOR THE ACCURACY OR COMPLETENESS OF SCANNED COPIES OF THIS PLAN SHEET.

TO ACCOMPANY PLANS DATED 11-05-15

UNIT OF MEASUREMENT SYMBOLS:

Some of the symbols used in the project plan quantity tables and in the Bid Item List are:

TABLE A

SYMBOL USED	DEFINITIONS
ACRE	ACRE
CF	CUBIC FOOT
CY	CUBIC YARD
EA	EACH
GAL	GALLON
LB	POUND
LF	LINEAR FOOT
SQFT	SQUARE FOOT
SQYD	SQUARE YARD
STA	100 FEET
TAB	TABLET
TON	2,000 POUNDS

Some of the symbols used in the plans other than in the project plan quantity tables are:

TABLE B

SYMBOL USED	DEFINITIONS
ksi	KIPS PER SQUARE INCH
ksf	KIPS PER SQUARE FOOT
psi	POUNDS PER SQUARE INCH
psf	POUNDS PER SQUARE FOOT
lb/ft^3, pcf	POUNDS PER CUBIC FOOT
tsf	TONS PER SQUARE FOOT
mph, MPH *	MILES PER HOUR
ø	NOMINAL DIAMETER
oz	OUNCE
lb	POUND
kip	1,000 POUNDS
cal	CALORIE
ft	FOOT OR FEET
gal	GALLON

* For use on a sign panel only

STATE OF CALIFORNIA
DEPARTMENT OF TRANSPORTATION

ABBREVIATIONS (SHEET 2 OF 2)

NO SCALE

RSP A10B DATED JULY 19, 2013 SUPERSEDES STANDARD PLAN A10B DATED MAY 20, 2011 - PAGE 2 OF THE STANDARD PLANS BOOK DATED 2010.

REVISED STANDARD PLAN RSP A10B

2010 REVISED STANDARD PLAN RSP A10B

DATE PLOTTED => 25-NOV-2015
TIME PLOTTED => 08:22

Dist	COUNTY	ROUTE	POST MILES TOTAL PROJECT	SHEET No.	TOTAL SHEETS
02	Sha	299	88.9/89.2	16	23

Randell D. Hiatt
REGISTERED CIVIL ENGINEER

July 19, 2013
PLANS APPROVAL DATE

REGISTERED PROFESSIONAL ENGINEER
Randell D. Hiatt
No. C50200
Exp. 6-30-15
CIVIL
STATE OF CALIFORNIA

THE STATE OF CALIFORNIA OR ITS OFFICERS OR AGENTS SHALL NOT BE RESPONSIBLE FOR THE ACCURACY OR COMPLETENESS OF SCANNED COPIES OF THIS PLAN SHEET.

TO ACCOMPANY PLANS DATED 11-05-15

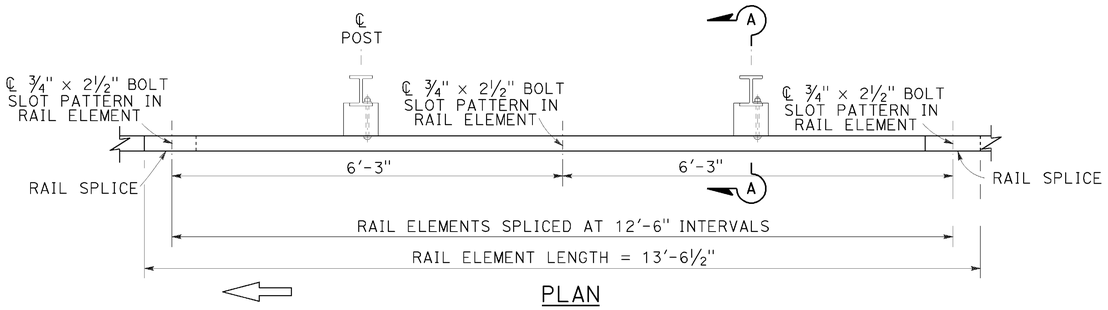

PLAN

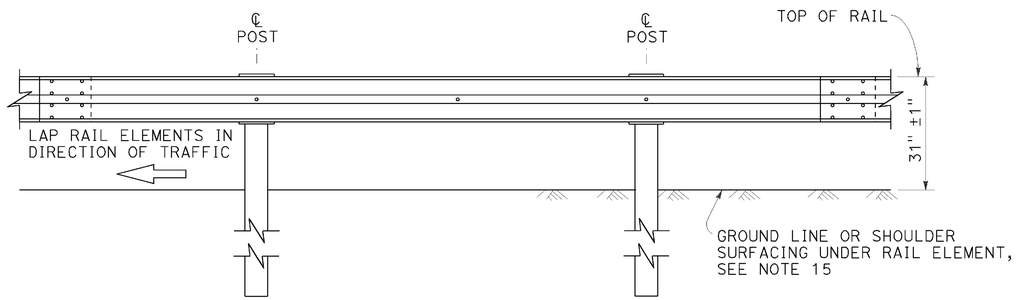

ELEVATION

MIDWEST GUARDRAIL SYSTEM WITH STEEL POSTS AND NOTCHED WOOD OR NOTCHED RECYCLED PLASTIC BLOCKS

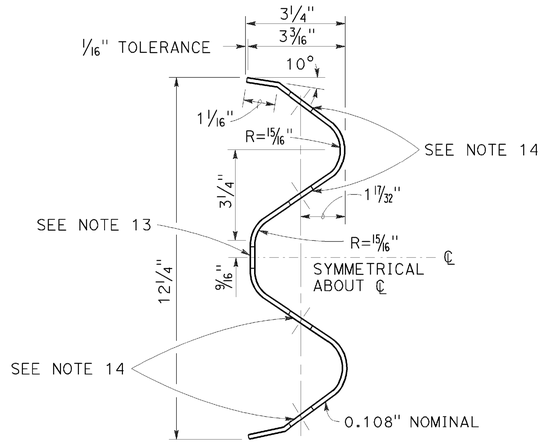

SECTION THRU RAIL ELEMENT

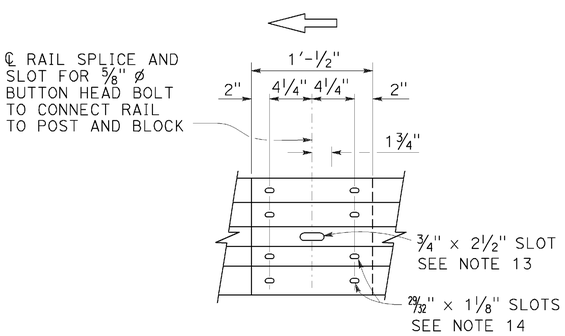

ELEVATION

RAIL ELEMENT SPLICE DETAIL

a) Connect the over lapped end of the rail elements with ⅝" ø × 1⅜" button head oval shoulder splice bolts inserted into the 29⁄32" × 1⅛" slots and bolted together with ⅝" ø recessed hex nuts. Recess of hex nut points toward rail element. A total of 8 bolts and nuts are to be used at each rail splice connection.

b) The ends of the rail elements are to be overlapped in the direction of traffic (see details).

c) Where end cap is to be attached to the end of a rail element, a total of 4 of the above described splice bolts and nuts are to be used.

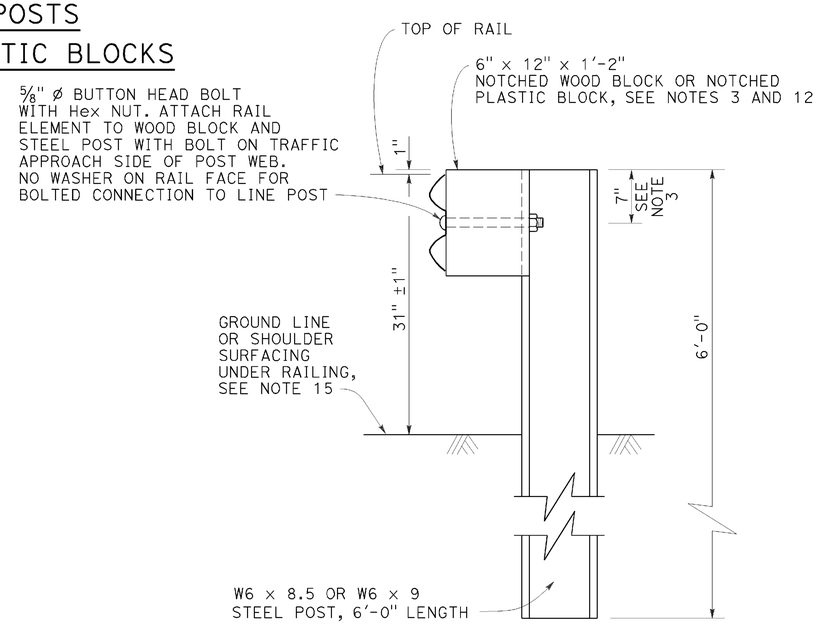

SECTION A-A

TYPICAL STEEL LINE POST INSTALLATION

See Note 4

NOTES:

1. For details of wood post installations, see Revised Standard Plan RSP A77L1.
2. For details of standard hardware used to construct MGS, see Revised Standard Plan RSP A77M1.
3. For details of steel posts and notched wood blocks used to construct MGS, see Revised Standard Plan RSP A77N2.
4. For additional installation details, see Revised Standard Plan RSP A77N3.
5. MGS post spacing to be 6'-3" center to center, except as otherwise noted.
6. For MGS typical layouts, see the A77P, A77Q and A77R Series of Standard Plans.
7. If railing is connected to terminal system end treatment, use 31" height terminal system end treatment.
8. For MGS end anchor details, see Revised Standard Plans RSP A77S1 and RSP A77T2.
9. For details of MGS transition to bridge railing, see Revised Standard Plan RSP A77U4.
10. For additional details of MGS connection to bridge railings, see Revised Standard Plans RSP A77U1, RSP A77U2 and RSP A77V1.
11. For dike positioning and MGS delineation details, see Revised Standard Plan RSP A77N4.
12. Notched face of block faces steel post.
13. Slotted hole for bolted connection of rail element to block and post. See "Section Thru Rail Element".
14. Slotted holes for splice bolts to overlap ends of rail element. See "Section Thru Rail Element".
15. Install posts in soil.

STATE OF CALIFORNIA
DEPARTMENT OF TRANSPORTATION

MIDWEST GUARDRAIL SYSTEM STANDARD RAILING SECTION (STEEL POST WITH NOTCHED WOOD OR NOTCHED RECYCLED PLASTIC BLOCK)

NO SCALE

RSP A77L2 DATED JULY 19, 2013 SUPPLEMENTS THE STANDARD PLANS BOOK DATED 2010.

REVISED STANDARD PLAN RSP A77L2

2010 REVISED STANDARD PLAN RSP A77L2

DATE PLOTTED => 25-NOV-2015
TIME PLOTTED => 08:23

Dist	COUNTY	ROUTE	POST MILES TOTAL PROJECT	SHEET No.	TOTAL SHEETS
02	Sha	299	88.9/89.2	17	23

Randell D. Hiatt
REGISTERED CIVIL ENGINEER

July 19, 2013
PLANS APPROVAL DATE

REGISTERED PROFESSIONAL ENGINEER
Randell D. Hiatt
No. C50200
Exp. 6-30-15
CIVIL
STATE OF CALIFORNIA

THE STATE OF CALIFORNIA OR ITS OFFICERS OR AGENTS SHALL NOT BE RESPONSIBLE FOR THE ACCURACY OR COMPLETENESS OF SCANNED COPIES OF THIS PLAN SHEET.

TO ACCOMPANY PLANS DATED 11-05-15

2010 REVISED STANDARD PLAN RSP A77L3

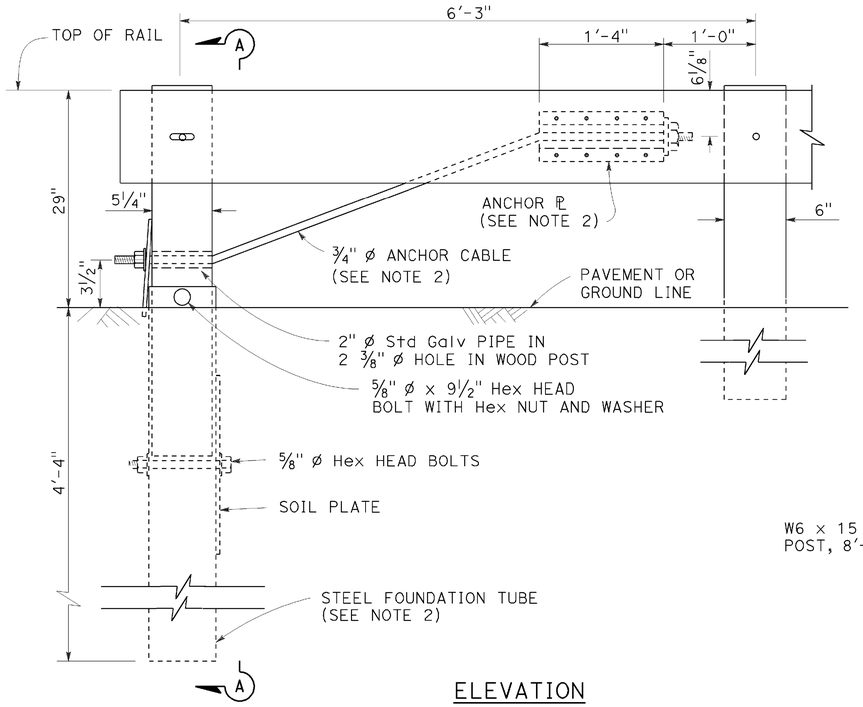

ELEVATION
END ANCHOR
ASSEMBLY (TYPE SFT)

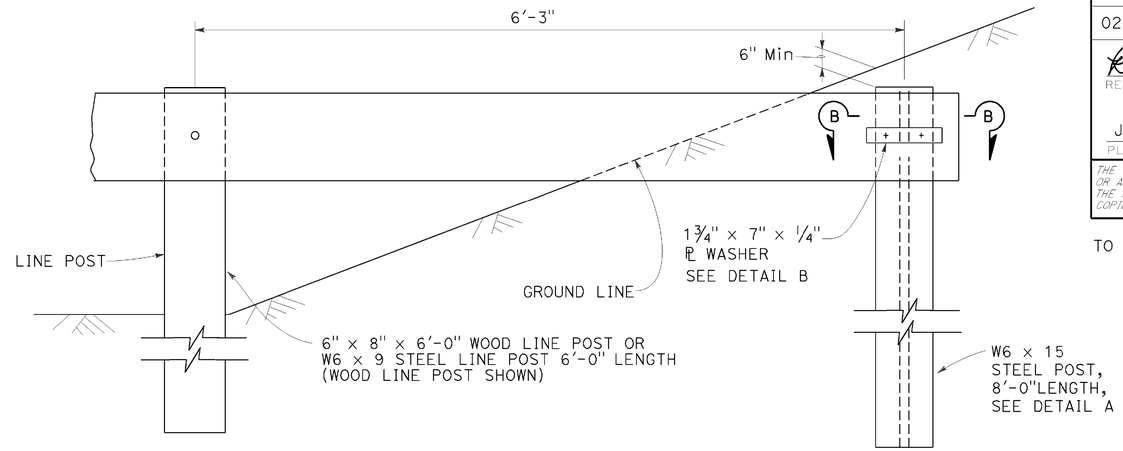

BURIED POST END ANCHOR

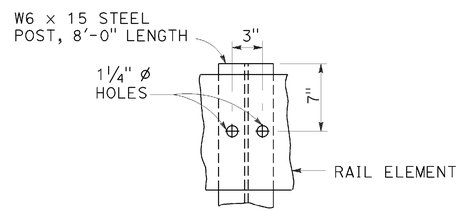

DETAIL A

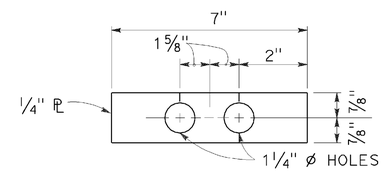

DETAIL B

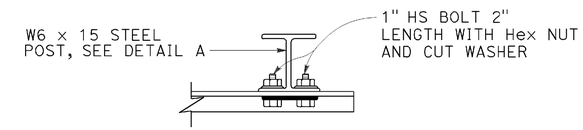

SECTION B-B

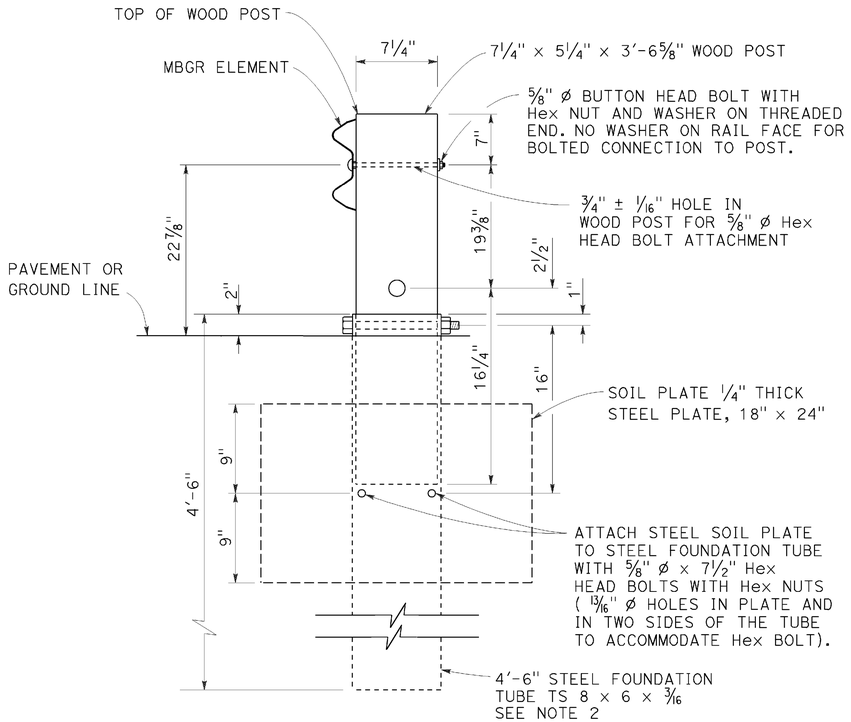

SECTION A-A

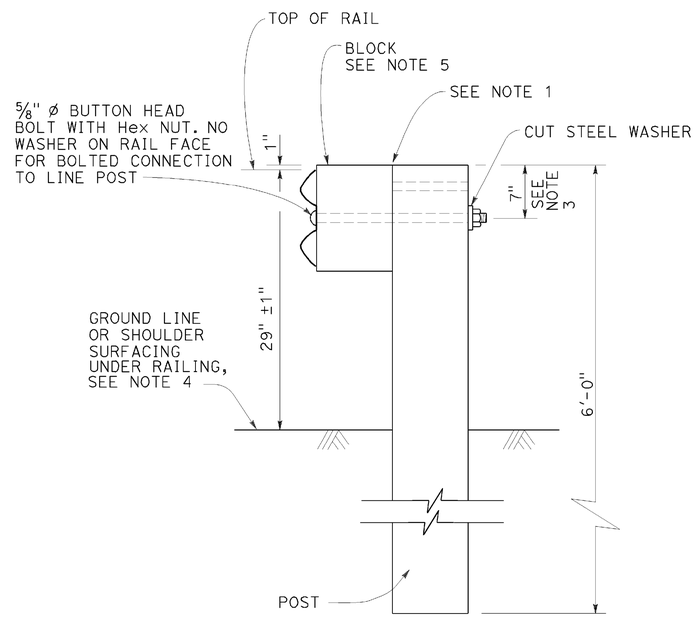

TYPICAL LINE
POST INSTALLATION

NOTES:

1. For wood post and wood block, toenail with 2-16d Galv nails in top of block. For steel post and notched wood or plastic block, notched face of block faces steel post.
2. A 6'-0" Length steel foundation tube, TS 8 x 6 x 3/16, without a soil plate, may be furnished and installed in place of the 4'-6" length steel foundation tube and soil plate shown, Minimum embadment of the 6'-0" length tube shall be 5'-9". A 5/8" ø Hex head bolt and nut shall be installed in the hole in the 6'-0" length tube to keep the wood post from dropping into the tube.
3. To connect railing to 27" terminal system end treatment, transition the top of railing height at a ratio of 120:1 to terminal system end treatment height plus one 12'-6" standard railing section at the transitioned height for a horizontal connection to the end treatment.
4. Install posts in soil.
5. See Revised Standard Plans RSP A77N1 and RSP A77N2 for details.
6. Holes excavation in the slope to construct the buried post end anchor shall be backfilled with selected earth, placed in layers approximately 1'-0" thick. Each layer shall be moistened and thoroughly compacted.

STATE OF CALIFORNIA
DEPARTMENT OF TRANSPORTATION

METAL BEAM GUARD RAILING RECONSTRUCT INSTALLATION

NO SCALE

RSP A77L3 DATED JULY 19, 2013 SUPPLEMENTS THE STANDARD PLANS BOOK DATED 2010.

REVISED STANDARD PLAN RSP A77L3

DATE PLOTTED => 25-NOV-2015
TIME PLOTTED => 08:23

Dist	COUNTY	ROUTE	POST MILES TOTAL PROJECT	SHEET No.	TOTAL SHEETS
02	Sha	299	88.9/89.2	18	23

Randell D. Hiatt
REGISTERED CIVIL ENGINEER

July 19, 2013
PLANS APPROVAL DATE

REGISTERED PROFESSIONAL ENGINEER
Randell D. Hiatt
No. C50200
Exp. 6-30-15
CIVIL
STATE OF CALIFORNIA

THE STATE OF CALIFORNIA OR ITS OFFICERS OR AGENTS SHALL NOT BE RESPONSIBLE FOR THE ACCURACY OR COMPLETENESS OF SCANNED COPIES OF THIS PLAN SHEET.

TO ACCOMPANY PLANS DATED 11-05-15

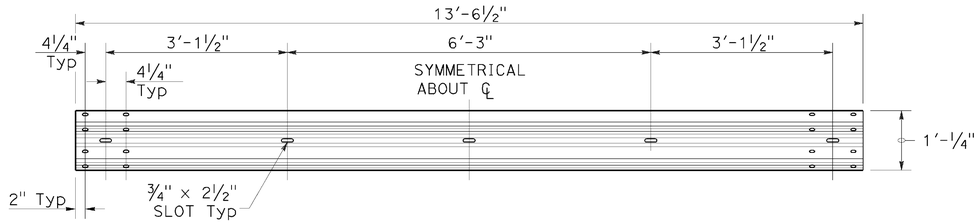

TYPICAL RAIL ELEMENT

NOTE:

1. Slotted holes for splice bolts to overlap ends of rail element.

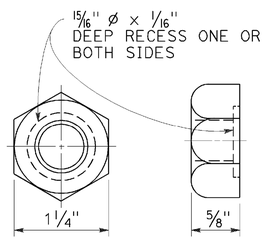

⅝" Ø RECESS NUT

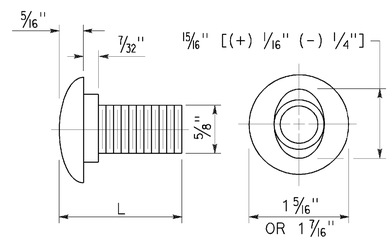

⅝" Ø BUTTON HEAD BOLT

BUTTON HEAD BOLT

L	THREAD LENGTH
1⅜"	FULL THREAD LENGTH
2"	FULL THREAD LENGTH
10"	4" Min THREAD LENGTH
18"	4" Min THREAD LENGTH
20"	4" Min THREAD LENGTH
22"	4" Min THREAD LENGTH
26"	4" Min THREAD LENGTH
36"	4" Min THREAD LENGTH
** 2¾"	2" Min THREAD LENGTH
** 19"	4" Min THREAD LENGTH

** For nested rail applications.

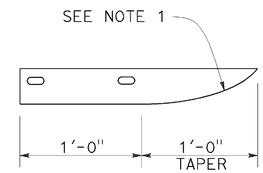

PLAN

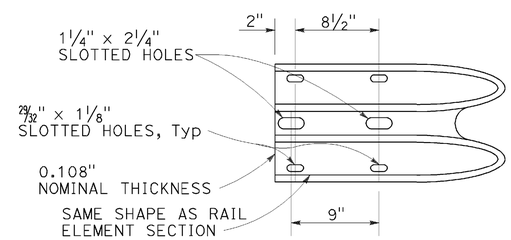

ELEVATION

END CAP
(TYPE A)

STATE OF CALIFORNIA
DEPARTMENT OF TRANSPORTATION

MIDWEST GUARDRAIL SYSTEM STANDARD HARDWARE

NO SCALE

RSP A77M1 DATED JULY 19, 2013 SUPPLEMENTS THE STANDARD PLANS BOOK DATED 2010.

REVISED STANDARD PLAN RSP A77M1

2010 REVISED STANDARD PLAN RSP A77M1

DATE PLOTTED => 25-NOV-2015
TIME PLOTTED => 08:23

Dist	COUNTY	ROUTE	POST MILES TOTAL PROJECT	SHEET No.	TOTAL SHEETS
02	Sha	299	88.9/89.2	19	23

Randell D. Hiatt
REGISTERED CIVIL ENGINEER

November 15, 2013
PLANS APPROVAL DATE

REGISTERED PROFESSIONAL ENGINEER
Randell D. Hiatt
No. C50200
Exp. 6-30-15
CIVIL
STATE OF CALIFORNIA

THE STATE OF CALIFORNIA OR ITS OFFICERS OR AGENTS SHALL NOT BE RESPONSIBLE FOR THE ACCURACY OR COMPLETENESS OF SCANNED COPIES OF THIS PLAN SHEET.

TO ACCOMPANY PLANS DATED 11-05-15

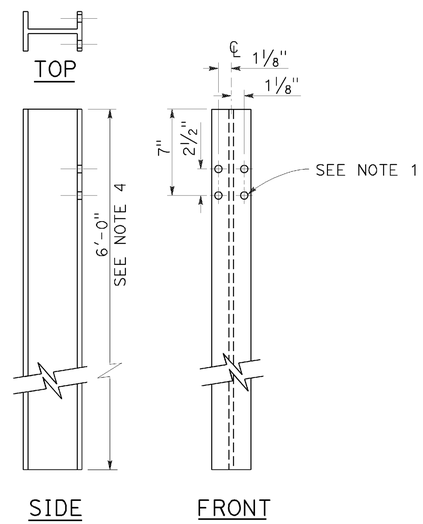

W6 x 9 OR W6 x 8.5
STEEL POST
See Note 4

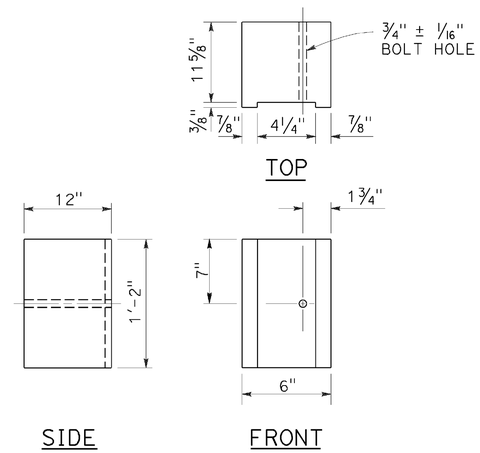

6" x 12"
NOTCHED WOOD BLOCK
See Notes 2 and 3

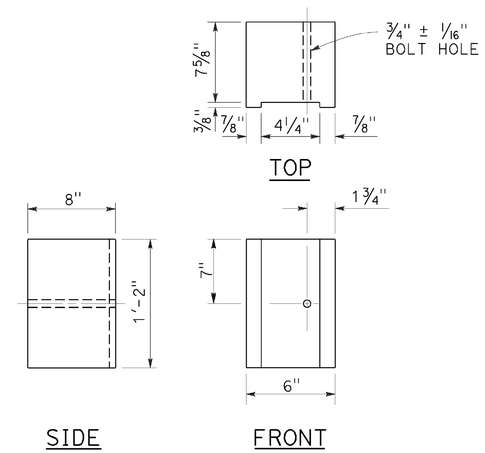

6" x 8"
NOTCHED WOOD BLOCK
Only for use with metal beam guard railing. See Note 5

NOTES:

1. All holes in steel post shall be 13/16" Dia maximum.
2. Dimensions shown for wood block are nominal.
3. Notched face of block faces steel post.
4. 6'-0" length posts to be used for typical roadway installation. See Revised Standard Plan RSP A77N3.
5. See Revised Standard Plan RSP A77L3 for use of 6" x 8" and 8" x 8" notched wood blocks.
6. This post and 8" x 12" block combination to be used for line post sections of MGS on narrow roadways and where strengthened line post sections of MGS are warranted to shield fixed objects.

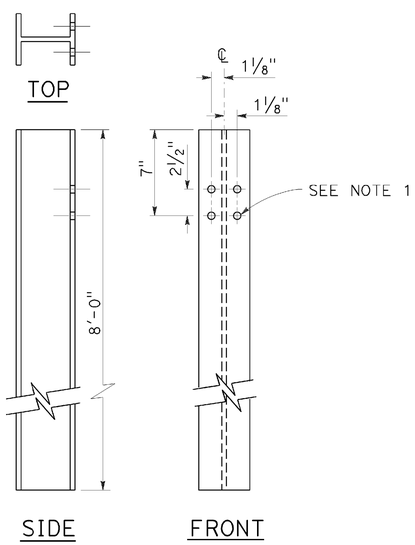

W6 x 15
STEEL POST
See Note 6

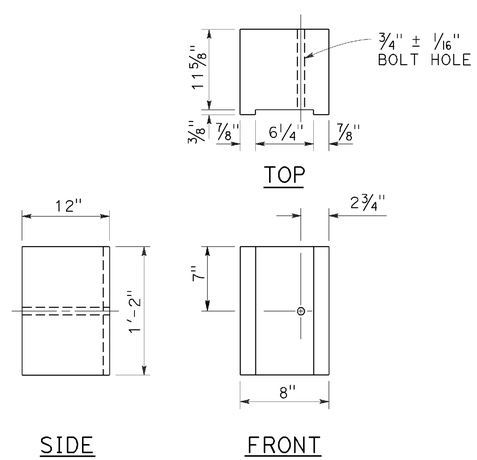

8" x 12"
NOTCHED WOOD BLOCK
See Notes 2 and 3

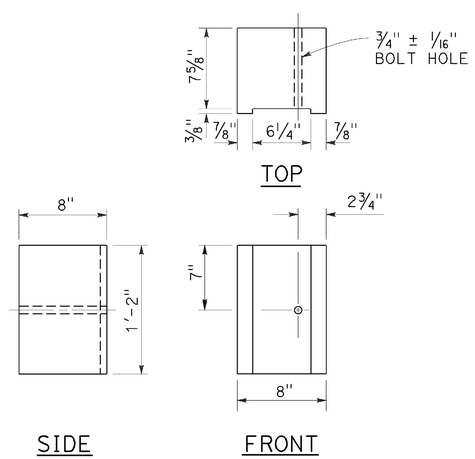

8" x 8"
NOTCHED WOOD BLOCK
Only for use with metal beam guard railing. See Note 5

STATE OF CALIFORNIA
DEPARTMENT OF TRANSPORTATION

MIDWEST GUARDRAIL SYSTEM STEEL POST AND NOTCHED WOOD BLOCK DETAILS

NO SCALE

RSP A77N2 DATED NOVEMBER 15, 2013 SUPERSEDES RSP A77N2
DATED JULY 19, 2013 THAT SUPPLEMENTS THE STANDARD PLANS BOOK DATED 2010.

REVISED STANDARD PLAN RSP A77N2

2010 REVISED STANDARD PLAN RSP A77N2

DATE PLOTTED => 25-NOV-2015
TIME PLOTTED => 08:23

Dist	COUNTY	ROUTE	POST MILES TOTAL PROJECT	SHEET No.	TOTAL SHEETS
02	Sha	299	88.9/89.2	20	23

Srikanth Balasubramanian
REGISTERED CIVIL ENGINEER

October 30, 2015
PLANS APPROVAL DATE

REGISTERED PROFESSIONAL ENGINEER Srikanth N. Balasubramanian No. C56426 Exp. 6-30-17 CIVIL STATE OF CALIFORNIA

THE STATE OF CALIFORNIA OR ITS OFFICERS OR AGENTS SHALL NOT BE RESPONSIBLE FOR THE ACCURACY OR COMPLETENESS OF SCANNED COPIES OF THIS PLAN SHEET.

TO ACCOMPANY PLANS DATED 11-05-15

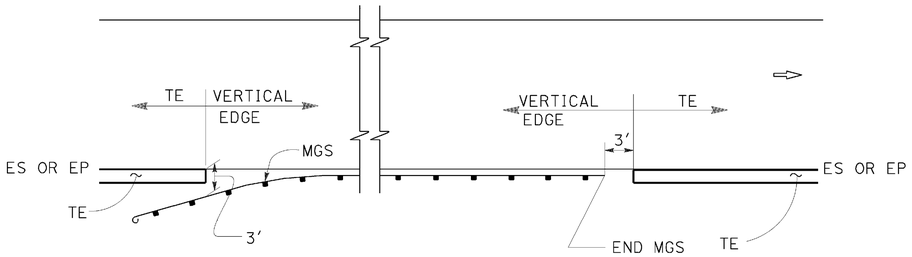

MGS

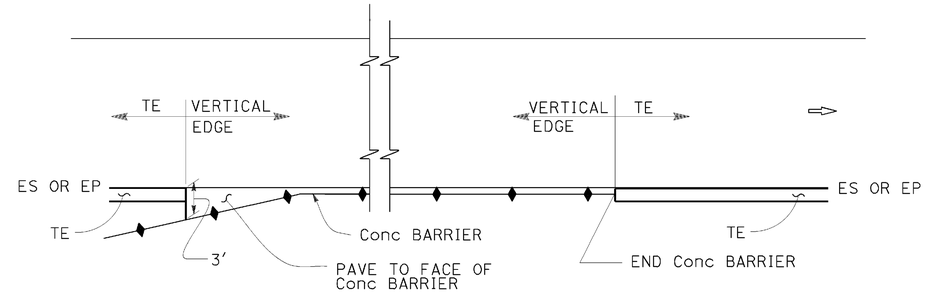

CONCRETE BARRIER

ABBREVIATIONS:

TE TAPERED EDGE

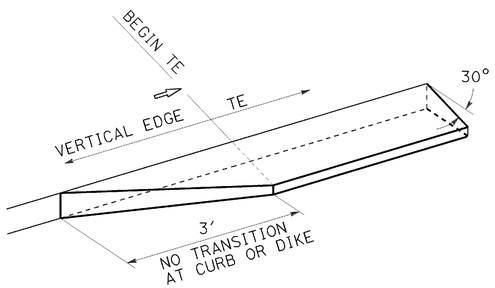

TRANSITION DETAIL FOR CONCRETE ONLY

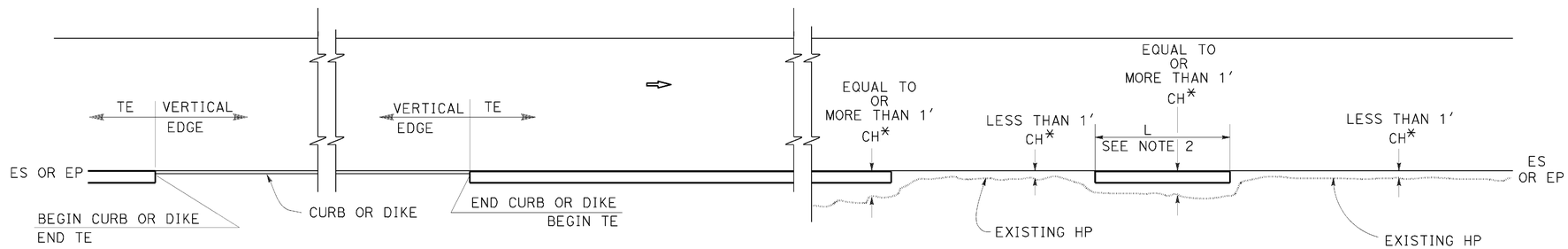

CURB OR DIKE

NARROW SIDE SLOPE

* CH = Distance from ES or EP to existing HP.

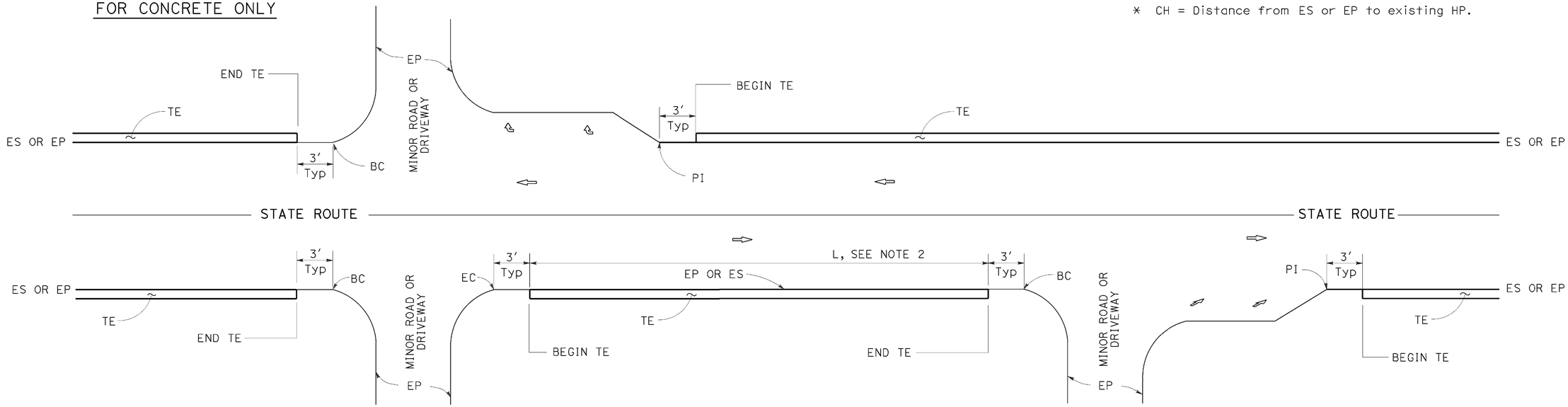

INTERTECTION

DRIVEWAY AND INTERSECTION

MINOR ROADWAY OR DRIVEWAY

STATE OF CALIFORNIA
DEPARTMENT OF TRANSPORTATION

PAVEMENT EDGE TREATMENTS

NO SCALE

NOTES:

1. For details not shown, see Revised Standard Plans RSP P75 and RSP P76.
2. Tapered edge is optional when L is less than 30′.

RSP P74 DATED OCTOBER 30, 2015 SUPERSEDES RSP P74 DATED NOVEMBER 15, 2013 AND RSP P74 DATED JANUARY 20, 2012 THAT SUPPLEMENTS THE STANDARD PLANS BOOK DATED 2010.

REVISED STANDARD PLAN RSP P74

2010 REVISED STANDARD PLAN RSP P74

DATE PLOTTED => 25-NOV-2015
TIME PLOTTED => 08:23

Dist	COUNTY	ROUTE	POST MILES TOTAL PROJECT	SHEET No.	TOTAL SHEETS
02	Sha	299	88.9/89.2	21	23

Srikanth Balasubramanian
REGISTERED CIVIL ENGINEER

October 30, 2015
PLANS APPROVAL DATE

REGISTERED PROFESSIONAL ENGINEER
Srikanth N. Balasubramanian
No. C56426
Exp. 6-30-17
CIVIL
STATE OF CALIFORNIA

THE STATE OF CALIFORNIA OR ITS OFFICERS OR AGENTS SHALL NOT BE RESPONSIBLE FOR THE ACCURACY OR COMPLETENESS OF SCANNED COPIES OF THIS PLAN SHEET.

TO ACCOMPANY PLANS DATED 11-05-15

LEGEND:

- HMA PAVEMENT
- HMA OR CONCRETE PAVEMENT
- CONCRETE PAVEMENT

ABBREVIATIONS:

TE TAPERED EDGE
TT TOTAL THICKNESS OF TE
HW HINGE WIDTH, DISTANCE FROM ES OR EP TO HP

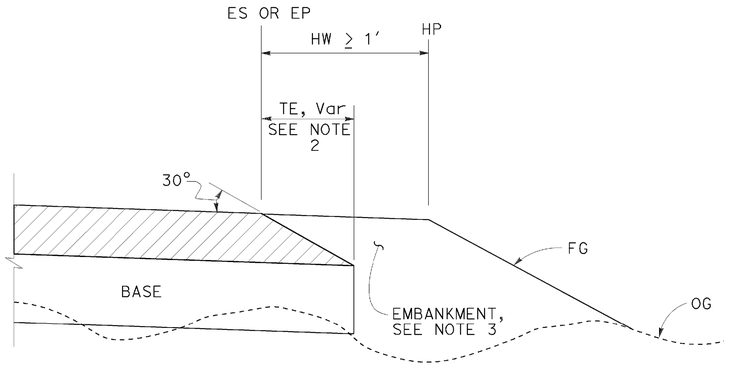

CASE K
Tapered Edge - Fill Section, HW ≥ 1′

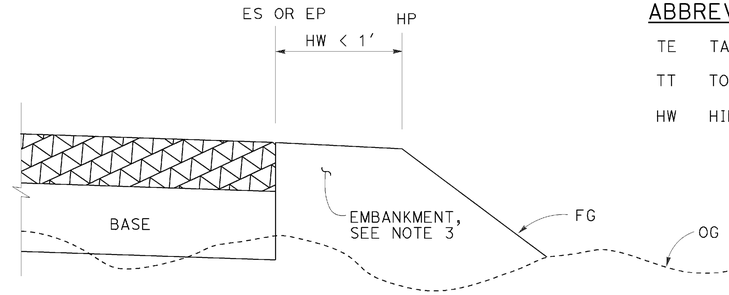

CASE L
Vertical Edge - Fill Section, HW < 1′

FILL SECTION

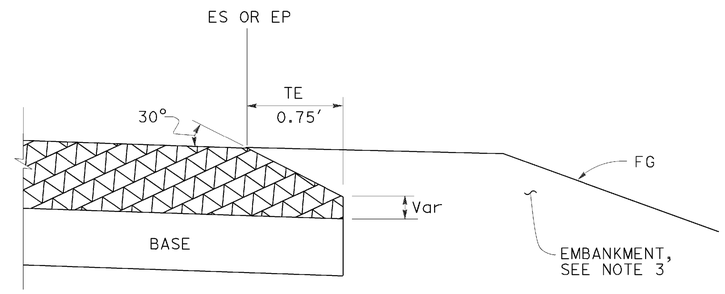

DETAIL "B"
For HMA pavement thickness more than 0.43′ or concrete pavement

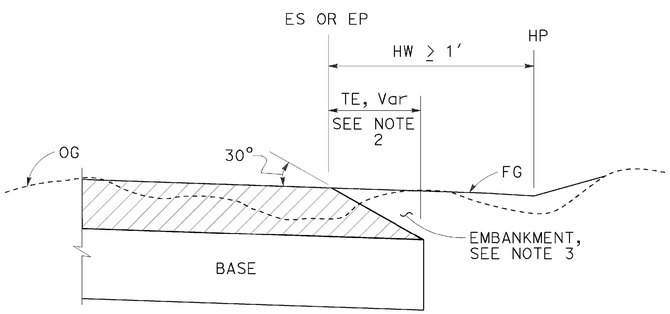

CASE M
Tapered Edge - Cut Section, HW ≥ 1′

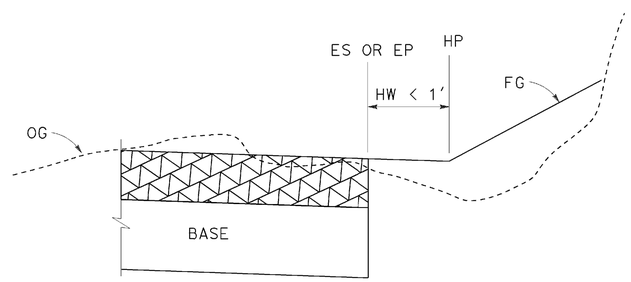

CASE N
Vertical Edge - Cut Section, HW < 1′

CUT SECTION

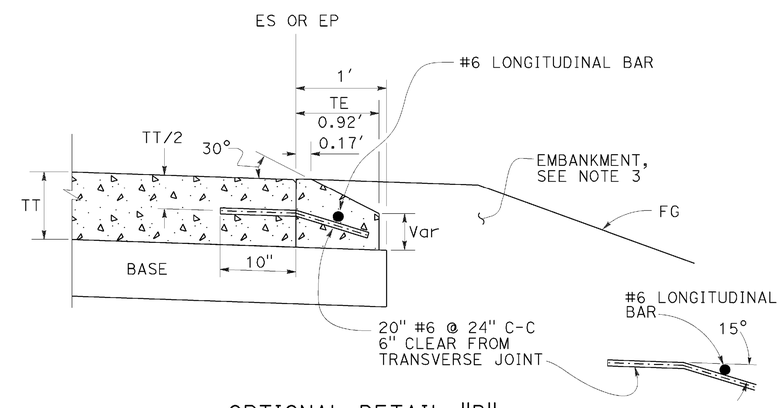

OPTIONAL DETAIL "B"
For concrete pavement
See Note 4

NOTES:

1. For limits of tapered edge and vertical edge treatments, see Revised Standard Plan RSP P74
2. Details shown for HMA pavement thickness less than 0.43′. See Detail "B" for HMA pavement thickness more than 0.43′ or concrete pavement.
3. For locations and limits of embankment see project plans.
4. Tapered edge transverse joint must match pavement transverse joint. End of #6 longitudinal bar must be 2" ±½" clear from transverse joint.
5. Tapered edge is not needed in the area of MGS, barrier, right turn lane and acceleration lane. See Revised Standard Plan RSP P74.

STATE OF CALIFORNIA
DEPARTMENT OF TRANSPORTATION

PAVEMENT EDGE TREATMENTS-NEW CONSTRUCTION

NO SCALE

RSP P76 DATED OCTOBER 30, 2015 SUPERSEDES RSP P76 DATED NOVEMBER 15, 2013 AND RSP P76 DATED JANUARY 20, 2012 THAT SUPPLEMENTS THE STANDARD PLANS BOOK DATED 2010.

REVISED STANDARD PLAN RSP P76

2010 REVISED STANDARD PLAN RSP P76

DATE PLOTTED => 25-NOV-2015
TIME PLOTTED => 08:24

Dist	COUNTY	ROUTE	POST MILES TOTAL PROJECT	SHEET No.	TOTAL SHEETS
02	Sha	299	88.9/89.2	22	23

REGISTERED CIVIL ENGINEER

July 19, 2013
PLANS APPROVAL DATE

REGISTERED PROFESSIONAL ENGINEER Gurinderpal Bhullar No. C48815 Exp. 9-30-14 CIVIL STATE OF CALIFORNIA

THE STATE OF CALIFORNIA OR ITS OFFICERS OR AGENTS SHALL NOT BE RESPONSIBLE FOR THE ACCURACY OR COMPLETENESS OF SCANNED COPIES OF THIS PLAN SHEET.

TO ACCOMPANY PLANS DATED 11-05-15

TABLE 1

TAPER LENGTH CRITERIA AND CHANNELIZING DEVICE SPACING

SPEED (S)	MINIMUM TAPER LENGTH * FOR WIDTH OF OFFSET 12 FEET (W)				MAXIMUM CHANNELIZING DEVICE SPACING		
					X	Y	Z **
	TANGENT 2L	MERGING L	SHIFTING L/2	SHOULDER L/3	TAPER	TANGENT	CONFLICT
mph	ft	ft	ft	ft	ft	ft	ft
20	160	80	40	27	20	40	10
25	250	125	63	42	25	50	12
30	360	180	90	60	30	60	15
35	490	245	123	82	35	70	17
40	640	320	160	107	40	80	20
45	1080	540	270	180	45	90	22
50	1200	600	300	200	50	100	25
55	1320	660	330	220	55	110	27
60	1440	720	360	240	60	120	30
65	1560	780	390	260	65	130	32
70	1680	840	420	280	70	140	35

* - For other offsets, use the following merging taper length formula for L:
For speed of 40 mph or less, $L = WS^2/60$
For speed of 45 mph or more, $L = WS$

Where: L = Taper length in feet
W = Width of offset in feet
S = Posted speed limit, off-peak 85th-percentile speed prior to work starting, or the anticipated operating speed in mph

** - Use for taper and tangent sections where there are no pavement markings or where there is a conflict between existing pavement markings and channelizers (CA).

TABLE 2

LONGITUDINAL BUFFER SPACE AND FLAGGER STATION SPACING

SPEED *	Min D **	DOWNGRADE Min D ***		
		-3%	-6%	-9%
mph	ft	ft	ft	ft
20	115	116	120	126
25	155	158	165	173
30	200	205	215	227
35	250	257	271	287
40	305	315	333	354
45	360	378	400	427
50	425	446	474	507
55	495	520	553	593
60	570	598	638	686
65	645	682	728	785
70	730	771	825	891

* - Speed is posted speed limit, off-peak 85th-percentile speed prior to work starting, or the anticipated operating speed in mph

** - Longitudinal buffer space or flagger station spacing

*** - Use on sustained downgrade steeper than -3 percent and longer than 1 mile.

TABLE 3

ADVANCE WARNING SIGN SPACING

ROAD TYPE	DISTANCE BETWEEN SIGNS *		
	A	B	C
	ft	ft	ft
URBAN - 25 mph OR LESS	100	100	100
URBAN - MORE THAN 25 mph TO 40 mph	250	250	250
URBAN - MORE THAN 40 mph	350	350	350
RURAL	500	500	500
EXPRESSWAY / FREEWAY	1000	1500	2640

* - The distances are approximate, are intended for guidance purposes only, and should be applied with engineering judgment. These distances should be adjusted by the Engineer for field conditions, if necessary, by increasing or decreasing the recommmended distances.

STATE OF CALIFORNIA
DEPARTMENT OF TRANSPORTATION

TRAFFIC CONTROL SYSTEM TABLES FOR LANE AND RAMP CLOSURES

NO SCALE

RSP T9 DATED JULY 19, 2013 SUPERSEDES RSP T9 DATED APRIL 19, 2013 THAT SUPPLEMENTS THE STANDARD PLANS BOOK DATED 2010.

REVISED STANDARD PLAN RSP T9

2010 REVISED STANDARD PLAN RSP T9

DATE PLOTTED => 25-NOV-2015
TIME PLOTTED => 08:24

Dist	COUNTY	ROUTE	POST MILES TOTAL PROJECT	SHEET No.	TOTAL SHEETS
02	Sha	299	88.9/89.2	23	23

Devinder Singh
REGISTERED CIVIL ENGINEER

October 30, 2015
PLANS APPROVAL DATE

REGISTERED PROFESSIONAL ENGINEER
Devinder Singh
No. C50470
Exp. 6-30-17
CIVIL
STATE OF CALIFORNIA

THE STATE OF CALIFORNIA OR ITS OFFICERS OR AGENTS SHALL NOT BE RESPONSIBLE FOR THE ACCURACY OR COMPLETENESS OF SCANNED COPIES OF THIS PLAN SHEET.

TO ACCOMPANY PLANS DATED 11-05-15

2010 REVISED STANDARD PLAN RSP T13

NOTES:

See Revised Standard Plan RSP T9 for tables.

Use cone spacing X for taper segment, Y for tangent segment or Z for conflict situations, as approriate, per Table 1, unless X, Y, or Z cone spacing is shown on this sheet.

Unless otherwise specified in the special provisions, all temporary warning signs shall have black legend on fluorescent orange background.

California codes are designated by (CA). Otherwise, Federal (MUTCD) codes are shown.

TYPICAL LANE CLOSURE WITH REVERSIBLE CONTROL

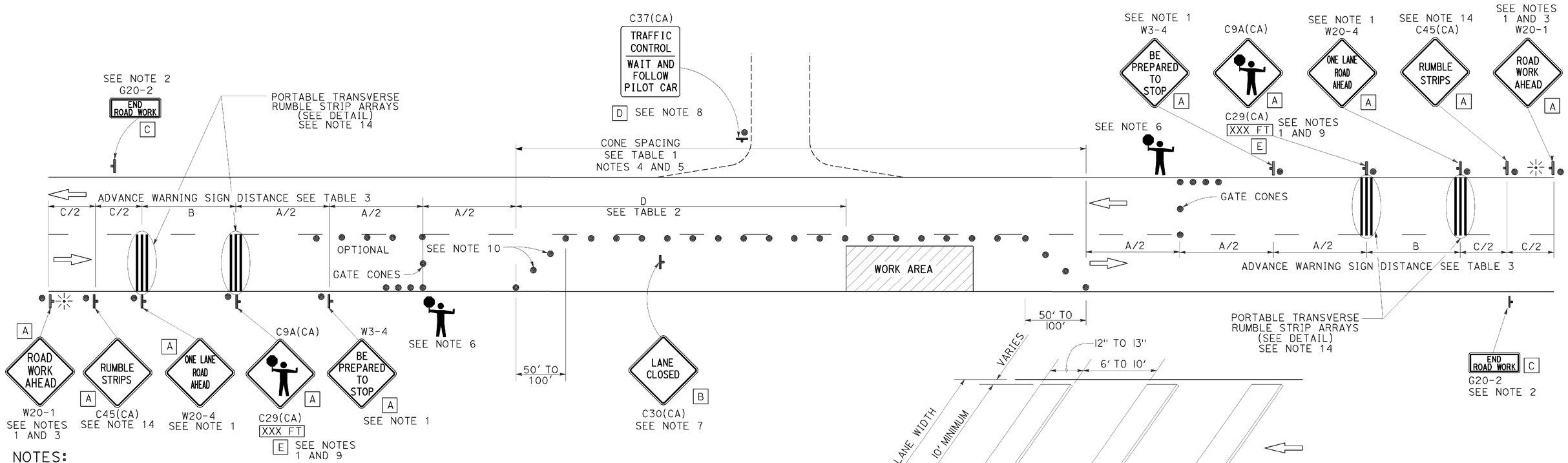

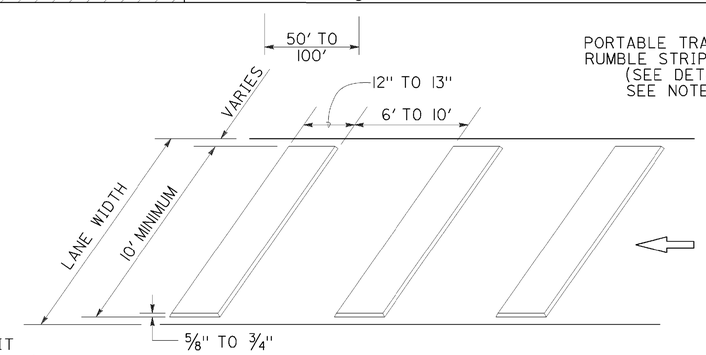

PORTABLE TRANSVERSE RUMBLE STRIP ARRAY DETAIL

NOTES:

1. Each advance warning sign in each direction of travel shall be equipped with at least two flags for daytime closure. Each flag shall be at least 16" x 16" in size and shall be orange or fluorescent red-orange in color. Flashing beacons shall be placed at the locations indicated for lane closure during hours of darkness.
2. A G20-2 "END ROAD WORK" sign, as appropriate, shall be placed at the end of the lane control unless the end of work area is obvious, or ends within a larger project's limits.
3. If the W20-1 sign would follow within 2000' of a stationary W20-1 or G20-1 "ROAD WORK NEXT _____ MILES", use a W20-4 sign for the first advance warning sign.
4. All cones used for lane closures during the hours of darkness shall be fitted with retroreflective bands (or sleeves) as specified in the specifications.
5. Portable delineators, placed at one-half the spacing indicated for traffic cones, may be used instead of cones for daytime closures only.
6. Additional advance flaggers may be required. Flagger should stand in a conspicuous place, be visible to approaching traffic as well as approaching vehicles after the first vehicle has stopped. During the hours of darkness, the flagging-station and flagger shall be illuminated and clearly visible to approaching traffic. The illumination footprint of the lighting on the ground shall be at least 20' in diameter. Place a minimum of four cones at 50' intervals in advance of flagger station as shown.
7. Place C30(CA) "LANE CLOSED" sign at 500' to 1000' intervals throughout extended work areas. They are optional if the work area is visible from the flagger station.
8. When a pilot car is used, place a C37(CA) "TRAFFIC CONTROL-WAIT AND FOLLOW PILOT CAR" sign with black legend on white background at all intersections, driveways and alleys without a flagger within traffic control area. Signs shall be clean and visible at all times. Where traffic can not be effectively self-regulated, at least one flagger shall be used at each intersection within traffic control area.
9. An optional C29(CA) sign may be placed below the C9A(CA) sign.
10. Either traffic cones or barricades shall be placed on the taper. Barricades shall be Type I, II, or III.
11. The color of the portable transverse rumble strips shall be black or orange. Use 2 arrays, each array shall consist of 3 rumble strips.
12. Portable transverse rumble strips shall not be placed on sharp horizontal or vertical curves nor shall they be placed through pedestrian crossings.
13. If the portable transverse rumble strips become out of alignment (skewed) by more than 6 inches, measured from one end to the other, they shall be readjusted to bring the placement back to the original location.
14. Portable transverse rumble strips are not required if any one of the following conditions is satisfied:
    A. Work duration occupies a location for four hours or less
    B. Posted speed limit is below 45 MPH
    C. Work is of emergency nature
    D. Work zone is in snow or icy weather conditions

SIGN PANEL SIZE (Min)

A	48" x 48"
B	30" x 30"
C	36" x 18"
D	36" x 42"
E	20" x 7"

LEGEND

- TRAFFIC CONE
- TEMPORARY TRAFFIC CONTROL SIGN
- PORTABLE FLASHING BEACON
- FLAGGER

STATE OF CALIFORNIA
DEPARTMENT OF TRANSPORTATION

TRAFFIC CONTROL SYSTEM FOR LANE CLOSURE ON TWO LANE CONVENTIONAL HIGHWAYS

NO SCALE

RSP T13 DATED OCTOBER 30, 2015 SUPERSEDES RSP T13 DATED OCTOBER 17, 2014, RSP T13 DATED JULY 18, 2014 AND RSP T13 DATED APRIL 19, 2013 AND STANDARD PLAN T13 DATED MAY 20, 2011 - PAGE 241 OF THE STANDARD PLANS BOOK DATED 2010.

REVISED STANDARD PLAN RSP T13

DATE PLOTTED => 25-NOV-2015
TIME PLOTTED => 08:24