| Dist | COUNTY | ROUTE | POST MILES TOTAL PROJECT | SHEET No. | TOTAL SHEETS |
|---|---|---|---|---|---|
| 02 | Tri | 3,36 | L0.0/L0.1<br>27.1/R41.2 | 1 | 31 |

INDEX OF PLANS


| SHEET No. | DESCRIPTION |
|---|---|
| 1 | TITLE AND LOCATION MAP |
| 2-3 | TYPICAL CROSS SECTIONS |
| 4-11 | CONSTRUCTION DETAILS |
| 12 | CONSTRUCTION AREA SIGNS |
| 13 | PAVEMENT DELINEATION DETAILS & QUANTITIES |
| 14-15 | SUMMARY OF QUANTITIES |
| 16 | TRAFFIC COUNT STATION |
| 17-31 | REVISED STANDARD PLANS |


THE STANDARD PLANS LIST APPLICABLE TO THIS CONTRACT IS INCLUDED IN THE NOTICE TO BIDDERS AND SPECIAL PROVISIONS BOOK.

STATE OF CALIFORNIA

# DEPARTMENT OF TRANSPORTATION

# PROJECT PLANS FOR CONSTRUCTION ON

# STATE HIGHWAY

## IN TRINITY COUNTY NEAR PEANUT ON ROUTE 3 FROM ROUTE 36 TO 0.1 MILE NORTH OF ROUTE 36 AND ON ROUTE 36 FROM 0.2 MILE WEST OF ROUTE 3 TO SHASTA COUNTY LINE

TO BE SUPPLEMENTED BY STANDARD PLANS DATED MAY 2010

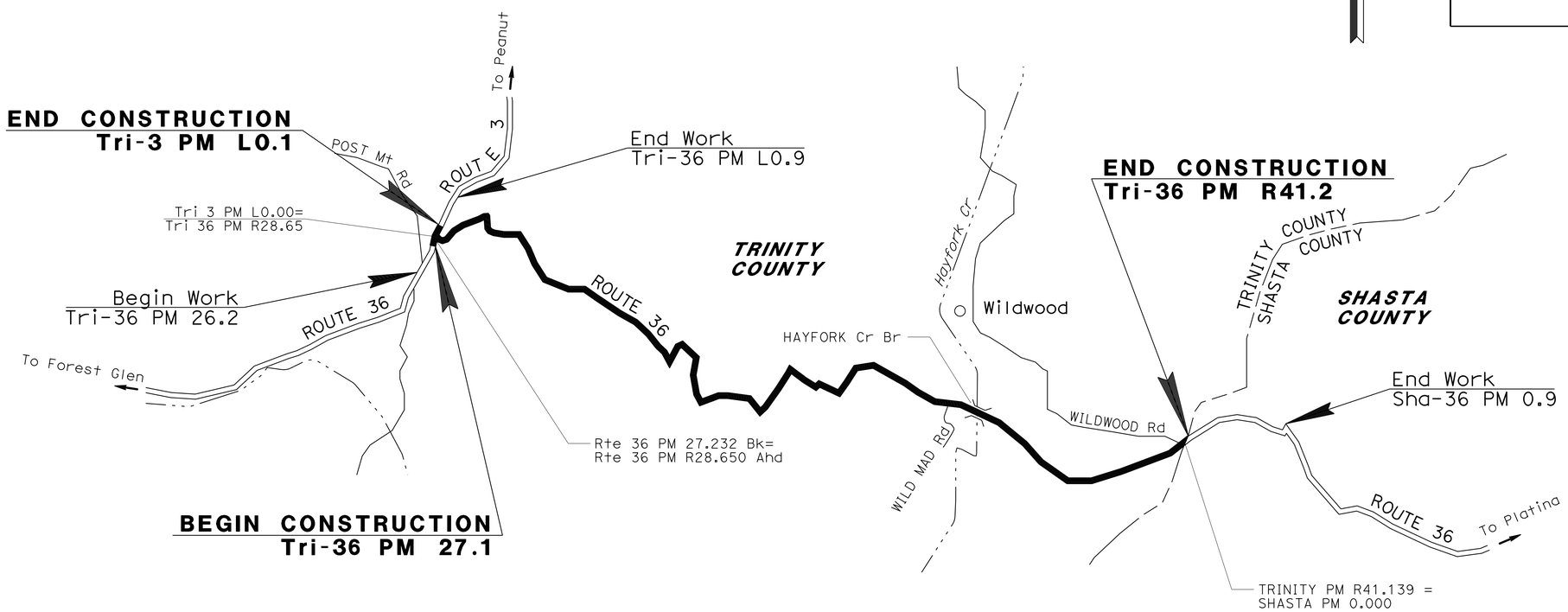


12-22-14

PROJECT ENGINEER
REGISTERED CIVIL ENGINEER

DATE

December 22, 2014

PLANS APPROVAL DATE

REGISTERED PROFESSIONAL ENGINEER MICHAEL A. CONNER No. C73123 Exp. 12-31-16 CIVIL STATE OF CALIFORNIA

*THE STATE OF CALIFORNIA OR ITS OFFICERS OR AGENTS SHALL NOT BE RESPONSIBLE FOR THE ACCURACY OR COMPLETENESS OF SCANNED COPIES OF THIS PLAN SHEET.*

THE CONTRACTOR SHALL POSSESS THE CLASS (OR CLASSES) OF LICENSE AS SPECIFIED IN THE "NOTICE TO BIDDERS."

NO SCALE

| CONTRACT No. | 02-4G1204 |
|---|---|
| PROJECT ID | 0213000077 |

PROJECT MANAGER: LANCE BROWN
DESIGN ENGINEER: LANCE BROWN

P:\proj1\02\4G120_plans\pse\24g120ab001.dgn

LAST REVISION 11-07-14 | DATE PLOTTED => 07-JAN-2015 | TIME PLOTTED => 11:26

| Dist | COUNTY | ROUTE | POST MILES TOTAL PROJECT | SHEET No. | TOTAL SHEETS |
|---|---|---|---|---|---|
| 02 | Tri | 3,36 | L0.0/L0.1<br>27.1/R41.2 | 2 | 31 |

REGISTERED CIVIL ENGINEER 12-22-14 DATE

12-22-14
PLANS APPROVAL DATE

REGISTERED PROFESSIONAL ENGINEER MICHAEL A. CONNER No. C73123 Exp. 12-31-16 CIVIL STATE OF CALIFORNIA

*THE STATE OF CALIFORNIA OR ITS OFFICERS OR AGENTS SHALL NOT BE RESPONSIBLE FOR THE ACCURACY OR COMPLETENESS OF SCANNED COPIES OF THIS PLAN SHEET.*

## NOTES:

1. DIMENSIONS OF THE PAVEMENT STRUCTURES (STRUCTURAL SECTIONS) ARE SUBJECT TO TOLERANCES SPECIFIED IN THE STANDARD SPECIFICATIONS.
2. FOR ACCURATE RIGHT OF WAY DATA, CONTACT RIGHT OF WAY ENGINEERING AT THE DISTRICT OFFICE.
3. NO WORK ON BRIDGE DECKS.

PAVEMENT CLIMATE REGION
HIGH MOUNTAIN

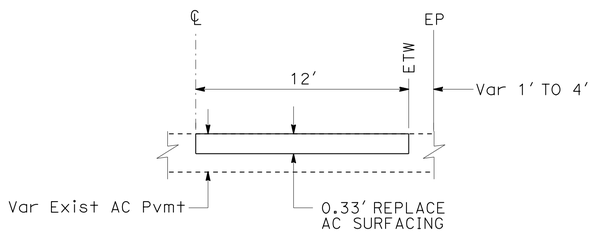


**REPLACE AC SURFACING**
ROUTE 36 R30.45 TO R30.49 WB

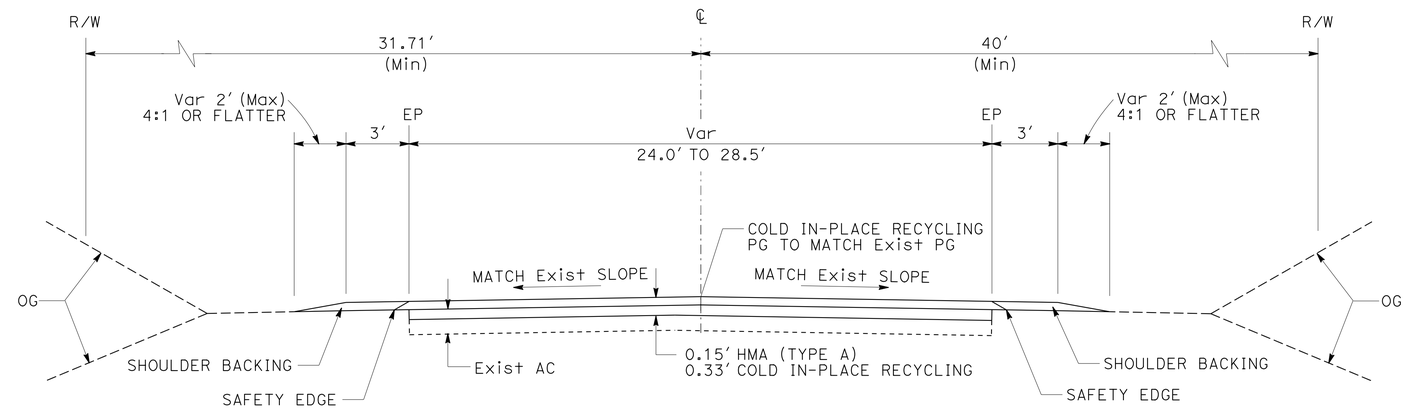


ROUTE 36 PM R28.70 TO R29.30
ROUTE 36 PM R29.70 TO R30.40
ROUTE 36 PM R30.70 TO R32.00
ROUTE 36 PM R32.70 TO R34.00

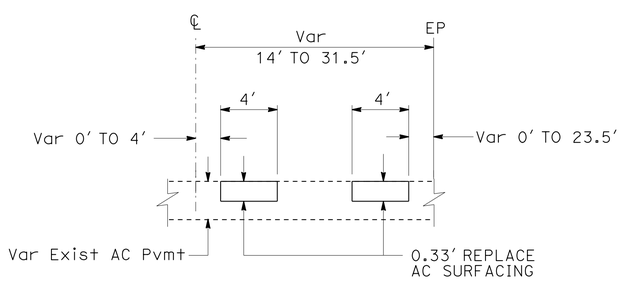


**REPLACE AC SURFACING**
ROUTE 3 PM L0.00 TO L0.05
ROUTE 36 27.15 TO R28.70
(TYPICAL BOTH DIRECTIONS)

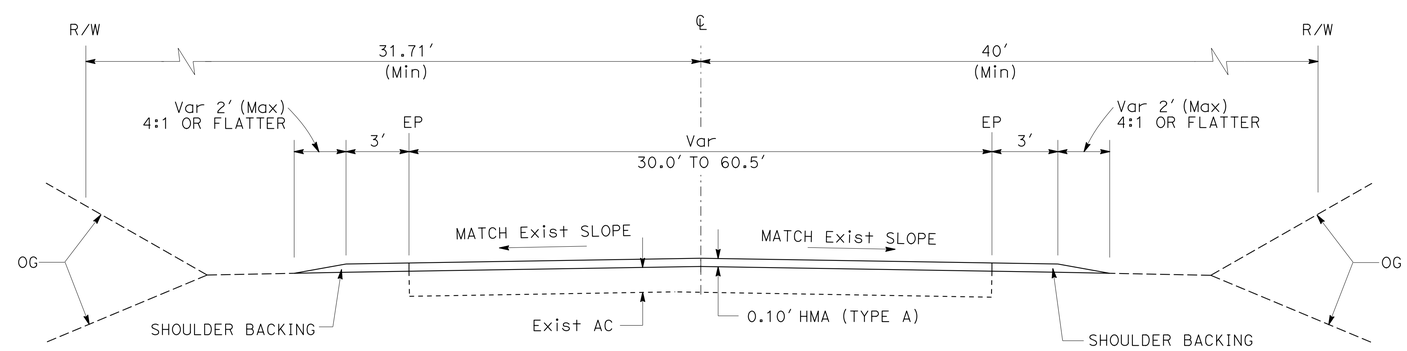


ROUTE 3 PM L0.00 TO L0.05
ROUTE 36 PM 27.15 TO R28.70
ROUTE 36 PM R36.68 TO R37.03

**TYPICAL CROSS SECTIONS**
NO SCALE

**X-1**

REVISED BY | DATE REVISED
MICHAEL CONNER | KARLIE SMITH
CALCULATED-DESIGNED BY | CHECKED BY
FUNCTIONAL SUPERVISOR | LANCE BROWN

STATE OF CALIFORNIA - DEPARTMENT OF TRANSPORTATION
Caltrans® MAINTENANCE

P:\proj1\02\4G120_plans\pse\24g120ca001.dgn

LAST REVISION 12-22-14 | DATE PLOTTED => 07-JAN-2015 | TIME PLOTTED => 11:26

| Dist | COUNTY | ROUTE | POST MILES TOTAL PROJECT | SHEET No. | TOTAL SHEETS |
|---|---|---|---|---|---|
| 02 | Tri | 3,36 | L0.0/L0.1 27.1/R41.2 | 3 | 31 |

REGISTERED CIVIL ENGINEER 12-22-14 DATE

12-22-14
PLANS APPROVAL DATE

REGISTERED PROFESSIONAL ENGINEER MICHAEL A. CONNER No. C73123 Exp. 12-31-16 CIVIL STATE OF CALIFORNIA

*THE STATE OF CALIFORNIA OR ITS OFFICERS OR AGENTS SHALL NOT BE RESPONSIBLE FOR THE ACCURACY OR COMPLETENESS OF SCANNED COPIES OF THIS PLAN SHEET.*

NOTES:

1. DIMENSIONS OF THE PAVEMENT STRUCTURES (STRUCTURAL SECTIONS) ARE SUBJECT TO TOLERANCES SPECIFIED IN THE STANDARD SPECIFICATIONS.
2. FOR ACCURATE RIGHT OF WAY DATA, CONTACT RIGHT OF WAY ENGINEERING AT THE DISTRICT OFFICE.
3. NO WORK ON BRIDGE DECKS.

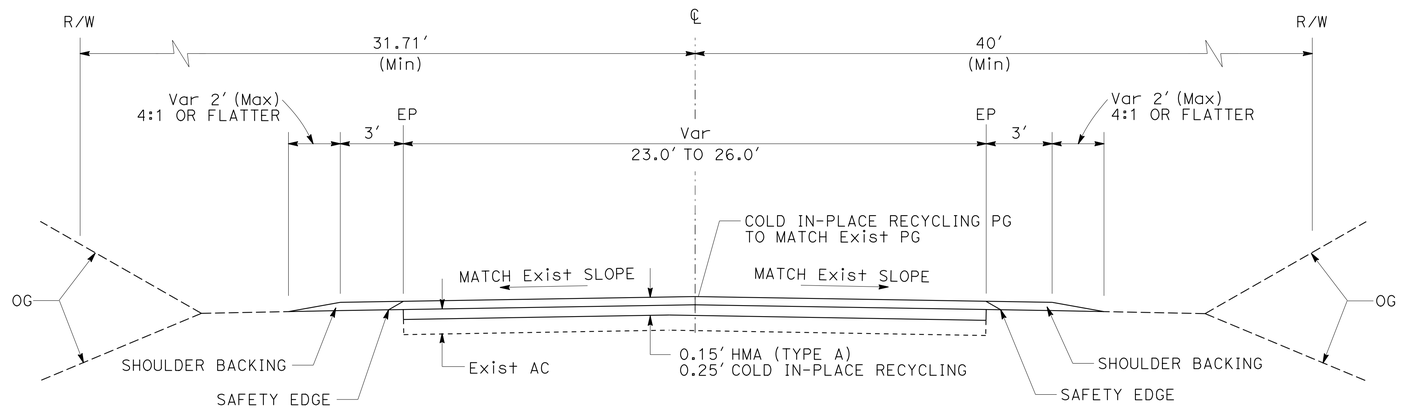


ROUTE 36 PM R29.30 TO R29.70
ROUTE 36 PM R32.00 TO R32.70
ROUTE 36 PM R34.00 TO R36.30

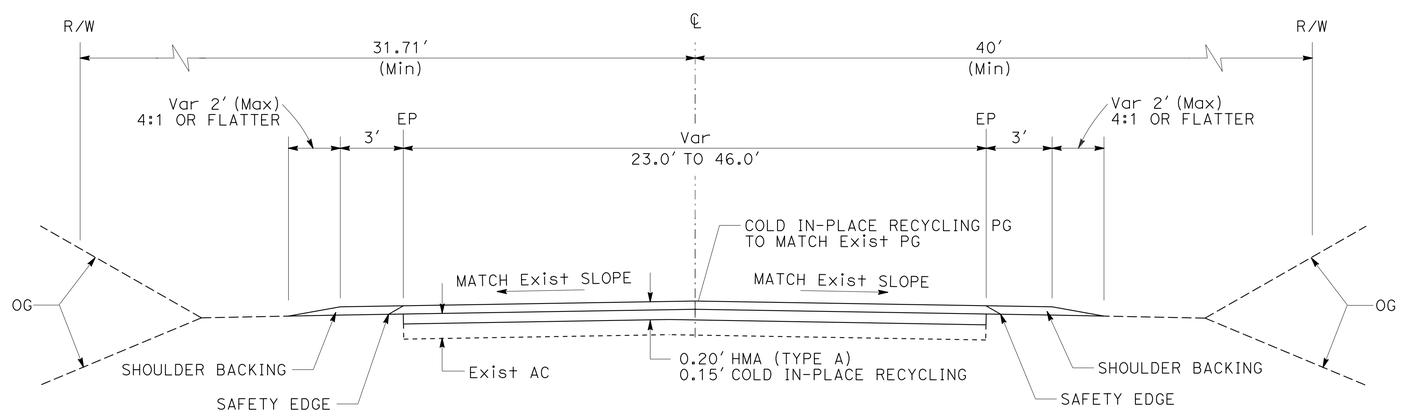


ROUTE 36 PM R36.30 TO R36.68
ROUTE 36 PM R37.03 TO R41.14

# TYPICAL CROSS SECTIONS

NO SCALE

**X-2**

REVISED BY | DATE REVISED
MICHAEL CONNER | KARLIE SMITH
CALCULATED-DESIGNED BY | CHECKED BY
FUNCTIONAL SUPERVISOR | LANCE BROWN

STATE OF CALIFORNIA - DEPARTMENT OF TRANSPORTATION
Caltrans® **MAINTENANCE**

P:\proj1\02\4G120_plans\pse\24g120ca002.dgn

LAST REVISION 12-22-14 | DATE PLOTTED => 07-JAN-2015 | TIME PLOTTED => 11:26

| Dist | COUNTY | ROUTE | POST MILES TOTAL PROJECT | SHEET No. | TOTAL SHEETS |
|---|---|---|---|---|---|
| 02 | Tri | 3,36 | L0.0/L0.1 27.1/R41.2 | 4 | 31 |

REGISTERED CIVIL ENGINEER 12-22-14 DATE

12-22-14
PLANS APPROVAL DATE

REGISTERED PROFESSIONAL ENGINEER MICHAEL A. CONNER No. C73123 Exp. 12-31-16 CIVIL STATE OF CALIFORNIA

*THE STATE OF CALIFORNIA OR ITS OFFICERS OR AGENTS SHALL NOT BE RESPONSIBLE FOR THE ACCURACY OR COMPLETENESS OF SCANNED COPIES OF THIS PLAN SHEET.*

## NOTES:

1. EXISTING UTILITY FACILITIES ARE NOT SHOWN ON THESE PLANS.
2. FOR COMPLETE RIGHT OF WAY DATA, SEE RIGHT OF WAY RECORD MAPS AT DISTRICT OFFICE.

## ABBREVIATIONS:

| | |
|---|---|
| DOT | DEPARTMENT OF TRANSPORTATION |
| GSY | GALLONS PER SQUARE YARD |
| CIR | COLD IN-PLACE RECYCLING |

## LEGEND:

- COLD PLANE AC PAVEMENT 0.00′ TO 0.20′
- COLD PLANE AC PAVEMENT 0.00′ TO 0.15′
- COLD PLANE AC PAVEMENT 0.00′ TO 0.10′
- HMA MATERIAL (TEMPORARY TAPER)
- IF NECESSARY, COLD PLANE ASPHALT CONCRETE PAVEMENT AND PLACE HMA MATERIAL

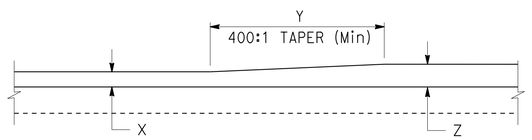


## OVERLAY TAPER DETAIL
(TYPICAL)

| X | Y | Z |
|---|---|---|
| 0.10′ | 20′ | 0.15′ |
| 0.15′ | 20′ | 0.20′ |
| 0.20′ | 40′ | 0.10′ |

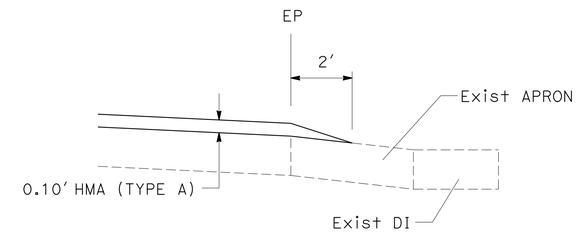


## TYPICAL DRAINAGE INLET CONFORM
Route 36 PM 37.02

## ROAD CONNECTIONS

| Rte | ROAD CONNECTION | SIDE | PM | DIMENSIONS (LF) A | B | C | CASE |
|---|---|---|---|---|---|---|---|
| 36 | USFS Rd 30N10 | L+ | R31.07 | 182 | 12 | 80 | 1 |
| | ROAD CONNECTION | L+ | R31.98 | 265 | 25 | 205 | 5 |
| | PULLOUT | L+ | R35.55 | 280 | 40 | 90 | 2 |
| | USFS Rd 30N23 | L+ | R36.98 | 130 | 65 | 23 | 4 |
| | USFS Rd 30N22 | L+ | R37.58 | 327 | 32 | 93 | 3 |
| | WILD-MAD Rd | R+ | R38.03 | 270 | 40 | 56 | 6 |
| | WILDWOOD MILL Rd | R+ | R38.47 | 285 | 32 | 68 | 3 |
| | DIRT ROAD | L+ | R38.62 | 170 | 25 | 57 | 3 |
| | USFS Rd 29N28 | R+ | R39.21 | 176 | 15 | 42 | 6 |
| | PRIVATE Rd | L+ | R40.19 | 68 | 31 | 19 | 3 |
| | USFS Rd 29N25 | R+ | R40.31 | 188 | 25 | 50 | 6 |
| | WILDWOOD STORE | L+ | R40.71 | 57 | 29 | 20 | 3 |
| | WILDWOOD STORE | L+ | R40.73 | 175 | 28 | 47 | 3 |
| | WILDWOOD Rd | L+ | R40.75 | 213 | 30 | 60 | 6 |
| | WILDWOOD Rd | R+ | R40.75 | 140 | 32 | 24 | 3 |
| | HALL CITY CAVE Rd | L+ | R41.07 | 127 | 25 | 36 | 6 |

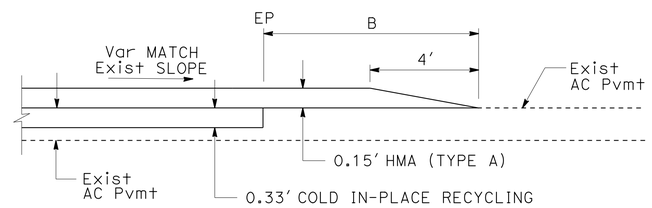


CASE 1
SECTION A-A

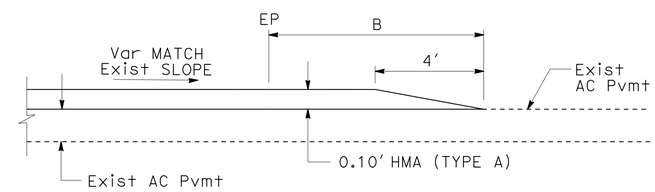


CASE 4
SECTION A-A

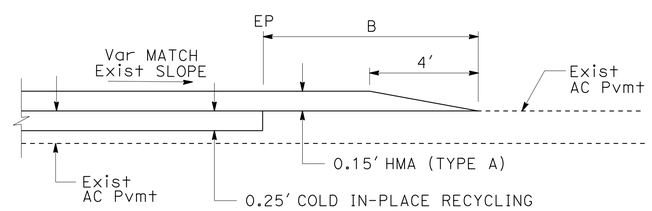


CASE 2
SECTION A-A

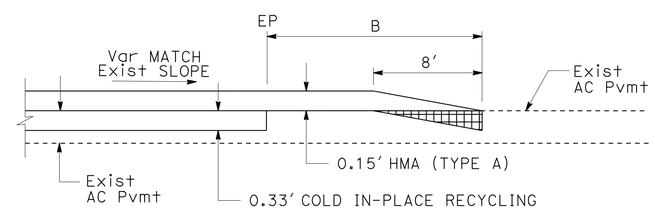


CASE 5
SECTION A-A

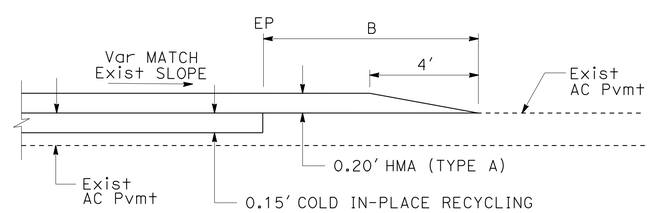


CASE 3
SECTION A-A

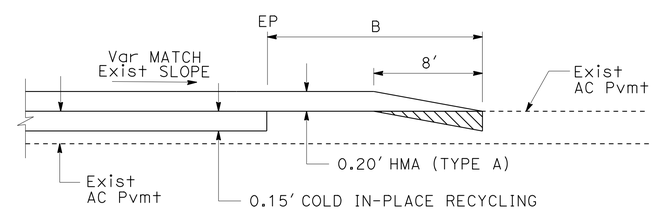


CASE 6
SECTION A-A

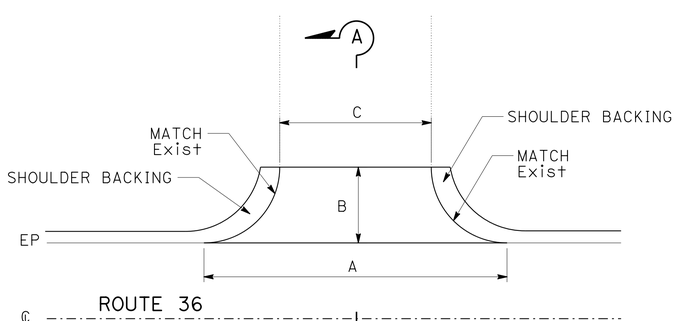


## DETAIL FOR ROAD CONNECTIONS

## CONSTRUCTION DETAILS
NO SCALE

C-1

REVISED BY | DATE REVISED
MICHAEL CONNER | KARLIE SMITH
CALCULATED-DESIGNED BY | CHECKED BY
FUNCTIONAL SUPERVISOR: LANCE BROWN

STATE OF CALIFORNIA - DEPARTMENT OF TRANSPORTATION
Caltrans MAINTENANCE

P:\proj1\02\4G120_plans\pse\24g120ga001.dgn

LAST REVISION 12-22-14 | DATE PLOTTED => 07-JAN-2015 | TIME PLOTTED => 11:26

| Dist | COUNTY | ROUTE | POST MILES TOTAL PROJECT | SHEET No. | TOTAL SHEETS |
|---|---|---|---|---|---|
| 02 | Tri | 3,36 | L0.0/L0.1 27.1/R41.2 | 5 | 31 |

REGISTERED CIVIL ENGINEER 12-22-14 DATE

12-22-14
PLANS APPROVAL DATE

REGISTERED PROFESSIONAL ENGINEER MICHAEL A. CONNER No. C73123 Exp. 12-31-16 CIVIL STATE OF CALIFORNIA

*THE STATE OF CALIFORNIA OR ITS OFFICERS OR AGENTS SHALL NOT BE RESPONSIBLE FOR THE ACCURACY OR COMPLETENESS OF SCANNED COPIES OF THIS PLAN SHEET.*

NOTES:

1. EXISTING UTILITY FACILITIES ARE NOT SHOWN ON THESE PLANS.
2. FOR ACCURATE RIGHT OF WAY DATA, CONTACT RIGHT OF WAY ENGINEERING AT THE DISTRICT OFFICE.

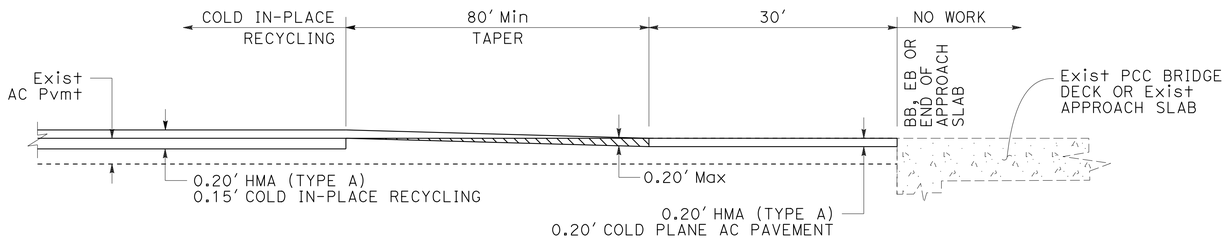


ROUTE 36 PM R38.37 AND R38.42

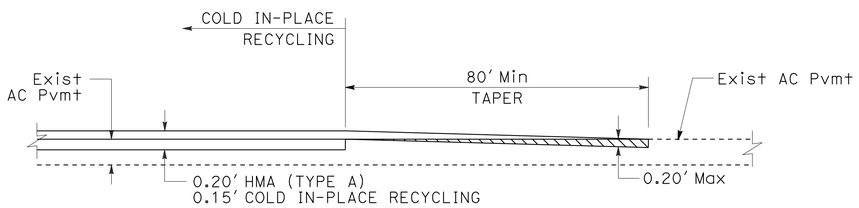


ROUTE 36 PM R41.14

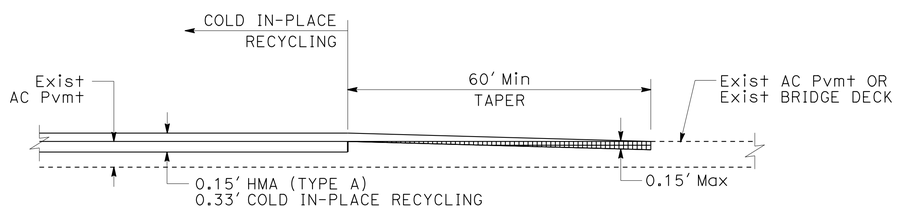


ROUTE 36 PM R30.40 AND R30.70

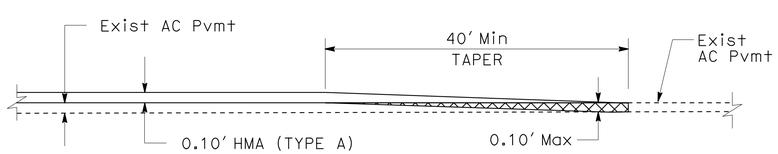


ROUTE 3 PM L0.05
ROUTE 36 PM 27.15

**MAINLINE CONFORM TAPER**

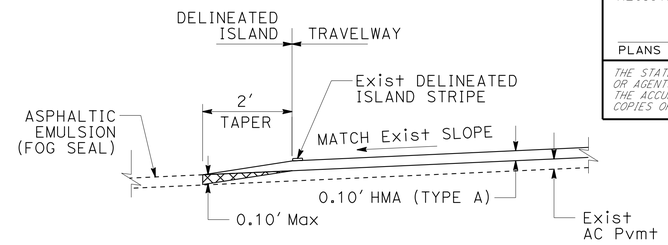


**CONFORM TAPER AT DELINEATED ISLAND**
Jct HIGHWAYS 3/36

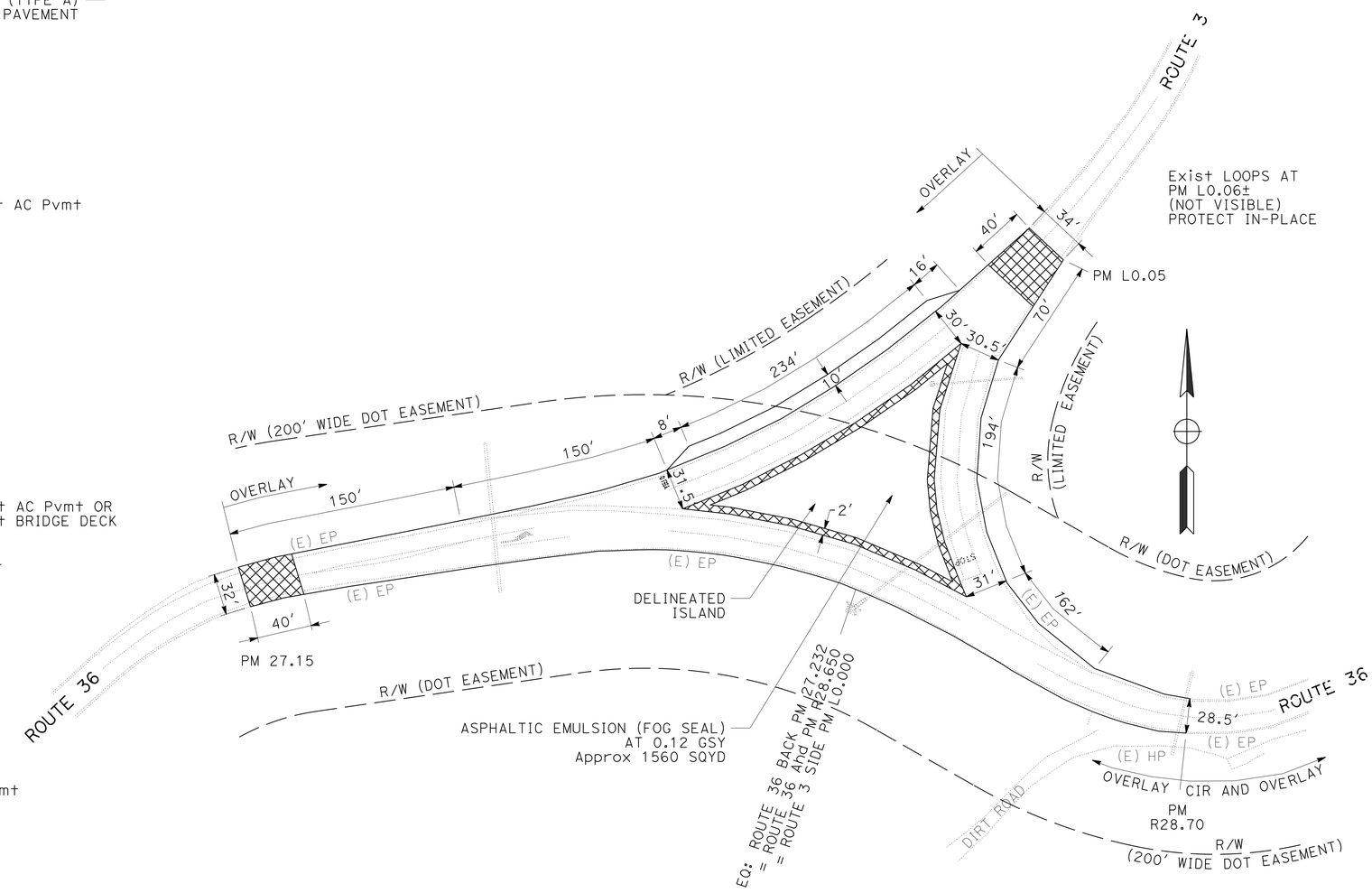


**CONSTRUCTION DETAILS**
NO SCALE

C-2

REVISED BY | DATE REVISED
MICHAEL CONNER | KARLIE SMITH
CALCULATED-DESIGNED BY | CHECKED BY
FUNCTIONAL SUPERVISOR | LANCE BROWN

STATE OF CALIFORNIA - DEPARTMENT OF TRANSPORTATION
Caltrans® MAINTENANCE

P:\proj1\02\4G120_plans\pse\24g120ga002.dgn

LAST REVISION 12-22-14 | DATE PLOTTED => 07-JAN-2015 | TIME PLOTTED => 11:26

| Dist | COUNTY | ROUTE | POST MILES TOTAL PROJECT | SHEET No. | TOTAL SHEETS |
|---|---|---|---|---|---|
| 02 | Tri | 3,36 | L0.0/L0.1 27.1/R41.2 | 6 | 31 |

REGISTERED CIVIL ENGINEER 12-22-14 DATE

12-22-14
PLANS APPROVAL DATE

REGISTERED PROFESSIONAL ENGINEER MICHAEL A. CONNER No. C73123 Exp. 12-31-16 CIVIL STATE OF CALIFORNIA

*THE STATE OF CALIFORNIA OR ITS OFFICERS OR AGENTS SHALL NOT BE RESPONSIBLE FOR THE ACCURACY OR COMPLETENESS OF SCANNED COPIES OF THIS PLAN SHEET.*

## NOTES:

1. FOR TEMPORARY CONSTRUCTION TAPERS, GRIND EXISTING SURFACES TO ACCOMMODATE A MINIMUM TAPER THICKNESS OF 0.10′ WHEN EITHER:
   A. HMA MATERIAL SUCH AS RUBBERIZED, POLYMER MODIFIED OR OPEN GRADED IS UNSUITABLE FOR RAKING TO A MAXIMUM 0.02′ THICKNESS AT THE CONFORM.
   B. TEMPORARY TAPER WILL BE IN PLACE FOR MORE THAN 14 DAYS.
2. PERMANENT SURFACE MAY BE EXISTING OR NEW PAVEMENT.
3. ROADWAY SURFACE IS THE TOP OF EXISTING SURFACE OR THE TOP OF THE PLANED SURFACE.
4. PLACE THE OBJECT MARKER WHERE THE GUARDRAIL BECOMES CLOSEST TO THE ETW (IN LINE WITH FACE OF GUARDRAIL)
5. EXISTING UTILITY FACILITIES ARE NOT SHOWN ON THESE PLANS.
6. FOR COMPLETE RIGHT OF WAY DATA, SEE RIGHT OF WAY RECORD MAPS AT DISTRICT OFFICE.

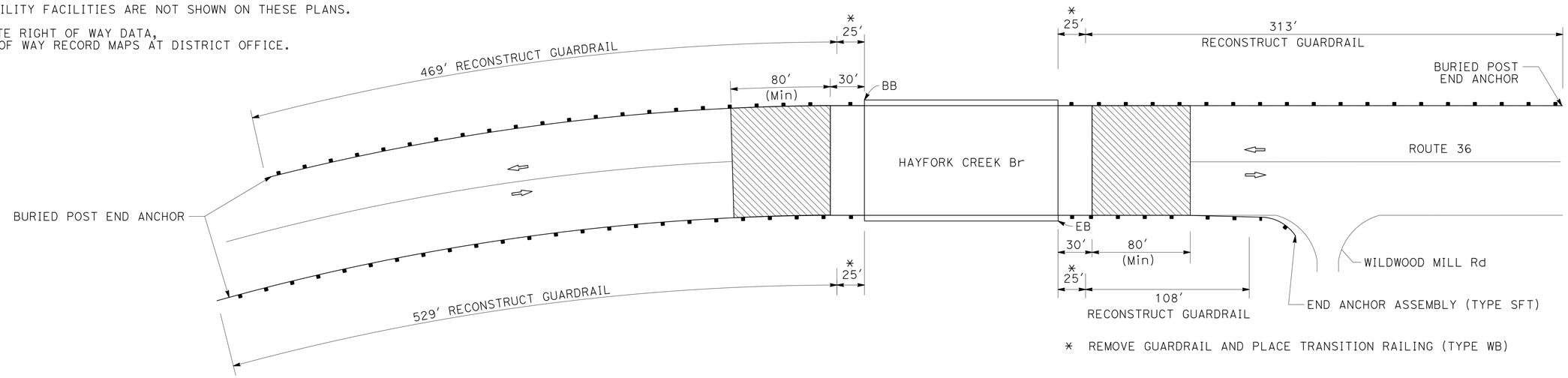


* REMOVE GUARDRAIL AND PLACE TRANSITION RAILING (TYPE WB)

## BRIDGE CONFORM/GUARDRAIL LOCATIONS

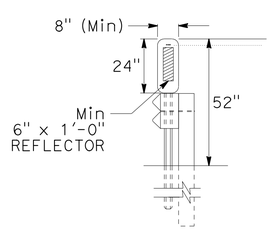


PLACE NEAR EDGE OF OBJECT MARKER IN LINE WITH THE EDGE OF OBJECT

## OBJECT MARKER DETAIL

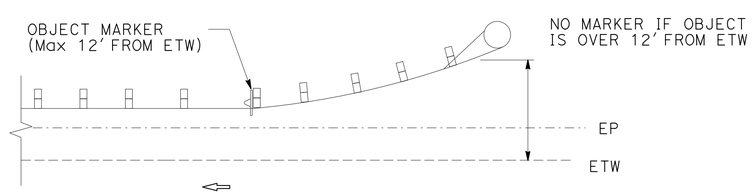


## TYPICAL GUARDRAIL OBJECT MARKERS

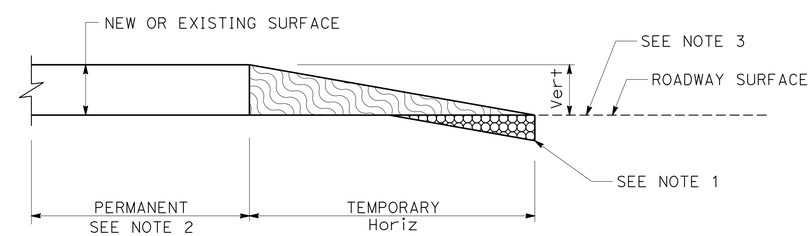


| Vert | SLOPE RATIO Horiz/Vert |
|---|---|
| 0-0.10′ | 70:1 |
| GREATER THAN 0.10′ | 160:1 |

## TYPICAL PAVING CONFORM FOR TEMPORARY CONSTRUCTION TAPERS

# CONSTRUCTION DETAILS

NO SCALE

C-3

STATE OF CALIFORNIA - DEPARTMENT OF TRANSPORTATION
Caltrans MAINTENANCE

FUNCTIONAL SUPERVISOR: LANCE BROWN
CALCULATED-DESIGNED BY: MICHAEL CONNER
CHECKED BY: KARLIE SMITH
REVISED BY
DATE REVISED

P:\proj1\02\4G120_plans\pse\24g120ga003.dgn

LAST REVISION 12-22-14 | DATE PLOTTED => 07-JAN-2015 | TIME PLOTTED => 11:26

| Dist | COUNTY | ROUTE | POST MILES TOTAL PROJECT | SHEET No. | TOTAL SHEETS |
|---|---|---|---|---|---|
| 02 | Tri | 3,36 | L0.0/L0.1 27.1/R41.2 | 7 | 31 |

REGISTERED CIVIL ENGINEER 12-22-14 DATE

12-22-14
PLANS APPROVAL DATE

REGISTERED PROFESSIONAL ENGINEER MICHAEL A. CONNER No. C73123 Exp. 12-31-16 CIVIL STATE OF CALIFORNIA

*THE STATE OF CALIFORNIA OR ITS OFFICERS OR AGENTS SHALL NOT BE RESPONSIBLE FOR THE ACCURACY OR COMPLETENESS OF SCANNED COPIES OF THIS PLAN SHEET.*

## NOTES:

1. SEE MEASURE HEIGHT DETAIL.
2. FOR DETAILS OF STANDARD HARDWARE USED TO CONSTRUCT GUARDRAIL, SEE STANDARD PLAN RSP A77M1. RSP A77M1 APPLIES TO MBGR.
3. FOR DETAILS OF POSTS (WOOD OR STEEL) AND BLOCKS (WOOD OR COMPOSITE) USED TO CONSTRUCT GUARDRAIL SEE STANDARD PLAN RSP A77N1 OR RSP A77N2.
4. A SINGLE LINE POST MAY BE MOVED UP TO 12" ALONG THE GUARDRAIL.
5. DIRECTION OF ADJACENT TRAFFIC INDICATED BY ⇨
6. SLOTTED HOLE FOR BOLTED CONNECTION OF RAIL ELEMENT TO BLOCK AND POST. SEE "RAIL ELEMENT SPLICE DETAIL".
7. SLOTTED HOLES FOR SPLICE BOLTS TO OVERLAP ENDS OF RAIL ELEMENT. SEE "RAIL ELEMENT SPLICE DETAIL".
8. ADDITIONAL HOLE IN UPPERMOST PORTION OF LINE POST IS FOR POTENTIAL FUTURE ADJUSTMENTS OF RAILING HEIGHT. SEE STANDARD PLAN RSP A77N1, RSP A77N2.
9. INSTALL POST IN SOIL.
10. TO CONNECT RAILING TO TERMINAL SYSTEM END TREATMENT, TRANSITION THE TOP OF RAILING HEIGHT AT A RATIO OF 120:1 TO TERMINAL SYSTEM END TREATMENT HEIGHT PLUS ONE 12'-6" STANDARD RAILING SECTION AT THE TRANSITIONED HEIGHT FOR A HORIZONTAL CONNECTION TO THE END TREATMENT.
11. PLACE RUB RAIL (GUARDRAIL ELEMENT) AND ATTACH TO POST WITH NO BLOCK WHEN HEIGHT OF GUARDRAIL IS 32" OR MORE ABOVE FINISHED GRADE UNDER FACE OF RAIL.
12. EXISTING UTILITY FACILITIES ARE NOT SHOWN ON THESE PLANS.

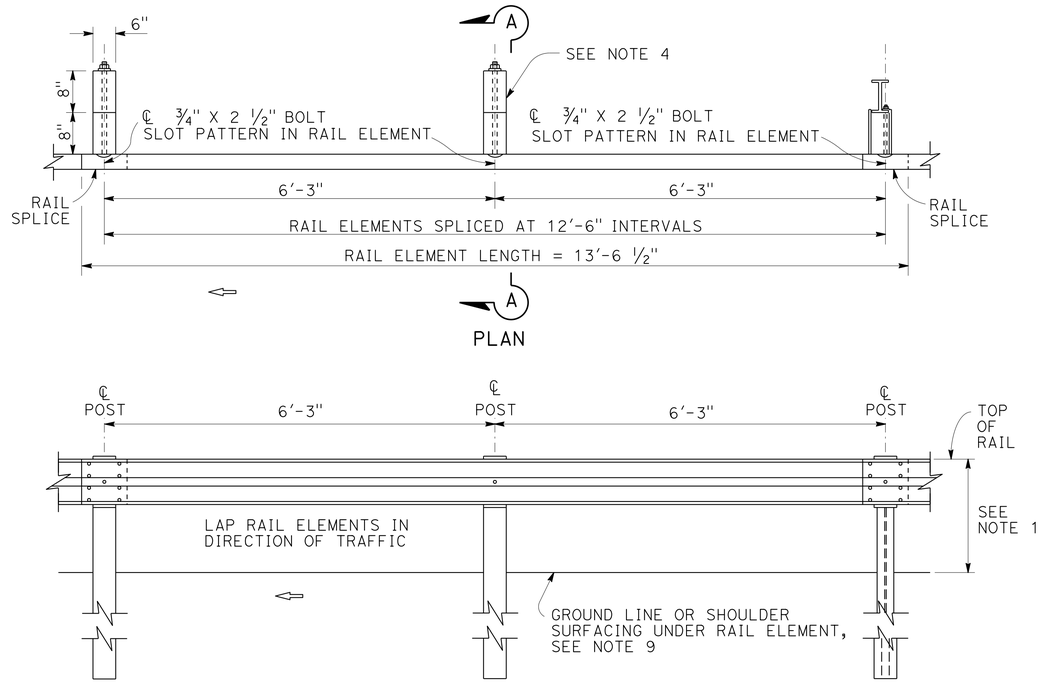


ELEVATION
**GUARDRAIL**

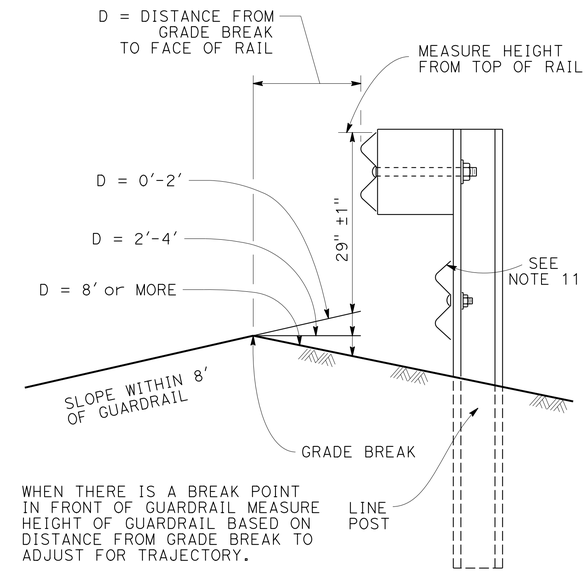


WHEN THERE IS A BREAK POINT IN FRONT OF GUARDRAIL MEASURE HEIGHT OF GUARDRAIL BASED ON DISTANCE FROM GRADE BREAK TO ADJUST FOR TRAJECTORY.

**MEASURE HEIGHT DETAIL AT GRADE BREAK**

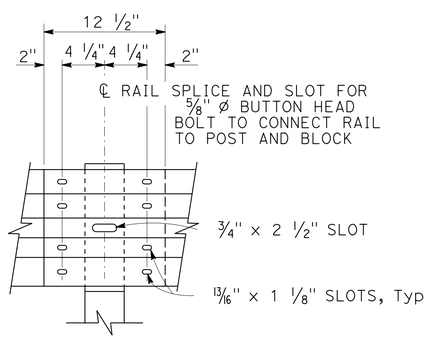


ELEVATION
**RAIL ELEMENT SPLICE DETAIL**

1. CONNECT THE OVER LAPPED END OF THE RAIL ELEMENTS WITH ⅝" ø x 1 ⅜" BUTTON HEAD OVAL SHOULDER SPLICE BOLTS INSERTED INTO THE 13/16" x 1 ⅛" SLOTS AND BOLTED TOGETHER WITH ⅝" ø RECESSED HEX NUTS. RECESS OF HEX NUT POINTS TOWARD RAIL ELEMENT. A TOTAL OF 8 BOLTS AND NUTS ARE TO BE USED AT EACH RAIL SPLICE CONNECTION.
2. THE ENDS OF THE RAIL ELEMENTS ARE TO BE OVERLAPPED IN THE DIRECTION OF TRAFFIC (SEE DETAILS).
3. WHERE END CAP IS TO BE ATTACHED TO THE END OF A RAIL ELEMENT, A TOTAL OF 4 OF THE ABOVE DESCRIBED SPLICE BOLTS AND NUTS ARE TO BE USED.

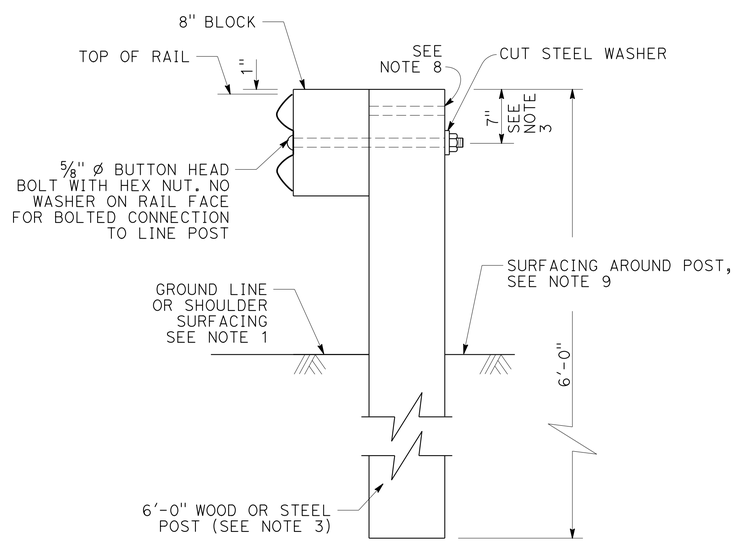


SECTION A-A
**TYPICAL LINE POST INSTALLATION**
SEE NOTE 4

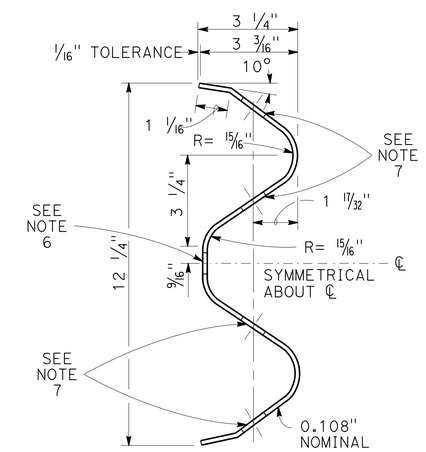


**SECTION THRU RAIL ELEMENT**

# CONSTRUCTION DETAILS

NO SCALE

**C-4**

STATE OF CALIFORNIA - DEPARTMENT OF TRANSPORTATION
Caltrans® MAINTENANCE

FUNCTIONAL SUPERVISOR: LANCE BROWN
CALCULATED-DESIGNED BY: MICHAEL CONNER
CHECKED BY: KARLIE SMITH
REVISED BY / DATE REVISED

P:\proj1\02\4G120_plans\pse\24g120ga004.dgn

LAST REVISION 12-22-14
DATE PLOTTED => 07-JAN-2015
TIME PLOTTED => 11:26

| Dist | COUNTY | ROUTE | POST MILES TOTAL PROJECT | SHEET No. | TOTAL SHEETS |
|---|---|---|---|---|---|
| 02 | Tri | 3,36 | L0.0/L0.1 27.1/R41.2 | 8 | 31 |

REGISTERED CIVIL ENGINEER 12-22-14 DATE

12-22-14
PLANS APPROVAL DATE

REGISTERED PROFESSIONAL ENGINEER MICHAEL A. CONNER No. C73123 Exp. 12-31-16 CIVIL STATE OF CALIFORNIA

*THE STATE OF CALIFORNIA OR ITS OFFICERS OR AGENTS SHALL NOT BE RESPONSIBLE FOR THE ACCURACY OR COMPLETENESS OF SCANNED COPIES OF THIS PLAN SHEET.*

NOTES:

1. THESE INSTALLATION DETAILS ARE APPLICABLE TO WOOD AND STEEL LINE POST INSTALLATIONS. USE W6X9 FOR 7' STEEL POSTS.
2. SLOPE IN FRONT OF GUARDRAIL MUST BE 10:1 OR FLATTER.
3. W6 x 15 STEEL POST, 8'-0" IN LENGTH, WITH 8" NOTCHED BLOCKS MAY BE USED IN PLACE OF THE 10" x 10" x 8'-0" WOOD POST WITH 8" BLOCK SHOWN IN THE "STRENGTHENED RAILING SECTIONS DETAILS".
4. DIRECTION OF ADJACENT TRAFFIC INDICATED BY ⇦ .
5. EXISTING UTILITY FACILITIES ARE NOT SHOWN ON THESE PLANS.
6. PLACE HMA BERM AROUND DOWNDRAIN BY HAND.
7. ALIGN 6"x12" TUBE WITH Exist DOWNDRAIN.
8. FILL GAP BETWEEN Exist EP AND SLOPED RAMP AS IT TAPERS FROM 3" TO 0" WITH HMA.

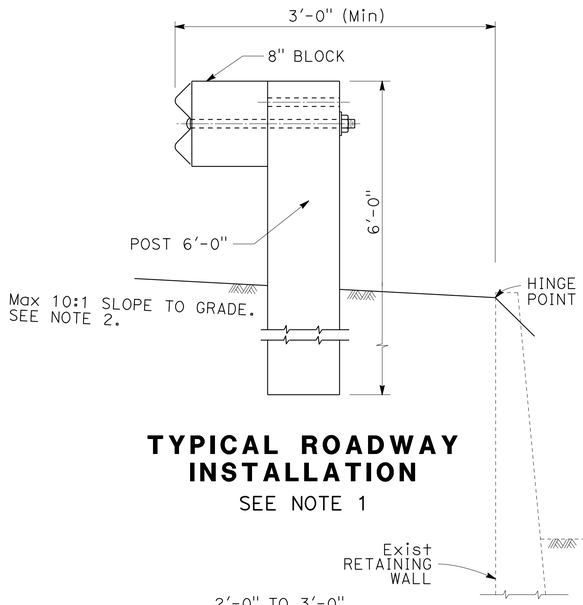


**TYPICAL ROADWAY INSTALLATION**

SEE NOTE 1

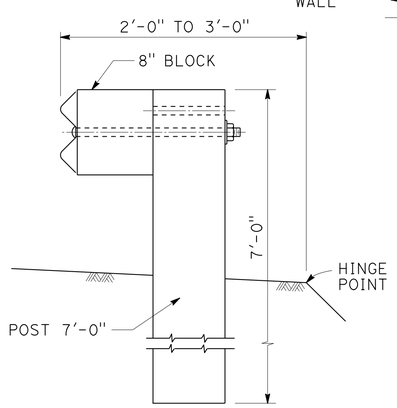


**NARROW ROADWAY INSTALLATION**

SEE NOTE 1

**POST EMBEDMENT**

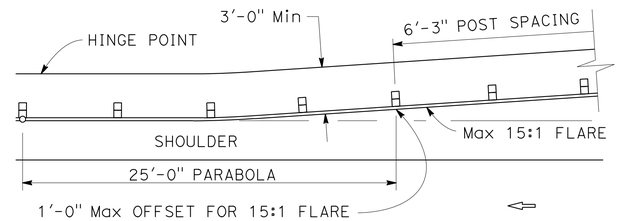


**GUARDRAIL WITH FLARED ALIGNMENT**

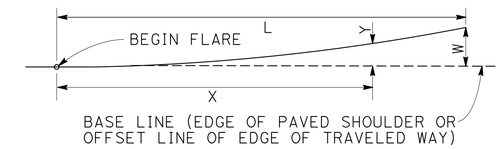


$$Y = \frac{WX^2}{L^2}$$

Y = OFFSET FROM BASE LINE
W = MAXIMUM OFFSET
X = DISTANCE ALONG BASE LINE
L = LENGTH OF FLARE

**PARABOLIC FLARE OFFSETS**

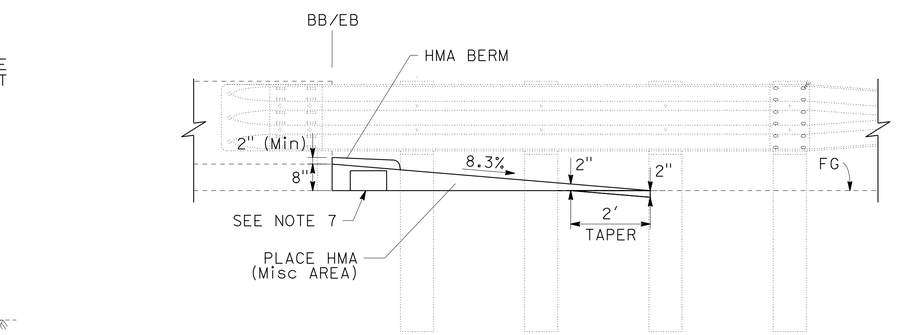


ELEVATION

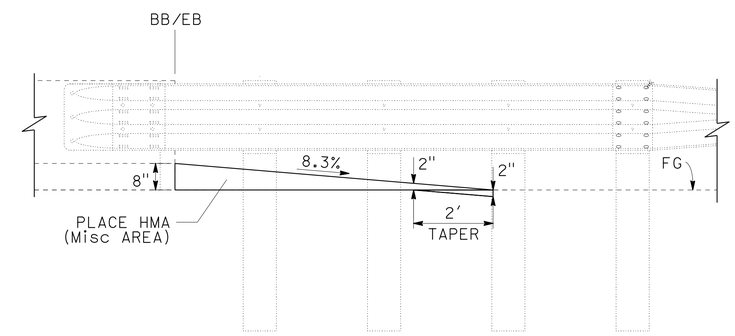


ELEVATION

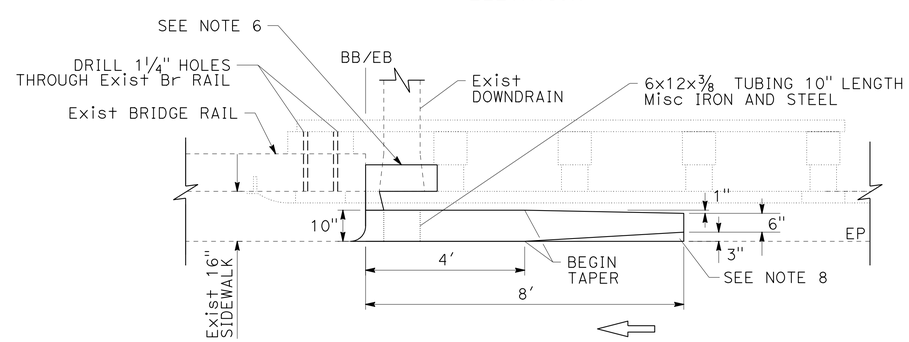


PLAN

Tri-36-R38.37 Rt

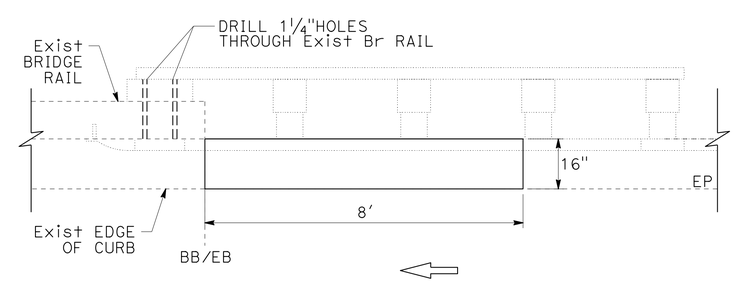


PLAN

Tri-36-R38.37 Lt
Tri-36-R38.41 Lt& Rt

**DRAINAGE APRON DETAIL**

**CONSTRUCTION DETAILS**

NO SCALE

C-5

REVISED BY | DATE REVISED
MICHAEL CONNER | KARLIE SMITH
CALCULATED-DESIGNED BY | CHECKED BY
FUNCTIONAL SUPERVISOR | LANCE BROWN

STATE OF CALIFORNIA - DEPARTMENT OF TRANSPORTATION
Caltrans® MAINTENANCE

P:\proj1\02\4G120_plans\pse\24g120ga005.dgn

LAST REVISION 12-22-14 | DATE PLOTTED => 07-JAN-2015 | TIME PLOTTED => 11:26

| Dist | COUNTY | ROUTE | POST MILES TOTAL PROJECT | SHEET No. | TOTAL SHEETS |
|---|---|---|---|---|---|
| 02 | Tri | 3,36 | L0.0/L0.1<br>27.1/R41.2 | 9 | 31 |

REGISTERED CIVIL ENGINEER 12-22-14 DATE

12-22-14
PLANS APPROVAL DATE

REGISTERED PROFESSIONAL ENGINEER MICHAEL A. CONNER No. C73123 Exp. 12-31-16 CIVIL STATE OF CALIFORNIA

*THE STATE OF CALIFORNIA OR ITS OFFICERS OR AGENTS SHALL NOT BE RESPONSIBLE FOR THE ACCURACY OR COMPLETENESS OF SCANNED COPIES OF THIS PLAN SHEET.*

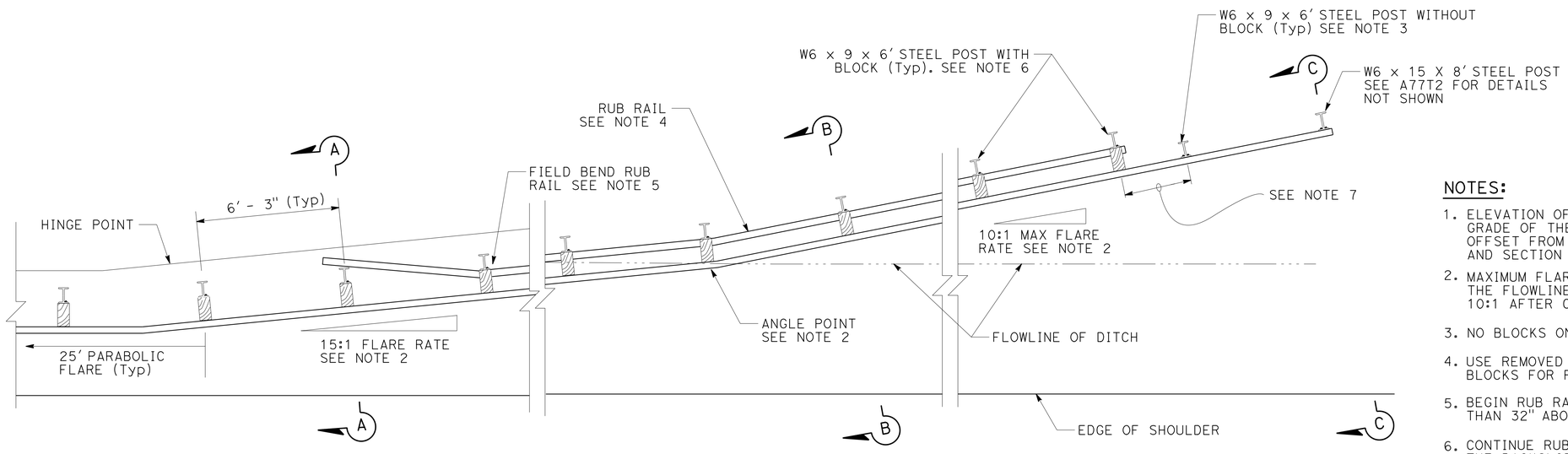


PLAN

## NOTES:

1. ELEVATION OF THE GUARDRAIL SHOULD FOLLOW THE PROFILE GRADE OF THE SHOULDER AND BE NO LOWER THAN 10% OF THE OFFSET FROM THE SHOULDER TO THE RAIL. SEE SECTION B-B AND SECTION C-C.
2. MAXIMUM FLARE RATE OF GUARDRAIL FROM THE SHOULDER TO THE FLOWLINE IS 15:1. FLARE RATE CAN BE INCREASED UP TO 10:1 AFTER CROSSING THE DITCH FLOWLINE.
3. NO BLOCKS ON POSTS WHERE BLOCKS ARE IN CONTACT WITH SOIL.
4. USE REMOVED STANDARD GUARDRAIL ELEMENTS WITH NO BLOCKS FOR RUB RAIL.
5. BEGIN RUB RAIL WHEN THE HEIGHT OF THE GUARDRAIL IS MORE THAN 32" ABOVE THE GROUND DIRECTLY BELOW THE RAIL.
6. CONTINUE RUB RAIL UNTIL TOP OF RUB RAIL BURIED IN THE BACKSLOPE.
7. POST SPACING AND ELEMENT SPLICES SHOWN FOR MGS. MAINTAIN 6'-3" SPACING AND SPLICE ELEMENTS AT POSTS FOR MBGR.
8. THE BURIED POST END ANCHOR SHOULD BE INSTALLED IN A NON-TRAVERSABLE SLOPE.
9. EXISTING UTILITY FACILITIES ARE NOT SHOWN ON THESE PLANS.

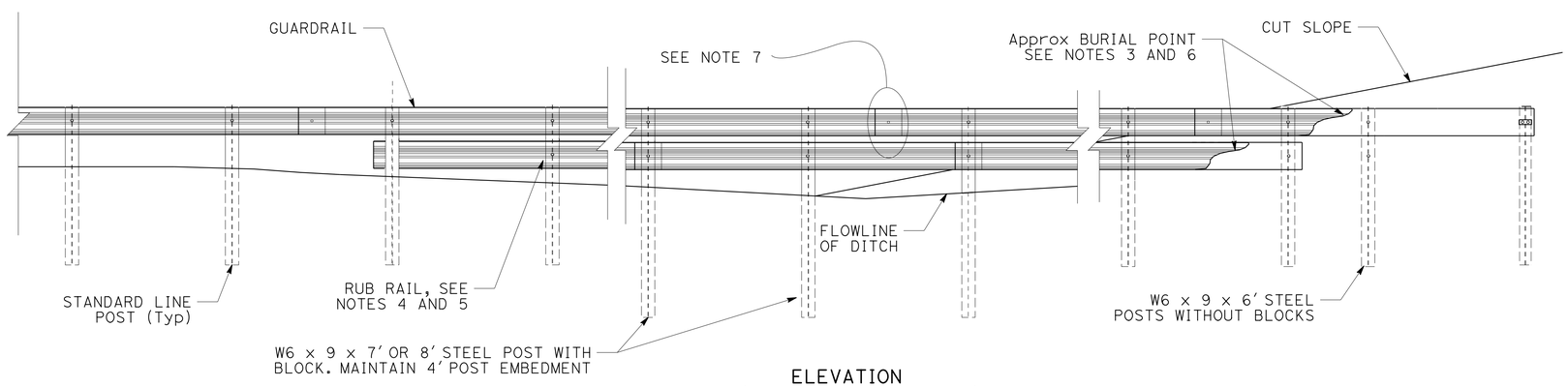


ELEVATION
(PROFILE ALONG RAIL)

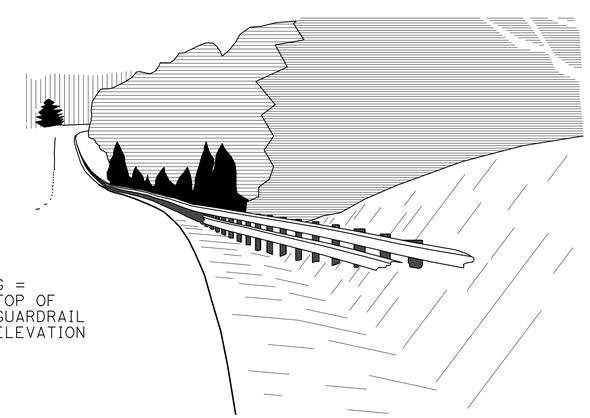

PERSPECTIVE

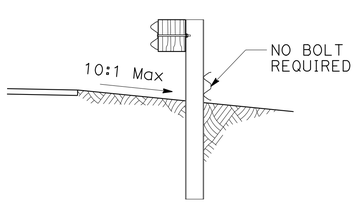


SECTION A-A

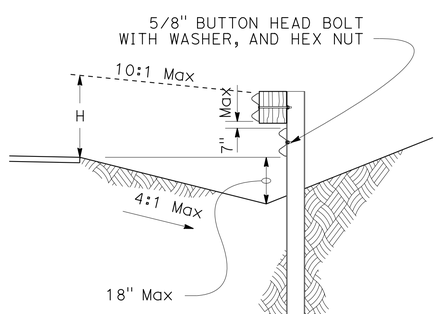


SECTION B-B

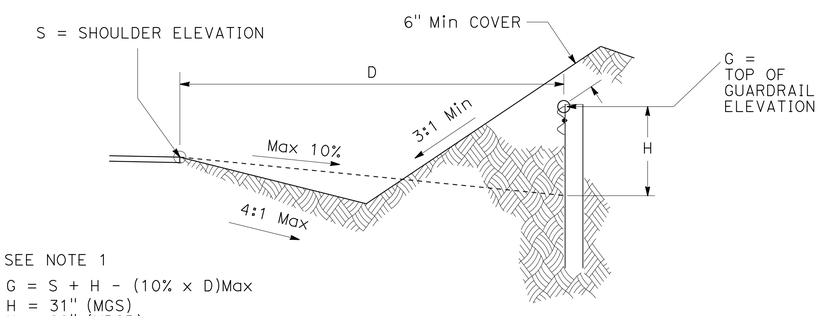


SEE NOTE 1

G = S + H - (10% x D)Max
H = 31" (MGS)
H = 29" (MBGR)

SECTION C-C

# GUARDRAIL MODIFIED BURIED POST END ANCHOR

# CONSTRUCTION DETAILS

NO SCALE

C-6

STATE OF CALIFORNIA - DEPARTMENT OF TRANSPORTATION
Caltrans® MAINTENANCE

FUNCTIONAL SUPERVISOR: LANCE BROWN
CALCULATED-DESIGNED BY: MICHAEL CONNER
CHECKED BY: KARLIE SMITH
REVISED BY
DATE REVISED

P:\proj1\02\4G1201_plans\pse\24g120ga006.dgn

LAST REVISION 12-22-14 | DATE PLOTTED => 07-JAN-2015 | TIME PLOTTED => 11:26

| Dist | COUNTY | ROUTE | POST MILES TOTAL PROJECT | SHEET No. | TOTAL SHEETS |
|---|---|---|---|---|---|
| 02 | Tri | 3,36 | L0.0/L0.1 27.1/R41.2 | 10 | 31 |

REGISTERED CIVIL ENGINEER 12-22-14 DATE

12-22-14
PLANS APPROVAL DATE

REGISTERED PROFESSIONAL ENGINEER MICHAEL A. CONNER No. C73123 Exp. 12-31-16 CIVIL STATE OF CALIFORNIA

*THE STATE OF CALIFORNIA OR ITS OFFICERS OR AGENTS SHALL NOT BE RESPONSIBLE FOR THE ACCURACY OR COMPLETENESS OF SCANNED COPIES OF THIS PLAN SHEET.*

NOTES:

1. EXISTING UTILITY FACILITIES ARE NOT SHOWN ON THESE PLANS.
2. LAP ALL RAILS AT EXISTING RAIL LAPS.
3. A 2-POST OPTION IS AVAILABLE, BUT NOT SHOWN.
4. LAPPED ELEMENTS MUST BE SUPPORTED BY A Min OF 2 POSTS ON EACH SIDE OF THE OMITTED POST(S).

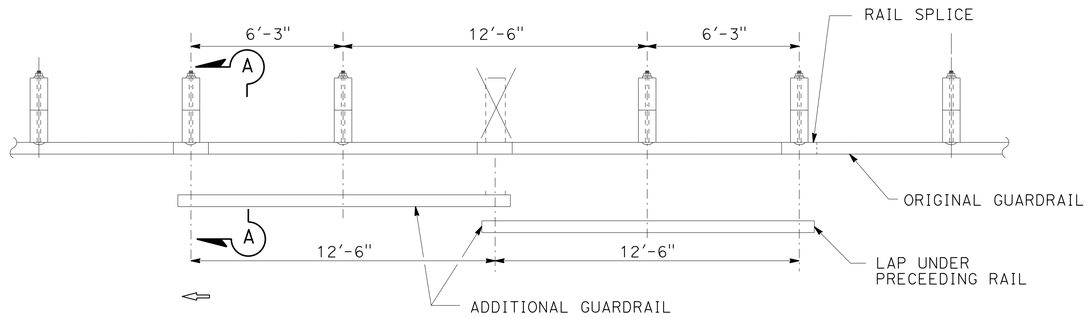


**CASE 1** (ONE POST OMITTED AT JUNCTION OF TWO ELEMENTS)

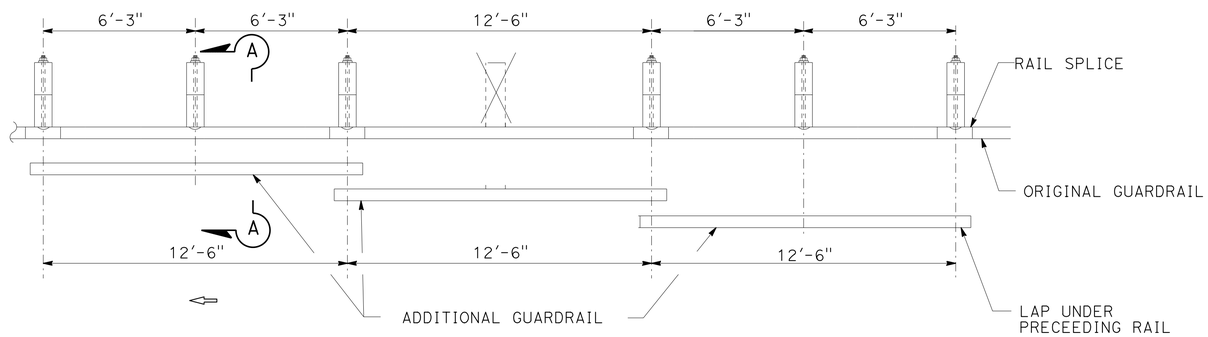


**CASE 2** (ONE POST OMITTED AT CENTER OF ELEMENT)

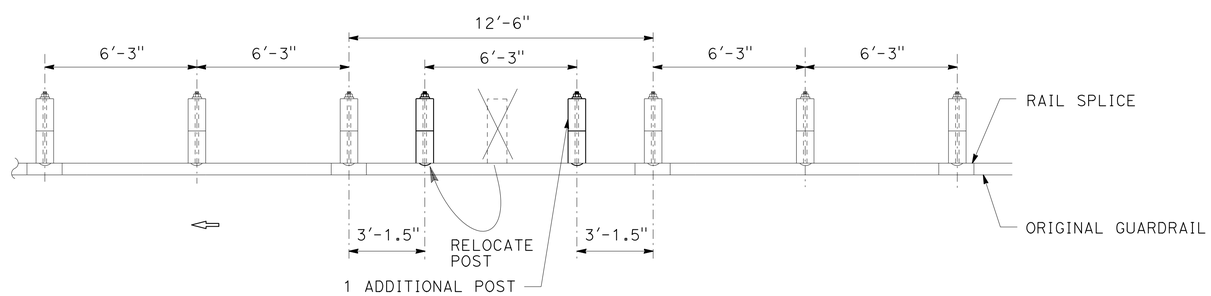


**CASE 3** (ONE POST OMITTED, MOVE THE POST AND ADD ONE POST)
(NO NESTED RAIL REQUIRED)

**LONG SPAN NESTED GUARDRAIL**

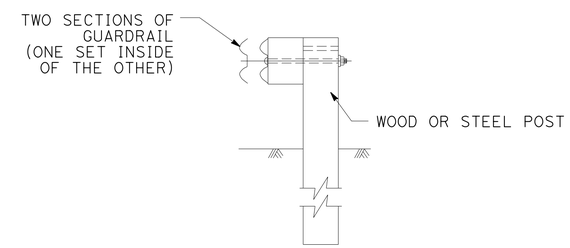


SECTION A-A

**TYPICAL RAILING OVERLAP INSTALLATION AT POST**

# CONSTRUCTION DETAILS

NO SCALE

C-7

REVISED BY | DATE REVISED
MICHAEL CONNER | KARLIE SMITH
CALCULATED-DESIGNED BY | CHECKED BY
FUNCTIONAL SUPERVISOR: LANCE BROWN

STATE OF CALIFORNIA - DEPARTMENT OF TRANSPORTATION
Caltrans® MAINTENANCE

P:\proj1\02\4G120_plans\pse\24g120ga007.dgn

LAST REVISION 12-22-14 | DATE PLOTTED => 07-JAN-2015 | TIME PLOTTED => 11:26

| Dist | COUNTY | ROUTE | POST MILES TOTAL PROJECT | SHEET No. | TOTAL SHEETS |
|---|---|---|---|---|---|
| 02 | Tri | 3,36 | L0.0/L0.1 27.1/R41.2 | 11 | 31 |

REGISTERED CIVIL ENGINEER 12-22-14 DATE

12-22-14
PLANS APPROVAL DATE

REGISTERED PROFESSIONAL ENGINEER MICHAEL A. CONNER No. C73123 Exp. 12-31-16 CIVIL STATE OF CALIFORNIA

*THE STATE OF CALIFORNIA OR ITS OFFICERS OR AGENTS SHALL NOT BE RESPONSIBLE FOR THE ACCURACY OR COMPLETENESS OF SCANNED COPIES OF THIS PLAN SHEET.*

## NOTES:

1. USE 5/8" ø BUTTON HEAD BOLTS AND HEX NUTS FOR CONNECTIONS TO POSTS.
2. IF CONSTRUCTING ANCHOR BLOCK, TAPER THE TOP OF THE ANCHOR BLOCK AT 4:1 FOR 1" TOLERANCE.
3. EXTERIOR SPLICE BOLT HOLES FOR RAIL ELEMENT SPLICES AT POST No. T4 AND THE CONNECTION TO THE CONCRETE BARRIER OR RAILING SHALL BE THE STANDARD 3/16" X 1 1/8" SLOT SIZE. INTERIOR SPLICE BOLT HOLES AT THESE LOCATIONS MAY BE INCREASED UP TO 1 1/4" ø. ONLY THE TOP 4 AND THE BOTTOM 4 SPLICE BOLTS WITH WASHERS AND NUTS ARE REQUIRED FOR RAIL SPLICES AT POST No. T4 AND THE TOP 2 AND THE BOTTOM 2 SPLICE BOLTS ARE REQUIRED AT THE CONNECTION TO THE CONCRETE BARRIER OR RAILING.
4. END CAP MAY BE INSTALLED OVER 12 Ga AND 10 Ga THRIE BEAM ELEMENTS WHERE TRANSITION RAILING IS INSTALLED ON THE DEPARTURE END OF BRIDGE RAILING. FOR DETAILS NOT SHOWN, SEE STANDARD PLAN A78C1.
5. THE TOP ELEVATION OF POSTS No. T2 THROUGH No. T7 SHALL NOT PROJECT MORE THAN 1" ABOVE THE TOP ELEVATION OF THE RAIL ELEMENT.
6. THE GUARD RAILING CONNECTED TO TRANSITION RAILING (TYPE WB) WILL BE A STANDARD RAILING SECTION OF METAL BEAM GUARD RAILING WITH HEIGHT TRANSITION RATIO OF 120:1.
7. THE DEPTH OF THE METAL BOX SPACER VARIES FROM THE 5 1/8" TO 1 1/2" AND IS DEPENDENT ON THE WIDTH OF THE CONCRETE RAILING OR WALL. THE COMBINED DIMENSION FOR THE DEPTH OF THE METAL BOX SPACER PLUS THE WIDTH OF RAILING OR WALL SHOULD BE 17 1/8".
8. EXISTING UTILITY FACILITIES ARE NOT SHOWN ON THESE PLANS.

## LEGEND:

(A) NESTED THRIE BEAM ELEMENTS (ONE 12 Ga ELEMENT NESTED OVER ONE 10 Ga ELEMENT).

(B) ONE 10 Ga "W" BEAM TO THRIE BEAM ELEMENT.

(C) ONE 12 Ga THRIE BEAM ELEMENT.

(D) ONE 10 Ga "W" BEAM RAIL ELEMENT (7'-3 1/2" LENGTH)

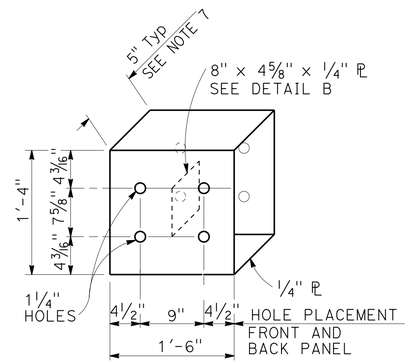


**DETAIL A**
**METAL BOX SPACER**

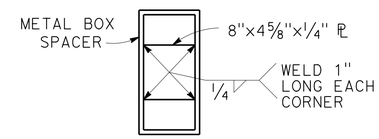


**DETAIL B**

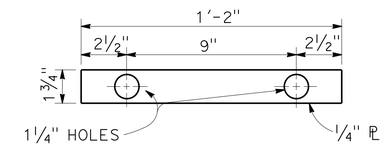


**DETAIL C**
**PLATE 'A'**

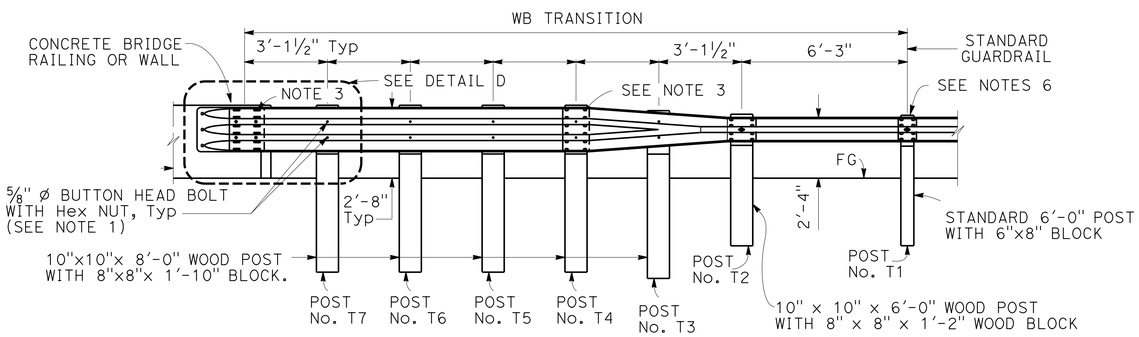


ELEVATION

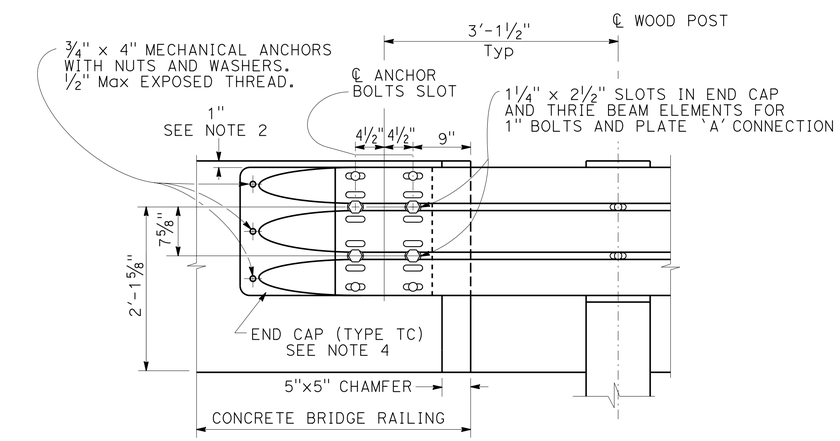


**DETAIL D**

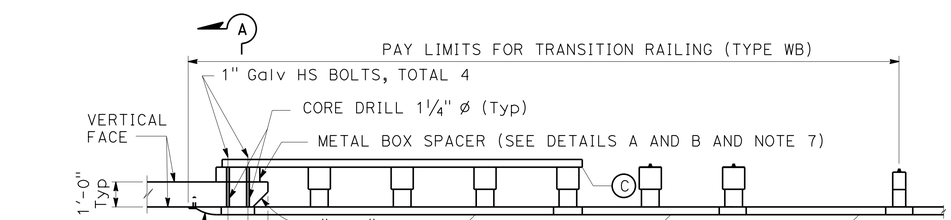


PLAN

**TRANSITION RAILING (TYPE WB)**

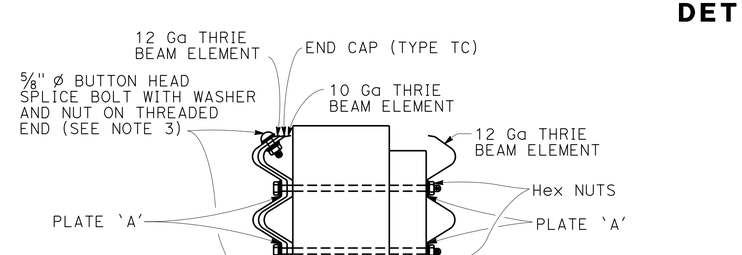


**SECTION A-A**

# CONSTRUCTION DETAILS

NO SCALE

C-8

| | |
|---|---|
| CALCULATED-DESIGNED BY | MICHAEL CONNER |
| CHECKED BY | KARLIE SMITH |
| FUNCTIONAL SUPERVISOR | LANCE BROWN |
| REVISED BY | |
| DATE REVISED | |

STATE OF CALIFORNIA - DEPARTMENT OF TRANSPORTATION
Caltrans MAINTENANCE

P:\proj1\02\4G120_plans\pse\24g120ga008.dgn

LAST REVISION 12-22-14 | DATE PLOTTED => 07-JAN-2015 | TIME PLOTTED => 11:26

| Dist | COUNTY | ROUTE | POST MILES TOTAL PROJECT | SHEET No. | TOTAL SHEETS |
|---|---|---|---|---|---|
| 02 | Tri | 3,36 | L0.0/L0.1 27.1/R41.2 | 12 | 31 |

REGISTERED CIVIL ENGINEER 12-22-14 DATE

12-22-14
PLANS APPROVAL DATE

REGISTERED PROFESSIONAL ENGINEER MICHAEL A. CONNER No. C73123 Exp. 12-31-16 CIVIL STATE OF CALIFORNIA

*THE STATE OF CALIFORNIA OR ITS OFFICERS OR AGENTS SHALL NOT BE RESPONSIBLE FOR THE ACCURACY OR COMPLETENESS OF SCANNED COPIES OF THIS PLAN SHEET.*

NOTES:

1. EXACT LOCATION OF ALL SIGNS TO BE DETERMINED BY THE ENGINEER.
2. CALIFORNIA CODES ARE DESIGNATED BY (CA), OTHERWISE FEDERAL CODES ARE SHOWN.
3. INTERMEDIATE G20-1 SIGNS SHOULD BE PLACED EVERY 3 TO 5 MILES AS NECESSARY.

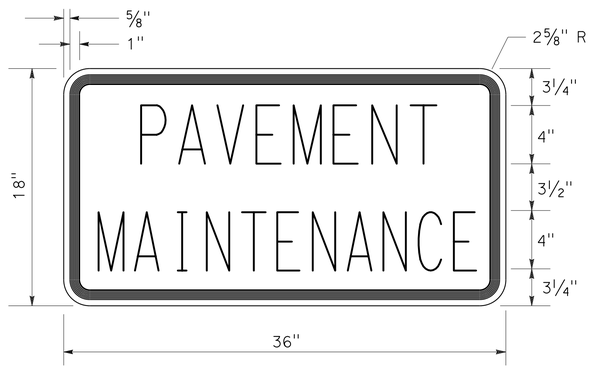


**C23B(CA) SIGN PANEL DETAIL**

## ROAD CONNECTIONS

| Rte | POST MILE | DESCRIPTION | Ⓑ |
|---|---|---|---|
| 36 | R36.98 | FOREST SERVICE Rd 30N23 | Lt |
| | R37.58 | FOREST SERVICE Rd 30N22 | Lt |
| | R38.03 | WILD-MAD Rd | Rt |
| | R39.21 | FOREST SERVICE Rd 29N28 | Rt |
| | R40.75 | W SIDE WILDWOOD Rd | Lt |
| | R41.07 | HALL CITY CAVE | Lt |

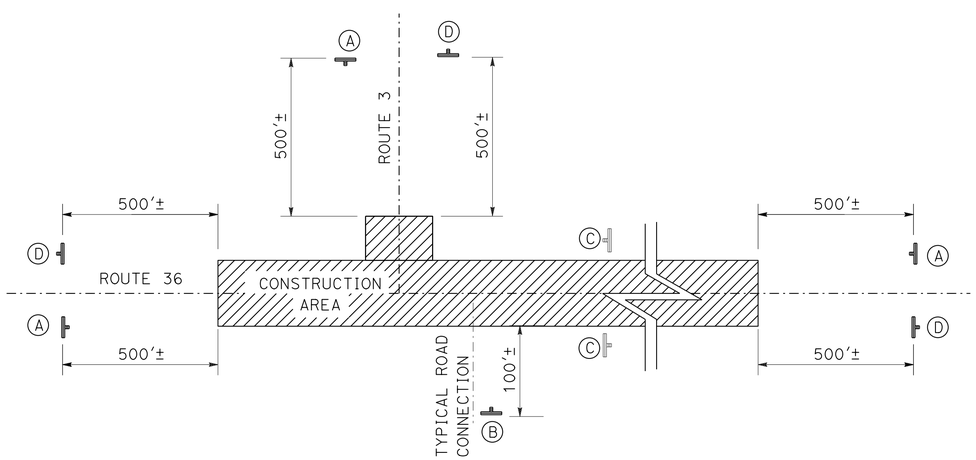


**CONSTRUCTION AREA SIGNS (STATIONARY MOUNTED)**

## CONSTRUCTION AREA SIGNS (STATIONARY MOUNTED)

| TYPE | CODE | PANEL SIZE | SIGN MESSAGE | NUMBER AND SIZE OF POST | No. OF SIGNS |
|---|---|---|---|---|---|
| Ⓐ | G20-1 | 36" x 18" | ROAD WORK NEXT XX MILES | 1-4" x 6" | 3 |
| | C23B(CA) | 36" x 18" | PAVEMENT MAINTENANCE | | |
| Ⓑ | W20-1 | 48" x 48" | ROAD WORK AHEAD | 1-4" x 6" | 6 |
| Ⓒ | G20-1 | 36" x 18" | ROAD WORK NEXT XX MILES | 1-4" x 4" | 4 |
| Ⓓ | G20-2 | 36" x 18" | END ROAD WORK | 1-4" x 4" | 3 |

# CONSTRUCTION AREA SIGNS

NO SCALE

**CS-1**

REVISED BY | DATE REVISED
MICHAEL CONNER | KARLIE SMITH
CALCULATED-DESIGNED BY | CHECKED BY
FUNCTIONAL SUPERVISOR: LANCE BROWN

STATE OF CALIFORNIA - DEPARTMENT OF TRANSPORTATION
Caltrans® MAINTENANCE

P:\proj1\02\4G120_plans\pse\24g120ia001.dgn

LAST REVISION 12-22-14 | DATE PLOTTED => 07-JAN-2015 | TIME PLOTTED => 11:26

| Dist | COUNTY | ROUTE | POST MILES TOTAL PROJECT | SHEET No. | TOTAL SHEETS |
|---|---|---|---|---|---|
| 02 | Tri | 3,36 | L0.0/L0.1<br>27.1/R41.2 | 13 | 31 |

REGISTERED CIVIL ENGINEER 12-22-14 DATE

12-22-14
PLANS APPROVAL DATE

REGISTERED PROFESSIONAL ENGINEER MICHAEL A. CONNER No. C73123 Exp. 12-31-16 CIVIL STATE OF CALIFORNIA

*THE STATE OF CALIFORNIA OR ITS OFFICERS OR AGENTS SHALL NOT BE RESPONSIBLE FOR THE ACCURACY OR COMPLETENESS OF SCANNED COPIES OF THIS PLAN SHEET.*

NOTE:

1. (N) - NOT A SEPARATE PAY ITEM, FOR INFORMATION ONLY

## THERMOPLASTIC PAVEMENT MARKING

| Rte | POST MILE | Lt | Rt | (N) EA | SQFT | REMARKS |
|---|---|---|---|---|---|---|
| 3 | L0.00 | | X | 1 | 22.0 | STOP |
| | L0.00 | X | | 1 | 24.0 | YIELD |
| | L0.00 | | X | 1 | 652.0 | DELINEATED ISLAND |
| | L0.00 | X | | 1 | 18.0 | ROAD CONNECTION LIMIT LINE |
| 36 | 27.18 | | X | 1 | 42.0 | TYPE III (L) ARROW |
| | R36.98 | X | | 1 | 22.0 | STOP |
| | R36.98 | X | | 1 | 30.0 | ROAD CONNECTION LIMIT LINE |
| | R37.58 | X | | 1 | 22.0 | STOP |
| | R37.58 | X | | 1 | 27.0 | ROAD CONNECTION LIMIT LINE |
| | R38.03 | | X | 1 | 22.0 | STOP |
| | R38.03 | | X | 1 | 40.0 | ROAD CONNECTION LIMIT LINE |
| | R39.21 | | X | 1 | 22.0 | STOP |
| | R39.21 | | X | 1 | 24.0 | ROAD CONNECTION LIMIT LINE |
| | R40.75 | X | | 1 | 22.0 | STOP |
| | R40.75 | X | | 1 | 48.0 | ROAD CONNECTION LIMIT LINE |
| | R41.07 | X | | 1 | 22.0 | STOP |
| | R41.07 | X | | 1 | 27.0 | ROAD CONNECTION LIMIT LINE |
| TOTAL | | | | | 1086.0 | |

## REMOVE THERMOPLASTIC PAVEMENT MARKING

| Rte | POST MILE | Lt | Rt | (N) EA | SQFT | REMARKS |
|---|---|---|---|---|---|---|
| 3 | L0.00 | | X | 1 | 22.0 | STOP |
| | L0.00 | X | | 1 | 24.0 | YIELD |
| | L0.00 | X | | 1 | 18.0 | ROAD CONNECTION LIMIT LINE |
| 36 | 27.18 | | X | 1 | 42.0 | TYPE III (L) ARROW |
| | R36.98 | X | | 1 | 22.0 | STOP |
| | R36.98 | X | | 1 | 30.0 | ROAD CONNECTION LIMIT LINE |
| | R37.58 | X | | 1 | 22.0 | STOP |
| | R37.58 | X | | 1 | 27.0 | ROAD CONNECTION LIMIT LINE |
| | R38.03 | | X | 1 | 22.0 | STOP |
| | R38.03 | | X | 1 | 40.0 | ROAD CONNECTION LIMIT LINE |
| | R39.21 | | X | 1 | 22.0 | STOP |
| | R39.21 | | X | 1 | 24.0 | ROAD CONNECTION LIMIT LINE |
| | R40.75 | X | | 1 | 22.0 | STOP |
| | R40.75 | X | | 1 | 48.0 | ROAD CONNECTION LIMIT LINE |
| | R41.07 | X | | 1 | 22.0 | STOP |
| | R41.07 | X | | 1 | 27.0 | ROAD CONNECTION LIMIT LINE |
| TOTAL | | | | | 434.0 | |

## THERMOPLASTIC TRAFFIC STRIPE (SPRAYABLE)

| Rte | POST MILE LIMITS | DETAIL 18 | DETAIL 21 | DETAIL 27B | DETAIL 27C | DETAIL 28 | DETAIL 38A |
|---|---|---|---|---|---|---|---|
| | | LF | LF | LF | LF | LF | LF |
| 3 | L0.00-L0.05 | | 528 | 1056 | | | |
| 36 | 27.15-R41.14 | 898 | 65,203 | 131,620 | 1109 | 318 | 106 |
| TOTAL | | 200,838 | | | | | |

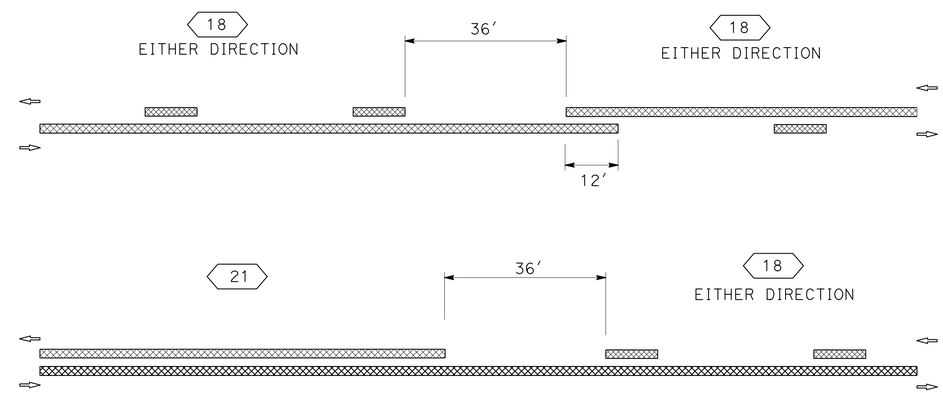


## TYPICAL STRIPE TRANSITION DETAILS

## REMOVE PAVEMENT MARKER

| Rte | POST MILE LIMITS | EA |
|---|---|---|
| 3 | L0.00-L0.05 | 44 |
| 36 | 27.15-R28.70 | 46 |
| TOTAL | | 90 |

## REMOVE THERMOPLASTIC TRAFFIC STRIPE

| Rte | POST MILE LIMITS | DETAIL 28 | DETAIL 38A |
|---|---|---|---|
| | | LF | LF |
| 36 | 27.17-27.23 | 318 | 106 |
| TOTAL | | 424 | |

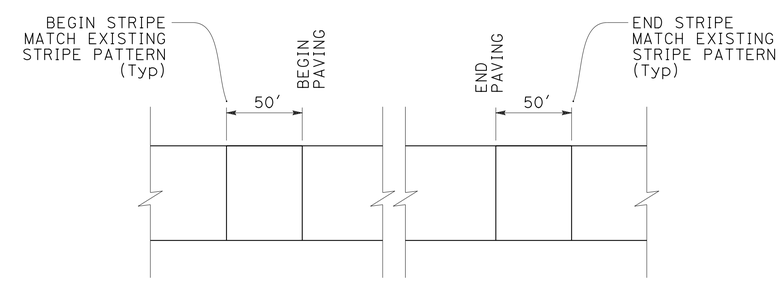


## TRAFFIC STRIPE MATCH DETAIL

# PAVEMENT DELINEATION DETAILS AND QUANTITIES

NO SCALE

**PDQ-1**

REVISED BY | DATE REVISED
MICHAEL CONNER | KARLIE SMITH
CALCULATED-DESIGNED BY | CHECKED BY
FUNCTIONAL SUPERVISOR: LANCE BROWN

STATE OF CALIFORNIA - DEPARTMENT OF TRANSPORTATION
Caltrans® MAINTENANCE

P:\proj1\02\4G120_plans\pse\24g120nc001.dgn

LAST REVISION 12-22-14 | DATE PLOTTED => 07-JAN-2015 | TIME PLOTTED => 11:26

| Dist | COUNTY | ROUTE | POST MILES TOTAL PROJECT | SHEET No. | TOTAL SHEETS |
|---|---|---|---|---|---|
| 02 | Tri | 3,36 | L0.0/L0.1<br>27.1/R41.2 | 14 | 31 |

REGISTERED CIVIL ENGINEER 12-22-14 DATE

12-22-14
PLANS APPROVAL DATE

REGISTERED PROFESSIONAL ENGINEER MICHAEL A. CONNER No. C73123 Exp. 12-31-16 CIVIL STATE OF CALIFORNIA

*THE STATE OF CALIFORNIA OR ITS OFFICERS OR AGENTS SHALL NOT BE RESPONSIBLE FOR THE ACCURACY OR COMPLETENESS OF SCANNED COPIES OF THIS PLAN SHEET.*

NOTE:

1. (N) - NOT A SEPARATE PAY ITEM, FOR INFORMATION ONLY

ABBREVIATIONS:

CIR COLD IN-PLACE RECYCLING

# ROADWAY QUANTITIES SUMMARY

| Rte | POST MILE LIMITS | (N) LENGTH | (N) WIDTH | (N) OVERLAY | (N) CIR DEPTH | HMA (TYPE A) | SHOULDER BACKING | TACK COAT | ASPHALTIC EMULSION (FOG SEAL COAT) | COLD IN-PLACE RECYCLING | EMULSIFIED RECYCLING AGENT (COLD IN-PLACE RECYCLING) | CEMENT (COLD IN-PLACE RECYCLING) | ASPHALTIC EMULSION (COLD IN-PLACE RECYCLING) | SAND COVER (COLD IN-PLACE RECYCLING) |
|---|---|---|---|---|---|---|---|---|---|---|---|---|---|---|
| | PM - PM | LF | LF | LF | LF | TON | TON | TON | TON | SQYD | TON | TON | TON | TON |
| 3 | L0.00-L0.05 | 1416 | 30.0-60.5 | 0.10 | | 228 | 109 | 2 | 1 | | | | | |
| 36 | 27.15-27.21 | 317 | 32.0-31.0 | 0.10 | | | | | | | | | | |
| | 27.21-27.23 | 106 | 31.0 | 0.10 | | | | | | | | | | |
| | R28.65-R28.67 | 106 | 31.0-30.0 | 0.10 | | | | | | | | | | |
| | R28.67-R28.70 | 158 | 30.0-28.5 | 0.10 | | | | | | | | | | |
| | R28.70-R29.00 | 1584 | 28.5-25.0 | 0.15 | 0.33 | | | | | | | | | |
| | R29.00-R29.30 | 1584 | 25.0 | 0.15 | 0.33 | | | | | | | | | |
| | R29.30-R29.50 | 1056 | 25.0 | 0.15 | 0.25 | | | | | | | | | |
| | R29.50-R29.70 | 1056 | 25.0 | 0.15 | 0.25 | | | | | | | | | |
| | R29.70-R30.00 | 1584 | 25.0 | 0.15 | 0.33 | | | | | | | | | |
| | R30.00-R30.40 | 2112 | 25.0-24.5 | 0.15 | 0.33 | | | | | | | | | |
| | R30.40-R30.70 | | | | | | | | | | | | | |
| | R30.70-R31.00 | 1584 | 24.5 | 0.15 | 0.33 | | | | | | | | | |
| | R31.00-R31.50 | 2640 | 24.5-24.0 | 0.15 | 0.33 | | | | | | | | | |
| | R31.50-R32.00 | 2640 | 24.0-24.5 | 0.15 | 0.33 | | | | | | | | | |
| | R32.00-R32.50 | 2640 | 24.5 | 0.15 | 0.25 | | | | | | | | | |
| | R32.50-R32.70 | 1056 | 24.5 | 0.15 | 0.25 | | | | | | | | | |
| | R32.70-R33.00 | 1584 | 24.5-24.0 | 0.15 | 0.33 | | | | | | | | | |
| | R33.00-R33.50 | 2640 | 24.0-25.0 | 0.15 | 0.33 | | | | | | | | | |
| | R33.50-R34.00 | 2640 | 25.0-24.0 | 0.15 | 0.33 | | | | | | | | | |
| | R34.00-R34.50 | 2640 | 24.0-24.5 | 0.15 | 0.25 | | | | | | | | | |
| | R34.50-R35.00 | 2640 | 24.5-26.0 | 0.15 | 0.25 | | | | | | | | | |
| | R35.00-R35.50 | 2640 | 26.0-23.5 | 0.15 | 0.25 | 20,206 | 8595 | 61 | | | | | | |
| | R35.50-R36.00 | 2640 | 23.5-23.0 | 0.15 | 0.25 | | | | | | | | | |
| | R36.00-R36.30 | 1584 | 23.0 | 0.15 | 0.25 | | | | | 171,535 | 743 | 166 | 72 | 129 |
| | R36.30-R36.50 | 1056 | 23.0 | 0.20 | 0.15 | | | | | | | | | |
| | R36.50-R36.68 | 950 | 23.0 | 0.20 | 0.15 | | | | | | | | | |
| | R36.68-R36.72 | 211 | 31.5 | 0.10 | | | | | | | | | | |
| | R36.72-R37.03 | 1637 | 31.5 | 0.10 | | | | | | | | | | |
| | R37.04-R37.50 | 2429 | 24.5-25.0 | 0.20 | 0.15 | | | | | | | | | |
| | R37.50-R38.00 | 2640 | 25.0 | 0.20 | 0.15 | | | | | | | | | |
| | R38.00-R38.37 | 1954 | 25.0-33.0 | 0.20 | 0.15 | | | | | | | | | |
| | R38.37-R38.42 | | | | | | | | | | | | | |
| | R38.42-R38.50 | 449 | 33.0-26.0 | 0.20 | 0.15 | | | | | | | | | |
| | R38.50-R39.00 | 2640 | 26.0 | 0.20 | 0.15 | | | | | | | | | |
| | R39.00-R39.50 | 2640 | 26.0-24.5 | 0.20 | 0.15 | | | | | | | | | |
| | R39.50-R40.00 | 2640 | 24.5 | 0.20 | 0.15 | | | | | | | | | |
| | R40.00-R40.50 | 2640 | 24.5 | 0.20 | 0.15 | | | | | | | | | |
| | R40.50-R41.00 | 2640 | 24.5-26.5 | 0.20 | 0.15 | | | | | | | | | |
| | R41.00-R41.07 | 370 | 26.5-28.0 | 0.20 | 0.15 | | | | | | | | | |
| | R41.07-R41.09 | 106 | 28.0-46.0 | 0.20 | 0.15 | | | | | | | | | |
| | R41.09-R41.11 | 106 | 46.0 | 0.20 | 0.15 | | | | | | | | | |
| | R41.11-R41.12 | 53 | 46.0-28.0 | 0.20 | 0.15 | | | | | | | | | |
| | R41.12-R41.14 | 106 | 28.0-33.5 | 0.20 | 0.15 | | | | | | | | | |
| | 16 ROAD CONNECTIONS | | | | | 815 | 71 | 4 | | | | | | |
| | SUBTOTAL FROM Q-2 | | | | | 2 | | | | | | | | |
| | TOTAL | | | | | 21,251 | 8775 | 67 | 1 | 171,535 | 743 | 166 | 72 | 129 |

## SUMMARY OF QUANTITIES

Q-1

REVISED BY | DATE REVISED

MICHAEL CONNER | KARLIE SMITH

CALCULATED-DESIGNED BY | CHECKED BY

FUNCTIONAL SUPERVISOR: LANCE BROWN

STATE OF CALIFORNIA - DEPARTMENT OF TRANSPORTATION

Caltrans® MAINTENANCE

P:\proj1\02\4G120_plans\pse\24g120pa001.dgn

LAST REVISION 12-22-14 | DATE PLOTTED => 07-JAN-2015 TIME PLOTTED => 11:26

| Dist | COUNTY | ROUTE | POST MILES TOTAL PROJECT | SHEET No. | TOTAL SHEETS |
|---|---|---|---|---|---|
| 02 | Tri | 3,36 | L0.0/L0.1<br>27.1/R41.2 | 15 | 31 |

REGISTERED CIVIL ENGINEER 12-22-14 DATE

12-22-14
PLANS APPROVAL DATE

REGISTERED PROFESSIONAL ENGINEER MICHAEL A. CONNER No. C73123 Exp. 12-31-16 CIVIL STATE OF CALIFORNIA

*THE STATE OF CALIFORNIA OR ITS OFFICERS OR AGENTS SHALL NOT BE RESPONSIBLE FOR THE ACCURACY OR COMPLETENESS OF SCANNED COPIES OF THIS PLAN SHEET.*

NOTES:

1. (N) - NOT A SEPARATE PAY ITEM, FOR INFORMATION ONLY
2. EXACT LOCATIONS OF REPLACE ASPHALT CONCRETE SURFACING TO BE DETERMINED BY ENGINEER.

## COLD PLANE ASPHALT CONCRETE PAVEMENT

| Rte | POST MILE | (N) LENGTH | (N) WIDTH | AREA | REMARKS |
|---|---|---|---|---|---|
| | | LF | LF | SQYD | |
| 3 | L0.00 | 652 | 2.0 | 145 | AROUND DELINEATED ISLAND |
| | L0.05 | 40 | 28.0 | 125 | BEGIN JOB ON ROUTE 3 |
| 36 | 27.15 | 40 | 32.0 | 143 | BEGIN JOB ON ROUTE 36 |
| | R30.40 | 60 | 24.5 | 164 | MAINLINE CONFORM AT GAP |
| | R30.70 | 60 | 24.5 | 164 | MAINLINE CONFORM AT GAP |
| | R31.98 | 8 | 205.0 | 183 | ROAD CONNECTION - L+ |
| | R38.03 | 8 | 56.0 | 50 | ROAD CONNECTION - R+ |
| | R38.37 | 110 | 33.0 | 404 | CONFORM AT BRIDGE |
| | R38.41 | 110 | 33.0 | 404 | CONFORM AT BRIDGE |
| | R39.21 | 8 | 42.0 | 38 | ROAD CONNECTION - R+ |
| | R40.31 | 8 | 50.0 | 45 | ROAD CONNECTION - R+ |
| | R40.75 | 8 | 60.0 | 54 | ROAD CONNECTION - L+ |
| | R41.07 | 8 | 36.0 | 32 | ROAD CONNECTION - L+ |
| | R41.14 | 80 | 33.5 | 298 | END OF JOB |
| TOTAL | | | | 2249 | |

## PREPAVING GRINDING DAY

| Rte | POST MILE LIMITS | EA |
|---|---|---|
| 3 | L0.00-L0.05 | 1 |
| 36 | 27.15-R28.70 | |
| TOTAL | | 1 |

## REPLACE ASPHALT CONCRETE SURFACING

| Rte | POST MILE LIMITS | (N) No. OF DIGOUTS | (N) Avg LENGTH | (N) WIDTH | (N) DEPTH | REPLACE AC SURFACING |
|---|---|---|---|---|---|---|
| | PM - PM | | LF | LF | LF | CY |
| 3 | L0.00-L0.05 | 3 | 100 | 4 | 0.33 | 15 |
| 36 | 27.15-R28.70 | | | | | |
| | R30.45-R30.49 | 1 | 211 | 12 | 0.33 | 31 |
| TOTAL | | | | | | 46 |

SEE NOTE 2

## GUARDRAIL ITEMS

| Rte | POST MILE | DIRECTION | RECONSTRUCT GUARDRAIL * | RECONSTRUCT GUARDRAIL (7' POST) * | REMOVE GUARDRAIL | END ANCHOR ASSEMBLY (TYPE SFT) | TRANSITION RAILING (TYPE WB) | (N) BURIED POST END ANCHOR | GUARD RAILING DELINEATOR | OBJECT MARKER (TYPE L-1) | HMA (TYPE A) ** | PLACE HMA (Misc AREA) | Misc IRON AND STEEL | TREATED WOOD WASTE | DELINEATOR REMARKS |
|---|---|---|---|---|---|---|---|---|---|---|---|---|---|---|---|
| | | | LF | LF | LF | EA | EA | EA | EA | EA | TONS | SQYD | LB | LB | |
| 36 | R38.26 | EB | 421 | 108 | 25 | | 1 | 1 | 2 | 1 | 2 | 4.8 | 43 | 22,499 | Approx 170' spacing |
| | R38.28 | WB | 373 | 96 | 25 | | 1 | 1 | 2 | | | | | | Approx 150' spacing |
| | R38.42 | EB | 84 | 24 | 25 | 1 | 1 | | | | | | | | |
| | R38.42 | WB | 253 | 60 | 25 | | 1 | 1 | | 1 | | | | | |
| TOTAL | | | 1131 | 288 | 100 | 1 | 4 | | 4 | 2 | 2 | 4.8 | 43 | 22,499 | |

* USE STEEL POSTS FOR RECONSTRUCT GUARDRAIL
** ADDITIONAL QUANTITIES SHOWN ELSEWHERE. SEE SHEET Q-1 FOR TOTAL QUANTITIES.

# SUMMARY OF QUANTITIES

Q-2

REVISED BY | DATE REVISED
MICHAEL CONNER | KARLIE SMITH
CALCULATED-DESIGNED BY | CHECKED BY
FUNCTIONAL SUPERVISOR: LANCE BROWN

STATE OF CALIFORNIA - DEPARTMENT OF TRANSPORTATION
Caltrans MAINTENANCE

P:\proj1\02\4G120_plans\pse\24g120pa002.dgn

LAST REVISION 12-22-14 | DATE PLOTTED => 07-JAN-2015 | TIME PLOTTED => 11:26

| Dist | COUNTY | ROUTE | POST MILES TOTAL PROJECT | SHEET No. | TOTAL SHEETS |
|---|---|---|---|---|---|
| 02 | Tri | 3,36 | L.0.0/L0.1<br>27.1/R41.2 | 16 | 31 |

ART 12-22-14
REGISTERED ELECTRICAL ENGINEER DATE

12-22-14
PLANS APPROVAL DATE

REGISTERED PROFESSIONAL ENGINEER A.P. ROBLES No. E15293 Exp. 3-31-15 ELECTRICAL STATE OF CALIFORNIA

*THE STATE OF CALIFORNIA OR ITS OFFICERS OR AGENTS SHALL NOT BE RESPONSIBLE FOR THE ACCURACY OR COMPLETENESS OF SCANNED COPIES OF THIS PLAN SHEET.*

## NOTE:

1. FOR ACCURATE RIGHT OF WAY AND ACCESS DATA, CONTACT RIGHT OF WAY ENGINEERING AT THE DISTRICT OFFICE.

## PROJECT NOTES:

1 REUSE SHOULDER TERMINATION.

2 COIL 10' OF WIRES IN PB.

## LEGEND:

TCS TRAFFIC COUNT STATION

## LOOP DETECTORS TO REMAIN IN PLACE AND OPERATIONAL

| ID No. | LOCATION | TYPE | DESCRIPTION | EQUIPMENT |
|---|---|---|---|---|
| 101 | Tri-3-L0.06 | CONTROL | 318' NORTH OF Rte 36 JCT | 2 LOOP |
| 305 | Tri-36-27.085 | CONTROL | 777' WEST OF Rte 3 | 2 LOOP |

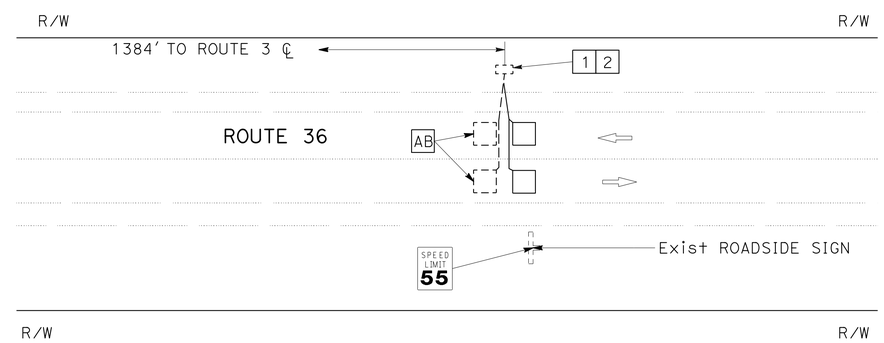


TCS No. 192
P.M. R28.91

## TRAFFIC COUNT STATION

| SHEET No. | (N) TYPE A LOOP | (N) SHOULDER TERMINATION |
|---|---|---|
| | EA | EA |
| E-1 | 2 | 1 |

(N) - NOT A SEPARATE PAY ITEM, FOR INFORMATION ONLY

*APPROVED FOR ELECTRICAL WORK ONLY*

## TRAFFIC COUNT STATION

NO SCALE

**E-1**

REVISED BY | DATE REVISED

ARTURO P. ROBLES | PRAJAKTI ERANDE

CALCULATED-DESIGNED BY | CHECKED BY

FUNCTIONAL SUPERVISOR: ROB STINGER

STATE OF CALIFORNIA - DEPARTMENT OF TRANSPORTATION
Caltrans® ELECTRICAL DESIGN

P:\proj1\02\4G120_plans\pse\24g120ua001.dgn

LAST REVISION 12-22-14 | DATE PLOTTED => 07-JAN-2015 | TIME PLOTTED => 11:26

BORDER LAST REVISED 7/2/2010 | USERNAME => s115152 | DGN FILE => 24g120ua001.dgn | RELATIVE BORDER SCALE IS IN INCHES 0 1 2 3 | UNIT 0147 | PROJECT NUMBER & PHASE 02-1300-0077-1 EA 02-4G1201

## M

| | |
|---|---|
| Maint | MAINTENANCE |
| Max | MAXIMUM |
| MB | METAL BEAM |
| MBB | METAL BEAM BARRIER |
| MBGR | METAL BEAM GUARD RAILING |
| Med | MEDIAN |
| MGS | MIDWEST GUARDRAIL SYSTEM |
| MH | MANHOLE |
| Min | MINIMUM |
| Misc | MISCELLANEOUS |
| Misc I & S | MISCELLANEOUS IRON AND STEEL |
| Mkr | MARKER |
| Mod | MODIFIED, |
| | MODIFY |
| Mon | MONUMENT |
| MP | METAL PLATE |
| MPGR | METAL PLATE GUARD RAILING |
| MR | MOVEMENT RATING |
| MSE | MECHANICALLY STABILIZED EMBANKMENT |
| Mt | MOUNTAIN, MOUNT |
| Mtl | MATERIAL |
| MVP | MAINTENANCE VEHICLE PULLOUT |

## N

| | |
|---|---|
| N | NORTH |
| NB | NORTHBOUND |
| No. | NUMBER (MUST HAVE PERIOD) |
| Nos. | NUMBERS (MUST HAVE PERIOD) |
| NPS | NOMINAL PIPE SIZE |
| NS | NEAR SIDE |
| NSP | NEW STANDARD PLAN |
| NTS | NOT TO SCALE |

## O

| | |
|---|---|
| Oblr | OBLITERATE |
| OC | OVERCROSSING |
| OD | OUTSIDE DIAMETER |
| OF | OUTSIDE FACE |
| OG | ORIGINAL GROUND |
| OGAC | OPEN GRADED ASPHALT CONCRETE |
| OGFC | OPEN GRADED FRICTION COURSE |
| OH | OVERHEAD |
| OHWM | ORDINARY HIGH WATER MARK |
| O-O | OUT TO OUT |
| Opp | OPPOSITE |
| OSD | OVERSIDE DRAIN |

## P

| | |
|---|---|
| P | PAGE |
| PAP | PERFORATED ALUMINUM PIPE |
| PB | PULL BOX |
| PC | POINT OF CURVATURE, |
| | PRECAST |
| PCC | POINT OF COMPOUND CURVE, |
| | PORTLAND CEMENT CONCRETE |
| PCMS | PORTABLE CHANGEABLE MESSAGE SIGN |
| PCP | PERFORATED CONCRETE PIPE, |
| | PRESTRESSED CONCRETE PIPE |
| PCVC | POINT OF COMPOUND VERTICAL CURVE |
| PEC | PERMIT TO ENTER AND CONSTRUCT |
| Ped | PEDESTRIAN |
| Ped OC | PEDESTRIAN OVERCROSSING |
| Ped UC | PEDESTRIAN UNDERCROSSING |
| Perm Mtl | PERMEABLE MATERIAL |

## P continued

| | |
|---|---|
| PG | PROFILE GRADE |
| PI | POINT OF INTERSECTION |
| PJP | PARTIAL JOINT PENETRATION |
| Pkwy | PARKWAY |
| ℙ,PL | PLATE |
| P/L | PROPERTY LINE |
| PM | POST MILE, |
| | TIME FROM NOON TO MIDNIGHT |
| PN | PAVING NOTCH |
| POC | POINT OF HORIZONTAL CURVE |
| POT | POINT OF TANGENT |
| POVC | POINT OF VERTICAL CURVE |
| PP | PIPE PILE, |
| | PLASTIC PIPE, |
| | POWER POLE |
| PPL | PREFORMED PERMEABLE LINER |
| PPP | PERFORATED PLASTIC PIPE |
| PRC | POINT OF REVERSE CURVE |
| PRF | PAVEMENT REINFORCING FABRIC |
| PRVC | POINT OF REVERSE VERTICAL CURVE |
| PS&E | PLANS, SPECIFICATIONS AND ESTIMATES |
| PS, P/S | PRESTRESSED |
| PSP | PERFORATED STEEL PIPE |
| PT | POINT OF TANGENCY |
| PVC | POLYVINYL CHLORIDE |
| Pvmt | PAVEMENT |

## Q

| | |
|---|---|
| Qty | QUANTITY |

## R

| | |
|---|---|
| R | RADIUS |
| R & D | REMOVE AND DISPOSE |
| R & S | REMOVE AND SALVAGE |
| R/C | RATE OF CHANGE |
| RCA | REINFORCED CONCRETE ARCH |
| RCB | REINFORCED CONCRETE BOX |
| RCP | REINFORCED CONCRETE PIPE |
| RCPA | REINFORCED CONCRETE PIPE ARCH |
| Rd | ROAD |
| Reinf | REINFORCED, |
| | REINFORCEMENT, |
| | REINFORCING |
| Rel | RELOCATE |
| Repl | REPLACEMENT |
| Ret | RETAINING |
| Rev | REVISED, REVISION |
| Rdwy | ROADWAY |
| RHMA | RUBBERIZED HOT MIX ASPHALT |
| Riv | RIVER |
| RM | ROAD-MIXED |
| RP | RADIUS POINT, |
| | REFERENCE POINT |
| RR | RAILROAD |
| RSP | ROCK SLOPE PROTECTION, |
| | REVISED STANDARD PLAN |
| Rt | RIGHT |
| Rte | ROUTE |
| RW | REDWOOD, |
| | RETAINING WALL |
| R/W | RIGHT OF WAY |
| Rwy | RAILWAY |

## S

| | |
|---|---|
| S | SOUTH, |
| | SUPPLEMENT |
| SAE | STRUCTURE APPROACH EMBANKMENT |
| Salv | SALVAGE |
| SAPP | STRUCTURAL ALUMINUM PLATE PIPE |
| SB | SOUTHBOUND |
| SC | SAND CUSHION |
| SCSP | SLOTTED CORRUGATED STEEL PIPE |
| SD | STORM DRAIN |
| Sec | SECOND, |
| | SECTION |
| Sep | SEPARATION |
| SG | SUBGRADE |
| Shld | SHOULDER |
| Sht | SHEET |
| Sim | SIMILAR |
| ℄ | STATION LINE |
| SM | SELECTED MATERIAL |
| Spec | SPECIAL, |
| | SPECIFICATIONS |
| SPP | SLOTTED PLASTIC PIPE |
| SS | SLOPE STAKE |
| SSBM | STRAP AND SADDLE BRACKET METHOD |
| SSD | STRUCTURAL SECTION DRAIN |
| SSPA | STRUCTURAL STEEL PLATE ARCH |
| SSPP | STRUCTURAL STEEL PLATE PIPE |
| SSPPA | STRUCTURAL STEEL PLATE PIPE ARCH |
| SSRP | STEEL SPIRAL RIB PIPE |
| St | STREET |
| Sta | STATION |
| STBB | SINGLE THRIE BEAM BARRIER |
| Std | STANDARD |
| Str | STRUCTURE |
| Surf | SURFACING |
| SW | SIDEWALK, |
| | SOUND WALL |
| Swr | SEWER |
| Sym | SYMMETRICAL |
| S4S | SURFACE 4 SIDES |

## T

| | |
|---|---|
| T | SEMI-TANGENT |
| Tan | TANGENT |
| TBB | THRIE BEAM BARRIER |
| Tbr | TIMBER |
| TC | TOP OF CURB |
| TCB | TRAFFIC CONTROL BOX |
| TCE | TEMPORARY CONSTRUCTION EASEMENT |
| Tel | TELEPHONE |
| Temp | TEMPORARY |
| TG | TOP OF GRADE |
| Tot | TOTAL |
| TP | TELEPHONE POLE |
| TPB | TREATED PERMEABLE BASE |
| TPM | TREATED PERMEABLE MATERIAL |
| Trans | TRANSITION |

## T continued

| | |
|---|---|
| TS | TRANSVERSE, |
| | TRAFFIC SIGNAL, |
| | TUBULAR STEEL |
| Typ | TYPICAL |

## U

| | |
|---|---|
| UC | UNDERCROSSING |
| UD | UNDERDRAIN |
| UG | UNDERGROUND |
| UON | UNLESS OTHERWISE NOTED |
| UP | UNDERPASS |

## V

| | |
|---|---|
| V | VALVE, |
| | DESIGN SPEED |
| Var | VARIABLE, |
| | VARIES |
| VC | VERTICAL CURVE |
| VCP | VITRIFIED CLAY PIPE |
| Vert | VERTICAL |
| Via | VIADUCT |
| Vol | VOLUME |

## W

| | |
|---|---|
| W | WEST, |
| | WIDTH |
| WB | WESTBOUND |
| WH | WEEP HOLE |
| WM | WIRE MESH |
| WS | WATER SURFACE |
| WSP | WELDED STEEL PIPE |
| Wt | WEIGHT |
| WV | WATER VALVE |
| WW | WINGWALL |
| WWLOL | WINGWALL LAYOUT LINE |

## X

| | |
|---|---|
| X Sec | CROSS SECTION |
| Xing | CROSSING |

## Y

| | |
|---|---|
| Yr | YEAR |
| Yrs | YEARS |

| Dist | COUNTY | ROUTE | POST MILES TOTAL PROJECT | SHEET No. | TOTAL SHEETS |
|---|---|---|---|---|---|
| 02 | Tri | 3,36 | L0.0/L0.1 27.1/R41.2 | 17 | 31 |

Grace M. Tsushima
REGISTERED CIVIL ENGINEER

July 19, 2013
PLANS APPROVAL DATE

REGISTERED PROFESSIONAL ENGINEER Grace M. Tsushima No. C49814 Exp. 9-30-14 CIVIL STATE OF CALIFORNIA

THE STATE OF CALIFORNIA OR ITS OFFICERS OR AGENTS SHALL NOT BE RESPONSIBLE FOR THE ACCURACY OR COMPLETENESS OF SCANNED COPIES OF THIS PLAN SHEET.

TO ACCOMPANY PLANS DATED 12-22-14

### UNIT OF MEASUREMENT SYMBOLS:

Some of the symbols used in the project plan quantity tables and in the Bid Item List are:

TABLE A

| SYMBOL USED | DEFINITIONS |
|---|---|
| ACRE | ACRE |
| CF | CUBIC FOOT |
| CY | CUBIC YARD |
| EA | EACH |
| GAL | GALLON |
| LB | POUND |
| LF | LINEAR FOOT |
| SQFT | SQUARE FOOT |
| SQYD | SQUARE YARD |
| STA | 100 FEET |
| TAB | TABLET |
| TON | 2,000 POUNDS |

Some of the symbols used in the plans other than in the project plan quantity tables are:

TABLE B

| SYMBOL USED | DEFINITIONS |
|---|---|
| ksi | KIPS PER SQUARE INCH |
| ksf | KIPS PER SQUARE FOOT |
| psi | POUNDS PER SQUARE INCH |
| psf | POUNDS PER SQUARE FOOT |
| $lb/ft^3$, pcf | POUNDS PER CUBIC FOOT |
| tsf | TONS PER SQUARE FOOT |
| mph, MPH * | MILES PER HOUR |
| ø | NOMINAL DIAMETER |
| oz | OUNCE |
| lb | POUND |
| kip | 1,000 POUNDS |
| cal | CALORIE |
| ft | FOOT OR FEET |
| gal | GALLON |

* For use on a sign panel only

STATE OF CALIFORNIA
DEPARTMENT OF TRANSPORTATION

# ABBREVIATIONS (SHEET 2 OF 2)

NO SCALE

RSP A10B DATED JULY 19, 2013 SUPERSEDES STANDARD PLAN A10B DATED MAY 20, 2011 - PAGE 2 OF THE STANDARD PLANS BOOK DATED 2010.

# REVISED STANDARD PLAN RSP A10B

2010 REVISED STANDARD PLAN RSP A10B

DATE PLOTTED => 07-JAN-2015
TIME PLOTTED => 11:26

| Dist | COUNTY | ROUTE | POST MILES TOTAL PROJECT | SHEET No. | TOTAL SHEETS |
|---|---|---|---|---|---|
| 02 | Tri | 3,36 | L0.0/L0.1 27.1/R41.2 | 18 | 31 |

REGISTERED CIVIL ENGINEER

July 20, 2012
PLANS APPROVAL DATE

REGISTERED PROFESSIONAL ENGINEER Roberta L. McLaughlin No. C40375 Exp. 3-31-13 CIVIL STATE OF CALIFORNIA

*THE STATE OF CALIFORNIA OR ITS OFFICERS OR AGENTS SHALL NOT BE RESPONSIBLE FOR THE ACCURACY OR COMPLETENESS OF SCANNED COPIES OF THIS PLAN SHEET.*

TO ACCOMPANY PLANS DATED 12-22-14

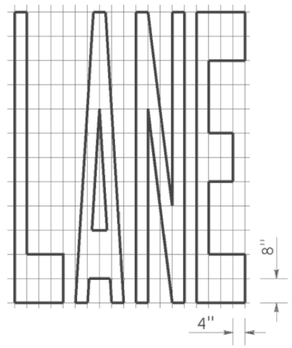


A=24 ft$^2$

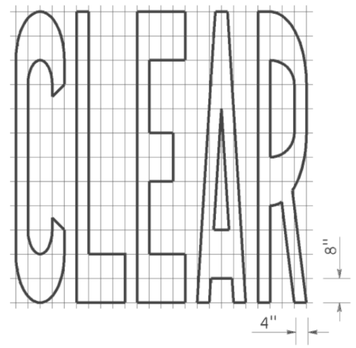


A=27 ft$^2$

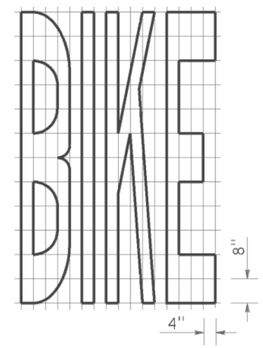


A=21 ft$^2$

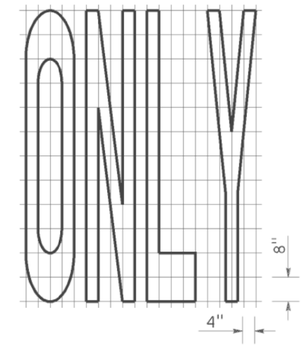


A=22 ft$^2$

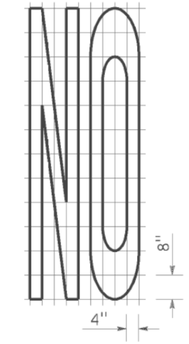


A=14 ft$^2$

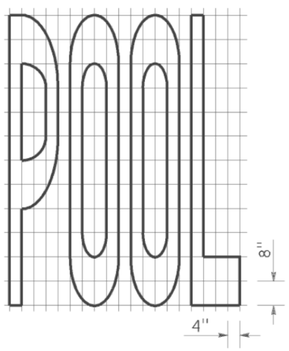


A=23 ft$^2$

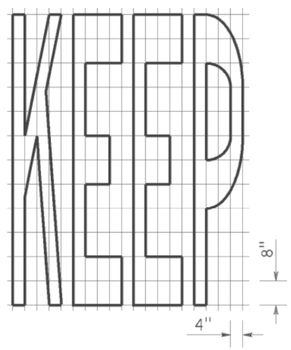


A=24 ft$^2$

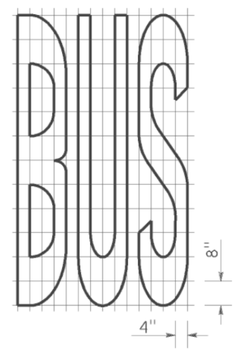


A=20 ft$^2$

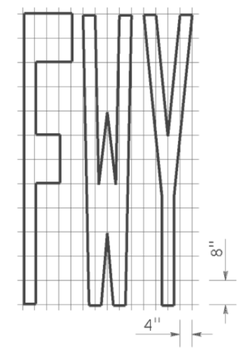


A=16 ft$^2$

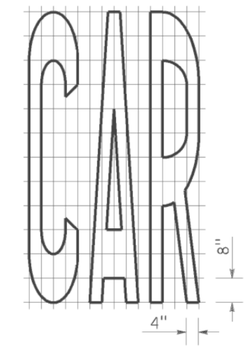


A=17 ft$^2$

| WORD MARKINGS | | | |
|---|---|---|---|
| ITEM | ft$^2$ | ITEM | ft$^2$ |
| LANE | 24 | NO | 14 |
| POOL | 23 | BIKE | 21 |
| CAR | 17 | BUS | 20 |
| CLEAR | 27 | ONLY | 22 |
| KEEP | 24 | FWY | 16 |

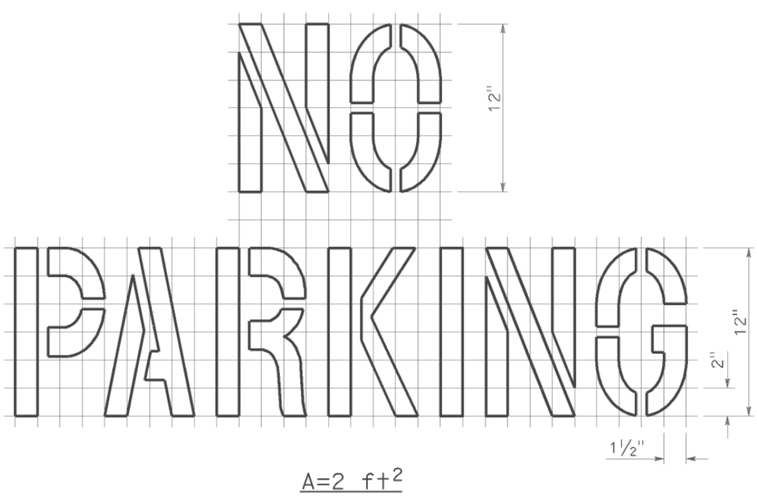


A=2 ft$^2$
See Notes 6 and 7

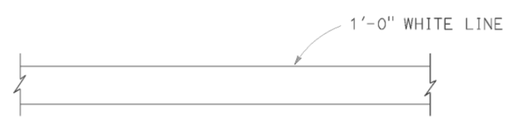


LIMIT LINE (STOP LINE)

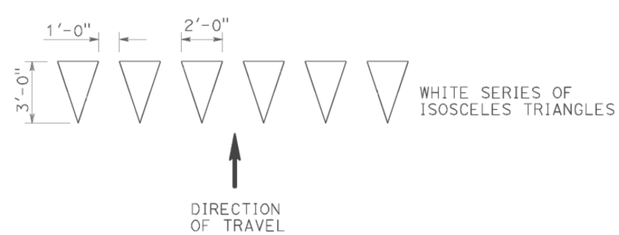


YIELD LINE

NOTES:

1. If a message consists of more than one word, it should read "UP", i.e., the first word should be nearest the driver.
2. The space between words should be at least four times the height of the characters for low speed roads, but not more than ten times the height of the characters. The space may be reduced appropriately where there is limited space because of local conditions.
3. Minor variations in dimensions may be accepted by the Engineer.
4. Portions of a letter, number or symbol may be separated by connecting segments not to exceed 2" in width.
5. The words "NO PARKING" pavement marking is to be used for parking facilities. For typical locations of markings, see Standard Plans A90A and A90B.
6. The words "NO PARKING", shall be painted in white letters no less than 1'-0" high on a contrasting background and located so that it is visible to traffic enforcement officials.

STATE OF CALIFORNIA
DEPARTMENT OF TRANSPORTATION

# PAVEMENT MARKINGS WORDS, LIMIT AND YIELD LINES

NO SCALE

RSP A24E DATED JULY 20, 2012 SUPERSEDES STANDARD PLAN A24E
DATED MAY 20, 2011 - PAGE 17 OF THE STANDARD PLANS BOOK DATED 2010.

**REVISED STANDARD PLAN RSP A24E**

**2010 REVISED STANDARD PLAN RSP A24E**

DATE PLOTTED => 07-JAN-2015
TIME PLOTTED => 11:27

| Dist | COUNTY | ROUTE | POST MILES TOTAL PROJECT | SHEET No. | TOTAL SHEETS |
|---|---|---|---|---|---|
| 02 | Tri | 3,36 | L0.0/L0.1<br>27.1/R41.2 | 19 | 31 |

Randell D. Hiatt
REGISTERED CIVIL ENGINEER

July 19, 2013
PLANS APPROVAL DATE

REGISTERED PROFESSIONAL ENGINEER
Randell D. Hiatt
No. C50200
Exp. 6-30-15
CIVIL
STATE OF CALIFORNIA

*THE STATE OF CALIFORNIA OR ITS OFFICERS OR AGENTS SHALL NOT BE RESPONSIBLE FOR THE ACCURACY OR COMPLETENESS OF SCANNED COPIES OF THIS PLAN SHEET.*

TO ACCOMPANY PLANS DATED 12-22-14

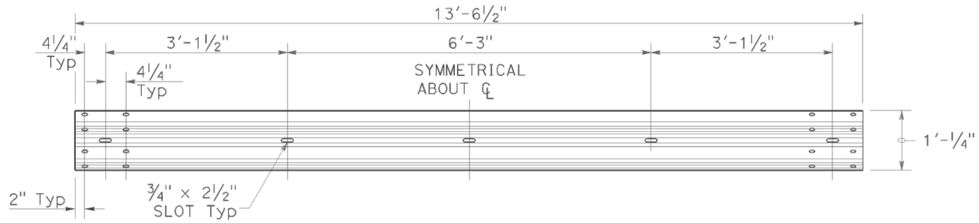


TYPICAL RAIL ELEMENT

NOTE:

1. Slotted holes for splice bolts to overlap ends of rail element.

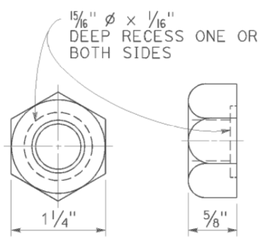


⅝" ø RECESS NUT

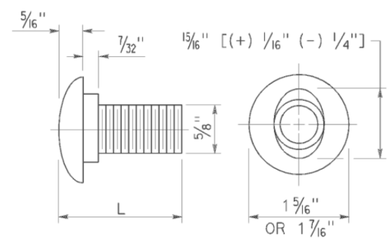


⅝" ø BUTTON HEAD BOLT

BUTTON HEAD BOLT

| L | THREAD LENGTH |
|---|---|
| 1⅜" | FULL THREAD LENGTH |
| 2" | FULL THREAD LENGTH |
| 10" | 4" Min THREAD LENGTH |
| 18" | 4" Min THREAD LENGTH |
| 20" | 4" Min THREAD LENGTH |
| 22" | 4" Min THREAD LENGTH |
| 26" | 4" Min THREAD LENGTH |
| 36" | 4" Min THREAD LENGTH |
| ** 2¾" | 2" Min THREAD LENGTH |
| ** 19" | 4" Min THREAD LENGTH |

** For nested rail applications.

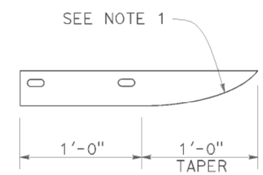


PLAN

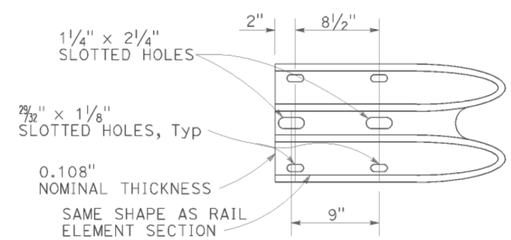


ELEVATION

END CAP
(TYPE A)

STATE OF CALIFORNIA
DEPARTMENT OF TRANSPORTATION

# MIDWEST GUARDRAIL SYSTEM STANDARD HARDWARE

NO SCALE

RSP A77M1 DATED JULY 19, 2013 SUPPLEMENTS THE STANDARD PLANS BOOK DATED 2010.

**REVISED STANDARD PLAN RSP A77M1**

**2010 REVISED STANDARD PLAN RSP A77M1**

DATE PLOTTED => 07-JAN-2015
TIME PLOTTED => 11:27

| Dist | COUNTY | ROUTE | POST MILES TOTAL PROJECT | SHEET No. | TOTAL SHEETS |
|---|---|---|---|---|---|
| 02 | Tri | 3,36 | L0.0/L0.1<br>27.1/R41.2 | 20 | 31 |

Randell D. Hiatt
REGISTERED CIVIL ENGINEER

July 19, 2013
PLANS APPROVAL DATE

REGISTERED PROFESSIONAL ENGINEER
Randell D. Hiatt
No. C50200
Exp. 6-30-15
CIVIL
STATE OF CALIFORNIA

*THE STATE OF CALIFORNIA OR ITS OFFICERS OR AGENTS SHALL NOT BE RESPONSIBLE FOR THE ACCURACY OR COMPLETENESS OF SCANNED COPIES OF THIS PLAN SHEET.*

TO ACCOMPANY PLANS DATED 12-22-14

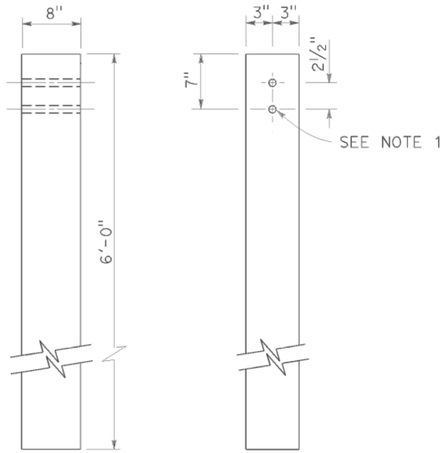


SIDE FRONT

6" x 8" WOOD POST
See Note 3

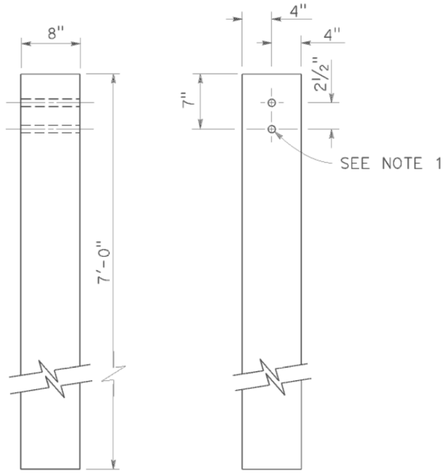


SIDE FRONT

8" x 8" WOOD POST
See Note 4

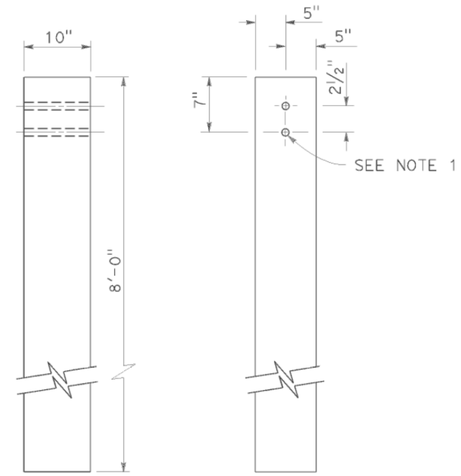


SIDE FRONT

10" x 10" WOOD POST
See Note 5

## NOTES:

1. All holes in wood posts and blocks shall be 3/4" Dia ± 1/16".
2. Dimensions shown for wood post are nominal.
3. This post and block combination used for standard line post sections of MGS.
4. This post and 8" x 12" block combination used for line post sections of MGS on narrow roadways.
5. This post and 8" x 12" block combination is typically used where strengthened line post sections of MGS are warranted to shield fixed objects.
6. See Revised Standard Plan RSP A77L3 for use of 6" x 8" and 8" x 8" wood blocks.

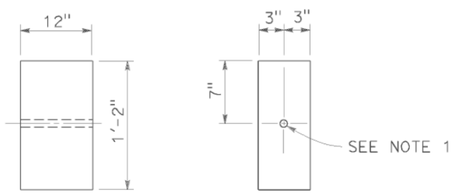


SIDE FRONT

6" x 12" WOOD BLOCK
See Note 3

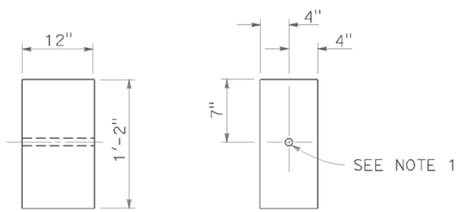


SIDE FRONT

8" x 12" WOOD BLOCK

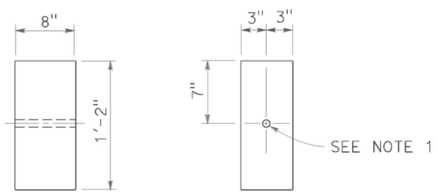


SIDE FRONT

6" x 8" WOOD BLOCK
Only for use with metal beam guard rail see Note 6

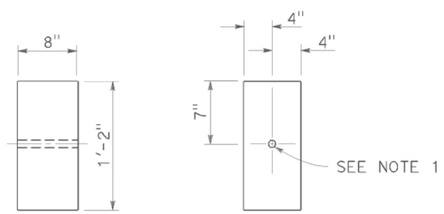


SIDE FRONT

8" x 8" WOOD BLOCK
Only for use with metal beam guard rail see Note 6

STATE OF CALIFORNIA
DEPARTMENT OF TRANSPORTATION

# MIDWEST GUARDRAIL SYSTEM WOOD POST AND WOOD BLOCK DETAILS

NO SCALE

RSP A77N1 DATED JULY 19, 2013 SUPPLEMENTS THE STANDARD PLANS BOOK DATED 2010.

**REVISED STANDARD PLAN RSP A77N1**

**2010 REVISED STANDARD PLAN RSP A77N1**

DATE PLOTTED => 07-JAN-2015
TIME PLOTTED => 11:27

| Dist | COUNTY | ROUTE | POST MILES TOTAL PROJECT | SHEET No. | TOTAL SHEETS |
|---|---|---|---|---|---|
| 02 | Tri | 3,36 | L0.0/L0.1<br>27.1/R41.2 | 21 | 31 |

Randell D. Hiatt
REGISTERED CIVIL ENGINEER

November 15, 2013
PLANS APPROVAL DATE

REGISTERED PROFESSIONAL ENGINEER
Randell D. Hiatt
No. C50200
Exp. 6-30-15
CIVIL
STATE OF CALIFORNIA

*THE STATE OF CALIFORNIA OR ITS OFFICERS OR AGENTS SHALL NOT BE RESPONSIBLE FOR THE ACCURACY OR COMPLETENESS OF SCANNED COPIES OF THIS PLAN SHEET.*

TO ACCOMPANY PLANS DATED 12-22-14

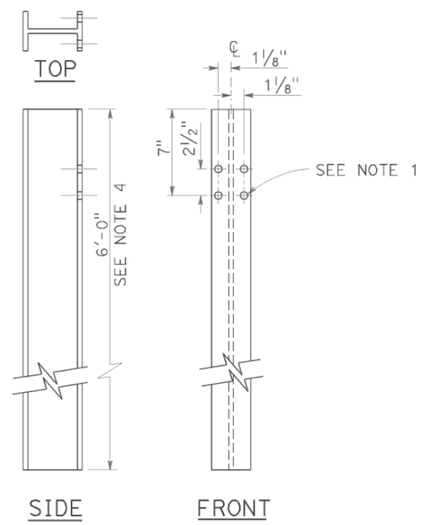


W6 x 9 OR W6 x 8.5
STEEL POST
See Note 4

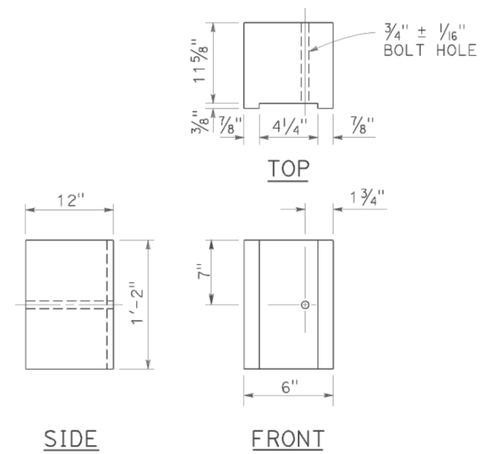


6" x 12"
NOTCHED WOOD BLOCK
See Notes 2 and 3

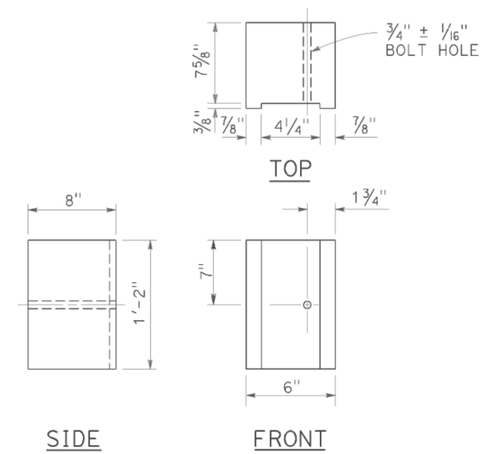


6" x 8"
NOTCHED WOOD BLOCK
Only for use with metal beam guard railing. See Note 5

## NOTES:

1. All holes in steel post shall be 13/16" Dia maximum.
2. Dimensions shown for wood block are nominal.
3. Notched face of block faces steel post.
4. 6'-0" length posts to be used for typical roadway installation. See Revised Standard Plan RSP A77N3.
5. See Revised Standard Plan RSP A77L3 for use of 6" x 8" and 8" x 8" notched wood blocks.
6. This post and 8" x 12" block combination to be used for line post sections of MGS on narrow roadways and where strengthened line post sections of MGS are warranted to shield fixed objects.

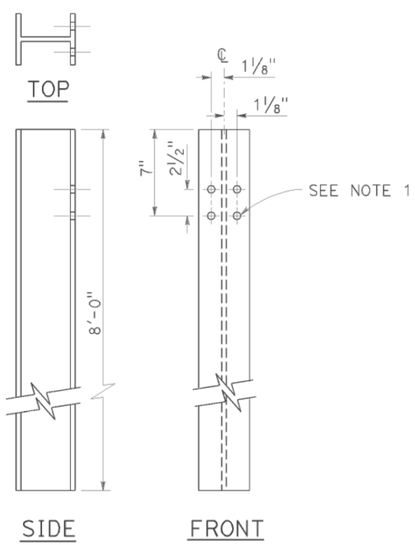


W6 x 15
STEEL POST
See Note 6

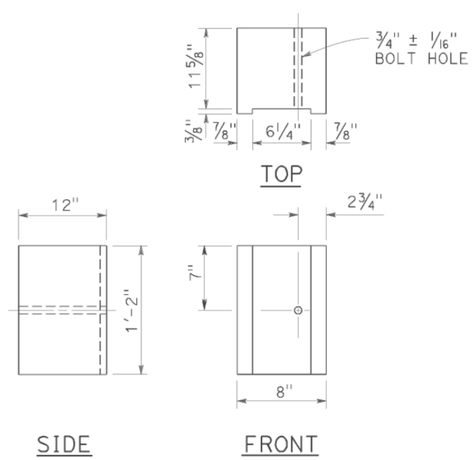


8" x 12"
NOTCHED WOOD BLOCK
See Notes 2 and 3

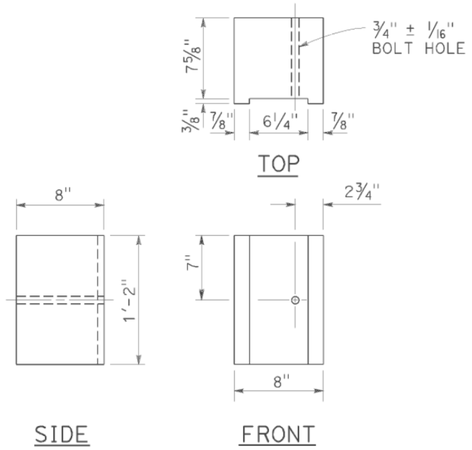


8" x 8"
NOTCHED WOOD BLOCK
Only for use with metal beam guard railing. See Note 5

STATE OF CALIFORNIA
DEPARTMENT OF TRANSPORTATION

# MIDWEST GUARDRAIL SYSTEM STEEL POST AND NOTCHED WOOD BLOCK DETAILS

NO SCALE

RSP A77N2 DATED NOVEMBER 15, 2013 SUPERSEDES RSP A77N2
DATED JULY 19, 2013 THAT SUPPLEMENTS THE STANDARD PLANS BOOK DATED 2010.

**REVISED STANDARD PLAN RSP A77N2**

**2010 REVISED STANDARD PLAN RSP A77N2**

DATE PLOTTED => 07-JAN-2015
TIME PLOTTED => 11:27

| DIST | COUNTY | ROUTE | POST MILES TOTAL PROJECT | SHEET No. | TOTAL SHEETS |
|---|---|---|---|---|---|
| 02 | Tri | 3,36 | L0.0/L0.1<br>27.1/R41.2 | 22 | 31 |

REGISTERED CIVIL ENGINEER

November 15, 2013
PLANS APPROVAL DATE

REGISTERED PROFESSIONAL ENGINEER
Cornelis M. Hakim
No. C55610
Exp. 12-31-14
CIVIL
STATE OF CALIFORNIA

THE STATE OF CALIFORNIA OR ITS OFFICERS OR AGENTS SHALL NOT BE RESPONSIBLE FOR THE ACCURACY OR COMPLETENESS OF SCANNED COPIES OF THIS PLAN SHEET.

TO ACCOMPANY PLANS DATED 12-22-14

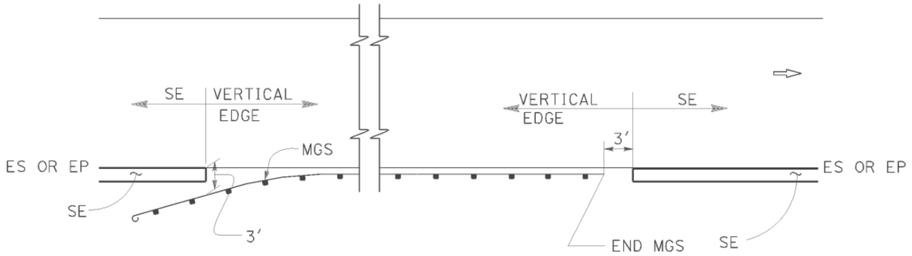


MGS

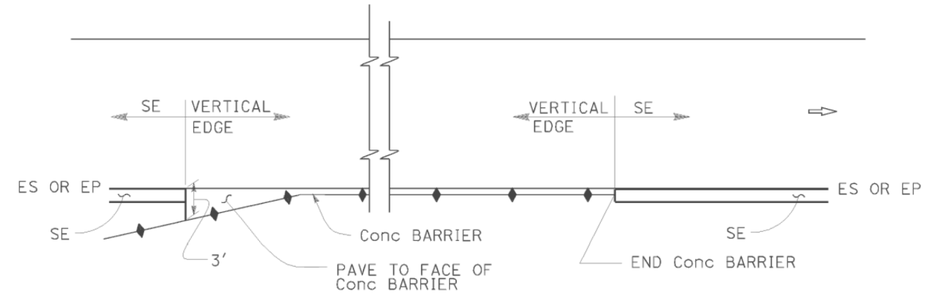


CONCRETE BARRIER

ABBREVIATIONS:

SE SAFETY EDGE

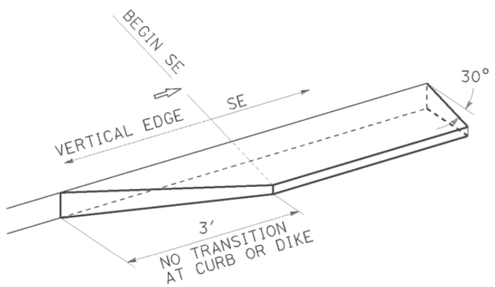


TRANSITION DETAIL FOR CONCRETE ONLY

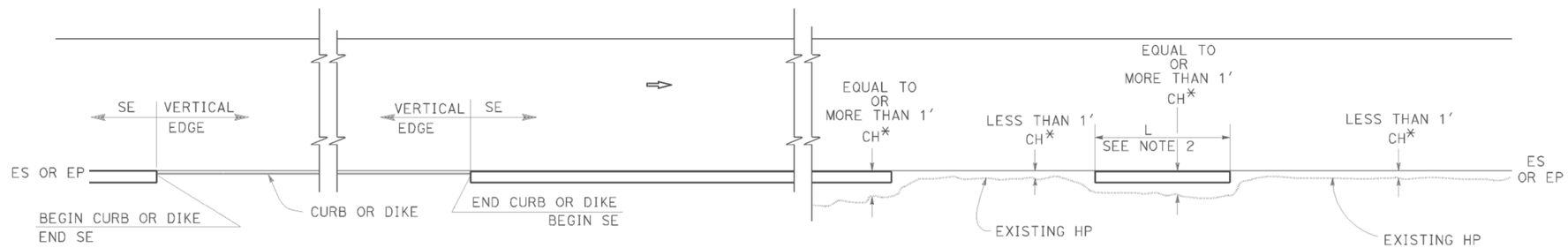


CURB OR DIKE

NARROW SIDE SLOPE

* CH = Distance from ES or EP to existing HP.

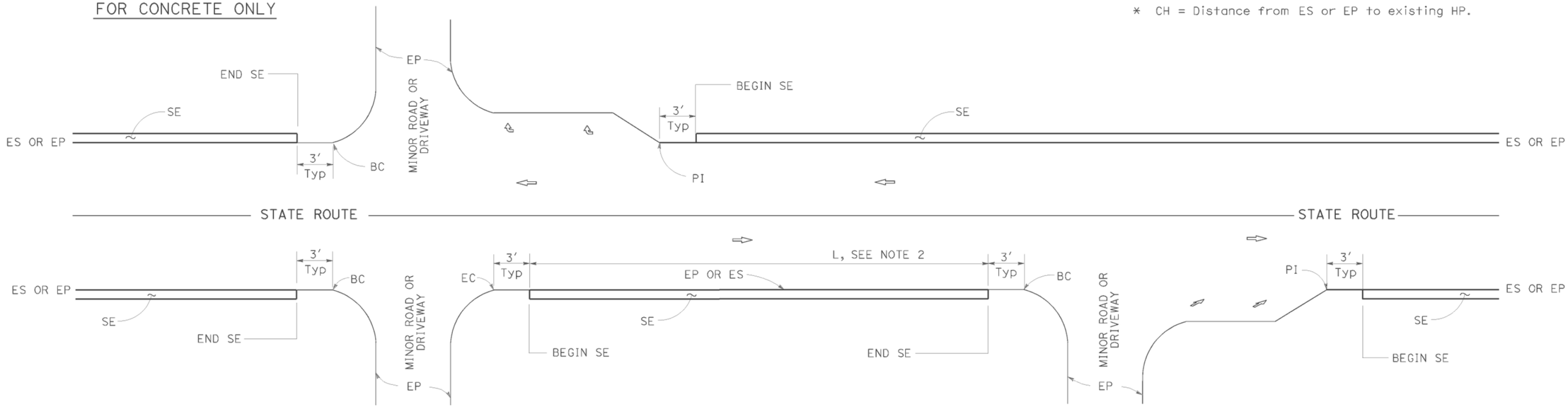


INTERSECTION

DRIVEWAY AND INTERSECTION

MINOR ROADWAY OR DRIVEWAY

NOTES:

1. For details not shown, see Revised Standard Plans RSP P75 and RSP P76.
2. Safety edge is optional when L is less than 30'.

STATE OF CALIFORNIA
DEPARTMENT OF TRANSPORTATION

# PAVEMENT EDGE TREATMENTS

NO SCALE

RSP P74 DATED NOVEMBER 15, 2013 SUPERSEDES RSP P74 DATED JANUARY 20, 2012 THAT SUPPLEMENTS THE STANDARD PLANS BOOK DATED 2010.

**REVISED STANDARD PLAN RSP P74**

**2010 REVISED STANDARD PLAN RSP P74**

DATE PLOTTED => 07-JAN-2015
TIME PLOTTED => 11:27

| DIST | COUNTY | ROUTE | POST MILES TOTAL PROJECT | SHEET No. | TOTAL SHEETS |
|---|---|---|---|---|---|
| 02 | Tri | 3,36 | L0.0/L0.1<br>27.1/R41.2 | 23 | 31 |

REGISTERED CIVIL ENGINEER

November 15, 2013
PLANS APPROVAL DATE

REGISTERED PROFESSIONAL ENGINEER
Cornelis M. Hakim
No. C55610
Exp. 12-31-14
CIVIL
STATE OF CALIFORNIA

*THE STATE OF CALIFORNIA OR ITS OFFICERS OR AGENTS SHALL NOT BE RESPONSIBLE FOR THE ACCURACY OR COMPLETENESS OF SCANNED COPIES OF THIS PLAN SHEET.*

TO ACCOMPANY PLANS DATED 12-22-14

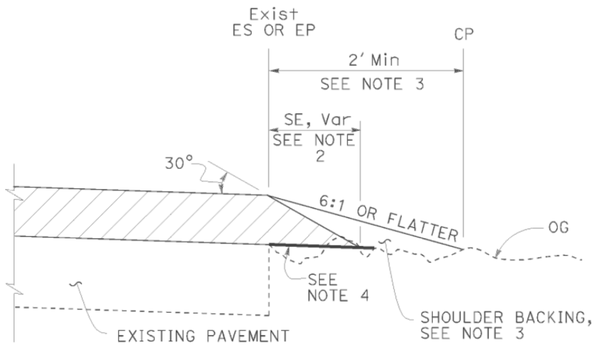


CASE A
Safety Edge

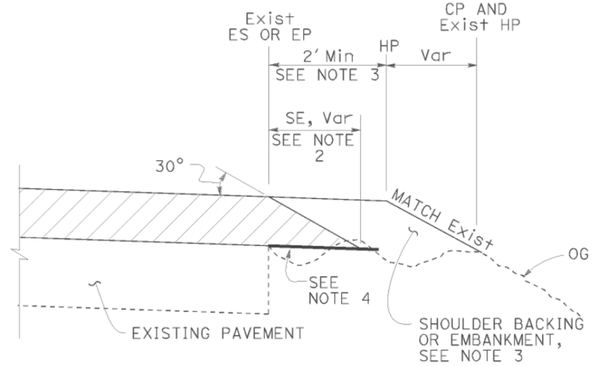


CASE B
Safety Edge

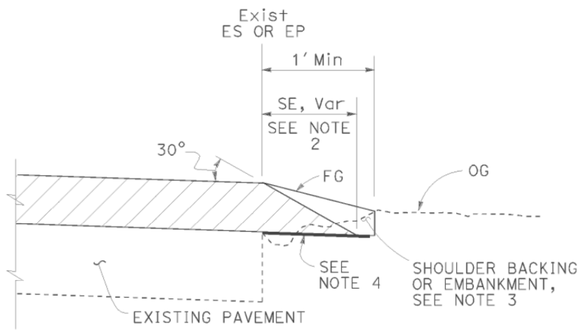


CASE C
Safety Edge

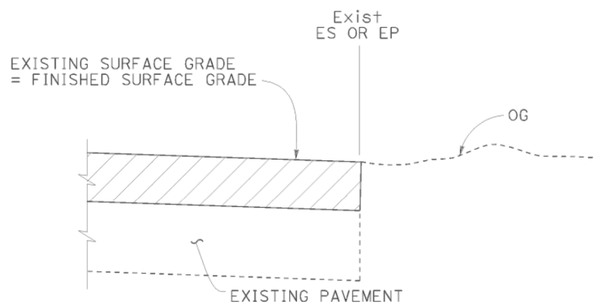


CASE D
Vertical Edge

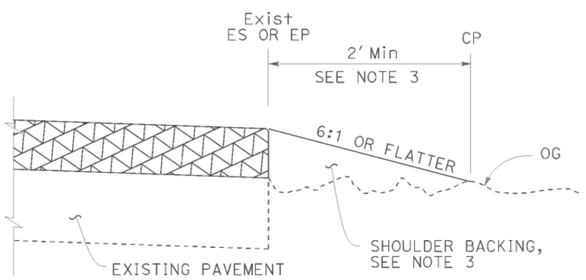


CASE E
Vertical Edge

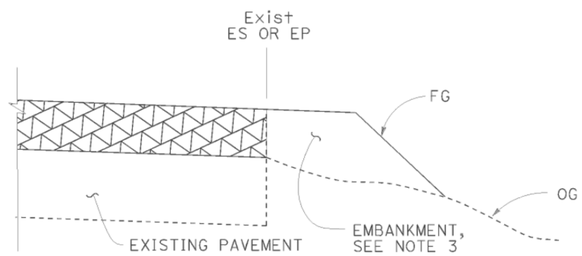


CASE F
Vertical Edge
* See Table A and Revised Std Plan RSP P74

## LEGEND:

- HMA OVERLAY
- HMA OR CONCRETE OVERLAY
- CONCRETE OVERLAY

## ABBREVIATIONS:

SE SAFETY EDGE
TT TOTAL THICKNESS OF SE

## TABLE A
## EDGE TREATMENT FOR VARIOUS OVERLAY THICKNESS AND CONDITIONS

| | OVERLAY THICKNESS | |
|---|---|---|
| FIELD CONDITION | LESS THAN 0.15' | 0.15' OR MORE |
| Exist SLOPE 6:1 OR FLATTER | CASE E | CASE A |
| Exist SLOPE 3:1 TO 6:1 | CASE E | CASE B |
| Exist SLOPE STEEPER THAN 3:1 | CASE F | CASE F |
| CUT SECTION (REPLACE, COLD PLANE, MILL PAVEMENT) | CASE D | CASE C |

## ADDITIONAL HMA OR CONCRETE QUANTITIES FOR SE/SIDE/MILE

| TYPICAL CROSS SECTION | TT | TOTAL ADDITIONAL MATERIAL FOR SE/SIDE/MILE | | |
|---|---|---|---|---|
| | | HMA (TON) | CONCRETE (CY)* | CONCRETE (CY)** |
| TT | 0.15' | NA | NA | NA |
| | 0.20' | 13.7 | NA | NA |
| | 0.30' | 30.9 | NA | NA |
| | 0.40' | 54.9 | NA | NA |
| | 0.45' | 69.4 | NA | NA |
| TT 0.43' | 0.50' | 84.2 | NA | NA |
| | 0.60' | 113.9 | NA | NA |
| | 0.70' | 143.6 | 70.9 | 94.2 |
| | 0.80' | 173.3 | 85.6 | 112.2 |
| | 0.90' | 203.0 | 100.3 | 130.2 |
| | 1.00' | 232.7 | 114.9 | 148.2 |
| | 1.10' | 262.4 | 129.6 | 166.2 |
| | 1.20' | 292.1 | 144.3 | 184.2 |

* For Detail "A"
** For Optional Detail "A"

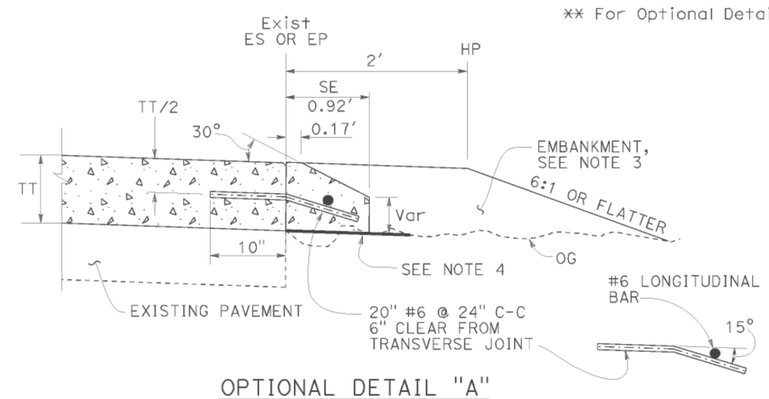


OPTIONAL DETAIL "A"
For concrete overlay
See Note 5

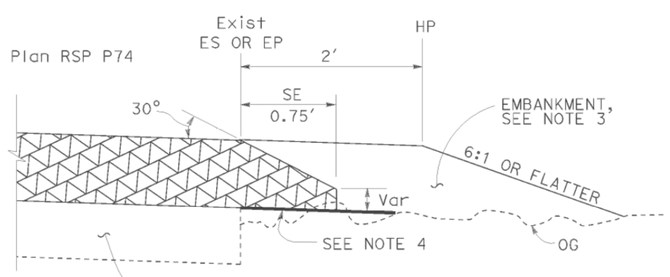


DETAIL "A"
For HMA overlay thickness more than 0.43' or concrete overlay

## NOTES:

1. For limits of safety edge and vertical edge treatments, see Revised Standard Plan RSP P74.
2. Details shown for HMA overlay thickness less than 0.43'. See Detail "A" for HMA overlay thickness more than 0.43' or concrete overlay.
3. For locations and limits of shoulder backing or embankment see project plans.
4. Grade existing ground to place safety edge. 1' minimum width
5. Safety edge transverse joint must match overlay transverse joint. End of #6 longitudinal bar must be 2" ±½" clear from transverse joint.
6. Safety edge is not needed in the area of MGS, barrier, right turn lane and acceleration lane. See Revised Standard Plan RSP P74.

STATE OF CALIFORNIA
DEPARTMENT OF TRANSPORTATION

# PAVEMENT EDGE TREATMENTS-OVERLAYS

NO SCALE

RSP P75 DATED NOVEMBER 15, 2013 SUPERSEDES RSP P75 DATED JANUARY 20, 2012 THAT SUPPLEMENTS THE STANDARD PLANS BOOK DATED 2010.

# REVISED STANDARD PLAN RSP P75

**2010 REVISED STANDARD PLAN RSP P75**

DATE PLOTTED => 07-JAN-2015
TIME PLOTTED => 11:27

| Dist | COUNTY | ROUTE | POST MILES TOTAL PROJECT | SHEET No. | TOTAL SHEETS |
|---|---|---|---|---|---|
| 02 | Tri | 3,36 | L0.0/L0.1 27.1/R41.2 | 24 | 31 |

REGISTERED CIVIL ENGINEER

July 19, 2013
PLANS APPROVAL DATE

REGISTERED PROFESSIONAL ENGINEER Gurinderpal Bhullar No. C48815 Exp. 9-30-14 CIVIL STATE OF CALIFORNIA

*THE STATE OF CALIFORNIA OR ITS OFFICERS OR AGENTS SHALL NOT BE RESPONSIBLE FOR THE ACCURACY OR COMPLETENESS OF SCANNED COPIES OF THIS PLAN SHEET.*

TO ACCOMPANY PLANS DATED 12-22-14

2010 REVISED STANDARD PLAN RSP T9

## TABLE 1

### TAPER LENGTH CRITERIA AND CHANNELIZING DEVICE SPACING

| SPEED (S) | MINIMUM TAPER LENGTH * FOR WIDTH OF OFFSET 12 FEET (W) | | | | MAXIMUM CHANNELIZING DEVICE SPACING | | |
|---|---|---|---|---|---|---|---|
| | | | | | X | Y | Z ** |
| | TANGENT 2L | MERGING L | SHIFTING L/2 | SHOULDER L/3 | TAPER | TANGENT | CONFLICT |
| mph | ft | ft | ft | ft | ft | ft | ft |
| 20 | 160 | 80 | 40 | 27 | 20 | 40 | 10 |
| 25 | 250 | 125 | 63 | 42 | 25 | 50 | 12 |
| 30 | 360 | 180 | 90 | 60 | 30 | 60 | 15 |
| 35 | 490 | 245 | 123 | 82 | 35 | 70 | 17 |
| 40 | 640 | 320 | 160 | 107 | 40 | 80 | 20 |
| 45 | 1080 | 540 | 270 | 180 | 45 | 90 | 22 |
| 50 | 1200 | 600 | 300 | 200 | 50 | 100 | 25 |
| 55 | 1320 | 660 | 330 | 220 | 55 | 110 | 27 |
| 60 | 1440 | 720 | 360 | 240 | 60 | 120 | 30 |
| 65 | 1560 | 780 | 390 | 260 | 65 | 130 | 32 |
| 70 | 1680 | 840 | 420 | 280 | 70 | 140 | 35 |

* - For other offsets, use the following merging taper length formula for L:
For speed of 40 mph or less, $L = WS^2/60$
For speed of 45 mph or more, $L = WS$

Where: L = Taper length in feet
W = Width of offset in feet
S = Posted speed limit, off-peak 85th-percentile speed prior to work starting, or the anticipated operating speed in mph

** - Use for taper and tangent sections where there are no pavement markings or where there is a conflict between existing pavement markings and channelizers (CA).

## TABLE 2

### LONGITUDINAL BUFFER SPACE AND FLAGGER STATION SPACING

| SPEED * | Min D ** | DOWNGRADE Min D *** | | |
|---|---|---|---|---|
| | | -3% | -6% | -9% |
| mph | ft | ft | ft | ft |
| 20 | 115 | 116 | 120 | 126 |
| 25 | 155 | 158 | 165 | 173 |
| 30 | 200 | 205 | 215 | 227 |
| 35 | 250 | 257 | 271 | 287 |
| 40 | 305 | 315 | 333 | 354 |
| 45 | 360 | 378 | 400 | 427 |
| 50 | 425 | 446 | 474 | 507 |
| 55 | 495 | 520 | 553 | 593 |
| 60 | 570 | 598 | 638 | 686 |
| 65 | 645 | 682 | 728 | 785 |
| 70 | 730 | 771 | 825 | 891 |

* - Speed is posted speed limit, off-peak 85th-percentile speed prior to work starting, or the anticipated operating speed in mph

** - Longitudinal buffer space or flagger station spacing

*** - Use on sustained downgrade steeper than -3 percent and longer than 1 mile.

## TABLE 3

### ADVANCE WARNING SIGN SPACING

| ROAD TYPE | DISTANCE BETWEEN SIGNS * | | |
|---|---|---|---|
| | A | B | C |
| | ft | ft | ft |
| URBAN - 25 mph OR LESS | 100 | 100 | 100 |
| URBAN - MORE THAN 25 mph TO 40 mph | 250 | 250 | 250 |
| URBAN - MORE THAN 40 mph | 350 | 350 | 350 |
| RURAL | 500 | 500 | 500 |
| EXPRESSWAY / FREEWAY | 1000 | 1500 | 2640 |

* - The distances are approximate, are intended for guidance purposes only, and should be applied with engineering judgment. These distances should be adjusted by the Engineer for field conditions, if necessary, by increasing or decreasing the recommmended distances.

STATE OF CALIFORNIA
DEPARTMENT OF TRANSPORTATION

# TRAFFIC CONTROL SYSTEM TABLES FOR LANE AND RAMP CLOSURES

NO SCALE

RSP T9 DATED JULY 19, 2013 SUPERSEDES RSP T9 DATED APRIL 19, 2013 THAT SUPPLEMENTS THE STANDARD PLANS BOOK DATED 2010.

**REVISED STANDARD PLAN RSP T9**

DATE PLOTTED => 07-JAN-2015
TIME PLOTTED => 11:27

| Dist | COUNTY | ROUTE | POST MILES TOTAL PROJECT | SHEET No. | TOTAL SHEETS |
|---|---|---|---|---|---|
| 02 | Tri | 3,36 | L0.0/L0.1<br>27.1/R41.2 | 25 | 31 |

Devinder Singh
REGISTERED CIVIL ENGINEER

October 17, 2014
PLANS APPROVAL DATE

REGISTERED PROFESSIONAL ENGINEER
Devinder Singh
No. C50470
Exp. 6-30-15
CIVIL
STATE OF CALIFORNIA

THE STATE OF CALIFORNIA OR ITS OFFICERS OR AGENTS SHALL NOT BE RESPONSIBLE FOR THE ACCURACY OR COMPLETENESS OF SCANNED COPIES OF THIS PLAN SHEET.

TO ACCOMPANY PLANS DATED 12-22-14

## NOTES:

See Revised Standard Plan RSP T9 for tables.

Use cone spacing X for taper segment, Y for tangent segment or Z for conflict situations, as approriate, per Table 1, unless X, Y, or Z cone spacing is shown on this sheet.

Unless otherwise specified in the special provisions, all temporary warning signs shall have black legend on fluorescent orange background.

California codes are designated by (CA). Otherwise, Federal (MUTCD) codes are shown.

## TYPICAL LANE CLOSURE WITH REVERSIBLE CONTROL

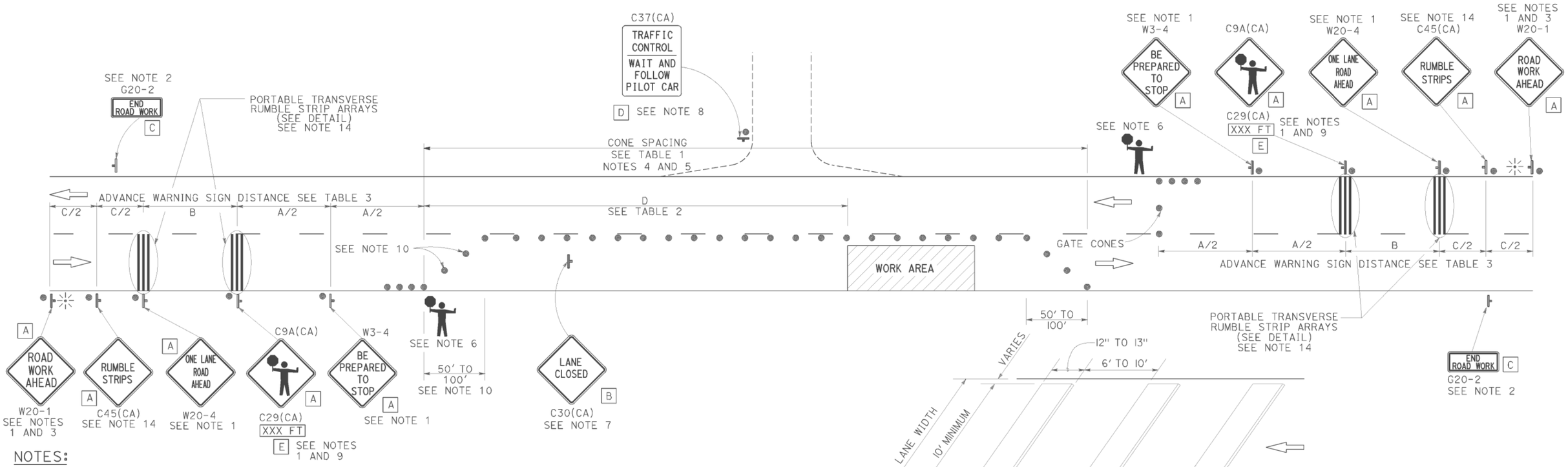


## NOTES:

1. Each advance warning sign in each direction of travel shall be equipped with at least two flags for daytime closure. Each flag shall be at least 16" x 16" in size and shall be orange or fluorescent red-orange in color. Flashing beacons shall be placed at the locations indicated for lane closure during hours of darkness.
2. A G20-2 "END ROAD WORK" sign, as appropriate, shall be placed at the end of the lane control unless the end of work area is obvious, or ends within a larger project's limits.
3. If the W20-1 sign would follow within 2000' of a stationary W20-1 or G20-1 "ROAD WORK NEXT _____ MILES", use a W20-4 sign for the first advance warning sign.
4. All cones used for lane closures during the hours of darkness shall be fitted with retroreflective bands (or sleeves) as specified in the specifications.
5. Portable delineators, placed at one-half the spacing indicated for traffic cones, may be used instead of cones for daytime closures only.
6. Additional advance flaggers may be required. Flagger should stand in a conspicuous place, be visible to approaching traffic as well as approaching vehicles after the first vehicle has stopped. During the hours of darkness, the flagging-station and flagger shall be illuminated and clearly visible to approaching traffic. The illumination footprint of the lighting on the ground shall be at least 20' in diameter. Place a minimum of four cones at 50' intervals in advance of flagger station as shown.
7. Place C30(CA) "LANE CLOSED" sign at 500' to 1000' intervals throughout extended work areas. They are optional if the work area is visible from the flagger station.
8. When a pilot car is used, place a C37(CA) "TRAFFIC CONTROL-WAIT AND FOLLOW PILOT CAR" sign with black legend on white background at all intersections, driveways and alleys without a flagger within traffic control area. Signs shall be clean and visible at all times. Where traffic can not be effectively self-regulated, at least one flagger shall be used at each intersection within traffic control area.
9. An optional C29(CA) sign may be placed below the C9A(CA) sign.
10. Either traffic cones or barricades shall be placed on the taper. Barricades shall be Type I, II, or III.
11. The color of the portable transverse rumble strips shall be black or orange. Use 2 arrays, each array shall consist of 3 rumble strips.
12. Portable transverse rumble strips shall not be placed on sharp horizontal or vertical curves nor shall they be placed through pedestrian crossings.
13. If the portable transverse rumble strips become out of alignment (skewed) by more than 6 inches, measured from one end to the other, they shall be readjusted to bring the placement back to the original location.
14. Portable transverse rumble strips are not required if any one of the following conditions is satisfied:
    A. Work duration occupies a location for four hours or less
    B. Posted speed limit is below 45 MPH
    C. Work is of emergency nature
    D. Work zone is in snow or icy weather conditions

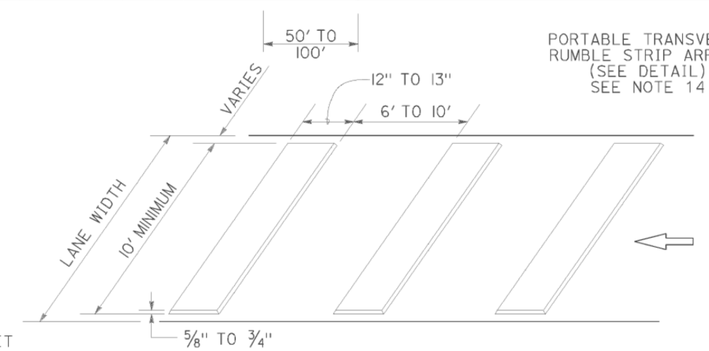


## PORTABLE TRANSVERSE RUMBLE STRIP ARRAY DETAIL

## LEGEND

- TRAFFIC CONE
- TEMPORARY TRAFFIC CONTROL SIGN
- PORTABLE FLASHING BEACON
- FLAGGER

## SIGN PANEL SIZE (Min)

| | |
|---|---|
| A | 48" x 48" |
| B | 30" x 30" |
| C | 36" x 18" |
| D | 36" x 42" |
| E | 20" x 7" |

STATE OF CALIFORNIA
DEPARTMENT OF TRANSPORTATION

# TRAFFIC CONTROL SYSTEM FOR LANE CLOSURE ON TWO LANE CONVENTIONAL HIGHWAYS

NO SCALE

RSP T13 DATED OCTOBER 17, 2014 SUPERSEDES RSP T13 DATED JULY 18, 2014 AND RSP T13 DATED APRIL 19, 2013 AND STANDARD PLAN T13 DATED MAY 20, 2011 - PAGE 241 OF THE STANDARD PLANS BOOK DATED 2010.

# REVISED STANDARD PLAN RSP T13

2010 REVISED STANDARD PLAN RSP T13

DATE PLOTTED => 07-JAN-2015
TIME PLOTTED => 11:27

| Dist | COUNTY | ROUTE | POST MILES TOTAL PROJECT | SHEET No. | TOTAL SHEETS |
|---|---|---|---|---|---|
| 02 | Tri | 3,36 | L0.0/L0.1 27.1/R41.2 | 26 | 31 |

REGISTERED CIVIL ENGINEER

April 19, 2013
PLANS APPROVAL DATE

REGISTERED PROFESSIONAL ENGINEER Gurinderpal Bhullar No. C48815 Exp. 9-30-14 CIVIL STATE OF CALIFORNIA

*THE STATE OF CALIFORNIA OR ITS OFFICERS OR AGENTS SHALL NOT BE RESPONSIBLE FOR THE ACCURACY OR COMPLETENESS OF SCANNED COPIES OF THIS PLAN SHEET.*

TO ACCOMPANY PLANS DATED 12-22-14

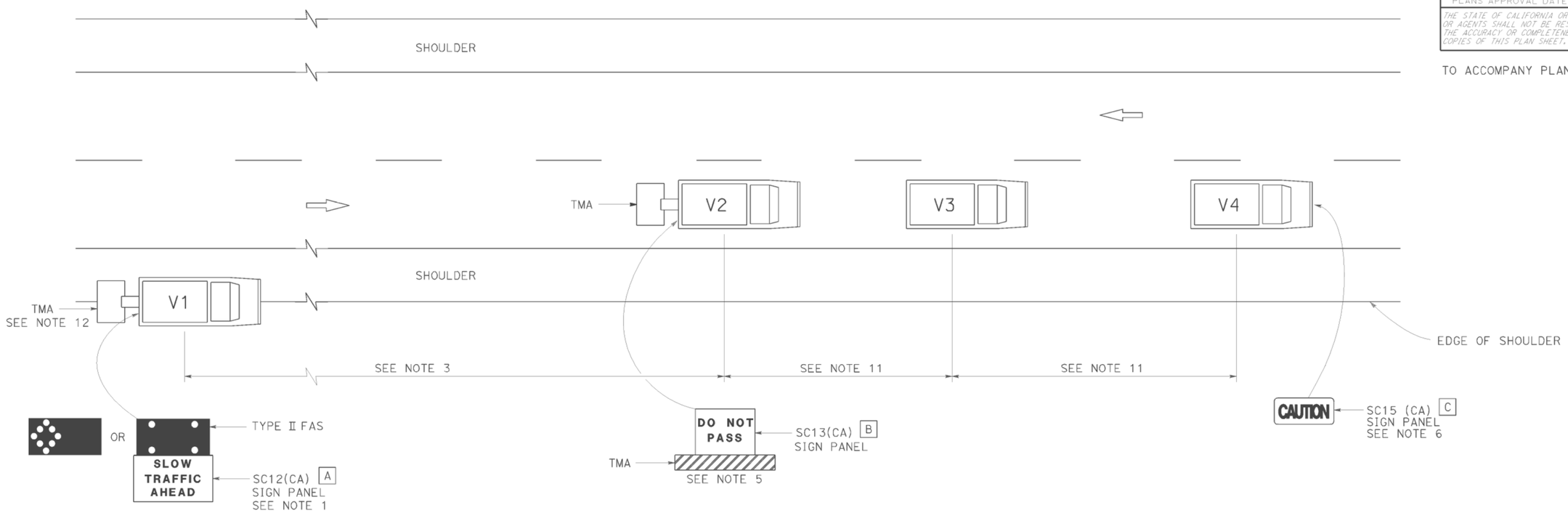


## LEGEND

| | |
|---|---|
| V1 | SIGN VEHICLE |
| V2 | SHADOW VEHICLE |
| V3 | WORK/APPLICATION VEHICLE |
| V4 | SIGN VEHICLE |
| TMA | TRUCK-MOUNTED ATTENUATOR |
| | FLASHING ARROW SIGN (FAS) IN FLASHING CAUTION MODE |
| | FLASHING ARROW SIGN (FAS) IN ALTERNATING DIAMOND CAUTION |

## SIGN PANEL SIZE (Min)

| | |
|---|---|
| A | 72" x 42" |
| B | 54" x 42" |
| C | 54" x 24" |

## NOTES:

1. Either a changeable message sign or a SC12(CA) "SLOW TRAFFIC AHEAD" sign shall be mounted on the rear of sign vehicle V1. The changeable message sign shall be sequenced to show the "CAUTION" message first, follow by the "SLOW TRAFFIC AHEAD" message. A Type II flashing arrow sign may be used with the SC12(CA) sign panel.
2. Sign vehicle V1 should be positioned where highly visible when shoulders are not available.
3. If traffic queues develop, sign vehicle V1 should be positioned upstream from the end of queue.
4. Vehicle-mounted sign panels shall have Type III or above retroreflective sheeting, black on white, or black on fluorescent orange, with 6" minimum series D letters per Caltrans sign specifications.
5. Shadow vehicle shall be equipped with a truck-mounted attenuator. The sign panel shown shall be mounted on the rear of shadow vehicle V2. The message "LANE CLOSED" may be used in place of the "DO NOT PASS" message.
6. The sign panel shown shall be mounted on the front of sign vehicle V4, facing opposing traffic.
7. All vehicles shall be equipped with flashing or rotating amber lights.
8. Sign vehicle V4 will not be required when the work and vehicles V2 and V3 are 2' or more from the centerline of the highway during the work or application operations.
9. All vehicles used for lane closures shall be equipped with two-way radios and the vehicle operators shall maintain communication during the work or application operation.
10. This plan shall not be used where workers would be on foot in the work area. Use a stationary type lane closure (Revised Standard Plan T13) for this condition.
11. Minimize spacing between vehicles V2 and V3 and vehicles V3 and V4 to deter road users from driving in between them.
12. If sign vehicle V1 encroaches into the traffic lane due to insufficient shoulder width, sign vehicle V1 shall be equipped with a truck-mounted attenuator. Sign vehicle V1 shall stay as close to the edge of shoulder as practicable.

STATE OF CALIFORNIA
DEPARTMENT OF TRANSPORTATION

# TRAFFIC CONTROL SYSTEM FOR MOVING LANE CLOSURE ON TWO LANE HIGHWAYS

NO SCALE

RSP T17 DATED APRIL 19, 2013 SUPERSEDES STANDARD PLAN T17
DATED MAY 20, 2011 - PAGE 245 OF THE STANDARD PLANS BOOK DATED 2010.

# REVISED STANDARD PLAN RSP T17

2010 REVISED STANDARD PLAN RSP T17

DATE PLOTTED => 07-JAN-2015
TIME PLOTTED => 11:27

| Dist | COUNTY | ROUTE | POST MILES TOTAL PROJECT | SHEET No. | TOTAL SHEETS |
|---|---|---|---|---|---|
| 02 | Tri | 3,36 | L0.0/L0.1<br>27.1/R41.2 | 27 | 31 |

Theresa Gabriel
REGISTERED ELECTRICAL ENGINEER

July 19, 2013
PLANS APPROVAL DATE

REGISTERED PROFESSIONAL ENGINEER
Theresa Aziz Gabriel
No. E15129
Exp. 6-30-14
ELECTRICAL
STATE OF CALIFORNIA

*THE STATE OF CALIFORNIA OR ITS OFFICERS OR AGENTS SHALL NOT BE RESPONSIBLE FOR THE ACCURACY OR COMPLETENESS OF SCANNED COPIES OF THIS PLAN SHEET.*

TO ACCOMPANY PLANS DATED 12-22-14

## LEGEND:

| | |
|---|---|
| AB | ABANDON. IF APPLIED TO CONDUIT, REMOVE CONDUCTORS |
| BC | INSTALL PULL BOX IN EXISTING CONDUIT RUN |
| BP | PEDESTRIAN BARRICADE, TYPE AS INDICATED ON PLAN |
| CB | INSTALL CONDUIT INTO EXISTING PULL BOX |
| CC | CONNECT NEW AND EXISTING CONDUIT. REMOVE EXISTING CONDUCTORS AND INSTALL CONDUCTORS AS INDICATED |
| CF | CONDUIT TO REMAIN FOR FUTURE USE. REMOVE CONDUCTORS. INSTALL PULL TAPE |
| DH | DETECTOR HANDHOLE |
| FA | FOUNDATION TO BE ABANDONED |
| IS | INSTALL SIGN ON SIGNAL MAST ARM |
| NS | NO SLIP BASE ON STANDARD |
| PEC | PHOTOELECTRIC CONTROL |
| PEU | PHOTOELECTRIC UNIT |
| RC | EQUIPMENT OR MATERIAL TO BE REMOVED AND BECOME THE PROPERTY OF THE CONTRACTOR |
| RE | REMOVE ELECTROLIER, FUSES AND BALLAST. TAPE ENDS OF CONDUCTORS |
| RL | RELOCATE EQUIPMENT |
| RR | REMOVE AND REUSE EQUIPMENT |
| RS | REMOVE AND SALVAGE EQUIPMENT |
| SC | SPLICE NEW TO EXISTING CONDUCTORS |
| SD | SERVICE DISCONNECT |
| TSP | TELEPHONE SERVICE POINT |

## ABBREVIATIONS

| | |
|---|---|
| APS | ACCESSIBLE PEDESTRIAN SIGNAL |
| BBS | BATTERY BACKUP SYSTEM |
| BC | BOLT CIRCLE |
| BPB | BICYCLE PUSH BUTTON |
| C | CONDUIT |
| CB | CIRCUIT BREAKER |
| CCTV | CLOSED CIRCUIT TELEVISION |
| Ckt | CIRCUIT |
| CMS | CHANGEABLE MESSAGE SIGN |
| Ctid | CALTRANS IDENTIFICATION |
| Comm | COMMUNICATION |
| DLC | LOOP DETECTOR LEAD-IN CABLE |
| EMS | EXTINGUISHABLE MESSAGE SIGN |
| EVUC | EMERGENCY VEHICLE UNIT CABLE |
| EVUD | EMERGENCY VEHICLE UNIT DETECTOR |
| FB | FLASHING BEACON |
| FBCA | FLASHING BEACON CONTROL ASSEMBLY |
| FBS | FLASHING BEACON WITH SLIP BASE |
| FO | FIBER OPTIC |
| G | EQUIPMENT GROUNDING CONDUCTOR |
| GB | GROUND BUS |
| GFCI | GROUND FAULT CIRCUIT INTERRUPTER |
| HAR | HIGHWAY ADVISORY RADIO |
| Hex | HEXAGONAL |
| HPS | HIGH PRESSURE SODIUM |
| IISNS | INTERNALLY ILLUMINATED STREET NAME SIGN |
| ISL | INDUCTION SIGN LIGHTING |
| LED | LIGHT EMITTING DIODE |
| LMA | LUMINAIRE MAST ARM |
| LPS | LOW PRESSURE SODIUM |
| Ltg | LIGHTING |
| Lum | LUMINAIRE |
| M | METERED |
| MAT | MAST ARM MOUNTING TOP ATTACHMENT |
| MAS | MAST ARM MOUNTING SIDE ATTACHMENT |
| M/M | MULTIPLE TO MULTIPLE TRANSFORMER |
| Mtg | MOUNTING |
| MV | MERCURY VAPOR LIGHTING FIXTURE |
| MVDS | MICROWAVE VEHICLE DETECTION SYSTEM |
| N | NEUTRAL (GROUNDED CONDUCTOR) |
| NB | NEUTRAL BUS |
| NC | NORMALLY CLOSE |
| NO | NORMALLY OPEN |
| P | CIRCUIT BREAKER'S POLE |
| PB | PULL BOX |
| PBA | PUSH BUTTON ASSEMBLY |
| PEC | PHOTOELECTRIC CONTROL |
| Ped | PEDESTRIAN |
| PEU | PHOTOELECTRIC UNIT |
| PT | CONDUIT WITH PULL TAPE |
| RE | RELOCATED EQUIPMENT |
| RM | RAMP METERING |
| RWIS | ROADSIDE WEATHER INFORMATION SYSTEM |
| SB | SLIP BASE |
| SIC | SIGNAL INTERCONNECT CABLE |
| Sig | SIGNAL |
| SMA | SIGNAL MAST ARM |
| SNS | STREET NAME SIGN |
| SP | SERVICE POINT |
| TDC | TELEPHONE DEMARCATION CABINET |
| TMS | TRAFFIC MONITORING STATION |
| TOS | TRAFFIC OPERATIONS SYSTEM |
| Veh | VEHICLE |
| VIVDS | VIDEO IMAGE VEHICLE DETECTION SYSTEM |
| WIM | WEIGH-IN-MOTION |
| Xfmr | TRANSFORMER |

## SOFFIT AND WALL MOUNTED LUMINAIRES

- PENDANT, 70 W HPS UNLESS OTHERWISE SPECIFIED
- FLUSH, 70 W HPS UNLESS OTHERWISE SPECIFIED
- WALL SURFACE, 70 W HPS UNLESS OTHERWISE SPECIFIED
- EXISTING SOFFIT OR WALL LUMINAIRE TO REMAIN UNMODIFIED
- EXISTING SOFFIT OR WALL LUMINAIRE TO BE MODIFIED AS SPECIFIED

**NOTE:**
Arrow indicates "street side" of luminaire.

COMMONLY USED SYMBOLS FOR UNITED STATES CUSTOMARY UNITS OF MEASUREMENT:

| SYMBOL USED | DEFINITIONS |
|---|---|
| Ω | OHMS |
| min | MINUTE |
| s | SECOND |
| bps | BITS PER SECOND |
| Bps | BYTES PER SECOND |
| A | AMPERE |
| V | VOLT |
| V(dc) | VOLT (DIRECT CURRENT) |
| V(ac) | VOLT (ALTERNATING CURRENT) |
| FC | FOOT - CANDLE |
| W | WATTS |
| VA | VOLT-AMPERE |
| M | MEGA |
| k | KILO |
| m | MILLI |
| μ | MICRO |
| P | PICO |
| Hz | HERTZ |

## MISCELLANEOUS ELECTROLIERS

| NEW | EXISTING | |
|---|---|---|
| | | LUMINAIRE ON WOOD POLE |
| | | NON-STANDARD ELECTROLIER (SEE PROJECT NOTES OR PROJECT PLANS) |
| | | CITY ELECTROLIER |
| | | ELECTROLIER FOUNDATION (FUTURE INSTALLATION) |

**NOTES:**

1. HPS luminaires shall be 310 W HPS when installed on Type 21, 21D, 30, 31 and 32 Standards, unless otherwise specified. HPS luminaires shall be 200 W when installed on other type standards or poles, unless otherwise specified.
2. LED luminaires shall be 235 W when installed on Type 21, 21D, 30, 31 and 32 Standards, unless otherwise specified. LED luminaires shall be 165 W when installed on other type standards or poles, unless otherwise specified.
3. Luminaires shall be the cutoff type, ANSI Type III medium cutoff lighting distribution, unless otherwise specified.

## STANDARD ELECTROLIER

| NEW | EXISTING | STANDARD TYPE |
|---|---|---|
| | | 15 |
| | | 15D |
| | | 15 STRUCTURE |
| | | 15D STRUCTURE |
| | | 21 |
| | | 21D |
| | | 21 STRUCTURE |
| | | 21D STRUCTURE |
| | | 30 |
| | | 31 |
| | | 32 |

STATE OF CALIFORNIA
DEPARTMENT OF TRANSPORTATION

# ELECTRICAL SYSTEMS (LEGEND AND ABBREVIATIONS)

NO SCALE

RSP ES-1A DATED JULY 19, 2013 SUPERSEDES STANDARD PLAN ES-1A DATED MAY 20, 2011 - PAGE 425 OF THE STANDARD PLANS BOOK DATED 2010.

**REVISED STANDARD PLAN RSP ES-1A**

2010 REVISED STANDARD PLAN RSP ES-1A

DATE PLOTTED => 07-JAN-2015
TIME PLOTTED => 11:28

| Dist | COUNTY | ROUTE | POST MILES TOTAL PROJECT | SHEET No. | TOTAL SHEETS |
|---|---|---|---|---|---|
| 02 | Tri | 3,36 | L0.0/L0.1 27.1/R41.2 | 28 | 31 |

Theresa Gabriel
REGISTERED ELECTRICAL ENGINEER

July 19, 2013
PLANS APPROVAL DATE

REGISTERED PROFESSIONAL ENGINEER Theresa Aziz Gabriel No. E15129 Exp. 6-30-14 ELECTRICAL STATE OF CALIFORNIA

*THE STATE OF CALIFORNIA OR ITS OFFICERS OR AGENTS SHALL NOT BE RESPONSIBLE FOR THE ACCURACY OR COMPLETENESS OF SCANNED COPIES OF THIS PLAN SHEET.*

TO ACCOMPANY PLANS DATED 12-22-14

## CONDUIT

| NEW | EXISTING | |
|---|---|---|
| | | LIGHTING CONDUIT, UNLESS OTHERWISE INDICATED OR NOTED |
| | | TRAFFIC SIGNAL CONDUIT |
| C | c | COMMUNICATION CONDUIT |
| T | t | TELEPHONE CONDUIT |
| F | f | FIRE ALARM CONDUIT |
| FO | fo | FIBER OPTIC CONDUIT |
| | | CONDUIT TERMINATION |
| R | r | CONDUIT RISER ATTACHED TO THE STRUCTURE OR SERVICE POLE |

## SERVICE EQUIPMENT

| NEW | EXISTING | |
|---|---|---|
| OH | oh | OVERHEAD LINES |
| U | U | WOOD POLE, "U" INDICATES UTILITY OWNED |
| | | POLE GUY WITH ANCHOR |
| | | UTILITY TRANSFORMER - GROUND MOUNTED |
| III | III | SERVICE EQUIPMENT ENCLOSURE TYPE. DOOR INDICATES FRONT OF ENCLOSURE |
| T | t | TELEPHONE DEMARCATION CABINET |

## POLE-MOUNTED SERVICE DESIGNATION

TYPE H SERVICE, 28'-10" — TYPE OF INSTALLATION AND POLE HEIGHT ABOVE GRADE

## FLASHING BEACON

| NEW | EXISTING | |
|---|---|---|
| R | R | FLASHING BEACON (ONE VEHICLE SIGNAL HEAD WITH BACKPLATE AND VISOR) "R" INDICATES RED INDICATION, "Y" INDICATES YELLOW INDICATION |
| Y Y | Y Y | FLASHING BEACON WITH TYPE 15-FBS STANDARD AND A SIGN. |
| R R | R R | FLASHING BEACON WITH TYPES 9, 9A OR 9B SIGN UNLESS OTHERWISE SPECIFIED OR INDICATED |

## SIGNAL EQUIPMENT

| NEW | EXISTING | |
|---|---|---|
| C | C | PEDESTRIAN SIGNAL HEAD "C" INDICATES COUNTDOWN PEDESTRIAN HEAD |
| | | PUSH BUTTON ASSEMBLY POST |
| | | PEDESTRIAN BARRICADE |
| | | VEHICLE SIGNAL HEAD (WITH BACKPLATE AND 3-SECTIONS: RED, YELLOW AND GREEN) |
| | | VEHICLE SIGNAL HEAD WITH ANGLE VISOR |
| PV | PV | MODIFICATIONS OF BASIC SYMBOL: "L" INDICATES ALL NON-ARROW SECTIONS LOUVERED "LG" INDICATES LOUVERED GREEN SECTION ONLY "PV" INDICATES ALL 12" SECTIONS PROGRAMMED VISIBILITY "8" INDICATES ALL 8" SECTIONS (ONLY WHEN SPECIFIED) |
| | | VEHICLE SIGNAL HEAD CONSISTING OF RED, YELLOW AND GREEN LEFT ARROW SECTIONS |
| | | VEHICLE SIGNAL HEAD CONSISTING OF RED AND YELLOW SECTIONS WITH AN UP GREEN ARROW SECTION |
| | | VEHICLE SIGNAL HEAD (5 SECTION) CONSISTING OF RED, YELLOW AND GREEN SECTIONS WITH YELLOW AND GREEN RIGHT ARROW SECTIONS |
| | | TYPE 15TS STANDARD WITH VEHICLE SIGNAL HEAD AND LUMINAIRE |
| | | TYPE 21TS STANDARD WITH VEHICLE SIGNAL HEAD AND LUMINAIRE |
| | | STANDARD WITH LUMINAIRE AND SIGNAL MAST ARMS AND ATTACHED VEHICLE SIGNAL HEADS |
| | | TYPE 1 STANDARD WITH ATTACHED VEHICLE SIGNAL HEADS |
| | | STANDARD WITH A SIGNAL MAST ARM, ATTACHED VEHICLE SIGNAL HEADS AND INTERNALLY ILLUMINATED STREET NAME SIGN |
| | | CONTROLLER ASSEMBLY. DOOR INDICATES FRONT OF CABINET |

## SIGNAL EQUIPMENT Cont

| NEW | EXISTING | |
|---|---|---|
| | | GUARD POST |
| | | TYPE 1 STANDARD WITH RAMP METERING SIGN |
| | | OPTICAL DETECTOR FOR THE EMERGENCY VEHICLE DETECTION SYSTEM |

### NOTES:

1. All signal sections shall be 12" unless shown otherwise.
2. Signal heads shall be provided with backplates unless shown otherwise.

## ILLUMINATED OVERHEAD SIGN

| NEW | EXISTING | |
|---|---|---|
| | | SINGLE POST, SINGLE ILLUMINATED SIGN, BALANCED BUTTERFLY |
| | | SINGLE POST, DOUBLE ILLUMINATED SIGN, BALANCED BUTTERFLY |
| | | SINGLE POST, SINGLE ILLUMINATED SIGN, FULL CANTILEVER |
| | | DOUBLE POST, SINGLE ILLUMINATED SIGN |
| | | SINGLE ILLUMINATED SIGN MOUNTED ON STRUCTURE |
| | | DOUBLE POST, SINGLE ILLUMINATED SIGN WITH ELECTROLIER |

STATE OF CALIFORNIA
DEPARTMENT OF TRANSPORTATION

# ELECTRICAL SYSTEMS (LEGEND AND ABBREVIATIONS)

NO SCALE

RSP ES-1B DATED JULY 19, 2013 SUPERSEDES STANDARD PLAN ES-1B DATED MAY 20, 2011 - PAGE 426 OF THE STANDARD PLANS BOOK DATED 2010.

**REVISED STANDARD PLAN RSP ES-1B**

**2010 REVISED STANDARD PLAN RSP ES-1B**

DATE PLOTTED => 07-JAN-2015
TIME PLOTTED => 11:28

| Dist | COUNTY | ROUTE | POST MILES TOTAL PROJECT | SHEET No. | TOTAL SHEETS |
|---|---|---|---|---|---|
| 02 | Tri | 3,36 | L0.0/L0.1 27.1/R41.2 | 29 | 31 |

Theresa Gabriel
REGISTERED ELECTRICAL ENGINEER

July 19, 2013
PLANS APPROVAL DATE

REGISTERED PROFESSIONAL ENGINEER Theresa Aziz Gabriel No. E15129 Exp. 6-30-14 ELECTRICAL STATE OF CALIFORNIA

*THE STATE OF CALIFORNIA OR ITS OFFICERS OR AGENTS SHALL NOT BE RESPONSIBLE FOR THE ACCURACY OR COMPLETENESS OF SCANNED COPIES OF THIS PLAN SHEET.*

TO ACCOMPANY PLANS DATED 12-22-14

# EQUIPMENT IDENTIFICATION

## ILLUMINATED SIGN IDENTIFICATION NUMBER:

SIGN No. 12345
10 ISL SCI 1.0

- SIGN NUMBER - PLACE ON POST OR STRUCTURE
- TRANSFORMER RATING (kVA)
- LIGHTING CONTROL TYPE
- NUMBER AND TYPE OF FIXTURES

DO NOT PLACE ON STANDARD OR STRUCTURE

## ELECTROLIER OR EQUIPMENT IDENTIFICATION NUMBER:

12345 - 15'-0"

- MAST ARM LENGTH, IF SHOWN. DO NOT PLACE ON STANDARD OR STRUCTURE
- EQUIPMENT NUMBER - PLACE ON STANDARD OR STRUCTURE. EXISTING EQUIPMENT NUMBERS ARE SHOWN IN PARENTHESIS

## CONDUIT AND CONDUCTOR IDENTIFICATION:

1½"C, 2#10, 15#14, 2 DLC, 12P#18

- PAIR
- NUMBER AND SIZE OF CONDUCTORS AND CABLES
- SIZE OF CONDUIT IN INCHES

| | |
|---|---|
| Ø1, Ø2, Ø2P, etc. | TRAFFIC PHASE IDENTIFICATION FOR SIGNAL FACES, DETECTORS AND PHASE DIAGRAMS |
| 1 2 3 | LEGEND NUMBERS |
| A B C | EQUIPMENT, SIGNAL POLES, INSTALLATION OR ITEMS |
| 1 2 3 | CONDUIT RUN NUMBERS |

## SIGNAL AND LIGHTING STANDARD (TYPICAL DESIGNATION):

19A - 3 - 100

- WIND VELOCITY = 100 mph
- CASE 3 ARM LOADING
- STANDARD TYPE
- STANDARD PLAN SHEET NUMBER
- DETAIL, NUMBER, SECTION, TYPE OR ELEVATION

# MISCELLANEOUS EQUIPMENT

| NEW | EXISTING | |
|---|---|---|
| CMS | cms | CHANGEABLE MESSAGE SIGN |
| | | CLOSED CIRCUIT TELEVISION CAMERA |
| | | HIGHWAY ADVISORY RADIO POLE AND ANTENNA |
| EMS | ems | EXTINGUISHABLE MESSAGE SIGN |
| M V | m v | DETECTION DEVICE<br>M = MICROWAVE SENSOR<br>V = VIDEO IMAGE SENSOR |

# WIRING DIAGRAM LEGEND

- EXTERNAL CONDUCTOR
- CONDUCTOR OR BUS
- TIE POINT
- CONTACTOR COIL
- CONTACTOR, NO CONTACT
- TERMINAL BLOCKS
- CONTACTOR, NC CONTACT
- ENCLOSURE BOND
- GROUNDING ELECTRODE
- CIRCUIT BREAKER
- RECEPTACLE

# PULL BOXES

| NEW | EXISTING | |
|---|---|---|
| | | PULL BOX, No. 5 UNLESS OTHERWISE INDICATED OR NOTED |
| 3 | 9A(21) | PULL BOX, ADDITIONAL DESIGNATIONS OR DESCRIPTIONS |

3 No. 3½ PULL BOX
5 No. 5 PULL BOX
6 No. 6 PULL BOX
7 No. 7 (CEILING PULL BOX)
8 No. 8 (PENDANT SOFFIT PULL BOX)
9 No. 9 PULL BOX
9A No. 9A PULL BOX

(C) COMMUNICATIONS PULL BOX
(E) PULL BOX WITH EXTENSION
(S) SPRINKLER CONTROL PULL BOX
(21) ANCHOR BOLTS AND CONDUIT FOR FUTURE INSTALLATION OF TYPE 21 STANDARD
(T) TRAFFIC PULL BOX

# VEHICLE DETECTORS

5 J 9 U

- VEHICLE DETECTOR DESIGNATION
- U = UPPER
  L = LOWER
- SLOT NUMBER IN INPUT FILE
- INPUT FILE (I OR J)
- PHASE

| NEW | EXISTING | |
|---|---|---|
| | | TYPE A DETECTOR LOOP. OUTLINE OF SAWCUT SHOWN |
| | | TYPE B DETECTOR LOOP. OUTLINE OF SAWCUT SHOWN |
| | | TYPE C DETECTOR LOOP. OUTLINE OF SAWCUT SHOWN |
| | | TYPE D DETECTOR LOOP. OUTLINE OF SAWCUT SHOWN |
| | | TYPE E DETECTOR LOOP. OUTLINE OF SAWCUT SHOWN |
| | | TYPE Q DETECTOR LOOP. OUTLINE OF SAWCUT SHOWN |
| | | MAGNETIC DETECTOR |
| DH | dh | DETECTOR HANDHOLE |
| | | MICROWAVE OR VIDEO DETECTION ZONE |

STATE OF CALIFORNIA
DEPARTMENT OF TRANSPORTATION

# ELECTRICAL SYSTEMS (LEGEND AND ABBREVIATIONS)

NO SCALE

RSP ES-1C DATED JULY 19, 2013 SUPERSEDES STANDARD PLAN ES-1C DATED MAY 20, 2011 - PAGE 427 OF THE STANDARD PLANS BOOK DATED 2010.

**REVISED STANDARD PLAN RSP ES-1C**

2010 REVISED STANDARD PLAN RSP ES-1C

DATE PLOTTED => 07-JAN-2015
TIME PLOTTED => 11:28

| Dist | COUNTY | ROUTE | POST MILES TOTAL PROJECT | SHEET No. | TOTAL SHEETS |
|---|---|---|---|---|---|
| 02 | Tri | 3,36 | L0.0/L0.1<br>27.1/R41.2 | 30 | 31 |

Theresa Gabriel
REGISTERED ELECTRICAL ENGINEER

July 19, 2013
PLANS APPROVAL DATE

REGISTERED PROFESSIONAL ENGINEER
Theresa Aziz Gabriel
No. E15129
Exp. 6-30-14
ELECTRICAL
STATE OF CALIFORNIA

*THE STATE OF CALIFORNIA OR ITS OFFICERS OR AGENTS SHALL NOT BE RESPONSIBLE FOR THE ACCURACY OR COMPLETENESS OF SCANNED COPIES OF THIS PLAN SHEET.*

TO ACCOMPANY PLANS DATED 12-22-14

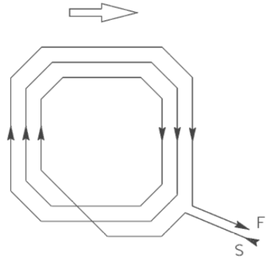


WINDING DETAIL

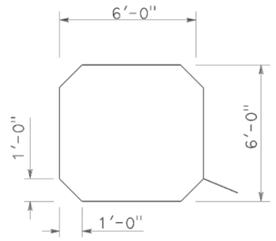


SAWCUT DETAIL

TYPE A LOOP DETECTOR CONFIGURATION

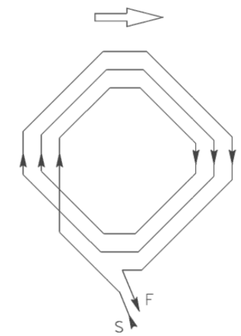


WINDING DETAIL

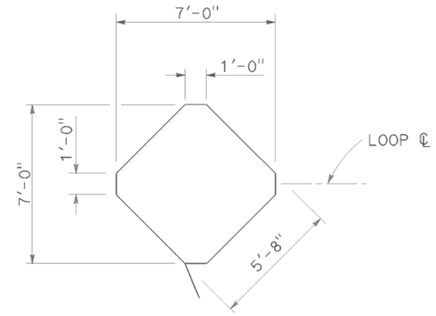


SAWCUT DETAIL

TYPE B LOOP DETECTOR CONFIGURATION

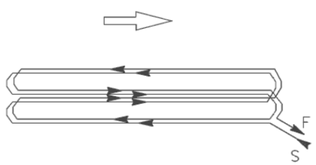


WINDING DETAIL

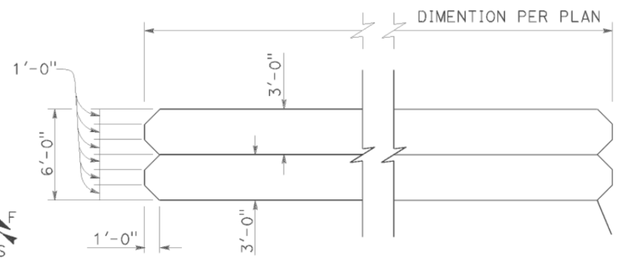


SAWCUT DETAIL

TYPE C LOOP DETECTOR CONFIGURATION

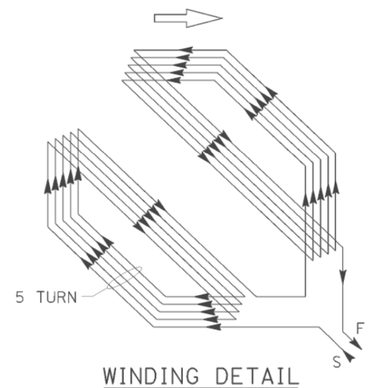


WINDING DETAIL

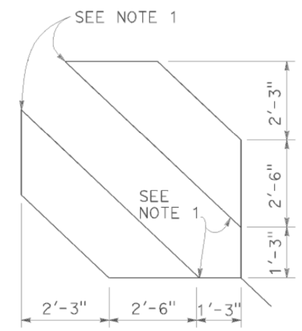


SAWCUT DETAIL

TYPE D LOOP DETECTOR CONFIGURATION

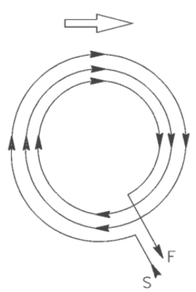


WINDING DETAIL

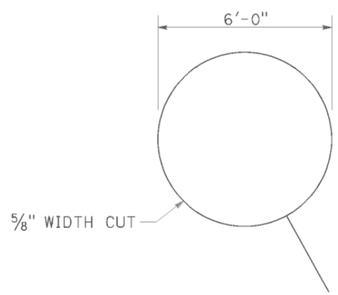


SAWCUT DETAIL

TYPE E LOOP DETECTOR CONFIGURATION

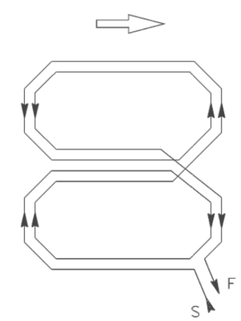


WINDING DETAIL

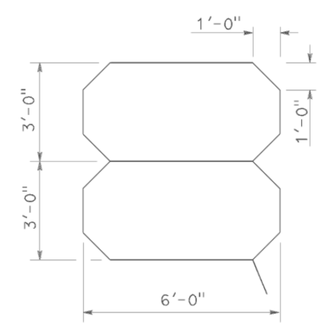


SAWCUT DETAIL

TYPE Q LOOP DETECTOR CONFIGURATION

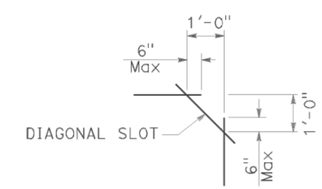


PLAN VIEW OF DIAGONAL SLOT AT CORNERS

NOTES:

1. Round corners of acute angle sawcuts to prevent damage to conductors.
2. Typical distance separating loops from edge to edge is 10' for Type A, B, D and E installation in single lane.

STATE OF CALIFORNIA
DEPARTMENT OF TRANSPORTATION

# ELECTRICAL SYSTEMS (DETECTORS)

NO SCALE

RSP ES-5B DATED JULY 19, 2013 SUPERSEDES STANDARD PLAN ES-5B DATED MAY 20, 2011 - PAGE 449 OF THE STANDARD PLANS BOOK DATED 2010.

**REVISED STANDARD PLAN RSP ES-5B**

**2010 REVISED STANDARD PLAN RSP ES-5B**

DATE PLOTTED => 07-JAN-2015
TIME PLOTTED => 11:28

| Dist | COUNTY | ROUTE | POST MILES TOTAL PROJECT | SHEET No. | TOTAL SHEETS |
|---|---|---|---|---|---|
| 02 | Tri | 3,36 | L0.0/L0.1 27.1/R41.2 | 31 | 31 |

Theresa Gabriel
REGISTERED ELECTRICAL ENGINEER

July 19, 2013
PLANS APPROVAL DATE

REGISTERED PROFESSIONAL ENGINEER Theresa Aziz Gabriel No. E15129 Exp. 6-30-14 ELECTRICAL STATE OF CALIFORNIA

*THE STATE OF CALIFORNIA OR ITS OFFICERS OR AGENTS SHALL NOT BE RESPONSIBLE FOR THE ACCURACY OR COMPLETENESS OF SCANNED COPIES OF THIS PLAN SHEET.*

TO ACCOMPANY PLANS DATED 12-22-14

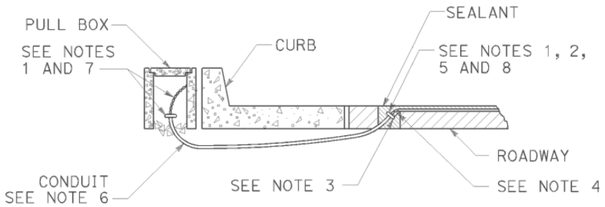


TYPE A
CURB TERMINATION DETAIL

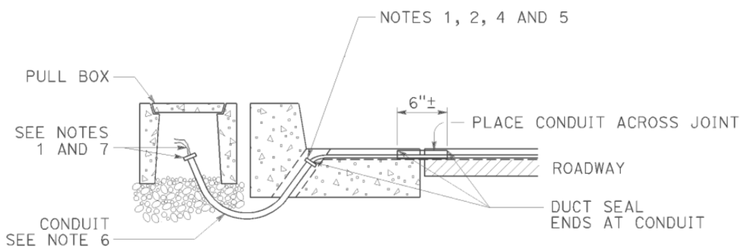


CROSS SECTION

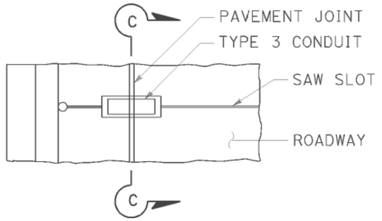


PLAN VIEW

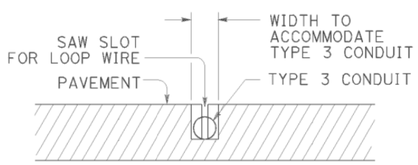


SECTION C-C

TYPE B
CURB TERMINATION DETAIL

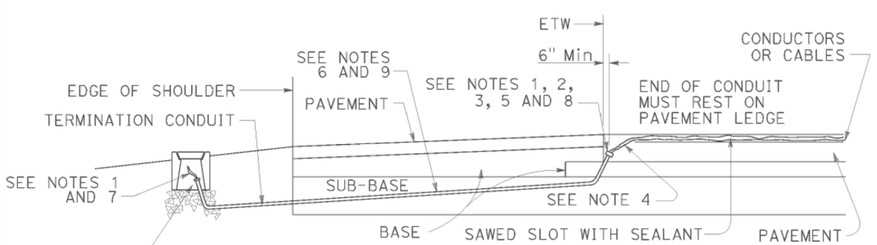


CROSS SECTION

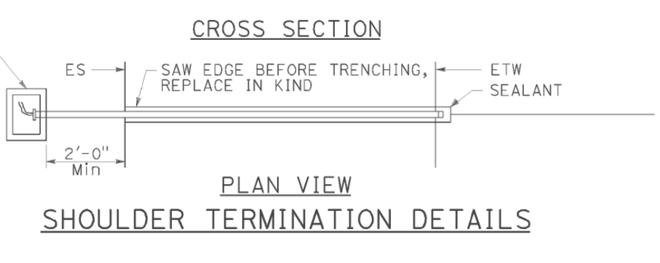


PLAN VIEW

SHOULDER TERMINATION DETAILS

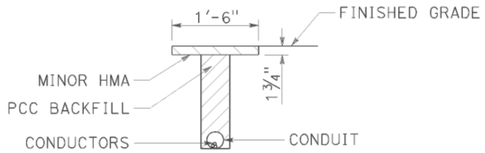


"T" TRENCH
DETAIL T

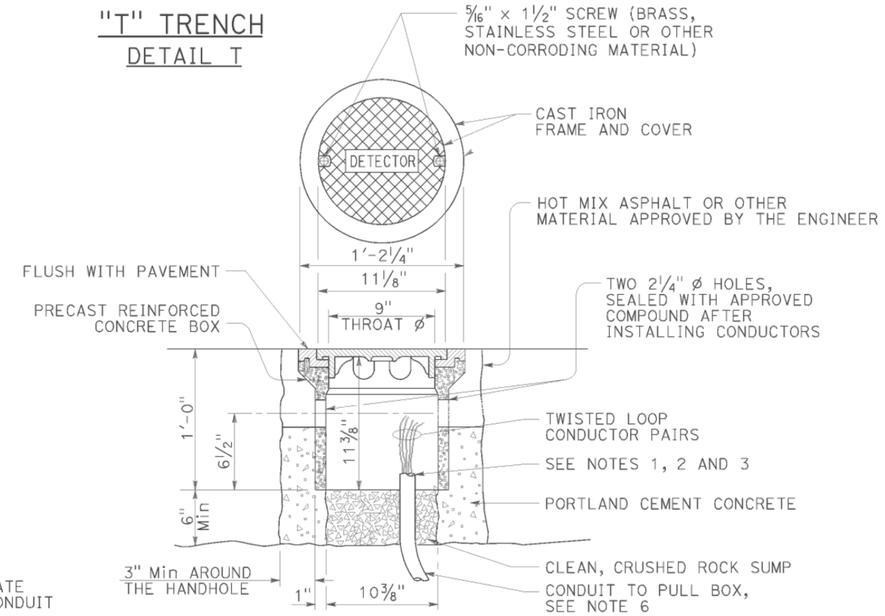


DETECTOR HANDHOLE DETAIL

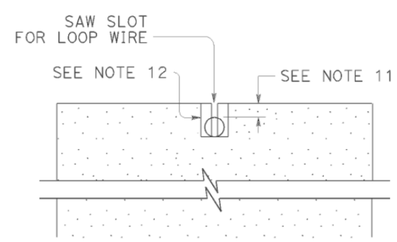


SECTION A-A

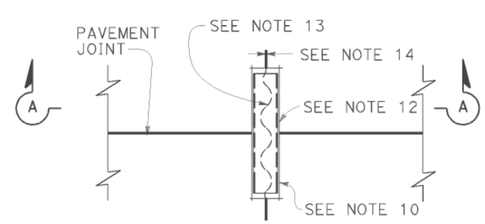


PLAN VIEW

TYPICAL LOOP LEAD-IN DETAIL
AT PAVEMENT JOINT

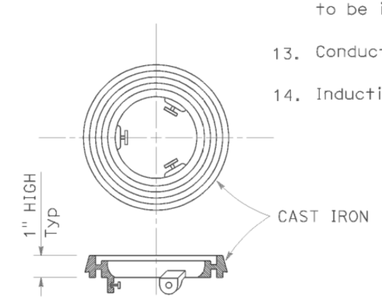


LOCKING GRADE RING

NOTES:

1. Bushing shall be used at end of conduit.
2. Tape detector conductors or cables 3" each side of bushings.
3. Install duct seal compound to each end of termination conduit before installing sealant.
4. Round all sharp edges where detector conductors or cables have to pass.
5. End of conduit shall be 3⅛" below roadway surface.
6. Conduit size / Loop conductors
   - 1"C minimum — 1 to 2 pairs
   - 1½"C minimum — 3 to 4 pairs
   - 2"C minimum — 5 or more pairs
7. Splice detector conductors or cables to detector lead-in-cable.
8. Location of detector handhole when shown on plans.
9. When the shoulder and traveled way are paved with the same material and there is no joint between them, the conduit shall extend only 2'-0" into the shoulder pavement.
10. ¾"C, Type 3 conduit 6" long minimum, plug both ends with duct compound to keep out sealant.
11. ½" Minimum between top of conduit and pavement surface.
12. Sawcut shall not exceed 1" in width and ⅛" longer than conduit to be installed.
13. Conductors with ½" minimum slack inside conduit.
14. Inductive loop detector saw slot.

STATE OF CALIFORNIA
DEPARTMENT OF TRANSPORTATION

# ELECTRICAL SYSTEMS (CURB TERMINATION AND HANDHOLE)

NO SCALE

RSP ES-5D DATED JULY 19, 2013 SUPERSEDES STANDARD PLAN ES-5D DATED MAY 20, 2011 - PAGE 451 OF THE STANDARD PLANS BOOK DATED 2010.

**REVISED STANDARD PLAN RSP ES-5D**

**2010 REVISED STANDARD PLAN RSP ES-5D**

DATE PLOTTED => 07-JAN-2015
TIME PLOTTED => 11:28