Dist	COUNTY	ROUTE	POST MILES TOTAL PROJECT	SHEET No.	TOTAL SHEETS
02	Sis	97	2.1/2.5	1	25

INDEX OF PLANS

SHEET No.	DESCRIPTION
1	TITLE AND LOCATION MAP
2	TYPICAL CROSS SECTIONS
3-4	LAYOUTS
5	SUPERELEVATION DIAGRAM
6-8	CONSTRUCTION DETAILS
9	CONSTRUCTION AREA SIGNS
10-12	PAVEMENT DELINEATION AND SIGN PLANS, DETAILS AND QUANTITIES
13-14	SIGN DETAILS
15	SUMMARY OF QUANTITIES
16-18	EROSION CONTROL PLANS AND QUANTITIES
19-25	REVISED STANDARD PLANS

STATE OF CALIFORNIA

DEPARTMENT OF TRANSPORTATION

PROJECT PLANS FOR CONSTRUCTION ON

STATE HIGHWAY

IN SISKIYOU COUNTY NEAR WEED FROM ANGEL VALLEY ROAD TO MAPLE AVENUE

TO BE SUPPLEMENTED BY STANDARD PLANS DATED 2010

LOCATION MAP

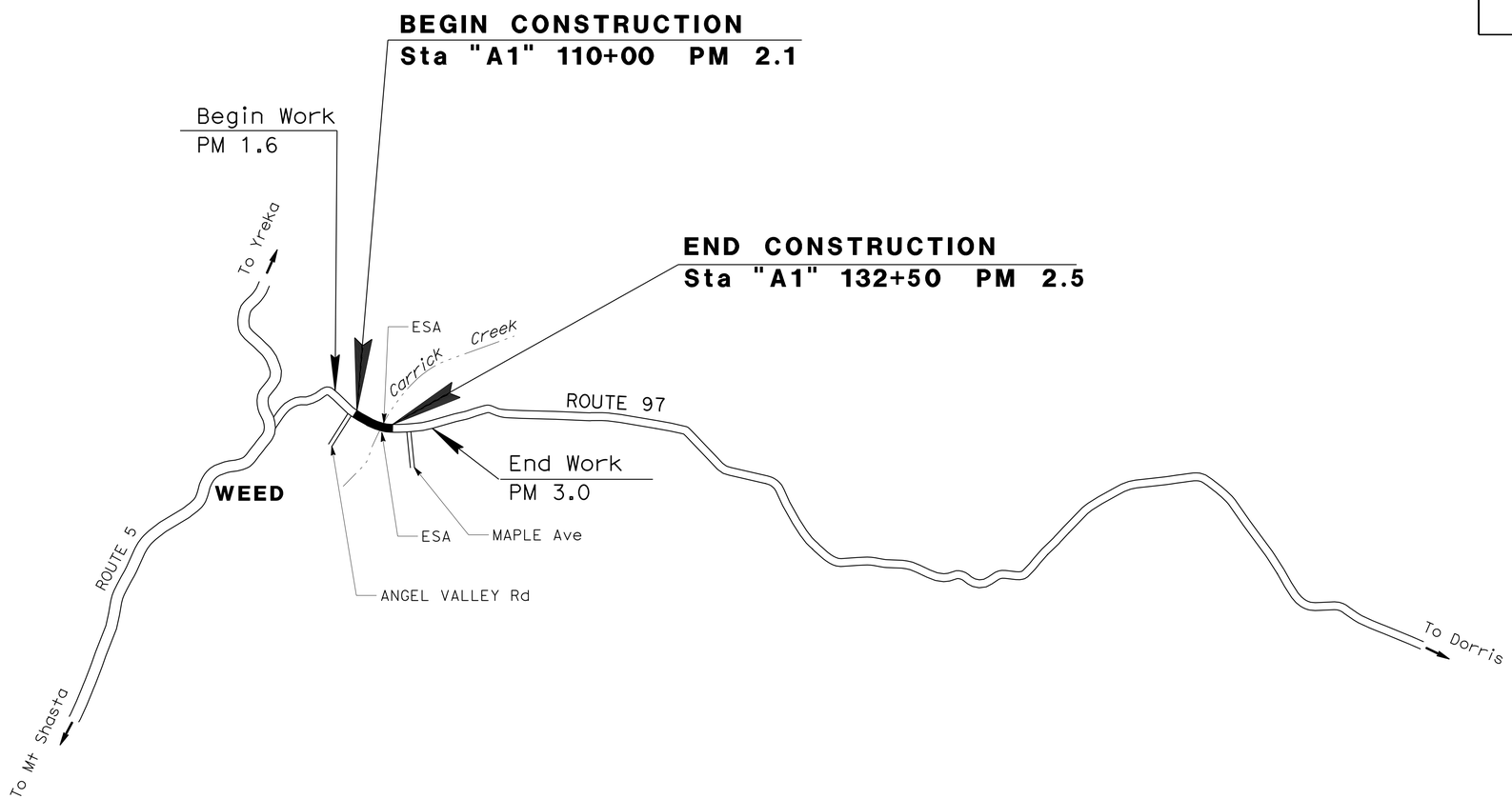

Russell Flood 06-11-14
PROJECT ENGINEER DATE
REGISTERED CIVIL ENGINEER

June 30, 2014
PLANS APPROVAL DATE

REGISTERED PROFESSIONAL ENGINEER
RUSSELL FLOOD
No. C72261
Exp. 06-30-16
CIVIL
STATE OF CALIFORNIA

THE STATE OF CALIFORNIA OR ITS OFFICERS OR AGENTS SHALL NOT BE RESPONSIBLE FOR THE ACCURACY OR COMPLETENESS OF SCANNED COPIES OF THIS PLAN SHEET.

THE CONTRACTOR SHALL POSSESS THE CLASS (OR CLASSES) OF LICENSE AS SPECIFIED IN THE "NOTICE TO BIDDERS."

NO SCALE

CONTRACT No.	02-4G00U4
PROJECT ID	0214000120

PROJECT MANAGER: DEREK WILLIS
DESIGN ENGINEER: STEVE TOPAL

P:\proj\02\40000_plans\pse\24g000ab001.dgn

LAST REVISION 06-29-14
DATE PLOTTED => 02-JUL-2014
TIME PLOTTED => 15:46

Dist	COUNTY	ROUTE	POST MILES TOTAL PROJECT	SHEET No.	TOTAL SHEETS
02	Sis	97	2.1/2.5	2	25

Russell Flood 06-30-14
REGISTERED CIVIL ENGINEER DATE

06-30-14
PLANS APPROVAL DATE

REGISTERED PROFESSIONAL ENGINEER RUSSELL FLOOD No. C72261 Exp. 06-30-16 CIVIL STATE OF CALIFORNIA

THE STATE OF CALIFORNIA OR ITS OFFICERS OR AGENTS SHALL NOT BE RESPONSIBLE FOR THE ACCURACY OR COMPLETENESS OF SCANNED COPIES OF THIS PLAN SHEET.

NOTES:

1. DIMENSIONS OF THE PAVEMENT STRUCTURES (STRUCTURAL SECTIONS) ARE SUBJECT TO TOLERANCES SPECIFIED IN THE STANDARD SPECIFICATIONS.
2. SEE REVISED STANDARD PLANS FOR SAFETY EDGE DETAILS.
3. SUPERELEVATION SHOWN ON THE SUPERELEVATION DIAGRAMS.

ABBREVIATIONS

(E)	EXISTING
TRIM	TRIM LINE
Super	SUPERELEVATION

DESIGN DESIGNATION

ADT (2015)	6648	D	56%
ADT (2035)	8388	T	17%
DHV	932	V	55 mph
ESAL	7,456,000	TI(20)	11.5

PAVEMENT CLIMATE REGION

HIGH MOUNTAIN

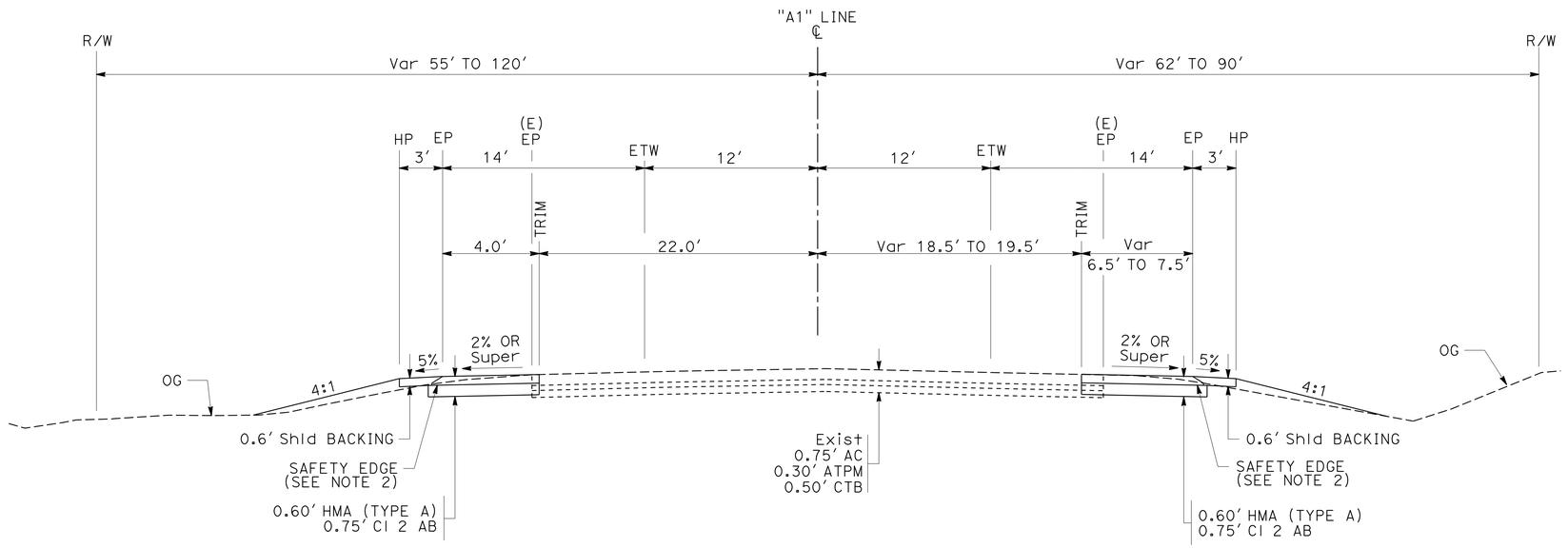

"A1" 113+00 TO 132+50

"A1" 110+00 TO 132+50

ROUTE 97

TYPICAL CROSS SECTIONS

NO SCALE

X-1

REVISED BY | DATE REVISED
RUSSELL FLOOD | GINNY SEIBERT
CALCULATED-DESIGNED BY | CHECKED BY
FUNCTIONAL SUPERVISOR | STEVE TOPAL

STATE OF CALIFORNIA - DEPARTMENT OF TRANSPORTATION
Caltrans
DESIGN

P:\proj1\02\4G00U1_plans\pse\24g000ca001.dgn

LAST REVISION | DATE PLOTTED => 02-JUL-2014
02-18-14 | TIME PLOTTED => 15:46

Dist	COUNTY	ROUTE	POST MILES TOTAL PROJECT	SHEET No.	TOTAL SHEETS
02	Sis	97	2.1/2.5	3	25

Russell Flood 06-30-14
REGISTERED CIVIL ENGINEER DATE

06-30-14
PLANS APPROVAL DATE

REGISTERED PROFESSIONAL ENGINEER
RUSSELL FLOOD
No. C72261
Exp. 06-30-16
CIVIL
STATE OF CALIFORNIA

THE STATE OF CALIFORNIA OR ITS OFFICERS OR AGENTS SHALL NOT BE RESPONSIBLE FOR THE ACCURACY OR COMPLETENESS OF SCANNED COPIES OF THIS PLAN SHEET.

NOTES:

1. FOR ACCURATE RIGHT OF WAY DATA, CONTACT RIGHT OF WAY ENGINEERING AT THE DISTRICT OFFICE.

ABBREVIATIONS:

(E) EXISTING
TFESA TEMPORARY FENCE (TYPE ESA)
TRIM TRIM LINE

LEGEND:

HMA CONFORM (SEE Const DETAILS)

RECONSTRUCT DRIVEWAY (SEE Const DETAILS)

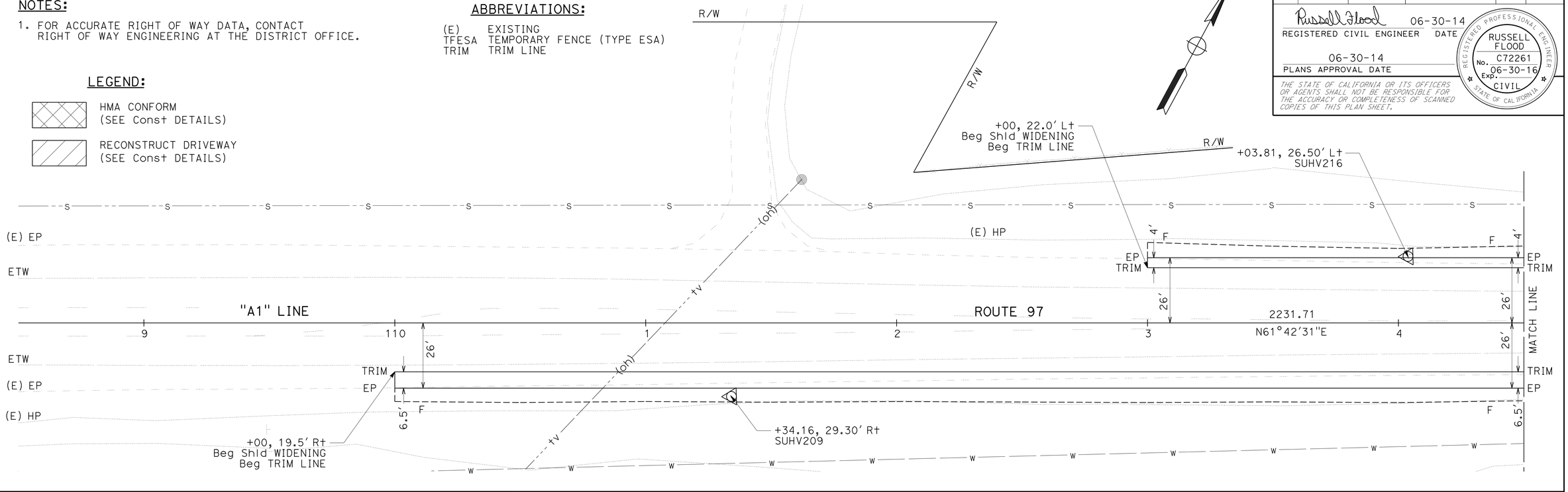

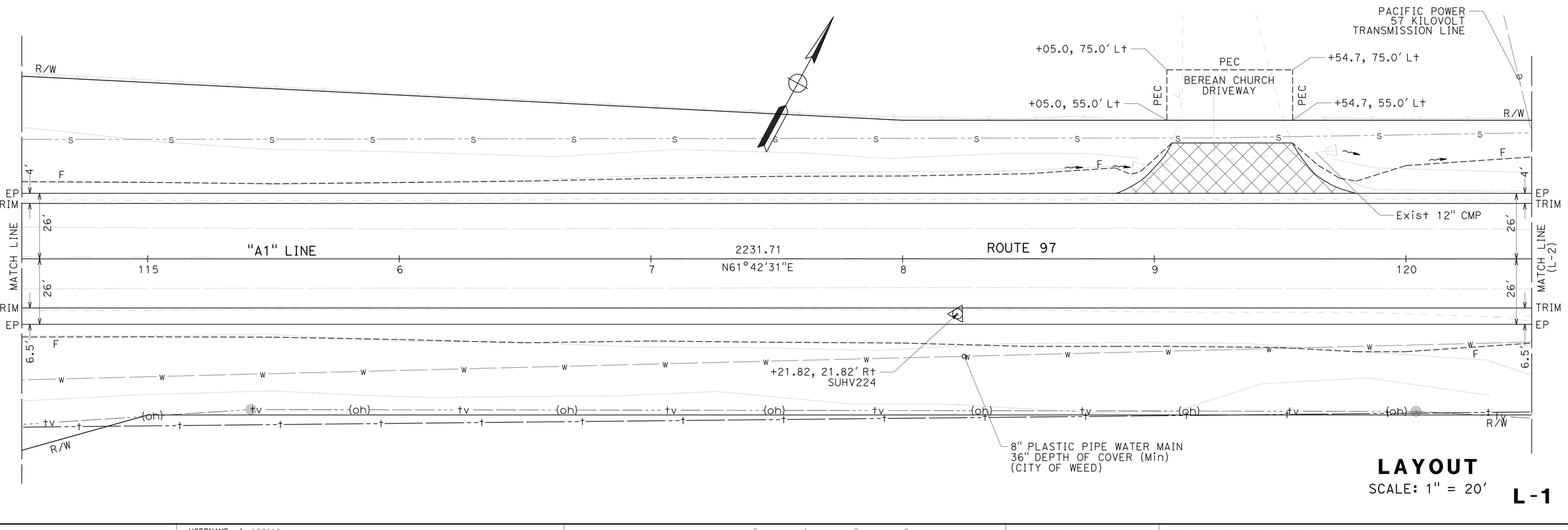

LAYOUT

SCALE: 1" = 20'

L-1

REVISED BY | DATE REVISED
RUSSELL FLOOD | GINNY SEIBERT
CALCULATED-DESIGNED BY | CHECKED BY
FUNCTIONAL SUPERVISOR | STEVE TOPAL

STATE OF CALIFORNIA - DEPARTMENT OF TRANSPORTATION
DESIGN
Caltrans

P:\proj1\02\4G000_plans\pse\24g000ea001.dgn

LAST REVISION 05-08-14 | DATE PLOTTED => 02-JUL-2014 | TIME PLOTTED => 15:46

Dist	COUNTY	ROUTE	POST MILES TOTAL PROJECT	SHEET No.	TOTAL SHEETS
02	Sis	97	2.1/2.5	4	25

Russell Flood 06-30-14
REGISTERED CIVIL ENGINEER DATE

06-30-14
PLANS APPROVAL DATE

REGISTERED PROFESSIONAL ENGINEER RUSSELL FLOOD No. C72261 Exp. 06-30-16 CIVIL STATE OF CALIFORNIA

THE STATE OF CALIFORNIA OR ITS OFFICERS OR AGENTS SHALL NOT BE RESPONSIBLE FOR THE ACCURACY OR COMPLETENESS OF SCANNED COPIES OF THIS PLAN SHEET.

NOTE:

1. FOR ACCURATE RIGHT OF WAY DATA, CONTACT RIGHT OF WAY ENGINEERING AT THE DISTRICT OFFICE.
2. PROTECT IN PLACE.

CURVE DATA

No. ⊕	R	Δ	T	L
1	2000′	08°53′06″	155.39′	310.15′
2	3000′	24°37′54″	654.99′	1289.74′

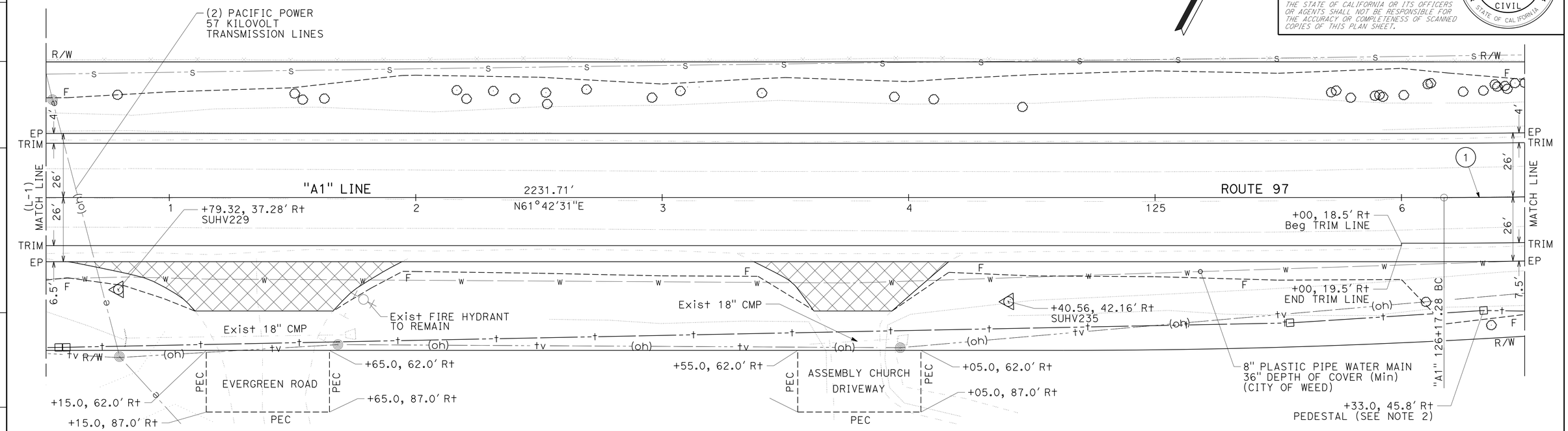

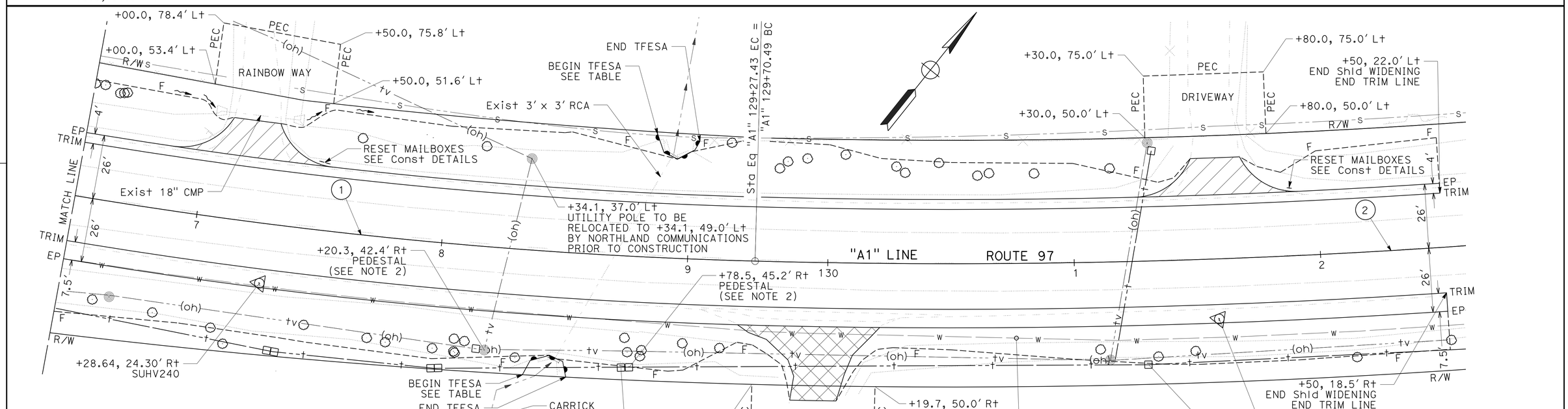

TEMPORARY FENCE (TYPE ESA) LOCATIONS

	Sta, OFFSET				
NB	+36.5, 50.7′ Rt	+39.3, 44.4′ Rt	+46.6, 42.1′ Rt	+52.1, 44.2′ Rt	+53.7, 50.4′ Rt
SB	+85.5, 50.0′ Lt	+88.5, 42.6′ Lt	+94.2, 40.3′ Lt	+01.3, 44.3′ Lt	+03.2, 47.8′ Lt

LAYOUT

SCALE: 1" = 20′

L-2

REVISED BY | DATE REVISED
RUSSELL FLOOD | GINNY SEIBERT
CALCULATED-DESIGNED BY | CHECKED BY
FUNCTIONAL SUPERVISOR | STEVE TOPAL

STATE OF CALIFORNIA - DEPARTMENT OF TRANSPORTATION
DESIGN
Caltrans

P:\proj1\02\4G00X_plans\pse\24g000ea002.dgn

LAST REVISION 05-08-14 | DATE PLOTTED => 02-JUL-2014 | TIME PLOTTED => 15:46

Dist	COUNTY	ROUTE	POST MILES TOTAL PROJECT	SHEET No.	TOTAL SHEETS
02	Sis	97	2.1/2.5	5	25

Russell Flood 06-30-14
REGISTERED CIVIL ENGINEER DATE

06-30-14
PLANS APPROVAL DATE

REGISTERED PROFESSIONAL ENGINEER RUSSELL FLOOD No. C72261 Exp. 06-30-16 CIVIL STATE OF CALIFORNIA

THE STATE OF CALIFORNIA OR ITS OFFICERS OR AGENTS SHALL NOT BE RESPONSIBLE FOR THE ACCURACY OR COMPLETENESS OF SCANNED COPIES OF THIS PLAN SHEET.

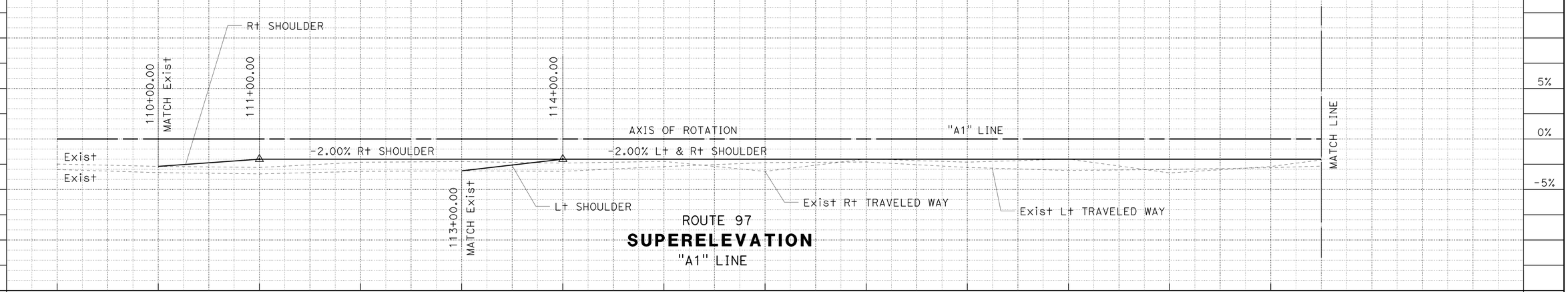

ROUTE 97
SUPERELEVATION
"A1" LINE

STATION		9	110+00	1	2	3	4	115+00	6	7	8	9	120+00	1
CY	Exc		39.1	37.0	35.7	62.3	57.0	56.0	56.1	54.4	50.3	50.5	57.4	
	Emb		3.6	3.5	3.6	5.5	5.9	6.1	10.5	16.2	29.1	27.0	72.0	

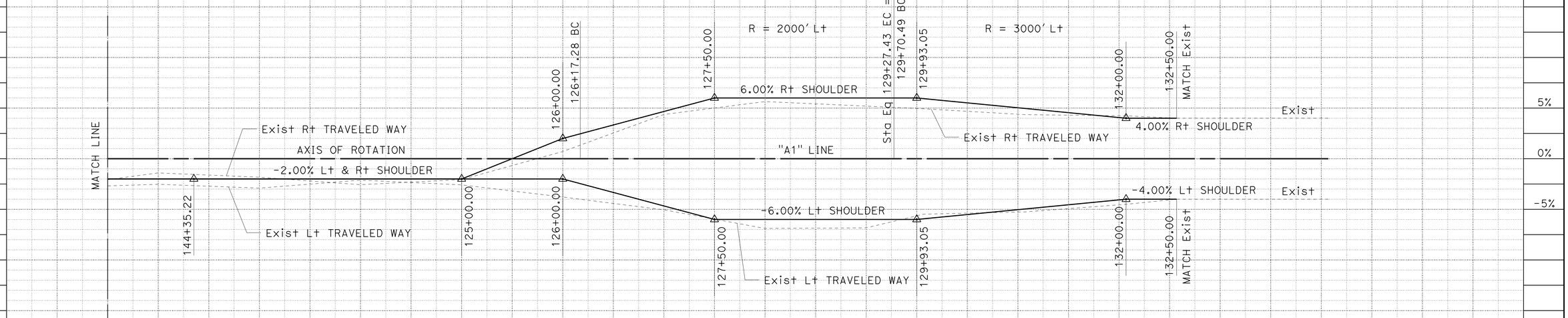

ROUTE 97
SUPERELEVATION
"A1" LINE

SUPERELEVATION DIAGRAM
SCALE: 1" = 10'

SE-1

STATION		1	2	3	4	125+00	6	7	8	9	130+00	1	2	3	4	TOTAL
CY	Exc	55.7	60.1	58.0	61.1	58.6	55.9	50.3	51.4	32.6	60.8	51.1	28.2			1179.6
	Emb	69.5	95.7	79.6	104.1	104.3	156.8	120.6	128.3	62.1	54.4	35.3	21.8			1215.5

REVISED BY | DATE REVISED
GINNY SEIBERT | RUSSELL FLOOD
CALCULATED-DESIGNED BY | CHECKED BY
FUNCTIONAL SUPERVISOR: STEVE TOPAL

STATE OF CALIFORNIA - DEPARTMENT OF TRANSPORTATION
Caltrans® **DESIGN**

P:\proj1\02\4G00_plans\pse\24g000fc001.dgn

LAST REVISION | DATE PLOTTED => 02-JUL-2014 | TIME PLOTTED => 15:46
02-04-14

Dist	COUNTY	ROUTE	POST MILES TOTAL PROJECT	SHEET No.	TOTAL SHEETS
02	Sis	97	2.1/2.5	6	25

Russell Flood 06-30-14
REGISTERED CIVIL ENGINEER DATE

06-30-14
PLANS APPROVAL DATE

REGISTERED PROFESSIONAL ENGINEER RUSSELL FLOOD No. C72261 Exp. 06-30-16 CIVIL STATE OF CALIFORNIA

THE STATE OF CALIFORNIA OR ITS OFFICERS OR AGENTS SHALL NOT BE RESPONSIBLE FOR THE ACCURACY OR COMPLETENESS OF SCANNED COPIES OF THIS PLAN SHEET.

NOTE:

1. SHOULDER BACKING DEPTH TO MATCH HMA (TYPE A) THICKNESS ALONG EDGE OF PAVEMENT AT CONFORMS.

LEGEND:

COLD PLANE ASPHALT CONCRETE PAVEMENT

ABBREVIATIONS:

CPACP COLD PLANE ASPHALT CONCRETE PAVEMENT
Pt POINT

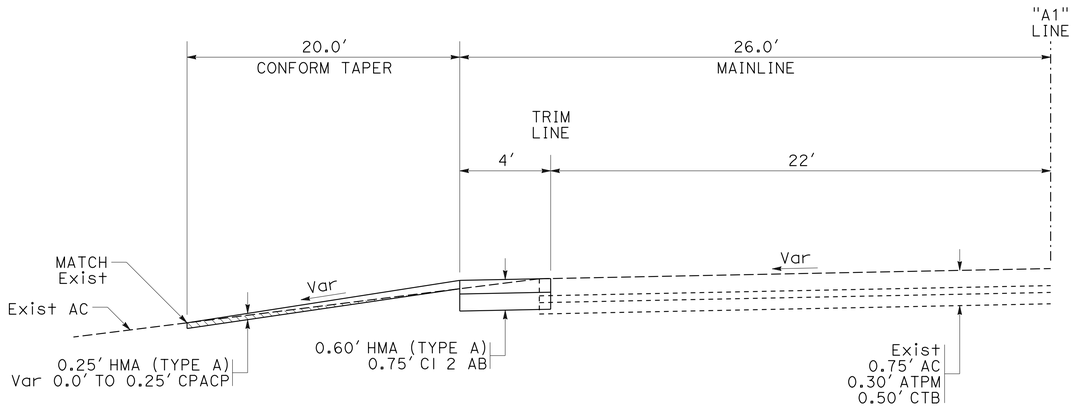

SECTION D-D
TYPICAL CONFORM TAPER (SOUTHBOUND)

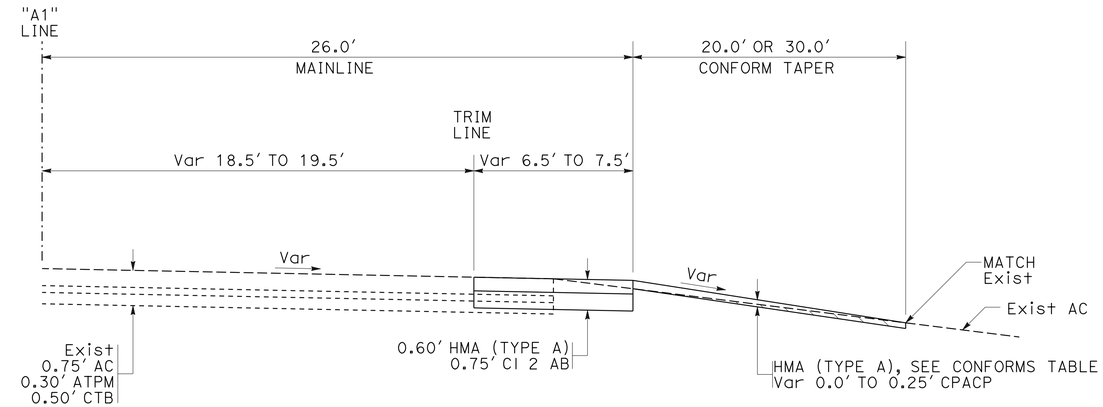

SECTION D-D
TYPICAL CONFORM TAPER (NORTHBOUND)

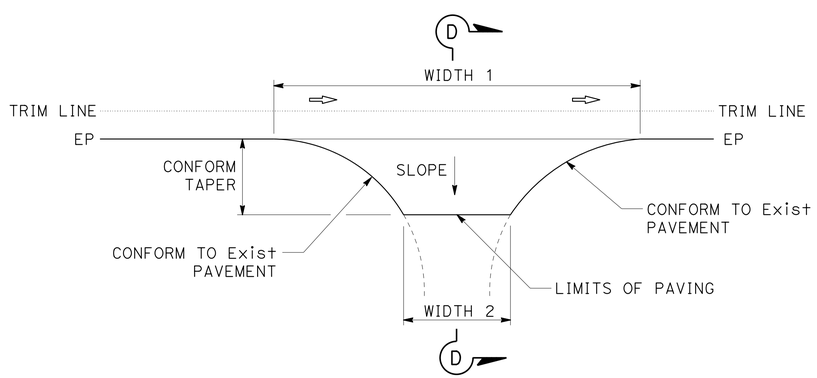

PLAN
TYPICAL CONFORM TAPER FOR ROAD CONNECTIONS AND DRIVEWAYS

CONFORMS

LOCATION "A1" LINE	DESCRIPTION	APPROXIMATE SLOPE	CONFORM TAPER	WIDTH 1	WIDTH 2	HMA (TYPE A) THICKNESS
			LF	LF	LF	LF
119+24 Lt	BEREAN CHURCH DRIVEWAY	5.4%	20	95	48	0.25′
121+25 Rt	EVERGREEN ROAD	4.0%	20	136	56	0.25′
123+77 Rt	ASSEMBLY CHURCH DRIVEWAY	5.4%	20	79	32	0.25′
129+96 Rt	DRIVEWAY	11.2%	30	58	19	0.25′ - 0.45′

CONSTRUCTION DETAILS

NO SCALE

C-1

REVISED BY | DATE REVISED
RUSSELL FLOOD | GINNY SEIBERT
CALCULATED-DESIGNED BY | CHECKED BY
FUNCTIONAL SUPERVISOR
STEVE TOPAL

STATE OF CALIFORNIA - DEPARTMENT OF TRANSPORTATION
Caltrans
DESIGN

P:\proj1\02\4G000_plans\pse\24g000ga001.dgn

LAST REVISION 03-19-14 | DATE PLOTTED => 02-JUL-2014 | TIME PLOTTED => 15:46

Dist	COUNTY	ROUTE	POST MILES TOTAL PROJECT	SHEET No.	TOTAL SHEETS
02	Sis	97	2.1/2.5	7	25

Russell Flood 06-30-14
REGISTERED CIVIL ENGINEER DATE

06-30-14
PLANS APPROVAL DATE

REGISTERED PROFESSIONAL ENGINEER RUSSELL FLOOD No. C72261 Exp. 06-30-16 CIVIL STATE OF CALIFORNIA

THE STATE OF CALIFORNIA OR ITS OFFICERS OR AGENTS SHALL NOT BE RESPONSIBLE FOR THE ACCURACY OR COMPLETENESS OF SCANNED COPIES OF THIS PLAN SHEET.

NOTES:

1. EXISTING UTILITIES HAVE NOT BEEN POSITIVELY LOCATED.
2. SEE SHEET C-3 FOR MAILBOX DETAILS AT RECONSTRUCTED DRIVEWAYS.

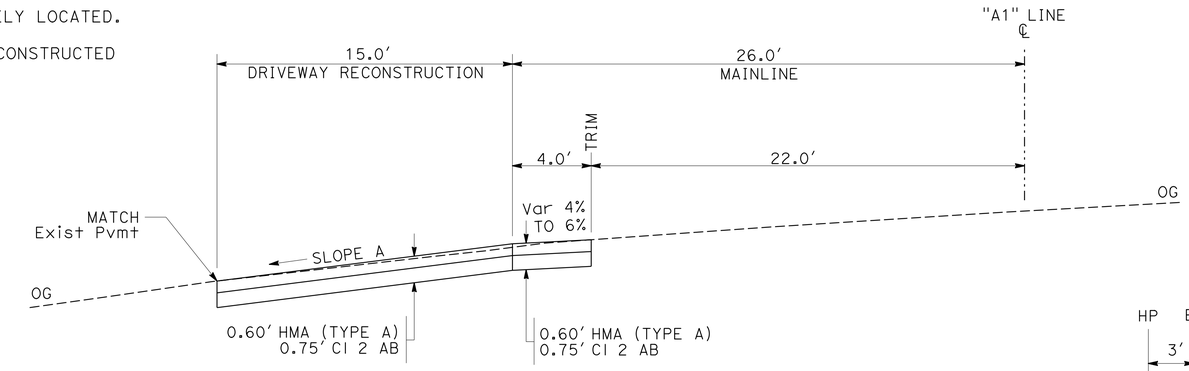

SECTION A-A

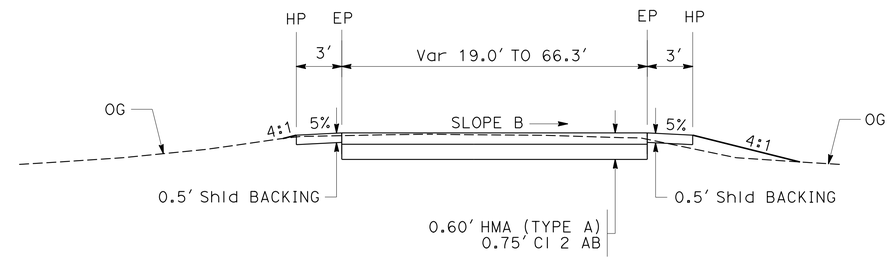

SECTION B-B

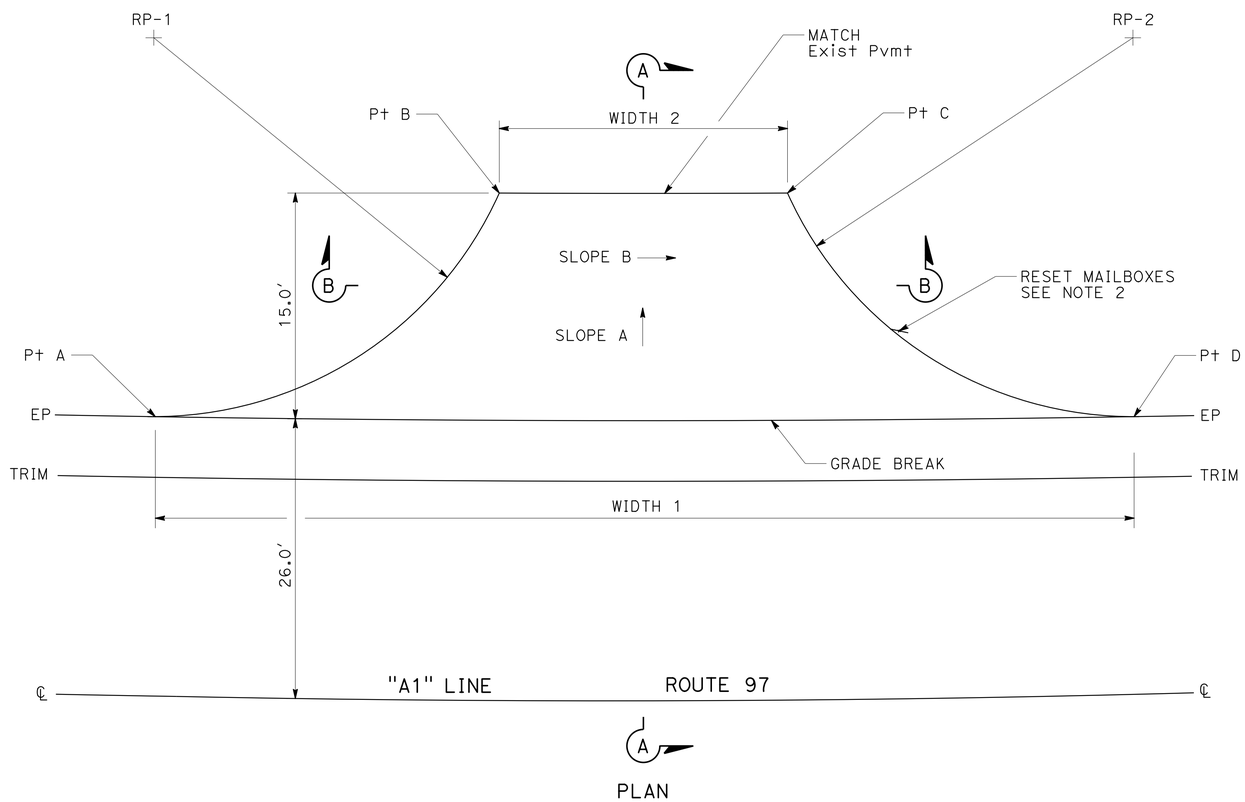

PLAN

TYPICAL RECONSTRUCTION DETAIL

DRIVEWAY RECONSTRUCTION

DESCRIPTION	POINT	POINT LOCATIONS "A1" LINE STATION, OFFSET	RADIUS POINTS STATION, OFFSET	RADIUS	APPROXIMATE SLOPE A	APPROXIMATE SLOPE B *	WIDTH 1 LF	WIDTH 2 LF
RAINBOW WAY	A	126+86.4, 26.0' Lt	RP-1 126+86.4, 51.0' Lt	25.0'	12.6%	2.8%	65.5	19
	B	127+09.9, 41.0' Lt						
	C	127+29.3, 41.0' Lt	RP-2 127+52.7, 51.0' Lt	25.0'				
	D	127+52.7, 26.0' Lt						
DRIVEWAY RECONSTRUCT	A	131+25.2, 26.0' Lt	RP-1 131+25.2, 51.0' Lt	25.0'	10.3%	0.9%	66.3	20
	B	131+48.4, 41.0' Lt						
	C	131+68.8, 41.0' Lt	RP-2 131+92.0, 51.0' Lt	25.0'				
	D	131+92.0, 26.0' Lt						

* MATCH MAINLINE PROFILE AT EP

CONSTRUCTION DETAILS

SCALE: 1" = 10'

C-2

REVISED BY | DATE REVISED
GINNY SEIBERT | RUSSELL FLOOD
CALCULATED-DESIGNED BY | CHECKED BY
FUNCTIONAL SUPERVISOR: STEVE TOPAL
STATE OF CALIFORNIA - DEPARTMENT OF TRANSPORTATION
Caltrans DESIGN
P:\proj1\02\4G00X_plans\pse\24g000ga002.dgn

LAST REVISION 01-31-14 | DATE PLOTTED => 02-JUL-2014 | TIME PLOTTED => 15:46

Dist	COUNTY	ROUTE	POST MILES TOTAL PROJECT	SHEET No.	TOTAL SHEETS
02	Sis	97	2.1/2.5	8	25

Russell Flood 06-30-14
REGISTERED CIVIL ENGINEER DATE

06-30-14
PLANS APPROVAL DATE

REGISTERED PROFESSIONAL ENGINEER RUSSELL FLOOD No. C72261 Exp. 06-30-16 CIVIL STATE OF CALIFORNIA

THE STATE OF CALIFORNIA OR ITS OFFICERS OR AGENTS SHALL NOT BE RESPONSIBLE FOR THE ACCURACY OR COMPLETENESS OF SCANNED COPIES OF THIS PLAN SHEET.

NOTES:

1. REDWOOD MATERIAL SHALL BE 2" x 6" OR 2" x 8" TRIMMED TO FIT WITHIN BOTTOM OF MAILBOX FLANGES.
2. REATTACH EXISTING NEWSPAPER BOXES TO NEW MAILBOX ASSEMBLIES AS SHOWN.
3. CONTRACTOR SHALL VERIFY DIMENSIONS IN THE FIELD.
4. MAILBOX SUPPORT HARDWARE SHALL BE GALVANIZED STEEL.

RESET MAILBOX

LOCATION	MAILBOX	NEWSPAPER BOX	STATION, OFFSET "A1" LINE FROM	TO
RAINBOW WAY DRIVEWAY RECONSTRUCT	4	1	127+34.5, 29.9′ L+	127+48.9, 27.7′ L+
			127+37.1, 29.3′ L+	127+50.5, 27.3′ L+
DRIVEWAY RECONSTRUCT	2	2	131+69.0, 39.2′ L+	131+87.7, 27.5′ L+

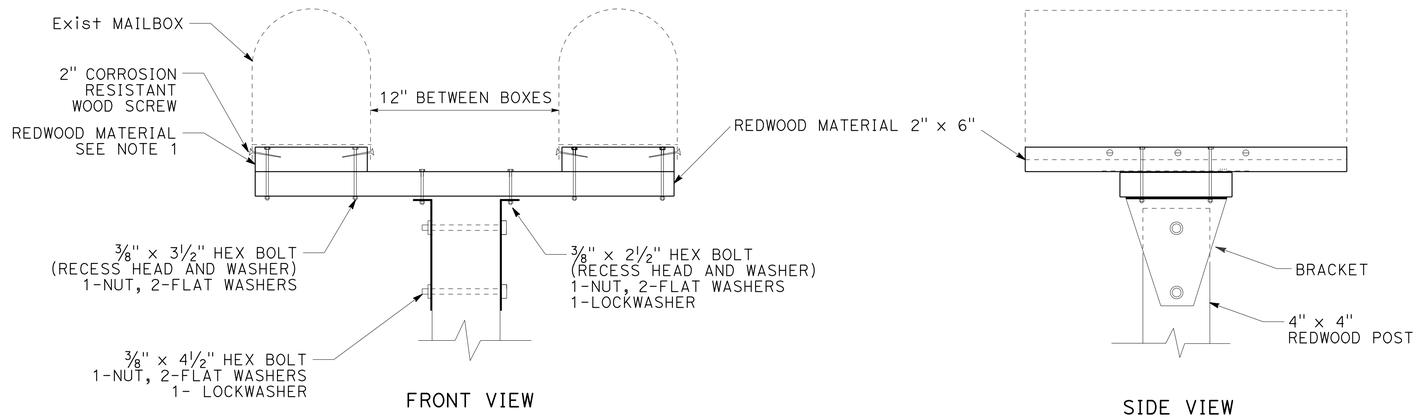

DOUBLE MAILBOX ASSEMBLIES

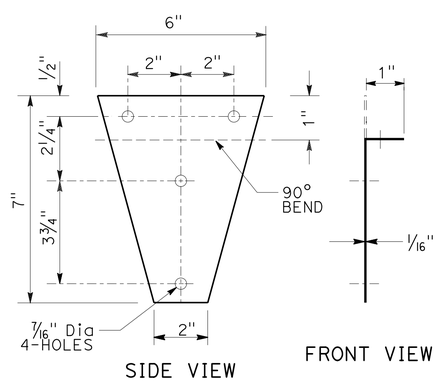

BRACKET

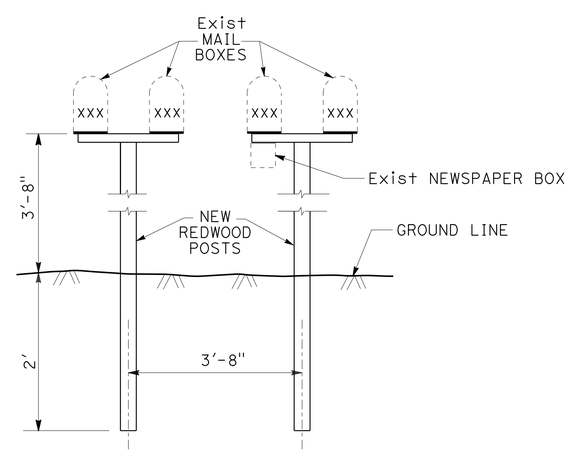

SETTING AND SPACING

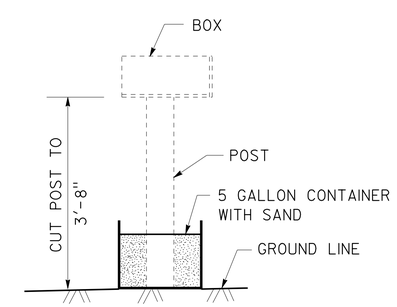

TEMPORARY MAILBOX DETAIL

CONSTRUCTION DETAILS
RESET MAILBOX
NO SCALE

C-3

REVISED BY | DATE REVISED
WILL LESLIE | RUSSELL FLOOD
CALCULATED-DESIGNED BY | CHECKED BY
FUNCTIONAL SUPERVISOR: STEVE TOPAL
STATE OF CALIFORNIA - DEPARTMENT OF TRANSPORTATION
Caltrans® DESIGN
P:\proj1\02\4G000_plans\pse\24g000ga003.dgn

LAST REVISION 05-08-14 | DATE PLOTTED => 02-JUL-2014 | TIME PLOTTED => 15:46

Dist	COUNTY	ROUTE	POST MILES TOTAL PROJECT	SHEET No.	TOTAL SHEETS
02	Sis	97	2.1/2.5	9	25

Russell Flood 06-30-14
REGISTERED CIVIL ENGINEER DATE

06-30-14
PLANS APPROVAL DATE

REGISTERED PROFESSIONAL ENGINEER RUSSELL FLOOD No. C72261 Exp. 06-30-16 CIVIL STATE OF CALIFORNIA

THE STATE OF CALIFORNIA OR ITS OFFICERS OR AGENTS SHALL NOT BE RESPONSIBLE FOR THE ACCURACY OR COMPLETENESS OF SCANNED COPIES OF THIS PLAN SHEET.

NOTES:

1. EXACT SIGN LOCATIONS TO BE DETERMINED BY THE ENGINEER.
2. EXISTING UTILITIES HAVE NOT BEEN POSITIVELY LOCATED.
3. SIGNS SHOWN WITH (CA) INDICATE CALIFORNIA SIGN CODES, OTHERWISE FEDERAL SIGN CODES ARE SHOWN.

CONSTRUCTION AREA SIGNS (STATIONARY MOUNTED)

TYPE	CODE	PANEL SIZE	SIGN MESSAGE	NUMBER AND SIZE OF POSTS	No. OF SIGNS
(A)	W20-1	48" x 48"	ROAD WORK AHEAD	1-4" x 6"	2
	C23B(CA)	36" x 18"	SHOULDER WIDENING		
(B)	W20-1	36" x 36"	ROAD WORK AHEAD	1-4" x 4"	4
(C)	G20-2	36" x 18"	END ROAD WORK	1-4" x 4"	6

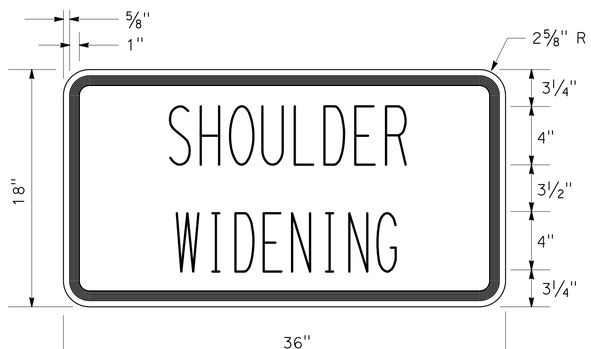

C23B(CA) SIGN PANEL DETAIL

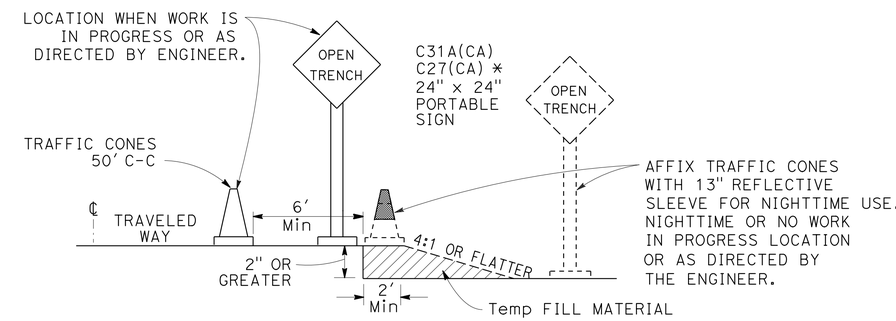

OPEN TRENCH SIGNING AND MARKING

* PLACE AT 250' INTERVALS THROUGH THE OPEN TRENCH AREA. ALTERNATE C27(CA) (OPEN TRENCH) AND C31A(CA) (NO SHOULDER) SIGNS.

ROAD CONNECTIONS*

STATION	NAME
107+50 R†	ANGEL VALLEY ROAD
121+25 R†	EVERGREEN ROAD
R†	MAPLE AVENUE
R†	BROOKSIDE AVENUE

* ROAD CONNECTIONS REQUIRING TYPE (B) & (C) CONSTRUCTION AREA SIGNS

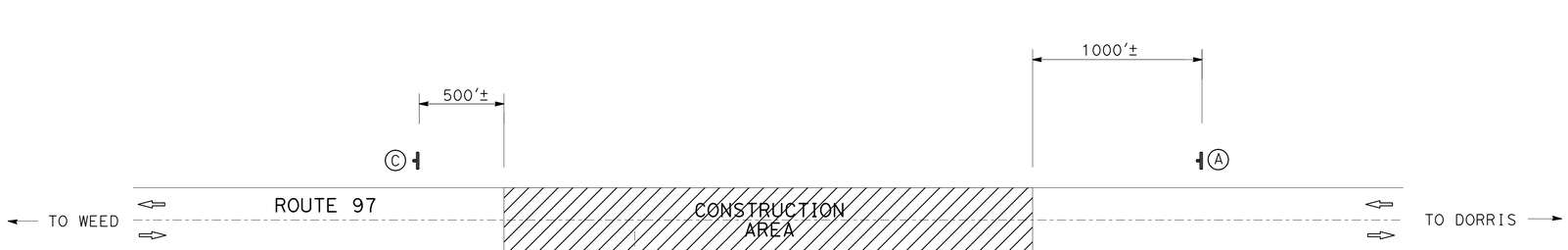

CONSTRUCTION AREA SIGNS

CONSTRUCTION AREA SIGNS

NO SCALE

CS-1

REVISED BY | DATE REVISED
RUSSELL FLOOD | GINNY SEIBERT
CALCULATED-DESIGNED BY | CHECKED BY
FUNCTIONAL SUPERVISOR | STEVE TOPAL
STATE OF CALIFORNIA - DEPARTMENT OF TRANSPORTATION
Caltrans DESIGN
P:\proj1\02\4G00X_plans\pse\24g0001a001.dgn

LAST REVISION | DATE PLOTTED => 02-JUL-2014 | TIME PLOTTED => 15:46
05-08-14

BORDER LAST REVISED 7/2/2010 | USERNAME => s123119 | DGN FILE => 24g0001a001.dgn | RELATIVE BORDER SCALE IS IN INCHES 0 1 2 3 | UNIT 0319 | PROJECT NUMBER & PHASE 02-1400-0120-1 | EA: 02-4G00U1

Dist	COUNTY	ROUTE	POST MILES TOTAL PROJECT	SHEET No.	TOTAL SHEETS
02	Sis	97	2.1/2.5	10	25

Russell Flood 06-30-14
REGISTERED CIVIL ENGINEER DATE

06-30-14
PLANS APPROVAL DATE

REGISTERED PROFESSIONAL ENGINEER RUSSELL FLOOD No. C72261 Exp. 06-30-16 CIVIL STATE OF CALIFORNIA

THE STATE OF CALIFORNIA OR ITS OFFICERS OR AGENTS SHALL NOT BE RESPONSIBLE FOR THE ACCURACY OR COMPLETENESS OF SCANNED COPIES OF THIS PLAN SHEET.

NOTE:

1. EXACT SIGN LOCATIONS TO BE DETERMINED BY THE ENGINEER.
2. REMOVE ALL EXISTING DELINEATORS AND MARKERS FROM STATION "A1" 109+00 TO 132+50.

LEGEND:

- OBJECT MARKER (TYPE L-1)
- DELINEATOR (TYPE F)
- DELINEATOR (TYPE E)
- MARKER (CULVERT)
- MILEPOST MARKER
- RESET ROADSIDE SIGN
- REMOVE ROADSIDE SIGN
- RELOCATE ROADSIDE SIGN
- s Approx DELINEATOR (TYPE F) SPACING ON CURVE

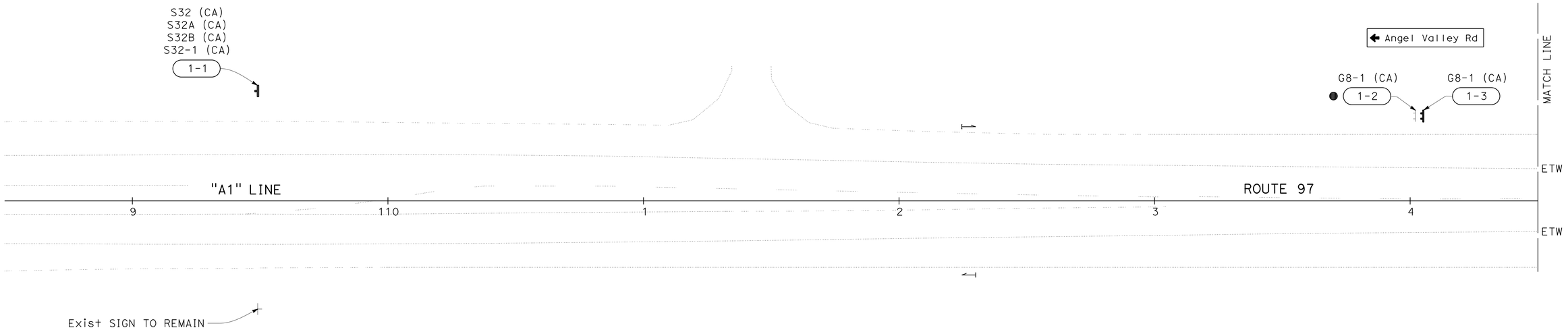

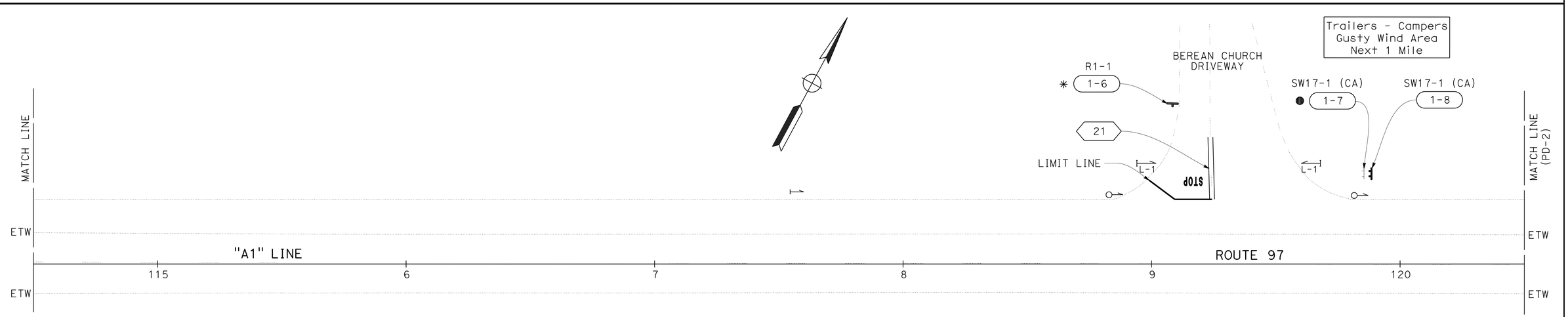

Macdoel	40
Dorris	50
Klamath Falls	71

PAVEMENT DELINEATION AND SIGN PLAN

SCALE: 1" = 20'

PD-1

APPROVED FOR PAVEMENT DELINEATION AND SIGN WORK ONLY

REVISED BY | DATE REVISED
RUSSELL FLOOD | GINNY SEIBERT
CALCULATED-DESIGNED BY | CHECKED BY
FUNCTIONAL SUPERVISOR | STEVE TOPAL

STATE OF CALIFORNIA - DEPARTMENT OF TRANSPORTATION
Caltrans® DESIGN

P:\proj1\02\4G000_plans\pse\24g000na001.dgn

LAST REVISION 05-12-14 | DATE PLOTTED => 02-JUL-2014 | TIME PLOTTED => 15:46

Dist	COUNTY	ROUTE	POST MILES TOTAL PROJECT	SHEET No.	TOTAL SHEETS
02	Sis	97	2.1/2.5	11	25

Russell Flood 06-30-14
REGISTERED CIVIL ENGINEER DATE

06-30-14
PLANS APPROVAL DATE

REGISTERED PROFESSIONAL ENGINEER RUSSELL FLOOD No. C72261 Exp. 06-30-16 CIVIL STATE OF CALIFORNIA

THE STATE OF CALIFORNIA OR ITS OFFICERS OR AGENTS SHALL NOT BE RESPONSIBLE FOR THE ACCURACY OR COMPLETENESS OF SCANNED COPIES OF THIS PLAN SHEET.

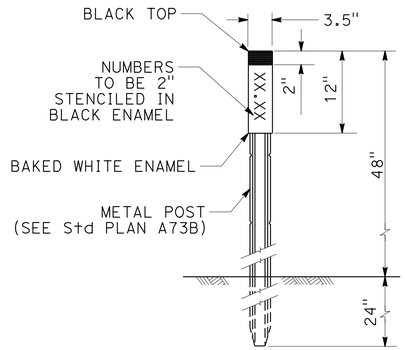

MARKER (CULVERT)

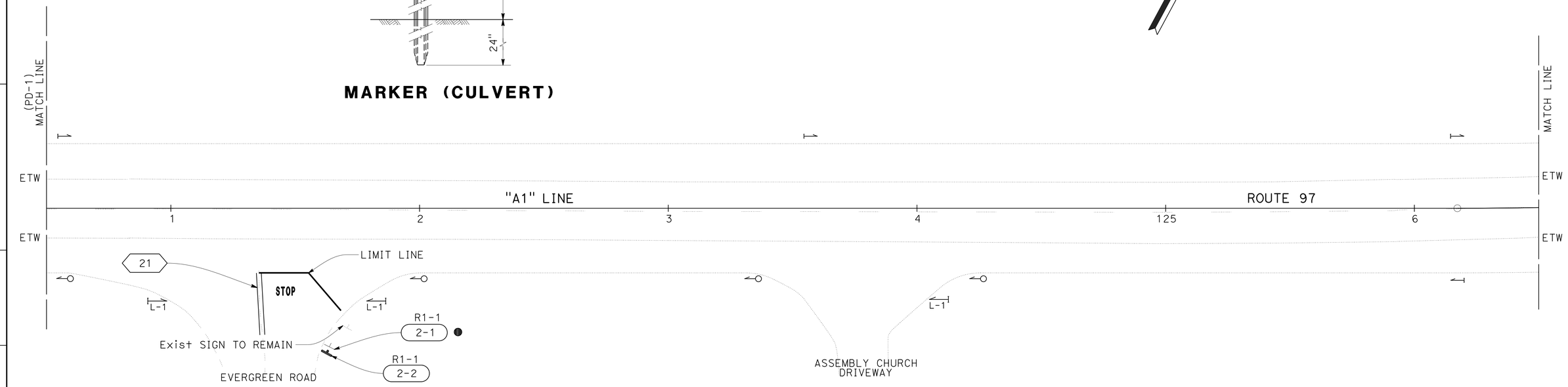

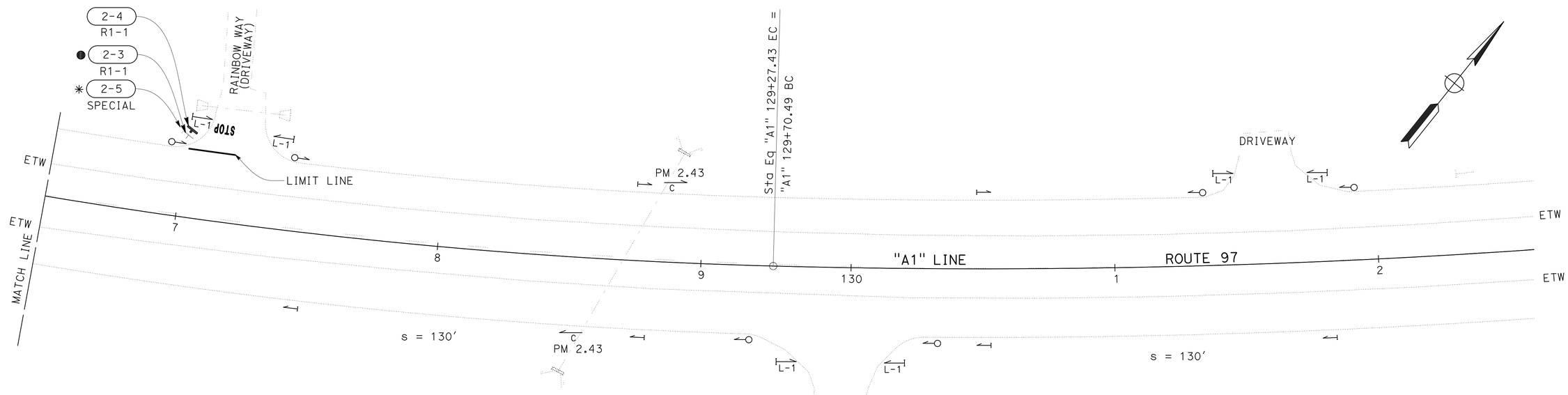

APPROVED FOR PAVEMENT DELINEATION AND SIGN WORK ONLY

PAVEMENT DELINEATION AND SIGN PLAN

SCALE: 1" = 20'

PD-2

REVISED BY	DATE REVISED
RUSSELL FLOOD	GINNY SEIBERT
CALCULATED-DESIGNED BY	CHECKED BY
FUNCTIONAL SUPERVISOR	STEVE TOPAL

STATE OF CALIFORNIA - DEPARTMENT OF TRANSPORTATION
Caltrans
DESIGN

P:\proj1\02\4G00U_plans\pse\24g000na002.dgn

LAST REVISION 04-29-14 | DATE PLOTTED => 02-JUL-2014 | TIME PLOTTED => 15:46

Dist	COUNTY	ROUTE	POST MILES TOTAL PROJECT	SHEET No.	TOTAL SHEETS
02	Sis	97	2.1/2.5	12	25

Russell Flood 06-30-14
REGISTERED CIVIL ENGINEER DATE

06-30-14
PLANS APPROVAL DATE

REGISTERED PROFESSIONAL ENGINEER RUSSELL FLOOD No. C72261 Exp. 06-30-16 CIVIL STATE OF CALIFORNIA

THE STATE OF CALIFORNIA OR ITS OFFICERS OR AGENTS SHALL NOT BE RESPONSIBLE FOR THE ACCURACY OR COMPLETENESS OF SCANNED COPIES OF THIS PLAN SHEET.

NOTE:

1. SIGNS WILL BE MOUNTED ON 2.5" x 2.5" METAL POST UNLESS OTHERWISE NOTED.

ABBREVIATIONS:

(E) EXISTING

DELINEATORS AND MARKERS

SHEET No.	STATION "A1" LINE	REMOVE MARKER	REMOVE DELINEATOR	DELINEATOR (CLASS 2) TYPE E	DELINEATOR (CLASS 2) TYPE F	MARKER (CULVERT)	OBJECT MARKER (TYPE L-1)
		EA	EA	EA	EA	EA	EA
PD-1	108+50 TO 120+50		2	2	4		2
PD-2	120+50 TO 132+50	4	6	10	10	2	10
SUBTOTAL				12	14		
TOTAL		4	8	26		2	12

THERMOPLASTIC TRAFFIC STRIPE (SPRAYABLE)

SHEET No.	DESCRIPTION	STATION "A1" LINE	DETAIL 21
			LF
PD-1	BEREAN CHURCH DRIVEWAY	119+30	25
PD-2	EVERGREEN ROAD	121+40	25
		TOTAL	50

THERMOPLASTIC PAVEMENT MARKING

SHEET No.	DESCRIPTION	STATION "A1" LINE	REMOVE	PLACE		REMARKS
			SQFT	EA	SQFT	
PD-1	BEREAN CHURCH DRIVEWAY	119+30	28	1	28	LIMIT LINE
	BEREAN CHURCH DRIVEWAY	119+30	44	1	22	STOP
PD-2	EVERGREEN ROAD	121+40	40	1	40	LIMIT LINE
	EVERGREEN ROAD	121+40	22	1	22	STOP
	RAINBOW WAY	127+16	18	1	18	LIMIT LINE
	RAINBOW WAY	127+16	22	1	22	STOP
		TOTAL	174		152	

ROADSIDE SIGNS

SHEET No.	SIGN No.	SIGN CODE	PANEL SIZE	POST SIZE AND MATERIAL (SEE NOTE 1)	POST LENGTH	REMOVE ROADSIDE SIGN (WOOD POST)	RESET ROADSIDE SIGN (ONE POST)	ROADSIDE SIGN (ONE POST)	ROADSIDE SIGN (TWO POST)	SIGN PANEL DESCRIPTION
					FT	EA	EA	EA	EA	
PD-1	1-1	S32 (CA)	36" x 30"	METAL POST	13			1		ADOPT-A-HIGHWAY
		S32A (CA)	10" x 12"							ADOPT-A-HIGHWAY SHIELD
		S32B (CA)	30" x 15"							WEED HIGH SCHOOL KEY CLUB
		S32-1 (CA)	15" x 18"							LITTER REMOVAL
	1-2	G8-1 (CA)	108" x 18"			1				ANGEL VALLEY ROAD
	1-3	G8-1 (CA)	108" x 18"	METAL POST	10				1	ANGEL VALLEY ROAD
	1-4	G5 (CA)	102" x 42"			1				MACDOEL 40 DORRIS 50 KLAMATH FALLS 71
	1-5	G5 (CA)	102" x 42"	WOOD POST 6" x 6"	15				1	MACDOEL 40 DORRIS 50 KLAMATH FALLS 71
	1-6	R1-1	30"	WOOD POST (E)			1			STOP SIGN
	1-7	SW17-1 (CA)	132" x 48"			1				TRAILERS - CAMPERS GUSTY WIND AREA NEXT 1 MILE
	1-8	SW17-1 (CA)	132" x 48"	WOOD POST 6" x 6"	17				1	TRAILERS - CAMPERS GUSTY WIND AREA NEXT 1 MILE
PD-2	2-1	R1-1	30"			1				STOP SIGN
	2-2	R1-1	30"	METAL POST	12			1		STOP SIGN
	2-3	R1-1	30"			1				STOP SIGN
	2-4	R1-1	30"	METAL POST	12			1		STOP SIGN
	2-5	Exist STREET SIGN		WOOD POST (E)			1			RAINBOW WAY
TOTAL						5	2	3	3	

MATERIAL SUMMARY CONTRACTOR FURNISHED SIGNS

SHEET No.	SIGN No.	SIGN CODE	PANEL SIZE	SINGLE FACED	BACKGROUND SHEETING COLOR	BACKGROUND RETROREFLECTIVE ASTM TYPE	LEGEND SHEETING COLOR	LEGEND RETROREFLECTIVE ASTM TYPE	FURNISH SINGLE SHEET ALUMINUM SIGN (0.063"-UNFRAMED)	FURNISH SINGLE SHEET ALUMINUM SIGN (0.080"-FRAMED)	SIGN PANEL DESCRIPTION
									SQFT	SQFT	
PD-1	1-1	S32 (CA)	36" x 30"	X	GREEN	III	WHITE	III	7.5		ADOPT-A-HIGHWAY
		S32A (CA)	10" x 12"	X	GREEN	III	WHITE	III	0.83		ADOPT-A-HIGHWAY SHIELD
		S32B (CA)	30" x 15"	X	WHITE	III	BLACK	III	3.13		WEED HIGH SCHOOL KEY CLUB
		S32-1 (CA)	15" x 18"	X					1.88		LITTER REMOVAL
	1-3	G8-1 (CA)	108" x 18"	X	GREEN	III	WHITE	III		13.5	ANGEL VALLEY ROAD
	1-5	G5 (CA)	102" x 42"	X	GREEN	III	WHITE	III		29.75	MACDOEL 40 DORRIS 50 KLAMATH FALLS 71
	1-8	SW17-1 (CA)	132" x 48"	X	YELLOW	III	BLACK	III		44	TRAILERS - CAMPERS GUSTY WIND AREA NEXT 1 MILE
PD-2	2-2	R1-1	30"	X	RED	III	WHITE	III	6.25		STOP SIGN
	2-4	R1-1	30"	X	RED	III	WHITE	III	6.25		STOP SIGN
								TOTAL	25.84	87.25	

PAVEMENT DELINEATION AND SIGN QUANTITIES

PDQ-1

REVISED BY | DATE REVISED
RUSSELL FLOOD | GINNY SEIBERT
CALCULATED-DESIGNED BY | CHECKED BY
FUNCTIONAL SUPERVISOR | STEVE TOPAL
STATE OF CALIFORNIA - DEPARTMENT OF TRANSPORTATION
Caltrans DESIGN

P:\proj1\02\4G000_plans\pse\24g000nc001.dgn

LAST REVISION 04-29-14 | DATE PLOTTED => 02-JUL-2014 | TIME PLOTTED => 15:46

Dist	COUNTY	ROUTE	POST MILES TOTAL PROJECT	SHEET No.	TOTAL SHEETS
02	Sis	97	2.1/2.5	13	25

Russell Flood 06-30-14
REGISTERED CIVIL ENGINEER DATE

06-30-14
PLANS APPROVAL DATE

REGISTERED PROFESSIONAL ENGINEER
RUSSELL FLOOD
No. C72261
Exp. 06-30-16
CIVIL
STATE OF CALIFORNIA

THE STATE OF CALIFORNIA OR ITS OFFICERS OR AGENTS SHALL NOT BE RESPONSIBLE FOR THE ACCURACY OR COMPLETENESS OF SCANNED COPIES OF THIS PLAN SHEET.

NOTES:

1. USE A 2¼" SQUARE TUBE × 30" LONG, 3/16" THICK ANCHOR FOR 2" POSTS. USE A 3" SQUARE TUBE × 3′ LONG, 3/16" THICK ANCHOR FOR 2½" POSTS.
2. USE A 5/16" CORNER BOLT OR TWO DRIVE RIVETS TO FASTEN ASSEMBLED SIGN AND POST INTO ANCHOR. INSTALL CORNER BOLT OR DRIVE RIVETS INTO THE SIDES FACING TRAFFIC.
3. REMOVE EXISTING AC OR PCC, DRIVE ANCHOR SLEEVE INTO SOIL AND RECAP WITH LIKE MATERIAL, MATCHING EXISTING THICKNESS.
4. 2" POSTS ARE TO BE 1/8" THICK, PERFORATIONS OF 7/16" IN DIAMETER ARE 1" ON CENTER ON ALL SIDES, LENGTHS ARE 10′ AND 12′.
5. 2½" POSTS ARE TO BE 1/8" THICK, PERFORATIONS OF 7/16" IN DIAMETER ARE 1" ON CENTER ON ALL SIDES, 2-1/2" POSTS ARE 12′ AND 14′ IN LENGTH.
6. FOR DETAILS NOT SHOWN, REFER TO THE STANDARD PLANS.
7. 2½" POSTS SHALL BE USED IN SIDEWALK AND HIGH PEDESTRIAN USE PLACEMENTS AS DETERMINED BY THE ENGINEER.
8. ALL ANCHOR SLEEVES SHALL BE EMBEDDED IN PCC, EXCEPT FOR INSTALLATIONS IN PAVEMENTS OR SIDEWALKS.

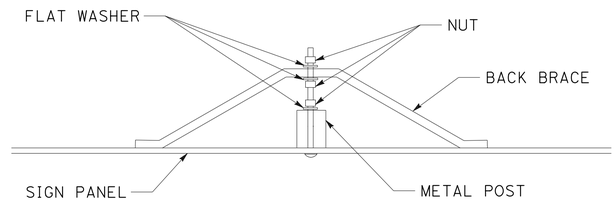

BACK BRACE MOUNTING DETAIL

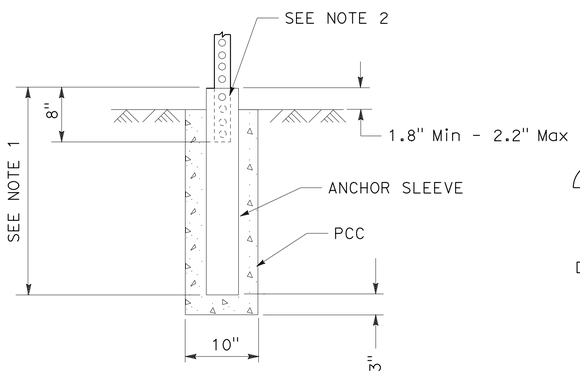

INSTALLATION IN SOIL (PCC)
(SEE NOTE 8)

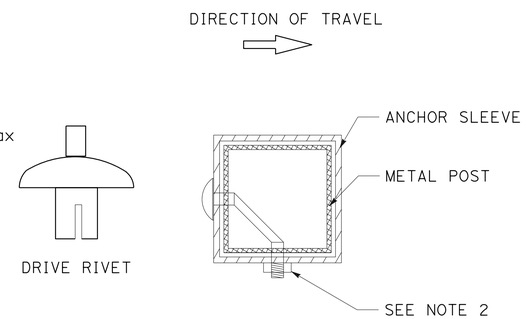

FASTENER DETAILS

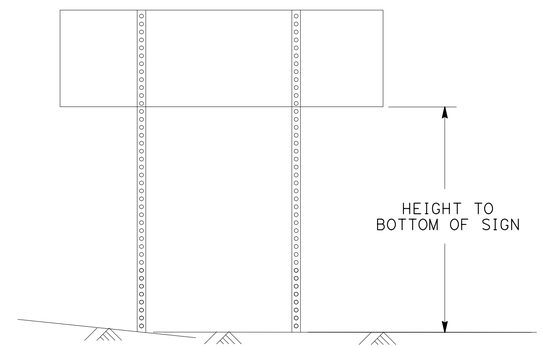

TWO POSTS INSTALLATION
(POST SIZE, SEE CHART BELOW)

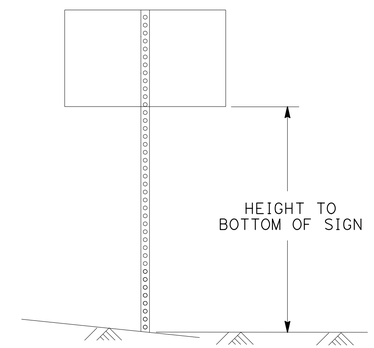

SINGLE POST INSTALLATION
(POST SIZE, SEE CHART BELOW)

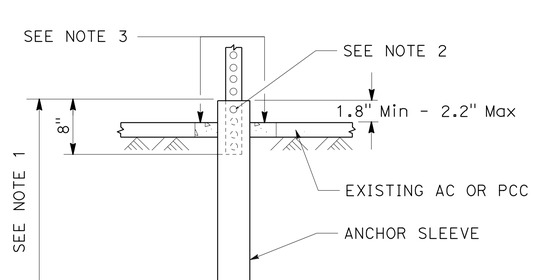

INSTALLATION IN EXISTING AC OR PCC

Max SQFT OF SIGN

POST SIZE	60"	72"	84"	96"	108"	120"
2"	18	16	14	12	10	8
2.5"	35	32	28	24	21	21

HEIGHT TO BOTTOM OF SIGN
DOUBLE POST GROUND SIGNS
70 MPH WIND SPEED

Max SQFT OF SIGN

POST SIZE	60"	72"	84"	96"	108"	120"
2"	10.5	10	8.7	7.4	6.2	5
2.5"	16	16	16	16	12	12

HEIGHT TO BOTTOM OF SIGN
SINGLE POST GROUND SIGNS
70 MPH WIND SPEED

METAL SIGN POST DETAIL

METAL SIGN POST INSTALLATION DETAILS

SIGN DETAILS

NO SCALE **SD-1**

REVISED BY | DATE REVISED
RUSSELL FLOOD | GINNY SEIBERT
CALCULATED-DESIGNED BY | CHECKED BY
FUNCTIONAL SUPERVISOR
STEVE TOPAL

STATE OF CALIFORNIA - DEPARTMENT OF TRANSPORTATION
Caltrans
DESIGN

P:\proj1\02\4G00X_plans\pse\24g000ob001.dgn

LAST REVISION 01-29-14 | DATE PLOTTED => 02-JUL-2014 | TIME PLOTTED => 15:46

Dist	COUNTY	ROUTE	POST MILES TOTAL PROJECT	SHEET No.	TOTAL SHEETS
02	Sis	97	2.1/2.5	14	25

Russell Flood 06-30-14
REGISTERED CIVIL ENGINEER DATE

06-30-14
PLANS APPROVAL DATE

REGISTERED PROFESSIONAL ENGINEER
RUSSELL FLOOD
No. C72261
Exp. 06-30-16
CIVIL
STATE OF CALIFORNIA

THE STATE OF CALIFORNIA OR ITS OFFICERS OR AGENTS SHALL NOT BE RESPONSIBLE FOR THE ACCURACY OR COMPLETENESS OF SCANNED COPIES OF THIS PLAN SHEET.

NOTE:

1. SIGNS SHOWN WITH (CA) INDICATE CALIFORNIA SIGN CODES, OTHERWISE FEDERAL SIGN CODES ARE SHOWN.

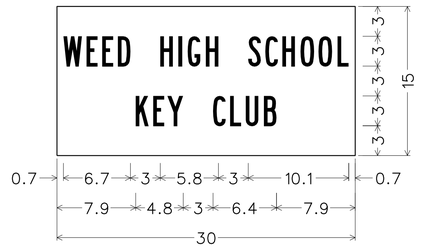

No border, White on White;
[WEED HIGH SCHOOL] Black B;
[KEY CLUB] Black B;

SIGN No. 1-1

S32B (CA)

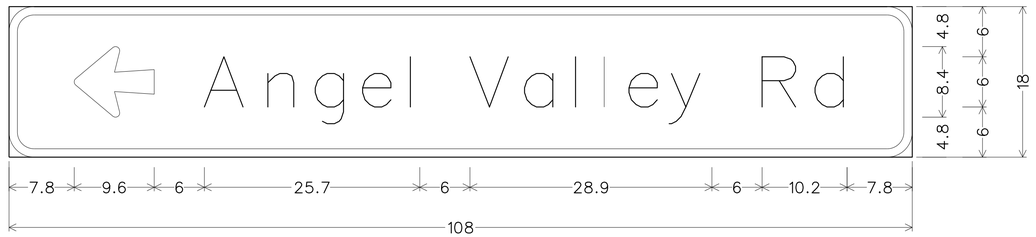

3.0" RADIUS, 1.0" BORDER, WHITE ON GREEN;
ARROW 6UC-1L - 9.6" 180°; [ANGEL VALLEY RD] E MOD;

SIGN No. 1-3

G8-1 (CA)

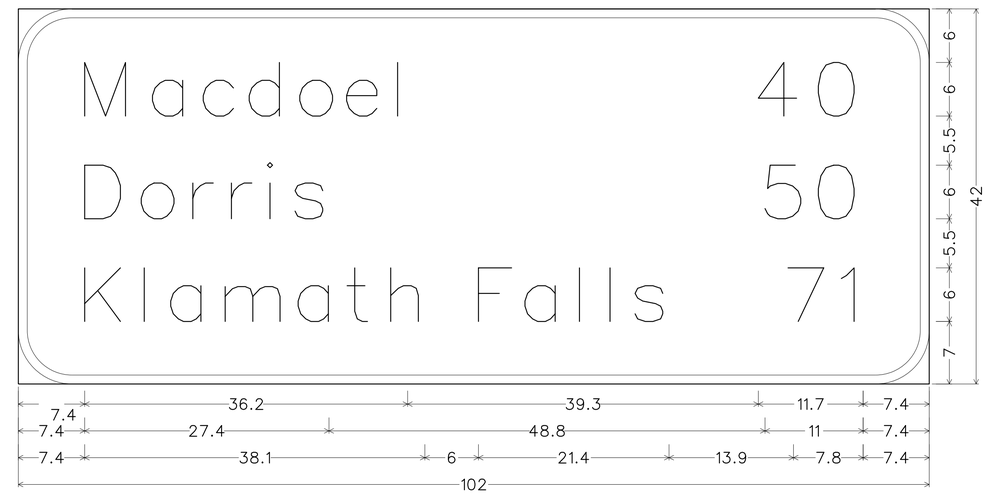

6.0" RADIUS, 1.0" BORDER, WHITE ON GREEN;
[MACDOEL] E MOD; [DORRIS] E MOD; [KLAMATH FALLS] E MOD; [40] E MOD; [50] E MOD; [71] E MOD;

SIGN No. 1-5

G5 (CA)

SIGN DETAILS

NO SCALE

SD-2

REVISED BY | DATE REVISED
FRANK RIVAS | RUSSELL FLOOD
CALCULATED-DESIGNED BY | CHECKED BY
FUNCTIONAL SUPERVISOR
STEVE TOPAL

STATE OF CALIFORNIA - DEPARTMENT OF TRANSPORTATION
Caltrans
DESIGN

P:\proj1\02\4G00U_plans\pse\24g000ob002.dgn

LAST REVISION 06-25-14 | DATE PLOTTED => 02-JUL-2014 | TIME PLOTTED => 15:46

Dist	COUNTY	ROUTE	POST MILES TOTAL PROJECT	SHEET No.	TOTAL SHEETS
02	Sis	97	2.1/2.5	15	25

Russell Flood 06-30-14
REGISTERED CIVIL ENGINEER DATE

06-30-14
PLANS APPROVAL DATE

REGISTERED PROFESSIONAL ENGINEER
RUSSELL FLOOD
No. C72261
Exp. 06-30-16
CIVIL
STATE OF CALIFORNIA

THE STATE OF CALIFORNIA OR ITS OFFICERS OR AGENTS SHALL NOT BE RESPONSIBLE FOR THE ACCURACY OR COMPLETENESS OF SCANNED COPIES OF THIS PLAN SHEET.

NOTE:

1. (N) - NOT A SEPARATE PAY ITEM, FOR INFORMATION ONLY.

MAINTAIN EXISTING TRAFFIC MANAGEMENT SYSTEM ELEMENTS DURING CONSTRUCTION

CO-RT-PM	TYPE	LOCATION DESCRIPTION
SIS-97-PM 2.59	HAR FLASHER	NORTH OF WEED NEAR MAPLE AVENUE (SB)
SIS-97-PM 2.60	HAR FLASHER	NORTH OF WEED NEAR MAPLE AVENUE (NB)

WATER POLLUTION CONTROL

LOCATION	Temp FIBER ROLL
	LF
"A1" 110+00.00 TO 132+50.00	400
TOTAL	400

TEMPORARY FENCE (TYPE ESA)

STATION "A1" LINE	NORTHBOUND	SOUTHBOUND	TEMPORARY FENCE (TYPE ESA)
			LF
128+36 TO 128+54	X		27
128+85 TO 129+03		X	26
TOTAL			53

ROADWAY ITEMS

STATION "A1" LINE	NORTHBOUND	SOUTHBOUND	* RESET MAILBOX	COLD PLANE ASPHALT CONCRETE PAVEMENT	ROADWAY EXCAVATION	(N) EMBANKMENT	IMPORTED BORROW (CY)	SHOULDER BACKING	CLASS 2 AGGREGATE BASE (CY)	HOT MIX ASPHALT (TYPE A)	TACK COAT	DESCRIPTION
			EA	SQYD	CY	CY	CY	TON	CY	TON	TON	
110+00 TO 132+50					1179	1379	200	416	726	1163	0.53	MAINLINE
CONFORMS/RECONSTRUCTION												
119+24		X		143				4		26	0.07	BEREAN CHURCH DRIVEWAY
121+25	X			189				5		34	0.09	EVERGREEN ROAD
123+77	X			116				4		21	0.06	ASSEMBLY CHURCH DRIVEWAY
127+16		X	5		24	6		7	13	23	0.01	RAINBOW WAY
129+96	X			98				4		28	0.05	DRIVEWAY
131+60		X	4		25	7		7	14	24	0.01	DRIVEWAY
TOTAL			9	546	1228	1392	200	447	753	1319	0.82	

* - MAILBOX TOTAL INCLUDES 6 MAILBOXES AND 3 NEWSPAPER BOXES.

TREATED WOOD WASTE

DESCRIPTION	SHEET No.	LOCATION	(N) WOOD POSTS TO BE REMOVED	TREATED WOOD WASTE
			EA	LB
SIGN POSTS	PD-1	ROADSIDE SIGN 1-2	2	80
		ROADSIDE SIGN 1-4	2	80
		ROADSIDE SIGN 1-7	2	80
	PD-2	ROADSIDE SIGN 2-1	1	40
		ROADSIDE SIGN 2-3	1	40
MAILBOX POSTS	C-2	AT RAINBOW WAY	2	80
		AT DRIVEWAY	1	40
			TOTAL	440

SUMMARY OF QUANTITIES

Q-1

REVISED BY | DATE REVISED
RUSSELL FLOOD | GINNY SEIBERT
CALCULATED-DESIGNED BY | CHECKED BY
FUNCTIONAL SUPERVISOR: STEVE TOPAL
STATE OF CALIFORNIA - DEPARTMENT OF TRANSPORTATION
Caltrans® DESIGN
P:\proj1\02\4G000_plans\pse\24g000pa001.dgn

LAST REVISION 04-29-14 | DATE PLOTTED => 02-JUL-2014 | TIME PLOTTED => 15:46

Dist	COUNTY	ROUTE	POST MILES TOTAL PROJECT	SHEET No.	TOTAL SHEETS
02	Sis	97	2.1/2.5	16	25

LICENSED LANDSCAPE ARCHITECT

06-30-14
PLANS APPROVAL DATE

LICENSED LANDSCAPE ARCHITECT J. PATRICK SULLIVAN #3125 Signature 07/31/14 Renewal Date 06/11/14 Date STATE OF CALIFORNIA

THE STATE OF CALIFORNIA OR ITS OFFICERS OR AGENTS SHALL NOT BE RESPONSIBLE FOR THE ACCURACY OR COMPLETENESS OF SCANNED COPIES OF THIS PLAN SHEET.

NOTES:

1. FOR ACCURATE RIGHT OF WAY DATA, CONTACT RIGHT OF WAY ENGINEERING AT THE DISTRICT OFFICE.
2. DISTURBED AREAS INCLUDE SLOPE FACTOR IN AREA MEASUREMENTS.

EROSION CONTROL QUANTITY TABLE

HYDROSEED	
TOTAL SQFT THIS SHEET	6,240

LEGEND:

HYDROSEED

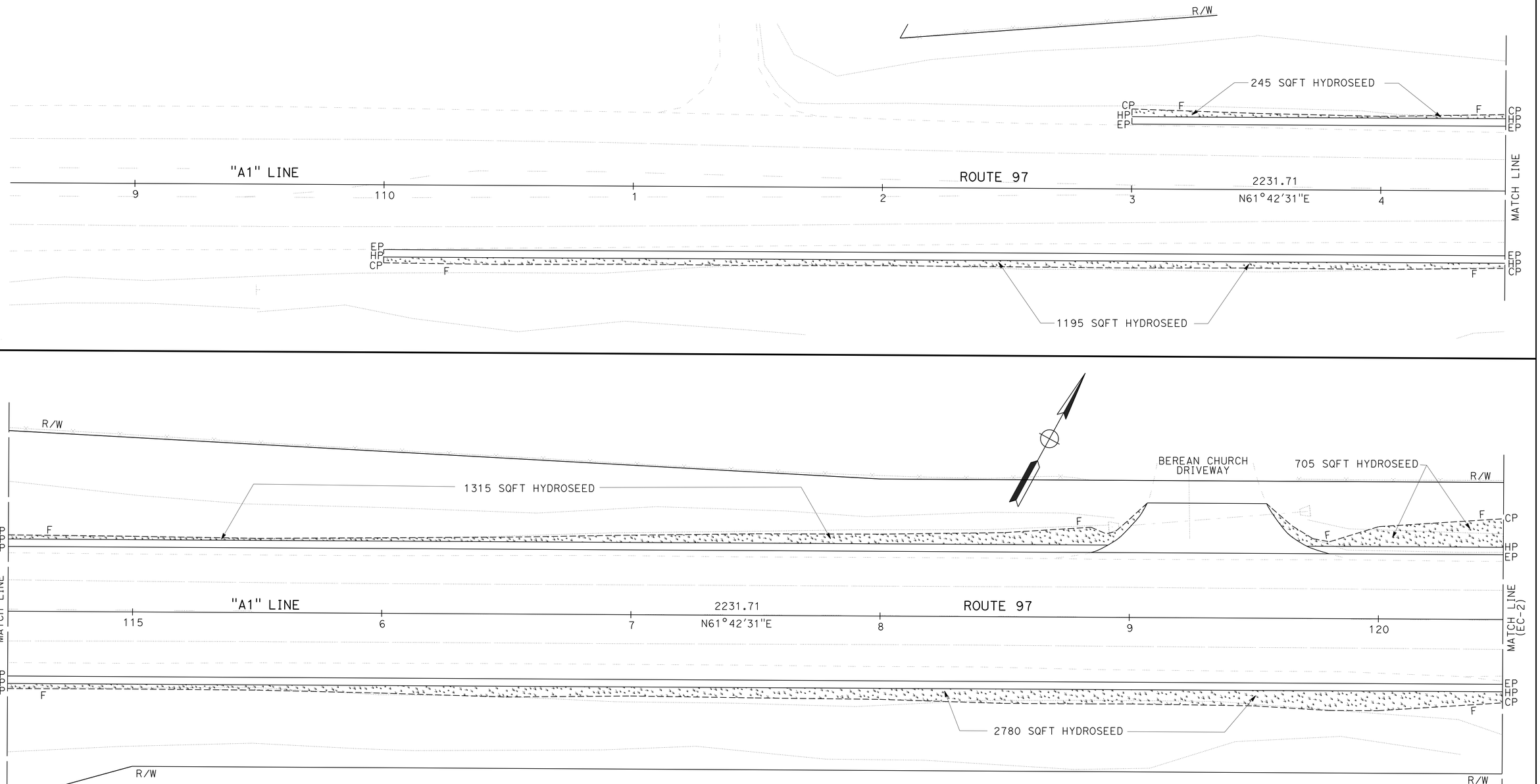

EROSION CONTROL PLAN
SCALE: 1" = 20'

EC-1

APPROVED FOR EROSION CONTROL WORK ONLY

REVISED BY | DATE REVISED
J. PATRICK SULLIVAN | RON FLORY
CALCULATED-DESIGNED BY | CHECKED BY
SENIOR LANDSCAPE ARCHITECT | RON FLORY
STATE OF CALIFORNIA - DEPARTMENT OF TRANSPORTATION
Caltrans® LANDSCAPE ARCHITECTURE

P:\proj1\02\4G000_plans\pse\24g000te001.dgn

LAST REVISION 06-30-14 | DATE PLOTTED => 02-JUL-2014 | TIME PLOTTED => 15:46

Dist	COUNTY	ROUTE	POST MILES TOTAL PROJECT	SHEET No.	TOTAL SHEETS
02	Sis	97	2.1/2.5	17	25

LICENSED LANDSCAPE ARCHITECT

06-30-14
PLANS APPROVAL DATE

LICENSED LANDSCAPE ARCHITECT J. PATRICK SULLIVAN #3125 Signature 07/31/16 Renewal Date 06/11/14 Date STATE OF CALIFORNIA

THE STATE OF CALIFORNIA OR ITS OFFICERS OR AGENTS SHALL NOT BE RESPONSIBLE FOR THE ACCURACY OR COMPLETENESS OF SCANNED COPIES OF THIS PLAN SHEET.

NOTE:

1. FOR ACCURATE RIGHT OF WAY DATA, CONTACT RIGHT OF WAY ENGINEERING AT THE DISTRICT OFFICE.

EROSION CONTROL QUANTITY TABLE

HYDROSEED	
TOTAL SQFT THIS SHEET	29,670

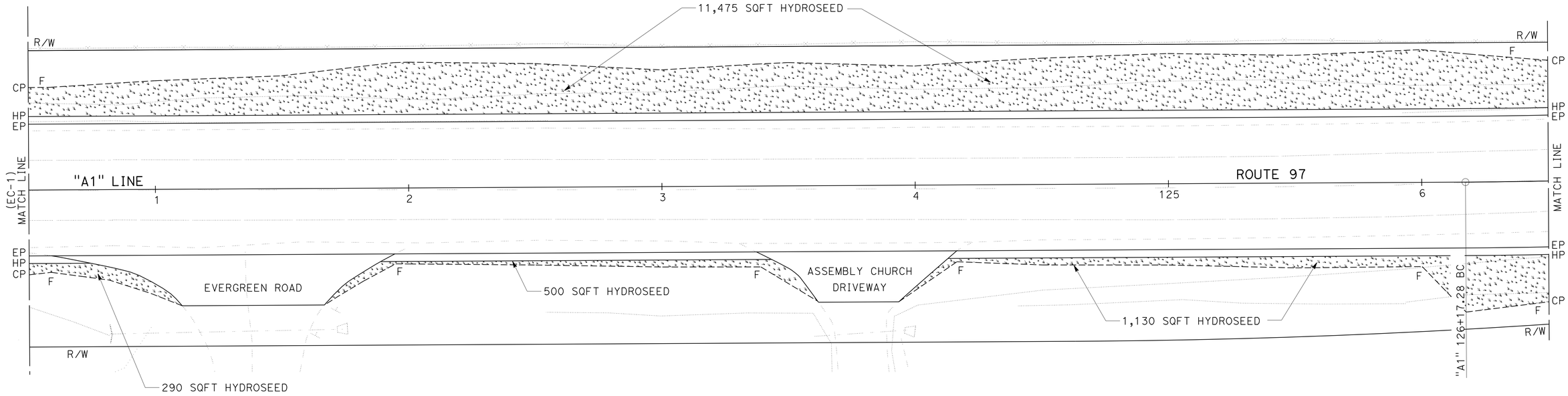

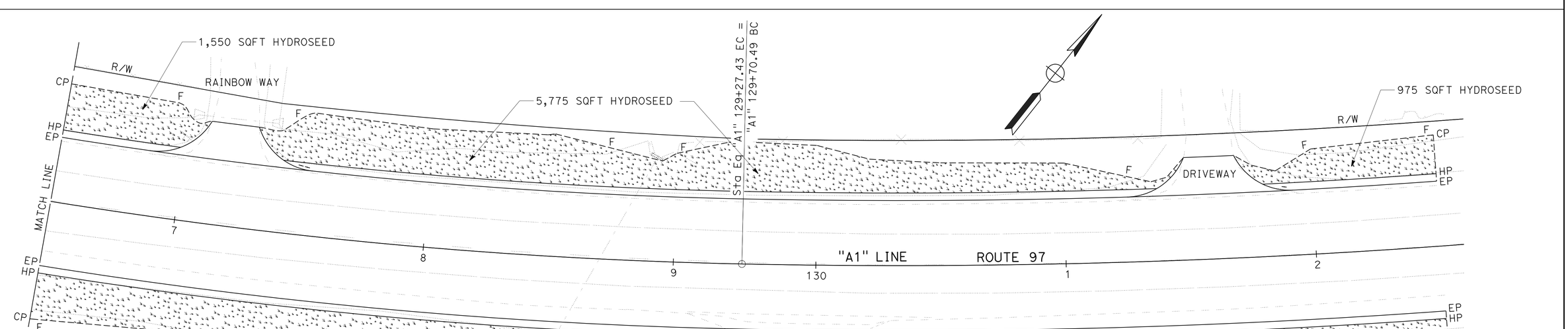

EROSION CONTROL PLAN

SCALE: 1" = 20'

EC-2

APPROVED FOR EROSION CONTROL WORK ONLY

REVISED BY | DATE REVISED
J. PATRICK SULLIVAN | RON FLORY
CALCULATED-DESIGNED BY | CHECKED BY
SENIOR LANDSCAPE ARCHITECT | RON FLORY

STATE OF CALIFORNIA - DEPARTMENT OF TRANSPORTATION
Caltrans® LANDSCAPE ARCHITECTURE

P:\proj1\02\4G000_plans\pse\24g000te002.dgn

LAST REVISION 06-30-14 | DATE PLOTTED => 02-JUL-2014 TIME PLOTTED => 15:46

Dist	COUNTY	ROUTE	POST MILES TOTAL PROJECT	SHEET No.	TOTAL SHEETS
02	Sis	97	2.1/2.5	18	25

LICENSED LANDSCAPE ARCHITECT

06-30-14
PLANS APPROVAL DATE

LICENSED LANDSCAPE ARCHITECT J. PATRICK SULLIVAN #3125 Signature 07/31/16 Renewal Date 06/11/14 Date STATE OF CALIFORNIA

THE STATE OF CALIFORNIA OR ITS OFFICERS OR AGENTS SHALL NOT BE RESPONSIBLE FOR THE ACCURACY OR COMPLETENESS OF SCANNED COPIES OF THIS PLAN SHEET.

NOTES:

1. (N) - NOT A SEPARATE PAY ITEM, FOR INFORMATION ONLY.
2. REFER TO INDIVIDUAL EC SHEETS FOR LOCATIONS, EC TYPES & QUANTITIES.
3. TOTAL HYDROSEEDING ACREAGE IS 0.82 ACRES.

HYDROSEED SEQUENCE/APPLICATION RATES (N)

SEQUENCE	ITEM	MATERIAL DESCRIPTION	MATERIAL TYPE	APPLICATION RATE (N)
STEP 1	HYDROSEED APPLICATION	PURE LIVE SEED	MIX	90 LB/ACRE
		FIBER	ALTERNATE	2000 LB/ACRE
		SLOW RELEASE FERTLIZER	GRANULAR	100 LB/ACRE
STEP 2	HYDROSEED APPLICATION	COMPOST	RECYCLED WOOD PRODUCT	1.2 CY/ACRE
		FIBER	ALTERNATE	1800 LB/ACRE
		TACKIFIER	PSYLLIUM	100 LB/ACRE

SEED MIX (N)

BOTANICAL NAME (COMMON NAME)	PERCENT GERMINATION (MINIMUM)	POUNDS PURE LIVE SEED PER ACRE (N) (SLOPE MEASUREMENT)
ACHILLEA MILLEFOLIUM (COMMON YARROW)	70	1
BROMUS HORDEACUS (BLANDO BROME)	70	15
ELYMUS ELMOIDES (SQUIRREL TAIL WILDRYE)	70	10
FESTUCA IDAHOENSIS (WESTERN FESCUE)	70	10
HORDEUM VULGARE UC 937 (COMMON WINTER BARLEY)	80	15
LOLIUM MULTIFLORUM-TETRAPLOID (ANNUAL RYE GRASS)	80	15
LOTUS PURSHIANUS (SPANISH CLOVER)	80	6
LUPINUS NANA (DWARF LUPINES)	60	3
TRIFOLIUM HIRTIUM (ROSE CLOVER)	70	15
	TOTAL	90

HYDROSEED QUANTITIES

MATERIAL DESCRIPTION	MATERIAL TYPE	TOTALS	
PURE LIVE SEED	MIX	74 LB (N)	HYDROSEED
FIBER	ALTERNATE	3,133 LB (N)	
SLOW RELEASE FERTLIZER	GRANULAR	82 LB (N)	
COMPOST	RECYCLED WOOD PRODUCT	0.99 CY (N)	
TACKIFIER	PSYLLIUM	82 LB (N)	
SHEET No. EC-1 - EC-2		TOTAL SQFT	35,910

EROSION CONTROL QUANTITIES

ECQ-1

REVISED BY | DATE REVISED
J. PATRICK SULLIVAN | RON FLORY
CALCULATED-DESIGNED BY | CHECKED BY
SENIOR LANDSCAPE ARCHITECT | RON FLORY
STATE OF CALIFORNIA - DEPARTMENT OF TRANSPORTATION
Caltrans® LANDSCAPE ARCHITECTURE

P:\proj\02\4G000_plans\pse\24g000tg001.dgn

LAST REVISION 06-30-14 | DATE PLOTTED => 02-JUL-2014 TIME PLOTTED => 15:46

M

Maint	MAINTENANCE
Max	MAXIMUM
MB	METAL BEAM
MBB	METAL BEAM BARRIER
MBGR	METAL BEAM GUARD RAILING
Med	MEDIAN
MGS	MIDWEST GUARDRAIL SYSTEM
MH	MANHOLE
Min	MINIMUM
Misc	MISCELLANEOUS
Misc I & S	MISCELLANEOUS IRON AND STEEL
Mkr	MARKER
Mod	MODIFIED,
	MODIFY
Mon	MONUMENT
MP	METAL PLATE
MPGR	METAL PLATE GUARD RAILING
MR	MOVEMENT RATING
MSE	MECHANICALLY STABILIZED EMBANKMENT
Mt	MOUNTAIN, MOUNT
Mtl	MATERIAL
MVP	MAINTENANCE VEHICLE PULLOUT

N

N	NORTH
NB	NORTHBOUND
No.	NUMBER (MUST HAVE PERIOD)
Nos.	NUMBERS (MUST HAVE PERIOD)
NPS	NOMINAL PIPE SIZE
NS	NEAR SIDE
NSP	NEW STANDARD PLAN
NTS	NOT TO SCALE

O

Oblr	OBLITERATE
OC	OVERCROSSING
OD	OUTSIDE DIAMETER
OF	OUTSIDE FACE
OG	ORIGINAL GROUND
OGAC	OPEN GRADED ASPHALT CONCRETE
OGFC	OPEN GRADED FRICTION COURSE
OH	OVERHEAD
OHWM	ORDINARY HIGH WATER MARK
O-O	OUT TO OUT
Opp	OPPOSITE
OSD	OVERSIDE DRAIN

P

P	PAGE
PAP	PERFORATED ALUMINUM PIPE
PB	PULL BOX
PC	POINT OF CURVATURE,
	PRECAST
PCC	POINT OF COMPOUND CURVE,
	PORTLAND CEMENT CONCRETE
PCMS	PORTABLE CHANGEABLE MESSAGE SIGN
PCP	PERFORATED CONCRETE PIPE,
	PRESTRESSED CONCRETE PIPE
PCVC	POINT OF COMPOUND VERTICAL CURVE
PEC	PERMIT TO ENTER AND CONSTRUCT
Ped	PEDESTRIAN
Ped OC	PEDESTRIAN OVERCROSSING
Ped UC	PEDESTRIAN UNDERCROSSING
Perm Mtl	PERMEABLE MATERIAL

P continued

PG	PROFILE GRADE
PI	POINT OF INTERSECTION
PJP	PARTIAL JOINT PENETRATION
Pkwy	PARKWAY
ℙ,PL	PLATE
P/L	PROPERTY LINE
PM	POST MILE,
	TIME FROM NOON TO MIDNIGHT
PN	PAVING NOTCH
POC	POINT OF HORIZONTAL CURVE
POT	POINT OF TANGENT
POVC	POINT OF VERTICAL CURVE
PP	PIPE PILE,
	PLASTIC PIPE,
	POWER POLE
PPL	PREFORMED PERMEABLE LINER
PPP	PERFORATED PLASTIC PIPE
PRC	POINT OF REVERSE CURVE
PRF	PAVEMENT REINFORCING FABRIC
PRVC	POINT OF REVERSE VERTICAL CURVE
PS&E	PLANS, SPECIFICATIONS AND ESTIMATES
PS, P/S	PRESTRESSED
PSP	PERFORATED STEEL PIPE
PT	POINT OF TANGENCY
PVC	POLYVINYL CHLORIDE
Pvmt	PAVEMENT

Q

Qty	QUANTITY

R

R	RADIUS
R & D	REMOVE AND DISPOSE
R & S	REMOVE AND SALVAGE
R/C	RATE OF CHANGE
RCA	REINFORCED CONCRETE ARCH
RCB	REINFORCED CONCRETE BOX
RCP	REINFORCED CONCRETE PIPE
RCPA	REINFORCED CONCRETE PIPE ARCH
Rd	ROAD
Reinf	REINFORCED,
	REINFORCEMENT,
	REINFORCING
Rel	RELOCATE
Repl	REPLACEMENT
Ret	RETAINING
Rev	REVISED, REVISION
Rdwy	ROADWAY
RHMA	RUBBERIZED HOT MIX ASPHALT
Riv	RIVER
RM	ROAD-MIXED
RP	RADIUS POINT,
	REFERENCE POINT
RR	RAILROAD
RSP	ROCK SLOPE PROTECTION,
	REVISED STANDARD PLAN
Rt	RIGHT
Rte	ROUTE
RW	REDWOOD,
	RETAINING WALL
R/W	RIGHT OF WAY
Rwy	RAILWAY

S

S	SOUTH,
	SUPPLEMENT
SAE	STRUCTURE APPROACH EMBANKMENT
Salv	SALVAGE
SAPP	STRUCTURAL ALUMINUM PLATE PIPE
SB	SOUTHBOUND
SC	SAND CUSHION
SCSP	SLOTTED CORRUGATED STEEL PIPE
SD	STORM DRAIN
Sec	SECOND,
	SECTION
Sep	SEPARATION
SG	SUBGRADE
Shld	SHOULDER
Sht	SHEET
Sim	SIMILAR
℄	STATION LINE
SM	SELECTED MATERIAL
Spec	SPECIAL,
	SPECIFICATIONS
SPP	SLOTTED PLASTIC PIPE
SS	SLOPE STAKE
SSBM	STRAP AND SADDLE BRACKET METHOD
SSD	STRUCTURAL SECTION DRAIN
SSPA	STRUCTURAL STEEL PLATE ARCH
SSPP	STRUCTURAL STEEL PLATE PIPE
SSPPA	STRUCTURAL STEEL PLATE PIPE ARCH
SSRP	STEEL SPIRAL RIB PIPE
St	STREET
Sta	STATION
STBB	SINGLE THRIE BEAM BARRIER
Std	STANDARD
Str	STRUCTURE
Surf	SURFACING
SW	SIDEWALK,
	SOUND WALL
Swr	SEWER
Sym	SYMMETRICAL
S4S	SURFACE 4 SIDES

T

T	SEMI-TANGENT
Tan	TANGENT
TBB	THRIE BEAM BARRIER
Tbr	TIMBER
TC	TOP OF CURB
TCB	TRAFFIC CONTROL BOX
TCE	TEMPORARY CONSTRUCTION EASEMENT
Tel	TELEPHONE
Temp	TEMPORARY
TG	TOP OF GRADE
Tot	TOTAL
TP	TELEPHONE POLE
TPB	TREATED PERMEABLE BASE
TPM	TREATED PERMEABLE MATERIAL
Trans	TRANSITION

T continued

TS	TRANSVERSE,
	TRAFFIC SIGNAL,
	TUBULAR STEEL
Typ	TYPICAL

U

UC	UNDERCROSSING
UD	UNDERDRAIN
UG	UNDERGROUND
UON	UNLESS OTHERWISE NOTED
UP	UNDERPASS

V

V	VALVE,
	DESIGN SPEED
Var	VARIABLE,
	VARIES
VC	VERTICAL CURVE
VCP	VITRIFIED CLAY PIPE
Vert	VERTICAL
Via	VIADUCT
Vol	VOLUME

W

W	WEST,
	WIDTH
WB	WESTBOUND
WH	WEEP HOLE
WM	WIRE MESH
WS	WATER SURFACE
WSP	WELDED STEEL PIPE
Wt	WEIGHT
WV	WATER VALVE
WW	WINGWALL
WWLOL	WINGWALL LAYOUT LINE

X

X Sec	CROSS SECTION
Xing	CROSSING

Y

Yr	YEAR
Yrs	YEARS

Dist	COUNTY	ROUTE	POST MILES TOTAL PROJECT	SHEET No.	TOTAL SHEETS
02	Sis	97	2.1/2.5	19	25

Grace M. Tsushima
REGISTERED CIVIL ENGINEER

July 19, 2013
PLANS APPROVAL DATE

REGISTERED PROFESSIONAL ENGINEER Grace M. Tsushima No. C49814 Exp. 9-30-14 CIVIL STATE OF CALIFORNIA

THE STATE OF CALIFORNIA OR ITS OFFICERS OR AGENTS SHALL NOT BE RESPONSIBLE FOR THE ACCURACY OR COMPLETENESS OF SCANNED COPIES OF THIS PLAN SHEET.

TO ACCOMPANY PLANS DATED 06-30-14

UNIT OF MEASUREMENT SYMBOLS:

Some of the symbols used in the project plan quantity tables and in the Bid Item List are:

TABLE A

SYMBOL USED	DEFINITIONS
ACRE	ACRE
CF	CUBIC FOOT
CY	CUBIC YARD
EA	EACH
GAL	GALLON
LB	POUND
LF	LINEAR FOOT
SQFT	SQUARE FOOT
SQYD	SQUARE YARD
STA	100 FEET
TAB	TABLET
TON	2,000 POUNDS

Some of the symbols used in the plans other than in the project plan quantity tables are:

TABLE B

SYMBOL USED	DEFINITIONS
ksi	KIPS PER SQUARE INCH
ksf	KIPS PER SQUARE FOOT
psi	POUNDS PER SQUARE INCH
psf	POUNDS PER SQUARE FOOT
lb/ft^3, pcf	POUNDS PER CUBIC FOOT
tsf	TONS PER SQUARE FOOT
mph, MPH *	MILES PER HOUR
ø	NOMINAL DIAMETER
oz	OUNCE
lb	POUND
kip	1,000 POUNDS
cal	CALORIE
ft	FOOT OR FEET
gal	GALLON

* For use on a sign panel only

STATE OF CALIFORNIA
DEPARTMENT OF TRANSPORTATION

ABBREVIATIONS (SHEET 2 OF 2)

NO SCALE

RSP A10B DATED JULY 19, 2013 SUPERSEDES STANDARD PLAN A10B DATED MAY 20, 2011 - PAGE 2 OF THE STANDARD PLANS BOOK DATED 2010.

REVISED STANDARD PLAN RSP A10B

2010 REVISED STANDARD PLAN RSP A10B

DATE PLOTTED => 02-JUL-2014
TIME PLOTTED => 15:46

Dist	COUNTY	ROUTE	POST MILES TOTAL PROJECT	SHEET No.	TOTAL SHEETS
02	Sis	97	2.1/2.5	20	25

REGISTERED CIVIL ENGINEER

July 20, 2012
PLANS APPROVAL DATE

REGISTERED PROFESSIONAL ENGINEER
Roberta L. McLaughlin
No. C40375
Exp. 3-31-13
CIVIL
STATE OF CALIFORNIA

THE STATE OF CALIFORNIA OR ITS OFFICERS OR AGENTS SHALL NOT BE RESPONSIBLE FOR THE ACCURACY OR COMPLETENESS OF SCANNED COPIES OF THIS PLAN SHEET.

TO ACCOMPANY PLANS DATED 06-30-14

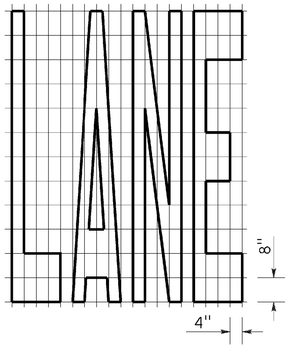

A=24 ft²

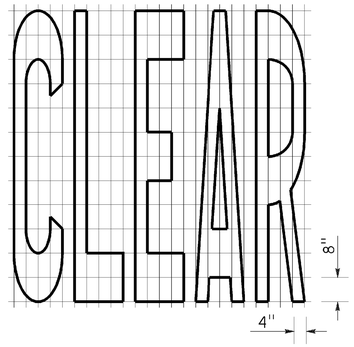

A=27 ft²

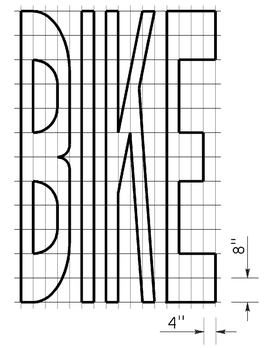

A=21 ft²

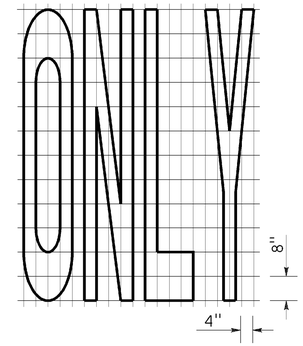

A=22 ft²

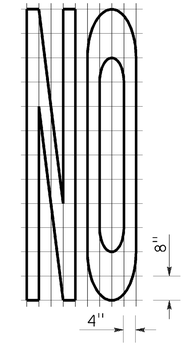

A=14 ft²

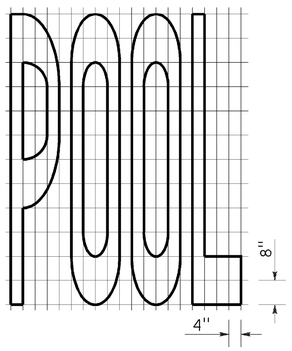

A=23 ft²

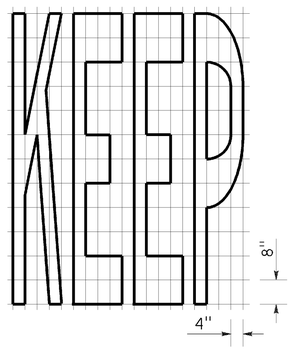

A=24 ft²

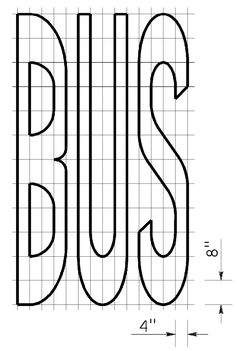

A=20 ft²

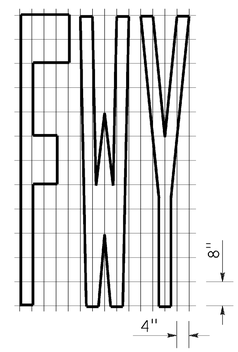

A=16 ft²

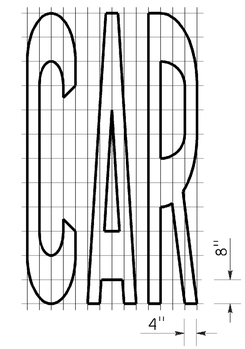

A=17 ft²

WORD MARKINGS			
ITEM	ft²	ITEM	ft²
LANE	24	NO	14
POOL	23	BIKE	21
CAR	17	BUS	20
CLEAR	27	ONLY	22
KEEP	24	FWY	16

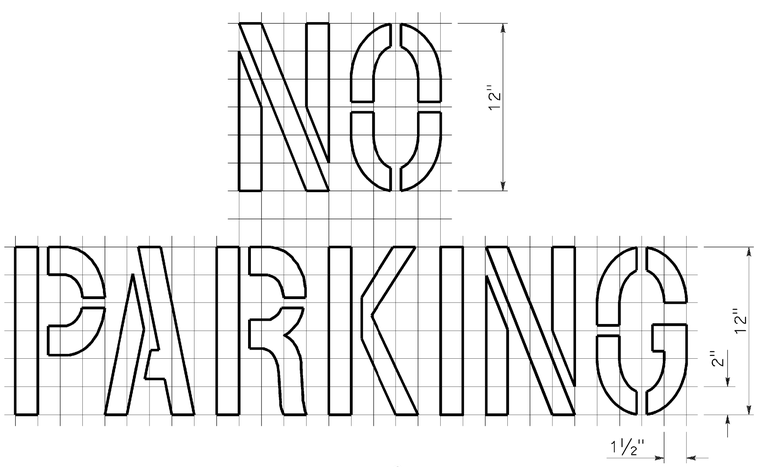

A=2 ft²
See Notes 6 and 7

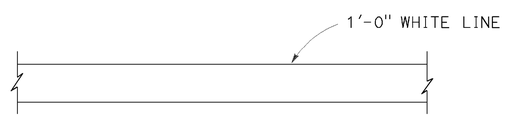

LIMIT LINE (STOP LINE)

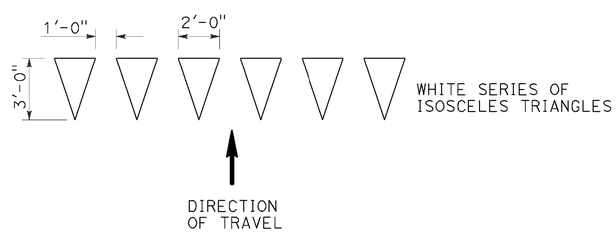

YIELD LINE

NOTES:

1. If a message consists of more than one word, it should read "UP", i.e., the first word should be nearest the driver.
2. The space between words should be at least four times the height of the characters for low speed roads, but not more than ten times the height of the characters. The space may be reduced appropriately where there is limited space because of local conditions.
3. Minor variations in dimensions may be accepted by the Engineer.
4. Portions of a letter, number or symbol may be separated by connecting segments not to exceed 2" in width.
5. The words "NO PARKING" pavement marking is to be used for parking facilities. For typical locations of markings, see Standard Plans A90A and A90B.
6. The words "NO PARKING", shall be painted in white letters no less than 1'-0" high on a contrasting background and located so that it is visible to traffic enforcement officials.

STATE OF CALIFORNIA
DEPARTMENT OF TRANSPORTATION

PAVEMENT MARKINGS WORDS, LIMIT AND YIELD LINES

NO SCALE

RSP A24E DATED JULY 20, 2012 SUPERSEDES STANDARD PLAN A24E DATED MAY 20, 2011 - PAGE 17 OF THE STANDARD PLANS BOOK DATED 2010.

REVISED STANDARD PLAN RSP A24E

2010 REVISED STANDARD PLAN RSP A24E

DATE PLOTTED => 02-JUL-2014
TIME PLOTTED => 15:47

DIST	COUNTY	ROUTE	POST MILES TOTAL PROJECT	SHEET No.	TOTAL SHEETS
02	Sis	97	2.1/2.5	21	25

REGISTERED CIVIL ENGINEER

November 15, 2013
PLANS APPROVAL DATE

REGISTERED PROFESSIONAL ENGINEER
Cornelis M. Hokim
No. C55610
Exp. 12-31-14
CIVIL
STATE OF CALIFORNIA

THE STATE OF CALIFORNIA OR ITS OFFICERS OR AGENTS SHALL NOT BE RESPONSIBLE FOR THE ACCURACY OR COMPLETENESS OF SCANNED COPIES OF THIS PLAN SHEET.

TO ACCOMPANY PLANS DATED 06-30-14

ABBREVIATIONS:

SE SAFETY EDGE

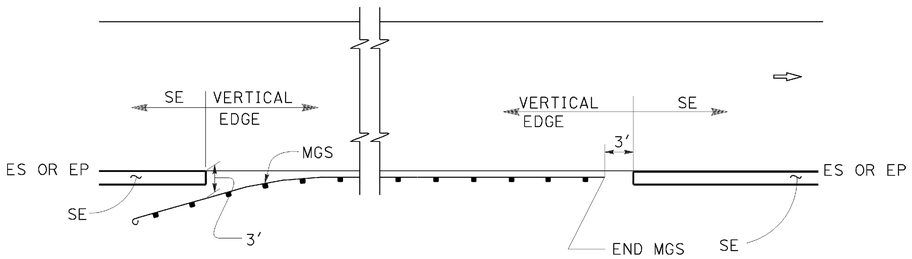

MGS

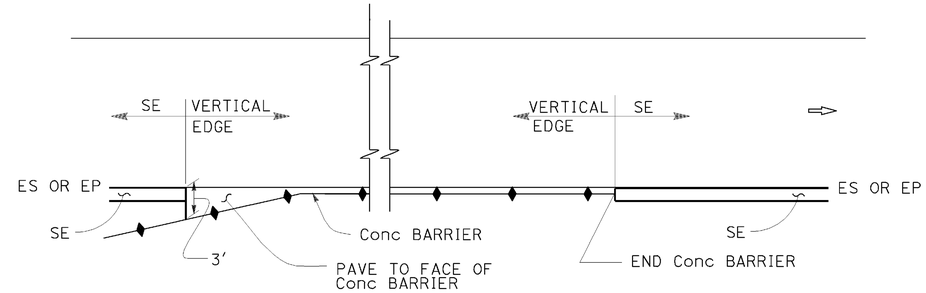

CONCRETE BARRIER

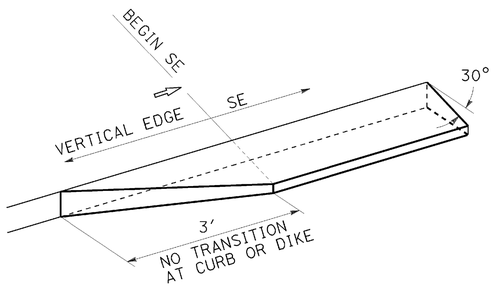

TRANSITION DETAIL
FOR CONCRETE ONLY

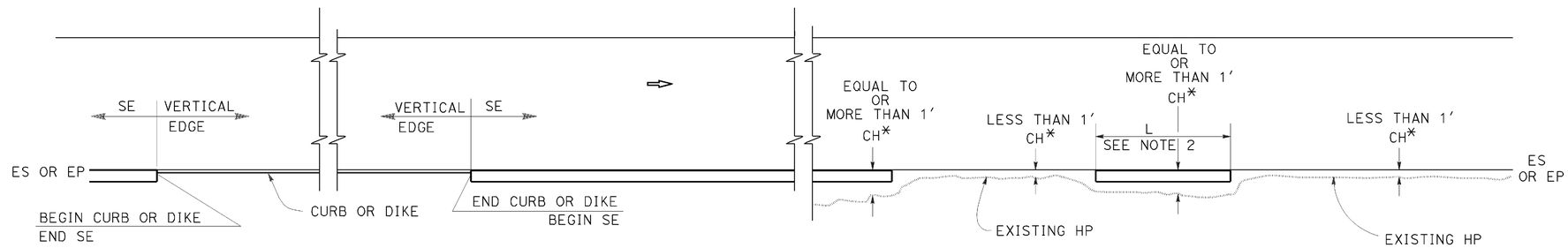

CURB OR DIKE

NARROW SIDE SLOPE

* CH = Distance from ES or EP to existing HP.

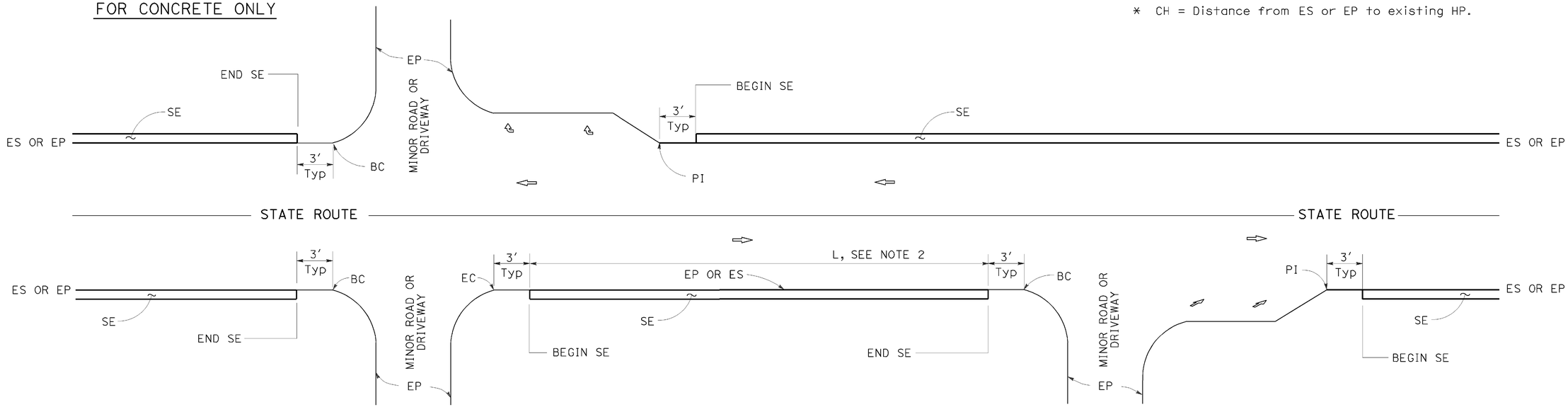

INTERSECTION

MINOR ROADWAY OR DRIVEWAY

DRIVEWAY AND INTERSECTION

NOTES:

1. For details not shown, see Revised Standard Plans RSP P75 and RSP P76.
2. Safety edge is optional when L is less than 30′.

STATE OF CALIFORNIA
DEPARTMENT OF TRANSPORTATION

PAVEMENT EDGE TREATMENTS

NO SCALE

RSP P74 DATED NOVEMBER 15, 2013 SUPERSEDES RSP P74 DATED JANUARY 20, 2012 THAT SUPPLEMENTS THE STANDARD PLANS BOOK DATED 2010.

REVISED STANDARD PLAN RSP P74

2010 REVISED STANDARD PLAN RSP P74

DATE PLOTTED => 02-JUL-2014
TIME PLOTTED => 15:47

DIST	COUNTY	ROUTE	POST MILES TOTAL PROJECT	SHEET No.	TOTAL SHEETS
02	Sis	97	2.1/2.5	22	25

REGISTERED CIVIL ENGINEER

November 15, 2013
PLANS APPROVAL DATE

REGISTERED PROFESSIONAL ENGINEER Cornelis M. Hakim No. C55610 Exp. 12-31-14 CIVIL STATE OF CALIFORNIA

THE STATE OF CALIFORNIA OR ITS OFFICERS OR AGENTS SHALL NOT BE RESPONSIBLE FOR THE ACCURACY OR COMPLETENESS OF SCANNED COPIES OF THIS PLAN SHEET.

TO ACCOMPANY PLANS DATED 06-30-14

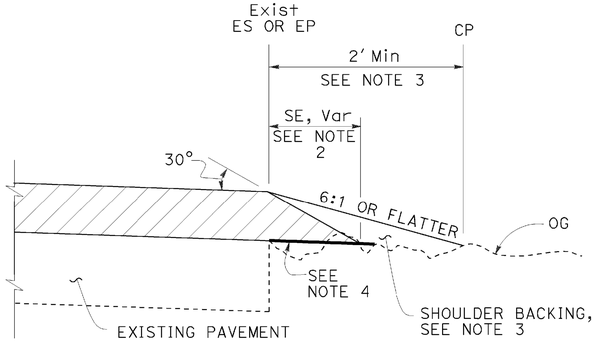

CASE A
Safety Edge

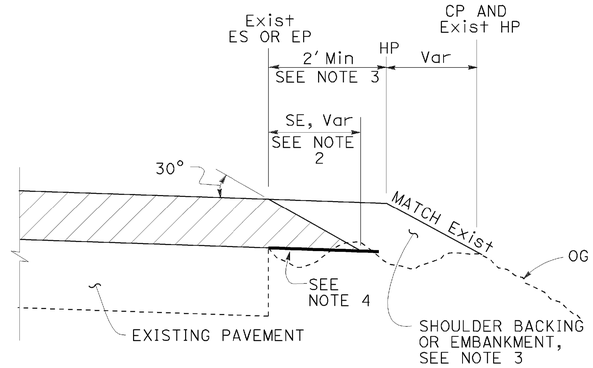

CASE B
Safety Edge

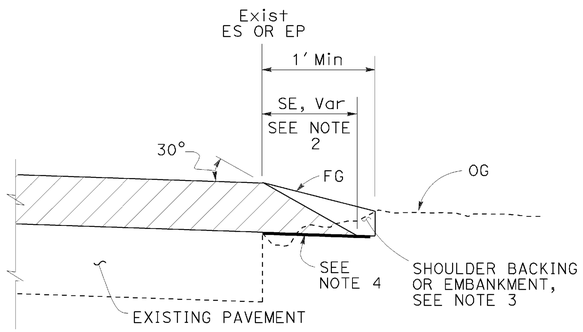

CASE C
Safety Edge

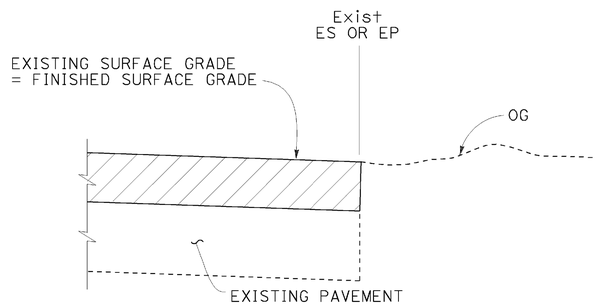

CASE D
Vertical Edge

LEGEND:

- HMA OVERLAY
- HMA OR CONCRETE OVERLAY
- CONCRETE OVERLAY

ABBREVIATIONS:

SE SAFETY EDGE
TT TOTAL THICKNESS OF SE

TABLE A
EDGE TREATMENT FOR VARIOUS OVERLAY THICKNESS AND CONDITIONS

	OVERLAY THICKNESS	
FIELD CONDITION	LESS THAN 0.15'	0.15' OR MORE
Exist SLOPE 6:1 OR FLATTER	CASE E	CASE A
Exist SLOPE 3:1 TO 6:1	CASE E	CASE B
Exist SLOPE STEEPER THAN 3:1	CASE F	CASE F
CUT SECTION (REPLACE, COLD PLANE, MILL PAVEMENT)	CASE D	CASE C

ADDITIONAL HMA OR CONCRETE QUANTITIES FOR SE/SIDE/MILE

TYPICAL CROSS SECTION	TT	TOTAL ADDITIONAL MATERIAL FOR SE/SIDE/MILE		
		HMA (TON)	CONCRETE (CY)*	CONCRETE (CY)**
TT	0.15'	NA	NA	NA
	0.20'	13.7	NA	NA
	0.30'	30.9	NA	NA
	0.40'	54.9	NA	NA
	0.45'	69.4	NA	NA
TT 0.43'	0.50'	84.2	NA	NA
	0.60'	113.9	NA	NA
	0.70'	143.6	70.9	94.2
	0.80'	173.3	85.6	112.2
	0.90'	203.0	100.3	130.2
	1.00'	232.7	114.9	148.2
	1.10'	262.4	129.6	166.2
	1.20'	292.1	144.3	184.2

* For Detail "A"
** For Optional Detail "A"

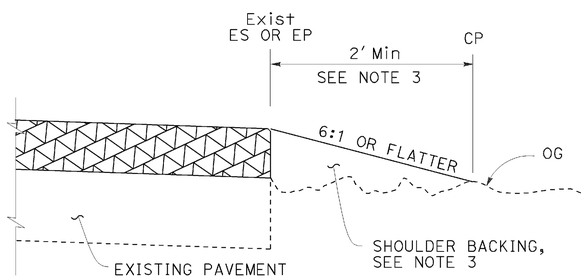

CASE E
Vertical Edge

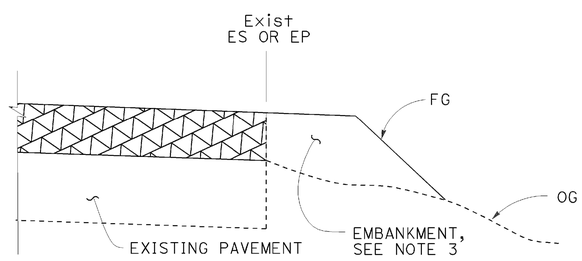

CASE F
Vertical Edge
* See Table A and Revised Std Plan RSP P74

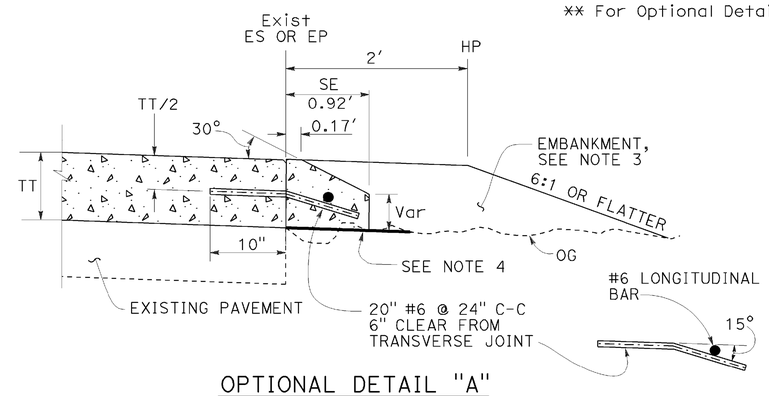

OPTIONAL DETAIL "A"
For concrete overlay
See Note 5

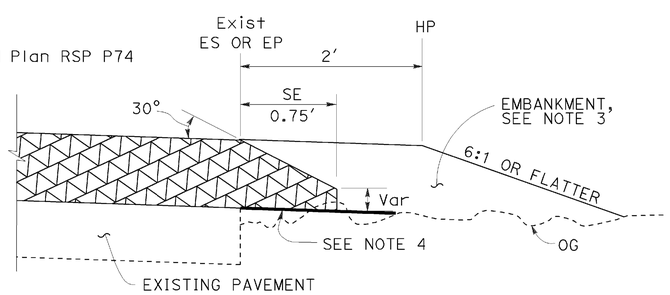

DETAIL "A"
For HMA overlay thickness more than 0.43' or concrete overlay

NOTES:

1. For limits of safety edge and vertical edge treatments, see Revised Standard Plan RSP P74.
2. Details shown for HMA overlay thickness less than 0.43'. See Detail "A" for HMA overlay thickness more than 0.43' or concrete overlay.
3. For locations and limits of shoulder backing or embankment see project plans.
4. Grade existing ground to place safety edge. 1' minimum width
5. Safety edge transverse joint must match overlay transverse joint. End of #6 longitudinal bar must be 2" ±½" clear from transverse joint.
6. Safety edge is not needed in the area of MGS, barrier, right turn lane and acceleration lane. See Revised Standard Plan RSP P74.

STATE OF CALIFORNIA
DEPARTMENT OF TRANSPORTATION

PAVEMENT EDGE TREATMENTS-OVERLAYS

NO SCALE

RSP P75 DATED NOVEMBER 15, 2013 SUPERSEDES RSP P75 DATED JANUARY 20, 2012 THAT SUPPLEMENTS THE STANDARD PLANS BOOK DATED 2010.

REVISED STANDARD PLAN RSP P75

2010 REVISED STANDARD PLAN RSP P75

DATE PLOTTED => 02-JUL-2014
TIME PLOTTED => 15:47

DIST	COUNTY	ROUTE	POST MILES TOTAL PROJECT	SHEET No.	TOTAL SHEETS
02	Sis	97	2.1/2.5	23	25

REGISTERED CIVIL ENGINEER

November 15, 2013
PLANS APPROVAL DATE

REGISTERED PROFESSIONAL ENGINEER
Cornelis M. Hokim
No. C55610
Exp. 12-31-14
CIVIL
STATE OF CALIFORNIA

THE STATE OF CALIFORNIA OR ITS OFFICERS OR AGENTS SHALL NOT BE RESPONSIBLE FOR THE ACCURACY OR COMPLETENESS OF SCANNED COPIES OF THIS PLAN SHEET.

TO ACCOMPANY PLANS DATED 06-30-14

LEGEND:

- HMA PAVEMENT
- HMA OR CONCRETE PAVEMENT
- CONCRETE PAVEMENT

ABBREVIATIONS:

SE SAFETY EDGE
TT TOTAL THICKNESS OF SE
HW HINGE WIDTH, DISTANCE FROM ES OR EP TO HP

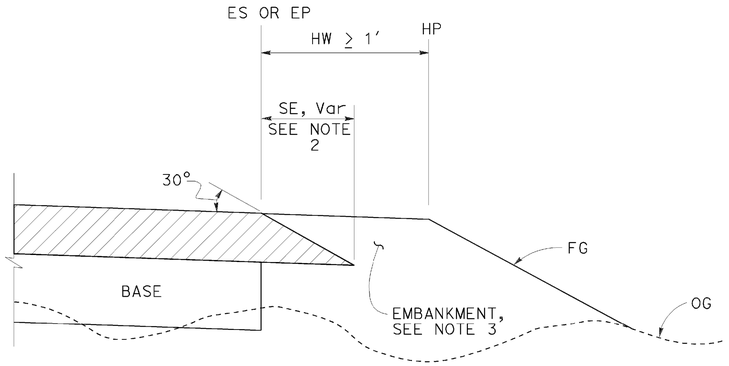

CASE K
Safety Edge - Fill Section, HW ≥ 1′

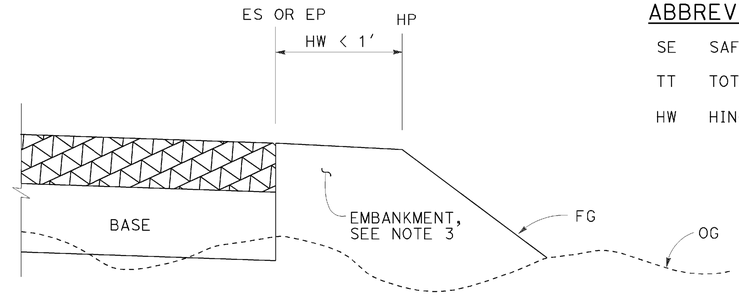

CASE L
Vertical Edge - Fill Section, HW < 1′

FILL SECTION

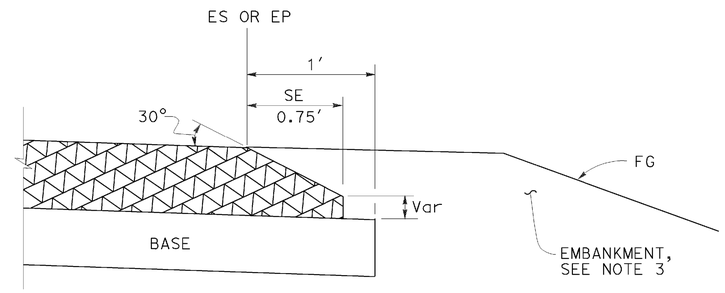

DETAIL "B"
For HMA pavement thickness more than 0.43′ or concrete pavement

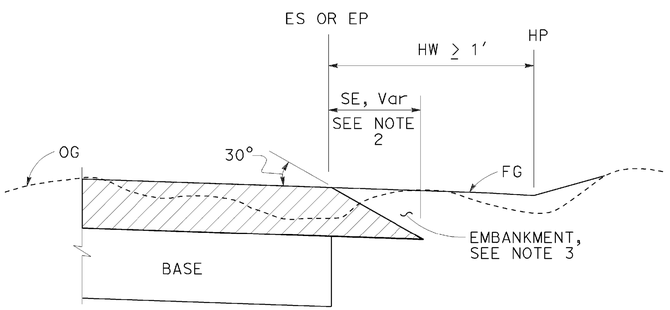

CASE M
Safety Edge - Cut Section, HW ≥ 1′

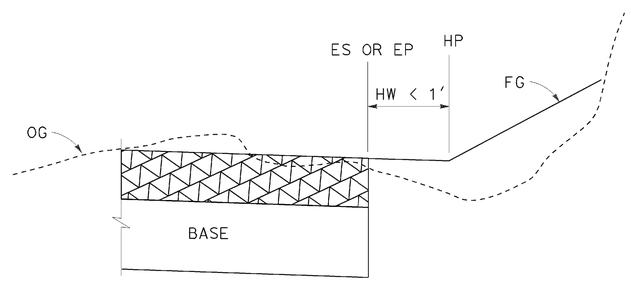

CASE N
Vertical Edge - Cut Section, HW < 1′

CUT SECTION

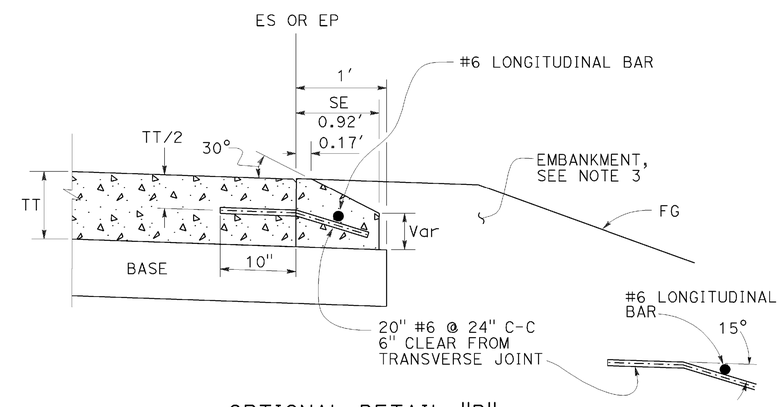

OPTIONAL DETAIL "B"
For concrete pavement
See Note 4

NOTES:

1. For limits of safety edge and vertical edge treatments, see Revised Standard Plan RSP P74
2. Details shown for HMA pavement thickness less than 0.43′. See Detail "B" for HMA pavement thickness more than 0.43′ or concrete pavement.
3. For locations and limits of embankment see project plans.
4. Safety edge transverse joint must match pavement transverse joint. End of #6 longitudinal bar must be 2" ±½" clear from transverse joint.
5. Safety edge is not needed in the area of MGS, barrier, right turn lane and acceleration lane. See Revised Standard Plan RSP P74.

STATE OF CALIFORNIA
DEPARTMENT OF TRANSPORTATION

PAVEMENT EDGE TREATMENTS-NEW CONSTRUCTION

NO SCALE

RSP P76 DATED NOVEMBER 15, 2013 SUPERSEDES RSP P76 DATED JANUARY 20, 2012 THAT SUPPLEMENTS THE STANDARD PLANS BOOK DATED 2010.

REVISED STANDARD PLAN RSP P76

2010 REVISED STANDARD PLAN RSP P76

DATE PLOTTED => 02-JUL-2014
TIME PLOTTED => 15:47

Dist	COUNTY	ROUTE	POST MILES TOTAL PROJECT	SHEET No.	TOTAL SHEETS
02	Sis	97	2.1/2.5	24	25

REGISTERED CIVIL ENGINEER

July 19, 2013
PLANS APPROVAL DATE

REGISTERED PROFESSIONAL ENGINEER
Gurinderpal Bhullar
No. C48815
Exp. 9-30-14
CIVIL
STATE OF CALIFORNIA

THE STATE OF CALIFORNIA OR ITS OFFICERS OR AGENTS SHALL NOT BE RESPONSIBLE FOR THE ACCURACY OR COMPLETENESS OF SCANNED COPIES OF THIS PLAN SHEET.

TO ACCOMPANY PLANS DATED 06-30-14

TABLE 1

TAPER LENGTH CRITERIA AND CHANNELIZING DEVICE SPACING

SPEED (S)	MINIMUM TAPER LENGTH * FOR WIDTH OF OFFSET 12 FEET (W)				MAXIMUM CHANNELIZING DEVICE SPACING		
					X	Y	Z **
	TANGENT 2L	MERGING L	SHIFTING L/2	SHOULDER L/3	TAPER	TANGENT	CONFLICT
mph	ft	ft	ft	ft	ft	ft	ft
20	160	80	40	27	20	40	10
25	250	125	63	42	25	50	12
30	360	180	90	60	30	60	15
35	490	245	123	82	35	70	17
40	640	320	160	107	40	80	20
45	1080	540	270	180	45	90	22
50	1200	600	300	200	50	100	25
55	1320	660	330	220	55	110	27
60	1440	720	360	240	60	120	30
65	1560	780	390	260	65	130	32
70	1680	840	420	280	70	140	35

* - For other offsets, use the following merging taper length formula for L:
For speed of 40 mph or less, $L = WS^2/60$
For speed of 45 mph or more, $L = WS$

Where: L = Taper length in feet
W = Width of offset in feet
S = Posted speed limit, off-peak 85th-percentile speed prior to work starting, or the anticipated operating speed in mph

** - Use for taper and tangent sections where there are no pavement markings or where there is a conflict between existing pavement markings and channelizers (CA).

TABLE 2

LONGITUDINAL BUFFER SPACE AND FLAGGER STATION SPACING

SPEED *	Min D **	DOWNGRADE Min D ***		
		-3%	-6%	-9%
mph	ft	ft	ft	ft
20	115	116	120	126
25	155	158	165	173
30	200	205	215	227
35	250	257	271	287
40	305	315	333	354
45	360	378	400	427
50	425	446	474	507
55	495	520	553	593
60	570	598	638	686
65	645	682	728	785
70	730	771	825	891

* - Speed is posted speed limit, off-peak 85th-percentile speed prior to work starting, or the anticipated operating speed in mph

** - Longitudinal buffer space or flagger station spacing

*** - Use on sustained downgrade steeper than -3 percent and longer than 1 mile.

TABLE 3

ADVANCE WARNING SIGN SPACING

ROAD TYPE	DISTANCE BETWEEN SIGNS *		
	A	B	C
	ft	ft	ft
URBAN - 25 mph OR LESS	100	100	100
URBAN - MORE THAN 25 mph TO 40 mph	250	250	250
URBAN - MORE THAN 40 mph	350	350	350
RURAL	500	500	500
EXPRESSWAY / FREEWAY	1000	1500	2640

* - The distances are approximate, are intended for guidance purposes only, and should be applied with engineering judgment. These distances should be adjusted by the Engineer for field conditions, if necessary, by increasing or decreasing the recommmended distances.

STATE OF CALIFORNIA
DEPARTMENT OF TRANSPORTATION

TRAFFIC CONTROL SYSTEM TABLES FOR LANE AND RAMP CLOSURES

NO SCALE

RSP T9 DATED JULY 19, 2013 SUPERSEDES RSP T9 DATED APRIL 19, 2013 THAT SUPPLEMENTS THE STANDARD PLANS BOOK DATED 2010.

REVISED STANDARD PLAN RSP T9

2010 REVISED STANDARD PLAN RSP T9

DATE PLOTTED => 02-JUL-2014
TIME PLOTTED => 15:47

Dist	COUNTY	ROUTE	POST MILES TOTAL PROJECT	SHEET No.	TOTAL SHEETS
02	Sis	97	2.1/2.5	25	25

REGISTERED CIVIL ENGINEER

July 18, 2014
PLANS APPROVAL DATE

REGISTERED PROFESSIONAL ENGINEER Gurinderpal Bhullar No. C48815 Exp. 9-30-14 CIVIL STATE OF CALIFORNIA

THE STATE OF CALIFORNIA OR ITS OFFICERS OR AGENTS SHALL NOT BE RESPONSIBLE FOR THE ACCURACY OR COMPLETENESS OF SCANNED COPIES OF THIS PLAN SHEET.

TO ACCOMPANY PLANS DATED 06-30-14

NOTES:

See Revised Standard Plan RSP T9 for tables.

Use cone spacing X for taper segment, Y for tangent segment or Z for conflict situations, as approriate, per Table 1, unless X, Y, or Z cone spacing is shown on this sheet.

Unless otherwise specified in the special provisions, all temporary warning signs shall have black legend on fluorescent orange background.

California codes are designated by (CA). Otherwise, Federal (MUTCD) codes are shown.

TYPICAL LANE CLOSURE WITH REVERSIBLE CONTROL

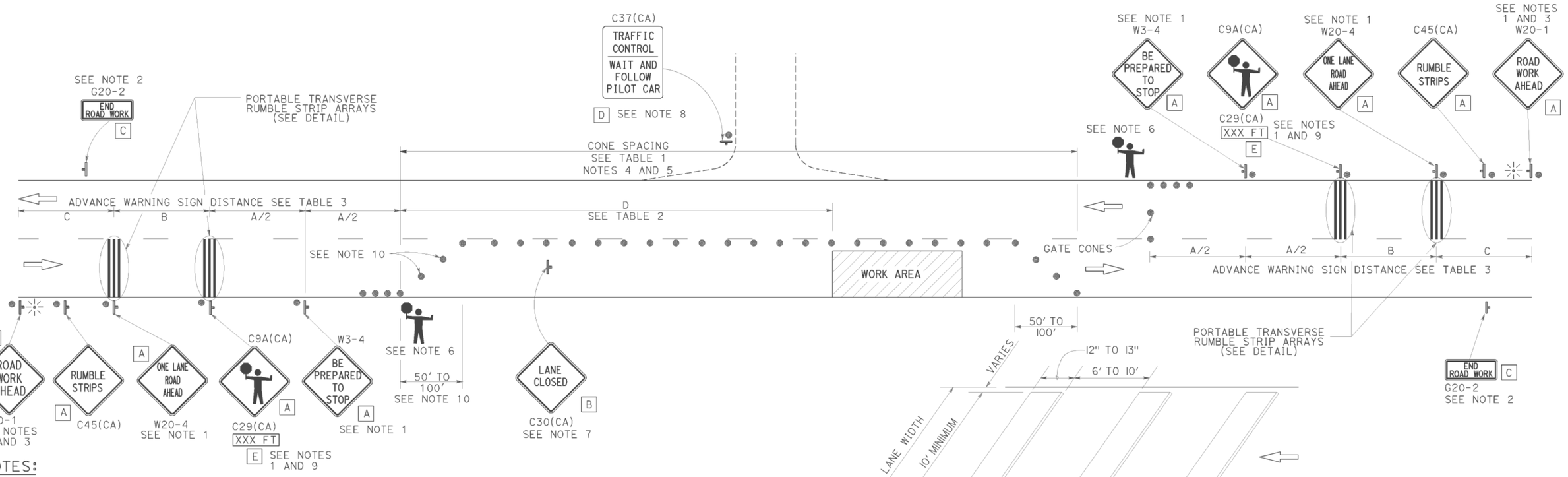

NOTES:

1. Each advance warning sign in each direction of travel shall be equipped with at least two flags for daytime closure. Each flag shall be at least 16" x 16" in size and shall be orange or fluorescent red-orange in color. Flashing beacons shall be placed at the locations indicated for lane closure during hours of darkness.
2. A G20-2 "END ROAD WORK" sign, as appropriate, shall be placed at the end of the lane control unless the end of work area is obvious, or ends within a larger project's limits.
3. If the W20-1 sign would follow within 2000' of a stationary W20-1 or G20-1 "ROAD WORK NEXT _____ MILES", use a W20-4 sign for the first advance warning sign.
4. All cones used for lane closures during the hours of darkness shall be fitted with retroreflective bands (or sleeves) as specified in the specifications.
5. Portable delineators, placed at one-half the spacing indicated for traffic cones, may be used instead of cones for daytime closures only.
6. Additional advance flaggers may be required. Flagger should stand in a conspicuous place, be visible to approaching traffic as well as approaching vehicles after the first vehicle has stopped. During the hours of darkness, the flagging-station and flagger shall be illuminated and clearly visible to approaching traffic. The illumination footprint of the lighting on the ground shall be at least 20' in diameter. Place a minimum of four cones at 50' intervals in advance of flagger station as shown.
7. Place C30(CA) "LANE CLOSED" sign at 500' to 1000' intervals throughout extended work areas. They are optional if the work area is visible from the flagger station.
8. When a pilot car is used, place a C37(CA) "TRAFFIC CONTROL-WAIT AND FOLLOW PILOT CAR" sign with black legend on white background at all intersections, driveways and alleys without a flagger within traffic control area. Signs shall be clean and visible at all times. Where traffic can not be effectively self-regulated, at least one flagger shall be used at each intersection within traffic control area.
9. An optional C29(CA) sign may be placed below the C9A(CA) sign.
10. Either traffic cones or barricades shall be placed on the taper. Barricades shall be Type I, II, or III.
11. The color of the portable transverse rumble strips shall be black or orange. Use 2 arrays, each array shall consist of 3 rumble strips.
12. Portable transverse rumble strips shall not be placed on sharp horizontal or vertical curves nor shall they be placed through pedestrian crossings.
13. If the portable transverse rumble strips become out of alignment (skewed) by more than 6 inches, measured from one end to the other, they shall be readjusted to bring the placement back to the original location.

PORTABLE TRANSVERSE RUMBLE STRIP ARRAY DETAIL

LEGEND

- TRAFFIC CONE
- TEMPORARY TRAFFIC CONTROL SIGN
- PORTABLE FLASHING BEACON
- FLAGGER

SIGN PANEL SIZE (Min)

A	48" x 48"
B	30" x 30"
C	36" x 18"
D	36" x 42"
E	20" x 7"

STATE OF CALIFORNIA
DEPARTMENT OF TRANSPORTATION

TRAFFIC CONTROL SYSTEM FOR LANE CLOSURE ON TWO LANE CONVENTIONAL HIGHWAYS

NO SCALE

RSP T13 DATED JULY 18, 2014 SUPERSEDES RSP T13 DATED APRIL 19, 2013 AND STANDARD PLAN T13 DATED MAY 20, 2011 - PAGE 241 OF THE STANDARD PLANS BOOK DATED 2010.

REVISED STANDARD PLAN RSP T13

2010 REVISED STANDARD PLAN RSP T13

DATE PLOTTED => 03-SEP-2014
TIME PLOTTED => 11:29