Dist	COUNTY	ROUTE	POST MILES TOTAL PROJECT	SHEET No.	TOTAL SHEETS
02	Tri	3	R26.2	1	16

INDEX OF PLANS

SHEET No.	DESCRIPTION
1	TITLE AND LOCATION MAP
2-3	TYPICAL CROSS SECTIONS
4	LAYOUT
5	CONSTRUCTION AREA SIGNS
6	SUMMARY OF QUANTITIES
7-8	EROSION CONTROL PLAN AND QUANTITIES
9-16	REVISED STANDARD PLANS

THE STANDARD PLANS LIST APPLICABLE TO THIS CONTRACT IS INCLUDED IN THE NOTICE TO BIDDERS AND SPECIAL PROVISIONS BOOK.

STATE OF CALIFORNIA

DEPARTMENT OF TRANSPORTATION

PROJECT PLANS FOR CONSTRUCTION ON

STATE HIGHWAY

IN TRINITY COUNTY ABOUT 10 MILES SOUTH OF DOUGLAS CITY AT 0.1 MILE SOUTH OF BROWNS CREEK BRIDGE

LOCATION OF CONSTRUCTION

PM R26.2

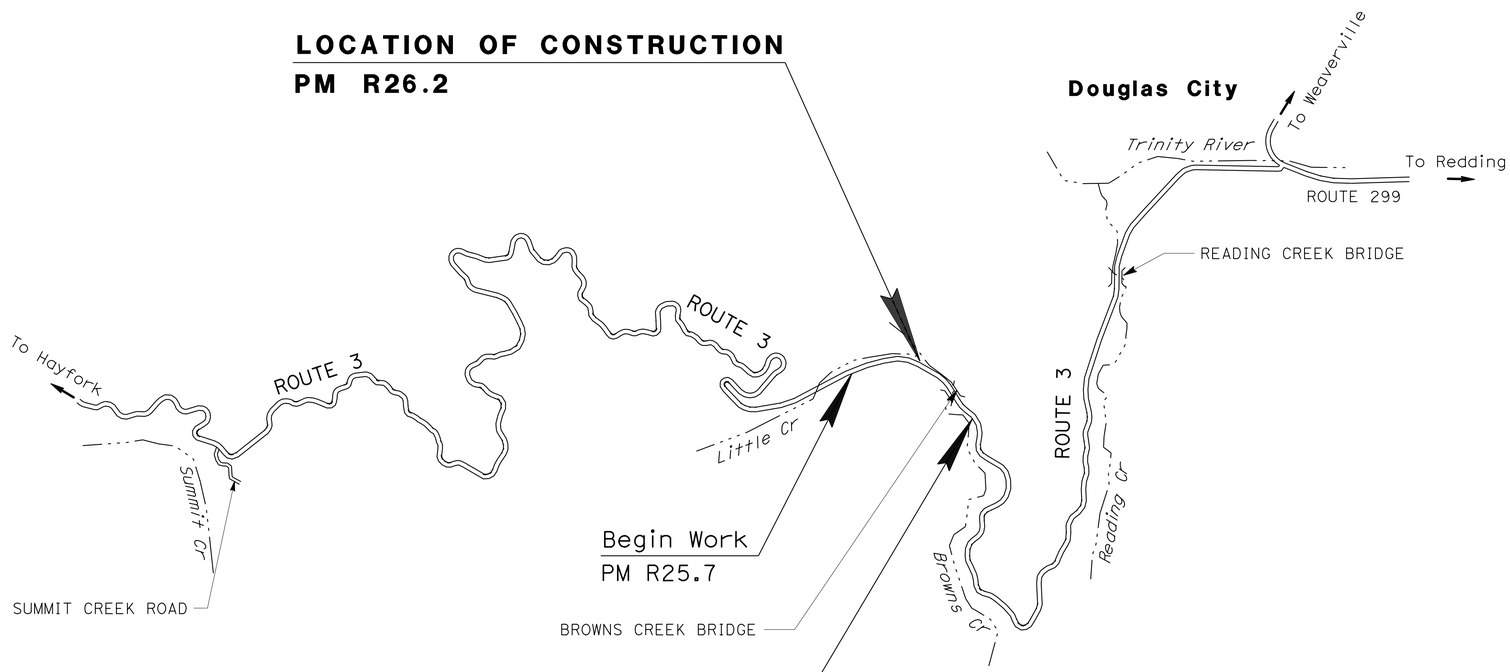

THE CONTRACTOR SHALL POSSESS THE CLASS (OR CLASSES) OF LICENSE AS SPECIFIED IN THE "NOTICE TO BIDDERS."

NO SCALE

Hafez Alawar 07-02-14
PROJECT ENGINEER DATE
REGISTERED CIVIL ENGINEER

July 2, 2014
PLANS APPROVAL DATE

REGISTERED PROFESSIONAL ENGINEER HAFEZ ALAWAR No. C79659 Exp. 09-30-14 CIVIL STATE OF CALIFORNIA

THE STATE OF CALIFORNIA OR ITS OFFICERS OR AGENTS SHALL NOT BE RESPONSIBLE FOR THE ACCURACY OR COMPLETENESS OF SCANNED COPIES OF THIS PLAN SHEET.

CONTRACT No.	02-4F6304
PROJECT ID	0213000022

PROJECT MANAGER: STEVE ROGERS
DESIGN ENGINEER: JULIE CASEY

P:\proj1\02\4F630_plans\pse\24f630ab001.dgn

LAST REVISION 07-01-14 | DATE PLOTTED => 13-AUG-2014 | TIME PLOTTED => 11:58

Dist	COUNTY	ROUTE	POST MILES TOTAL PROJECT	SHEET No.	TOTAL SHEETS
02	Tri	3	R26.2	2	16

REGISTERED CIVIL ENGINEER 07-02-14 DATE

07-02-14
PLANS APPROVAL DATE

REGISTERED PROFESSIONAL ENGINEER HAFEZ ALAWAR No. C79659 Exp. 09-30-14 CIVIL STATE OF CALIFORNIA

THE STATE OF CALIFORNIA OR ITS OFFICERS OR AGENTS SHALL NOT BE RESPONSIBLE FOR THE ACCURACY OR COMPLETENESS OF SCANNED COPIES OF THIS PLAN SHEET.

NOTES:

1. DIMENSIONS OF THE PAVEMENT STRUCTURES (STRUCTURAL SECTIONS) ARE SUBJECT TO TOLERANCES SPECIFIED IN THE STANDARD SPECIFICATIONS.

CLIMATE REGION:

LOW MOUNTAIN

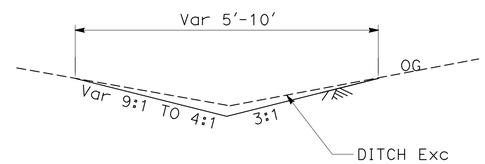

V DITCH DETAIL

"A1" 10+50 TO 12+50
"A1" 12+65 TO 14+20

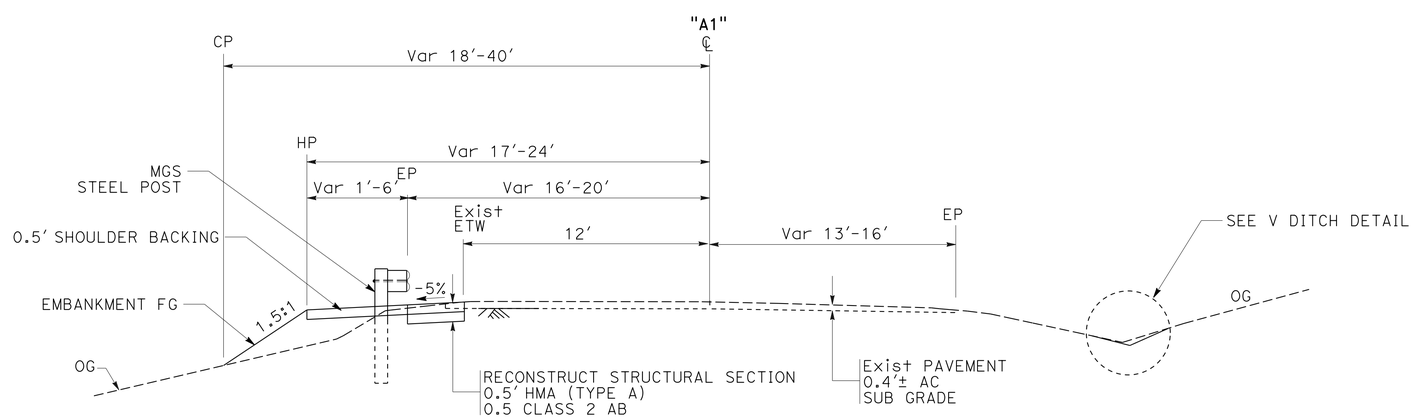

"A1" 10+72 TO 12+10
"A1" 13+10 TO 13+50

TYPICAL CROSS SECTIONS

NO SCALE

ROUTE 3

X-1

REVISED BY	DATE REVISED

CALCULATED-DESIGNED BY	CHECKED BY
STEVE ALAWAR	TOM PENICK

FUNCTIONAL SUPERVISOR: JULIE CASEY

STATE OF CALIFORNIA - DEPARTMENT OF TRANSPORTATION

Caltrans® DESIGN

P:\proj1\02\4F630_plans\pse\24f630ca001.dgn

LAST REVISION 07-02-14 | DATE PLOTTED => 13-AUG-2014 | TIME PLOTTED => 11:58

Dist	COUNTY	ROUTE	POST MILES TOTAL PROJECT	SHEET No.	TOTAL SHEETS
02	Tri	3	R26.2	3	16

REGISTERED CIVIL ENGINEER 07-02-14 DATE

07-02-14
PLANS APPROVAL DATE

REGISTERED PROFESSIONAL ENGINEER HAFEZ ALAWAR No. C79659 Exp. 09-30-14 CIVIL STATE OF CALIFORNIA

THE STATE OF CALIFORNIA OR ITS OFFICERS OR AGENTS SHALL NOT BE RESPONSIBLE FOR THE ACCURACY OR COMPLETENESS OF SCANNED COPIES OF THIS PLAN SHEET.

NOTES:

1. NO WORK WILL BE ALLOWED ON THE ROADWAY UNTIL THE EXISTING CRIBWALL IS SUPPORTED WITH INSTALLATION OF RSP (1/4 TON, METHOD A).

LEGEND:

- RSP FABRIC (CLASS 8)
- ROCK SLOPE PROTECTION (1/4 TON, METHOD A)
- ROCK SLOPE PROTECTION (BACKING No.1, METHOD B)(TON)

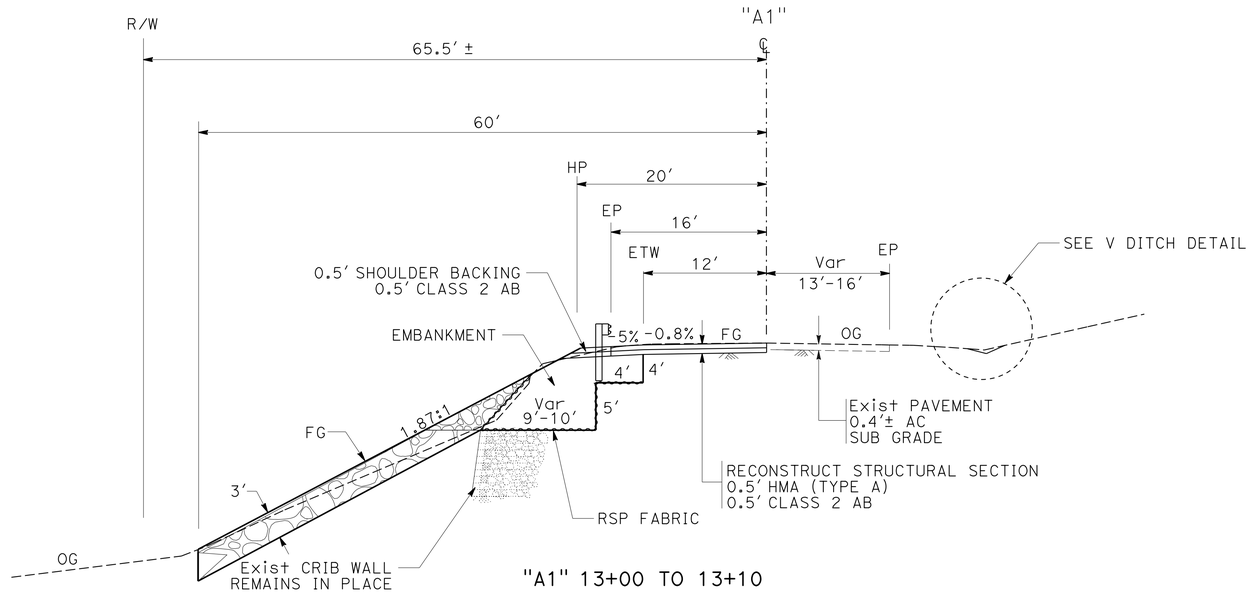

"A1" 13+00 TO 13+10

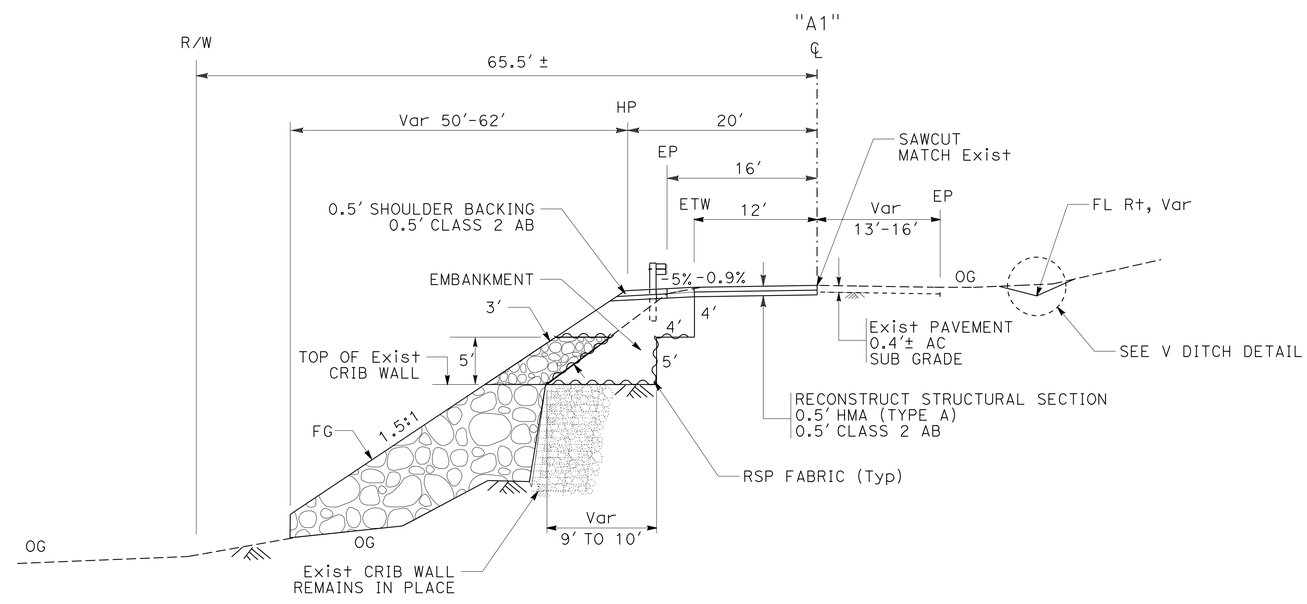

TYPICAL CROSS SECTION
"A1" 12+10 TO 13+00

ROUTE 3

TYPICAL CROSS SECTIONS
NO SCALE

X-2

STATE OF CALIFORNIA - DEPARTMENT OF TRANSPORTATION
Caltrans® **DESIGN**

FUNCTIONAL SUPERVISOR: JULIE CASEY
CALCULATED-DESIGNED BY: STEVE ALAWAR
CHECKED BY: TOM PENICK
REVISED BY
DATE REVISED

P:\proj1\02\4F630_plans\pse\24f630ca002.dgn

LAST REVISION 07-02-14 | DATE PLOTTED => 13-AUG-2014 | TIME PLOTTED => 11:58

Dist	COUNTY	ROUTE	POST MILES TOTAL PROJECT	SHEET No.	TOTAL SHEETS
02	Tri	3	R26.2	4	16

REGISTERED CIVIL ENGINEER 07-02-14 DATE

07-02-14
PLANS APPROVAL DATE

REGISTERED PROFESSIONAL ENGINEER HAFEZ ALAWAR No. C79659 Exp. 09-30-14 CIVIL STATE OF CALIFORNIA

THE STATE OF CALIFORNIA OR ITS OFFICERS OR AGENTS SHALL NOT BE RESPONSIBLE FOR THE ACCURACY OR COMPLETENESS OF SCANNED COPIES OF THIS PLAN SHEET.

NOTES:

1. FOR ACCURATE RIGHT OF WAY DATA, CONTACT RIGHT OF WAY ENGINEERING AT THE DISTRICT OFFICE.
2. TEMPORARY EROSION CONTROL LOCATIONS TO BE DETERMINED BY THE ENGINEER.

LEGEND:

- TFESA — TEMPORARY FENCE (TYPE ESA)
- RECONSTRUCT STRUCTURAL SECTION
- ROCK SLOPE PROTECTION (1/4 TON, METHOD A)
- TEMPORARY CONSTRUCTION EASEMENT (TCE)
- ROCK SLOPE PROTECTION (BACKING No.1, METHOD B)(TON)
- OBJECT MARKER (TYPE L)
- X — PAVEMENT DELINEATION STRIPE DETAIL No.

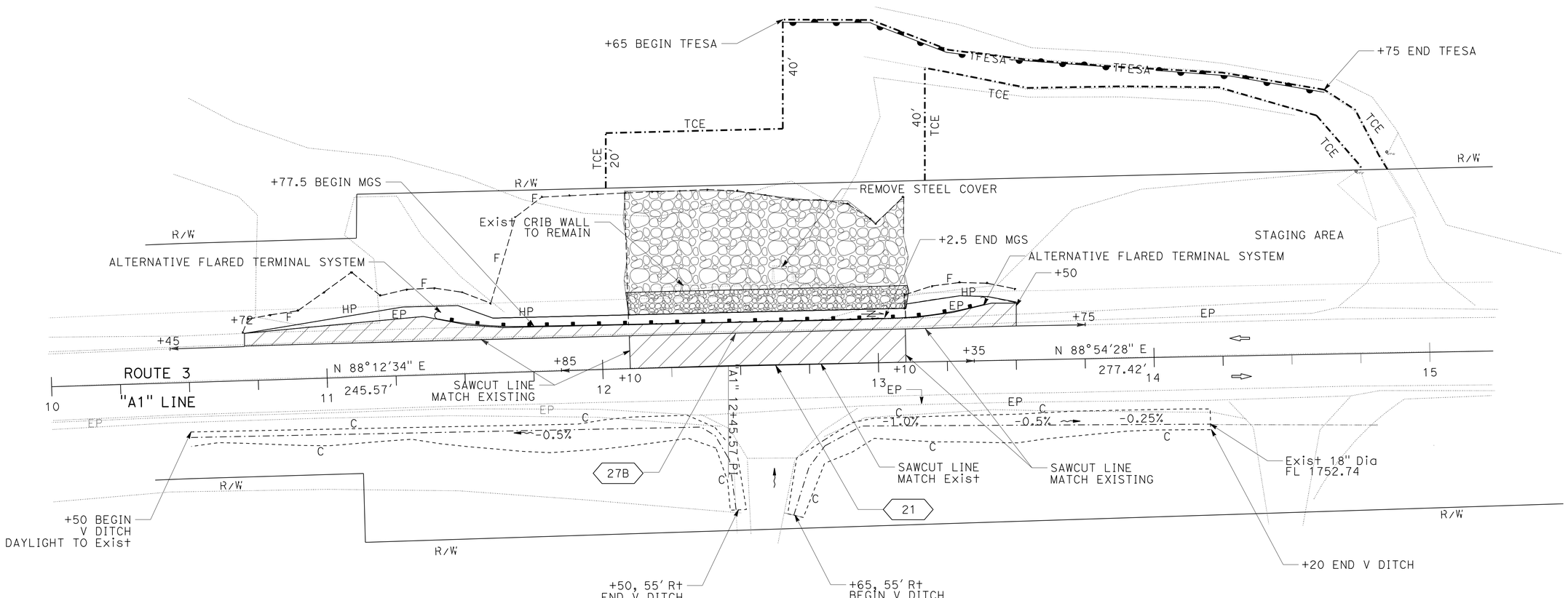

PLAN
PM 26.15

LAYOUT
SCALE: 1" = 20'

L-1

STATE OF CALIFORNIA - DEPARTMENT OF TRANSPORTATION	DESIGN	FUNCTIONAL SUPERVISOR: JULIE CASEY	CALCULATED-DESIGNED BY: STEVE ALAWAR	CHECKED BY: TOM PENICK	REVISED BY	DATE REVISED

P:\proj1\02\4F630_plans\pse\24f630ea001.dgn

LAST REVISION 07-02-14 | DATE PLOTTED => 13-AUG-2014 | TIME PLOTTED => 11:58

BORDER LAST REVISED 7/2/2010 | USERNAME => s115152 | DGN FILE => 24f630ea001.dgn | RELATIVE BORDER SCALE IS IN INCHES 0 1 2 3 | UNIT 0318 | PROJECT NUMBER & PHASE 02-1300-0022-1 | EA 02-4F630

Dist	COUNTY	ROUTE	POST MILES TOTAL PROJECT	SHEET No.	TOTAL SHEETS
02	Tri	3	R26.2	5	16

REGISTERED CIVIL ENGINEER 07-02-14 DATE

07-02-14
PLANS APPROVAL DATE

REGISTERED PROFESSIONAL ENGINEER HAFEZ ALAWAR No. C79659 Exp. 09-30-14 CIVIL STATE OF CALIFORNIA

THE STATE OF CALIFORNIA OR ITS OFFICERS OR AGENTS SHALL NOT BE RESPONSIBLE FOR THE ACCURACY OR COMPLETENESS OF SCANNED COPIES OF THIS PLAN SHEET.

NOTES:

1. EXACT SIGN LOCATIONS TO BE DETERMINED BY THE ENGINEER.
2. SIGNS SHOWN WITH (CA) INDICATE CALIFORNIA SIGN CODE, OTHERWISE FEDERAL SIGN CODES ARE SHOWN.

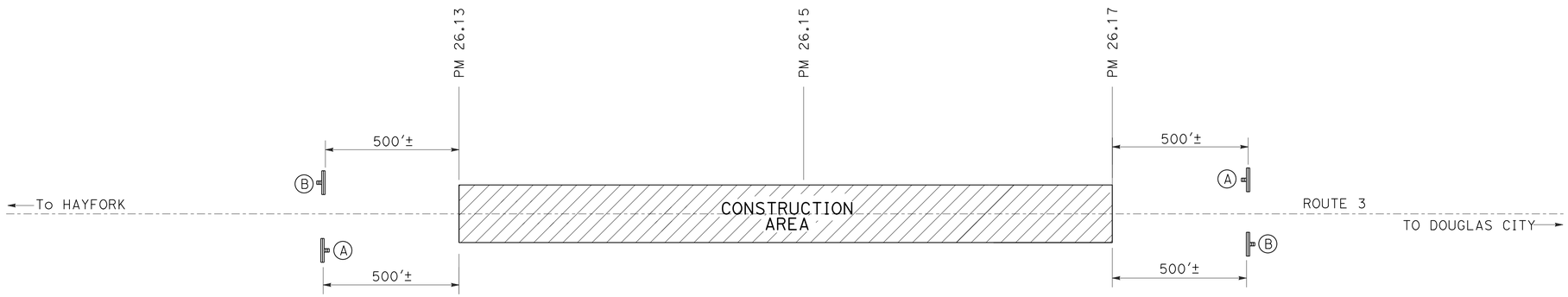

CONSTRUCTION AREA SIGNS

CONSTRUCTION AREA SIGNS (STATIONARY MOUNTED)

SYMBOL	SIGN CODE	PANEL SIZE	SIGN MESSAGE	NUMBER AND SIZE OF POST	No. OF SIGNS
A	W20-1 C23B(CA)	48" x 48" 24" x 18"	ROAD WORK AHEAD SLOPE REPAIR	1 - 4" x 6"	2
B	G20-2	36" x 18"	END ROAD WORK	1 - 4" x 4"	2

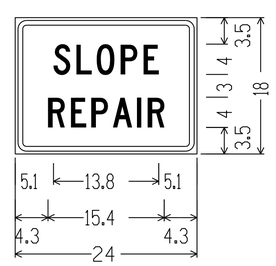

1.5" Radius, Ø.6" Border,
Ø.4" Indent, Black on Orange;

[SLOPE] C;
[REPAIR] C;

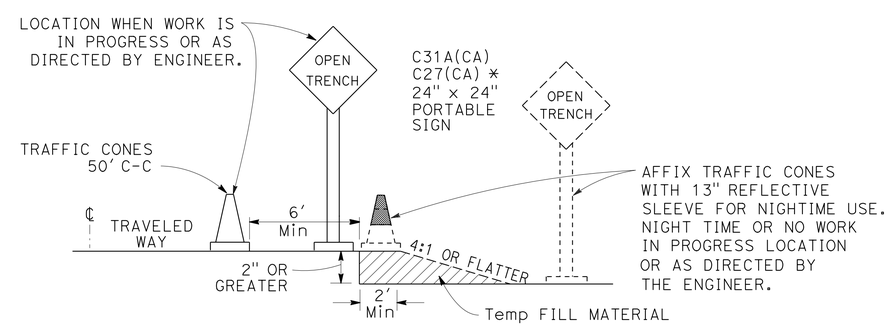

OPEN TRENCH SIGNING AND MARKING

* PLACE AT 25' INTERVALS THROUGH THE OPEN TRENCH AREA-ALTERNATE C27(CA) (OPEN TRENCH) AND C31A(CA) (NO SHOULDER) SIGNS

CONSTRUCTION AREA SIGNS

NO SCALE

CS-1

STATE OF CALIFORNIA - DEPARTMENT OF TRANSPORTATION
Caltrans® DESIGN

FUNCTIONAL SUPERVISOR: JULIE CASEY
CALCULATED-DESIGNED BY: STEVE ALAWAR
CHECKED BY: TOM PENICK
REVISED BY
DATE REVISED

P:\proj1\02\4F630_plans\pse\24f630la001.dgn

LAST REVISION 07-02-14
DATE PLOTTED => 13-AUG-2014
TIME PLOTTED => 11:58

Dist	COUNTY	ROUTE	POST MILES TOTAL PROJECT	SHEET No.	TOTAL SHEETS
02	Tri	3	R26.2	6	16

REGISTERED CIVIL ENGINEER 07-02-14 DATE

07-02-14
PLANS APPROVAL DATE

REGISTERED PROFESSIONAL ENGINEER HAFEZ ALAWAR No. C79659 Exp. 09-30-14 CIVIL STATE OF CALIFORNIA

THE STATE OF CALIFORNIA OR ITS OFFICERS OR AGENTS SHALL NOT BE RESPONSIBLE FOR THE ACCURACY OR COMPLETENESS OF SCANNED COPIES OF THIS PLAN SHEET.

NOTES:

1. (N) - NOT A SEPARATE PAY ITEM, FOR INFORMATION ONLY
1. TEMPORARY EROSION CONTROL LOCATIONS TO BE DETERMINED BY THE ENGINEER.

TEMPORARY EROSION CONTROL

SHEET	LOCATION	DESCRIPTION	QUANTITY		
			SQFT	LF	LF
L-1	PM R26.15	TEMPORARY HYDRAULIC MULCH	300		
L-1	PM R26.15	TEMPORARY FIBER ROLL		200	
L-1	PM R26.15	TEMPORARY GRAVEL BAG BERM			30
		TOTAL	300	200	30

ROADWAY QUANTITIES

LOCATION FROM	LOCATION TO	ROCK SLOPE PROTECTION (1/4 TON, METHOD A)	ROCK SLOPE PROTECTION (No.1, METHOD B)(TON)	ROCK SLOPE PROTECTION FABRIC (CLASS 8)	ROADWAY EXCAVATION	DITCH EXCAVATION	IMPORTED BORROW	(N) EMBANKMENT	HMA (TYPE A)	TACK COAT	CLASS 2 AB	SHOULDER BACKING	MGS (STEEL POST)	ALTERNATIVE FLARED TERMINAL SYSTEM	TEMPORARY FENCING (TYPE ESA)	THERMOPLASTIC TRAFFIC STRIPE (SPRAYABLE) DETAIL 21	THERMOPLASTIC TRAFFIC STRIPE (SPRAYABLE) DETAIL 27B	OBJECT MARKER (TYPE L-1)	REMOVE STEEL COVER
		TON	TON	SQYD	CY	CY	CY	CY	TON	TON	CY	TON	LF	EA	LF	LF	LF	EA	EA
"A1" 10+50 R+	"A1" 14+20 R+					26													
"A1" 10+72 L+	"A1" 13+50 L+						240	486	99	0.25	65	37							1
"A1" 12+10 L+	"A1" 13+10 L+	810	230	320	300														
"A1" 11+40 L+	"A1" 11+77.5 L+													1					
"A1" 13+02.5 L+	"A1" 13+40 L+													1					
"A1" 11+77.5 L+	"A1" 13+02.5 L+												125					1	
"A1" 10+45 L+	"A1" 13+75 L+																330		
"A1" 11+85 L+	"A1" 13+35 L+															150			
"A1" 12+65 L+	"A1" 14+75 L+														210				
SUBTOTAL																150	330		
TOTAL		810	230	320	300	26	240	486	99	0.25	65	37	125	2	210	480		1	1

SUMMARY OF QUANTITIES
Q-1

STATE OF CALIFORNIA - DEPARTMENT OF TRANSPORTATION
Caltrans DESIGN

FUNCTIONAL SUPERVISOR: JULIE CASEY
CALCULATED-DESIGNED BY: STEVE ALAWAR
CHECKED BY: TOM PENICK
REVISED BY
DATE REVISED

P:\proj1\02\4F630_plans\pse\24f630pa001.dgn

LAST REVISION 07-02-14
DATE PLOTTED => 13-AUG-2014
TIME PLOTTED => 11:58

Dist	COUNTY	ROUTE	POST MILES TOTAL PROJECT	SHEET No.	TOTAL SHEETS
02	Tri	3	R26.2	7	16

LICENSED LANDSCAPE ARCHITECT

07-02-14

PLANS APPROVAL DATE

LICENSED LANDSCAPE ARCHITECT J. PATRICK SULLIVAN #3125 Signature 07/31/16 Renewal Date 07/02/14 Date STATE OF CALIFORNIA

THE STATE OF CALIFORNIA OR ITS OFFICERS OR AGENTS SHALL NOT BE RESPONSIBLE FOR THE ACCURACY OR COMPLETENESS OF SCANNED COPIES OF THIS PLAN SHEET.

NOTE:

1. FOR ACCURATE RIGHT OF WAY DATA, CONTACT RIGHT OF WAY ENGINEERING AT THE DISTRICT OFFICE.

LEGEND:

- TFESA — TEMPORARY FENCE (TYPE ESA)
- HYDROSEED
- ROCK SLOPE PROTECTION
- TEMPORARY CONSTRUCTION EASEMENT (TCE)
- ROCK SLOPE PROTECTION

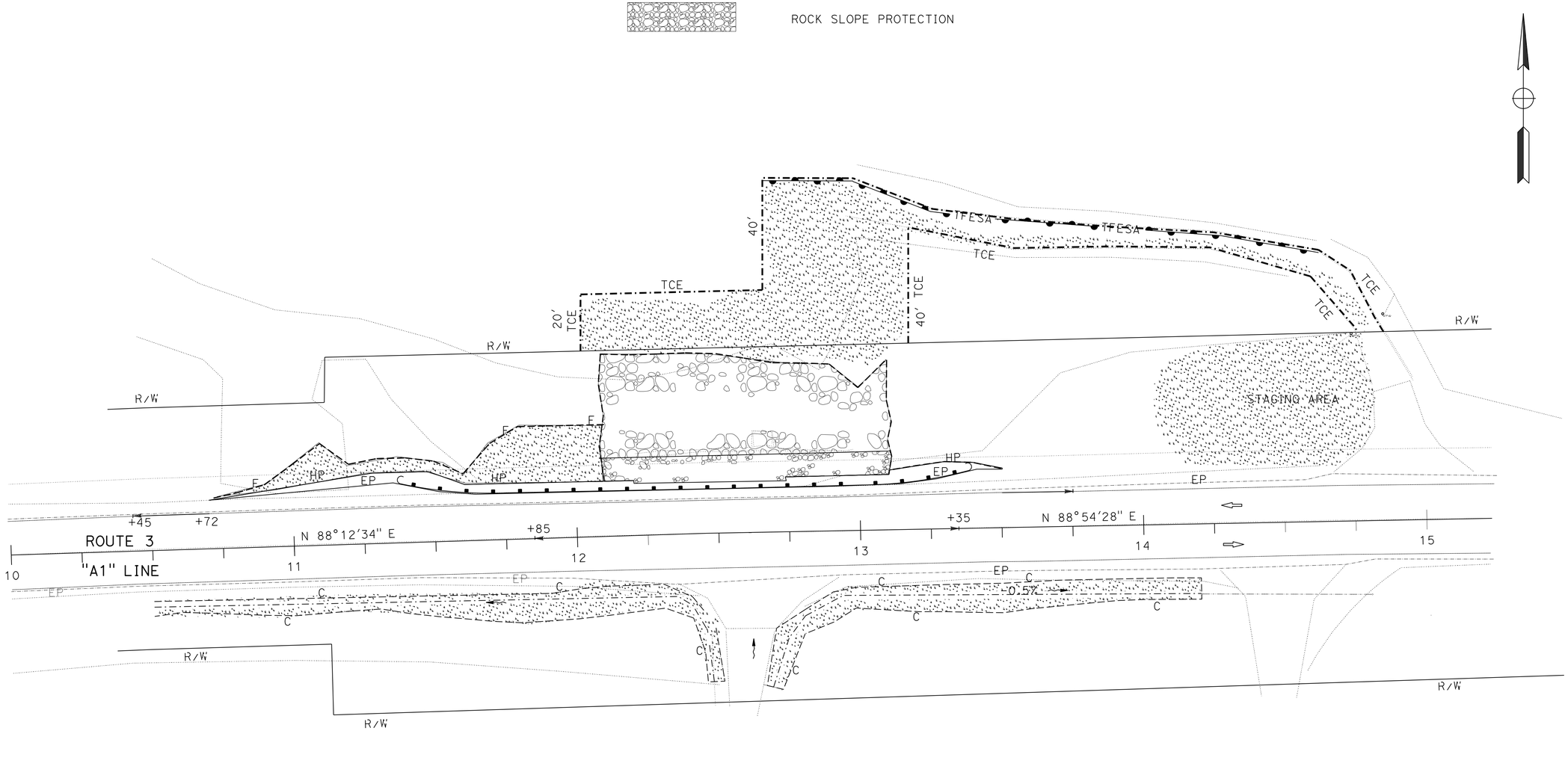

PLAN
PM 26.15

EROSION CONTROL PLAN

SCALE: 1" = 20'

EC-1

APPROVED FOR EROSION CONTROL WORK ONLY

STATE OF CALIFORNIA - DEPARTMENT OF TRANSPORTATION
Caltrans® LANDSCAPE ARCHITECTURE

SENIOR LANDSCAPE ARCHITECT: RON FLORY
CALCULATED-DESIGNED BY: J. PATRICK SULLIVAN
CHECKED BY: RON FLORY
REVISED BY
DATE REVISED

P:\proj\02\4f630\plans\pse\24f630te001.dgn

LAST REVISION 07-02-14
DATE PLOTTED => 13-AUG-2014
TIME PLOTTED => 11:58

Dist	COUNTY	ROUTE	POST MILES TOTAL PROJECT	SHEET No.	TOTAL SHEETS
02	Tri	3	R26.2	8	16

LICENSED LANDSCAPE ARCHITECT

07-02-14
PLANS APPROVAL DATE

LICENSED LANDSCAPE ARCHITECT J. PATRICK SULLIVAN #3125 Signature 07/31/14 Renewal Date 07/02/14 Date STATE OF CALIFORNIA

THE STATE OF CALIFORNIA OR ITS OFFICERS OR AGENTS SHALL NOT BE RESPONSIBLE FOR THE ACCURACY OR COMPLETENESS OF SCANNED COPIES OF THIS PLAN SHEET.

NOTES:

1. (N) - NOT A SEPARATE PAY ITEM, FOR INFORMATION ONLY
2. REFER TO INDIVIDUAL EC SHEETS FOR LOCATIONS, EC TYPES & QUANTITIES.
3. APPLY STRAW SUFFICIENTLY TO SLOPES, SO THAT BARE SOIL IS COMPLETELY COVERED.
4. TOTAL HYDROSEEDING ACREAGE IS 0.36 ACRES (N)

HYDROSEED SEQUENCE/ APPLICATION RATES (N)

SEQUENCE	ITEM	MATERIAL DESCRIPTION	MATERIAL TYPE	APPLICATION RATE (N)
STEP 1	HYDROSEED APPLICATION	PURE LIVE SEED	MIX	85 LB/ACRE
		FIBER	ALTERNATE	2000 LB/ACRE
		SLOW RELEASE FERTLIZER	GRANULAR	100 LB/ACRE
STEP 2	STRAW APPLICATION	STRAW	WHEAT/ BARLEY	4 TON/ACRE
STEP 3	HYDROSEED APPLICATION	COMPOST	RECYCLED WOOD PRODUCT	1.2 CY/ACRE
		FIBER	ALTERNATE	1000 LB/ACRE
		TACKIFIER	PSYLLIUM	100 LB/ACRE

SEED MIX (N)

BOTANICAL NAME (COMMON NAME)	PERCENT GERMINATION (MINIMUM)	POUNDS PURE LIVE SEED PER ACRE (N) (SLOPE MEASUREMENT)
ACHILLEA MILLEFOLIUM (COMMON YARROW)	70	2
ELYMUS TRITICOIDES (CREEPING RYE)	70	12
FESTUCA IDAHOENSIS (WESTERN FESCUE)	80	20
LUPINUS NANA (DWARF LUPINES)	80	3
POA SECUNDA (BLUE PINE GRASS)	70	10
TRIFOLIUM HIRTIUM (ROSE CLOVER)	70	23
VULPIA MICROSTACHYS (THREE-WEEKS FESCUE)	70	15
	TOTAL	85

HYDROSEED TOTALS

MATERIAL DESCRIPTION	MATERIAL TYPE	TOTALS		
PURE LIVE SEED	MIX	30.6 LB (N)		HYDROSEED
FIBER	ALTERNATE	1080 LB (N)		
SLOW RELEASE FERTLIZER	GRANULAR	36 LB (N)		
COMPOST	RECYCLED WOOD PRODUCT	0.45 CY (N)		
STRAW	WHEAT/ BARLEY	1.5 TONS (N)		
TACKIFIER	PSYLLIUM	36 LB (N)		
SHEET NO.				
EC-1			SQFT	15,700
		TOTAL SQFT		15,700

EROSION CONTROL QUANTITIES

ECQ-1

REVISED BY | DATE REVISED
J. PATRICK SULLIVAN | RON FLORY
CALCULATED-DESIGNED BY | CHECKED BY
SENIOR LANDSCAPE ARCHITECT | RON FLORY
STATE OF CALIFORNIA - DEPARTMENT OF TRANSPORTATION
Caltrans® LANDSCAPE ARCHITECTURE

P:\proj1\02\4f630\ plans\pse\24f630tg001.dgn

LAST REVISION 07-02-14 | DATE PLOTTED => 13-AUG-2014 TIME PLOTTED => 11:59

M

Maint	MAINTENANCE
Max	MAXIMUM
MB	METAL BEAM
MBB	METAL BEAM BARRIER
MBGR	METAL BEAM GUARD RAILING
Med	MEDIAN
MGS	MIDWEST GUARDRAIL SYSTEM
MH	MANHOLE
Min	MINIMUM
Misc	MISCELLANEOUS
Misc I & S	MISCELLANEOUS IRON AND STEEL
Mkr	MARKER
Mod	MODIFIED, MODIFY
Mon	MONUMENT
MP	METAL PLATE
MPGR	METAL PLATE GUARD RAILING
MR	MOVEMENT RATING
MSE	MECHANICALLY STABILIZED EMBANKMENT
Mt	MOUNTAIN, MOUNT
Mtl	MATERIAL
MVP	MAINTENANCE VEHICLE PULLOUT

N

N	NORTH
NB	NORTHBOUND
No.	NUMBER (MUST HAVE PERIOD)
Nos.	NUMBERS (MUST HAVE PERIOD)
NPS	NOMINAL PIPE SIZE
NS	NEAR SIDE
NSP	NEW STANDARD PLAN
NTS	NOT TO SCALE

O

Oblr	OBLITERATE
OC	OVERCROSSING
OD	OUTSIDE DIAMETER
OF	OUTSIDE FACE
OG	ORIGINAL GROUND
OGAC	OPEN GRADED ASPHALT CONCRETE
OGFC	OPEN GRADED FRICTION COURSE
OH	OVERHEAD
OHWM	ORDINARY HIGH WATER MARK
O-O	OUT TO OUT
Opp	OPPOSITE
OSD	OVERSIDE DRAIN

P

P	PAGE
PAP	PERFORATED ALUMINUM PIPE
PB	PULL BOX
PC	POINT OF CURVATURE, PRECAST
PCC	POINT OF COMPOUND CURVE, PORTLAND CEMENT CONCRETE
PCMS	PORTABLE CHANGEABLE MESSAGE SIGN
PCP	PERFORATED CONCRETE PIPE, PRESTRESSED CONCRETE PIPE
PCVC	POINT OF COMPOUND VERTICAL CURVE
PEC	PERMIT TO ENTER AND CONSTRUCT
Ped	PEDESTRIAN
Ped OC	PEDESTRIAN OVERCROSSING
Ped UC	PEDESTRIAN UNDERCROSSING
Perm Mtl	PERMEABLE MATERIAL

P continued

PG	PROFILE GRADE
PI	POINT OF INTERSECTION
PJP	PARTIAL JOINT PENETRATION
Pkwy	PARKWAY
₱,PL	PLATE
P/L	PROPERTY LINE
PM	POST MILE, TIME FROM NOON TO MIDNIGHT
PN	PAVING NOTCH
POC	POINT OF HORIZONTAL CURVE
POT	POINT OF TANGENT
POVC	POINT OF VERTICAL CURVE
PP	PIPE PILE, PLASTIC PIPE, POWER POLE
PPL	PREFORMED PERMEABLE LINER
PPP	PERFORATED PLASTIC PIPE
PRC	POINT OF REVERSE CURVE
PRF	PAVEMENT REINFORCING FABRIC
PRVC	POINT OF REVERSE VERTICAL CURVE
PS&E	PLANS, SPECIFICATIONS AND ESTIMATES
PS, P/S	PRESTRESSED
PSP	PERFORATED STEEL PIPE
PT	POINT OF TANGENCY
PVC	POLYVINYL CHLORIDE
Pvmt	PAVEMENT

Q

Qty	QUANTITY

R

R	RADIUS
R & D	REMOVE AND DISPOSE
R & S	REMOVE AND SALVAGE
R/C	RATE OF CHANGE
RCA	REINFORCED CONCRETE ARCH
RCB	REINFORCED CONCRETE BOX
RCP	REINFORCED CONCRETE PIPE
RCPA	REINFORCED CONCRETE PIPE ARCH
Rd	ROAD
Reinf	REINFORCED, REINFORCEMENT, REINFORCING
Rel	RELOCATE
Repl	REPLACEMENT
Ret	RETAINING
Rev	REVISED, REVISION
Rdwy	ROADWAY
RHMA	RUBBERIZED HOT MIX ASPHALT
Riv	RIVER
RM	ROAD-MIXED
RP	RADIUS POINT, REFERENCE POINT
RR	RAILROAD
RSP	ROCK SLOPE PROTECTION, REVISED STANDARD PLAN
Rt	RIGHT
Rte	ROUTE
RW	REDWOOD, RETAINING WALL
R/W	RIGHT OF WAY
Rwy	RAILWAY

S

S	SOUTH, SUPPLEMENT
SAE	STRUCTURE APPROACH EMBANKMENT
Salv	SALVAGE
SAPP	STRUCTURAL ALUMINUM PLATE PIPE
SB	SOUTHBOUND
SC	SAND CUSHION
SCSP	SLOTTED CORRUGATED STEEL PIPE
SD	STORM DRAIN
Sec	SECOND, SECTION
Sep	SEPARATION
SG	SUBGRADE
Shld	SHOULDER
Sht	SHEET
Sim	SIMILAR
₺	STATION LINE
SM	SELECTED MATERIAL
Spec	SPECIAL, SPECIFICATIONS
SPP	SLOTTED PLASTIC PIPE
SS	SLOPE STAKE
SSBM	STRAP AND SADDLE BRACKET METHOD
SSD	STRUCTURAL SECTION DRAIN
SSPA	STRUCTURAL STEEL PLATE ARCH
SSPP	STRUCTURAL STEEL PLATE PIPE
SSPPA	STRUCTURAL STEEL PLATE PIPE ARCH
SSRP	STEEL SPIRAL RIB PIPE
St	STREET
Sta	STATION
STBB	SINGLE THRIE BEAM BARRIER
Std	STANDARD
Str	STRUCTURE
Surf	SURFACING
SW	SIDEWALK, SOUND WALL
Swr	SEWER
Sym	SYMMETRICAL
S4S	SURFACE 4 SIDES

T

T	SEMI-TANGENT
Tan	TANGENT
TBB	THRIE BEAM BARRIER
Tbr	TIMBER
TC	TOP OF CURB
TCB	TRAFFIC CONTROL BOX
TCE	TEMPORARY CONSTRUCTION EASEMENT
Tel	TELEPHONE
Temp	TEMPORARY
TG	TOP OF GRADE
Tot	TOTAL
TP	TELEPHONE POLE
TPB	TREATED PERMEABLE BASE
TPM	TREATED PERMEABLE MATERIAL
Trans	TRANSITION

T continued

TS	TRANSVERSE, TRAFFIC SIGNAL, TUBULAR STEEL
Typ	TYPICAL

U

UC	UNDERCROSSING
UD	UNDERDRAIN
UG	UNDERGROUND
UON	UNLESS OTHERWISE NOTED
UP	UNDERPASS

V

V	VALVE, DESIGN SPEED
Var	VARIABLE, VARIES
VC	VERTICAL CURVE
VCP	VITRIFIED CLAY PIPE
Vert	VERTICAL
Via	VIADUCT
Vol	VOLUME

W

W	WEST, WIDTH
WB	WESTBOUND
WH	WEEP HOLE
WM	WIRE MESH
WS	WATER SURFACE
WSP	WELDED STEEL PIPE
Wt	WEIGHT
WV	WATER VALVE
WW	WINGWALL
WWLOL	WINGWALL LAYOUT LINE

X

X Sec	CROSS SECTION
Xing	CROSSING

Y

Yr	YEAR
Yrs	YEARS

Dist	COUNTY	ROUTE	POST MILES TOTAL PROJECT	SHEET No.	TOTAL SHEETS
02	Tri	3	R26.2	9	16

Grace M. Tsushima
REGISTERED CIVIL ENGINEER

July 19, 2013
PLANS APPROVAL DATE

REGISTERED PROFESSIONAL ENGINEER Grace M. Tsushima No. C49814 Exp. 9-30-14 CIVIL STATE OF CALIFORNIA

THE STATE OF CALIFORNIA OR ITS OFFICERS OR AGENTS SHALL NOT BE RESPONSIBLE FOR THE ACCURACY OR COMPLETENESS OF SCANNED COPIES OF THIS PLAN SHEET.

TO ACCOMPANY PLANS DATED 07-02-14

UNIT OF MEASUREMENT SYMBOLS:

Some of the symbols used in the project plan quantity tables and in the Bid Item List are:

TABLE A

SYMBOL USED	DEFINITIONS
ACRE	ACRE
CF	CUBIC FOOT
CY	CUBIC YARD
EA	EACH
GAL	GALLON
LB	POUND
LF	LINEAR FOOT
SQFT	SQUARE FOOT
SQYD	SQUARE YARD
STA	100 FEET
TAB	TABLET
TON	2,000 POUNDS

Some of the symbols used in the plans other than in the project plan quantity tables are:

TABLE B

SYMBOL USED	DEFINITIONS
ksi	KIPS PER SQUARE INCH
ksf	KIPS PER SQUARE FOOT
psi	POUNDS PER SQUARE INCH
psf	POUNDS PER SQUARE FOOT
lb/ft^3, pcf	POUNDS PER CUBIC FOOT
tsf	TONS PER SQUARE FOOT
mph, MPH *	MILES PER HOUR
ø	NOMINAL DIAMETER
oz	OUNCE
lb	POUND
kip	1,000 POUNDS
cal	CALORIE
ft	FOOT OR FEET
gal	GALLON

* For use on a sign panel only

STATE OF CALIFORNIA
DEPARTMENT OF TRANSPORTATION

ABBREVIATIONS (SHEET 2 OF 2)

NO SCALE

RSP A10B DATED JULY 19, 2013 SUPERSEDES STANDARD PLAN A10B DATED MAY 20, 2011 - PAGE 2 OF THE STANDARD PLANS BOOK DATED 2010.

REVISED STANDARD PLAN RSP A10B

2010 REVISED STANDARD PLAN RSP A10B

DATE PLOTTED => 13-AUG-2014
TIME PLOTTED => 11:59

Dist	COUNTY	ROUTE	POST MILES TOTAL PROJECT	SHEET No.	TOTAL SHEETS
02	Tri	3	R26.2	10	16

Randell D. Hiatt
REGISTERED CIVIL ENGINEER

July 19, 2013
PLANS APPROVAL DATE

REGISTERED PROFESSIONAL ENGINEER
Randell D. Hiatt
No. C50200
Exp. 6-30-15
CIVIL
STATE OF CALIFORNIA

THE STATE OF CALIFORNIA OR ITS OFFICERS OR AGENTS SHALL NOT BE RESPONSIBLE FOR THE ACCURACY OR COMPLETENESS OF SCANNED COPIES OF THIS PLAN SHEET.

TO ACCOMPANY PLANS DATED 07-02-14

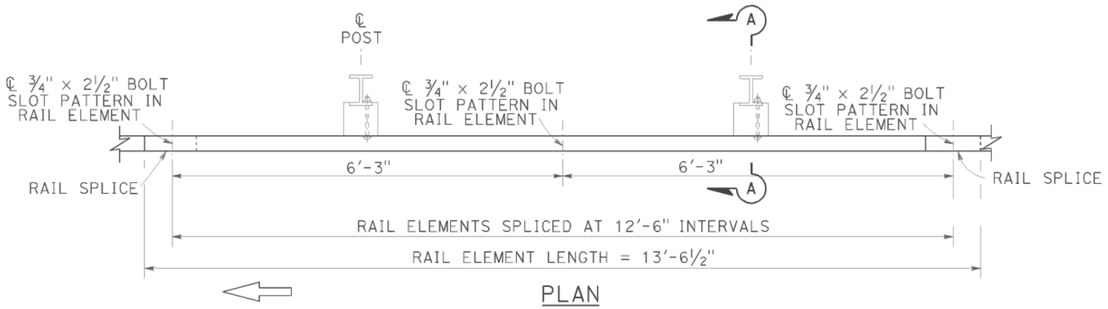

PLAN

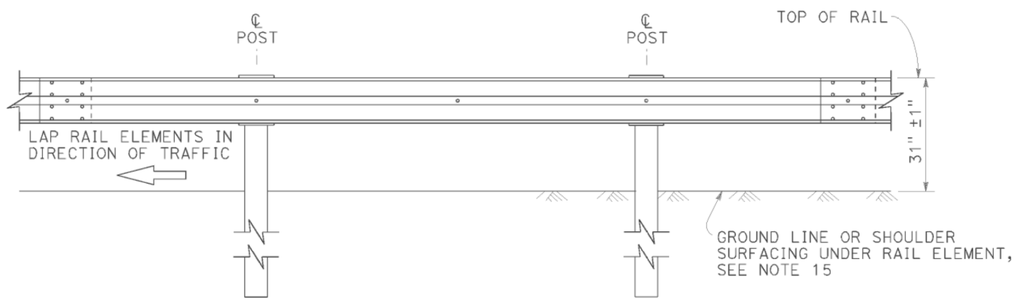

ELEVATION

MIDWEST GUARDRAIL SYSTEM WITH STEEL POSTS AND NOTCHED WOOD OR NOTCHED RECYCLED PLASTIC BLOCKS

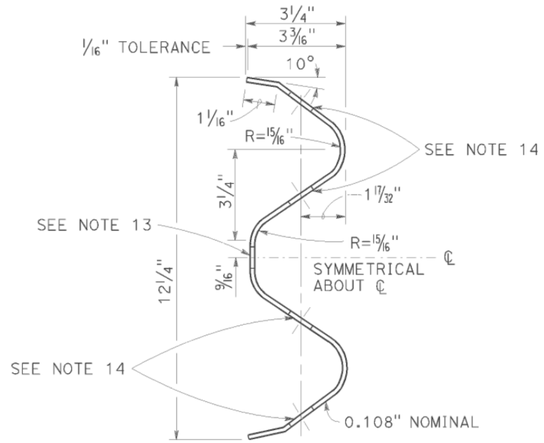

SECTION THRU RAIL ELEMENT

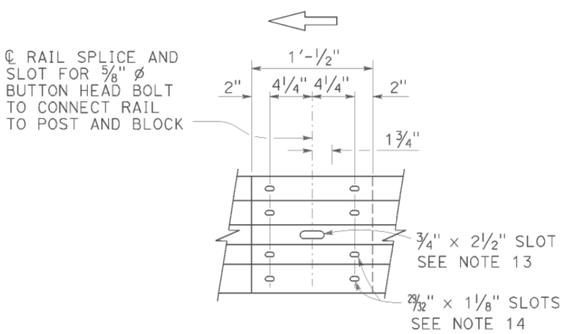

ELEVATION

RAIL ELEMENT SPLICE DETAIL

a) Connect the over lapped end of the rail elements with ⅝" ø × 1⅜" button head oval shoulder splice bolts inserted into the 29/32" × 1⅛" slots and bolted together with ⅝" ø recessed hex nuts. Recess of hex nut points toward rail element. A total of 8 bolts and nuts are to be used at each rail splice connection.

b) The ends of the rail elements are to be overlapped in the direction of traffic (see details).

c) Where end cap is to be attached to the end of a rail element, a total of 4 of the above described splice bolts and nuts are to be used.

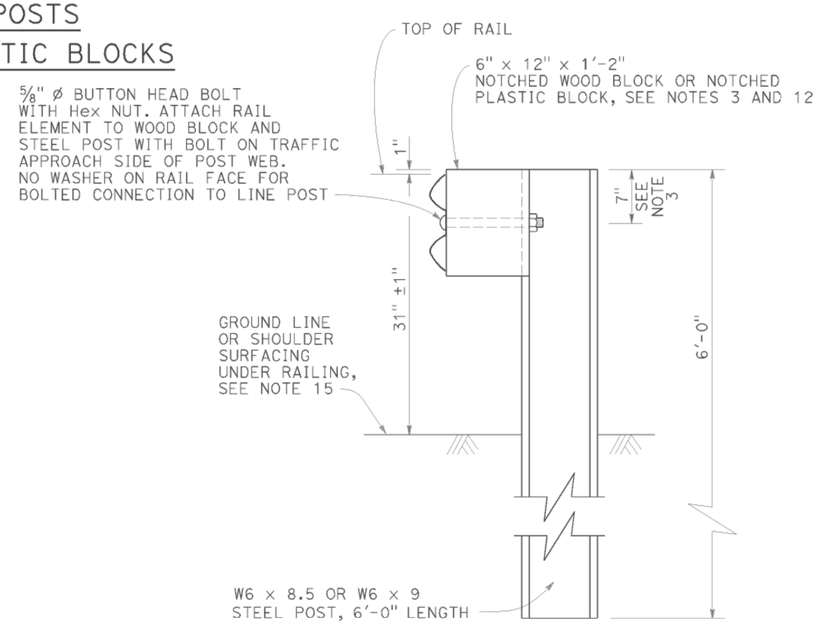

SECTION A-A

TYPICAL STEEL LINE POST INSTALLATION

See Note 4

NOTES:

1. For details of wood post installations, see Revised Standard Plan RSP A77L1.
2. For details of standard hardware used to construct MGS, see Revised Standard Plan RSP A77M1.
3. For details of steel posts and notched wood blocks used to construct MGS, see Revised Standard Plan RSP A77N2.
4. For additional installation details, see Revised Standard Plan RSP A77N3.
5. MGS post spacing to be 6'-3" center to center, except as otherwise noted.
6. For MGS typical layouts, see the A77P, A77Q and A77R Series of Standard Plans.
7. If railing is connected to terminal system end treatment, use 31" height terminal system end treatment.
8. For MGS end anchor details, see Revised Standard Plans RSP A77S1 and RSP A77T2.
9. For details of MGS transition to bridge railing, see Revised Standard Plan RSP A77U4.
10. For additional details of MGS connection to bridge railings, see Revised Standard Plans RSP A77U1, RSP A77U2 and RSP A77V1.
11. For dike positioning and MGS delineation details, see Revised Standard Plan RSP A77N4.
12. Notched face of block faces steel post.
13. Slotted hole for bolted connection of rail element to block and post. See "Section Thru Rail Element".
14. Slotted holes for splice bolts to overlap ends of rail element. See "Section Thru Rail Element".
15. Install posts in soil.

STATE OF CALIFORNIA
DEPARTMENT OF TRANSPORTATION

MIDWEST GUARDRAIL SYSTEM STANDARD RAILING SECTION (STEEL POST WITH NOTCHED WOOD OR NOTCHED RECYCLED PLASTIC BLOCK)

NO SCALE

RSP A77L2 DATED JULY 19, 2013 SUPPLEMENTS THE STANDARD PLANS BOOK DATED 2010.

REVISED STANDARD PLAN RSP A77L2

2010 REVISED STANDARD PLAN RSP A77L2

DATE PLOTTED => 13-AUG-2014
TIME PLOTTED => 11:59

Dist	COUNTY	ROUTE	POST MILES TOTAL PROJECT	SHEET No.	TOTAL SHEETS
02	Tri	3	R26.2	11	16

Randell D. Hiatt
REGISTERED CIVIL ENGINEER

July 19, 2013
PLANS APPROVAL DATE

REGISTERED PROFESSIONAL ENGINEER
Randell D. Hiatt
No. C50200
Exp. 6-30-15
CIVIL
STATE OF CALIFORNIA

THE STATE OF CALIFORNIA OR ITS OFFICERS OR AGENTS SHALL NOT BE RESPONSIBLE FOR THE ACCURACY OR COMPLETENESS OF SCANNED COPIES OF THIS PLAN SHEET.

TO ACCOMPANY PLANS DATED 07-02-14

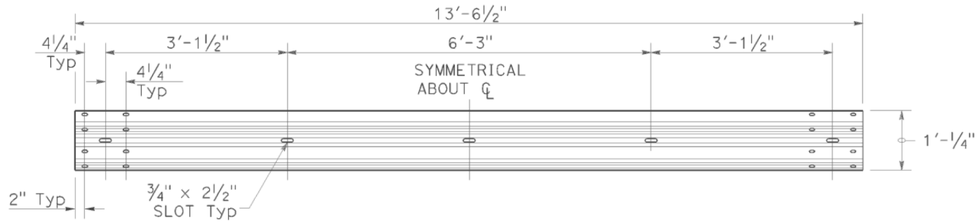

TYPICAL RAIL ELEMENT

NOTE:

1. Slotted holes for splice bolts to overlap ends of rail element.

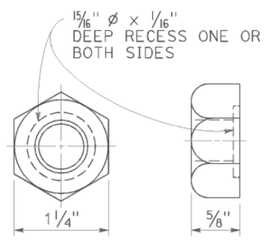

⅝" Ø RECESS NUT

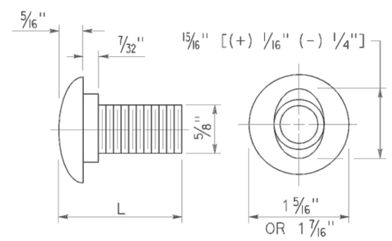

⅝" Ø BUTTON HEAD BOLT

BUTTON HEAD BOLT

L	THREAD LENGTH
1⅜"	FULL THREAD LENGTH
2"	FULL THREAD LENGTH
10"	4" Min THREAD LENGTH
18"	4" Min THREAD LENGTH
20"	4" Min THREAD LENGTH
22"	4" Min THREAD LENGTH
26"	4" Min THREAD LENGTH
36"	4" Min THREAD LENGTH
** 2¾"	2" Min THREAD LENGTH
** 19"	4" Min THREAD LENGTH

** For nested rail applications.

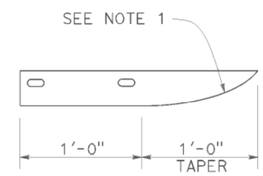

PLAN

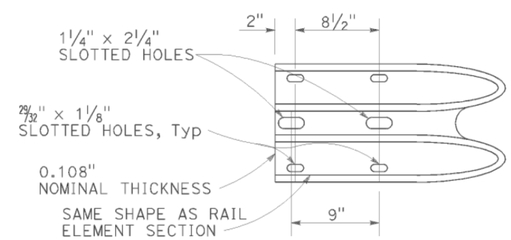

ELEVATION

END CAP
(TYPE A)

STATE OF CALIFORNIA
DEPARTMENT OF TRANSPORTATION

MIDWEST GUARDRAIL SYSTEM STANDARD HARDWARE

NO SCALE

RSP A77M1 DATED JULY 19, 2013 SUPPLEMENTS THE STANDARD PLANS BOOK DATED 2010.

REVISED STANDARD PLAN RSP A77M1

2010 REVISED STANDARD PLAN RSP A77M1

DATE PLOTTED => 13-AUG-2014
TIME PLOTTED => 11:59

Dist	COUNTY	ROUTE	POST MILES TOTAL PROJECT	SHEET No.	TOTAL SHEETS
02	Tri	3	R26.2	12	16

Randell D. Hiatt
REGISTERED CIVIL ENGINEER

November 15, 2013
PLANS APPROVAL DATE

REGISTERED PROFESSIONAL ENGINEER
Randell D. Hiatt
No. C50200
Exp. 6-30-15
CIVIL
STATE OF CALIFORNIA

THE STATE OF CALIFORNIA OR ITS OFFICERS OR AGENTS SHALL NOT BE RESPONSIBLE FOR THE ACCURACY OR COMPLETENESS OF SCANNED COPIES OF THIS PLAN SHEET.

TO ACCOMPANY PLANS DATED 07-02-14

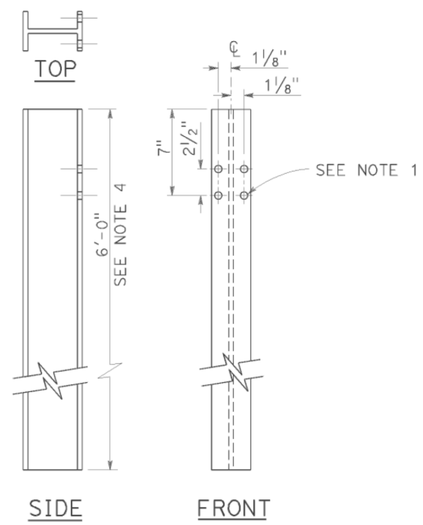

W6 x 9 OR W6 x 8.5
STEEL POST
See Note 4

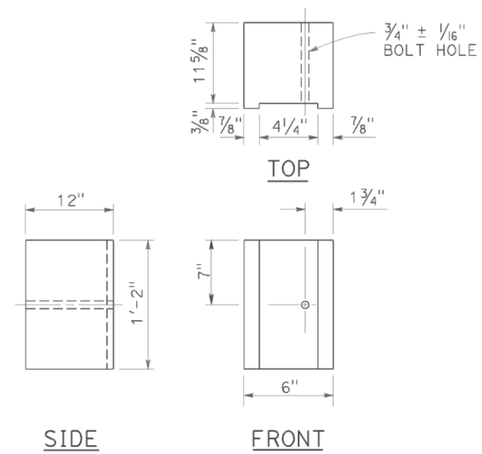

6" x 12"
NOTCHED WOOD BLOCK
See Notes 2 and 3

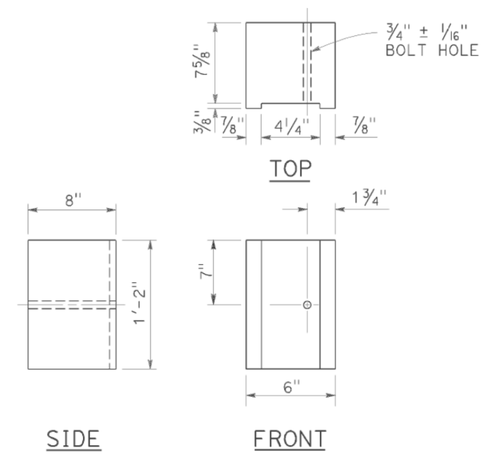

6" x 8"
NOTCHED WOOD BLOCK
Only for use with metal beam guard railing. See Note 5

NOTES:

1. All holes in steel post shall be 13/16" Dia maximum.
2. Dimensions shown for wood block are nominal.
3. Notched face of block faces steel post.
4. 6'-0" length posts to be used for typical roadway installation. See Revised Standard Plan RSP A77N3.
5. See Revised Standard Plan RSP A77L3 for use of 6" x 8" and 8" x 8" notched wood blocks.
6. This post and 8" x 12" block combination to be used for line post sections of MGS on narrow roadways and where strengthened line post sections of MGS are warranted to shield fixed objects.

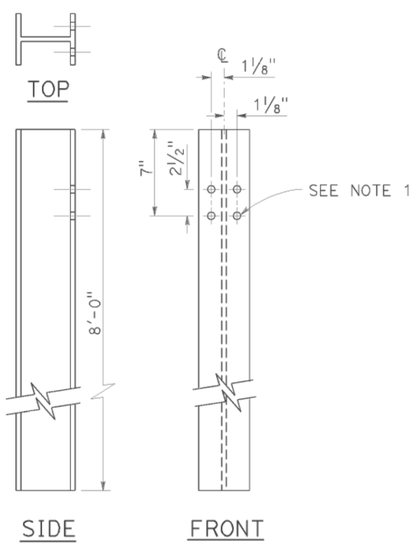

W6 x 15
STEEL POST
See Note 6

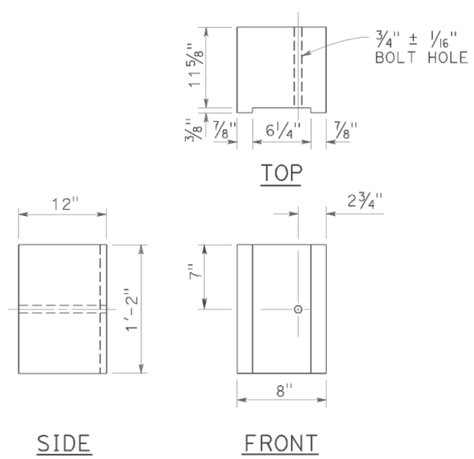

8" x 12"
NOTCHED WOOD BLOCK
See Notes 2 and 3

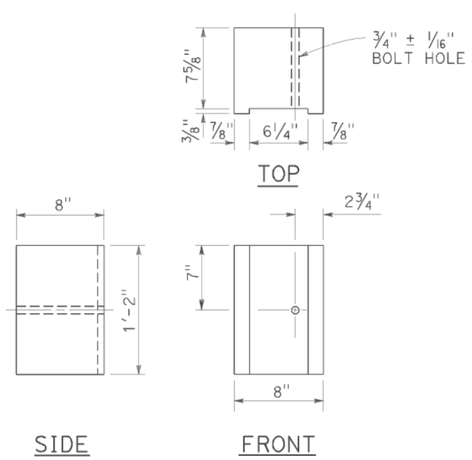

8" x 8"
NOTCHED WOOD BLOCK
Only for use with metal beam guard railing. See Note 5

STATE OF CALIFORNIA
DEPARTMENT OF TRANSPORTATION

MIDWEST GUARDRAIL SYSTEM STEEL POST AND NOTCHED WOOD BLOCK DETAILS

NO SCALE

RSP A77N2 DATED NOVEMBER 15, 2013 SUPERSEDES RSP A77N2
DATED JULY 19, 2013 THAT SUPPLEMENTS THE STANDARD PLANS BOOK DATED 2010.

REVISED STANDARD PLAN RSP A77N2

2010 REVISED STANDARD PLAN RSP A77N2

DATE PLOTTED => 13-AUG-2014
TIME PLOTTED => 11:59

Dist	COUNTY	ROUTE	POST MILES TOTAL PROJECT	SHEET No.	TOTAL SHEETS
02	Tri	3	R26.2	13	16

Randell D. Hiatt
REGISTERED CIVIL ENGINEER

November 15, 2013
PLANS APPROVAL DATE

REGISTERED PROFESSIONAL ENGINEER
Randell D. Hiatt
No. C50200
Exp. 6-30-15
CIVIL
STATE OF CALIFORNIA

THE STATE OF CALIFORNIA OR ITS OFFICERS OR AGENTS SHALL NOT BE RESPONSIBLE FOR THE ACCURACY OR COMPLETENESS OF SCANNED COPIES OF THIS PLAN SHEET.

TO ACCOMPANY PLANS DATED 07-02-14

2010 REVISED STANDARD PLAN RSP A77N3

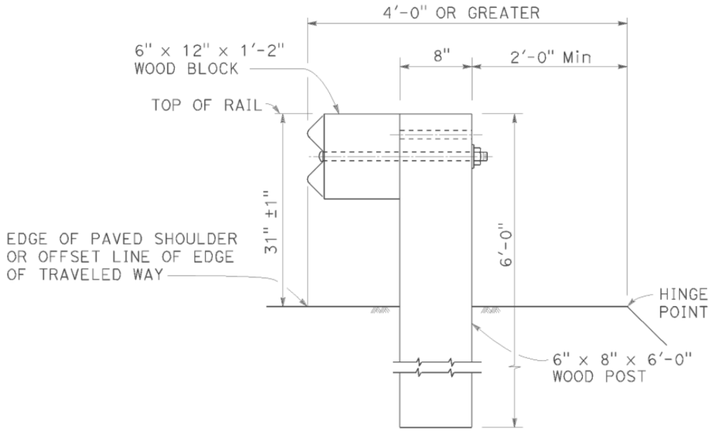

DETAIL A
TYPICAL ROADWAY INSTALLATION
See Note 1

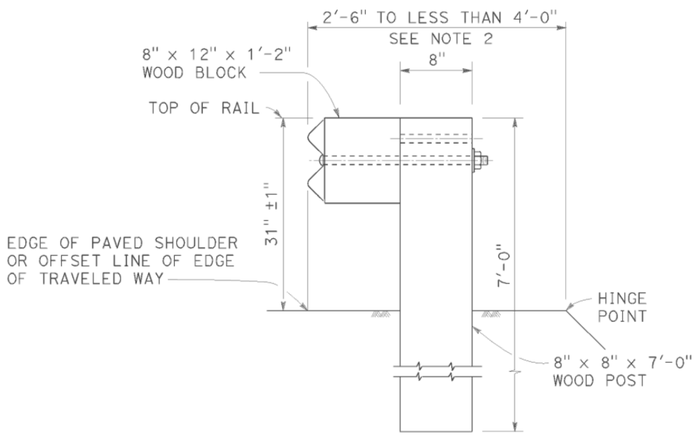

DETAIL B
NARROW ROADWAY INSTALLATION
See Note 1

POST EMBEDMENT

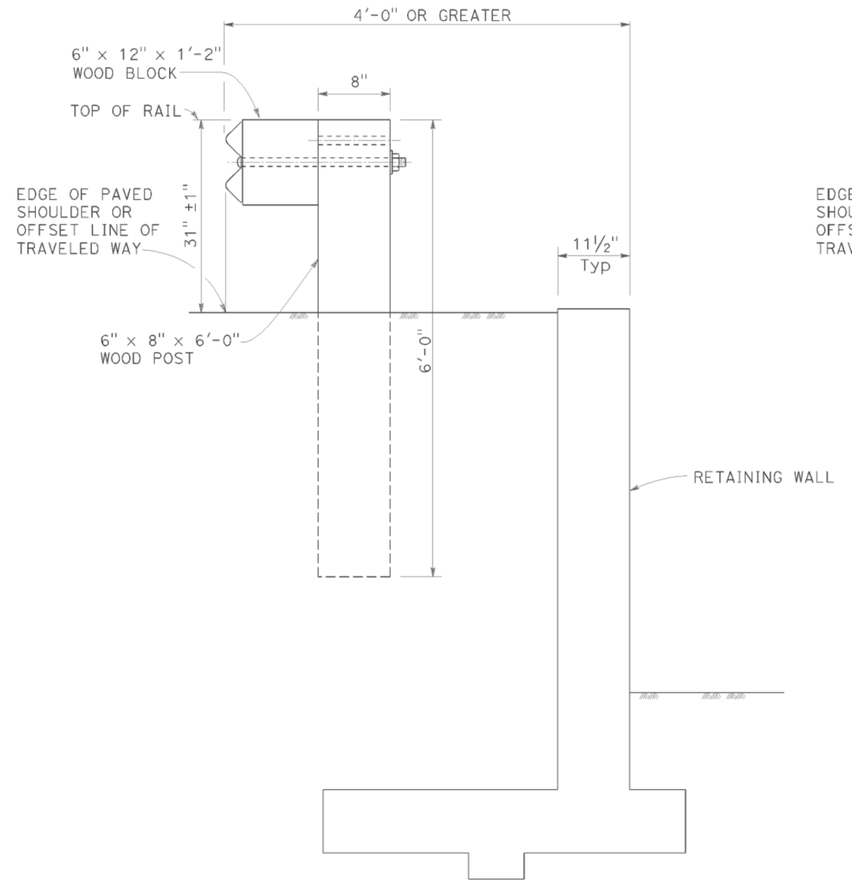

DETAIL C

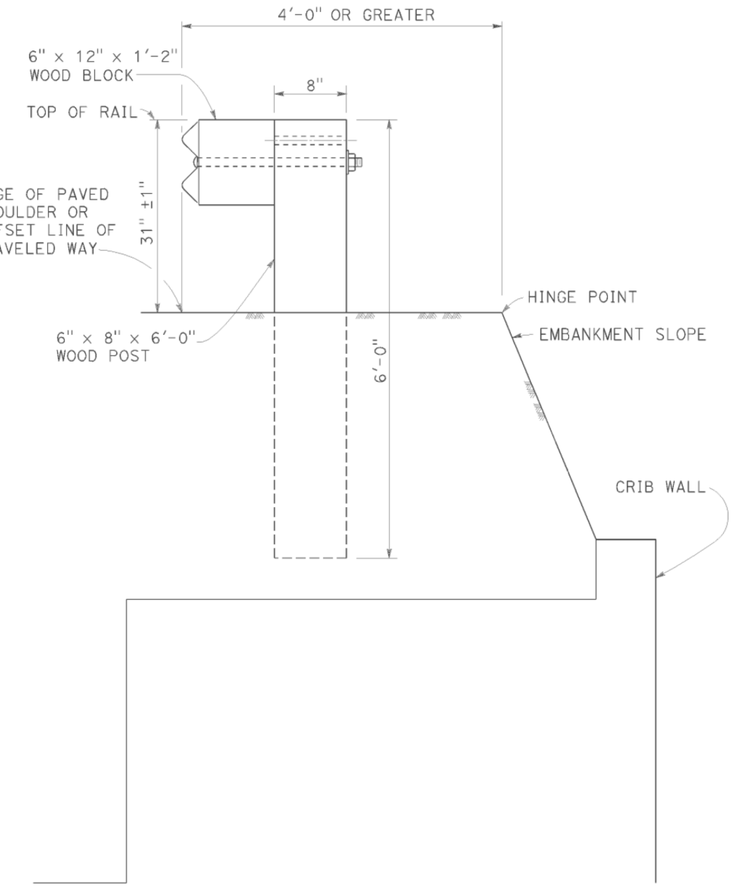

DETAIL D

INSTALLATION AT EARTH RETAINING WALLS

NOTES:

1. These installation details also applicable to steel line post installations. For Detail A, C, and D, where steel line post installations are constructed, W6 x 8.5 or W6 x 9 steel post, 6'-0" in length, with 6" x 12" x 1'-2" notched wood blocks or notched recycled plastic blocks are to be used in place of the size of wood post and wood block shown. For Detail B, where steel line post installations are constructed, W6 x 15 steel post, 8'-0" in length, with 8" x 12" x 1'-2" notched wood blocks or notched recycled plastic blocks are to be used in place of the size of wood post and wood block shown. For additional installation details, see Revised Standard Plan RSP A77L1 and RSP A77L2.
2. Where the distance between the face of the rail and the hinge point is less than 2'-6", see the Project Plans for special details.
3. For dike positioning with MGS installations, see Revised Standard Plan RSP A77N4.

STATE OF CALIFORNIA
DEPARTMENT OF TRANSPORTATION

MIDWEST GUARDRAIL SYSTEM TYPICAL LINE POST EMBEDMENT AND HINGE POINT OFFSET DETAILS

NO SCALE

RSP A77N3 DATED NOVEMBER 15, 2013 SUPERSEDES RSP A77N3 DATED JULY 19, 2013 THAT SUPPLEMENTS THE STANDARD PLANS BOOK DATED 2010.

REVISED STANDARD PLAN RSP A77N3

DATE PLOTTED => 13-AUG-2014
TIME PLOTTED => 11:59

Dist	COUNTY	ROUTE	POST MILES TOTAL PROJECT	SHEET No.	TOTAL SHEETS
02	Tri	3	R26.2	14	16

Randell D. Hiatt
REGISTERED CIVIL ENGINEER

July 19, 2013
PLANS APPROVAL DATE

REGISTERED PROFESSIONAL ENGINEER
Randell D. Hiatt
No. C50200
Exp. 6-30-15
CIVIL
STATE OF CALIFORNIA

THE STATE OF CALIFORNIA OR ITS OFFICERS OR AGENTS SHALL NOT BE RESPONSIBLE FOR THE ACCURACY OR COMPLETENESS OF SCANNED COPIES OF THIS PLAN SHEET.

TO ACCOMPANY PLANS DATED 07-02-14

2010 REVISED STANDARD PLAN RSP A77P2

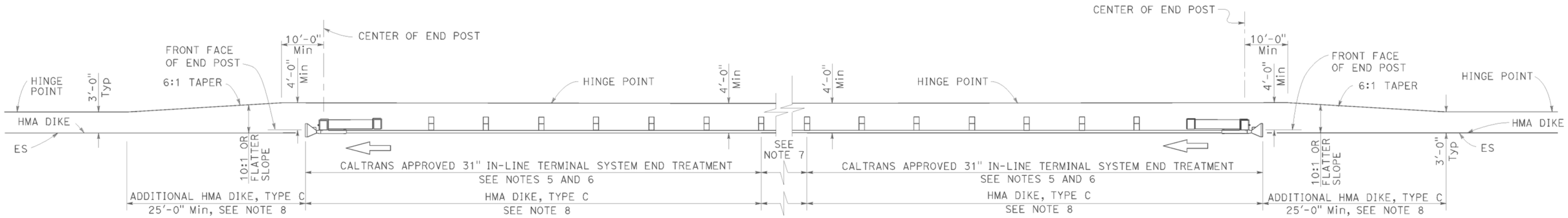

TYPE 11D LAYOUT

(Embankment MGS installation with
31" in-line end treatment at each end of railing)
See Note 4

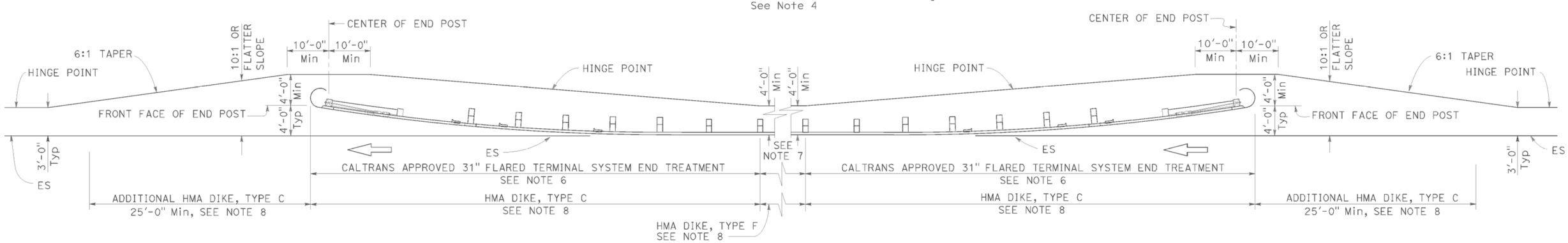

TYPE 11E LAYOUT

(Embankment MGS installation with
31" flared end treatment at each end of railing)
See Note 4

NOTES:

1. Line post, blocks and hardware to be used are shown on Revised Standard Plans RSP A77L1, RSP A77L2, RSP A77M1, RSP A77N1 and RSP A77N2.
2. MGS post spacing to be 6'-3" center to center, except as otherwise noted.
3. Except as noted, line posts are 6" x 8" x 6'-0" wood with 6" x 12" x 1'-2" wood blocks. W6 x 8.5 or W6 x 9 steel posts, 6'-0" in length, with 6" x 12" x 1'-2" notched wood blocks or plastic blocks may be used for 6" x 8" x 6'-0" wood post with 6" x 12" x 1'-2" wood blocks where applicable and when specified.
4. Layout Types 11D through 11L, shown on the A77P Series of Standard Plans, are typically used where MGS is recommended to shield embankment slopes and a crashworthy 31" end treatment is required for both directions of traffic.
5. 31" in-line terminal system end treatments are used where site conditions will not accommodate a flared end treatment.
6. The type of 31" terminal system end treatment to be used will be shown on the Project Plans.
7. Dependent on site conditions (embankment height and side slope), construction of additional MGS (length equal to multiples of 12'-6" with 6'-3" post spacing) may be advisable.
8. Where placement of dike is required with MGS installations, see Revised Standard Plan RSP A77N4 for dike positioning details.

STATE OF CALIFORNIA
DEPARTMENT OF TRANSPORTATION

MIDWEST GUARDRAIL SYSTEM TYPICAL LAYOUTS FOR EMBANKMENTS

NO SCALE

RSP A77P2 DATED JULY 19, 2013 SUPPLEMENTS THE STANDARD PLANS BOOK DATED 2010.

REVISED STANDARD PLAN RSP A77P2

DATE PLOTTED => 13-AUG-2014
TIME PLOTTED => 11:59

Dist	COUNTY	ROUTE	POST MILES TOTAL PROJECT	SHEET No.	TOTAL SHEETS
02	Tri	3	R26.2	15	16

REGISTERED CIVIL ENGINEER

July 19, 2013
PLANS APPROVAL DATE

REGISTERED PROFESSIONAL ENGINEER Gurinderpal Bhullar No. C48815 Exp. 9-30-14 CIVIL STATE OF CALIFORNIA

THE STATE OF CALIFORNIA OR ITS OFFICERS OR AGENTS SHALL NOT BE RESPONSIBLE FOR THE ACCURACY OR COMPLETENESS OF SCANNED COPIES OF THIS PLAN SHEET.

TO ACCOMPANY PLANS DATED 07-02-14

2010 REVISED STANDARD PLAN RSP T9

TABLE 1

TAPER LENGTH CRITERIA AND CHANNELIZING DEVICE SPACING

SPEED (S)	MINIMUM TAPER LENGTH * FOR WIDTH OF OFFSET 12 FEET (W)				MAXIMUM CHANNELIZING DEVICE SPACING		
					X	Y	Z **
	TANGENT 2L	MERGING L	SHIFTING L/2	SHOULDER L/3	TAPER	TANGENT	CONFLICT
mph	ft	ft	ft	ft	ft	ft	ft
20	160	80	40	27	20	40	10
25	250	125	63	42	25	50	12
30	360	180	90	60	30	60	15
35	490	245	123	82	35	70	17
40	640	320	160	107	40	80	20
45	1080	540	270	180	45	90	22
50	1200	600	300	200	50	100	25
55	1320	660	330	220	55	110	27
60	1440	720	360	240	60	120	30
65	1560	780	390	260	65	130	32
70	1680	840	420	280	70	140	35

* - For other offsets, use the following merging taper length formula for L:
For speed of 40 mph or less, $L = WS^2/60$
For speed of 45 mph or more, $L = WS$

Where: L = Taper length in feet
W = Width of offset in feet
S = Posted speed limit, off-peak 85th-percentile speed prior to work starting, or the anticipated operating speed in mph

** - Use for taper and tangent sections where there are no pavement markings or where there is a conflict between existing pavement markings and channelizers (CA).

TABLE 2

LONGITUDINAL BUFFER SPACE AND FLAGGER STATION SPACING

SPEED *	Min D **	DOWNGRADE Min D ***		
		-3%	-6%	-9%
mph	ft	ft	ft	ft
20	115	116	120	126
25	155	158	165	173
30	200	205	215	227
35	250	257	271	287
40	305	315	333	354
45	360	378	400	427
50	425	446	474	507
55	495	520	553	593
60	570	598	638	686
65	645	682	728	785
70	730	771	825	891

* - Speed is posted speed limit, off-peak 85th-percentile speed prior to work starting, or the anticipated operating speed in mph

** - Longitudinal buffer space or flagger station spacing

*** - Use on sustained downgrade steeper than -3 percent and longer than 1 mile.

TABLE 3

ADVANCE WARNING SIGN SPACING

ROAD TYPE	DISTANCE BETWEEN SIGNS *		
	A	B	C
	ft	ft	ft
URBAN - 25 mph OR LESS	100	100	100
URBAN - MORE THAN 25 mph TO 40 mph	250	250	250
URBAN - MORE THAN 40 mph	350	350	350
RURAL	500	500	500
EXPRESSWAY / FREEWAY	1000	1500	2640

* - The distances are approximate, are intended for guidance purposes only, and should be applied with engineering judgment. These distances should be adjusted by the Engineer for field conditions, if necessary, by increasing or decreasing the recommmended distances.

STATE OF CALIFORNIA
DEPARTMENT OF TRANSPORTATION

TRAFFIC CONTROL SYSTEM TABLES FOR LANE AND RAMP CLOSURES

NO SCALE

RSP T9 DATED JULY 19, 2013 SUPERSEDES RSP T9 DATED APRIL 19, 2013 THAT SUPPLEMENTS THE STANDARD PLANS BOOK DATED 2010.

REVISED STANDARD PLAN RSP T9

DATE PLOTTED => 13-AUG-2014
TIME PLOTTED => 11:59

Dist	COUNTY	ROUTE	POST MILES TOTAL PROJECT	SHEET No.	TOTAL SHEETS
02	Tri	3	R26.2	16	16

REGISTERED CIVIL ENGINEER

July 18, 2014
PLANS APPROVAL DATE

REGISTERED PROFESSIONAL ENGINEER Gurinderpal Bhullar No. C48815 Exp. 9-30-14 CIVIL STATE OF CALIFORNIA

THE STATE OF CALIFORNIA OR ITS OFFICERS OR AGENTS SHALL NOT BE RESPONSIBLE FOR THE ACCURACY OR COMPLETENESS OF SCANNED COPIES OF THIS PLAN SHEET.

TO ACCOMPANY PLANS DATED 07-02-14

NOTES:

See Revised Standard Plan RSP T9 for tables.

Use cone spacing X for taper segment, Y for tangent segment or Z for conflict situations, as approriate, per Table 1, unless X, Y, or Z cone spacing is shown on this sheet.

Unless otherwise specified in the special provisions, all temporary warning signs shall have black legend on fluorescent orange background.

California codes are designated by (CA). Otherwise, Federal (MUTCD) codes are shown.

TYPICAL LANE CLOSURE WITH REVERSIBLE CONTROL

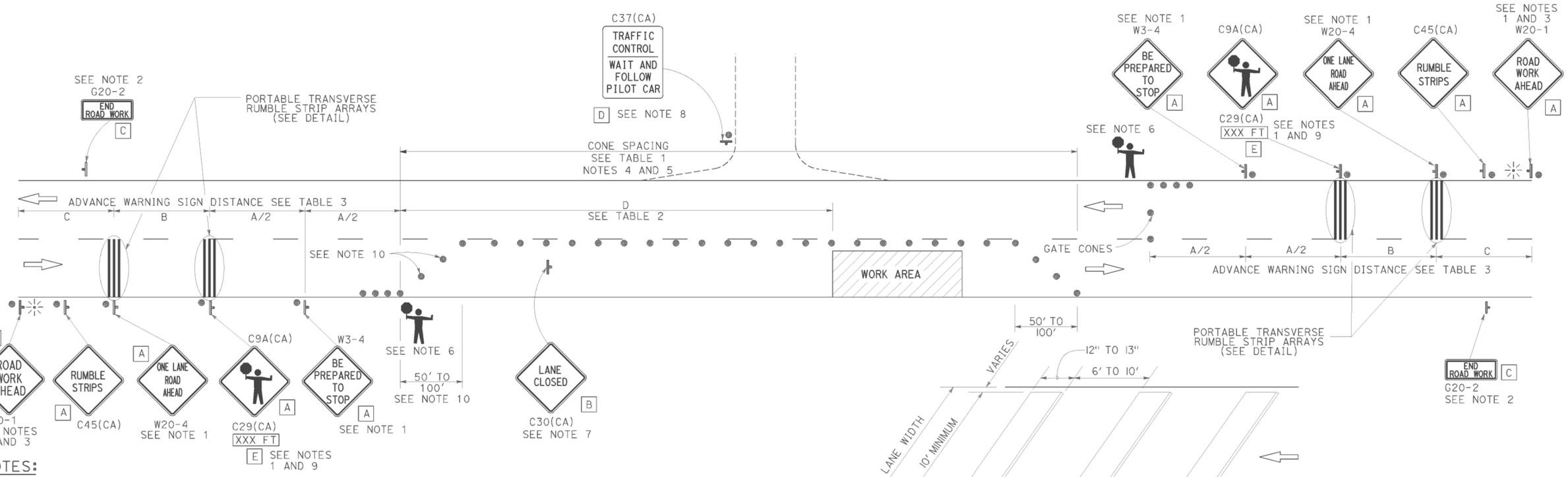

PORTABLE TRANSVERSE RUMBLE STRIP ARRAY DETAIL

NOTES:

1. Each advance warning sign in each direction of travel shall be equipped with at least two flags for daytime closure. Each flag shall be at least 16" x 16" in size and shall be orange or fluorescent red-orange in color. Flashing beacons shall be placed at the locations indicated for lane closure during hours of darkness.
2. A G20-2 "END ROAD WORK" sign, as appropriate, shall be placed at the end of the lane control unless the end of work area is obvious, or ends within a larger project's limits.
3. If the W20-1 sign would follow within 2000' of a stationary W20-1 or G20-1 "ROAD WORK NEXT _____ MILES", use a W20-4 sign for the first advance warning sign.
4. All cones used for lane closures during the hours of darkness shall be fitted with retroreflective bands (or sleeves) as specified in the specifications.
5. Portable delineators, placed at one-half the spacing indicated for traffic cones, may be used instead of cones for daytime closures only.
6. Additional advance flaggers may be required. Flagger should stand in a conspicuous place, be visible to approaching traffic as well as approaching vehicles after the first vehicle has stopped. During the hours of darkness, the flagging-station and flagger shall be illuminated and clearly visible to approaching traffic. The illumination footprint of the lighting on the ground shall be at least 20' in diameter. Place a minimum of four cones at 50' intervals in advance of flagger station as shown.
7. Place C30(CA) "LANE CLOSED" sign at 500' to 1000' intervals throughout extended work areas. They are optional if the work area is visible from the flagger station.
8. When a pilot car is used, place a C37(CA) "TRAFFIC CONTROL-WAIT AND FOLLOW PILOT CAR" sign with black legend on white background at all intersections, driveways and alleys without a flagger within traffic control area. Signs shall be clean and visible at all times. Where traffic can not be effectively self-regulated, at least one flagger shall be used at each intersection within traffic control area.
9. An optional C29(CA) sign may be placed below the C9A(CA) sign.
10. Either traffic cones or barricades shall be placed on the taper. Barricades shall be Type I, II, or III.
11. The color of the portable transverse rumble strips shall be black or orange. Use 2 arrays, each array shall consist of 3 rumble strips.
12. Portable transverse rumble strips shall not be placed on sharp horizontal or vertical curves nor shall they be placed through pedestrian crossings.
13. If the portable transverse rumble strips become out of alignment (skewed) by more than 6 inches, measured from one end to the other, they shall be readjusted to bring the placement back to the original location.

LEGEND

- TRAFFIC CONE
- TEMPORARY TRAFFIC CONTROL SIGN
- PORTABLE FLASHING BEACON
- FLAGGER

SIGN PANEL SIZE (Min)

A	48" x 48"
B	30" x 30"
C	36" x 18"
D	36" x 42"
E	20" x 7"

STATE OF CALIFORNIA
DEPARTMENT OF TRANSPORTATION

TRAFFIC CONTROL SYSTEM FOR LANE CLOSURE ON TWO LANE CONVENTIONAL HIGHWAYS

NO SCALE

RSP T13 DATED JULY 18, 2014 SUPERSEDES RSP T13 DATED APRIL 19, 2013 AND STANDARD PLAN T13 DATED MAY 20, 2011 - PAGE 241 OF THE STANDARD PLANS BOOK DATED 2010.

REVISED STANDARD PLAN RSP T13

2010 REVISED STANDARD PLAN RSP T13

DATE PLOTTED => 13-AUG-2014
TIME PLOTTED => 11:59