Dist	COUNTY	ROUTE	POST MILES TOTAL PROJECT	SHEET No.	TOTAL SHEETS
02	Plu	147	7.5/8.9	1	52

STATE OF CALIFORNIA

DEPARTMENT OF TRANSPORTATION

PROJECT PLANS FOR CONSTRUCTION ON

STATE HIGHWAY

IN PLUMAS COUNTY
ABOUT 7 MILES NORTH OF CANYON DAM
FROM 0.1 MILE NORTH OF COUNTY ROAD A-13
TO HAMILTON BRANCH BRIDGE

TO BE SUPPLEMENTED BY STANDARD PLANS DATED MAY 2010

INDEX OF PLANS

SHEET No.	DESCRIPTION
1	TITLE AND LOCATION MAP
2-3	TYPICAL CROSS SECTIONS
4-6	LAYOUTS
7-9	PROFILES AND SUPERELEVATION DIAGRAMS
10-15	CONSTRUCTION DETAILS
16-23	DRAINAGE PLANS
24	CONSTRUCTION AREA SIGNS
25-30	PAVEMENT DELINEATION PLANS
31-38	SIGN PLANS
39	SUMMARY OF QUANTITIES
40-52	REVISED STANDARD PLANS

THE STANDARD PLANS LIST APPLICABLE TO THIS CONTRACT IS INCLUDED IN THE NOTICE TO BIDDERS AND SPECIAL PROVISIONS BOOK.

LOCATION MAP

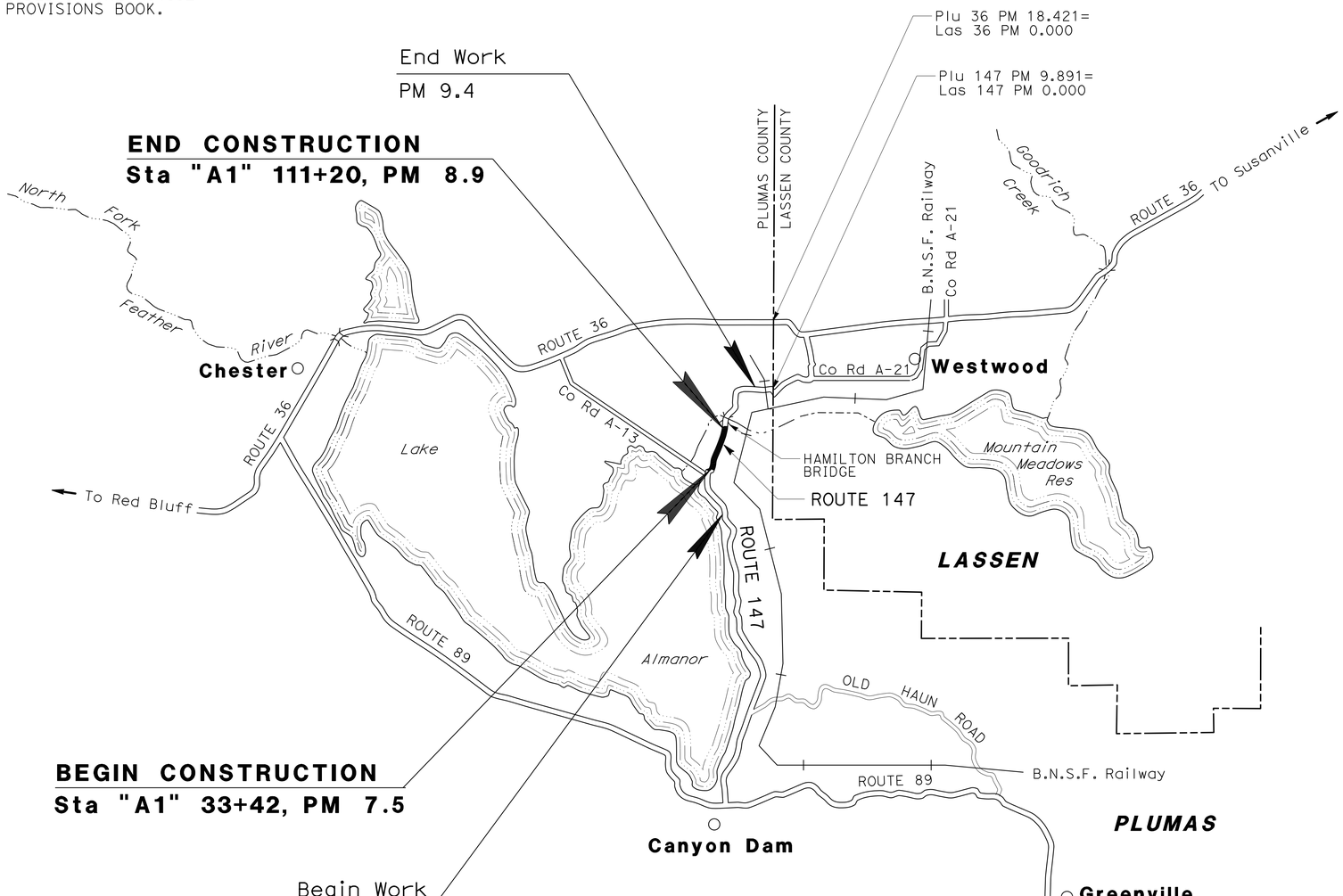

DRAFT CONTRACT REVIEW
NICKNAME-HAMILTON BRANCH ROADWAY REHAB
SPECS-BRANDON
REVIEWER-LINDA
QUANTITIES-LYNN H

Christopher Galantine 02-04-15
PROJECT ENGINEER REGISTERED CIVIL ENGINEER DATE

February 4, 2015
PLANS APPROVAL DATE

REGISTERED PROFESSIONAL ENGINEER CHRIS GALANTINE No. C52287 Exp. 12-31-16 CIVIL STATE OF CALIFORNIA

THE STATE OF CALIFORNIA OR ITS OFFICERS OR AGENTS SHALL NOT BE RESPONSIBLE FOR THE ACCURACY OR COMPLETENESS OF SCANNED COPIES OF THIS PLAN SHEET.

THE CONTRACTOR SHALL POSSESS THE CLASS (OR CLASSES) OF LICENSE AS SPECIFIED IN THE "NOTICE TO BIDDERS."

NO SCALE

CONTRACT No.	02-4F3904
PROJECT ID	0212000102

PROJECT MANAGER: ERIC ORR
DESIGN ENGINEER: JULIE CASEY

P:\proj\02\4F390_plans\pse\24f390ab001.dgn

LAST REVISION 02-11-15 | DATE PLOTTED => 23-FEB-2015 | TIME PLOTTED => 09:37

Dist	COUNTY	ROUTE	POST MILES TOTAL PROJECT	SHEET No.	TOTAL SHEETS
02	Plu	147	7.5/8.9	2	52

Christopher Galantine 02-04-15
REGISTERED CIVIL ENGINEER DATE

02-04-15
PLANS APPROVAL DATE

REGISTERED PROFESSIONAL ENGINEER CHRIS GALANTINE No. C52287 Exp. 12-31-16 CIVIL STATE OF CALIFORNIA

THE STATE OF CALIFORNIA OR ITS OFFICERS OR AGENTS SHALL NOT BE RESPONSIBLE FOR THE ACCURACY OR COMPLETENESS OF SCANNED COPIES OF THIS PLAN SHEET.

NOTES:

1. DIMENSIONS OF THE PAVEMENT STRUCTURES (STRUCTURAL SECTIONS) ARE SUBJECT TO TOLERANCES SPECIFIED IN THE STANDARD SPECIFICATIONS.
2. SUPERELEVATIONS ARE SHOWN ON THE SUPERELEVATION DIAGRAM.
3. PLACE A SAFETY EDGE REGARDLESS OF SHOULDER BACKING WIDTH, EXCEPT DRIVEWAYS.

ROUTE 147 DESIGN DESIGNATION

ADT (2015)	1403	D (2012)	61%
ADT (2035)	1423	T (2012)	10%
DHV (2035)	274	V	55 MPH
EAL (2035)	735,400	20-Yr TI	8.5

CLIMATE REGION:

HIGH MOUNTAIN

ABBREVIATIONS:

FDR-C	FULL DEPTH RECLAMATION-CEMENT
SE	SAFETY EDGE
(E)	EXISTING
Super	SUPERELEVATION

LEGEND:

1. Exist
   Var 0.45′ TO 1.15′ AC
   Var 0.33 TO 0.50′ AB
   Var 0 TO 0.50′ BASEMENT MATERIAL
4. 0.30′ SHOULDER BACKING
   Var DEPTH Emb 0.0′ TO 4.5′
5. 0.70′ HMA (TYPE A)
6. 0.15′ TO 0.30′ COLD PLANE AC
   0.30′ HMA (TYPE A)

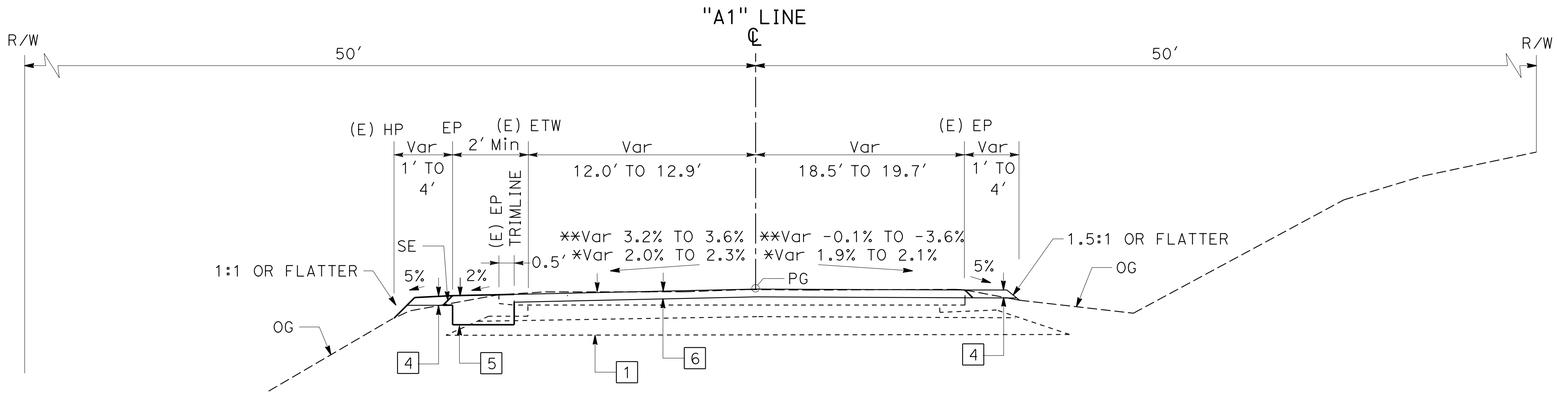

ROUTE 147
COLD PLANE CONFORMS

* "A1" 35+50 TO "A1" 36+70, L+ SHOULDER EXTENSION ONLY
** "A1" 110+00 TO "A1" 111+20, LT & R+ SHOULDER EXTENSION

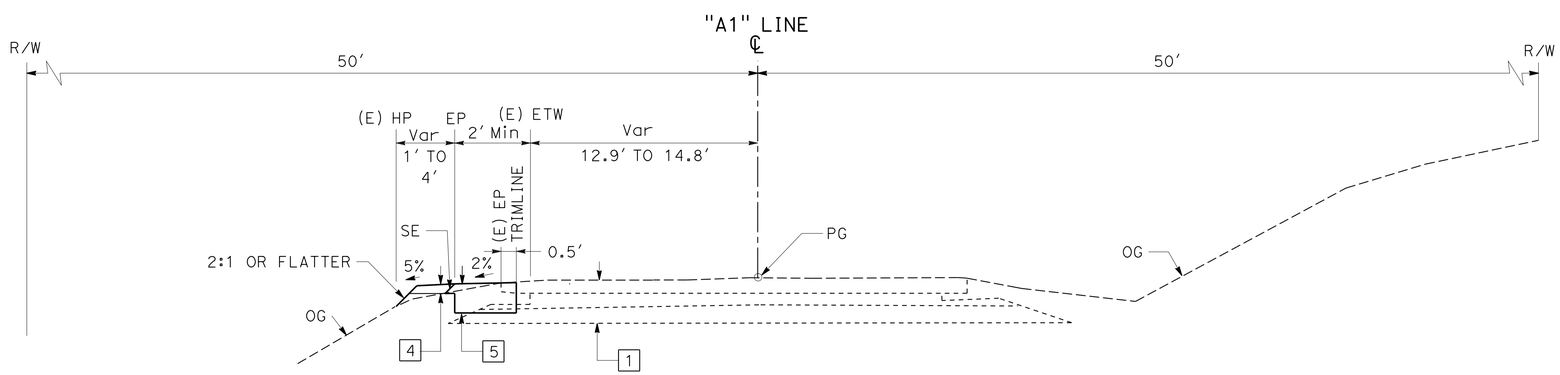

ROUTE 147
SHOULDER EXTENSION

"A1" 33+42 TO "A1" 35+50

TYPICAL CROSS SECTIONS

NO SCALE

X-1

STATE OF CALIFORNIA - DEPARTMENT OF TRANSPORTATION
Caltrans® DESIGN

FUNCTIONAL SUPERVISOR: JULIE CASEY
CALCULATED-DESIGNED BY: CHRIS GALANTINE
CHECKED BY: STEVE ALAWAR
REVISED BY
DATE REVISED

P:\proj1\02\4F390_plans\pse\24f390ca001.dgn

LAST REVISION 02-04-15
DATE PLOTTED => 23-FEB-2015
TIME PLOTTED => 09:37

Dist	COUNTY	ROUTE	POST MILES TOTAL PROJECT	SHEET No.	TOTAL SHEETS
02	Plu	147	7.5/8.9	3	52

Christopher Galantine 02-04-15
REGISTERED CIVIL ENGINEER DATE

02-04-15
PLANS APPROVAL DATE

REGISTERED PROFESSIONAL ENGINEER
CHRIS GALANTINE
No. C52287
Exp. 12-31-16
CIVIL
STATE OF CALIFORNIA

THE STATE OF CALIFORNIA OR ITS OFFICERS OR AGENTS SHALL NOT BE RESPONSIBLE FOR THE ACCURACY OR COMPLETENESS OF SCANNED COPIES OF THIS PLAN SHEET.

NOTES:

1. DIMENSIONS OF THE PAVEMENT STRUCTURES (STRUCTURAL SECTIONS) ARE SUBJECT TO TOLERANCES SPECIFIED IN THE STANDARD SPECIFICATIONS.
2. FDR-C DEPTH IS TO BE MEASURED FROM THE FINISHED GRADE FDR-C SURFACE PLANE.
3. EXCESS MATERIAL GENERATED BY THE FDR-C PULVERIZED MATERIAL EXPANSION, PROFILE CORRECTION, AND CROSS SLOPE CORRECTION, SHALL BE PLACED WHERE SHOWN.
4. EXCAVATE BEFORE THE FDR-C PROCESS.
5. PLACE A SAFETY EDGE REGARDLESS OF SHOULDER BACKING WIDTH, EXCEPT DRIVEWAYS.

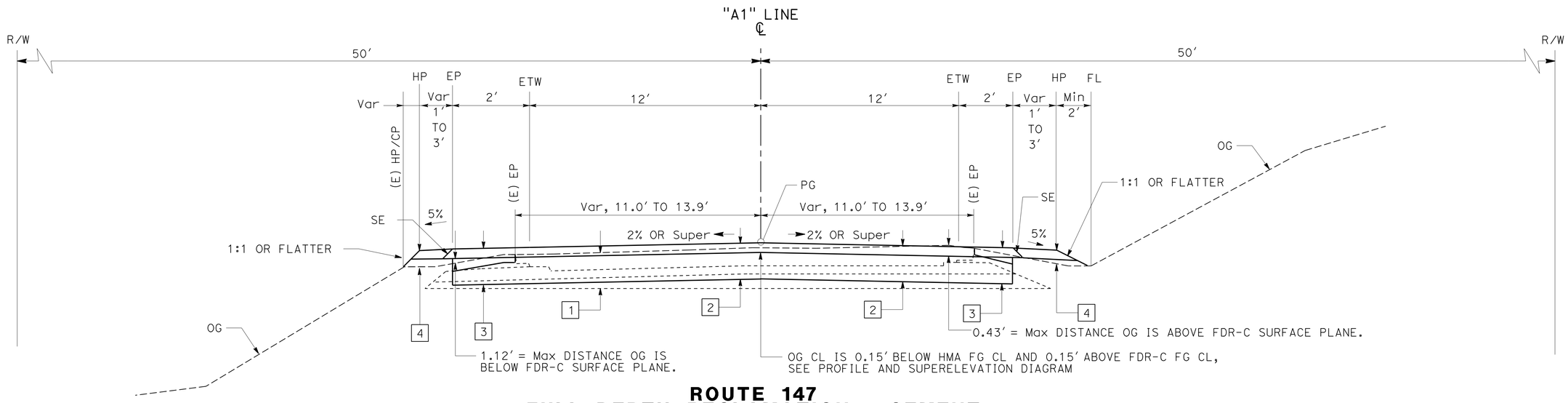

ROUTE 147
FULL DEPTH RECLAMATION - CEMENT
"A1" 36+70 TO "A1" 110+00

LEGEND:

1 — Exist
Var 0.45′ TO 1.15′ AC
Var 0.33 TO 0.50′ AB
Var 0 TO 0.50′ BASEMENT MATERIAL

2 — 0.30′ HMA (TYPE A)
0.85′ Min FDR-C

3 — 0.30′ HMA (TYPE A)
0.85′ Min FDR-C
0.25′ Rdwy Exc (SEE NOTE 4)

4 — 0.30′ SHOULDER BACKING
Var DEPTH Emb 0.0′ TO 4.5′

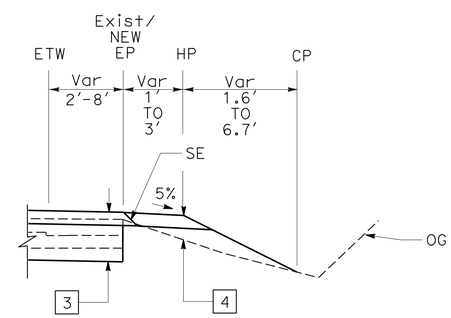

"A1" 36+70 Rt TO "A1" 42+00 Rt

TYPICAL CROSS SECTIONS
NO SCALE

X-2

STATE OF CALIFORNIA - DEPARTMENT OF TRANSPORTATION
DESIGN
Caltrans®

FUNCTIONAL SUPERVISOR: JULIE CASEY
CALCULATED-DESIGNED BY: CHRIS GALANTINE
CHECKED BY: STEVE ALAWAR
REVISED BY
DATE REVISED

P:\proj1\02\4F390_plans\pse\24f390ca002.dgn

LAST REVISION 02-04-15
DATE PLOTTED => 23-FEB-2015
TIME PLOTTED => 09:37

BORDER LAST REVISED 7/2/2010
USERNAME => s115152
DGN FILE => 24f390ca002.dgn
RELATIVE BORDER SCALE IS IN INCHES 0 1 2 3
UNIT 0318
PROJECT NUMBER & PHASE 02-1200-0102-1
EA 02-4F3901

Dist	COUNTY	ROUTE	POST MILES TOTAL PROJECT	SHEET No.	TOTAL SHEETS
02	Plu	147	7.5/8.9	4	52

Christopher Galantine 02-04-15
REGISTERED CIVIL ENGINEER DATE

02-04-15
PLANS APPROVAL DATE

REGISTERED PROFESSIONAL ENGINEER CHRIS GALANTINE No. C52287 Exp. 12-31-16 CIVIL STATE OF CALIFORNIA

THE STATE OF CALIFORNIA OR ITS OFFICERS OR AGENTS SHALL NOT BE RESPONSIBLE FOR THE ACCURACY OR COMPLETENESS OF SCANNED COPIES OF THIS PLAN SHEET.

NOTE:

1. FOR ACCURATE RIGHT OF WAY DATA, CONTACT RIGHT OF WAY ENGINEERING AT THE DISTRICT OFFICE.

LEGEND:

- COLD PLANE HMA
- PEC — PERMIT TO ENTER AND CONSTRUCT
- TCE — Temp CONSTRUCTION EASEMENT

CURVE DATA

No. (#)	R	Δ	T	L
1A	7640.0′	11°14′59″	752.45′	1500.06′

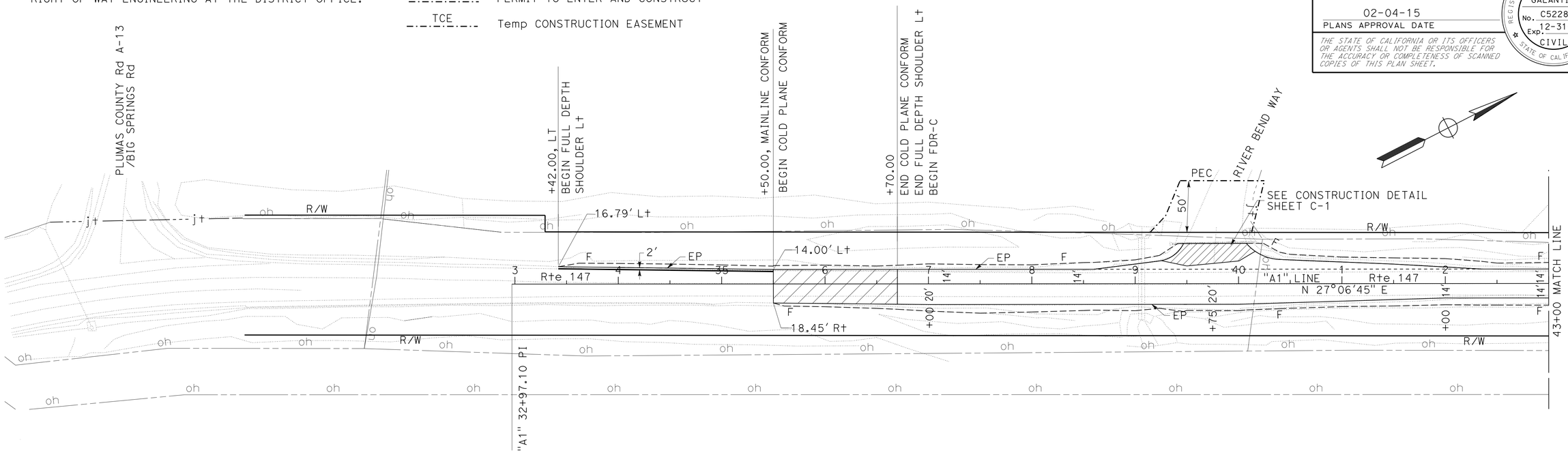

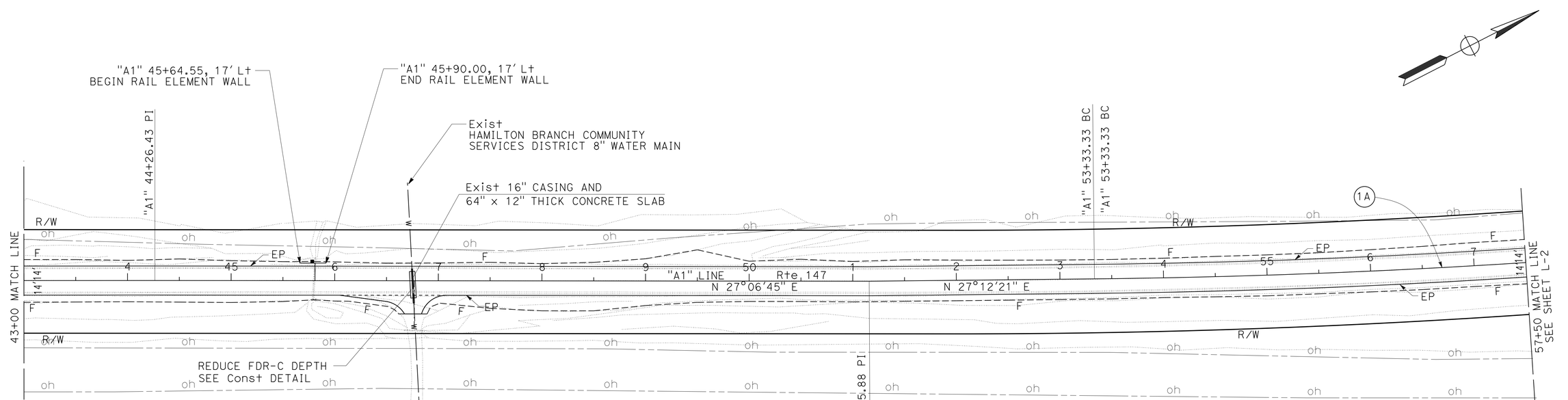

LAYOUT

SCALE: 1" = 50′

L-1

REVISED BY | DATE REVISED
CHRIS GALANTINE | STEVE ALAWAR
CALCULATED-DESIGNED BY | CHECKED BY
FUNCTIONAL SUPERVISOR: JULIE CASEY

STATE OF CALIFORNIA - DEPARTMENT OF TRANSPORTATION
Caltrans® DESIGN

P:\proj1\02\4F390_plans\pse\24f390ea001.dgn

LAST REVISION 02-04-15 | DATE PLOTTED => 23-FEB-2015 | TIME PLOTTED => 09:37

Dist	COUNTY	ROUTE	POST MILES TOTAL PROJECT	SHEET No.	TOTAL SHEETS
02	Plu	147	7.5/8.9	5	52

Christopher Galantine 02-04-15
REGISTERED CIVIL ENGINEER DATE

02-04-15
PLANS APPROVAL DATE

REGISTERED PROFESSIONAL ENGINEER
CHRIS GALANTINE
No. C52287
Exp. 12-31-16
CIVIL
STATE OF CALIFORNIA

THE STATE OF CALIFORNIA OR ITS OFFICERS OR AGENTS SHALL NOT BE RESPONSIBLE FOR THE ACCURACY OR COMPLETENESS OF SCANNED COPIES OF THIS PLAN SHEET.

NOTE:

1. FOR ACCURATE RIGHT OF WAY DATA, CONTACT RIGHT OF WAY ENGINEERING AT THE DISTRICT OFFICE.

CURVE DATA

No. ⊕	R	Δ	T	L
1A	7640.0	11°14'59"	752.45	1500.06
1B	10000.0	01°20'05"	116.49	232.96
1C	7865.0	08°27'22"	581.45	1160.79
2A	20000.0	01°27'42"	255.11	510.19

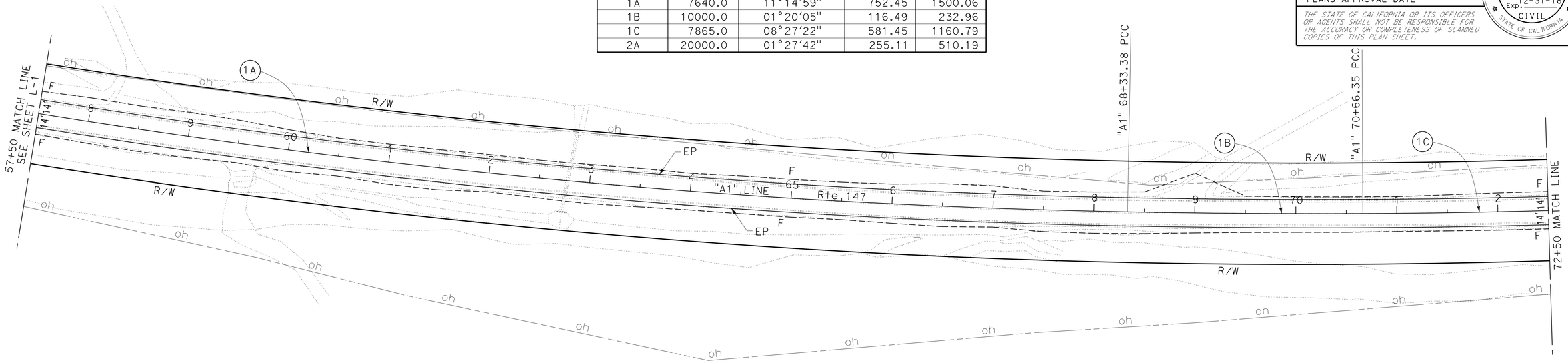

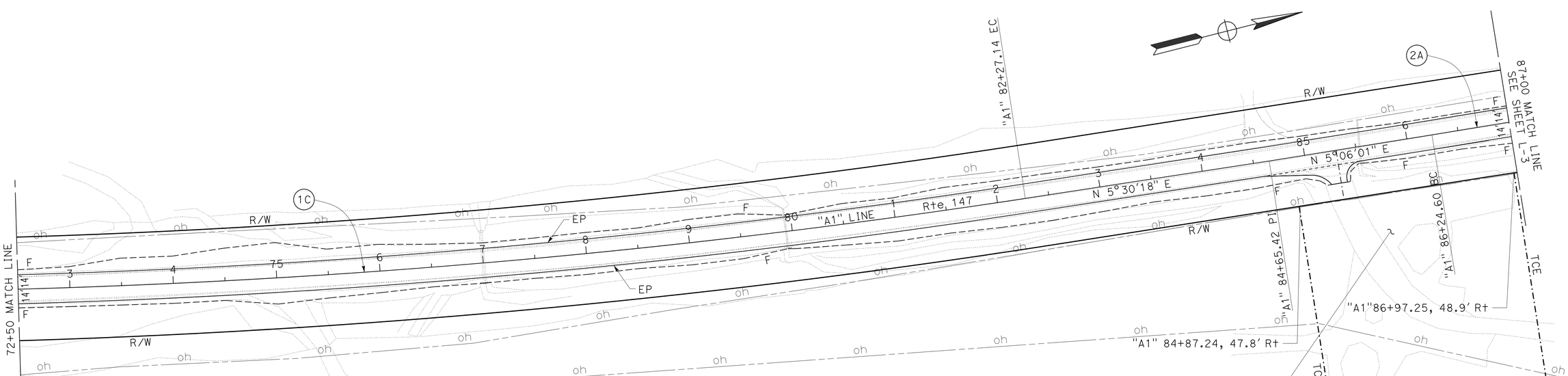

LAYOUT
SCALE: 1" = 50'

L-2

REVISED BY	DATE REVISED
CHRIS GALANTINE	STEVE ALAWAR
CALCULATED-DESIGNED BY	CHECKED BY
FUNCTIONAL SUPERVISOR	JULIE CASEY

STATE OF CALIFORNIA - DEPARTMENT OF TRANSPORTATION
Caltrans
DESIGN

P:\proj1\02\4F390_plans\pse\24f390ea002.dgn

LAST REVISION 02-04-15 | DATE PLOTTED => 23-FEB-2015 | TIME PLOTTED => 09:37

Dist	COUNTY	ROUTE	POST MILES TOTAL PROJECT	SHEET No.	TOTAL SHEETS
02	Plu	147	7.5/8.9	6	52

Christopher Galantine 02-04-15
REGISTERED CIVIL ENGINEER DATE

02-04-15
PLANS APPROVAL DATE

REGISTERED PROFESSIONAL ENGINEER
CHRIS GALANTINE
No. C52287
Exp. 12-31-16
CIVIL
STATE OF CALIFORNIA

THE STATE OF CALIFORNIA OR ITS OFFICERS OR AGENTS SHALL NOT BE RESPONSIBLE FOR THE ACCURACY OR COMPLETENESS OF SCANNED COPIES OF THIS PLAN SHEET.

NOTE:

1. FOR ACCURATE RIGHT OF WAY DATA, CONTACT RIGHT OF WAY ENGINEERING AT THE DISTRICT OFFICE.

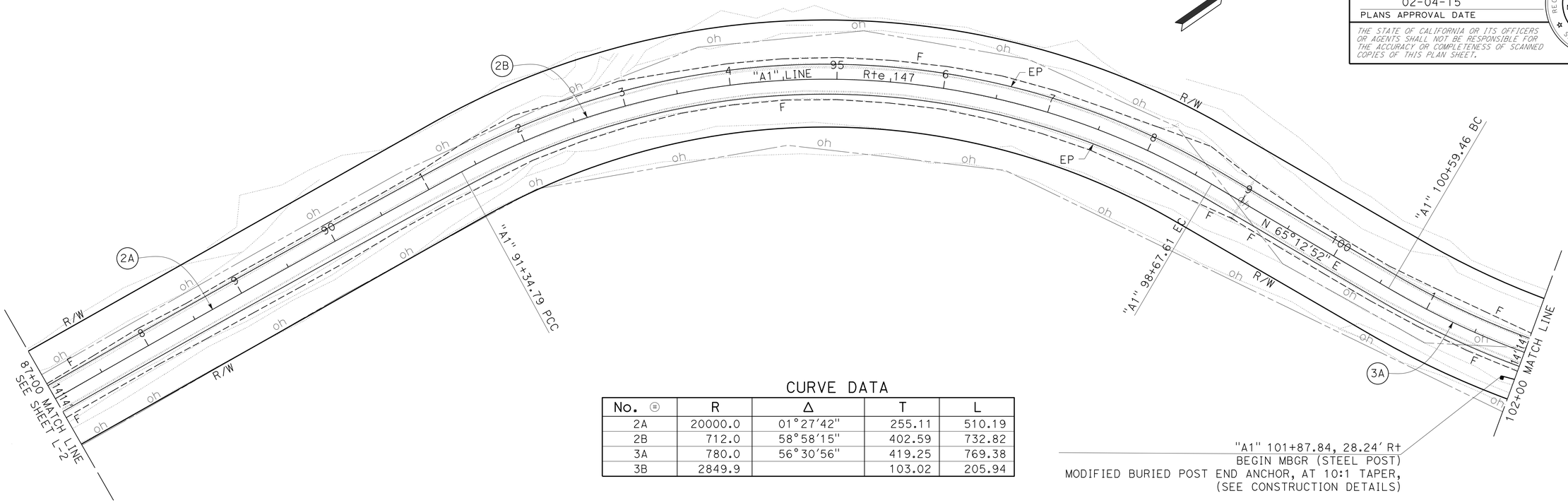

CURVE DATA

No.	R	Δ	T	L
2A	20000.0	01°27'42"	255.11	510.19
2B	712.0	58°58'15"	402.59	732.82
3A	780.0	56°30'56"	419.25	769.38
3B	2849.9		103.02	205.94

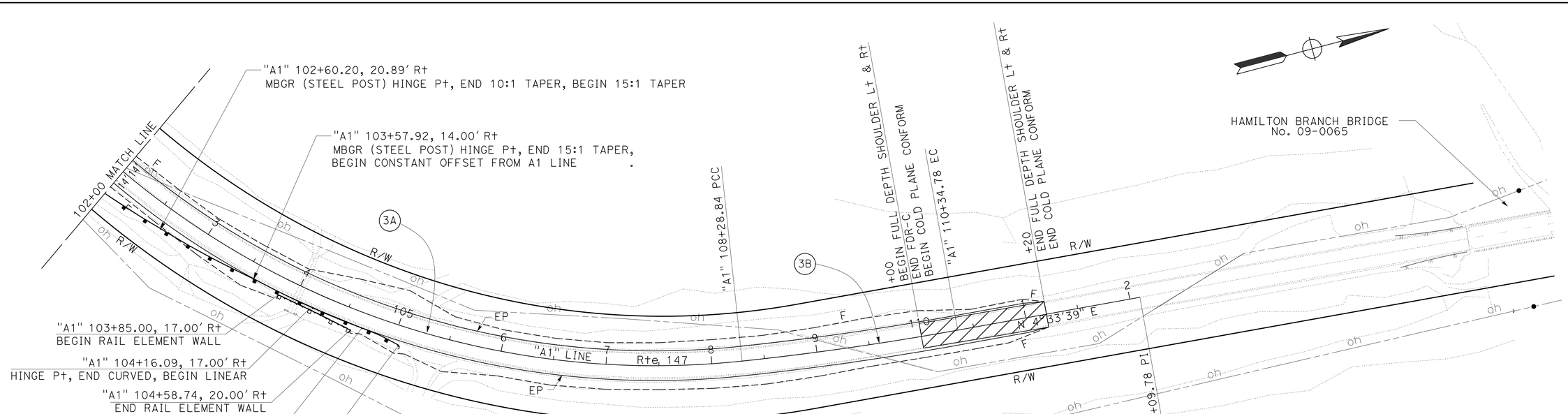

LAYOUT
SCALE: 1" = 50'

L-3

REVISED BY | DATE REVISED
CHRIS GALANTINE | STEVE ALAWAR
CALCULATED-DESIGNED BY | CHECKED BY
FUNCTIONAL SUPERVISOR: JULIE CASEY

STATE OF CALIFORNIA - DEPARTMENT OF TRANSPORTATION
Caltrans
DESIGN

P:\proj1\02\4F390_plans\pse\24f390ea003.dgn

LAST REVISION | DATE PLOTTED => 23-FEB-2015
02-04-15 | TIME PLOTTED => 09:37

Dist	COUNTY	ROUTE	POST MILES TOTAL PROJECT	SHEET No.	TOTAL SHEETS
02	Plu	147	7.5/8.9	7	52

Christopher Galantine 02-04-15
REGISTERED CIVIL ENGINEER DATE

02-04-15
PLANS APPROVAL DATE

REGISTERED PROFESSIONAL ENGINEER
CHRIS GALANTINE
No. C52287
Exp. 12-31-16
CIVIL
STATE OF CALIFORNIA

THE STATE OF CALIFORNIA OR ITS OFFICERS OR AGENTS SHALL NOT BE RESPONSIBLE FOR THE ACCURACY OR COMPLETENESS OF SCANNED COPIES OF THIS PLAN SHEET.

NOTE:

1. "Exc" LISTED AT BOTTOM OF SHEET IS ROADWAY EXCAVATION ONLY. FOR EXCESS EXCAVATION FROM FDR-C EXPANSION, PROFILE CHANGE, AND CROSS SLOPE CORRECTION, SEE SUMMARY OF QUANTITY TABLE.

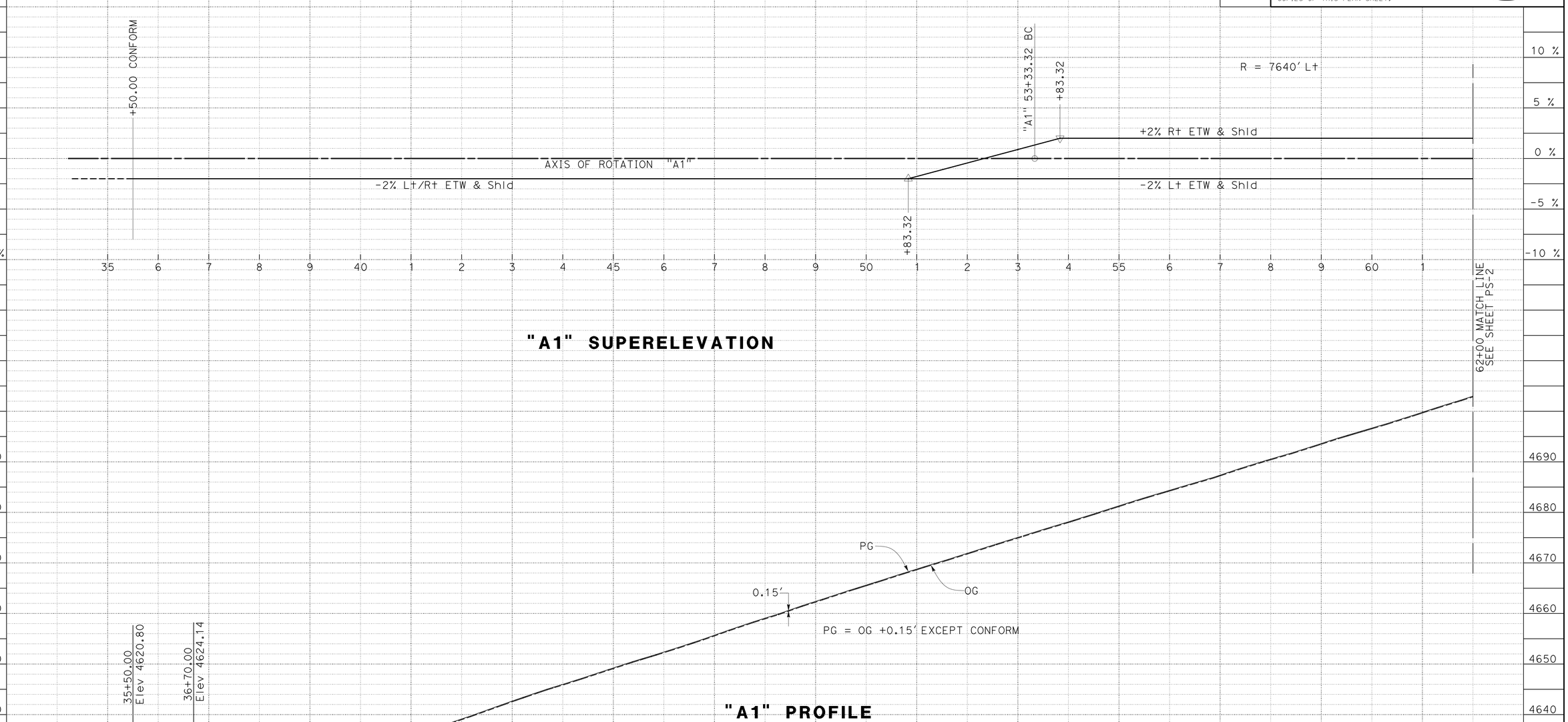

PROFILE AND SUPERELEVATION DIAGRAM

SCALE: 1" = 100' Horiz
1" = 10' Vert

PS-1

STATION		35	6	7	8	9	40	1	2	3	4	45	6	7	8	9	50	1	2	3	4	55	6	7	8	9	60	1	2	TOTAL
CY	Exc	53.1					19.6					38.9					27.7					15.4					6.3		
	Emb	25.9					105.0					97.2					111.0					191.7					42.3		

REVISED BY | DATE REVISED
CHRIS GALANTINE | STEVE ALAWAR
CALCULATED-DESIGNED BY | CHECKED BY
FUNCTIONAL SUPERVISOR: JULIE CASEY

STATE OF CALIFORNIA - DEPARTMENT OF TRANSPORTATION
Caltrans® DESIGN

P:\proj1\02\4F390_plans\pse\24f390fb001.dgn

LAST REVISION 02-04-15 | DATE PLOTTED => 23-FEB-2015 | TIME PLOTTED => 09:37

Dist	COUNTY	ROUTE	POST MILES TOTAL PROJECT	SHEET No.	TOTAL SHEETS
02	Plu	147	7.5/8.9	8	52

Christopher Galantine 02-04-15
REGISTERED CIVIL ENGINEER DATE

02-04-15
PLANS APPROVAL DATE

REGISTERED PROFESSIONAL ENGINEER
CHRIS GALANTINE
No. C52287
Exp. 12-31-16
CIVIL
STATE OF CALIFORNIA

THE STATE OF CALIFORNIA OR ITS OFFICERS OR AGENTS SHALL NOT BE RESPONSIBLE FOR THE ACCURACY OR COMPLETENESS OF SCANNED COPIES OF THIS PLAN SHEET.

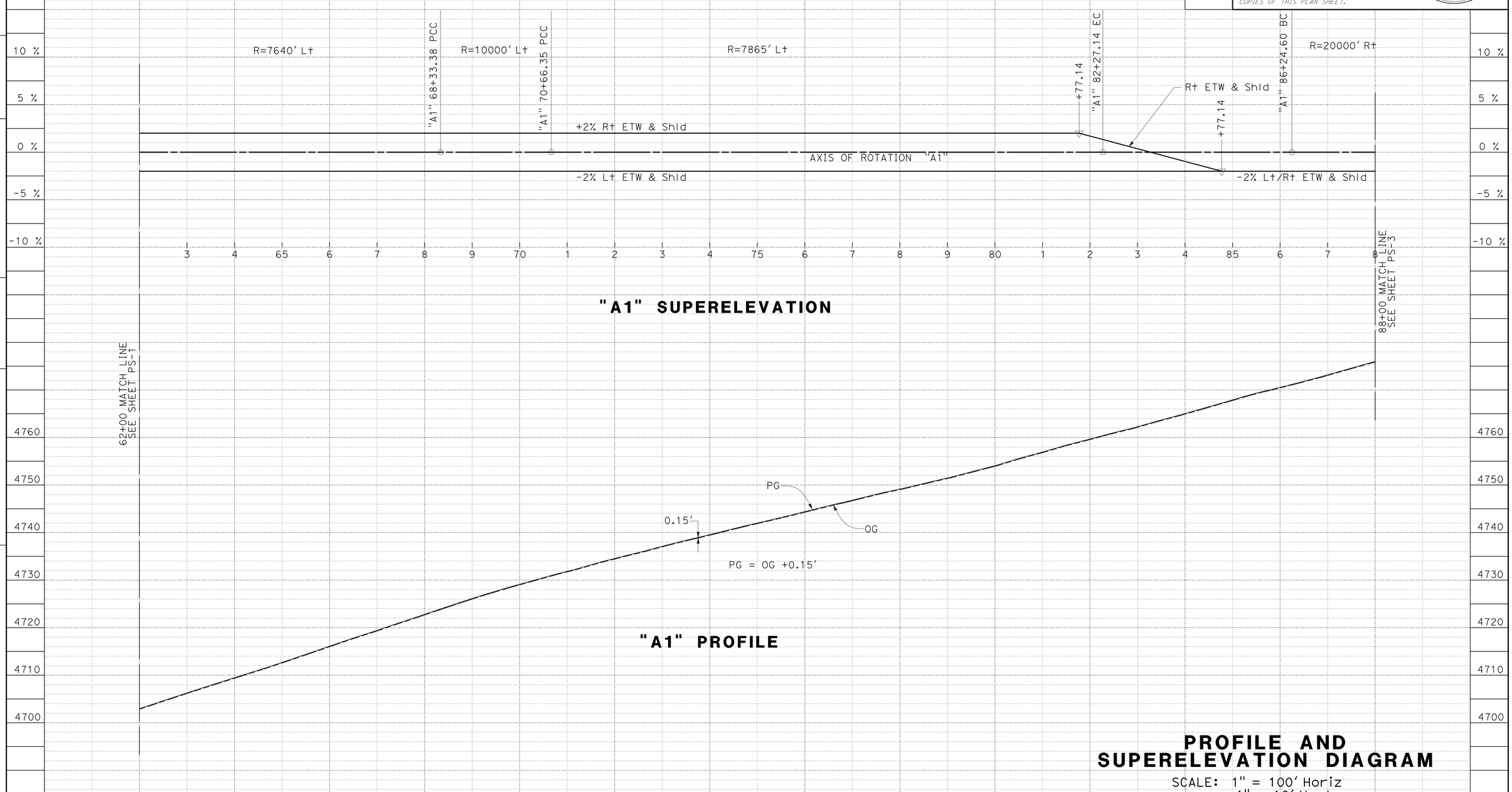

PROFILE AND SUPERELEVATION DIAGRAM

SCALE: 1" = 100' Horiz
1" = 10' Vert

PS-2

STATION		2	3	4	65	6	7	8	9	70	1	2	3	4	75	6	7	8	9	80	1	2	3	4	85	6	7	8	TOTAL
CY	Exc	8.5			14.0					14.9					16.1					18.0					26.0				
	Emb	60.6			149.4					106.4					118.7					83.3					7.5				

REVISED BY | DATE REVISED
CHRIS GALANTINE | STEVE ALAWAR
CALCULATED-DESIGNED BY | CHECKED BY
FUNCTIONAL SUPERVISOR | JULIE CASEY
STATE OF CALIFORNIA - DEPARTMENT OF TRANSPORTATION
Caltrans DESIGN
P:\proj1\02\4F390_plans\pse\24f390fb002.dgn

LAST REVISION DATE PLOTTED => 23-FEB-2015
TIME PLOTTED => 09:37
02-04-15

Dist	COUNTY	ROUTE	POST MILES TOTAL PROJECT	SHEET No.	TOTAL SHEETS
02	Plu	147	7.5/8.9	9	52

Christopher Galantine 02-04-15
REGISTERED CIVIL ENGINEER DATE

02-04-15
PLANS APPROVAL DATE

REGISTERED PROFESSIONAL ENGINEER CHRIS GALANTINE No. C52287 Exp. 12-31-16 CIVIL STATE OF CALIFORNIA

THE STATE OF CALIFORNIA OR ITS OFFICERS OR AGENTS SHALL NOT BE RESPONSIBLE FOR THE ACCURACY OR COMPLETENESS OF SCANNED COPIES OF THIS PLAN SHEET.

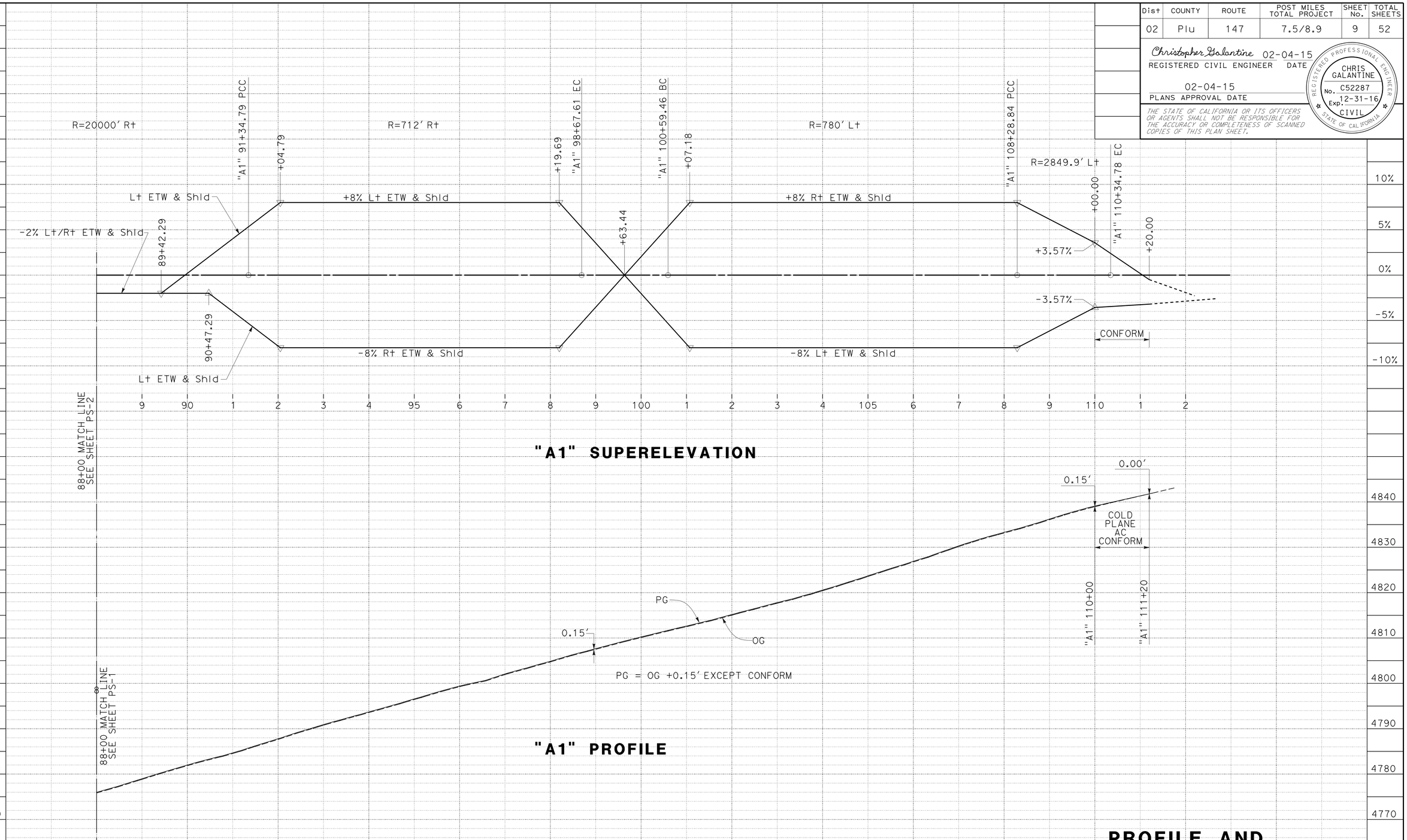

PROFILE AND SUPERELEVATION DIAGRAM

SCALE: 1" = 100' Horiz
1" = 10' Vert

PS-3

REVISED BY | DATE REVISED
CHRIS GALANTINE | STEVE ALAWAR
CALCULATED-DESIGNED BY | CHECKED BY
FUNCTIONAL SUPERVISOR: JULIE CASEY

STATE OF CALIFORNIA - DEPARTMENT OF TRANSPORTATION
Caltrans
DESIGN

P:\proj1\02\4F390_plans\pse\24f390fb003.dgn

LAST REVISION 02-04-15 | DATE PLOTTED => 23-FEB-2015 | TIME PLOTTED => 09:37

BORDER LAST REVISED 7/2/2010 | USERNAME => s115152 | DGN FILE => 24f390fb003.dgn | RELATIVE BORDER SCALE IS IN INCHES 0 1 2 3 | UNIT 0318 | PROJECT NUMBER & PHASE 02-1200-0102-1 | EA 02-4F3901

Dist	COUNTY	ROUTE	POST MILES TOTAL PROJECT	SHEET No.	TOTAL SHEETS
02	Plu	147	7.5/8.9	10	52

Christopher Galantine 02-04-15
REGISTERED CIVIL ENGINEER DATE

02-04-15
PLANS APPROVAL DATE

REGISTERED PROFESSIONAL ENGINEER CHRIS GALANTINE No. C52287 Exp. 12-31-16 CIVIL STATE OF CALIFORNIA

THE STATE OF CALIFORNIA OR ITS OFFICERS OR AGENTS SHALL NOT BE RESPONSIBLE FOR THE ACCURACY OR COMPLETENESS OF SCANNED COPIES OF THIS PLAN SHEET.

NOTE:

1. SHOULDER BACKING TO BE USED ALONG ROAD CONNECTIONS

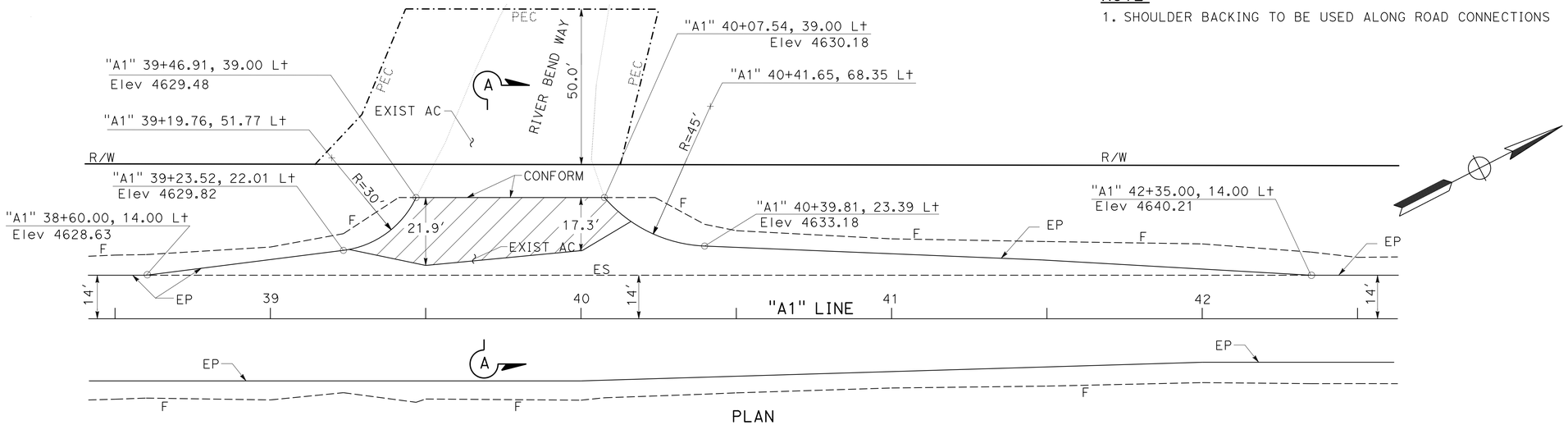

PLAN

ROAD CONNECTION, PM 7.57

SCALE: 1" = 20'

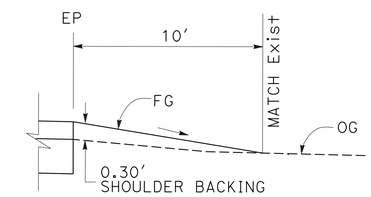

DIRT ROAD WITHOUT ANY PAVING CONFORM (Typ)

NO SCALE

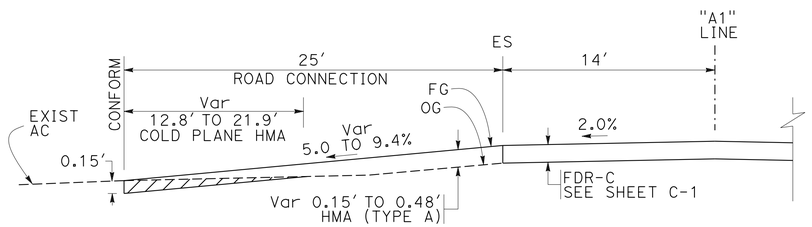

SECTION A-A

NO SCALE

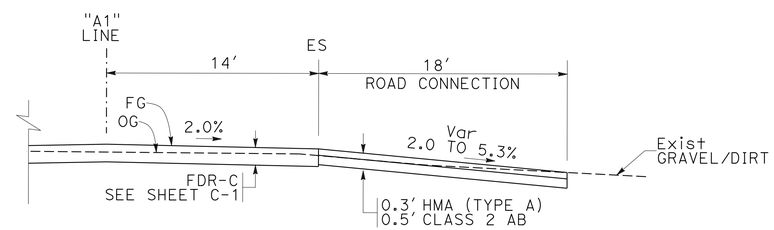

SECTION B-B

NO SCALE

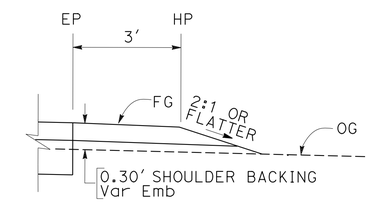

SHOULDER BACKING ALONG PAVED ROAD CONNECTION (Typ)

NO SCALE

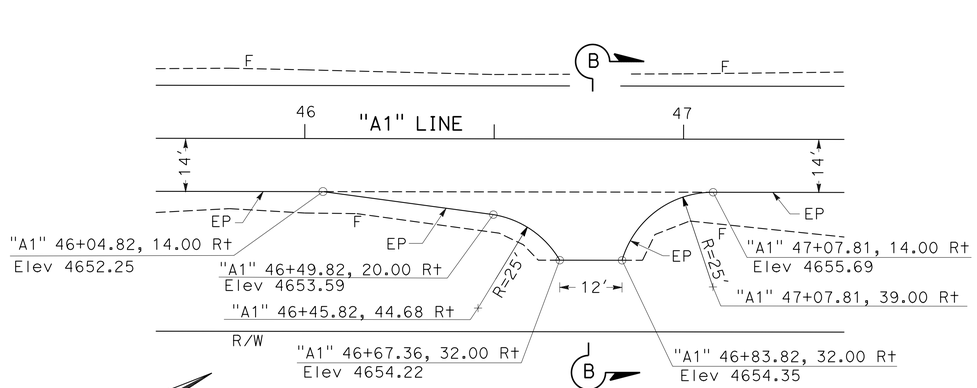

PLAN

ROAD CONNECTION, PM 7.70

SCALE: 1" = 20'

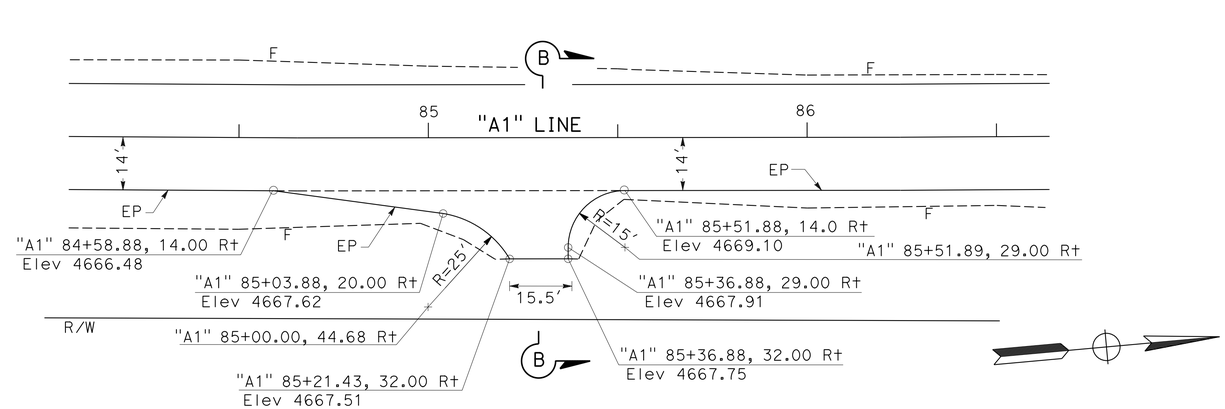

PLAN

ROAD CONNECTION, PM 8.43

SCALE: 1" = 20'

CONSTRUCTION DETAILS

SCALE: AS SHOWN

C-1

REVISED BY | DATE REVISED
CHRIS GALANTINE | STEVE ALAWAR
CALCULATED-DESIGNED BY | CHECKED BY
FUNCTIONAL SUPERVISOR: JULIE CASEY

STATE OF CALIFORNIA - DEPARTMENT OF TRANSPORTATION
Caltrans
DESIGN

P:\proj1\02\4F390_plans\pse\24f390ga001.dgn

LAST REVISION 02-04-15 | DATE PLOTTED => 23-FEB-2015 | TIME PLOTTED => 09:38

Dist	COUNTY	ROUTE	POST MILES TOTAL PROJECT	SHEET No.	TOTAL SHEETS
02	Plu	147	7.5/8.9	11	52

Christopher Galantine 02-04-15
REGISTERED CIVIL ENGINEER DATE

02-04-15
PLANS APPROVAL DATE

REGISTERED PROFESSIONAL ENGINEER
CHRIS GALANTINE
No. C52287
Exp. 12-31-16
CIVIL
STATE OF CALIFORNIA

THE STATE OF CALIFORNIA OR ITS OFFICERS OR AGENTS SHALL NOT BE RESPONSIBLE FOR THE ACCURACY OR COMPLETENESS OF SCANNED COPIES OF THIS PLAN SHEET.

NOTES:

1. GRIND EXISTING SURFACES TO ACCOMODATE A MINIMUM TAPER THICKNESS OF 0.10′ WHEN EITHER:
   A. HMA MATERIAL SUCH AS RUBBERIZED, POLYMER MODIFIED OR OPEN GRADED IS UNSUITABLE FOR RAKING TO A MAXIMUM 0.02′ THICKNESS AT THE CONFORM.
   B. TEMPORARY TAPER WILL BE IN PLACE FOR MORE THAN 14 DAYS.
2. PERMANENT SURFACE MAY BE EXISTING OR NEW PAVEMENT.
3. ROADWAY SURFACE IS THE TOP OF EXISTING SURFACE OR THE TOP OF THE PLANED SURFACE.

LEGEND:

- HMA MATERIAL (TEMPORARY TAPER)
- IF NECESSARY, COLD PLANE ASPHALT CONCRETE PAVEMENT AND PLACE HMA MATERIAL (SEE NOTE 1)
- CONCRETE
- REDUCE FDR-C DEPTH
- WOOD MULCH
- COLD PLANE AC

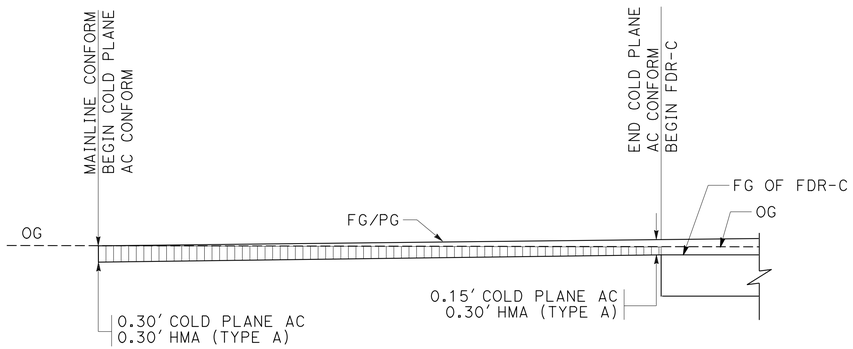

TYPICAL PAVING DETAIL FOR MAINLINE CONFORMS

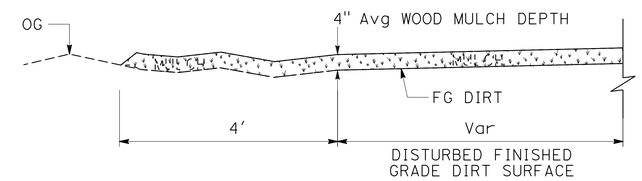

TYPICAL WOOD MULCH PLACEMENT

NOTES:
1. FOR DISTURBED SOIL AREAS AT DRAINAGE AND RAIL ELEMENT WALL WORK LOCATIONS.
2. WOOD MULCH TYPE MUST BE TREE TRIMMING MULCH.

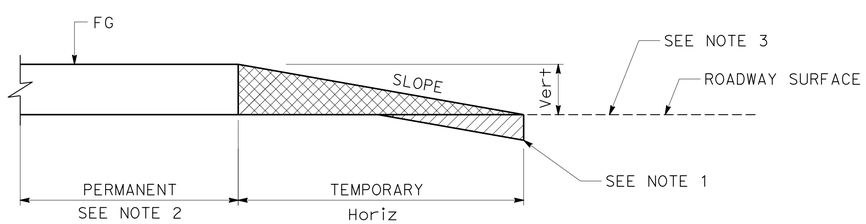

Vert	SLOPE RATIO Horiz/Vert
0-0.10′	70:1
GREATER THAN 0.10′	160:1

TYPICAL PAVING CONFORM FOR TEMPORARY CONSTRUCTION TAPERS

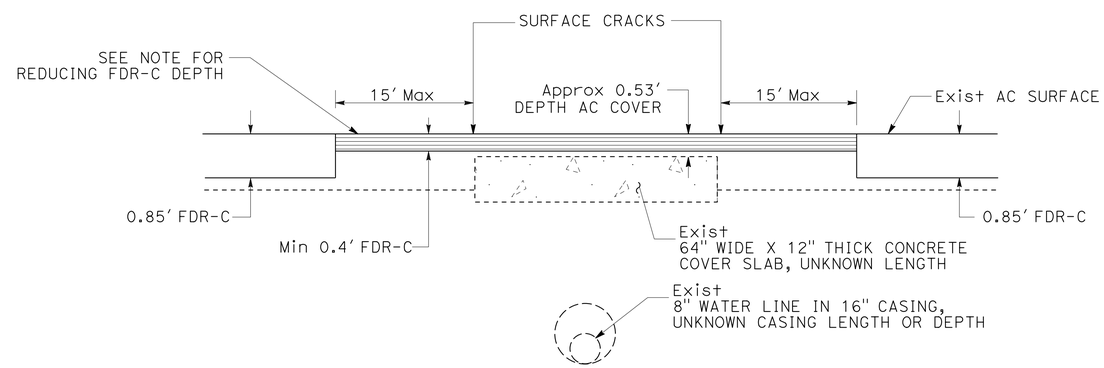

REDUCE FDR-C DEPTH

Approx Sta "A1" 46+75

NOTE: EXISTING HAMILTON BRANCH COMMUNITY SERVICE DISTRICT 8" WATER LINE HAS NOT BEEN POSITIVELY LOCATED.

CONSTRUCTION DETAILS

NO SCALE

C-2

REVISED BY | DATE REVISED
CHRIS GALANTINE | STEVE ALAWAR
CALCULATED-DESIGNED BY | CHECKED BY
FUNCTIONAL SUPERVISOR
JULIE CASEY

STATE OF CALIFORNIA - DEPARTMENT OF TRANSPORTATION
Caltrans® DESIGN

P:\proj1\02\4F390_plans\pse\24f390ga002.dgn

LAST REVISION 02-04-15 | DATE PLOTTED => 23-FEB-2015 | TIME PLOTTED => 09:38

Dist	COUNTY	ROUTE	POST MILES TOTAL PROJECT	SHEET No.	TOTAL SHEETS
02	Plu	147	7.5/8.9	12	52

Christopher Galantine 02-04-15
REGISTERED CIVIL ENGINEER DATE

02-04-15
PLANS APPROVAL DATE

REGISTERED PROFESSIONAL ENGINEER
CHRIS GALANTINE
No. C52287
Exp. 12-31-16
CIVIL
STATE OF CALIFORNIA

THE STATE OF CALIFORNIA OR ITS OFFICERS OR AGENTS SHALL NOT BE RESPONSIBLE FOR THE ACCURACY OR COMPLETENESS OF SCANNED COPIES OF THIS PLAN SHEET.

NOTE:

1. THE TOP OF WALL ELEVATION IS TO BE AT THE SHOULDER BACKING HINGE POINT OR LOWER. IF THERE IS LESS THAN 24½" VERTICALLY BETWEEN THE HINGE POINT AND OG, THEN BURY THE RAIL ELEMENT ACCORDINGLY.

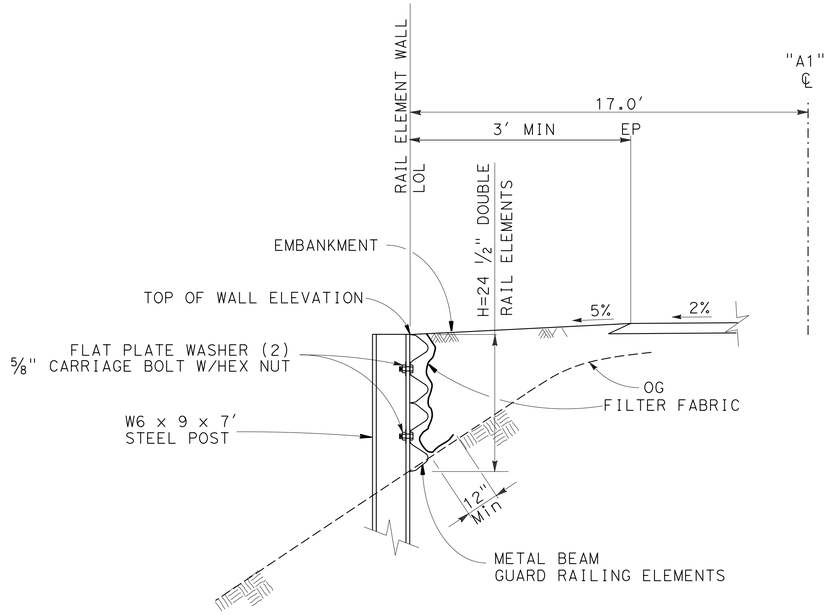

SECTION B-B

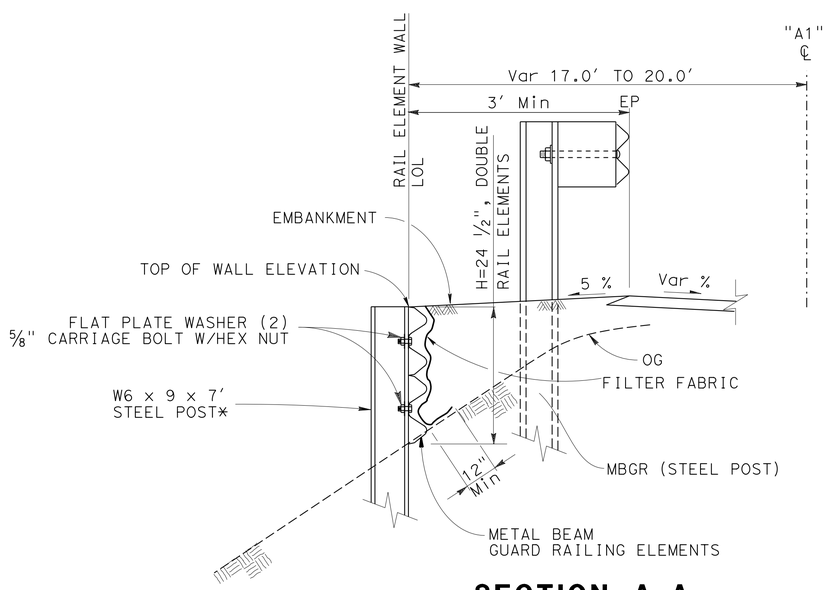

SECTION A-A

* NOTE:
DO NOT PLACE POST OVER CSP AT "A1"45+80.10 (PM 7.54). IF POST IS POSITIONED OVER CSP AT "A1" 104+02.13 (PM 8.77), THEN SUBSTITUTE 6' POST OVER CSP.

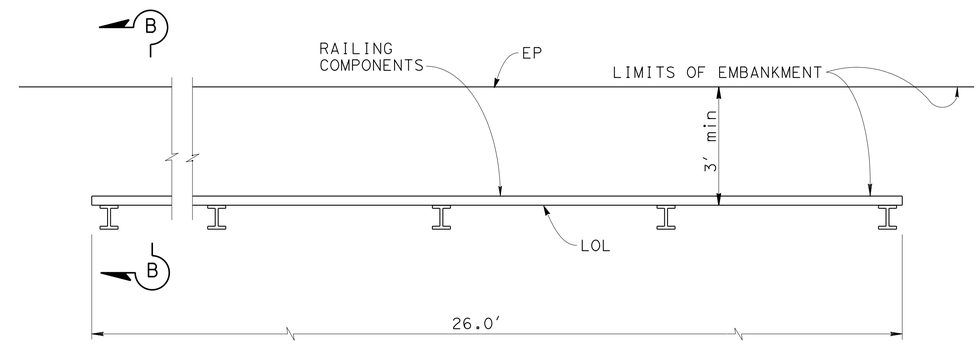

PLAN
RAIL ELEMENT WALL

"A1" 45+64.50, 17.0' Lt TO "A1" 45+90.54, 17' Lt

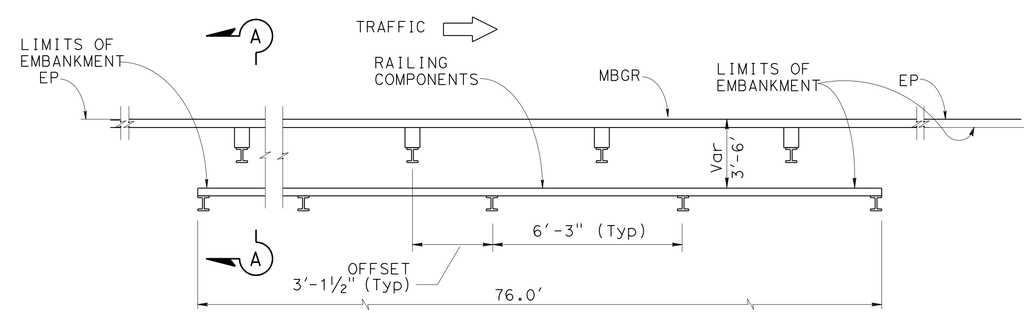

PLAN
METAL BEAM GUARD RAILING & RAIL ELEMENT WALL

"A1" 103+85.00 TO "A1" 104+95.63

CONSTRUCTION DETAILS

NO SCALE

C-3

REVISED BY	DATE REVISED

CHRIS GALANTINE — CALCULATED-DESIGNED BY
STEVE ALAWAR — CHECKED BY
JULIE CASEY — FUNCTIONAL SUPERVISOR

STATE OF CALIFORNIA - DEPARTMENT OF TRANSPORTATION
Caltrans® DESIGN

P:\proj1\02\4F390_plans\pse\24f390ga003.dgn

LAST REVISION 02-04-15
DATE PLOTTED => 23-FEB-2015
TIME PLOTTED => 09:38

Dist	COUNTY	ROUTE	POST MILES TOTAL PROJECT	SHEET No.	TOTAL SHEETS
02	Plu	147	7.5/8.9	13	52

Dwight D Winterlin 02-04-15
REGISTERED CIVIL ENGINEER DATE

02-04-15
PLANS APPROVAL DATE

REGISTERED PROFESSIONAL ENGINEER DWIGHT WINTERLIN No. C68438 Exp. 9-30-15 CIVIL STATE OF CALIFORNIA

THE STATE OF CALIFORNIA OR ITS OFFICERS OR AGENTS SHALL NOT BE RESPONSIBLE FOR THE ACCURACY OR COMPLETENESS OF SCANNED COPIES OF THIS PLAN SHEET.

NOTES:

1. Max 10:1 SLOPE IN FRONT OF GUARDRAIL.
2. FOR DETAILS OF STANDARD HARDWARE USED TO CONSTRUCT GUARDRAIL, SEE STANDARD PLAN A77M1.
3. FOR DETAILS OF STEEL LINE POSTS USED TO CONSTRUCT GUARDRAIL SEE STANDARD PLAN A77N2. FOR 8′ POST USE W6 X 15 STEEL POST.
4. A SINGLE LINE POST POST MAY BE OFFSET UP TO 12" INLINE WITH THE GUARDRAIL IF AUTHORIZED.
5. WHEN THERE IS A BREAK POINT IN FRONT OF GUARDRAIL BETWEEN 4′-8′ THE HEIGHT WILL BE DETERMINED BY THE ENGINEER.
6. PLACE RUB RAIL (GUARDRAIL ELEMENT) AS SHOWN WHEN HEIGHT OF GUARDRAIL IS MIN 32" ABOVE FINISH GRADE UNDER FACE OF RAIL.
7. FOR BOLTED CONNECTION OF RAIL ELEMENT TO BLOCK AND POST, SEE "RAIL ELEMENT SPLICE DETAIL" AND "SECTON THRU RAIL ELEMENT", STANDARD PLAN A77L1 OR A77L2.
8. TO CONNECT RAILING TO TERMINAL SYSTEM END TREATMENT, TRANSITION THE TOP OF RAILING HEIGHT AT A RATIO OF 120:1 TO TERMINAL SYSTEM END TREATMENT HEIGHT PLUS ONE 12′-6" STANDARD RAILING SECTION AT THE TERMINAL HEIGHT.
9. ADDITIONAL HOLE IN UPPERMOST PORTION OF LINE POST IS FOR POTENTIAL FUTURE ADJUSTMENTS OF RAILING HEIGHT. SEE STANDARD PLAN A77N1, A77N2.
10. FOR WOOD POST, TOENAIL BLOCKS TO POST WITH 2-16D GALVANIZED NAILS. BLOCKS MUST HAVE MEANS TO RESIST ROTATION OTHER THAN THROUGH BOLT.
11. DIMENSIONS FOR POST AND BLOCKS ARE NOMINAL.

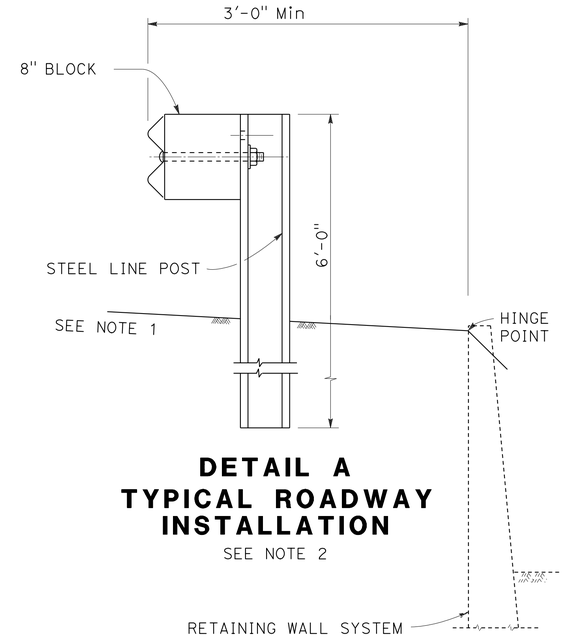

DETAIL A
TYPICAL ROADWAY INSTALLATION
SEE NOTE 2

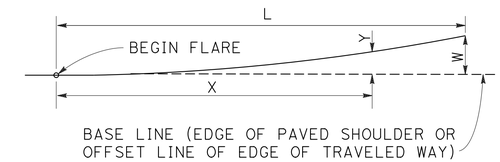

$$Y = \frac{WX^2}{L^2}$$

Y = OFFSET FROM BASE LINE
W = MAXIMUM OFFSET
X = DISTANCE ALONG BASE LINE
L = LENGTH OF FLARE

PARABOLIC FLARE OFFSETS

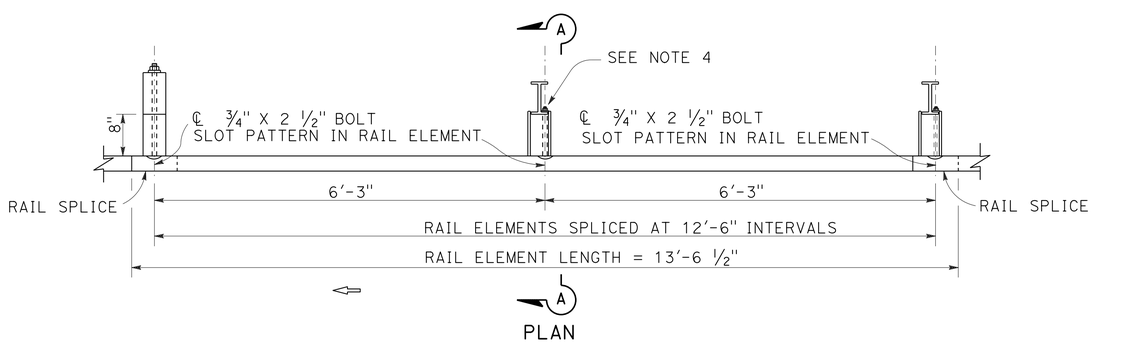

PLAN

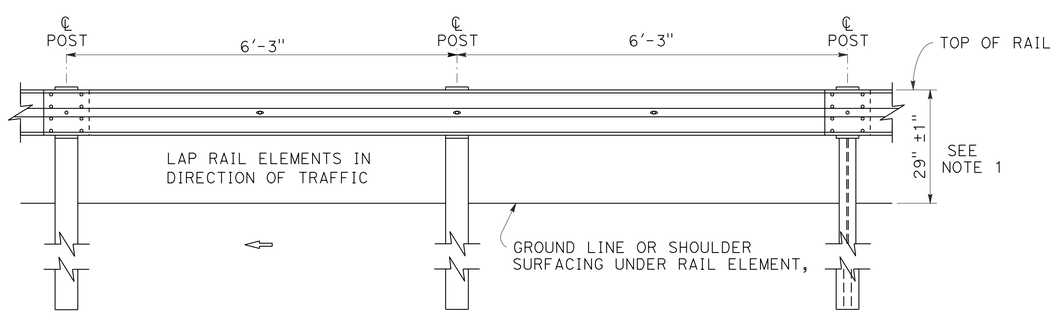

ELEVATION

METAL BEAM GUARD RAILING

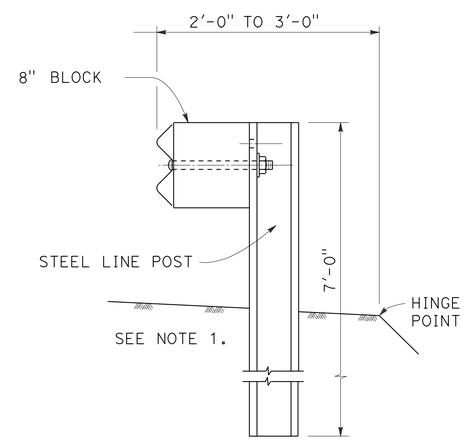

DETAIL B
NARROW ROADWAY INSTALLATION
SEE NOTE 2

POST EMBEDMENT

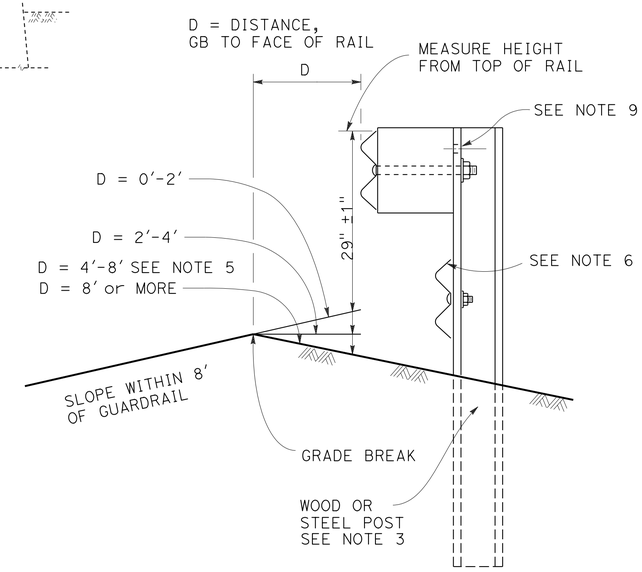

SECTION A-A

MEASURE HEIGHT DETAIL AT GRADE BREAK (GB)

WHEN THERE IS A BREAK POINT IN FRONT OF GUARDRAIL MEASURE HEIGHT OF GUARD RAIL BASED ON DISTANCE FROM GRADE BREAK TO ADJUST FOR TRAJECTORY.

CONSTRUCTION DETAILS
GUARD RAILING
STANDARD RAILING SECTION

NO SCALE

C-4

REVISED BY	DATE REVISED

CALCULATED-DESIGNED BY: DWIGHT WINTERLIN
CHECKED BY: JOHN HART
FUNCTIONAL SUPERVISOR: KRISTI WESTOBY

STATE OF CALIFORNIA - DEPARTMENT OF TRANSPORTATION
Caltrans
TRAFFIC

P:\proj\02\4F390_plans\pse\24f390ga004.dgn

LAST REVISION 02-04-12 | DATE PLOTTED => 23-FEB-2015 | TIME PLOTTED => 09:38

Dist	COUNTY	ROUTE	POST MILES TOTAL PROJECT	SHEET No.	TOTAL SHEETS
02	Plu	147	7.5/8.9	14	52

Dwight D Winterlin 02-04-15
REGISTERED CIVIL ENGINEER DATE

02-04-15
PLANS APPROVAL DATE

REGISTERED PROFESSIONAL ENGINEER DWIGHT WINTERLIN No. C68438 Exp. 9-30-15 CIVIL STATE OF CALIFORNIA

THE STATE OF CALIFORNIA OR ITS OFFICERS OR AGENTS SHALL NOT BE RESPONSIBLE FOR THE ACCURACY OR COMPLETENESS OF SCANNED COPIES OF THIS PLAN SHEET.

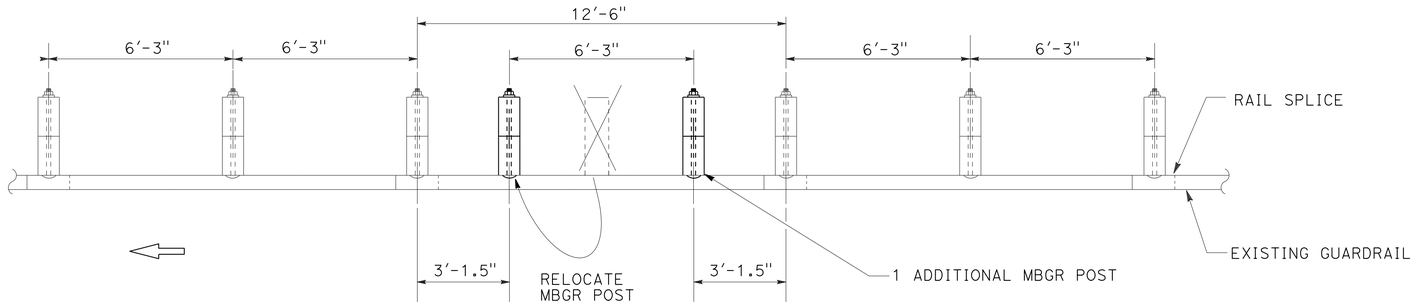

CASE 1
(ONE POST CONFLICT, MOVE THE POST AND ADD ONE POST)
(NO NESTED RAIL REQUIRED)

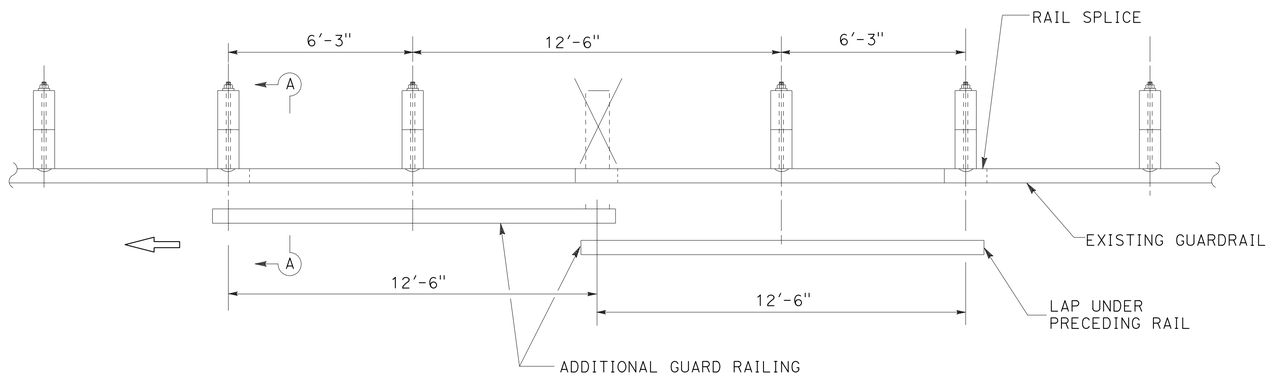

CASE 2
(ONE POST OMITTED AT JUNCTION OF TWO ELEMENTS)
(NEST TWO LENGTHS OF RAIL REQUIRED)

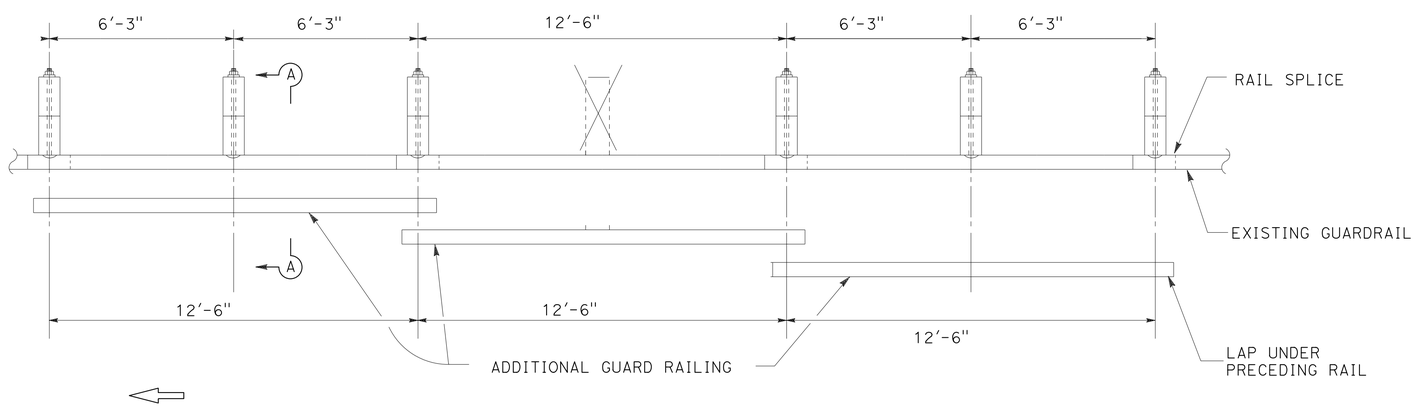

CASE 3
(ONE POST OMITTED AT CENTER OF OF ELEMENT)
(NEST THREE LENGTHS OF RAIL REQUIRED)
(ONE ADDITIONAL POST MAY BE OMITTED SEE NOTE 3)

LONG SPAN NESTED GUARD RAILING

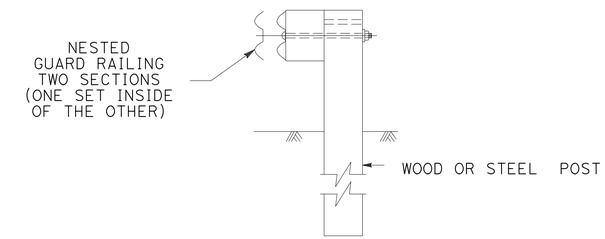

SECTION A-A

TYPICAL RAILING OVERLAP INSTALLATION AT POST

NOTES:

1. NEST ALL RAILS AT EXISTING RAIL LAPS.
2. WHEN A POST IS REMOVED AND THE RAIL ELEMENTS ARE NESTED, THE NESTED ELEMENTS MUST BE SUPPORTED BY A MIN OF 2 POST EACH SIDE OF THE MISSING POST OR ADD ADDITIONAL LENGTH OF NESTED ELEMENTS.
3. USING CASE 3, A SECOND ADJACENT POST CAN BE REMOVED IF THE NESTED RAIL ELEMENTS ARE SUPPORTED BY A Min OF 2 POSTS EACH SIDE OF THE MISSING POSTS.
   THE 2-POST OPTION USES CASE 3 BUT NOT SHOWN.

CONSTRUCTION DETAILS
METAL BEAM GUARD RAILING
REMOVE POST OPTIONS

NO SCALE

C-5

REVISED BY | DATE REVISED
DWIGHT WINTERLIN | JOHN HART
CALCULATED-DESIGNED BY | CHECKED BY
FUNCTIONAL SUPERVISOR
KRISTI WESTOBY

STATE OF CALIFORNIA - DEPARTMENT OF TRANSPORTATION
Caltrans
TRAFFIC

P:\proj\02\4F390_plans\pse\24f390ga005.dgn

LAST REVISION 02-04-12 | DATE PLOTTED => 23-FEB-2015 | TIME PLOTTED => 09:38

Dist	COUNTY	ROUTE	POST MILES TOTAL PROJECT	SHEET No.	TOTAL SHEETS
02	Plu	147	7.5/8.9	10	52

Dwight D Winterlin 02-04-15
REGISTERED CIVIL ENGINEER DATE

02-04-15
PLANS APPROVAL DATE

REGISTERED PROFESSIONAL ENGINEER
DWIGHT WINTERLIN
No. C68438
Exp. 9-30-15
CIVIL
STATE OF CALIFORNIA

THE STATE OF CALIFORNIA OR ITS OFFICERS OR AGENTS SHALL NOT BE RESPONSIBLE FOR THE ACCURACY OR COMPLETENESS OF SCANNED COPIES OF THIS PLAN SHEET.

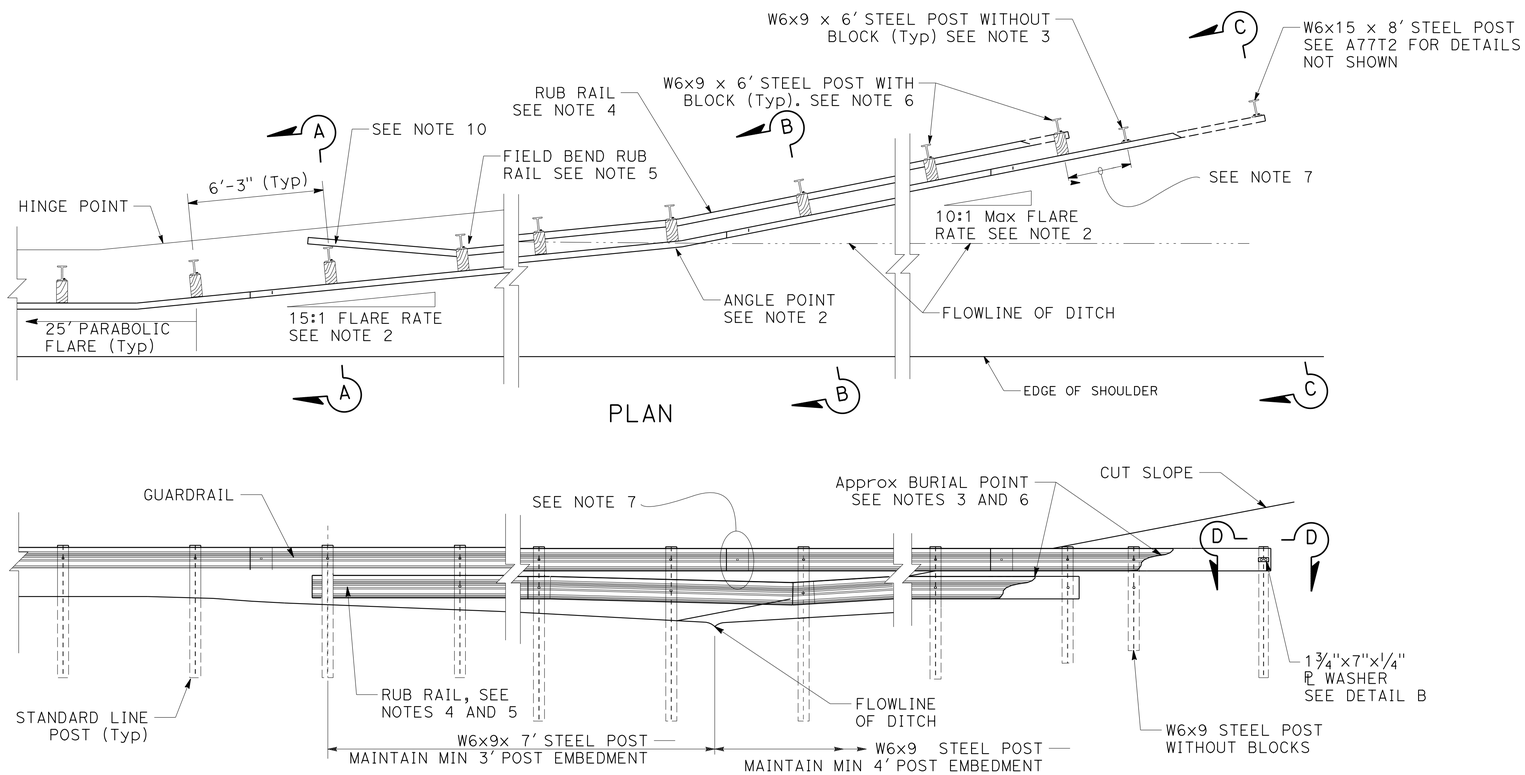

NOTES:

1. ELEVATION OF THE GUARDRAIL SHOULD FOLLOW THE PROFILE GRADE OF THE SHOULDER AND BE NO LOWER THAN 10% OF THE OFFSET FROM THE SHOULDER TO THE RAIL. SEE SECTION B-B AND SECTION C-C.
2. MAXIMUM FLARE RATE OF GUARDRAIL FROM THE SHOULDER TO THE FLOWLINE IS 15:1. FLARE RATE CAN BE INCREASED UP TO 10:1 AFTER CROSSING THE DITCH FLOWLINE.
3. NO BLOCKS ON POSTS WHERE BLOCKS ARE IN CONTACT WITH SOIL.
4. USE STANDARD GUARDRAIL ELEMENTS WITH NO BLOCKS FOR RUB RAIL.
5. BEGIN RUB RAIL WHEN THE HEIGHT OF THE GUARDRAIL IS MORE THAN 32" ABOVE THE GROUND DIRECTLY BELOW THE RAIL.
6. CONTINUE RUB RAIL UNTIL TOP OF RUB RAIL BURIED IN THE BACKSLOPE.
7. POST SPACING AND ELEMENT SPLICES SHOWN FOR MGS. MAINTAIN 6'-3" SPACING AND SPLICE ELEMENTS AT POSTS FOR MBGR.
8. THE BURIED POST END ANCHOR SHOULD BE INSTALLED IN A NON-TRAVERSABLE SLOPE.
9. ANCHOR POST MAY BE MOVED 1 POST FROM END IF AUTHORIZED.
10. ONE WAY ROADWAYS AT TRAILING END, RUB RAIL MAY REMAIN ON TRAFFIC SIDE OF POST.
11. EXISTING UTILITY FACILITIES ARE NOT SHOWN ON THESE PLANS.

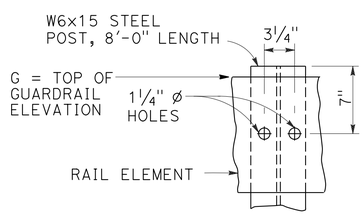

DETAIL A

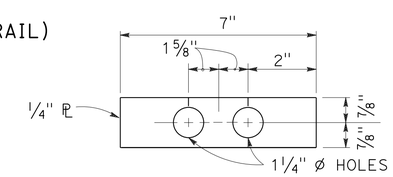

DETAIL B

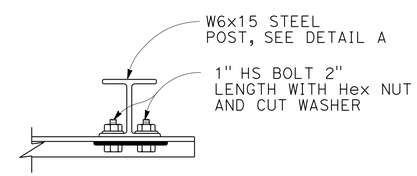

ANCHOR POST DETAIL SECTION D-D

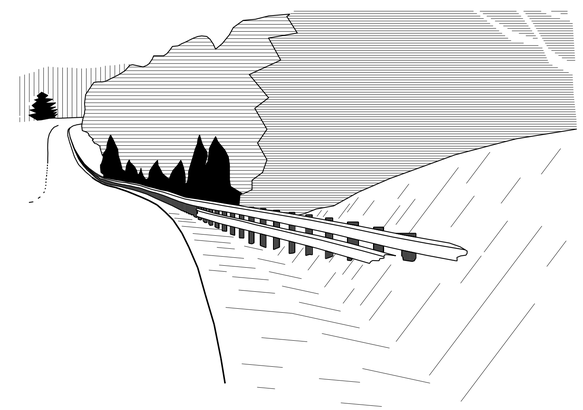

PERSPECTIVE

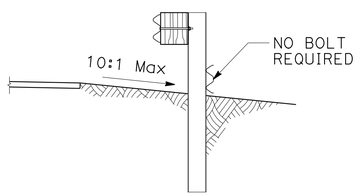

SECTION A-A

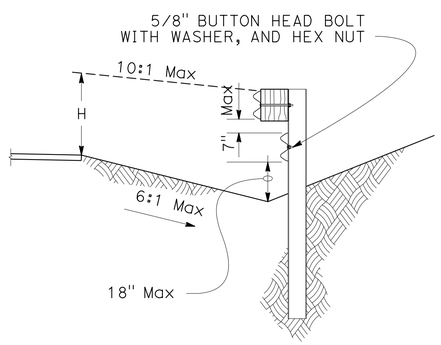

SECTION B-B

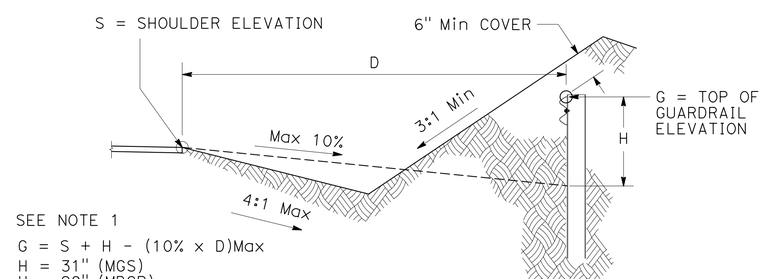

SECTION C-C

CONSTRUCTION DETAILS
GUARDRAIL MODIFIED BURIED POST END ANCHOR
NO SCALE

C-6

REVISED BY	DATE REVISED
DWIGHT WINTERLIN	JOHN HART
CALCULATED-DESIGNED BY	CHECKED BY
FUNCTIONAL SUPERVISOR	KRISTI WESTOBY

STATE OF CALIFORNIA - DEPARTMENT OF TRANSPORTATION
Caltrans® TRAFFIC

P:\proj1\02\4F390_plans\pse\24f390ga006.dgn

LAST REVISION 02-04-12 | DATE PLOTTED => 23-FEB-2015 | TIME PLOTTED => 09:38

Dist	COUNTY	ROUTE	POST MILES TOTAL PROJECT	SHEET No.	TOTAL SHEETS
02	Plu	147	7.5/8.9	16	52

Christopher Galantine 02-04-15
REGISTERED CIVIL ENGINEER DATE

02-04-15
PLANS APPROVAL DATE

REGISTERED PROFESSIONAL ENGINEER
CHRIS GALANTINE
No. C52287
Exp. 12-31-16
CIVIL
STATE OF CALIFORNIA

THE STATE OF CALIFORNIA OR ITS OFFICERS OR AGENTS SHALL NOT BE RESPONSIBLE FOR THE ACCURACY OR COMPLETENESS OF SCANNED COPIES OF THIS PLAN SHEET.

NOTE:

1. FOR ACCURATE RIGHT OF WAY DATA, CONTACT RIGHT OF WAY ENGINEERING AT THE DISTRICT OFFICE.

LEGEND:

- RSP (No. 2, METHOD B)
- RSP FABRIC (CL 8)
- C — MARKER (CULVERT)
- UD — UNDERDRAIN MARKER

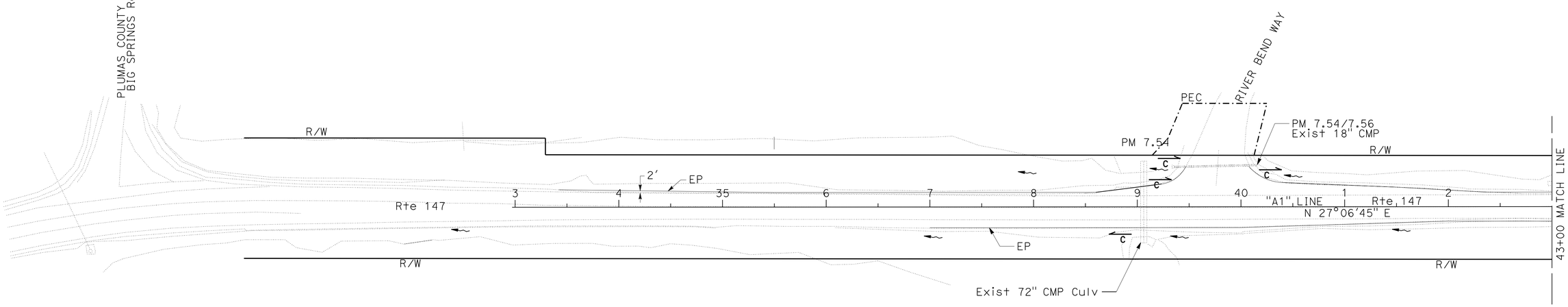

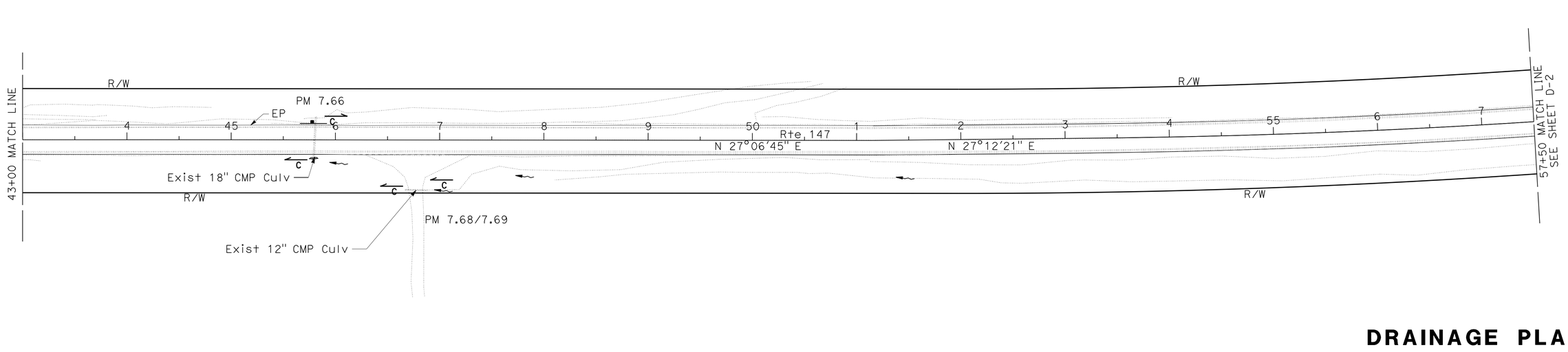

DRAINAGE PLAN

SCALE: 1" = 50'

D-1

APPROVED FOR DRAINAGE WORK ONLY

REVISED BY	DATE REVISED
CHRIS GALANTINE	STEVE ALAWAR
CALCULATED-DESIGNED BY	CHECKED BY
FUNCTIONAL SUPERVISOR	JULIE CASEY

STATE OF CALIFORNIA - DEPARTMENT OF TRANSPORTATION
Caltrans
DESIGN

P:\proj1\02\4F390_plans\pse\24f390ia001.dgn

LAST REVISION 02-04-15 | DATE PLOTTED => 23-FEB-2015 | TIME PLOTTED => 09:38

Dist	COUNTY	ROUTE	POST MILES TOTAL PROJECT	SHEET No.	TOTAL SHEETS
02	Plu	147	7.5/8.9	17	52

Christopher Galantine 02-04-15
REGISTERED CIVIL ENGINEER DATE

02-04-15
PLANS APPROVAL DATE

REGISTERED PROFESSIONAL ENGINEER
CHRIS GALANTINE
No. C52287
Exp. 12-31-16
CIVIL
STATE OF CALIFORNIA

THE STATE OF CALIFORNIA OR ITS OFFICERS OR AGENTS SHALL NOT BE RESPONSIBLE FOR THE ACCURACY OR COMPLETENESS OF SCANNED COPIES OF THIS PLAN SHEET.

NOTE:

1. FOR ACCURATE RIGHT OF WAY DATA, CONTACT RIGHT OF WAY ENGINEERING AT THE DISTRICT OFFICE.

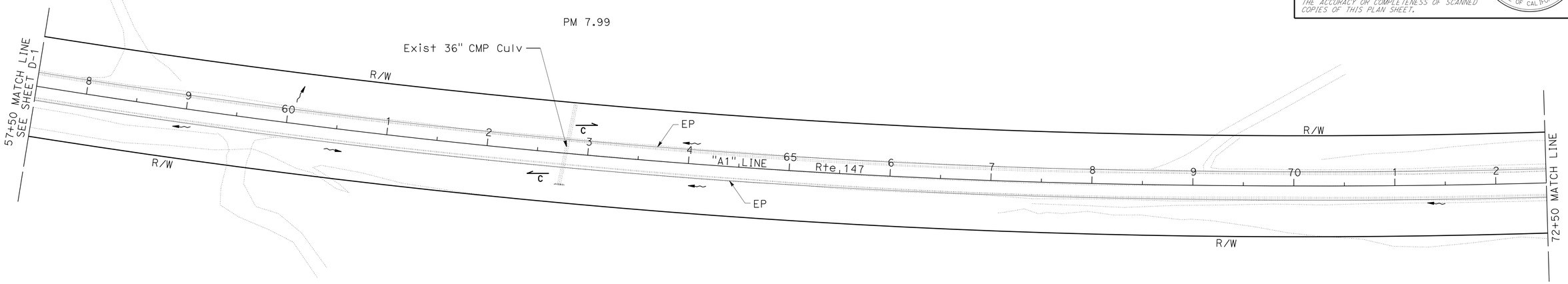

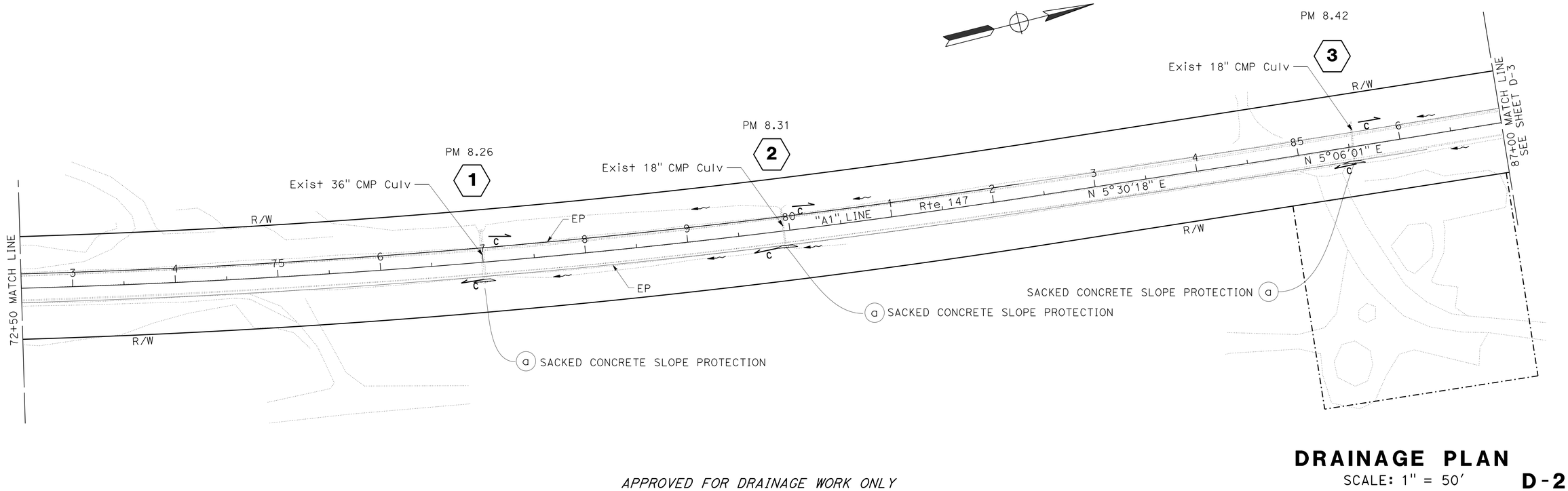

APPROVED FOR DRAINAGE WORK ONLY

DRAINAGE PLAN

SCALE: 1" = 50'

D-2

REVISED BY	DATE REVISED
CHRIS GALANTINE	STEVE ALAWAR
CALCULATED-DESIGNED BY	CHECKED BY
FUNCTIONAL SUPERVISOR	JULIE CASEY

STATE OF CALIFORNIA - DEPARTMENT OF TRANSPORTATION
Caltrans
DESIGN

P:\proj1\02\4F390_plans\pse\24f390ia002.dgn

LAST REVISION 02-04-15 | DATE PLOTTED => 23-FEB-2015 | TIME PLOTTED => 09:38

Dist	COUNTY	ROUTE	POST MILES TOTAL PROJECT	SHEET No.	TOTAL SHEETS
02	Plu	147	7.5/8.9	18	52

Christopher Galantine 02-04-15
REGISTERED CIVIL ENGINEER DATE

02-04-15
PLANS APPROVAL DATE

REGISTERED PROFESSIONAL ENGINEER
CHRIS GALANTINE
No. C52287
Exp. 12-31-16
CIVIL
STATE OF CALIFORNIA

THE STATE OF CALIFORNIA OR ITS OFFICERS OR AGENTS SHALL NOT BE RESPONSIBLE FOR THE ACCURACY OR COMPLETENESS OF SCANNED COPIES OF THIS PLAN SHEET.

NOTE:

1. FOR ACCURATE RIGHT OF WAY DATA, CONTACT RIGHT OF WAY ENGINEERING AT THE DISTRICT OFFICE.

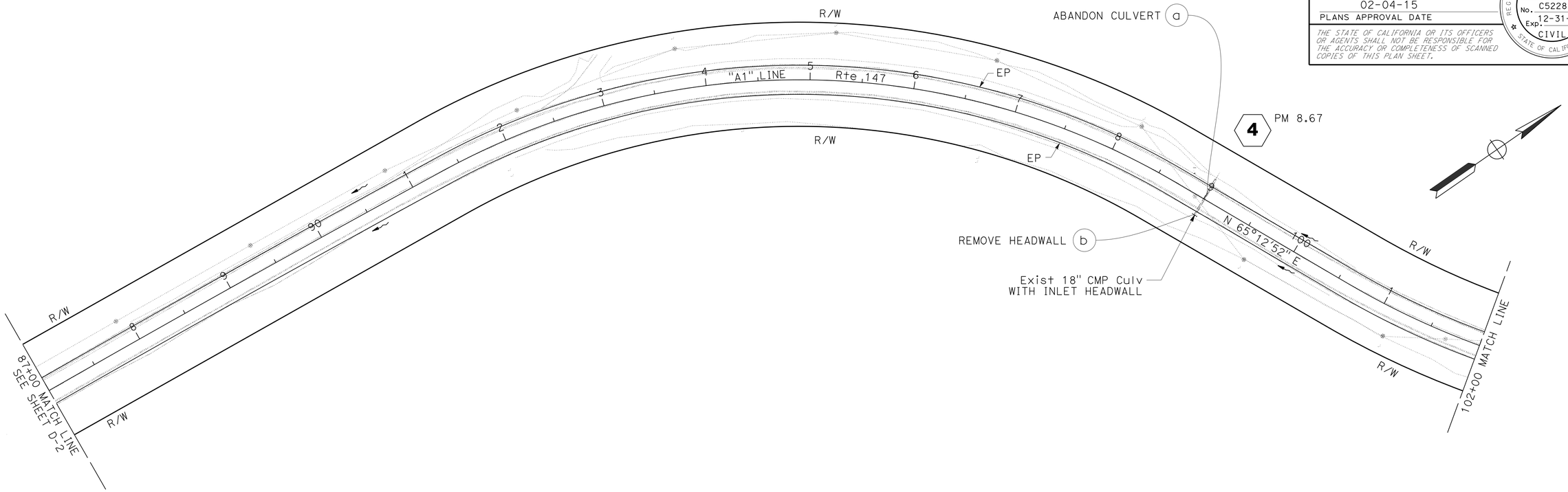

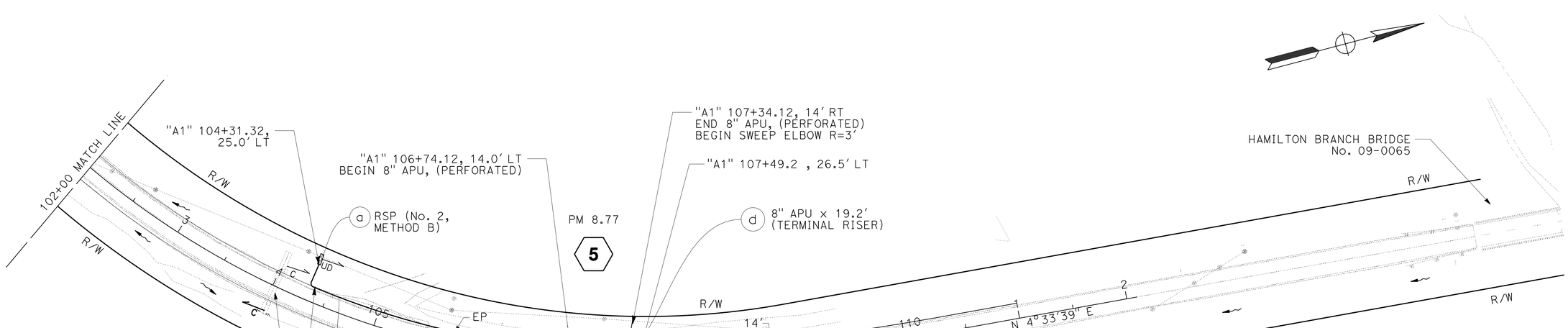

DRAINAGE PLAN

SCALE: 1" = 50'

D-3

APPROVED FOR DRAINAGE WORK ONLY

STATE OF CALIFORNIA - DEPARTMENT OF TRANSPORTATION
Caltrans
DESIGN

FUNCTIONAL SUPERVISOR: JULIE CASEY
CALCULATED-DESIGNED BY: CHRIS GALANTINE
CHECKED BY: STEVE ALAWAR
REVISED BY
DATE REVISED

P:\proj1\02\4F390_plans\pse\24f390ia003.dgn

LAST REVISION 02-04-15
DATE PLOTTED => 23-FEB-2015
TIME PLOTTED => 09:38

Dist	COUNTY	ROUTE	POST MILES TOTAL PROJECT	SHEET No.	TOTAL SHEETS
02	Plu	147	7.5/8.9	19	52

Christopher Galantine 02-04-15
REGISTERED CIVIL ENGINEER DATE

02-04-15
PLANS APPROVAL DATE

REGISTERED PROFESSIONAL ENGINEER CHRIS GALANTINE No. C52287 Exp. 12-31-16 CIVIL STATE OF CALIFORNIA

THE STATE OF CALIFORNIA OR ITS OFFICERS OR AGENTS SHALL NOT BE RESPONSIBLE FOR THE ACCURACY OR COMPLETENESS OF SCANNED COPIES OF THIS PLAN SHEET.

NOTE:

1. A "STRETCHER" IS PLACED WITH ITS LONG DIMENSION PARALLEL TO THE CONTOUR OF THE SLOPE AND A "HEADER" IS PLACED AT RIGHT ANGLES TO THE "STRETCHERS".

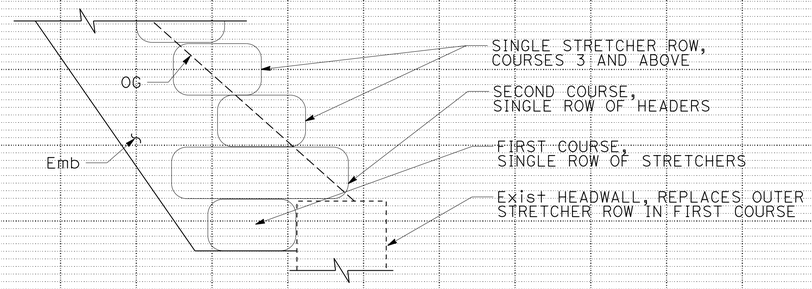

TYPICAL SECTION FOR WHEN SACK BASE IS ON HEADWALL

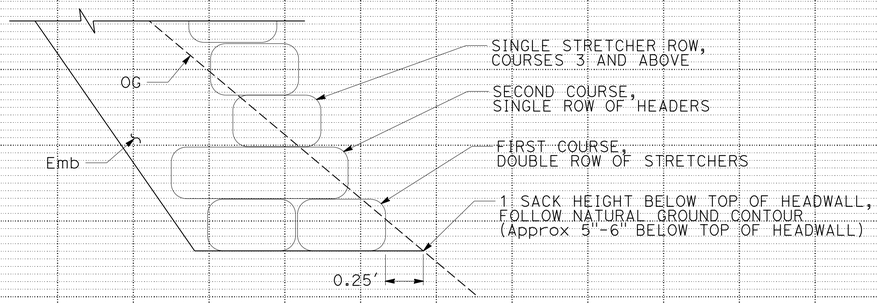

TYPICAL SECTION FOR WHEN SACK BASE EXTENDS BEYOND HEADWALL

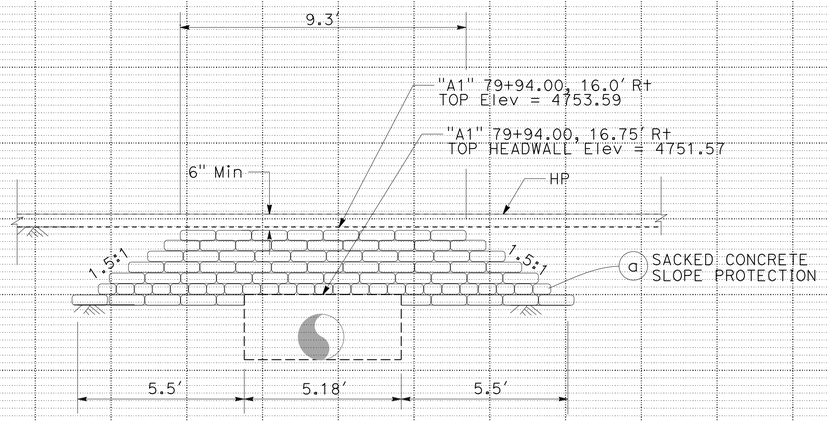

ELEVATION
SCALE: AS SHOWN

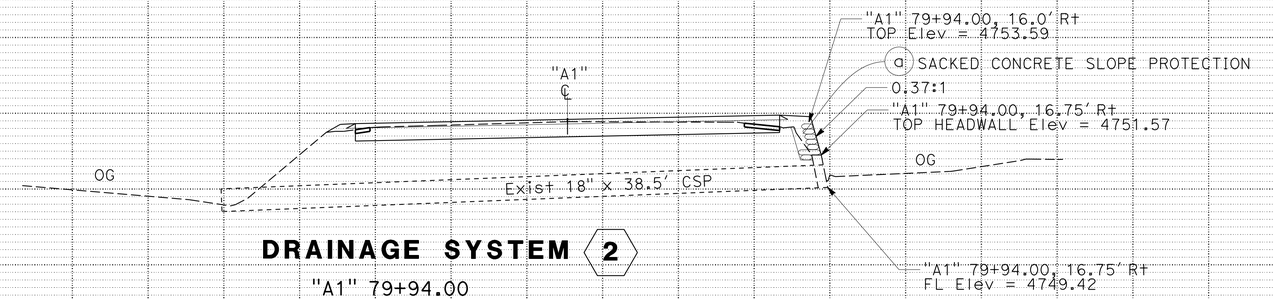

DRAINAGE SYSTEM 2
"A1" 79+94.00
SCALE: 1" = 5'

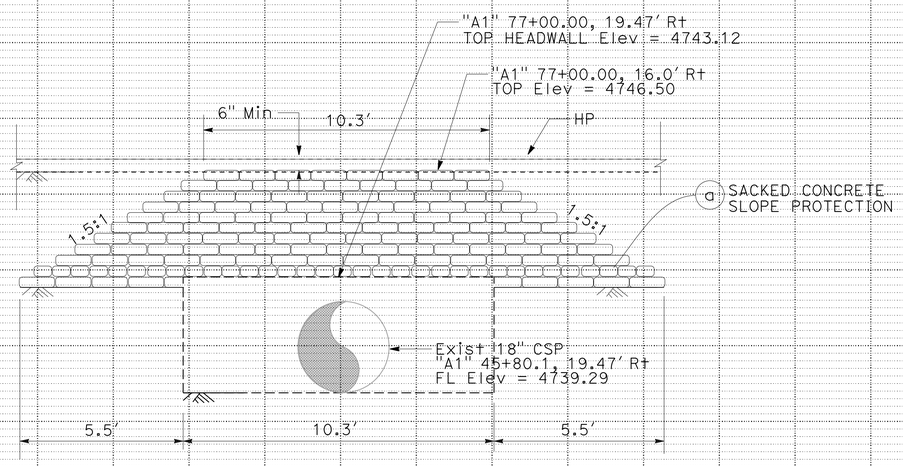

ELEVATION
SCALE: AS SHOWN

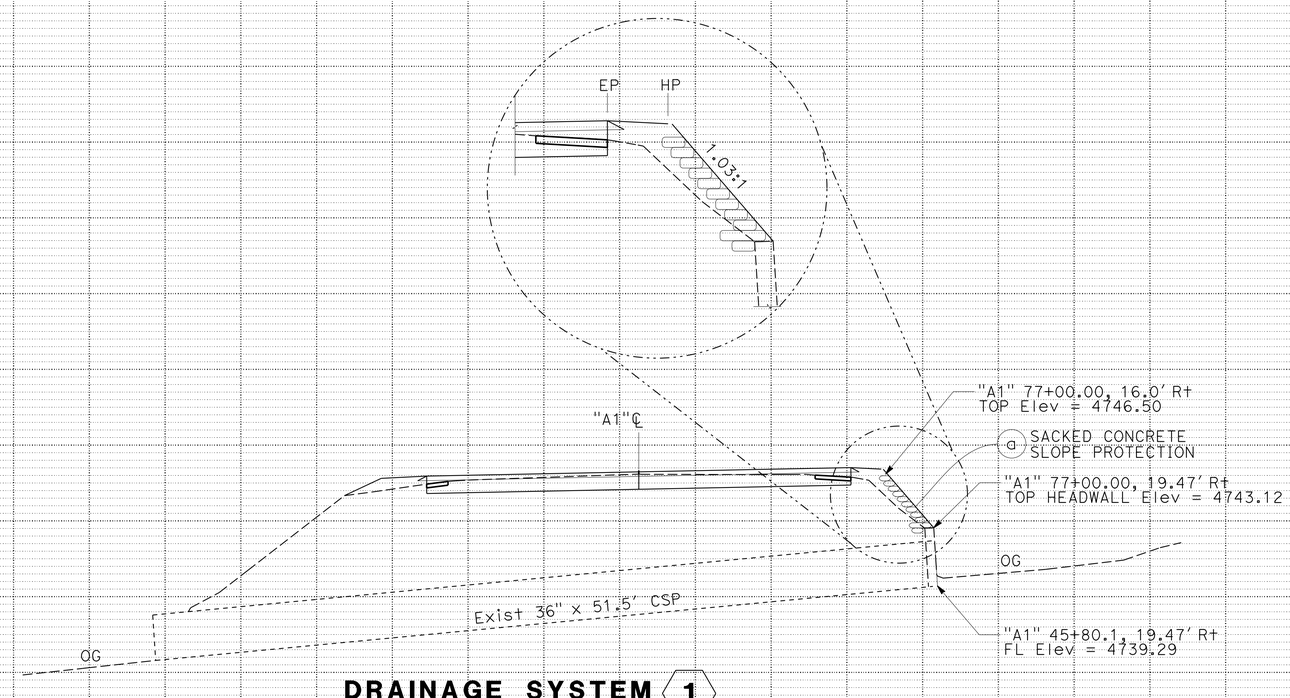

DRAINAGE SYSTEM 1
"A1" 77+00.00
SCALE: 1" = 5'

DRAINAGE PROFILES

SCALE: AS SHOWN

DP-1

REVISED BY | DATE REVISED
CHRIS GALANTINE | STEVE ALAWAR
CALCULATED-DESIGNED BY | CHECKED BY
FUNCTIONAL SUPERVISOR | JULIE CASEY
STATE OF CALIFORNIA - DEPARTMENT OF TRANSPORTATION
Caltrans
DESIGN

P:\proj\02_4F390_plans\pse\24f390ib001.dgn

LAST REVISION 02-04-15 | DATE PLOTTED => 23-FEB-2015 | TIME PLOTTED => 09:38

Dist	COUNTY	ROUTE	POST MILES TOTAL PROJECT	SHEET No.	TOTAL SHEETS
02	Plu	147	7.5/8.9	20	52

Christopher Galantine 02-04-15
REGISTERED CIVIL ENGINEER DATE

02-04-15
PLANS APPROVAL DATE

REGISTERED PROFESSIONAL ENGINEER
CHRIS GALANTINE
No. C52287
Exp. 12-31-16
CIVIL
STATE OF CALIFORNIA

THE STATE OF CALIFORNIA OR ITS OFFICERS OR AGENTS SHALL NOT BE RESPONSIBLE FOR THE ACCURACY OR COMPLETENESS OF SCANNED COPIES OF THIS PLAN SHEET.

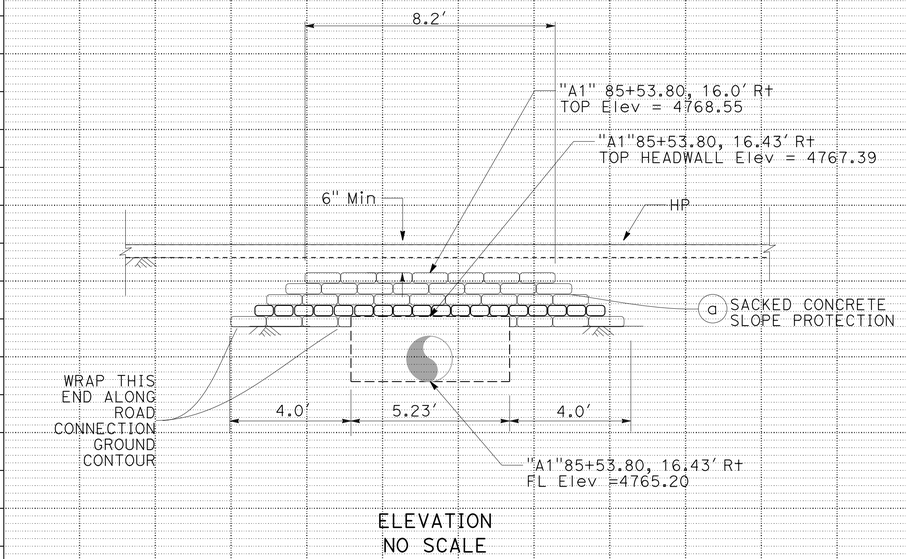

ELEVATION
NO SCALE

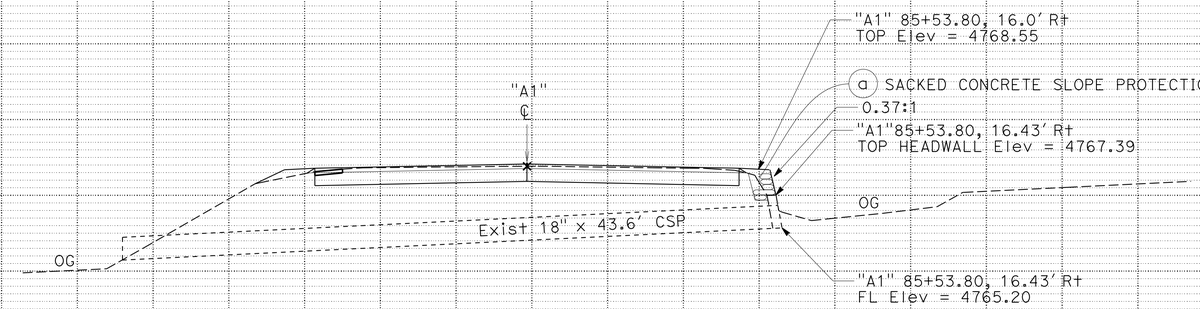

DRAINAGE SYSTEM No. 3

STA "A1" 85+53.80
SCALE: 1" = 5'

DRAINAGE PROFILES

SCALE AS SHOWN

DP-2

REVISED BY | DATE REVISED
CHRIS GALANTINE | STEVE ALAWAR
CALCULATED-DESIGNED BY | CHECKED BY
FUNCTIONAL SUPERVISOR
JULIE CASEY

STATE OF CALIFORNIA - DEPARTMENT OF TRANSPORTATION
Caltrans® DESIGN

P:\proj1\02\4F390_plans\pse\24f390ib002.dgn

LAST REVISION 02-04-15 | DATE PLOTTED => 23-FEB-2015 | TIME PLOTTED => 09:38

Dist	COUNTY	ROUTE	POST MILES TOTAL PROJECT	SHEET No.	TOTAL SHEETS
02	Plu	147	7.5/8.9	21	52

Christopher Galantine 02-04-15
REGISTERED CIVIL ENGINEER DATE

02-04-15
PLANS APPROVAL DATE

REGISTERED PROFESSIONAL ENGINEER CHRIS GALANTINE No. C52287 Exp. 12-31-16 CIVIL STATE OF CALIFORNIA

THE STATE OF CALIFORNIA OR ITS OFFICERS OR AGENTS SHALL NOT BE RESPONSIBLE FOR THE ACCURACY OR COMPLETENESS OF SCANNED COPIES OF THIS PLAN SHEET.

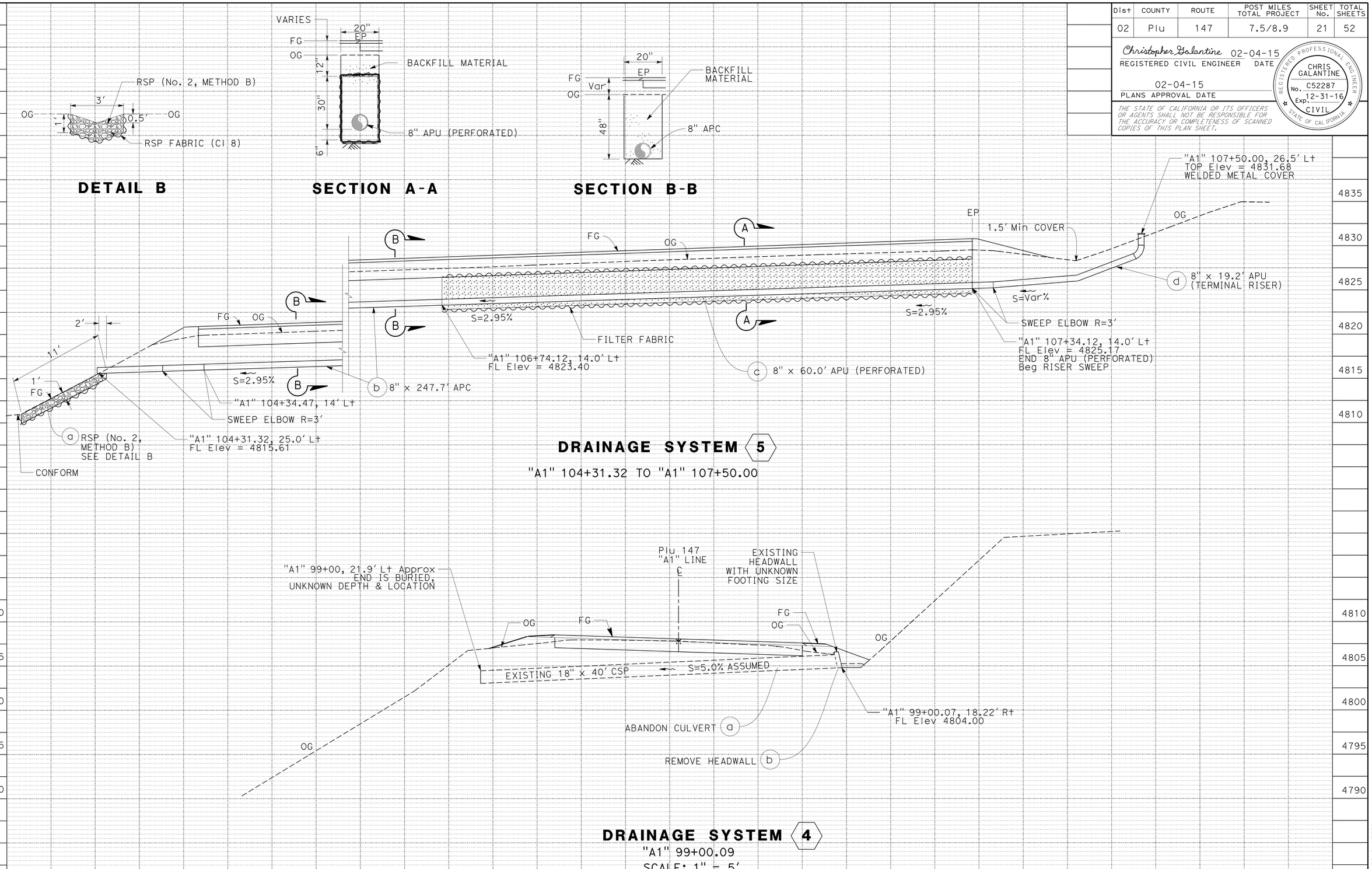

NOTE:
1. CULVERT DAMAGED APPROXIMATELY 5' FROM INLET AND SILT BUILT UP DOWNSTREAM OF DAMAGED AREA.

DRAINAGE PROFILES

SCALE: AS SHOWN

DP-3

REVISED BY | DATE REVISED

CHRIS GALANTINE | STEVE ALAWAR

CALCULATED-DESIGNED BY | CHECKED BY

FUNCTIONAL SUPERVISOR: JULIE CASEY

STATE OF CALIFORNIA - DEPARTMENT OF TRANSPORTATION

DESIGN

Caltrans

P:\proj1\02\4F390_plans\pse\24f390ib003.dgn

LAST REVISION 02-04-15 | DATE PLOTTED => 23-FEB-2015 | TIME PLOTTED => 09:38

BORDER LAST REVISED 7/2/2010 | USERNAME => s115152 | DGN FILE => 24f390ib003.dgn | RELATIVE BORDER SCALE IS IN INCHES 0 1 2 3 | UNIT 0318 | PROJECT NUMBER & PHASE 02-1200-0102-1 | EA 02-4F3901

Dist	COUNTY	ROUTE	POST MILES TOTAL PROJECT	SHEET No.	TOTAL SHEETS
02	Plu	147	7.5/8.9	22	52

Christopher Galantine 02-04-15
REGISTERED CIVIL ENGINEER DATE

02-04-15
PLANS APPROVAL DATE

REGISTERED PROFESSIONAL ENGINEER
CHRIS GALANTINE
No. C52287
Exp. 12-31-16
CIVIL
STATE OF CALIFORNIA

THE STATE OF CALIFORNIA OR ITS OFFICERS OR AGENTS SHALL NOT BE RESPONSIBLE FOR THE ACCURACY OR COMPLETENESS OF SCANNED COPIES OF THIS PLAN SHEET.

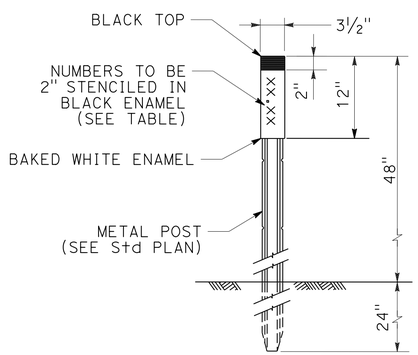

CULVERT MARKER

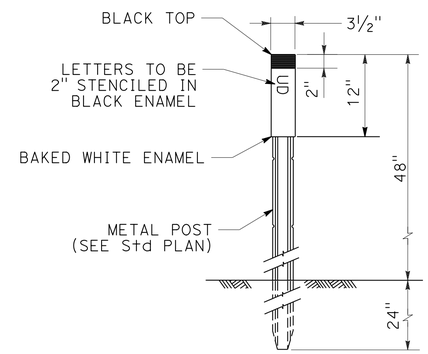

UNDERDRAIN MARKER

DRAINAGE DETAILS

NO SCALE

DD-1

STATE OF CALIFORNIA - DEPARTMENT OF TRANSPORTATION
Caltrans
DESIGN

FUNCTIONAL SUPERVISOR: JULIE CASEY
CALCULATED-DESIGNED BY: CHRIS GALANTINE
CHECKED BY: STEVE ALAWAR
REVISED BY
DATE REVISED

P:\proj\02\4F390_plans\pse\24f390ic001.dgn

LAST REVISION 02-04-15
DATE PLOTTED => 23-FEB-2015
TIME PLOTTED => 09:38

Dist	COUNTY	ROUTE	POST MILES TOTAL PROJECT	SHEET No.	TOTAL SHEETS
02	Plu	147	7.5/8.9	23	52

Christopher Galantine 02-04-15
REGISTERED CIVIL ENGINEER DATE

02-04-15
PLANS APPROVAL DATE

REGISTERED PROFESSIONAL ENGINEER
CHRIS GALANTINE
No. C52287
Exp. 12-31-16
CIVIL
STATE OF CALIFORNIA

THE STATE OF CALIFORNIA OR ITS OFFICERS OR AGENTS SHALL NOT BE RESPONSIBLE FOR THE ACCURACY OR COMPLETENESS OF SCANNED COPIES OF THIS PLAN SHEET.

NOTES:

1. (N) - NOT A SEPARATE PAY ITEM, FOR INFORMATION ONLY
2. ALL PIPE JOINT CLASSIFICATIONS ARE STANDARD JOINT TYPE.
3. PLACE 4" DEPTH OF WOOD MULCH ON DISTURBED SOIL WHERE SHOWN ON PLANS.
4. WOOD MULCH TYPE MUST BE TREE TRIMMING MULCH.

DRAINAGE QUANTITIES

DRAINAGE SHEET No.	DRAINAGE SYSTEM No. ⬡	DRAINAGE UNIT No. ○	ABANDON CULVERT	REMOVE HEADWALL	8" ALTERNATIVE PIPE CULVERT	8" ALTERNATIVE PIPE UNDERDRAIN	ROCK SLOPE PROTECTION (No 2, METHOD B)	ROCK SLOPE PROTECTION FABRIC (CLASS 8)	SACKED CONCRETE SLOPE PROTECTION	WOOD MULCH	RIGHT/LEFT/BOTH	STATION	DESCRIPTION
			EA		LF	LF	CY	SQYD	SQFT	CY			
D-2	1	a							58	1.0	R†	"A1" 77+00.10	SLOPE PROTECTION ABOVE HEADWALL
D-2	2	a							31	0.8	R†	"A1" 79+93.99	SLOPE PROTECTION ABOVE HEADWALL
D-2	3	a							16	0.6	R†	"A1" 85+53.78	SLOPE PROTECTION ABOVE HEADWALL
D-3	4	a	1								B	"A1" 99+00.09	ABANDON DAMAGED AND PARTIALLY SILTED IN CULVERT. OUTLET BURIED, HEADWALL AT INLET
		b		1							R†	"A1" 99+00.09	
D-3	5	a					1.1	6.9		1.1	L†	"A1" 104+31.22	RSP OUTLET ENERGY DISSIPATOR
		b			247.7					1.1	L† L†	"A1" 104+31.22 "A1" 106+74.12	8" APU X 247.7'
		c				60.0					L† L†	"A1" 106+74.12 "A1" 107+34.12	8" PERFORATED APU, CI 1 PERMEABLE MATERIAL, FABRIC
		d				19.2				1.1	L† L†	"A1" 107+34.12 "A1" 107+49.22	8" APU TERMINAL RISER
TOTAL			1	1	247.7	79.2	1.1	6.9	105	5.7*			

* ITEM TOTAL SUMMARIZED ON SHEET Q-1

CULVERT AND UNDERDRAIN MARKERS

DRAINAGE SYSTEM No.	STATION	POSTMILE	L	R	MARKER (CULVERT)	UNDERDRAIN MARKER	REMOVE MARKER	REMARKS
					EA	EA	EA	
	"A1" 39+06.23	7.54	X	X	2		2	CROSS CULVERT
	"A1" 45+80.10	7.66	X	X	2		2	CROSS CULVERT
	"A1" 62+77.97	7.99	X	X	2		2	CROSS CULVERT
1	"A1" 77+00.10	8.26	X	X	2		2	CROSS CULVERT
2	"A1" 79+93.99	8.31	X	X	2		2	CROSS CULVERT
3	"A1" 85+53.78	8.42	X	X	2		2	CROSS CULVERT
4	"A1" 99+00.09	8.67					1	CROSS CULVERT
	"A1" 104+01.65	8.77	X	X	2		2	CROSS CULVERT
5	"A1" 104+31.32	8.77	X			1		UNDERDRAIN OUTLET
5	"A1" 107+49.22	8.83	X			1		UNDERDRAIN TERMINAL RISER
	"A1" 39+33.58	7.54	X		1			LONGITUDINAL CULVERT, RIVER BEND WAY
	"A1" 40+15.94	7.56	X		1			LONGITUDINAL CULVERT, RIVER BEND WAY
	"A1" 46+67.07	7.68		X	1			LONGITUDINAL CULVERT, UNNAMED UTILITIES ACCESS Rd
	"A1" 46+87.55	7.69		X	1			LONGITUDINAL CULVERT, UNNAMED UTILITIES ACCESS Rd
TOTAL					18	2	15	

ALTERNATIVE MATERIALS
ALLOWABLE MATERIALS AND PROTECTION

ITEM	PLASTIC	GALVANIZED STEEL		RCP
		UNCOATED	POLYMERIC SHEET COATING	
8" APC	ALL TYPES	0.079"	0.079"	NOT ALLOWED
8" APU	ALL TYPES	0.079"	0.079"	NOT ALLOWED

DRAINAGE QUANTITIES
DQ-1

CHRIS GALANTINE | REVISED BY
STEVE ALAWAR | DATE REVISED
CALCULATED-DESIGNED BY
CHECKED BY
FUNCTIONAL SUPERVISOR
JULIE CASEY

STATE OF CALIFORNIA - DEPARTMENT OF TRANSPORTATION
Caltrans® DESIGN

P:\proj1\02\4F390_plans\pse\24f390id001.dgn

LAST REVISION 02-04-15 | DATE PLOTTED => 23-FEB-2015 | TIME PLOTTED => 09:38

Dist	COUNTY	ROUTE	POST MILES TOTAL PROJECT	SHEET No.	TOTAL SHEETS
02	Plu	147	7.5/8.9	24	52

Christopher Galantine 02-04-15
REGISTERED CIVIL ENGINEER DATE

02-04-15
PLANS APPROVAL DATE

REGISTERED PROFESSIONAL ENGINEER CHRIS GALANTINE No. C52287 Exp. 12-31-16 CIVIL STATE OF CALIFORNIA

THE STATE OF CALIFORNIA OR ITS OFFICERS OR AGENTS SHALL NOT BE RESPONSIBLE FOR THE ACCURACY OR COMPLETENESS OF SCANNED COPIES OF THIS PLAN SHEET.

NOTES:

1. EXACT SIGN LOCATION TO BE DETERMINED BY THE ENGINEER.
2. EXISTING UTILITY FACILITIES HAVE NOT BEEN PLOTTED ON THESE PLANS.
3. INTERMEDIATE C11(CA) SIGNS TO BE PLACED EVERY 3.5 MILES.
4. CALIFORNIA SIGN CODES ARE DESIGNATED BY (CA), OTHERWISE FEDERAL MUTCD CODES ARE SHOWN.
5. (N) - NOT A SEPARATE PAY ITEM, FOR INFORMATION ONLY

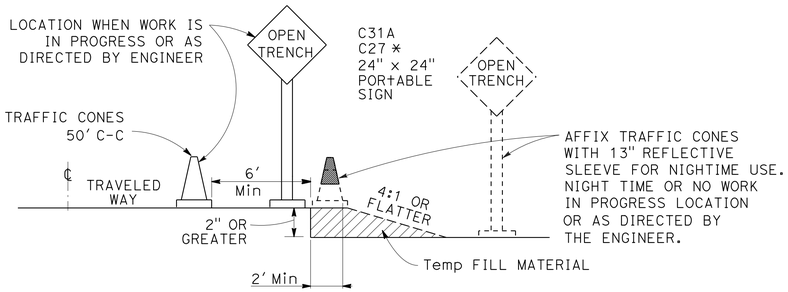

OPEN TRENCH SIGNING AND MARKING

* PLACE AT 250' INTERVALS THROUGH THE OPEN TRENCH AREA, ALTERNATE C27 (OPEN TRENCH) AND C31A (NO SHOULDER) SIGNS

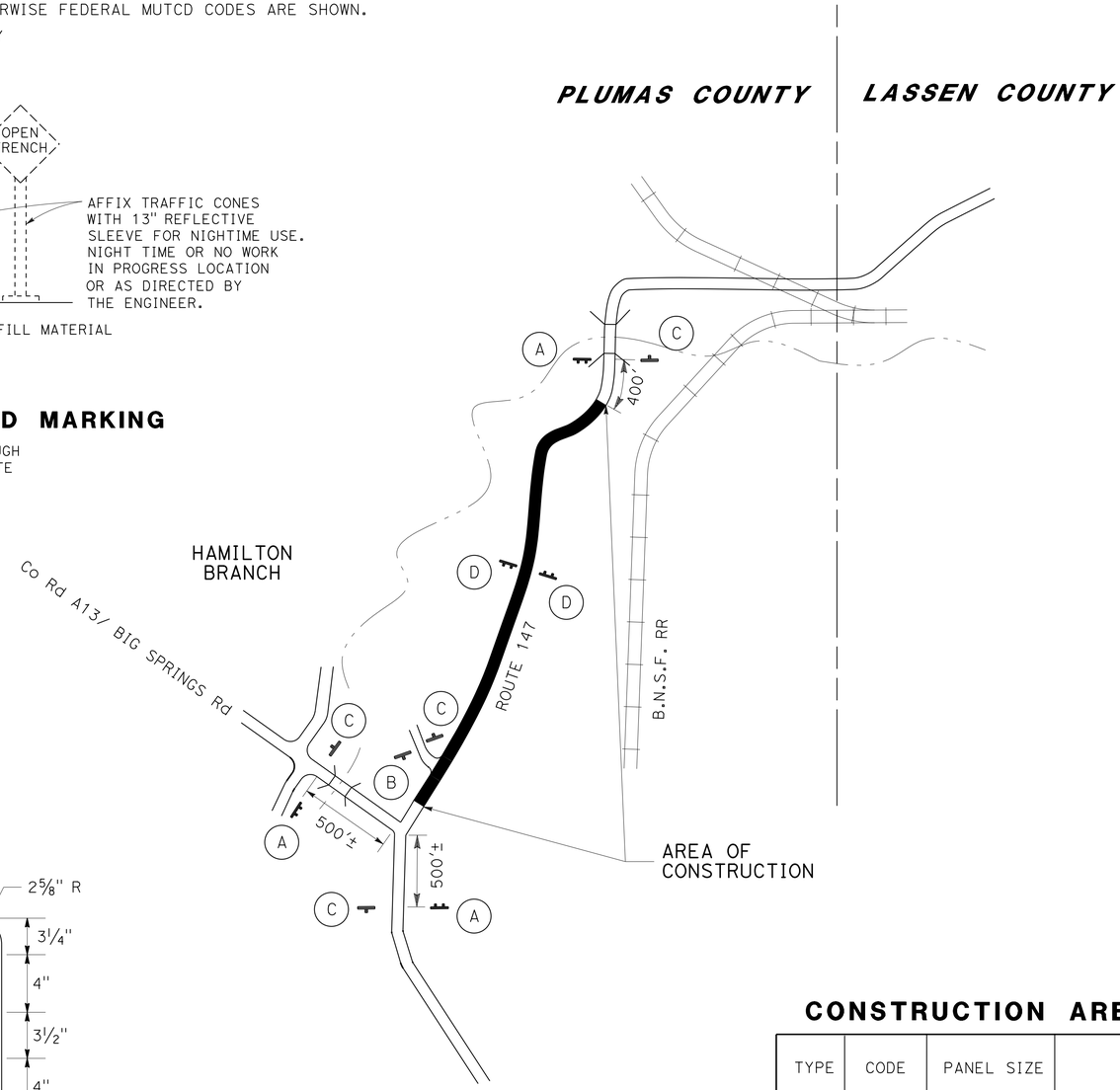

CONSTRUCTION AREA SIGN PLAN

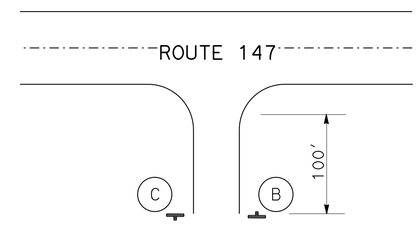

TYPICAL ROAD CONNECTION CONSTRUCTION AREA SIGN DETAIL

PORTABLE CHANGEABLE MESSAGE SIGNS

	(N) EA	LS
TOTAL	3	1

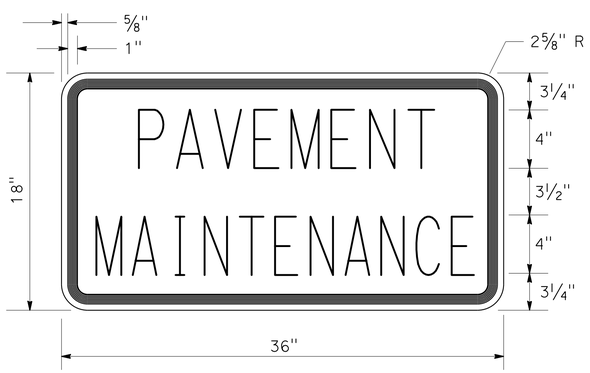

C23B(CA) SIGN PANEL DETAIL

CONSTRUCTION AREA SIGNS (STATIONARY MOUNTED)

TYPE	CODE	PANEL SIZE	SIGN MESSAGE	No. AND SIZE OF POSTS	No. OF SIGNS
A	C11(CA) C23B(CA)	60" x 36" 36" x 18"	ROAD CONSTRUCTION NEXT XX MILES PAVEMENT MAINTENANCE	2 - 4" x 6"	3
B	W20-1	48" x 48"	ROAD WORK AHEAD	1 - 4" x 6"	1
C	G20-2	36" x 18"	END ROAD WORK	1 - 4" x 4"	4
D	C11(CA)	60" x 36"	ROAD CONSTRUCTION NEXT XX MILES	2 - 4" x 6"	2

CONSTRUCTION AREA SIGNS

NO SCALE

CS-1

REVISED BY	DATE REVISED
CHRIS GALANTINE	STEVE ALAWAR
CALCULATED-DESIGNED BY	CHECKED BY
FUNCTIONAL SUPERVISOR	JULIE CASEY

STATE OF CALIFORNIA - DEPARTMENT OF TRANSPORTATION
Caltrans
DESIGN

P:\proj1\02\4F390_plans\pse\24f3901a001.dgn

LAST REVISION 02-04-15
DATE PLOTTED => 23-FEB-2015
TIME PLOTTED => 09:38

Dist	COUNTY	ROUTE	POST MILES TOTAL PROJECT	SHEET No.	TOTAL SHEETS
02	Plu	147	7.5/8.9	25	52

Christopher Galantine 02-04-15
REGISTERED CIVIL ENGINEER DATE

02-04-15
PLANS APPROVAL DATE

REGISTERED PROFESSIONAL ENGINEER
CHRIS GALANTINE
No. C52287
Exp. 12-31-16
CIVIL
STATE OF CALIFORNIA

THE STATE OF CALIFORNIA OR ITS OFFICERS OR AGENTS SHALL NOT BE RESPONSIBLE FOR THE ACCURACY OR COMPLETENESS OF SCANNED COPIES OF THIS PLAN SHEET.

NOTE:

1. FOR ACCURATE RIGHT OF WAY DATA, CONTACT RIGHT OF WAY ENGINEERING AT THE DISTRICT OFFICE.

LEGEND:

- 1-2 PAVEMENT DELINEATION STRIPE DETAIL No.
- DELINEATOR (CLASS 2), (TYPE E)
- SINGLE STRIPE MARKER
- STRIPE CHANGE LOCATION
- MILEPOST MARKER
- S= DELINEATOR SPACING
- OBJECT MARKER (TYPE L)
- DELINEATOR (CLASS 2), (TYPE F)

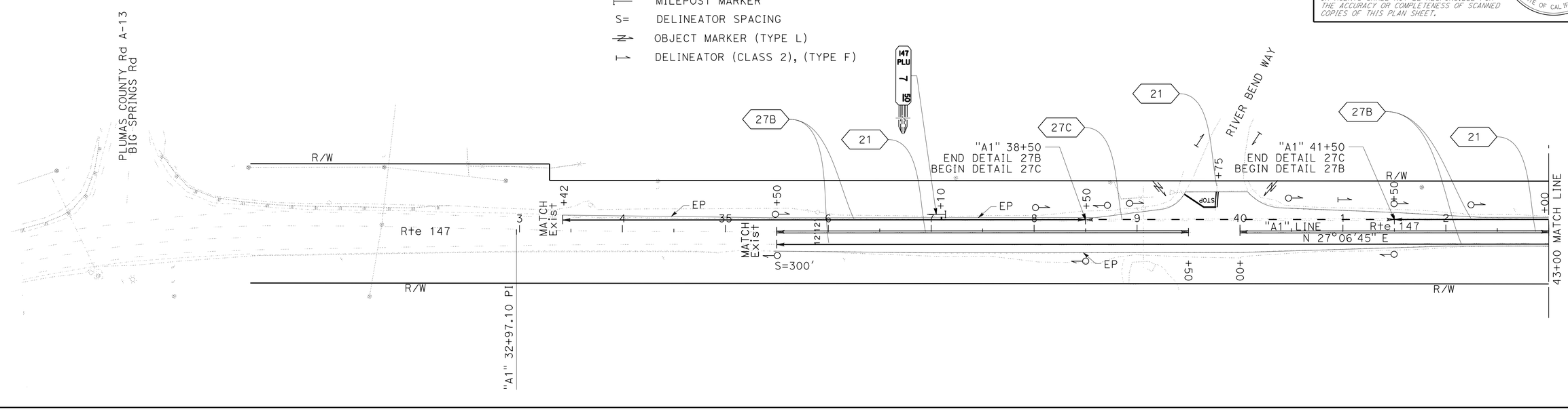

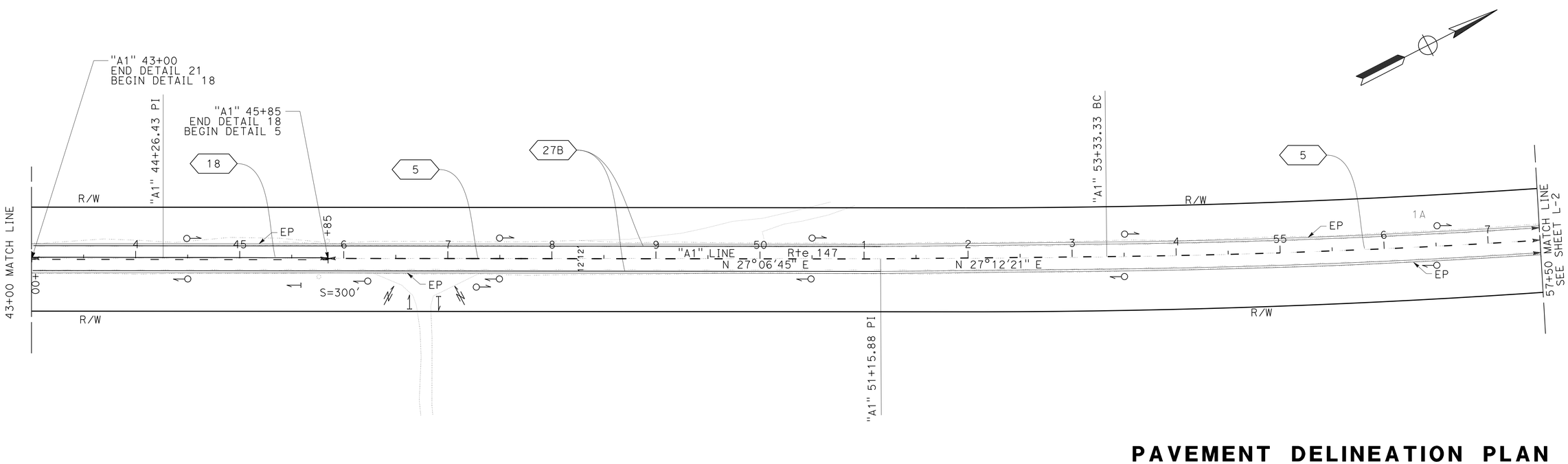

PAVEMENT DELINEATION PLAN

SCALE: 1" = 50'

PD-1

APPROVED FOR PAVEMENT DELINEATION WORK ONLY

STATE OF CALIFORNIA - DEPARTMENT OF TRANSPORTATION
Caltrans
DESIGN

FUNCTIONAL SUPERVISOR: JULIE CASEY
CALCULATED-DESIGNED BY: CHRIS GALANTINE
CHECKED BY: STEVE ALAWAR
REVISED BY
DATE REVISED

P:\proj1\02\4F390_plans\pse\24f390na001.dgn

LAST REVISION 02-04-15
DATE PLOTTED => 23-FEB-2015
TIME PLOTTED => 09:38

Dist	COUNTY	ROUTE	POST MILES TOTAL PROJECT	SHEET No.	TOTAL SHEETS
02	Plu	147	7.5/8.9	26	52

Christopher Galantine 02-04-15
REGISTERED CIVIL ENGINEER DATE

02-04-15
PLANS APPROVAL DATE

REGISTERED PROFESSIONAL ENGINEER
CHRIS GALANTINE
No. C52287
Exp. 12-31-16
CIVIL
STATE OF CALIFORNIA

THE STATE OF CALIFORNIA OR ITS OFFICERS OR AGENTS SHALL NOT BE RESPONSIBLE FOR THE ACCURACY OR COMPLETENESS OF SCANNED COPIES OF THIS PLAN SHEET.

NOTE:

1. FOR ACCURATE RIGHT OF WAY DATA, CONTACT RIGHT OF WAY ENGINEERING AT THE DISTRICT OFFICE.

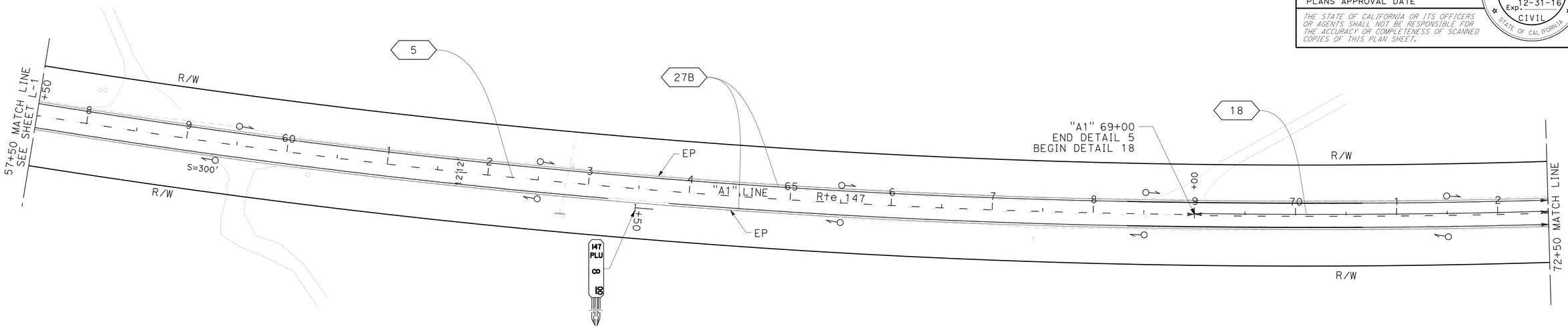

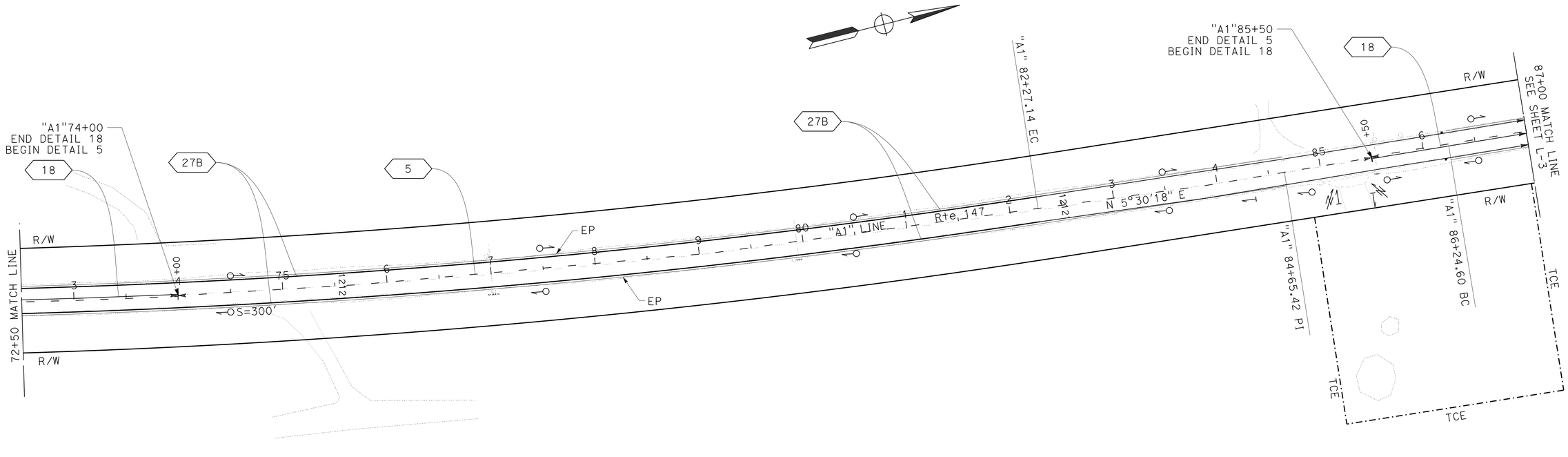

PAVEMENT DELINEATION PLAN

SCALE: 1" = 50'

APPROVED FOR PAVEMENT DELINEATION WORK ONLY

PD-2

REVISED BY | DATE REVISED
CHRIS GALANTINE | STEVE ALAWAR
CALCULATED-DESIGNED BY | CHECKED BY
FUNCTIONAL SUPERVISOR: JULIE CASEY

STATE OF CALIFORNIA - DEPARTMENT OF TRANSPORTATION
Caltrans® DESIGN

P:\proj1\02\4F390_plans\pse\24f390na002.dgn

LAST REVISION 02-04-15 | DATE PLOTTED => 23-FEB-2015 | TIME PLOTTED => 09:38

BORDER LAST REVISED 7/2/2010 | USERNAME => s115152 | DGN FILE => 24f390na002.dgn | RELATIVE BORDER SCALE IS IN INCHES 0 1 2 3 | UNIT 0318 | PROJECT NUMBER & PHASE 02-1200-0102-1 | EA 02-4F3901

Dist	COUNTY	ROUTE	POST MILES TOTAL PROJECT	SHEET No.	TOTAL SHEETS
02	Plu	147	7.5/8.9	27	52

Christopher Galantine 02-04-15
REGISTERED CIVIL ENGINEER DATE

02-04-15
PLANS APPROVAL DATE

REGISTERED PROFESSIONAL ENGINEER
CHRIS GALANTINE
No. C52287
Exp. 12-31-16
CIVIL
STATE OF CALIFORNIA

THE STATE OF CALIFORNIA OR ITS OFFICERS OR AGENTS SHALL NOT BE RESPONSIBLE FOR THE ACCURACY OR COMPLETENESS OF SCANNED COPIES OF THIS PLAN SHEET.

NOTE:

1. FOR ACCURATE RIGHT OF WAY DATA, CONTACT RIGHT OF WAY ENGINEERING AT THE DISTRICT OFFICE.

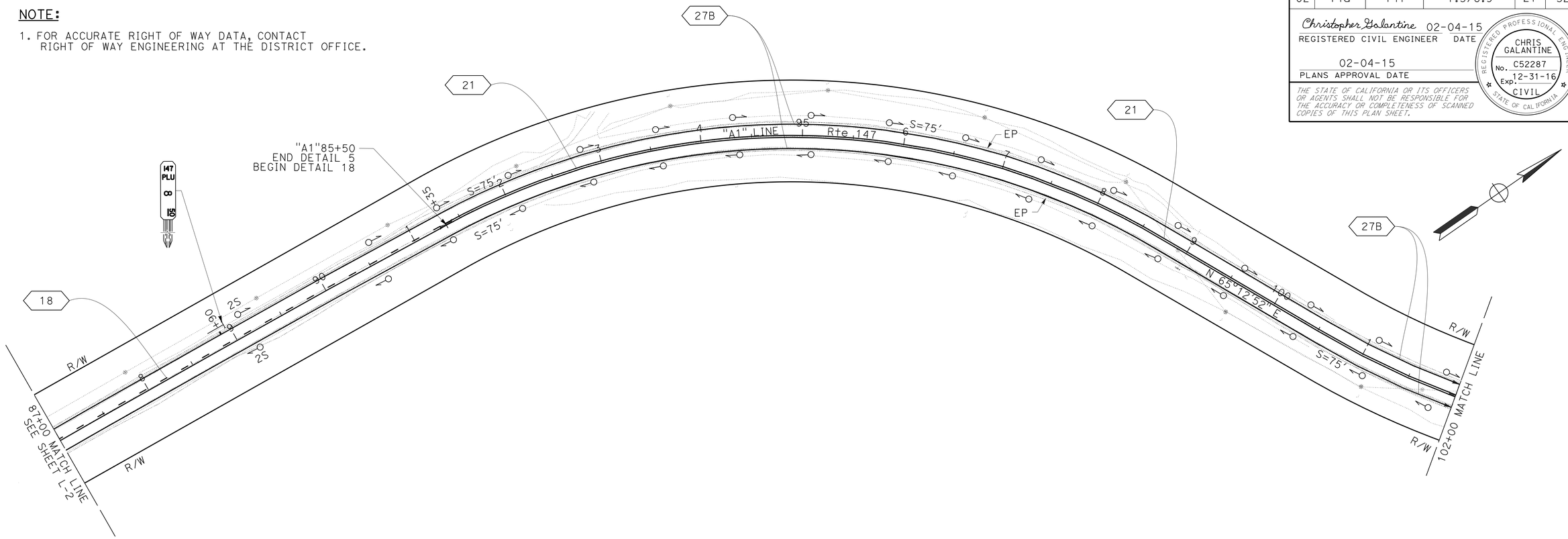

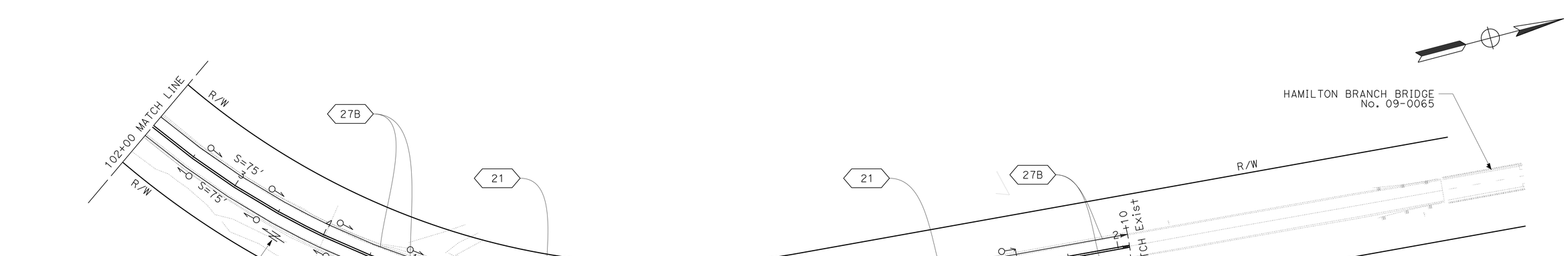

PAVEMENT DELINEATION PLAN

SCALE: 1" = 50'

PD-3

APPROVED FOR PAVEMENT DELINEATION WORK ONLY

REVISED BY	DATE REVISED
CHRIS GALANTINE	STEVE ALAWAR
CALCULATED-DESIGNED BY	CHECKED BY
FUNCTIONAL SUPERVISOR	JULIE CASEY

STATE OF CALIFORNIA - DEPARTMENT OF TRANSPORTATION
Caltrans
DESIGN

P:\proj1\02\4F390_plans\pse\24f390na003.dgn

LAST REVISION 02-04-15 | DATE PLOTTED => 23-FEB-2015 | TIME PLOTTED => 09:38

BORDER LAST REVISED 7/2/2010 | USERNAME => s115152 | DGN FILE => 24f390na003.dgn | RELATIVE BORDER SCALE IS IN INCHES 0 1 2 3 | UNIT 0318 | PROJECT NUMBER & PHASE 02-1200-0102-1 | EA 02-4F3901

Dist	COUNTY	ROUTE	POST MILES TOTAL PROJECT	SHEET No.	TOTAL SHEETS
02	Plu	147	7.5/8.9	28	52

Christopher Galantine 02-04-15
REGISTERED CIVIL ENGINEER DATE

02-04-15
PLANS APPROVAL DATE

REGISTERED PROFESSIONAL ENGINEER
CHRIS GALANTINE
No. C52287
Exp. 12-31-16
CIVIL
STATE OF CALIFORNIA

THE STATE OF CALIFORNIA OR ITS OFFICERS OR AGENTS SHALL NOT BE RESPONSIBLE FOR THE ACCURACY OR COMPLETENESS OF SCANNED COPIES OF THIS PLAN SHEET.

NOTES:

1. FOR DETAILS NOT SHOWN, REFER TO THE STANDARD PLANS.

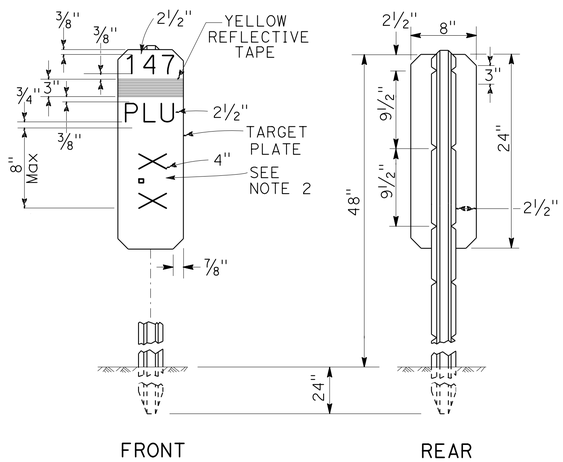

NOTES:

1. THE MARKER SHALL BE WHITE (NON-REFLECTIVE) TARGET PLATE WITH BLACK SERIES D NUMERALS AND LETTERS.
2. A POST MILE PREFIX, SUCH AS "R", SHALL APPLY ONLY WHEN DIRECTED BY THE ENGINEER.
3. ALL INFORMATION SHALL BE IN ENGLISH UNITS (MILES).

MILEPOST MARKER

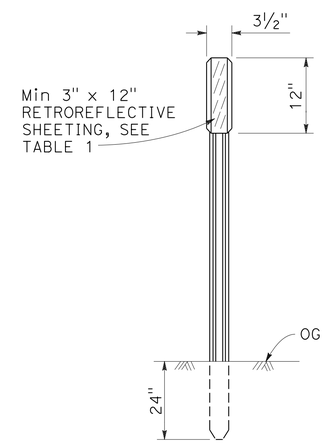

CLASS 2 METAL POST

PAVEMENT DELINEATION DETAILS

NO SCALE

PDD-1

LAST REVISION	DATE PLOTTED => 23-FEB-2015
02-04-15	TIME PLOTTED => 09:38

REVISED BY	DATE REVISED

CALCULATED-DESIGNED BY	CHRIS GALANTINE
CHECKED BY	STEVE ALAWAR
FUNCTIONAL SUPERVISOR	JULIE CASEY

STATE OF CALIFORNIA - DEPARTMENT OF TRANSPORTATION
Caltrans
DESIGN

P:\proj1\02\4F390_plans\pse\24f390nb001.dgn

Dist	COUNTY	ROUTE	POST MILES TOTAL PROJECT	SHEET No.	TOTAL SHEETS
02	Plu	147	7.5/8.9	29	52

Christopher Galantine 02-04-15
REGISTERED CIVIL ENGINEER DATE

02-04-15
PLANS APPROVAL DATE

REGISTERED PROFESSIONAL ENGINEER
CHRIS GALANTINE
No. C52287
Exp. 12-31-16
CIVIL
STATE OF CALIFORNIA

THE STATE OF CALIFORNIA OR ITS OFFICERS OR AGENTS SHALL NOT BE RESPONSIBLE FOR THE ACCURACY OR COMPLETENESS OF SCANNED COPIES OF THIS PLAN SHEET.

NOTES:

1. FOR DETAILS NOT SHOWN, REFER TO THE STANDARD PLANS.

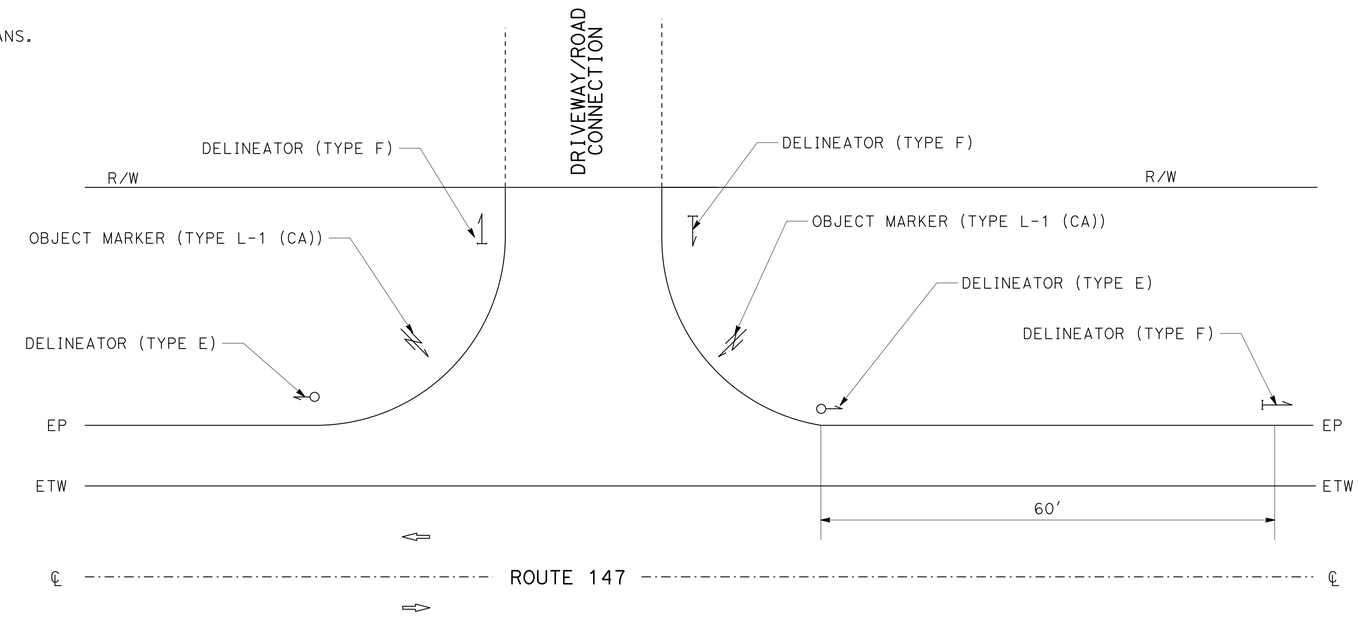

DRIVEWAY / ROAD CONNECTION DELINEATOR PLACEMENT DETAIL

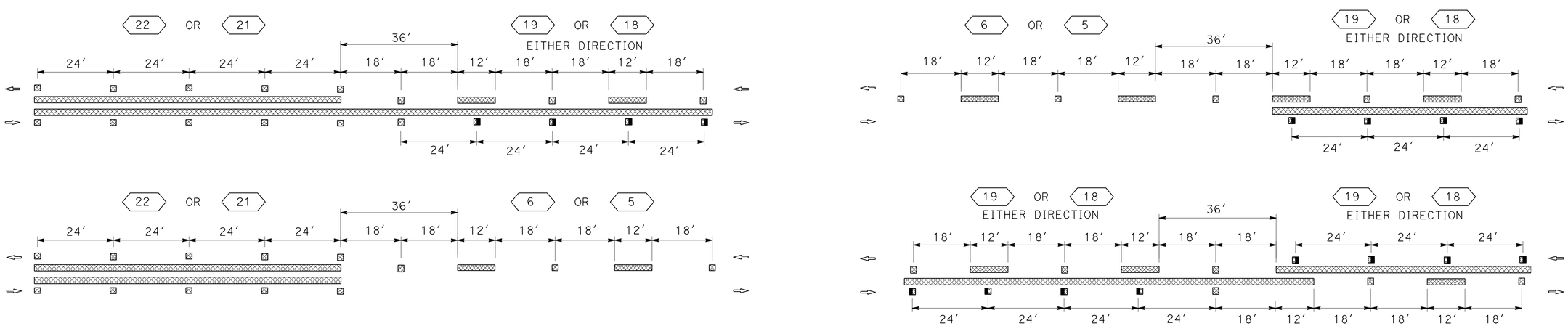

TYPICAL STRIPE TRANSITION DETAILS (CONVENTIONAL ROADWAY)

PAVEMENT DELINEATION DETAILS

NO SCALE

PDD-2

STATE OF CALIFORNIA - DEPARTMENT OF TRANSPORTATION
Caltrans® DESIGN

FUNCTIONAL SUPERVISOR: JULIE CASEY
CALCULATED-DESIGNED BY: CHRIS GALANTINE
CHECKED BY: STEVE ALAWAR
REVISED BY
DATE REVISED

P:\proj1\02\4F390_plans\pse\24f390nb002.dgn

LAST REVISION 02-04-15
DATE PLOTTED => 23-FEB-2015
TIME PLOTTED => 09:38

Dist	COUNTY	ROUTE	POST MILES TOTAL PROJECT	SHEET No.	TOTAL SHEETS
02	Plu	147	7.5/8.9	30	52

Christopher Galantine 02-04-15
REGISTERED CIVIL ENGINEER DATE

02-04-15
PLANS APPROVAL DATE

REGISTERED PROFESSIONAL ENGINEER
CHRIS GALANTINE
No. C52287
Exp. 12-31-16
CIVIL
STATE OF CALIFORNIA

THE STATE OF CALIFORNIA OR ITS OFFICERS OR AGENTS SHALL NOT BE RESPONSIBLE FOR THE ACCURACY OR COMPLETENESS OF SCANNED COPIES OF THIS PLAN SHEET.

PAVEMENT DELINEATION QUANTITIES

		STATION			THERMOPLASTIC TRAFFIC STRIPE (SPRAYABLE)				
SHEET No.	LINE	FROM	TO	L+/R+/CL	DETAIL 5 LF	DETAIL 18 LF	DETAIL 21 LF	DETAIL 27C LF	DETAIL 27B LF
PD-1	A1	35+50	39+50	CL			400		
PD-1	A1	35+50	43+00	R+					750
PD-1	A1	33+42	38+50	L+					508
PD-1	A1	38+50	41+50	L+				300	
PD-1	A1	39+75	39+75	L+			25		
PD-1	A1	40+00	43+00	CL			300		
PD-1	A1	41+50	43+00	L+					150
PD-1	A1	43+00	57+50	L+\R+					2900
PD-1	A1	43+00	45+85	CL		285			
PD-1	A1	45+85	57+50	CL	1165				
PD-2	A1	57+50	72+50	L+\R+					3000
PD-2	A1	57+50	69+00	CL	1150				
PD-2	A1	59+70	59+90	L+\R+					
PD-2	A1	69+00	72+50	CL		350			
PD-2	A1	72+50	87+00	L+\R+					2900
PD-2	A1	72+50	74+00	CL		150			
PD-2	A1	74+00	85+50	CL	1150				
PD-2	A1	85+50	87+00	CL		150			
PD-3	A1	87+00	91+35	CL		435			
PD-3	A1	91+35	112+10	CL			2075		
PD-3	A1	87+00	112+10	L+\R+					5020
				SUBTOTAL	3465	1370	2800	300	15,228
				TOTAL	23,163				

MILEPOST MARKERS, DELINEATORS AND OBJECT MARKERS

	DELINEATOR (CLASS 2)		MILEPOST MARKER	REMOVE DELINEATOR	OBJECT MARKERS (TYPE L-1)
	TYPE F	TYPE E			
	EA	EA	EA	EA	EA
SUBTOTAL	9	100	3	7	7
TOTAL	109		3	7	7

PAVEMENT MARKING QUANTITIES

STATION	THERMOPLASTIC PAVEMENT MARKING				COMMENTS
	TYPE	QUANTITY		SQFT	
		EA	LF		
"A1" 39+75 L+	STOP BAR	1	35	35	LIMIT LINE
"A1" 39+75 L+	STOP	1		22	"STOP" PAVEMENT MARKING
		TOTAL		57	

PAVEMENT DELINEATION QUANTITIES
PDQ-1

REVISED BY | DATE REVISED
CHRIS GALANTINE | STEVE ALAWAR
CALCULATED-DESIGNED BY | CHECKED BY
FUNCTIONAL SUPERVISOR | JULIE CASEY
STATE OF CALIFORNIA - DEPARTMENT OF TRANSPORTATION
Caltrans
DESIGN
P:\proj1\02\4F390_plans\pse\24f390nc001.dgn

LAST REVISION 02-04-15 | DATE PLOTTED => 23-FEB-2015 | TIME PLOTTED => 09:38

Dist	COUNTY	ROUTE	POST MILES TOTAL PROJECT	SHEET No.	TOTAL SHEETS
02	Plu	147	7.5/8.9	31	52

REGISTERED CIVIL ENGINEER 02-04-15 DATE

02-04-15
PLANS APPROVAL DATE

REGISTERED PROFESSIONAL ENGINEER JAVED IQBAL No. C82518 Exp. 9/30/16 CIVIL STATE OF CALIFORNIA

THE STATE OF CALIFORNIA OR ITS OFFICERS OR AGENTS SHALL NOT BE RESPONSIBLE FOR THE ACCURACY OR COMPLETENESS OF SCANNED COPIES OF THIS PLAN SHEET.

NOTES:

1. CALIFORNIA SIGN CODES ARE DESIGNATED BY (CA), OTHERWISE, FEDERAL MUTCD SIGN CODES ARE SHOWN.
2. EXACT SIGN LOCATIONS TO BE DETERMINED BY THE ENGINEER.

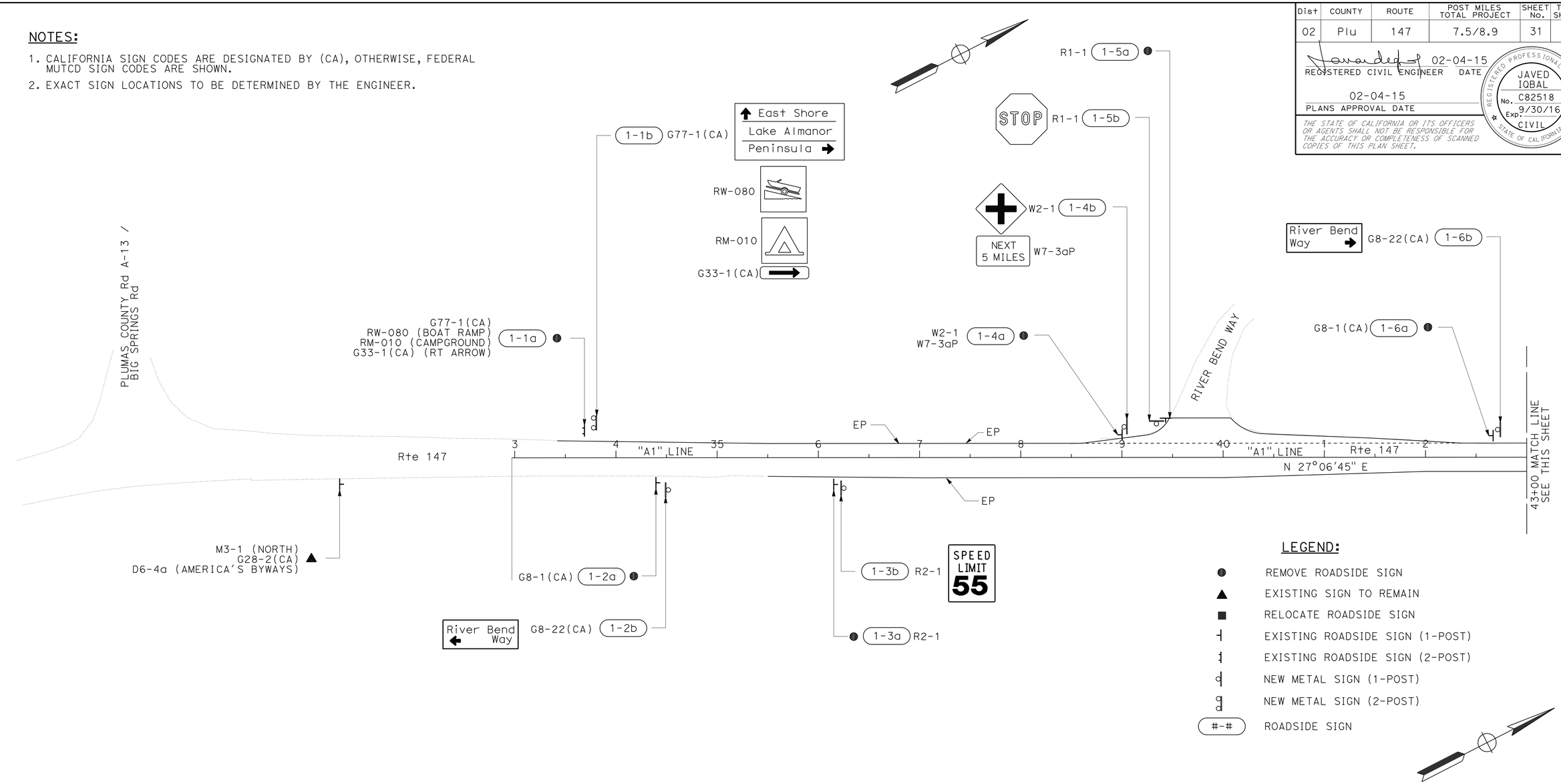

LEGEND:

- ● REMOVE ROADSIDE SIGN
- ▲ EXISTING SIGN TO REMAIN
- ■ RELOCATE ROADSIDE SIGN
- EXISTING ROADSIDE SIGN (1-POST)
- EXISTING ROADSIDE SIGN (2-POST)
- NEW METAL SIGN (1-POST)
- NEW METAL SIGN (2-POST)
- (#-#) ROADSIDE SIGN

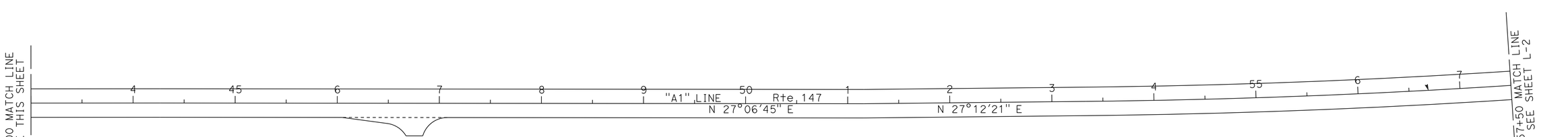

SIGN PLAN

SCALE: 1" = 50'

S-1

APPROVED FOR SIGN WORK ONLY

REVISED BY | DATE REVISED
JAVED IQBAL | FRANK RIVAS
CALCULATED-DESIGNED BY | CHECKED BY
FUNCTIONAL SUPERVISOR | JULIE CASEY

STATE OF CALIFORNIA - DEPARTMENT OF TRANSPORTATION
Caltrans DESIGN

P:\proj1\02\4F390_plans\pse\24f390oa001.dgn

LAST REVISION 01-28-15 | DATE PLOTTED => 23-FEB-2015 | TIME PLOTTED => 09:38

Dist	COUNTY	ROUTE	POST MILES TOTAL PROJECT	SHEET No.	TOTAL SHEETS
02	Plu	147	7.5/8.9	32	52

REGISTERED CIVIL ENGINEER 02-04-15 DATE

02-04-15
PLANS APPROVAL DATE

REGISTERED PROFESSIONAL ENGINEER JAVED IQBAL No. C82518 Exp. 9/30/16 CIVIL STATE OF CALIFORNIA

THE STATE OF CALIFORNIA OR ITS OFFICERS OR AGENTS SHALL NOT BE RESPONSIBLE FOR THE ACCURACY OR COMPLETENESS OF SCANNED COPIES OF THIS PLAN SHEET.

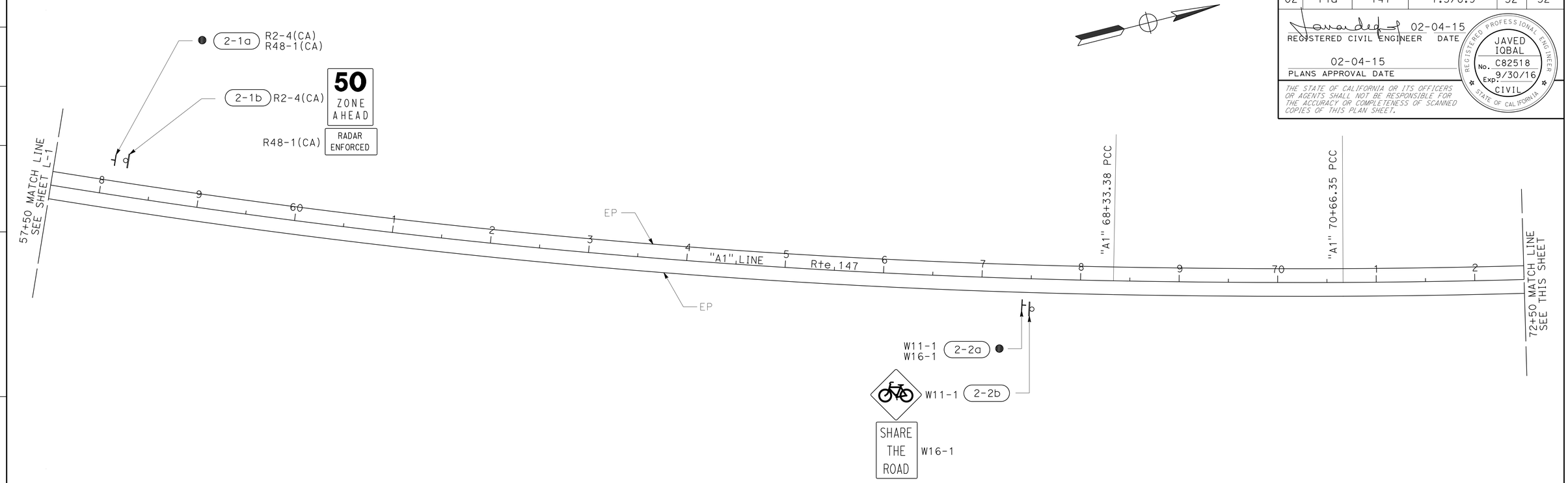

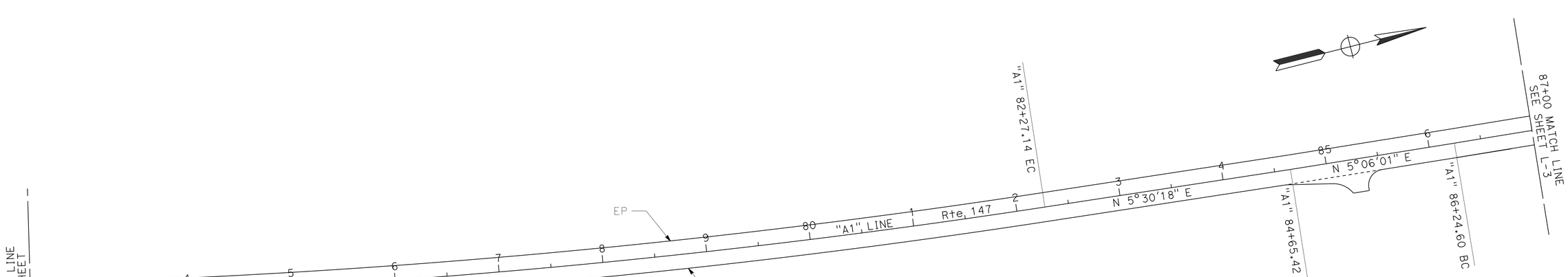

SIGN PLAN

SCALE: 1" = 50'

S-2

APPROVED FOR SIGN WORK ONLY

REVISED BY | DATE REVISED

JAVED IQBAL | FRANK RIVAS

CALCULATED-DESIGNED BY | CHECKED BY

FUNCTIONAL SUPERVISOR: JULIE CASEY

STATE OF CALIFORNIA - DEPARTMENT OF TRANSPORTATION

Caltrans® **DESIGN**

P:\proj1\02\4F390_plans\pse\24f390aa002.dgn

LAST REVISION 01-28-15 | DATE PLOTTED => 23-FEB-2015 | TIME PLOTTED => 09:38

Dist	COUNTY	ROUTE	POST MILES TOTAL PROJECT	SHEET No.	TOTAL SHEETS
02	Plu	147	7.5/8.9	33	52

REGISTERED CIVIL ENGINEER 02-04-15 DATE

02-04-15
PLANS APPROVAL DATE

REGISTERED PROFESSIONAL ENGINEER JAVED IQBAL No. C82518 Exp. 9/30/16 CIVIL STATE OF CALIFORNIA

THE STATE OF CALIFORNIA OR ITS OFFICERS OR AGENTS SHALL NOT BE RESPONSIBLE FOR THE ACCURACY OR COMPLETENESS OF SCANNED COPIES OF THIS PLAN SHEET.

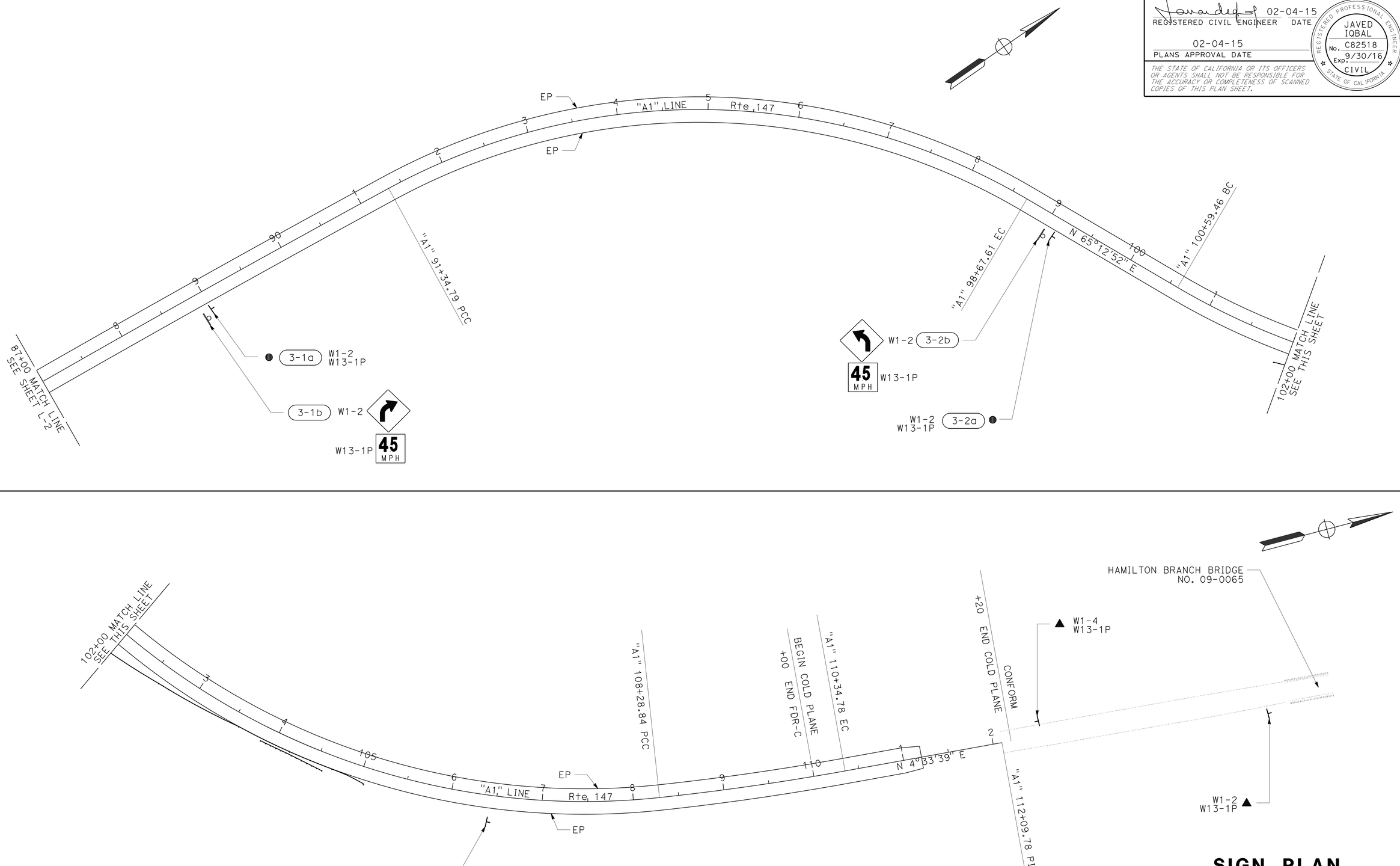

SIGN PLAN

SCALE: 1" = 50'

S-3

APPROVED FOR SIGN WORK ONLY

REVISED BY	DATE REVISED

CALCULATED-DESIGNED BY: JAVED IQBAL
CHECKED BY: FRANK RIVAS
FUNCTIONAL SUPERVISOR: JULIE CASEY

STATE OF CALIFORNIA - DEPARTMENT OF TRANSPORTATION
Caltrans
DESIGN

P:\proj1\02\4F390_plans\pse\24f390oa003.dgn

LAST REVISION 01-28-15
DATE PLOTTED => 23-FEB-2015
TIME PLOTTED => 09:38

Dist	COUNTY	ROUTE	POST MILES TOTAL PROJECT	SHEET No.	TOTAL SHEETS
02	Plu	147	7.5/8.9	34	52

REGISTERED CIVIL ENGINEER 02-04-15 DATE

02-04-15
PLANS APPROVAL DATE

REGISTERED PROFESSIONAL ENGINEER FRANK RIVAS No. C53592 Exp. 6/30/15 CIVIL STATE OF CALIFORNIA

THE STATE OF CALIFORNIA OR ITS OFFICERS OR AGENTS SHALL NOT BE RESPONSIBLE FOR THE ACCURACY OR COMPLETENESS OF SCANNED COPIES OF THIS PLAN SHEET.

NOTES:

1. USE A 2¼" Sq TUBE x 30" LONG, 3/16" THICK ANCHOR FOR 2" POSTS.
   USE A 3" Sq TUBE x 3' LONG, 3/16" THICK ANCHOR FOR 2-1/2 " POSTS.
2. USE A 5/16" CORNER BOLT OR TWO DRIVE RIVETS TO FASTEN ASSEMBLED SIGN AND POST INTO ANCHOR. INSTALL CORNER BOLT OR DRIVE RIVETS INTO THE SIDES FACING TRAFFIC.
3. REMOVE EXISTING AC OR PCC, DRIVE ANCHOR SLEEVE INTO SOIL AND RECAP WITH LIKE MATERIAL, MATCHING EXISTING THICKNESS.
4. 2" POSTS ARE TO BE 1/8" THICK, PERFORATIONS OF 7/16" IN DIAMETER ARE 1" ON CENTER ON ALL SIDES, LENGTHS ARE 10' AND 12'.
5. 2-1/2" POSTS ARE TO BE 1/8" THICK, PERFORATIONS OF 7/16" IN DIAMETER ARE 1" ON CENTER ON ALL SIDES, 2-1/2" POSTS ARE 12' AND 14' IN LENGTH.
6. FOR DETAILS NOT SHOWN, REFER TO THE STANDARD PLANS.
7. 2-1/2" POSTS SHALL BE USED IN SIDEWALK AND HIGH PEDESTRIAN USE PLACEMENTS.
8. ALL ANCHOR SLEEVES SHALL BE EMBEDDED IN PCC, EXCEPT FOR INSTALLATIONS IN PAVEMENTS OR SIDEWALKS.

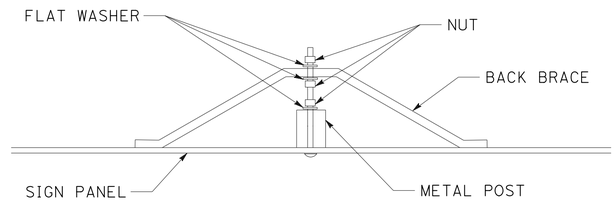

BACK BRACE MOUNTING DETAIL

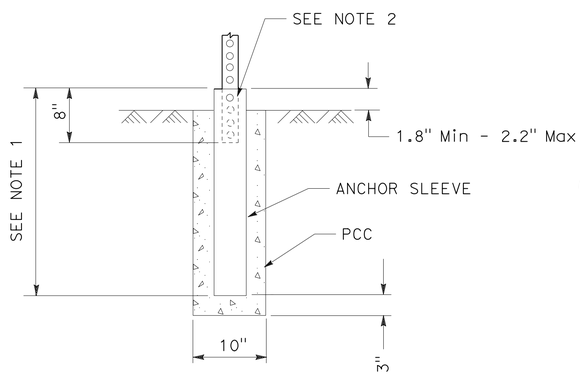

INSTALLATION IN SOIL (PCC)
(SEE NOTE 8)

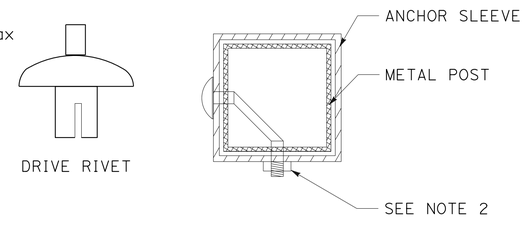

FASTENER DETAILS

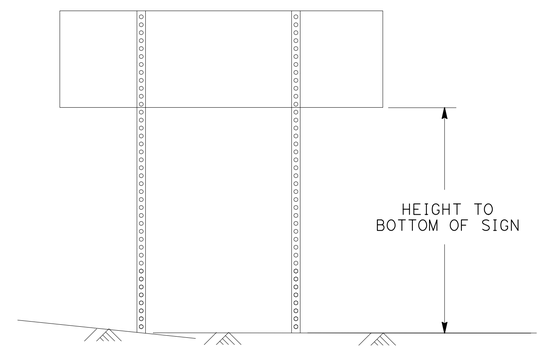

TWO POSTS INSTALLATION
(POST SIZE, SEE CHART BELOW)

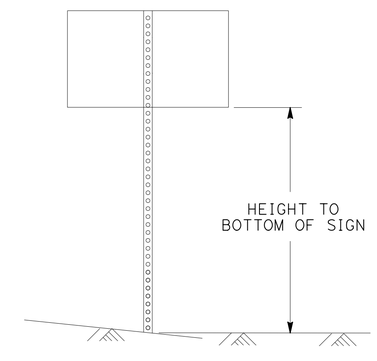

SINGLE POST INSTALLATION
(POST SIZE, SEE CHART BELOW)

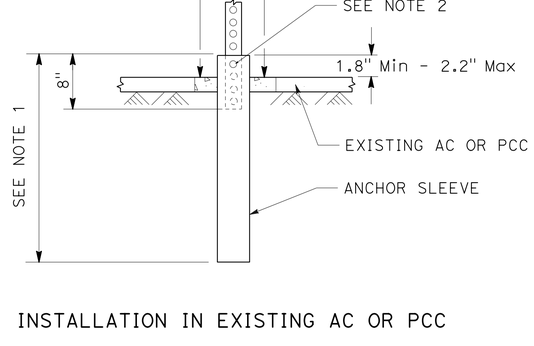

INSTALLATION IN EXISTING AC OR PCC

Max SQFT OF SIGN

POST SIZE	60"	72"	84"	96"	108"	120"
2"	18	16	14	12	10	8
2.5"	35	32	28	24	21	21

HEIGHT TO BOTTOM OF SIGN
DOUBLE POST GROUND SIGNS
70 MPH WIND SPEED

Max SQFT OF SIGN

POST SIZE	60"	72"	84"	96"	108"	120"
2"	10.5	10	8.7	7.4	6.2	5
2.5"	16	16	16	16	12	12

HEIGHT TO BOTTOM OF SIGN
SINGLE POST GROUND SIGNS
70 MPH WIND SPEED

METAL SIGN POST DETAIL

METAL SIGN POST INSTALLATION DETAILS

SIGN DETAILS
NO SCALE
SD-1

FRANK RIVAS — REVISED BY — DATE REVISED
CHRIS GALANTINE — CALCULATED-DESIGNED BY — CHECKED BY
ROB STINGER — FUNCTIONAL SUPERVISOR

STATE OF CALIFORNIA - DEPARTMENT OF TRANSPORTATION
Caltrans® TRAFFIC OPS

P:\proj1\02\4F390_plans\pse\24f390ob001.dgn

LAST REVISION 02-04-15 | DATE PLOTTED => 23-FEB-2015 | TIME PLOTTED => 09:38

BORDER LAST REVISED 7/2/2010 | USERNAME => s115152 | DGN FILE => 24f390ob001.dgn | RELATIVE BORDER SCALE IS IN INCHES 0 1 2 3 | UNIT 0147 | PROJECT NUMBER & PHASE 02-1200-0102-1 | EA 02-4F3901

Dist	COUNTY	ROUTE	POST MILES TOTAL PROJECT	SHEET No.	TOTAL SHEETS
02	Plu	147	7.5/8.9	35	52

REGISTERED CIVIL ENGINEER 02-04-15 DATE

02-04-15
PLANS APPROVAL DATE

REGISTERED PROFESSIONAL ENGINEER FRANK RIVAS No. C53592 Exp. 6/30/15 CIVIL STATE OF CALIFORNIA

THE STATE OF CALIFORNIA OR ITS OFFICERS OR AGENTS SHALL NOT BE RESPONSIBLE FOR THE ACCURACY OR COMPLETENESS OF SCANNED COPIES OF THIS PLAN SHEET.

NOTES:

1. ALL DIMENSIONS ARE IN INCHES.

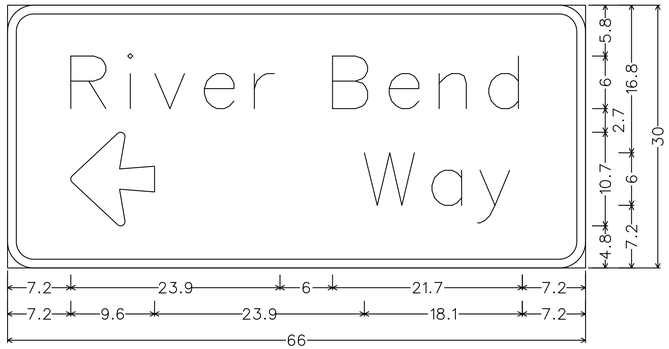

3.0" RADIUS, 1.0" BORDER, WHITE ON GREEN;
[RIVER BEND] E MOD; ARROW 6UC-2LH - 9.6" 180° [WAY] E MOD;

1-2b
G8-22(CA)

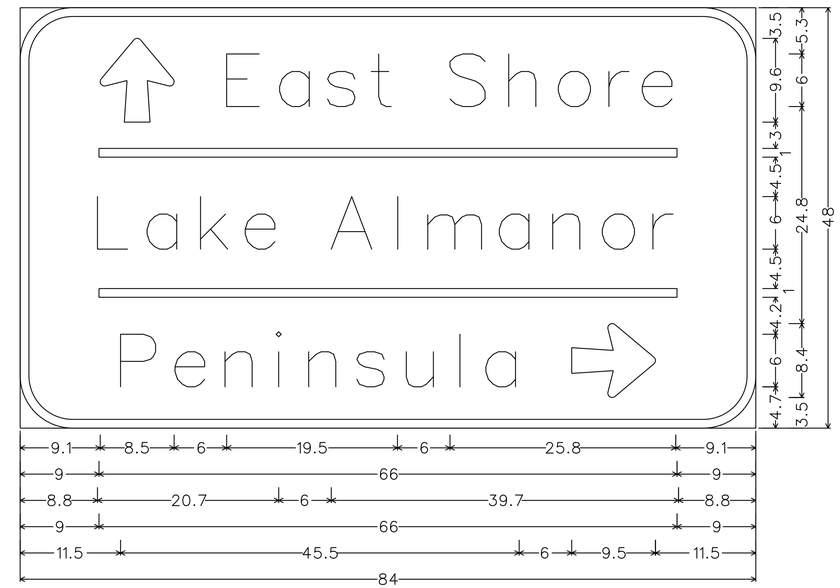

6.0" RADIUS, 1.0" BORDER, WHITE ON GREEN;
ARROW 6UC-1L - 9.6" 90° [EAST SHORE] E MOD; [LAKE ALMANOR] E MOD;
[PENINSULA] E MOD;
ARROW 6UC-1L - 9.6" 0°

1-1b
G77-1

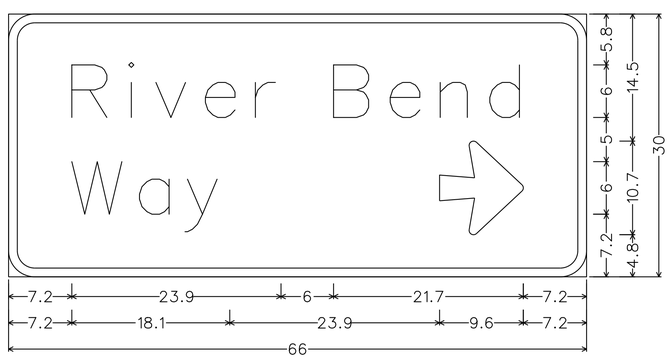

3.0" RADIUS, 1.0" BORDER, WHITE ON GREEN;
[RIVER BEND] E MOD; [WAY] E MOD; ARROW 6UC-2LH - 9.6" 0°

1-6b
G8-22(CA)

SIGN DETAILS

NO SCALE

SD-2

REVISED BY	DATE REVISED
FRANK RIVAS	CHRIS GALANTINE
CALCULATED-DESIGNED BY	CHECKED BY
FUNCTIONAL SUPERVISOR	ROB STINGER

STATE OF CALIFORNIA - DEPARTMENT OF TRANSPORTATION
Caltrans
TRAFFIC OPS

P:\proj1\02\4F390_plans\pse\24f390ob002.dgn

LAST REVISION 02-04-15 | DATE PLOTTED => 23-FEB-2015 | TIME PLOTTED => 09:38

Dist	COUNTY	ROUTE	POST MILES TOTAL PROJECT	SHEET No.	TOTAL SHEETS
02	Plu	147	7.5/8.9	36	52

REGISTERED CIVIL ENGINEER 02-04-15 DATE

02-04-15
PLANS APPROVAL DATE

REGISTERED PROFESSIONAL ENGINEER JAVED IQBAL No. C82518 Exp. 9/30/16 CIVIL STATE OF CALIFORNIA

THE STATE OF CALIFORNIA OR ITS OFFICERS OR AGENTS SHALL NOT BE RESPONSIBLE FOR THE ACCURACY OR COMPLETENESS OF SCANNED COPIES OF THIS PLAN SHEET.

NOTES:

1. EXACT LOCATION AND POSITION OF ROADSIDE SIGN TO BE DETERMINED BY THE ENGINEER.
2. POST SIZE AND LENGTH GIVEN ARE APPROXIMATE.
3. CALIFORNIA CODES ARE DESIGNATED BY (CA), OTHERWISE FEDERAL CODES ARE SHOWN.
4. (N) NOT A SEPARATE PAY ITEM, FOR INFORMATION ONLY.
5. "C" DIM = VERTICAL CLEARANCE EP TO BOTTOM OF SIGN PANEL.
6. POST DIMENSIONS CALCULATED ASSUMING CLOSEST EDGE OF SIGN IS 3' FROM EP OR BACK OF GUARDRAIL POST.

ROADSIDE SIGNS (EXISTING)

SIGN No. (#-##)	SIGN CODE	PANEL SIZE In x In	REMOVE ROADSIDE SIGN (EA)	TREATED WOOD WASTE (LB)	ROADSIDE SIGN ONE POST (EA)	ROADSIDE SIGN TWO POST (EA)	(N) "C" DIM (FT)	(N) POST SIZE AND LENGTH (LF) METAL POST 2½" x 2½"	WOOD POST 4" x 4"	WOOD POST 4" x 6"	WOOD POST 6" x 6"	WOOD POST 6" x 8"	COMMENTS
1-1a	G77-1(CA)	84 x 48	1	240						20.5,21.5			
	RW-080	24 x 24											
	RM-010	24 x 24											
	G33-1(CA)	24 x 6											
1-2a	G8-1	36 x 18	1	74						13.0			
1-3a	R2-1	36 x 48	1	63						11.0			
1-4a	W2-1	36 x 36	1	74						13.0			
	W7-3aP	32 x 18											
1-5a	R1-1	30 x 30	1	66						11.5			
1-6a	G8-1	36 x 18	1	66						11.5			
2-1a	R2-4(CA)	36 x 45	1	69						12.0			
	R48-1(CA)	36 x 18											
2-2a	W11-1	30 x 30	1	69						12.0			
	W16-1	18 x 24											
3-1a	W1-2	36 x 36	1	72						12.5			
	W13-1P	30 x 30											
3-2a	W1-2	36 x 36	1	69						12.0			
	W13-1P	30 x 30											
SHEET TOTAL			10	862									

SIGN QUANTITIES

SQ-1

REVISED BY | DATE REVISED

JAVED IQBAL | FRANK RIVAS

CALCULATED-DESIGNED BY | CHECKED BY

FUNCTIONAL SUPERVISOR: JULIE CASEY

STATE OF CALIFORNIA - DEPARTMENT OF TRANSPORTATION

Caltrans® DESIGN

P:\proj1\02\4F390_plans\pse\24f390od001.dgn

LAST REVISION 02-11-15 | DATE PLOTTED => 23-FEB-2015 | TIME PLOTTED => 09:38

Dist	COUNTY	ROUTE	POST MILES TOTAL PROJECT	SHEET No.	TOTAL SHEETS
02	Plu	147	7.5/8.9	37	52

REGISTERED CIVIL ENGINEER 02-04-15 DATE

02-04-15
PLANS APPROVAL DATE

REGISTERED PROFESSIONAL ENGINEER JAVED IQBAL No. C82518 Exp. 9/30/16 CIVIL STATE OF CALIFORNIA

THE STATE OF CALIFORNIA OR ITS OFFICERS OR AGENTS SHALL NOT BE RESPONSIBLE FOR THE ACCURACY OR COMPLETENESS OF SCANNED COPIES OF THIS PLAN SHEET.

NOTE:

1. (N) - NOT A SEPARATE PAY ITEM, FOR INFORMATION ONLY

ROADSIDE SIGNS (NEW)

SIGN No. (#-##)	SIGN CODE	PANEL SIZE In x In	REMOVE ROADSIDE SIGN (EA)	TREATED WOOD WASTE (LB)	ROADSIDE SIGN ONE POST (EA)	ROADSIDE SIGN TWO POST (EA)	(N) "C" DIM (FT)	(N) POST SIZE AND LENGTH (LF) METAL POST 2½" x 2½"	WOOD POST 4" x 4"	WOOD POST 4" x 6"	WOOD POST 6" x 6"	WOOD POST 6" x 8"	COMMENTS
1-1b	G77-1(CA)	84 x 48				1				20.5,21.5			
	RW-080	24 x 24											
	RM-010	24 x 24											
	G33-1(CA)	24 x 6											
1-2b	G8-22(CA)	66 x 30				1		10.2					
1-3b	R2-1	36 x 48			1			8.2					
1-4b	W2-1	36 x 36			1			10.2					
	W7-3aP	30 x 24											
1-5b	R1-1	30 x 30			1			8.7					
1-6b	G8-22(CA)	66 x 30				1		8.7					
2-1b	R2-4(CA)	36 x 45			1			9.2					
	R48-1(CA)	36 x 18											
2-2b	W11-1	30 x 30			1			9.2					
	W16-1	18 x 24											
3-1b	W1-2	36 x 36			1			9.7					PLACE 125' BEFORE CURVE
	W13-1P	30 x 30											
3-2b	W1-2	36 x 36			1			9.2					PLACE 125' BEFORE CURVE
	W13-1P	30 x 30											
SHEET TOTAL					7	3							
GRAND TOTAL			10	862	7	3							

SIGN QUANTITIES
SQ-2

REVISED BY	DATE REVISED

JAVED IQBAL — CALCULATED-DESIGNED BY
FRANK RIVAS — CHECKED BY
JULIE CASEY — FUNCTIONAL SUPERVISOR

STATE OF CALIFORNIA - DEPARTMENT OF TRANSPORTATION
Caltrans
DESIGN

P:\proj1\02\4F390_plans\pse\24f390od002.dgn

LAST REVISION 02-11-15 | DATE PLOTTED => 23-FEB-2015 | TIME PLOTTED => 09:38

Dist	COUNTY	ROUTE	POST MILES TOTAL PROJECT	SHEET No.	TOTAL SHEETS
02	Plu	147	7.5/8.9	38	52

REGISTERED CIVIL ENGINEER 02-04-15 DATE

02-04-15
PLANS APPROVAL DATE

REGISTERED PROFESSIONAL ENGINEER JAVED IQBAL No. C82518 Exp. 9/30/16 CIVIL STATE OF CALIFORNIA

THE STATE OF CALIFORNIA OR ITS OFFICERS OR AGENTS SHALL NOT BE RESPONSIBLE FOR THE ACCURACY OR COMPLETENESS OF SCANNED COPIES OF THIS PLAN SHEET.

ABBREVIATIONS:

L LENGTH OF SIGN
D DEPTH OF SIGN
FY FLUORESCENT YELLOW

ROADSIDE SIGN PANEL QUANTITIES

SIGN No.	SIGN CODE	SIGN MESSAGE/ DESCRIPTION	SIGN SIZE L x D (In x In)	SINGLE FACED	SIGN FACING MATERIAL						FURNISH SINGLE SHEET ALUMINUM SIGN	FURNISH SINGLE SHEET ALUMINUM SIGN FOR RETROREFLECTIVE SHEETING (TYPE XI)			RETROREFLECTIVE SHEETING (TYPE XI)
					BACKGROUND		LEGEND		PROTECTIVE FILM		UNFRAMED	UNFRAMED	FRAMED		
					SHEETING COLOR	RETROREFLECTIVE ASTM TYPE	SHEETING COLOR	RETROREFLECTIVE ASTM TYPE	STANDARD	PREMIUM	0.080"	0.080"	0.063"	0.080"	
1-1b	G77-1(CA)	ARROW HEAD, EAST SHORE, LAKE ALMANOR, PENINSULA, ARROW HEAD	84 x 48	X	GREEN	XI	WHITE	XI		X				28.0	28.0
1-1b	RW-080	BOAT LAUNCH RAMP SYMBOL	24 x 24	X	BROWN	XI	WHITE	XI		X		4.0			4.0
1-1b	RM-010	CAMPGROUND, TENT SYMBOL	24 x 24	X	BROWN	XI	WHITE	XI		X		4.0			4.0
1-1b	G33-1(CA)	ARROW	24 x 6	X	BROWN	XI	WHITE	XI		X		1.0			1.0
1-2b	G8-22(CA)	ARROW HEAD, RIVER BEND WAY	66 x 30	X	GREEN	XI	WHITE	XI		X			13.8		13.8
1-3b	R2-1	SPEED LIMIT 55	36 x 48	X	WHITE	VIII	BLACK		X		12.0				
1-4b	W2-1	CROSS TRAFFIC SYMBOL	36 x 36	X	FY	XI	BLACK			X		9.0			9.0
1-4b	W7-3aP	NEXT 5 MILES	30 x 24	X	FY	XI	BLACK			X		5.0			5.0
1-5b	R1-1	STOP	30 x 30	X	RED	XI	WHITE	XI		X		6.3			6.3
1-6b	G8-22(CA)	ARROW HEAD, RIVER BEND WAY	66 x 30	X	GREEN	XI	WHITE	XI		X			13.8		13.8
2-1b	R2-4(CA)	50 ZONE AHEAD	36 x 45	X	WHITE	VIII	BLACK		X		11.3				
2-1b	R48-1(CA)	RADAR ENFORCED	36 x 18	X	WHITE	VIII	BLACK		X		4.5				
2-2b	W11-1	BICYCLE SYMBOL	30 x 30	X	FY	XI	BLACK			X		6.3			6.3
2-2b	W16-1	SHARE THE ROAD	18 x 24	X	FY	XI	BLACK			X		3.0			3.0
3-1b	W1-2	RIGHT CURVE ARROW	36 x 36	X	FY	XI	BLACK			X		9.0			9.0
3-1b	W13-1P	45 MPH	30 x 30	X	FY	XI	BLACK			X		6.3			6.3
3-2b	W1-2	LEFT CURVE ARROW	36 x 36	X	FY	XI	BLACK			X		9.0			9.0
3-2b	W13-1P	45 MPH	30 x 30	X	FY	XI	BLACK			X		6.3			6.3
GRAND TOTAL (SQFT)											27.8	69.2	27.6	28.0	124.8

REVISED BY | DATE REVISED
JAVED IQBAL | FRANK RIVAS
CALCULATED-DESIGNED BY | CHECKED BY
FUNCTIONAL SUPERVISOR | JULIE CASEY

STATE OF CALIFORNIA - DEPARTMENT OF TRANSPORTATION
Caltrans
DESIGN

P:\proj1\02\4F390_plans\pse\24f390od003.dgn

SIGN QUANTITIES
SQ-3

LAST REVISION 02-11-15 | DATE PLOTTED => 23-FEB-2015 | TIME PLOTTED => 09:38

Dist	COUNTY	ROUTE	POST MILES TOTAL PROJECT	SHEET No.	TOTAL SHEETS
02	Plu	147	7.5/8.9	39	52

Christopher Galantine 02-04-15
REGISTERED CIVIL ENGINEER DATE

02-04-15
PLANS APPROVAL DATE

REGISTERED PROFESSIONAL ENGINEER CHRIS GALANTINE No. C52287 Exp. 12-31-16 CIVIL STATE OF CALIFORNIA

THE STATE OF CALIFORNIA OR ITS OFFICERS OR AGENTS SHALL NOT BE RESPONSIBLE FOR THE ACCURACY OR COMPLETENESS OF SCANNED COPIES OF THIS PLAN SHEET.

NOTES:

1. (N) - NOT A SEPARATE PAY ITEM, FOR INFORMATION ONLY
2. PLACE 4" DEPTH OF WOOD MULCH ON DISTURBED SOIL WHERE SHOWN ON PLANS
3. WOOD MULCH TYPE MUST BE TREE TRIMMING MLCH.

AVAILABLE EMBANKMENT (N)

FROM ROADWAY EXCAVATION	FROM EXCESS FDR-C PULVERIZED MATERIAL DUE TO EXPANSION (9.1% ASSUMED)	EXCESS FDR-C MATERIAL DUE TO PROFILE /CROSS SLOPE CORRECTION. NO EXPANSION ASSUMED
CY	CY	CY
248	703	758

ROADWAY QUANTITIES

LOCATION	ROADWAY EXCAVATION	(N) EMBANKMENT	SHOULDER BACKING	CLASS 2 AGGREGATE BASE	COLD PLANE ASPHALT CONCRETE PAVEMENT	FULL DEPTH RECLAMATION-CEMENT	CEMENT (FULL DEPTH RECLAMATION-CEMENT)	ASPHALTIC EMULSION (FULL DEPTH RECLAMATION -CEMENT)	HOT MIX ASPHALT (TYPE A)	TACK COAT	TEMPORARY COVER	TEMPORARY CHECK DAM	TEMPORARY FIBER ROLL	RAIL ELEMENT WALL	WOOD MULCH	MBGR (STEEL POST)	A1t FLARED TERMINAL SECTION	COMMENTS
	CY	CY	TON	CY	SQYD	SQYD	TON	TON	TON	TON	SQYD	LF	LF	SQFT	CY	LF	EA	
"A1" 33+42 TO "A1" 111+20	213	1709	845			23,190	100	10.4	4980	7.1	500	150	350					
"A1" 35+50 TO "A1" 36+70					428													CONFORM @ BEGIN PROJECT
"A1" 39+30 TO "A1" 40+15 Lt					154													CONFORM @ RIVER BEND WAY
"A1" 110+00 TO "A1" 111+20					322													CONFORM @ PROJECT END
ROAD CONNECTION, PM 7.70 RIGHT	18			13.5														ROAD CONNECTION, PM 7.70 RIGHT
ROAD CONNECTION, PM 8.43 RIGHT	17			11.9														ROAD CONNECTION, PM 8.43 RIGHT
17.00' Lt OF "A1" 45+64.50 TO 17.00' Lt OF "A1" 45+90.54														53.1	3.7			RETAINING WALL, LINEAR, DO NOT PLACE POST OVER CSP. SHIFT WALL TO AVOID IF NECESSARY.
17.00' Rt OF "A1" 103+85.00 TO 17.00' Rt OF "A1" 104+16.09														63.5	2.2			RETAINING WALL, R=797', IF POST IS OVER CSP, SUBSTITUTE 6' POST
17.00' Rt OF "A1" 104+16.09 TO 20.00' Rt OF "A1" 104+58.74														88.5	3.3			RETAINING WALL, LINEAR
28.24' Rt OF "A1" 101+87.84 TO 20.89' Rt OF "A1" 102+60.20															8.2	75.0		BEGIN MODIFIED BURIED POST END ANCHOR AT 10:1 FLARE
20.89' Rt OF "A1" 102+60.20 TO 14.00' Rt OF "A1" 103+57.92																100.0		CONTINUE MODIFIED BURIED POST END ANCHOR AT 15:1 FLARE
14.00' Rt OF "A1" 103+57.92 TO 14.00' Rt OF "A1" 104+68.26																112.5		CONSISTENT 14.0' OFFSET MBGR
14.00' Rt OF "A1" 104+68.26 TO 18.00' Rt OF "A1" 105+05.09																	1	FLARED TERMINAL SECTION
SUBTOTAL FROM DRAINAGE QUANTITY TABLE															5.7*			
TOTAL	248	1709	845	25.4	904	23,190	100	10.4	4980	7.1	500	150	350	205.1	23.1	287.5	1	

* ADDITIONAL QUANTITIES SHOWN ELSEWHERE, SEE DRAINAGE PLANS.

SUMMARY OF QUANTITIES

Q-1

REVISED BY | DATE REVISED
CHRIS GALANTINE | STEVE ALAWAR
CALCULATED-DESIGNED BY | CHECKED BY
FUNCTIONAL SUPERVISOR: JULIE CASEY

STATE OF CALIFORNIA - DEPARTMENT OF TRANSPORTATION
Caltrans DESIGN

P:\proj1\02\4F390_plans\pse\24f390pa001.dgn

LAST REVISION 02-11-15 | DATE PLOTTED => 23-FEB-2015 | TIME PLOTTED => 09:38

M

Maint	MAINTENANCE
Max	MAXIMUM
MB	METAL BEAM
MBB	METAL BEAM BARRIER
MBGR	METAL BEAM GUARD RAILING
Med	MEDIAN
MGS	MIDWEST GUARDRAIL SYSTEM
MH	MANHOLE
Min	MINIMUM
Misc	MISCELLANEOUS
Misc I & S	MISCELLANEOUS IRON AND STEEL
Mkr	MARKER
Mod	MODIFIED, MODIFY
Mon	MONUMENT
MP	METAL PLATE
MPGR	METAL PLATE GUARD RAILING
MR	MOVEMENT RATING
MSE	MECHANICALLY STABILIZED EMBANKMENT
Mt	MOUNTAIN, MOUNT
Mtl	MATERIAL
MVP	MAINTENANCE VEHICLE PULLOUT

N

N	NORTH
NB	NORTHBOUND
No.	NUMBER (MUST HAVE PERIOD)
Nos.	NUMBERS (MUST HAVE PERIOD)
NPS	NOMINAL PIPE SIZE
NS	NEAR SIDE
NSP	NEW STANDARD PLAN
NTS	NOT TO SCALE

O

Oblr	OBLITERATE
OC	OVERCROSSING
OD	OUTSIDE DIAMETER
OF	OUTSIDE FACE
OG	ORIGINAL GROUND
OGAC	OPEN GRADED ASPHALT CONCRETE
OGFC	OPEN GRADED FRICTION COURSE
OH	OVERHEAD
OHWM	ORDINARY HIGH WATER MARK
O-O	OUT TO OUT
Opp	OPPOSITE
OSD	OVERSIDE DRAIN

P

P	PAGE
PAP	PERFORATED ALUMINUM PIPE
PB	PULL BOX
PC	POINT OF CURVATURE, PRECAST
PCC	POINT OF COMPOUND CURVE, PORTLAND CEMENT CONCRETE
PCMS	PORTABLE CHANGEABLE MESSAGE SIGN
PCP	PERFORATED CONCRETE PIPE, PRESTRESSED CONCRETE PIPE
PCVC	POINT OF COMPOUND VERTICAL CURVE
PEC	PERMIT TO ENTER AND CONSTRUCT
Ped	PEDESTRIAN
Ped OC	PEDESTRIAN OVERCROSSING
Ped UC	PEDESTRIAN UNDERCROSSING
Perm Mtl	PERMEABLE MATERIAL

P continued

PG	PROFILE GRADE
PI	POINT OF INTERSECTION
PJP	PARTIAL JOINT PENETRATION
Pkwy	PARKWAY
₱,PL	PLATE
P/L	PROPERTY LINE
PM	POST MILE, TIME FROM NOON TO MIDNIGHT
PN	PAVING NOTCH
POC	POINT OF HORIZONTAL CURVE
POT	POINT OF TANGENT
POVC	POINT OF VERTICAL CURVE
PP	PIPE PILE, PLASTIC PIPE, POWER POLE
PPL	PREFORMED PERMEABLE LINER
PPP	PERFORATED PLASTIC PIPE
PRC	POINT OF REVERSE CURVE
PRF	PAVEMENT REINFORCING FABRIC
PRVC	POINT OF REVERSE VERTICAL CURVE
PS&E	PLANS, SPECIFICATIONS AND ESTIMATES
PS, P/S	PRESTRESSED
PSP	PERFORATED STEEL PIPE
PT	POINT OF TANGENCY
PVC	POLYVINYL CHLORIDE
Pvmt	PAVEMENT

Q

Qty	QUANTITY

R

R	RADIUS
R & D	REMOVE AND DISPOSE
R & S	REMOVE AND SALVAGE
R/C	RATE OF CHANGE
RCA	REINFORCED CONCRETE ARCH
RCB	REINFORCED CONCRETE BOX
RCP	REINFORCED CONCRETE PIPE
RCPA	REINFORCED CONCRETE PIPE ARCH
Rd	ROAD
Reinf	REINFORCED, REINFORCEMENT, REINFORCING
Rel	RELOCATE
Repl	REPLACEMENT
Ret	RETAINING
Rev	REVISED, REVISION
Rdwy	ROADWAY
RHMA	RUBBERIZED HOT MIX ASPHALT
Riv	RIVER
RM	ROAD-MIXED
RP	RADIUS POINT, REFERENCE POINT
RR	RAILROAD
RSP	ROCK SLOPE PROTECTION, REVISED STANDARD PLAN
Rt	RIGHT
Rte	ROUTE
RW	REDWOOD, RETAINING WALL
R/W	RIGHT OF WAY
Rwy	RAILWAY

S

S	SOUTH, SUPPLEMENT
SAE	STRUCTURE APPROACH EMBANKMENT
Salv	SALVAGE
SAPP	STRUCTURAL ALUMINUM PLATE PIPE
SB	SOUTHBOUND
SC	SAND CUSHION
SCSP	SLOTTED CORRUGATED STEEL PIPE
SD	STORM DRAIN
Sec	SECOND, SECTION
Sep	SEPARATION
SG	SUBGRADE
Shld	SHOULDER
Sht	SHEET
Sim	SIMILAR
℄	STATION LINE
SM	SELECTED MATERIAL
Spec	SPECIAL, SPECIFICATIONS
SPP	SLOTTED PLASTIC PIPE
SS	SLOPE STAKE
SSBM	STRAP AND SADDLE BRACKET METHOD
SSD	STRUCTURAL SECTION DRAIN
SSPA	STRUCTURAL STEEL PLATE ARCH
SSPP	STRUCTURAL STEEL PLATE PIPE
SSPPA	STRUCTURAL STEEL PLATE PIPE ARCH
SSRP	STEEL SPIRAL RIB PIPE
St	STREET
Sta	STATION
STBB	SINGLE THRIE BEAM BARRIER
Std	STANDARD
Str	STRUCTURE
Surf	SURFACING
SW	SIDEWALK, SOUND WALL
Swr	SEWER
Sym	SYMMETRICAL
S4S	SURFACE 4 SIDES

T

T	SEMI-TANGENT
Tan	TANGENT
TBB	THRIE BEAM BARRIER
Tbr	TIMBER
TC	TOP OF CURB
TCB	TRAFFIC CONTROL BOX
TCE	TEMPORARY CONSTRUCTION EASEMENT
Tel	TELEPHONE
Temp	TEMPORARY
TG	TOP OF GRADE
Tot	TOTAL
TP	TELEPHONE POLE
TPB	TREATED PERMEABLE BASE
TPM	TREATED PERMEABLE MATERIAL
Trans	TRANSITION

T continued

TS	TRANSVERSE, TRAFFIC SIGNAL, TUBULAR STEEL
Typ	TYPICAL

U

UC	UNDERCROSSING
UD	UNDERDRAIN
UG	UNDERGROUND
UON	UNLESS OTHERWISE NOTED
UP	UNDERPASS

V

V	VALVE, DESIGN SPEED
Var	VARIABLE, VARIES
VC	VERTICAL CURVE
VCP	VITRIFIED CLAY PIPE
Vert	VERTICAL
Via	VIADUCT
Vol	VOLUME

W

W	WEST, WIDTH
WB	WESTBOUND
WH	WEEP HOLE
WM	WIRE MESH
WS	WATER SURFACE
WSP	WELDED STEEL PIPE
Wt	WEIGHT
WV	WATER VALVE
WW	WINGWALL
WWLOL	WINGWALL LAYOUT LINE

X

X Sec	CROSS SECTION
Xing	CROSSING

Y

Yr	YEAR
Yrs	YEARS

Dist	COUNTY	ROUTE	POST MILES TOTAL PROJECT	SHEET No.	TOTAL SHEETS
02	Plu	147	7.5/8.9	40	52

Grace M. Tsushima
REGISTERED CIVIL ENGINEER

July 19, 2013
PLANS APPROVAL DATE

REGISTERED PROFESSIONAL ENGINEER Grace M. Tsushima No. C49814 Exp. 9-30-14 CIVIL STATE OF CALIFORNIA

THE STATE OF CALIFORNIA OR ITS OFFICERS OR AGENTS SHALL NOT BE RESPONSIBLE FOR THE ACCURACY OR COMPLETENESS OF SCANNED COPIES OF THIS PLAN SHEET.

TO ACCOMPANY PLANS DATED 02-04-15

UNIT OF MEASUREMENT SYMBOLS:

Some of the symbols used in the project plan quantity tables and in the Bid Item List are:

TABLE A

SYMBOL USED	DEFINITIONS
ACRE	ACRE
CF	CUBIC FOOT
CY	CUBIC YARD
EA	EACH
GAL	GALLON
LB	POUND
LF	LINEAR FOOT
SQFT	SQUARE FOOT
SQYD	SQUARE YARD
STA	100 FEET
TAB	TABLET
TON	2,000 POUNDS

Some of the symbols used in the plans other than in the project plan quantity tables are:

TABLE B

SYMBOL USED	DEFINITIONS
ksi	KIPS PER SQUARE INCH
ksf	KIPS PER SQUARE FOOT
psi	POUNDS PER SQUARE INCH
psf	POUNDS PER SQUARE FOOT
lb/ft^3, pcf	POUNDS PER CUBIC FOOT
tsf	TONS PER SQUARE FOOT
mph, MPH *	MILES PER HOUR
ø	NOMINAL DIAMETER
oz	OUNCE
lb	POUND
kip	1,000 POUNDS
cal	CALORIE
ft	FOOT OR FEET
gal	GALLON

* For use on a sign panel only

STATE OF CALIFORNIA
DEPARTMENT OF TRANSPORTATION

ABBREVIATIONS (SHEET 2 OF 2)

NO SCALE

RSP A10B DATED JULY 19, 2013 SUPERSEDES STANDARD PLAN A10B DATED MAY 20, 2011 - PAGE 2 OF THE STANDARD PLANS BOOK DATED 2010.

REVISED STANDARD PLAN RSP A10B

2010 REVISED STANDARD PLAN RSP A10B

DATE PLOTTED => 23-FEB-2015
TIME PLOTTED => 09:38

Dist	COUNTY	ROUTE	POST MILES TOTAL PROJECT	SHEET No.	TOTAL SHEETS
02	Plu	147	7.5/8.9	41	52

REGISTERED CIVIL ENGINEER

July 20, 2012
PLANS APPROVAL DATE

REGISTERED PROFESSIONAL ENGINEER
Roberta L. McLaughlin
No. C40375
Exp. 3-31-13
CIVIL
STATE OF CALIFORNIA

THE STATE OF CALIFORNIA OR ITS OFFICERS OR AGENTS SHALL NOT BE RESPONSIBLE FOR THE ACCURACY OR COMPLETENESS OF SCANNED COPIES OF THIS PLAN SHEET.

TO ACCOMPANY PLANS DATED 02-04-15

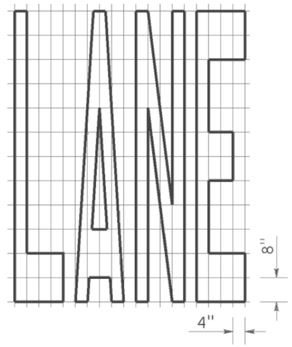

A=24 ft^2

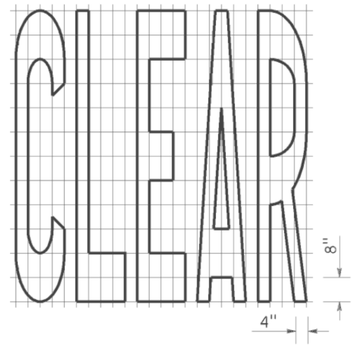

A=27 ft^2

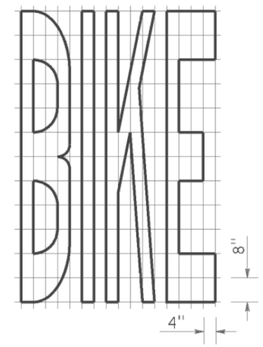

A=21 ft^2

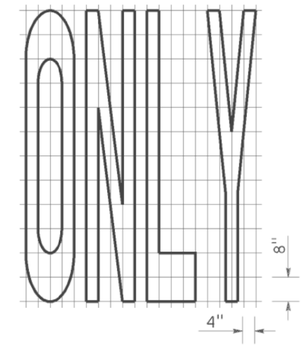

A=22 ft^2

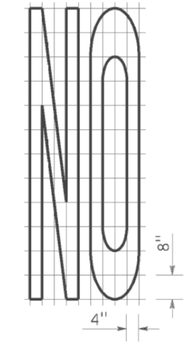

A=14 ft^2

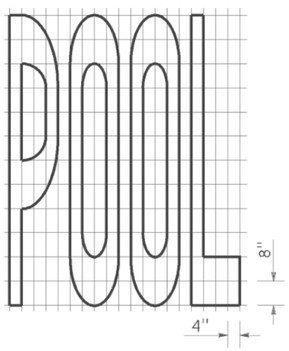

A=23 ft^2

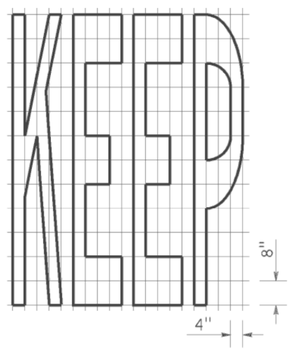

A=24 ft^2

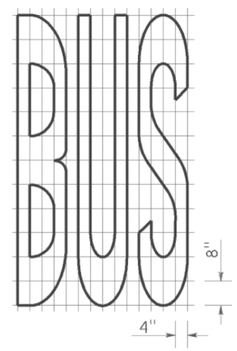

A=20 ft^2

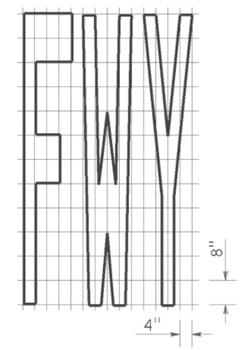

A=16 ft^2

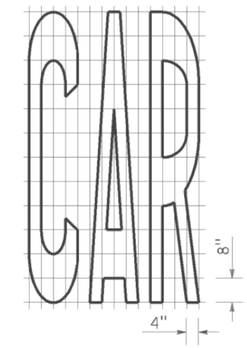

A=17 ft^2

WORD MARKINGS			
ITEM	ft^2	ITEM	ft^2
LANE	24	NO	14
POOL	23	BIKE	21
CAR	17	BUS	20
CLEAR	27	ONLY	22
KEEP	24	FWY	16

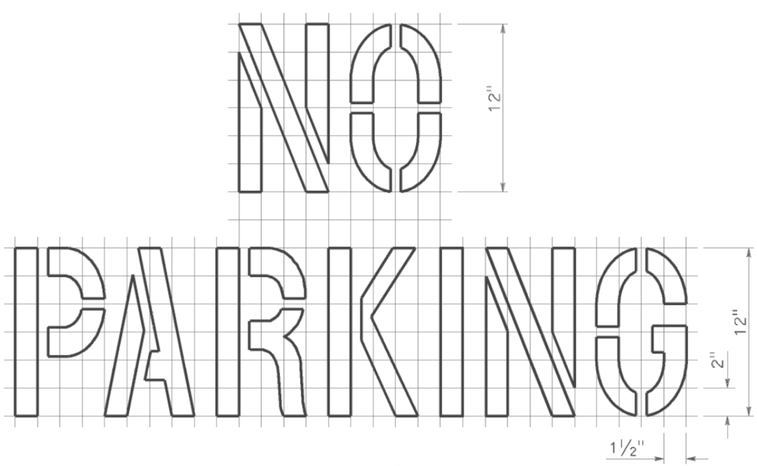

A=2 ft^2
See Notes 6 and 7

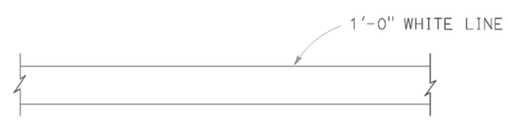

LIMIT LINE (STOP LINE)

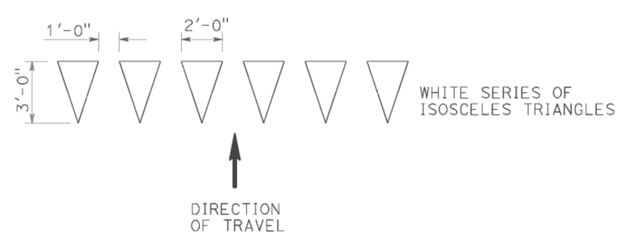

YIELD LINE

NOTES:

1. If a message consists of more than one word, it should read "UP", i.e., the first word should be nearest the driver.
2. The space between words should be at least four times the height of the characters for low speed roads, but not more than ten times the height of the characters. The space may be reduced appropriately where there is limited space because of local conditions.
3. Minor variations in dimensions may be accepted by the Engineer.
4. Portions of a letter, number or symbol may be separated by connecting segments not to exceed 2" in width.
5. The words "NO PARKING" pavement marking is to be used for parking facilities. For typical locations of markings, see Standard Plans A90A and A90B.
6. The words "NO PARKING", shall be painted in white letters no less than 1'-0" high on a contrasting background and located so that it is visible to traffic enforcement officials.

STATE OF CALIFORNIA
DEPARTMENT OF TRANSPORTATION

PAVEMENT MARKINGS WORDS, LIMIT AND YIELD LINES

NO SCALE

RSP A24E DATED JULY 20, 2012 SUPERSEDES STANDARD PLAN A24E
DATED MAY 20, 2011 - PAGE 17 OF THE STANDARD PLANS BOOK DATED 2010.

REVISED STANDARD PLAN RSP A24E

2010 REVISED STANDARD PLAN RSP A24E

DATE PLOTTED => 23-FEB-2015
TIME PLOTTED => 09:38

Dist	COUNTY	ROUTE	POST MILES TOTAL PROJECT	SHEET No.	TOTAL SHEETS
02	Plu	147	7.5/8.9	42	52

Randell D. Hiatt
REGISTERED CIVIL ENGINEER

July 19, 2013
PLANS APPROVAL DATE

REGISTERED PROFESSIONAL ENGINEER
Randell D. Hiatt
No. C50200
Exp. 6-30-15
CIVIL
STATE OF CALIFORNIA

THE STATE OF CALIFORNIA OR ITS OFFICERS OR AGENTS SHALL NOT BE RESPONSIBLE FOR THE ACCURACY OR COMPLETENESS OF SCANNED COPIES OF THIS PLAN SHEET.

TO ACCOMPANY PLANS DATED 02-04-15

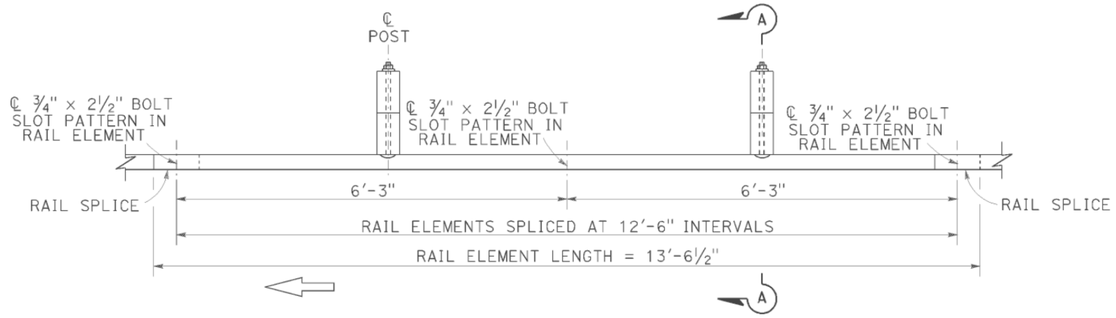

PLAN

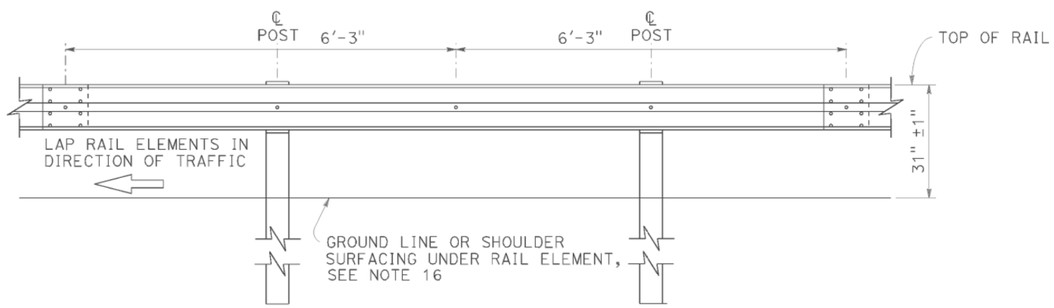

ELEVATION

MIDWEST GUARDRAIL SYSTEM WITH WOOD POST AND BLOCKS

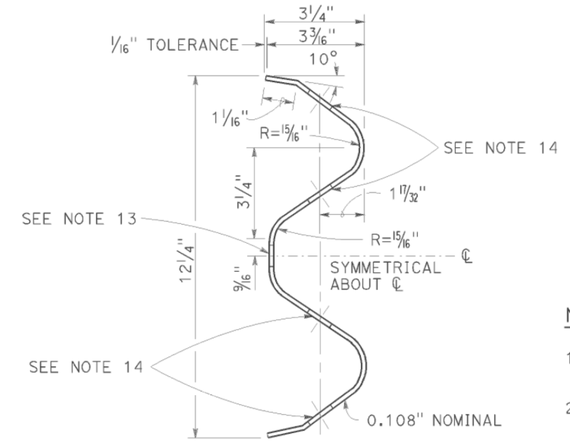

SECTION THRU RAIL ELEMENT

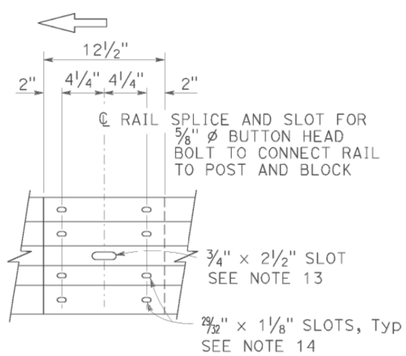

ELEVATION

RAIL ELEMENT SPLICE DETAIL

a) Connect the over lapped end of the rail elements with ⅝" ø × 1⅜" button head oval shoulder splice bolts inserted into the 29/32" × 1⅛" slots and bolted together with ⅝" ø recessed hex nuts. Recess of hex nut points toward rail element. A total of 8 bolts and nuts are to be used at each rail splice connection.

b) The ends of the rail elements are to be overlapped in the direction of traffic (see details).

c) Where end cap is to be attached to the end of a rail element, a total of 4 of the above described splice bolts and nuts are to be used.

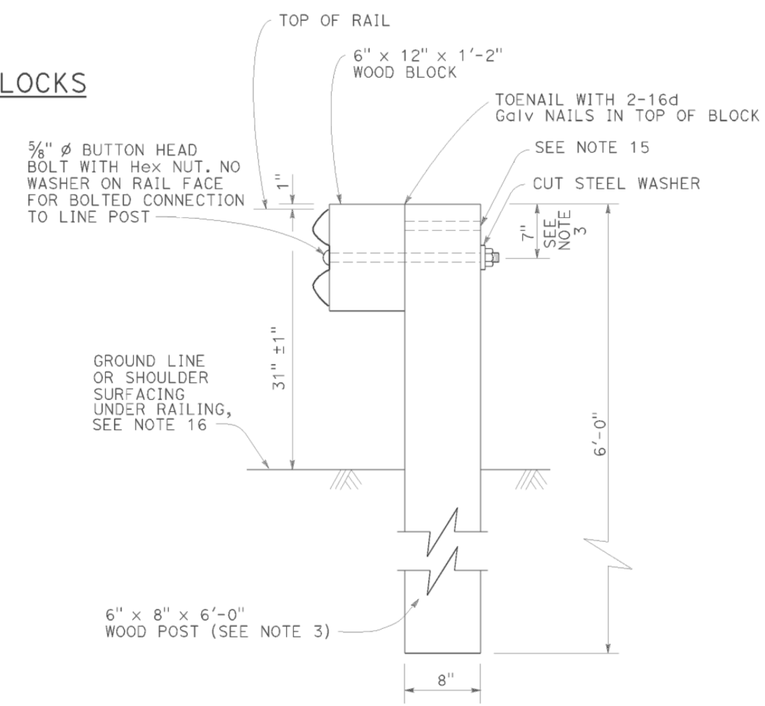

SECTION A-A

TYPICAL WOOD LINE POST INSTALLATION

See Note 4

NOTES:

1. For details of steel post installations, see Revised Standard Plan RSP A77L2.
2. For details of standard hardware used to construct MGS, see Revised Standard Plan RSP A77M1.
3. For details of wood posts and wood blocks used to construct MGS, see Revised Standard Plan RSP A77N1.
4. For additional installation details, see Revised Standard Plan RSP A77N3.
5. MGS post spacing to be 6'-3" center to center, except as otherwise noted.
6. For MGS typical layouts, see the A77P, A77Q and A77R Series of Standard Plans.
7. If railing is connected to terminal system end treatment, use 31" height terminal system end treatment.
8. For MGS end anchor details, see Revised Standard Plans RSP A77S1 and RSP A77T2.
9. For details of MGS transition to bridge railing, see Revised Standard Plan RSP A77U4.
10. For additional details of MSG connection to bridge railing, see Revised Standard Plans RSP A77U1, RSP A77U2 and RSP A77V1.
11. For MGS connection details to abutments and walls, see Revised Standard Plan RSP A77U3.
12. For typical MGS delineation and dike positioning details, see Revised Standard Plan RSP A77N4.
13. Slotted hole for bolted connection of rail element to block and post. See "Section Thru Rail Element".
14. Slotted holes for splice bolts to overlap ends of rail element. See "Section Thru Rail Element".
15. Additional hole in uppermost portion of line post is for potential future adjustments of railing height. See Revised Standard Plan RSP A77N1.
16. Install posts in soil.

STATE OF CALIFORNIA
DEPARTMENT OF TRANSPORTATION

MIDWEST GUARDRAIL SYSTEM STANDARD RAILING SECTION (WOOD POST WITH WOOD BLOCK)

NO SCALE

RSP A77L1 DATED JULY 19, 2013 SUPPLEMENTS STANDARD PLANS BOOK DATED 2010.

REVISED STANDARD PLAN RSP A77L1

2010 REVISED STANDARD PLAN RSP A77L1

DATE PLOTTED => 23-FEB-2015
TIME PLOTTED => 09:38

Dist	COUNTY	ROUTE	POST MILES TOTAL PROJECT	SHEET No.	TOTAL SHEETS
02	Plu	147	7.5/8.9	43	52

Randell D. Hiatt
REGISTERED CIVIL ENGINEER

July 19, 2013
PLANS APPROVAL DATE

REGISTERED PROFESSIONAL ENGINEER
Randell D. Hiatt
No. C50200
Exp. 6-30-15
CIVIL
STATE OF CALIFORNIA

THE STATE OF CALIFORNIA OR ITS OFFICERS OR AGENTS SHALL NOT BE RESPONSIBLE FOR THE ACCURACY OR COMPLETENESS OF SCANNED COPIES OF THIS PLAN SHEET.

TO ACCOMPANY PLANS DATED 02-04-15

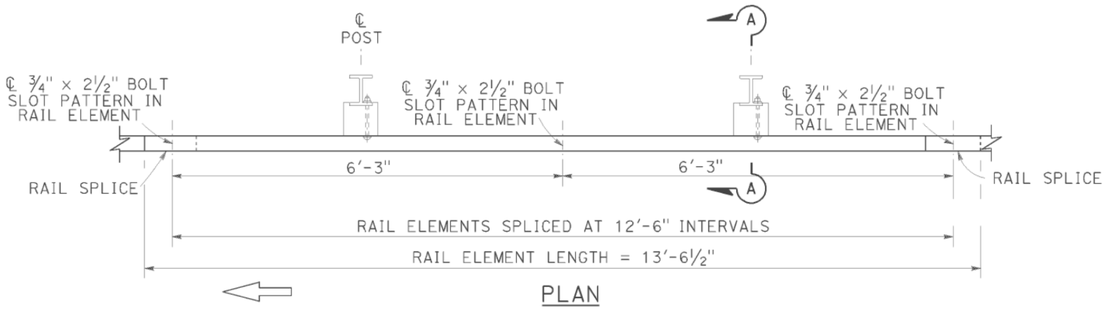

PLAN

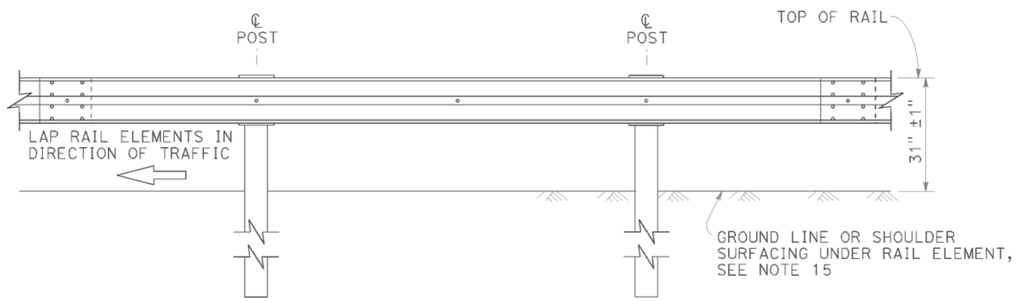

ELEVATION

MIDWEST GUARDRAIL SYSTEM WITH STEEL POSTS AND NOTCHED WOOD OR NOTCHED RECYCLED PLASTIC BLOCKS

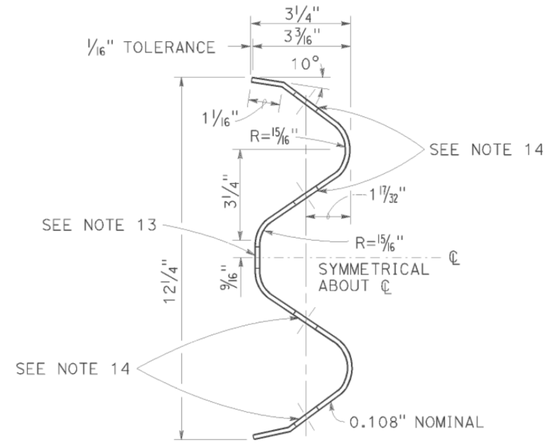

SECTION THRU RAIL ELEMENT

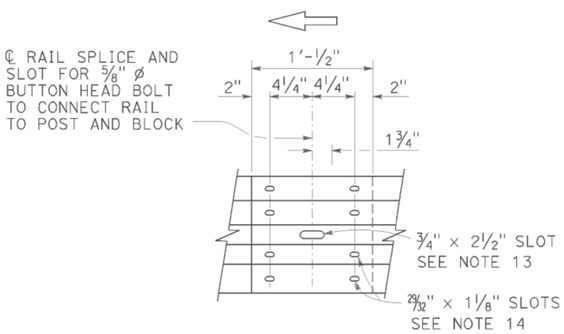

ELEVATION

RAIL ELEMENT SPLICE DETAIL

a) Connect the over lapped end of the rail elements with ⅝" ø × 1⅜" button head oval shoulder splice bolts inserted into the 29/32" × 1⅛" slots and bolted together with ⅝" ø recessed hex nuts. Recess of hex nut points toward rail element. A total of 8 bolts and nuts are to be used at each rail splice connection.

b) The ends of the rail elements are to be overlapped in the direction of traffic (see details).

c) Where end cap is to be attached to the end of a rail element, a total of 4 of the above described splice bolts and nuts are to be used.

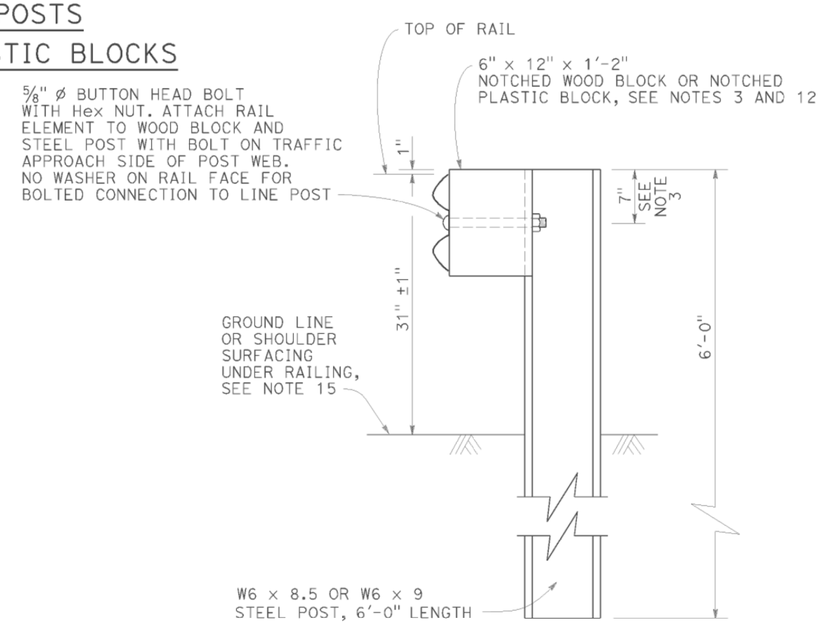

SECTION A-A

TYPICAL STEEL LINE POST INSTALLATION

See Note 4

NOTES:

1. For details of wood post installations, see Revised Standard Plan RSP A77L1.
2. For details of standard hardware used to construct MGS, see Revised Standard Plan RSP A77M1.
3. For details of steel posts and notched wood blocks used to construct MGS, see Revised Standard Plan RSP A77N2.
4. For additional installation details, see Revised Standard Plan RSP A77N3.
5. MGS post spacing to be 6'-3" center to center, except as otherwise noted.
6. For MGS typical layouts, see the A77P, A77Q and A77R Series of Standard Plans.
7. If railing is connected to terminal system end treatment, use 31" height terminal system end treatment.
8. For MGS end anchor details, see Revised Standard Plans RSP A77S1 and RSP A77T2.
9. For details of MGS transition to bridge railing, see Revised Standard Plan RSP A77U4.
10. For additional details of MGS connection to bridge railings, see Revised Standard Plans RSP A77U1, RSP A77U2 and RSP A77V1.
11. For dike positioning and MGS delineation details, see Revised Standard Plan RSP A77N4.
12. Notched face of block faces steel post.
13. Slotted hole for bolted connection of rail element to block and post. See "Section Thru Rail Element".
14. Slotted holes for splice bolts to overlap ends of rail element. See "Section Thru Rail Element".
15. Install posts in soil.

STATE OF CALIFORNIA
DEPARTMENT OF TRANSPORTATION

MIDWEST GUARDRAIL SYSTEM STANDARD RAILING SECTION (STEEL POST WITH NOTCHED WOOD OR NOTCHED RECYCLED PLASTIC BLOCK)

NO SCALE

RSP A77L2 DATED JULY 19, 2013 SUPPLEMENTS THE STANDARD PLANS BOOK DATED 2010.

REVISED STANDARD PLAN RSP A77L2

2010 REVISED STANDARD PLAN RSP A77L2

DATE PLOTTED => 23-FEB-2015
TIME PLOTTED => 09:38

Dist	COUNTY	ROUTE	POST MILES TOTAL PROJECT	SHEET No.	TOTAL SHEETS
02	Plu	147	7.5/8.9	44	52

Randell D. Hiatt
REGISTERED CIVIL ENGINEER

July 19, 2013
PLANS APPROVAL DATE

REGISTERED PROFESSIONAL ENGINEER
Randell D. Hiatt
No. C50200
Exp. 6-30-15
CIVIL
STATE OF CALIFORNIA

THE STATE OF CALIFORNIA OR ITS OFFICERS OR AGENTS SHALL NOT BE RESPONSIBLE FOR THE ACCURACY OR COMPLETENESS OF SCANNED COPIES OF THIS PLAN SHEET.

TO ACCOMPANY PLANS DATED 02-04-15

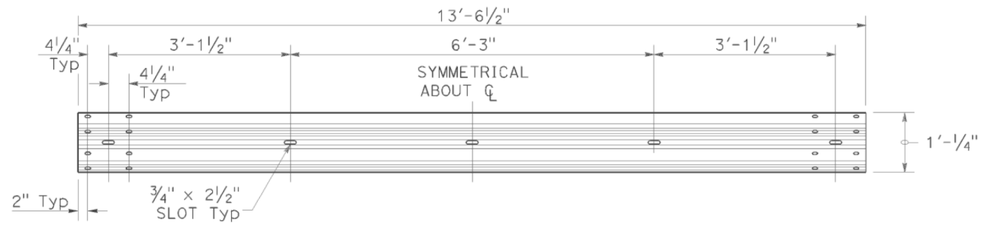

TYPICAL RAIL ELEMENT

NOTE:

1. Slotted holes for splice bolts to overlap ends of rail element.

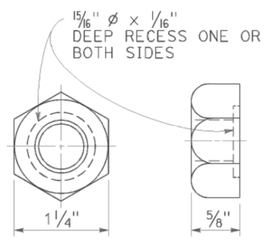

⅝" ø RECESS NUT

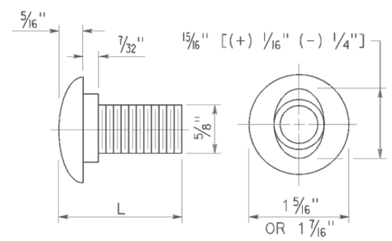

⅝" ø BUTTON HEAD BOLT

BUTTON HEAD BOLT

L	THREAD LENGTH
1⅜"	FULL THREAD LENGTH
2"	FULL THREAD LENGTH
10"	4" Min THREAD LENGTH
18"	4" Min THREAD LENGTH
20"	4" Min THREAD LENGTH
22"	4" Min THREAD LENGTH
26"	4" Min THREAD LENGTH
36"	4" Min THREAD LENGTH
** 2¾"	2" Min THREAD LENGTH
** 19"	4" Min THREAD LENGTH

** For nested rail applications.

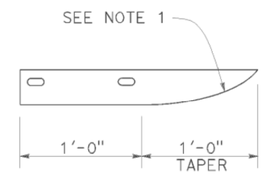

PLAN

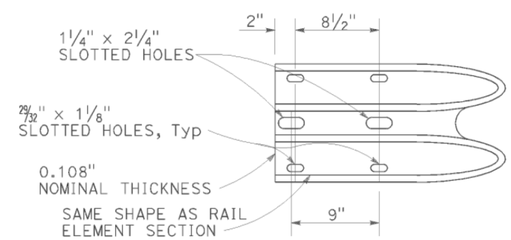

ELEVATION

END CAP
(TYPE A)

STATE OF CALIFORNIA
DEPARTMENT OF TRANSPORTATION

MIDWEST GUARDRAIL SYSTEM STANDARD HARDWARE

NO SCALE

RSP A77M1 DATED JULY 19, 2013 SUPPLEMENTS THE STANDARD PLANS BOOK DATED 2010.

REVISED STANDARD PLAN RSP A77M1

2010 REVISED STANDARD PLAN RSP A77M1

DATE PLOTTED => 23-FEB-2015
TIME PLOTTED => 09:38

Dist	COUNTY	ROUTE	POST MILES TOTAL PROJECT	SHEET No.	TOTAL SHEETS
02	Plu	147	7.5/8.9	45	52

Randell D. Hiatt
REGISTERED CIVIL ENGINEER

July 19, 2013
PLANS APPROVAL DATE

REGISTERED PROFESSIONAL ENGINEER
Randell D. Hiatt
No. C50200
Exp. 6-30-15
CIVIL
STATE OF CALIFORNIA

THE STATE OF CALIFORNIA OR ITS OFFICERS OR AGENTS SHALL NOT BE RESPONSIBLE FOR THE ACCURACY OR COMPLETENESS OF SCANNED COPIES OF THIS PLAN SHEET.

TO ACCOMPANY PLANS DATED 02-04-15

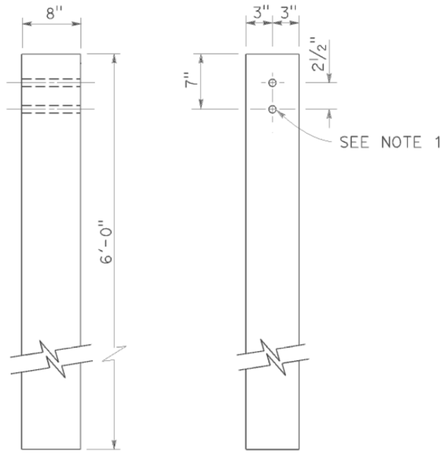

SIDE FRONT

6" x 8" WOOD POST
See Note 3

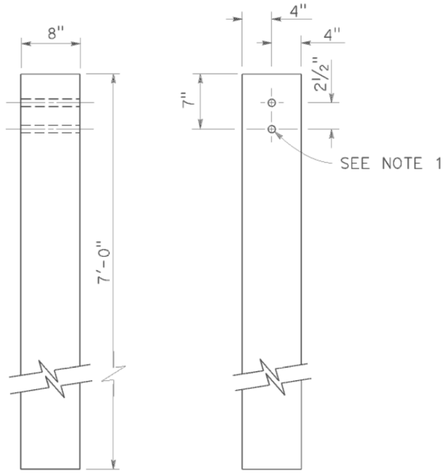

SIDE FRONT

8" x 8" WOOD POST
See Note 4

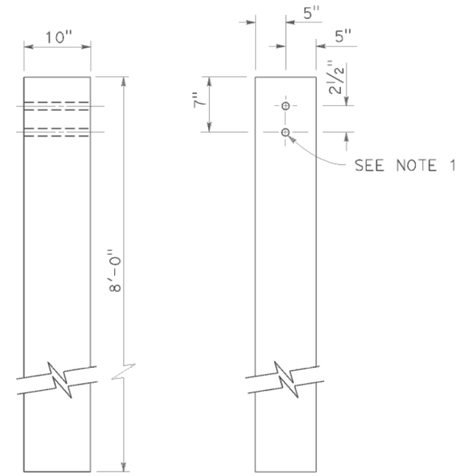

SIDE FRONT

10" x 10" WOOD POST
See Note 5

NOTES:

1. All holes in wood posts and blocks shall be 3/4" Dia ± 1/16".
2. Dimensions shown for wood post are nominal.
3. This post and block combination used for standard line post sections of MGS.
4. This post and 8" x 12" block combination used for line post sections of MGS on narrow roadways.
5. This post and 8" x 12" block combination is typically used where strengthened line post sections of MGS are warranted to shield fixed objects.
6. See Revised Standard Plan RSP A77L3 for use of 6" x 8" and 8" x 8" wood blocks.

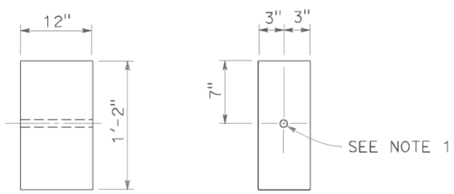

SIDE FRONT

6" x 12" WOOD BLOCK
See Note 3

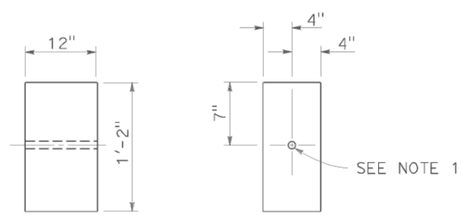

SIDE FRONT

8" x 12" WOOD BLOCK

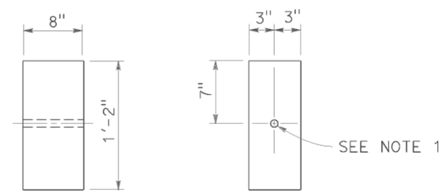

SIDE FRONT

6" x 8" WOOD BLOCK
Only for use with metal beam guard rail see Note 6

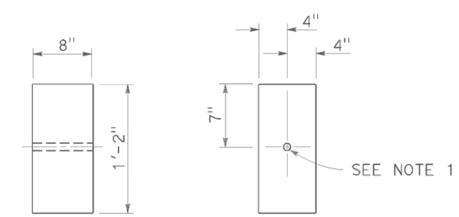

SIDE FRONT

8" x 8" WOOD BLOCK
Only for use with metal beam guard rail see Note 6

STATE OF CALIFORNIA
DEPARTMENT OF TRANSPORTATION

MIDWEST GUARDRAIL SYSTEM WOOD POST AND WOOD BLOCK DETAILS

NO SCALE

RSP A77N1 DATED JULY 19, 2013 SUPPLEMENTS THE STANDARD PLANS BOOK DATED 2010.

REVISED STANDARD PLAN RSP A77N1

2010 REVISED STANDARD PLAN RSP A77N1

DATE PLOTTED => 23-FEB-2015
TIME PLOTTED => 09:39

Dist	COUNTY	ROUTE	POST MILES TOTAL PROJECT	SHEET No.	TOTAL SHEETS
02	Plu	147	7.5/8.9	46	52

Randell D. Hiatt
REGISTERED CIVIL ENGINEER

November 15, 2013
PLANS APPROVAL DATE

REGISTERED PROFESSIONAL ENGINEER
Randell D. Hiatt
No. C50200
Exp. 6-30-15
CIVIL
STATE OF CALIFORNIA

THE STATE OF CALIFORNIA OR ITS OFFICERS OR AGENTS SHALL NOT BE RESPONSIBLE FOR THE ACCURACY OR COMPLETENESS OF SCANNED COPIES OF THIS PLAN SHEET.

TO ACCOMPANY PLANS DATED 02-04-15

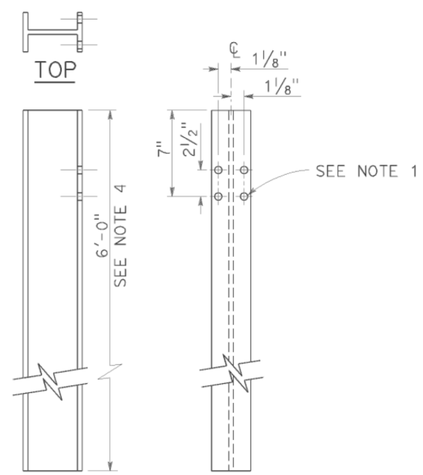

SIDE FRONT

W6 x 9 OR W6 x 8.5
STEEL POST
See Note 4

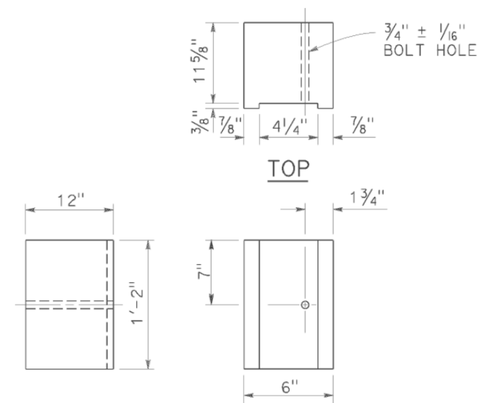

SIDE FRONT

6" x 12"
NOTCHED WOOD BLOCK
See Notes 2 and 3

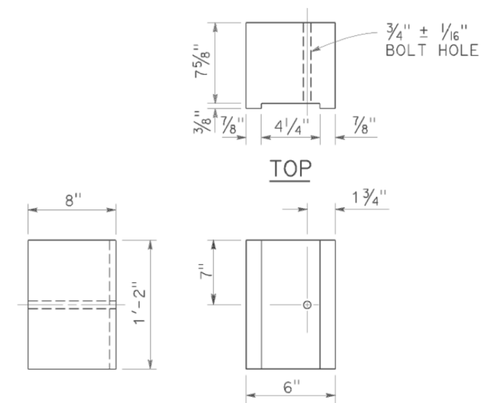

SIDE FRONT

6" x 8"
NOTCHED WOOD BLOCK
Only for use with metal beam guard railing. See Note 5

NOTES:

1. All holes in steel post shall be 13/16" Dia maximum.
2. Dimensions shown for wood block are nominal.
3. Notched face of block faces steel post.
4. 6'-0" length posts to be used for typical roadway installation. See Revised Standard Plan RSP A77N3.
5. See Revised Standard Plan RSP A77L3 for use of 6" x 8" and 8" x 8" notched wood blocks.
6. This post and 8" x 12" block combination to be used for line post sections of MGS on narrow roadways and where strengthened line post sections of MGS are warranted to shield fixed objects.

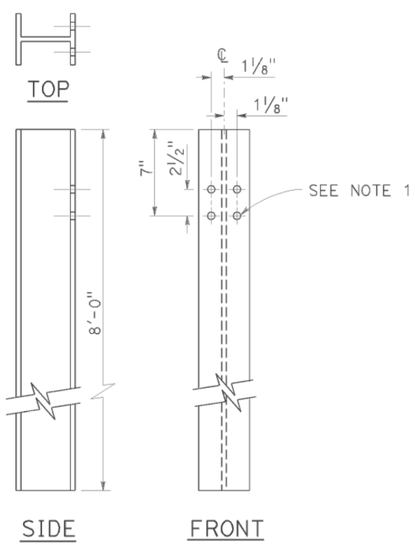

SIDE FRONT

W6 x 15
STEEL POST
See Note 6

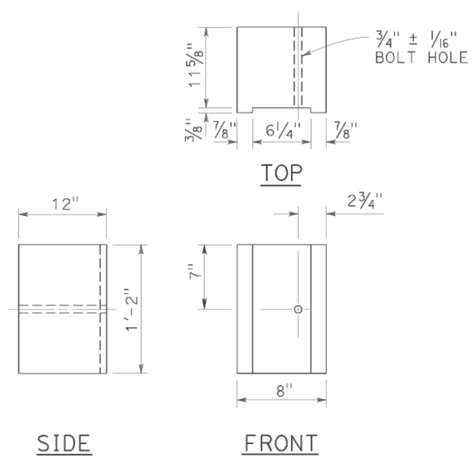

SIDE FRONT

8" x 12"
NOTCHED WOOD BLOCK
See Notes 2 and 3

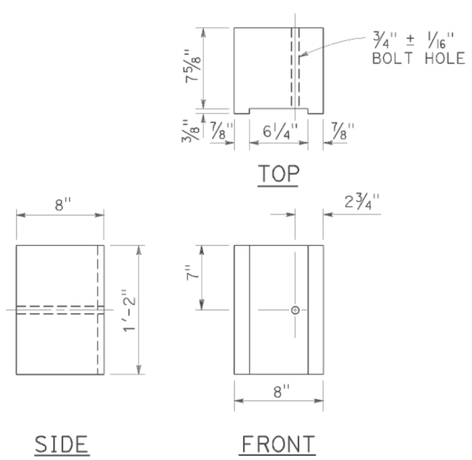

SIDE FRONT

8" x 8"
NOTCHED WOOD BLOCK
Only for use with metal beam guard railing. See Note 5

STATE OF CALIFORNIA
DEPARTMENT OF TRANSPORTATION

MIDWEST GUARDRAIL SYSTEM STEEL POST AND NOTCHED WOOD BLOCK DETAILS

NO SCALE

RSP A77N2 DATED NOVEMBER 15, 2013 SUPERSEDES RSP A77N2
DATED JULY 19, 2013 THAT SUPPLEMENTS THE STANDARD PLANS BOOK DATED 2010.

REVISED STANDARD PLAN RSP A77N2

2010 REVISED STANDARD PLAN RSP A77N2

DATE PLOTTED => 23-FEB-2015
TIME PLOTTED => 09:39

DIST	COUNTY	ROUTE	POST MILES TOTAL PROJECT	SHEET No.	TOTAL SHEETS
02	Plu	147	7.5/8.9	47	52

REGISTERED CIVIL ENGINEER

November 15, 2013
PLANS APPROVAL DATE

REGISTERED PROFESSIONAL ENGINEER
Cornelis M. Hakim
No. C55610
Exp. 12-31-14
CIVIL
STATE OF CALIFORNIA

THE STATE OF CALIFORNIA OR ITS OFFICERS OR AGENTS SHALL NOT BE RESPONSIBLE FOR THE ACCURACY OR COMPLETENESS OF SCANNED COPIES OF THIS PLAN SHEET.

TO ACCOMPANY PLANS DATED 02-04-15

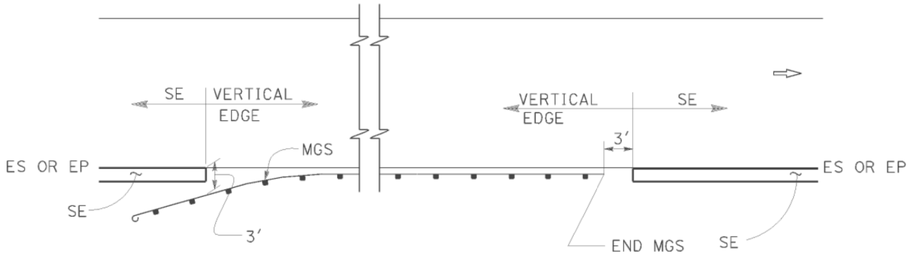

MGS

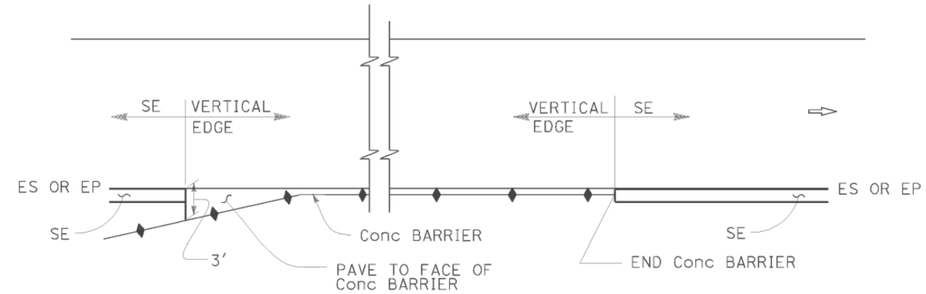

CONCRETE BARRIER

ABBREVIATIONS:

SE SAFETY EDGE

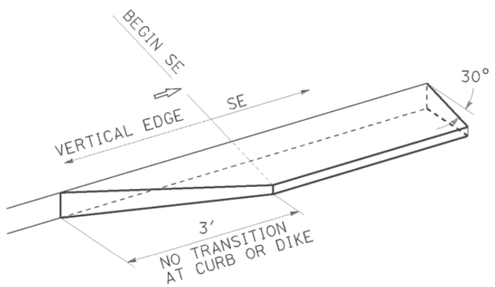

TRANSITION DETAIL
FOR CONCRETE ONLY

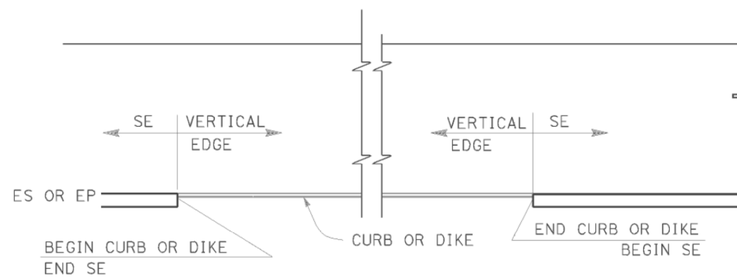

CURB OR DIKE

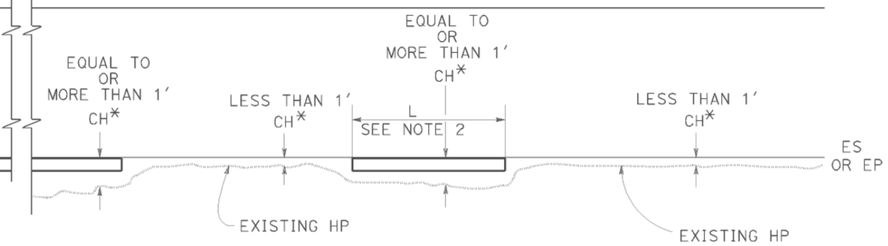

NARROW SIDE SLOPE

* CH = Distance from ES or EP to existing HP.

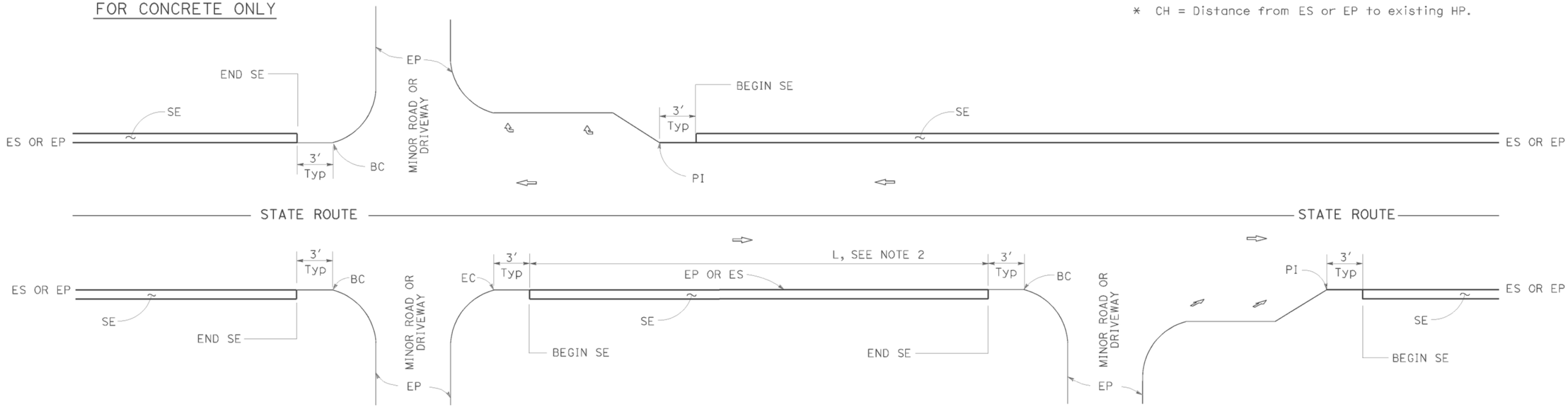

INTERSECTION

MINOR ROADWAY OR DRIVEWAY

DRIVEWAY AND INTERSECTION

NOTES:

1. For details not shown, see Revised Standard Plans RSP P75 and RSP P76.
2. Safety edge is optional when L is less than 30'.

STATE OF CALIFORNIA
DEPARTMENT OF TRANSPORTATION

PAVEMENT EDGE TREATMENTS

NO SCALE

RSP P74 DATED NOVEMBER 15, 2013 SUPERSEDES RSP P74 DATED JANUARY 20, 2012 THAT SUPPLEMENTS THE STANDARD PLANS BOOK DATED 2010.

REVISED STANDARD PLAN RSP P74

2010 REVISED STANDARD PLAN RSP P74

DATE PLOTTED => 23-FEB-2015
TIME PLOTTED => 09:39

DIST	COUNTY	ROUTE	POST MILES TOTAL PROJECT	SHEET No.	TOTAL SHEETS
02	Plu	147	7.5/8.9	48	52

REGISTERED CIVIL ENGINEER

November 15, 2013
PLANS APPROVAL DATE

REGISTERED PROFESSIONAL ENGINEER
Cornelis M. Hakim
No. C55610
Exp. 12-31-14
CIVIL
STATE OF CALIFORNIA

THE STATE OF CALIFORNIA OR ITS OFFICERS OR AGENTS SHALL NOT BE RESPONSIBLE FOR THE ACCURACY OR COMPLETENESS OF SCANNED COPIES OF THIS PLAN SHEET.

TO ACCOMPANY PLANS DATED 02-04-15

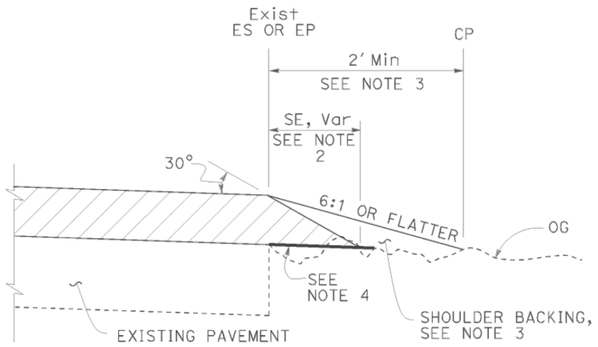

CASE A
Safety Edge

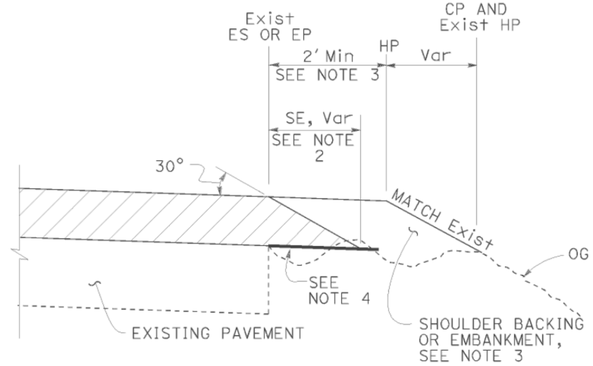

CASE B
Safety Edge

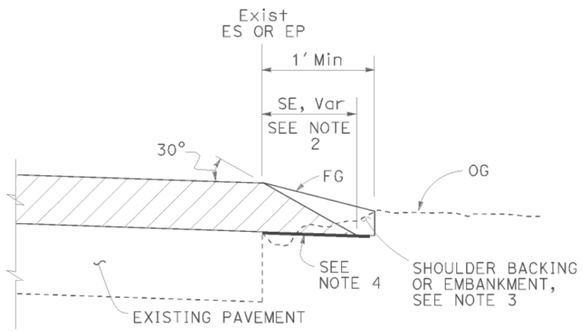

CASE C
Safety Edge

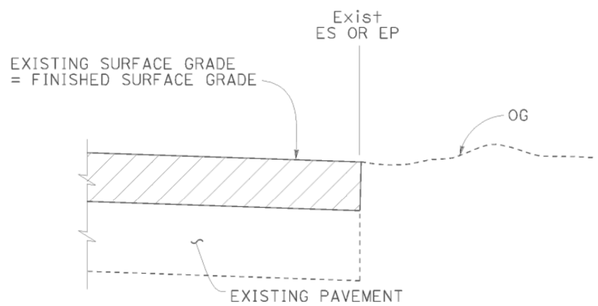

CASE D
Vertical Edge

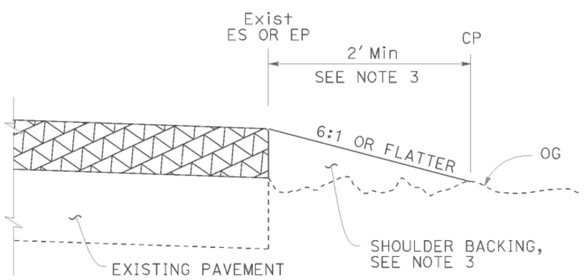

CASE E
Vertical Edge

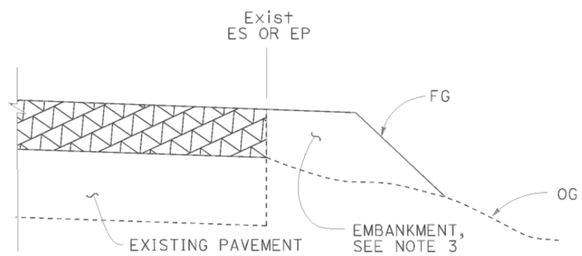

CASE F
Vertical Edge
* See Table A and Revised Std Plan RSP P74

LEGEND:

- HMA OVERLAY
- HMA OR CONCRETE OVERLAY
- CONCRETE OVERLAY

ABBREVIATIONS:

SE SAFETY EDGE
TT TOTAL THICKNESS OF SE

TABLE A
EDGE TREATMENT FOR VARIOUS OVERLAY THICKNESS AND CONDITIONS

	OVERLAY THICKNESS	
FIELD CONDITION	LESS THAN 0.15'	0.15' OR MORE
Exist SLOPE 6:1 OR FLATTER	CASE E	CASE A
Exist SLOPE 3:1 TO 6:1	CASE E	CASE B
Exist SLOPE STEEPER THAN 3:1	CASE F	CASE F
CUT SECTION (REPLACE, COLD PLANE, MILL PAVEMENT)	CASE D	CASE C

ADDITIONAL HMA OR CONCRETE QUANTITIES FOR SE/SIDE/MILE

TYPICAL CROSS SECTION	TT	TOTAL ADDITIONAL MATERIAL FOR SE/SIDE/MILE		
		HMA (TON)	CONCRETE (CY)*	CONCRETE (CY)**
TT	0.15'	NA	NA	NA
	0.20'	13.7	NA	NA
	0.30'	30.9	NA	NA
	0.40'	54.9	NA	NA
	0.45'	69.4	NA	NA
TT 0.43'	0.50'	84.2	NA	NA
	0.60'	113.9	NA	NA
	0.70'	143.6	70.9	94.2
	0.80'	173.3	85.6	112.2
	0.90'	203.0	100.3	130.2
	1.00'	232.7	114.9	148.2
	1.10'	262.4	129.6	166.2
	1.20'	292.1	144.3	184.2

* For Detail "A"
** For Optional Detail "A"

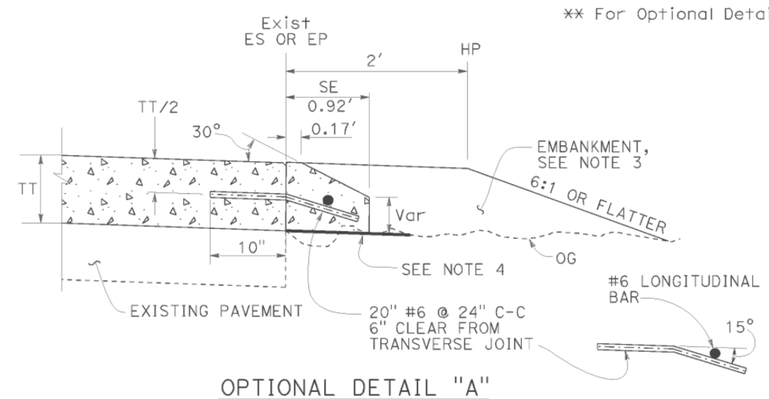

OPTIONAL DETAIL "A"
For concrete overlay
See Note 5

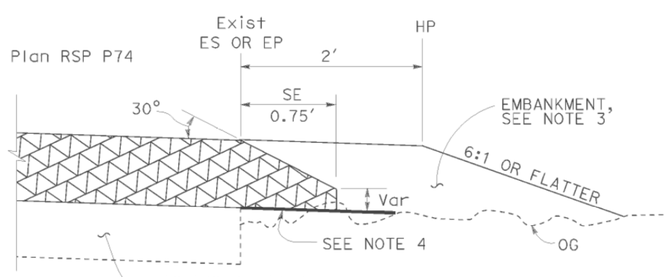

DETAIL "A"
For HMA overlay thickness more than 0.43' or concrete overlay

NOTES:

1. For limits of safety edge and vertical edge treatments, see Revised Standard Plan RSP P74.
2. Details shown for HMA overlay thickness less than 0.43'. See Detail "A" for HMA overlay thickness more than 0.43' or concrete overlay.
3. For locations and limits of shoulder backing or embankment see project plans.
4. Grade existing ground to place safety edge. 1' minimum width
5. Safety edge transverse joint must match overlay transverse joint. End of #6 longitudinal bar must be 2" ±½" clear from transverse joint.
6. Safety edge is not needed in the area of MGS, barrier, right turn lane and acceleration lane. See Revised Standard Plan RSP P74.

STATE OF CALIFORNIA
DEPARTMENT OF TRANSPORTATION

PAVEMENT EDGE TREATMENTS-OVERLAYS

NO SCALE

RSP P75 DATED NOVEMBER 15, 2013 SUPERSEDES RSP P75 DATED JANUARY 20, 2012 THAT SUPPLEMENTS THE STANDARD PLANS BOOK DATED 2010.

REVISED STANDARD PLAN RSP P75

2010 REVISED STANDARD PLAN RSP P75

DATE PLOTTED => 23-FEB-2015
TIME PLOTTED => 09:39

DIST	COUNTY	ROUTE	POST MILES TOTAL PROJECT	SHEET No.	TOTAL SHEETS
02	Plu	147	7.5/8.9	49	52

REGISTERED CIVIL ENGINEER

November 15, 2013
PLANS APPROVAL DATE

REGISTERED PROFESSIONAL ENGINEER
Cornelis M. Hakim
No. C55610
Exp. 12-31-14
CIVIL
STATE OF CALIFORNIA

THE STATE OF CALIFORNIA OR ITS OFFICERS OR AGENTS SHALL NOT BE RESPONSIBLE FOR THE ACCURACY OR COMPLETENESS OF SCANNED COPIES OF THIS PLAN SHEET.

TO ACCOMPANY PLANS DATED 02-04-15

LEGEND:

- HMA PAVEMENT
- HMA OR CONCRETE PAVEMENT
- CONCRETE PAVEMENT

ABBREVIATIONS:

SE SAFETY EDGE
TT TOTAL THICKNESS OF SE
HW HINGE WIDTH, DISTANCE FROM ES OR EP TO HP

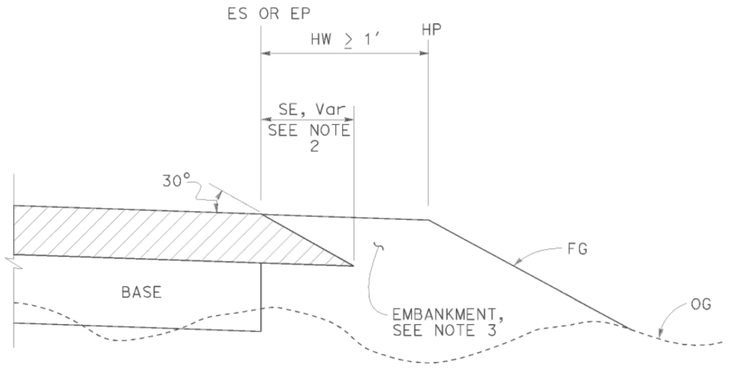

CASE K
Safety Edge - Fill Section, HW ≥ 1′

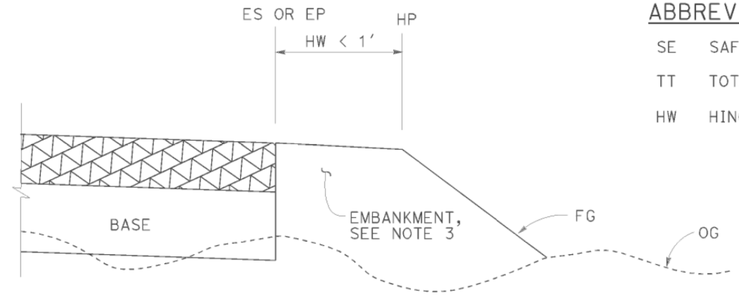

CASE L
Vertical Edge - Fill Section, HW < 1′

FILL SECTION

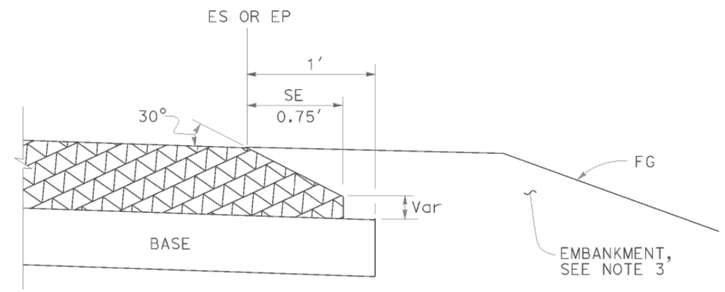

DETAIL "B"
For HMA pavement thickness more than 0.43′ or concrete pavement

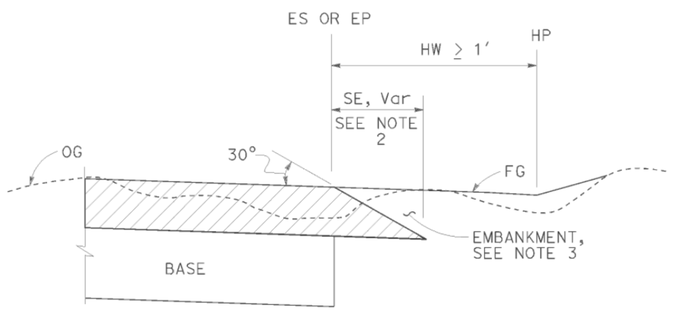

CASE M
Safety Edge - Cut Section, HW ≥ 1′

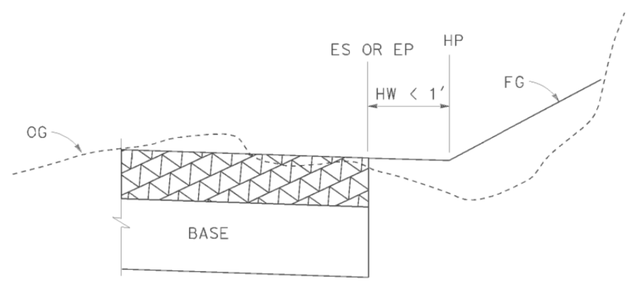

CASE N
Vertical Edge - Cut Section, HW < 1′

CUT SECTION

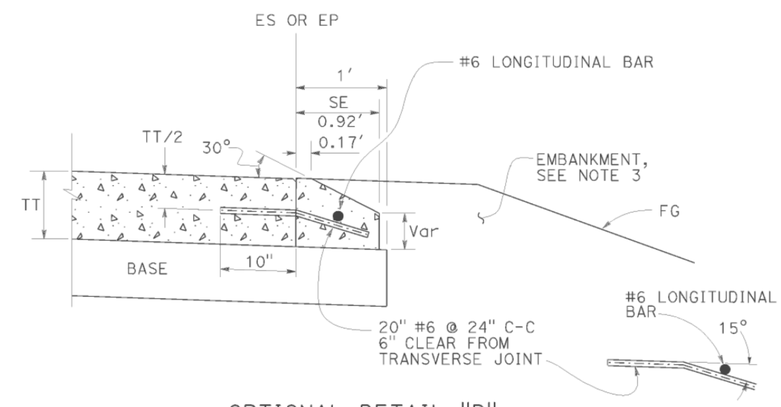

OPTIONAL DETAIL "B"
For concrete pavement
See Note 4

NOTES:

1. For limits of safety edge and vertical edge treatments, see Revised Standard Plan RSP P74
2. Details shown for HMA pavement thickness less than 0.43′. See Detail "B" for HMA pavement thickness more than 0.43′ or concrete pavement.
3. For locations and limits of embankment see project plans.
4. Safety edge transverse joint must match pavement transverse joint. End of #6 longitudinal bar must be 2" ±½" clear from transverse joint.
5. Safety edge is not needed in the area of MGS, barrier, right turn lane and acceleration lane. See Revised Standard Plan RSP P74.

STATE OF CALIFORNIA
DEPARTMENT OF TRANSPORTATION

PAVEMENT EDGE TREATMENTS-NEW CONSTRUCTION

NO SCALE

RSP P76 DATED NOVEMBER 15, 2013 SUPERSEDES RSP P76 DATED JANUARY 20, 2012 THAT SUPPLEMENTS THE STANDARD PLANS BOOK DATED 2010.

REVISED STANDARD PLAN RSP P76

2010 REVISED STANDARD PLAN RSP P76

DATE PLOTTED => 23-FEB-2015
TIME PLOTTED => 09:39

Dist	COUNTY	ROUTE	POST MILES TOTAL PROJECT	SHEET No.	TOTAL SHEETS
02	Plu	147	7.5/8.9	50	52

REGISTERED CIVIL ENGINEER

July 19, 2013
PLANS APPROVAL DATE

REGISTERED PROFESSIONAL ENGINEER
Gurinderpal Bhullar
No. C48815
Exp. 9-30-14
CIVIL
STATE OF CALIFORNIA

THE STATE OF CALIFORNIA OR ITS OFFICERS OR AGENTS SHALL NOT BE RESPONSIBLE FOR THE ACCURACY OR COMPLETENESS OF SCANNED COPIES OF THIS PLAN SHEET.

TO ACCOMPANY PLANS DATED 02-04-15

2010 REVISED STANDARD PLAN RSP T9

TABLE 1

TAPER LENGTH CRITERIA AND CHANNELIZING DEVICE SPACING

SPEED (S)	MINIMUM TAPER LENGTH * FOR WIDTH OF OFFSET 12 FEET (W)				MAXIMUM CHANNELIZING DEVICE SPACING		
					X	Y	Z **
	TANGENT 2L	MERGING L	SHIFTING L/2	SHOULDER L/3	TAPER	TANGENT	CONFLICT
mph	ft	ft	ft	ft	ft	ft	ft
20	160	80	40	27	20	40	10
25	250	125	63	42	25	50	12
30	360	180	90	60	30	60	15
35	490	245	123	82	35	70	17
40	640	320	160	107	40	80	20
45	1080	540	270	180	45	90	22
50	1200	600	300	200	50	100	25
55	1320	660	330	220	55	110	27
60	1440	720	360	240	60	120	30
65	1560	780	390	260	65	130	32
70	1680	840	420	280	70	140	35

* - For other offsets, use the following merging taper length formula for L:
For speed of 40 mph or less, $L = WS^2/60$
For speed of 45 mph or more, $L = WS$

Where: L = Taper length in feet
W = Width of offset in feet
S = Posted speed limit, off-peak 85th-percentile speed prior to work starting, or the anticipated operating speed in mph

** - Use for taper and tangent sections where there are no pavement markings or where there is a conflict between existing pavement markings and channelizers (CA).

TABLE 2

LONGITUDINAL BUFFER SPACE AND FLAGGER STATION SPACING

SPEED *	Min D **	DOWNGRADE Min D ***		
		-3%	-6%	-9%
mph	ft	ft	ft	ft
20	115	116	120	126
25	155	158	165	173
30	200	205	215	227
35	250	257	271	287
40	305	315	333	354
45	360	378	400	427
50	425	446	474	507
55	495	520	553	593
60	570	598	638	686
65	645	682	728	785
70	730	771	825	891

* - Speed is posted speed limit, off-peak 85th-percentile speed prior to work starting, or the anticipated operating speed in mph

** - Longitudinal buffer space or flagger station spacing

*** - Use on sustained downgrade steeper than -3 percent and longer than 1 mile.

TABLE 3

ADVANCE WARNING SIGN SPACING

ROAD TYPE	DISTANCE BETWEEN SIGNS *		
	A	B	C
	ft	ft	ft
URBAN - 25 mph OR LESS	100	100	100
URBAN - MORE THAN 25 mph TO 40 mph	250	250	250
URBAN - MORE THAN 40 mph	350	350	350
RURAL	500	500	500
EXPRESSWAY / FREEWAY	1000	1500	2640

* - The distances are approximate, are intended for guidance purposes only, and should be applied with engineering judgment. These distances should be adjusted by the Engineer for field conditions, if necessary, by increasing or decreasing the recommmended distances.

STATE OF CALIFORNIA
DEPARTMENT OF TRANSPORTATION

TRAFFIC CONTROL SYSTEM TABLES FOR LANE AND RAMP CLOSURES

NO SCALE

RSP T9 DATED JULY 19, 2013 SUPERSEDES RSP T9 DATED APRIL 19, 2013 THAT SUPPLEMENTS THE STANDARD PLANS BOOK DATED 2010.

REVISED STANDARD PLAN RSP T9

DATE PLOTTED => 23-FEB-2015
TIME PLOTTED => 09:39

Dist	COUNTY	ROUTE	POST MILES TOTAL PROJECT	SHEET No.	TOTAL SHEETS
02	Plu	147	7.5/8.9	51	52

Devinder Singh
REGISTERED CIVIL ENGINEER

October 17, 2014
PLANS APPROVAL DATE

REGISTERED PROFESSIONAL ENGINEER
Devinder Singh
No. C50470
Exp. 6-30-15
CIVIL
STATE OF CALIFORNIA

THE STATE OF CALIFORNIA OR ITS OFFICERS OR AGENTS SHALL NOT BE RESPONSIBLE FOR THE ACCURACY OR COMPLETENESS OF SCANNED COPIES OF THIS PLAN SHEET.

TO ACCOMPANY PLANS DATED 02-04-15

NOTES:

See Revised Standard Plan RSP T9 for tables.

Use cone spacing X for taper segment, Y for tangent segment or Z for conflict situations, as approriate, per Table 1, unless X, Y, or Z cone spacing is shown on this sheet.

Unless otherwise specified in the special provisions, all temporary warning signs shall have black legend on fluorescent orange background.

California codes are designated by (CA). Otherwise, Federal (MUTCD) codes are shown.

TYPICAL LANE CLOSURE WITH REVERSIBLE CONTROL

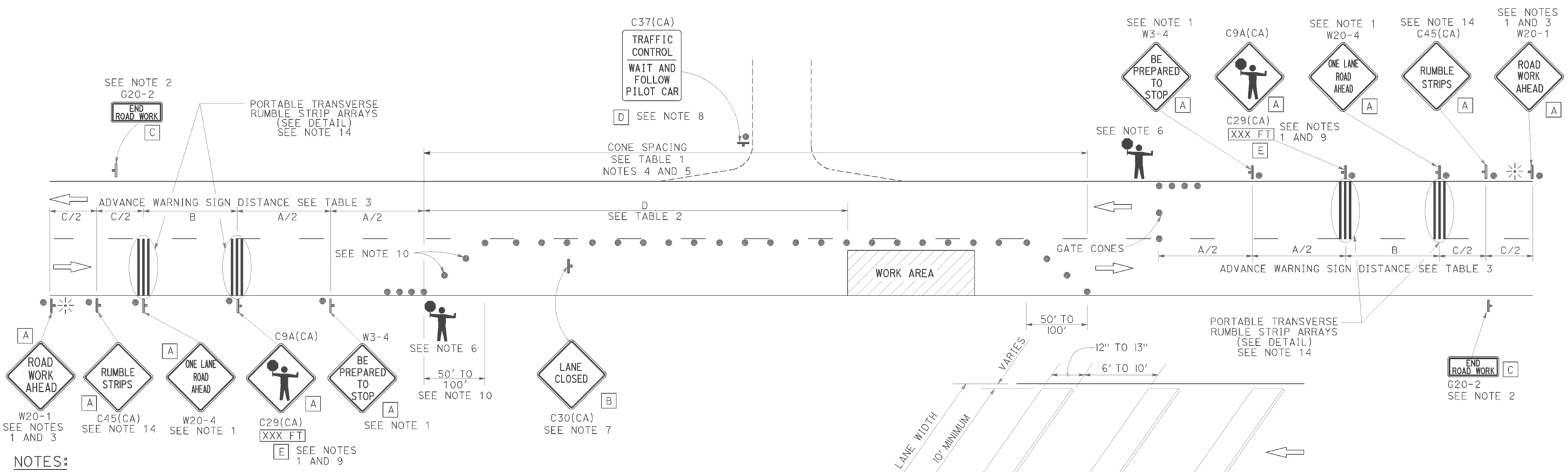

NOTES:

1. Each advance warning sign in each direction of travel shall be equipped with at least two flags for daytime closure. Each flag shall be at least 16" x 16" in size and shall be orange or fluorescent red-orange in color. Flashing beacons shall be placed at the locations indicated for lane closure during hours of darkness.
2. A G20-2 "END ROAD WORK" sign, as appropriate, shall be placed at the end of the lane control unless the end of work area is obvious, or ends within a larger project's limits.
3. If the W20-1 sign would follow within 2000' of a stationary W20-1 or G20-1 "ROAD WORK NEXT _____ MILES", use a W20-4 sign for the first advance warning sign.
4. All cones used for lane closures during the hours of darkness shall be fitted with retroreflective bands (or sleeves) as specified in the specifications.
5. Portable delineators, placed at one-half the spacing indicated for traffic cones, may be used instead of cones for daytime closures only.
6. Additional advance flaggers may be required. Flagger should stand in a conspicuous place, be visible to approaching traffic as well as approaching vehicles after the first vehicle has stopped. During the hours of darkness, the flagging-station and flagger shall be illuminated and clearly visible to approaching traffic. The illumination footprint of the lighting on the ground shall be at least 20' in diameter. Place a minimum of four cones at 50' intervals in advance of flagger station as shown.
7. Place C30(CA) "LANE CLOSED" sign at 500' to 1000' intervals throughout extended work areas. They are optional if the work area is visible from the flagger station.
8. When a pilot car is used, place a C37(CA) "TRAFFIC CONTROL-WAIT AND FOLLOW PILOT CAR" sign with black legend on white background at all intersections, driveways and alleys without a flagger within traffic control area. Signs shall be clean and visible at all times. Where traffic can not be effectively self-regulated, at least one flagger shall be used at each intersection within traffic control area.
9. An optional C29(CA) sign may be placed below the C9A(CA) sign.
10. Either traffic cones or barricades shall be placed on the taper. Barricades shall be Type I, II, or III.
11. The color of the portable transverse rumble strips shall be black or orange. Use 2 arrays, each array shall consist of 3 rumble strips.
12. Portable transverse rumble strips shall not be placed on sharp horizontal or vertical curves nor shall they be placed through pedestrian crossings.
13. If the portable transverse rumble strips become out of alignment (skewed) by more than 6 inches, measured from one end to the other, they shall be readjusted to bring the placement back to the original location.
14. Portable transverse rumble strips are not required if any one of the following conditions is satisfied:
    A. Work duration occupies a location for four hours or less
    B. Posted speed limit is below 45 MPH
    C. Work is of emergency nature
    D. Work zone is in snow or icy weather conditions

PORTABLE TRANSVERSE RUMBLE STRIP ARRAY DETAIL

LEGEND

- TRAFFIC CONE
- TEMPORARY TRAFFIC CONTROL SIGN
- PORTABLE FLASHING BEACON
- FLAGGER

SIGN PANEL SIZE (Min)

A	48" x 48"
B	30" x 30"
C	36" x 18"
D	36" x 42"
E	20" x 7"

STATE OF CALIFORNIA
DEPARTMENT OF TRANSPORTATION

TRAFFIC CONTROL SYSTEM FOR LANE CLOSURE ON TWO LANE CONVENTIONAL HIGHWAYS

NO SCALE

RSP T13 DATED OCTOBER 17, 2014 SUPERSEDES RSP T13 DATED JULY 18, 2014 AND RSP T13 DATED APRIL 19, 2013 AND STANDARD PLAN T13 DATED MAY 20, 2011 - PAGE 241 OF THE STANDARD PLANS BOOK DATED 2010.

REVISED STANDARD PLAN RSP T13

2010 REVISED STANDARD PLAN RSP T13

DATE PLOTTED => 23-FEB-2015
TIME PLOTTED => 09:39

Dist	COUNTY	ROUTE	POST MILES TOTAL PROJECT	SHEET No.	TOTAL SHEETS
02	Plu	147	7.5/8.9	52	52

REGISTERED CIVIL ENGINEER

April 19, 2013
PLANS APPROVAL DATE

REGISTERED PROFESSIONAL ENGINEER Gurinderpal Bhullar No. C48815 Exp. 9-30-14 CIVIL STATE OF CALIFORNIA

THE STATE OF CALIFORNIA OR ITS OFFICERS OR AGENTS SHALL NOT BE RESPONSIBLE FOR THE ACCURACY OR COMPLETENESS OF SCANNED COPIES OF THIS PLAN SHEET.

TO ACCOMPANY PLANS DATED 02-04-15

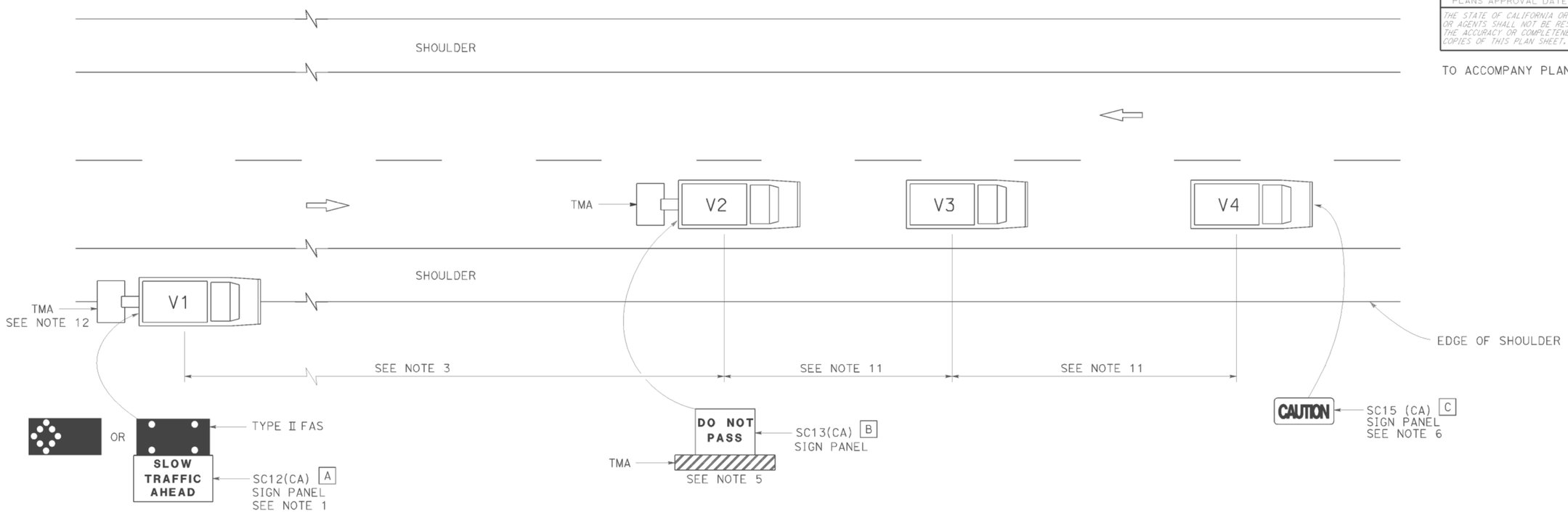

LEGEND

V1	SIGN VEHICLE
V2	SHADOW VEHICLE
V3	WORK/APPLICATION VEHICLE
V4	SIGN VEHICLE
TMA	TRUCK-MOUNTED ATTENUATOR
	FLASHING ARROW SIGN (FAS) IN FLASHING CAUTION MODE
	FLASHING ARROW SIGN (FAS) IN ALTERNATING DIAMOND CAUTION

SIGN PANEL SIZE (Min)

A	72" x 42"
B	54" x 42"
C	54" x 24"

NOTES:

1. Either a changeable message sign or a SC12(CA) "SLOW TRAFFIC AHEAD" sign shall be mounted on the rear of sign vehicle V1. The changeable message sign shall be sequenced to show the "CAUTION" message first, follow by the "SLOW TRAFFIC AHEAD" message. A Type II flashing arrow sign may be used with the SC12(CA) sign panel.
2. Sign vehicle V1 should be positioned where highly visible when shoulders are not available.
3. If traffic queues develop, sign vehicle V1 should be positioned upstream from the end of queue.
4. Vehicle-mounted sign panels shall have Type III or above retroreflective sheeting, black on white, or black on fluorescent orange, with 6" minimum series D letters per Caltrans sign specifications.
5. Shadow vehicle shall be equipped with a truck-mounted attenuator. The sign panel shown shall be mounted on the rear of shadow vehicle V2. The message "LANE CLOSED" may be used in place of the "DO NOT PASS" message.
6. The sign panel shown shall be mounted on the front of sign vehicle V4, facing opposing traffic.
7. All vehicles shall be equipped with flashing or rotating amber lights.
8. Sign vehicle V4 will not be required when the work and vehicles V2 and V3 are 2′ or more from the centerline of the highway during the work or application operations.
9. All vehicles used for lane closures shall be equipped with two-way radios and the vehicle operators shall maintain communication during the work or application operation.
10. This plan shall not be used where workers would be on foot in the work area. Use a stationary type lane closure (Revised Standard Plan T13) for this condition.
11. Minimize spacing between vehicles V2 and V3 and vehicles V3 and V4 to deter road users from driving in between them.
12. If sign vehicle V1 encroaches into the traffic lane due to insufficient shoulder width, sign vehicle V1 shall be equipped with a truck-mounted attenuator. Sign vehicle V1 shall stay as close to the edge of shoulder as practicable.

STATE OF CALIFORNIA
DEPARTMENT OF TRANSPORTATION

TRAFFIC CONTROL SYSTEM FOR MOVING LANE CLOSURE ON TWO LANE HIGHWAYS

NO SCALE

RSP T17 DATED APRIL 19, 2013 SUPERSEDES STANDARD PLAN T17
DATED MAY 20, 2011 - PAGE 245 OF THE STANDARD PLANS BOOK DATED 2010.

REVISED STANDARD PLAN RSP T17

2010 REVISED STANDARD PLAN RSP T17

DATE PLOTTED => 23-FEB-2015
TIME PLOTTED => 09:39