Dist	COUNTY	ROUTE	POST MILES TOTAL PROJECT	SHEET No.	TOTAL SHEETS
02	Sis	3,97	27.0/36.0 0.5/R11.5	1	19

INDEX OF PLANS

SHEET No.	DESCRIPTION
1	TITLE
2-3	TYPICAL CROSS SECTIONS
4	LAYOUTS
5-6	CONSTRUCTION DETAILS
7	CONSTRUCTION AREA SIGNS
8	PAVEMENT DELINEATION DETAILS
9-10	PAVEMENT DELINEATION QUANTITIES
11-13	SUMMARY OF QUANTITIES
14-15	MODIFY TRAFFIC MONITORING STATION
16-19	REVISED STANDARD PLANS

THE STANDARD PLANS LIST APPLICABLE TO THIS CONTRACT IS INCLUDED IN THE NOTICE TO BIDDERS AND SPECIAL PROVISIONS BOOK.

STATE OF CALIFORNIA

DEPARTMENT OF TRANSPORTATION

PROJECT PLANS FOR CONSTRUCTION ON

STATE HIGHWAY

IN SISKIYOU COUNTY ON ROUTE 3 FROM 0.1 MILE SOUTH OF KIDDER CREEK BRIDGE TO 0.2 MILE NORTH OF REIDEL RANCH ROAD AND ON ROUTE 97 FROM 0.1 MILE SOUTH OF ALAMO AVENUE TO YELLOW BUTTE ROAD

TO BE SUPPLEMENTED BY STANDARD PLANS DATED 2010

LOCATION MAP

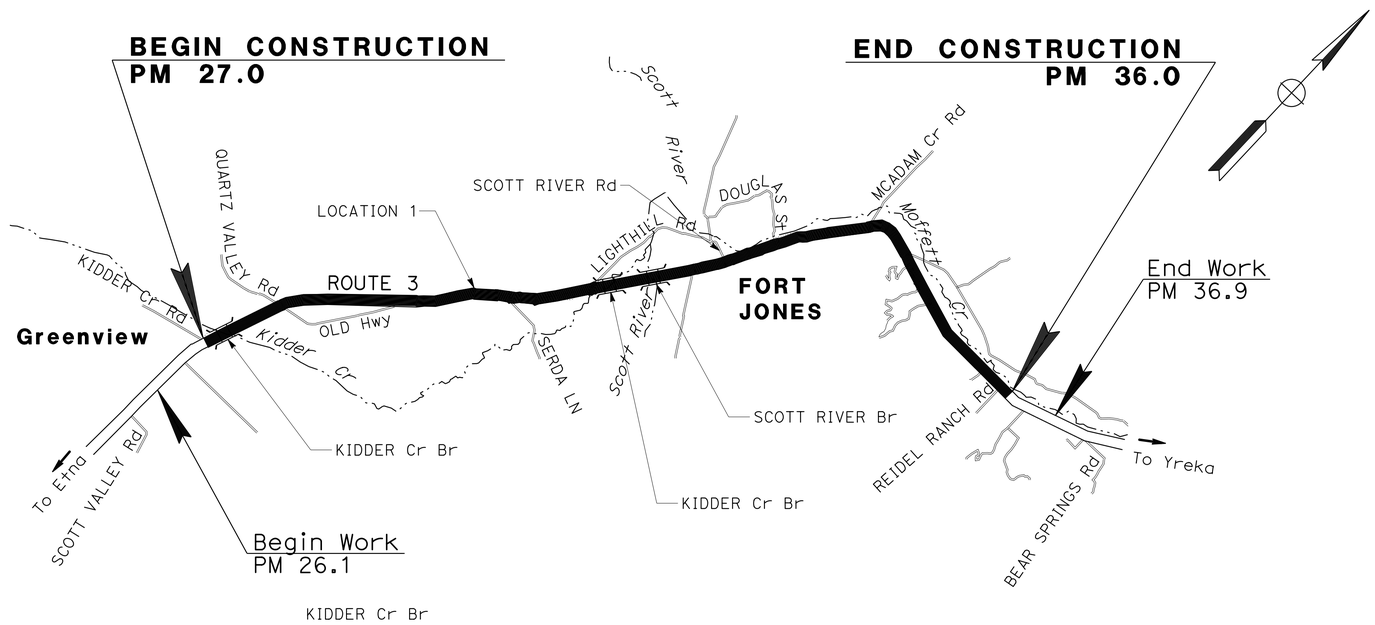

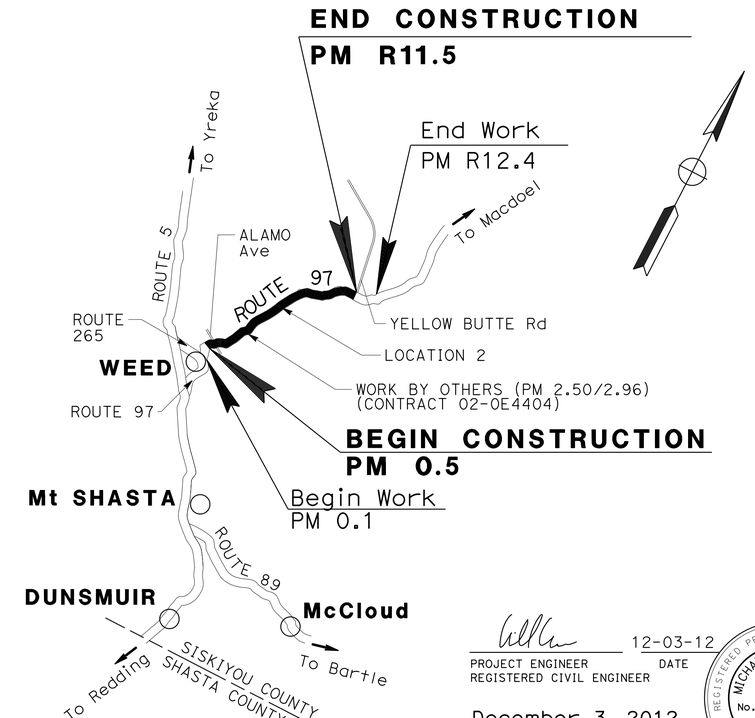

12-03-12

PROJECT ENGINEER DATE
REGISTERED CIVIL ENGINEER

December 3, 2012

PLANS APPROVAL DATE

REGISTERED PROFESSIONAL ENGINEER MICHAEL A. CONNER No. C73123 Exp. 12-31-12 CIVIL STATE OF CALIFORNIA

THE STATE OF CALIFORNIA OR ITS OFFICERS OR AGENTS SHALL NOT BE RESPONSIBLE FOR THE ACCURACY OR COMPLETENESS OF SCANNED COPIES OF THIS PLAN SHEET.

THE CONTRACTOR SHALL POSSESS THE CLASS (OR CLASSES) OF LICENSE AS SPECIFIED IN THE "NOTICE TO BIDDERS."

NO SCALE

CONTRACT No.	02-4F1504
PROJECT ID	0212000123

PROJECT MANAGER: DON ANDERSON
DESIGN ENGINEER: DON ANDERSON

P:\proj1\02\4F150_plans\pse\24F150ab001.dgn

LAST REVISION 12-03-12 DATE PLOTTED => 30-NOV-2012 TIME PLOTTED => 11:46

Dist	COUNTY	ROUTE	POST MILES TOTAL PROJECT	SHEET No.	TOTAL SHEETS
02	Sis	3,97	27.0/36.0, 0.5/R11.5	2	19

REGISTERED CIVIL ENGINEER 12-03-12 DATE

12-03-12
PLANS APPROVAL DATE

REGISTERED PROFESSIONAL ENGINEER MICHAEL A. CONNER No. C73123 Exp. 12-31-12 CIVIL STATE OF CALIFORNIA

THE STATE OF CALIFORNIA OR ITS OFFICERS OR AGENTS SHALL NOT BE RESPONSIBLE FOR THE ACCURACY OR COMPLETENESS OF SCANNED COPIES OF THIS PLAN SHEET.

NOTES:

1. DIMENSIONS OF THE PAVEMENT STRUCTURES (STRUCTURAL SECTIONS) ARE SUBJECT TO TOLERANCES SPECIFIED IN THE STANDARD SPECIFICATIONS.
2. FOR ACCURATE RIGHT OF WAY DATA, CONTACT RIGHT OF WAY ENGINEERING AT THE DISTRICT OFFICE.
3. DO NOT PLACE CHIP SEAL ON BRIDGE DECKS.
4. Exist UTILITY FACILITIES HAVE NOT BEEN PLOTTED ON THESE PLANS.

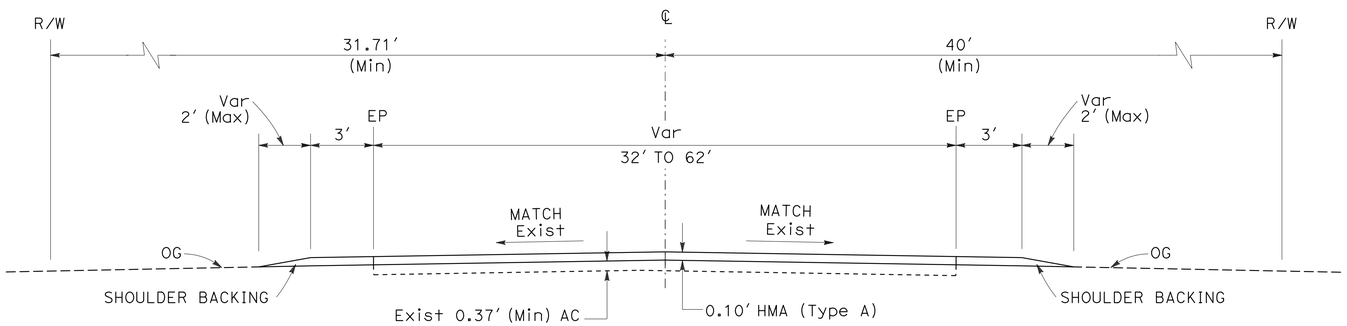

LOCATION 1 - Sis-3-33.07/36.00
Sis-3-32.00/32.55

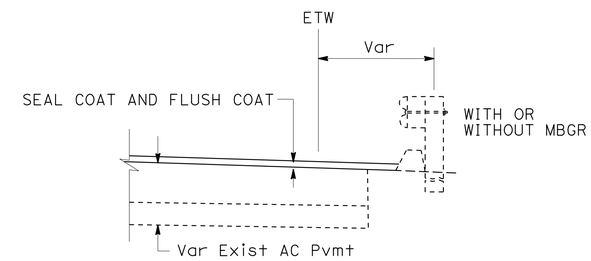

DIKE DETAILS

TYPICAL BOTH DIRECTIONS

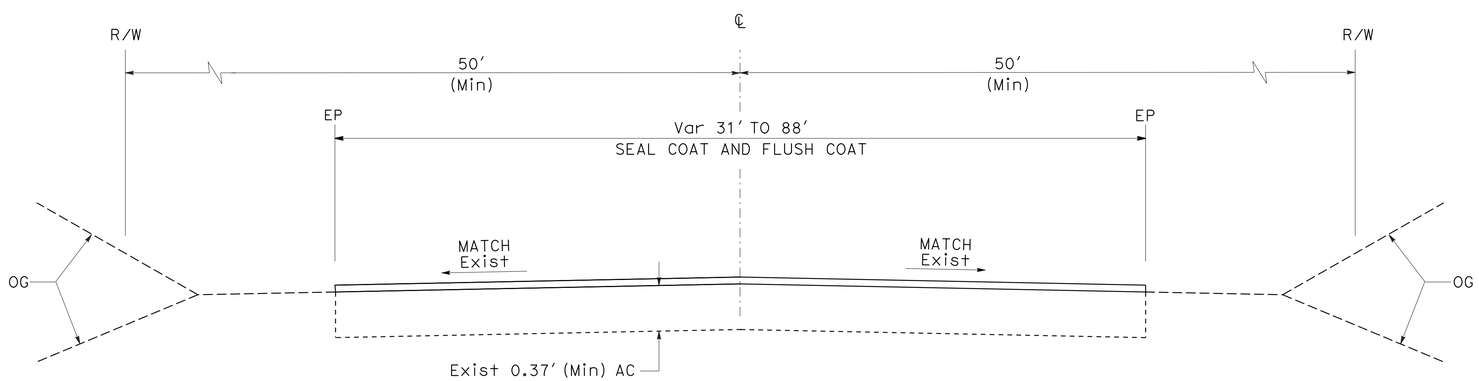

LOCATION 1 - Sis-3-27.00/32.00

LOCATION 2 - Sis-97-0.50/2.50
Sis-97-4.83/5.37
Sis-97-8.87/10.32
Sis-97-R11.16/R11.50

TYPICAL CROSS SECTION

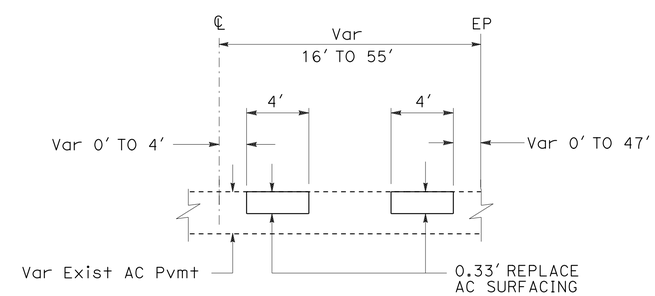

REPLACE AC SURFACING

(TYPICAL BOTH DIRECTIONS)

LOCATION 1 - Sis-3-27.00/36.00

TYPICAL CROSS SECTIONS

NO SCALE

X-1

REVISED BY | DATE REVISED
MICHAEL CONNER | KARLIE SMITH
CALCULATED-DESIGNED BY | CHECKED BY
FUNCTIONAL SUPERVISOR: DON ANDERSON

STATE OF CALIFORNIA - DEPARTMENT OF TRANSPORTATION
Caltrans® MAINTENANCE

P:\proj1\02\4f150_plans\pse\24f150ca001.dgn

LAST REVISION 12-03-12 | DATE PLOTTED => 30-NOV-2012 | TIME PLOTTED => 11:46

Dist	COUNTY	ROUTE	POST MILES TOTAL PROJECT	SHEET No.	TOTAL SHEETS
02	Sis	3,97	27.0/36.0, 0.5/R11.5	3	19

REGISTERED CIVIL ENGINEER 12-03-12 DATE

12-03-12
PLANS APPROVAL DATE

REGISTERED PROFESSIONAL ENGINEER MICHAEL A. CONNER No. C73123 Exp. 12-31-12 CIVIL STATE OF CALIFORNIA

THE STATE OF CALIFORNIA OR ITS OFFICERS OR AGENTS SHALL NOT BE RESPONSIBLE FOR THE ACCURACY OR COMPLETENESS OF SCANNED COPIES OF THIS PLAN SHEET.

NOTES:

1. DIMENSIONS OF THE PAVEMENT STRUCTURES (STRUCTURAL SECTIONS) ARE SUBJECT TO TOLERANCES SPECIFIED IN THE STANDARD SPECIFICATIONS.
2. SHOULDERS THAT ARE FOG SEALED AT LOCATION 2 AT SHOT RATE OF 0.12 GSY
3. FOR ACCURATE RIGHT OF WAY DATA, CONTACT RIGHT OF WAY ENGINEERING AT THE DISTRICT OFFICE.
4. Exist UTILITY FACILITIES HAVE NOT BEEN PLOTTED ON THESE PLANS.

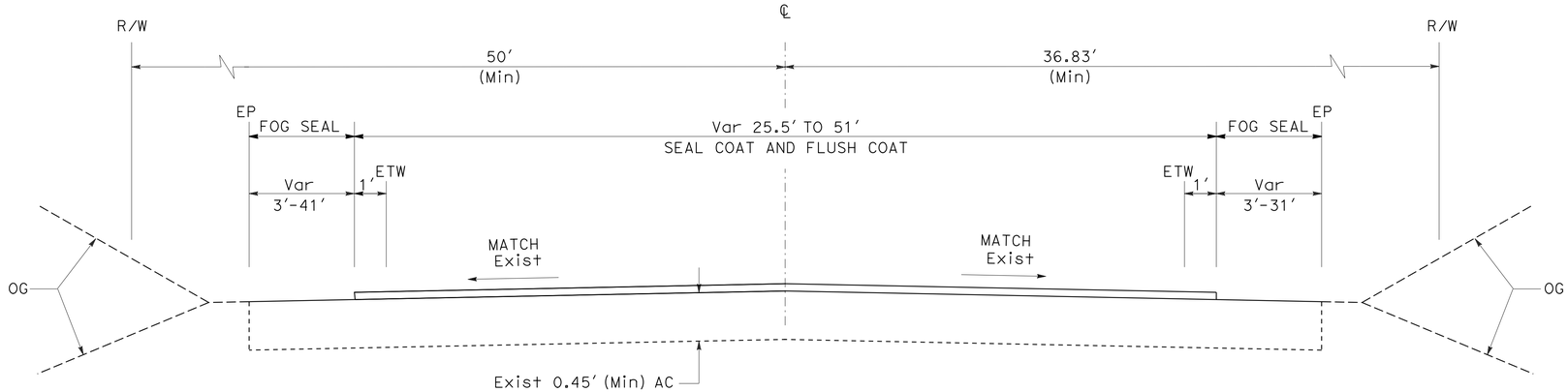

LOCATION 2 - Sis-97-2.96/4.83
Sis-97-5.37/8.87
Sis-97-10.32/R11.16

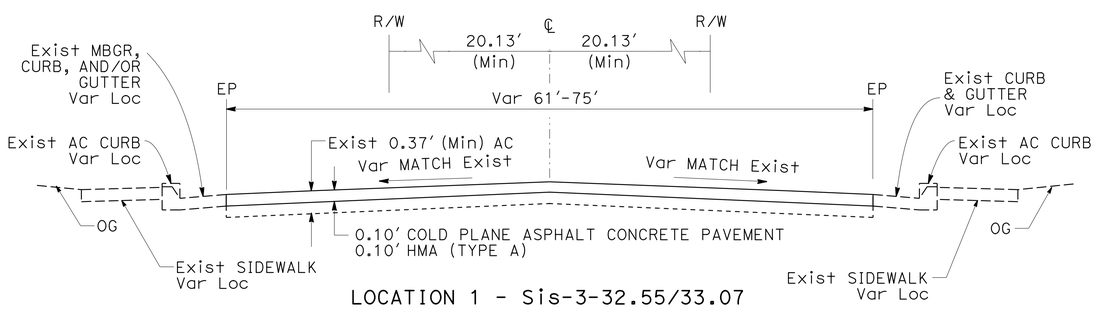

LOCATION 1 - Sis-3-32.55/33.07

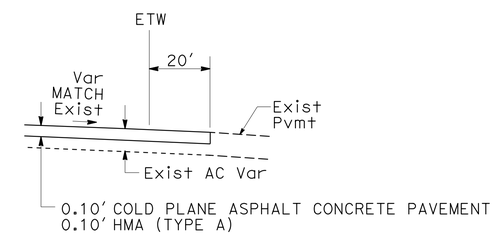

LOCATION 1 - Sis-3-32.74/32.76 Lt

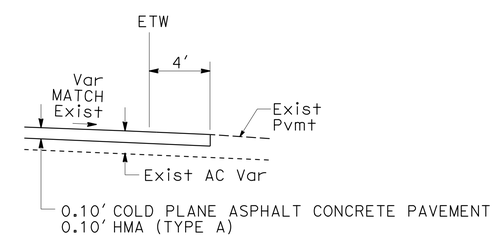

LOCATION 1 - Sis-3-32.96/32.98 Rt

TYPICAL CROSS SECTION

TYPICAL CROSS SECTIONS

NO SCALE

X-2

REVISED BY | DATE REVISED
MICHAEL CONNER | KARLIE SMITH
CALCULATED-DESIGNED BY | CHECKED BY
FUNCTIONAL SUPERVISOR: DON ANDERSON

STATE OF CALIFORNIA - DEPARTMENT OF TRANSPORTATION
Caltrans® MAINTENANCE

P:\proj1\02\4f150_plans\pse\24f150ca002.dgn

LAST REVISION 12-03-12 | DATE PLOTTED => 30-NOV-2012 | TIME PLOTTED => 11:46

Dist	COUNTY	ROUTE	POST MILES TOTAL PROJECT	SHEET No.	TOTAL SHEETS
02	Sis	3,97	27.0/36.0, 0.5/R11.5	4	19

REGISTERED CIVIL ENGINEER 12-03-12 DATE

12-03-12
PLANS APPROVAL DATE

REGISTERED PROFESSIONAL ENGINEER MICHAEL A. CONNER No. C73123 Exp. 12-31-12 CIVIL STATE OF CALIFORNIA

THE STATE OF CALIFORNIA OR ITS OFFICERS OR AGENTS SHALL NOT BE RESPONSIBLE FOR THE ACCURACY OR COMPLETENESS OF SCANNED COPIES OF THIS PLAN SHEET.

NOTES:

1. FOR ACCURATE RIGHT OF WAY DATA, CONTACT RIGHT OF WAY ENGINEERING AT THE DISTRICT OFFICE.
2. LOCATION OF UTILITY AND FACILITY SHOWN ON THESE PLANS ARE APPROXIMATE AND SHALL BE VERIFIED BY THE CONTRACTOR PRIOR TO CONSTRUCTION. OTHER EXISTING UTILITY FACILITIES ARE NOT SHOWN ON THESE PLANS.

LEGEND:

COLD PLANE ASPHALT CONCRETE PAVEMENT (0.10' TO 0.00')

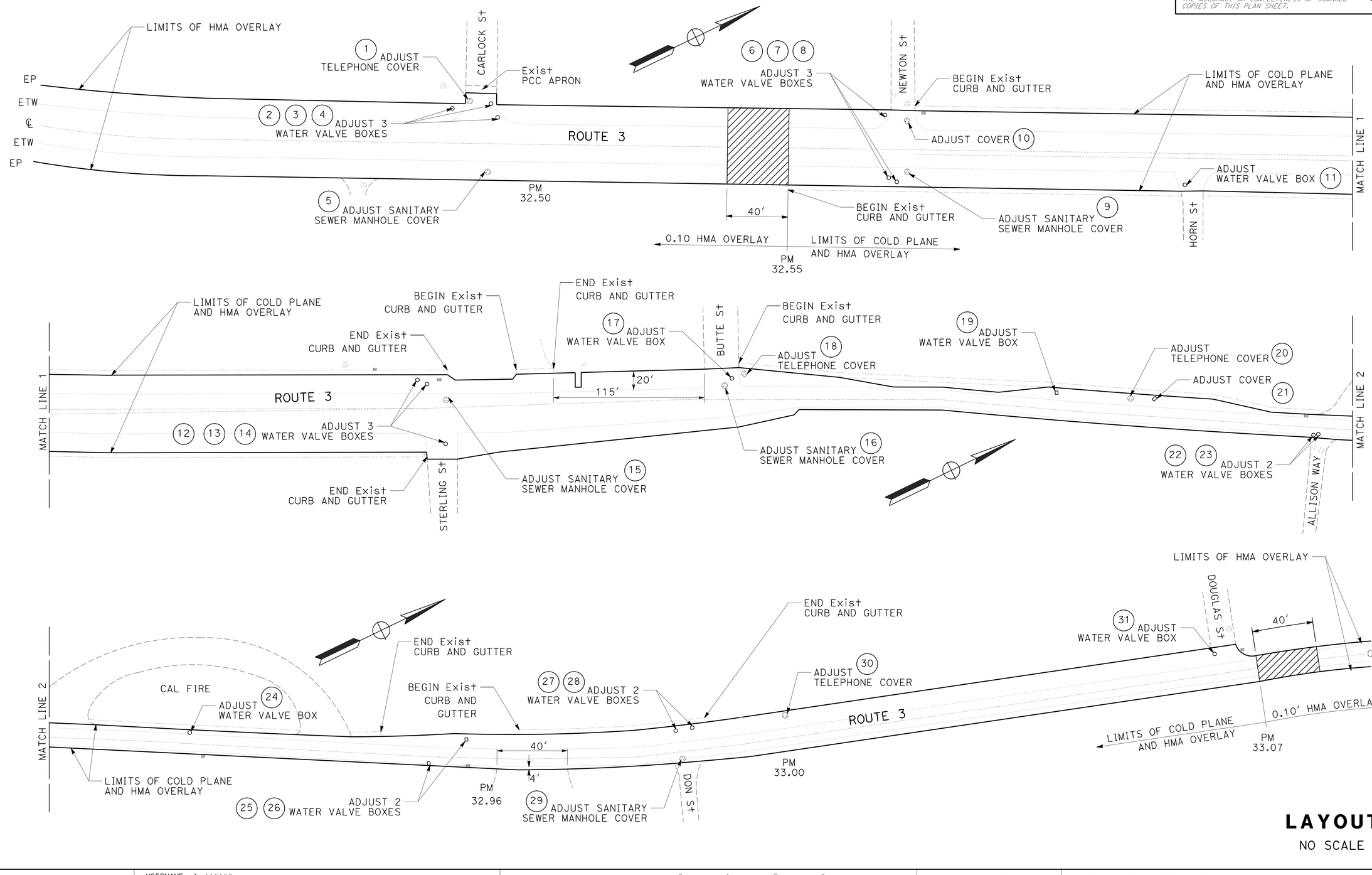

LAYOUT

NO SCALE **L-1**

REVISED BY	DATE REVISED
MICHAEL CONNER	KARLIE SMITH
CALCULATED-DESIGNED BY	CHECKED BY
FUNCTIONAL SUPERVISOR	DON ANDERSON

STATE OF CALIFORNIA - DEPARTMENT OF TRANSPORTATION
Caltrans® MAINTENANCE

P:\proj1\02\4f150_plans\pse\24f150ea001.dgn

LAST REVISION 12-03-12 | DATE PLOTTED => 30-NOV-2012 | TIME PLOTTED => 11:46

Dist	COUNTY	ROUTE	POST MILES TOTAL PROJECT	SHEET No.	TOTAL SHEETS
02	Sis	3,97	27.0/36.0, 0.5/R11.5	5	19

REGISTERED CIVIL ENGINEER 12-03-12 DATE

12-03-12
PLANS APPROVAL DATE

REGISTERED PROFESSIONAL ENGINEER MICHAEL A. CONNER No. C73123 Exp. 12-31-12 CIVIL STATE OF CALIFORNIA

THE STATE OF CALIFORNIA OR ITS OFFICERS OR AGENTS SHALL NOT BE RESPONSIBLE FOR THE ACCURACY OR COMPLETENESS OF SCANNED COPIES OF THIS PLAN SHEET.

NOTE:

1. EXISTING UTILITY FACILITIES HAVE NOT BEEN PLOTTED ON THESE PLANS.

LEGEND:

COLD PLANE ASPHALT CONCRETE PAVEMENT (0.00' TO 0.10')

PCC

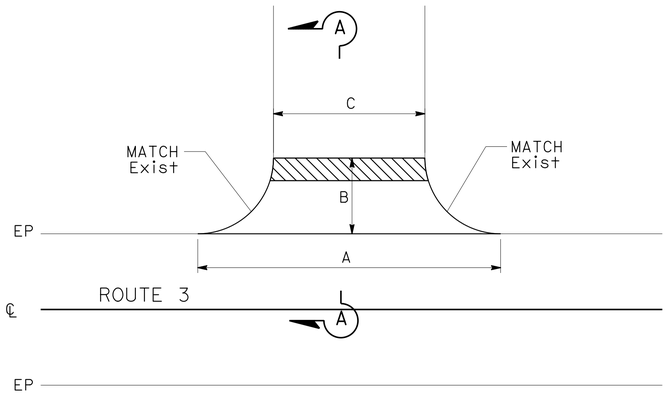

DETAIL FOR CASE A ROAD CONNECTIONS

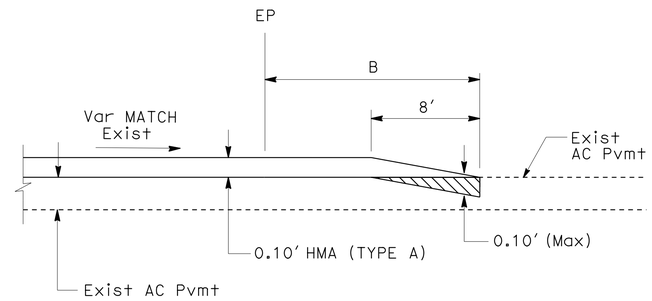

SECTION A-A

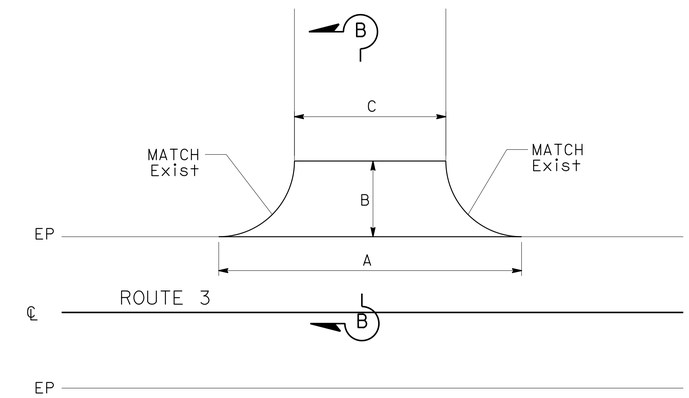

DETAIL FOR CASE B ROAD CONNECTIONS

ROAD CONNECTIONS

Loc	ROAD CONNECTION	SIDE	PM	DIMENSIONS (LF) A	B	C	CASE
1	DRIVEWAY	L+	32.02	85	20	30	A
	DRIVEWAY	R+	32.03	49	10	27	A
	DRIVEWAY	L+	32.05	146	20	39	A
	DRIVEWAY	R+	32.05	84	20	25	A
	DRIVEWAY	R+	32.09	95	20	34	A
	DRIVEWAY	R+	32.10	141	20	42	A
	DRIVEWAY	L+	32.10	133	20	38	A
	DRIVEWAY	L+	32.13	80	20	24	A
	DRIVEWAY	L+	32.15	123	20	25	A
	EASTSIDE Rd	R+	32.17	280	25	64	A
	SCOTT RIVER Rd	L+	32.19	122	20	62	A
	DRIVEWAY	L+	32.21	120	20	43	A
	MATTHEWS St	L+	32.24	285	20	89	A
	DRIVEWAY	R+	32.41	40	10	18	B
	DRIVEWAY	R+	32.44	27	10	17	B
	DRIVEWAY	R+	32.45	35	10	20	B
	DRIVEWAY	R+	32.47	40	10	23	B
	CARLOCK St	L+	32.49	59	14	50	A
	DRIVEWAY	L+	33.07	60	12	39	B
	DRIVEWAY	L+	33.10	69	12	39	A
	DRIVEWAY	L+	33.19	53	12	35	B
	DRIVEWAY	R+	33.20	32	12	15	A
	DRIVEWAY	L+	33.20	49	12	19	B
	DRIVEWAY	L+	33.22	86	12	48	A
	HAMILTON St	L+	33.26	64	20	26	A
	DRIVEWAY	L+	33.27	49	12	22	A
	DRIVEWAY	L+	33.29	46	12	18	B
	DRIVEWAY	R+	33.36	94	20	94	B
	DRIVEWAY	L+	33.37	64	12	24	B
	DRIVEWAY	R+	33.44	40	15	40	B
	DRIVEWAY	R+	33.45	44	12	23	B
	DRIVEWAY	L+	33.45	50	12	26	B
	DRIVEWAY	L+	33.48	44	12	16	B
	DRIVEWAY	L+	33.55	44	12	22	A

ROAD CONNECTIONS

Loc	ROAD CONNECTION	SIDE	PM	DIMENSIONS (LF) A	B	C	CASE
1	DRIVEWAY	R+	33.58	119	12	26	B
	MARBLE VIEW Dr	L+	33.60	74	20	30	A
	DRIVEWAY	L+	33.61	79	12	34	B
	DRIVEWAY	L+	33.68	77	12	33	B
	DRIVEWAY	L+	33.78	319	20	208	A
	DRIVEWAY	R+	33.82	59	12	22	B
	HEPPNER Ln	R+	33.89	142	20	40	A
	MCADAMS Cr Rd	L+	34.05	217	12	31	A
	MCADAMS Cr Rd	R+	34.05	234	39	65	B
	DRIVEWAY	R+	34.22	85	12	24	B
	DRIVEWAY	L+	34.26	46	12	22	B
	DRIVEWAY	L+	34.50	64	12	25	B
	W MOFFETT Cr Rd	R+	34.59	45	12	22	B
	W MOFFETT Cr Rd	L+	34.59	281	20	54	A
	DRIVEWAY	R+	34.70	86	12	30	B
	DRIVEWAY	R+	34.80	44	12	12	B
	DRIVEWAY	L+	35.00	49	12	18	B
	DRIVEWAY	L+	35.00	49	12	18	B
	DRIVEWAY	L+	35.03	55	12	21	B
	DRIVEWAY	L+	35.14	61	12	25	B
	DRIVEWAY	R+	35.16	49	12	22	B
	DRIVEWAY	L+	35.41	48	12	21	B
	DRIVEWAY	L+	35.44	48	12	23	B
	DRIVEWAY	L+	35.49	47	12	33	B
	DRIVEWAY	R+	35.54	32	12	14	B
	DRIVEWAY	L+	35.59	47	12	34	B
	DRIVEWAY	R+	35.63	46	12	21	B
	DRIVEWAY	L+	35.73	49	12	25	B
	DRIVEWAY	L+	35.76	30	12	16	B
	REIDEL RANCH Rd	R+	35.78	43	12	18	A
	DRIVEWAY	R+	35.80	48	12	25	B
	DRIVEWAY	R+	35.84	31	12	15	B
	DRIVEWAY	L+	35.84	46	12	31	B
	DRIVEWAY	R+	35.92	51	12	18	B

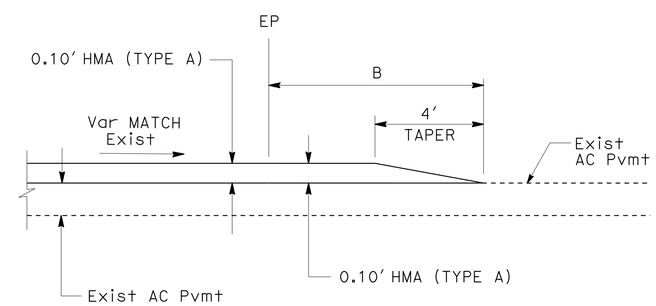

SECTION B-B

CONSTRUCTION DETAILS

NO SCALE

C-1

REVISED BY | DATE REVISED

MICHAEL CONNER | KARLIE SMITH

CALCULATED-DESIGNED BY | CHECKED BY

FUNCTIONAL SUPERVISOR: DON ANDERSON

STATE OF CALIFORNIA - DEPARTMENT OF TRANSPORTATION

Caltrans® MAINTENANCE

P:\proj1\02\4f150_plans\pse\24f150ga001.dgn

LAST REVISION 12-03-12 | DATE PLOTTED => 30-NOV-2012 | TIME PLOTTED => 11:46

Dist	COUNTY	ROUTE	POST MILES TOTAL PROJECT	SHEET No.	TOTAL SHEETS
02	Sis	3,97	27.0/36.0, 0.5/R11.5	6	19

REGISTERED CIVIL ENGINEER 12-03-12 DATE

12-03-12
PLANS APPROVAL DATE

REGISTERED PROFESSIONAL ENGINEER MICHAEL A. CONNER No. C73123 Exp. 12-31-12 CIVIL STATE OF CALIFORNIA

THE STATE OF CALIFORNIA OR ITS OFFICERS OR AGENTS SHALL NOT BE RESPONSIBLE FOR THE ACCURACY OR COMPLETENESS OF SCANNED COPIES OF THIS PLAN SHEET.

NOTE:

1. EXISTING UTILITY FACILITIES HAVE NOT BEEN PLOTTED ON THESE PLANS.

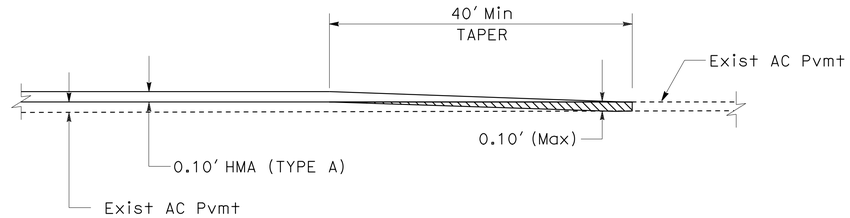

MAINLINE CONFORM TAPER

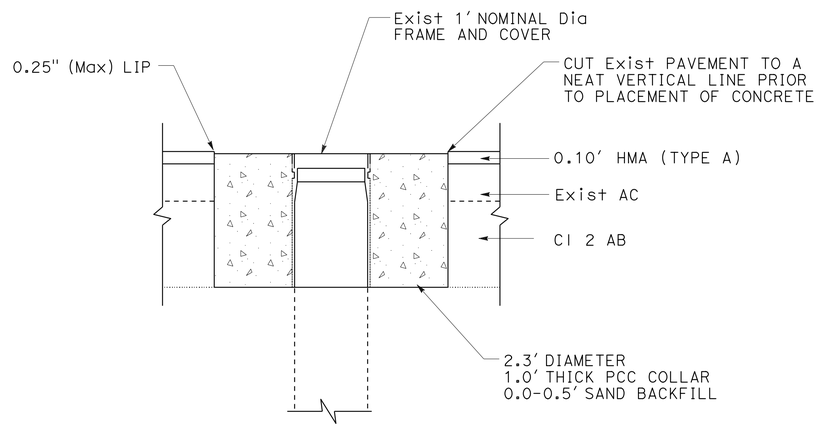

ADJUST UTILITY VALVE BOX DETAIL

LOCATION 1 - PM 32.45 TO 32.55

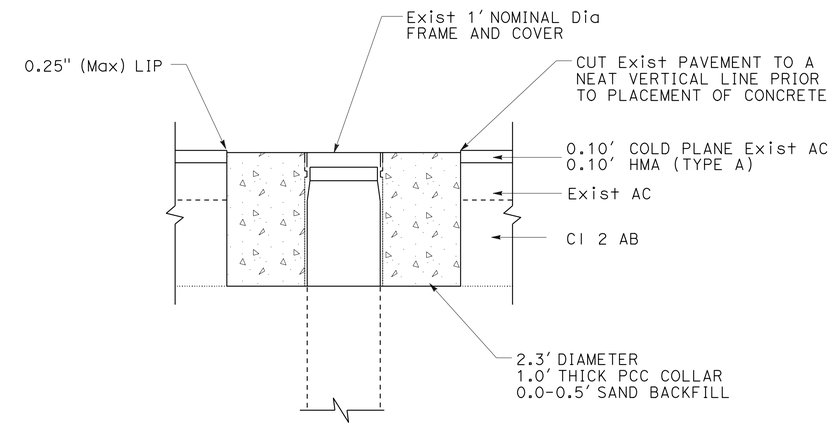

ADJUST UTILITY VALVE BOX DETAIL

LOCATION - PM 32.55 TO 33.07

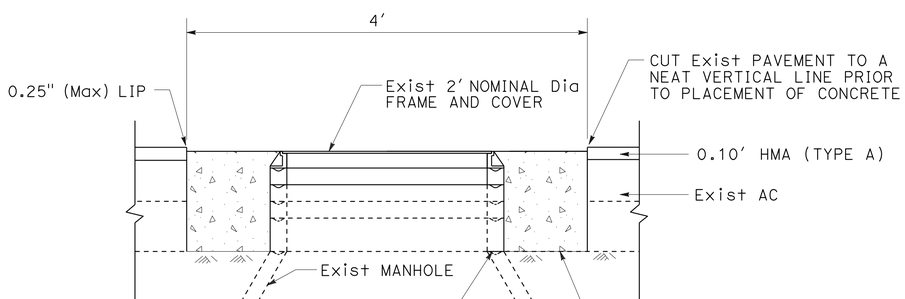

ADJUST UTILITY MANHOLE DETAIL

LOCATION 1 - PM 32.45 TO 32.55

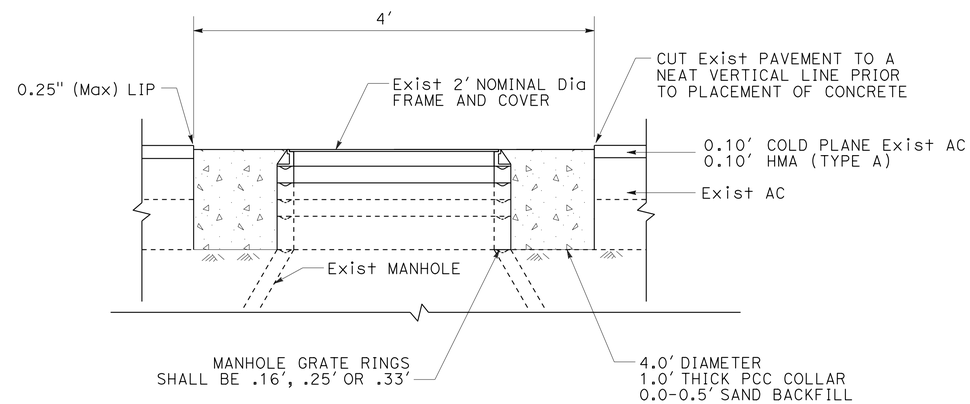

ADJUST UTILITY MANHOLE DETAIL

LOCATION 1 - PM 32.55 TO 33.07

CONSTRUCTION DETAILS

NO SCALE

C-2

REVISED BY | DATE REVISED
MICHAEL CONNER | KARLIE SMITH
CALCULATED-DESIGNED BY | CHECKED BY
FUNCTIONAL SUPERVISOR | DON ANDERSON

STATE OF CALIFORNIA - DEPARTMENT OF TRANSPORTATION
Caltrans® MAINTENANCE

P:\proj1\02\4f150_plans\pse\24f150ga002.dgn

LAST REVISION 12-03-12 | DATE PLOTTED => 30-NOV-2012 | TIME PLOTTED => 11:47

Dist	COUNTY	ROUTE	POST MILES TOTAL PROJECT	SHEET No.	TOTAL SHEETS
02	Sis	3,97	27.0/36.0, 0.5/R11.5	7	19

REGISTERED CIVIL ENGINEER 12-03-12 DATE

12-03-12
PLANS APPROVAL DATE

REGISTERED PROFESSIONAL ENGINEER MICHAEL A. CONNER No. C73123 Exp. 12-31-12 CIVIL STATE OF CALIFORNIA

THE STATE OF CALIFORNIA OR ITS OFFICERS OR AGENTS SHALL NOT BE RESPONSIBLE FOR THE ACCURACY OR COMPLETENESS OF SCANNED COPIES OF THIS PLAN SHEET.

NOTES:

1. EXACT LOCATION OF ALL SIGNS TO BE DETERMINED BY THE ENGINEER.
2. EXISTING UTILITY FACILITIES ARE NOT SHOWN ON THESE PLANS.
3. CALIFORNIA CODES ARE DESIGNATED BY (CA), OTHERWISE FEDERAL CODES ARE SHOWN.
4. INTERMEDIATE G20-1 SIGNS SHOULD BE PLACED EVERY 3 TO 5 MILES AS NECESSARY.

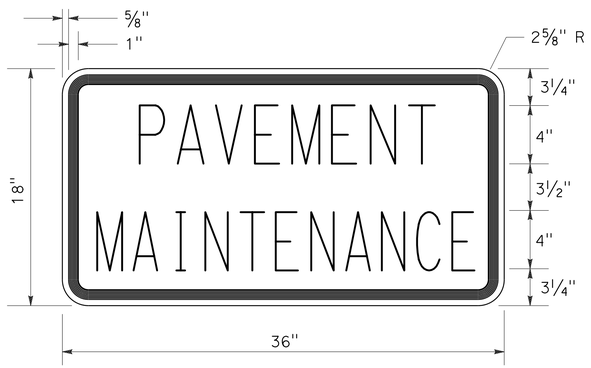

C23B(CA) SIGN PANEL DETAIL

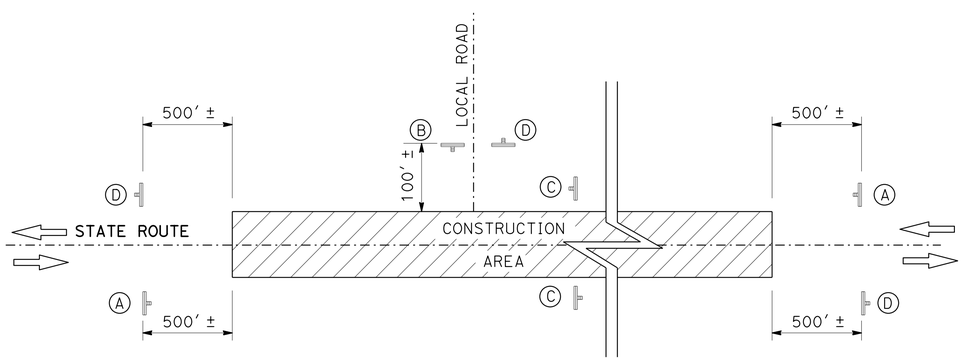

CONSTRUCTION AREA SIGNS (STATIONARY MOUNTED)

ROAD CONNECTIONS

LOCATION	Co-Rte	PM	DESCRIPTION	Ⓑ	Ⓓ
1	Sis-3	27.15	GREENVIEW Rd	L+	L+
		27.57	ROAD CONNECTION	L+	L+
		27.79	QUARTZ VALLEY Rd/GREENVIEW Rd	L+ & R+	L+ & R+
		30.22	SERDA Ln	R+	R+
		31.11	LIGHTHILL Rd	L+	L+
		32.17	EASTSIDE Rd	R+	R+
		32.19	SCOTT RIVER Rd	L+	L+
		32.24	MATHEWS St	L+	L+
		32.49	CARLOCK St	L+	L+
		32.57	NEWTON St	R+	R+
		32.72	STERLING St	R+	R+
		32.76	BUTTE St	L+	L+
		32.87	ALLISON WAY	R+	R+
		32.99	DON St	R+	R+
		33.05	DOUGLAS St	L+	L+
		33.26	HAMILTON St	L+	L+
		33.60	MARBLE VIEW Dr	L+	L+
		33.89	HEPPNER Ln	R+	R+
		34.05	MCADAM CREEK Rd	L+	L+
		34.59	MOFFETT CREEK Rd	L+	L+
		35.78	REIDEL RANCH Rd	R+	R+
2	Sis-97	0.62	ALAMO Ave	L+ & R+	L+ & R+
		1.05	WEST LINCOLN St	L+ & R+	L+ & R+
		1.21	ALAMEDA WAY	L+	L+
		1.33	HOY Rd/CALIFORNIA St	L+ & R+	L+ & R+
		2.04	ANGEL VALLEY Rd	R+	R+
		2.22	ROAD CONNECTION	L+	L+
		2.26	EVERGREEN Ln	R+	R+
		3.95	SOLUS WAY/ROAD CONNECTION	L+ & R+	L+ & R+
		4.07	ROAD CONNECTION	R+	R+
		4.26	ROAD CONNECTION	R+	R+
		4.43	BIG SPRINGS Rd	L+	L+
		5.36	HOTLUM Rd	R+	R+
		7.49	JUNIPER VALLEY Rd	L+	L+
		8.52	JUNIPER VALLEY Rd	L+	L+
		R11.50	YELLOW BUTTE Rd	L+	L+

CONSTRUCTION AREA SIGNS (STATIONARY MOUNTED)

TYPE	CODE	PANEL SIZE	SIGN MESSAGE	NUMBER AND SIZE OF POST	No. OF SIGNS
Ⓐ	G20-1 C23B(CA)	36" x 18" 36" x 18"	ROAD WORK NEXT XX MILES PAVEMENT MAINTENANCE	1-4" x 6"	4
Ⓑ	W20-1	48" x 48"	ROAD WORK AHEAD	1-4" x 6"	41
Ⓒ	G20-1	36" x 18"	ROAD WORK NEXT XX MILES	1-4" x 4"	8
Ⓓ	G20-2	36" x 18"	END ROAD WORK	1-4" x 4"	45

CONSTRUCTION AREA SIGNS

NO SCALE

CS-1

REVISED BY | DATE REVISED
MICHAEL CONNER | KARLIE SMITH
CALCULATED-DESIGNED BY | CHECKED BY
FUNCTIONAL SUPERVISOR: DON ANDERSON

STATE OF CALIFORNIA - DEPARTMENT OF TRANSPORTATION
Caltrans® MAINTENANCE

P:\proj1\02\4F150_plans\pse\24f150ia001.dgn

LAST REVISION 12-03-12 | DATE PLOTTED => 30-NOV-2012 | TIME PLOTTED => 11:47

Dist	COUNTY	ROUTE	POST MILES TOTAL PROJECT	SHEET No.	TOTAL SHEETS
02	Sis	3,97	27.0/36.0, 0.5/R11.5	8	19

REGISTERED CIVIL ENGINEER 12-03-12 DATE

12-03-12
PLANS APPROVAL DATE

REGISTERED PROFESSIONAL ENGINEER MICHAEL A. CONNER No. C73123 Exp. 12-31-12 CIVIL STATE OF CALIFORNIA

THE STATE OF CALIFORNIA OR ITS OFFICERS OR AGENTS SHALL NOT BE RESPONSIBLE FOR THE ACCURACY OR COMPLETENESS OF SCANNED COPIES OF THIS PLAN SHEET.

NOTE:

1. EXISTING UTILITY FACILITIES ARE NOT SHOWN ON THESE PLANS.

LEGEND:

XX TRAFFIC STRIPE DETAIL No.

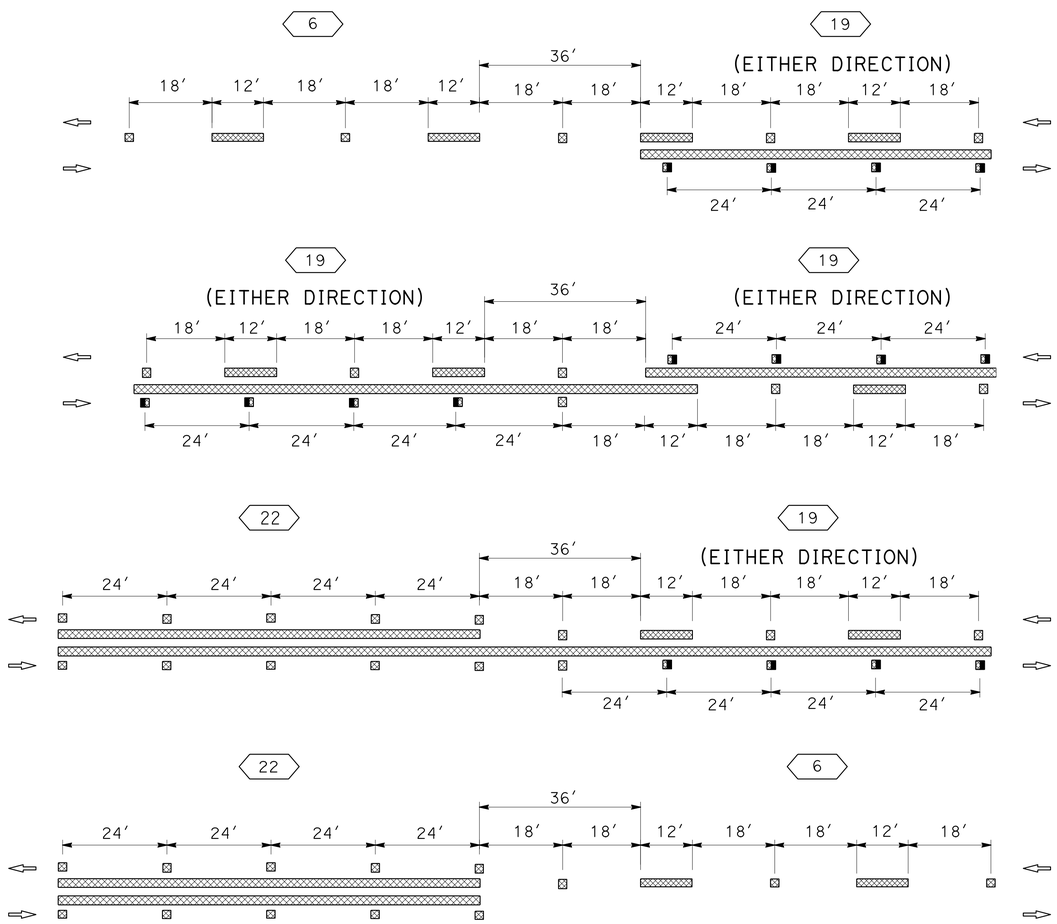

TYPICAL STRIPE TRANSITION DETAILS

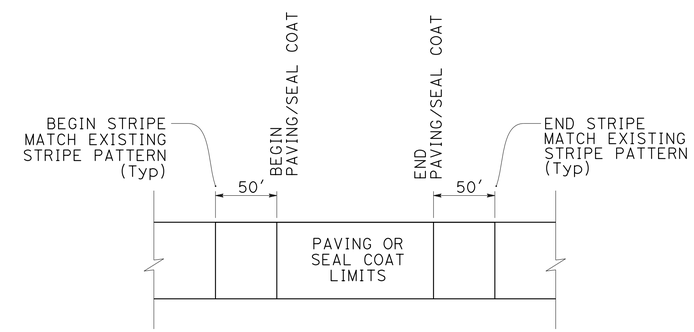

TRAFFIC STRIPE MATCH DETAIL

PAVEMENT DELINEATION DETAILS

NO SCALE

PDD-1

REVISED BY	DATE REVISED

CALCULATED-DESIGNED BY	CHECKED BY
MICHAEL CONNER	KARLIE SMITH

FUNCTIONAL SUPERVISOR: DON ANDERSON

STATE OF CALIFORNIA - DEPARTMENT OF TRANSPORTATION
Caltrans® MAINTENANCE

P:\proj1\02\4f150_plans\pse\24f150nb001.dgn

LAST REVISION 12-03-12 | DATE PLOTTED => 30-NOV-2012 | TIME PLOTTED => 11:47

Dist	COUNTY	ROUTE	POST MILES TOTAL PROJECT	SHEET No.	TOTAL SHEETS
02	Sis	3,97	27.0/36.0, 0.5/R11.5	9	19

REGISTERED CIVIL ENGINEER DATE 12-03-12

PLANS APPROVAL DATE 12-03-12

REGISTERED PROFESSIONAL ENGINEER MICHAEL A. CONNER No. C73123 Exp. 12-31-12 CIVIL STATE OF CALIFORNIA

THE STATE OF CALIFORNIA OR ITS OFFICERS OR AGENTS SHALL NOT BE RESPONSIBLE FOR THE ACCURACY OR COMPLETENESS OF SCANNED COPIES OF THIS PLAN SHEET.

NOTES:

1. (N) NOT A SEPERATE PAY ITEM, FOR INFORMATION ONLY.
2. EXISTING UTILITY FACILITIES HAVE NOT BEEN PLOTTED ON THESE PLANS.

THERMOPLASTIC PAVEMENT MARKING

Loc	Co-Rte	PM	Lt	Rt	(N) EA	SQFT	REMARKS
1	Sis-3	27.15	X		1	29	ROAD CONNECTION LIMIT LINE
		27.15	X		1	22	STOP
		27.57	X		1	36	ROAD CONNECTION LIMIT LINE
		27.57	X		1	22	STOP
		27.79	X	X	2	129	ROAD CONNECTION LIMIT LINE
		27.79	X	X	2	44	STOP
		30.22		X	1	37	ROAD CONNECTION LIMIT LINE
		30.22		X	1	22	STOP
		31.11	X		1	29	ROAD CONNECTION LIMIT LINE
		31.11	X		1	22	STOP
		32.17		X	1	30	ROAD CONNECTION LIMIT LINE
		32.17		X	1	22	STOP
		32.19	X		1	38	ROAD CONNECTION LIMIT LINE
		32.19	X		1	22	STOP
		32.24	X		1	43	ROAD CONNECTION LIMIT LINE
		32.24	X		1	22	STOP
		32.49	X		1	85	CROSSWALK
		32.50	X	X	1	110	CROSSWALK
		32.52		X	1	23	SLOW (YELLOW)
		32.52		X	1	35	SCHOOL (YELLOW)
		32.52		X	1	21	XING (YELLOW)
		32.57		X	1	24	ROAD CONNECTION LIMIT LINE
		32.58	X	X	1	128	CROSSWALK (YELLOW)
		32.59	X		1	23	SLOW (YELLOW)
		32.59	X		1	35	SCHOOL (YELLOW)
		32.59	X		1	21	XING (YELLOW)
		32.62		X	1	130	CROSSWALK
		32.72		X	1	26	ROAD CONNECTION LIMIT LINE
		32.72		X	1	22	STOP
		32.72	X	X	1	130	CROSSWALK
		32.76	X		1	27	ROAD CONNECTION LIMIT LINE
		32.76	X		1	22	STOP
		32.87		X	1	10	ROAD CONNECTION LIMIT LINE
		32.87		X	1	22	STOP
		32.92	X	X	1	74	CROSSWALK
		32.99		X	1	14	ROAD CONNECTION LIMIT LINE
		32.99		X	1	22	STOP
		33.05	X		1	27	ROAD CONNECTION LIMIT LINE
		33.05	X		1	22	STOP
		33.26	X		1	20	ROAD CONNECTION LIMIT LINE
		33.26	X		1	22	STOP
		33.60	X		1	24	ROAD CONNECTION LIMIT LINE
		33.60	X		1	22	STOP
		33.89		X	1	25	ROAD CONNECTION LIMIT LINE
		34.05	X		1	45	ROAD CONNECTION LIMIT LINE
		34.05	X		1	22	STOP
		34.59	X		1	33	ROAD CONNECTION LIMIT LINE
		34.59	X		1	22	STOP
Loc 1 TOTAL						1857	

THERMOPLASTIC PAVEMENT MARKING (Cont)

Loc	Co-Rte	PM	Lt	Rt	(N) EA	SQFT	REMARKS
2	Sis-97	0.61		X	1	42	TYPE III (R) ARROW
		0.62	X	X	4	168	TYPE III (L) ARROW
		0.62	X	X	2	63	ROAD CONNECTION LIMIT LINE
		0.62	X	X	2	44	STOP
		0.62	X		1	42	TYPE III (R) ARROW
		0.96		X	1	18	PED
		0.96		X	1	21	XING
		1.02		X	1	42	TYPE III (R) ARROW
		1.02		X	1	42	TYPE III (L) ARROW
		1.05	X		2	84	TYPE III (R) ARROW
		1.05	X		2	84	TYPE III (L) ARROW
		1.05	X	X	2	71	ROAD CONNECTION LIMIT LINE
		1.05	X	X	3	66	STOP
		1.05	X	X	1	138	CROSSWALK
		1.16	X		1	18	PED
		1.16	X		1	21	XING
		1.21	X		1	27	ROAD CONNECTION LIMIT LINE
		1.21	X		1	22	STOP
		1.33	X	X	4	168	TYPE III (L) ARROW
		1.33	X	X	2	85	ROAD CONNECTION LIMIT LINE
		1.33	X	X	2	44	STOP
		2.02		X	1	42	TYPE III (R) ARROW
		2.04	X		2	84	TYPE III (L) ARROW
		2.04		X	1	39	ROAD CONNECTION LIMIT LINE
		2.04		X	1	22	STOP
		2.22	X		1	24	ROAD CONNECTION LIMIT LINE
		2.22	X		1	22	STOP
		2.26		X	1	45	ROAD CONNECTION LIMIT LINE
		2.26		X	1	22	STOP
		3.95	X	X	2	60	ROAD CONNECTION LIMIT LINE
		3.95	X	X	2	44	STOP
		4.07		X	1	24	ROAD CONNECTION LIMIT LINE
		4.26		X	1	21	ROAD CONNECTION LIMIT LINE
		4.36		X	1	42	TYPE III (L) ARROW
		4.43	X		1	42	TYPE III (L) ARROW
		4.43	X		1	37	ROAD CONNECTION LIMIT LINE
		4.43	X		1	22	STOP
		5.27		X	1	42	TYPE VI ARROW
		5.31		X	1	42	TYPE VI ARROW
		5.33	X		1	42	TYPE VI ARROW
		5.36	X	X	2	84	TYPE VI ARROW
		5.36		X	1	29	ROAD CONNECTION LIMIT LINE
		5.36		X	1	22	STOP
		5.41	X		1	42	TYPE VI ARROW
		7.49		X	1	42	TYPE III (L) ARROW
		7.49	X		1	38	ROAD CONNECTION LIMIT LINE
		7.49	X		1	22	STOP
		8.52	X		1	24	ROAD CONNECTION LIMIT LINE
		8.52	X		1	22	STOP
		10.32		X	1	42	TYPE VI ARROW
		10.35		X	1	42	TYPE VI ARROW
		10.39		X	1	42	TYPE VI ARROW
		R11.50	X		1	27	ROAD CONNECTION LIMIT LINE
		R11.50	X		1	22	STOP
Loc 2 TOTAL						2528	
Loc 1 TOTAL						1857	
GRAND TOTAL						4385	

PAVEMENT DELINEATION QUANTITIES

PDQ-1

REVISED BY | DATE REVISED

MICHAEL CONNER | KARLIE SMITH

CALCULATED-DESIGNED BY | CHECKED BY

FUNCTIONAL SUPERVISOR: DON ANDERSON

STATE OF CALIFORNIA - DEPARTMENT OF TRANSPORTATION

Caltrans® MAINTENANCE

P:\proj1\02\4F150_plans\pse\24f150nc001.dgn

LAST REVISION 12-03-12 | DATE PLOTTED => 30-NOV-2012 | TIME PLOTTED => 11:47

Dist	COUNTY	ROUTE	POST MILES TOTAL PROJECT	SHEET No.	TOTAL SHEETS
02	Sis	3,97	27.0/36.0, 0.5/R11.5	10	19

REGISTERED CIVIL ENGINEER 12-03-12 DATE

12-03-12
PLANS APPROVAL DATE

REGISTERED PROFESSIONAL ENGINEER MICHAEL A. CONNER No. C73123 Exp. 12-31-12 CIVIL STATE OF CALIFORNIA

THE STATE OF CALIFORNIA OR ITS OFFICERS OR AGENTS SHALL NOT BE RESPONSIBLE FOR THE ACCURACY OR COMPLETENESS OF SCANNED COPIES OF THIS PLAN SHEET.

NOTES:

1. (N) NOT A SEPERATE PAY ITEM, FOR INFORMATION ONLY.
2. EXISTING UTILITY FACILITIES HAVE NOT BEEN PLOTTED ON THESE PLANS.
3. RECESSED MARKERS NOT TO BE PLACED ON BRIDGE DECKS.
4. NO WORK ON Sis-97-PM 2.50/2.96.

REMOVE THERMOPLASTIC PAVEMENT MARKING

Loc	Co-Rte	PM	Lt	Rt	(N) EA	SQFT	REMARKS
1	Sis-3	31.11	X		1	22	STOP
		32.17		X	1	30	ROAD CONNECTION LIMIT LINE
		32.17		X	1	22	STOP
		32.19	X		1	38	ROAD CONNECTION LIMIT LINE
		32.19	X		1	22	STOP
		32.24	X		1	43	ROAD CONNECTION LIMIT LINE
		32.24	X		1	22	STOP
		32.49	X		1	85	CROSSWALK
		32.50	X	X	1	110	CROSSWALK
		32.52		X	1	23	SLOW (YELLOW)
		32.52		X	1	35	SCHOOL (YELLOW)
		32.52		X	1	21	XING (YELLOW)
		32.57		X	1	24	ROAD CONNECTION LIMIT LINE
		32.58	X	X	1	128	CROSSWALK (YELLOW)
		32.59	X		1	23	SLOW (YELLOW)
		32.59	X		1	35	SCHOOL (YELLOW)
		32.59	X		1	21	XING (YELLOW)
		32.62		X	1	130	CROSSWALK
		32.72		X	1	26	ROAD CONNECTION LIMIT LINE
		32.72		X	1	22	STOP
		32.72	X	X	1	130	CROSSWALK
		32.76	X		1	27	ROAD CONNECTION LIMIT LINE
		32.76	X		1	22	STOP
		32.87		X	1	10	ROAD CONNECTION LIMIT LINE
		32.87		X	1	22	STOP
		32.92	X	X	1	74	CROSSWALK
		32.99		X	1	14	ROAD CONNECTION LIMIT LINE
		32.99		X	1	22	STOP
		33.05	X		1	27	ROAD CONNECTION LIMIT LINE
		33.05	X		1	22	STOP
		33.26	X		1	20	ROAD CONNECTION LIMIT LINE
		33.26	X		1	22	STOP
		33.60	X		1	24	ROAD CONNECTION LIMIT LINE
		33.60	X		1	22	STOP
		33.89		X	1	25	ROAD CONNECTION LIMIT LINE
		34.05	X		1	45	ROAD CONNECTION LIMIT LINE
		34.05	X		1	22	STOP
		34.59	X		1	33	ROAD CONNECTION LIMIT LINE
		34.59	X		1	22	STOP
2	Sis-97	0.61		X	1	42	TYPE III (R) ARROW
		0.62	X	X	4	168	TYPE III (L) ARROW
		0.62	X	X	2	63	ROAD CONNECTION LIMIT LINE
		0.62	X	X	2	44	STOP
		0.62	X		1	42	TYPE III (R) ARROW
		0.96		X	1	18	PED
		0.96		X	1	21	XING
		1.02		X	1	42	TYPE III (R) ARROW
		1.02		X	1	42	TYPE III (L) ARROW
		1.05	X		2	84	TYPE III (R) ARROW
		1.05	X		2	84	TYPE III (L) ARROW
		1.05	X	X	2	71	ROAD CONNECTION LIMIT LINE
		1.05	X	X	3	66	STOP
		1.05	X	X	1	138	CROSSWALK
		1.16	X		1	18	PED
		1.16	X		1	21	XING
		1.21	X		1	27	ROAD CONNECTION LIMIT LINE
SUB-TOTAL 1						2478	

THERMOPLASTIC TRAFFIC STRIPE (SPRAYABLE)

Loc	Co-Rte	PM LIMITS	DETAIL 6	DETAIL 12	DETAIL 19	DETAIL 22	DETAIL 27B	DETAIL 27C	DETAIL 29	DETAIL 38	DETAIL 38A
			LF	LF	LF	LF	LF	LF	LF	LF	LF
1	Sis-3	27.00-32.00					52,800	1380			
		32.00-36.00	7551		4330	8449	42,240	2065	793		
2	Sis-97	0.50-2.50 2.96-R11.50	7551	13,887			111,303	5560		2693	2746
SUB-TOTAL				13,887	4330	8449	206,343	9005	793	2693	2746
TOTAL			255,797								

SEE NOTE 4

REMOVE THERMOPLASTIC PAVEMENT MARKING (Cont)

Loc	Co-Rte	PM	Lt	Rt	(N) EA	SQFT	REMARKS
2	Sis-97	1.21	X		1	22	STOP
		1.33	X	X	4	168	TYPE III (L) ARROW
		1.33	X	X	2	85	ROAD CONNECTION LIMIT LINE
		1.33	X	X	2	44	STOP
		2.02		X	1	42	TYPE III (R) ARROW
		2.04	X		2	84	TYPE III (L) ARROW
		2.04		X	1	39	ROAD CONNECTION LIMIT LINE
		2.04		X	1	22	STOP
		2.22	X		1	24	ROAD CONNECTION LIMIT LINE
		2.22	X		1	22	STOP
		2.26		X	1	45	ROAD CONNECTION LIMIT LINE
		2.26		X	1	22	STOP
		3.95	X	X	2	60	ROAD CONNECTION LIMIT LINE
		3.95	X	X	2	44	STOP
		4.07		X	1	24	ROAD CONNECTION LIMIT LINE
		4.26		X	1	21	ROAD CONNECTION LIMIT LINE
		4.36		X	1	42	TYPE III (L) ARROW
		4.43	X		1	42	TYPE III (L) ARROW
		4.43	X		1	37	ROAD CONNECTION LIMIT LINE
		4.43	X		1	22	STOP
		5.27		X	1	42	TYPE VI ARROW
		5.31		X	1	42	TYPE VI ARROW
		5.33	X		1	42	TYPE VI ARROW
		5.36	X	X	2	84	TYPE VI ARROW
		5.36		X	1	29	ROAD CONNECTION LIMIT LINE
		5.36		X	1	22	STOP
		5.41	X		1	42	TYPE VI ARROW
		7.49		X	1	42	TYPE III (L) ARROW
		7.49	X		1	38	ROAD CONNECTION LIMIT LINE
		7.49	X		1	22	STOP
		8.52	X		1	24	ROAD CONNECTION LIMIT LINE
		8.52	X		1	22	STOP
		10.32		X	1	42	TYPE VI ARROW
		10.35		X	1	42	TYPE VI ARROW
		10.39		X	1	42	TYPE VI ARROW
		R11.50	X		1	27	ROAD CONNECTION LIMIT LINE
		R11.50	X		1	22	STOP
SUB-TOTAL 1						2478	
TOTAL						4015	

PAVEMENT MARKER (RETROREFLECTIVE-RECESSED)

Loc	Co-Rte	PM LIMITS	TYPE D	TYPE G	TYPE H
			EA	EA	EA
1	Sis-3	27.00-36.00	1877	2	485
2	Sis-97	0.50-2.50 2.96-R11.50	3861	404	477
SUB-TOTAL			5738	406	962
TOTAL			7106		

SEE NOTE 3 AND 4

THERMOPLASTIC TRAFFIC STRIPE (SPRAYABLE 2-COAT)

Loc	Co-Rte	PM LIMITS	DETAIL 6	DETAIL 19	DETAIL 22	DETAIL 29	DETAIL 32
			LF	LF	LF	LF	LF
1	Sis-3	27.00-32.00	14,309	7287	4805		
2	Sis-97	0.50-2.50 2.96-R11.50	5756	11,405	36,168	3380	951
SUB-TOTAL			20,065	18,692	40,973	3380	951
TOTAL			84,061				

SEE NOTE 4

PAVEMENT DELINEATION QUANTITIES

PDQ-2

REVISED BY | DATE REVISED

MICHAEL CONNER | KARLIE SMITH

CALCULATED-DESIGNED BY | CHECKED BY

FUNCTIONAL SUPERVISOR: DON ANDERSON

STATE OF CALIFORNIA - DEPARTMENT OF TRANSPORTATION

Caltrans® MAINTENANCE

P:\proj11\02\4F150_plans\pse\24F150nc002.dgn

LAST REVISION 12-03-12 | DATE PLOTTED => 30-NOV-2012 | TIME PLOTTED => 11:47

Dist	COUNTY	ROUTE	POST MILES TOTAL PROJECT	SHEET No.	TOTAL SHEETS
02	Sis	3,97	27.0/36.0, 0.5/R11.5	11	19

REGISTERED CIVIL ENGINEER 12-03-12 DATE

12-03-12
PLANS APPROVAL DATE

REGISTERED PROFESSIONAL ENGINEER MICHAEL A. CONNER No. C73123 Exp. 12-31-12 CIVIL STATE OF CALIFORNIA

THE STATE OF CALIFORNIA OR ITS OFFICERS OR AGENTS SHALL NOT BE RESPONSIBLE FOR THE ACCURACY OR COMPLETENESS OF SCANNED COPIES OF THIS PLAN SHEET.

NOTES:

1. (N) NOT A SEPARATE PAY ITEM, FOR INFORMATION ONLY
2. EXISTING UTILITY FACILITIES ARE NOT SHOWN ON THESE PLANS.

ROADWAY QUANTITIES SUMMARY

Loc	Co-Rte	POST MILE LIMITS	(N) LENGTH	(N) WIDTH	ASPHALTIC EMULSION (FOG SEAL)	HMA (TYPE A)	SHOULDER BACKING	TACK COAT	SEAL COAT: ASPHALT-RUBBER BINDER	SEAL COAT: SCREENINGS (HOT-APPLIED)	FLUSH COAT: ASPHALTIC EMULSION (FLUSH COAT)	FLUSH COAT: SAND COVER (SEAL)
		PM - PM	LF	LF	TON	TON	TON	TON	TON	TON	TON	TON
1	Sis-3	27.00-27.09	475.2	31.5-33.0								
		27.09-27.12	158.4	33.0								
		27.12-27.65	2798.4	33.0								
		27.65-28.00	1848.0	33.0-32.0								
		28.00-28.64	3379.2	32.0								
		28.64-29.00	1901.8	32.0-33.0								
		29.00-29.73	3854.4	33.0-31.5								
		29.73-30.00	1425.6	31.5-34.0								
		30.00-30.50	2640.0	34.0-33.0					247	1673	24	191
		30.50-31.00	2640.0	33.0-32.0								
		31.00-31.23	1214.4	32.0-33.0								
		31.23-31.26	158.4	33.0								
		31.26-31.66	2112.0	33.0-32.0								
		31.66-31.68	105.6	32.0-31.0								
		31.68-31.74	316.8	31.0								
		31.74-31.76	105.6	31.0-34.0								
		31.76-32.00	1267.2	34.0-33.0								
		32.00-32.39		34.0								
		32.39-32.41		34.0-43.0								
		32.41-32.47		43.0-46.0								
		32.47-32.48		46.0-55.0								
		32.48-32.55		55.0-62.0								
		32.55-32.57		62.0-65.0								
		32.57-32.73		65.0								
		32.73-32.79		75.0-61.0								
		32.79-32.81		61.0-49.0								
		32.81-32.84		34.0-44.0								
		32.84-32.89		44.0-36.0		5730	1242	31				
		32.89-32.99		36.0-45.0								
		32.99-33.05		45.0-46.0								
		33.05-33.07		31.0-32.0								
		33.07-33.66		32.0								
		33.66-34.00		32.0								
		34.00-34.59		32.0-33.0								
		34.59-35.00		33.0								
		35.00-35.63		33.0-34.0								
		35.63-36.00		34.0-33.0								
		ROAD CONNECTIONS				530	67	8				
Loc 1 TOTAL						6260	1309	39	247	1673	24	191

SUMMARY OF QUANTITIES

Q-1

STATE OF CALIFORNIA - DEPARTMENT OF TRANSPORTATION
Caltrans MAINTENANCE

FUNCTIONAL SUPERVISOR: DON ANDERSON
CALCULATED-DESIGNED BY: MICHAEL CONNER
CHECKED BY: KARLIE SMITH
REVISED BY
DATE REVISED

P:\proj1\02\4F150_plans\pse\24F150pa001.dgn

LAST REVISION 12-03-12
DATE PLOTTED => 30-NOV-2012
TIME PLOTTED => 11:47

Dist	COUNTY	ROUTE	POST MILES TOTAL PROJECT	SHEET No.	TOTAL SHEETS
02	Sis	3,97	27.0/36.0, 0.5/R11.5	12	19

12-03-12
REGISTERED CIVIL ENGINEER DATE

12-03-12
PLANS APPROVAL DATE

REGISTERED PROFESSIONAL ENGINEER MICHAEL A. CONNER No. C73123 Exp. 12-31-12 CIVIL STATE OF CALIFORNIA

THE STATE OF CALIFORNIA OR ITS OFFICERS OR AGENTS SHALL NOT BE RESPONSIBLE FOR THE ACCURACY OR COMPLETENESS OF SCANNED COPIES OF THIS PLAN SHEET.

NOTES:

1. (N) NOT A SEPARATE PAY ITEM, FOR INFORMATION ONLY
2. EXISTING UTILITY FACILITIES ARE NOT SHOWN ON THESE PLANS.

ROADWAY QUANTITIES SUMMARY (Cont)

Loc	Co-Rte	POST MILE LIMITS	(N) LENGTH	(N) WIDTH	ASPHALTIC EMULSION (FOG SEAL)	HMA (TYPE A)	SHOULDER BACKING	TACK COAT	SEAL COAT		FLUSH COAT	
									ASPHALT-RUBBER BINDER	SCREENINGS (HOT-APPLIED)	ASPHALTIC EMULSION (FLUSH COAT)	SAND COVER (SEAL)
		PM - PM	LF	LF	TON	TON	TON	TON	TON	TON	TON	TON
2	Sis-97	0.50-0.55	264.0	46.5-74.0								
		0.55-0.62	369.6	74.0-88.0								
		0.62-0.63	52.8	88.0-68.5								
		0.63-0.68	264.0	68.5-55.0								
		0.68-0.80	633.6	55.0-45.5								
		0.80-0.98	950.4	45.5-55.5								
		0.98-1.05	369.6	55.5-58.0								
		1.05-1.21	844.8	58.0-57.0								
		1.21-1.33	633.6	57.0-59.0								
		1.33-1.50	897.6	59.0-45.5								
		1.50-1.98	2534.4	45.5-46.5								
		1.98-2.04	316.8	46.5-62.0								
		2.04-2.19	792.0	62.0-45.0								
		2.19-2.50	1636.8	45.0-44.5								
		2.96-3.01	264.0	64.5-99.5								
		3.01-3.19	950.4	99.5-46.0								
		3.19-3.55	1900.8	46.0								
		3.55-4.00	2376.0	46.0-46.5								
		4.00-4.26	1372.8	46.5								
		4.26-4.43	897.6	46.5-58.0								
		4.43-4.58	792.0	58.0-43.0								
		4.58-4.78	1056.0	43.0					567	3838	55	439
		4.78-4.83	264.0	43.0-49.0								
		4.83-5.00	897.6	49.0								
		5.00-5.37	1953.6	49.0-56.0								
		5.37-5.42	264.0	56.0-55.0								
		5.42-5.67	1320.0	55.0-45.5								
		5.67-6.13	2428.8	45.5-46.0	43							
		6.13-6.50	1953.6	46.0								
		6.50-7.31	4276.8	46.0-45.5								
		7.31-7.49	950.4	45.5-59.5								
		7.49-7.61	633.6	59.5-46.0								
		7.61-8.00	2059.2	46.0								
		8.00-8.75	3960.0	46.0-47.0								
		8.75-8.87	633.6	47.0-50.0								
		8.87-9.50	3326.4	50.0-50.5								
		9.50-10.00	2640.0	50.5								
		10.00-10.32	1689.6	50.5								
		10.32-10.43	580.8	50.5-48.5								
		10.43-R11.00	3009.6	48.5-42.5								
		R11.00-R11.16	844.8	42.5-47.0								
		R11.16-R11.50	1795.2	47.0								
Loc 2 TOTAL					43				567	3838	55	439
Loc 1 TOTAL						6260	1309	39	247	1673	24	191
TOTAL					43	6260	1309	39	814	5511	79	630

SUMMARY OF QUANTITIES

Q-2

REVISED BY | DATE REVISED
MICHAEL CONNER | KARLIE SMITH
CALCULATED-DESIGNED BY | CHECKED BY
FUNCTIONAL SUPERVISOR
DON ANDERSON

STATE OF CALIFORNIA - DEPARTMENT OF TRANSPORTATION
Caltrans MAINTENANCE

P:\proj1\02\4f150_plans\pse\24f150pa002.dgn

LAST REVISION 12-03-12 | DATE PLOTTED => 30-NOV-2012 | TIME PLOTTED => 11:47

Dist	COUNTY	ROUTE	POST MILES TOTAL PROJECT	SHEET No.	TOTAL SHEETS
02	Sis	3,97	27.0/36.0, 0.5/R11.5	13	19

12-03-12
REGISTERED CIVIL ENGINEER DATE

12-03-12
PLANS APPROVAL DATE

REGISTERED PROFESSIONAL ENGINEER MICHAEL A. CONNER No. C73123 Exp. 12-31-12 CIVIL STATE OF CALIFORNIA

THE STATE OF CALIFORNIA OR ITS OFFICERS OR AGENTS SHALL NOT BE RESPONSIBLE FOR THE ACCURACY OR COMPLETENESS OF SCANNED COPIES OF THIS PLAN SHEET.

NOTES:

1. (N) NOT A SEPARATE PAY ITEM, FOR INFORMATION ONLY
2. EXISTING UTILITY FACILITIES ARE NOT SHOWN ON THESE PLANS.
3. EXACT LOCATIONS OF REPLACE ASPHALT CONCRETE SURFACING TO BE DETERMINED BY ENGINEER.

REPLACE ASPHALT CONCRETE SURFACING

Loc	Co-Rte	POST MILE LIMITS	(N) No. OF DIGOUTS	(N) Avg LENGTH	(N) WIDTH	(N) DEPTH	REPLACE AC SURFACING
		PM - PM		LF	LF	LF	CY
1	Sis-3	27.00-28.00	10	100	4	0.33	49
		28.00-29.00	10	100	4	0.33	49
		29.00-30.00	10	100	4	0.33	49
		30.00-31.00	10	100	4	0.33	49
		31.00-32.00	10	100	4	0.33	49
		33.00-34.00	10	100	4	0.33	49
		34.00-35.00	10	100	4	0.33	49
		35.00-36.00	10	100	4	0.33	49
TOTAL							391

*SEE NOTE 3

PREPAVING GRINDING DAY

Loc	Co-Rte	POSTMILE LIMITS	EA
1	Sis-3	32.00-32.55	2
		33.07-36.00	
TOTAL			2

COLD PLANE ASPHALT CONCRETE PAVEMENT

Loc	Co-Rte	PM	(N) LENGTH	(N) WIDTH	AREA	REMARKS
			LF	LF	SQYD	
1	Sis-3	32.00	40	34	151	MAINLINE CONFORM
		32.02	8	30	27	DRIVEWAY - Lt
		32.03	8	27	24	DRIVEWAY - Rt
		32.05	8	39	35	DRIVEWAY - Lt
		32.05	8	25	22	DRIVEWAY - Rt
		32.09	8	34	30	DRIVEWAY - Rt
		32.10	8	42	37	DRIVEWAY - Rt
		32.10	8	38	34	DRIVEWAY - Lt
		32.13	8	24	21	DRIVEWAY - Lt
		32.15	8	25	22	DRIVEWAY - Lt
		32.17	8	64	57	EASTSIDE Rd - Rt
		32.19	8	62	55	SCOTT RIVER Rd - Lt
		32.21	8	43	38	DRIVEWAY - Lt
		32.24	8	89	79	MATTHEWS St - Lt
		32.49	8	50	44	CARLOCK St - Lt
		32.54	40	62	276	MAINLINE CONFORM
		32.55-33.07	2745.6	32-65	16,092	MILL AREA THROUGH TOWN
		33.07	40	32	142	MAINLINE CONFORM
		33.10	8	39	35	DRIVEWAY - Lt
		33.20	8	15	13	DRIVEWAY - Rt
		33.22	8	48	43	DRIVEWAY - Lt
		33.26	8	26	23	HAMILTON St - Lt
		33.27	8	22	20	DRIVEWAY - Lt
		33.55	8	22	20	DRIVEWAY - Lt
		33.60	8	30	27	MARBLE VIEW Dr - Lt
		33.78	8	208	185	DRIVEWAY - Lt
		33.89	8	40	36	HEPPNER Ln - Rt
		34.05	8	31	28	MCADAMS Cr Rd - Lt
		34.59	8	54	48	W MOFFETT Cr Rd - Lt
		35.78	8	18	16	REIDEL RANCH Rd - Rt
		36.00	40	33	147	MAINLINE CONFORM
TOTAL					17,826	

ADJUST UTILITY COVER TO GRADE

Loc	Co-Rte	PM	UTILITY LOCATION	SHEET No.	TELEPHONE	WATER VALVE BOX	SANITARY SEWER MANHOLE	Misc COVER
					EA	EA	EA	EA
1	Sis-3	32.45	1	L-1	1			
		32.49	2	L-1		1		
		32.49	3	L-1		1		
		32.49	4	L-1		1		
		32.49	5	L-1			1	
		32.57	6	L-1		1		
		32.57	7	L-1		1		
		32.57	8	L-1		1		
		32.57	9	L-1			1	
		32.57	10	L-1				1
		32.62	11	L-1		1		
		32.71	12	L-1		1		
		32.71	13	L-1		1		
		32.71	14	L-1		1		
		32.71	15	L-1			1	
		32.75	16	L-1			1	
		32.75	17	L-1		1		
		32.75	18	L-1	1			
		32.85	19	L-1		1		
		32.85	20	L-1	1			
		32.85	21	L-1				1
		32.87	22	L-1		1		
		32.87	23	L-1		1		
		32.91	24	L-1		1		
		32.95	25	L-1		1		
		32.95	26	L-1		1		
		32.97	27	L-1		1		
		32.97	28	L-1		1		
		32.97	29	L-1			1	
		33.00	30	L-1	1			
		33.05	31	L-1		1		
SUB-TOTAL					4	20	5	2
TOTAL					31			

SUMMARY OF QUANTITIES

Q-3

REVISED BY | DATE REVISED
MICHAEL CONNER | KARLIE SMITH
CALCULATED-DESIGNED BY | CHECKED BY
FUNCTIONAL SUPERVISOR: DON ANDERSON
STATE OF CALIFORNIA - DEPARTMENT OF TRANSPORTATION
Caltrans® MAINTENANCE

P:\proj1\02\4F150_plans\pse\24f150pa003.dgn

LAST REVISION 12-03-12 | DATE PLOTTED => 30-NOV-2012 | TIME PLOTTED => 11:47

Dist	COUNTY	ROUTE	POST MILES TOTAL PROJECT	SHEET No.	TOTAL SHEETS
02	Sis	3,97	27.0/36.0 0.5/R11.5	14	19

REGISTERED CIVIL ENGINEER 12-03-12 DATE

12-03-12
PLANS APPROVAL DATE

REGISTERED PROFESSIONAL ENGINEER THERESA ANDERSON No. C77957 Exp. 6-30-13 CIVIL STATE OF CALIFORNIA

THE STATE OF CALIFORNIA OR ITS OFFICERS OR AGENTS SHALL NOT BE RESPONSIBLE FOR THE ACCURACY OR COMPLETENESS OF SCANNED COPIES OF THIS PLAN SHEET.

NOTES:

1. FOR ACCURATE RIGHT OF WAY AND ACCESS DATA, CONTACT RIGHT OF WAY ENGINEERING AT THE DISTRICT OFFICE.
2. EXISTING UTILITY FACILITIES ARE NOT SHOWN ON THESE PLANS.

LEGEND:

— PROPOSED AXLE SENSOR

(PB) OBJECT MARKER (TYPE PB)

(pb) EXISTING OBJECT MARKER (TYPE PB)

ABBREVIATIONS:

STC SCREENED TRANSMISSION CABLE

stc Exist STC

NOTES (THIS SHEET):

1. CENTER LOOPS IN LANES.
2. ABANDON Exist LOOPS AND AXLE SENSORS.

[3] PLACE PULL BOX PAVING.

[4] INSTALL AXLE SENSOR 2′ FROM LOOP AND 2" FROM THE LEFT HAND STRIPE. THE LEFT HAND LANE STRIPE IS DETERMINED BY THE DIRECTION OF TRAVEL. (Typ FOR 2)

[5] Exist 2"C, 2 LOOP WIRES, 2 stc. REMOVE 2 LOOP WIRES (E), 2 stc. ADD 2 LOOP WIRES AND 2 STC.

[6] Exist 2"C, 2 LOOP WIRES. REMOVE 2 LOOP WIRES (E). ADD 2 LOOP WIRES.

[7] COIL 10′ OF CABLES IN THE PULL BOX.

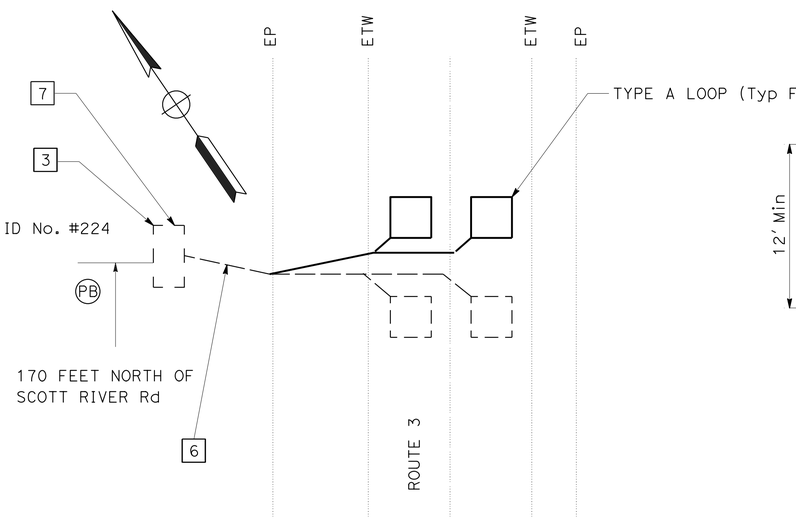

LOCATION 1

PM 32.2

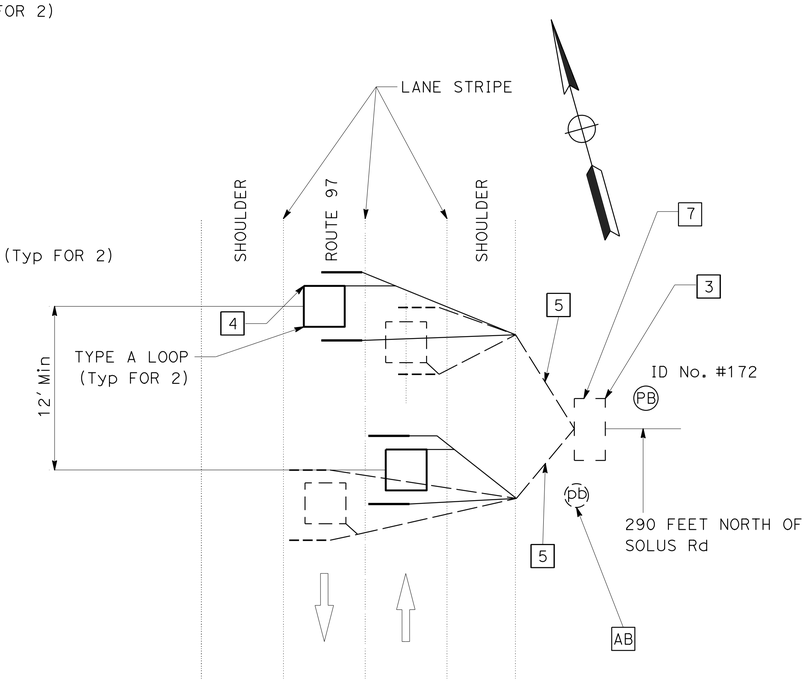

LOCATION 2

PM 3.99

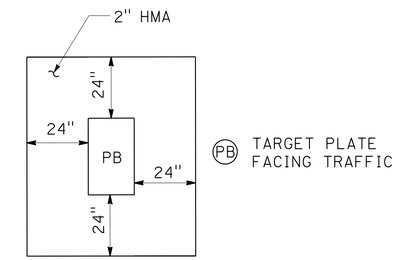

PULL BOX PAVING

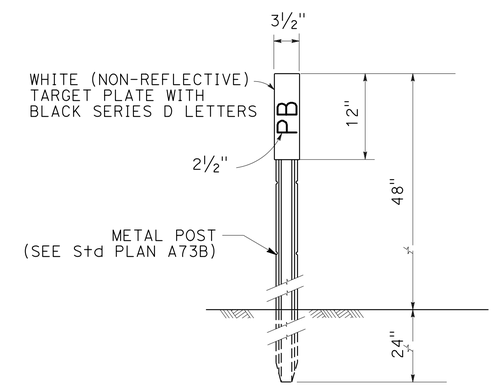

NOTE: PLACE MARKER 2" OUTSIDE PULL BOX PAVING ON SIDE AWAY FROM TRAFFIC. SEE PULL BOX PAVING DETAIL.

OBJECT MARKER (TYPE PB)

NO SCALE

EXISTING LOOP DETECTORS TO REMAIN IN PLACE AND OPERATIONAL

ID No.	LOCATION	TYPE	DESCRIPTION
#P126	SIS-97-R1.16	2-PROFILE LOOPS	614 FEET NORTH OF LINCOLN Ave

EXISTING TRAFFIC MANAGEMENT SYSTEM ELEMENTS TO BE MAINTAINED

TYPE	PM	DESCRIPTION
HAR FLASHER	SIS-97-PM R2.59	NEAR MAPLE Ave, SB SIDE
HAR FLASHER	SIS-97-PM R2.60	NEAR MAPLE Ave, NB SIDE

MODIFY TRAFFIC COUNT STATION

NO SCALE

APPROVED FOR ELECTRICAL WORK ONLY

E-1

REVISED BY | DATE REVISED

TERI ANDERSON | ARTURO ROBLES

CALCULATED-DESIGNED BY | CHECKED BY

FUNCTIONAL SUPERVISOR: ROB STINGER

STATE OF CALIFORNIA - DEPARTMENT OF TRANSPORTATION
Caltrans® ELECTRICAL DESIGN

P:\proj1\02\4F150_plans\pse\24f150ua001.dgn

LAST REVISION | DATE PLOTTED => 30-NOV-2012 | TIME PLOTTED => 11:47
12-03-12

BORDER LAST REVISED 7/2/2010 | USERNAME => s115152 | DGN FILE => 24f150ua001.dgn | RELATIVE BORDER SCALE IS IN INCHES 0 1 2 3 | UNIT 0147 | PROJECT NUMBER & PHASE 02120001231

Dist	COUNTY	ROUTE	POST MILES TOTAL PROJECT	SHEET No.	TOTAL SHEETS
02	Sis	3,97	27.0/36.0 0.5/R11.5	15	19

REGISTERED CIVIL ENGINEER 12-03-12 DATE

12-03-12
PLANS APPROVAL DATE

REGISTERED PROFESSIONAL ENGINEER
THERESA ANDERSON
No. C77957
Exp. 6-30-13
CIVIL
STATE OF CALIFORNIA

THE STATE OF CALIFORNIA OR ITS OFFICERS OR AGENTS SHALL NOT BE RESPONSIBLE FOR THE ACCURACY OR COMPLETENESS OF SCANNED COPIES OF THIS PLAN SHEET.

MODIFY TRAFFIC COUNT STATION

SHEET No.	(N) TYPE A LOOP DETECTOR	(N) AXLE SENSOR	(N) PULL BOX PAVING	(N) OBJECT MARKER (TYPE PB)
	EA	EA	EA	EA
E-1	4	4	2	2

(N) - NOT A SEPARATE PAY ITEM, FOR INFORMATON ONLY

ELECTRICAL QUANTITIES

E-2

APPROVED FOR ELECTRICAL WORK ONLY

REVISED BY | DATE REVISED
TERI ANDERSON | ARTURO ROBLES
CALCULATED-DESIGNED BY | CHECKED BY
FUNCTIONAL SUPERVISOR
ROB STINGER

STATE OF CALIFORNIA - DEPARTMENT OF TRANSPORTATION
Caltrans® ELECTRICAL DESIGN

P:\proj1\02\4f150_plans\pse\24f150ua002.dgn

LAST REVISION 12-03-12 | DATE PLOTTED => 30-NOV-2012 TIME PLOTTED => 11:47

Dist	COUNTY	ROUTE	POST MILES TOTAL PROJECT	SHEET No.	TOTAL SHEETS
02	Sis	3,97	27.0/36.0 0.5/R11.5	16	19

REGISTERED CIVIL ENGINEER

April 20, 2012
PLANS APPROVAL DATE

REGISTERED PROFESSIONAL ENGINEER
Roberta L. McLaughlin
No. C40375
Exp. 3-31-13
CIVIL
STATE OF CALIFORNIA

THE STATE OF CALIFORNIA OR ITS OFFICERS OR AGENTS SHALL NOT BE RESPONSIBLE FOR THE ACCURACY OR COMPLETENESS OF SCANNED COPIES OF THIS PLAN SHEET.

TO ACCOMPANY PLANS DATED 12-03-12

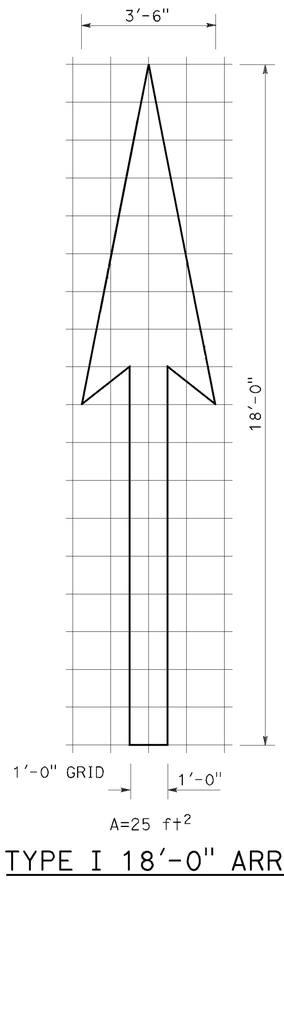

A=25 ft^2

TYPE I 18'-0" ARROW

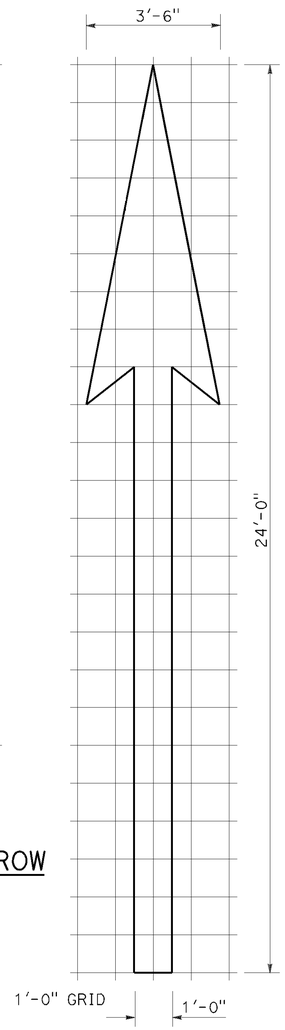

A=31 ft^2

TYPE I 24'-0" ARROW

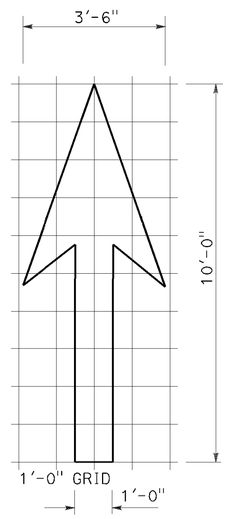

A=14 ft^2

TYPE I 10'-0" ARROW

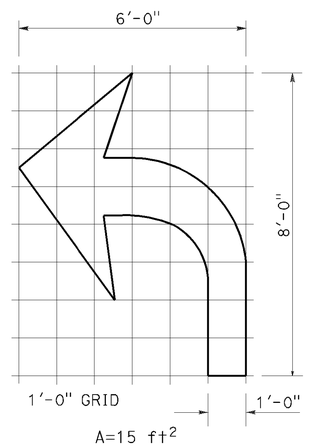

A=15 ft^2

TYPE IV (L) ARROW

(For Type IV (R) arrow, use mirror image)

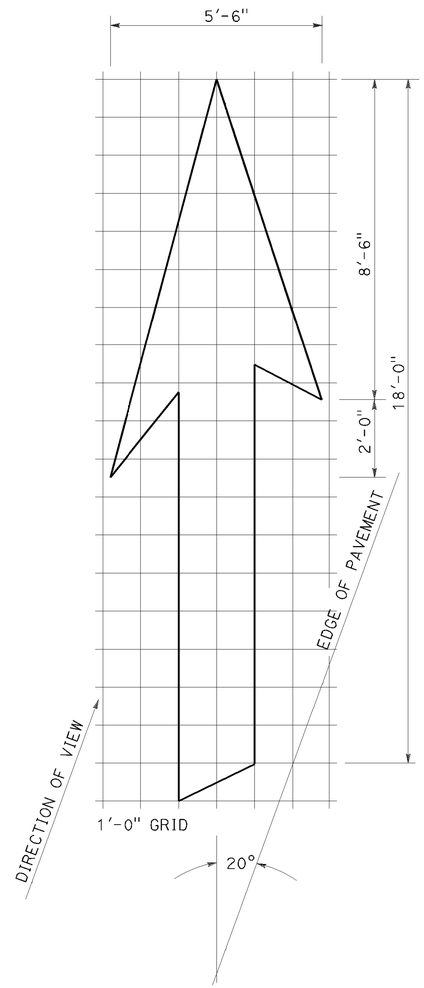

A=42 ft^2

TYPE VI ARROW

Right lane drop arrow
(For left lane, use mirror image)

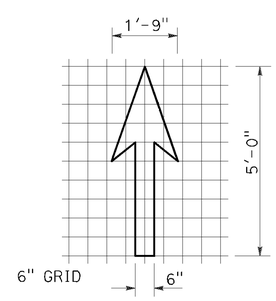

A=3.5 ft^2

BIKE LANE ARROW

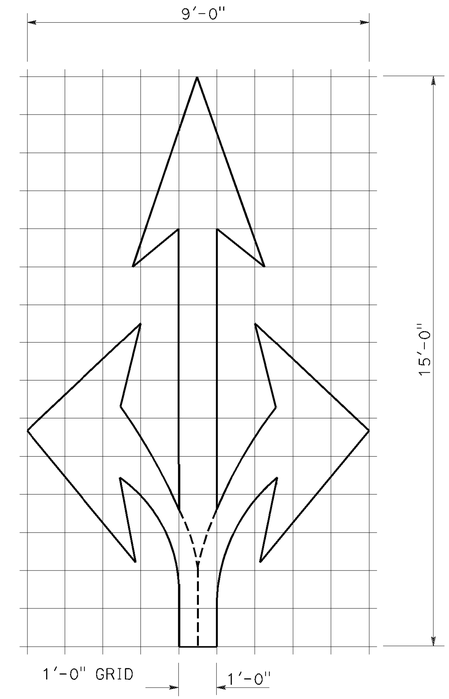

A=36 ft^2

TYPE VIII ARROW

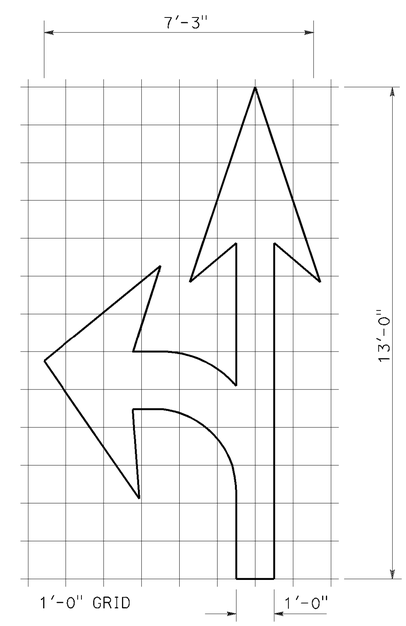

A=27 ft^2

TYPE VII (L) ARROW

(For Type VII (R) arrow, use mirror image)

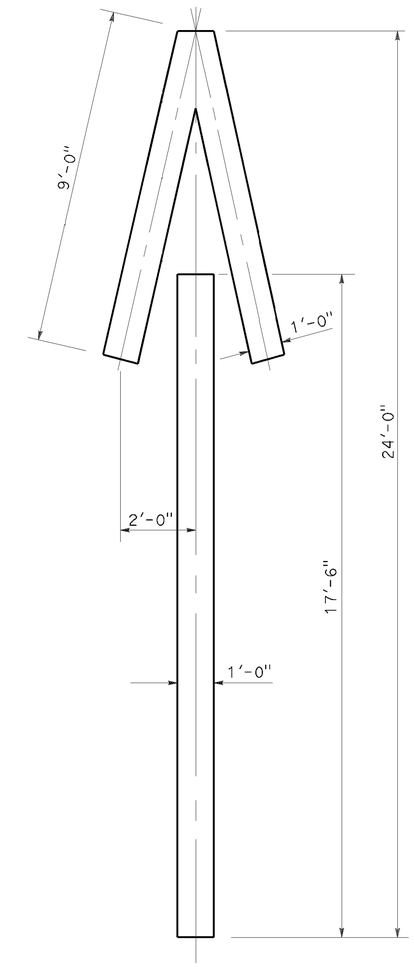

A=33 ft^2

TYPE V ARROW

NOTE:
Minor variations in dimensions may be accepted by the Engineer.

STATE OF CALIFORNIA
DEPARTMENT OF TRANSPORTATION

PAVEMENT MARKINGS ARROWS

NO SCALE

RSP A24A DATED APRIL 20, 2012 SUPERSEDES STANDARD PLAN A24A DATED MAY 20, 2011 - PAGE 13 OF THE STANDARD PLANS BOOK DATED 2010.

REVISED STANDARD PLAN RSP A24A

2010 REVISED STANDARD PLAN RSP A24A

P:\proj1\02\4F150_plans\pse\24f150va001.dgn

USERNAME => s115152
DGN FILE => 24f150va001.dgn

DATE PLOTTED => 30-NOV-2012
TIME PLOTTED => 11:47

3-14-12

Dist	COUNTY	ROUTE	POST MILES TOTAL PROJECT	SHEET No.	TOTAL SHEETS
02	Sis	3,97	27.0/36.0 0.5/R11.5	17	19

REGISTERED CIVIL ENGINEER

July 20, 2012
PLANS APPROVAL DATE

REGISTERED PROFESSIONAL ENGINEER
Roberta L. McLaughlin
No. C40375
Exp. 3-31-13
CIVIL
STATE OF CALIFORNIA

THE STATE OF CALIFORNIA OR ITS OFFICERS OR AGENTS SHALL NOT BE RESPONSIBLE FOR THE ACCURACY OR COMPLETENESS OF SCANNED COPIES OF THIS PLAN SHEET.

TO ACCOMPANY PLANS DATED 12-03-12

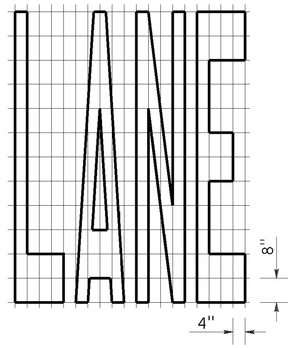

A=24 ft²

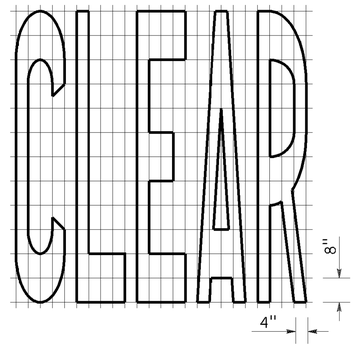

A=27 ft²

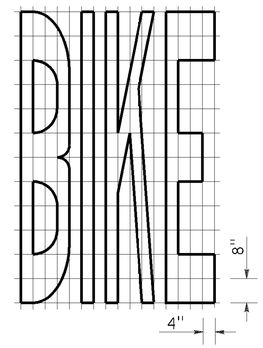

A=21 ft²

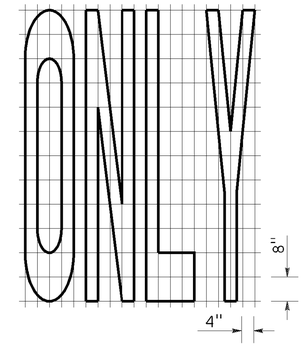

A=22 ft²

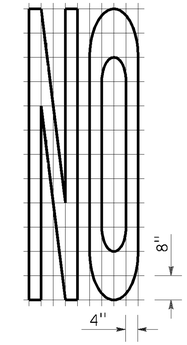

A=14 ft²

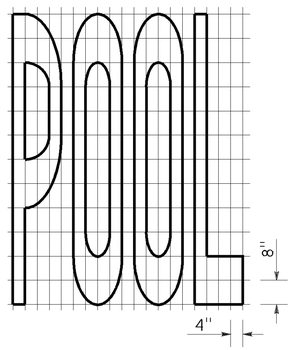

A=23 ft²

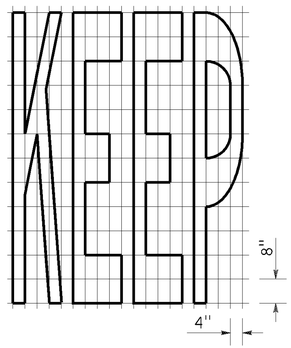

A=24 ft²

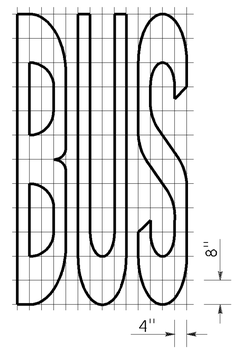

A=20 ft²

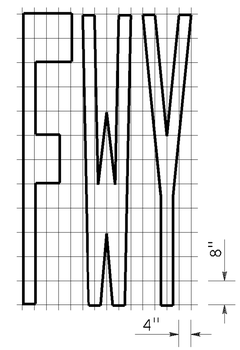

A=16 ft²

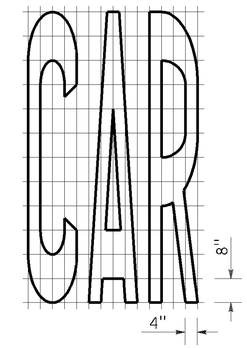

A=17 ft²

WORD MARKINGS			
ITEM	ft²	ITEM	ft²
LANE	24	NO	14
POOL	23	BIKE	21
CAR	17	BUS	20
CLEAR	27	ONLY	22
KEEP	24	FWY	16

A=2 ft²
See Notes 6 and 7

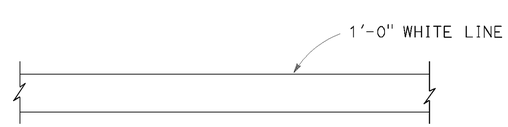

LIMIT LINE (STOP LINE)

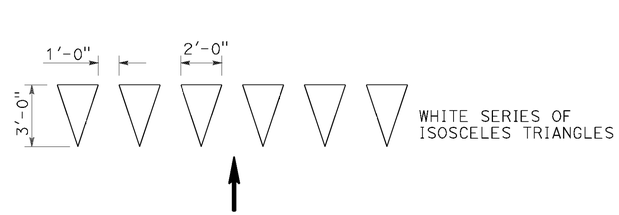

YIELD LINE

NOTES:

1. If a message consists of more than one word, it should read "UP", i.e., the first word should be nearest the driver.
2. The space between words should be at least four times the height of the characters for low speed roads, but not more than ten times the height of the characters. The space may be reduced appropriately where there is limited space because of local conditions.
3. Minor variations in dimensions may be accepted by the Engineer.
4. Portions of a letter, number or symbol may be separated by connecting segments not to exceed 2" in width.
5. The words "NO PARKING" pavement marking is to be used for parking facilities. For typical locations of markings, see Standard Plans A90A and A90B.
6. The words "NO PARKING", shall be painted in white letters no less than 1'-0" high on a contrasting background and located so that it is visible to traffic enforcement officials.

STATE OF CALIFORNIA
DEPARTMENT OF TRANSPORTATION

PAVEMENT MARKINGS WORDS, LIMIT AND YIELD LINES

NO SCALE

RSP A24E DATED JULY 20, 2012 SUPERSEDES STANDARD PLAN A24E DATED MAY 20, 2011 - PAGE 17 OF THE STANDARD PLANS BOOK DATED 2010.

REVISED STANDARD PLAN RSP A24E

2010 REVISED STANDARD PLAN RSP A24E

P:\proj1\02\4F150_plans\pse\24f150va002.dgn

USERNAME => s115152
DGN FILE => 24f150va002.dgn

DATE PLOTTED => 30-NOV-2012
TIME PLOTTED => 11:47

6-12-12

Dist	COUNTY	ROUTE	POST MILES TOTAL PROJECT	SHEET No.	TOTAL SHEETS
02	Sis	3,97	27.0/36.0 0.5/R11.5	18	19

REGISTERED CIVIL ENGINEER

July 20, 2012
PLANS APPROVAL DATE

REGISTERED PROFESSIONAL ENGINEER
Roberta L. McLaughlin
No. C40375
Exp. 3-31-13
CIVIL
STATE OF CALIFORNIA

THE STATE OF CALIFORNIA OR ITS OFFICERS OR AGENTS SHALL NOT BE RESPONSIBLE FOR THE ACCURACY OR COMPLETENESS OF SCANNED COPIES OF THIS PLAN SHEET.

TO ACCOMPANY PLANS DATED 12-03-12

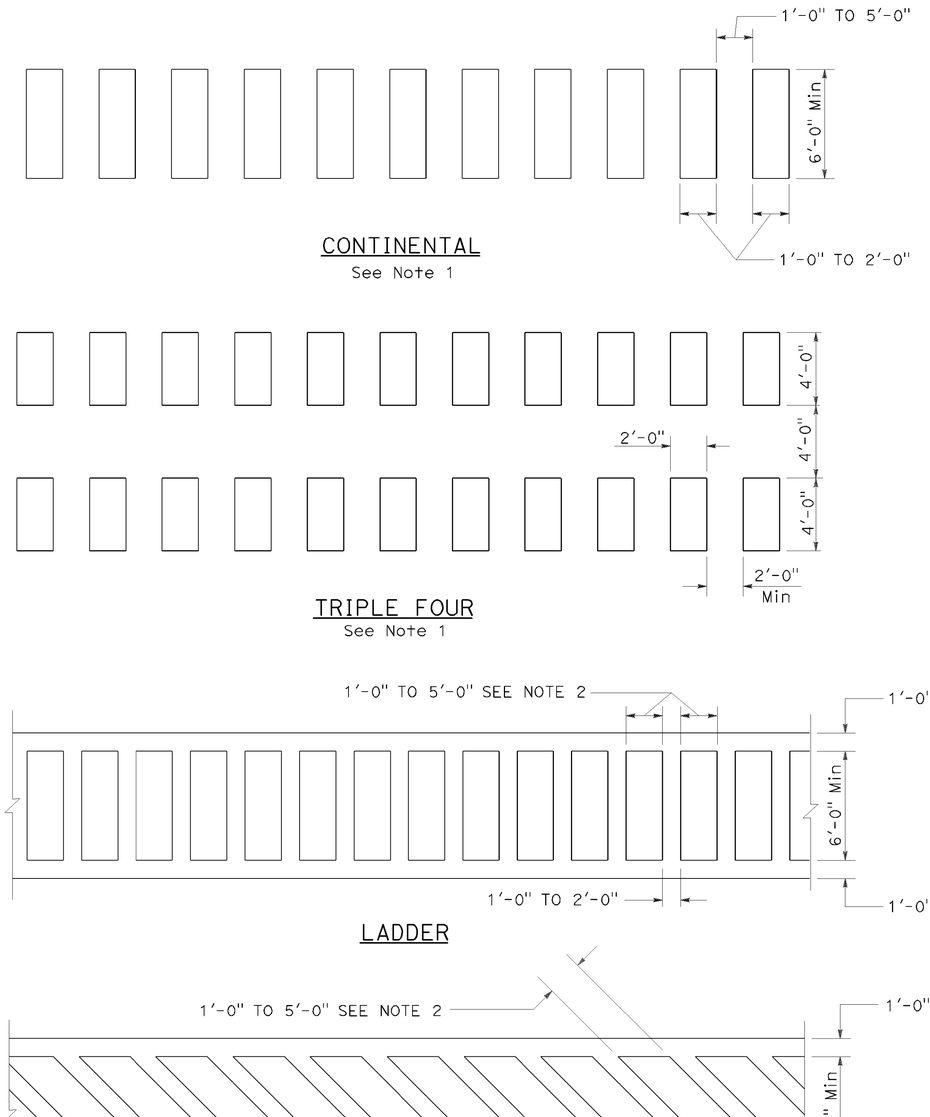

HIGHER VISIBILITY CROSSWALKS

NOTES:

1. Spaces between markings should be placed in wheel tracks of each lane.
2. Spacings not to exceed 2.5 times width of longitudinal line.
3. All crosswalk markings must be white except for those near schools must be yellow.

BASIC

STATE OF CALIFORNIA
DEPARTMENT OF TRANSPORTATION

PAVEMENT MARKINGS CROSSWALKS

NO SCALE

RSP A24F DATED JULY 20, 2012 SUPPLEMENTS THE STANDARD PLANS BOOK DATED 2010.

REVISED STANDARD PLAN RSP A24F

2010 REVISED STANDARD PLAN RSP A24F

P:\proj1\02\4F150_plans\pse\24f150va003.dgn

USERNAME => s115152
DGN FILE => 24f150va003.dgn

DATE PLOTTED => 30-NOV-2012
TIME PLOTTED => 11:47

6-28-12

DIST	COUNTY	ROUTE	POST MILES TOTAL PROJECT	SHEET NO.	TOTAL SHEETS
02	Sis	3,97	27.0/36.0 0.5/R11.5	19	19

Jeffery G. McRae
REGISTERED ELECTRICAL ENGINEER

January 20, 2012
PLANS APPROVAL DATE

REGISTERED PROFESSIONAL ENGINEER
Jeffery G. McRae
No. E14512
Exp. 6-30-12
ELECTRICAL
STATE OF CALIFORNIA

THE STATE OF CALIFORNIA OR ITS OFFICERS OR AGENTS SHALL NOT BE RESPONSIBLE FOR THE ACCURACY OR COMPLETENESS OF SCANNED COPIES OF THIS PLAN SHEET.

TO ACCOMPANY PLANS DATED 12-03-12

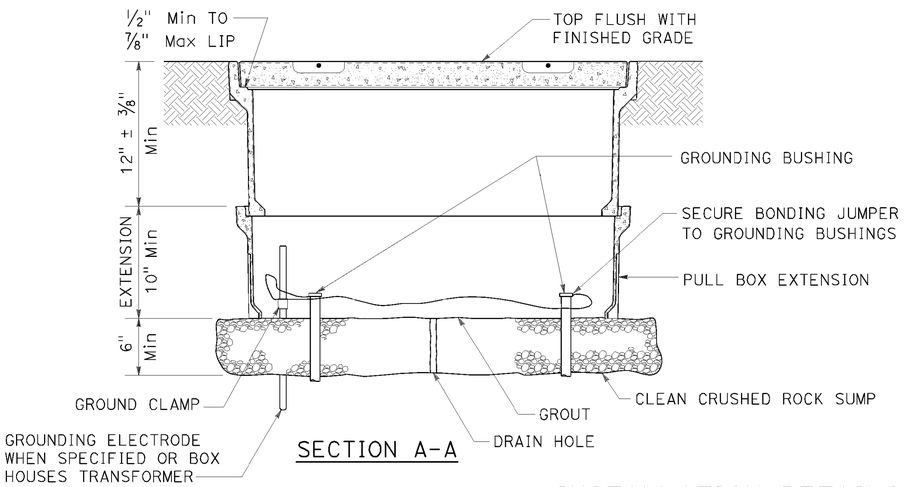

SECTION A-A

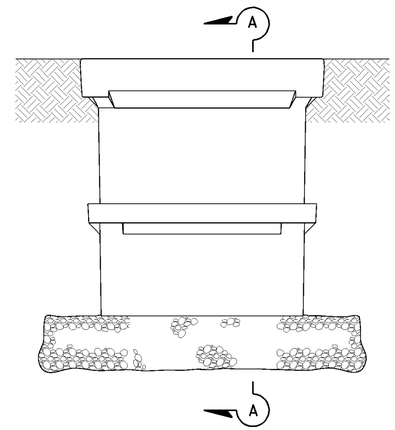

SIDE VIEW

INSTALLATION DETAILS

DETAIL A

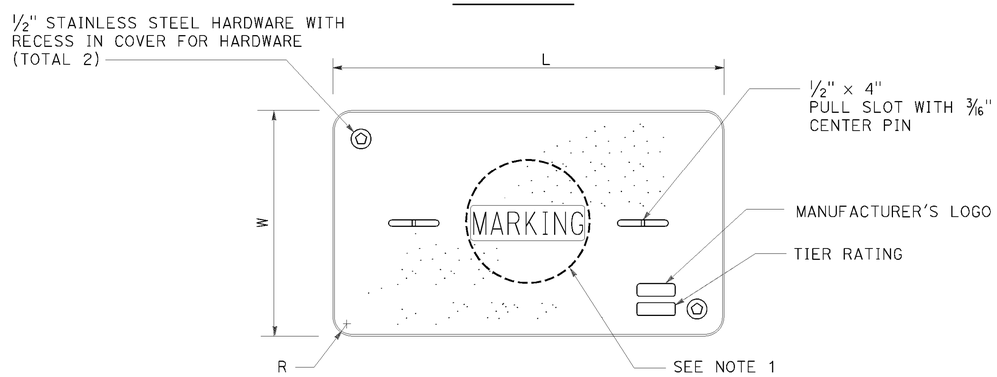

COVER TOP VIEW

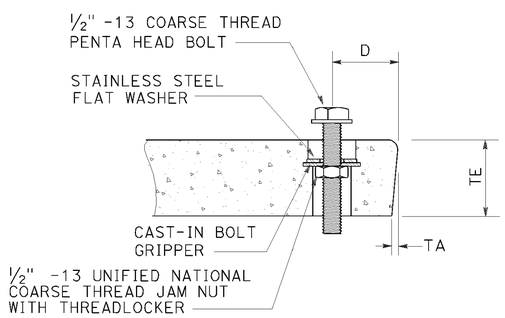

TYPICAL COVER CAPTIVE BOLT

OR SIMILAR

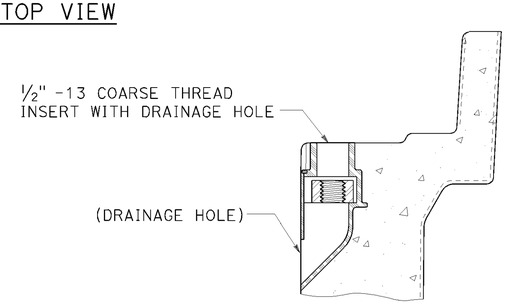

TYPICAL THREADED INSERT

OR SIMILAR

DIMENSION TABLE										
PULL BOX	PULL BOX			COVER						
	MINIMUM DEPTH BOX	MINIMUM DEPTH EXTENSION	MAXIMUM WEIGHT	L	W	R	TE	TA	D	MAXIMUM WEIGHT
No. 3½	12"	N/A	40 lb	1' - 3⅜"	10⅛"	1⅜"	2"	⅛"	1¾"	30 lb
No. 5	12"	10"	55 lb	1' - 11¼"	1' - 1¾"	1⅜"	2"	⅛"	1¾"	60 lb
No. 6	12"	10"	70 lb	2' - 6½"	1' - 5½"	1⅜"	2"	⅛"	2"	85 lb

NOTES ON PULL BOXES:

1. Pull box covers must be marked as follows: "SERVICE" Service circuits between service point and service disconnect; "SPRINKLER-CONTROL" sprinkler control circuits, 50 V or less; "CALTRANS" on all pull boxes, except pull boxes marked "SPRINKLER-CONTROL"; and "TELEPHONE" Telephone service;

   A) No. 3½ pull box.
      1) "SIGNAL" - Traffic signal circuits with or without street or sign lighting circuits.
      2) "ST LIGHTING" - Street or sign lighting circuits where voltage is under 600 V.

   B) No. 5, 6, 9 or 9A pull box.
      1) "TRAFFIC SIGNAL" - Traffic signal circuits with or without street or sign lighting circuits.
      2) "STREET LIGHTING" - Street or sign lighting circuits where voltage is under 600 V.
      3) "STREET LIGHTING-HIGH VOLTAGE" - Street or sign lighting circuits where voltage is above 600 V.
      4) "IRRIGATION" - Circuits to irrigation controller 120 V or more.
      5) "RAMP METER" - Ramp meter circuits.
      6) "COUNT STATION" - Count or speed monitor circuits.
      7) "COMMUNICATIONS" - Communication circuits.
      8) "TOS COMMUNICATIONS" - TOS communication line.
      9) "TOS POWER" - TOS power.
      10) "TDC POWER" - Telephone demarcation cabinet power.
      11) "CCTV" - Closed circuit television circuits.
      12) "TMS" - Traffic monitoring station circuits.
      13) "CMS" - Changeable message sign circuits.
      14) "HAR" - Highway advisory radio circuits.

2. The nominal dimensions of the opening in which the cover sets must be the same as the cover dimensions (L and W) plus ⅛" or greater.

3. Covers and boxes must be interchangeable with California Standard. When interchanged with a standard, the top surfaces must be flush within ⅛". Top outside radius of covers and pull boxes must have a ⅛" radius.

4. Pull box extension may be another pull box as long as the bottom edge of the pull box can fit into the cover opening.

STATE OF CALIFORNIA
DEPARTMENT OF TRANSPORTATION

ELECTRICAL SYSTEMS (PULL BOX)

NO SCALE

RSP ES-8A DATED JANUARY 20, 2012 SUPPLEMENTS THE STANDARD PLANS BOOK DATED 2010.

REVISED STANDARD PLAN RSP ES-8A

2010 REVISED STANDARD PLAN RSP ES-8A

P:\proj1\02\4F150_plans\pse\24f150va004.dgn
USERNAME => s115152
DGN FILE => 24f150va004.dgn
DATE PLOTTED => 30-NOV-2012
TIME PLOTTED => 11:47
01-09-12