Dist	COUNTY	ROUTE	POST MILES TOTAL PROJECT	SHEET No.	TOTAL SHEETS
02	Sha	44	R4.3/R7.4	1	17

ACNH-P044(050)E

STATE OF CALIFORNIA
DEPARTMENT OF TRANSPORTATION

PROJECT PLANS FOR CONSTRUCTION ON
STATE HIGHWAY
IN SHASTA COUNTY AT AND NEAR PALO CEDRO FROM STILLWATER CREEK BRIDGE TO COW CREEK BRIDGE

TO BE SUPPLEMENTED BY STANDARD PLANS DATED 2010

INDEX OF PLANS

SHEET No.	DESCRIPTION
1	TITLE
2	TYPICAL CROSS SECTION
3-6	CONSTRUCTION DETAILS
7	CONSTRUCTION AREA SIGNS
8-10	DETOUR PLAN
11	PAVEMENT DELINEATION DETAILS
12	PAVEMENT DELINEATION QUANTITIES
13	SUMMARY OF QUANTITIES
14	MODIFY TRAFFIC COUNT STATION
15-17	REVISED STANDARD PLANS

THE STANDARD PLANS LIST APPLICABLE TO THIS CONTRACT IS INCLUDED IN THE NOTICE TO BIDDERS AND SPECIAL PROVISIONS BOOK.

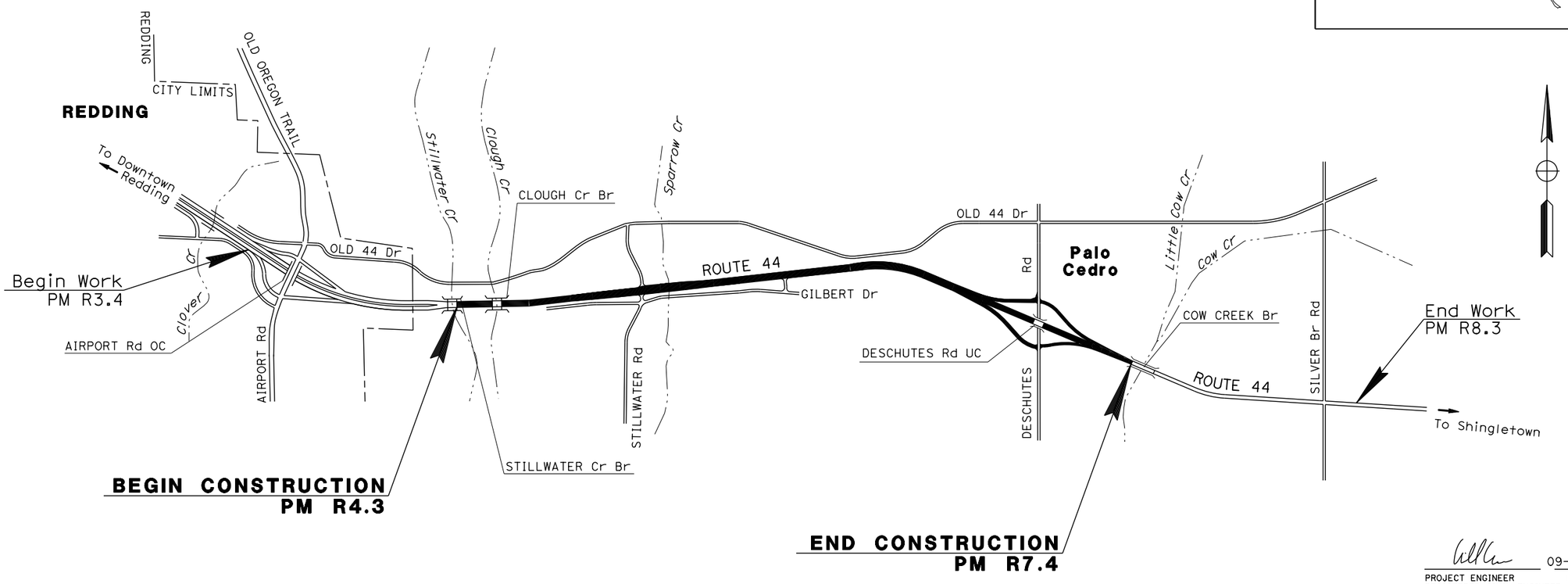

09-26-12
PROJECT ENGINEER DATE
REGISTERED CIVIL ENGINEER

SEPTEMBER 26, 2012
PLANS APPROVAL DATE

REGISTERED PROFESSIONAL ENGINEER MICHAEL A. CONNER No. C73123 Exp. 12-31-12 CIVIL STATE OF CALIFORNIA

THE STATE OF CALIFORNIA OR ITS OFFICERS OR AGENTS SHALL NOT BE RESPONSIBLE FOR THE ACCURACY OR COMPLETENESS OF SCANNED COPIES OF THIS PLAN SHEET.

CONTRACT No.	**02-4E9504**
PROJECT ID	**0212120112**

LAST REVISION 09-26-12
DATE PLOTTED => 19-OCT-2012
TIME PLOTTED => 08:14

PROJECT MANAGER: LANCE BROWN
DESIGN ENGINEER: LANCE BROWN

P:\proj1\02\4E950_plans\pse\24e950ab001.dgn

THE CONTRACTOR SHALL POSSESS THE CLASS (OR CLASSES) OF LICENSE AS SPECIFIED IN THE "NOTICE TO BIDDERS."

NO SCALE

Dist	COUNTY	ROUTE	POST MILES TOTAL PROJECT	SHEET No.	TOTAL SHEETS
02	Sha	44	R4.3/R7.4	2	17

REGISTERED CIVIL ENGINEER 09-26-12 DATE

09-26-12
PLANS APPROVAL DATE

REGISTERED PROFESSIONAL ENGINEER MICHAEL A. CONNER No. C73123 Exp. 12-31-12 CIVIL STATE OF CALIFORNIA

THE STATE OF CALIFORNIA OR ITS OFFICERS OR AGENTS SHALL NOT BE RESPONSIBLE FOR THE ACCURACY OR COMPLETENESS OF SCANNED COPIES OF THIS PLAN SHEET.

NOTES:

1. DIMENSIONS OF THE PAVEMENT STRUCTURES (STRUCTURAL SECTIONS) ARE SUBJECT TO TOLERANCES SPECIFIED IN THE STANDARD SPECIFICATIONS.
2. SUPERELEVATIONS AS SHOWN OR AS DIRECTED BY THE ENGINEER.
3. FOR ACCURATE RIGHT OF WAY DATA, CONTACT RIGHT OF WAY ENGINEERING AT THE DISTRICT OFFICE.
4. EXISTING UTILITY FACILITES ARE NOT SHOWN ON THESE PLANS.

ABBREVIATIONS:

RHMA-O	RUBBERIZED HOT MIX ASPHALT (OPEN GRADED)
RAC	RUBBERIZED ASPHALT CONCRETE

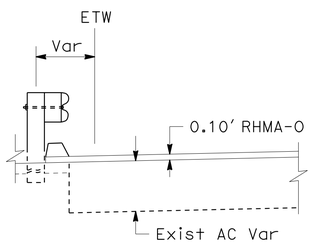

DIKE LOCATION
(TYPICAL BOTH DIRECTIONS)
R6.97-R7.00 EB & WB
R7.01-R7.04 EB & WB

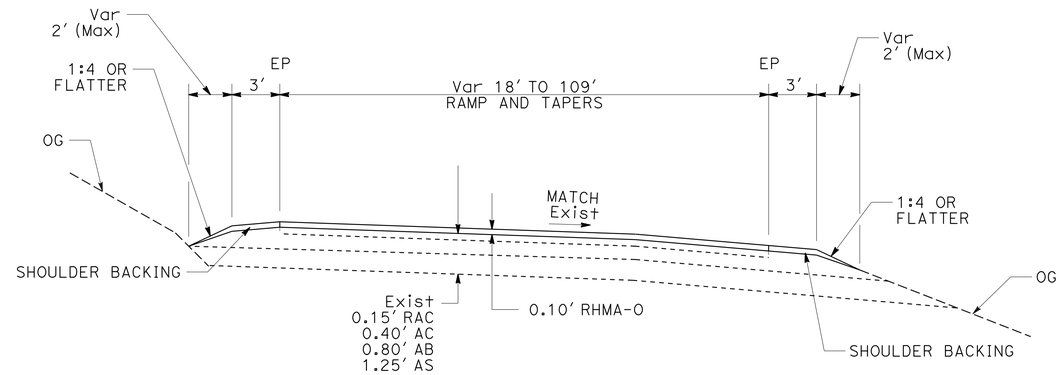

DESCHUTES RAMPS

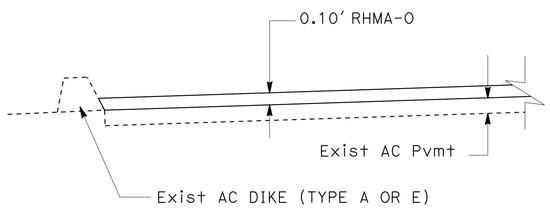

DIKE DETAILS
(TYPICAL BOTH DIRECTIONS)

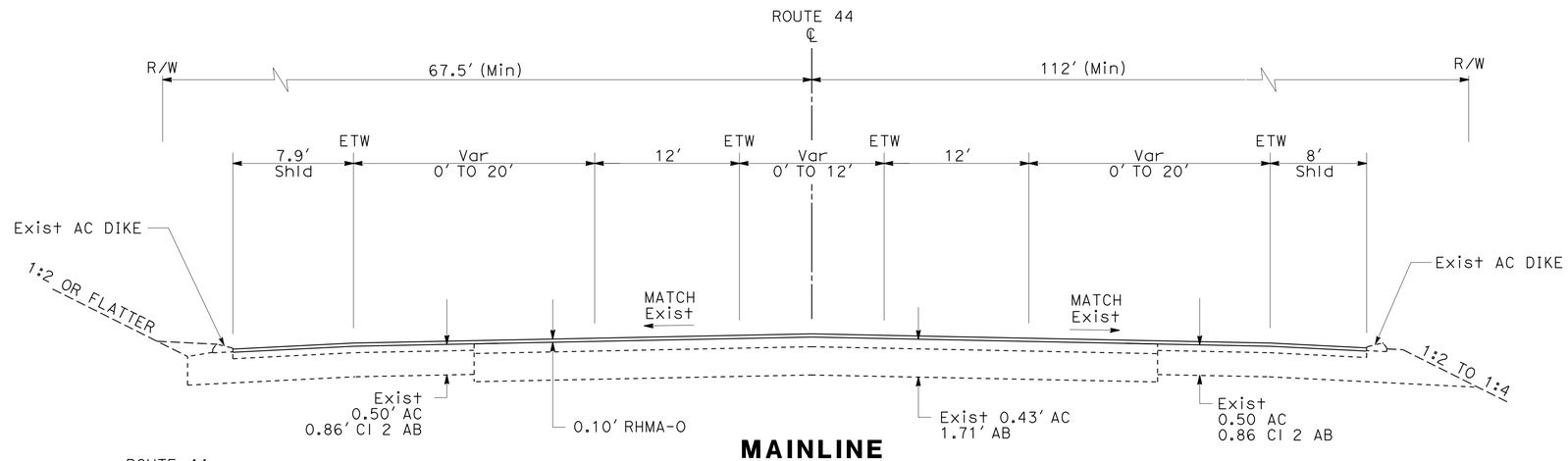

MAINLINE
PM R4.78/R5.22

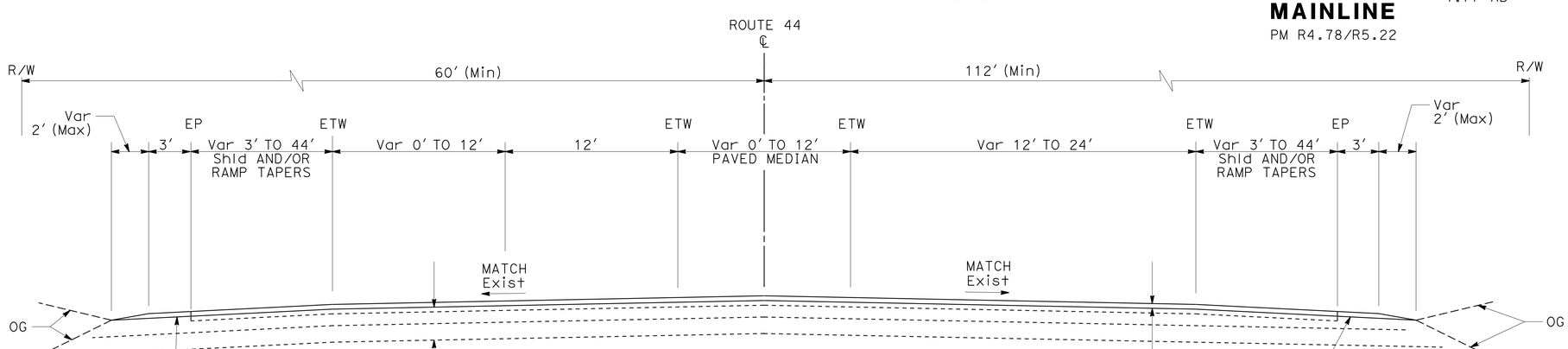

MAINLINE
PM R5.22/R7.40
PM R4.30/R4.78

TYPICAL CROSS SECTIONS
NO SCALE

X-1

CALCULATED-DESIGNED BY MICHAEL CONNER
CHECKED BY KARLIE SMITH
REVISED BY
DATE REVISED
FUNCTIONAL SUPERVISOR LANCE BROWN

STATE OF CALIFORNIA - DEPARTMENT OF TRANSPORTATION
Caltrans® MAINTENANCE

P:\proj\02\4E950_plans\pse\24e950ca001.dgn

LAST REVISION 09-26-12
DATE PLOTTED => 01-OCT-2012
TIME PLOTTED => 13:19

Dist	COUNTY	ROUTE	POST MILES TOTAL PROJECT	SHEET No.	TOTAL SHEETS
02	Sha	44	R4.3/R7.4	3	17

REGISTERED CIVIL ENGINEER 09-26-12 DATE

09-26-12
PLANS APPROVAL DATE

REGISTERED PROFESSIONAL ENGINEER MICHAEL A. CONNER No. C73123 Exp. 12-31-12 CIVIL STATE OF CALIFORNIA

THE STATE OF CALIFORNIA OR ITS OFFICERS OR AGENTS SHALL NOT BE RESPONSIBLE FOR THE ACCURACY OR COMPLETENESS OF SCANNED COPIES OF THIS PLAN SHEET.

NOTES:

1. EXISTING UTILITY FACILITIES ARE NOT SHOWN ON THESE PLANS.
2. FOR EXISTING STRUCTURAL SECTION, SEE TYPICALS.

LEGEND:

COLD PLANE AC PAVEMENT (0.00′ TO 0.10′)
0.10′ RHMA-O

COLD PLANE AC PAVEMENT (0.10′)
0.10′ RHMA-O

ABBREVIATIONS:

RHMA-O	RUBBERIZED HOT MIX ASPHALT (OPEN GRADED)
GSY	GALLONS PER SQUARE YARD

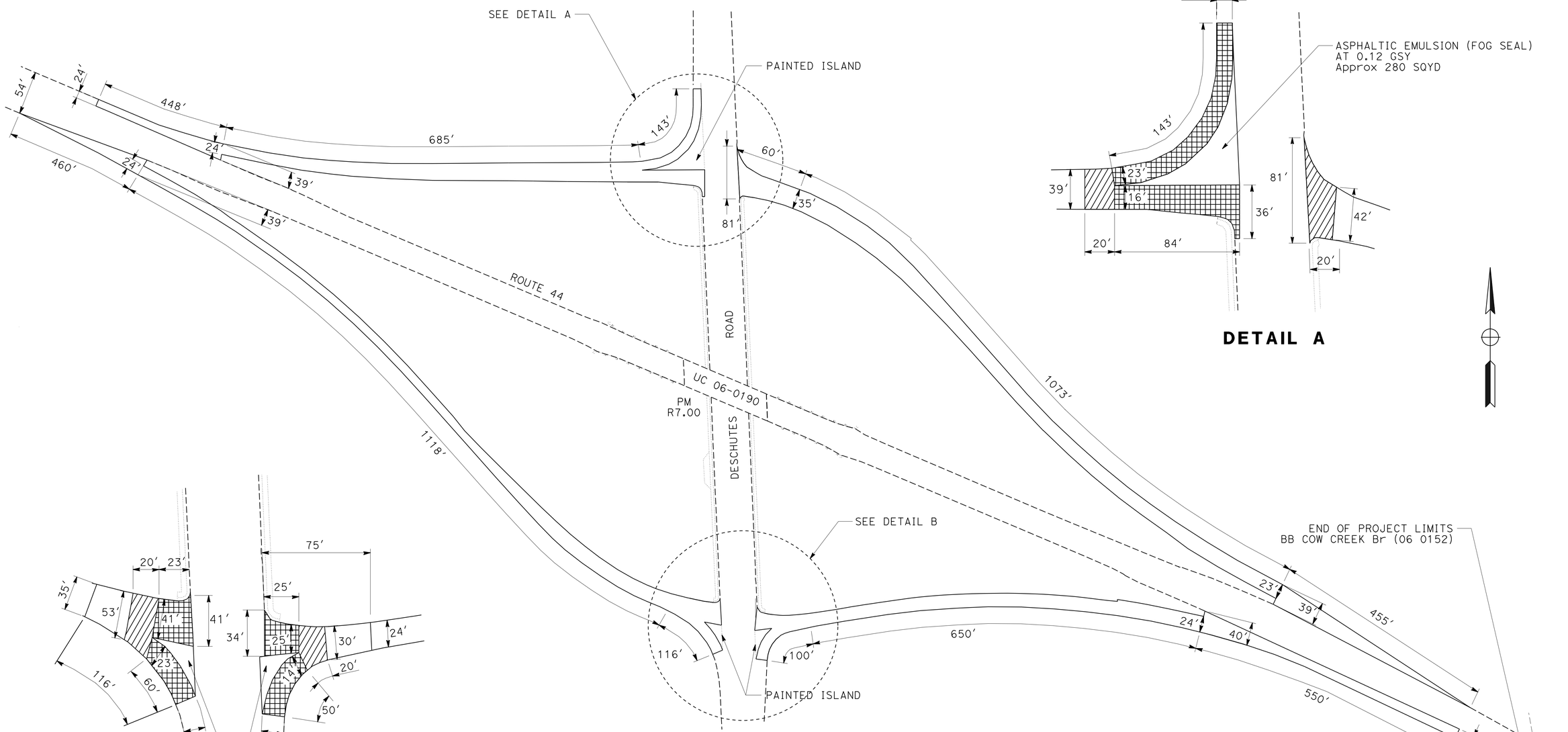

CONSTRUCTION DETAILS

NO SCALE

C-1

REVISED BY	DATE REVISED

CALCULATED-DESIGNED BY	CHECKED BY
MICHAEL CONNER	KARLIE SMITH

FUNCTIONAL SUPERVISOR: LANCE BROWN

STATE OF CALIFORNIA - DEPARTMENT OF TRANSPORTATION
Caltrans® MAINTENANCE

P:\proj1\02\4E950_plans\pse\24e950ga001.dgn

LAST REVISION 09-26-12 | DATE PLOTTED => 01-OCT-2012 | TIME PLOTTED => 13:19

Dist	COUNTY	ROUTE	POST MILES TOTAL PROJECT	SHEET No.	TOTAL SHEETS
02	Sha	44	R4.3/R7.4	4	17

REGISTERED CIVIL ENGINEER 09-26-12 DATE

09-26-12
PLANS APPROVAL DATE

REGISTERED PROFESSIONAL ENGINEER MICHAEL A. CONNER No. C73123 Exp. 12-31-12 CIVIL STATE OF CALIFORNIA

THE STATE OF CALIFORNIA OR ITS OFFICERS OR AGENTS SHALL NOT BE RESPONSIBLE FOR THE ACCURACY OR COMPLETENESS OF SCANNED COPIES OF THIS PLAN SHEET.

NOTE:

1. EXISTING UTILITY FACILITIES ARE NOT SHOWN ON THESE PLANS.

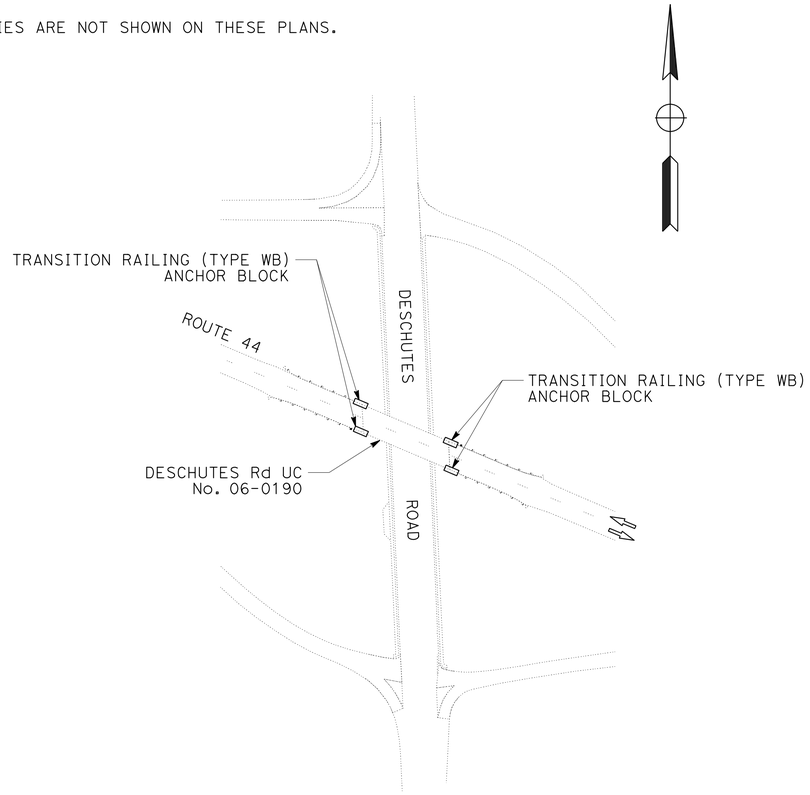

TRANSITION ANCHOR BLOCK LOCATION
DESCHUTES ROAD UC

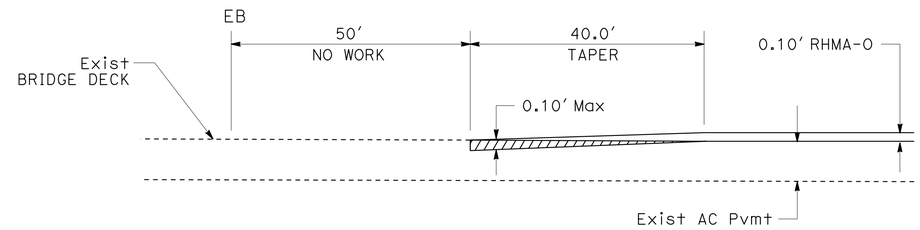

MAINLINE CONFORM TAPER
STILLWATER CREEK Br PM R4.31

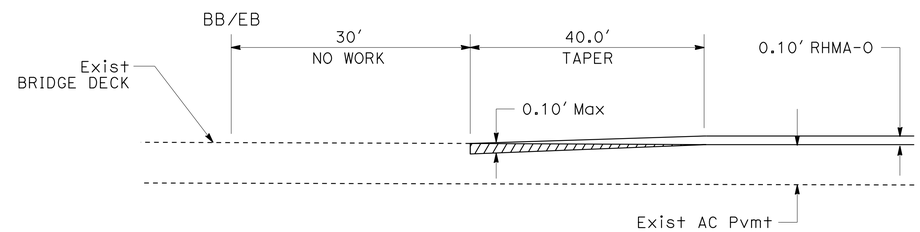

MAINLINE CONFORM TAPER
CLOUGH CREEK Br PM R4.55

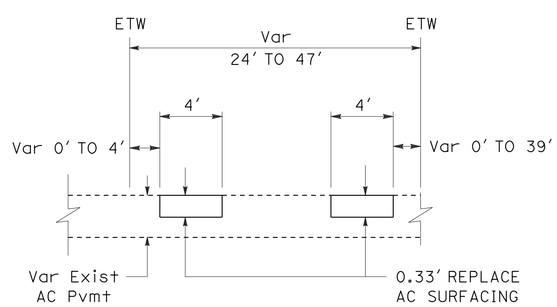

REPLACE AC SURFACING
(TYPICAL BOTH DIRECTIONS)

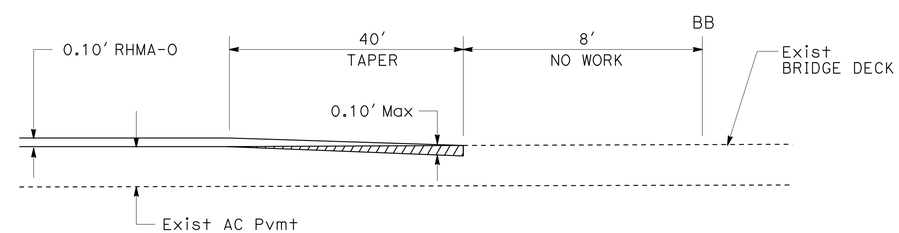

MAINLINE CONFORM TAPER
COW CREEK Br PM R7.40

CONSTRUCTION DETAILS

NO SCALE

C-2

REVISED BY	DATE REVISED

CALCULATED-DESIGNED BY	CHECKED BY
MICHAEL CONNER	KARLIE SMITH

FUNCTIONAL SUPERVISOR: LANCE BROWN

STATE OF CALIFORNIA - DEPARTMENT OF TRANSPORTATION
Caltrans® MAINTENANCE

P:\proj\02\4E950_plans\pse\24e950ga002.dgn

LAST REVISION 09-26-12 | DATE PLOTTED => 01-OCT-2012 | TIME PLOTTED => 13:19

Dist	COUNTY	ROUTE	POST MILES TOTAL PROJECT	SHEET No.	TOTAL SHEETS
02	Sha	44	R4.3/R7.4	5	17

REGISTERED CIVIL ENGINEER 09-26-12 DATE

09-26-12
PLANS APPROVAL DATE

REGISTERED PROFESSIONAL ENGINEER MICHAEL A. CONNER No. C73123 Exp. 12-31-12 CIVIL STATE OF CALIFORNIA

THE STATE OF CALIFORNIA OR ITS OFFICERS OR AGENTS SHALL NOT BE RESPONSIBLE FOR THE ACCURACY OR COMPLETENESS OF SCANNED COPIES OF THIS PLAN SHEET.

NOTES:

1. LAP ALL RAILS AT EXISTING RAIL LAPS.
2. WHEN A POST IS REMOVED AND THE RAIL ELEMENTS ARE LAPPED, THEN THE LAPPED ELEMENTS MUST BE SUPPORTED BY A Min OF 2 POSTS OR ADD ADDITIONAL LENGTH OF LAPPED ELEMENTS.
3. EXISTING UTILITY FACILITIES ARE NOT SHOWN ON THESE PLANS.

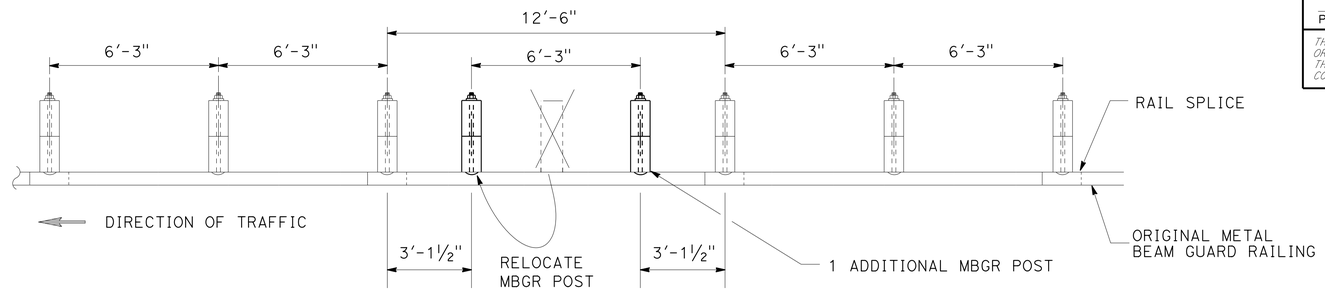

CASE 1
(ONE POST OMITTED, MOVE THE POST and ADD ONE POST)

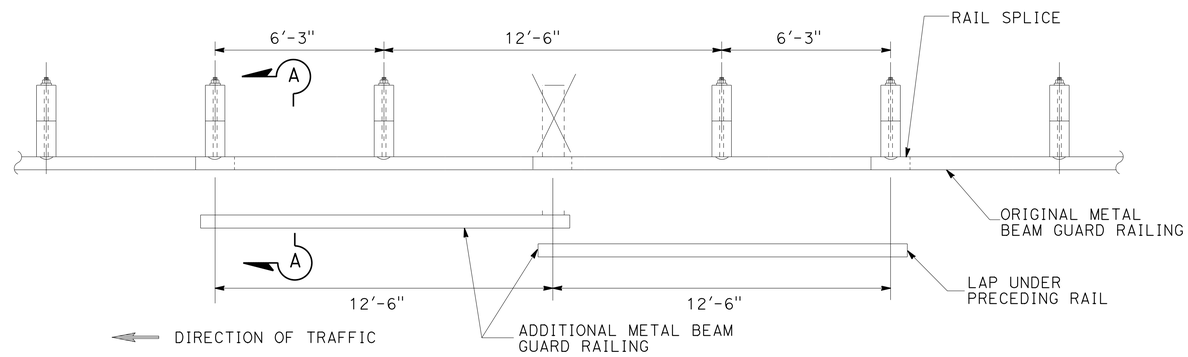

CASE 2
(ONE POST OMITTED AT JUNCTION OF TWO ELEMENTS)

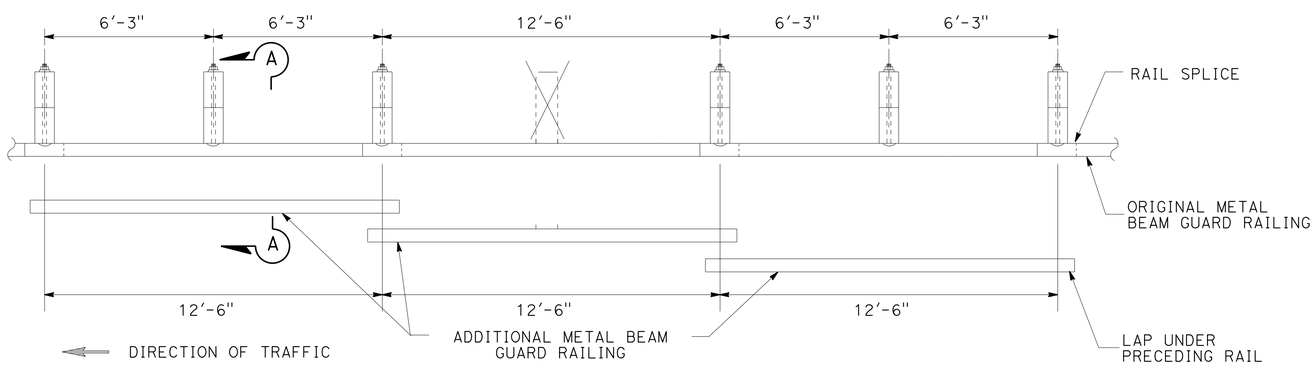

CASE 3
(ONE POST OMITTED AT CENTER OF OF ELEMENT)

LONG SPAN NESTED GUARD RAILING

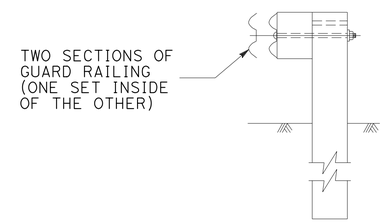

SECTION A-A

TYPICAL RAILING OVERLAP INSTALLATION AT POST

CONSTRUCTION DETAILS

NO SCALE

C-3

REVISED BY | DATE REVISED
MICHAEL CONNER | KARLIE SMITH
CALCULATED-DESIGNED BY | CHECKED BY
FUNCTIONAL SUPERVISOR
LANCE BROWN

STATE OF CALIFORNIA - DEPARTMENT OF TRANSPORTATION
Caltrans® MAINTENANCE

P:\proj1\02\4E950_plans\pse\24e950ga003.dgn

LAST REVISION | DATE PLOTTED => 01-OCT-2012
09-26-12 | TIME PLOTTED => 13:19

Dist	COUNTY	ROUTE	POST MILES TOTAL PROJECT	SHEET No.	TOTAL SHEETS
02	Sha	44	R4.3/R7.4	6	17

REGISTERED CIVIL ENGINEER 09-26-12 DATE

09-26-12
PLANS APPROVAL DATE

REGISTERED PROFESSIONAL ENGINEER MICHAEL A. CONNER No. C73123 Exp. 12-31-12 CIVIL STATE OF CALIFORNIA

THE STATE OF CALIFORNIA OR ITS OFFICERS OR AGENTS SHALL NOT BE RESPONSIBLE FOR THE ACCURACY OR COMPLETENESS OF SCANNED COPIES OF THIS PLAN SHEET.

NOTES:

1. FOR WB CONNECTION DETAILS NOT SHOWN, SEE Std PLANS A77J1, A77F1, A77F2.
2. DEPENDENT DIMENSIONS WILL BE VERIFIED IN THE FIELD BEFORE FABRICATING ANY END CONNECTION TO CONFORM WITH EXISTING PAVED CONDITIONS.
3. ALL PLATES AND BOLTS ARE GALVANIZED.
4. TAPER TO MATCH EXISTING AT MAX 4:1
5. EXISTING UTILITY FACILITIES HAVE NOT BEEN PLOTTED ON THESE PLANS.

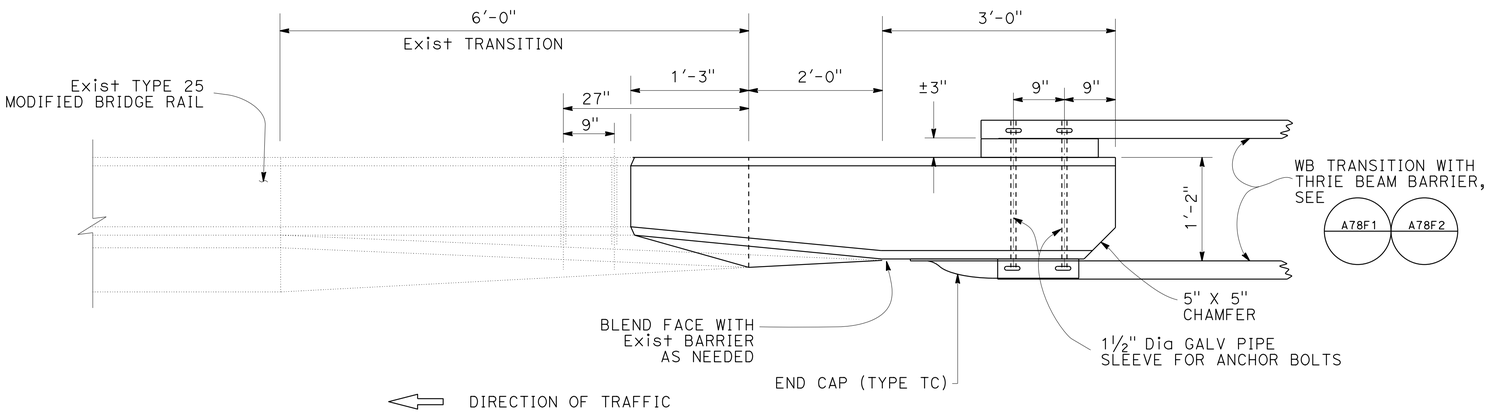

PLAN

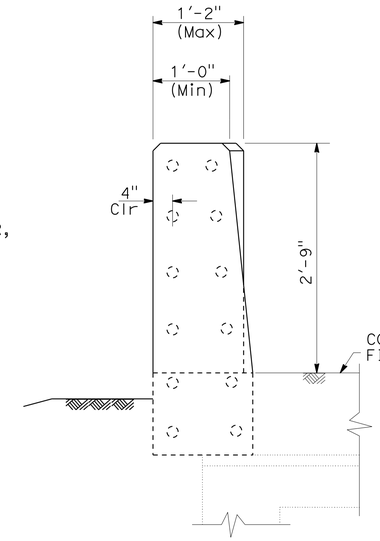

SECTION B-B

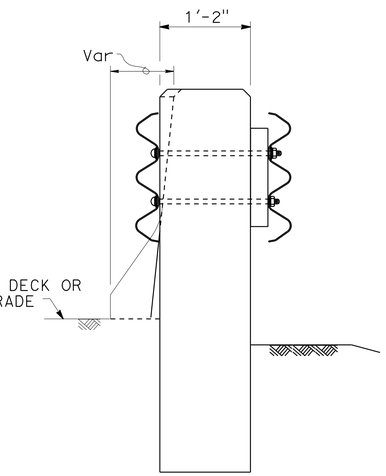

SECTION C-C

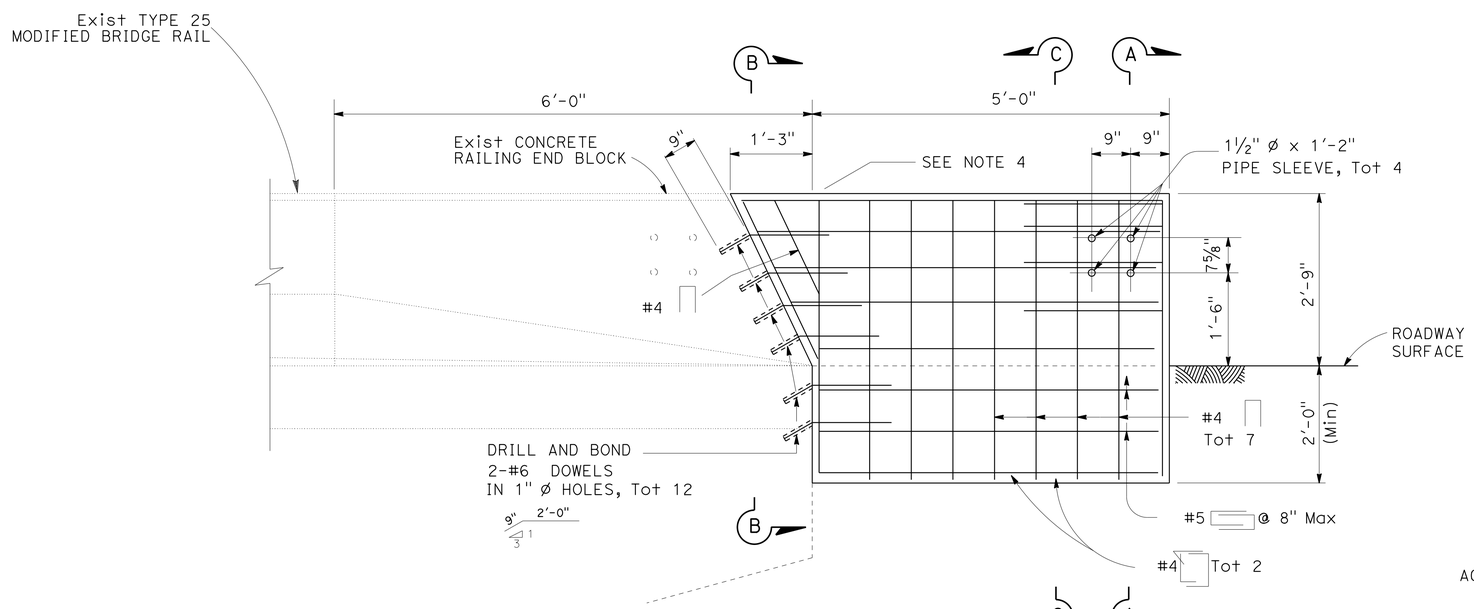

ELEVATION

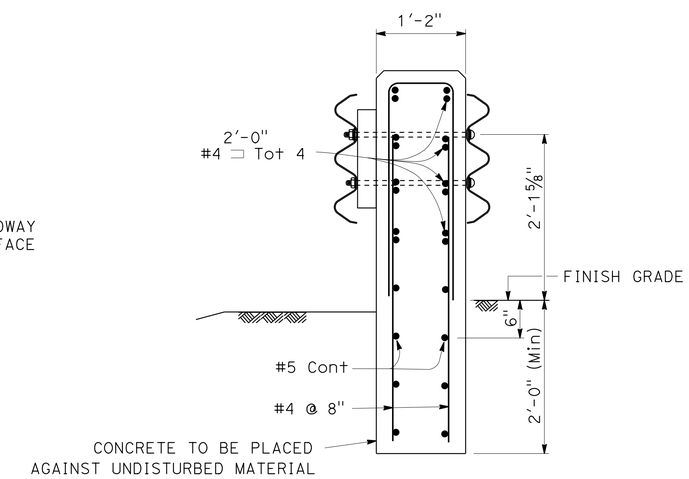

SECTION A-A

CONCRETE BARRIER (TRANSITION ANCHOR BLOCK)

TRANSITION BLOCK TYPE 25 MODIFIED

CONSTRUCTION DETAILS

NO SCALE

C-4

STATE OF CALIFORNIA - DEPARTMENT OF TRANSPORTATION
Caltrans® MAINTENANCE

FUNCTIONAL SUPERVISOR: LANCE BROWN
CALCULATED-DESIGNED BY: MICHAEL CONNER
CHECKED BY: KARLIE SMITH
REVISED BY / DATE REVISED

P:\proj1\02\4E950_plans\pse\24e950ga004.dgn

LAST REVISION 09-26-12
DATE PLOTTED => 01-OCT-2012
TIME PLOTTED => 13:19

Dist	COUNTY	ROUTE	POST MILES TOTAL PROJECT	SHEET No.	TOTAL SHEETS
02	Sha	44	R4.3/R7.4	7	17

REGISTERED CIVIL ENGINEER 09-26-12 DATE

09-26-12
PLANS APPROVAL DATE

REGISTERED PROFESSIONAL ENGINEER MICHAEL A. CONNER No. C73123 Exp. 12-31-12 CIVIL STATE OF CALIFORNIA

THE STATE OF CALIFORNIA OR ITS OFFICERS OR AGENTS SHALL NOT BE RESPONSIBLE FOR THE ACCURACY OR COMPLETENESS OF SCANNED COPIES OF THIS PLAN SHEET.

NOTES:

1. EXACT LOCATION OF ALL SIGNS TO BE DETERMINED BY THE ENGINEER.
2. CALIFORNIA CODES ARE DESIGNATED BY (CA), OTHERWISE FEDERAL CODES ARE SHOWN.
3. EXISTING UTILITY FACILITIES HAVE NOT BEEN PLOTTED ON THESE PLANS.

LEGEND:

ONE POST STATIONARY MOUNTED SIGN

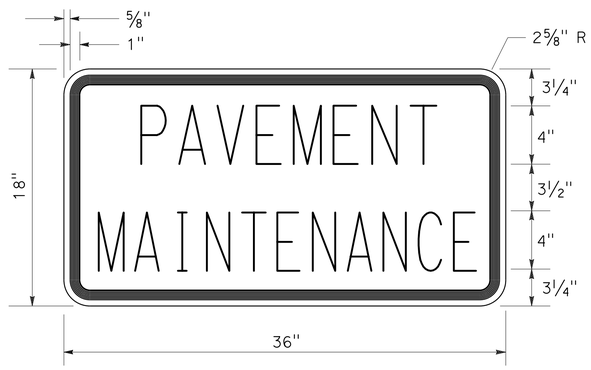

C23B(CA) SIGN PANEL DETAIL

CONSTRUCTION AREA SIGNS (STATIONARY MOUNTED)

TYPE	CODE	PANEL SIZE	SIGN MESSAGE	NUMBER AND SIZE OF POST	No. OF SIGNS
(A)	W20-1	48" x 48"	ROAD WORK AHEAD	1-4" x 6"	4
	C23B(CA)	36" x 18"	PAVEMENT MAINTENANCE		
(B)	W20-1	48" x 48"	ROAD WORK AHEAD	1-4" x 6"	3
(C)	G20-2	36" x 18"	END ROAD WORK	1-4" x 4"	7

ROAD CONNECTIONS/RAMPS

PM	DESCRIPTION	(B)	(C)
R4.99	STILLWATER Rd	R† & L†	R† & L†
R5.93	GILBERT Dr	R†	R†
R6.81	EB EXIT TO DESCHUTES Rd		R†
R6.84	WB ENTRANCE FROM DESCHUTES Rd		
R7.18	EB ENTRANCE FROM DESCHUTES Rd		
R7.20	WB EXIT TO DESCHUTES Rd		L†

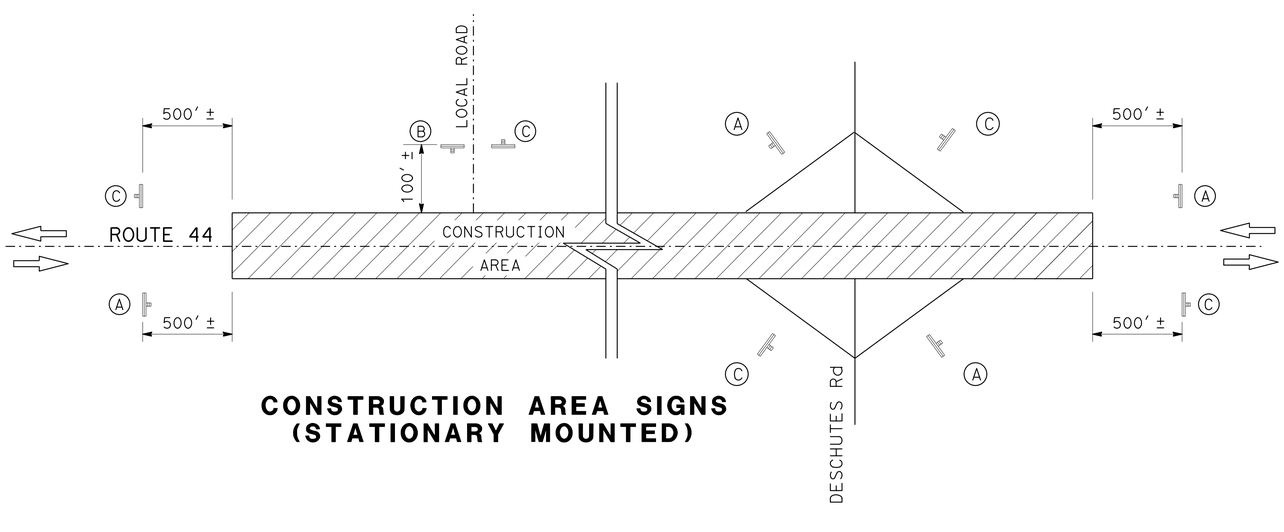

CONSTRUCTION AREA SIGNS (STATIONARY MOUNTED)

CONSTRUCTION AREA SIGNS

NO SCALE

CS-1

REVISED BY	DATE REVISED
MICHAEL CONNER	KARLIE SMITH
CALCULATED-DESIGNED BY	CHECKED BY
FUNCTIONAL SUPERVISOR	LANCE BROWN

STATE OF CALIFORNIA - DEPARTMENT OF TRANSPORTATION
Caltrans MAINTENANCE

P:\proj1\02\4E950_plans\pse\24e9501a001.dgn

LAST REVISION 09-26-12 | DATE PLOTTED => 01-OCT-2012 | TIME PLOTTED => 13:19

Dist	COUNTY	ROUTE	POST MILES TOTAL PROJECT	SHEET No.	TOTAL SHEETS
02	Sha	44	R4.3/R7.4	8	17

REGISTERED CIVIL ENGINEER 09-26-12 DATE

09-26-12
PLANS APPROVAL DATE

REGISTERED PROFESSIONAL ENGINEER MICHAEL A. CONNER No. C73123 Exp. 12-31-12 CIVIL STATE OF CALIFORNIA

THE STATE OF CALIFORNIA OR ITS OFFICERS OR AGENTS SHALL NOT BE RESPONSIBLE FOR THE ACCURACY OR COMPLETENESS OF SCANNED COPIES OF THIS PLAN SHEET.

NOTES:

1. PRE-NOTIFICATION PCMS: PLACE NEAR RAMP AND ACTIVATE APPROXIMATELY 12 HOURS PRIOR TO RAMP CLOSURE.

EXIT WILL BE CLOSED	TODAY (or TONIGHT) XX:XXPM - XX:XXAM
FRAME 1	FRAME 2

2. RAMP CLOSED PCMS: MOVE PRE-NOTIFICATION PCMS APPROXIMATELY 1000 FEET BEFORE RAMP AND ACTIVATE DURING RAMP CLOSURE.

EXIT XXX OR ROAD NAME CLOSED	FOLLOW DETOUR
FRAME 1	FRAME 2

3. PLACE 7 DAYS PRIOR TO RAMP CLOSURE.
4. ADD SIGN(S) SPACED EQUALLY BETWEEN INTERCHANGES WITH MAXIMUM SPACING AT 5 MILES.
5. EXACT SIGN LOCATION TO BE DETERMINED BY THE ENGINEER.
6. EXISTING UTILITY FACILITIES ARE NOT SHOWN ON THESE PLANS.
7. RAMP CLOSED PCMS: PLACE BEFORE OPEN ON-RAMP AND ACTIVATE DURING RAMP CLOSURE.

EB 44 ON RAMP CLOSED	FOLLOW DETOUR
FRAME 1	FRAME 2

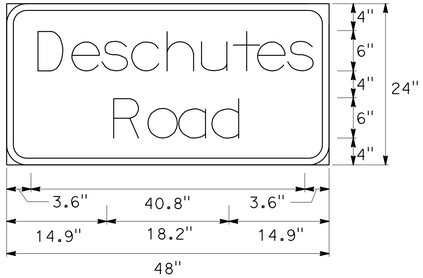

3.0" RADIUS, 1.0" BORDER, BLACK ON ORANGE; [DESCHUTES] D; [ROAD] D;

SPECIAL

CONSTRUCTION AREA SIGNS (PORTABLE)

CODE	PANEL SIZE	PANEL MESSAGE
G28-2 (44) (CA)	24" x 24"	ROUTE SHIELD (44)
M3-2	24" x 12"	EAST
M4-8A	24" x 18"	END DETOUR
M4-10L	48" x 18"	DETOUR (Lt ARROW)
M4-10R	48" x 18"	DETOUR (Rt ARROW)
SC3 (CA)	48" x 18"	DETOUR (UP ARROW)
SC6-3 (CA)	48" x 48"	RAMP CLOSED
SPECIAL	48" x 24"	ROAD NAME

LEGEND:

PORTABLE CHANGEABLE MESSAGE SIGN

CONSTRUCTION AREA SIGN (PORTABLE)

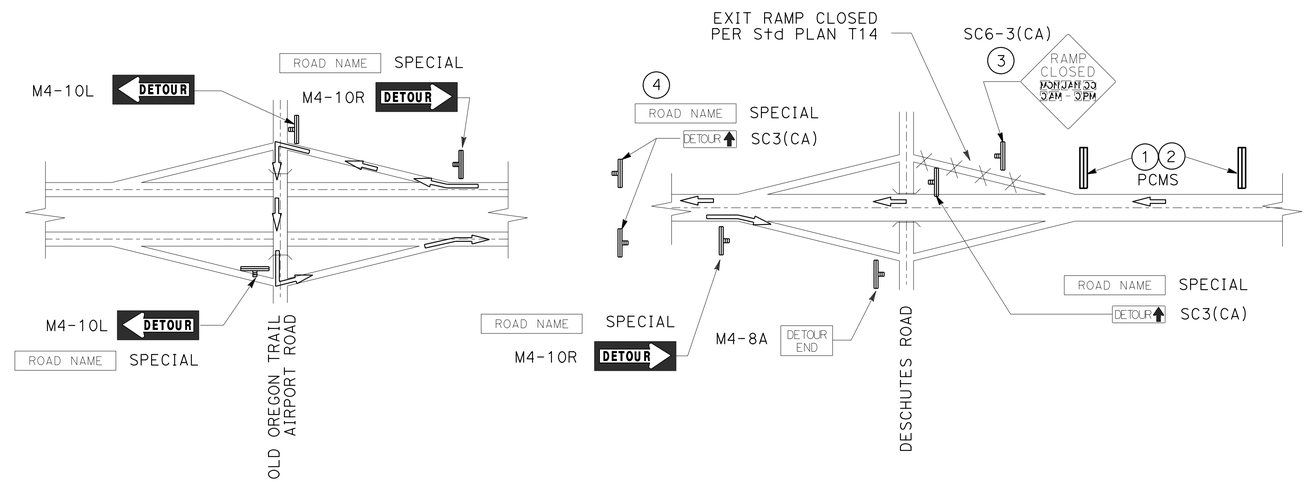

TYPICAL EXIT RAMP DETOUR SIGNING

WB 44 - TO DESCHUTES Rd

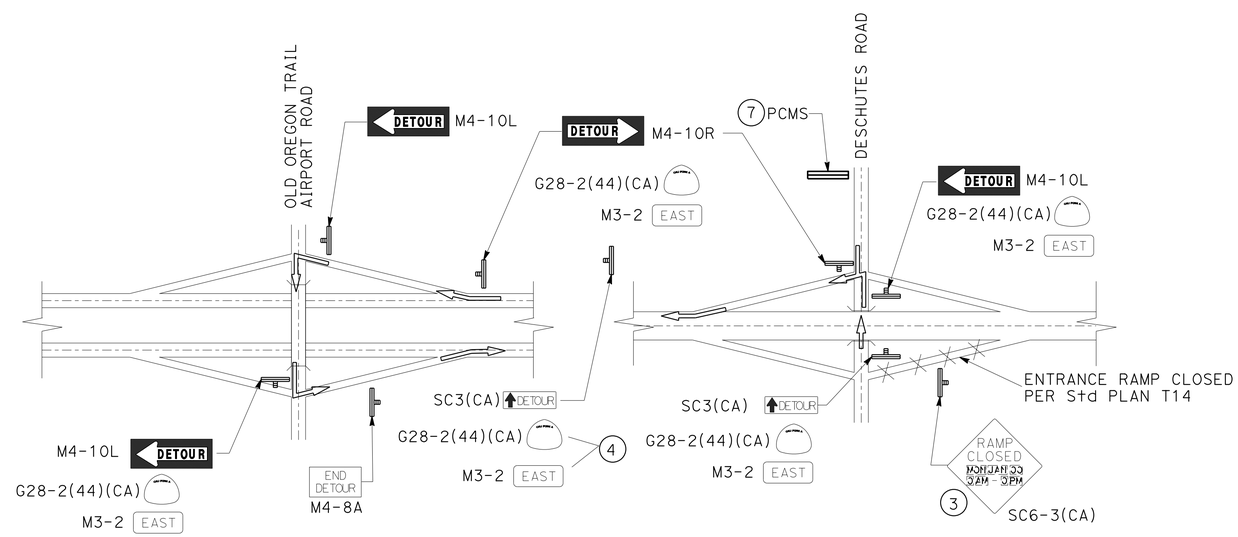

TYPICAL ENTRANCE RAMP DETOUR SIGNING

EB 44 - FROM DESCHUTES Rd

DETOUR PLAN

NO SCALE **DE-1**

MICHAEL CONNER — REVISED BY
KARLIE SMITH — DATE REVISED
CALCULATED-DESIGNED BY
CHECKED BY
LANCE BROWN — FUNCTIONAL SUPERVISOR

STATE OF CALIFORNIA - DEPARTMENT OF TRANSPORTATION
Caltrans® MAINTENANCE

P:\proj\02\4E950_plans\pse\24e950mg001.dgn

LAST REVISION DATE PLOTTED => 01-OCT-2012
09-26-12 TIME PLOTTED => 13:19

Dist	COUNTY	ROUTE	POST MILES TOTAL PROJECT	SHEET No.	TOTAL SHEETS
02	Sha	44	R4.3/R7.4	9	17

REGISTERED CIVIL ENGINEER 09-26-12 DATE

09-26-12
PLANS APPROVAL DATE

REGISTERED PROFESSIONAL ENGINEER MICHAEL A. CONNER No. C73123 Exp. 12-31-12 CIVIL STATE OF CALIFORNIA

THE STATE OF CALIFORNIA OR ITS OFFICERS OR AGENTS SHALL NOT BE RESPONSIBLE FOR THE ACCURACY OR COMPLETENESS OF SCANNED COPIES OF THIS PLAN SHEET.

NOTES:

1. PRE-NOTIFICATION PCMS: PLACE NEAR RAMP AND ACTIVATE APPROXIMATELY 12 HOURS PRIOR TO RAMP CLOSURE.

EXIT WILL BE CLOSED	TODAY (or TONIGHT) XX:XXPM - XX:XXAM
FRAME 1	FRAME 2

2. RAMP CLOSED PCMS: MOVE PRE-NOTIFICATION PCMS APPROXIMATELY 1000 FEET BEFORE RAMP AND ACTIVATE DURING RAMP CLOSURE.

RAMP TO DESCHUTES CLOSED	FOLLOW DETOUR
FRAME 1	FRAME 2

3. PLACE 7 DAYS PRIOR TO RAMP CLOSURE.
4. ADD SIGN(S) SPACED EQUALLY BETWEEN INTERCHANGES.
5. EXACT SIGN LOCATION TO BE DETERMINED BY THE ENGINEER.
6. EXISTING UTILITY FACILITIES ARE NOT SHOWN ON THESE PLANS.

CONSTRUCTION AREA SIGNS (PORTABLE SIGNS)

SIGN No. ◯	CODE	PANEL SIZE (INCH)	REMARKS	No. (EA)
Ⓐ *	SC6-3(CA)	48" x 48"	"RAMP CLOSED" "DATE-TIME"	1
Ⓑ	M4-10L SPECIAL	48" x 48" 48" x 24"	DETOUR (Lt ARROW) DESCHUTES ROAD	2
Ⓒ	M4-8A	24" x 18"	END DETOUR	1
			TOTAL	4

* SEE NOTE 3

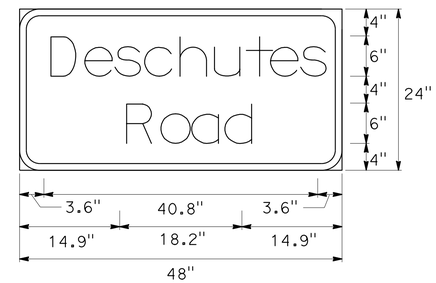

3.0" RADIUS, 1.0" BORDER, BLACK ON ORANGE;
[DESCHUTES] D; [ROAD] D;

SPECIAL

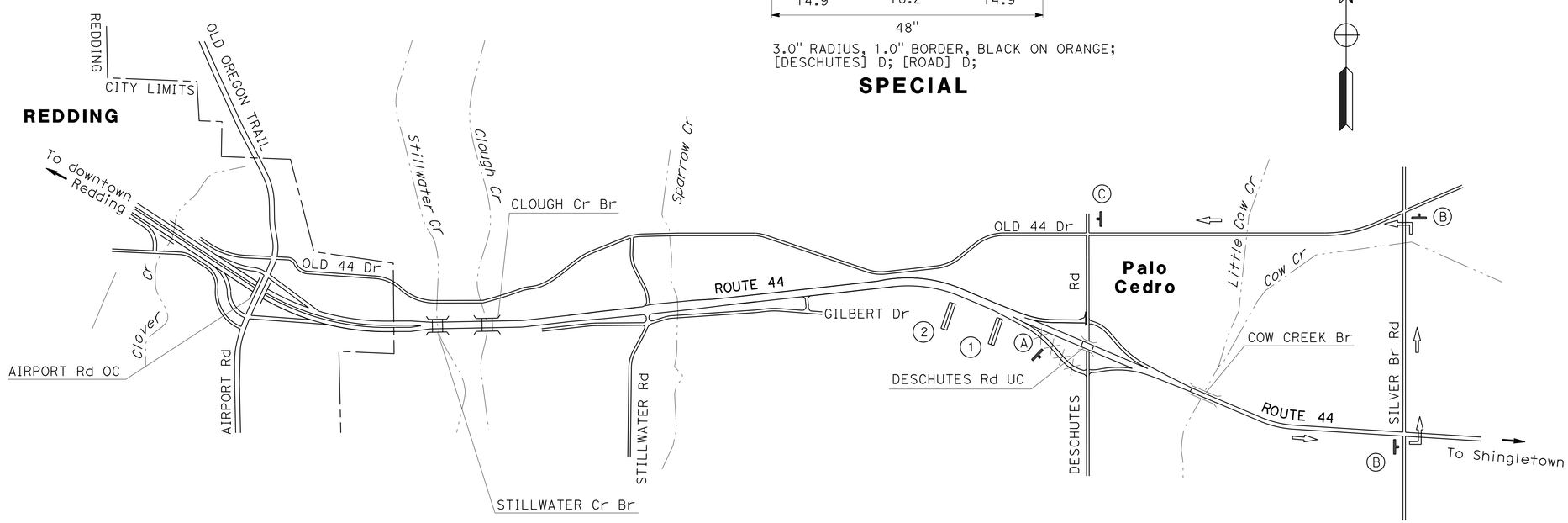

DETOUR FOR CLOSURE OF EB 44 TO DESCHUTES Rd

DETOUR PLAN

NO SCALE

DE-2

REVISED BY	DATE REVISED
MICHAEL CONNER	KARLIE SMITH
CALCULATED-DESIGNED BY	CHECKED BY
FUNCTIONAL SUPERVISOR	LANCE BROWN

STATE OF CALIFORNIA - DEPARTMENT OF TRANSPORTATION
Caltrans® MAINTENANCE

P:\proj\02\4E950_plans\pse\24e950mg002.dgn

LAST REVISION DATE PLOTTED => 01-OCT-2012
09-26-12 TIME PLOTTED => 13:19

Dist	COUNTY	ROUTE	POST MILES TOTAL PROJECT	SHEET No.	TOTAL SHEETS
02	Sha	44	R4.3/R7.4	10	17

REGISTERED CIVIL ENGINEER 09-26-12 DATE

09-26-12
PLANS APPROVAL DATE

REGISTERED PROFESSIONAL ENGINEER MICHAEL A. CONNER No. C73123 Exp. 12-31-12 CIVIL STATE OF CALIFORNIA

THE STATE OF CALIFORNIA OR ITS OFFICERS OR AGENTS SHALL NOT BE RESPONSIBLE FOR THE ACCURACY OR COMPLETENESS OF SCANNED COPIES OF THIS PLAN SHEET.

NOTES:

1. RAMP CLOSED PCMS:

RAMP TO WB 44 CLOSED	FOLLOW DETOUR
FRAME 1	FRAME 2

2. ADD SIGN(S) NEAR THE INTERSECTION WITH A MAJOR ROAD CONNECTIONS.
3. EXACT SIGN LOCATION TO BE DETERMINED BY THE ENGINEER.
4. EXISTING UTILITY FACILITIES ARE NOT SHOWN ON THESE PLANS.

CONSTRUCTION AREA SIGNS (PORTABLE SIGNS)

SIGN No. ◯	CODE	PANEL SIZE (INCH)	REMARKS	No. (EA)
Ⓐ	M4-10L G28-2 (44) (CA) M3-4	48" x 18" 24" x 24" 24" x 12"	DETOUR (Lt ARROW) ROUTE SHIELD (44) WEST	5
Ⓑ	SC3 (CA) G28-2 (44) (CA) M3-4	48" x 18" 24" x 24" 24" x 12"	DETOUR (UP ARROW) ROUTE SHIELD (44) WEST	4
Ⓒ	M4-8A	24" x 18"	END DETOUR	1
			TOTAL	10

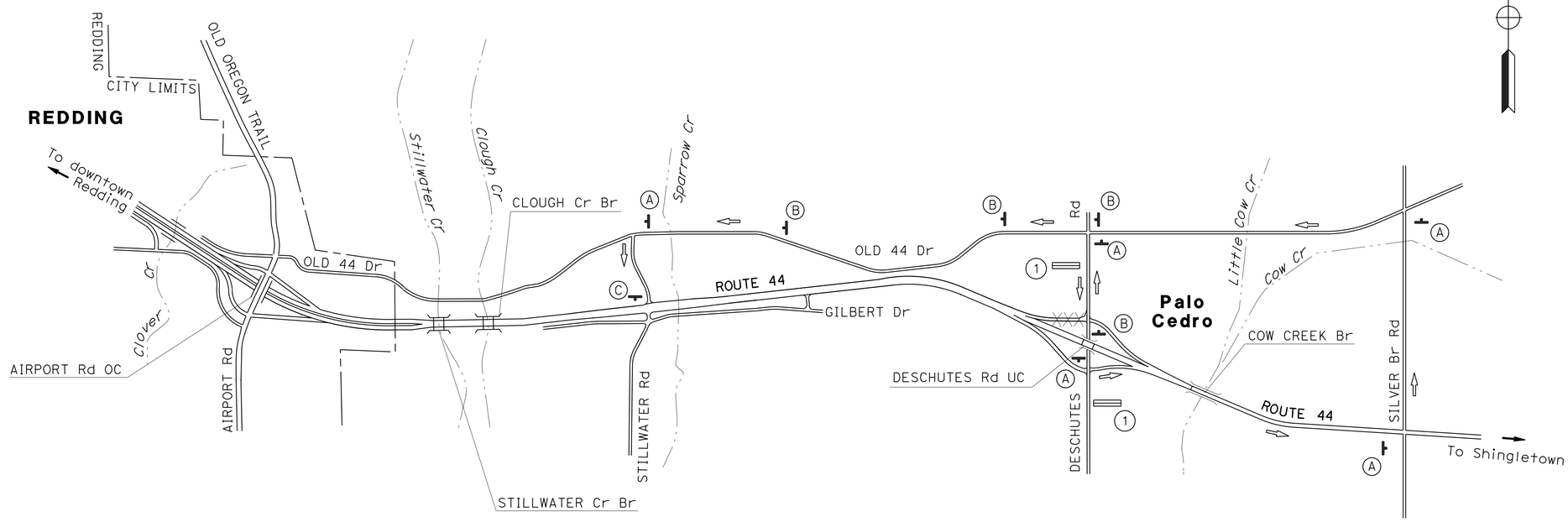

DETOUR FOR CLOSURE OF WB 44 ENTRANCE FROM DESCHUTES ROAD

DETOUR PLAN

NO SCALE

DE-3

MICHAEL CONNER — KARLIE SMITH — REVISED BY — DATE REVISED — CALCULATED-DESIGNED BY — CHECKED BY — FUNCTIONAL SUPERVISOR — LANCE BROWN

STATE OF CALIFORNIA - DEPARTMENT OF TRANSPORTATION — MAINTENANCE

P:\proj1\02\4E950_plans\pse\24e950mg003.dgn

LAST REVISION 09-26-12 — DATE PLOTTED => 01-OCT-2012 — TIME PLOTTED => 13:19

Dist	COUNTY	ROUTE	POST MILES TOTAL PROJECT	SHEET No.	TOTAL SHEETS
02	Sha	44	R4.3/R7.4	11	17

REGISTERED CIVIL ENGINEER 09-26-12 DATE

09-26-12
PLANS APPROVAL DATE

REGISTERED PROFESSIONAL ENGINEER MICHAEL A. CONNER No. C73123 Exp. 12-31-12 CIVIL STATE OF CALIFORNIA

THE STATE OF CALIFORNIA OR ITS OFFICERS OR AGENTS SHALL NOT BE RESPONSIBLE FOR THE ACCURACY OR COMPLETENESS OF SCANNED COPIES OF THIS PLAN SHEET.

NOTE:

1. EXISTING UTILITY FACILITIES ARE NOT SHOWN ON THESE PLANS.

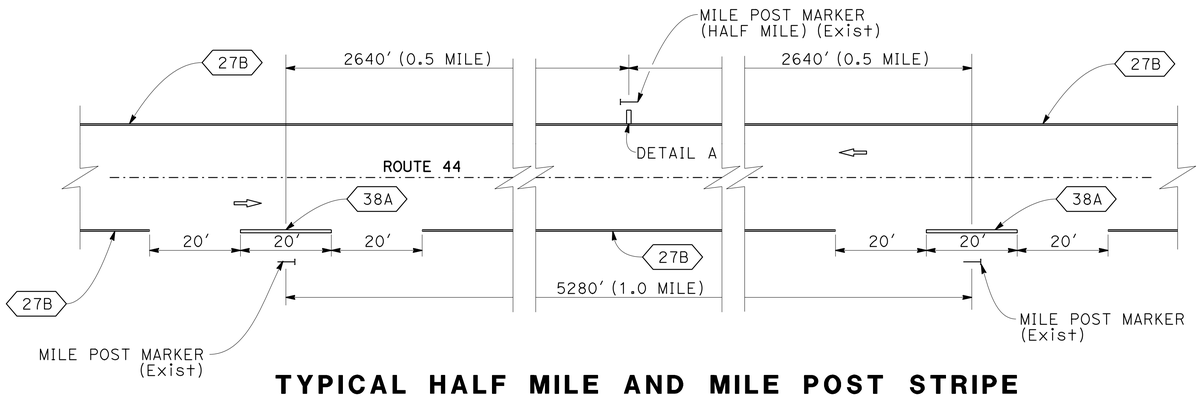

TYPICAL HALF MILE AND MILE POST STRIPE

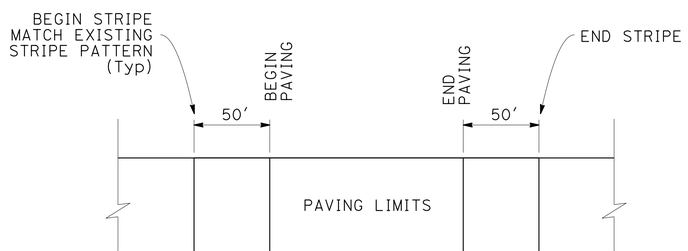

TRAFFIC STRIPE MATCH DETAIL

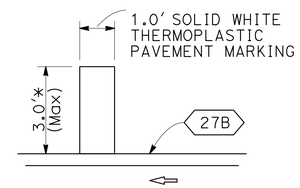

DETAIL A

* ACTUAL LENGTH MAY VARY DUE TO PAVEMENT WIDTH

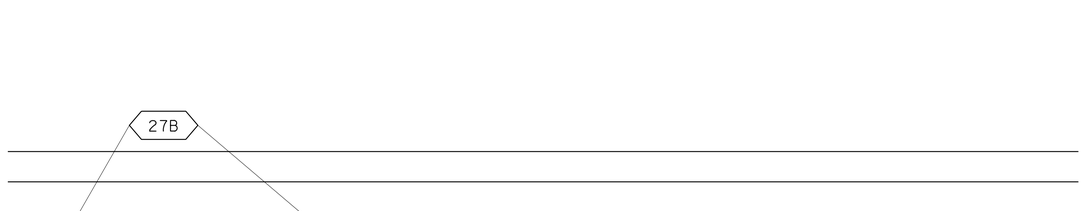

EDGE LINE FLAIR DETAIL

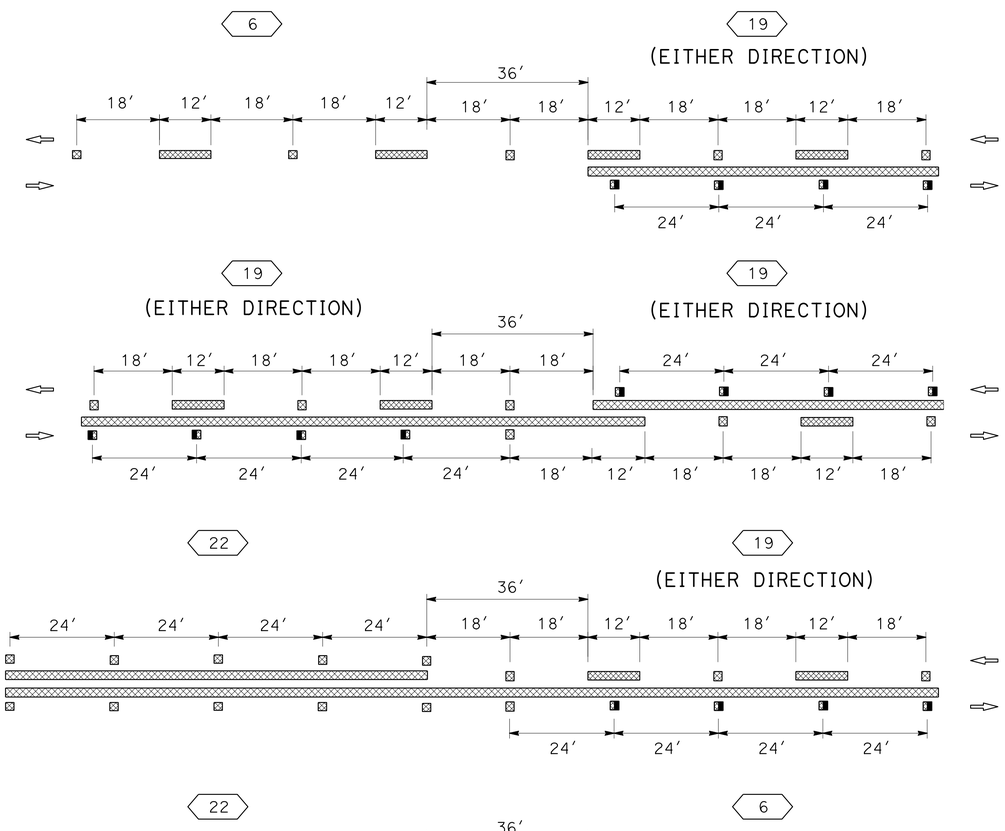

TYPICAL STRIPE TRANSITION DETAILS

PAVEMENT DELINEATION DETAILS

NO SCALE

PDD-1

REVISED BY | DATE REVISED
MICHAEL CONNER | KARLIE SMITH
CALCULATED-DESIGNED BY | CHECKED BY
FUNCTIONAL SUPERVISOR | LANCE BROWN

STATE OF CALIFORNIA - DEPARTMENT OF TRANSPORTATION
Caltrans® MAINTENANCE

P:\proj1\02\4E950_plans\pse\24e950nb001.dgn

LAST REVISION 09-26-12 | DATE PLOTTED => 01-OCT-2012 | TIME PLOTTED => 13:19

Dist	COUNTY	ROUTE	POST MILES TOTAL PROJECT	SHEET No.	TOTAL SHEETS
02	Sha	44	R4.3/R7.4	12	17

REGISTERED CIVIL ENGINEER 09-26-12 DATE

09-26-12
PLANS APPROVAL DATE

REGISTERED PROFESSIONAL ENGINEER MICHAEL A. CONNER No. C73123 Exp. 12-31-12 CIVIL STATE OF CALIFORNIA

THE STATE OF CALIFORNIA OR ITS OFFICERS OR AGENTS SHALL NOT BE RESPONSIBLE FOR THE ACCURACY OR COMPLETENESS OF SCANNED COPIES OF THIS PLAN SHEET.

NOTES:

1. EXISTING UTILITY FACILITIES ARE NOT SHOWN ON THESE PLANS.
2. (N) - NOT A SEPARATE PAY ITEM, FOR INFORMATION ONLY.

THERMOPLASTIC PAVEMENT MARKING

DESCRIPTION		PM	EB	WB	EA	SQFT	REMARKS
MAINLINE		R4.50	X		1	3.0	DETAIL A
		R4.86		X	1	42.0	TYPE III (R) ARROW
		R4.88		X	1	42.0	TYPE III (L) ARROW
		R4.92		X	1	42.0	TYPE III (R) ARROW
		R4.93		X	1	42.0	TYPE III (L) ARROW
		R4.97		X	1	42.0	TYPE III (R) ARROW
		R4.97		X	1	42.0	TYPE III (L) ARROW
		R4.99	X	X	2	152.0	ROAD CONNECTION LIMIT LINE
		R4.99	X	X	3	66.0	STOP
		R5.00	X		1	42.0	TYPE III (L) ARROW
		R5.00	X		1	42.0	TYPE III (R) ARROW
		R5.05	X		1	42.0	TYPE III (L) ARROW
		R5.05	X		1	42.0	TYPE III (R) ARROW
		R5.09	X		1	42.0	TYPE III (L) ARROW
		R5.10	X		1	42.0	TYPE III (R) ARROW
		R5.50	X		1	3.0	DETAIL A
		R5.93		X	1	31.0	ROAD CONNECTION LIMIT LINE
		R5.93		X	1	22.0	STOP
		R5.93	X		1	42.0	TYPE III (L) ARROW
		R5.96	X		1	42.0	TYPE III (L) ARROW
		R6.24	X		1	42.0	TYPE VI ARROW
		R6.26	X		1	42.0	TYPE VI ARROW
		R6.30	X		1	42.0	TYPE VI ARROW
		R6.50	X		1	3.0	DETAIL A
DESCHUTES Rd	EB EXIT	R6.81		X	2	84.0	TYPE III (L) ARROW
				X	1	45.0	TYPE II (L) ARROW
				X	1	59.0	TYPE II (B) ARROW
				X	2	44.0	STOP
				X	1	41.0	ROAD CONNECTION LIMIT LINE
	WB ENTRANCE	R6.84	X		3	126.0	TYPE VI ARROW
			X		1	33.0	TYPE V ARROW
			X		2	84.0	TYPE III (R) ARROW
	EB ENTRANCE	R7.18		X	2	66.0	TYPE V ARROW
				X	1	24.0	YIELD
				X	1	14.0	ROAD CONNECTION LIMIT LINE
	WB EXIT	R7.20	X		2	84.0	TYPE III (L) ARROW
			X		2	90.0	TYPE II (R) ARROW
			X		1	50.0	ROAD CONNECTION LIMIT LINE
			X		2	44.0	STOP
TOTAL						1882.0	

PAVEMENT MARKER (RETROREFLECTIVE)

POST MILE LIMITS	TYPE D	TYPE G	TYPE H
	EA	EA	EA
R4.34-R7.40	1006	352	184
TOTAL	1542		

REMOVE THERMOPLASTIC PAVEMENT MARKING

DESCRIPTION		PM	EB	WB	EA	SQFT	REMARKS
MAINLINE		R4.86		X	1	42.0	TYPE III (R) ARROW
		R4.88		X	1	42.0	TYPE III (L) ARROW
		R4.92		X	1	42.0	TYPE III (R) ARROW
		R4.93		X	1	42.0	TYPE III (L) ARROW
		R4.97		X	1	42.0	TYPE III (R) ARROW
		R4.97		X	1	42.0	TYPE III (L) ARROW
		R4.99	X	X	2	152.0	ROAD CONNECTION LIMIT LINE
		R4.99	X	X	3	66.0	STOP
		R5.00	X		1	42.0	TYPE III (L) ARROW
		R5.00	X		1	42.0	TYPE III (R) ARROW
		R5.05	X		1	42.0	TYPE III (L) ARROW
		R5.05	X		1	42.0	TYPE III (R) ARROW
		R5.09	X		1	42.0	TYPE III (L) ARROW
		R5.10	X		1	42.0	TYPE III (R) ARROW
		R5.93		X	1	31.0	ROAD CONNECTION LIMIT LINE
		R5.93		X	1	22.0	STOP
		R5.93	X		1	42.0	TYPE III (L) ARROW
		R5.96	X		1	42.0	TYPE III (L) ARROW
		R6.24	X		1	42.0	TYPE VI ARROW
		R6.26	X		1	42.0	TYPE VI ARROW
		R6.30	X		1	42.0	TYPE VI ARROW
DESCHUTES Rd	EB EXIT	R6.81		X	2	84.0	TYPE III (L) ARROW
				X	1	45.0	TYPE II (L) ARROW
				X	1	59.0	TYPE II (B) ARROW
				X	2	44.0	STOP
				X	1	41.0	ROAD CONNECTION LIMIT LINE
	WB ENTRANCE	R6.84	X		3	126.0	TYPE VI ARROW
			X		1	33.0	TYPE V ARROW
			X		2	84.0	TYPE III (R) ARROW
	EB ENTRANCE	R7.18		X	2	66.0	TYPE V ARROW
				X	1	24.0	YIELD
				X	1	14.0	ROAD CONNECTION LIMIT LINE
	WB EXIT	R7.20	X		2	84.0	TYPE III (L) ARROW
			X		2	90.0	TYPE II (R) ARROW
			X		1	50.0	ROAD CONNECTION LIMIT LINE
			X		2	44.0	STOP
TOTAL						1873.0	

THERMOPLASTIC TRAFFIC STRIPE (SPRAYABLE)

POSTMILE LIMITS	DETAIL 6	DETAIL 9	DETAIL 12	DETAIL 19	DETAIL 22	DETAIL 25A	DETAIL 27B	DETAIL 27C	DETAIL 29	DETAIL 36	DETAIL 36A	DETAIL 38	DETAIL 38A	DETAIL 38B
	LF	LF	LF	LF	LF	LF	LF	LF	LF	LF	LF	LF	LF	LF
R4.34-R7.40	5016	260	2886	529	5544	3832	36,376	1162	5069	525	733	4485	83	202
TOTAL	66,702													

PAVEMENT DELINEATION QUANTITIES
PDQ-1

REVISED BY | DATE REVISED
MICHAEL CONNER | KARLIE SMITH
CALCULATED-DESIGNED BY | CHECKED BY
FUNCTIONAL SUPERVISOR
LANCE BROWN

STATE OF CALIFORNIA - DEPARTMENT OF TRANSPORTATION
Caltrans MAINTENANCE

P:\proj1\02\4E950_plans\pse\24e950nc001.dgn

LAST REVISION 09-26-12 | DATE PLOTTED => 01-OCT-2012 | TIME PLOTTED => 13:19

Dist	COUNTY	ROUTE	POST MILES TOTAL PROJECT	SHEET No.	TOTAL SHEETS
02	Sha	44	R4.3/R7.4	13	17

REGISTERED CIVIL ENGINEER DATE 09-26-12

PLANS APPROVAL DATE 09-26-12

REGISTERED PROFESSIONAL ENGINEER MICHAEL A. CONNER No. C73123 Exp. 12-31-12 CIVIL STATE OF CALIFORNIA

THE STATE OF CALIFORNIA OR ITS OFFICERS OR AGENTS SHALL NOT BE RESPONSIBLE FOR THE ACCURACY OR COMPLETENESS OF SCANNED COPIES OF THIS PLAN SHEET.

NOTES:

1. EXACT LOCATIONS OF REPLACE ASPHALT CONCRETE SURFACING TO BE DETERMINED BY ENGINEER.
2. (N) - NOT A SEPARATE PAY ITEM, FOR INFORMATION ONLY.
3. EXISTING UTILITY FACILITIES ARE NOT SHOWN ON THESE PLANS.

ABBREVIATIONS:

RHMA-O RUBBERIZED HOT MIX ASPHALT (OPEN GRADED)

PREPAVING GRINDING DAY

POSTMILE LIMITS	EA
R4.34-R7.40	2
TOTAL	2

PLACE HMA DIKE (TYPE F)

POSTMILE	SIDE	LENGTH
		LF
R6.97	L+	112.5
R6.97	R+	137.5
R7.01	L+	131.0
R7.01	R+	112.5
TOTAL		493.5

ROADWAY QUANTITIES

POST MILE LIMITS	(N) LENGTH	(N) WIDTH	RHMA-O	HMA (TYPE A)	TACK COAT	SHOULDER BACKING	ASPHALTIC EMULSION (FOG SEAL COAT)
PM - PM	LF	LF	TON	TON	TON	TON	TON
R4.34-R4.45	580.8	40.0-46.0					
R4.45-R4.55	528.0	46.0-40.0					
R4.56-R4.68	633.6	40.0-48.0					
R4.68-R4.78	528.0	48.0-41.5					
R4.78-R4.88	528.0	41.5-68.0					
R4.88-R4.97	475.2	68.0-79.0					
R4.97-R4.99	105.6	79.0					
R4.99-R5.00	52.8	79.0-69.0					
R5.00-R5.09	475.2	69.0-65.0					
R5.09-R5.21	633.6	65.0-42.0					
R5.21-R5.33	633.6	42.0-40.0					
R5.33-R5.37	211.2	50.0					
R5.37-R5.38	52.8	40.0					
R5.38-R5.40	105.6	65.0-47.5					
R5.40-R5.54	739.2	47.5					
R5.54-R5.58	211.2	47.5-53.0					
R5.58-R5.71	686.4	43.0-42.0					
R5.71-R5.83	633.6	48.0-45.0					
R5.83-R5.90	369.6	45.0-57.0					
R5.90-R5.95	264.0	57.0-61.0	5569		30.6	445	
R5.95-R6.00	264.0	61.0-43.0					
R6.00-R6.08	422.4	43.0-47.0					
R6.08-R6.14	316.8	55.0-58.0					
R6.14-R6.15	52.8	58.0-69.0					
R6.15-R6.18	158.4	56.0-61.0					
R6.18-R6.19	52.8	66.0-60.0					
R6.19-R6.22	158.4	60.0-61.0					
R6.22-R6.23	52.8	61.0-68.0					
R6.23-R6.39	844.8	60.0-63.0					
R6.39-R6.45	316.8	63.0-59.0					
R6.45-R6.46	52.8	59.0-84.0					
R6.46-R6.47	52.8	84.0-61.0					
R6.47-R6.59	633.6	61.0-62.0					
R6.59-R6.69	528.0	54.0-53.5					
R6.69-R6.94	1320.0	53.5-44.0					
R6.94-R7.00	316.8	44.0-40.0					
R7.03-R7.18	792.0	40.0-52.0					
R7.18-R7.32	739.2	52.0-57.0					
R7.32-R7.40	422.4	57.0-40.0					
HMA DIKE				7			
ROAD CONNECTIONS/RAMPS			1301		8.7	342	0.2
TOTAL			6870	7	39.3	787	0.2

REMOVE ASPHALT CONCRETE DIKE

POSTMILE	SIDE	LENGTH
		LF
R6.97	L+	112.5
R6.97	R+	137.5
R7.01	L+	131.0
R7.01	R+	112.5
TOTAL		493.5

COLD PLANE ASPHALT CONCRETE PAVEMENT

POST MILE	(N) LENGTH	(N) WIDTH	AREA	REMARKS
	LF	LF	SQYD	
R4.34	40	44	196	STILLWATER CREEK Br EB
R4.55	40	42	187	CLOUGH CREEK Br BB
R4.56	40	42	187	CLOUGH CREEK Br EB
R4.99	20	25-30	61	STILLWATER Rd - R+
R4.99	20	34-40	82	STILLWATER Rd - L+
R5.93	20	30	67	GILBERT Dr - R+
R6.81	43 & 80	23-64	388	EB EXIT TO DESCHUTES Rd
R6.84	104 & 163	21-39	679	WB ENTRANCE FROM DESCHUTES Rd
R7.00	40	44	196	DESCHUTES Rd UC BB
R7.03	40	44	196	DESCHUTES Rd UC EB
R7.18	45 & 70	12-39	231	EB ENTRANCE FROM DESCHUTES Rd
R7.20	20	42-81	137	WB EXIT TO DESCHUTES Rd
R7.40	40	43	191	COW CREEK Br BB
TOTAL			2798	

RUMBLE STRIP

POST MILE LIMITS	DIRECTION	Sta
R4.34-R4.77	EB & WB	46
R5.21-R5.48	EB & WB	30
R5.48-R5.68	EB, WB, & MIDDLE	33
R5.68-R5.85	EB & WB	18
R6.07-R6.76	EB & WB	74
R6.85-R7.20	EB & WB	38
R7.31-R7.40	WB	5
TOTAL		244

REPLACE ASPHALT CONCRETE SURFACING

POST MILE LIMITS	(N) No. OF DIGOUTS	(N) Avg LENGTH	(N) WIDTH	(N) DEPTH	REPLACE AC SURFACING
PM - PM		LF	LF	LF	CY
R4.34-R5.00	10	100	4	0.33	49
R5.00-R6.00	10	100	4	0.33	49
R6.00-R7.00	10	100	4	0.33	49
R7.00-R7.34	5	100	4	0.33	25
TOTAL					172

METAL BEAM GUARD RAIL ITEMS

POST MILE	DIRECTION	RECONSTRUCT MBGR	REMOVE MBGR	ALTERNATIVE FLARED TERMINAL SYSTEM (N)*	MINOR CONCRETE (MINOR STRUCTURE)	TRANSITION RAILING (TYPE WB)	BURIED (N)*
		LF	LF	EA	CY	EA	EA
R5.93	EB	762.5		1			1
R5.97	WB	362.5		2			
R6.97	EB	112.5	25		1.2	1	
R6.97	WB	87.5	25		1.2	1	
R7.01	EB	87.5	25		1.2	1	
R7.01	WB	106.0	25		1.2	1	
TOTAL		1518.5	100	3	4.8	4	1

* INCLUDED IN RECONSTRUCTION QUANTITY.

SUMMARY OF QUANTITIES

Q-1

REVISED BY | DATE REVISED

MICHAEL CONNER | KARLIE SMITH

CALCULATED-DESIGNED BY | CHECKED BY

FUNCTIONAL SUPERVISOR: LANCE BROWN

STATE OF CALIFORNIA - DEPARTMENT OF TRANSPORTATION

Caltrans® MAINTENANCE

P:\proj1\02\4E950_plans\pse\24e950pa001.dgn

LAST REVISION 09-26-12 | DATE PLOTTED => 01-OCT-2012 TIME PLOTTED => 13:19

Dist	COUNTY	ROUTE	POST MILES TOTAL PROJECT	SHEET No.	TOTAL SHEETS
02	Sha	44	R4.3/R7.4	14	17

REGISTERED CIVIL ENGINEER 09-26-12 DATE

09-26-12
PLANS APPROVAL DATE

REGISTERED PROFESSIONAL ENGINEER THERESA ANDERSON No. C77957 Exp. 6-30-13 CIVIL STATE OF CALIFORNIA

THE STATE OF CALIFORNIA OR ITS OFFICERS OR AGENTS SHALL NOT BE RESPONSIBLE FOR THE ACCURACY OR COMPLETENESS OF SCANNED COPIES OF THIS PLAN SHEET.

NOTES:

1. FOR ACCURATE RIGHT OF WAY AND ACCESS DATA, CONTACT RIGHT OF WAY ENGINEERING AT THE DISTRICT OFFICE.
2. EXISTING UTILITY FACILITIES ARE NOT SHOWN ON THESE PLANS.
3. (N) - NOT A SEPARATE PAY ITEM, FOR INFORMATION ONLY.

NOTES (THIS SHEET):

1. LOOP AND AXLE SENSOR LOCATIONS ARE APPROXIMATE. FINAL LOCATION WILL BE DETERMINED BY THE ENGINEER.
2. AB Exist LOOPS.

3 COIL 10' OF CABLES IN THE CABINET.

4 INSTALL AXLE SENSOR 2" FROM LANE LINE. TYPICAL OF 2.

LEGEND:

— PROPOSED AXLE SENSOR

ABBREVIATIONS:

Cab CABINET
STC SCREEN TRANSMISSION CABLE

TRAFFIC COUNT STATION QUANTITIES

(N) TYPE A LOOP DETECTOR	(N) AXLE SENSOR
EA	EA
3	6

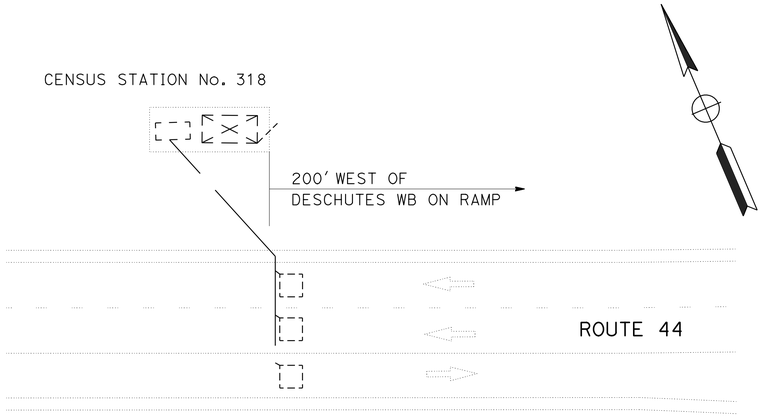

EXISTING FACILITIES

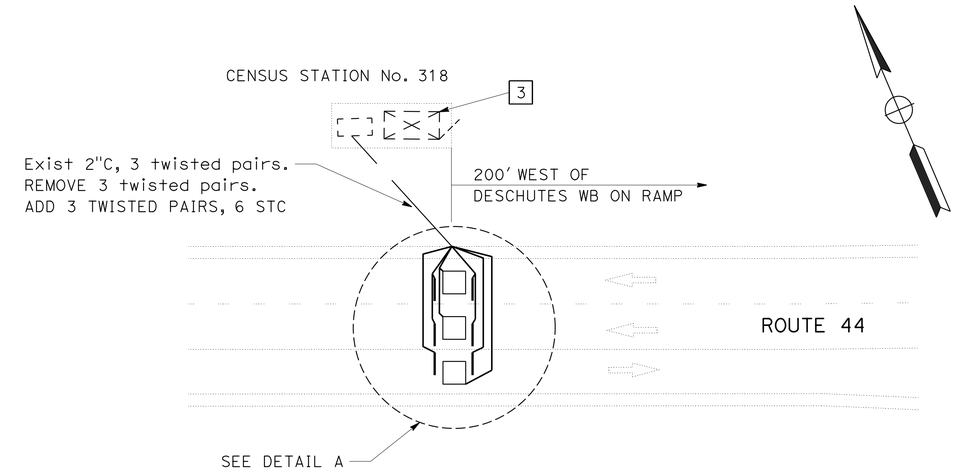

PROPOSED FACILITIES

EXISTING LOOP DETECTORS TO REMAIN IN PLACE AND OPERATIONAL

ID No.	LOCATION	TYPE	DESCRIPTION	EQUIPMENT
R109	SHA-44-R6.81	RAMP	DESCHUTES EB OFF-RAMP PB 25' WEST OF PAVED GORE NOSE	1 LOOP
R110	SHA-44-R6.77	RAMP	DESCHUTES WB ON-RAMP 200' WEST OF PAVED GORE NOSE	1 LOOP
210	SHA-44-R7.37	CONTROL	ON MAINLINE 174' WEST OF COW CREEK BRIDGE	2 LOOPS
R111	SHA-44-R7.23	RAMP	DESCHUTES EB ON-RAMP 234' EAST OF PAVED GORE	1 LOOP
R112	SHA-44-R7.21	RAMP	DESCHUTES WB OFF-RAMP. PB DIRECTLY ACROSS FROM END OF PAVED GORE	1 LOOP

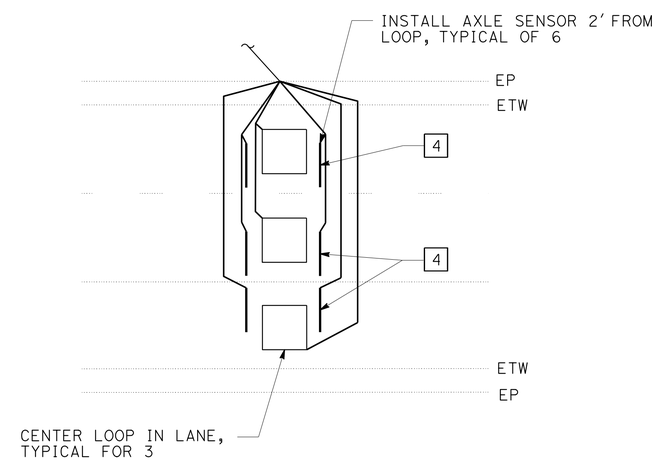

DETAIL A

MODIFY TRAFFIC COUNT STATION

NO SCALE

E-1

APPROVED FOR ELECTRICAL WORK ONLY

REVISED BY | DATE REVISED
TERI ANDERSON | ARTURO ROBLES
CALCULATED-DESIGNED BY | CHECKED BY
FUNCTIONAL SUPERVISOR: ROB STINGER
STATE OF CALIFORNIA - DEPARTMENT OF TRANSPORTATION
Caltrans® ELECTRICAL DESIGN
P:\proj\02\4E950_plans\pse\24e950ua001.dgn

LAST REVISION | DATE PLOTTED => 01-OCT-2012 | TIME PLOTTED => 13:19
09-26-12

Dist	COUNTY	ROUTE	POST MILES TOTAL PROJECT	SHEET No.	TOTAL SHEETS
02	Sha	44	R4.3/R7.4	15	17

REGISTERED CIVIL ENGINEER

April 20, 2012
PLANS APPROVAL DATE

REGISTERED PROFESSIONAL ENGINEER
Roberta L. McLaughlin
No. C40375
Exp. 3-31-13
CIVIL
STATE OF CALIFORNIA

THE STATE OF CALIFORNIA OR ITS OFFICERS OR AGENTS SHALL NOT BE RESPONSIBLE FOR THE ACCURACY OR COMPLETENESS OF SCANNED COPIES OF THIS PLAN SHEET.

TO ACCOMPANY PLANS DATED 09-26-12

2010 REVISED STANDARD PLAN RSP A24A

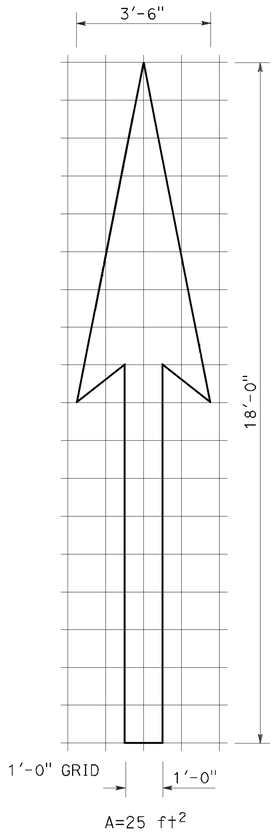

A=25 ft^2

TYPE I 18'-0" ARROW

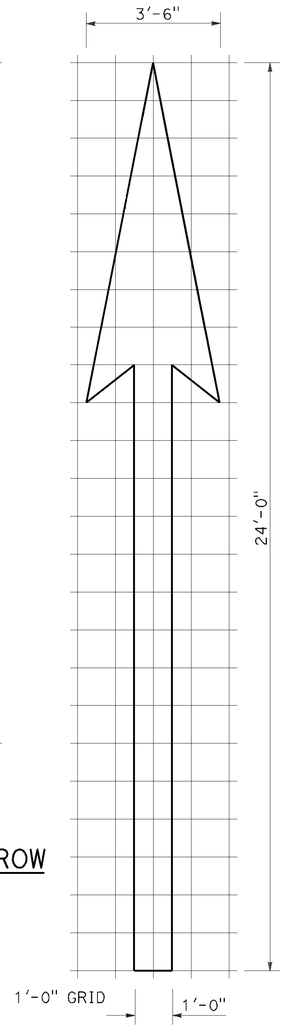

A=31 ft^2

TYPE I 24'-0" ARROW

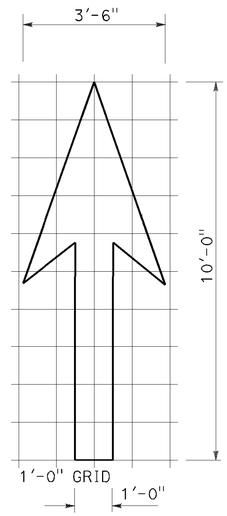

A=14 ft^2

TYPE I 10'-0" ARROW

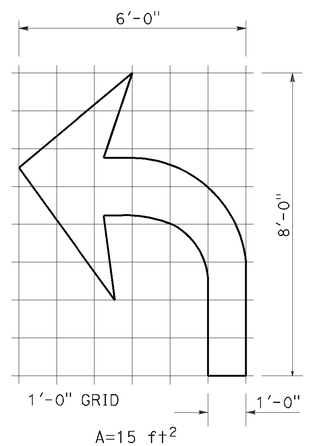

A=15 ft^2

TYPE IV (L) ARROW

(For Type IV (R) arrow, use mirror image)

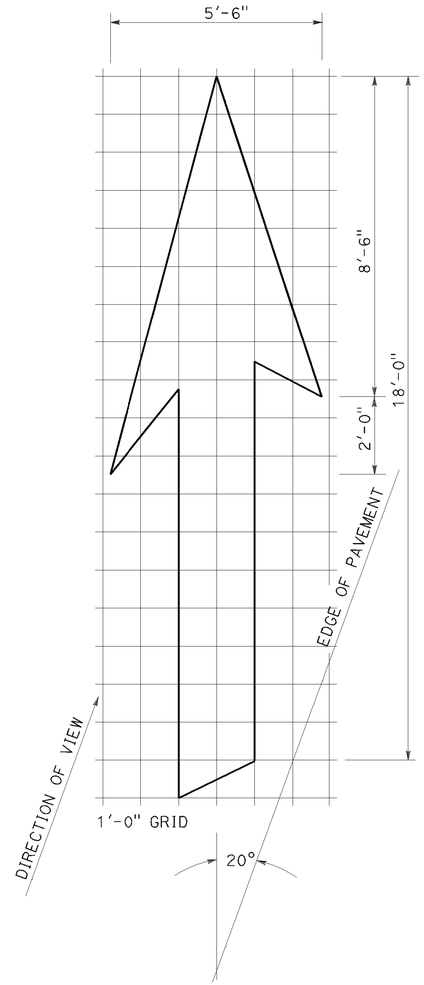

A=42 ft^2

TYPE VI ARROW

Right lane drop arrow
(For left lane, use mirror image)

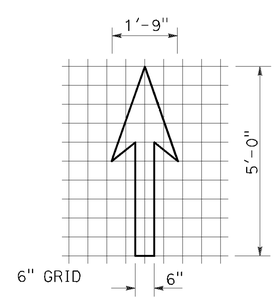

A=3.5 ft^2

BIKE LANE ARROW

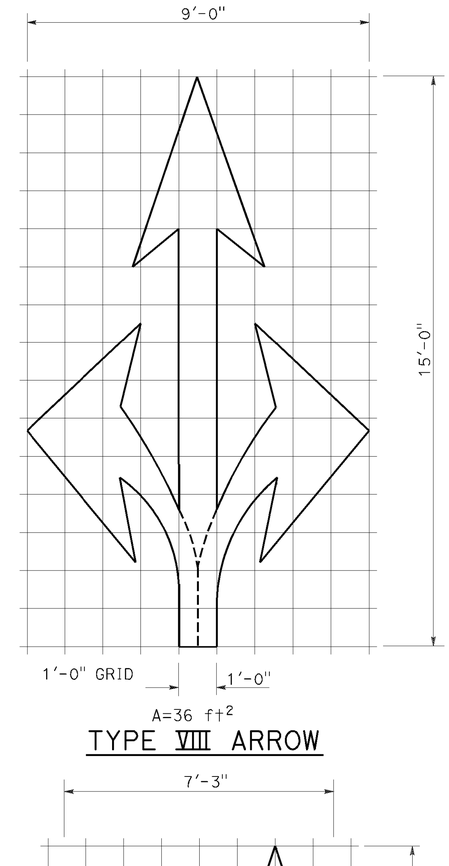

A=36 ft^2

TYPE VIII ARROW

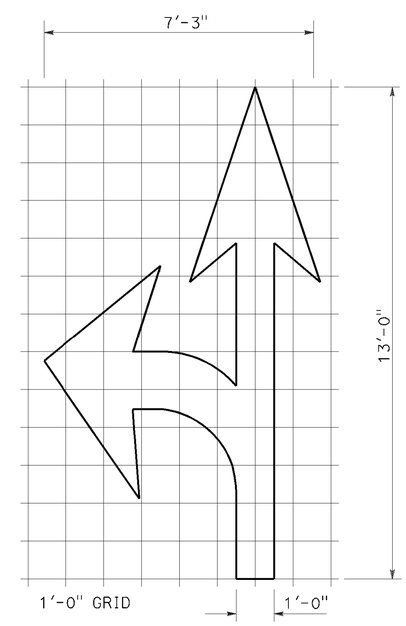

A=27 ft^2

TYPE VII (L) ARROW

(For Type VII (R) arrow, use mirror image)

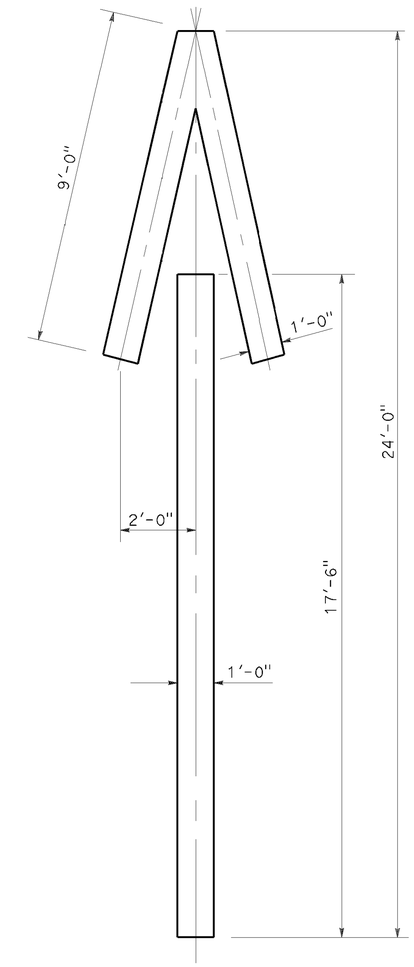

A=33 ft^2

TYPE V ARROW

NOTE:
Minor variations in dimensions may be accepted by the Engineer.

STATE OF CALIFORNIA
DEPARTMENT OF TRANSPORTATION

PAVEMENT MARKINGS ARROWS

NO SCALE

RSP A24A DATED APRIL 20, 2012 SUPERSEDES STANDARD PLAN A24A DATED MAY 20, 2011 - PAGE 13 OF THE STANDARD PLANS BOOK DATED 2010.

REVISED STANDARD PLAN RSP A24A

P:\proj1\02\4E950_plans\pse\24e950va001.dgn

USERNAME => s115152
DGN FILE => 24e950va001.dgn

DATE PLOTTED => 01-OCT-2012
TIME PLOTTED => 13:19

3-14-12

DIST	COUNTY	ROUTE	POST MILES TOTAL PROJECT	SHEET NO.	TOTAL SHEETS
02	Sha	44	R4.3/R7.4	16	17

REGISTERED ELECTRICAL ENGINEER

January 20, 2012
PLANS APPROVAL DATE

REGISTERED PROFESSIONAL ENGINEER Jeffery G. McRae No. E14512 Exp. 6-30-12 ELECTRICAL STATE OF CALIFORNIA

THE STATE OF CALIFORNIA OR ITS OFFICERS OR AGENTS SHALL NOT BE RESPONSIBLE FOR THE ACCURACY OR COMPLETENESS OF SCANNED COPIES OF THIS PLAN SHEET.

TO ACCOMPANY PLANS DATED 09-26-12

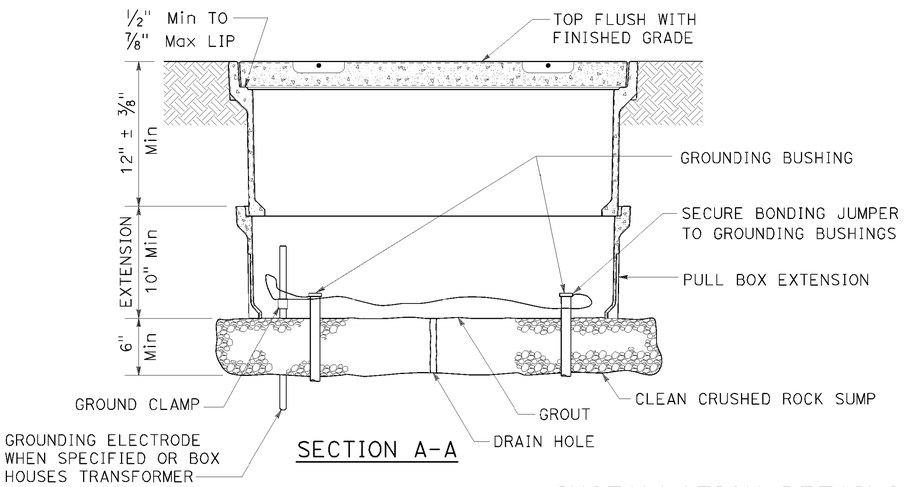

SECTION A-A

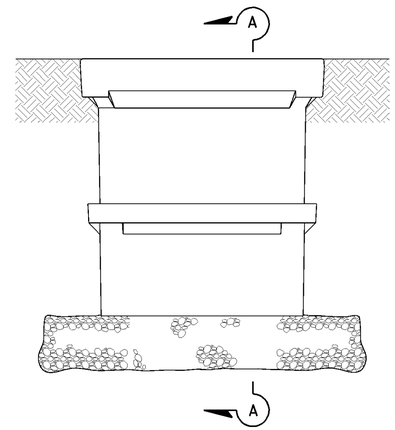

SIDE VIEW

INSTALLATION DETAILS

DETAIL A

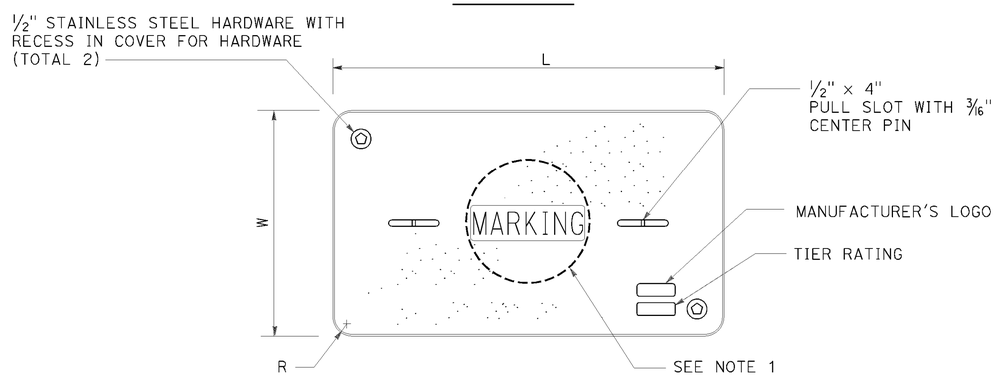

COVER TOP VIEW

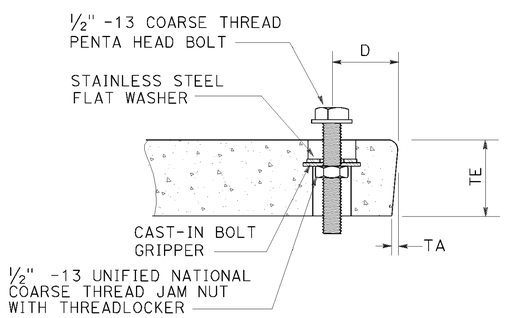

TYPICAL COVER CAPTIVE BOLT

OR SIMILAR

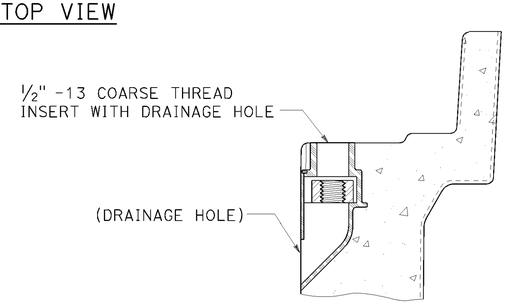

TYPICAL THREADED INSERT

OR SIMILAR

DIMENSION TABLE										
PULL BOX	PULL BOX			COVER						
	MINIMUM DEPTH BOX	MINIMUM DEPTH EXTENSION	MAXIMUM WEIGHT	L	W	R	TE	TA	D	MAXIMUM WEIGHT
No. 3½	12"	N/A	40 lb	1' - 3⅜"	10⅛"	1⅜"	2"	⅛"	1¾"	30 lb
No. 5	12"	10"	55 lb	1' - 11¼"	1' - 1¾"	1⅜"	2"	⅛"	1¾"	60 lb
No. 6	12"	10"	70 lb	2' - 6½"	1' - 5½"	1⅜"	2"	⅛"	2"	85 lb

NOTES ON PULL BOXES:

1. Pull box covers must be marked as follows: "SERVICE" Service circuits between service point and service disconnect; "SPRINKLER-CONTROL" sprinkler control circuits, 50 V or less; "CALTRANS" on all pull boxes, except pull boxes marked "SPRINKLER-CONTROL"; and "TELEPHONE" Telephone service;

   A) No. 3½ pull box.
      1) "SIGNAL" - Traffic signal circuits with or without street or sign lighting circuits.
      2) "ST LIGHTING" - Street or sign lighting circuits where voltage is under 600 V.

   B) No. 5, 6, 9 or 9A pull box.
      1) "TRAFFIC SIGNAL" - Traffic signal circuits with or without street or sign lighting circuits.
      2) "STREET LIGHTING" - Street or sign lighting circuits where voltage is under 600 V.
      3) "STREET LIGHTING-HIGH VOLTAGE" - Street or sign lighting circuits where voltage is above 600 V.
      4) "IRRIGATION" - Circuits to irrigation controller 120 V or more.
      5) "RAMP METER" - Ramp meter circuits.
      6) "COUNT STATION" - Count or speed monitor circuits.
      7) "COMMUNICATIONS" - Communication circuits.
      8) "TOS COMMUNICATIONS" - TOS communication line.
      9) "TOS POWER" - TOS power.
      10) "TDC POWER" - Telephone demarcation cabinet power.
      11) "CCTV" - Closed circuit television circuits.
      12) "TMS" - Traffic monitoring station circuits.
      13) "CMS" - Changeable message sign circuits.
      14) "HAR" - Highway advisory radio circuits.

2. The nominal dimensions of the opening in which the cover sets must be the same as the cover dimensions (L and W) plus ⅛" or greater.

3. Covers and boxes must be interchangeable with California Standard. When interchanged with a standard, the top surfaces must be flush within ⅛". Top outside radius of covers and pull boxes must have a ⅛" radius.

4. Pull box extension may be another pull box as long as the bottom edge of the pull box can fit into the cover opening.

STATE OF CALIFORNIA
DEPARTMENT OF TRANSPORTATION

ELECTRICAL SYSTEMS (PULL BOX)

NO SCALE

RSP ES-8A DATED JANUARY 20, 2012 SUPPLEMENTS THE STANDARD PLANS BOOK DATED 2010.

REVISED STANDARD PLAN RSP ES-8A

2010 REVISED STANDARD PLAN RSP ES-8A

P:\proj1\02\4E950_plans\pse\24e950va002.dgn

USERNAME => s115152
DGN FILE => 24e950va002.dgn

DATE PLOTTED => 01-OCT-2012
TIME PLOTTED => 13:19

01-09-12

DIST	COUNTY	ROUTE	POST MILES TOTAL PROJECT	SHEET NO.	TOTAL SHEETS
02	Sha	44	R4.3/R7.4	17	17

REGISTERED ELECTRICAL ENGINEER

January 20, 2012
PLANS APPROVAL DATE

REGISTERED PROFESSIONAL ENGINEER Jeffery G. McRae No. E14512 Exp. 6-30-12 ELECTRICAL STATE OF CALIFORNIA

THE STATE OF CALIFORNIA OR ITS OFFICERS OR AGENTS SHALL NOT BE RESPONSIBLE FOR THE ACCURACY OR COMPLETENESS OF SCANNED COPIES OF THIS PLAN SHEET.

TO ACCOMPANY PLANS DATED 09-26-12

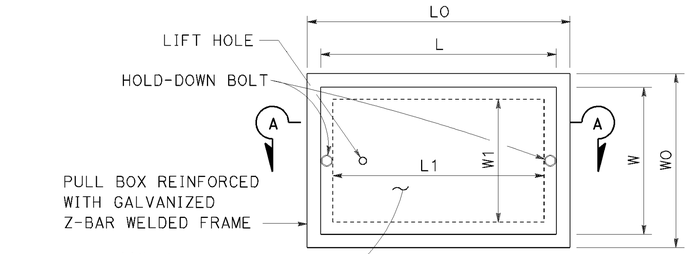

TOP VIEW

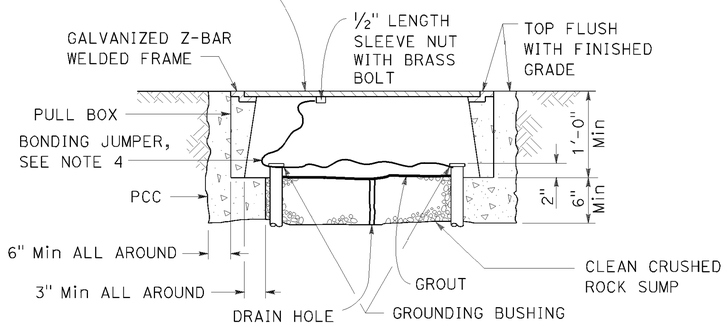

SECTION A-A

No. 3½(T), No. 5(T) AND No. 6(T) TRAFFIC PULL BOX

NOTES ON PULL BOXES:

1. Traffic pull box shall be provided with steel cover and special concrete footing. Steel cover shall have embossed non-skid pattern.
2. Steel reinforcing shall be as regularly used in the standard products of the respective manufacturer.
3. Pull box covers must be marked as follows: "SERVICE" Service circuits between service point and service disconnect; "SPRINKLER-CONTROL" Sprinkler control circuits, 50 V or less; "CALTRANS" On all pull boxes, except pull boxes marked "SPRINKLER-CONTROL"; and "TELEPHONE" Telephone service.
   A) No. 3½(T) pull box.
      1) "SIGNAL" - Traffic signal circuits with or without street or sign lighting circuits.
      2) "ST LIGHTING" - Street or sign lighting circuits where voltage is under 600 V.
   B) No. 5(T) or 6(T) pull box.
      1) "TRAFFIC SIGNAL" - Traffic signal circuits with or without street or sign lighting circuits.
      2) "STREET LIGHTING" - Street or sign lighting circuits where voltage is under 600 V.
      3) "STREET LIGHTING-HIGH VOLTAGE" - Street or sign lighting circuits where voltage is above 600 V.
      4) "IRRIGATION" - Circuits to irrigation controller 120 V or more.
      5) "RAMP METER" - Ramp meter circuits.
      6) "COUNT STATION" - Count or speed monitor circuits.
      7) "COMMUNICATION" - Communication circuits.
      8) "TOS COMMUNICATIONS" - TOS communications line.
      9) "TOS POWER" - TOS power.
      10) "TDC POWER" - Telephone demarcation cabinet power.
      11) "CCTV" - Closed circuit television circuits.
      12) "TMS" - Traffic monitoring station circuits.
      13) "CMS" - Changeable message sign circuits.
      14) "HAR" - Highway advisory radio circuits.
4. Bonding jumper for metal covers shall be 3' long, minimum.
5. The nominal dimensions of the opening in which the cover sets must be the same as the cover dimensions except the length and width dimensions shall be ⅛" greater.
6. Covers and boxes must be interchangeable with California standard male and female gages. When interchanged with a standard male or female gage, the top surfaces must be flush within ⅛".

DIMENSION TABLE

PULL BOX	BOX						COVER				
	MINIMUM * THICKNESS	MINIMUM DEPTH BOX AND EXTENSION	WO	LO	L1	W1	L **	W **	R	EDGE THICKNESS	EDGE TAPER
No. 3½(T)	1½"	1'-0"	1'-5"± 1"	1'-8⅞"±	1'-2½"±	10⅝"± 1"	1'-8"±	1'-1¾"±	0"	½"	NONE
No. 5(T)	1¾"	1'-0"	1'-11½"± 1"	2'-5½"±	1'-7"±	1'-1"± 1"	2'-3"±	1'-4"±	0"	½"	NONE
No. 6(T)	2"	1'-0"	2'-6"± 1"	2'-11½"±	1'-11½"±	1'-5"± 1"	2'-9"±	1'-8"±	0"	½"	NONE

* EXCLUDING CONDUIT WEB ** TOP DIMENSION

STATE OF CALIFORNIA
DEPARTMENT OF TRANSPORTATION

ELECTRICAL SYSTEMS (TRAFFIC RATED PULL BOX)

NO SCALE

RSP ES-8B DATED JANUARY 20, 2012 SUPPLEMENTS THE STANDARD PLANS BOOK DATED 2010.

REVISED STANDARD PLAN RSP ES-8B

2010 REVISED STANDARD PLAN RSP ES-8B

P:\proj1\02\4E950_plans\pse\24e950va003.dgn
USERNAME => s115152
DGN FILE => 24e950va003.dgn
DATE PLOTTED => 01-OCT-2012
TIME PLOTTED => 13:19
01-05-12