Dist	COUNTY	ROUTE	POST MILES TOTAL PROJECT	SHEET No.	TOTAL SHEETS
02	Teh	32	5.1/6.3	1	74

ACSTP-P032(042)E

STATE OF CALIFORNIA

DEPARTMENT OF TRANSPORTATION

PROJECT PLANS FOR CONSTRUCTION ON

STATE HIGHWAY

IN TEHAMA COUNTY ABOUT 18 MILES EAST OF FOREST RANCH FROM 1.6 MILES TO 2.9 MILES EAST OF SODA SPRINGS ROAD

TO BE SUPPLEMENTED BY STANDARD PLANS DATED MAY 2010

INDEX OF PLANS

SHEET No.	DESCRIPTION
1	TITLE AND LOCATION MAP
2-3	TYPICAL CROSS SECTIONS
4-8	LAYOUTS
9-13	PROFILES AND SUPERELEVATION DIAGRAMS
14-18	CONSTRUCTION DETAILS
19-37	DRAINAGE PLANS, PROFILES, DETAILS AND QUANTITIES
38	CONSTRUCTION AREA SIGNS
39-48	PAVEMENT DELINEATION AND SIGN PLANS, DETAILS AND QUANTITIES
49	SUMMARY OF QUANTITIES
50-55	EROSION CONTROL PLANS
56-74	REVISED STANDARD PLANS

THE STANDARD PLANS LIST APPLICABLE TO THIS CONTRACT IS INCLUDED IN THE NOTICE TO BIDDERS AND SPECIAL PROVISIONS BOOK.

LOCATION MAP

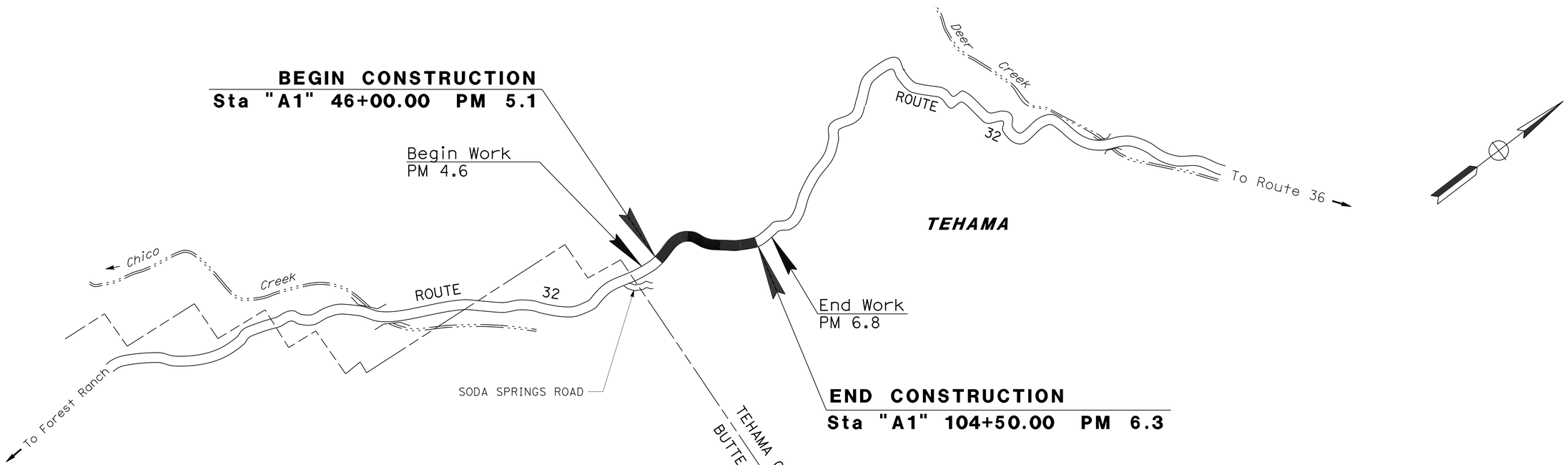

THE CONTRACTOR SHALL POSSESS THE CLASS (OR CLASSES) OF LICENSE AS SPECIFIED IN THE "NOTICE TO BIDDERS."

NO SCALE

07-28-14
PROJECT ENGINEER DATE
REGISTERED CIVIL ENGINEER

July 28, 2014
PLANS APPROVAL DATE

REGISTERED PROFESSIONAL ENGINEER
MICHAEL E. FEAKES
No. C70755
Exp. 6/30/15
CIVIL
STATE OF CALIFORNIA

THE STATE OF CALIFORNIA OR ITS OFFICERS OR AGENTS SHALL NOT BE RESPONSIBLE FOR THE ACCURACY OR COMPLETENESS OF SCANNED COPIES OF THIS PLAN SHEET.

CONTRACT No.	02-4E90U4
PROJECT ID	0214000080

LAST REVISION 07-28-14
DATE PLOTTED => 14-AUG-2014
TIME PLOTTED => 11:19

PROJECT MANAGER CHRIS HARVEY
DESIGN ENGINEER AL TRUJILLO

P:\proj\02\4E900_plans\pse\24e900ab001.dgn

Dist	COUNTY	ROUTE	POST MILES TOTAL PROJECT	SHEET No.	TOTAL SHEETS
02	Teh	32	5.1/6.3	2	74

REGISTERED CIVIL ENGINEER 07-28-14 DATE

07-28-14
PLANS APPROVAL DATE

REGISTERED PROFESSIONAL ENGINEER MICHAEL E. FEAKES No. C70755 Exp. 6-30-15 CIVIL STATE OF CALIFORNIA

THE STATE OF CALIFORNIA OR ITS OFFICERS OR AGENTS SHALL NOT BE RESPONSIBLE FOR THE ACCURACY OR COMPLETENESS OF SCANNED COPIES OF THIS PLAN SHEET.

NOTES:

1. DIMENSIONS OF THE PAVEMENT STRUCTURES (STRUCTURAL SECTIONS) ARE SUBJECT TO TOLERANCES SPECIFIED IN THE STANDARD SPECIFICATIONS.
2. SUPERELEVATIONS ARE SHOWN ON THE SUPERELEVATION DIAGRAM.

ABBREVIATIONS:

SBKG	SHOULDER BACKING
(E)	EXISTING
GFL	GUTTER FLOW LINE
LL	LANE LINE
CPACP	COLD PLANE ASPHALT CONCRETE PAVEMENT
SEG	SUBGRADE ENHANCEMENT GEOGRID

DESIGN DESIGNATION:

ADT (2015)	1005	D	77%
ADT (2035)	1025	T	10%
DHV	174	V	55 MPH
EAL	844,300	TI_{20}	9

CLIMATE REGION:

HIGH MOUNTAIN

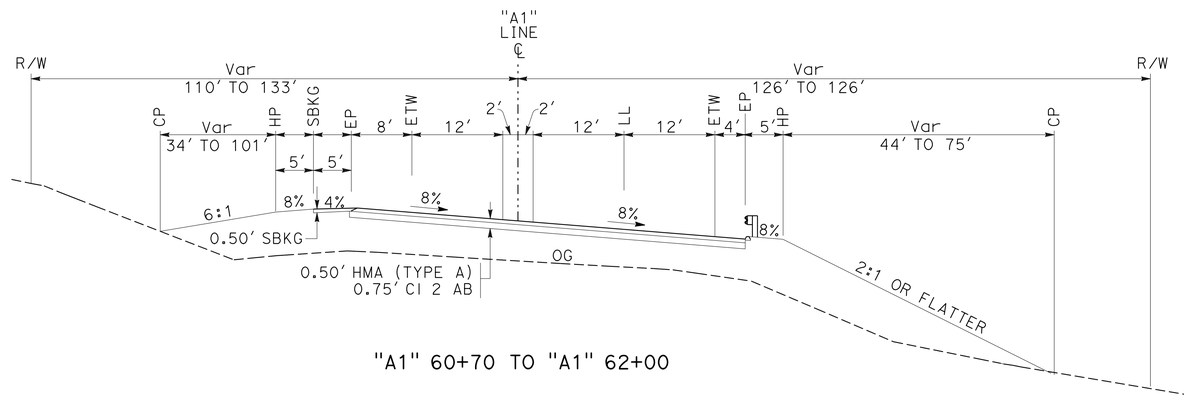

"A1" 60+70 TO "A1" 62+00

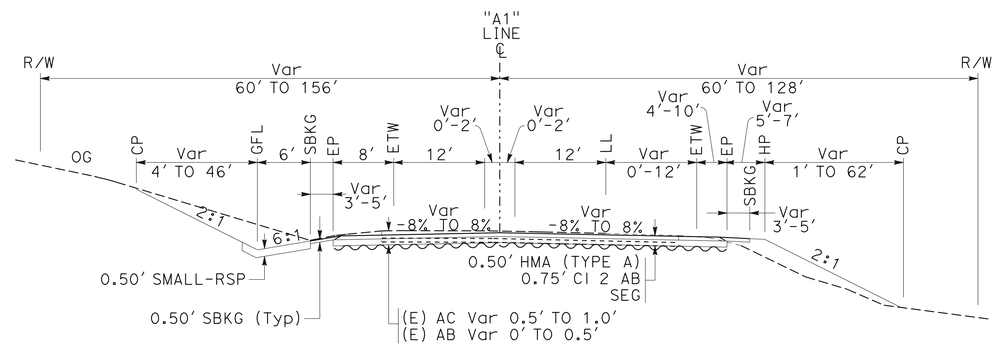

"A1" 49+25 TO "A1" 60+70
"A1" 70+75 TO "A1" 71+50
"A1" 83+00 TO "A1" 90+00

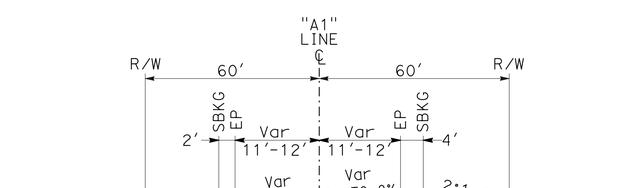

"A1" 46+00 TO "A1" 49+25

SUBGRADE ENHANCEMENT GEOGRID

STATION RANGE	SQYD
"A1" 49+25 TO 59+50	5467
"A1" 70+75 TO 89+00	9867
"A1" 99+00 TO 104+00	2445
TOTAL	17,780

ROUTE 32

TYPICAL CROSS SECTIONS

NO SCALE

X-1

STATE OF CALIFORNIA - DEPARTMENT OF TRANSPORTATION
Caltrans® DESIGN

FUNCTIONAL SUPERVISOR: AL TRUJILLO
CALCULATED-DESIGNED BY: JEFF CARSON
CHECKED BY: MICHAEL FEAKES
REVISED BY
DATE REVISED

P:\proj1\02\4E900_plans\pse\24e900ca001.dgn

LAST REVISION 07-28-14
DATE PLOTTED => 29-JUL-2014
TIME PLOTTED => 06:36

Dist	COUNTY	ROUTE	POST MILES TOTAL PROJECT	SHEET No.	TOTAL SHEETS
02	Teh	32	5.1/6.3	3	74

REGISTERED CIVIL ENGINEER 07-28-14 DATE

07-28-14
PLANS APPROVAL DATE

REGISTERED PROFESSIONAL ENGINEER MICHAEL E. FEAKES No. C70755 Exp. 6-30-15 CIVIL STATE OF CALIFORNIA

THE STATE OF CALIFORNIA OR ITS OFFICERS OR AGENTS SHALL NOT BE RESPONSIBLE FOR THE ACCURACY OR COMPLETENESS OF SCANNED COPIES OF THIS PLAN SHEET.

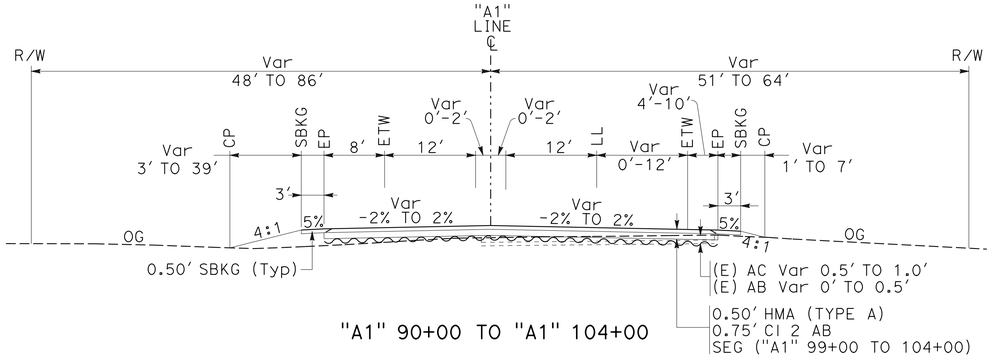

"A1" 90+00 TO "A1" 104+00

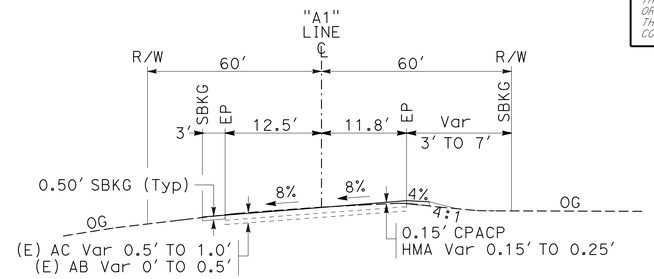

"A1" 104+00 TO "A1" 104+50

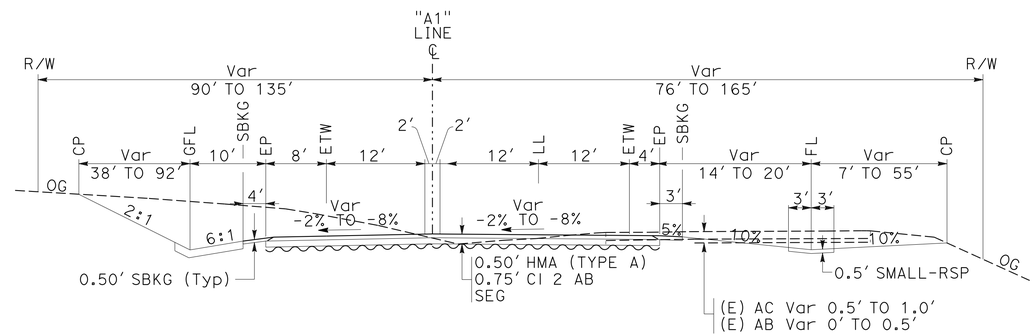

"A1" 71+50 TO "A1" 83+00

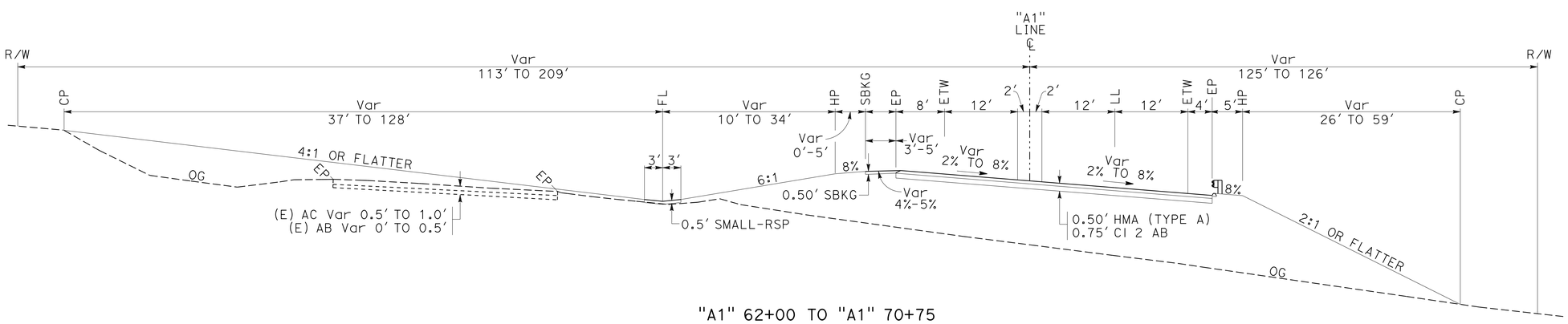

"A1" 62+00 TO "A1" 70+75

TYPICAL CROSS SECTIONS

NO SCALE

X-2

ROUTE 32

REVISED BY	DATE REVISED
JEFF CARSON	MICHAEL FEAKES
CALCULATED-DESIGNED BY	CHECKED BY
FUNCTIONAL SUPERVISOR	AL TRUJILLO

STATE OF CALIFORNIA - DEPARTMENT OF TRANSPORTATION

Caltrans® **DESIGN**

P:\proj1\02\4E900_plans\pse\24e900ca002.dgn

LAST REVISION 07-28-14 | DATE PLOTTED => 29-JUL-2014 | TIME PLOTTED => 06:36

Dist	COUNTY	ROUTE	POST MILES TOTAL PROJECT	SHEET No.	TOTAL SHEETS
02	Teh	32	5.1/6.3	4	74

REGISTERED CIVIL ENGINEER 07-28-14 DATE

07-28-14
PLANS APPROVAL DATE

REGISTERED PROFESSIONAL ENGINEER MICHAEL E. FEAKES No. C70755 Exp. 6-30-15 CIVIL STATE OF CALIFORNIA

THE STATE OF CALIFORNIA OR ITS OFFICERS OR AGENTS SHALL NOT BE RESPONSIBLE FOR THE ACCURACY OR COMPLETENESS OF SCANNED COPIES OF THIS PLAN SHEET.

NOTE:

1. FOR ACCURATE RIGHT OF WAY DATA, CONTACT RIGHT OF WAY ENGINEERING AT THE DISTRICT OFFICE.

LEGEND

COLD PLANE ASPHALT CONCRETE PAVEMENT

ABBREVIATIONS

CPACP	COLD PLANE ASPHALT CONCRETE PAVEMENT
EAA	END ANCHOR ASSEMBLY
SP	STEEL POST
AFTS	ALTERNATIVE FLARED TERMINAL SYSTEM

T.26 N.,R.3 E.,M.D.M.
SECTION 13

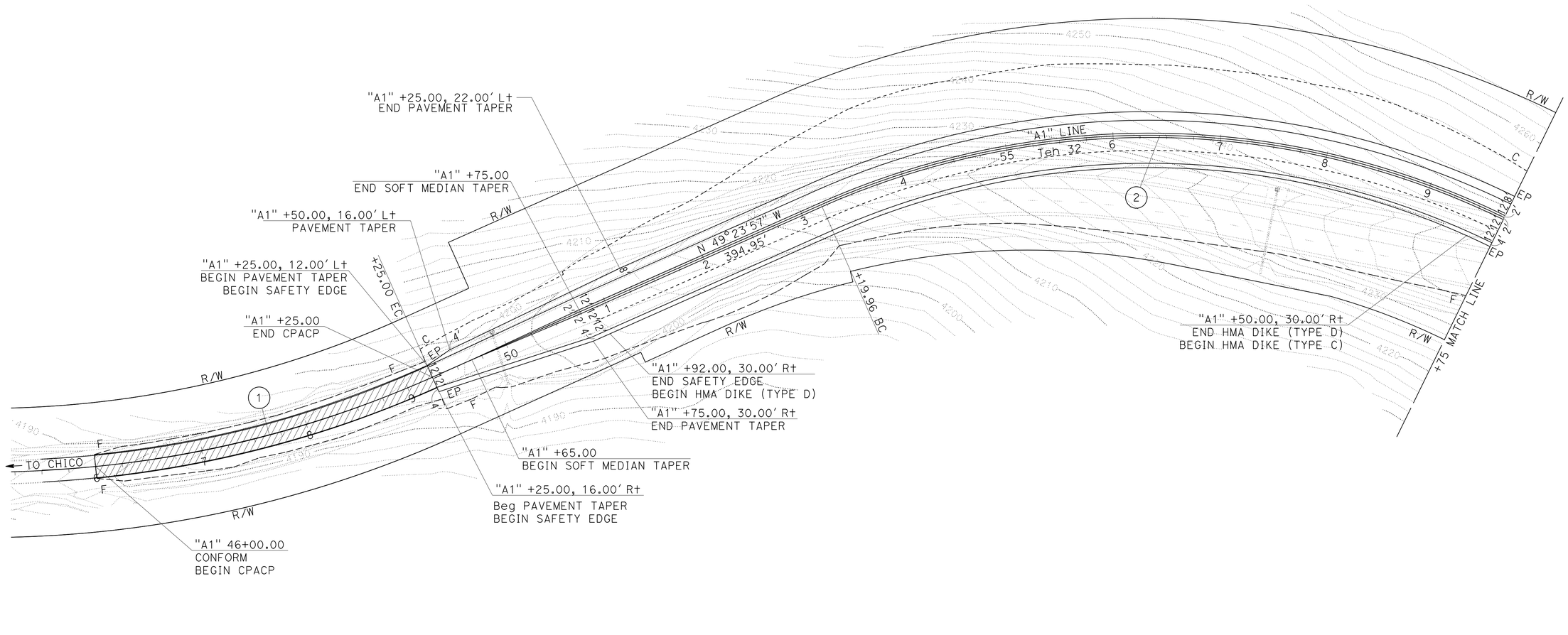

CURVE DATA

No. ⊕	R	Δ	T	L
①	1025'	23°28'49"	213.02'	420.05'
②	750'	119°56'29"	1297.50'	1570.03'

LAYOUT

SCALE: 1" = 50' **L-1**

STATE OF CALIFORNIA - DEPARTMENT OF TRANSPORTATION
Caltrans® **DESIGN**

FUNCTIONAL SUPERVISOR: AL TRUJILLO
JEFF CARSON — MICHAEL FEAKES
CALCULATED-DESIGNED BY — CHECKED BY
REVISED BY — DATE REVISED

P:\proj1\02\4E900_plans\pse\24e900ea001.dgn

LAST REVISION 07-28-14 | DATE PLOTTED => 29-JUL-2014 | TIME PLOTTED => 06:36

Dist	COUNTY	ROUTE	POST MILES TOTAL PROJECT	SHEET No.	TOTAL SHEETS
02	Teh	32	5.1/6.3	5	74

REGISTERED CIVIL ENGINEER 07-28-14 DATE

07-28-14
PLANS APPROVAL DATE

REGISTERED PROFESSIONAL ENGINEER MICHAEL E. FEAKES No. C70755 Exp. 6-30-15 CIVIL STATE OF CALIFORNIA

THE STATE OF CALIFORNIA OR ITS OFFICERS OR AGENTS SHALL NOT BE RESPONSIBLE FOR THE ACCURACY OR COMPLETENESS OF SCANNED COPIES OF THIS PLAN SHEET.

NOTE:

1. FOR ACCURATE RIGHT OF WAY DATA, CONTACT RIGHT OF WAY ENGINEERING AT THE DISTRICT OFFICE.

T.26 N., R.3 E., M.D.M.
SECTION 13

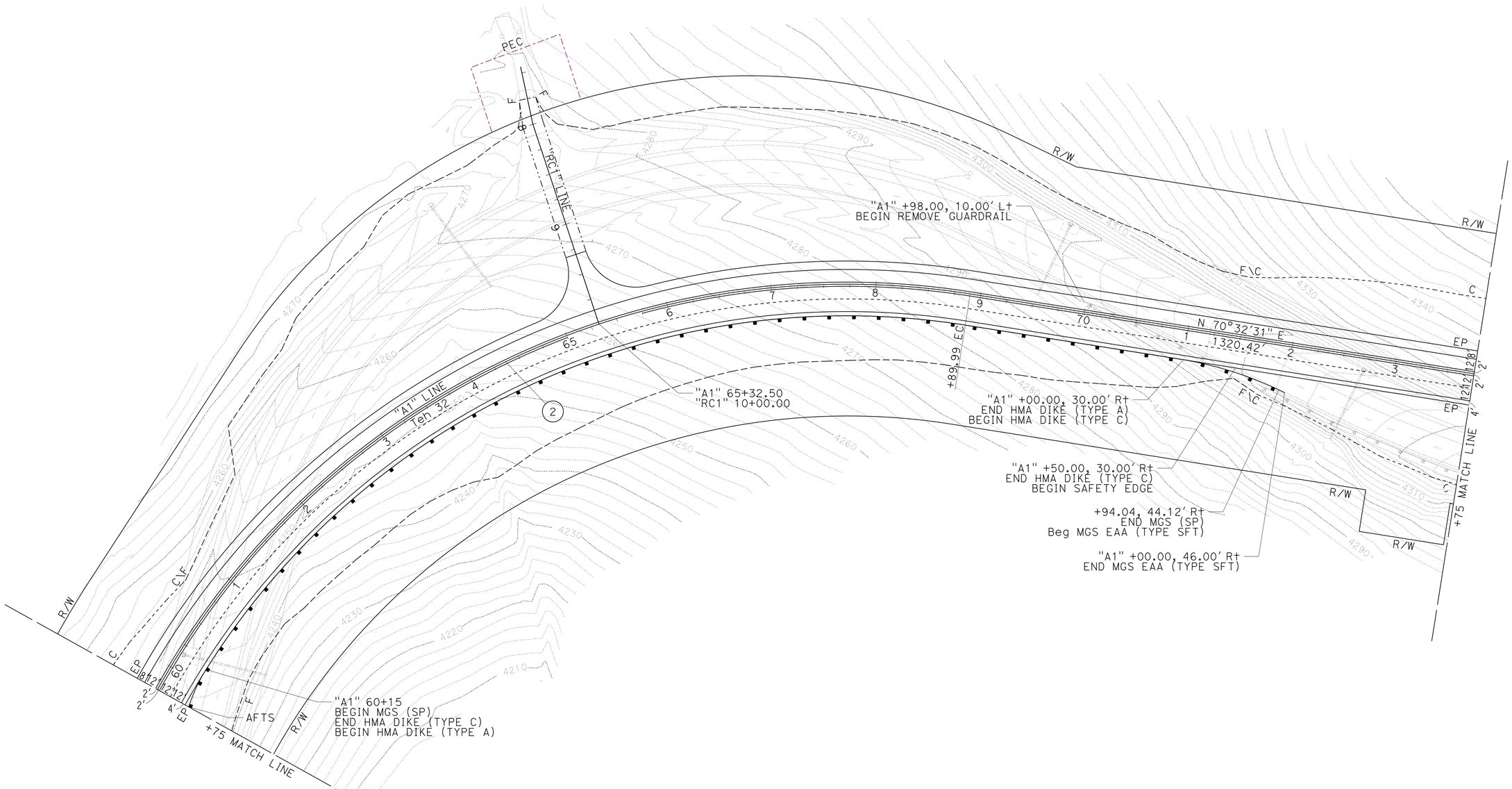

CURVE DATA

No. ⊕	R	Δ	T	L
②	750'	119°56'29"	1297.50'	1570.03'

LAYOUT

SCALE: 1" = 50' **L-2**

REVISED BY	DATE REVISED

CALCULATED-DESIGNED BY	CHECKED BY
JEFF CARSON	MICHAEL FEAKES

FUNCTIONAL SUPERVISOR: AL TRUJILLO

STATE OF CALIFORNIA - DEPARTMENT OF TRANSPORTATION
Caltrans
DESIGN

P:\proj1\02\4E900_plans\pse\24e900ea002.dgn

LAST REVISION 07-28-14 | DATE PLOTTED => 29-JUL-2014 | TIME PLOTTED => 06:36

Dist	COUNTY	ROUTE	POST MILES TOTAL PROJECT	SHEET No.	TOTAL SHEETS
02	Teh	32	5.1/6.3	6	74

REGISTERED CIVIL ENGINEER 07-28-14 DATE

07-28-14
PLANS APPROVAL DATE

REGISTERED PROFESSIONAL ENGINEER MICHAEL E. FEAKES No. C70755 Exp. 6-30-15 CIVIL STATE OF CALIFORNIA

THE STATE OF CALIFORNIA OR ITS OFFICERS OR AGENTS SHALL NOT BE RESPONSIBLE FOR THE ACCURACY OR COMPLETENESS OF SCANNED COPIES OF THIS PLAN SHEET.

NOTE:

1. FOR ACCURATE RIGHT OF WAY DATA, CONTACT RIGHT OF WAY ENGINEERING AT THE DISTRICT OFFICE.

T.26 N., R.3 E., M.D.M.
SECTION 13

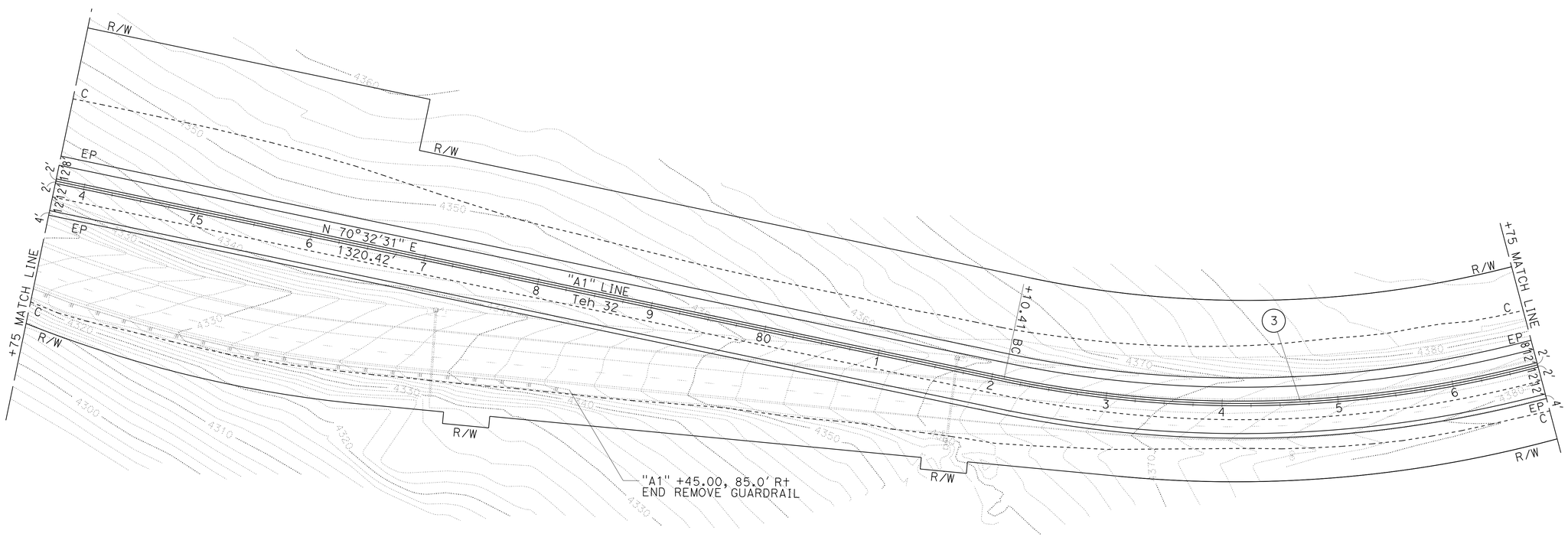

CURVE DATA

No. ⊕	R	Δ	T	L
③	1000'	46°44'09"	432.07'	815.69'

LAYOUT

SCALE: 1" = 50' **L-3**

REVISED BY | DATE REVISED

JEFF CARSON | MICHAEL FEAKES

CALCULATED-DESIGNED BY | CHECKED BY

FUNCTIONAL SUPERVISOR: AL TRUJILLO

STATE OF CALIFORNIA - DEPARTMENT OF TRANSPORTATION

Caltrans

DESIGN

P:\proj1\02\4E900_plans\pse\24e900ea003.dgn

LAST REVISION | DATE PLOTTED => 29-JUL-2014 | TIME PLOTTED => 06:36 | 07-28-14

Dist	COUNTY	ROUTE	POST MILES TOTAL PROJECT	SHEET No.	TOTAL SHEETS
02	Teh	32	5.1/6.3	7	74

REGISTERED CIVIL ENGINEER 07-28-14 DATE

07-28-14
PLANS APPROVAL DATE

REGISTERED PROFESSIONAL ENGINEER MICHAEL E. FEAKES No. C70755 Exp. 6-30-15 CIVIL STATE OF CALIFORNIA

THE STATE OF CALIFORNIA OR ITS OFFICERS OR AGENTS SHALL NOT BE RESPONSIBLE FOR THE ACCURACY OR COMPLETENESS OF SCANNED COPIES OF THIS PLAN SHEET.

NOTE:

1. FOR ACCURATE RIGHT OF WAY DATA, CONTACT RIGHT OF WAY ENGINEERING AT THE DISTRICT OFFICE.

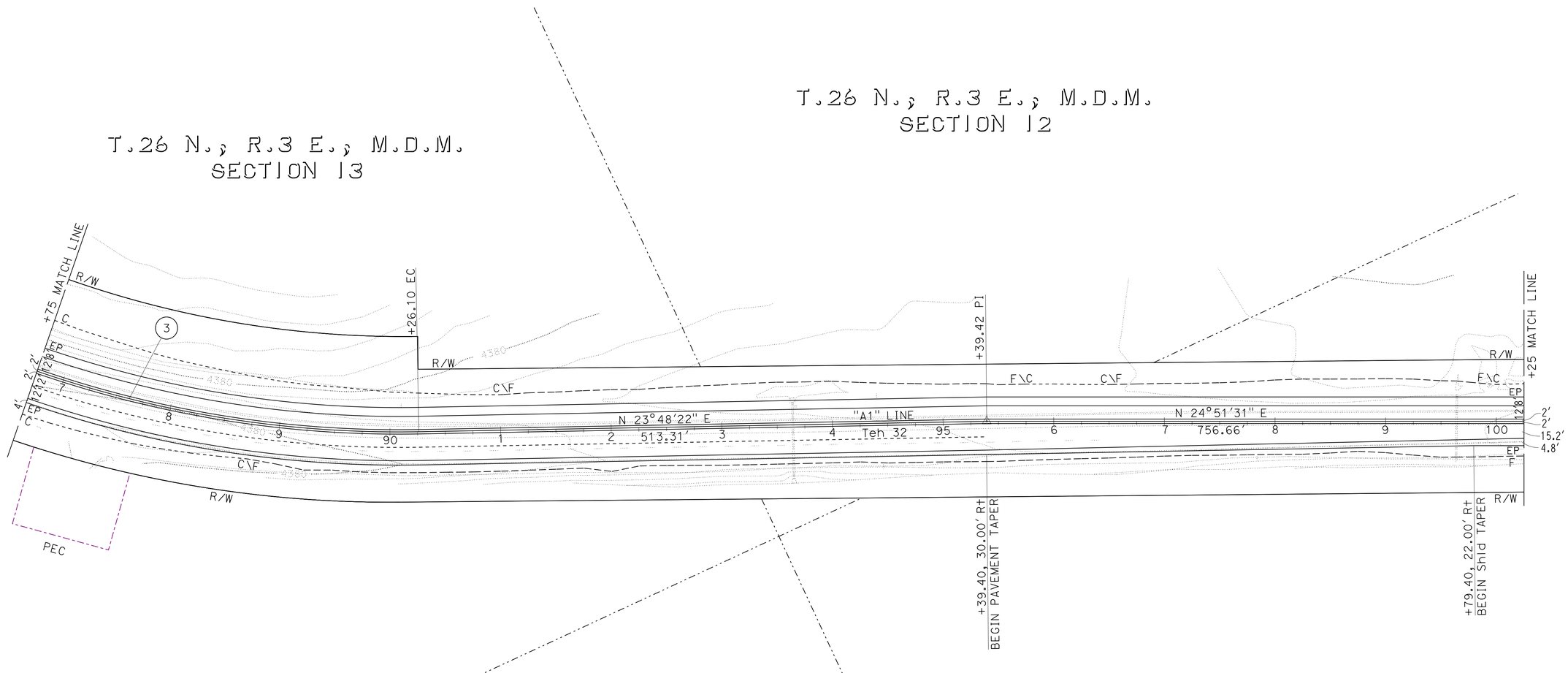

CURVE DATA

No. ⊕	R	Δ	T	L
③	1000'	46°44' 09"	432.07'	815.69'

LAYOUT

SCALE: 1" = 50' **L-4**

STATE OF CALIFORNIA - DEPARTMENT OF TRANSPORTATION
Caltrans® **DESIGN**

FUNCTIONAL SUPERVISOR: AL TRUJILLO
CALCULATED-DESIGNED BY: JEFF CARSON
CHECKED BY: MICHAEL FEAKES
REVISED BY
DATE REVISED

P:\proj1\02\4E900_plans\pse\24e900ea004.dgn

LAST REVISION DATE PLOTTED => 29-JUL-2014
07-28-14 TIME PLOTTED => 06:36

BORDER LAST REVISED 7/2/2010 | USERNAME => s115152 | DGN FILE => 24e900ea004.dgn | RELATIVE BORDER SCALE IS IN INCHES 0 1 2 3 | UNIT 0316 | PROJECT NUMBER & PHASE 02-1400-0080-1 EA: 02-4E90U1

Dist	COUNTY	ROUTE	POST MILES TOTAL PROJECT	SHEET No.	TOTAL SHEETS
02	Teh	32	5.1/6.3	8	74

REGISTERED CIVIL ENGINEER 07-28-14 DATE

07-28-14
PLANS APPROVAL DATE

REGISTERED PROFESSIONAL ENGINEER MICHAEL E. FEAKES No. C70755 Exp. 6-30-15 CIVIL STATE OF CALIFORNIA

THE STATE OF CALIFORNIA OR ITS OFFICERS OR AGENTS SHALL NOT BE RESPONSIBLE FOR THE ACCURACY OR COMPLETENESS OF SCANNED COPIES OF THIS PLAN SHEET.

NOTE:

1. FOR ACCURATE RIGHT OF WAY DATA, CONTACT RIGHT OF WAY ENGINEERING AT THE DISTRICT OFFICE.

T.26 N., R.4 E., M.D.M.
SECTION 7

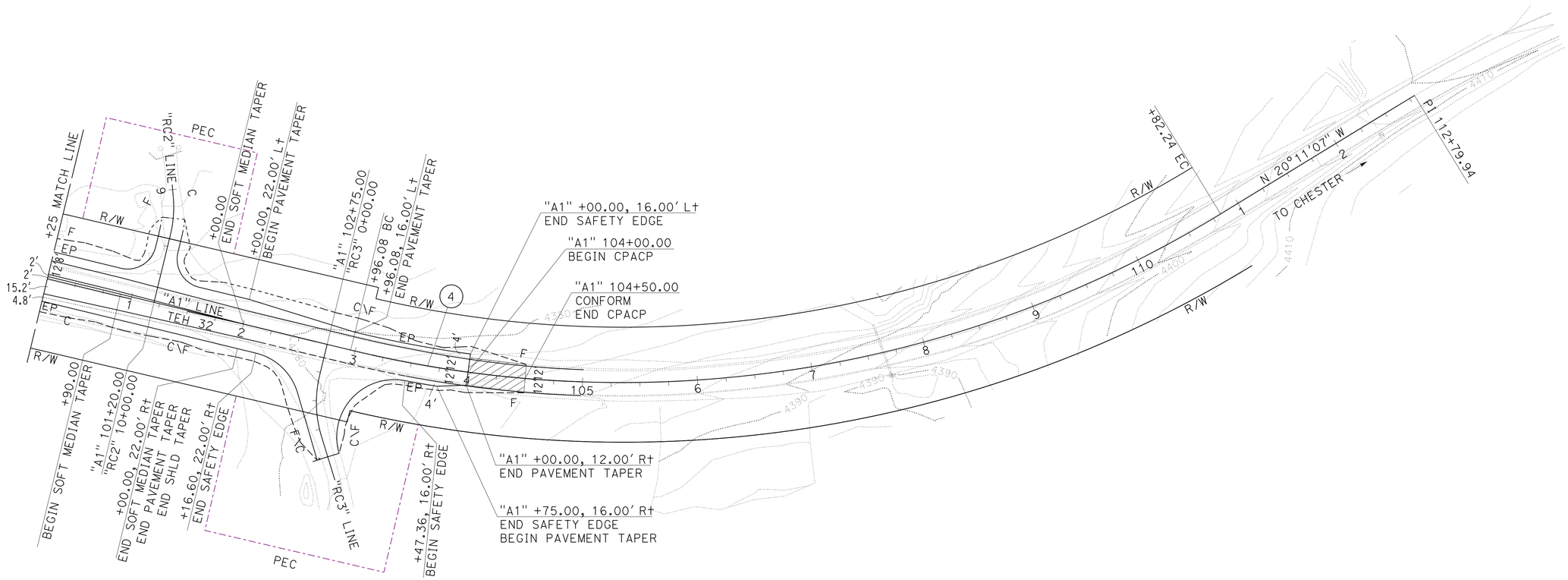

CURVE DATA

No. ⊕	R	Δ	T	L
④	1000′	45°02′ 38"	414.66′	786.16′

LAYOUT

SCALE: 1" = 50′ **L-5**

CALCULATED-DESIGNED BY		REVISED BY	
CHECKED BY		DATE REVISED	
JEFF CARSON	FUNCTIONAL SUPERVISOR		
MICHAEL FEAKES	AL TRUJILLO		

STATE OF CALIFORNIA - DEPARTMENT OF TRANSPORTATION
Caltrans
DESIGN

P:\proj\02\4E900_plans\pse\24e900ea005.dgn

LAST REVISION 07-28-14 | DATE PLOTTED => 29-JUL-2014 | TIME PLOTTED => 06:36

BORDER LAST REVISED 7/2/2010 | USERNAME => s115152 | DGN FILE => 24e900ea005.dgn | RELATIVE BORDER SCALE IS IN INCHES 0 1 2 3 | UNIT 0316 | PROJECT NUMBER & PHASE 02-1400-0080-1 EA: 02-4E90U1

Dist	COUNTY	ROUTE	POST MILES TOTAL PROJECT	SHEET No.	TOTAL SHEETS
02	Teh	32	5.1/6.3	9	74

REGISTERED CIVIL ENGINEER 07-28-14 DATE

07-28-14
PLANS APPROVAL DATE

REGISTERED PROFESSIONAL ENGINEER MICHAEL E. FEAKES No. C70755 Exp. 6-30-15 CIVIL STATE OF CALIFORNIA

THE STATE OF CALIFORNIA OR ITS OFFICERS OR AGENTS SHALL NOT BE RESPONSIBLE FOR THE ACCURACY OR COMPLETENESS OF SCANNED COPIES OF THIS PLAN SHEET.

ABBREVIATIONS:
TW TRAVELED WAY

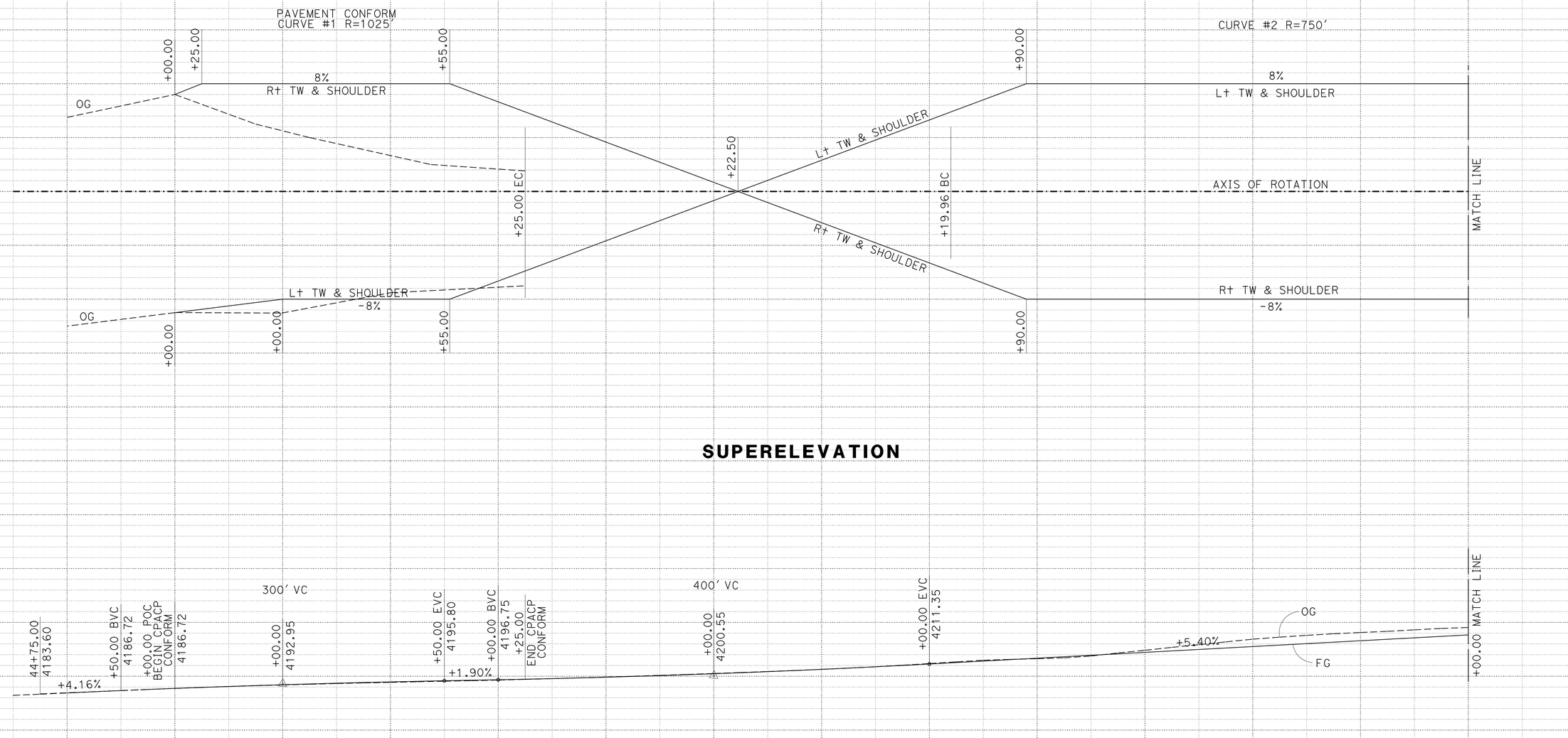

PROFILE AND SUPERELEVATION DIAGRAM

SCALE: 1" = 50' Horiz
1" = 50' Vert

PS-1

STATION	45	46	47	48	49	50	51	52	53	54	55	56	57	58	TOTAL
CY Exc					12,435										12,435
CY Emb					436										436

REVISED BY | DATE REVISED
JEFF CARSON | MICHAEL FEAKES
CALCULATED-DESIGNED BY | CHECKED BY
FUNCTIONAL SUPERVISOR
AL TRUJILLO

STATE OF CALIFORNIA - DEPARTMENT OF TRANSPORTATION
Caltrans
DESIGN

P:\proj1\02\4E900_plans\pse\24e900fb001.dgn

LAST REVISION 07-28-14 | DATE PLOTTED => 29-JUL-2014 | TIME PLOTTED => 06:36

Dist	COUNTY	ROUTE	POST MILES TOTAL PROJECT	SHEET No.	TOTAL SHEETS
02	Teh	32	5.1/6.3	10	74

REGISTERED CIVIL ENGINEER 07-28-14 DATE

07-28-14
PLANS APPROVAL DATE

REGISTERED PROFESSIONAL ENGINEER MICHAEL E. FEAKES No. C70755 Exp. 6-30-15 CIVIL STATE OF CALIFORNIA

THE STATE OF CALIFORNIA OR ITS OFFICERS OR AGENTS SHALL NOT BE RESPONSIBLE FOR THE ACCURACY OR COMPLETENESS OF SCANNED COPIES OF THIS PLAN SHEET.

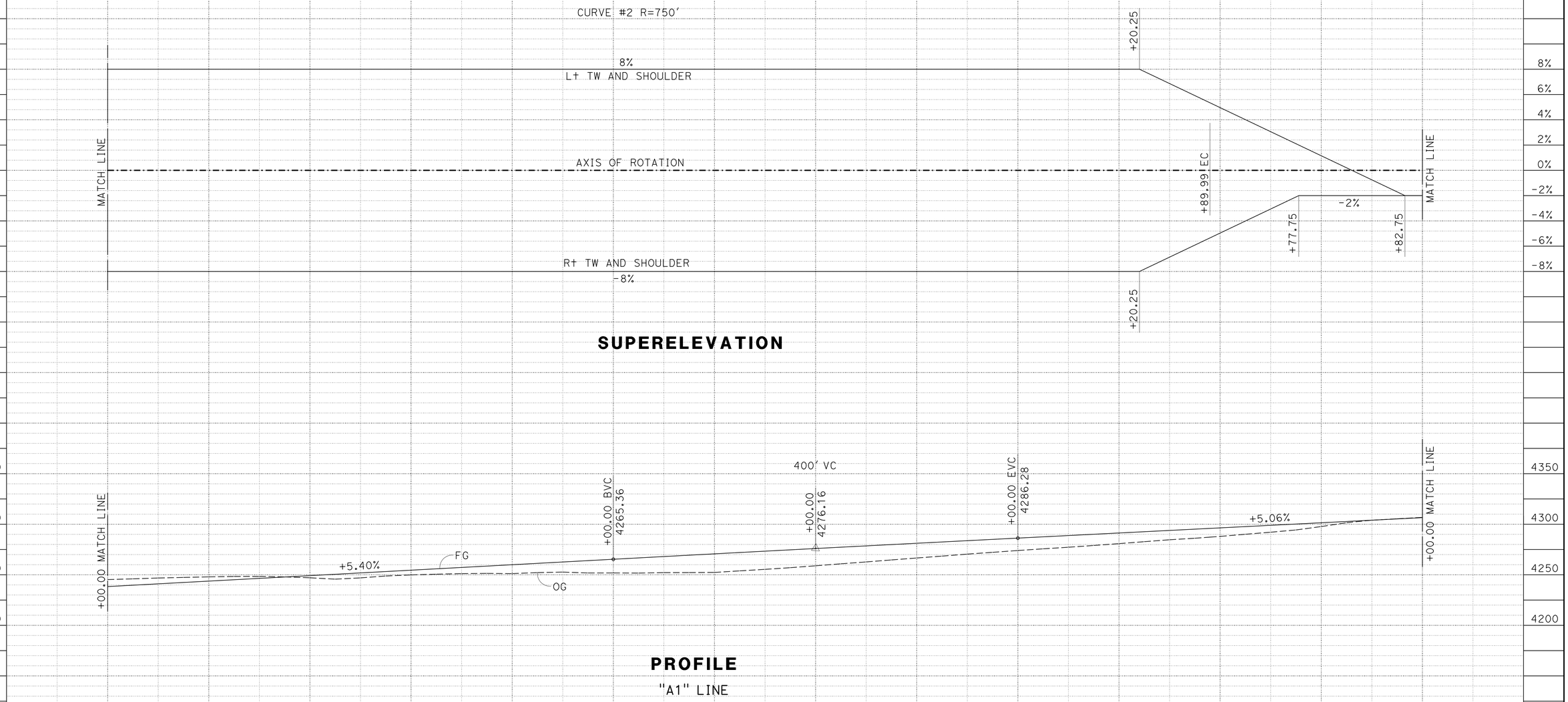

PROFILE AND SUPERELEVATION DIAGRAM

SCALE: 1" = 50' Horiz
1" = 50' Vert

PS-2

STATION		58	59	60	61	62	63	64	65	66	67	68	69	70	71	TOTAL
CY	Exc	3671														3671
	Emb	49,250														49,250

REVISED BY | DATE REVISED
JEFF CARSON | MICHAEL FEAKES
CALCULATED-DESIGNED BY | CHECKED BY
FUNCTIONAL SUPERVISOR: AL TRUJILLO

STATE OF CALIFORNIA - DEPARTMENT OF TRANSPORTATION
Caltrans DESIGN

P:\proj1\02\4E900_plans\pse\24e900fb002.dgn

LAST REVISION 07-28-14 | DATE PLOTTED => 29-JUL-2014 | TIME PLOTTED => 06:36

Dist	COUNTY	ROUTE	POST MILES TOTAL PROJECT	SHEET No.	TOTAL SHEETS
02	Teh	32	5.1/6.3	11	74

REGISTERED CIVIL ENGINEER 07-28-14 DATE

07-28-14
PLANS APPROVAL DATE

REGISTERED PROFESSIONAL ENGINEER MICHAEL E. FEAKES No. C70755 Exp. 6-30-15 CIVIL STATE OF CALIFORNIA

THE STATE OF CALIFORNIA OR ITS OFFICERS OR AGENTS SHALL NOT BE RESPONSIBLE FOR THE ACCURACY OR COMPLETENESS OF SCANNED COPIES OF THIS PLAN SHEET.

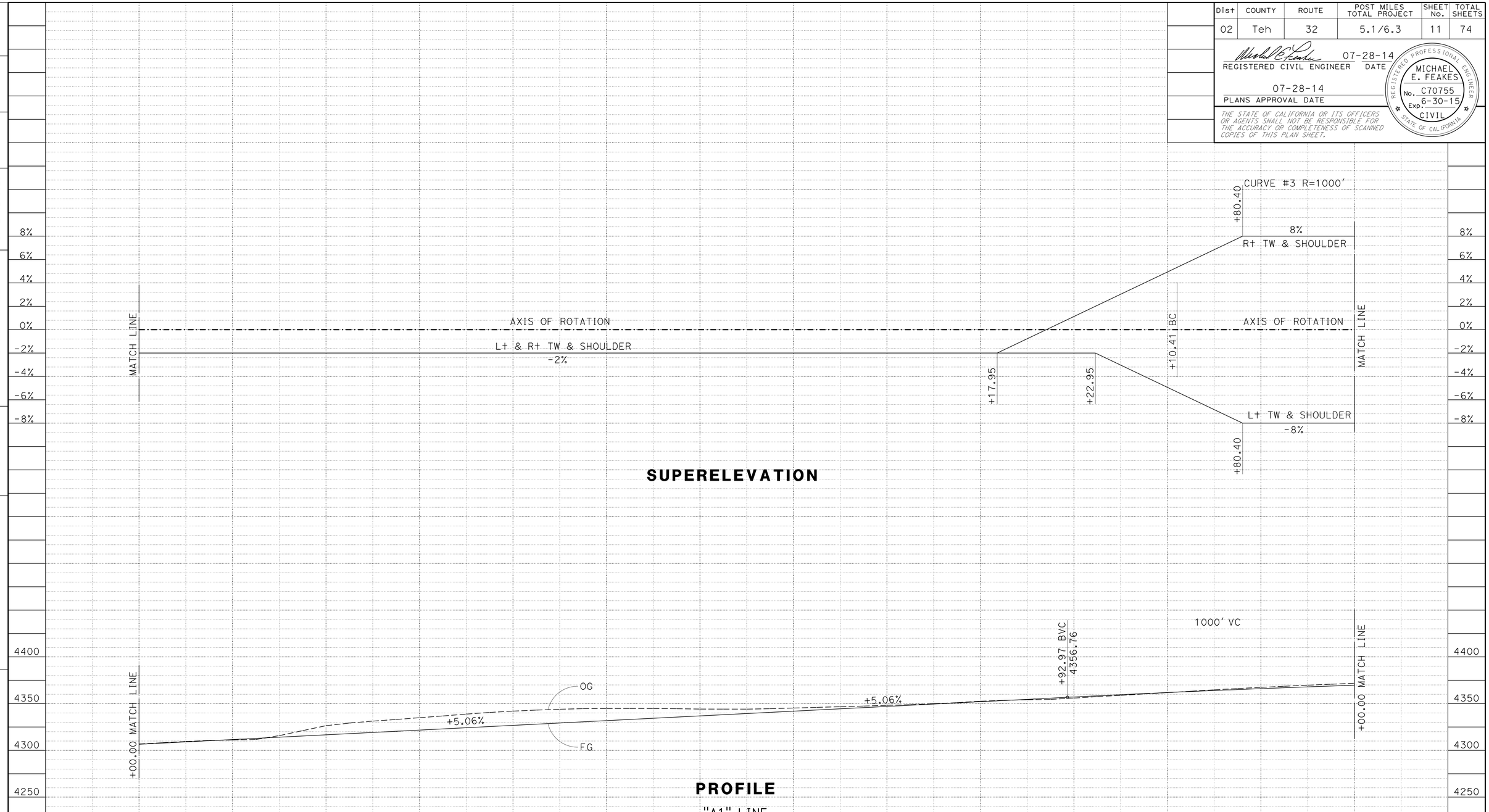

PROFILE AND SUPERELEVATION DIAGRAM

SCALE: 1" = 50' Horiz
1" = 50' Vert

PS-3

STATION	71	72	73	74	75	76	77	78	79	80	81	82	83	84	TOTAL
CY Exc	32,870										3487				36,357
CY Emb	79										27				106

REVISED BY | DATE REVISED
JEFF CARSON | MICHAEL FEAKES
CALCULATED-DESIGNED BY | CHECKED BY
FUNCTIONAL SUPERVISOR: AL TRUJILLO

STATE OF CALIFORNIA - DEPARTMENT OF TRANSPORTATION
Caltrans DESIGN

P:\proj1\02\4E900_plans\pse\24e900fb003.dgn

LAST REVISION 07-28-14 | DATE PLOTTED => 29-JUL-2014 | TIME PLOTTED => 06:36

Dist	COUNTY	ROUTE	POST MILES TOTAL PROJECT	SHEET No.	TOTAL SHEETS
02	Teh	32	5.1/6.3	12	74

REGISTERED CIVIL ENGINEER 07-28-14 DATE

07-28-14
PLANS APPROVAL DATE

REGISTERED PROFESSIONAL ENGINEER MICHAEL E. FEAKES No. C70755 Exp. 6-30-15 CIVIL STATE OF CALIFORNIA

THE STATE OF CALIFORNIA OR ITS OFFICERS OR AGENTS SHALL NOT BE RESPONSIBLE FOR THE ACCURACY OR COMPLETENESS OF SCANNED COPIES OF THIS PLAN SHEET.

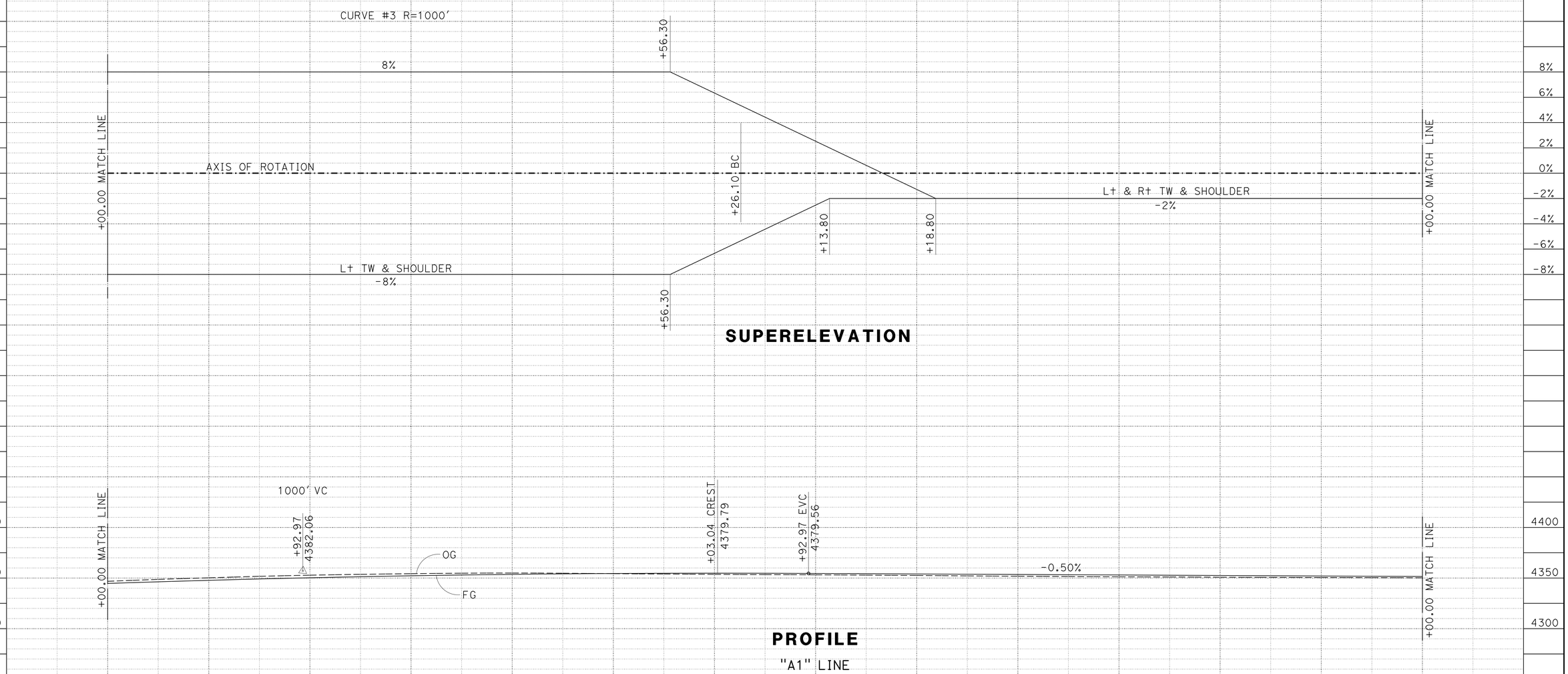

PROFILE AND SUPERELEVATION DIAGRAM

SCALE: 1" = 50' Horiz
1" = 50' Vert

PS-4

STATION	84	85	86	87	88	89	90	91	92	93	94	95	96	97	TOTAL
CY Exc	6562														6562
CY Emb	1010														1010

REVISED BY | DATE REVISED
JEFF CARSON | MICHAEL FEAKES
CALCULATED-DESIGNED BY | CHECKED BY
FUNCTIONAL SUPERVISOR: AL TRUJILLO

STATE OF CALIFORNIA - DEPARTMENT OF TRANSPORTATION
Caltrans DESIGN

P:\proj1\02\4E900_plans\pse\24e900fb004.dgn

LAST REVISION 07-28-14 | DATE PLOTTED => 29-JUL-2014 | TIME PLOTTED => 06:36

Dist	COUNTY	ROUTE	POST MILES TOTAL PROJECT	SHEET No.	TOTAL SHEETS
02	Teh	32	5.1/6.3	13	74

REGISTERED CIVIL ENGINEER 07-28-14 DATE

07-28-14
PLANS APPROVAL DATE

REGISTERED PROFESSIONAL ENGINEER MICHAEL E. FEAKES No. C70755 Exp. 6-30-15 CIVIL STATE OF CALIFORNIA

THE STATE OF CALIFORNIA OR ITS OFFICERS OR AGENTS SHALL NOT BE RESPONSIBLE FOR THE ACCURACY OR COMPLETENESS OF SCANNED COPIES OF THIS PLAN SHEET.

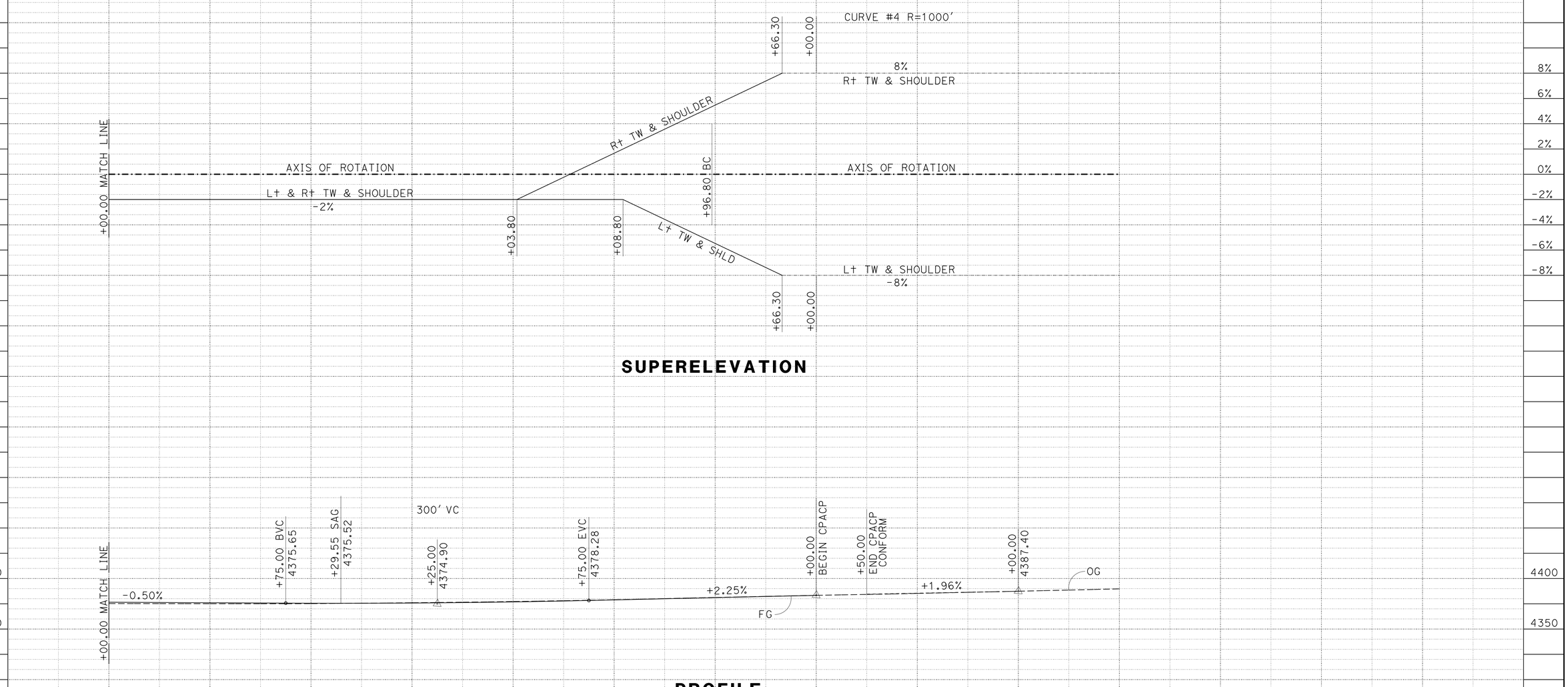

PROFILE AND SUPERELEVATION DIAGRAM

SCALE: 1" = 50' Horiz
1" = 50' Vert

PS-5

STATION		97	98	99	100	101	102	103	104	105	106	SHEET TOTAL	TOTAL
CY	Exc	1275										1275	60,300
	Emb	278										278	51,350

REVISED BY | DATE REVISED
JEFF CARSON | MICHAEL FEAKES
CALCULATED-DESIGNED BY | CHECKED BY
FUNCTIONAL SUPERVISOR: AL TRUJILLO

STATE OF CALIFORNIA - DEPARTMENT OF TRANSPORTATION
Caltrans DESIGN

P:\proj1\02\4E900_plans\pse\24e900fb005.dgn

LAST REVISION 07-28-14 | DATE PLOTTED => 29-JUL-2014 | TIME PLOTTED => 06:36

Dist	COUNTY	ROUTE	POST MILES TOTAL PROJECT	SHEET No.	TOTAL SHEETS
02	Teh	32	5.1/6.3	14	74

REGISTERED CIVIL ENGINEER 07-28-14 DATE

07-28-14
PLANS APPROVAL DATE

REGISTERED PROFESSIONAL ENGINEER MICHAEL E. FEAKES No. C70755 Exp. 6-30-15 CIVIL STATE OF CALIFORNIA

THE STATE OF CALIFORNIA OR ITS OFFICERS OR AGENTS SHALL NOT BE RESPONSIBLE FOR THE ACCURACY OR COMPLETENESS OF SCANNED COPIES OF THIS PLAN SHEET.

ABBREVIATIONS

CPACP COLD PLANE ASPHALT CONCRETE PAVEMENT
EGR EDGE OF GRAVEL ROAD

"RC1" LINE - EDGE OF PAVEMENT

No. ⊛	INTERVAL	ALIGN	Sta	OFFSET	Elev
2b	BC	RC1	9+30.20	10.00′ Lt	4280.88
2b	Δ/2	RC1	9+64.23	23.38′ Lt	4281.51
2b	EC	A1	65+87.30	22.00′ Lt	4282.28
2a	BC	RC1	9+30.20	10.00′ Rt	4279.88
2a	Δ/2	RC1	9+64.23	23.38′ Rt	4279.11
2a	EC	A1	64+77.70	22.00′ Lt	4276.58

CURVE DATA

No. ⊛	R	Δ	T	L
2	750′	119°56′28"	1297.50′	1570.03′
2b	50′	85°48′51"	46.47′	74.89′
2a	50′	85°48′51"	46.47′	74.89′

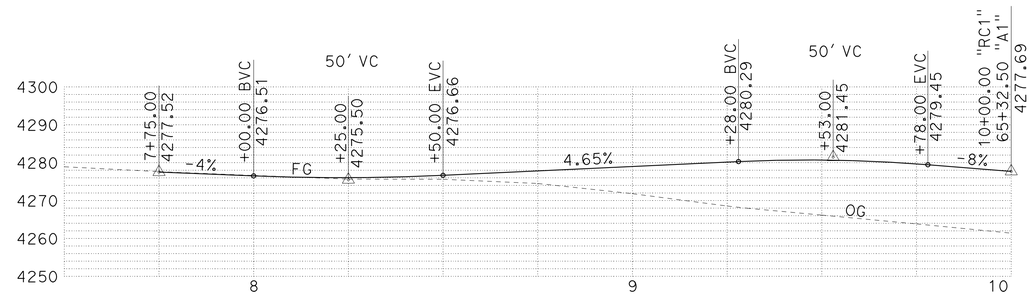

PROFILE
"RC1" LINE
SCALE: 1" = 20′

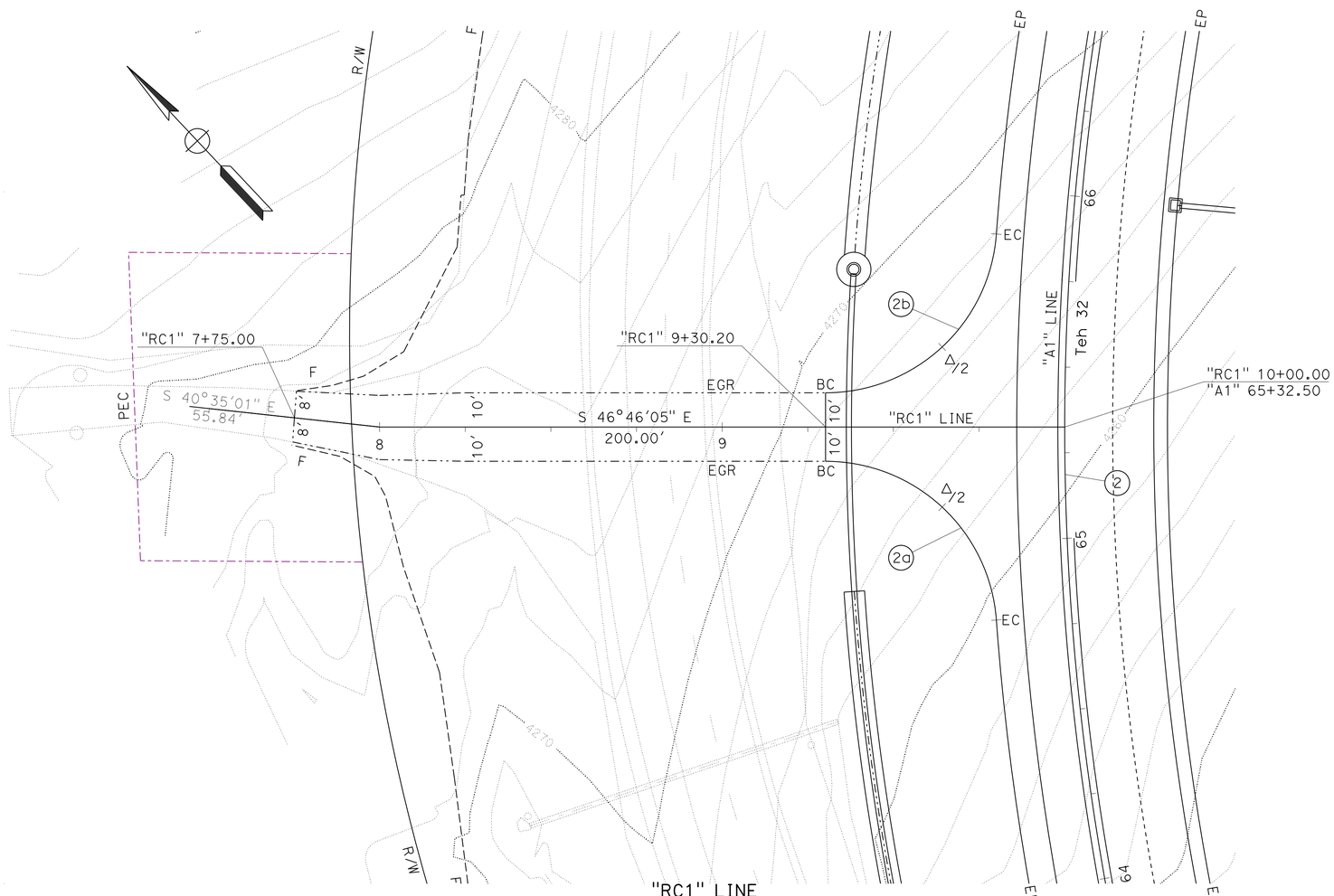

"RC1" LINE
SCALE: 1" = 20′

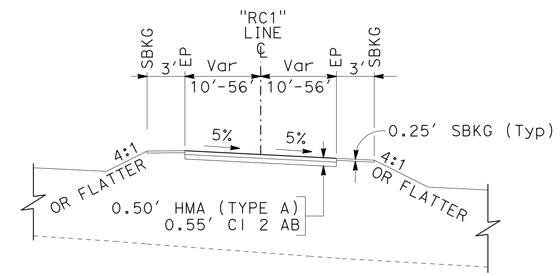

TYPICAL SECTION
"RC1" 9+30 TO 9+78
NO SCALE

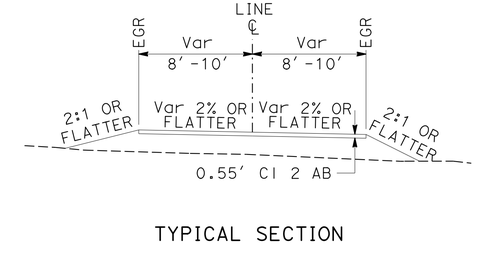

TYPICAL SECTION
"RC1" 7+75 TO 9+30
NO SCALE

CONSTRUCTION DETAILS

SCALE: AS SHOWN

C-1

REVISED BY | DATE REVISED
JEFF CARSON | MICHAEL FEAKES
CALCULATED-DESIGNED BY | CHECKED BY
FUNCTIONAL SUPERVISOR
AL TRUJILLO

STATE OF CALIFORNIA - DEPARTMENT OF TRANSPORTATION
Caltrans
DESIGN

P:\proj1\02\4E900_plans\pse\24e900ga001.dgn

LAST REVISION 07-28-14 | DATE PLOTTED => 29-JUL-2014 TIME PLOTTED => 06:36

Dist	COUNTY	ROUTE	POST MILES TOTAL PROJECT	SHEET No.	TOTAL SHEETS
02	Teh	32	5.1/6.3	15	74

REGISTERED CIVIL ENGINEER 07-28-14 DATE

07-28-14
PLANS APPROVAL DATE

REGISTERED PROFESSIONAL ENGINEER MICHAEL E. FEAKES No. C70755 Exp. 6-30-15 CIVIL STATE OF CALIFORNIA

THE STATE OF CALIFORNIA OR ITS OFFICERS OR AGENTS SHALL NOT BE RESPONSIBLE FOR THE ACCURACY OR COMPLETENESS OF SCANNED COPIES OF THIS PLAN SHEET.

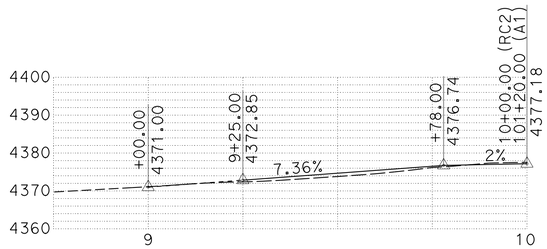

PROFILE
"RC2" LINE
SCALE: 1" = 20'

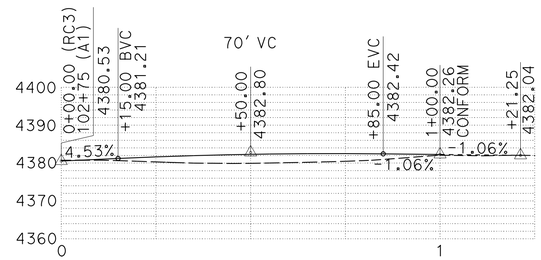

PROFILE
"RC3" LINE
SCALE: 1" = 20'

"RC2"\"RC3" LINE - EDGE OF PAVEMENT

No. ⊕	INTERVAL	ALIGN	Sta	OFFSET	Elev
5b	BC	RC2	9+43.00	10.0' Lt	4374.26
5b	Δ/2	RC2	9+70.70	17.3' Lt	4376.55
5b	EC	A1	100+85.00	22.0' Lt	4376.19
5a	BC	RC2	9+43.00	10.0' Rt	4374.26
5a	Δ/2	RC2	9+70.70	17.3' Rt	4376.00
5a	EC	A1	101+55.00	22.0' Lt	4377.40
6b	BC	A1	103+47.35	16.0' Rt	4383.03
6b	Δ/4	A1	103+23.45	22.67' Rt	4382.80
6b	Δ/2	RC3	0+46.45	30.6' Lt	4383.00
6b	3Δ/4	RC3	0+74.40	16.8'	4382.25
6b	EC	RC3	1+00.00	10.0'	4382.06
6a	BC	A1	102+16.60	22.0' Rt	4379.72
6a	Δ/2	RC3	0+28.50	33.35' Rt	4380.32
6a	EC	RC3	0+44.45	16.65' Rt	4381.73

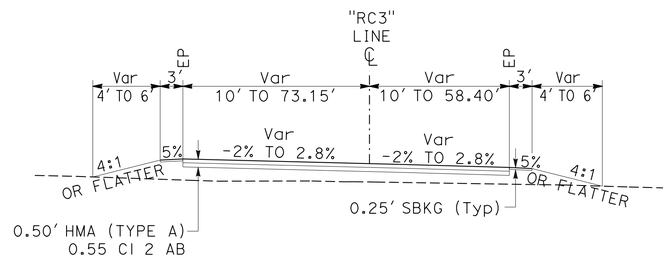

TYPICAL SECTION
"RC3" 0+18.7 TO 1+00
NO SCALE

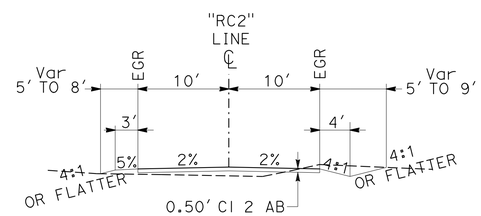

TYPICAL SECTION
"RC2" 9+25 TO 9+43
NO SCALE

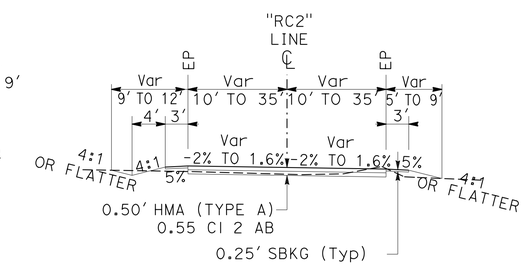

TYPICAL SECTION
"RC2" 9+43 TO 9+78
NO SCALE

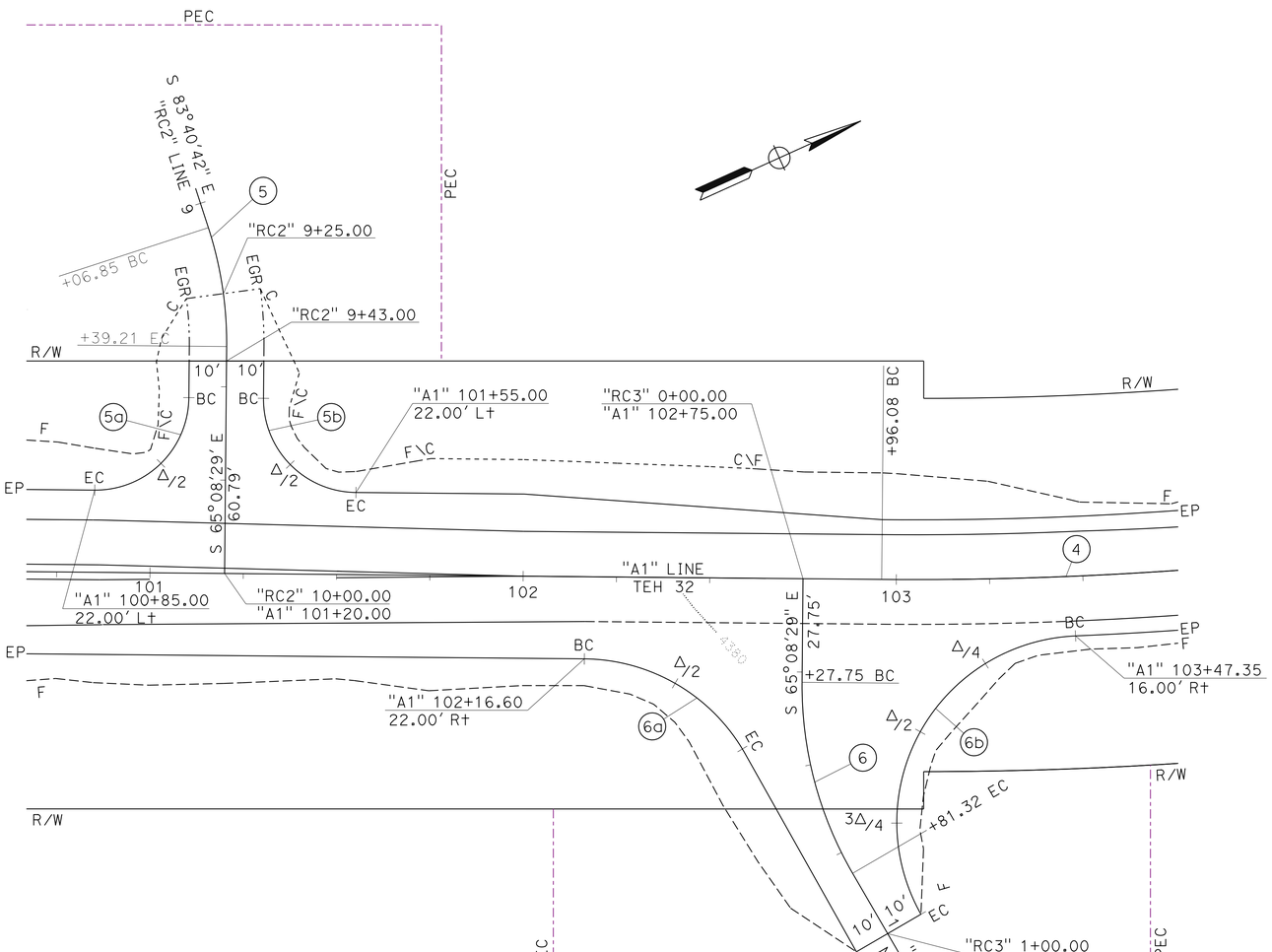

"RC2" LINE & "RC3" LINE
SCALE: 1" = 20'

CURVE DATA

No. ⊕	R	Δ	T	L
4	1000'	45°02'38"	414.66'	786.16'
5	100'	18°32'12"	16.32'	32.35'
5a	25'	89°59'54"	25.00'	39.27'
5b	25'	90°00'06"	25.00	39.27'
6	100'	30°41'29"	27.44'	53.57'
6a	50'	60°08'52"	28.95'	52.49'
6b	50'	116°54'52"	81.46'	102.03'

CONSTRUCTION DETAILS

SCALE: AS SHOWN

C-2

STATE OF CALIFORNIA - DEPARTMENT OF TRANSPORTATION
Caltrans®
DESIGN

FUNCTIONAL SUPERVISOR: AL TRUJILLO
CALCULATED-DESIGNED BY: JEFF CARSON
CHECKED BY: MICHAEL FEAKES
REVISED BY
DATE REVISED

P:\proj\02\4E900_plans\pse\24e900ga002.dgn

LAST REVISION 07-28-14
DATE PLOTTED => 29-JUL-2014
TIME PLOTTED => 06:36

Dist	COUNTY	ROUTE	POST MILES TOTAL PROJECT	SHEET No.	TOTAL SHEETS
02	Teh	32	5.1/6.3	16	74

REGISTERED CIVIL ENGINEER 07-28-14 DATE

07-28-14
PLANS APPROVAL DATE

REGISTERED PROFESSIONAL ENGINEER MICHAEL E. FEAKES No. C70755 Exp. 6-30-15 CIVIL STATE OF CALIFORNIA

THE STATE OF CALIFORNIA OR ITS OFFICERS OR AGENTS SHALL NOT BE RESPONSIBLE FOR THE ACCURACY OR COMPLETENESS OF SCANNED COPIES OF THIS PLAN SHEET.

NOTES:

1. SEE Std PLANS RSP A77L2 AND A77N4 FOR DETAILS NOT SHOWN.
2. WHEN THERE IS A GRADE BREAK POINT BETWEEN 4'-8' IN FRONT OF GUARD RAILING, THE HEIGHT WILL BE DETERMINED BY THE ENGINEER.
3. EXACT LOCATIONS OF RUB RAIL ELEMENTS WILL BE DETERMINED BY THE ENGINEER. ATTACH TO POST WITH NO BLOCK.

LEGEND

CPACP

ABBREVIATIONS

CPACP COLD PLANE ASPHALT CONCRETE PAVEMENT

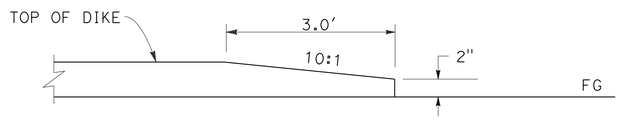

DIKE END TRANSITION
TYPICAL ALL DIKES

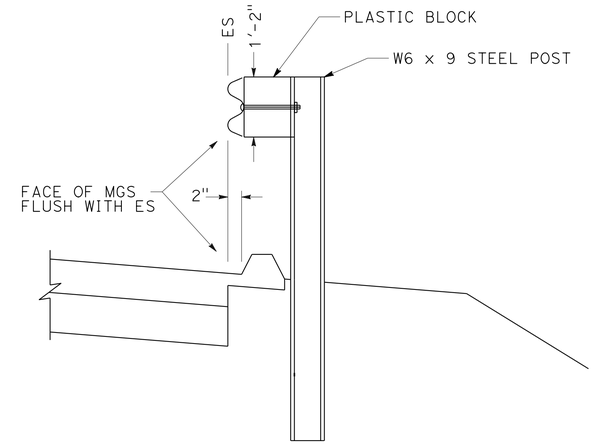

DIKE POSITIONING TYPICAL MGS (STEEL POST)

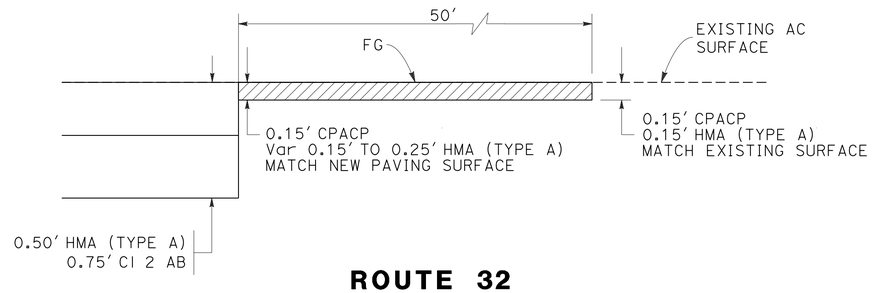

ROUTE 32 HMA PAVING CONFORM
"A1" 104+00.00 TO 104+50.00

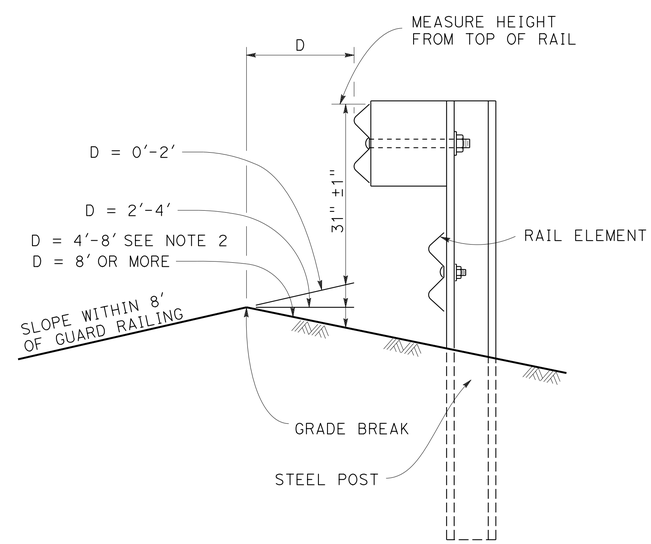

RUB RAIL DETAIL
WHEN THERE IS A GRADE BREAK IN FRONT OF GUARDRAIL MEASURE HEIGHT OF GUARDRAIL BASED ON DISTANCE FROM GRADE BREAK.

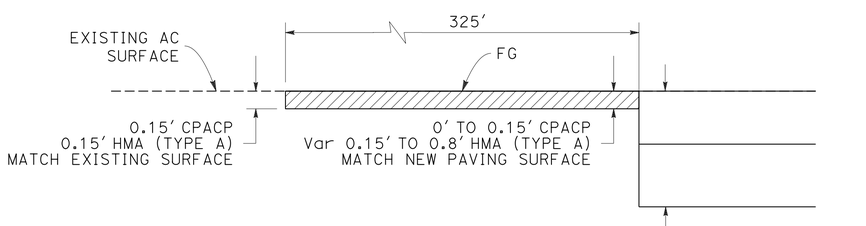

ROUTE 32 HMA PAVING CONFORM
"A1" 46+00.00 TO 49+25.00

CONSTRUCTION DETAILS

NO SCALE

C-3

STATE OF CALIFORNIA - DEPARTMENT OF TRANSPORTATION
Caltrans DESIGN
FUNCTIONAL SUPERVISOR: AL TRUJILLO
CALCULATED-DESIGNED BY: JEFF CARSON
CHECKED BY: MICHAEL FEAKES
REVISED BY
DATE REVISED

P:\proj\02\4E900_plans\pse\24e900ga003.dgn

LAST REVISION 07-28-14 | DATE PLOTTED => 29-JUL-2014 | TIME PLOTTED => 06:36

Dist	COUNTY	ROUTE	POST MILES TOTAL PROJECT	SHEET No.	TOTAL SHEETS
02	Teh	32	5.1/6.3	17	74

REGISTERED CIVIL ENGINEER 07-28-14 DATE

07-28-14
PLANS APPROVAL DATE

REGISTERED PROFESSIONAL ENGINEER MICHAEL E. FEAKES No. C70755 Exp. 6-30-15 CIVIL STATE OF CALIFORNIA

THE STATE OF CALIFORNIA OR ITS OFFICERS OR AGENTS SHALL NOT BE RESPONSIBLE FOR THE ACCURACY OR COMPLETENESS OF SCANNED COPIES OF THIS PLAN SHEET.

NOTES:

1. STANDARD 6′ POST SHALL BE STEEL, SEE STD PLN RSP A77L2 FOR ADDITIONAL DETAILS NOT SHOWN ON THIS PLAN
2. CRT POST SHALL BE WOOD.
3. SPLICE LOCATION OF MGS WILL NOT EFFECT SPAN.
4. GUARDRAIL ELEMENTS TO BE STANDARD 12′-6" LENGTH BETWEEN SPLICES.
5. IF MORE THAN ONE POST IS SKIPPED, THE USE OF THIS DETAIL REQURIES MINIMUM LENGTH OF 50′ OF STANDARD GUARDRAIL BEFORE ANOTHER LOCATION WITH POST CAN BE SKIPPED.

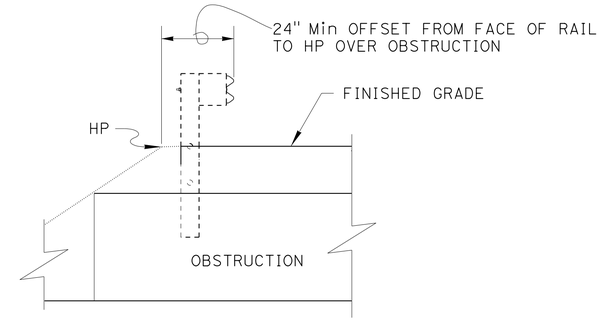

SECTION A-A

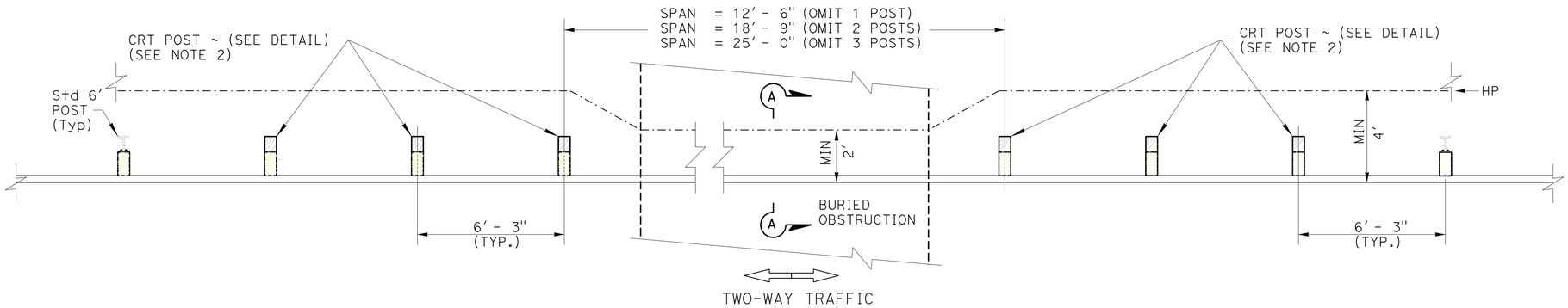

PLAN

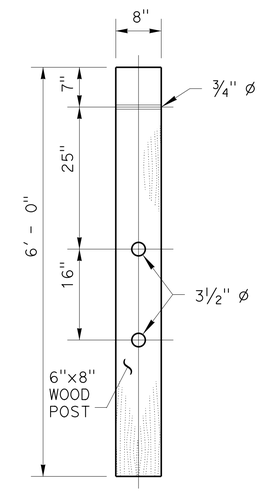

CONTROLLED RELEASING TERMINAL (CRT) POST DETAIL

SEE NOTE 2

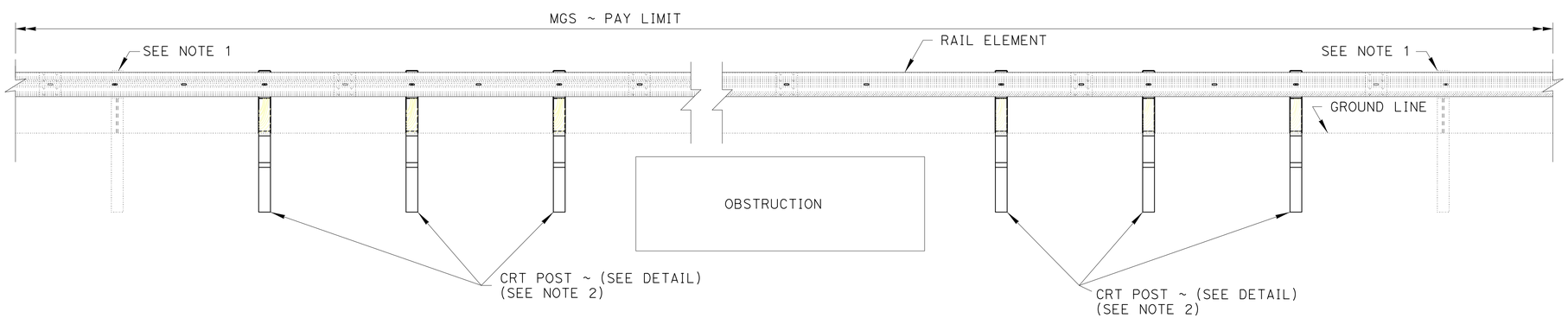

ELEVATION
SEE NOTE 6

CONSTRUCTION DETAILS MIDWEST GUARDRAIL SYSTEM OMIT 1 TO 3 POSTS

NO SCALE

C-4

REVISED BY | DATE REVISED
JEFF CARSON | MICHAEL FEAKES
CALCULATED-DESIGNED BY | CHECKED BY
FUNCTIONAL SUPERVISOR | AL TRUJILLO

STATE OF CALIFORNIA - DEPARTMENT OF TRANSPORTATION
Caltrans
DESIGN

P:\proj1\02\4E900_plans\pse\24e900ga004.dgn

LAST REVISION 07-28-14 | DATE PLOTTED => 29-JUL-2014 | TIME PLOTTED => 06:36

Dist	COUNTY	ROUTE	POST MILES TOTAL PROJECT	SHEET No.	TOTAL SHEETS
02	Teh	32	5.1/6.3	18	74

REGISTERED CIVIL ENGINEER 07-28-14 DATE

07-28-14
PLANS APPROVAL DATE

REGISTERED PROFESSIONAL ENGINEER MICHAEL E. FEAKES No. C70755 Exp. 6-30-15 CIVIL STATE OF CALIFORNIA

THE STATE OF CALIFORNIA OR ITS OFFICERS OR AGENTS SHALL NOT BE RESPONSIBLE FOR THE ACCURACY OR COMPLETENESS OF SCANNED COPIES OF THIS PLAN SHEET.

NOTES:

1. GRIND EXISTING SURFACES TO ACCOMODATE A MINIMUM TAPER THICKNESS OF 0.10′ WHEN EITHER:
   A. HMA MATERIAL SUCH AS RUBBERIZED, POLYMER MODIFIED OR OPEN GRADED IS UNSUITABLE FOR RAKING TO A MAXIMUM 0.02′ THICKNESS AT THE CONFORM.
   B. TEMPORARY TAPER WILL BE IN PLACE FOR MORE THAN 14 DAYS.
2. PERMANENT SURFACE MAY BE EXISTING OR NEW PAVEMENT.
3. ROADWAY SURFACE IS THE TOP OF EXISTING SURFACE OR THE TOP OF THE COLD PLANED SURFACING.

LEGEND:

HMA MATERIAL (TEMPORARY TAPER)

IF NECESSARY, COLD PLANE ASPHALT CONCRETE PAVEMENT AND PLACE HMA MATERIAL (SEE NOTE 1)

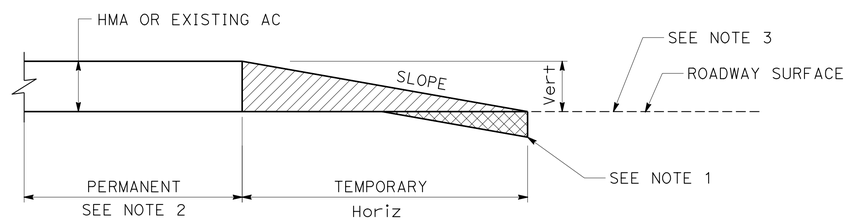

Vert	SLOPE RATIO Horiz/Vert
0-0.10′	70:1
GREATER THAN 0.10′	160:1

TYPICAL PAVING CONFORM FOR TEMPORARY CONSTRUCTION TAPERS

CONSTRUCTION DETAILS

NO SCALE

C-5

REVISED BY | DATE REVISED
JEFF CARSON | MICHAEL FEAKES
CALCULATED-DESIGNED BY | CHECKED BY
FUNCTIONAL SUPERVISOR | AL TRUJILLO
STATE OF CALIFORNIA - DEPARTMENT OF TRANSPORTATION
Caltrans® DESIGN

P:\proj1\02\4E900_plans\pse\24e900ga005.dgn

LAST REVISION 07-28-14 | DATE PLOTTED => 29-JUL-2014 | TIME PLOTTED => 06:36

Dist	COUNTY	ROUTE	POST MILES TOTAL PROJECT	SHEET No.	TOTAL SHEETS
02	Teh	32	5.1/6.3	19	74

Rodney S. Estes 07-28-14
REGISTERED CIVIL ENGINEER DATE

07-28-14
PLANS APPROVAL DATE

REGISTERED PROFESSIONAL ENGINEER
ROD ESTES
No. 74535
Exp. 12-31-15
CIVIL
STATE OF CALIFORNIA

THE STATE OF CALIFORNIA OR ITS OFFICERS OR AGENTS SHALL NOT BE RESPONSIBLE FOR THE ACCURACY OR COMPLETENESS OF SCANNED COPIES OF THIS PLAN SHEET.

NOTE:

1. FOR ACCURATE RIGHT OF WAY DATA, CONTACT RIGHT OF WAY ENGINEERING AT THE DISTRICT OFFICE.

LEGEND

[X] REMOVE EXISTING DRAINAGE UNIT

ABBREVIATIONS

GFL GUTTER FLOW LINE

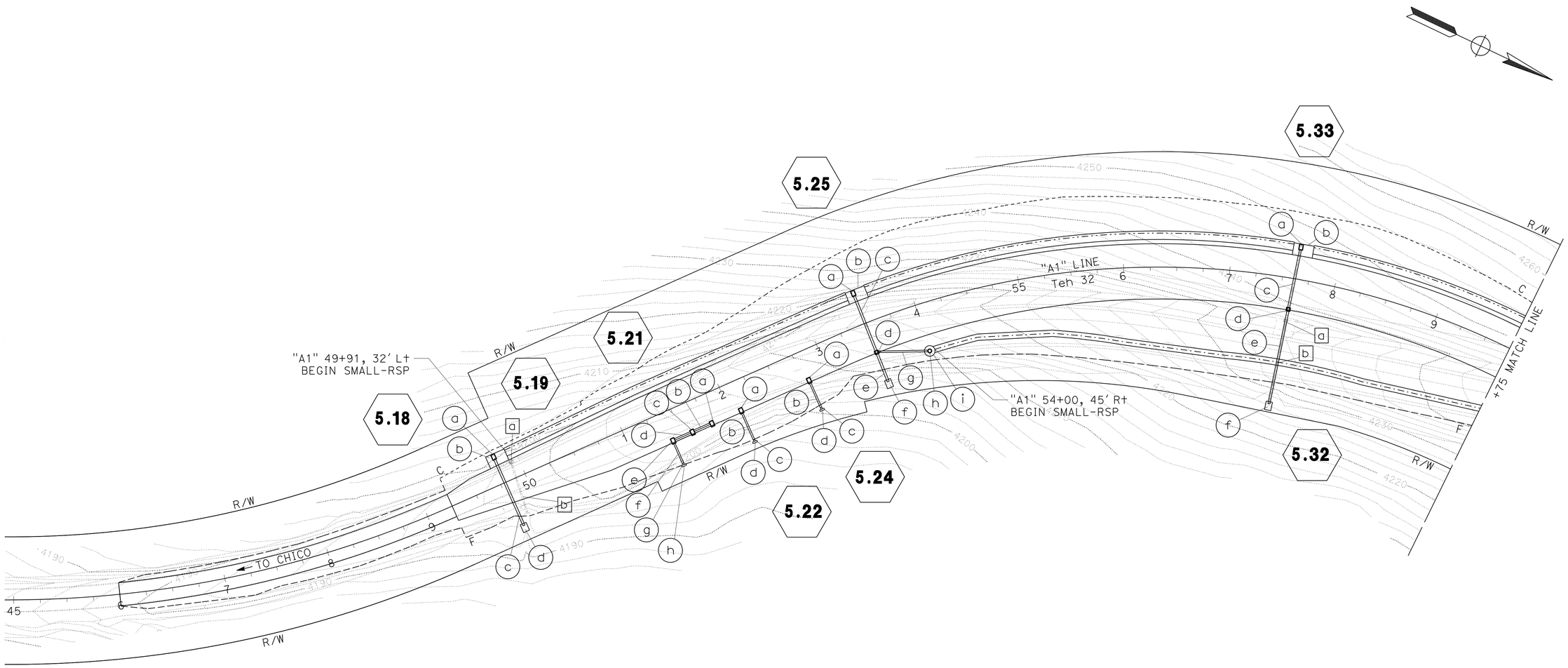

APPROVED FOR DRAINAGE WORK ONLY

DRAINAGE PLAN

SCALE: 1" = 50'

D-1

P:\proj\02\4E900_plans\pse\24e900ia001.dgn

STATE OF CALIFORNIA - DEPARTMENT OF TRANSPORTATION

Caltrans

DESIGN

FUNCTIONAL SUPERVISOR: AL TRUJILLO

CALCULATED-DESIGNED BY: JEFF CARSON

CHECKED BY: ROD ESTES

REVISED BY

DATE REVISED

LAST REVISION 07-28-14

DATE PLOTTED => 29-JUL-2014

TIME PLOTTED => 06:36

Dist	COUNTY	ROUTE	POST MILES TOTAL PROJECT	SHEET No.	TOTAL SHEETS
02	Teh	32	5.1/6.3	20	74

REGISTERED CIVIL ENGINEER 07-28-14 DATE

07-28-14
PLANS APPROVAL DATE

REGISTERED PROFESSIONAL ENGINEER ROD ESTES No. 74535 Exp. 12-31-15 CIVIL STATE OF CALIFORNIA

THE STATE OF CALIFORNIA OR ITS OFFICERS OR AGENTS SHALL NOT BE RESPONSIBLE FOR THE ACCURACY OR COMPLETENESS OF SCANNED COPIES OF THIS PLAN SHEET.

NOTE:

1. FOR ACCURATE RIGHT OF WAY DATA, CONTACT RIGHT OF WAY ENGINEERING AT THE DISTRICT OFFICE.

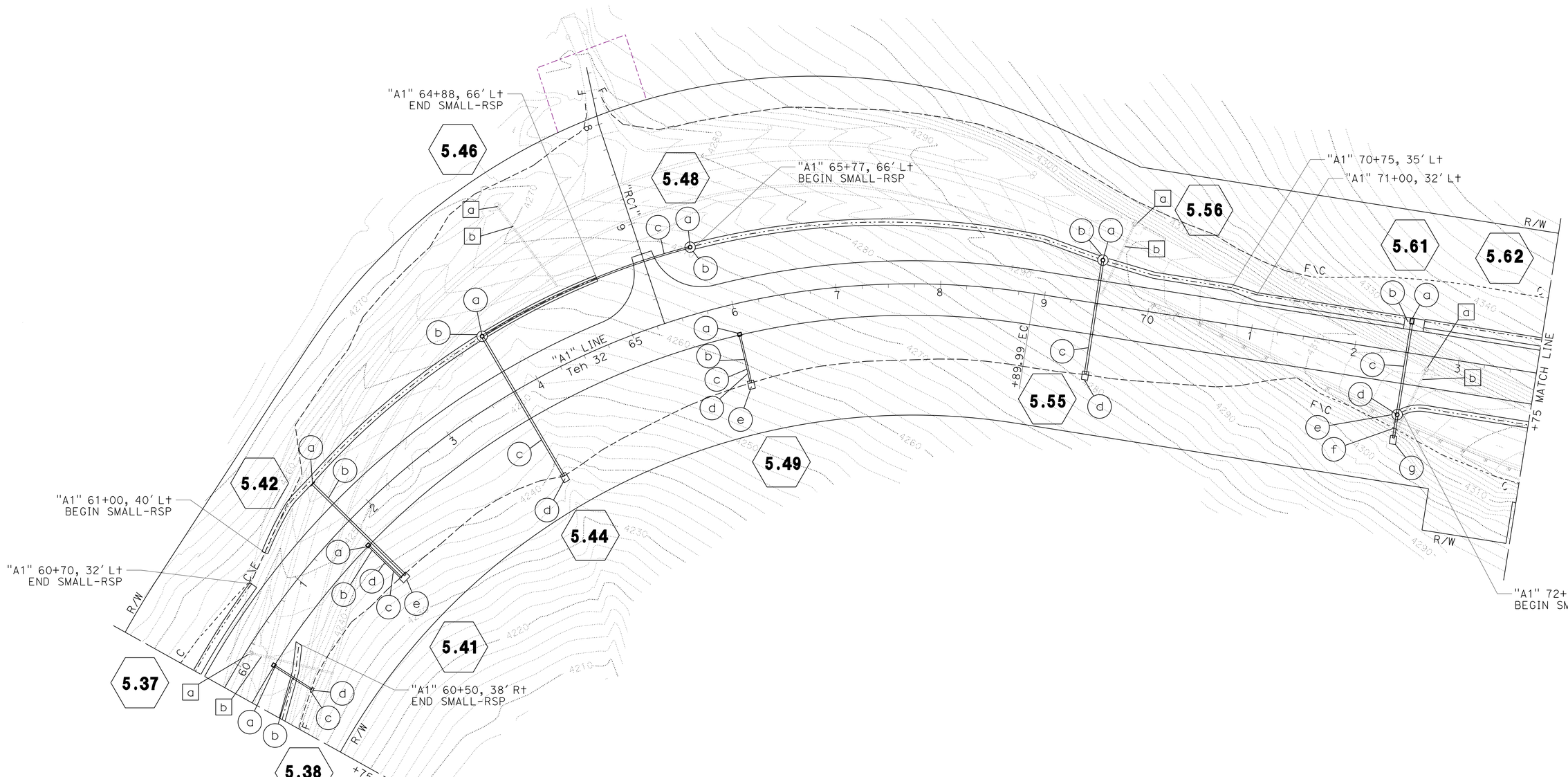

APPROVED FOR DRAINAGE WORK ONLY

DRAINAGE PLAN

SCALE: 1" = 50'

D-2

REVISED BY	DATE REVISED

CALCULATED-DESIGNED BY: JEFF CARSON
CHECKED BY: ROD ESTES
FUNCTIONAL SUPERVISOR: AL TRUJILLO

STATE OF CALIFORNIA - DEPARTMENT OF TRANSPORTATION
Caltrans
DESIGN

P:\proj1\02\4E900_plans\pse\24e900ia002.dgn

LAST REVISION 07-28-14 | DATE PLOTTED => 29-JUL-2014 | TIME PLOTTED => 06:36

Dist	COUNTY	ROUTE	POST MILES TOTAL PROJECT	SHEET No.	TOTAL SHEETS
02	Teh	32	5.1/6.3	21	74

Rodney S. Estes 07-28-14
REGISTERED CIVIL ENGINEER DATE

07-28-14
PLANS APPROVAL DATE

REGISTERED PROFESSIONAL ENGINEER
ROD ESTES
No. 74535
Exp. 12-31-15
CIVIL
STATE OF CALIFORNIA

THE STATE OF CALIFORNIA OR ITS OFFICERS OR AGENTS SHALL NOT BE RESPONSIBLE FOR THE ACCURACY OR COMPLETENESS OF SCANNED COPIES OF THIS PLAN SHEET.

NOTE:

1. FOR ACCURATE RIGHT OF WAY DATA, CONTACT RIGHT OF WAY ENGINEERING AT THE DISTRICT OFFICE.

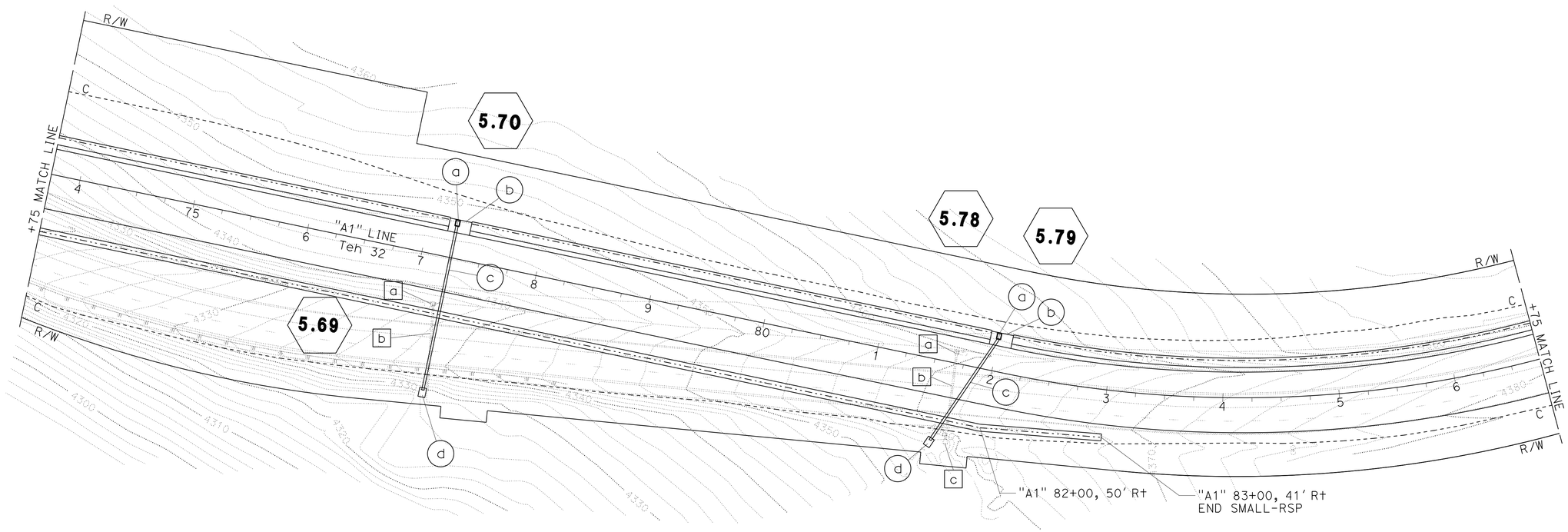

DRAINAGE PLAN

SCALE: 1" = 50'

D-3

APPROVED FOR DRAINAGE WORK ONLY

REVISED BY | DATE REVISED
JEFF CARSON | ROD ESTES
CALCULATED-DESIGNED BY | CHECKED BY
FUNCTIONAL SUPERVISOR
AL TRUJILLO

STATE OF CALIFORNIA - DEPARTMENT OF TRANSPORTATION
Caltrans
DESIGN

P:\proj1\02\4E900_plans\pse\24e900ia003.dgn

LAST REVISION | DATE PLOTTED => 29-JUL-2014
07-28-14 | TIME PLOTTED => 06:36

Dist	COUNTY	ROUTE	POST MILES TOTAL PROJECT	SHEET No.	TOTAL SHEETS
02	Teh	32	5.1/6.3	22	74

Rodney S. Estes 07-28-14
REGISTERED CIVIL ENGINEER DATE

07-28-14
PLANS APPROVAL DATE

REGISTERED PROFESSIONAL ENGINEER
ROD ESTES
No. 74535
Exp. 12-31-15
CIVIL
STATE OF CALIFORNIA

THE STATE OF CALIFORNIA OR ITS OFFICERS OR AGENTS SHALL NOT BE RESPONSIBLE FOR THE ACCURACY OR COMPLETENESS OF SCANNED COPIES OF THIS PLAN SHEET.

NOTE:

1. FOR ACCURATE RIGHT OF WAY DATA, CONTACT RIGHT OF WAY ENGINEERING AT THE DISTRICT OFFICE.

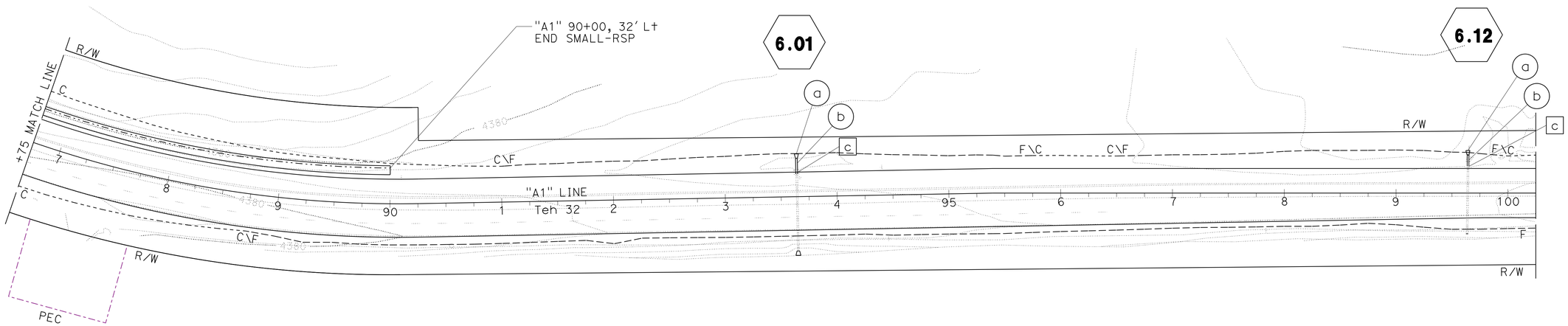

DRAINAGE PLAN

SCALE: 1" = 50'

D-4

APPROVED FOR DRAINAGE WORK ONLY

REVISED BY	DATE REVISED

CALCULATED-DESIGNED BY: JEFF CARSON
CHECKED BY: ROD ESTES
FUNCTIONAL SUPERVISOR: AL TRUJILLO

STATE OF CALIFORNIA - DEPARTMENT OF TRANSPORTATION
Caltrans
DESIGN

P:\proj1\02\4E900_plans\pse\24e900ia004.dgn

LAST REVISION 07-28-14 | DATE PLOTTED => 29-JUL-2014 | TIME PLOTTED => 06:36

Dist	COUNTY	ROUTE	POST MILES TOTAL PROJECT	SHEET No.	TOTAL SHEETS
02	Teh	32	5.1/6.3	23	74

REGISTERED CIVIL ENGINEER 07-28-14 DATE

07-28-14
PLANS APPROVAL DATE

REGISTERED PROFESSIONAL ENGINEER ROD ESTES No. 74535 Exp. 12-31-15 CIVIL STATE OF CALIFORNIA

THE STATE OF CALIFORNIA OR ITS OFFICERS OR AGENTS SHALL NOT BE RESPONSIBLE FOR THE ACCURACY OR COMPLETENESS OF SCANNED COPIES OF THIS PLAN SHEET.

LEGEND:

[X] REMOVE EXISTING DRAINAGE UNIT

ABBREVIATIONS:

GFL	GUTTER FLOW LINE
SI	LONGITUDINAL SLOPE
Sx	CROSS SLOPE

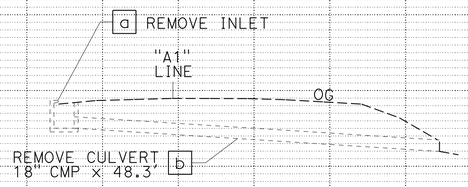

DRAINAGE SYSTEM 5.19
"A1" 49+90

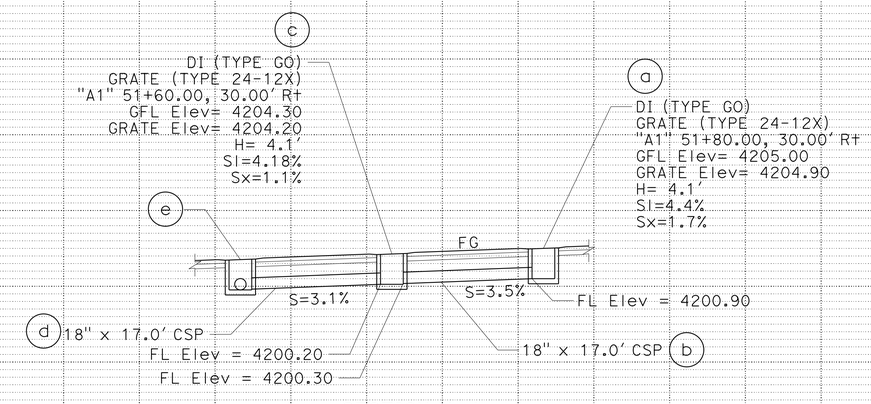

SECTION A-A

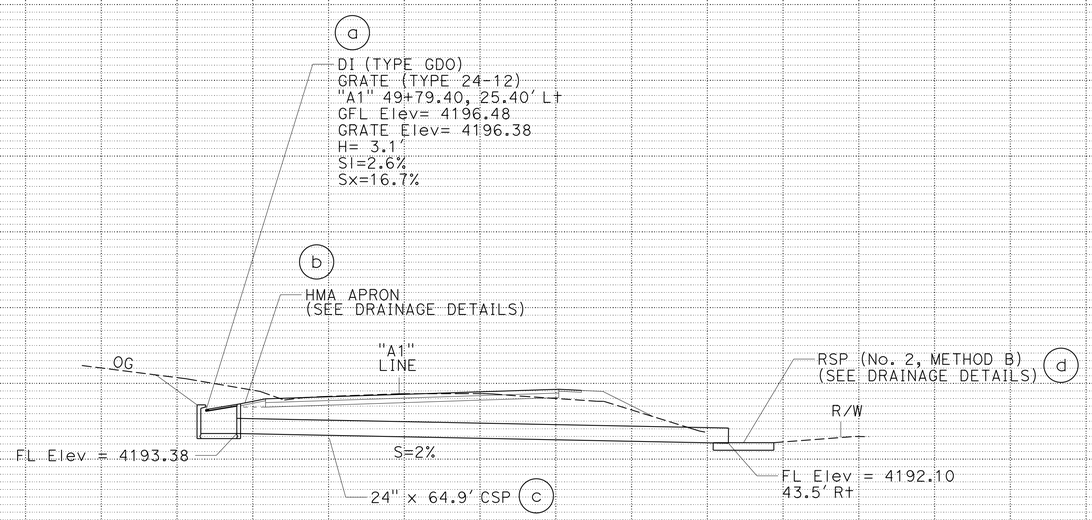

DRAINAGE SYSTEM 5.18
"A1" 49+79.40

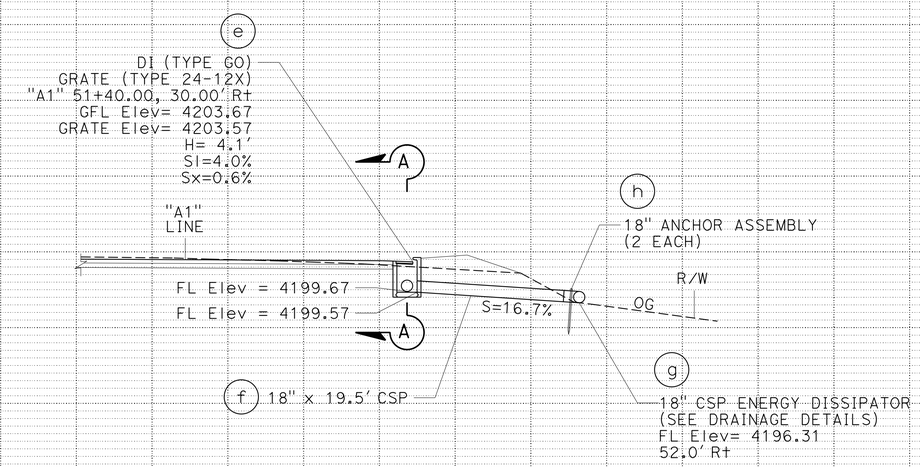

DRAINAGE SYSTEM 5.21
"A1" 51+40.00

DRAINAGE PROFILES

SCALE: 1" = 10'

DP-1

REVISED BY	DATE REVISED

CALCULATED-DESIGNED BY	CHECKED BY
JEFF CARSON	ROD ESTES

FUNCTIONAL SUPERVISOR: AL TRUJILLO

STATE OF CALIFORNIA - DEPARTMENT OF TRANSPORTATION
Caltrans
DESIGN

P:\proj\02\4E900_plans\pse\24e900ib001.dgn

LAST REVISION 07-28-14 | DATE PLOTTED => 29-JUL-2014 | TIME PLOTTED => 06:36

Dist	COUNTY	ROUTE	POST MILES TOTAL PROJECT	SHEET No.	TOTAL SHEETS
02	Teh	32	5.1/6.3	24	74

REGISTERED CIVIL ENGINEER 07-28-14 DATE

07-28-14
PLANS APPROVAL DATE

REGISTERED PROFESSIONAL ENGINEER ROD ESTES No. 74535 Exp. 12-31-15 CIVIL STATE OF CALIFORNIA

THE STATE OF CALIFORNIA OR ITS OFFICERS OR AGENTS SHALL NOT BE RESPONSIBLE FOR THE ACCURACY OR COMPLETENESS OF SCANNED COPIES OF THIS PLAN SHEET.

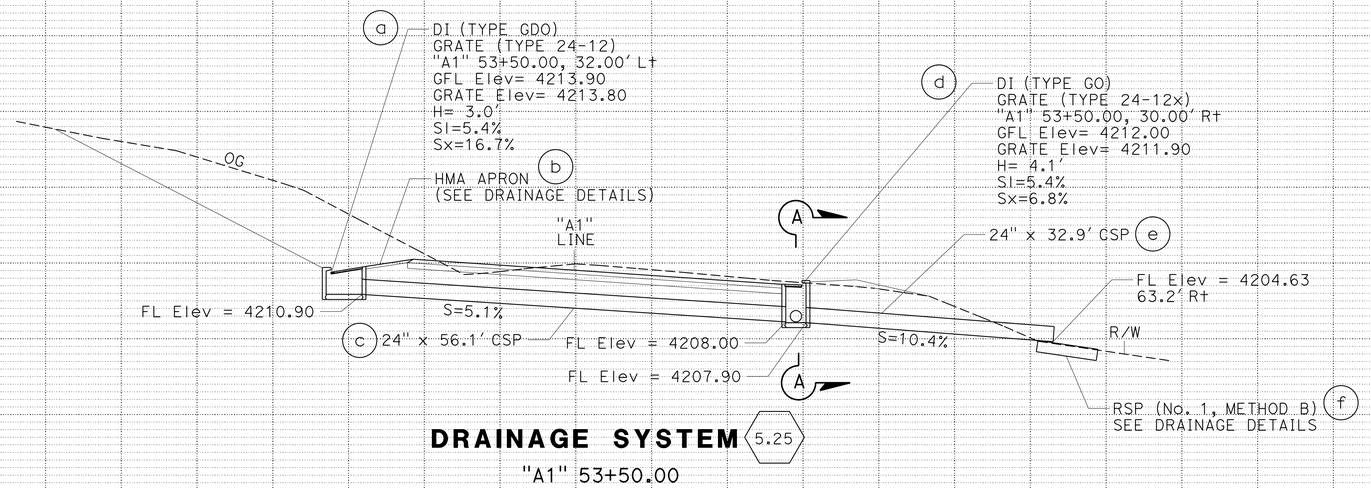

DRAINAGE SYSTEM 5.25

"A1" 53+50.00

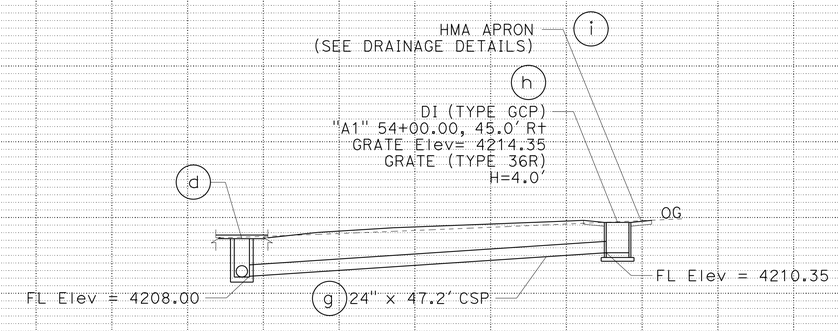

SECTION A-A

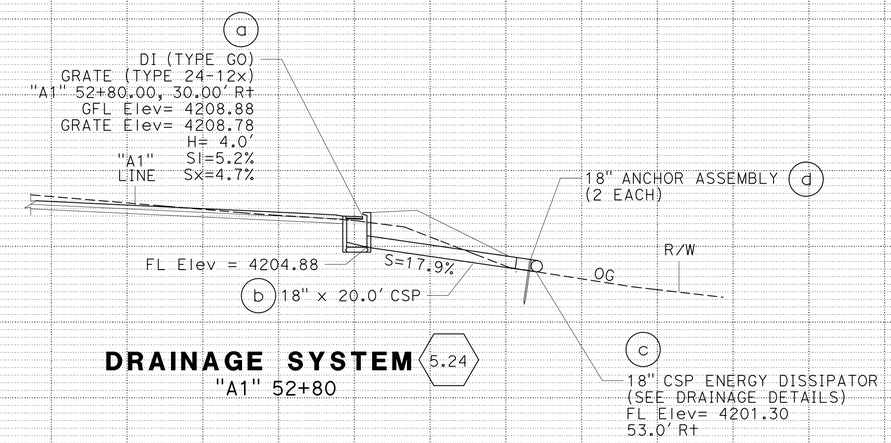

DRAINAGE SYSTEM 5.24

"A1" 52+80

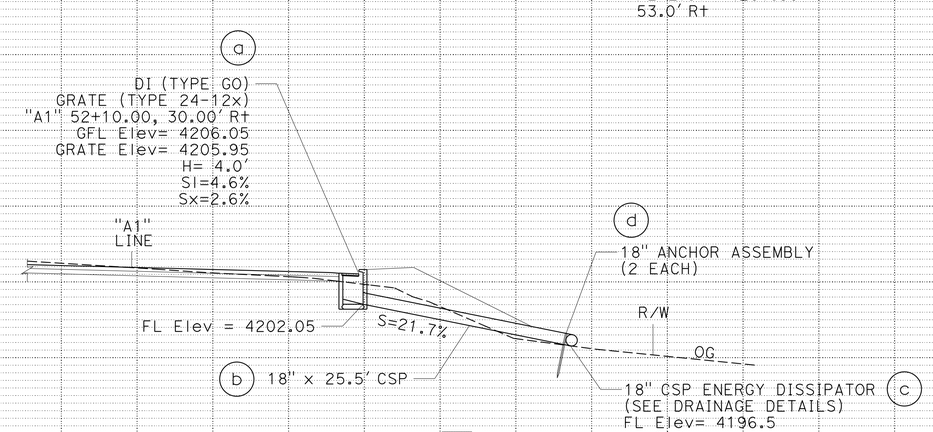

DRAINAGE SYSTEM 5.22

"A1" 52+10

DRAINAGE PROFILES

SCALE: 1" = 10'

DP-2

REVISED BY | DATE REVISED

JEFF CARSON | ROD ESTES

CALCULATED-DESIGNED BY | CHECKED BY

FUNCTIONAL SUPERVISOR

AL TRUJILLO

STATE OF CALIFORNIA - DEPARTMENT OF TRANSPORTATION

Caltrans

DESIGN

P:\proj1\02\4E900_plans\pse\24e900ib002.dgn

LAST REVISION 07-28-14 | DATE PLOTTED => 29-JUL-2014 | TIME PLOTTED => 06:36

Dist	COUNTY	ROUTE	POST MILES TOTAL PROJECT	SHEET No.	TOTAL SHEETS
02	Teh	32	5.1/6.3	25	74

REGISTERED CIVIL ENGINEER 07-28-14 DATE

07-28-14
PLANS APPROVAL DATE

REGISTERED PROFESSIONAL ENGINEER ROD ESTES No. 74535 Exp. 12-31-15 CIVIL STATE OF CALIFORNIA

THE STATE OF CALIFORNIA OR ITS OFFICERS OR AGENTS SHALL NOT BE RESPONSIBLE FOR THE ACCURACY OR COMPLETENESS OF SCANNED COPIES OF THIS PLAN SHEET.

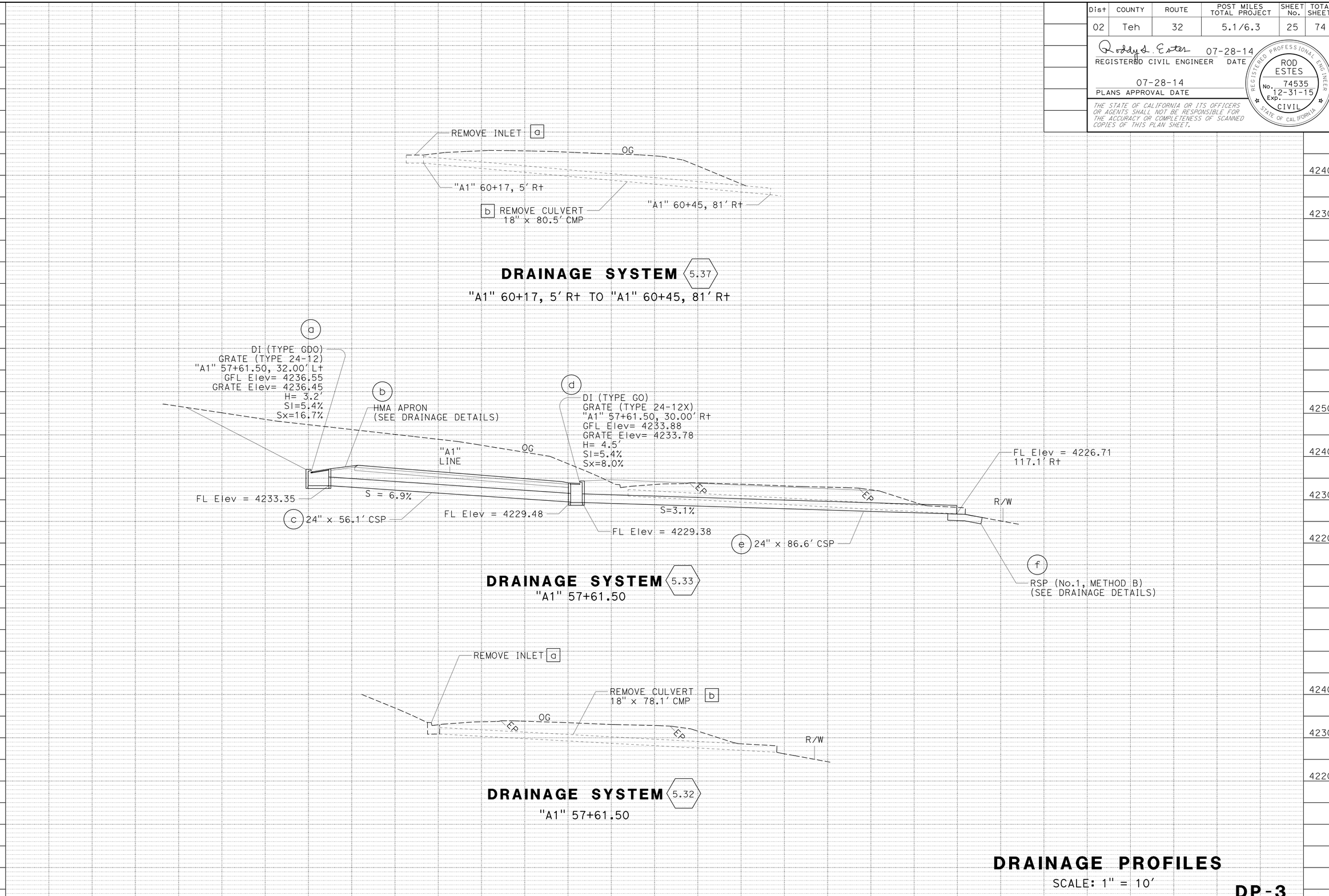

DRAINAGE PROFILES

SCALE: 1" = 10'

DP-3

REVISED BY | DATE REVISED

JEFF CARSON | ROD ESTES

CALCULATED-DESIGNED BY | CHECKED BY

FUNCTIONAL SUPERVISOR: AL TRUJILLO

STATE OF CALIFORNIA - DEPARTMENT OF TRANSPORTATION

Caltrans DESIGN

P:\proj1\02\4E900_plans\pse\24e900ib003.dgn

LAST REVISION 07-28-14 | DATE PLOTTED => 29-JUL-2014 | TIME PLOTTED => 06:36

Dist	COUNTY	ROUTE	POST MILES TOTAL PROJECT	SHEET No.	TOTAL SHEETS
02	Teh	32	5.1/6.3	26	74

REGISTERED CIVIL ENGINEER 07-28-14 DATE

07-28-14
PLANS APPROVAL DATE

REGISTERED PROFESSIONAL ENGINEER ROD ESTES No. 74535 Exp. 12-31-15 CIVIL STATE OF CALIFORNIA

THE STATE OF CALIFORNIA OR ITS OFFICERS OR AGENTS SHALL NOT BE RESPONSIBLE FOR THE ACCURACY OR COMPLETENESS OF SCANNED COPIES OF THIS PLAN SHEET.

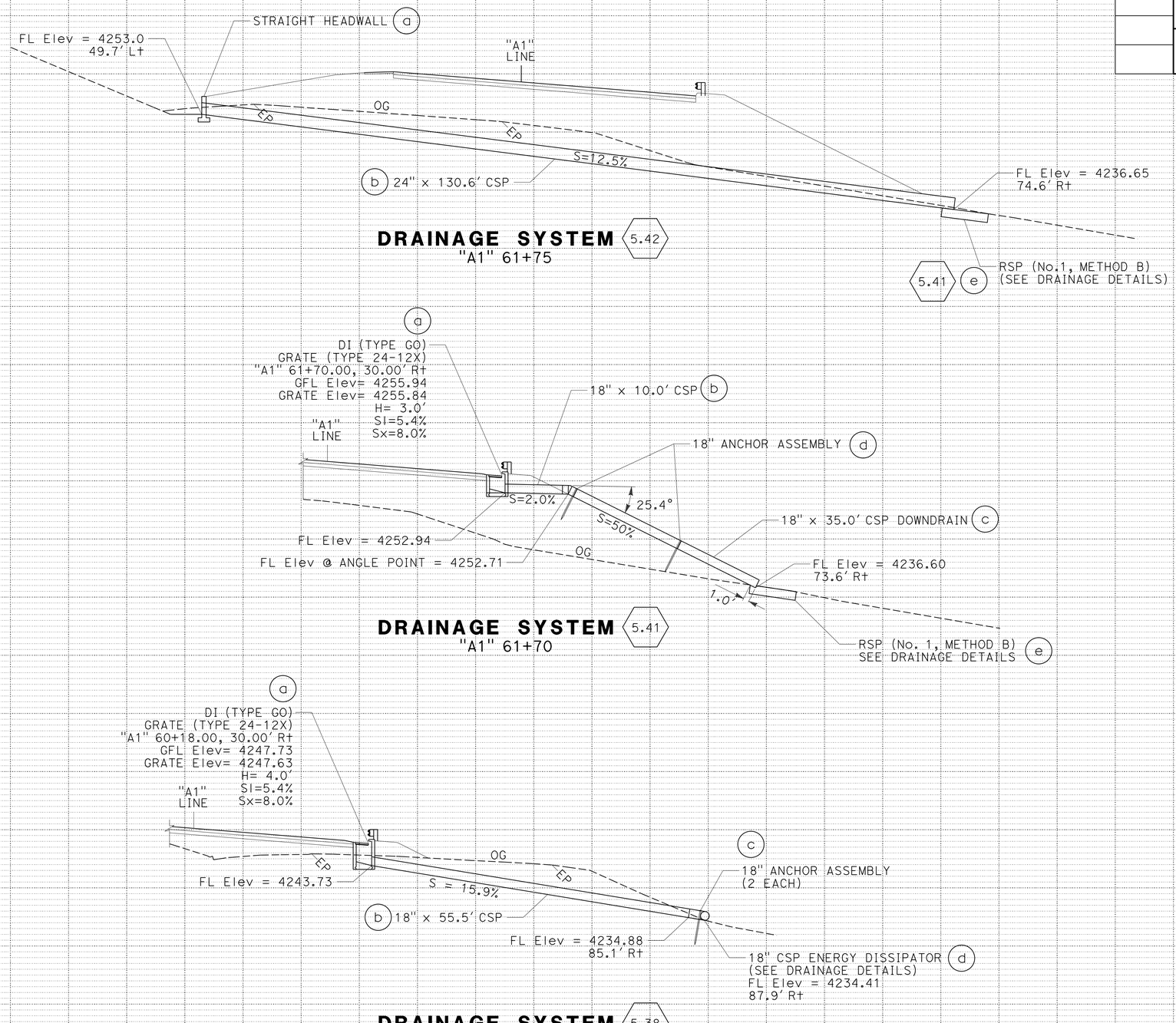

DRAINAGE PROFILES

SCALE: 1" = 10'

DP-4

REVISED BY | DATE REVISED
JEFF CARSON | ROD ESTES
CALCULATED-DESIGNED BY | CHECKED BY
FUNCTIONAL SUPERVISOR
AL TRUJILLO

STATE OF CALIFORNIA - DEPARTMENT OF TRANSPORTATION
Caltrans
DESIGN

P:\proj1\02\4E900_plans\pse\24e900ib004.dgn

LAST REVISION DATE PLOTTED => 29-JUL-2014
07-28-14 TIME PLOTTED => 06:36

Dist	COUNTY	ROUTE	POST MILES TOTAL PROJECT	SHEET No.	TOTAL SHEETS
02	Teh	32	5.1/6.3	27	74

REGISTERED CIVIL ENGINEER 07-28-14 DATE

07-28-14
PLANS APPROVAL DATE

REGISTERED PROFESSIONAL ENGINEER ROD ESTES No. 74535 Exp. 12-31-15 CIVIL STATE OF CALIFORNIA

THE STATE OF CALIFORNIA OR ITS OFFICERS OR AGENTS SHALL NOT BE RESPONSIBLE FOR THE ACCURACY OR COMPLETENESS OF SCANNED COPIES OF THIS PLAN SHEET.

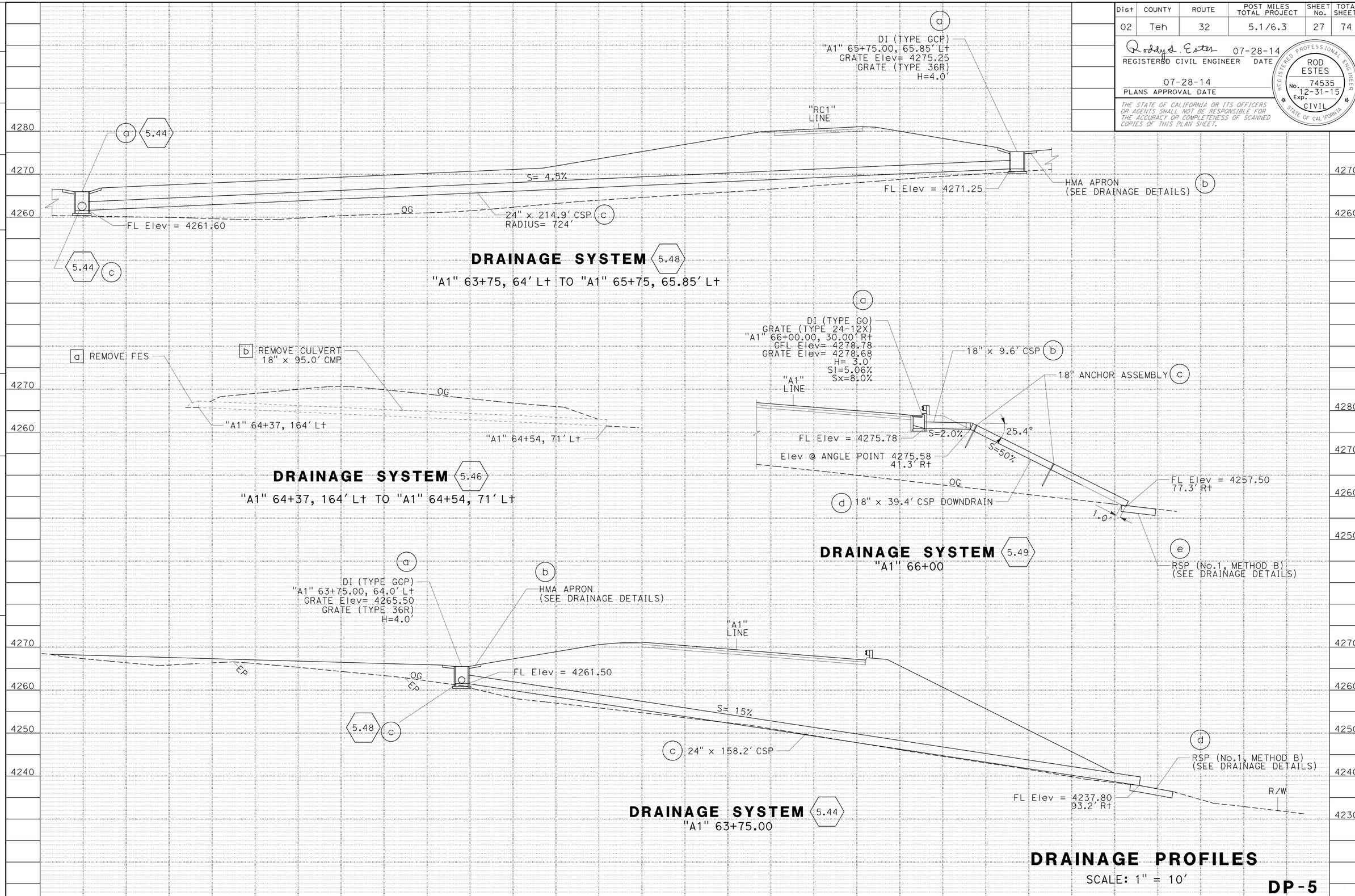

DRAINAGE PROFILES

SCALE: 1" = 10'

DP-5

STATE OF CALIFORNIA - DEPARTMENT OF TRANSPORTATION
Caltrans® DESIGN

FUNCTIONAL SUPERVISOR: AL TRUJILLO
CALCULATED-DESIGNED BY: JEFF CARSON
CHECKED BY: ROD ESTES
REVISED BY / DATE REVISED

P:\proj1\02\4E900_plans\pse\24e900ib005.dgn

LAST REVISION 07-28-14 | DATE PLOTTED => 29-JUL-2014 | TIME PLOTTED => 06:36

BORDER LAST REVISED 7/2/2010 | USERNAME => s115152 | DGN FILE => 24e900ib005.dgn | RELATIVE BORDER SCALE IS IN INCHES 0 1 2 3 | UNIT 0316 | PROJECT NUMBER & PHASE 02-1400-0080-1 | EA: 02-4E90U1

Dist	COUNTY	ROUTE	POST MILES TOTAL PROJECT	SHEET No.	TOTAL SHEETS
02	Teh	32	5.1/6.3	28	74

REGISTERED CIVIL ENGINEER 07-28-14 DATE

07-28-14
PLANS APPROVAL DATE

REGISTERED PROFESSIONAL ENGINEER ROD ESTES No. 74535 Exp. 12-31-15 CIVIL STATE OF CALIFORNIA

THE STATE OF CALIFORNIA OR ITS OFFICERS OR AGENTS SHALL NOT BE RESPONSIBLE FOR THE ACCURACY OR COMPLETENESS OF SCANNED COPIES OF THIS PLAN SHEET.

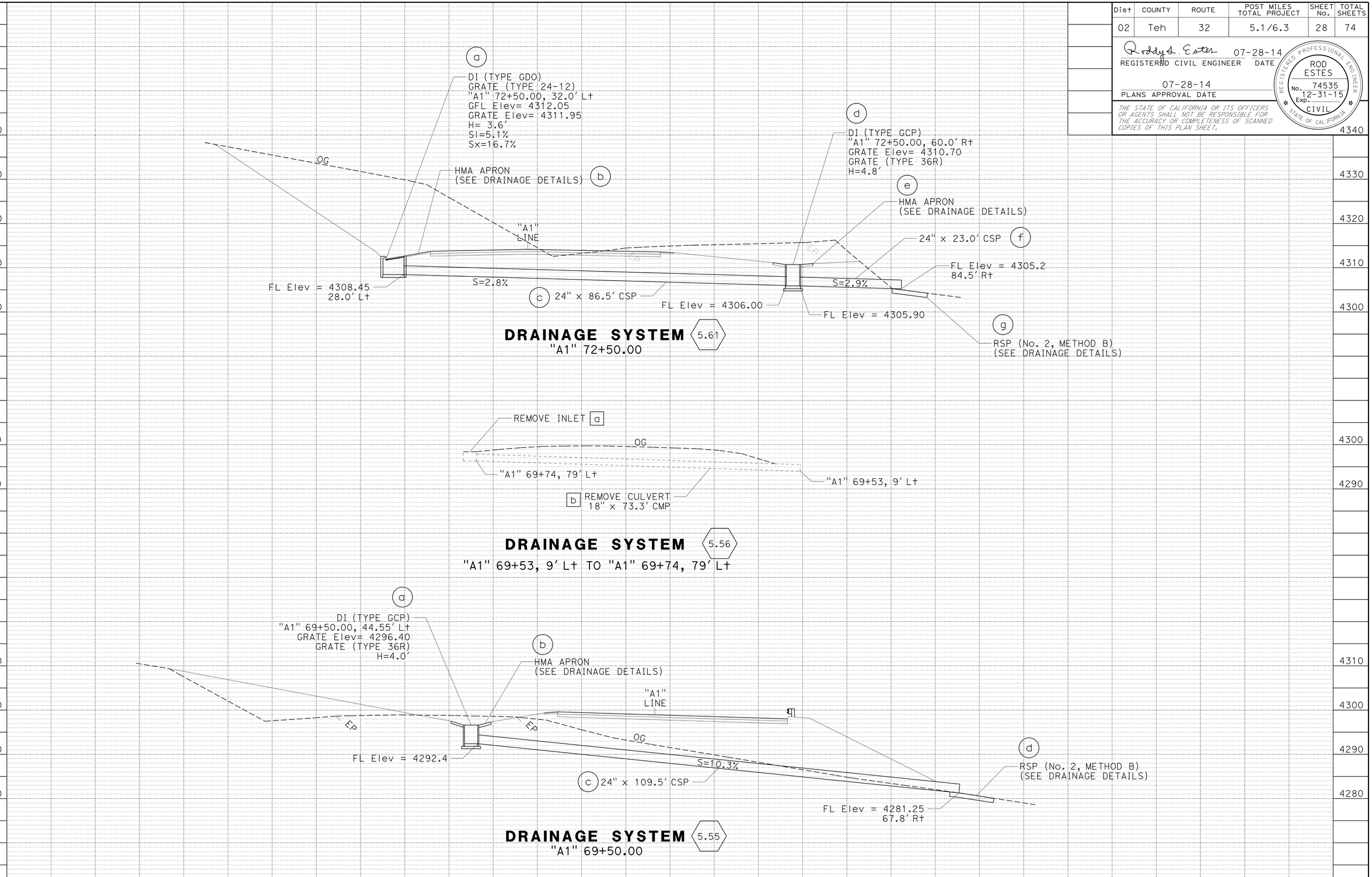

DRAINAGE PROFILES

SCALE: 1" = 10'

DP-6

REVISED BY | DATE REVISED

JEFF CARSON | ROD ESTES

CALCULATED-DESIGNED BY | CHECKED BY

FUNCTIONAL SUPERVISOR: AL TRUJILLO

STATE OF CALIFORNIA - DEPARTMENT OF TRANSPORTATION

Caltrans

DESIGN

P:\proj1\02\4E900_plans\pse\24e900ib006.dgn

LAST REVISION | DATE PLOTTED => 29-JUL-2014 | TIME PLOTTED => 06:36

07-28-14

BORDER LAST REVISED 7/2/2010 | USERNAME => s115152 | DGN FILE => 24e900ib006.dgn | RELATIVE BORDER SCALE IS IN INCHES 0 1 2 3 | UNIT 0316 | PROJECT NUMBER & PHASE 02-1400-0080-1 | EA: 02-4E90U1

Dist	COUNTY	ROUTE	POST MILES TOTAL PROJECT	SHEET No.	TOTAL SHEETS
02	Teh	32	5.1/6.3	29	74

REGISTERED CIVIL ENGINEER 07-28-14 DATE

07-28-14
PLANS APPROVAL DATE

REGISTERED PROFESSIONAL ENGINEER ROD ESTES No. 74535 Exp. 12-31-15 CIVIL STATE OF CALIFORNIA

THE STATE OF CALIFORNIA OR ITS OFFICERS OR AGENTS SHALL NOT BE RESPONSIBLE FOR THE ACCURACY OR COMPLETENESS OF SCANNED COPIES OF THIS PLAN SHEET.

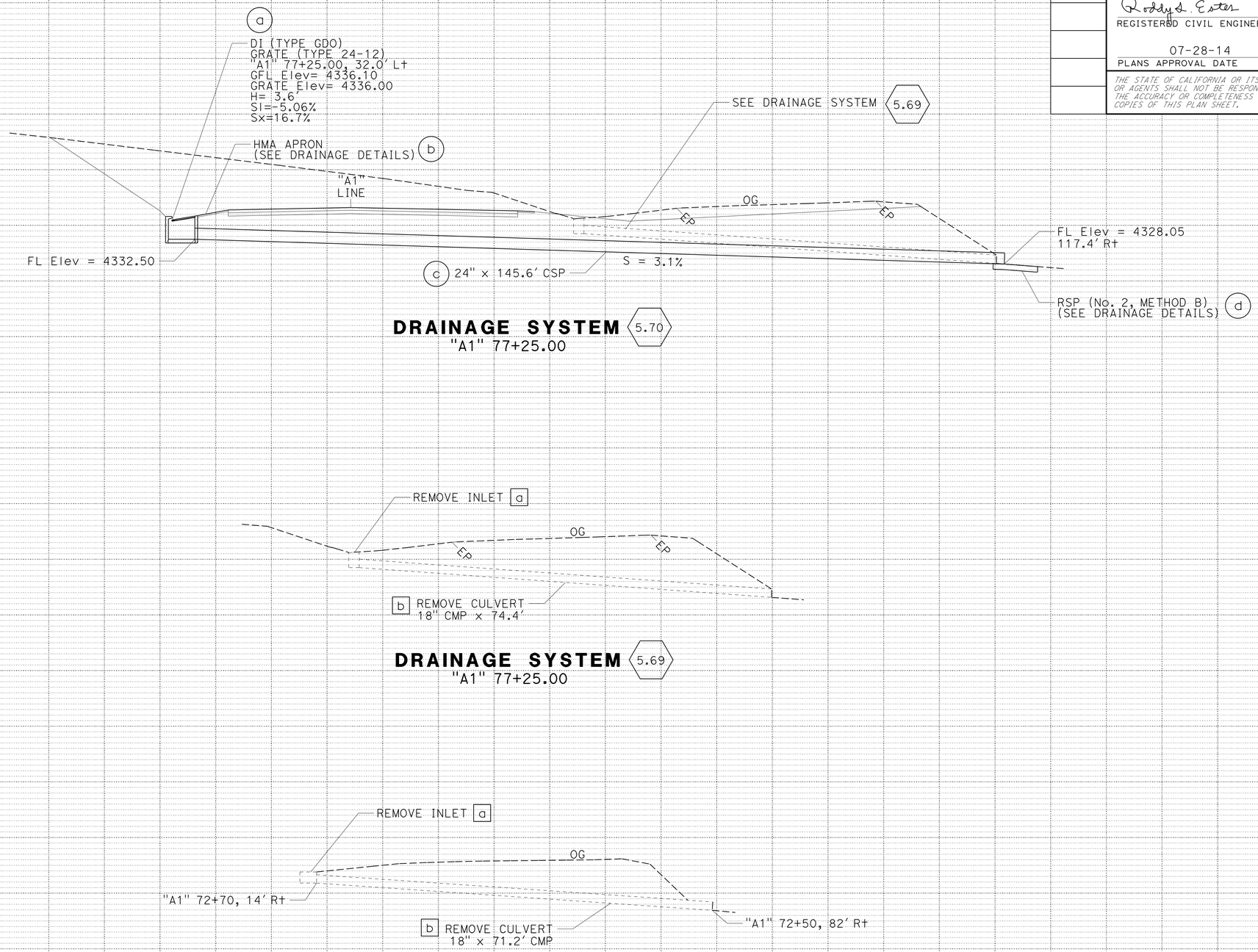

DRAINAGE PROFILES

SCALE: 1" = 10'

DP-7

REVISED BY | DATE REVISED

JEFF CARSON | ROD ESTES

CALCULATED-DESIGNED BY | CHECKED BY

FUNCTIONAL SUPERVISOR: AL TRUJILLO

STATE OF CALIFORNIA - DEPARTMENT OF TRANSPORTATION

Caltrans® **DESIGN**

P:\proj1\02\4E900_plans\pse\24e900ib007.dgn

LAST REVISION | DATE PLOTTED => 29-JUL-2014 | TIME PLOTTED => 06:36

07-28-14

Dist	COUNTY	ROUTE	POST MILES TOTAL PROJECT	SHEET No.	TOTAL SHEETS
02	Teh	32	5.1/6.3	30	74

REGISTERED CIVIL ENGINEER 07-28-14 DATE

07-28-14
PLANS APPROVAL DATE

REGISTERED PROFESSIONAL ENGINEER ROD ESTES No. 74535 Exp. 12-31-15 CIVIL STATE OF CALIFORNIA

THE STATE OF CALIFORNIA OR ITS OFFICERS OR AGENTS SHALL NOT BE RESPONSIBLE FOR THE ACCURACY OR COMPLETENESS OF SCANNED COPIES OF THIS PLAN SHEET.

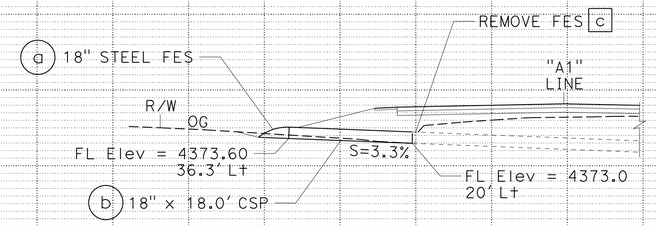

DRAINAGE SYSTEM 6.01
"A1" 93+63.40

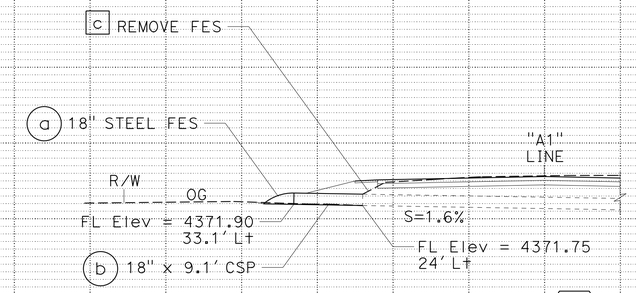

DRAINAGE SYSTEM 6.12
"A1" 99+63.60

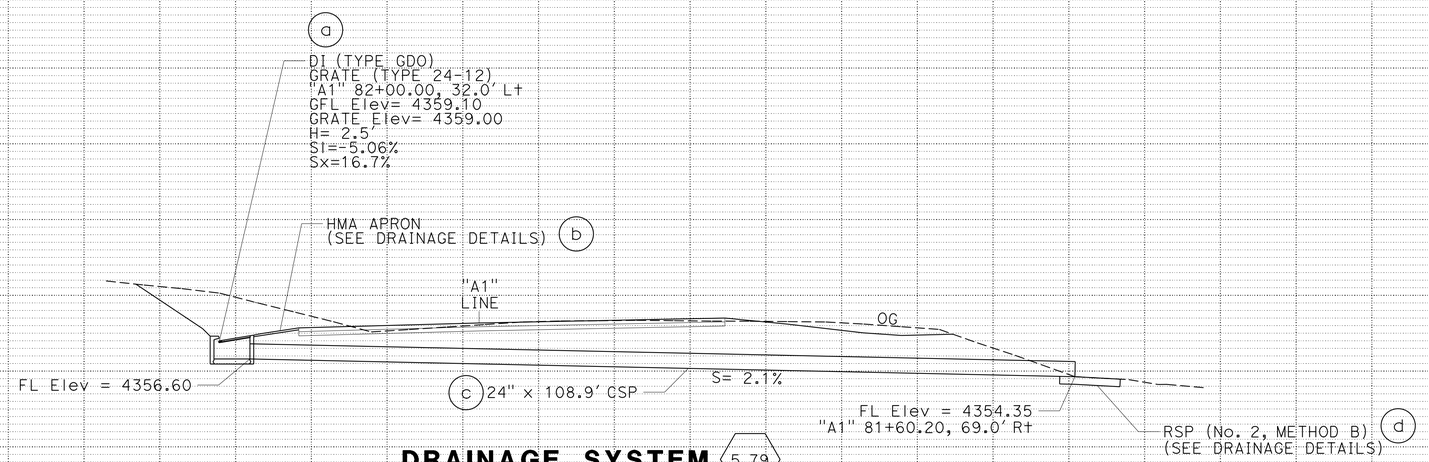

DRAINAGE SYSTEM 5.79
"A1" 82+00.00, 32.0' Lt TO "A1" 81+60.20, 69.0' Rt

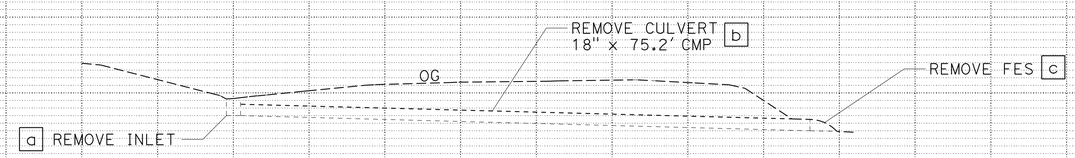

DRAINAGE SYSTEM 5.78
"A1" 81+75.00

DRAINAGE PROFILES

SCALE: 1" = 10'

DP-8

STATE OF CALIFORNIA - DEPARTMENT OF TRANSPORTATION
Caltrans® DESIGN

FUNCTIONAL SUPERVISOR: AL TRUJILLO
CALCULATED-DESIGNED BY: JEFF CARSON
CHECKED BY: ROD ESTES
REVISED BY / DATE REVISED

P:\proj1\02\4E900_plans\pse\24e900ib008.dgn

LAST REVISION 07-28-14 | DATE PLOTTED => 29-JUL-2014 | TIME PLOTTED => 06:36

Dist	COUNTY	ROUTE	POST MILES TOTAL PROJECT	SHEET No.	TOTAL SHEETS
02	Teh	32	5.1/6.3	31	74

Rodney S. Estes 07-28-14
REGISTERED CIVIL ENGINEER DATE

07-28-14
PLANS APPROVAL DATE

REGISTERED PROFESSIONAL ENGINEER ROD ESTES No. 74535 Exp. 12-31-15 CIVIL STATE OF CALIFORNIA

THE STATE OF CALIFORNIA OR ITS OFFICERS OR AGENTS SHALL NOT BE RESPONSIBLE FOR THE ACCURACY OR COMPLETENESS OF SCANNED COPIES OF THIS PLAN SHEET.

ROCK ENERGY DISSIPATOR

DRAINAGE SYSTEM No.	L (Ft)	W (Ft)	D (Ft)	RSP TYPE
5.18	8	6	1.0	No. 2
5.25	8	6	1.5	No. 1
5.33	8	6	1.5	No. 1
5.41	8	11	1.5	No. 1
5.44	8	6	1.5	No. 1
5.49	8	5	1.5	No. 1
5.55	8	6	1.0	No. 2
5.61	8	6	1.0	No. 2
5.70	8	6	1.0	No. 2
5.79	8	6	1.0	No. 2

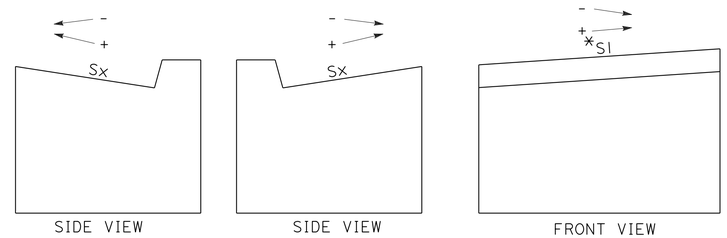

INLET SLOPE FIGURE

* THE SLOPE SI REFERENCES UP-STATION

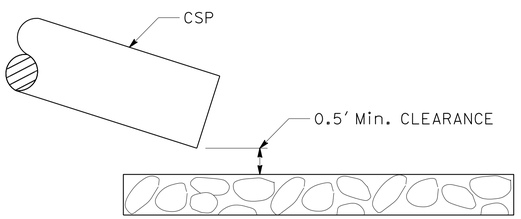

PROFILE

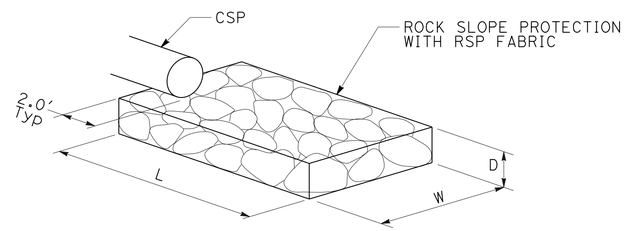

PERSPECTIVE

ROCK ENERGY DISSIPATOR

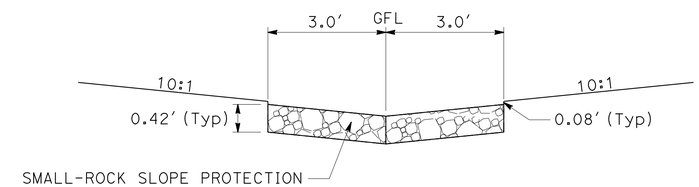

SMALL-RSP DETAIL

"A1" 54+00 TO 60+50 Rt
"A1" 61+00 TO 64+88 Lt
"A1" 65+77 TO 70+75 Lt
"A1" 72+54 TO 83+00 Rt

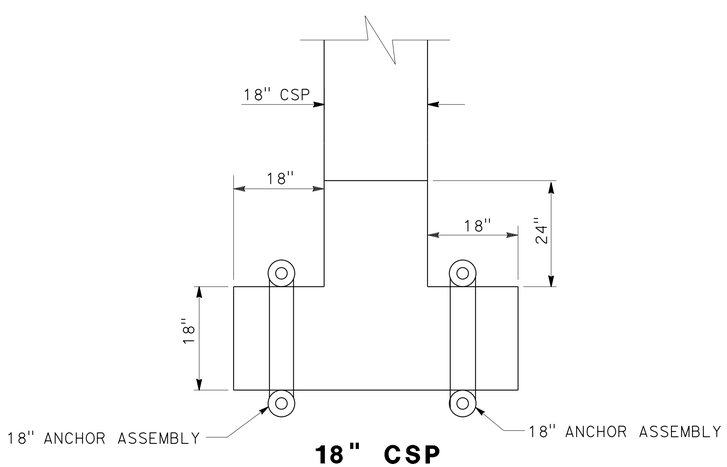

18" CSP ENERGY DISSIPATOR

5.21 g 5.22 c 5.24 c 5.38 d

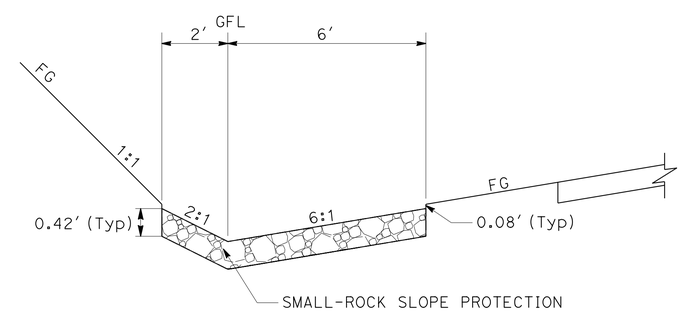

SMALL-RSP DETAIL

"A1" 49+91 TO 60+70 Lt
"A1" 70+75 TO 90+00 Lt

DRAINAGE DETAILS

NO SCALE

DD-1

REVISED BY | DATE REVISED
JEFF CARSON | ROD ESTES
CALCULATED-DESIGNED BY | CHECKED BY
FUNCTIONAL SUPERVISOR
AL TRUJILLO

STATE OF CALIFORNIA - DEPARTMENT OF TRANSPORTATION
Caltrans
DESIGN

P:\proj1\02\4E900_plans\pse\24e900ic001.dgn

LAST REVISION 07-28-14 | DATE PLOTTED => 29-JUL-2014 | TIME PLOTTED => 06:36

Dist	COUNTY	ROUTE	POST MILES TOTAL PROJECT	SHEET No.	TOTAL SHEETS
02	Teh	32	5.1/6.3	32	74

Rodney S. Estes 07-28-14
REGISTERED CIVIL ENGINEER DATE

07-28-14
PLANS APPROVAL DATE

REGISTERED PROFESSIONAL ENGINEER
ROD ESTES
No. 74535
Exp. 12-31-15
CIVIL
STATE OF CALIFORNIA

THE STATE OF CALIFORNIA OR ITS OFFICERS OR AGENTS SHALL NOT BE RESPONSIBLE FOR THE ACCURACY OR COMPLETENESS OF SCANNED COPIES OF THIS PLAN SHEET.

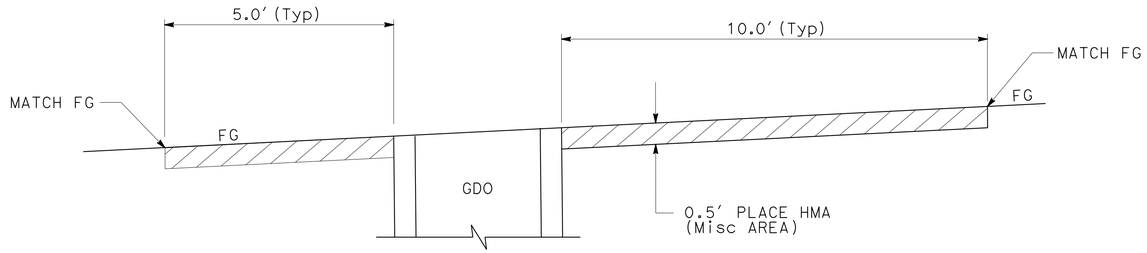

SECTION B-B

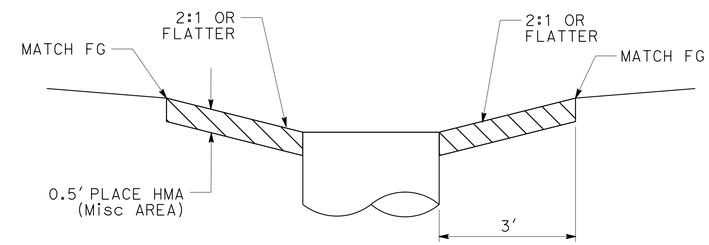

SECTION A-A

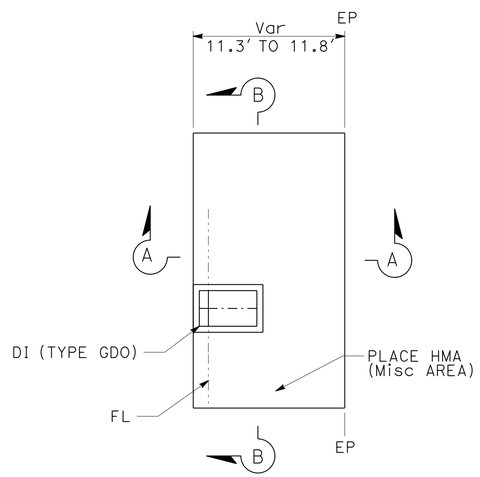

PLAN

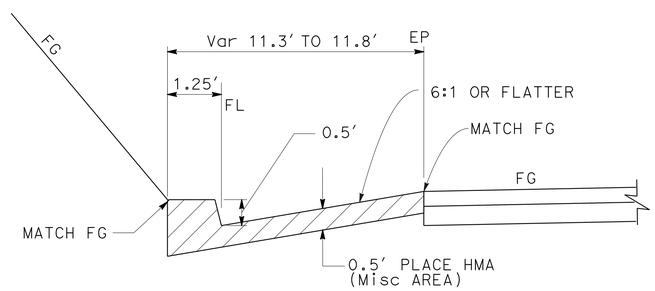

SECTION A-A

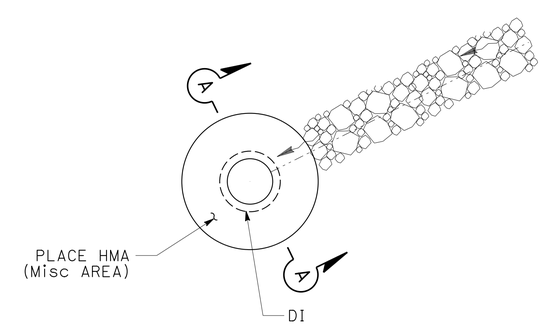

PLAN

GDO INLET APRON DETAIL

5.18 b 5.25 b 5.33 b 5.61 b 5.70 b 5.79 b

HMA APRON AND DRAINAGE INLET DETAIL

5.25 h 5.44 a 5.48 a 5.55 a 5.61 d

DRAINAGE DETAILS

NO SCALE

DD-2

REVISED BY	DATE REVISED

CALCULATED-DESIGNED BY: JEFF CARSON
CHECKED BY: ROD ESTES
FUNCTIONAL SUPERVISOR: AL TRUJILLO

STATE OF CALIFORNIA - DEPARTMENT OF TRANSPORTATION
Caltrans
DESIGN

P:\proj1\02\4E900_plans\pse\24e900ic002.dgn

LAST REVISION 07-28-14 | DATE PLOTTED => 29-JUL-2014 | TIME PLOTTED => 06:36

Dist	COUNTY	ROUTE	POST MILES TOTAL PROJECT	SHEET No.	TOTAL SHEETS
02	Teh	32	5.1/6.3	33	74

Rodney S. Estes 07-28-14
REGISTERED CIVIL ENGINEER DATE

07-28-14
PLANS APPROVAL DATE

REGISTERED PROFESSIONAL ENGINEER
ROD ESTES
No. 74535
Exp. 12-31-15
CIVIL
STATE OF CALIFORNIA

THE STATE OF CALIFORNIA OR ITS OFFICERS OR AGENTS SHALL NOT BE RESPONSIBLE FOR THE ACCURACY OR COMPLETENESS OF SCANNED COPIES OF THIS PLAN SHEET.

LINED CHANNEL QUANTITIES

STATION	SMALL-ROCK SLOPE PROTECTION CY	COMMENTS
"A1" 49+91, 32' Lt TO "A1" 60+70, 32' Lt	166	SMALL-RSP
"A1" 54+00, 45' Rt TO "A1" 60+50, 38' Rt	73	SMALL-RSP
"A1" 61+00, 40' Lt TO "A1" 64+88, 66' Lt	44	SMALL-RSP
"A1" 65+77, 66' Lt TO "A1" 70+75, 32' Lt	56	SMALL-RSP
"A1" 70+75, 32' Lt TO "A1" 90+00, 32' Lt	297	SMALL-RSP
"A1" 72+54, 57' Rt TO "A1" 83+00, 41' Rt	117	SMALL-RSP
TOTAL	753	

DRAINAGE QUANTITIES
DQ-1

REVISED BY | DATE REVISED
JEFF CARSON | ROD ESTES
CALCULATED-DESIGNED BY | CHECKED BY
FUNCTIONAL SUPERVISOR
AL TRUJILLO

STATE OF CALIFORNIA - DEPARTMENT OF TRANSPORTATION
Caltrans
DESIGN

P:\proj1\02\4E900_plans\pse\24e900id001.dgn

LAST REVISION 07-28-14 | DATE PLOTTED => 29-JUL-2014 | TIME PLOTTED => 06:36

Dist	COUNTY	ROUTE	POST MILES TOTAL PROJECT	SHEET No.	TOTAL SHEETS
02	Teh	32	5.1/6.3	34	74

Rodney S. Estes 07-28-14
REGISTERED CIVIL ENGINEER DATE

07-28-14
PLANS APPROVAL DATE

REGISTERED PROFESSIONAL ENGINEER ROD ESTES No. 74535 Exp. 12-31-15 CIVIL STATE OF CALIFORNIA

THE STATE OF CALIFORNIA OR ITS OFFICERS OR AGENTS SHALL NOT BE RESPONSIBLE FOR THE ACCURACY OR COMPLETENESS OF SCANNED COPIES OF THIS PLAN SHEET.

DRAINAGE QUANTITIES

SHEET No.	DRAINAGE SYSTEM No.	DRAINAGE UNIT No.	REMOVE FLARED END SECTION	REMOVE CULVERT	REMOVE INLET	HMA (TYPE A)	PLACE HMA (Misc AREA)	MINOR CONCRETE (MINOR STRUCTURE)	(N) HEIGHT	18" CORRUGATED STEEL PIPE (0.109" THICK)	24" CORRUGATED STEEL PIPE (0.109" THICK)	18" CORRUGATED STEEL PIPE DOWNDRAIN (0.109" THICK)	18" ANCHOR ASSEMBLY	18" CORRUGATED STEEL PIPE ENERGY DISSIPATOR (0.109" THICK)	18" STEEL FLARED END SECTION	36" PRECAST CONCRETE PIPE INLET	ROCK SLOPE PROTECTION (No. 1, METHOD B)	ROCK SLOPE PROTECTION (No. 2, METHOD B)	ROCK SLOPE PROTECTION FABRIC (CLASS 8)	Misc IRON AND STEEL	DESCRIPTION	"A1" STATION	SHEET No.	DRAINAGE SYSTEM No.	DRAINAGE UNIT No.
			EA	LF	EA	TON	SQYD	CY	LF	LF	LF	LF	EA	EA	EA	LF	CY	CY	SQYD	LB					
DP-1	5.18	a						1.65	3.1											634	DI (TYPE GDO) GRATE (TYPE 24-12)	49+79.4	DP-1	5.18	a
		b				7.4	21.9														PAVED APRON	49+79.4			b
		c									64.9										24" CSP (0.109" THICK)	49+79.4			c
		d																1.8	8.4		RSP (No. 2, METHOD B)	49+79.4			d
	5.19	a			1																REMOVE INLET	49+90		5.19	a
		b		48.3																	18" CMP	49+90			b
	5.21	a						1.51	4.1											239	DI (TYPE GO) GRATE (TYPE 24-12X)	51+80		5.21	a
		b								17.0											18" CSP (0.109" THICK)	51+60 TO 51+80			b
		c						1.51	4.1											239	DI (TYPE GO) GRATE (TYPE 24-12X)	51+60			c
		d								17.0											18" CSP (0.109" THICK)	51+40 TO 51+60			d
		e						1.51	4.1											239	DI (TYPE GO) GRATE (TYPE 24-12X)	51+40			e
		f								19.5											18" CSP (0.109" THICK)	51+40			f
		g												1							"T" ENERGY DISSAPATOR	51+40			g
		h											2								ANCHOR ASSEMBLY	51+40			h
DP-2	5.22	a						1.49	4.0											239	DI (TYPE GO) GRATE (TYPE 24-12X)	52+10	DP-2	5.22	a
		b								25.5											18" CSP (0.109" THICK)	52+10			b
		c												1							"T" ENERGY DISSAPATOR	52+10			c
		d											2								ANCHOR ASSEMBLY	52+10			d
	5.24	a						1.49	4.0											239	DI (TYPE GO) GRATE (TYPE 24-12X)	52+80		5.24	a
		b								20.0											18" CSP (0.109" THICK)	52+80			b
		c												1							"T" ENERGY DISSAPATOR	52+80			c
		d											2								ANCHOR ASSEMBLY	52+80			d
	5.25	a						1.62	3.0											634	DI (TYPE GDO) GRATE (TYPE 24-12)	53+50		5.25	a
		b				7.2	21.2														PAVED APRON	53+50			b
		c									56.1										24" CSP (0.109" THICK)	53+50			c
		d						1.51	4.1											239	DI (TYPE GO) GRATE (TYPE 24-12X)	53+50			d
		e									32.9										24" CSP (0.109" THICK)	53+50			e
		f															2.7		10.0		RSP (No. 1, METHOD B)	53+50			f
		g									47.2										24" CSP (0.109" THICK)	53+50 TO 54+00			g
		h						0.40	4.0							4.5				236	DI (TYPE GCP) GRATE (TYPE 36R)	54+00			h
		i				2.5	7.3														PAVED APRON	54+00			i
SUBTOTAL				48.3	1	*17.1	50.4	12.69		99.0	201.1		6	3		4.5	2.7	1.8	18.4	2938					

* HMA (TYPE A) INCLUDED IN ROADWAY QUANTITIES
(N) - NOT A SEPARATE PAY ITEM, FOR INFORMATION ONLY

DRAINAGE QUANTITIES DQ-2

CALCULATED-DESIGNED BY JEFF CARSON
CHECKED BY ROD ESTES
REVISED BY
DATE REVISED
FUNCTIONAL SUPERVISOR AL TRUJILLO

STATE OF CALIFORNIA - DEPARTMENT OF TRANSPORTATION
Caltrans DESIGN

P:\proj1\02\4E900_plans\pse\24e900id002.dgn

LAST REVISION 07-28-14
DATE PLOTTED => 29-JUL-2014
TIME PLOTTED => 06:36

Dist	COUNTY	ROUTE	POST MILES TOTAL PROJECT	SHEET No.	TOTAL SHEETS
02	Teh	32	5.1/6.3	35	74

Rodney S. Estes 07-28-14
REGISTERED CIVIL ENGINEER DATE

07-28-14
PLANS APPROVAL DATE

REGISTERED PROFESSIONAL ENGINEER ROD ESTES No. 74535 Exp. 12-31-15 CIVIL STATE OF CALIFORNIA

THE STATE OF CALIFORNIA OR ITS OFFICERS OR AGENTS SHALL NOT BE RESPONSIBLE FOR THE ACCURACY OR COMPLETENESS OF SCANNED COPIES OF THIS PLAN SHEET.

DRAINAGE QUANTITIES

SHEET No.	DRAINAGE SYSTEM No.	DRAINAGE UNIT No.	REMOVE FLARED END SECTION	REMOVE CULVERT (LF)	REMOVE INLET	HMA (TYPE A)	PLACE HMA (Misc AREA)	MINOR CONCRETE (MINOR STRUCTURE)	HEIGHT (N)	18" CORRUGATED STEEL PIPE (0.109" THICK)	24" CORRUGATED STEEL PIPE (0.109" THICK)	18" CORRUGATED STEEL PIPE DOWNDRAIN (0.109" THICK)	18" ANCHOR ASSEMBLY	18" CORRUGATED STEEL PIPE ENERGY DISSIPATOR (0.109" THICK)	18" STEEL FLARED END SECTION	36" PRECAST CONCRETE PIPE INLET	ROCK SLOPE PROTECTION (No. 1, METHOD B)	ROCK SLOPE PROTECTION (No. 2, METHOD B)	ROCK SLOPE PROTECTION FABRIC (CLASS 8)	Misc IRON AND STEEL	DESCRIPTION	"A1" STATION	SHEET No.	DRAINAGE SYSTEM No.	DRAINAGE UNIT No.
			EA	LF	EA	TON	SQYD	CY	LF	LF	LF	LF	EA	EA	EA	LF	CY	CY	SQYD	LB					
DP-3	5.32	a			1																REMOVE INLET	57+61.5	DP-3	5.32	a
		b		78.1																	18" CMP	57+61.5			b
	5.33	a						1.68	3.2											634	DI (TYPE GDO) GRATE (TYPE 24-12)	57+61.5		5.33	a
		b				7.2	21.2														PAVED APRON	57+61.5			b
		c									56.1										24" CSP (0.109" THICK)	57+61.5			c
		d						1.61	4.5											239	DI (TYPE GO) GRATE (TYPE 24-12X)	57+61.5			d
		e									86.6										24" CSP (0.109" THICK)	57+61.5			e
		f															2.7		10.0		RSP (No. 1, METHOD B)	57+61.5			f
	5.37	a			1																REMOVE INLET	60+17		5.37	a
		b		80.5																	18" CMP	60+17 TO 60+45			b
DP-4	5.38	a						1.49	4.0											239	DI (TYPE GO) GRATE (TYPE 24-12X)	60+18	DP-4	5.38	a
		b								55.5											18" CSP (0.109" THICK)	60+18			b
		c											2								18" ANCHOR ASSEMBLY	60+18			c
		d												1							"T" ENERGY DISSAPATOR	60+18			d
	5.41	a						1.24	3.0											239	DI (TYPE GO) GRATE (TYPE 24-12X)	61+70		5.41	a
		b								10.0											18" CSP (0.109" THICK)	61+70			b
		c										35.0									18" CSP DOWNDRAIN (0.109" THICK)	61+70			c
		d											2								18" ANCHOR ASSEMBLY	61+70			d
		e															4.9		16.1		RSP (No. 1, METHOD B)	61+70			e
	5.42	a						1.20													STRAIGHT HEADWALL	61+75		5.42	a
		b									130.6										24" CSP (0.109" THICK)	61+75			b
DP-5	5.44	a						0.40	4.0							4.5				236	DI (TYPE GCP) GRATE (TYPE 36R)	63+75	DP-5	5.44	a
		b				2.5	7.3														PAVED APRON	63+75			b
		c									158.2										24" CSP (0.109" THICK)	63+75			c
		d															2.7		10.0		RSP (No. 1, METHOD B)	63+75			d
	5.46	a	1																		REMOVE FES	64+37		5.46	a
		b		95.0																	18" CMP	64+37 TO 64+54			b
	5.48	a						0.40	4.0							4.5				236	DI (TYPE GCP) GRATE (TYPE 36R)	65+75		5.48	a
		b				2.5	7.3														PAVED APRON	65+75			b
		c									214.9										24" CSP (0.109" THICK)	63+75 TO 65+75			c
SUBTOTAL			1	253.6	2	*12.2	35.8	8.02		65.5	646.4	35.0	4	1		9.0	10.3		36.1	1823					

* HMA (TYPE A) INCLUDED IN ROADWAY QUANTITIES
(N) - NOT A SEPARATE PAY ITEM, FOR INFORMATION ONLY

DRAINAGE QUANTITIES

DQ-3

REVISED BY | DATE REVISED
JEFF CARSON | ROD ESTES
CALCULATED-DESIGNED BY | CHECKED BY
FUNCTIONAL SUPERVISOR: AL TRUJILLO

STATE OF CALIFORNIA - DEPARTMENT OF TRANSPORTATION
Caltrans DESIGN

P:\proj1\02\4E900_plans\pse\24e900id003.dgn

LAST REVISION 07-28-14 | DATE PLOTTED => 29-JUL-2014 | TIME PLOTTED => 06:36

Dist	COUNTY	ROUTE	POST MILES TOTAL PROJECT	SHEET No.	TOTAL SHEETS
02	Teh	32	5.1/6.3	36	74

REGISTERED CIVIL ENGINEER 07-28-14 DATE

07-28-14
PLANS APPROVAL DATE

REGISTERED PROFESSIONAL ENGINEER ROD ESTES No. 74535 Exp. 12-31-15 CIVIL STATE OF CALIFORNIA

THE STATE OF CALIFORNIA OR ITS OFFICERS OR AGENTS SHALL NOT BE RESPONSIBLE FOR THE ACCURACY OR COMPLETENESS OF SCANNED COPIES OF THIS PLAN SHEET.

DRAINAGE QUANTITIES

SHEET No.	DRAINAGE SYSTEM No.	DRAINAGE UNIT No.	REMOVE FLARED END SECTION	REMOVE CULVERT (LF)	REMOVE INLET	HMA (TYPE A)	PLACE HMA (Misc AREA)	MINOR CONCRETE (MINOR STRUCTURE)	HEIGHT (N)	18" CORRUGATED STEEL PIPE (0.109" THICK)	24" CORRUGATED STEEL PIPE (0.109" THICK)	18" CORRUGATED STEEL PIPE DOWNDRAIN (0.109" THICK)	18" ANCHOR ASSEMBLY	18" CORRUGATED STEEL PIPE ENERGY DISSIPATOR (0.109" THICK)	18" STEEL FLARED END SECTION	36" PRECAST CONCRETE PIPE INLET	ROCK SLOPE PROTECTION (No. 1, METHOD B)	ROCK SLOPE PROTECTION (No. 2, METHOD B)	ROCK SLOPE PROTECTION FABRIC (CLASS 8)	Misc IRON AND STEEL	DESCRIPTION	"A1" STATION	SHEET No.	DRAINAGE SYSTEM No.	DRAINAGE UNIT No.
			EA	LF	EA	TON	SQYD	CY	LF	LF	LF	LF	EA	EA	EA	LF	CY	CY	SQYD	LB					
	5.49	a						1.24	3.0											239	DI (TYPE GO) GRATE (TYPE 24-12X)	66+00		5.49	a
		b								9.6											18" CSP (0.109" THICK)	66+00			b
		c											2								18" ANCHOR ASSEMBLY	66+00			c
		d										39.4									18" CSP DOWNDRAIN (0.109" THICK)	66+00			d
		e															2.2		8.8		RSP (No. 1, METHOD B)	66+00			e
DP-6	5.55	a						0.40	4.0							4.5				236	DI (TYPE GCP) GRATE (TYPE 36R)	69+50	DP-6	5.55	a
		b				2.9	8.9														PAVED APRON	69+50			b
		c									109.5										24" CSP (0.109" THICK)	69+50			c
		d																1.8	8.4		RSP (No. 2, METHOD B)	69+50			d
	5.56	a			1																REMOVE INLET	69+74		5.56	a
		b		73.3																	18" CMP	69+53 TO 69+74			b
	5.61	a						1.81	3.6											634	DI (TYPE GDO) GRATE (TYPE 24-12)	72+50		5.61	a
		b				7.2	21.2														PAVED APRON	72+50			b
		c									86.5										24" CSP (0.109" THICK)	72+50			c
		d						0.40	4.8							5.3				236	DI (TYPE GCP) GRATE (TYPE 36R)	72+50			d
		e				2.5	7.3														PAVED APRON	72+50			e
		f									23.0										24" CSP (0.109" THICK)	72+50			f
		g																1.8	8.4		RSP (No. 2, METHOD B)	72+50			g
DP-7	5.62	a			1																REMOVE INLET	72+70	DP-7	5.62	a
		b		71.2																	18" CMP	72+50 TO 72+70			b
	5.69	a			1																REMOVE INLET	77+25		5.69	a
		b		74.4																	18" CMP	77+25			b
	5.70	a						1.81	3.6											634	DI (TYPE GDO) GRATE (TYPE 24-12)	77+25		5.70	a
		b				7.2	21.2														PAVED APRON	77+25			b
		c									145.6										24" CSP (0.109" THICK)	77+25			c
		d																1.8	8.4		RSP (No. 2, METHOD B)	77+25			d
DP-8	5.78	a			1																REMOVE INLET	81+75	DP-8	5.78	a
		b		75.2																	18" CMP	81+75			b
		c	1																		REMOVE FES	81+75			c
SUBTOTAL			1	294.1	4	*16.9	49.7	5.66		9.6	364.6	39.4	2			9.8	2.2	5.4	34.0	1979					

* HMA (TYPE A) INCLUDED IN ROADWAY QUANTITIES
(N) - NOT A SEPARATE PAY ITEM, FOR INFORMATION ONLY

DRAINAGE QUANTITIES

DQ-4

CALCULATED-DESIGNED BY JEFF CARSON
CHECKED BY ROD ESTES
REVISED BY
DATE REVISED
FUNCTIONAL SUPERVISOR AL TRUJILLO

STATE OF CALIFORNIA - DEPARTMENT OF TRANSPORTATION
Caltrans DESIGN

P:\proj1\02\4E900_plans\pse\24e900id004.dgn

LAST REVISION 07-28-14 | DATE PLOTTED => 29-JUL-2014 | TIME PLOTTED => 06:36

Dist	COUNTY	ROUTE	POST MILES TOTAL PROJECT	SHEET No.	TOTAL SHEETS
02	Teh	32	5.1/6.3	37	74

REGISTERED CIVIL ENGINEER 07-28-14 DATE

07-28-14
PLANS APPROVAL DATE

REGISTERED PROFESSIONAL ENGINEER ROD ESTES No. 74535 Exp. 12-31-15 CIVIL STATE OF CALIFORNIA

THE STATE OF CALIFORNIA OR ITS OFFICERS OR AGENTS SHALL NOT BE RESPONSIBLE FOR THE ACCURACY OR COMPLETENESS OF SCANNED COPIES OF THIS PLAN SHEET.

DRAINAGE QUANTITIES

SHEET No.	DRAINAGE SYSTEM No.	DRAINAGE UNIT No.	REMOVE FLARED END SECTION	REMOVE CULVERT (LF)	REMOVE INLET	HMA (TYPE A)	PLACE HMA (Misc AREA)	MINOR CONCRETE (MINOR STRUCTURE)	HEIGHT (N)	18" CORRUGATED STEEL PIPE (0.109" THICK)	24" CORRUGATED STEEL PIPE (0.109" THICK)	18" CORRUGATED STEEL PIPE DOWNDRAIN (0.109" THICK)	18" ANCHOR ASSEMBLY	18" CORRUGATED STEEL PIPE ENERGY DISSIPATOR (0.109" THICK)	18" STEEL FLARED END SECTION	36" PRECAST CONCRETE PIPE INLET	ROCK SLOPE PROTECTION (No. 1, METHOD B)	ROCK SLOPE PROTECTION (No. 2, METHOD B)	ROCK SLOPE PROTECTION FABRIC (CLASS 8)	Misc IRON AND STEEL	DESCRIPTION	"A1" STATION	SHEET No.	DRAINAGE SYSTEM No.	DRAINAGE UNIT No.
			EA	LF	EA	TON	SQYD	CY	LF	LF	LF	LF	EA	EA	EA	LF	CY	CY	SQYD	LB					
DP-8	5.79	a						1.62	2.5											634	DI (TYPE GDO) GRATE (TYPE 24-12)	82+00	DP-8	5.79	a
		b				7.2	21.2														PAVED APRON	82+00			b
		c									108.9										24" CSP (0.109" THICK)	81+60 TO 82+00			c
		d																1.8	8.4		RSP (No. 2, METHOD B)	81+60			d
	6.01	a													1						18" FES	93+63.4		6.01	a
		b								18.0											18" CSP (0.109" THICK)	93+63.4			b
		c	1																		REMOVE FES	93+63.4			c
	6.12	a													1						18" FES	99+63.6		6.12	a
		b								9.1											18" CSP (0.109" THICK)	99+63.6			b
		c	1																		REMOVE FES	99+63.6			c
SUBTOTAL (THIS SHEET)			2			7.2	21.2	1.62		27.1	108.9				2			1.8	8.4	634					
SUBTOTAL (SHEET DQ-2)				48.3	1	17.1	50.4	12.69		99.0	201.1		6	3		4.5	2.7	1.8	18.4	2938					
SUBTOTAL (SHEET DQ-3)			1	253.6	2	12.2	35.8	8.02		65.5	646.4	35.0	4	1		9.0	10.3		36.1	1823					
SUBTOTAL (SHEET DQ-4)			1	294.1	4	16.9	49.7	5.66		9.6	364.6	39.4	2			9.8	2.2	5.4	34.0	1979					
TOTAL			4	596.0	7	* 53.4	157.1	27.99		201.2	1321.0	74.4	12	4	2	23.3	15.2	9.0	96.9	7374					

* HMA (TYPE A) INCLUDED IN ROADWAY QUANTITIES

(N) - NOT A SEPARATE PAY ITEM, FOR INFORMATION ONLY

CALCULATED-DESIGNED BY JEFF CARSON
CHECKED BY ROD ESTES
REVISED BY
DATE REVISED
FUNCTIONAL SUPERVISOR AL TRUJILLO

STATE OF CALIFORNIA - DEPARTMENT OF TRANSPORTATION
Caltrans DESIGN

P:\proj\02\4E900_plans\pse\24e900id005.dgn

DRAINAGE QUANTITIES

DQ-5

LAST REVISION 07-28-14
DATE PLOTTED => 29-JUL-2014
TIME PLOTTED => 06:36

Dist	COUNTY	ROUTE	POST MILES TOTAL PROJECT	SHEET No.	TOTAL SHEETS
02	Teh	32	5.1/6.3	38	74

REGISTERED CIVIL ENGINEER 07-28-14 DATE

07-28-14
PLANS APPROVAL DATE

REGISTERED PROFESSIONAL ENGINEER MICHAEL E. FEAKES No. C70755 Exp. 6-30-15 CIVIL STATE OF CALIFORNIA

THE STATE OF CALIFORNIA OR ITS OFFICERS OR AGENTS SHALL NOT BE RESPONSIBLE FOR THE ACCURACY OR COMPLETENESS OF SCANNED COPIES OF THIS PLAN SHEET.

NOTES:

1. EXACT SIGN LOCATIONS WILL BE DETERMINED BY THE ENGINEER.
2. CALIFORNIA CODES ARE DESIGNATED BY (CA), OTHERWISE FEDERAL CODES ARE SHOWN.

LEGEND

→ DIRECTION OF TRAVEL

SIGN, STATIONARY MOUNTED, SINGLE POST

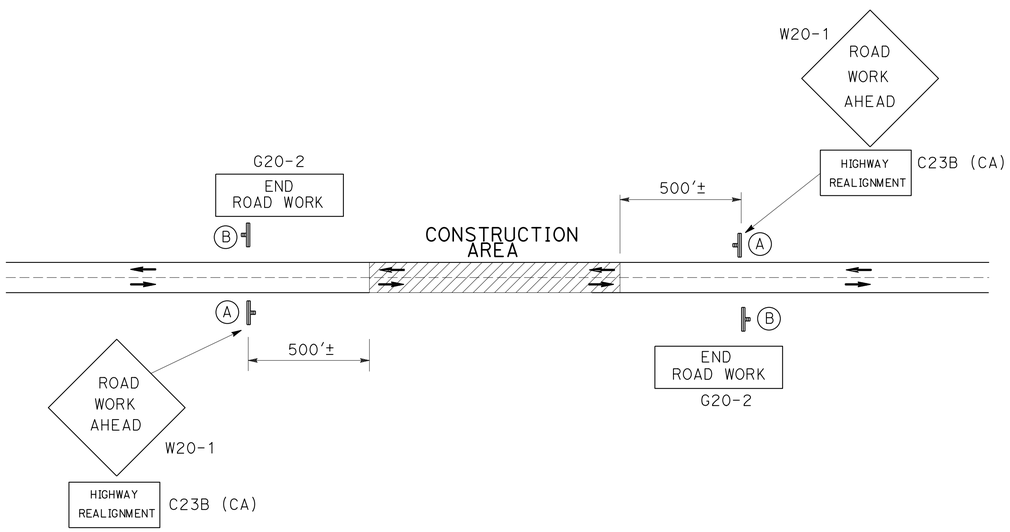

CONSTRUCTION AREA SIGNS (TYPICAL)

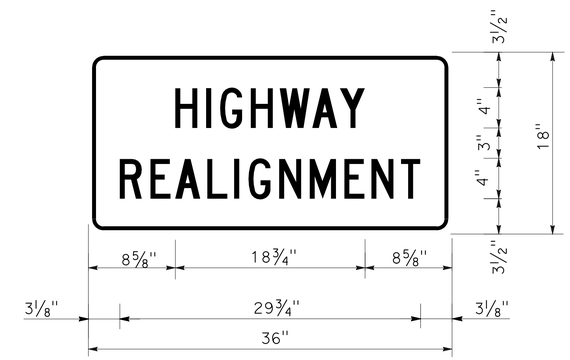

SIGN DETAIL

1.5" RADIUS, 0.4" BORDER, 0.4" INDENT, BLACK ON ORANGE;
[HIGHWAY] C; [REALIGNMENT] C;

CONSTRUCTION AREA SIGNS (STATIONARY MOUNTED)

SIGN No.	SIGN CODE	PANEL SIZE	SIGN MESSAGE	SIZE OF POST	No. OF SIGNS
A	W20-1 C23B (CA)	48" x 48" 36" x 18"	ROAD WORK AHEAD HIGHWAY REALIGNMENT	1 - 4" x 6"	2
B	G20-2	36" x 18"	END ROAD WORK	1 - 4" x 4"	2

CONSTRUCTION AREA SIGNS AND SIGN DETAILS

NO SCALE

CS-1

REVISED BY | DATE REVISED

JEFF CARSON | MICHAEL FEAKES

CALCULATED-DESIGNED BY | CHECKED BY

FUNCTIONAL SUPERVISOR: AL TRUJILLO

STATE OF CALIFORNIA - DEPARTMENT OF TRANSPORTATION

Caltrans DESIGN

P:\proj1\02\4E900_plans\pse\24e9001a001.dgn

LAST REVISION 07-28-14 | DATE PLOTTED => 29-JUL-2014 | TIME PLOTTED => 06:36

Dist	COUNTY	ROUTE	POST MILES TOTAL PROJECT	SHEET No.	TOTAL SHEETS
02	Teh	32	5.1/6.3	39	74

REGISTERED CIVIL ENGINEER 07-28-14 DATE

07-28-14
PLANS APPROVAL DATE

REGISTERED PROFESSIONAL ENGINEER MICHAEL E. FEAKES No. C70755 Exp. 6-30-15 CIVIL STATE OF CALIFORNIA

THE STATE OF CALIFORNIA OR ITS OFFICERS OR AGENTS SHALL NOT BE RESPONSIBLE FOR THE ACCURACY OR COMPLETENESS OF SCANNED COPIES OF THIS PLAN SHEET.

LEGEND

- SINGLE STRIPE MARKER
- STRIPE CHANGE LOCATION
- DELINEATOR (TYPE E)
- MARKER (CULVERT)
- OBJECT MARKER (TYPE L-1)
- MILEPOST MARKER
- REMOVE ROADSIDE SIGN
- RECONSTRUCT TURNABLE ROADSIDE SIGN
- REMOVE MARKER
- REMOVE DELINEATOR
- ROADSIDE SIGN (1-POST)
- TURNABLE ROADSIDE SIGN
- ROADSIDE SIGN
- PAVEMENT DELINEATOR DETAIL

ABBREVIATIONS

S SPACING OF DELINEATORS

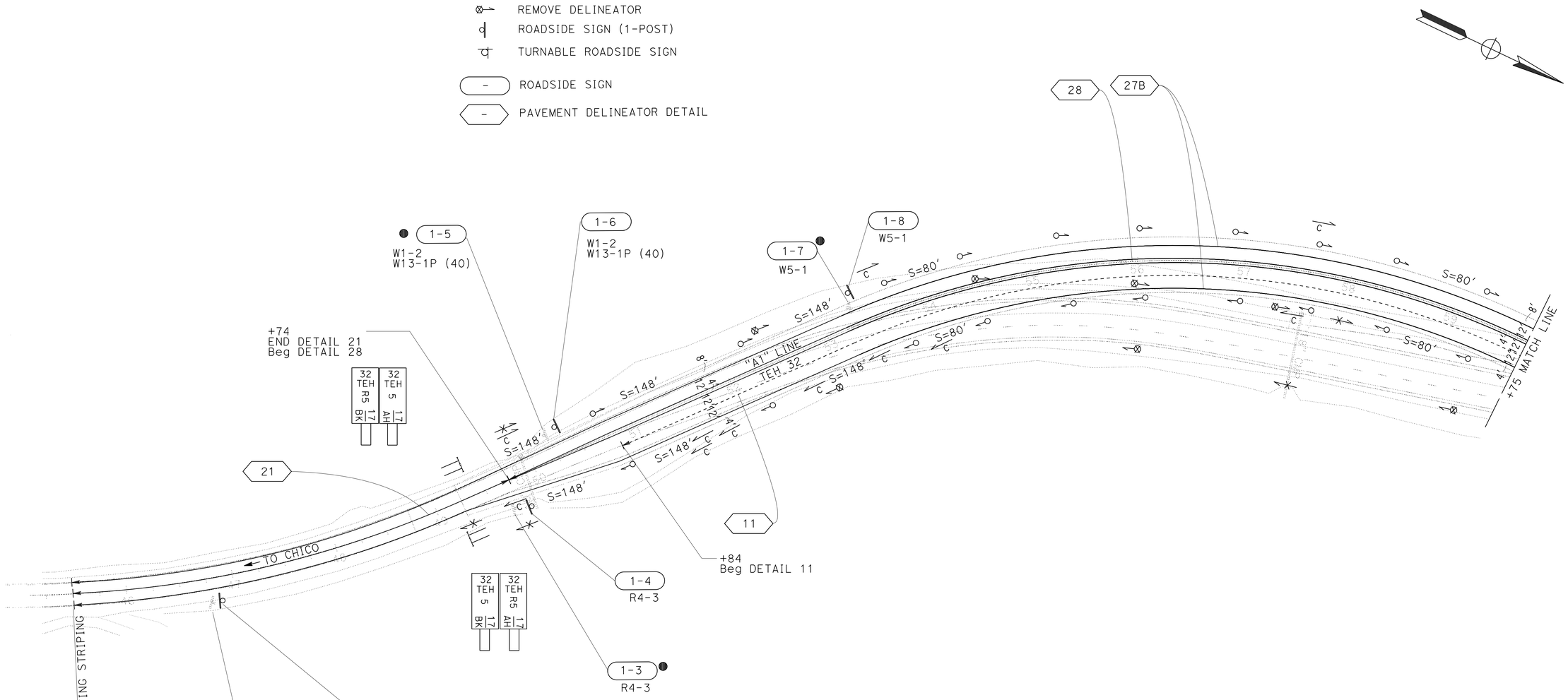

PAVEMENT DELINEATION AND SIGN PLAN

SCALE: 1" = 50'

PD-1

APPROVED FOR PAVEMENT DELINEATION AND SIGN WORK ONLY

STATE OF CALIFORNIA - DEPARTMENT OF TRANSPORTATION
Caltrans® DESIGN

FUNCTIONAL SUPERVISOR: AL TRUJILLO
CALCULATED-DESIGNED BY: JEFF CARSON
CHECKED BY: MICHAEL FEAKES
REVISED BY
DATE REVISED

P:\proj\02\4E900_plans\pse\24e900na001.dgn

LAST REVISION 07-28-14
DATE PLOTTED => 29-JUL-2014
TIME PLOTTED => 06:36

Dist	COUNTY	ROUTE	POST MILES TOTAL PROJECT	SHEET No.	TOTAL SHEETS
02	Teh	32	5.1/6.3	40	74

REGISTERED CIVIL ENGINEER 07-28-14 DATE

07-28-14
PLANS APPROVAL DATE

REGISTERED PROFESSIONAL ENGINEER MICHAEL E. FEAKES No. C70755 Exp. 6-30-15 CIVIL STATE OF CALIFORNIA

THE STATE OF CALIFORNIA OR ITS OFFICERS OR AGENTS SHALL NOT BE RESPONSIBLE FOR THE ACCURACY OR COMPLETENESS OF SCANNED COPIES OF THIS PLAN SHEET.

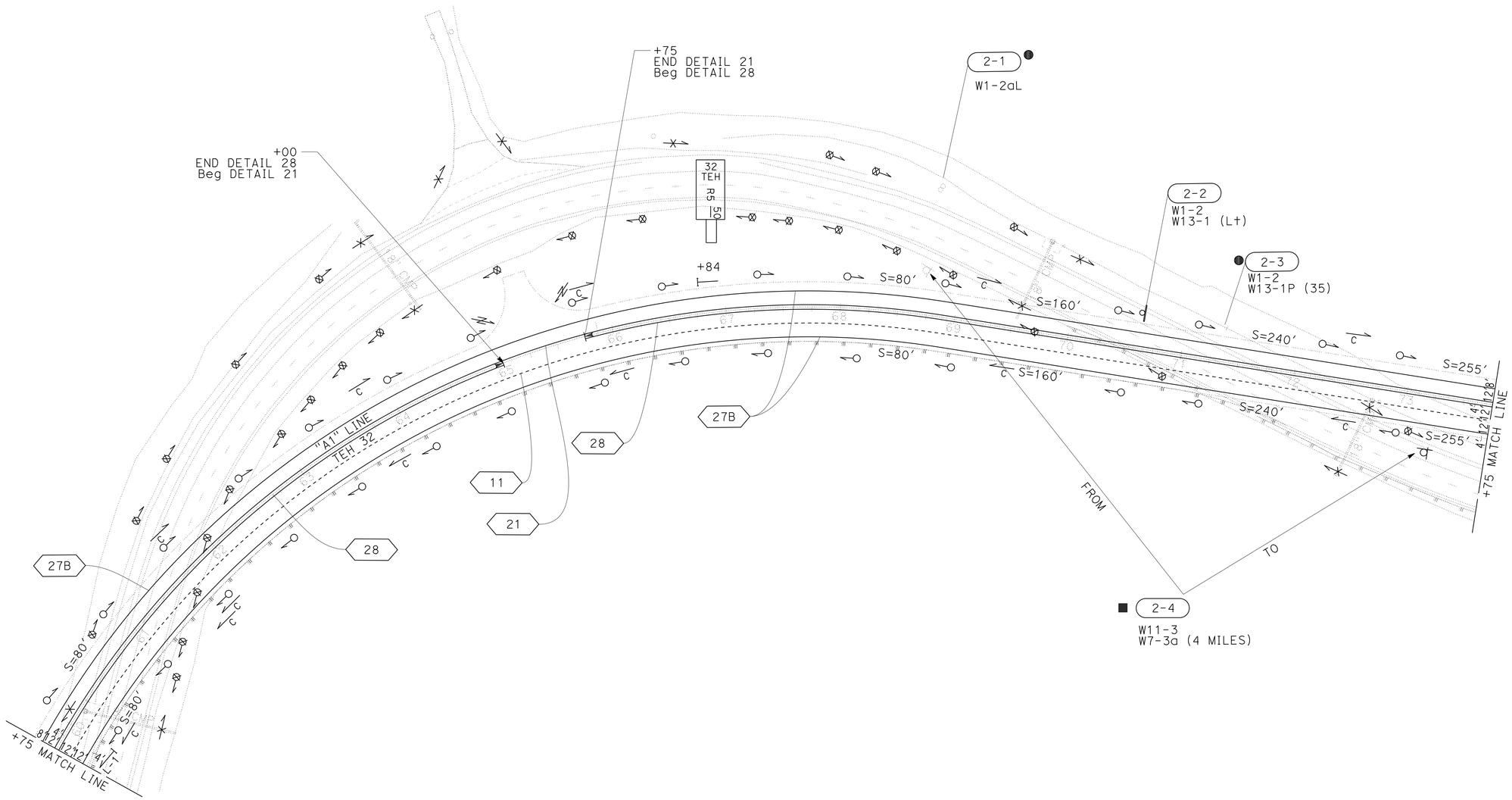

PAVEMENT DELINEATION AND SIGN PLAN

SCALE: 1" = 50′

PD-2

APPROVED FOR PAVEMENT DELINEATION AND SIGN WORK ONLY

REVISED BY	DATE REVISED

CALCULATED-DESIGNED BY: JEFF CARSON
CHECKED BY: MICHAEL FEAKES
FUNCTIONAL SUPERVISOR: AL TRUJILLO

STATE OF CALIFORNIA - DEPARTMENT OF TRANSPORTATION
Caltrans
DESIGN

P:\proj1\02\4E900_plans\pse\24e900na002.dgn

LAST REVISION 07-28-14 | DATE PLOTTED => 29-JUL-2014 | TIME PLOTTED => 06:36

Dist	COUNTY	ROUTE	POST MILES TOTAL PROJECT	SHEET No.	TOTAL SHEETS
02	Teh	32	5.1/6.3	41	74

REGISTERED CIVIL ENGINEER 07-28-14 DATE

07-28-14
PLANS APPROVAL DATE

REGISTERED PROFESSIONAL ENGINEER
MICHAEL E. FEAKES
No. C70755
Exp. 6-30-15
CIVIL
STATE OF CALIFORNIA

THE STATE OF CALIFORNIA OR ITS OFFICERS OR AGENTS SHALL NOT BE RESPONSIBLE FOR THE ACCURACY OR COMPLETENESS OF SCANNED COPIES OF THIS PLAN SHEET.

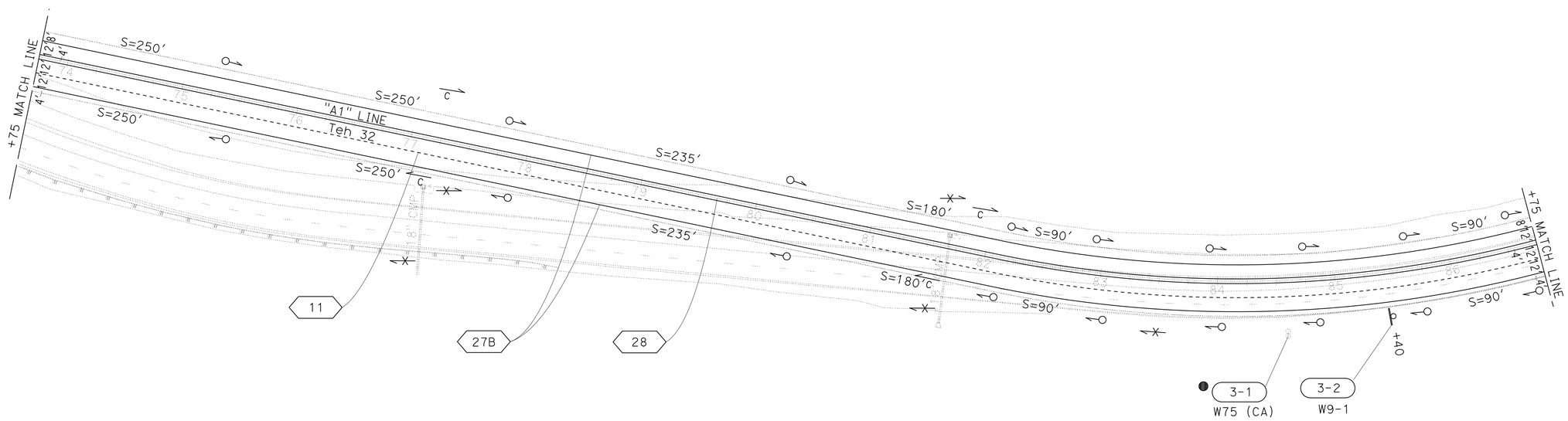

PAVEMENT DELINEATION AND SIGN PLAN

SCALE: 1" = 50'

PD-3

APPROVED FOR PAVEMENT DELINEATION AND SIGN WORK ONLY

REVISED BY	
DATE REVISED	
JEFF CARSON	
MICHAEL FEAKES	
CALCULATED-DESIGNED BY	
CHECKED BY	
FUNCTIONAL SUPERVISOR	
AL TRUJILLO	

STATE OF CALIFORNIA - DEPARTMENT OF TRANSPORTATION
Caltrans®
DESIGN

P:\proj1\02\4E900_plans\pse\24e900na003.dgn

LAST REVISION 07-28-14 | DATE PLOTTED => 29-JUL-2014 | TIME PLOTTED => 06:36

Dist	COUNTY	ROUTE	POST MILES TOTAL PROJECT	SHEET No.	TOTAL SHEETS
02	Teh	32	5.1/6.3	42	74

REGISTERED CIVIL ENGINEER 07-28-14 DATE

07-28-14
PLANS APPROVAL DATE

REGISTERED PROFESSIONAL ENGINEER
MICHAEL E. FEAKES
No. C70755
Exp. 6-30-15
CIVIL
STATE OF CALIFORNIA

THE STATE OF CALIFORNIA OR ITS OFFICERS OR AGENTS SHALL NOT BE RESPONSIBLE FOR THE ACCURACY OR COMPLETENESS OF SCANNED COPIES OF THIS PLAN SHEET.

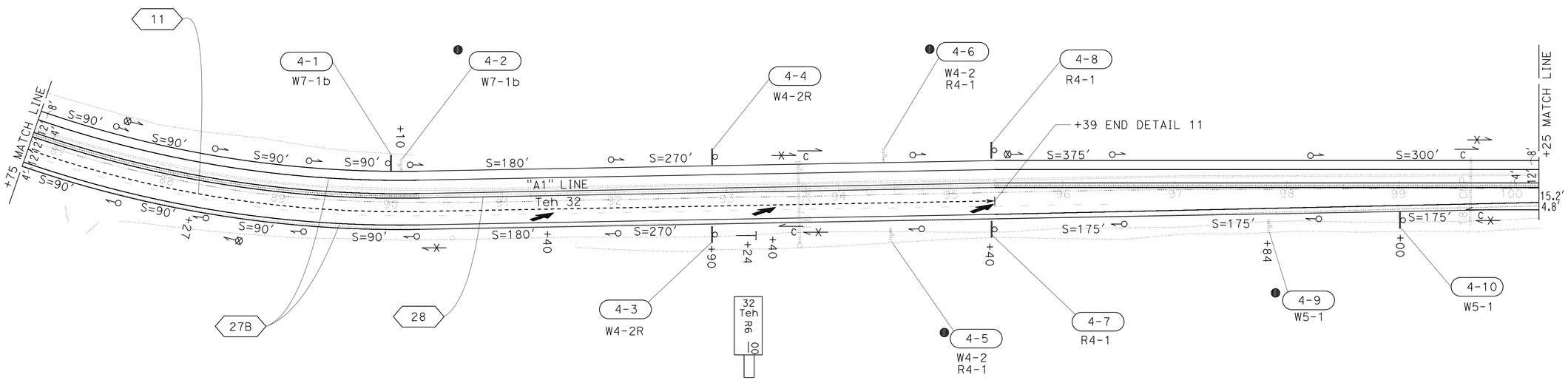

PAVEMENT DELINEATION AND SIGN PLAN

SCALE: 1" = 50'

PD-4

APPROVED FOR PAVEMENT DELINEATION AND SIGN WORK ONLY

CALCULATED-DESIGNED BY	JEFF CARSON	REVISED BY
CHECKED BY	MICHAEL FEAKES	DATE REVISED
FUNCTIONAL SUPERVISOR	AL TRUJILLO	

STATE OF CALIFORNIA - DEPARTMENT OF TRANSPORTATION
Caltrans
DESIGN

P:\proj1\02\4E900_plans\pse\24e900na004.dgn

LAST REVISION 07-28-14
DATE PLOTTED => 29-JUL-2014
TIME PLOTTED => 06:36

Dist	COUNTY	ROUTE	POST MILES TOTAL PROJECT	SHEET No.	TOTAL SHEETS
02	Teh	32	5.1/6.3	43	74

REGISTERED CIVIL ENGINEER 07-28-14 DATE

07-28-14
PLANS APPROVAL DATE

REGISTERED PROFESSIONAL ENGINEER MICHAEL E. FEAKES No. C70755 Exp. 6-30-15 CIVIL STATE OF CALIFORNIA

THE STATE OF CALIFORNIA OR ITS OFFICERS OR AGENTS SHALL NOT BE RESPONSIBLE FOR THE ACCURACY OR COMPLETENESS OF SCANNED COPIES OF THIS PLAN SHEET.

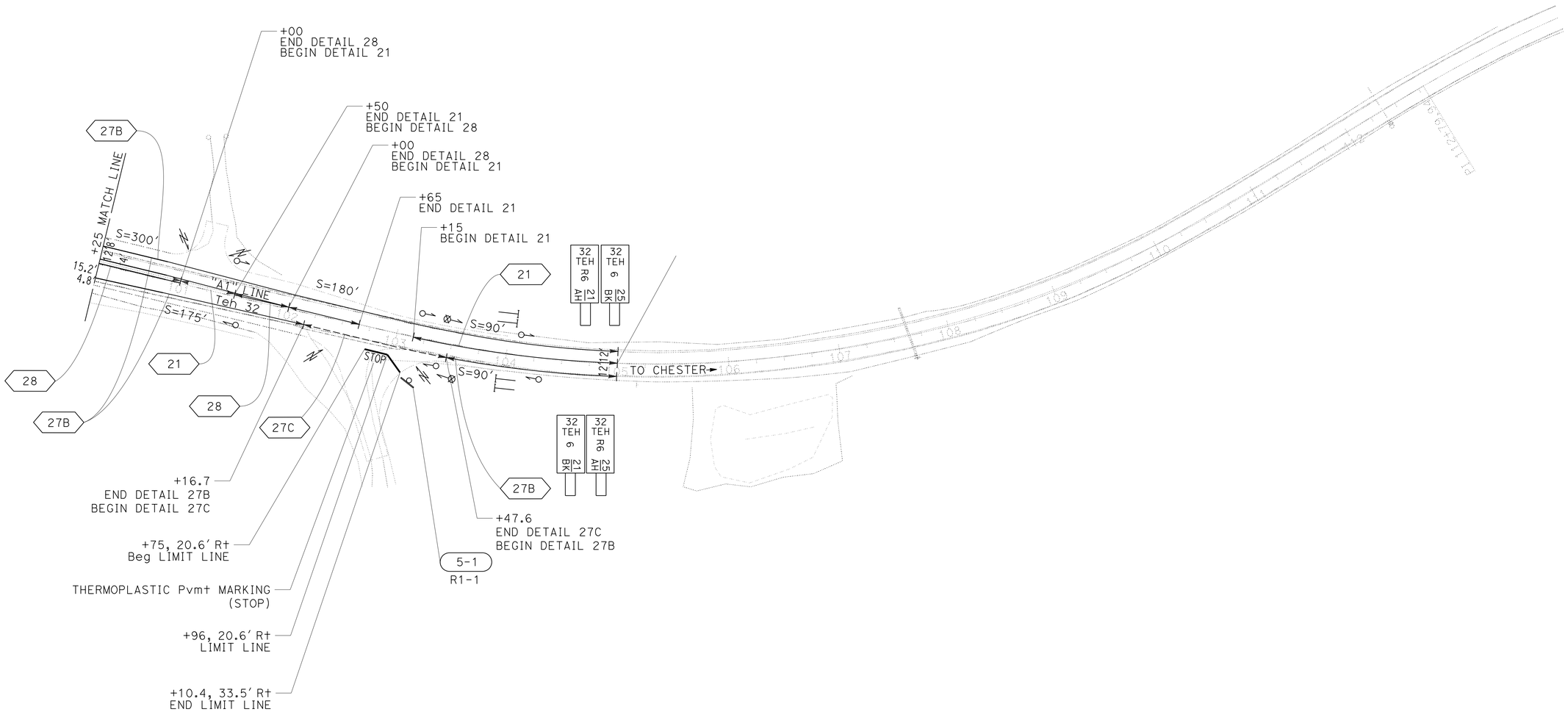

PAVEMENT DELINEATION AND SIGN PLAN

SCALE: 1" = 50'

PD-5

APPROVED FOR PAVEMENT DELINEATION AND SIGN WORK ONLY

STATE OF CALIFORNIA - DEPARTMENT OF TRANSPORTATION

Caltrans

DESIGN

FUNCTIONAL SUPERVISOR: AL TRUJILLO

CALCULATED-DESIGNED BY: JEFF CARSON

CHECKED BY: MICHAEL FEAKES

REVISED BY

DATE REVISED

P:\proj\02\4E900_plans\pse\24e900na005.dgn

LAST REVISION 07-28-14

DATE PLOTTED => 29-JUL-2014

TIME PLOTTED => 06:36

Dist	COUNTY	ROUTE	POST MILES TOTAL PROJECT	SHEET No.	TOTAL SHEETS
02	Teh	32	5.1/6.3	44	74

REGISTERED CIVIL ENGINEER 07-28-14 DATE

07-28-14
PLANS APPROVAL DATE

REGISTERED PROFESSIONAL ENGINEER MICHAEL E. FEAKES No. C70755 Exp. 6-30-15 CIVIL STATE OF CALIFORNIA

THE STATE OF CALIFORNIA OR ITS OFFICERS OR AGENTS SHALL NOT BE RESPONSIBLE FOR THE ACCURACY OR COMPLETENESS OF SCANNED COPIES OF THIS PLAN SHEET.

NOTES:

1. THE MARKER SHALL BE WHITE (NON-REFLECTIVE) TARGET PLATE WITH BLACK SERIES D NUMERALS AND LETTERS.
2. A POSTMILE PREFIX, SUCH AS "R", SHALL APPLY WHEN DIRECTED BY ENGINEER.
3. "BK" (BACK), "AH" (AHEAD), OR A BLANK SPACE SHALL APPLY AS DIRECTED BY THE ENGINEER.
4. ALL INFORMATION SHALL BE IN ENGLISH UNITS (MILES).

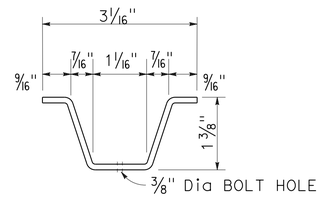

SECTION
METAL MARKER POST

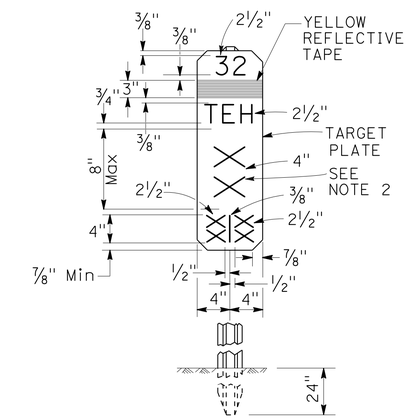

MILEPOST MARKER DETAIL

"A1" 66+84
"A1" 93+24

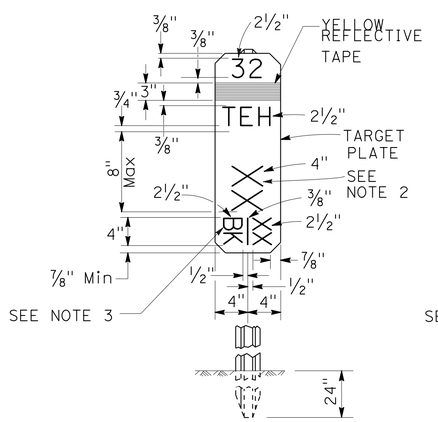

FRONT
BACK

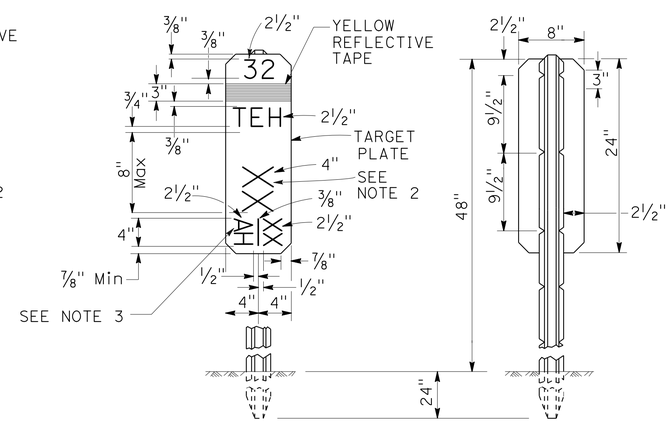

FRONT
AHEAD

REAR

MILEPOST MARKER DETAILS

"A1" 49+25
"A1" 104+00

MILEPOST MARKER

STATION	POST MILE	QUANTITY
49+25 L†	R5.17 Bk	1
49+25 L†	5.17 Ah	1
49+25 R†	5.17 Bk	1
49+25 R†	R5.17 Ah	1
66+84 L†	R5.50	1
93+24 R†	R6.00	1
104+00 L†	R6.21 Ah	1
104+00 L†	6.25 Bk	1
104+00 R†	R6.21 Bk	1
104+00 R†	6.25 Ah	1

PAVEMENT DELINEATION AND SIGN DETAILS

NO SCALE

PDD-1

REVISED BY | DATE REVISED
JEFF CARSON | MICHAEL FEAKES
CALCULATED-DESIGNED BY | CHECKED BY
FUNCTIONAL SUPERVISOR | AL TRUJILLO
STATE OF CALIFORNIA - DEPARTMENT OF TRANSPORTATION
Caltrans
DESIGN

P:\proj1\02\4E900_plans\pse\24e900nb001.dgn

LAST REVISION 07-28-14 | DATE PLOTTED => 29-JUL-2014 | TIME PLOTTED => 06:36

Dist	COUNTY	ROUTE	POST MILES TOTAL PROJECT	SHEET No.	TOTAL SHEETS
02	Teh	32	5.1/6.3	45	74

REGISTERED CIVIL ENGINEER 07-28-14 DATE

PLANS APPROVAL DATE 07-28-14

REGISTERED PROFESSIONAL ENGINEER MICHAEL E. FEAKES No. C70755 Exp. 6-30-15 CIVIL STATE OF CALIFORNIA

THE STATE OF CALIFORNIA OR ITS OFFICERS OR AGENTS SHALL NOT BE RESPONSIBLE FOR THE ACCURACY OR COMPLETENESS OF SCANNED COPIES OF THIS PLAN SHEET.

NOTES:

1. THE MARKER SHALL BE WHITE (NON-REFLECTIVE) TARGET PLATE WITH BLACK SERIES D NUMERALS AND LETTERS.
2. A POSTMILE PREFIX, SUCH AS "R", SHALL APPLY WHEN DIRECTED BY ENGINEER.
3. ALL INFORMATION SHALL BE IN ENGLISH UNITS (MILES).
4. (N) - NOT A SEPARATE PAY ITEM, FOR INFORMATION ONLY

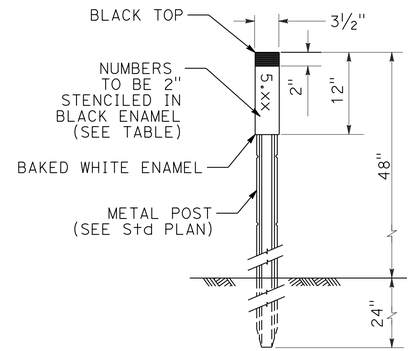

CULVERT MARKER

MATERIAL SUMMARY CONTRACTOR FURNISHED SIGNS

SHEET No.	No.	SIGN CODE	SIGN SIZE (L x D)	SINGLE FACED	BACKGROUND (N) SHEETING COLOR	BACKGROUND (N) RETROREFLECTIVE ASTM TYPE	LEGEND (N) SHEETING COLOR	LEGEND (N) RETROREFLECTIVE ASTM TYPE	PROTECTIVE OVERLAY (PREMIUM)	ROADSIDE SIGN SINGLE-SHEET UNFRAMED ALUMINUM (N) 0.063"	ROADSIDE SIGN SINGLE-SHEET UNFRAMED ALUMINUM (N) 0.080"	DESCRIPTION (REMARKS)
PD-1	1-2	G69 (CA) AHEAD	48" x 36"	x	GREEN	III	WHITE	III	x	x		"PASSING LANE AHEAD"
	1-4	R4-3	36" x 48"	x	WHITE	III	BLACK	II		x		"SLOWER TRAFFIC KEEP RIGHT"
	1-6	W1-2 W13-1P (XX)	36" x 36" 24" x 24"	x x	YELLOW YELLOW	III III	BLACK BLACK	II II		x x		CURVE SYMBOL XX MPH
	1-8	W5-1	36" x 36"	x	YELLOW	III	BLACK	II		x		"ROAD NARROWS"
PD-2	2-2	W1-2 (Lt) W13-1P (XX)	36" x 36" 24" x 24"	x x	YELLOW YELLOW	III III	BLACK BLACK	II II		x x		CURVE SYMBOL XX MPH
	2-4	W11-3 W7-3aP (4 MILES)	36" x 36" 24" x 30"	x x	YELLOW YELLOW	III III	BLACK BLACK	II II		x x		DEER SYMBOL "NEXT 4 MILES"
PD-3	3-2	W9-1	36" x 36"	x	YELLOW	III	BLACK	II		x		"LANE ENDS MERGE LEFT"
PD-4	4-1	W7-1b	36" x 36"	x	YELLOW	III	BLACK	II		x		GRADE SYMBOL, 5%
	4-3	W4-2R	36" x 36"	x	YELLOW	III	BLACK	II				LANE DROP SYMBOL
	4-4	W4-2R	36" x 36"	x	YELLOW	III	BLACK	II		x		LANE DROP SYMBOL
	4-7	R4-1	24" x 30"	x	WHITE	III	BLACK	II		x		"DO NOT PASS"
	4-8	R4-1	24" x 30"	x	WHITE	III	BLACK	II		x		"DO NOT PASS"
	4-10	W5-1	36" x 36"	x	YELLOW	III	BLACK	II		x		"ROAD NARROWS"
PD-5	5-1	R1-1	30" x 30"	x	RED	III	WHITE	II		x		STOP SIGN

XX - SPEED TO BE DETERMINED BY ENGINEER

MARKER (CULVERT)

SHEET	DRAINAGE SYSTEM	STATION "A1" LINE	Lt/Rt	MARKER (CULVERT)	POST MILES
PD-1	5.18	49+79	Lt/Rt	2	R5.18
	5.21	51+40	Rt	1	R5.21
	5.21	51+60	Rt	1	R5.21
	5.21	51+80	Rt	1	R5.22
	5.22	52+10	Rt	1	R5.22
	5.24	52+80	Rt	1	R5.24
	5.25	53+50	Lt/Rt	2	R5.25
	5.25	54+00	Rt	1	R5.26
	5.33	57+61	Lt/Rt	2	R5.33
PD-2	5.38	60+18	Rt	1	R5.38
	5.41	61+70	Rt	1	R5.41
	5.42	61+75	Lt/Rt	2	R5.42
	5.44	63+75	Lt/Rt	2	R5.44
	5.48	65+75	Lt	1	R5.48
	5.49	66+00	Rt	1	R5.49
	5.55	69+50	Lt/Rt	2	R5.55
	5.61	72+50	Lt/Rt	2	R5.61
PD-3	5.70	77+25	Lt/Rt	2	R5.70
	5.79	81+60	Rt	1	R5.78
	5.79	82+00	Lt	1	R5.79
PD-4	6.01	93+63	Lt/Rt	2	R6.01
	6.12	99+64	Lt/Rt	2	R6.12

PAVEMENT DELINEATION AND SIGN DETAILS

NO SCALE

PDD-2

REVISED BY | DATE REVISED

JEFF CARSON | MICHAEL FEAKES

CALCULATED-DESIGNED BY | CHECKED BY

FUNCTIONAL SUPERVISOR: AL TRUJILLO

STATE OF CALIFORNIA - DEPARTMENT OF TRANSPORTATION

Caltrans® DESIGN

P:\proj1\02\4E900_plans\pse\24e900nb002.dgn

LAST REVISION 07-28-14 | DATE PLOTTED => 29-JUL-2014 | TIME PLOTTED => 06:36

Dist	COUNTY	ROUTE	POST MILES TOTAL PROJECT	SHEET No.	TOTAL SHEETS
02	Teh	32	5.1/6.3	46	74

REGISTERED CIVIL ENGINEER 07-28-14 DATE

07-28-14
PLANS APPROVAL DATE

REGISTERED PROFESSIONAL ENGINEER MICHAEL E. FEAKES No. C70755 Exp. 6-30-15 CIVIL STATE OF CALIFORNIA

THE STATE OF CALIFORNIA OR ITS OFFICERS OR AGENTS SHALL NOT BE RESPONSIBLE FOR THE ACCURACY OR COMPLETENESS OF SCANNED COPIES OF THIS PLAN SHEET.

NOTES:

1. USE A 3" Sq TUBE x 3' LONG, 3/16" THICK ANCHOR FOR 2-1/2 " POSTS.
2. USE A 5/16" CORNER BOLT OR TWO DRIVE RIVETS TO FASTEN ASSEMBLED SIGN AND POST INTO ANCHOR. INSTALL CORNER BOLT OR DRIVE RIVETS INTO THE SIDES FACING TRAFFIC.
3. 2-1/2" POSTS ARE TO BE 1/8" THICK, PERFORATIONS OF 7/16" IN DIAMETER ARE 1" ON CENTER ON ALL SIDES, 2-1/2" POSTS ARE 12' AND 14' IN LENGTH.
4. FOR DETAILS NOT SHOWN, REFER TO THE STANDARD PLANS.
5. ALL ANCHOR SLEEVES SHALL BE EMBEDDED IN MINOR CONCRETE.

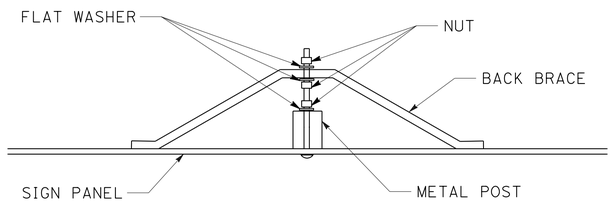

BACK BRACE MOUNTING DETAIL

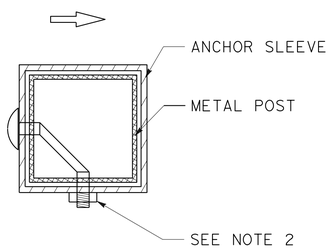

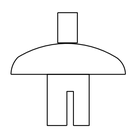

FASTENER DETAILS

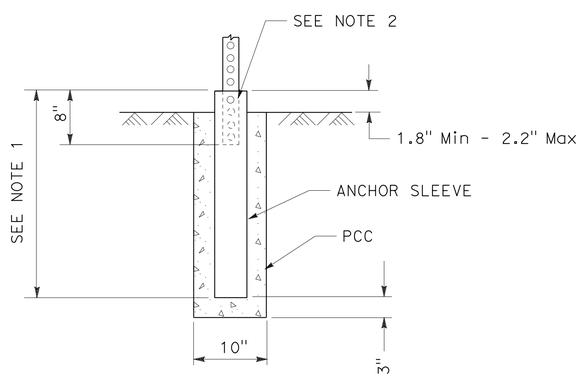

INSTALLATION IN SOIL (PCC)
(SEE NOTE 5)

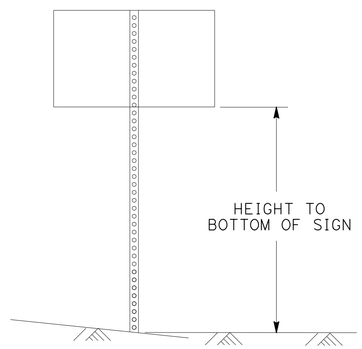

SINGLE POST INSTALLATION
(POST SIZE, SEE CHART BELOW)

Max SQFT OF SIGN

POST SIZE	60"	72"	84"	96"	108"	120"
2.5"	16	16	16	16	12	12

HEIGHT TO BOTTOM OF SIGN
SINGLE POST GROUND SIGNS
70 MPH WIND SPEED

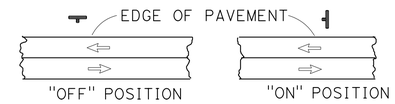

POSITION OF SIGNS

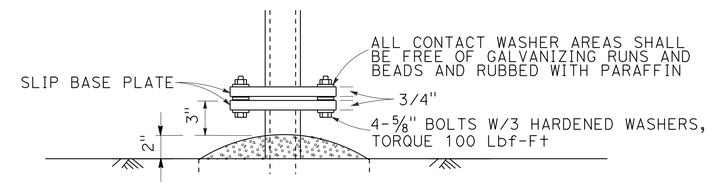

ELEVATION

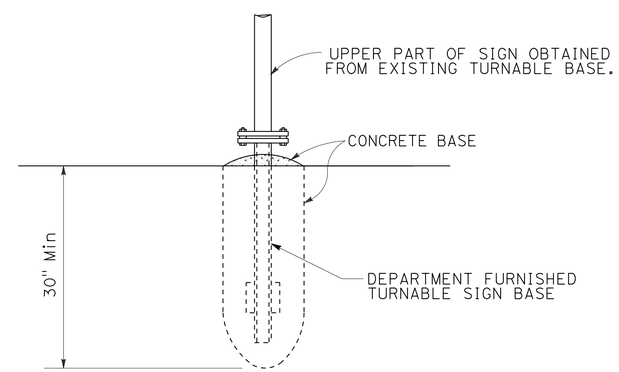

TURNABLE ROADSIDE SIGN BASE INSTALLATION

(RECONSTRUCT TURNABLE ROADSIDE SIGN)
"A1" 73+20

METAL SIGN POST INSTALLATION DETAILS

PAVEMENT DELINEATION AND SIGN DETAILS

NO SCALE

PDD-3

REVISED BY | DATE REVISED
JEFF CARSON | MICHAEL FEAKES
CALCULATED-DESIGNED BY | CHECKED BY
FUNCTIONAL SUPERVISOR
AL TRUJILLO

STATE OF CALIFORNIA - DEPARTMENT OF TRANSPORTATION
Caltrans
DESIGN

P:\proj\02\4E900_plans\pse\24e900nb003.dgn

LAST REVISION 07-28-14 | DATE PLOTTED => 29-JUL-2014 | TIME PLOTTED => 06:36

Dist	COUNTY	ROUTE	POST MILES TOTAL PROJECT	SHEET No.	TOTAL SHEETS
02	Teh	32	5.1/6.3	47	74

REGISTERED CIVIL ENGINEER 07-28-14 DATE

07-28-14
PLANS APPROVAL DATE

REGISTERED PROFESSIONAL ENGINEER MICHAEL E. FEAKES No. C70755 Exp. 6-30-15 CIVIL STATE OF CALIFORNIA

THE STATE OF CALIFORNIA OR ITS OFFICERS OR AGENTS SHALL NOT BE RESPONSIBLE FOR THE ACCURACY OR COMPLETENESS OF SCANNED COPIES OF THIS PLAN SHEET.

NOTE:

1. (N) - NOT A SEPARATE PAY ITEM, FOR INFORMATION ONLY

MARKERS AND DELINEATORS

SHEET No.	STATION	REMOVE MARKER	REMOVE DELINEATOR	DELINEATOR (CLASS 2) (TYPE E)	MARKER (CULVERT)	MILEPOST MARKER	OBJECT MARKER (TYPE L)	OBJECT MARKER (TYPE L-1)
		EA	EA	EA	EA	EA	EA	EA
PD-1	45+50 TO 59+75	5	7	20	11	4		
PD-2	59+75 TO 73+75	11	28	31	12	1	2	1
PD-3	73+75 TO 86+75	5		18	4			
PD-4	86+75 TO 100+25	5	3	16	4	1		
PD-5	100+25 TO 105+00		2	6		4	4	
	TOTAL	26	40	91	31	10	6	1

PAVEMENT DELINEATION QUANTITIES

STATION "A1 LINE"	THERMOPLASTIC TRAFFIC STRIPE (SPRAYABLE)					THERMOPLASTIC Pvmt MARKING	COMMENTS
	DETAIL 11	DETAIL 21	DETAIL 27B	DETAIL 27C	DETAIL 28		
	LF	LF	LF	LF	LF	SQFT	
45+50 TO 49+74		424					
45+50 TO 102+16.7 (Rt)			5625				
45+50 TO 105 (Lt)			5950				
49+74 TO 65+00					3052		
50+84 TO 95+39	4437						
65+00 TO 65+75		75					
65+75 TO 101+00					7050		
91+40						42	TYPE VI ARROW
93+40						42	TYPE VI ARROW
95+40						42	TYPE VI ARROW
101+00 TO 101+50		50					
101+50 TO 102+00					100		
102+00 TO 102+65		65					
102+16.7 TO 103+47.6 (Rt)				131			
102+75 TO 103+10.4						41	LIMIT LINE
102+85						22	"STOP"
103+15 TO 105+00		185					
103+47.6 TO 105+00 (Rt)			154				
SUBTOTAL	4437	799	11,729	131	10,202	189	
TOTAL	27,298					189	

PAVEMENT DELINEATION AND SIGN QUANTITIES

PDQ-1

CALCULATED-DESIGNED BY | CHECKED BY
JEFF CARSON | MICHAEL FEAKES
REVISED BY | DATE REVISED
FUNCTIONAL SUPERVISOR
AL TRUJILLO

STATE OF CALIFORNIA - DEPARTMENT OF TRANSPORTATION
Caltrans DESIGN

P:\proj1\02\4E900_plans\pse\24e900nc001.dgn

LAST REVISION 07-28-14 | DATE PLOTTED => 29-JUL-2014 | TIME PLOTTED => 06:36

Dist	COUNTY	ROUTE	POST MILES TOTAL PROJECT	SHEET No.	TOTAL SHEETS
02	Teh	32	5.1/6.3	48	74

REGISTERED CIVIL ENGINEER 07-28-14 DATE

07-28-14
PLANS APPROVAL DATE

REGISTERED PROFESSIONAL ENGINEER MICHAEL E. FEAKES No. C70755 Exp. 6-30-15 CIVIL STATE OF CALIFORNIA

THE STATE OF CALIFORNIA OR ITS OFFICERS OR AGENTS SHALL NOT BE RESPONSIBLE FOR THE ACCURACY OR COMPLETENESS OF SCANNED COPIES OF THIS PLAN SHEET.

NOTE:

1. (N) - NOT A SEPARATE PAY ITEM, FOR INFORMATION ONLY

ROADSIDE SIGNS

SHEET No.	SIGN No.	SIGN CODE	(N) PANEL SIZE	FURNISH SINGLE SHEET ALUMINUM SIGN (0.063"-UNFRAMED)	ROADSIDE SIGN ONE POST 2½" METAL POST	REMOVE ROADSIDE SIGN	RECONSTRUCT TURNABLE ROADSIDE SIGN	REMARKS
				SQFT	EA	EA	EA	
PD-1	1-1	R68				1		"PASSING LANE AHEAD"
	1-2	G69 (CA) AHEAD	48" x 36"	12.0	1			"PASSING LANE AHEAD"
	1-3	R4-3				1		"SLOWER TRAFFIC KEEP RIGHT"
	1-4	R4-3	36" x 48"	12.0	1			"SLOWER TRAFFIC KEEP RIGHT"
	1-5	W1-2 W13-1P (40)				1		CURVE SYMBOL 40 MPH
	1-6	W1-2 W13-1P (XX)	36" x 36" 24" x 24"	9.0 4.0	1			CURVE SYMBOL XX MPH
	1-7	W5-1				1		"ROAD NARROWS"
	1-8	W5-1	36" x 36"	9.0	1			"ROAD NARROWS"
PD-2	2-1	W1-2aL				1		CURVE SYMBOL (35 MPH)
	2-2	W1-2 (L†) W13-1P (XX)	36" x 36" 24" x 24"	9.0 4.0	1			CURVE SYMBOL XX MPH
	2-3	W1-2 (L†) W13-1P (35)				1		CURVE SYMBOL 35 MPH
	2-4	W11-3 W7-3aP	36" x 36" 24" x 30"	9.0 5.0			1	DEER SYMBOL "NEXT 4 MILES"
PD-3	3-1	W75(CA)				1		"LANE ENDS MERGE LEFT"
	3-2	W9-1	36" x 36"	9.0	1			"RIGHT LANE ENDS"
PD-4	4-1	W7-1b	36" x 36"	9.0	1			GRADE SYMBOL, 5%
	4-2	W7-1b				1		GRADE SYMBOL
	4-3	W4-2R	36" x 36"	9.0	1			LANE DROP SYMBOL
	4-4	W4-2R	36" x 36"	9.0	1			LANE DROP SYMBOL
	4-5	W4-2 R4-1				1		LANE DROP SYMBOL "DO NOT PASS"
	4-6	W4-2 R4-1				1		LANE DROP SYMBOL "DO NOT PASS"
	4-7	R4-1	24" x 30"	5.0	1			"DO NOT PASS"
	4-8	R4-1	24" x 30"	5.0	1			"DO NOT PASS"
	4-9	W5-1				1		"ROAD NARROWS"
	4-10	W5-1	36" x 36"	9.0	1			"ROAD NARROWS"
PD-5	5-1	R1-1	30" x 30"	6.25	1			"STOP"
TOTAL				134.25	13	11	1	

XX - SPEED TO BE DETERMINED BY ENGINEER

PAVEMENT DELINEATION AND SIGN QUANTITIES
PDQ-2

REVISED BY | DATE REVISED
JEFF CARSON | MICHAEL FEAKES
CALCULATED-DESIGNED BY | CHECKED BY
FUNCTIONAL SUPERVISOR
AL TRUJILLO
STATE OF CALIFORNIA - DEPARTMENT OF TRANSPORTATION
Caltrans DESIGN
P:\proj1\02\4E900_plans\pse\24e900nc002.dgn

LAST REVISION 07-28-14 | DATE PLOTTED => 29-JUL-2014 | TIME PLOTTED => 06:36

Dist	COUNTY	ROUTE	POST MILES TOTAL PROJECT	SHEET No.	TOTAL SHEETS
02	Teh	32	5.1/6.3	49	74

REGISTERED CIVIL ENGINEER 07-28-14 DATE

07-28-14
PLANS APPROVAL DATE

REGISTERED PROFESSIONAL ENGINEER MICHAEL E. FEAKES No. C70755 Exp. 6-30-15 CIVIL STATE OF CALIFORNIA

THE STATE OF CALIFORNIA OR ITS OFFICERS OR AGENTS SHALL NOT BE RESPONSIBLE FOR THE ACCURACY OR COMPLETENESS OF SCANNED COPIES OF THIS PLAN SHEET.

NOTE:

1. (N) - NOT A SEPARATE PAY ITEM, FOR INFORMATION ONLY

TEMPORARY WATER POLLUTION CONTROL

STATION	Temp COVER	Temp CHECK DAM	Temp DRAINAGE INLET PROTECTION	Temp FIBER ROLL	Temp SILT FENCE
"A1" 49+25.00 TO 104+00.00	SQYD	LF	EA	LF	LF
STORM WATER BMP'S	1000	200	5	2400	500
TOTAL	1000	200	5	2400	500

PLACE HMA DIKE

STATION	L+/R+	TYPE A	TYPE C	TYPE D
		LF	LF	LF
"A1" 50+92.00 TO 59+50.00	R+			850
"A1" 59+50.00 TO 60+15.00	R+		63	
"A1" 60+15.00 TO 71+00.00	R+	1050		
"A1" 71+00.00 TO 71+50.00	R+		50	
TOTAL		1050	113	850

ROADWAY QUANTITIES

ALIGNMENT	STATION	TREATED WOOD WASTE	REMOVE GUARDRAIL	COLD PLANE ASPHALT CONCRETE PAVEMENT	ROADWAY EXCAVATION	(N) EMBANKMENT	SHOULDER BACKING	CLASS 2 AGGREGATE BASE (CY)	HOT MIX ASPHALT (TYPE A)	TACK COAT	MIDWEST GUARDRAIL SYSTEM (STEEL POST)	END ANCHOR ASSEMBLY (TYPE SFT)	ALTERNATE FLARED TERMINAL SYSTEM	SUBGRADE ENHANCEMENT GEOGRID	REMARKS
		LB	LF	SQYD	CY	CY	TON	CY	TON	TON	LF	EA	EA	SQYD	
"A1"	46+00.00 TO 49+25.00			802			185		189	0.1					
"A1"	49+25.00 TO 104+00.00				60,305	51,350	1065	7760	10,316	8.0				17,780	
"A1"	59+75.00 TO 60+15.00												1		
"A1"	60+15.00 TO 71+94.04										1184				
"A1"	69+98.00 TO 78+45.00	11,130	865												
"A1"	71+94.04 TO 72+00.00											1			
"A1"	104+00.00 TO 104+50.00			135			15		23	0.1					
"RC1"						1155	8	102	71						
"RC2"					65	10	5	27	36						
"RC3"						160	12	79	127						
	FROM DRAINAGE QUANTITIES								53						
	TOTAL	11,130	865	937	60,370	52,675	1290	7968	10,815	8.2	1184	1	1	17,780	

SUMMARY OF QUANTITIES
Q-1

REVISED BY | DATE REVISED
JEFF CARSON | MICHAEL FEAKES
CALCULATED-DESIGNED BY | CHECKED BY
FUNCTIONAL SUPERVISOR
AL TRUJILLO

STATE OF CALIFORNIA - DEPARTMENT OF TRANSPORTATION
Caltrans® DESIGN

P:\proj1\02\4E900_plans\pse\24e900pa001.dgn

LAST REVISION 07-28-14 | DATE PLOTTED => 29-JUL-2014 | TIME PLOTTED => 06:36

Dist	COUNTY	ROUTE	POST MILES TOTAL PROJECT	SHEET No.	TOTAL SHEETS
02	Teh	32	5.1/6.3	50	74

LICENSED LANDSCAPE ARCHITECT

07-28-14
PLANS APPROVAL DATE

LICENSED LANDSCAPE ARCHITECT J. PATRICK SULLIVAN #3125 Signature 07/31/14 Renewal Date 7/16/14 Date STATE OF CALIFORNIA

THE STATE OF CALIFORNIA OR ITS OFFICERS OR AGENTS SHALL NOT BE RESPONSIBLE FOR THE ACCURACY OR COMPLETENESS OF SCANNED COPIES OF THIS PLAN SHEET.

NOTE:

1. FOR ACCURATE RIGHT OF WAY DATA, CONTACT RIGHT OF WAY ENGINEERING AT THE DISTRICT OFFICE.

LEGEND:

HYDROSEED

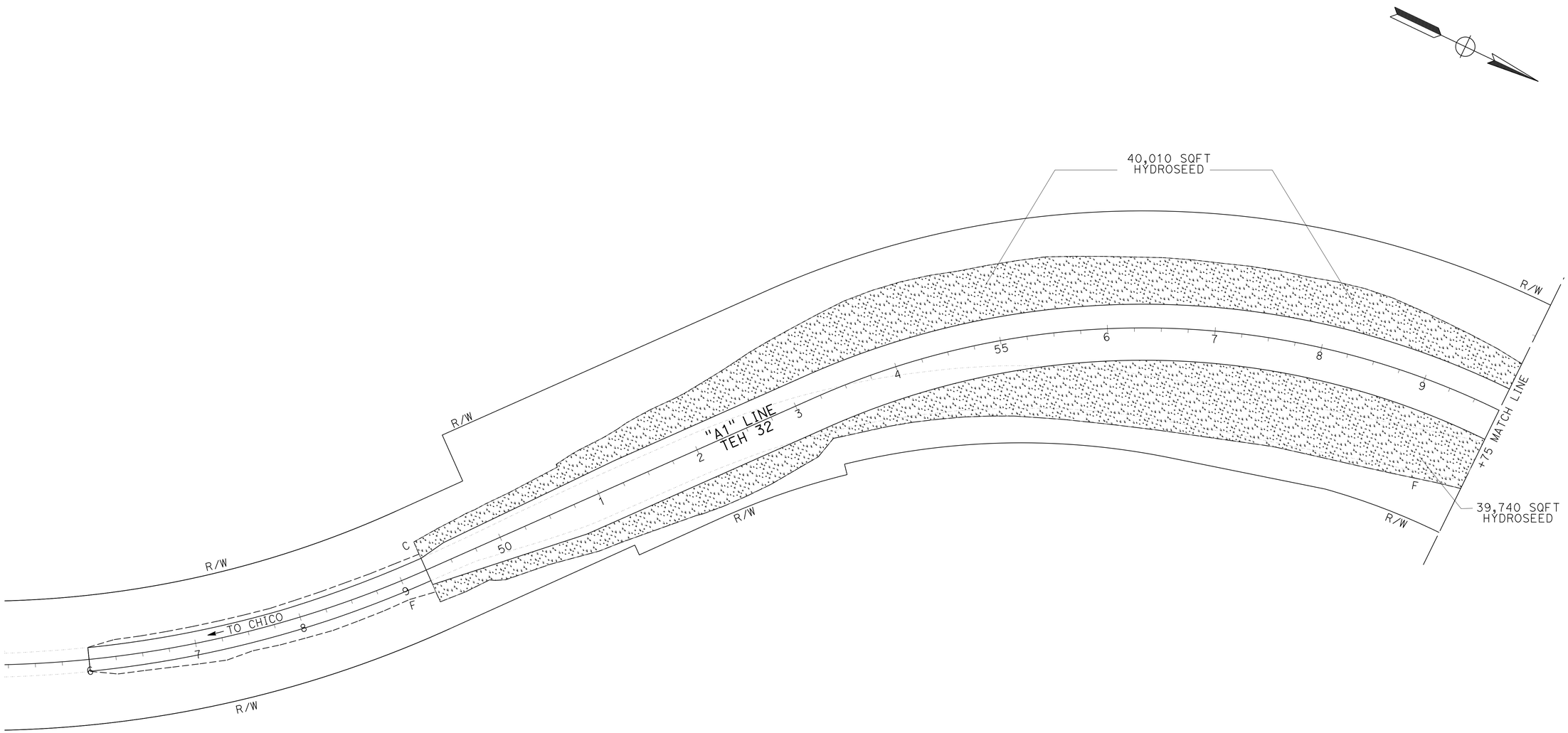

APPROVED FOR EROSION CONTROL WORK ONLY

EROSION CONTROL PLAN

SCALE: 1" = 50'

EC-1

REVISED BY	
DATE REVISED	
J. PATRICK SULLIVAN	
RON FLORY	
CALCULATED-DESIGNED BY	
CHECKED BY	
SENIOR LANDSCAPE ARCHITECT	
RON FLORY	

STATE OF CALIFORNIA - DEPARTMENT OF TRANSPORTATION
Caltrans® LANDSCAPE ARCHITECTURE

P:\proj1\02\4E900_plans\pse\24e900te001.dgn

LAST REVISION 07-16-14 | DATE PLOTTED => 29-JUL-2014 | TIME PLOTTED => 06:36

Dist	COUNTY	ROUTE	POST MILES TOTAL PROJECT	SHEET No.	TOTAL SHEETS
02	Teh	32	5.1/6.3	51	74

LICENSED LANDSCAPE ARCHITECT

07-28-14
PLANS APPROVAL DATE

LICENSED LANDSCAPE ARCHITECT J. PATRICK SULLIVAN #3125 Signature 07/31/14 Renewal Date 7/16/14 Date STATE OF CALIFORNIA

THE STATE OF CALIFORNIA OR ITS OFFICERS OR AGENTS SHALL NOT BE RESPONSIBLE FOR THE ACCURACY OR COMPLETENESS OF SCANNED COPIES OF THIS PLAN SHEET.

NOTE:

1. FOR ACCURATE RIGHT OF WAY DATA, CONTACT RIGHT OF WAY ENGINEERING AT THE DISTRICT OFFICE.

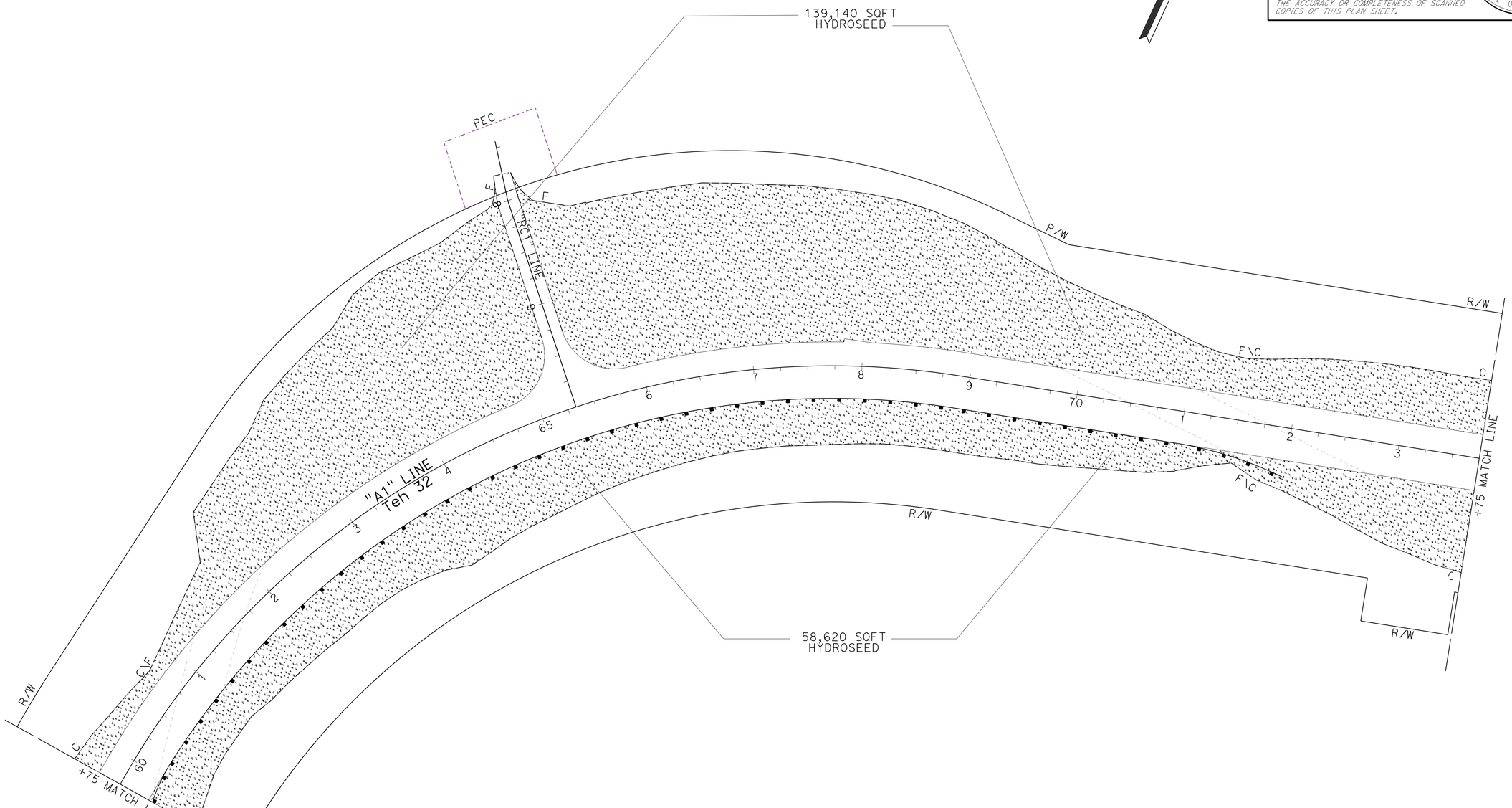

EROSION CONTROL PLAN

SCALE: 1" = 50'

EC-2

APPROVED FOR EROSION CONTROL WORK ONLY

REVISED BY	DATE REVISED

CALCULATED-DESIGNED BY	CHECKED BY
J. PATRICK SULLIVAN	RON FLORY

SENIOR LANDSCAPE ARCHITECT
RON FLORY

STATE OF CALIFORNIA - DEPARTMENT OF TRANSPORTATION
Caltrans® LANDSCAPE ARCHITECTURE

P:\proj1\02\4E900_plans\pse\24e900te002.dgn

LAST REVISION 07-16-14 | DATE PLOTTED => 29-JUL-2014 TIME PLOTTED => 06:37

Dist	COUNTY	ROUTE	POST MILES TOTAL PROJECT	SHEET No.	TOTAL SHEETS
02	Teh	32	5.1/6.3	52	74

LICENSED LANDSCAPE ARCHITECT

07-28-14
PLANS APPROVAL DATE

LICENSED LANDSCAPE ARCHITECT J. PATRICK SULLIVAN #3125 Signature 07/31/14 Renewal Date 7/16/14 Date STATE OF CALIFORNIA

THE STATE OF CALIFORNIA OR ITS OFFICERS OR AGENTS SHALL NOT BE RESPONSIBLE FOR THE ACCURACY OR COMPLETENESS OF SCANNED COPIES OF THIS PLAN SHEET.

NOTE:

1. FOR ACCURATE RIGHT OF WAY DATA, CONTACT RIGHT OF WAY ENGINEERING AT THE DISTRICT OFFICE.

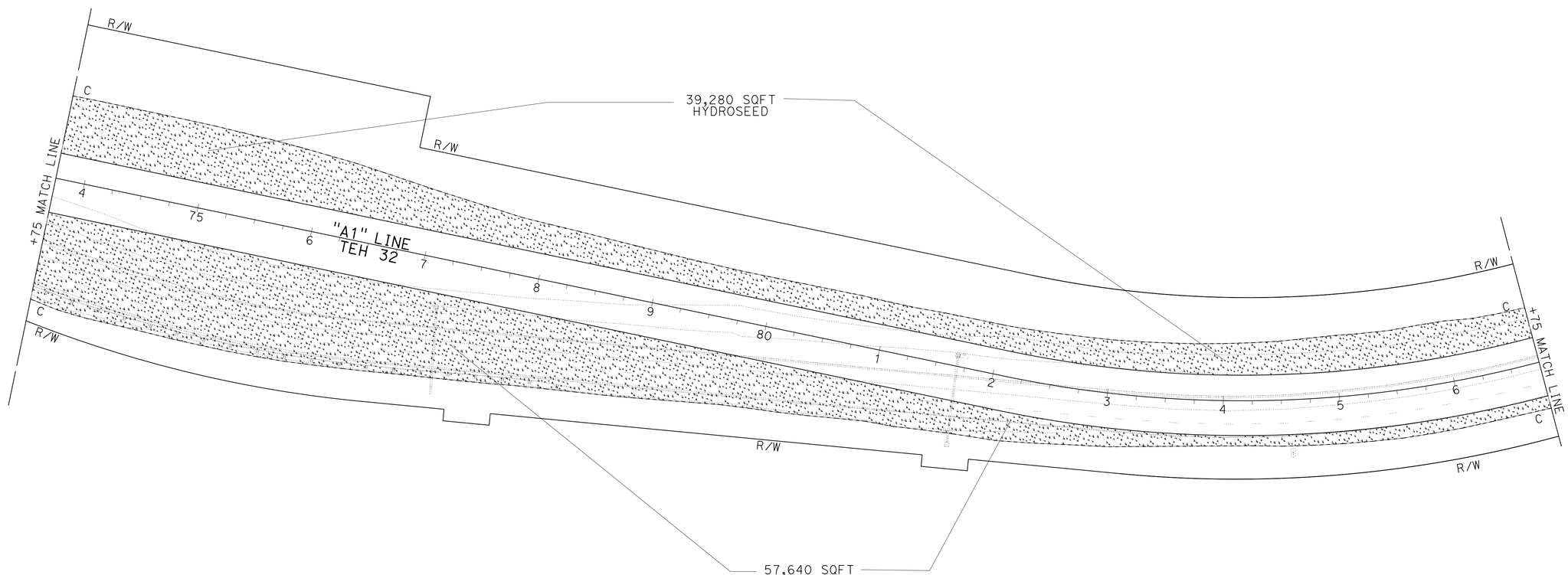

EROSION CONTROL PLAN

SCALE: 1" = 50'

EC-3

APPROVED FOR EROSION CONTROL WORK ONLY

REVISED BY | DATE REVISED

J. PATRICK SULLIVAN | RON FLORY

CALCULATED-DESIGNED BY | CHECKED BY

SENIOR LANDSCAPE ARCHITECT | RON FLORY

STATE OF CALIFORNIA - DEPARTMENT OF TRANSPORTATION

Caltrans® LANDSCAPE ARCHITECTURE

P:\proj\02\4E900_plans\pse\24e900te003.dgn

LAST REVISION 07-16-14 | DATE PLOTTED => 29-JUL-2014 TIME PLOTTED => 06:37

Dist	COUNTY	ROUTE	POST MILES TOTAL PROJECT	SHEET No.	TOTAL SHEETS
02	Teh	32	5.1/6.3	53	74

LICENSED LANDSCAPE ARCHITECT

07-28-14
PLANS APPROVAL DATE

LICENSED LANDSCAPE ARCHITECT J. PATRICK SULLIVAN #3125 Signature 07/31/14 Renewal Date 7/16/14 Date STATE OF CALIFORNIA

THE STATE OF CALIFORNIA OR ITS OFFICERS OR AGENTS SHALL NOT BE RESPONSIBLE FOR THE ACCURACY OR COMPLETENESS OF SCANNED COPIES OF THIS PLAN SHEET.

NOTE:

1. FOR ACCURATE RIGHT OF WAY DATA, CONTACT RIGHT OF WAY ENGINEERING AT THE DISTRICT OFFICE.

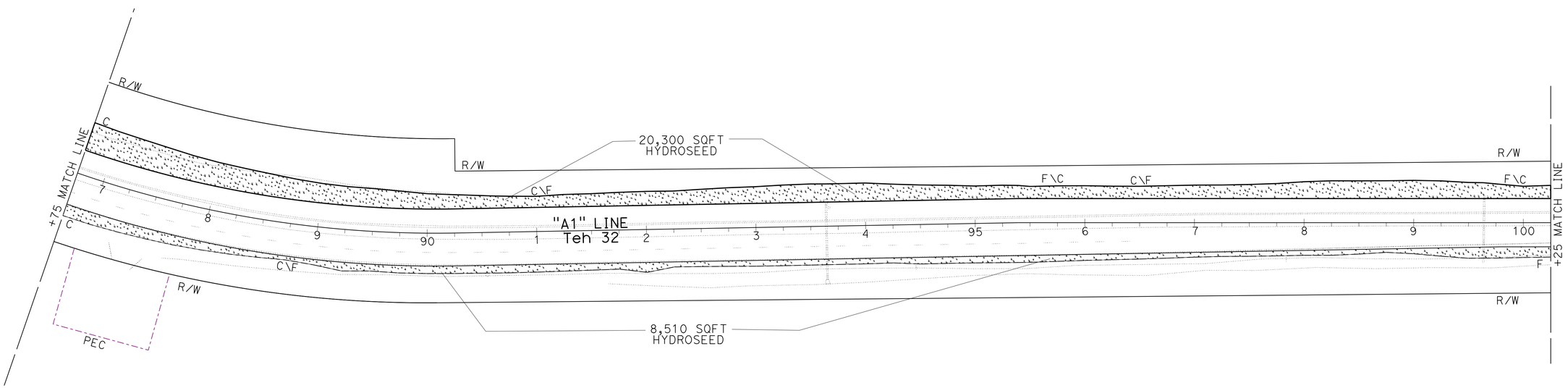

APPROVED FOR EROSION CONTROL WORK ONLY

EROSION CONTROL PLAN

SCALE: 1" = 50'

EC-4

REVISED BY	DATE REVISED

CALCULATED-DESIGNED BY
CHECKED BY
SENIOR LANDSCAPE ARCHITECT
RON FLORY
J. PATRICK SULLIVAN
RON FLORY

STATE OF CALIFORNIA - DEPARTMENT OF TRANSPORTATION
Caltrans® LANDSCAPE ARCHITECTURE

P:\proj1\02\4E900_plans\pse\24e900te004.dgn

LAST REVISION 07-16-14
DATE PLOTTED => 29-JUL-2014
TIME PLOTTED => 06:37

Dist	COUNTY	ROUTE	POST MILES TOTAL PROJECT	SHEET No.	TOTAL SHEETS
02	Teh	32	5.1/6.3	54	74

LICENSED LANDSCAPE ARCHITECT

07-28-14
PLANS APPROVAL DATE

LICENSED LANDSCAPE ARCHITECT J. PATRICK SULLIVAN #3125 Signature 07/31/14 Renewal Date 7/16/14 Date STATE OF CALIFORNIA

THE STATE OF CALIFORNIA OR ITS OFFICERS OR AGENTS SHALL NOT BE RESPONSIBLE FOR THE ACCURACY OR COMPLETENESS OF SCANNED COPIES OF THIS PLAN SHEET.

NOTE:

1. FOR ACCURATE RIGHT OF WAY DATA, CONTACT RIGHT OF WAY ENGINEERING AT THE DISTRICT OFFICE.

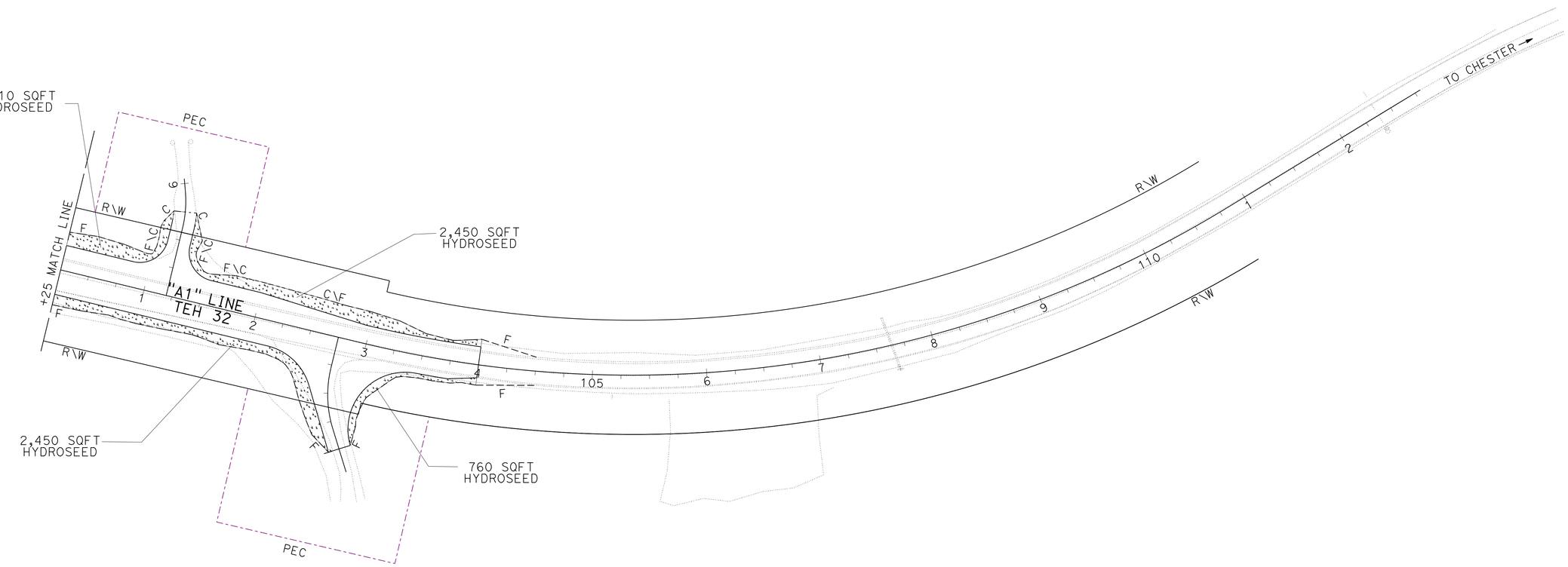

APPROVED FOR EROSION CONTROL WORK ONLY

EROSION CONTROL PLAN

SCALE: 1" = 50'

EC-5

REVISED BY	DATE REVISED

CALCULATED-DESIGNED BY	CHECKED BY
J. PATRICK SULLIVAN	RON FLORY

SENIOR LANDSCAPE ARCHITECT: RON FLORY

STATE OF CALIFORNIA - DEPARTMENT OF TRANSPORTATION
Caltrans® LANDSCAPE ARCHITECTURE

P:\proj\02\4E900_plans\pse\24e900te005.dgn

LAST REVISION 07-16-14 | DATE PLOTTED => 29-JUL-2014 | TIME PLOTTED => 06:37

Dist	COUNTY	ROUTE	POST MILES TOTAL PROJECT	SHEET No.	TOTAL SHEETS
02	Teh	32	5.1/6.3	55	74

LICENSED LANDSCAPE ARCHITECT

07-28-14
PLANS APPROVAL DATE

LICENSED LANDSCAPE ARCHITECT J. PATRICK SULLIVAN #3125 Signature 07/31/14 Renewal Date 7/16/14 Date STATE OF CALIFORNIA

THE STATE OF CALIFORNIA OR ITS OFFICERS OR AGENTS SHALL NOT BE RESPONSIBLE FOR THE ACCURACY OR COMPLETENESS OF SCANNED COPIES OF THIS PLAN SHEET.

NOTES:

1. (N) - NOT A SEPARATE PAY ITEM, FOR INFORMATION ONLY
2. REFER TO INDIVIDUAL EROSION CONTROL SHEETS FOR LOCATIONS & QUANTITIES.
3. APPLY STRAW SUFFICIENTLY TO FULLY COVER SLOPES.

HYDROSEED SEQUENCE/ APPLICATION RATES (N)

SEQUENCE	ITEM	MATERIAL DESCRIPTION	MATERIAL TYPE	APPLICATION RATE (N)
STEP 1	HYDROSEED APPLICATION	PURE LIVE SEED	MIX	105 LB/ACRE
		FIBER	ALTERNATE	2000 LB/ACRE
		SLOW RELEASE FERTLIZER	GRANULAR	100 LB/ACRE
STEP 2	STRAW APPLICATION	STRAW	WHEAT/ BARLEY	4 TON/ACRE
STEP 3	HYDROSEED APPLICATION	COMPOST	RECYCLED WOOD PRODUCT	1.2 CY/ACRE
		FIBER	ALTERNATE	1000 LB/ACRE
		TACKIFIER	PSYLLIUM	100 LB/ACRE

HYDROSEED TOTALS

MATERIAL DESCRIPTION	MATERIAL TYPE	(N) TOTALS
PURE LIVE SEED	MIX	988.05 LB
FIBER	ALTERNATE	28,230 LB
SLOW RELEASE FERTLIZER	GRANULAR	941 LB
COMPOST	RECYCLED WOOD PRODUCT	11.3 CY
STRAW	WHEAT/ BARLEY	37.64 TONS
TACKIFIER	PSYLLIUM	941 LB

* HYDROSEEDING QUANTITIES ARE BASED ON 9.41 ACRES

SEED MIX (N)

BOTANICAL NAME (COMMON NAME)	PERCENT GERMINATION (MINIMUM)	POUNDS PURE LIVE SEED PER ACRE (N) (SLOPE MEASUREMENT)
ACHILLEA MILLEFOLIUM (COMMON YARROW)	70	2
BROMUS CARINATUS (CALIFORNIA BROME)	70	8
ELYMUS GLAUCUS (BLUE WILDRYE)	80	20
FESTUCA IDAHOENSIS (WESTERN FESCUE)	80	20
LUPINUS NANA (DWARF LUPINES)	60	3
POA SECUNDA (BLUE PINE GRASS)	70	12
SECALE CEREALE 'MODESTO' (WINTER RYE)	70	25
VULPIA MICROSTACHYS (THREE-WEEKS FESCUE)	70	15
	TOTAL	105

EROSION CONTROL QUANTITIES

SHEET No.	STATION "A1" LINE	HYDROSEED SQFT
EC-1	49+00 TO 59+75	79,750
EC-2	59+75 TO 73+75	197,760
EC-3	73+75 TO 86+75	96,920
EC-4	86+75 TO 100+25	28,810
EC-5	100+25 TO 104+50	6,870
	TOTAL	410,110

EROSION CONTROL QUANTITIES
ECQ-1

REVISED BY | DATE REVISED
J. PATRICK SULLIVAN | RON FLORY
CALCULATED-DESIGNED BY | CHECKED BY
SENIOR LANDSCAPE ARCHITECT | RON FLORY
STATE OF CALIFORNIA - DEPARTMENT OF TRANSPORTATION
Caltrans® LANDSCAPE ARCHITECTURE

P:\proj1\02\4E900_plans\pse\24e900tg001.dgn

LAST REVISION 07-16-14 | DATE PLOTTED => 29-JUL-2014 | TIME PLOTTED => 06:37

M

Maint	MAINTENANCE
Max	MAXIMUM
MB	METAL BEAM
MBB	METAL BEAM BARRIER
MBGR	METAL BEAM GUARD RAILING
Med	MEDIAN
MGS	MIDWEST GUARDRAIL SYSTEM
MH	MANHOLE
Min	MINIMUM
Misc	MISCELLANEOUS
Misc I & S	MISCELLANEOUS IRON AND STEEL
Mkr	MARKER
Mod	MODIFIED,
	MODIFY
Mon	MONUMENT
MP	METAL PLATE
MPGR	METAL PLATE GUARD RAILING
MR	MOVEMENT RATING
MSE	MECHANICALLY STABILIZED EMBANKMENT
Mt	MOUNTAIN, MOUNT
Mtl	MATERIAL
MVP	MAINTENANCE VEHICLE PULLOUT

N

N	NORTH
NB	NORTHBOUND
No.	NUMBER (MUST HAVE PERIOD)
Nos.	NUMBERS (MUST HAVE PERIOD)
NPS	NOMINAL PIPE SIZE
NS	NEAR SIDE
NSP	NEW STANDARD PLAN
NTS	NOT TO SCALE

O

Oblr	OBLITERATE
OC	OVERCROSSING
OD	OUTSIDE DIAMETER
OF	OUTSIDE FACE
OG	ORIGINAL GROUND
OGAC	OPEN GRADED ASPHALT CONCRETE
OGFC	OPEN GRADED FRICTION COURSE
OH	OVERHEAD
OHWM	ORDINARY HIGH WATER MARK
O-O	OUT TO OUT
Opp	OPPOSITE
OSD	OVERSIDE DRAIN

P

P	PAGE
PAP	PERFORATED ALUMINUM PIPE
PB	PULL BOX
PC	POINT OF CURVATURE,
	PRECAST
PCC	POINT OF COMPOUND CURVE,
	PORTLAND CEMENT CONCRETE
PCMS	PORTABLE CHANGEABLE MESSAGE SIGN
PCP	PERFORATED CONCRETE PIPE,
	PRESTRESSED CONCRETE PIPE
PCVC	POINT OF COMPOUND VERTICAL CURVE
PEC	PERMIT TO ENTER AND CONSTRUCT
Ped	PEDESTRIAN
Ped OC	PEDESTRIAN OVERCROSSING
Ped UC	PEDESTRIAN UNDERCROSSING
Perm Mtl	PERMEABLE MATERIAL

P continued

PG	PROFILE GRADE
PI	POINT OF INTERSECTION
PJP	PARTIAL JOINT PENETRATION
Pkwy	PARKWAY
ℙ,PL	PLATE
P/L	PROPERTY LINE
PM	POST MILE,
	TIME FROM NOON TO MIDNIGHT
PN	PAVING NOTCH
POC	POINT OF HORIZONTAL CURVE
POT	POINT OF TANGENT
POVC	POINT OF VERTICAL CURVE
PP	PIPE PILE,
	PLASTIC PIPE,
	POWER POLE
PPL	PREFORMED PERMEABLE LINER
PPP	PERFORATED PLASTIC PIPE
PRC	POINT OF REVERSE CURVE
PRF	PAVEMENT REINFORCING FABRIC
PRVC	POINT OF REVERSE VERTICAL CURVE
PS&E	PLANS, SPECIFICATIONS AND ESTIMATES
PS, P/S	PRESTRESSED
PSP	PERFORATED STEEL PIPE
PT	POINT OF TANGENCY
PVC	POLYVINYL CHLORIDE
Pvmt	PAVEMENT

Q

Qty	QUANTITY

R

R	RADIUS
R & D	REMOVE AND DISPOSE
R & S	REMOVE AND SALVAGE
R/C	RATE OF CHANGE
RCA	REINFORCED CONCRETE ARCH
RCB	REINFORCED CONCRETE BOX
RCP	REINFORCED CONCRETE PIPE
RCPA	REINFORCED CONCRETE PIPE ARCH
Rd	ROAD
Reinf	REINFORCED,
	REINFORCEMENT,
	REINFORCING
Rel	RELOCATE
Repl	REPLACEMENT
Ret	RETAINING
Rev	REVISED, REVISION
Rdwy	ROADWAY
RHMA	RUBBERIZED HOT MIX ASPHALT
Riv	RIVER
RM	ROAD-MIXED
RP	RADIUS POINT,
	REFERENCE POINT
RR	RAILROAD
RSP	ROCK SLOPE PROTECTION,
	REVISED STANDARD PLAN
Rt	RIGHT
Rte	ROUTE
RW	REDWOOD,
	RETAINING WALL
R/W	RIGHT OF WAY
Rwy	RAILWAY

S

S	SOUTH,
	SUPPLEMENT
SAE	STRUCTURE APPROACH EMBANKMENT
Salv	SALVAGE
SAPP	STRUCTURAL ALUMINUM PLATE PIPE
SB	SOUTHBOUND
SC	SAND CUSHION
SCSP	SLOTTED CORRUGATED STEEL PIPE
SD	STORM DRAIN
Sec	SECOND,
	SECTION
Sep	SEPARATION
SG	SUBGRADE
Shld	SHOULDER
Sht	SHEET
Sim	SIMILAR
℄	STATION LINE
SM	SELECTED MATERIAL
Spec	SPECIAL,
	SPECIFICATIONS
SPP	SLOTTED PLASTIC PIPE
SS	SLOPE STAKE
SSBM	STRAP AND SADDLE BRACKET METHOD
SSD	STRUCTURAL SECTION DRAIN
SSPA	STRUCTURAL STEEL PLATE ARCH
SSPP	STRUCTURAL STEEL PLATE PIPE
SSPPA	STRUCTURAL STEEL PLATE PIPE ARCH
SSRP	STEEL SPIRAL RIB PIPE
St	STREET
Sta	STATION
STBB	SINGLE THRIE BEAM BARRIER
Std	STANDARD
Str	STRUCTURE
Surf	SURFACING
SW	SIDEWALK,
	SOUND WALL
Swr	SEWER
Sym	SYMMETRICAL
S4S	SURFACE 4 SIDES

T

T	SEMI-TANGENT
Tan	TANGENT
TBB	THRIE BEAM BARRIER
Tbr	TIMBER
TC	TOP OF CURB
TCB	TRAFFIC CONTROL BOX
TCE	TEMPORARY CONSTRUCTION EASEMENT
Tel	TELEPHONE
Temp	TEMPORARY
TG	TOP OF GRADE
Tot	TOTAL
TP	TELEPHONE POLE
TPB	TREATED PERMEABLE BASE
TPM	TREATED PERMEABLE MATERIAL
Trans	TRANSITION

T continued

TS	TRANSVERSE,
	TRAFFIC SIGNAL,
	TUBULAR STEEL
Typ	TYPICAL

U

UC	UNDERCROSSING
UD	UNDERDRAIN
UG	UNDERGROUND
UON	UNLESS OTHERWISE NOTED
UP	UNDERPASS

V

V	VALVE,
	DESIGN SPEED
Var	VARIABLE,
	VARIES
VC	VERTICAL CURVE
VCP	VITRIFIED CLAY PIPE
Vert	VERTICAL
Via	VIADUCT
Vol	VOLUME

W

W	WEST,
	WIDTH
WB	WESTBOUND
WH	WEEP HOLE
WM	WIRE MESH
WS	WATER SURFACE
WSP	WELDED STEEL PIPE
Wt	WEIGHT
WV	WATER VALVE
WW	WINGWALL
WWLOL	WINGWALL LAYOUT LINE

X

X Sec	CROSS SECTION
Xing	CROSSING

Y

Yr	YEAR
Yrs	YEARS

Dist	COUNTY	ROUTE	POST MILES TOTAL PROJECT	SHEET No.	TOTAL SHEETS
02	Teh	32	5.1/6.3	56	74

Grace M. Tsushima
REGISTERED CIVIL ENGINEER

July 19, 2013
PLANS APPROVAL DATE

REGISTERED PROFESSIONAL ENGINEER Grace M. Tsushima No. C49814 Exp. 9-30-14 CIVIL STATE OF CALIFORNIA

THE STATE OF CALIFORNIA OR ITS OFFICERS OR AGENTS SHALL NOT BE RESPONSIBLE FOR THE ACCURACY OR COMPLETENESS OF SCANNED COPIES OF THIS PLAN SHEET.

TO ACCOMPANY PLANS DATED 07-28-14

UNIT OF MEASUREMENT SYMBOLS:

Some of the symbols used in the project plan quantity tables and in the Bid Item List are:

TABLE A

SYMBOL USED	DEFINITIONS
ACRE	ACRE
CF	CUBIC FOOT
CY	CUBIC YARD
EA	EACH
GAL	GALLON
LB	POUND
LF	LINEAR FOOT
SQFT	SQUARE FOOT
SQYD	SQUARE YARD
STA	100 FEET
TAB	TABLET
TON	2,000 POUNDS

Some of the symbols used in the plans other than in the project plan quantity tables are:

TABLE B

SYMBOL USED	DEFINITIONS
ksi	KIPS PER SQUARE INCH
ksf	KIPS PER SQUARE FOOT
psi	POUNDS PER SQUARE INCH
psf	POUNDS PER SQUARE FOOT
lb/ft^3, pcf	POUNDS PER CUBIC FOOT
tsf	TONS PER SQUARE FOOT
mph, MPH *	MILES PER HOUR
ø	NOMINAL DIAMETER
oz	OUNCE
lb	POUND
kip	1,000 POUNDS
cal	CALORIE
ft	FOOT OR FEET
gal	GALLON

* For use on a sign panel only

STATE OF CALIFORNIA
DEPARTMENT OF TRANSPORTATION

ABBREVIATIONS (SHEET 2 OF 2)

NO SCALE

RSP A10B DATED JULY 19, 2013 SUPERSEDES STANDARD PLAN A10B DATED MAY 20, 2011 - PAGE 2 OF THE STANDARD PLANS BOOK DATED 2010.

REVISED STANDARD PLAN RSP A10B

2010 REVISED STANDARD PLAN RSP A10B

DATE PLOTTED => 29-JUL-2014
TIME PLOTTED => 08:37

Dist	COUNTY	ROUTE	POST MILES TOTAL PROJECT	SHEET No.	TOTAL SHEETS
02	Teh	32	5.1/6.3	57	74

REGISTERED CIVIL ENGINEER

April 20, 2012
PLANS APPROVAL DATE

REGISTERED PROFESSIONAL ENGINEER
Roberta L. McLaughlin
No. C40375
Exp. 3-31-13
CIVIL
STATE OF CALIFORNIA

THE STATE OF CALIFORNIA OR ITS OFFICERS OR AGENTS SHALL NOT BE RESPONSIBLE FOR THE ACCURACY OR COMPLETENESS OF SCANNED COPIES OF THIS PLAN SHEET.

TO ACCOMPANY PLANS DATED 07-28-14

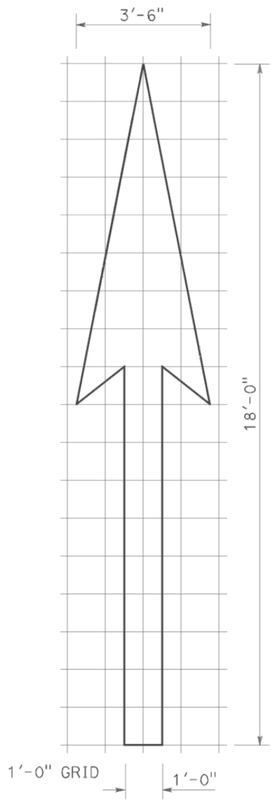

A=25 ft^2

TYPE I 18'-0" ARROW

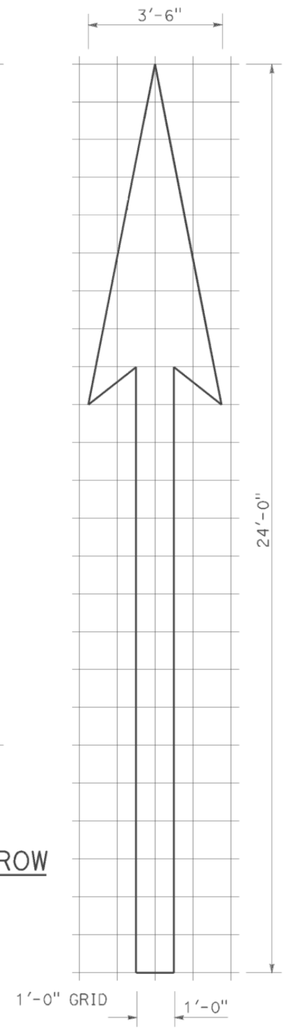

A=31 ft^2

TYPE I 24'-0" ARROW

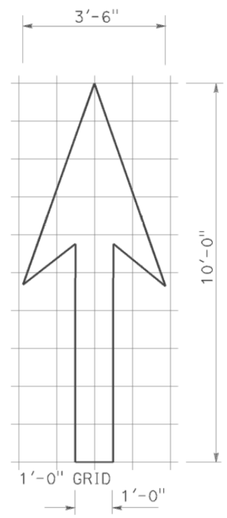

A=14 ft^2

TYPE I 10'-0" ARROW

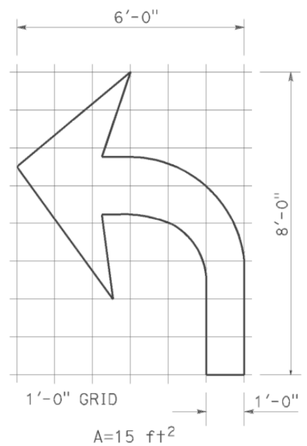

A=15 ft^2

TYPE IV (L) ARROW

(For Type IV (R) arrow, use mirror image)

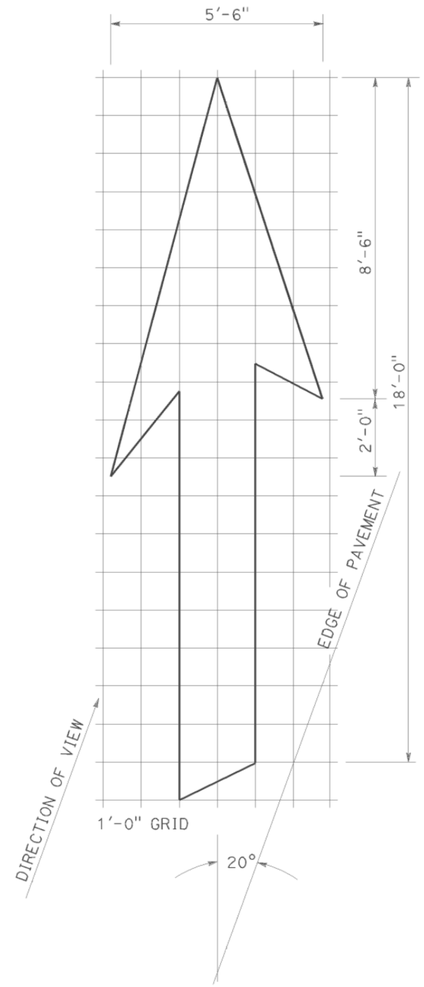

A=42 ft^2

TYPE VI ARROW

Right lane drop arrow
(For left lane, use mirror image)

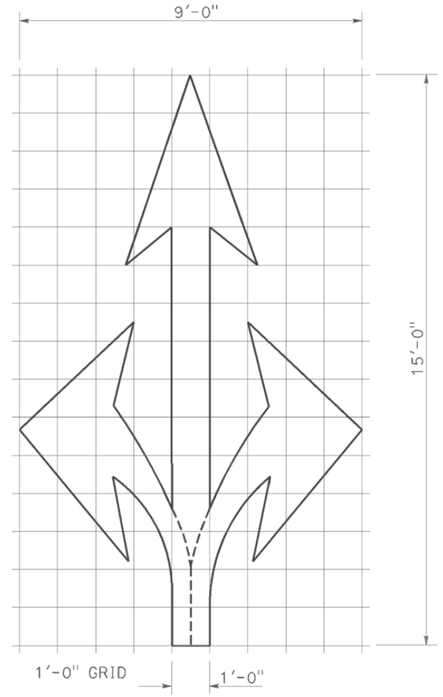

A=36 ft^2

TYPE VIII ARROW

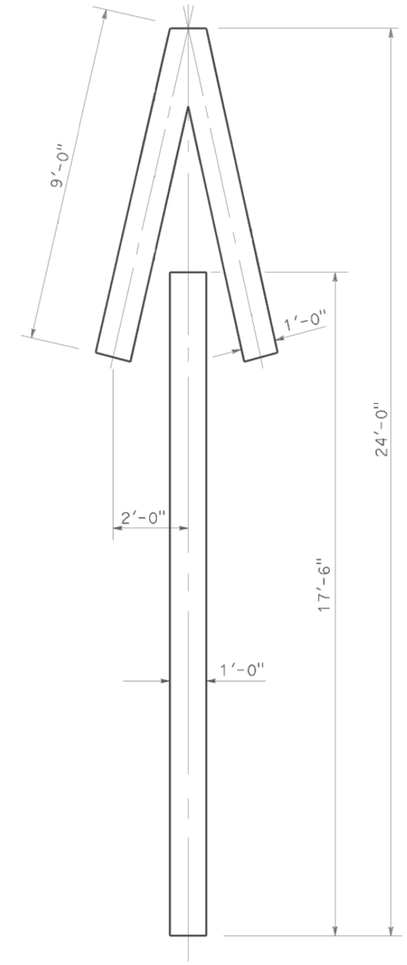

A=33 ft^2

TYPE V ARROW

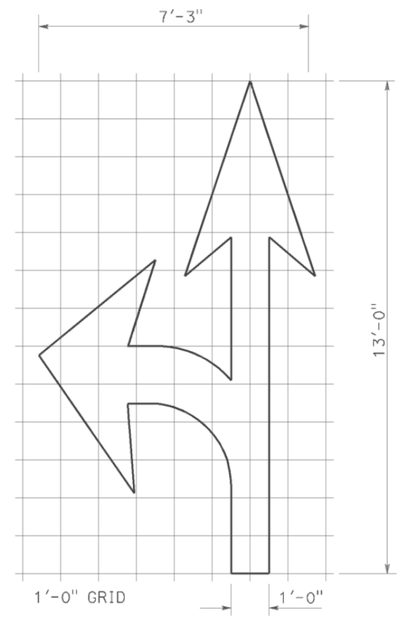

A=27 ft^2

TYPE VII (L) ARROW

(For Type VII (R) arrow, use mirror image)

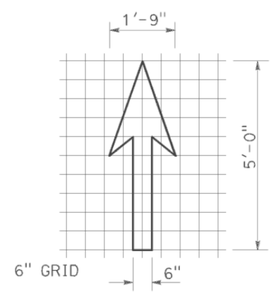

A=3.5 ft^2

BIKE LANE ARROW

NOTE:
Minor variations in dimensions may be accepted by the Engineer.

STATE OF CALIFORNIA
DEPARTMENT OF TRANSPORTATION

PAVEMENT MARKINGS ARROWS

NO SCALE

RSP A24A DATED APRIL 20, 2012 SUPERSEDES STANDARD PLAN A24A DATED MAY 20, 2011 - PAGE 13 OF THE STANDARD PLANS BOOK DATED 2010.

REVISED STANDARD PLAN RSP A24A

2010 REVISED STANDARD PLAN RSP A24A

DATE PLOTTED => 29-JUL-2014
TIME PLOTTED => 08:37

Dist	COUNTY	ROUTE	POST MILES TOTAL PROJECT	SHEET No.	TOTAL SHEETS
02	Teh	32	5.1/6.3	58	74

REGISTERED CIVIL ENGINEER

July 20, 2012
PLANS APPROVAL DATE

REGISTERED PROFESSIONAL ENGINEER
Roberta L. McLaughlin
No. C40375
Exp. 3-31-13
CIVIL
STATE OF CALIFORNIA

THE STATE OF CALIFORNIA OR ITS OFFICERS OR AGENTS SHALL NOT BE RESPONSIBLE FOR THE ACCURACY OR COMPLETENESS OF SCANNED COPIES OF THIS PLAN SHEET.

TO ACCOMPANY PLANS DATED 07-28-14

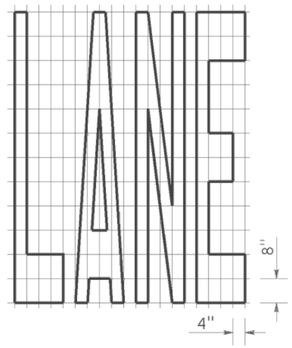

A=24 ft²

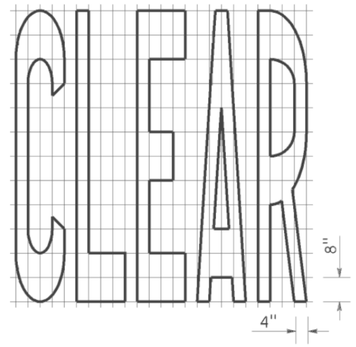

A=27 ft²

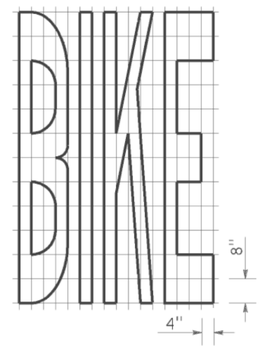

A=21 ft²

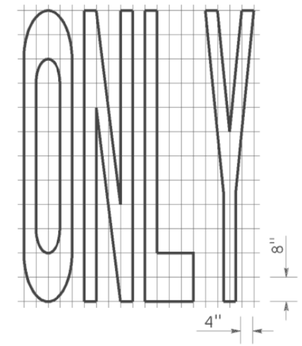

A=22 ft²

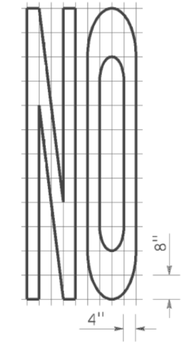

A=14 ft²

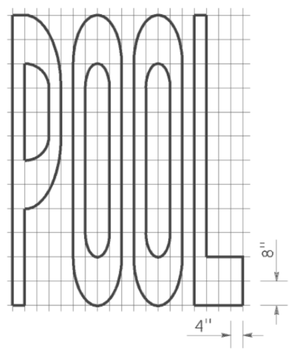

A=23 ft²

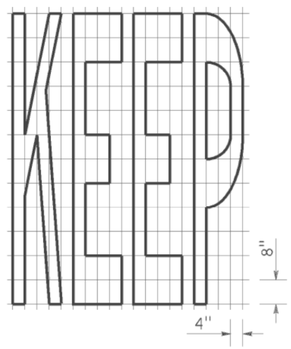

A=24 ft²

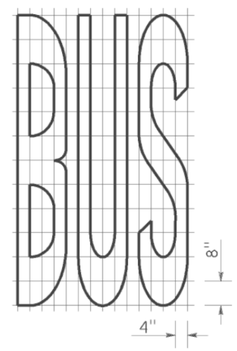

A=20 ft²

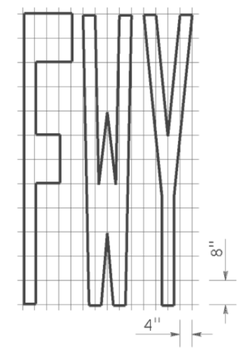

A=16 ft²

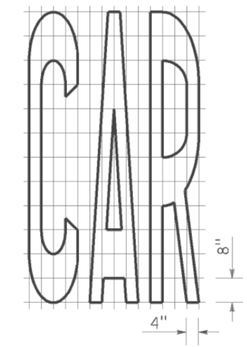

A=17 ft²

WORD MARKINGS			
ITEM	ft²	ITEM	ft²
LANE	24	NO	14
POOL	23	BIKE	21
CAR	17	BUS	20
CLEAR	27	ONLY	22
KEEP	24	FWY	16

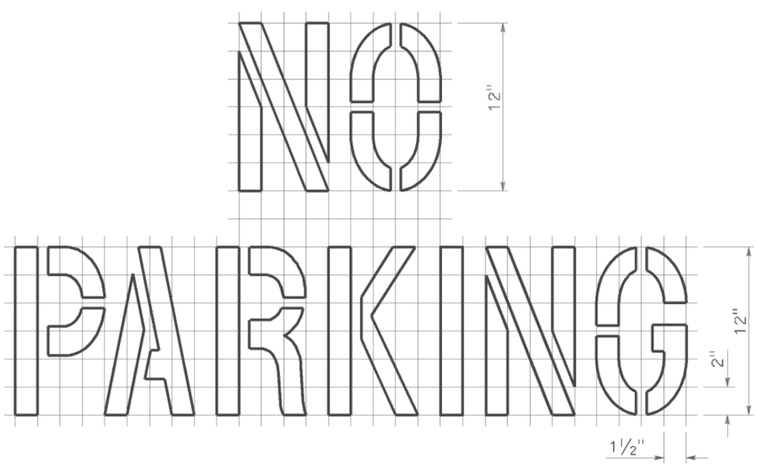

A=2 ft²
See Notes 6 and 7

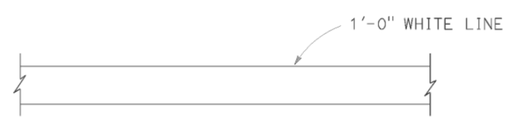

LIMIT LINE (STOP LINE)

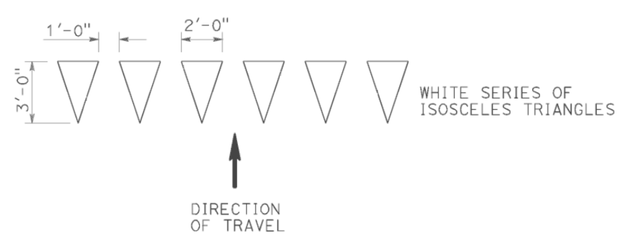

YIELD LINE

NOTES:

1. If a message consists of more than one word, it should read "UP", i.e., the first word should be nearest the driver.
2. The space between words should be at least four times the height of the characters for low speed roads, but not more than ten times the height of the characters. The space may be reduced appropriately where there is limited space because of local conditions.
3. Minor variations in dimensions may be accepted by the Engineer.
4. Portions of a letter, number or symbol may be separated by connecting segments not to exceed 2" in width.
5. The words "NO PARKING" pavement marking is to be used for parking facilities. For typical locations of markings, see Standard Plans A90A and A90B.
6. The words "NO PARKING", shall be painted in white letters no less than 1'-0" high on a contrasting background and located so that it is visible to traffic enforcement officials.

STATE OF CALIFORNIA
DEPARTMENT OF TRANSPORTATION

PAVEMENT MARKINGS WORDS, LIMIT AND YIELD LINES

NO SCALE

RSP A24E DATED JULY 20, 2012 SUPERSEDES STANDARD PLAN A24E
DATED MAY 20, 2011 - PAGE 17 OF THE STANDARD PLANS BOOK DATED 2010.

REVISED STANDARD PLAN RSP A24E

2010 REVISED STANDARD PLAN RSP A24E

DATE PLOTTED => 29-JUL-2014
TIME PLOTTED => 06:37

Dist	COUNTY	ROUTE	POST MILES TOTAL PROJECT	SHEET No.	TOTAL SHEETS
02	Teh	32	5.1/6.3	59	74

Randell D. Hiatt
REGISTERED CIVIL ENGINEER

July 19, 2013
PLANS APPROVAL DATE

REGISTERED PROFESSIONAL ENGINEER
Randell D. Hiatt
No. C50200
Exp. 6-30-15
CIVIL
STATE OF CALIFORNIA

THE STATE OF CALIFORNIA OR ITS OFFICERS OR AGENTS SHALL NOT BE RESPONSIBLE FOR THE ACCURACY OR COMPLETENESS OF SCANNED COPIES OF THIS PLAN SHEET.

TO ACCOMPANY PLANS DATED 07-28-14

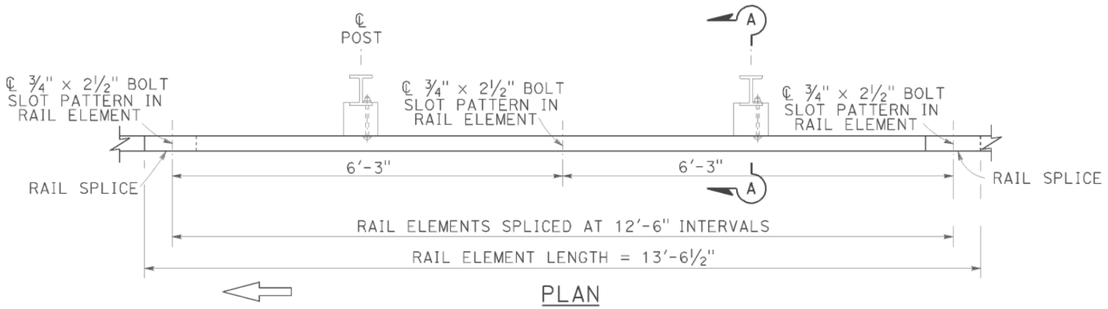

PLAN

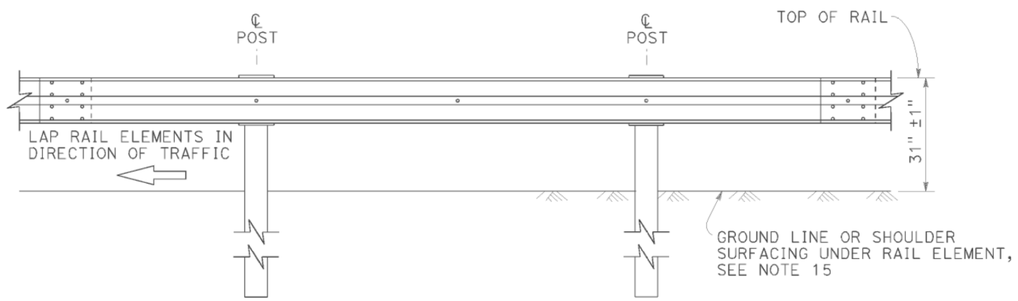

ELEVATION

MIDWEST GUARDRAIL SYSTEM WITH STEEL POSTS AND NOTCHED WOOD OR NOTCHED RECYCLED PLASTIC BLOCKS

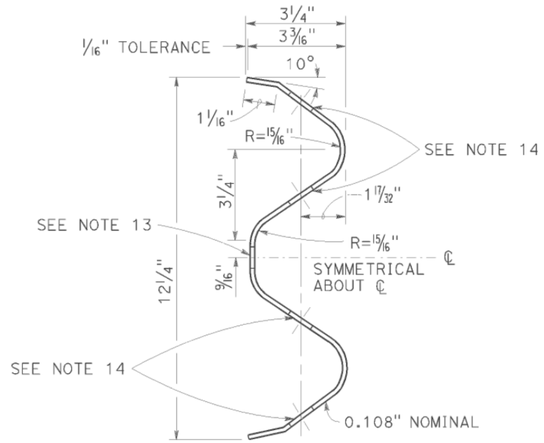

SECTION THRU RAIL ELEMENT

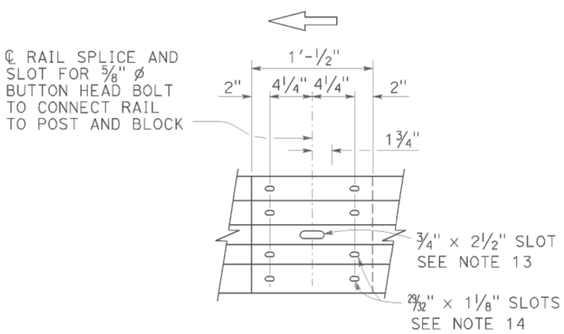

ELEVATION

RAIL ELEMENT SPLICE DETAIL

a) Connect the over lapped end of the rail elements with 5/8" ø × 1⅜" button head oval shoulder splice bolts inserted into the 29/32" × 1⅛" slots and bolted together with 5/8" ø recessed hex nuts. Recess of hex nut points toward rail element. A total of 8 bolts and nuts are to be used at each rail splice connection.

b) The ends of the rail elements are to be overlapped in the direction of traffic (see details).

c) Where end cap is to be attached to the end of a rail element, a total of 4 of the above described splice bolts and nuts are to be used.

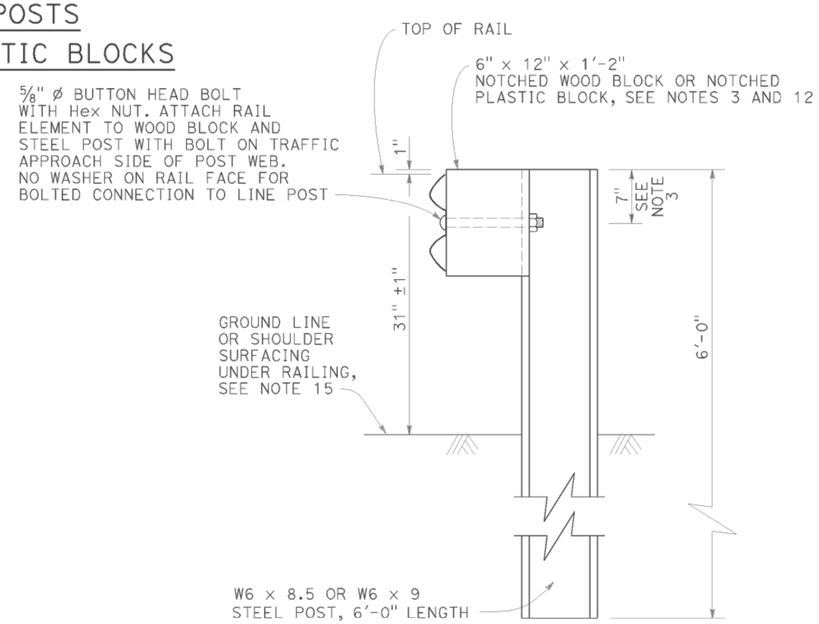

SECTION A-A

TYPICAL STEEL LINE POST INSTALLATION

See Note 4

NOTES:

1. For details of wood post installations, see Revised Standard Plan RSP A77L1.
2. For details of standard hardware used to construct MGS, see Revised Standard Plan RSP A77M1.
3. For details of steel posts and notched wood blocks used to construct MGS, see Revised Standard Plan RSP A77N2.
4. For additional installation details, see Revised Standard Plan RSP A77N3.
5. MGS post spacing to be 6'-3" center to center, except as otherwise noted.
6. For MGS typical layouts, see the A77P, A77Q and A77R Series of Standard Plans.
7. If railing is connected to terminal system end treatment, use 31" height terminal system end treatment.
8. For MGS end anchor details, see Revised Standard Plans RSP A77S1 and RSP A77T2.
9. For details of MGS transition to bridge railing, see Revised Standard Plan RSP A77U4.
10. For additional details of MGS connection to bridge railings, see Revised Standard Plans RSP A77U1, RSP A77U2 and RSP A77V1.
11. For dike positioning and MGS delineation details, see Revised Standard Plan RSP A77N4.
12. Notched face of block faces steel post.
13. Slotted hole for bolted connection of rail element to block and post. See "Section Thru Rail Element".
14. Slotted holes for splice bolts to overlap ends of rail element. See "Section Thru Rail Element".
15. Install posts in soil.

STATE OF CALIFORNIA
DEPARTMENT OF TRANSPORTATION

MIDWEST GUARDRAIL SYSTEM STANDARD RAILING SECTION (STEEL POST WITH NOTCHED WOOD OR NOTCHED RECYCLED PLASTIC BLOCK)

NO SCALE

RSP A77L2 DATED JULY 19, 2013 SUPPLEMENTS THE STANDARD PLANS BOOK DATED 2010.

REVISED STANDARD PLAN RSP A77L2

2010 REVISED STANDARD PLAN RSP A77L2

DATE PLOTTED => 29-JUL-2014
TIME PLOTTED => 06:37

Dist	COUNTY	ROUTE	POST MILES TOTAL PROJECT	SHEET No.	TOTAL SHEETS
02	Teh	32	5.1/6.3	60	74

Randell D. Hiatt
REGISTERED CIVIL ENGINEER

July 19, 2013
PLANS APPROVAL DATE

REGISTERED PROFESSIONAL ENGINEER
Randell D. Hiatt
No. C50200
Exp. 6-30-15
CIVIL
STATE OF CALIFORNIA

THE STATE OF CALIFORNIA OR ITS OFFICERS OR AGENTS SHALL NOT BE RESPONSIBLE FOR THE ACCURACY OR COMPLETENESS OF SCANNED COPIES OF THIS PLAN SHEET.

TO ACCOMPANY PLANS DATED 07-28-14

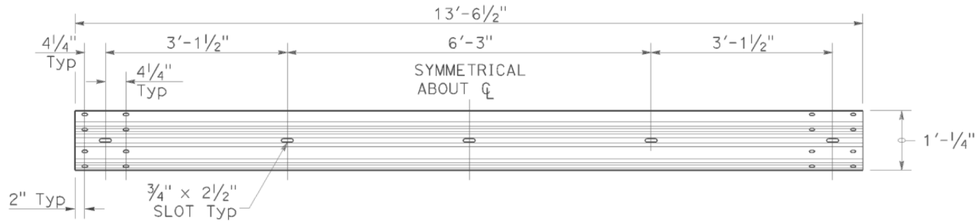

TYPICAL RAIL ELEMENT

NOTE:

1. Slotted holes for splice bolts to overlap ends of rail element.

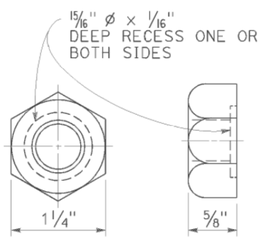

⅝" Ø RECESS NUT

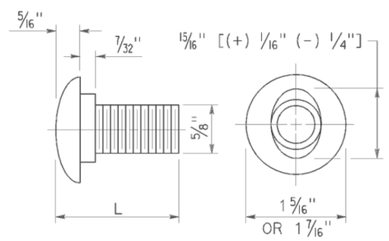

⅝" Ø BUTTON HEAD BOLT

BUTTON HEAD BOLT

L	THREAD LENGTH
1⅜"	FULL THREAD LENGTH
2"	FULL THREAD LENGTH
10"	4" Min THREAD LENGTH
18"	4" Min THREAD LENGTH
20"	4" Min THREAD LENGTH
22"	4" Min THREAD LENGTH
26"	4" Min THREAD LENGTH
36"	4" Min THREAD LENGTH
** 2¾"	2" Min THREAD LENGTH
** 19"	4" Min THREAD LENGTH

** For nested rail applications.

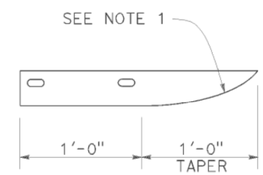

PLAN

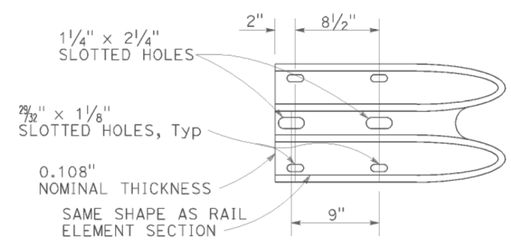

ELEVATION

END CAP
(TYPE A)

STATE OF CALIFORNIA
DEPARTMENT OF TRANSPORTATION

MIDWEST GUARDRAIL SYSTEM STANDARD HARDWARE

NO SCALE

RSP A77M1 DATED JULY 19, 2013 SUPPLEMENTS THE STANDARD PLANS BOOK DATED 2010.

REVISED STANDARD PLAN RSP A77M1

2010 REVISED STANDARD PLAN RSP A77M1

DATE PLOTTED => 29-JUL-2014
TIME PLOTTED => 06:37

Dist	COUNTY	ROUTE	POST MILES TOTAL PROJECT	SHEET No.	TOTAL SHEETS
02	Teh	32	5.1/6.3	61	74

Randell D. Hiatt
REGISTERED CIVIL ENGINEER

November 15, 2013
PLANS APPROVAL DATE

REGISTERED PROFESSIONAL ENGINEER
Randell D. Hiatt
No. C50200
Exp. 6-30-15
CIVIL
STATE OF CALIFORNIA

THE STATE OF CALIFORNIA OR ITS OFFICERS OR AGENTS SHALL NOT BE RESPONSIBLE FOR THE ACCURACY OR COMPLETENESS OF SCANNED COPIES OF THIS PLAN SHEET.

TO ACCOMPANY PLANS DATED 07-28-14

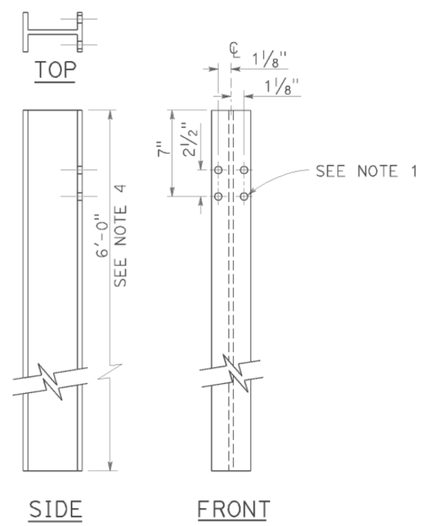

W6 x 9 OR W6 x 8.5
STEEL POST
See Note 4

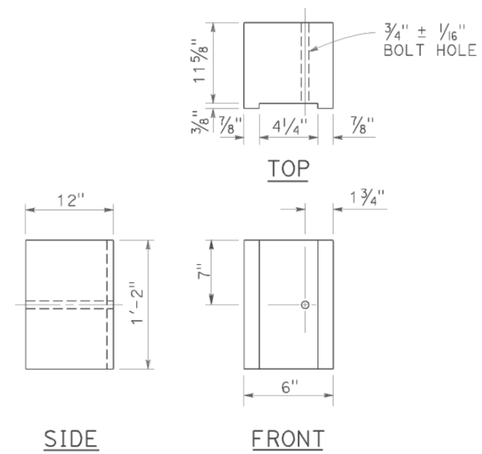

6" x 12"
NOTCHED WOOD BLOCK
See Notes 2 and 3

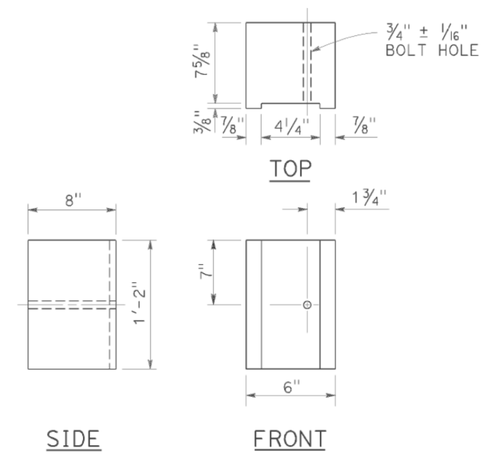

6" x 8"
NOTCHED WOOD BLOCK
Only for use with metal beam guard railing. See Note 5

NOTES:

1. All holes in steel post shall be 13/16" Dia maximum.
2. Dimensions shown for wood block are nominal.
3. Notched face of block faces steel post.
4. 6'-0" length posts to be used for typical roadway installation. See Revised Standard Plan RSP A77N3.
5. See Revised Standard Plan RSP A77L3 for use of 6" x 8" and 8" x 8" notched wood blocks.
6. This post and 8" x 12" block combination to be used for line post sections of MGS on narrow roadways and where strengthened line post sections of MGS are warranted to shield fixed objects.

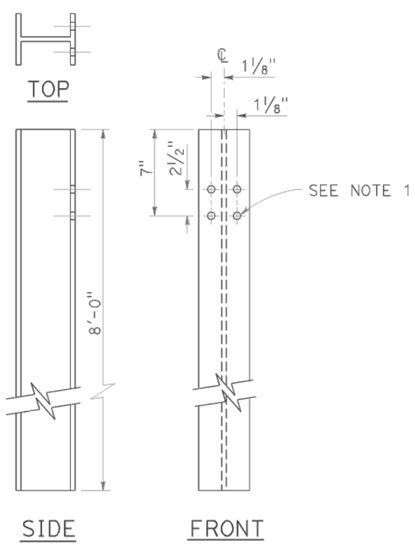

W6 x 15
STEEL POST
See Note 6

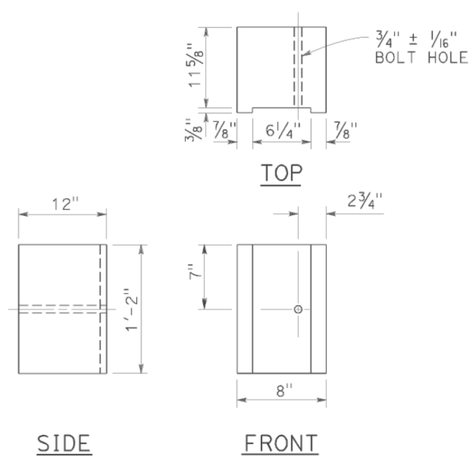

8" x 12"
NOTCHED WOOD BLOCK
See Notes 2 and 3

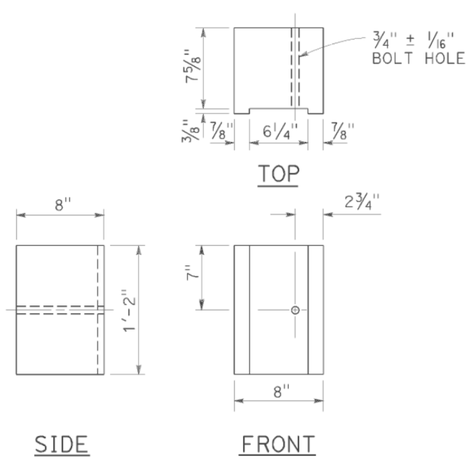

8" x 8"
NOTCHED WOOD BLOCK
Only for use with metal beam guard railing. See Note 5

STATE OF CALIFORNIA
DEPARTMENT OF TRANSPORTATION

MIDWEST GUARDRAIL SYSTEM STEEL POST AND NOTCHED WOOD BLOCK DETAILS

NO SCALE

RSP A77N2 DATED NOVEMBER 15, 2013 SUPERSEDES RSP A77N2
DATED JULY 19, 2013 THAT SUPPLEMENTS THE STANDARD PLANS BOOK DATED 2010.

REVISED STANDARD PLAN RSP A77N2

2010 REVISED STANDARD PLAN RSP A77N2

DATE PLOTTED => 29-JUL-2014
TIME PLOTTED => 06:37

Dist	COUNTY	ROUTE	POST MILES TOTAL PROJECT	SHEET No.	TOTAL SHEETS
02	Teh	32	5.1/6.3	62	74

Randell D. Hiatt
REGISTERED CIVIL ENGINEER

November 15, 2013
PLANS APPROVAL DATE

REGISTERED PROFESSIONAL ENGINEER
Randell D. Hiatt
No. C50200
Exp. 6-30-15
CIVIL
STATE OF CALIFORNIA

THE STATE OF CALIFORNIA OR ITS OFFICERS OR AGENTS SHALL NOT BE RESPONSIBLE FOR THE ACCURACY OR COMPLETENESS OF SCANNED COPIES OF THIS PLAN SHEET.

TO ACCOMPANY PLANS DATED 07-28-14

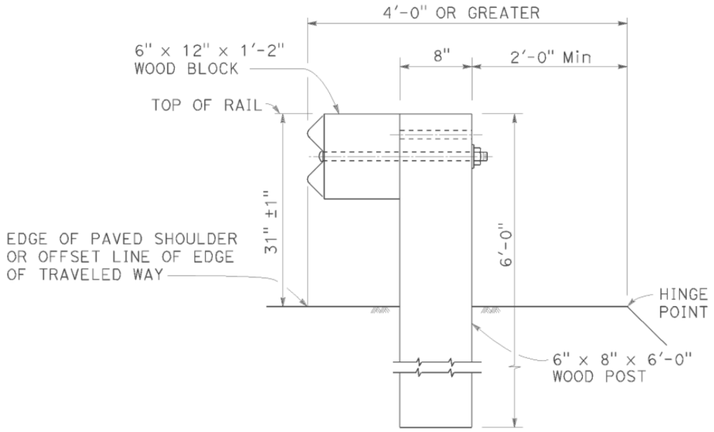

DETAIL A
TYPICAL ROADWAY INSTALLATION
See Note 1

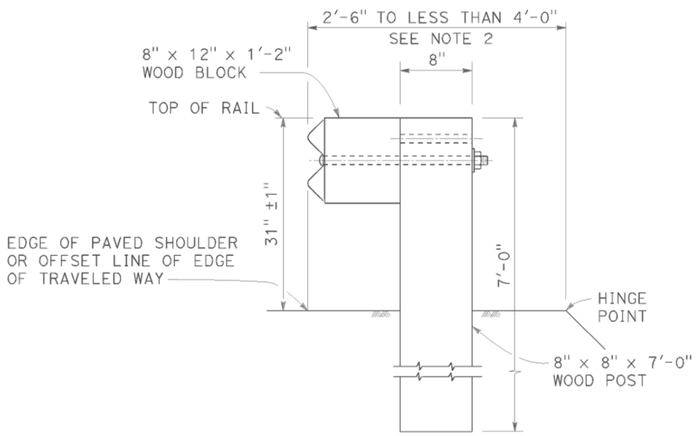

DETAIL B
NARROW ROADWAY INSTALLATION
See Note 1

POST EMBEDMENT

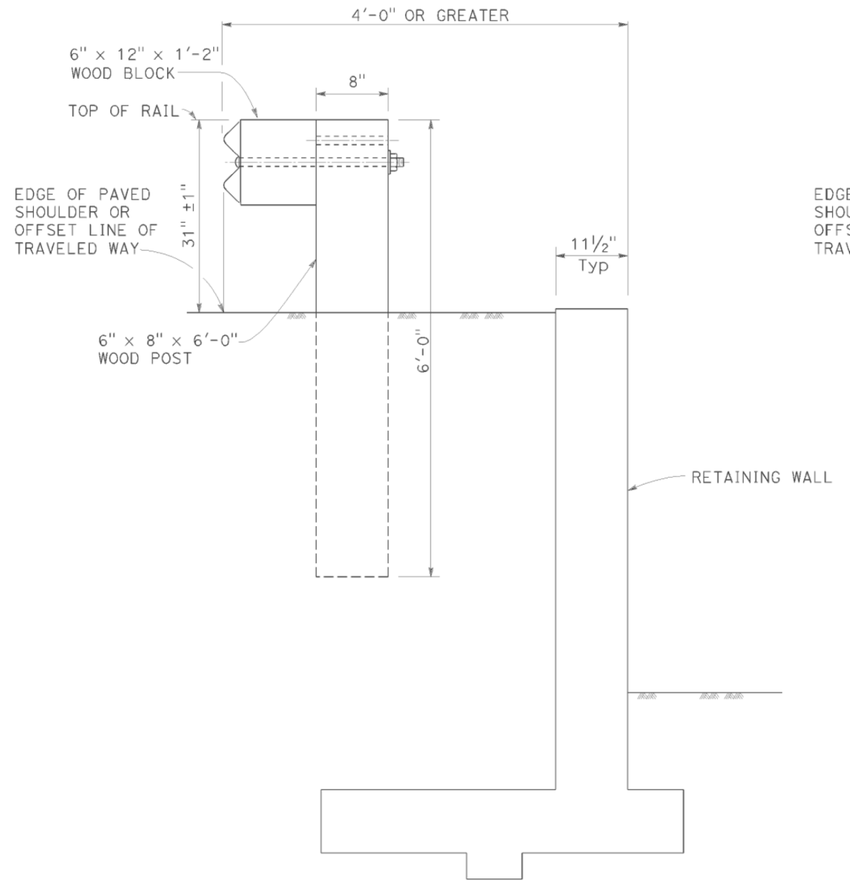

DETAIL C

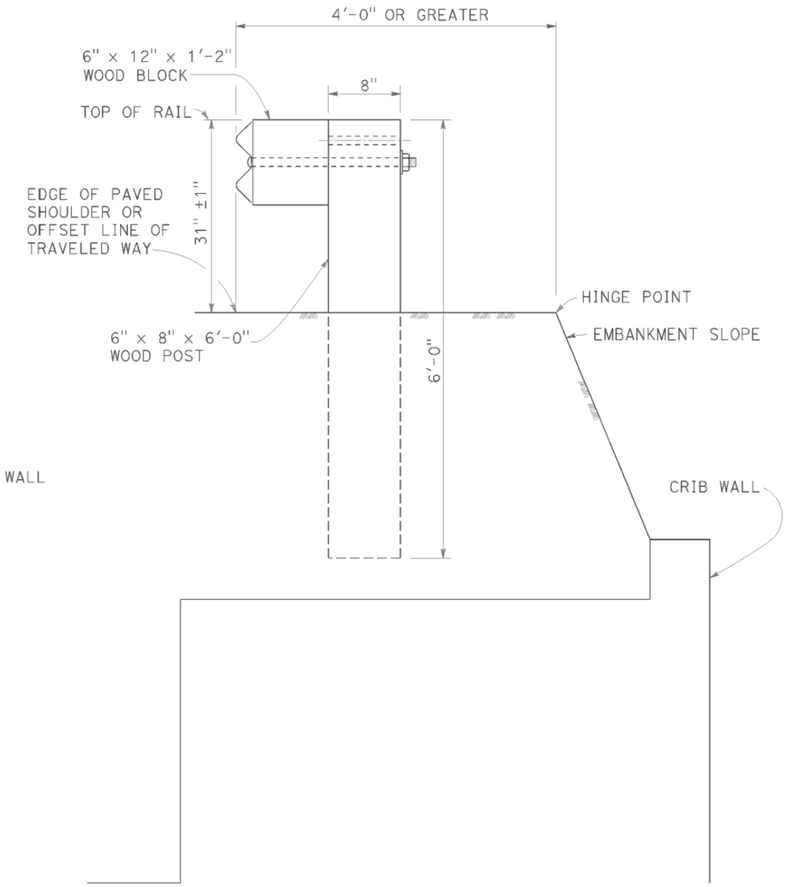

DETAIL D

INSTALLATION AT EARTH RETAINING WALLS

NOTES:

1. These installation details also applicable to steel line post installations. For Detail A, C, and D, where steel line post installations are constructed, W6 x 8.5 or W6 x 9 steel post, 6'-0" in length, with 6" x 12" x 1'-2" notched wood blocks or notched recycled plastic blocks are to be used in place of the size of wood post and wood block shown. For Detail B, where steel line post installations are constructed, W6 x 15 steel post, 8'-0" in length, with 8" x 12" x 1'-2" notched wood blocks or notched recycled plastic blocks are to be used in place of the size of wood post and wood block shown. For additional installation details, see Revised Standard Plan RSP A77L1 and RSP A77L2.
2. Where the distance between the face of the rail and the hinge point is less than 2'-6", see the Project Plans for special details.
3. For dike positioning with MGS installations, see Revised Standard Plan RSP A77N4.

STATE OF CALIFORNIA
DEPARTMENT OF TRANSPORTATION

MIDWEST GUARDRAIL SYSTEM TYPICAL LINE POST EMBEDMENT AND HINGE POINT OFFSET DETAILS

NO SCALE

RSP A77N3 DATED NOVEMBER 15, 2013 SUPERSEDES RSP A77N3 DATED JULY 19, 2013 THAT SUPPLEMENTS THE STANDARD PLANS BOOK DATED 2010.

REVISED STANDARD PLAN RSP A77N3

2010 REVISED STANDARD PLAN RSP A77N3

DATE PLOTTED => 29-JUL-2014
TIME PLOTTED => 06:37

Dist	COUNTY	ROUTE	POST MILES TOTAL PROJECT	SHEET No.	TOTAL SHEETS
02	Teh	32	5.1/6.3	63	74

Randell D. Hiatt
REGISTERED CIVIL ENGINEER

July 19, 2013
PLANS APPROVAL DATE

REGISTERED PROFESSIONAL ENGINEER
Randell D. Hiatt
No. C50200
Exp. 6-30-15
CIVIL
STATE OF CALIFORNIA

THE STATE OF CALIFORNIA OR ITS OFFICERS OR AGENTS SHALL NOT BE RESPONSIBLE FOR THE ACCURACY OR COMPLETENESS OF SCANNED COPIES OF THIS PLAN SHEET.

TO ACCOMPANY PLANS DATED 07-28-14

NOTES:

1. When necessary to place dike more than 7" in front of face of MGS, only Type C dike may be used. For dike details, see Revised Standard Plan RSP A87B.
2. For standard railing post embedment, see Revised Standard Plan RSP A77N3.
3. MGS delineation to be used where shown on the Project Plans.
4. When dike or curb is placed under MGS, the maximum height of the dike or curb shall be 6". Mountable dike should not be used. For dike and curb details, see Revised Standard Plans RSP A87A and RSP A87B.
5. For details of typical distance between the face of rail and hinge point, see Revised Standard Plan RSP A77N3.
6. For steel line posts, use 1/4 - 20 self-tapping screws in 0.22" diameter holes or 1/4" bolts in 9/32" diameter holes.

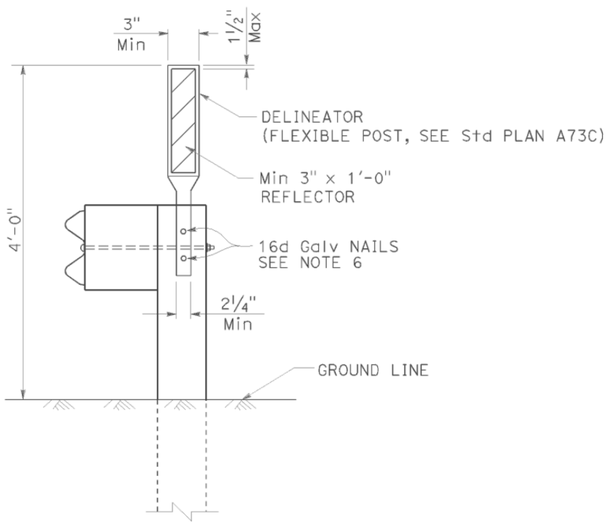

MGS DELINEATION

See Note 3

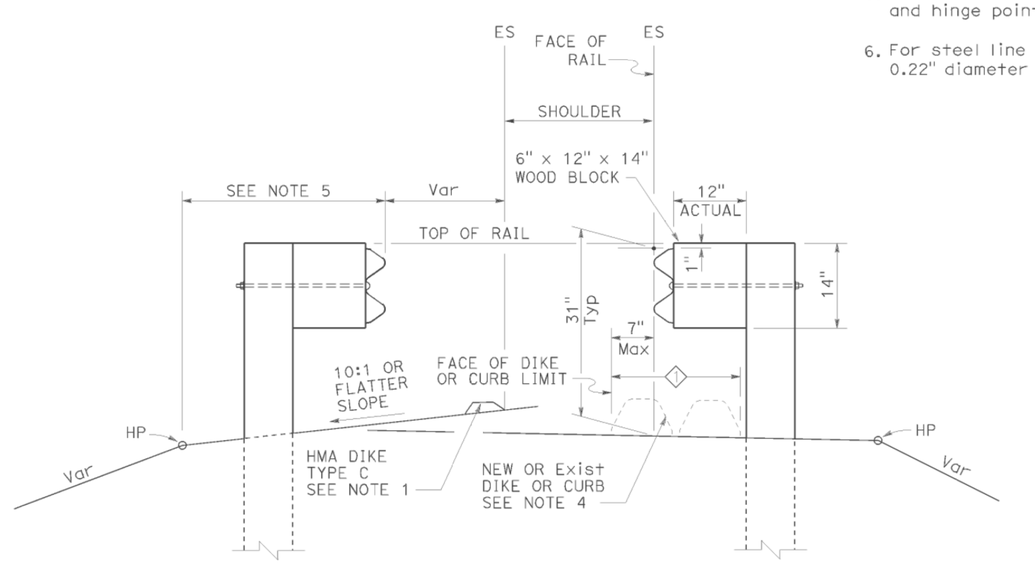

DIKE POSITIONING

See Note 1

1 PERMISSIBLE DIKE OR CURB PLACEMENT AREA

STATE OF CALIFORNIA
DEPARTMENT OF TRANSPORTATION

MIDWEST GUARDRAIL SYSTEM TYPICAL RAILING DELINEATION AND DIKE POSITIONING DETAILS

NO SCALE

RSP A77N4 DATED JULY 19, 2013 SUPPLEMENTS THE STANDARD PLANS BOOK DATED 2010.

REVISED STANDARD PLAN RSP A77N4

2010 REVISED STANDARD PLAN RSP A77N4

DATE PLOTTED => 29-JUL-2014
TIME PLOTTED => 06:37

Dist	COUNTY	ROUTE	POST MILES TOTAL PROJECT	SHEET No.	TOTAL SHEETS
02	Teh	32	5.1/6.3	64	74

Randell D. Hiatt
REGISTERED CIVIL ENGINEER

November 15, 2013
PLANS APPROVAL DATE

REGISTERED PROFESSIONAL ENGINEER
Randell D. Hiatt
No. C50200
Exp. 6-30-15
CIVIL
STATE OF CALIFORNIA

THE STATE OF CALIFORNIA OR ITS OFFICERS OR AGENTS SHALL NOT BE RESPONSIBLE FOR THE ACCURACY OR COMPLETENESS OF SCANNED COPIES OF THIS PLAN SHEET.

TO ACCOMPANY PLANS DATED 07-28-14

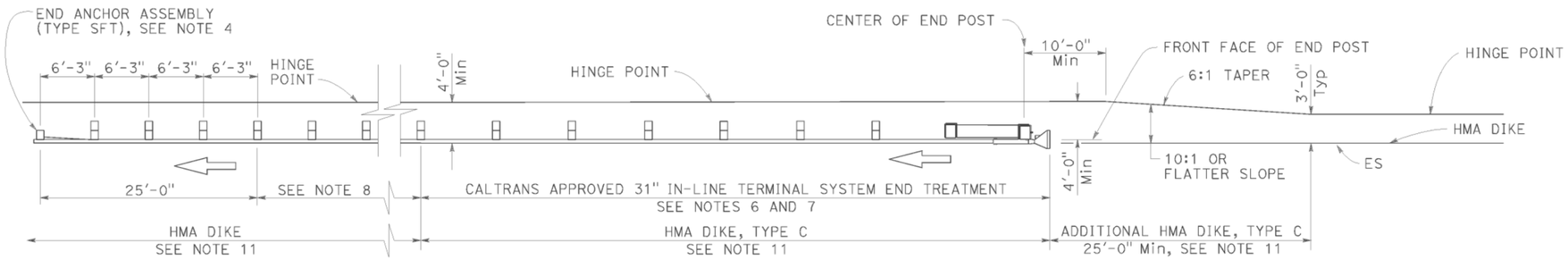

TYPE 11A LAYOUT

(Embankment MGS installation with 31" in-line end treatment at traffic approach end of railing) see Note 5

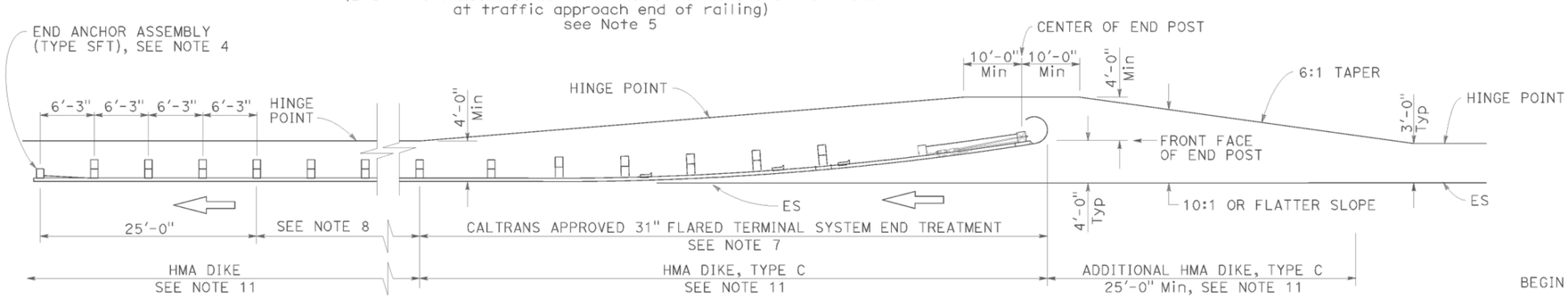

TYPE 11B LAYOUT

(Embankment MGS installation with 31" flared end treatment at traffic approach end of railing) see Note 5

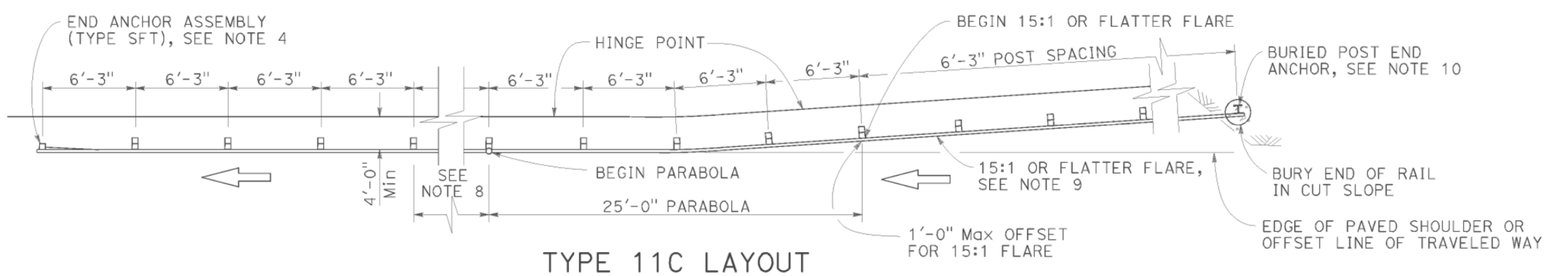

TYPE 11C LAYOUT

(Embankment MGS installation with buried end anchor treatment at traffic approach end of railing) see Notes 5 and 11

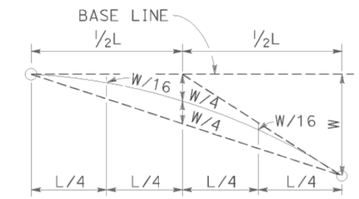

TYPICAL PARABOLIC LAYOUT

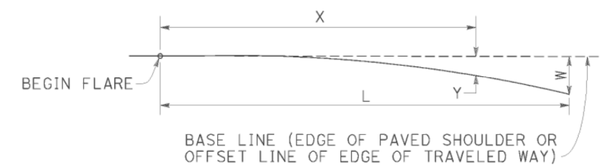

$$Y = \frac{WX^2}{L^2}$$

Y = OFFSET FROM BASE LINE
W = MAXIMUM OFFSET
X = DISTANCE ALONG BASE LINE
L = LENGTH OF FLARE

PARABOLIC FLARE OFFSETS

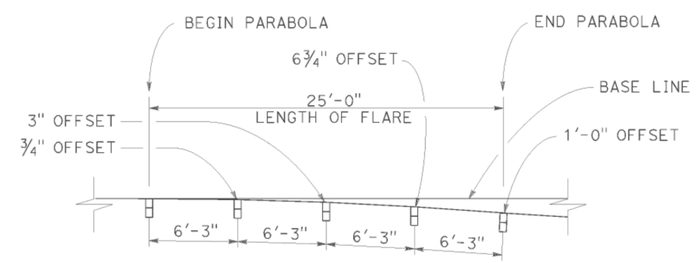

TYPICAL FLARE OFFSETS FOR 1 FOOT Max END OFFSET

NOTES:

1. Line post, blocks and hardware to be used are shown on Revised Standard Plans RSP A77L1, RSP A77L2, RSP A77M1, RSP A77N1 and RSP A77N2.
2. MGS post spacing to be 6'-3" center to center, except as otherwise noted.
3. Except as noted, line posts are 6" x 8" x 6'-0" wood with 6" x 12" x 1'-2" wood blocks. W6 x 8.5 or W6 x 9 steel posts, 6'-0" in length, with 6" x 12" x 1'-2" notched wood blocks or recycled plastic blocks may be used for 6" x 8" x 6'-0" wood post with 6" x 12" x 1'-2" wood blocks where applicable and when specified.
4. For End Anchor Assembly (Type SFT) details, see Revised Standard Plan RSP A77S1.
5. Layout Types 11A, 11B or 11C are typically used where MGS is recommended to shield embankment slopes and a crashworthy end treatment is required for only one direction of traffic.
6. 31" in-line terminal system end treatments are used where site conditions will not accommodate a flared end treatment.
7. The type of 31" terminal system end treatment to be used will be shown on the Project Plans.
8. Dependent on site conditions (embankment height and side slope), construction of additional MGS (length equal to multiples of 12'-6" with 6'-3" post spacing) may be advisable.
9. The 15:1 or flatter flare used with buried end anchors is based on the edge of the paved shoulder or offset line of edge of the traveled way. The length of MGS within the 15:1 or flatter flare is based on site conditions and should be a length equal to multiples of 12'-6".
10. For details of the buried post end anchor used with Type 11C Layout, see Revised Standard Plan RSP A77T2.
11. Where placement of dike is required with MGS installations, see Revised Standard Plan RSP A77N4 for dike positioning details.

STATE OF CALIFORNIA
DEPARTMENT OF TRANSPORTATION

MIDWEST GUARDRAIL SYSTEM TYPICAL LAYOUTS FOR EMBANKMENTS

NO SCALE

RSP A77P1 DATED NOVEMBER 15, 2013 SUPERSEDES RSP A77P1 DATED JULY 19, 2013 THAT SUPPLEMENTS THE STANDARD PLANS BOOK DATED 2010.

REVISED STANDARD PLAN RSP A77P1

2010 REVISED STANDARD PLAN RSP A77P1

DATE PLOTTED => 29-JUL-2014
TIME PLOTTED => 08:38

Dist	COUNTY	ROUTE	POST MILES TOTAL PROJECT	SHEET No.	TOTAL SHEETS
02	Teh	32	5.1/6.3	65	74

Randell D. Hiatt
REGISTERED CIVIL ENGINEER

November 15, 2013
PLANS APPROVAL DATE

REGISTERED PROFESSIONAL ENGINEER
Randell D. Hiatt
No. C50200
Exp. 6-30-15
CIVIL
STATE OF CALIFORNIA

THE STATE OF CALIFORNIA OR ITS OFFICERS OR AGENTS SHALL NOT BE RESPONSIBLE FOR THE ACCURACY OR COMPLETENESS OF SCANNED COPIES OF THIS PLAN SHEET.

TO ACCOMPANY PLANS DATED 07-28-14

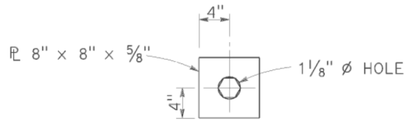

DETAIL "A"
CABLE CONNECTION
END PLATE

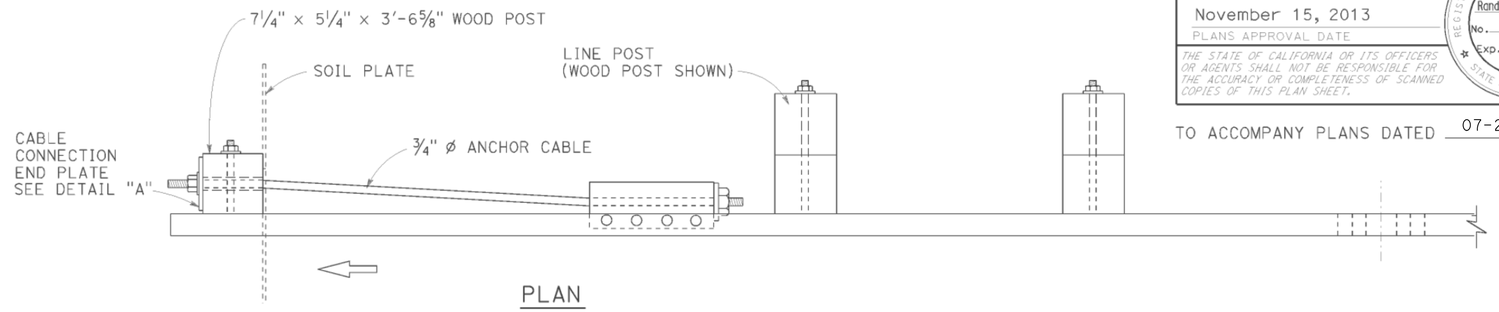

PLAN

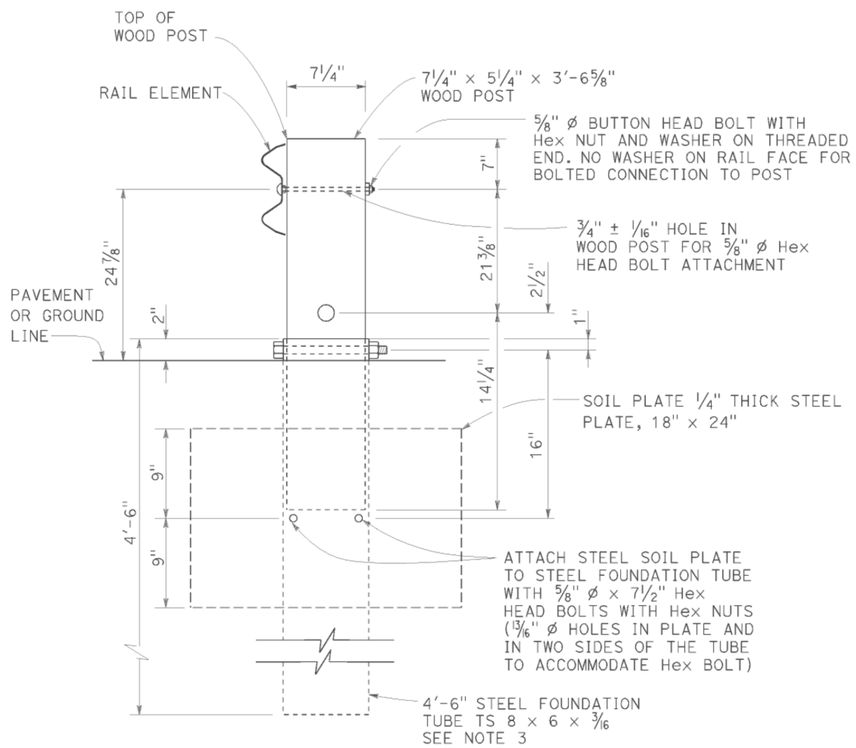

SECTION A-A

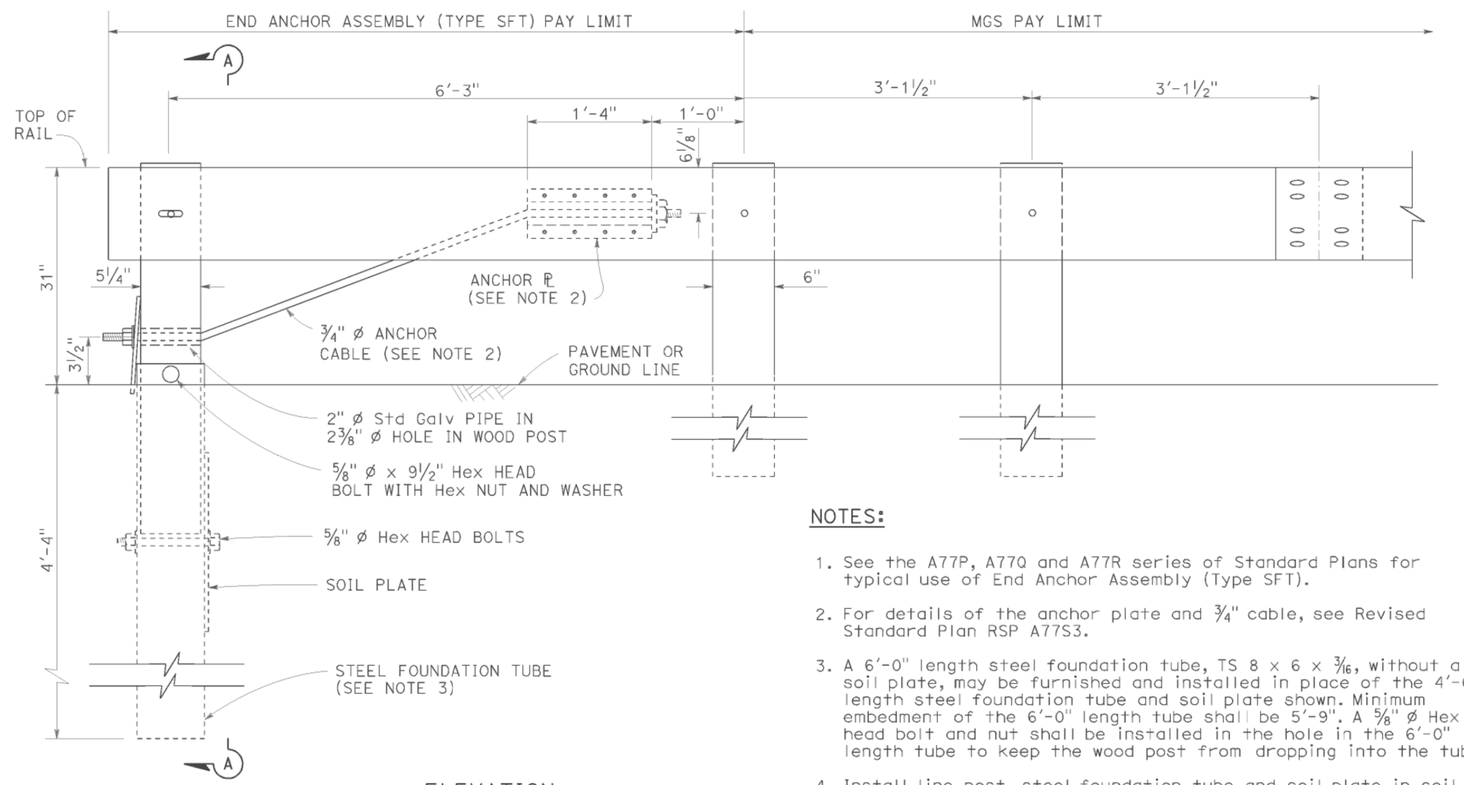

ELEVATION

END ANCHOR
ASSEMBLY (TYPE SFT)
See Note 1

NOTES:

1. See the A77P, A77Q and A77R series of Standard Plans for typical use of End Anchor Assembly (Type SFT).
2. For details of the anchor plate and 3/4" cable, see Revised Standard Plan RSP A77S3.
3. A 6'-0" length steel foundation tube, TS 8 x 6 x 3/16, without a soil plate, may be furnished and installed in place of the 4'-6" length steel foundation tube and soil plate shown. Minimum embedment of the 6'-0" length tube shall be 5'-9". A 5/8" ø Hex head bolt and nut shall be installed in the hole in the 6'-0" length tube to keep the wood post from dropping into the tube.
4. Install line post, steel foundation tube and soil plate in soil.

STATE OF CALIFORNIA
DEPARTMENT OF TRANSPORTATION

MIDWEST GUARDRAIL SYSTEM END ANCHOR ASSEMBLY (TYPE SFT)

NO SCALE

RSP A77S1 DATED NOVEMBER 15, 2013 SUPERSEDES RSP A77S1
DATED JULY 19, 2013 THAT SUPPLEMENTS THE STANDARD PLANS BOOK DATED 2010.

REVISED STANDARD PLAN RSP A77S1

2010 REVISED STANDARD PLAN RSP A77S1

DATE PLOTTED => 29-JUL-2014
TIME PLOTTED => 06:38

USERNAME => s115152
DGN FILE => 24e900va010.dgn

P:\proj1\02\4E900_plans\pse\24e900va010.dgn

10-4-13

DIST	COUNTY	ROUTE	POST MILES TOTAL PROJECT	SHEET No.	TOTAL SHEETS
02	Teh	32	5.1/6.3	66	74

REGISTERED CIVIL ENGINEER

November 15, 2013
PLANS APPROVAL DATE

REGISTERED PROFESSIONAL ENGINEER
Cornelis M. Hakim
No. C55610
Exp. 12-31-14
CIVIL
STATE OF CALIFORNIA

THE STATE OF CALIFORNIA OR ITS OFFICERS OR AGENTS SHALL NOT BE RESPONSIBLE FOR THE ACCURACY OR COMPLETENESS OF SCANNED COPIES OF THIS PLAN SHEET.

TO ACCOMPANY PLANS DATED 07-28-14

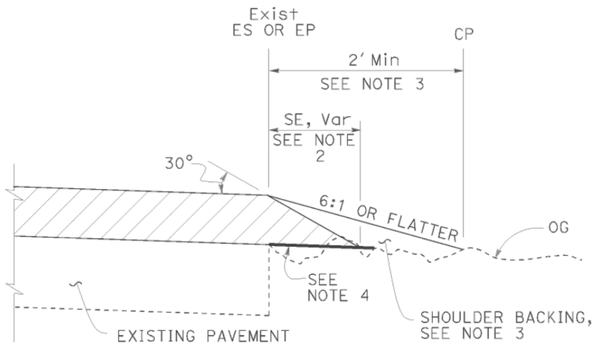

CASE A
Safety Edge

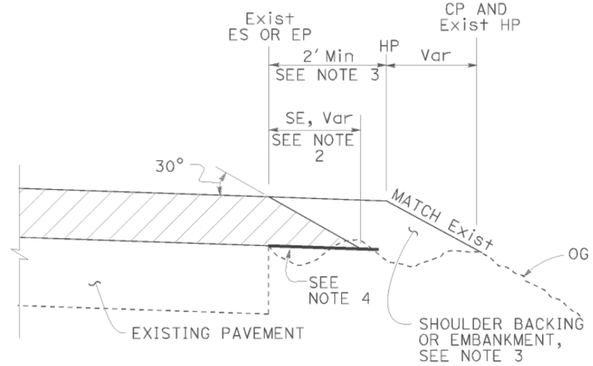

CASE B
Safety Edge

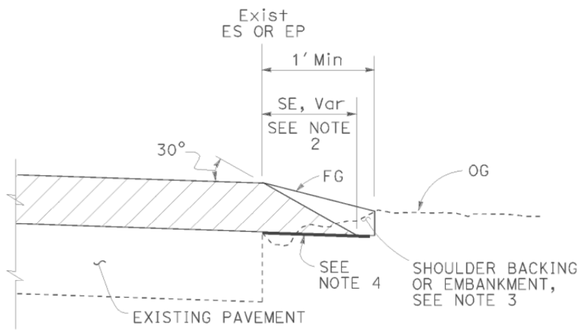

CASE C
Safety Edge

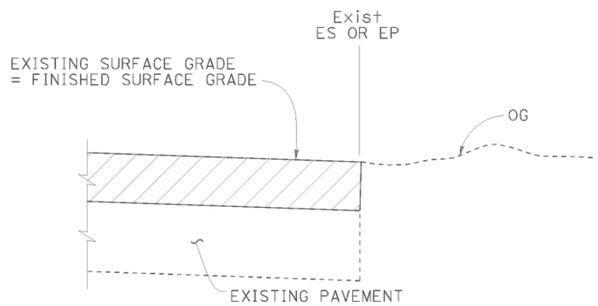

CASE D
Vertical Edge

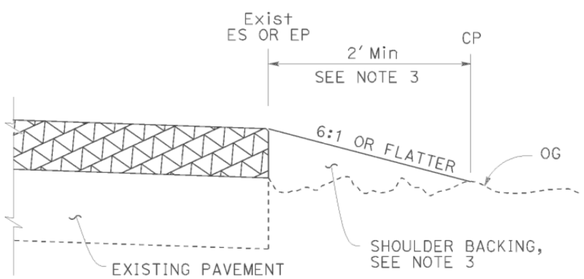

CASE E
Vertical Edge

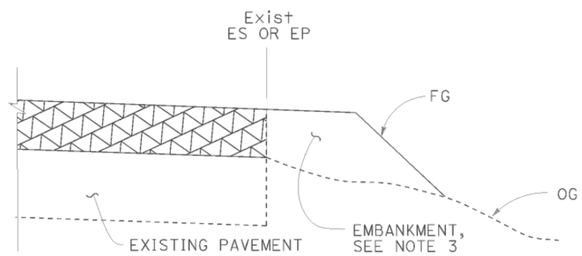

CASE F
Vertical Edge
* See Table A and Revised Std Plan RSP P74

LEGEND:

- HMA OVERLAY
- HMA OR CONCRETE OVERLAY
- CONCRETE OVERLAY

ABBREVIATIONS:

SE SAFETY EDGE
TT TOTAL THICKNESS OF SE

TABLE A
EDGE TREATMENT FOR VARIOUS OVERLAY THICKNESS AND CONDITIONS

	OVERLAY THICKNESS	
FIELD CONDITION	LESS THAN 0.15'	0.15' OR MORE
Exist SLOPE 6:1 OR FLATTER	CASE E	CASE A
Exist SLOPE 3:1 TO 6:1	CASE E	CASE B
Exist SLOPE STEEPER THAN 3:1	CASE F	CASE F
CUT SECTION (REPLACE, COLD PLANE, MILL PAVEMENT)	CASE D	CASE C

ADDITIONAL HMA OR CONCRETE QUANTITIES FOR SE/SIDE/MILE

TYPICAL CROSS SECTION	TT	TOTAL ADDITIONAL MATERIAL FOR SE/SIDE/MILE		
		HMA (TON)	CONCRETE (CY)*	CONCRETE (CY)**
TT	0.15'	NA	NA	NA
	0.20'	13.7	NA	NA
	0.30'	30.9	NA	NA
	0.40'	54.9	NA	NA
	0.45'	69.4	NA	NA
TT 0.43'	0.50'	84.2	NA	NA
	0.60'	113.9	NA	NA
	0.70'	143.6	70.9	94.2
	0.80'	173.3	85.6	112.2
	0.90'	203.0	100.3	130.2
	1.00'	232.7	114.9	148.2
	1.10'	262.4	129.6	166.2
	1.20'	292.1	144.3	184.2

* For Detail "A"
** For Optional Detail "A"

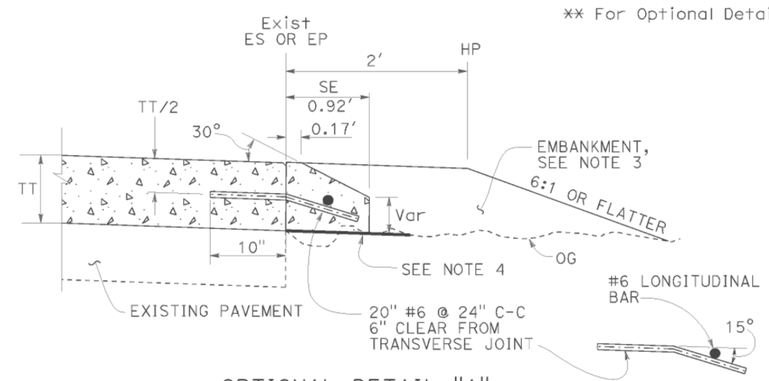

OPTIONAL DETAIL "A"
For concrete overlay
See Note 5

NOTES:

1. For limits of safety edge and vertical edge treatments, see Revised Standard Plan RSP P74.
2. Details shown for HMA overlay thickness less than 0.43'. See Detail "A" for HMA overlay thickness more than 0.43' or concrete overlay.
3. For locations and limits of shoulder backing or embankment see project plans.
4. Grade existing ground to place safety edge. 1' minimum width
5. Safety edge transverse joint must match overlay transverse joint. End of #6 longitudinal bar must be 2" ±½" clear from transverse joint.
6. Safety edge is not needed in the area of MGS, barrier, right turn lane and acceleration lane. See Revised Standard Plan RSP P74.

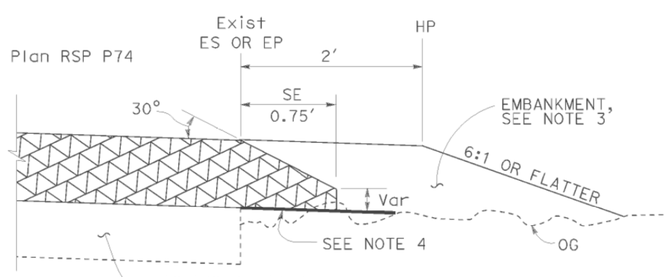

DETAIL "A"
For HMA overlay thickness more than 0.43' or concrete overlay

STATE OF CALIFORNIA
DEPARTMENT OF TRANSPORTATION

PAVEMENT EDGE TREATMENTS-OVERLAYS

NO SCALE

RSP P75 DATED NOVEMBER 15, 2013 SUPERSEDES RSP P75 DATED JANUARY 20, 2012 THAT SUPPLEMENTS THE STANDARD PLANS BOOK DATED 2010.

REVISED STANDARD PLAN RSP P75

2010 REVISED STANDARD PLAN RSP P75

DATE PLOTTED => 29-JUL-2014
TIME PLOTTED => 06:38

Dist	COUNTY	ROUTE	POST MILES TOTAL PROJECT	SHEET No.	TOTAL SHEETS
02	Teh	32	5.1/6.3	67	74

Randell D. Hiatt
REGISTERED CIVIL ENGINEER

November 15, 2013
PLANS APPROVAL DATE

REGISTERED PROFESSIONAL ENGINEER
Randell D. Hiatt
No. C50200
Exp. 6-30-15
CIVIL
STATE OF CALIFORNIA

THE STATE OF CALIFORNIA OR ITS OFFICERS OR AGENTS SHALL NOT BE RESPONSIBLE FOR THE ACCURACY OR COMPLETENESS OF SCANNED COPIES OF THIS PLAN SHEET.

TO ACCOMPANY PLANS DATED 07-28-14

NOTE:

See Revised Standard Plans RSP A77S1, RSP A77S2 and RSP A77T1 for typical use of anchor cable and anchor plate.

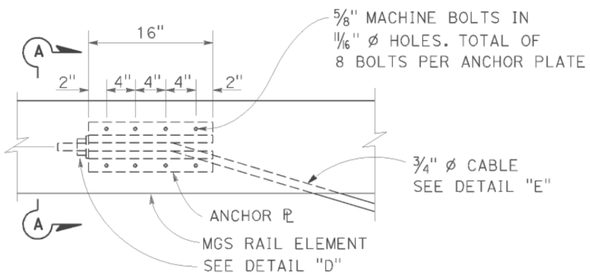

ANCHOR PLATE DETAIL
(MGS shown, TBB similar)

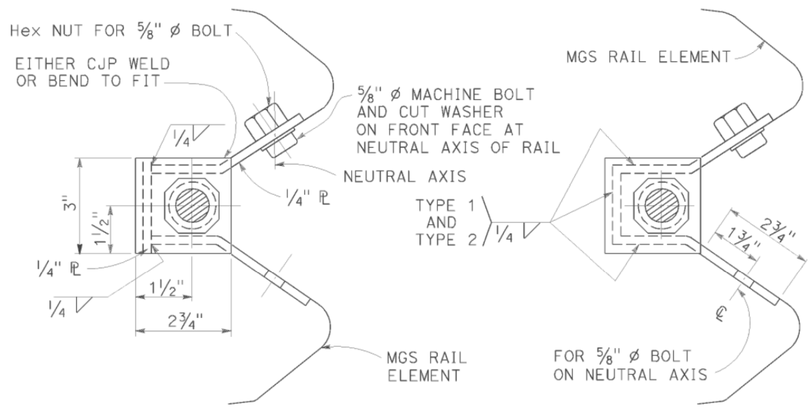

NOTE:
Dimensioning applies to both types.

SECTION A-A
(ALTERNATIVE TYPE 1)

SECTION A-A
(ALTERNATIVE TYPE 2)

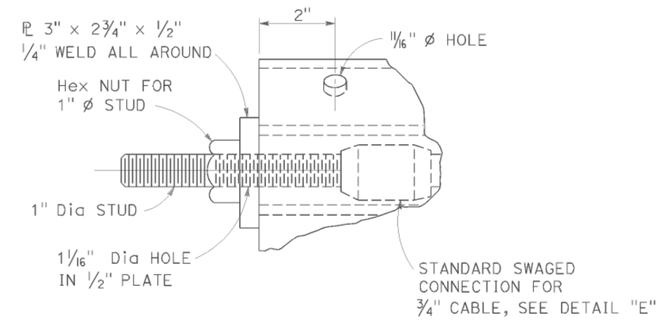

DETAIL "D"

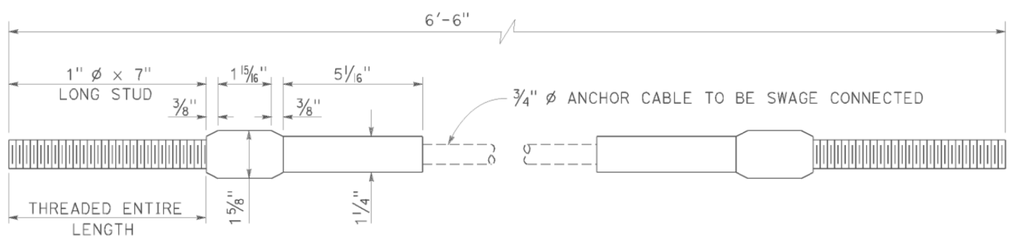

ANCHOR CABLE WITH
SWAGED FITTING AND STUD
DETAIL "E"

STATE OF CALIFORNIA
DEPARTMENT OF TRANSPORTATION

METAL RAILING ANCHOR CABLE AND ANCHOR PLATE DETAILS

NO SCALE

RSP A77S3 DATED NOVEMBER 15, 2013 SUPERSEDES RSP A77S3
DATED JULY 19, 2013 THAT SUPPLEMENTS THE STANDARD PLANS BOOK DATED 2010.

REVISED STANDARD PLAN RSP A77S3

2010 REVISED STANDARD PLAN RSP A77S3

DATE PLOTTED => 29-JUL-2014
TIME PLOTTED => 06:38

Dist	COUNTY	ROUTE	POST MILES TOTAL PROJECT	SHEET No.	TOTAL SHEETS
02	Teh	32	5.1/6.3	68	74

REGISTERED CIVIL ENGINEER

July 19, 2013
PLANS APPROVAL DATE

Michael Janzen No. 44788 Exp. 03-31-14 CIVIL
REGISTERED PROFESSIONAL ENGINEER
STATE OF CALIFORNIA

THE STATE OF CALIFORNIA OR ITS OFFICERS OR AGENTS SHALL NOT BE RESPONSIBLE FOR THE ACCURACY OR COMPLETENESS OF SCANNED COPIES OF THIS PLAN SHEET.

TO ACCOMPANY PLANS DATED 07-28-14

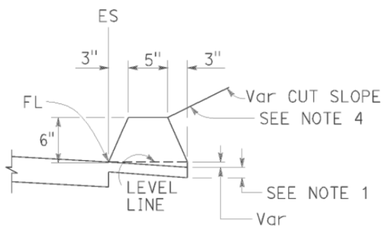

TYPE A
See Note 3

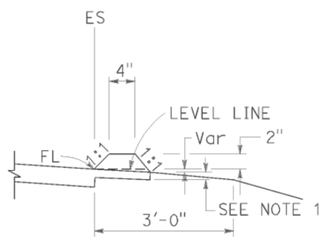

TYPE C

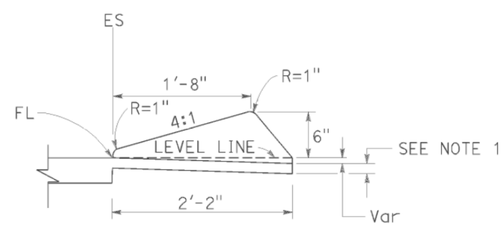

TYPE D

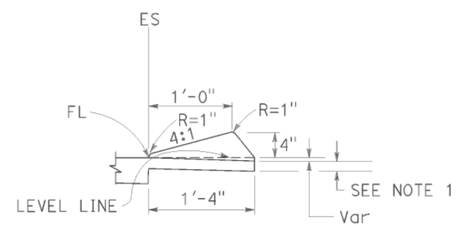

TYPE E

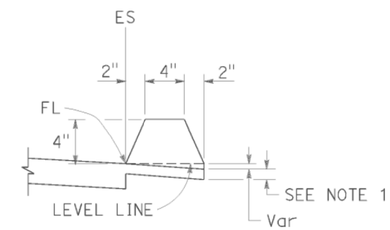

TYPE F
See Note 5

DIKES

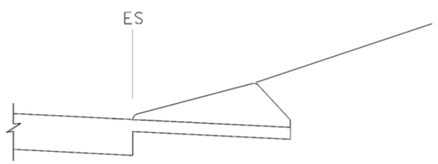

CASE C-1
Cut Slope

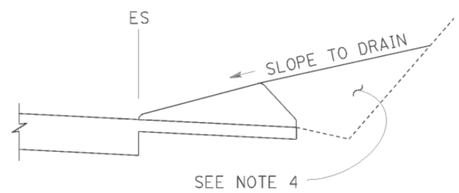

CASE C-2
Cut Slope

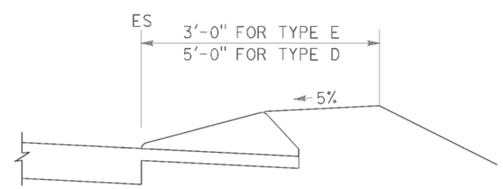

CASE F

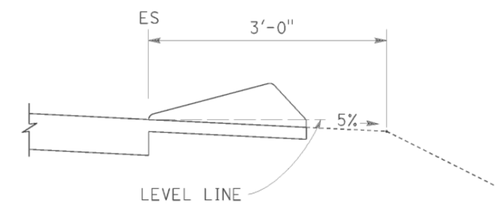

CASE R
See Note 2

TYPE D AND E BACKFILL DETAILS

NOTES:

1. For HMA shoulders only, extend top layer of HMA placed on the shoulder under dike with no joint at the ES. For projects with OGFC shoulders, do not extend OGFC under dike. See project plans for modified dike detail.
2. Case R applies to retrofit only projects where restrictive conditions do not provide enough width for Case F backfill.
3. Type A dike only to be used where restrictive slope conditions do not provide enough width to use Type D or Type E dike.
4. Fill and compact with excavated material to top of dike.
5. Use Type F dike, where dike is required with guard railing installations. See Revised Standard Plan RSP A77N4 for dike positioning details.

DIKE QUANTITIES

TYPE	CUBIC YARDS PER LINEAR FOOT
A	0.0135
C	0.0038
D	0.0293
E	0.0130
F	0.0066

Quantities based on 5% cross slope.

STATE OF CALIFORNIA
DEPARTMENT OF TRANSPORTATION

HOT MIX ASPHALT DIKES

NO SCALE

RSP A87B DATED JULY 19, 2013 SUPERSEDES STANDARD PLAN A87B
DATED MAY 20, 2011 - PAGE 120 OF THE STANDARD PLANS BOOK DATED 2010.

REVISED STANDARD PLAN RSP A87B

2010 REVISED STANDARD PLAN RSP A87B

DATE PLOTTED => 29-JUL-2014
TIME PLOTTED => 06:38

DIST	COUNTY	ROUTE	POST MILES TOTAL PROJECT	SHEET No.	TOTAL SHEETS
02	Teh	32	5.1/6.3	69	74

REGISTERED CIVIL ENGINEER

November 15, 2013
PLANS APPROVAL DATE

REGISTERED PROFESSIONAL ENGINEER
Cornelis M. Hakim
No. C55610
Exp. 12-31-14
CIVIL
STATE OF CALIFORNIA

THE STATE OF CALIFORNIA OR ITS OFFICERS OR AGENTS SHALL NOT BE RESPONSIBLE FOR THE ACCURACY OR COMPLETENESS OF SCANNED COPIES OF THIS PLAN SHEET.

TO ACCOMPANY PLANS DATED 07-28-14

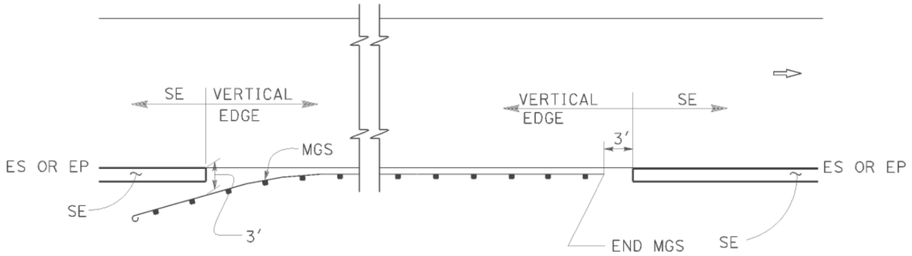

MGS

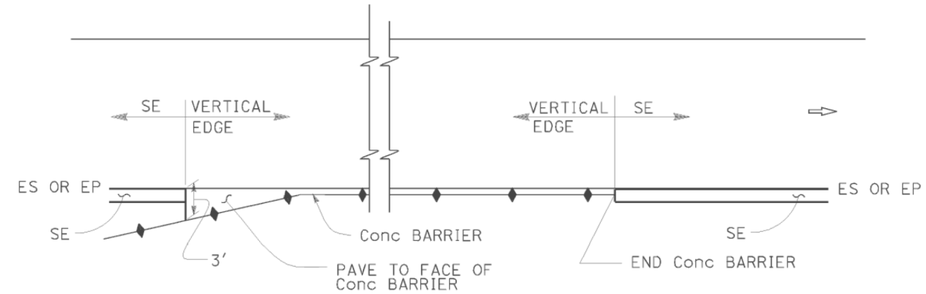

CONCRETE BARRIER

ABBREVIATIONS:

SE SAFETY EDGE

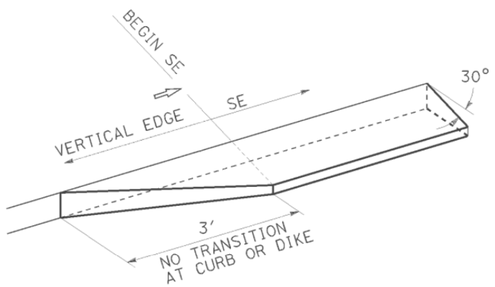

TRANSITION DETAIL FOR CONCRETE ONLY

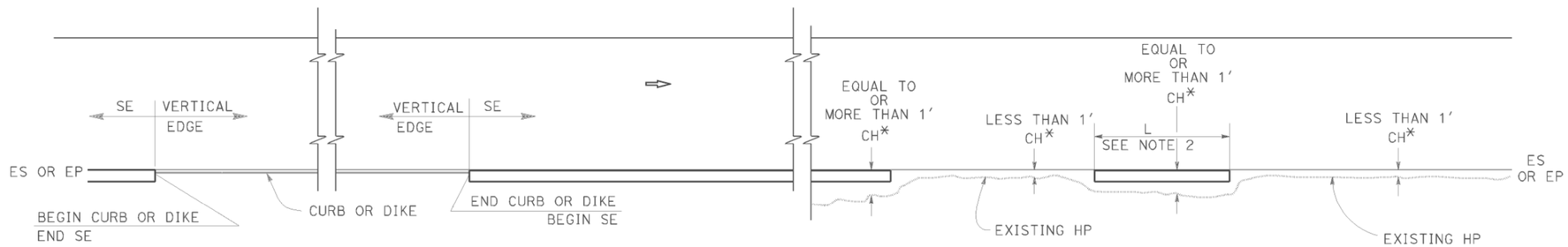

CURB OR DIKE

NARROW SIDE SLOPE

* CH = Distance from ES or EP to existing HP.

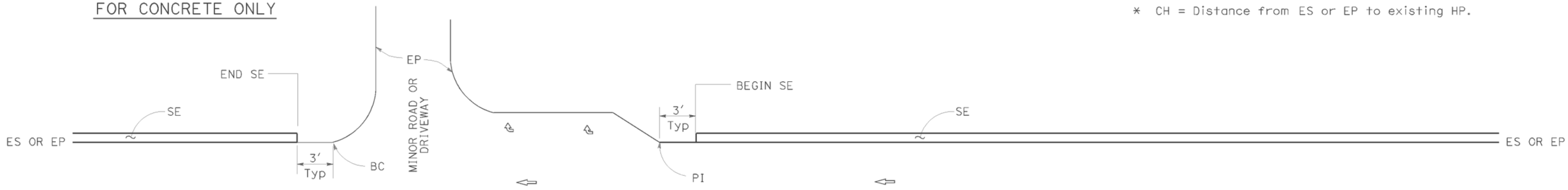

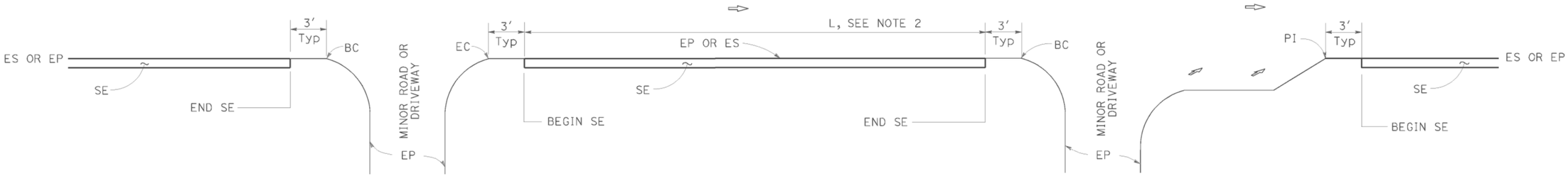

INTERSECTION

MINOR ROADWAY OR DRIVEWAY

DRIVEWAY AND INTERSECTION

NOTES:

1. For details not shown, see Revised Standard Plans RSP P75 and RSP P76.
2. Safety edge is optional when L is less than 30′.

STATE OF CALIFORNIA
DEPARTMENT OF TRANSPORTATION

PAVEMENT EDGE TREATMENTS

NO SCALE

RSP P74 DATED NOVEMBER 15, 2013 SUPERSEDES RSP P74 DATED JANUARY 20, 2012 THAT SUPPLEMENTS THE STANDARD PLANS BOOK DATED 2010.

REVISED STANDARD PLAN RSP P74

2010 REVISED STANDARD PLAN RSP P74

DATE PLOTTED => 29-JUL-2014
TIME PLOTTED => 06:38

DIST	COUNTY	ROUTE	POST MILES TOTAL PROJECT	SHEET No.	TOTAL SHEETS
02	Teh	32	5.1/6.3	70	74

REGISTERED CIVIL ENGINEER

November 15, 2013
PLANS APPROVAL DATE

REGISTERED PROFESSIONAL ENGINEER Cornelis M. Hakim No. C55610 Exp. 12-31-14 CIVIL STATE OF CALIFORNIA

THE STATE OF CALIFORNIA OR ITS OFFICERS OR AGENTS SHALL NOT BE RESPONSIBLE FOR THE ACCURACY OR COMPLETENESS OF SCANNED COPIES OF THIS PLAN SHEET.

TO ACCOMPANY PLANS DATED 07-28-14

LEGEND:

- HMA PAVEMENT
- HMA OR CONCRETE PAVEMENT
- CONCRETE PAVEMENT

ABBREVIATIONS:

SE SAFETY EDGE
TT TOTAL THICKNESS OF SE
HW HINGE WIDTH, DISTANCE FROM ES OR EP TO HP

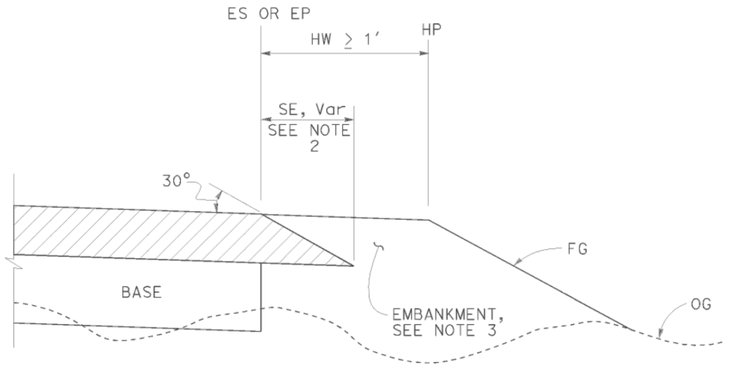

CASE K
Safety Edge - Fill Section, HW ≥ 1′

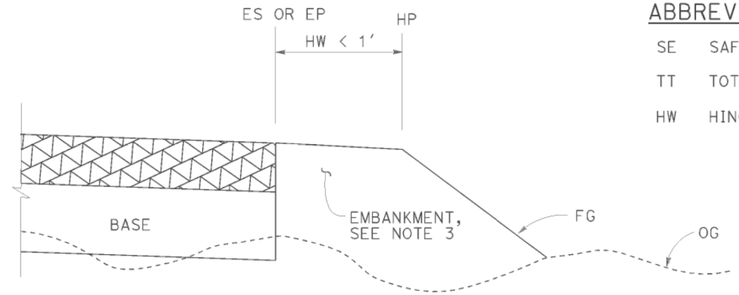

CASE L
Vertical Edge - Fill Section, HW < 1′

FILL SECTION

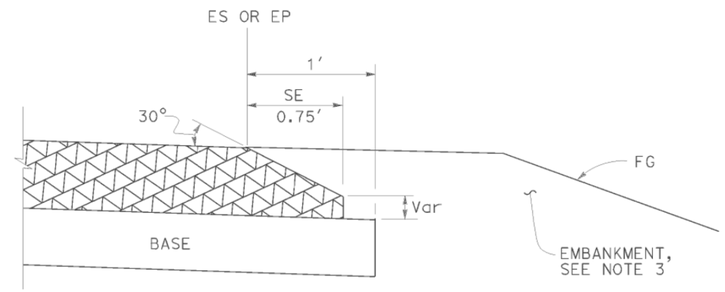

DETAIL "B"
For HMA pavement thickness more than 0.43′ or concrete pavement

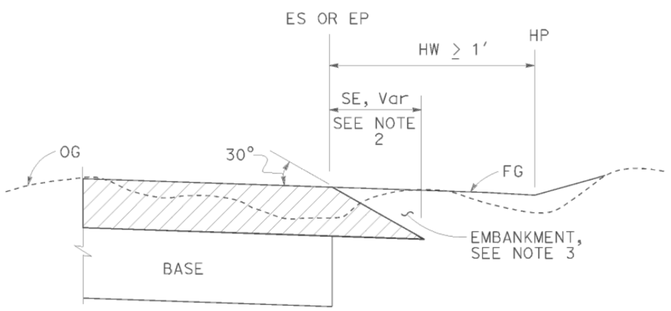

CASE M
Safety Edge - Cut Section, HW ≥ 1′

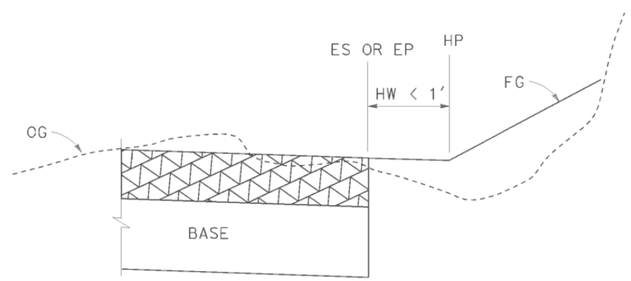

CASE N
Vertical Edge - Cut Section, HW < 1′

CUT SECTION

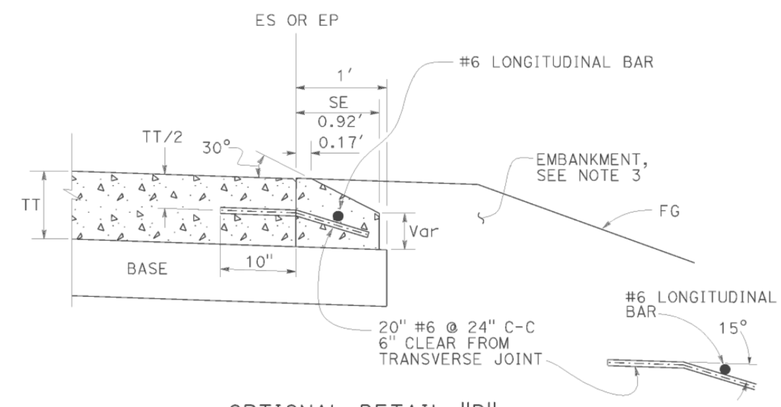

OPTIONAL DETAIL "B"
For concrete pavement
See Note 4

NOTES:

1. For limits of safety edge and vertical edge treatments, see Revised Standard Plan RSP P74
2. Details shown for HMA pavement thickness less than 0.43′. See Detail "B" for HMA pavement thickness more than 0.43′ or concrete pavement.
3. For locations and limits of embankment see project plans.
4. Safety edge transverse joint must match pavement transverse joint. End of #6 longitudinal bar must be 2" ±½" clear from transverse joint.
5. Safety edge is not needed in the area of MGS, barrier, right turn lane and acceleration lane. See Revised Standard Plan RSP P74.

STATE OF CALIFORNIA
DEPARTMENT OF TRANSPORTATION

PAVEMENT EDGE TREATMENTS-NEW CONSTRUCTION

NO SCALE

RSP P76 DATED NOVEMBER 15, 2013 SUPERSEDES RSP P76 DATED JANUARY 20, 2012 THAT SUPPLEMENTS THE STANDARD PLANS BOOK DATED 2010.

REVISED STANDARD PLAN RSP P76

2010 REVISED STANDARD PLAN RSP P76

DATE PLOTTED => 29-JUL-2014
TIME PLOTTED => 06:38

Dist	COUNTY	ROUTE	POST MILES TOTAL PROJECT	SHEET No.	TOTAL SHEETS
02	Teh	32	5.1/6.3	71	74

Raymond Don Tsztoo
REGISTERED CIVIL ENGINEER

April 19, 2013
PLANS APPROVAL DATE

REGISTERED PROFESSIONAL ENGINEER Raymond Don Tsztoo No. C37332 Exp. 6-30-14 CIVIL STATE OF CALIFORNIA

THE STATE OF CALIFORNIA OR ITS OFFICERS OR AGENTS SHALL NOT BE RESPONSIBLE FOR THE ACCURACY OR COMPLETENESS OF SCANNED COPIES OF THIS PLAN SHEET.

TO ACCOMPANY PLANS DATED 07-28-14

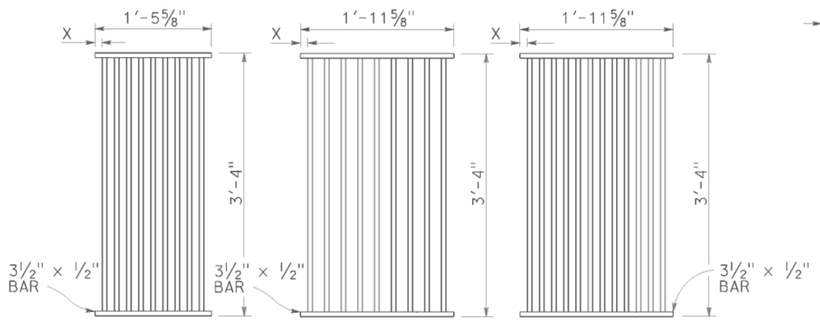

TYPE 18-9

1⅜" Clear spacing. Use within the roadbed on highways where bicycles and pedestrians are excluded.

TYPE 24-9

2" Clear spacing. Use in locations off the roadbed on all types of highways.

TYPE 24-12

1⅜" Clear spacing. Use within the roadbed on highways where bicycles and pedestrians are excluded.

RECTANGULAR GRATE DETAILS

(See table below)

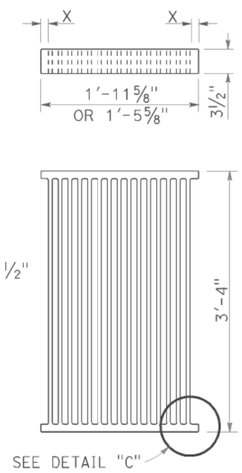

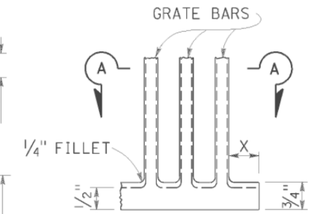

DETAIL "C"

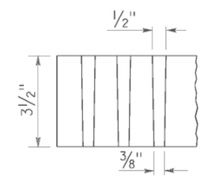

SECTION A-A

ALTERNATIVE CAST DUCTILE IRON GRATE OR CAST CARBON STEEL GRATE

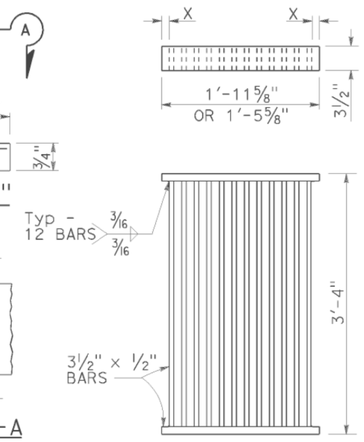

ALTERNATIVE WELDED GRATE

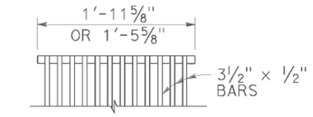

CAST END BLOCK

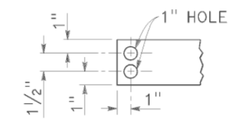

END OF BAR

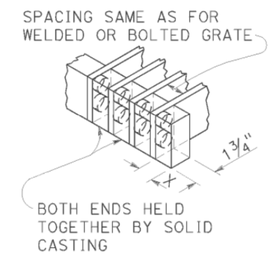

ALTERNATIVE CAST DUCTILE IRON OR CAST CARBON STEEL END BLOCK GRATE

NOTES:

1. Grate type numbers refer to approximate width of grate in inches and number of bars, respectively.
2. Contractor has the option of using cast ductile iron, cast carbon steel, welded, bolted, or cast end block grate.
3. Rounded top of bars optional on all grates.
4. Pipe inlets with a grate shall be placed so that bars parallel direction of principle surface flow.
5. Complete joint penetration butt welds may be substituted for the fillet welds on all anchors.
6. Standard square, hexagon, round or equivalent headed anchors may be substituted for the right angle hooks on the anchors shown on this plan.
7. Grate and frame weights are based on welded grates (weights of face angles, steps, protection bars, etc. are not included).
8. Connect chain to grate and frame only at locations shown on the plans. When chain is required, do not use cast ductile iron grates.

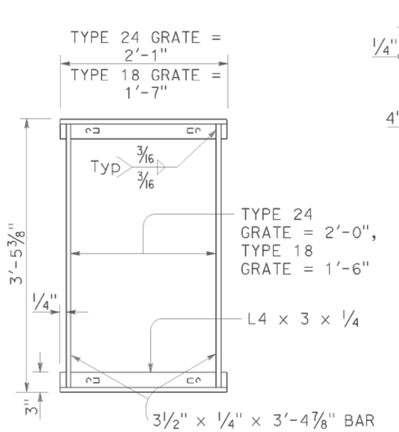

TYPICAL FRAME

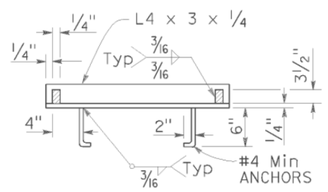

CROSS SECTION

(Thru frame)

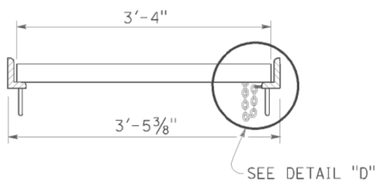

LONGITUDINAL SECTION

(Thru frame and grate)

RECTANGULAR FRAME DETAILS

(For all rectangular grates)

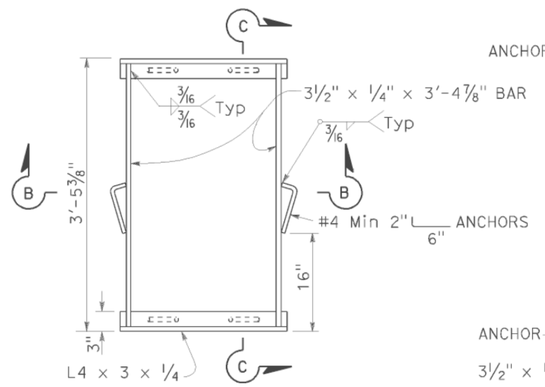

TYPICAL FRAME

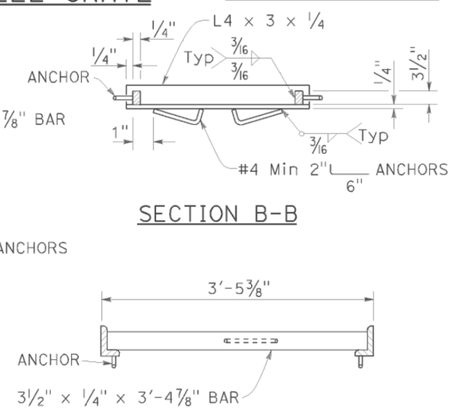

SECTION B-B

SECTION C-C

ALTERNATIVE ANCHOR FOR RECTANGULAR FRAME

(For details not shown, See Rectangular Frame Details)

INLET TYPE	GRATE TYPE	No. OF GRATES	WEIGHT LB
GDO	24-12	2	634
GOL-7	24-12	1	326
GOL-10	24-12	1	326
GO,G1,G2,G3,G4 (TYPE 24)	24-9	1	263
	24-12	1	326
G4 (TYPE 18),G5,G6	18-9	1	249
GT1	18-9	2	498
GT2	18-9	2	498
GT3	24-12	2	652
GT4	24-12	2	652
TRASH RACK			22
GRATE CHAIN			3

GRATE BAR SPACING TABLE

TYPE	No. OF BARS	CLEAR BAR SPACING	X
18-9	9	1⅜"	1 1/16"
24-9	9	2"	1 9/16"
24-12	12	1⅜"	1¼"

INLET TYPE	COVER TYPE	WEIGHT LB
OS	PLATE	174
OL-7	PLATE	170
OL-10	PLATE	170
OL-14	PLATE	170
OL-21	PLATE	170
OCP	PLATE	112
OCPI	PLATE	112
OCPI	REDWOOD	42
OMP	PLATE	177
OMPI	PLATE	177

BASIS FOR Misc IRON & STEEL FINAL PAY WEIGHTS FOR DRAINAGE INLETS

(See Note 7)

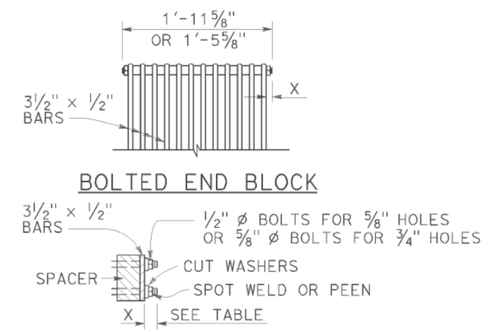

BOLTED END BLOCK

BOLTING DETAIL

ALTERNATIVE BOLTED GRATE

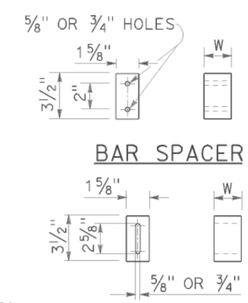

BAR SPACER

ALTERNATIVE SPACER

W = 1⅜" or 2"

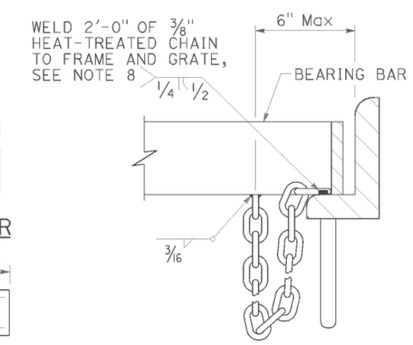

DETAIL "D"

(Steel grates only)

STATE OF CALIFORNIA
DEPARTMENT OF TRANSPORTATION

GRATE DETAILS No. 1

NO SCALE

RSP D77A DATED APRIL 19, 2013 SUPERSEDES RSP D77A DATED JULY 20, 2012 AND STANDARD PLAN D77A DATED MAY 20, 2011 - PAGE 164 OF THE STANDARD PLANS BOOK DATED 2010.

REVISED STANDARD PLAN RSP D77A

2010 REVISED STANDARD PLAN RSP D77A

DATE PLOTTED => 29-JUL-2014
TIME PLOTTED => 06:38

Dist	COUNTY	ROUTE	POST MILES TOTAL PROJECT	SHEET No.	TOTAL SHEETS
02	Teh	32	5.1/6.3	72	74

Raymond Don Tsztoo
REGISTERED CIVIL ENGINEER

April 19, 2013
PLANS APPROVAL DATE

REGISTERED PROFESSIONAL ENGINEER Raymond Don Tsztoo No. C37332 Exp. 6-30-14 CIVIL STATE OF CALIFORNIA

THE STATE OF CALIFORNIA OR ITS OFFICERS OR AGENTS SHALL NOT BE RESPONSIBLE FOR THE ACCURACY OR COMPLETENESS OF SCANNED COPIES OF THIS PLAN SHEET.

TO ACCOMPANY PLANS DATED 07-28-14

2010 REVISED STANDARD PLAN RSP D77B

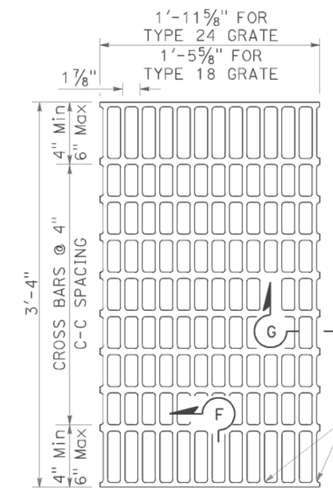

NOTES:

Bearing bars to be 3½" × ¼" bars on 1⅞" centers.

⅜"± ø Cross bars may be fillet welded, resistance welded or electroforged to bearing bars.

Weight of Type 24 grate = 141 LBS.

Weight of Type 18 grate = 107 LBS. (Type 24 grate shown).

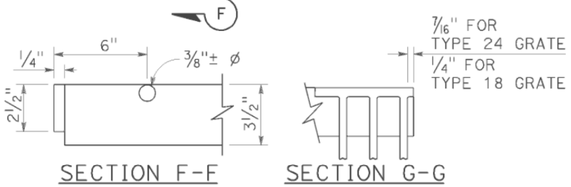

SECTION F-F SECTION G-G

TYPE 18-10 AND 24-13 GRATE

(Welded Steel)

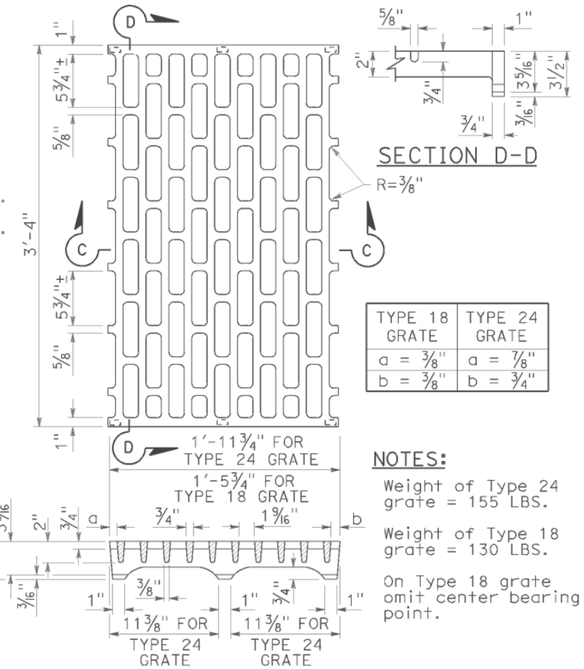

NOTES:

Weight of Type 24 grate = 155 LBS.

Weight of Type 18 grate = 130 LBS.

On Type 18 grate omit center bearing point.

TYPE 18 GRATE	TYPE 24 GRATE
a = ⅜"	a = ⅞"
b = ⅜"	b = ¾"

SECTION C-C

TYPE 18-8C AND 24-10C GRATE

(Cast ductile iron)

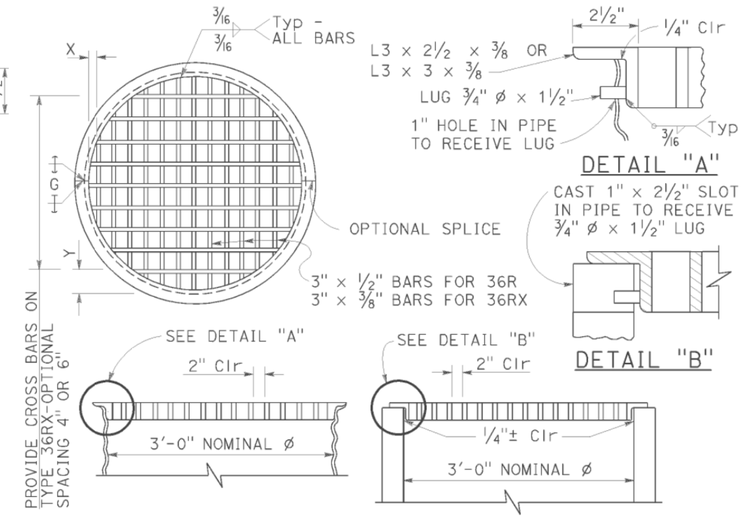

TYPE 36R AND 36RX GRATE DETAILS

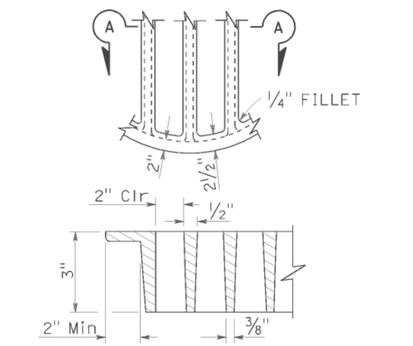

SECTION A-A

ALTERNATIVE CAST DUCTILE IRON GRATE OR CAST CARBON STEEL GRATE TYPE 36R AND 36RX

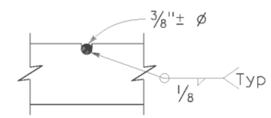

⅜"± ø Cross bars may be fillet welded, resistance welded or electroforged to bearing bars.

CROSS BAR DETAIL TYPE 36RX GRATE (WELDED STEEL)

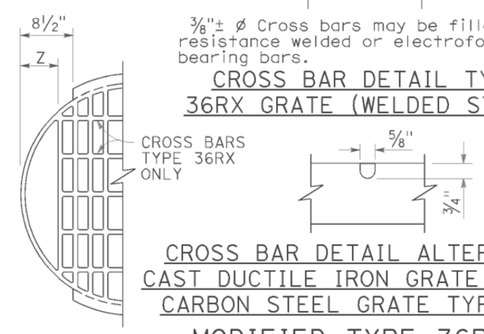

CROSS BAR DETAIL ALTERNATIVE CAST DUCTILE IRON GRATE OR CAST CARBON STEEL GRATE TYPE 36RX

MODIFIED TYPE 36R AND 36RX GRATE FOR ODI INLET

BASIS FOR Misc IRON AND STEEL FINAL PAY WEIGHTS FOR DRAINAGE INLETS

INLET TYPE	GRATE TYPE	No. OF GRATES	WEIGHT LB
GDO (SEE NOTE 4)	24-10C	2	391
	24-10S	2	456
	24-12X	2	473
	24-13	2	374
GO,GOL,G1,G2, G3,G4 (TYPE 24)	24-10C	1	202
	24-10S	1	229
	24-12X	1	239
	24-13	1	188
G4 (TYPE 18) G5,G6	18-8S	1	187
	18-9X	1	187
	18-10	1	149
GT1,GT2	18-8S	2	374
	18-9X	2	374
	18-10	2	298
GT3,GT4	24-10C	2	404
	24-10S	2	458
	24-12X	2	478
	24-13	2	376
ODI	36RX (Mod)	1	196
GMP,GCP,GCPI	36RX	1	215
ODI	36R (Mod)	1	220
GMP,GCP,GCPI	36R	1	236
TRASH RACK			22
GRATE CHAIN			3

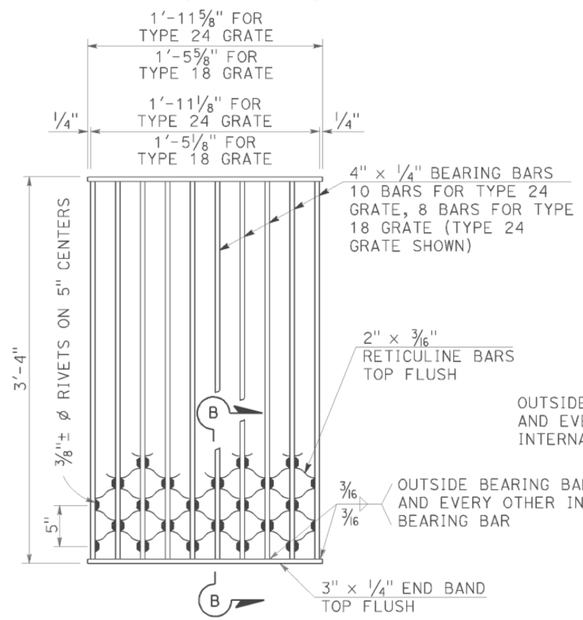

NOTES:

Weight of Type 24 grate = 182 LBS.
Weight of Type 18 grate = 145 LBS.

SECTION B-B

TYPE 18-8S AND 24-10S GRATE

(Welded Steel) Reticuline type

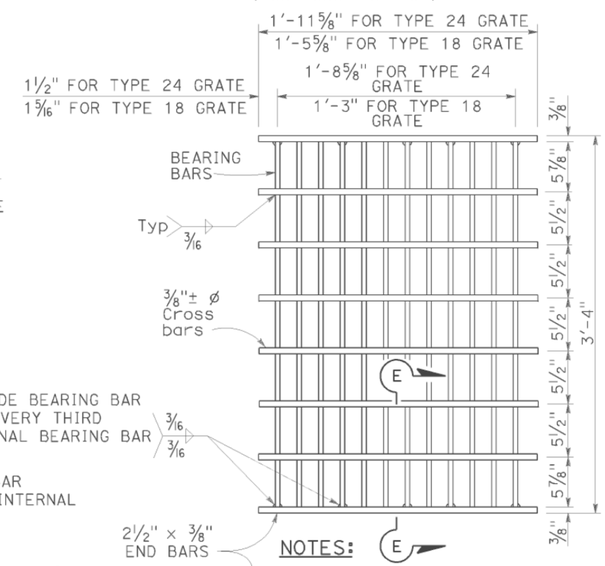

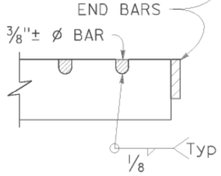

SECTION E-E

NOTES:

Bearing bars to be 3½" × ⅜" bars on 1⅞" centers.

12 Bars for Type 24 grate - 9 bars for Type 18 grates. (Type 24 grate shown).

Weight of Type 24 grate = 192 LBS.

Weight of Type 18 grate = 145 LBS.

⅜"± ø Cross bars may be fillet welded, resistance welded or electroforged to bearing bars.

TYPE 18-9X AND 24-12X GRATE

(Welded Steel)

NOTES:

1. When alternative grates are allowed - Final pay based on alternative with the lesser weight.
2. Use frame shown on Standard Plan D74A, D74B or RSP D77A as appropriate.
3. When Type 24-10S, 24-12X or 24-13 grates are used with GDO Inlets, a ¼" × 3½" × 3'-4⅞" steel bar shall be welded across the center of inlet frame to separate the individual grates.
4. See Revised Standard Plan RSP D77A for connecting chain to welded grate and frame. When chain is required, do not use cast ductile iron grate.

GRATE BAR SPACING TABLE

TYPE	No. OF BARS	CLEAR BAR SPACING	X	Y 4" SPACING	Y 6" SPACING	Z
36R	13	2"	2⅛"	-	-	-
36RX (STEEL)	15	2"	9/16"	3¾"	5¾"	-
36RX (CAST)	13	2"	2⅛"	3¾"	5¾"	-
36R Mod	12	2"	2⅛"	-	-	5"
36RX Mod (STEEL)	13	2"	9/16"	3¾"	5¾"	5 11/16"
36RX Mod (CAST)	12	2"	2⅛"	3¾"	5¾"	5"

STATE OF CALIFORNIA
DEPARTMENT OF TRANSPORTATION

GRATE DETAILS No. 2

NO SCALE

RSP D77B DATED APRIL 19, 2013 SUPERSEDES RSP D77B DATED JULY 20, 2012 AND STANDARD PLAN D77B DATED MAY 20, 2011 - PAGE 165 OF THE STANDARD PLANS BOOK DATED 2010.

REVISED STANDARD PLAN RSP D77B

DATE PLOTTED => 29-JUL-2014
TIME PLOTTED => 06:38

Dist	COUNTY	ROUTE	POST MILES TOTAL PROJECT	SHEET No.	TOTAL SHEETS
02	Teh	32	5.1/6.3	73	74

REGISTERED CIVIL ENGINEER

July 19, 2013
PLANS APPROVAL DATE

REGISTERED PROFESSIONAL ENGINEER
Gurinderpal Bhullar
No. C48815
Exp. 9-30-14
CIVIL
STATE OF CALIFORNIA

THE STATE OF CALIFORNIA OR ITS OFFICERS OR AGENTS SHALL NOT BE RESPONSIBLE FOR THE ACCURACY OR COMPLETENESS OF SCANNED COPIES OF THIS PLAN SHEET.

TO ACCOMPANY PLANS DATED 07-28-14

2010 REVISED STANDARD PLAN RSP T9

TABLE 1

TAPER LENGTH CRITERIA AND CHANNELIZING DEVICE SPACING

SPEED (S)	MINIMUM TAPER LENGTH * FOR WIDTH OF OFFSET 12 FEET (W)				MAXIMUM CHANNELIZING DEVICE SPACING		
					X	Y	Z **
	TANGENT 2L	MERGING L	SHIFTING L/2	SHOULDER L/3	TAPER	TANGENT	CONFLICT
mph	ft	ft	ft	ft	ft	ft	ft
20	160	80	40	27	20	40	10
25	250	125	63	42	25	50	12
30	360	180	90	60	30	60	15
35	490	245	123	82	35	70	17
40	640	320	160	107	40	80	20
45	1080	540	270	180	45	90	22
50	1200	600	300	200	50	100	25
55	1320	660	330	220	55	110	27
60	1440	720	360	240	60	120	30
65	1560	780	390	260	65	130	32
70	1680	840	420	280	70	140	35

* - For other offsets, use the following merging taper length formula for L:
For speed of 40 mph or less, $L = WS^2/60$
For speed of 45 mph or more, $L = WS$

Where: L = Taper length in feet
W = Width of offset in feet
S = Posted speed limit, off-peak 85th-percentile speed prior to work starting, or the anticipated operating speed in mph

** - Use for taper and tangent sections where there are no pavement markings or where there is a conflict between existing pavement markings and channelizers (CA).

TABLE 2

LONGITUDINAL BUFFER SPACE AND FLAGGER STATION SPACING

SPEED *	Min D **	DOWNGRADE Min D ***		
		-3%	-6%	-9%
mph	ft	ft	ft	ft
20	115	116	120	126
25	155	158	165	173
30	200	205	215	227
35	250	257	271	287
40	305	315	333	354
45	360	378	400	427
50	425	446	474	507
55	495	520	553	593
60	570	598	638	686
65	645	682	728	785
70	730	771	825	891

* - Speed is posted speed limit, off-peak 85th-percentile speed prior to work starting, or the anticipated operating speed in mph

** - Longitudinal buffer space or flagger station spacing

*** - Use on sustained downgrade steeper than -3 percent and longer than 1 mile.

TABLE 3

ADVANCE WARNING SIGN SPACING

ROAD TYPE	DISTANCE BETWEEN SIGNS *		
	A	B	C
	ft	ft	ft
URBAN - 25 mph OR LESS	100	100	100
URBAN - MORE THAN 25 mph TO 40 mph	250	250	250
URBAN - MORE THAN 40 mph	350	350	350
RURAL	500	500	500
EXPRESSWAY / FREEWAY	1000	1500	2640

* - The distances are approximate, are intended for guidance purposes only, and should be applied with engineering judgment. These distances should be adjusted by the Engineer for field conditions, if necessary, by increasing or decreasing the recommmended distances.

STATE OF CALIFORNIA
DEPARTMENT OF TRANSPORTATION

TRAFFIC CONTROL SYSTEM TABLES FOR LANE AND RAMP CLOSURES

NO SCALE

RSP T9 DATED JULY 19, 2013 SUPERSEDES RSP T9 DATED APRIL 19, 2013 THAT SUPPLEMENTS THE STANDARD PLANS BOOK DATED 2010.

REVISED STANDARD PLAN RSP T9

DATE PLOTTED => 29-JUL-2014
TIME PLOTTED => 06:38

Dist	COUNTY	ROUTE	POST MILES TOTAL PROJECT	SHEET No.	TOTAL SHEETS
02	Teh	32	5.1/6.3	74	74

REGISTERED CIVIL ENGINEER

July 18, 2014
PLANS APPROVAL DATE

REGISTERED PROFESSIONAL ENGINEER Gurinderpal Bhullar No. C48815 Exp. 9-30-14 CIVIL STATE OF CALIFORNIA

THE STATE OF CALIFORNIA OR ITS OFFICERS OR AGENTS SHALL NOT BE RESPONSIBLE FOR THE ACCURACY OR COMPLETENESS OF SCANNED COPIES OF THIS PLAN SHEET.

TO ACCOMPANY PLANS DATED 07-28-14

NOTES:

See Revised Standard Plan RSP T9 for tables.

Use cone spacing X for taper segment, Y for tangent segment or Z for conflict situations, as approriate, per Table 1, unless X, Y, or Z cone spacing is shown on this sheet.

Unless otherwise specified in the special provisions, all temporary warning signs shall have black legend on fluorescent orange background.

California codes are designated by (CA). Otherwise, Federal (MUTCD) codes are shown.

TYPICAL LANE CLOSURE WITH REVERSIBLE CONTROL

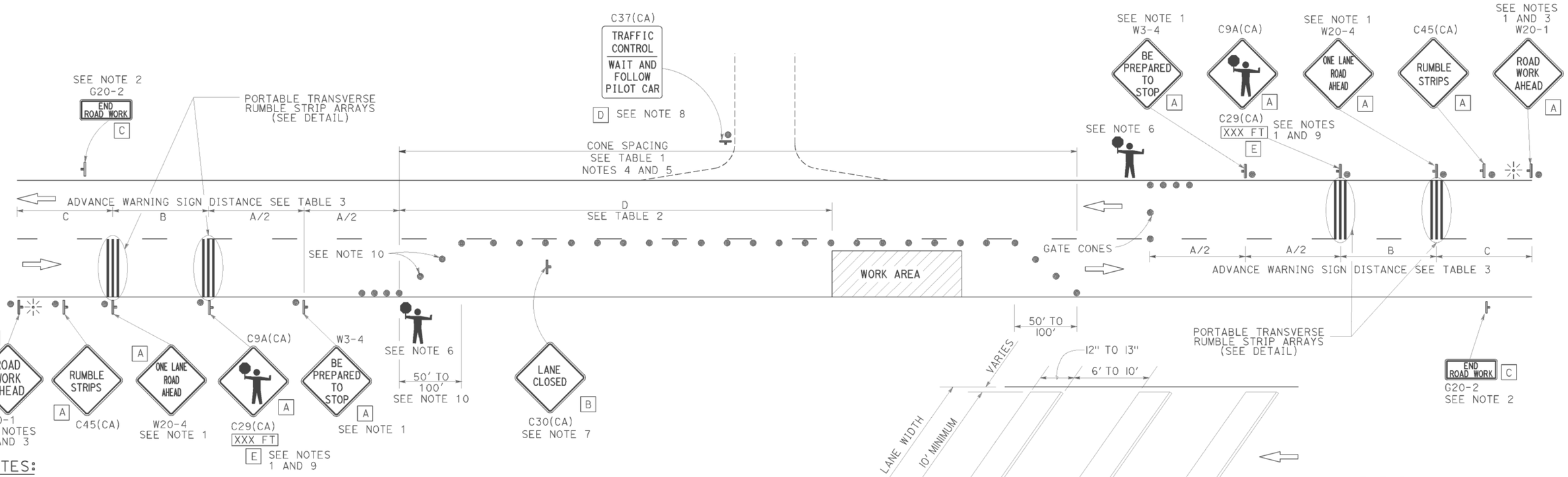

NOTES:

1. Each advance warning sign in each direction of travel shall be equipped with at least two flags for daytime closure. Each flag shall be at least 16" x 16" in size and shall be orange or fluorescent red-orange in color. Flashing beacons shall be placed at the locations indicated for lane closure during hours of darkness.
2. A G20-2 "END ROAD WORK" sign, as appropriate, shall be placed at the end of the lane control unless the end of work area is obvious, or ends within a larger project's limits.
3. If the W20-1 sign would follow within 2000' of a stationary W20-1 or G20-1 "ROAD WORK NEXT _____ MILES", use a W20-4 sign for the first advance warning sign.
4. All cones used for lane closures during the hours of darkness shall be fitted with retroreflective bands (or sleeves) as specified in the specifications.
5. Portable delineators, placed at one-half the spacing indicated for traffic cones, may be used instead of cones for daytime closures only.
6. Additional advance flaggers may be required. Flagger should stand in a conspicuous place, be visible to approaching traffic as well as approaching vehicles after the first vehicle has stopped. During the hours of darkness, the flagging-station and flagger shall be illuminated and clearly visible to approaching traffic. The illumination footprint of the lighting on the ground shall be at least 20' in diameter. Place a minimum of four cones at 50' intervals in advance of flagger station as shown.
7. Place C30(CA) "LANE CLOSED" sign at 500' to 1000' intervals throughout extended work areas. They are optional if the work area is visible from the flagger station.
8. When a pilot car is used, place a C37(CA) "TRAFFIC CONTROL-WAIT AND FOLLOW PILOT CAR" sign with black legend on white background at all intersections, driveways and alleys without a flagger within traffic control area. Signs shall be clean and visible at all times. Where traffic can not be effectively self-regulated, at least one flagger shall be used at each intersection within traffic control area.
9. An optional C29(CA) sign may be placed below the C9A(CA) sign.
10. Either traffic cones or barricades shall be placed on the taper. Barricades shall be Type I, II, or III.
11. The color of the portable transverse rumble strips shall be black or orange. Use 2 arrays, each array shall consist of 3 rumble strips.
12. Portable transverse rumble strips shall not be placed on sharp horizontal or vertical curves nor shall they be placed through pedestrian crossings.
13. If the portable transverse rumble strips become out of alignment (skewed) by more than 6 inches, measured from one end to the other, they shall be readjusted to bring the placement back to the original location.

PORTABLE TRANSVERSE RUMBLE STRIP ARRAY DETAIL

LEGEND

- TRAFFIC CONE
- TEMPORARY TRAFFIC CONTROL SIGN
- PORTABLE FLASHING BEACON
- FLAGGER

SIGN PANEL SIZE (Min)

A	48" x 48"
B	30" x 30"
C	36" x 18"
D	36" x 42"
E	20" x 7"

STATE OF CALIFORNIA
DEPARTMENT OF TRANSPORTATION

TRAFFIC CONTROL SYSTEM FOR LANE CLOSURE ON TWO LANE CONVENTIONAL HIGHWAYS

NO SCALE

RSP T13 DATED JULY 18, 2014 SUPERSEDES RSP T13 DATED APRIL 19, 2013 AND STANDARD PLAN T13 DATED MAY 20, 2011 - PAGE 241 OF THE STANDARD PLANS BOOK DATED 2010.

REVISED STANDARD PLAN RSP T13

2010 REVISED STANDARD PLAN RSP T13

DATE PLOTTED => 29-JUL-2014
TIME PLOTTED => 06:39