Dist	COUNTY	ROUTE	POST MILES TOTAL PROJECT	SHEET No.	TOTAL SHEETS
02	Las	395	T5.3/56.5	1	12

INDEX OF PLANS

SHEET No.	DESCRIPTION
1	TITLE SHEET
2-3	CONSTRUCTION DETAILS
4	CONSTRUCTION AREA SIGNS
5-7	PAVEMENT DELINEATION QUANTITIES
8	SUMMARY OF QUANTITIES
9-12	REVISED STANDARD PLANS

THE STANDARD PLANS LIST APPLICABLE TO THIS CONTRACT IS INCLUDED IN THE NOTICE TO BIDDERS AND SPECIAL PROVISIONS BOOK.

STATE OF CALIFORNIA

DEPARTMENT OF TRANSPORTATION

ACHSNH-P395(238)E

PROJECT PLANS FOR CONSTRUCTION ON

STATE HIGHWAY

IN LASSEN COUNTY AT AND NEAR DOYLE FROM 0.6 MILE NORTH OF ROUTE 70 TO 0.2 MILE NORTH OF SUNNYSIDE ROAD

TO BE SUPPLEMENTED BY STANDARD PLANS DATED MAY 2006

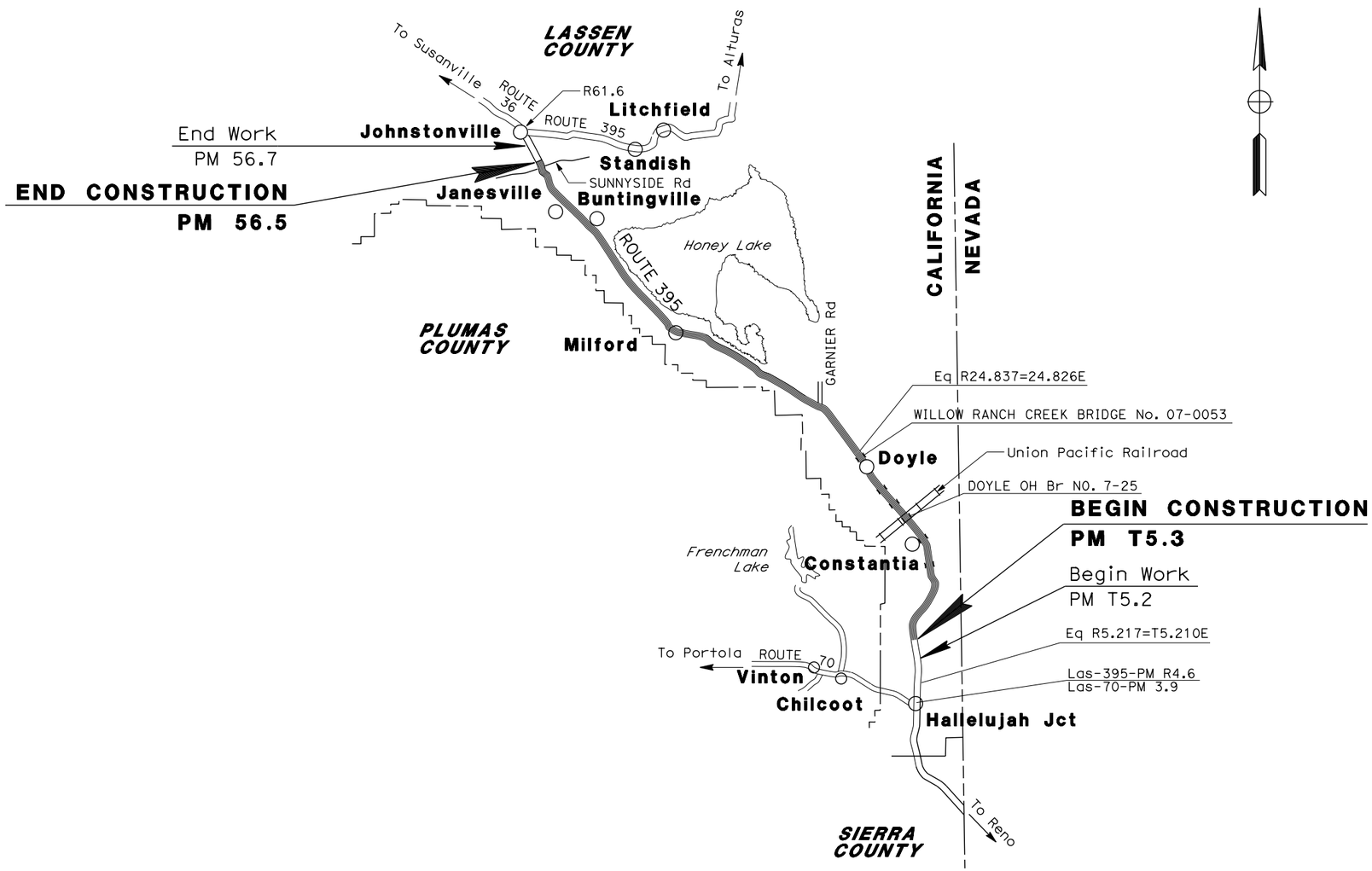

LOCATION MAP

NO SCALE

THE CONTRACTOR SHALL POSSESS THE CLASS (OR CLASSES) OF LICENSE AS SPECIFIED IN THE "NOTICE TO BIDDERS."

Justin W Borders 05-01-12
PROJECT ENGINEER REGISTERED CIVIL ENGINEER — DATE

May 7, 2012
PLANS APPROVAL DATE

REGISTERED PROFESSIONAL ENGINEER — JUSTIN W. BORDERS — No. C65918 — Exp. 6-30-14 — CIVIL — STATE OF CALIFORNIA

THE STATE OF CALIFORNIA OR ITS OFFICERS OR AGENTS SHALL NOT BE RESPONSIBLE FOR THE ACCURACY OR COMPLETENESS OF SCANNED COPIES OF THIS PLAN SHEET.

CONTRACT No.	02-4E8204
PROJECT ID	0212000040

LAST REVISION 05-01-12 — DATE PLOTTED => 03-JUL-2012 TIME PLOTTED => 09:33

PROJECT MANAGER: CHRIS HARVEY
FUNCTIONAL SUPERVISOR: AL TRUJILLO

P:\proj1\02\4E820_plans\pse\24e820ab001.dgn

Dist	COUNTY	ROUTE	POST MILES TOTAL PROJECT	SHEET No.	TOTAL SHEETS
02	Las	395	T5.3/56.5	2	12

REGISTERED CIVIL ENGINEER DATE 05-01-12

05-07-12
PLANS APPROVAL DATE

REGISTERED PROFESSIONAL ENGINEER JUSTIN W. BORDERS No. C65918 Exp. 6-30-14 CIVIL STATE OF CALIFORNIA

THE STATE OF CALIFORNIA OR ITS OFFICERS OR AGENTS SHALL NOT BE RESPONSIBLE FOR THE ACCURACY OR COMPLETENESS OF SCANNED COPIES OF THIS PLAN SHEET.

NOTES:

1. NO RUMBLE STRIP TO BE INSTALLED ON CONCRETE BRIDGES OR APPROACH SLABS.
2. ALL EXISTING CENTERLINE STRIPES AND PAVEMENT MARKERS WILL BE REPLACED.
3. EXISTING UTILITY FACILITIES HAVE NOT BEEN PLOTTED ON THESE PLANS.

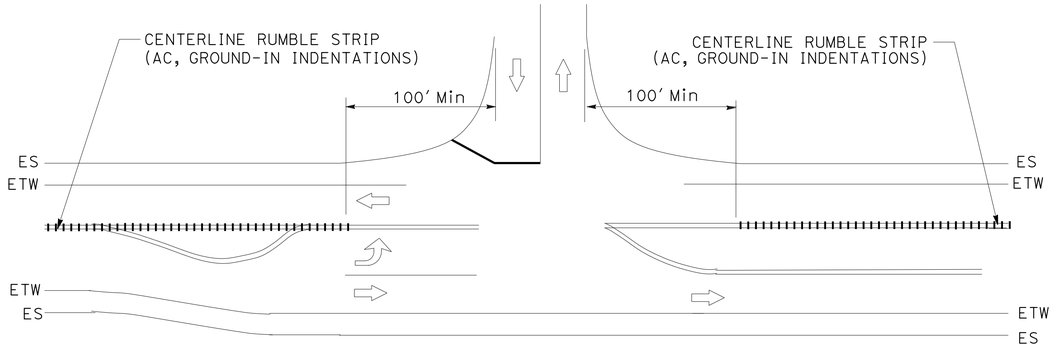

CENTERLINE RUMBLE STRIPS AT INTERSECTION WITH ONE LEFT TURN POCKET

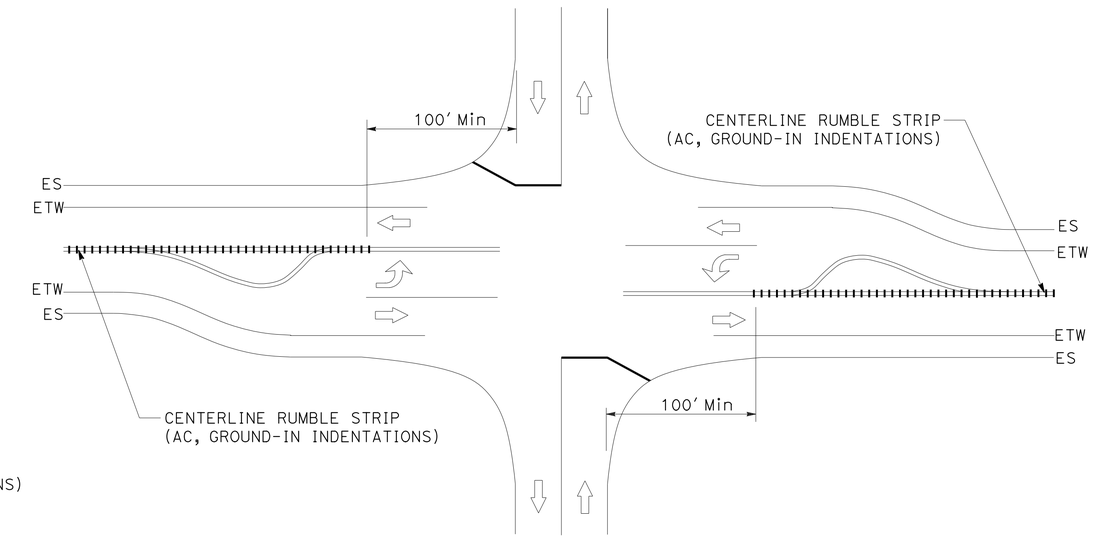

CENTERLINE RUMBLE STRIPS AT INTERSECTION WITH LEFT TURN POCKETS

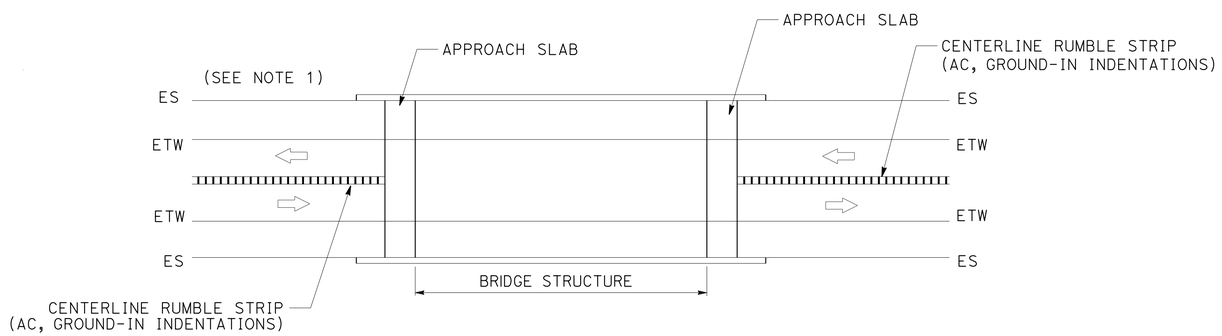

CENTERLINE RUMBLE STRIPS AT BRIDGE STRUCTURE

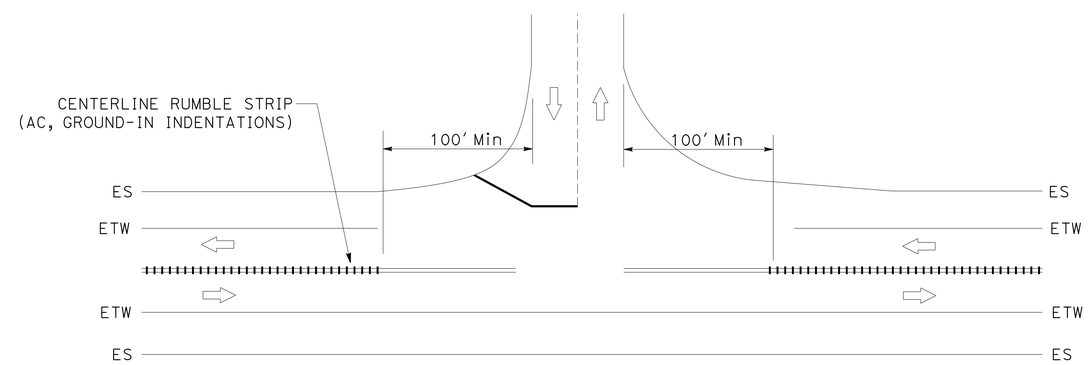

CENTERLINE RUMBLE STRIPS AT PUBLIC ROAD T-INTERSECTION

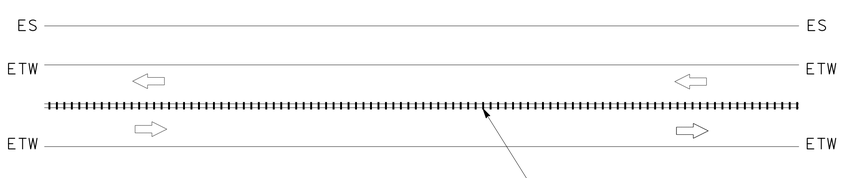

CENTERLINE RUMBLE STRIPS AT DRIVEWAY/PRIVATE ROAD APPROACH

CONSTRUCTION DETAILS

NO SCALE

C-1

REVISED BY	DATE REVISED
BILL LEHMAN	JUSTIN BORDERS

CALCULATED-DESIGNED BY
CHECKED BY

FUNCTIONAL SUPERVISOR: AL TRUJILLO

STATE OF CALIFORNIA - DEPARTMENT OF TRANSPORTATION
Caltrans
DESIGN

P:\proj1\02\4E820_plans\pse\24e820ga001.dgn

LAST REVISION 05-01-12 | DATE PLOTTED => 11-MAY-2012 | TIME PLOTTED => 12:21

BORDER LAST REVISED 7/2/2010 | USERNAME => s115152 | DGN FILE => 24e820ga001.dgn | RELATIVE BORDER SCALE IS IN INCHES 0 1 2 3 | UNIT 0316 | PROJECT NUMBER & PHASE 02120000401

Dist	COUNTY	ROUTE	POST MILES TOTAL PROJECT	SHEET No.	TOTAL SHEETS
02	Las	395	T5.3/56.5	3	12

REGISTERED CIVIL ENGINEER 05-01-12 DATE

05-07-12
PLANS APPROVAL DATE

REGISTERED PROFESSIONAL ENGINEER JUSTIN W. BORDERS No. C65918 Exp. 6-30-14 CIVIL STATE OF CALIFORNIA

THE STATE OF CALIFORNIA OR ITS OFFICERS OR AGENTS SHALL NOT BE RESPONSIBLE FOR THE ACCURACY OR COMPLETENESS OF SCANNED COPIES OF THIS PLAN SHEET.

NOTES:

1. RUMBLE STRIPS, AS SHOWN ON THIS PLAN SHALL NOT BE CONSTRUCTED ON BRIDGE DECKS OR BRIDGE APPROACH SLABS, OR ACROSS THE FULL WIDTH OF RAMPS AND PUBLIC ROAD APPROACHES.
2. EXISTING UTILITY FACILITIES HAVE NOT BEEN PLOTTED ON THESE PLANS.

LEGEND

DIRECTION OF TRAVEL

RUMBLE STRIP (AC, GROUND-IN INDENTATIONS)

TRAFFIC STRIPE

PAVEMENT MARKER
(RETROREFLECTIVE - RECESSED IN EXISTING RECESS)

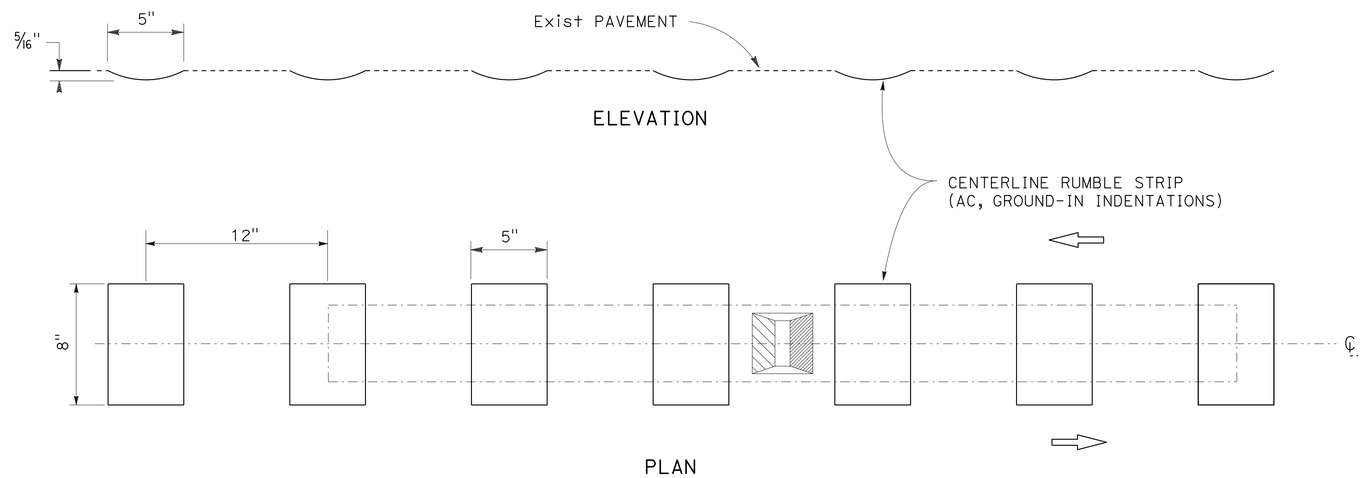

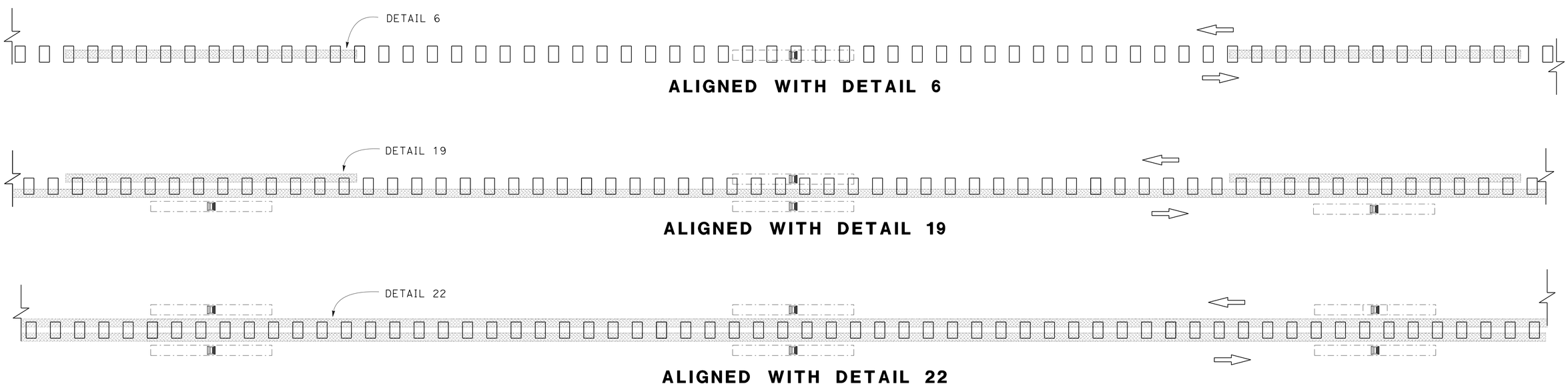

CENTERLINE RUMBLE STRIP (AC, GROUND-IN INDENTATIONS)

CONSTRUCTION DETAILS

NO SCALE

C-2

REVISED BY | DATE REVISED
BILL LEHMAN | JUSTIN BORDERS
CALCULATED-DESIGNED BY | CHECKED BY
FUNCTIONAL SUPERVISOR: AL TRUJILLO

STATE OF CALIFORNIA - DEPARTMENT OF TRANSPORTATION
Caltrans
DESIGN

P:\proj1\02\4E820_plans\pse\24e820ga002.dgn

LAST REVISION 05-01-12 | DATE PLOTTED => 11-MAY-2012 TIME PLOTTED => 12:21

Dist	COUNTY	ROUTE	POST MILES TOTAL PROJECT	SHEET No.	TOTAL SHEETS
02	Las	395	T5.3/56.5	4	12

REGISTERED CIVIL ENGINEER 05-01-12 DATE

05-07-12
PLANS APPROVAL DATE

REGISTERED PROFESSIONAL ENGINEER JUSTIN W. BORDERS No. C65918 Exp. 6-30-14 CIVIL STATE OF CALIFORNIA

THE STATE OF CALIFORNIA OR ITS OFFICERS OR AGENTS SHALL NOT BE RESPONSIBLE FOR THE ACCURACY OR COMPLETENESS OF SCANNED COPIES OF THIS PLAN SHEET.

NOTES:

1. EXACT LOCATION OF ALL SIGNS TO BE DETERMINED BY THE ENGINEER.
2. EXISTING UTILITY FACILITIES HAVE NOT BEEN PLOTTED ON THESE PLANS.

LEGEND

ONE POST STATIONARY MOUNTED SIGN

DIRECTION OF TRAFFIC

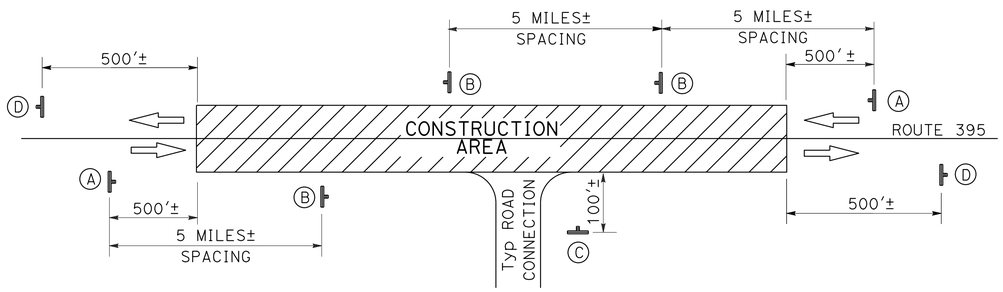

CONSTRUCTION AREA SIGNS (STATIONARY MOUNTED)

SIGN No.	CODE	PANEL SIZE	SIGN MESSAGE	NUMBER AND SIZE OF POST	No. OF SIGNS
A	G20-1	36" x 18"	ROAD WORK NEXT 50 MILES	1-4" x 6"	2
B	G20-1	36" x 18"	ROAD WORK NEXT XX MILES	1-4" X 4"	9
C	W20-1	48" x 48"	ROAD WORK AHEAD	1-4" X 6"	39
D	G20-2	36" x 18"	END ROAD WORK	1-4" X 4"	2

ROAD CONNECTIONS

Co-Rte	PM	LOCATION	# SIGNS
Las-395	14.34	RED ROCK ROAD	1
Las-395	R15.97	SCOTT ROAD	1
Las-395	R17.38	CONSTATIA ROAD	1
Las-395	R23.14	DOYLE LOOP/CONSTATIA ROAD	2
Las-395	R24.17	DOYLE GRADE ROAD	2
Las-395	25.21	RIVERVIEW DRIVE	1
Las-395	25.34	CAROL DRIVE	1
Las-395	25.63	RACHEL DRIVE	1
Las-395	26.59	LAVER CROSSING	1
Las-395	28.56	COWBOY JOE ROAD	1
Las-395	34.5	COUNTY HIGHWAY A25	1
Las-395	29.84	GARNIER ROAD	2
Las-395	39.35	MILFORD GRADE ROAD	1
Las-395	41.0	HIXON LANE	1
Las-395	41.3	STANSBURY AVENUE	1
Las-395	41.7	MILFORD GRADE	1
Las-395	41.78	SOUTH LAUFMAN ROAD	1
Las-395	43.9	LOUNSBURY LANE	1
Las-395	44.5	WRAN ROAD	1
Las-395	48.83	LAKECREST DRIVE	2
Las-395	50.34	HICKS ROAD	2
Las-395	50.7	JETERS RD/PAINTERS LANE	2
Las-395	51.87	STANDISH BUNNINGVILLE ROAD	1
Las-395	52.65	SOUTH JCT JANESVILLE ROAD	2
Las-395	53.10	SEARS ROAD	2
Las-395	54.10	SOUTH CHURCH STREET	2
Las-395	55.18	NORTH JANESVILLE ROAD	2
Las-395	56.34	SUNNYSIDE ROAD	1
Las-395	57.56	BASS HILL ROAD	1

CONSTRUCTION AREA SIGNS

NO SCALE

CS-1

REVISED BY | DATE REVISED
BILL LEHMAN | JUSTIN BORDERS
CALCULATED-DESIGNED BY | CHECKED BY
FUNCTIONAL SUPERVISOR
AL TRUJILLO

STATE OF CALIFORNIA - DEPARTMENT OF TRANSPORTATION
Caltrans
DESIGN

P:\proj1\02\4E820_plans\pse\24e8201a001.dgn

LAST REVISION 05-01-12 | DATE PLOTTED => 11-MAY-2012 | TIME PLOTTED => 12:21

Dist	COUNTY	ROUTE	POST MILES TOTAL PROJECT	SHEET No.	TOTAL SHEETS
02	Las	395	T5.3/56.5	5	12

REGISTERED CIVIL ENGINEER 05-01-12 DATE

05-07-12
PLANS APPROVAL DATE

REGISTERED PROFESSIONAL ENGINEER JUSTIN W. BORDERS No. C65918 Exp. 6-30-14 CIVIL STATE OF CALIFORNIA

THE STATE OF CALIFORNIA OR ITS OFFICERS OR AGENTS SHALL NOT BE RESPONSIBLE FOR THE ACCURACY OR COMPLETENESS OF SCANNED COPIES OF THIS PLAN SHEET.

LOCATION AND QUANTITY SUMMARY

BEGIN PM	END PM	THERMOPLASTIC TRAFFIC STRIPE (SPRAYABLE)				CENTERLINE RUMBLE STRIP (AC, GROUND IN INDENTATIONS)	PAVEMENT MARKERS (RETROREFLECTIVE-RECESSED)	
		DETAIL 6	DETAIL 19	DETAIL 22	DETAIL 29		TYPE D	TYPE H
		LF	LF	LF	LF	STATION	EA	EA
T5.37	6.90			8089		81	675	
6.90	7.23		1743			18	37	73
7.23	7.27	190				2	4	
7.27	7.89		3284			3	69	138
7.89	8.87		5164			52	109	215
8.87	9.79			4858		49	405	
9.79	9.95				1690	9	71	
9.95	11.78			9663		96	805	
11.78	12.32	2851				29	59	
12.32	12.45		687			7	15	29
12.45	12.87			2213		22	185	
12.87	13.00		681			7	15	28
13.00	14.03	5428				54	113	
14.03	14.08		264			3	7	12
14.08	14.17			475		5	40	
14.17	14.28				1152	6	49	
14.28	14.36			423		5	36	
14.36	14.51				1584	8	67	
14.51	14.78	1426				14	30	
14.78	14.92		739			8	16	32
14.92	15.23	1632				16	34	
15.23	15.40		898			9	20	38
15.40	15.51			581		6	49	
15.51	15.64		734			8	16	32
15.64	15.82	950				10	20	
R15.82	R15.93		539			6	12	23
R15.93	R15.98			306		3	27	
R15.98	R16.50		2725			28	58	115
R16.50	R17.24	3912				39	82	
R17.24	R17.32		423			5	10	19
R17.32	R17.51			998		10	83	
R17.51	R17.66		792			8	18	34
R17.66	R21.80	21,859				219	455	
R21.80	R22.03		1215			12	26	52
R22.03	R22.73	3696				37	77	
R22.73	R22.91		940			10	21	40
R22.91	R22.97			370		4	32	
R22.97	R23.02				528	3	23	
R23.02	R23.20			951		10	80	
R23.20	R23.34				1479	8	63	
R23.34	R23.65			1637		17	137	
R23.65	R23.74		475			5	11	21
R23.74	R23.97	1209				12	25	
R23.97	R24.06				951	5	41	
R24.06	R24.21			792		8	67	
R24.21	R24.29				845	5	36	
R24.29	R24.67			2007		20	168	
R24.67	R24.75		402			4	9	18
R24.75	25.21			2429		25	203	
25.21	25.26				528	3	23	
25.26	25.71			2376		24	199	
25.71	25.81		528			6	12	23
25.81	26.28	2476				25	52	
26.28	26.37		475			5	11	21
26.37	26.42			264		3	23	
26.42	27.61				12,567	8	525	
27.61	27.83			1162		12	98	
27.83	28.29	2418				24	50	
28.29	28.45		845			9	19	36
28.45	28.58			687		9	58	
28.58	30.09				15,957	10	666	
30.09	30.23			740		8	63	
30.23	33.12	15,260				153	346	
33.12	33.36		1267			13	27	54
SUBTOTAL		63,307	24,820	41,021	37,281	1342	6882	1053
TOTAL THIS SHEET		166,429				1342	7935	

PAVEMENT DELINEATION QUANTITIES

PDQ-1

REVISED BY | DATE REVISED

BILL LEHMAN | JUSTIN BORDERS

CALCULATED-DESIGNED BY | CHECKED BY

FUNCTIONAL SUPERVISOR: AL TRUJILLO

STATE OF CALIFORNIA - DEPARTMENT OF TRANSPORTATION

Caltrans® DESIGN

P:\proj1\02\4E820_plans\pse\24e820nc001.dgn

LAST REVISION 05-01-12 | DATE PLOTTED => 11-MAY-2012 TIME PLOTTED => 12:21

Dist	COUNTY	ROUTE	POST MILES TOTAL PROJECT	SHEET No.	TOTAL SHEETS
02	Las	395	T5.3/56.5	6	12

REGISTERED CIVIL ENGINEER 05-01-12 DATE

05-07-12
PLANS APPROVAL DATE

REGISTERED PROFESSIONAL ENGINEER JUSTIN W. BORDERS No. C65918 Exp. 6-30-14 CIVIL STATE OF CALIFORNIA

THE STATE OF CALIFORNIA OR ITS OFFICERS OR AGENTS SHALL NOT BE RESPONSIBLE FOR THE ACCURACY OR COMPLETENESS OF SCANNED COPIES OF THIS PLAN SHEET.

LOCATION AND QUANTITY SUMMARY

BEGIN PM	END PM	THERMOPLASTIC TRAFFIC STRIPE (SPRAYABLE) DETAIL 6 LF	DETAIL 19 LF	DETAIL 22 LF	DETAIL 29 LF	CENTERLINE RUMBLE STRIP (AC, GROUND IN INDENTATIONS) STATION	PAVEMENT MARKERS (RETROREFLECTIVE-RECESSED) TYPE D EA	TYPE H EA
33.36	33.44			423		5	36	
33.44	33.62		945			10	20	40
33.62	34.23	3216				32	67	
34.23	34.31		423			5	9	18
34.31	34.41				1056	6	44	
34.41	34.54			423		5	36	
34.54	34.62				845	5	36	
34.62	34.76			740		8	62	
34.76	34.97		2218			23	47	93
34.97	36.29				13,940	0	581	
36.29	36.50			1109		12	93	
36.50	36.75		1315			14	28	55
36.75	39.83	16,278				163	340	
39.83	39.88		264			3	22	11
39.88	39.97			475		5	40	
39.97	40.65				7181	0	300	
40.65	41.39			3908		40	326	
41.39	41.54				1584	8	66	
41.54	41.64			528		6	44	
41.64	41.80				1690	9	71	
41.91	42.21	1584				16	33	
42.21	42.29		423			5	9	18
42.29	42.36			365		4	31	
42.36	42.48		634			7	14	27
42.48	43.83	7112				71	149	
43.83	44.00		898			9	19	38
44.00	44.25	1320				13	28	
44.25	44.43			951		10	80	
44.48	44.51		159			2	4	7
44.51	45.49	5164				52	108	
45.49	46.40				9610	4	401	
46.40	46.55			813		8	68	
46.55	46.63		423			9	9	18
46.63	48.48	9742				98	203	
48.48	48.55		370			4	8	16
48.55	48.81			1373		14	115	
48.81	49.41				6336	6	264	
49.41	49.50			476		5	40	
49.50	49.60				1056	56	44	
49.60	49.97		977			28	20	41
49.97	50.05			423		5	36	
50.05	50.15				1056	6	44	
50.15	50.33			951		10	80	
50.33	50.43				1056	6	44	
50.43	50.65			1162		12	97	
50.65	50.74		486			5	11	21
50.74	51.57	4372				44	92	
51.57	51.63		317			3	7	14
51.63	51.85			1162		12	97	
51.85	51.94				951	5	40	
51.94	52.01		370			3	8	16
52.01	52.25	1267				13	27	
52.25	52.35		528			6	11	22
52.35	52.44				951	5	40	
52.44	52.63			1004		10	84	
52.63	52.73				1056	6	44	
52.73	52.91			951		10	80	
52.82	52.91				951	5	40	
52.91	53.09			951		10	80	
53.09	53.18				951	5	40	
53.18	53.23			264		3	22	
53.23	53.30		365			4	8	16
SUBTOTAL		50,055	11,115	18,452	50,270	968	4947	471
TOTAL THIS SHEET		129,892				968	5418	
TOTAL SHEET 1		166,429				1342	7935	
TOTAL		296,321				2310	13353	

PAVEMENT DELINEATION QUANTITIES

PDQ-2

STATE OF CALIFORNIA - DEPARTMENT OF TRANSPORTATION
Caltrans DESIGN

BILL LEHMAN — REVISED BY
JUSTIN BORDERS — DATE REVISED
CALCULATED-DESIGNED BY
CHECKED BY
AL TRUJILLO — FUNCTIONAL SUPERVISOR

P:\proj1\02\4E820_plans\pse\24e820nc002.dgn

LAST REVISION 05-01-12
DATE PLOTTED => 11-MAY-2012
TIME PLOTTED => 12:21

Dist	COUNTY	ROUTE	POST MILES TOTAL PROJECT	SHEET No.	TOTAL SHEETS
02	Las	395	T5.3/56.5	7	12

REGISTERED CIVIL ENGINEER 05-01-12 DATE

05-07-12
PLANS APPROVAL DATE

REGISTERED PROFESSIONAL ENGINEER JUSTIN W. BORDERS No. C65918 Exp. 6-30-14 CIVIL STATE OF CALIFORNIA

THE STATE OF CALIFORNIA OR ITS OFFICERS OR AGENTS SHALL NOT BE RESPONSIBLE FOR THE ACCURACY OR COMPLETENESS OF SCANNED COPIES OF THIS PLAN SHEET.

LOCATION AND QUANTITY SUMMARY

BEGIN PM	END PM	THERMOPLASTIC TRAFFIC STRIPE (SPRAYABLE)				CENTERLINE RUMBLE STRIP (AC, GROUND IN INDENTATIONS)	PAVEMENT MARKERS (RETROREFLECTIVE-RECESSED)	
		DETAIL 6	DETAIL 19	DETAIL 22	DETAIL 29		TYPE D	TYPE H
		LF	LF	LF	LF	STATION	EA	EA
53.30	53.70	2112				21	44	
53.70	53.77		365			7	9	16
53.77	53.81			212		20	19	
53.77	53.89				866	5	37	
53.89	54.07			951		10	80	
54.08	54.97				9399	5	392	
54.97	55.15			951		10	80	
55.15	55.26				1204	6	52	
55.26	55.76			2640		36	221	
55.08	55.85		4066			81	86	170
55.85	56.03	945				9	20	
56.03	56.08		264			5	7	12
56.08	56.28			1056		18	89	
56.28	56.38				1056	6	44	
56.38	56.41			159		2	14	
56.41	56.53		634			13	14	27
56.53	56.60	370				4	8	
SUBTOTAL		3427	5329	5969	12,525	258	1216	225
TOTAL THIS SHEET		27,250				258	1441	
TOTAL SHEET 1		166,429				1342	7935	
TOTAL SHEET 2		129,892				968	5418	
GRAND TOTAL		323,571				2568	14,794	

PAVEMENT DELINEATION QUANTITIES

PDQ-3

BILL LEHMAN — CALCULATED-DESIGNED BY
JUSTIN BORDERS — CHECKED BY
AL TRUJILLO — FUNCTIONAL SUPERVISOR
REVISED BY — DATE REVISED

STATE OF CALIFORNIA - DEPARTMENT OF TRANSPORTATION
Caltrans
DESIGN

P:\proj1\02\4E820_plans\pse\24e820nc003.dgn

LAST REVISION 05-01-12 | DATE PLOTTED => 11-MAY-2012 | TIME PLOTTED => 12:21

Dist	COUNTY	ROUTE	POST MILES TOTAL PROJECT	SHEET No.	TOTAL SHEETS
02	Las	395	T5.3/56.5	8	12

REGISTERED CIVIL ENGINEER 05-01-12 DATE

05-07-12
PLANS APPROVAL DATE

REGISTERED PROFESSIONAL ENGINEER JUSTIN W. BORDERS No. C65918 Exp. 6-30-14 CIVIL STATE OF CALIFORNIA

THE STATE OF CALIFORNIA OR ITS OFFICERS OR AGENTS SHALL NOT BE RESPONSIBLE FOR THE ACCURACY OR COMPLETENESS OF SCANNED COPIES OF THIS PLAN SHEET.

ABBREVIATIONS:

CCTV CLOSED CIRCUIT TV
RWIS ROADWAY INFORMATION WEATHER SYSTEM

EXISTING TRAFFIC MANAGEMENT SYSTEMS (TMS) - TO BE MAINTAINED AND LOOP DETECTORS - PROTECT IN PLACE

Co-Rte-PM	TYPE	DESCRIPTION
Las-395-PM 7.668	LOOP DETECTOR	201' SOUTH OF THE "SHOE TREE" & 1754' SOUTH OF PM 8.0 (2 LOOPS)
Las-395-PM R21.88	RWIS	1.3 MILES SOUTH OF DOYLE LOOP (NO PAVEMENT SENSORS)
Las-395-PM R21.88	CCTV	1.3 MILES SOUTH OF DOYLE LOOP
Las-395-PM 29.725	LOOP DETECTOR	605' SOUTH OF COUNTY ROAD A26 (2 LOOPS)
Las-395-PM 31.31	LOOP DETECTOR	1.5 MILES NORTH OF COUNTY ROAD A26 AT BIRD FLAT RANCH (2 LOOP)
Las-395-PM 49.53	LOOP DETECTOR	HONEY LAKE REST AREA (1 LOOP)
Las-395-PM 51.68	WEIGH IN MOTION	SOUTH OF COUNTY ROAD A3 (STANDISH/BUNTINGVILLE ROAD) (4 LOOPS)
Las-395-PM 51.70	HAR FLASHER	0.2 MILE SOUTH OF COUNTY ROAD A3
Las-395-PM 51.72	LOOP DETECTOR	946' SOUTH OF COUNTY ROAD A3 (STANDISH/BUNTINGVILLE ROAD) (2 LOOPS)
Las-395-PM 52.45	LOOP DETECTOR	263' SOUTH OF PM 52.50 AT THE JANESVILLE SIGN (2 LOOPS)
Las-395-PM 53.10	RWIS	JUST SOUTH OF SEARS ROAD NEAR JANESVILLE (NO PAVEMENT SENSORS)
Las-395-PM 53.10	CCTV	JUST SOUTH OF SEARS ROAD NEAR JANESVILLE

SUMMARY OF QUANTITIES
Q-1

REVISED BY | DATE REVISED
BILL LEHMAN | JUSTIN BORDERS
CALCULATED-DESIGNED BY | CHECKED BY
FUNCTIONAL SUPERVISOR
AL TRUJILLO

STATE OF CALIFORNIA - DEPARTMENT OF TRANSPORTATION
Caltrans DESIGN

P:\proj1\02\4E820_plans\pse\24e820pa001.dgn

LAST REVISION 05-01-12 | DATE PLOTTED => 11-MAY-2012 | TIME PLOTTED => 12:21

DIST	COUNTY	ROUTE	POST MILES TOTAL PROJECT	SHEET NO.	TOTAL SHEETS
02	Las	395	T5.3/56.5	9	12

Randell D. Hiatt
REGISTERED CIVIL ENGINEER

June 6, 2008
PLANS APPROVAL DATE

REGISTERED PROFESSIONAL ENGINEER
Randell D. Hiatt
No. C50200
Exp. 6-30-09
CIVIL
STATE OF CALIFORNIA

The State of California or its officers or agents shall not be responsible for the accuracy or completeness of electronic copies of this plan sheet.

To accompany plans dated 05-07-12

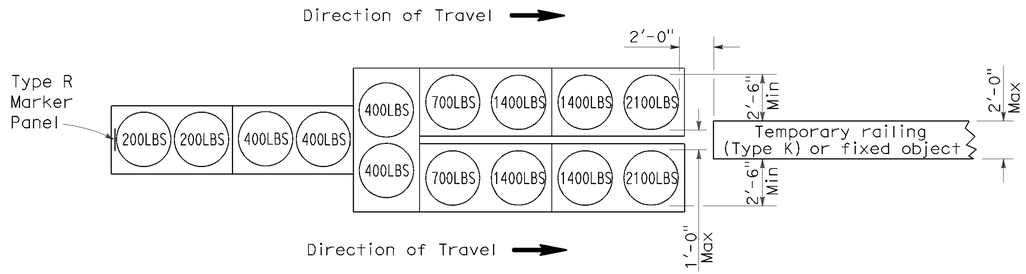

ARRAY 'TU14'

Approach speed 45 mph or more

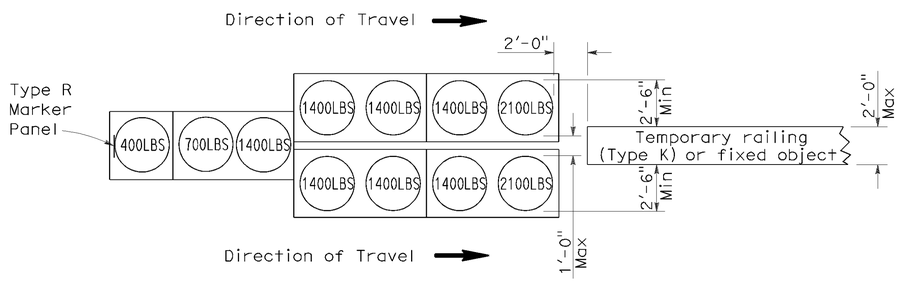

ARRAY 'TU11'

Approach speed less than 45 mph

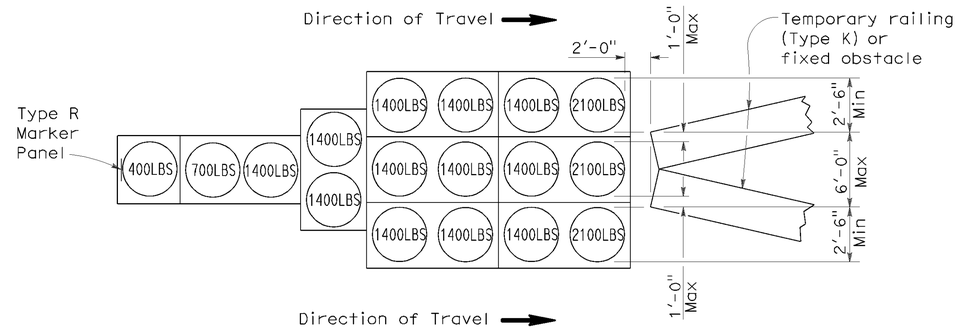

ARRAY 'TU17'

Approach speed less than 45 mph

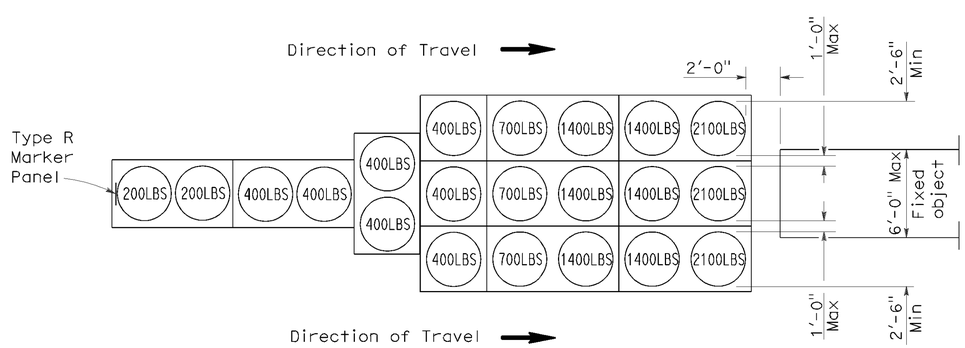

ARRAY 'TU21'

Approach speed 45 mph or more

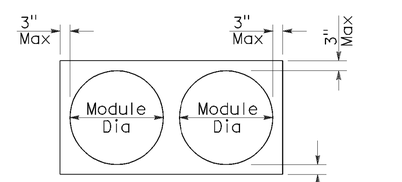

PLAN

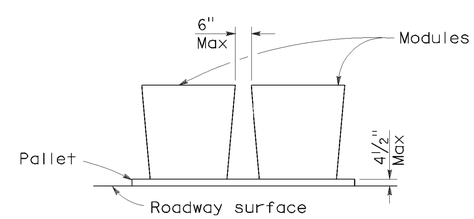

ELEVATION

CRASH CUSHION PALLET DETAIL

See Note 7

NOTES:

1. (XXX) Indicates sand filled module location and weight of sand in pounds for each module. Module spacing is based on the greater diameter of the module.
2. All sand weights are nominal.
3. Temporary crash cushion arrays shall not encroach on the traveled way.
4. Place the top of Type R marker panel 1" below the module lid.
5. Refer to Standard Plan A73B for marker details.
6. Approach speeds indicated conform to NCHRP 350 Report criteria.
7. Use of pallets is optional.

STATE OF CALIFORNIA
DEPARTMENT OF TRANSPORTATION

TEMPORARY CRASH CUSHION, SAND FILLED (UNIDIRECTIONAL)

NO SCALE

RSP T1A DATED JUNE 6, 2008 SUPERSEDES STANDARD PLAN T1A
DATED MAY 1, 2006 - PAGE 211 OF THE STANDARD PLANS BOOK DATED MAY 2006.

REVISED STANDARD PLAN RSP T1A

2006 REVISED STANDARD PLAN RSP T1A

P:\proj1\02\4E820_plans\pse\24e820va001.dgn
USERNAME => s115152
DGN FILE => 24e820va001.dgn
DATE PLOTTED => 11-MAY-2012
TIME PLOTTED => 12:21
5-15-08

DIST	COUNTY	ROUTE	POST MILES TOTAL PROJECT	SHEET NO.	TOTAL SHEETS
02	Las	395	T5.3/56.5	10	12

Randell D. Hiatt
REGISTERED CIVIL ENGINEER

June 6, 2008
PLANS APPROVAL DATE

REGISTERED PROFESSIONAL ENGINEER
Randell D. Hiatt
No. C50200
Exp. 6-30-09
CIVIL
STATE OF CALIFORNIA

The State of California or its officers or agents shall not be responsible for the accuracy or completeness of electronic copies of this plan sheet.

To accompany plans dated 05-07-12

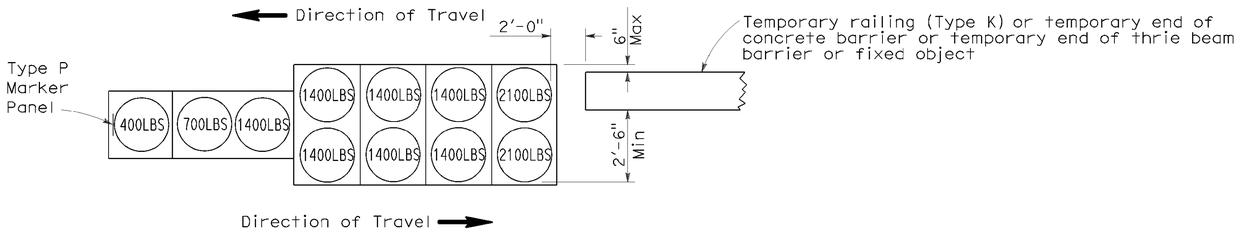

ARRAY 'TB11'

Approach speed less than 45 mph

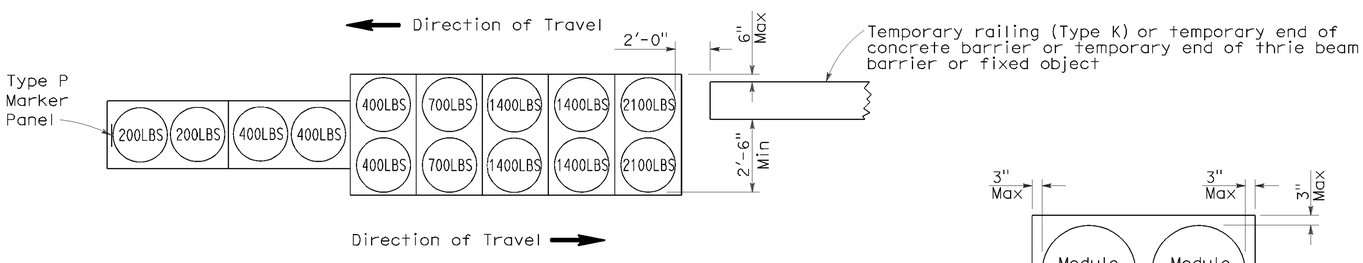

ARRAY 'TB14'

Approach speed 45 mph or more

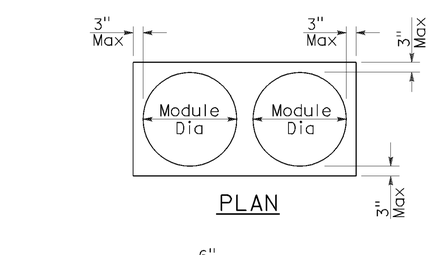

PLAN

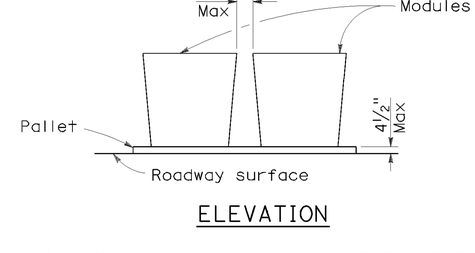

ELEVATION

CRASH CUSHION PALLET DETAIL

See Note 7

NOTES:

1. (XXX) Indicates sand filled module location and weight of sand in pounds for each module. Module spacing is based on the greater diameter of the module.
2. All sand weights are nominal.
3. Temporary crash cushion arrays shall not encroach on the traveled way.
4. Place the Type P marker panel so that the bottom of the panel rests upon the pallet.
5. Refer to Standard Plan A73B for marker details.
6. Approach speeds indicated conform to NCHRP 350 Report criteria.
7. Use of pallets is optional.

STATE OF CALIFORNIA
DEPARTMENT OF TRANSPORTATION

TEMPORARY CRASH CUSHION, SAND FILLED (BIDIRECTIONAL)

NO SCALE

RSP T1B DATED JUNE 6, 2008 SUPERSEDES STANDARD PLAN T1B
DATED MAY 1, 2006 - PAGE 212 OF THE STANDARD PLANS BOOK DATED MAY 2006.

REVISED STANDARD PLAN RSP T1B

2006 REVISED STANDARD PLAN RSP T1B

P:\proj1\02\4E820_plans\pse\24e820va002.dgn
USERNAME => s115152
DGN FILE => 24e820va002.dgn
DATE PLOTTED => 11-MAY-2012
TIME PLOTTED => 12:21
5-15-08

DIST	COUNTY	ROUTE	POST MILES TOTAL PROJECT	SHEET NO.	TOTAL SHEETS
02	Las	395	T5.3/56.5	11	12

Randell D. Hiatt
REGISTERED CIVIL ENGINEER

June 6, 2008
PLANS APPROVAL DATE

REGISTERED PROFESSIONAL ENGINEER
Randell D. Hiatt
No. C50200
Exp. 6-30-09
CIVIL
STATE OF CALIFORNIA

The State of California or its officers or agents shall not be responsible for the accuracy or completeness of electronic copies of this plan sheet.

To accompany plans dated 05-07-12

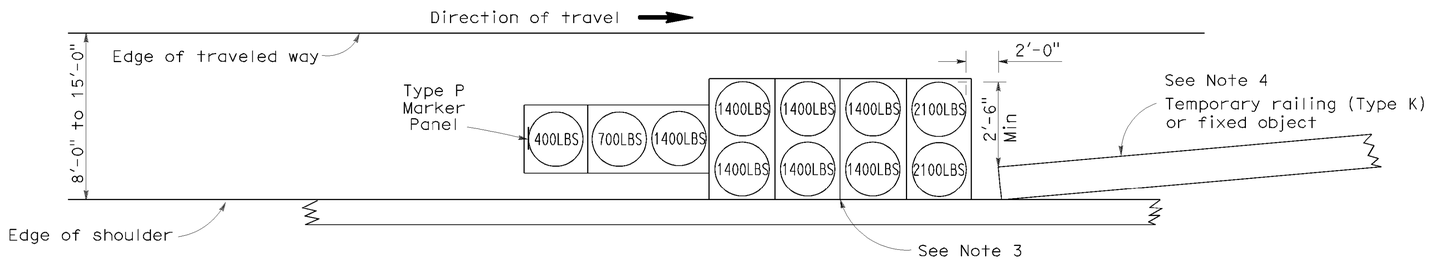

ARRAY 'TS11'

Approach speed less than 45 mph
See Note 9

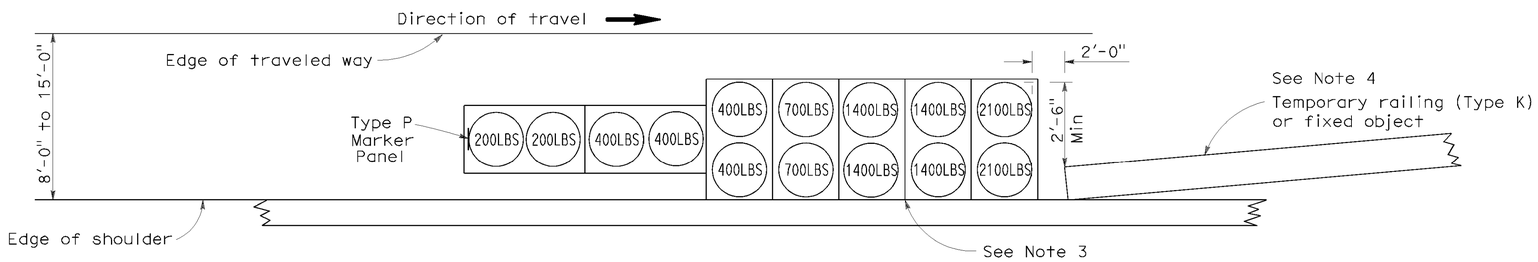

ARRAY 'TS14'

Approach speed 45 mph or more
See Note 9

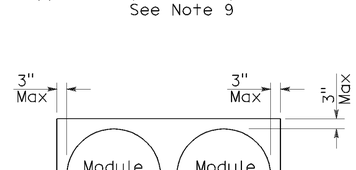

PLAN

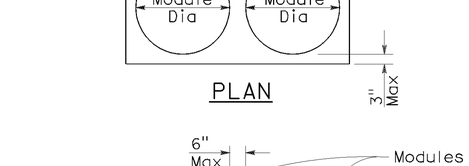

ELEVATION

CRASH CUSHION PALLET DETAIL

See Note 11

NOTES:

1. (XXX) Indicates sand filled module location and weight of sand in pounds for each module. Module spacing is based on the greater diameter of the module.
2. All sand weights are nominal.
3. The temporary crash cushion arrays shown on this plan shall be used only in locations where there will be traffic on one side of the temporary crash cushion array.
4. If the fixed object or approach end of the temporary railing is less than 15'-0" from the edge of traveled way, a temporary crash cushion is required in a construction or work zone.
5. Temporary crash cushion arrays shall not encroach on the traveled way.
6. Arrays for median shoulders shall conform to details shown on this plan for outside shoulders.
7. Place the Type P marker panel so that the bottom of the panel rests upon the pallet and faces traffic.
8. Refer to Standard Plan A73B for marker details.
9. For shoulder widths less than 8'-0", appropriate approved crash cushion protection, other than sand filled modules, shall be provided at fixed objects and at approach ends of temporary railing. The specific type of crash cushion shall be as shown on the project plans or as specified in the Special Provisions, or if not shown on the project plans or specified in the Special Provisions, shall be as approved by the Engineer.
10. Approach speeds indicated conform to NCHRP 350 Report criteria.
11. Use of pallets is optional.

STATE OF CALIFORNIA
DEPARTMENT OF TRANSPORTATION

TEMPORARY CRASH CUSHION, SAND FILLED (SHOULDER INSTALLATIONS)

NO SCALE

RSP T2 DATED JUNE 6, 2008 SUPERSEDES STANDARD PLAN T2
DATED MAY 1, 2006 - PAGE 213 OF THE STANDARD PLANS BOOK DATED MAY 2006.

REVISED STANDARD PLAN RSP T2

2006 REVISED STANDARD PLAN RSP T2

P:\proj1\02\4E820_plans\pse\24e820va003.dgn
USERNAME => s115152
DGN FILE => 24e820va003.dgn
DATE PLOTTED => 11-MAY-2012
TIME PLOTTED => 12:21
5-15-08

Dist	COUNTY	ROUTE	POST MILES TOTAL PROJECT	SHEET No.	TOTAL SHEETS
02	Las	395	T5.3/56.5	12	12

Randell D. Hiatt
REGISTERED CIVIL ENGINEER

May 20, 2011
PLANS APPROVAL DATE

REGISTERED PROFESSIONAL ENGINEER
Randell D. Hiatt
No. C50200
Exp. 6-30-11
CIVIL
STATE OF CALIFORNIA

The State of California or its officers or agents shall not be responsible for the accuracy or completeness of electronic copies of this plan sheet.

To accompany plans dated 05-07-12

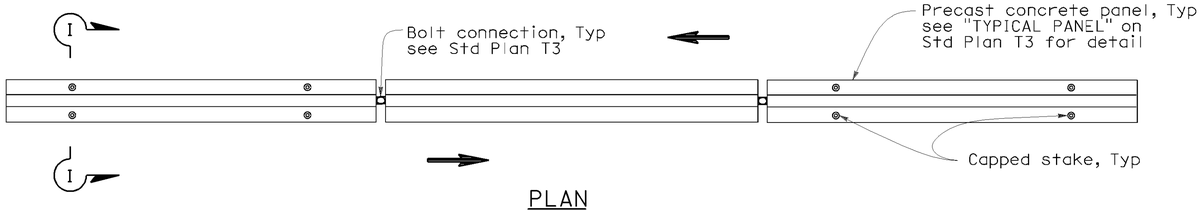

PLAN

RAILING STAKING CONFIGURATION FOR TWO-WAY TRAFFIC

See Note 1

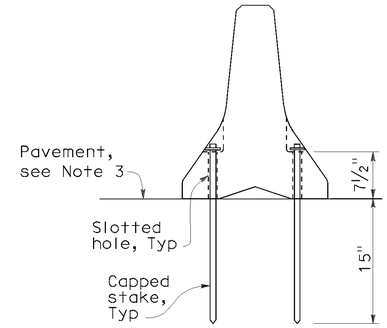

SECTION I-I

NOTES:

1. Where Type K Temporary Railing is placed as a temporary or long term barrier in two-way traffic on highways with less than 24" from the edge of traveled way, use four capped stakes per every other panel with end panels staked.
2. Where Type K Temporary Railing is placed 3" to 24" from the edge of an excavation on highways, use two capped stakes per panel along the traffic side.
3. Staked Type K Temporary Railing must be supported by at least 4" thick concrete, hot mix asphalt or existing asphalt concrete pavement.
4. The minimum yield strength for the washer must be 60,000 psi.
5. Direction of adjacent traffic indicated by ⟹.

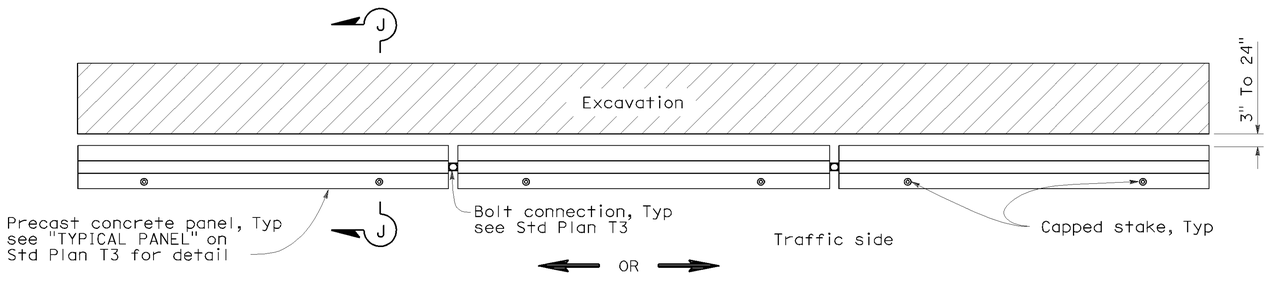

PLAN

RAILING STAKING CONFIGURATION ADJACENT TO AN EXCAVATION

See Note 2

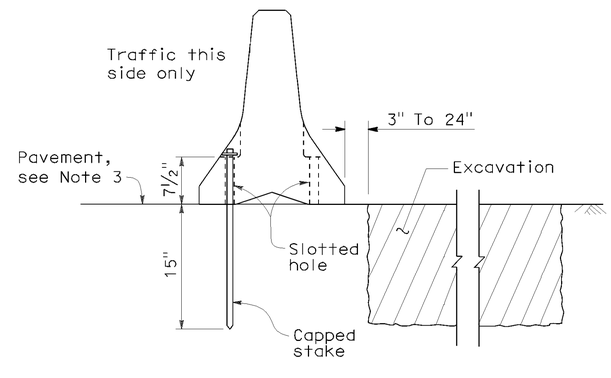

SECTION J-J

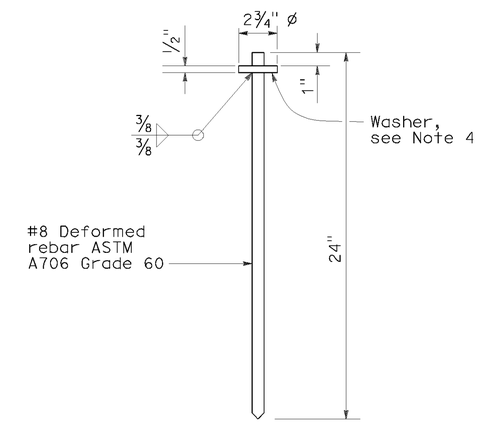

CAPPED STAKE DETAIL

STATE OF CALIFORNIA
DEPARTMENT OF TRANSPORTATION

TEMPORARY RAILING (TYPE K)

NO SCALE

NSP T3A DATED MAY 20, 2011 SUPPLEMENTS
THE STANDARD PLANS BOOK DATED MAY 2006.

NEW STANDARD PLAN NSP T3A

2006 NEW STANDARD PLAN NSP T3A

DATE PLOTTED => 11-MAY-2012
TIME PLOTTED => 12:21

P:\proj1\02\4E820_plans\pse\24e820va004.dgn

USERNAME => s115152
DGN FILE => 24e820va004.dgn

8-31-10