| Dist | COUNTY | ROUTE | POST MILES TOTAL PROJECT | SHEET No. | TOTAL SHEETS |
|---|---|---|---|---|---|
| 02 | Sis | 96 | 56.0 | 1 | 92 |

SHRP2-P096(053)

STATE OF CALIFORNIA
# DEPARTMENT OF TRANSPORTATION

## PROJECT PLANS FOR CONSTRUCTION ON
# STATE HIGHWAY
## IN SISKIYOU COUNTY NEAR SEIAD VALLEY AT 3.5 MILES EAST OF THOMPSON CREEK BRIDGE

TO BE SUPPLEMENTED BY STANDARD PLANS DATED 2010

INDEX OF PLANS


| SHEET No. | DESCRIPTION |
|---|---|
| 1 | TITLE AND LOCATION MAP |
| 2-3 | TYPICAL CROSS SECTIONS |
| 4 | LAYOUT |
| 5 | PROFILES AND SUPERELEVATION DIAGRAMS |
| 6-11 | CONSTRUCTION DETAILS |
| 12 | WATER POLLUTION CONTROL DETAILS |
| 13-16 | DRAINAGE PLANS, PROFILES, DETAILS AND QUANTITIES |
| 17 | UTILITY PLANS |
| 18-19 | CONSTRUCTION AREA SIGNS |
| 20-30 | STAGE CONSTRUCTION AND TRAFFIC HANDLING PLANS, DETAILS AND QUANTITIES |
| 31-33 | PAVEMENT DELINEATION AND SIGN PLANS |
| 34 | SUMMARY OF QUANTITIES |
| 35-36 | EROSION CONTROL PLANS |
| 37-39 | ELECTRICAL PLANS |
| 40-69 | REVISED STANDARD PLANS |

STRUCTURES

| | |
|---|---|
| 70-92 | STRUCTURE PLANS |


THE STANDARD PLANS LIST APPLICABLE TO THIS CONTRACT IS INCLUDED IN THE NOTICE TO BIDDERS AND SPECIAL PROVISIONS BOOK.

LOCATION MAP

## LOCATION OF CONSTRUCTION
**Sta "CL1" 162+49 PM 56.0**

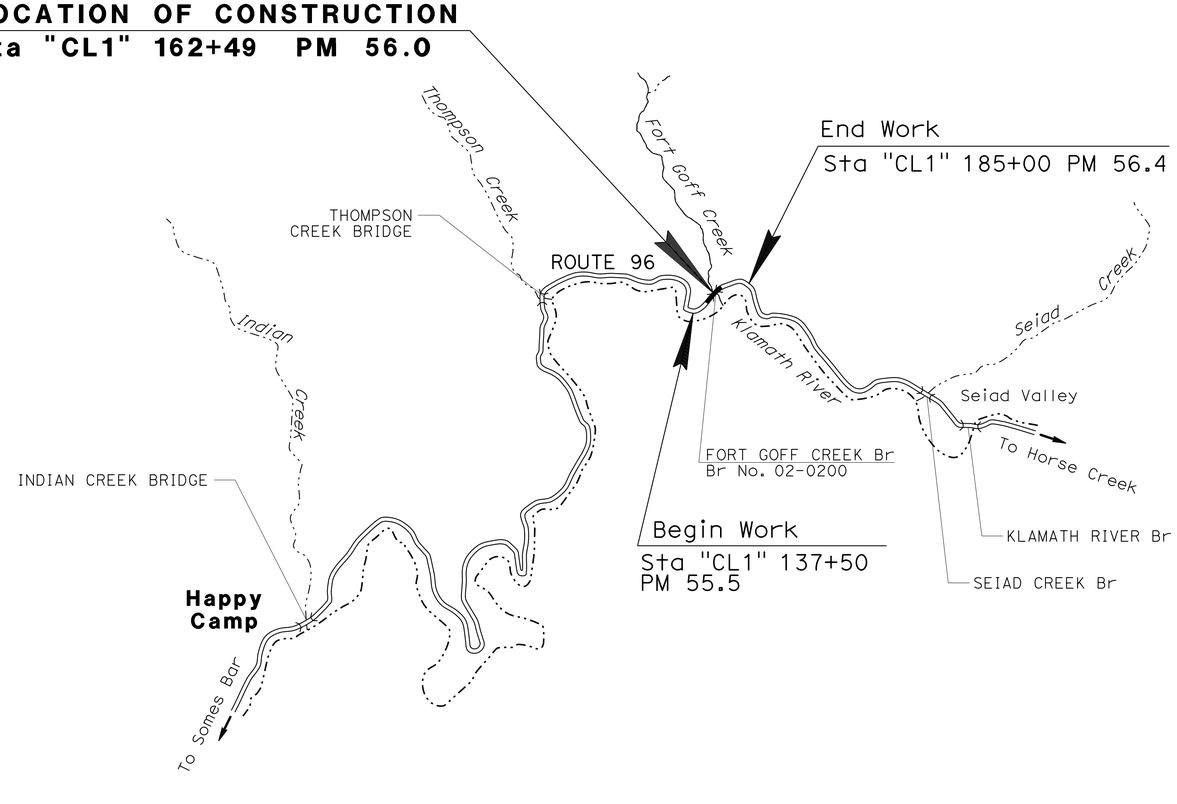


NO SCALE

Brett Ditzler 10-23-13
PROJECT ENGINEER DATE
REGISTERED CIVIL ENGINEER

October 25, 2013
PLANS APPROVAL DATE

REGISTERED PROFESSIONAL ENGINEER
BRETT DITZLER
No. C74085
Exp. 6-30-15
CIVIL
STATE OF CALIFORNIA

*THE STATE OF CALIFORNIA OR ITS OFFICERS OR AGENTS SHALL NOT BE RESPONSIBLE FOR THE ACCURACY OR COMPLETENESS OF SCANNED COPIES OF THIS PLAN SHEET.*

THE CONTRACTOR SHALL POSSESS THE CLASS (OR CLASSES) OF LICENSE AS SPECIFIED IN THE "NOTICE TO BIDDERS."

| CONTRACT No. | 02-4E6304 |
|---|---|
| PROJECT ID | 0212000010 |

PROJECT MANAGER: DEREK WILLIS
DESIGN ENGINEER: STEVE THORNE

P:\proj1\02\4E630_plans\pse\24e630ab001.dgn

LAST REVISION 10-25-13 | DATE PLOTTED => 24-OCT-2013 | TIME PLOTTED => 07:14

| Dist | COUNTY | ROUTE | POST MILES TOTAL PROJECT | SHEET No. | TOTAL SHEETS |
|---|---|---|---|---|---|
| 02 | Sis | 96 | 56.0 | 2 | 92 |

Brett Ditzler 10-23-13
REGISTERED CIVIL ENGINEER DATE

10-25-13
PLANS APPROVAL DATE

REGISTERED PROFESSIONAL ENGINEER BRETT DITZLER No. C74085 Exp. 6-30-15 CIVIL STATE OF CALIFORNIA

*THE STATE OF CALIFORNIA OR ITS OFFICERS OR AGENTS SHALL NOT BE RESPONSIBLE FOR THE ACCURACY OR COMPLETENESS OF SCANNED COPIES OF THIS PLAN SHEET.*

## NOTES:

1. DIMENSIONS OF THE PAVEMENT STRUCTURES (STRUCTURAL SECTIONS) ARE SUBJECT TO TOLERANCES SPECIFIED IN THE STANDARD SPECIFICATIONS.
2. SUPERELEVATIONS ARE SHOWN ON THE SUPERELEVATION DIAGRAM.
3. SEE LAYOUTS FOR GUARDRAIL AND CRASH CUSHION LOCATIONS.
4. SEE LAYOUTS FOR ADDITIONAL INFORMATION ON TEMPORARY CONSTRUCTION EASEMENTS.
5. SEE CONSTRUCTION DETAILS FOR CROSS SECTIONS AT DRIVEWAYS.

## ABBREVIATIONS;

Super SUPERELEVATION

HMA-A HOT MIX ASPHALT (TYPE A)

## DESIGN DESIGNATION

ADT (2014) = 603 D = 62%
ADT (2034) = 623 T = 4%
TI (2034) = 7.0 V = 55 MPH

## PAVEMENT CLIMATE REGION

LOW MOUNTAIN

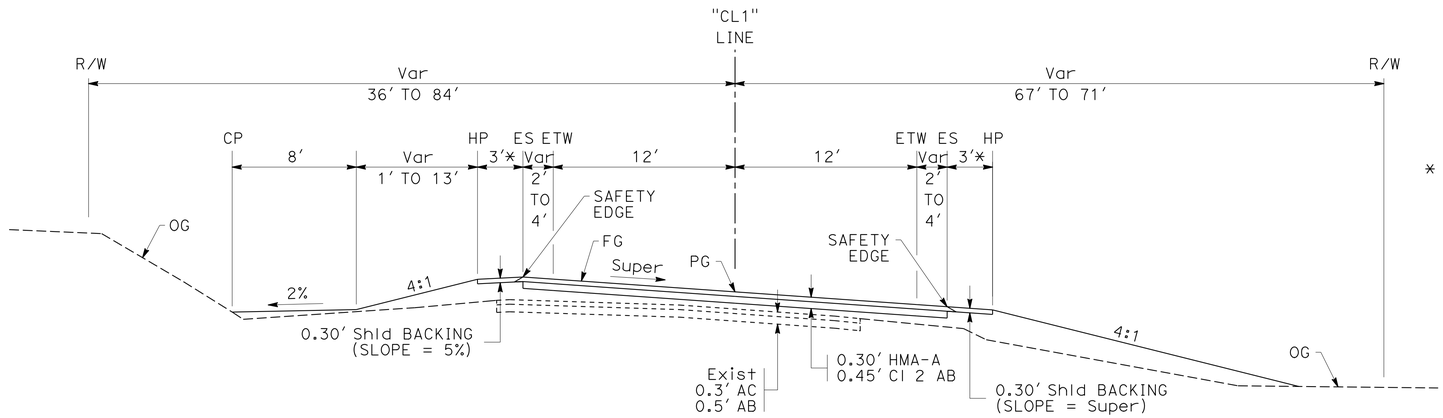


"CL1" 159+80 TO "CL1" 161+28.5

* DIMENSION VARIES WITHIN THE FOLLOWING LIMITS:
"CL1" 161+12.5 TO 161+18.5: Var 3' TO 4'
"CL1" 161+18.5 TO 161+28.5: 4'

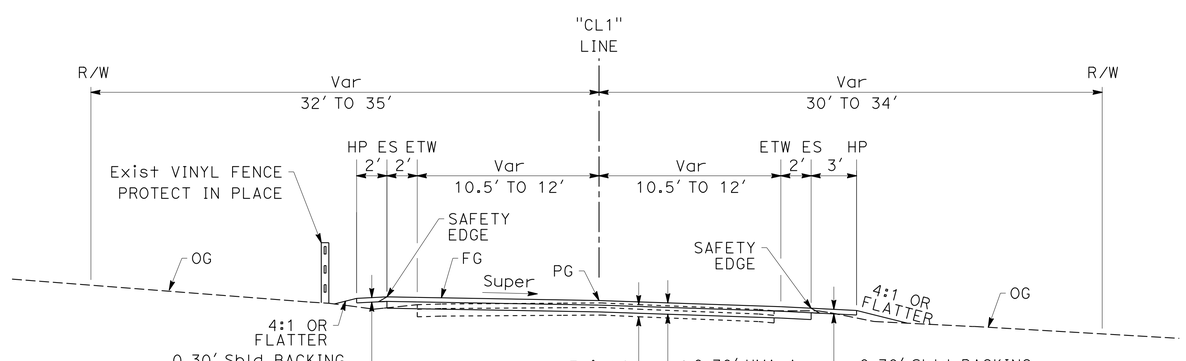


"CL1" 157+57.10 TO "CL1" 159+80

**ROUTE 96**

# TYPICAL CROSS SECTIONS

NO SCALE

**X-1**

REVISED BY | DATE REVISED
BRETT DITZLER | ALEX PETERSON
CALCULATED-DESIGNED BY | CHECKED BY
FUNCTIONAL SUPERVISOR
STEVE THORNE

STATE OF CALIFORNIA - DEPARTMENT OF TRANSPORTATION
Caltrans® HYDRAULICS DESIGN

P:\proj1\02\4E630_plans\pse\24e630ca001.dgn

LAST REVISION 10-23-13 | DATE PLOTTED => 24-OCT-2013 | TIME PLOTTED => 07:14

| Dist | COUNTY | ROUTE | POST MILES TOTAL PROJECT | SHEET No. | TOTAL SHEETS |
|---|---|---|---|---|---|
| 02 | Sis | 96 | 56.0 | 3 | 92 |

Brett Ditzler 10-23-13
REGISTERED CIVIL ENGINEER DATE

10-25-13
PLANS APPROVAL DATE

REGISTERED PROFESSIONAL ENGINEER
BRETT DITZLER
No. C74085
Exp. 6-30-15
CIVIL
STATE OF CALIFORNIA

*THE STATE OF CALIFORNIA OR ITS OFFICERS OR AGENTS SHALL NOT BE RESPONSIBLE FOR THE ACCURACY OR COMPLETENESS OF SCANNED COPIES OF THIS PLAN SHEET.*

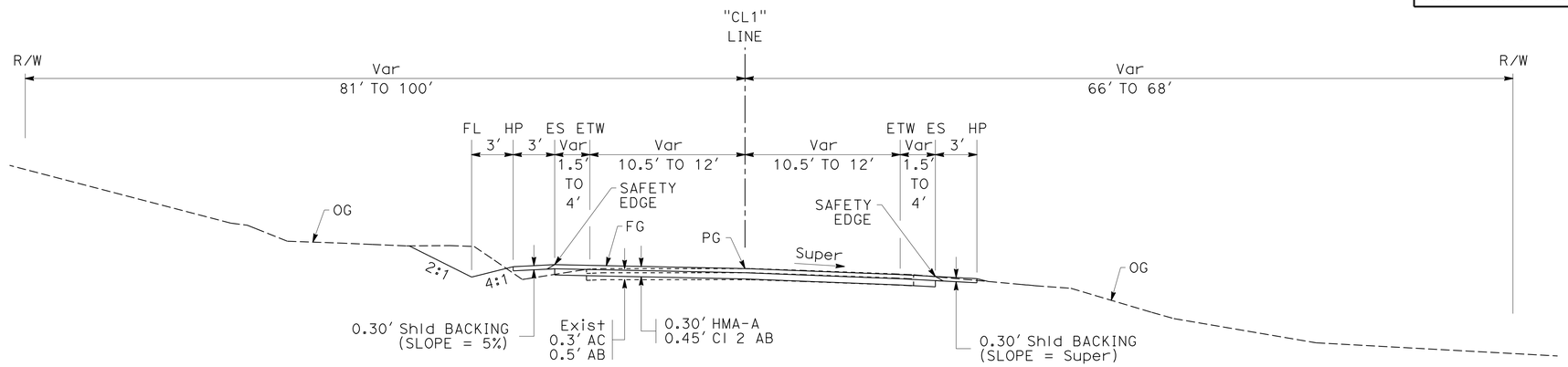


"CL1" 163+75.89 TO "CL1" 164+79.02

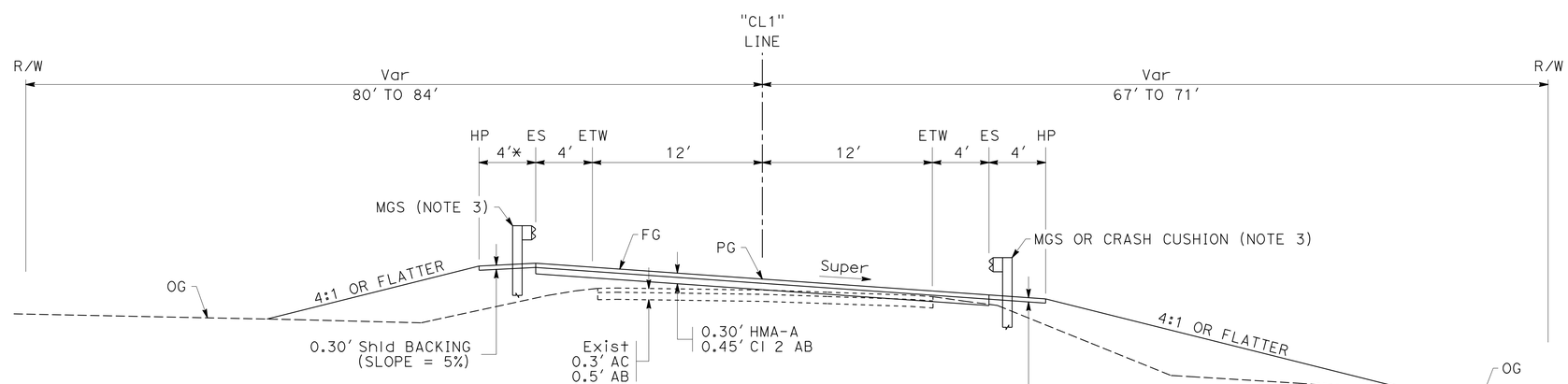


* DIMENSION VARIES WITHIN THE FOLLOWING LIMITS:
"CL1" 163+14.7 TO 163+52.2: Var 4' TO 8'

"CL1" 161+28.5 TO "CL1" 162+18.73 BB
"CL1" 162+78.73 EB TO 163+75.89

**ROUTE 96**

# TYPICAL CROSS SECTIONS

NO SCALE

**X-2**

REVISED BY | DATE REVISED
BRETT DITZLER | ALEX PETERSON
CALCULATED-DESIGNED BY | CHECKED BY
FUNCTIONAL SUPERVISOR
STEVE THORNE

STATE OF CALIFORNIA - DEPARTMENT OF TRANSPORTATION
Caltrans® **HYDRAULICS DESIGN**

P:\proj1\02\4E630_plans\pse\24e630ca002.dgn

LAST REVISION 10-23-13 | DATE PLOTTED => 24-OCT-2013 | TIME PLOTTED => 07:14

| Dist | COUNTY | ROUTE | POST MILES TOTAL PROJECT | SHEET No. | TOTAL SHEETS |
|---|---|---|---|---|---|
| 02 | Sis | 96 | 56.0 | 4 | 92 |

Brett Ditzler 10-23-13
REGISTERED CIVIL ENGINEER DATE

10-25-13
PLANS APPROVAL DATE

REGISTERED PROFESSIONAL ENGINEER BRETT DITZLER No. C74085 Exp. 6-30-15 CIVIL STATE OF CALIFORNIA

*THE STATE OF CALIFORNIA OR ITS OFFICERS OR AGENTS SHALL NOT BE RESPONSIBLE FOR THE ACCURACY OR COMPLETENESS OF SCANNED COPIES OF THIS PLAN SHEET.*

NOTE:

1. FOR ACCURATE RIGHT OF WAY DATA, CONTACT RIGHT OF WAY ENGINEERING AT THE DISTRICT OFFICE.

LEGEND:

ESA — ENVIRONMENTALLY SENSITIVE AREA (ESA)

## TFESA DATA

| SEGMENT No. | STATION | OFFSET |
|---|---|---|
| 1 | 162+58 | 68′ R+ |
| | 163+08 | 39′ R+ |
| | 163+12 | 67′ R+ |
| | 163+99 | 58′ R+ |
| | 164+05 | 23′ R+ |
| | 164+39 | 20′ R+ |
| | 164+90 | 46′ R+ |
| 2 | 163+75 | 78′ L+ |
| | 163+78 | 47′ L+ |
| | 164+03 | 32′ L+ |
| | 164+81 | 39′ L+ |
| | 165+35 | 35′ L+ |
| 3 | 164+72 | 26′ L+ |
| | 164+85 | 15′ L+ |
| | 165+30 | 15′ L+ |

## PEC AND TCE DATA

| No. # | STATION | OFFSET |
|---|---|---|
| 1 | 159+53.73 | 35.74′ L+ |
| 2 | 159+53.48 | 45.46′ L+ |
| 3 | 160+01.46 | 46.42′ L+ |
| 4 | 160+01.55 | 36.52′ L+ |
| 5 | 159+78.99 | 29.94′ R+ |
| 6 | 159+85.18 | 39.77′ R+ |
| 7 | 161+02.06 | 67.48′ R+ |
| 8 | 162+09.50 | 148.69′ R+ |
| 9 | 162+32.65 | 122.45′ R+ |
| 10 | 162+42.75 | 101.90′ R+ |
| 11 | 162+52.87 | 70.06′ R+ |
| 12 | 161+59.08 | 83.86′ L+ |
| 13 | 162+41.34 | 150.94′ L+ |
| 14 | 163+32.75 | 150.35′ L+ |
| 15 | 163+34.26 | 80.37′ L+ |

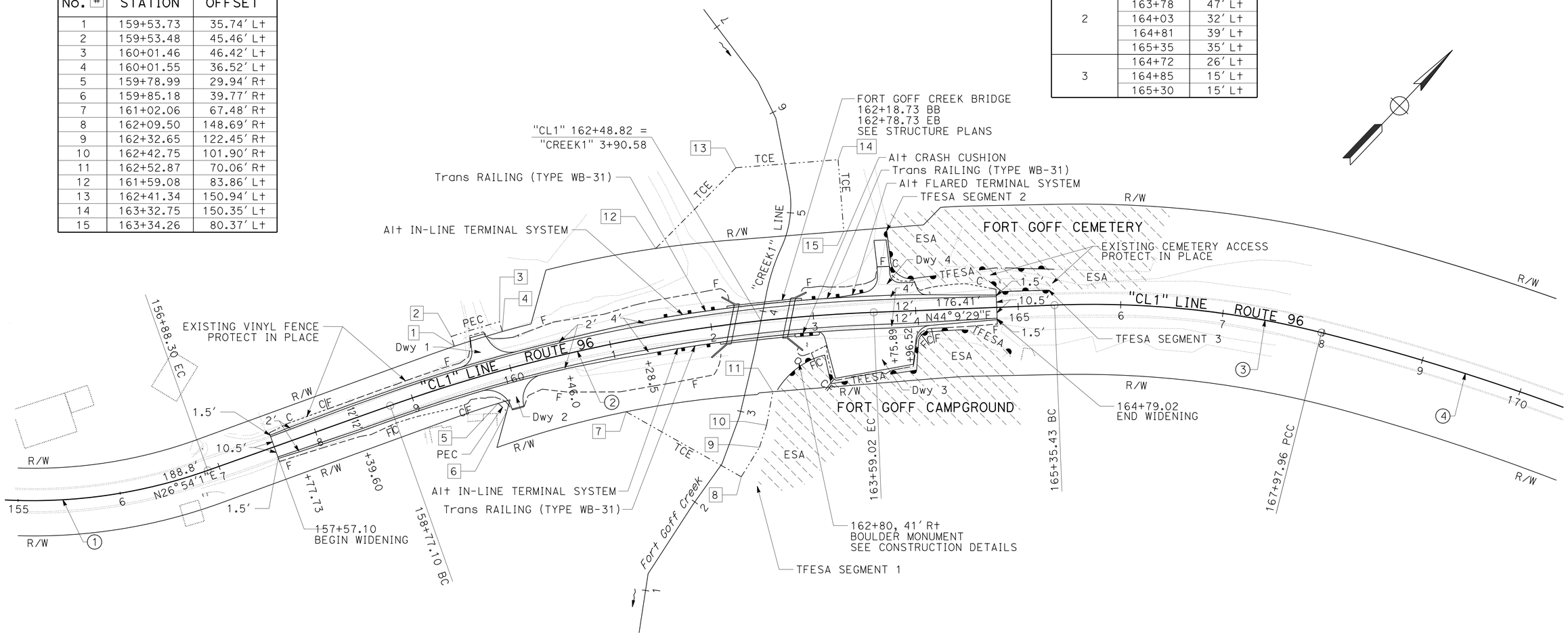


## CURVE DATA

| No. # | R | Δ | T | L |
|---|---|---|---|---|
| 1 | 511′ | 23°59′19" | 108.64′ | 214.09′ |
| 2 | 1600′ | 17°15′27" | 242.80′ | 481.92′ |
| 3 | 920′ | 16°21′00" | 132.16′ | 262.53′ |
| 4 | 2272′ | 13°59′34" | 278.82′ | 554.87′ |

# LAYOUT

SCALE: 1" = 50′

L-1

| REVISED BY | DATE REVISED |
|---|---|
| BRETT DITZLER | ALEX PETERSON |
| CALCULATED-DESIGNED BY | CHECKED BY |
| FUNCTIONAL SUPERVISOR | STEVE THORNE |

STATE OF CALIFORNIA - DEPARTMENT OF TRANSPORTATION
Caltrans® HYDRAULICS DESIGN

P:\proj1\02\4E630_plans\pse\24e630ea001.dgn

LAST REVISION 10-23-13 | DATE PLOTTED => 24-OCT-2013 | TIME PLOTTED => 07:14

| Dist | COUNTY | ROUTE | POST MILES TOTAL PROJECT | SHEET No. | TOTAL SHEETS |
|---|---|---|---|---|---|
| 02 | Sis | 96 | 56.0 | 5 | 92 |

Brett Ditzler 10-23-13
REGISTERED CIVIL ENGINEER DATE

10-25-13
PLANS APPROVAL DATE

REGISTERED PROFESSIONAL ENGINEER
BRETT DITZLER
No. C74085
Exp. 6-30-15
CIVIL
STATE OF CALIFORNIA

*THE STATE OF CALIFORNIA OR ITS OFFICERS OR AGENTS SHALL NOT BE RESPONSIBLE FOR THE ACCURACY OR COMPLETENESS OF SCANNED COPIES OF THIS PLAN SHEET.*

**NOTE:**

1. OG AND FG SHOWN AT "CL1" LINE ALIGNMENT

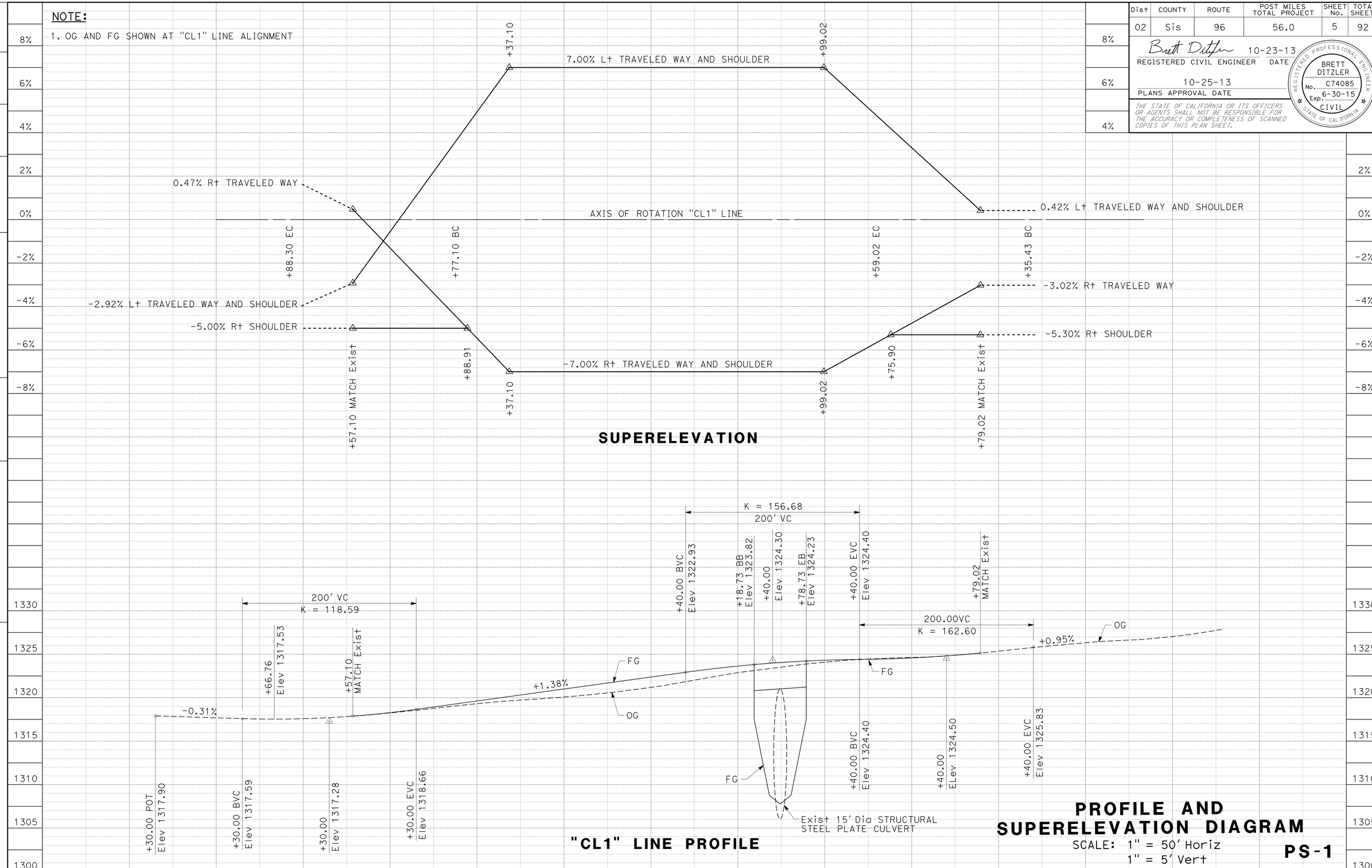


# PROFILE AND SUPERELEVATION DIAGRAM

SCALE: 1" = 50' Horiz
1" = 5' Vert

**PS-1**

| REVISED BY | DATE REVISED |
|---|---|
| BRETT DITZLER | ALEX PETERSON |

| CALCULATED-DESIGNED BY | CHECKED BY |
|---|---|

FUNCTIONAL SUPERVISOR: STEVE THORNE

STATE OF CALIFORNIA - DEPARTMENT OF TRANSPORTATION
Caltrans® HYDRAULICS DESIGN

P:\proj1\02\4E630_plans\pse\24e630fb001.dgn

LAST REVISION 10-23-13 | DATE PLOTTED => 24-OCT-2013 | TIME PLOTTED => 07:14

| Dist | COUNTY | ROUTE | POST MILES TOTAL PROJECT | SHEET No. | TOTAL SHEETS |
|---|---|---|---|---|---|
| 02 | Sis | 96 | 56.0 | 6 | 92 |

Brett Ditzler 10-23-13
REGISTERED CIVIL ENGINEER DATE

10-25-13
PLANS APPROVAL DATE

REGISTERED PROFESSIONAL ENGINEER BRETT DITZLER No. C74085 Exp. 6-30-15 CIVIL STATE OF CALIFORNIA

*THE STATE OF CALIFORNIA OR ITS OFFICERS OR AGENTS SHALL NOT BE RESPONSIBLE FOR THE ACCURACY OR COMPLETENESS OF SCANNED COPIES OF THIS PLAN SHEET.*

## NOTE:

1. FOR ACCURATE RIGHT OF WAY DATA, CONTACT RIGHT OF WAY ENGINEERING AT THE DISTRICT OFFICE.

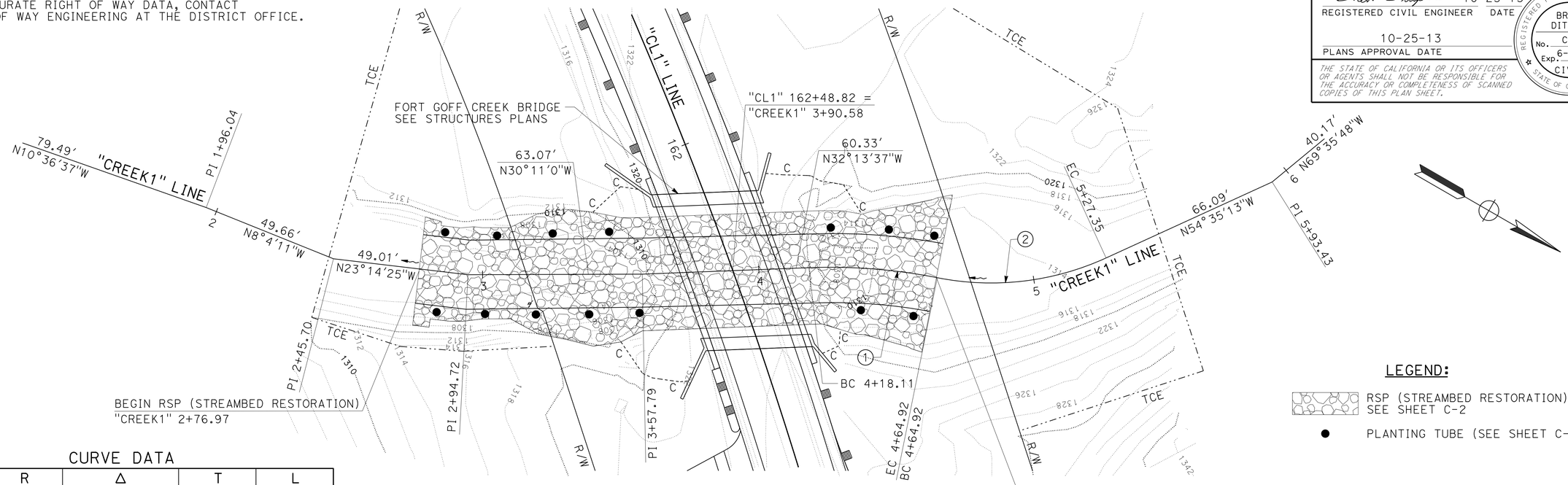


PLAN
SCALE: 1" = 20'

## CURVE DATA

| No. (#) | R | Δ | T | L |
|---|---|---|---|---|
| 1 | 200' | 13°24'30" | 23.51' | 46.80' |
| 2 | 100' | 35°46'07" | 32.27' | 62.43' |

## LEGEND:

RSP (STREAMBED RESTORATION) SEE SHEET C-2

● PLANTING TUBE (SEE SHEET C-3)

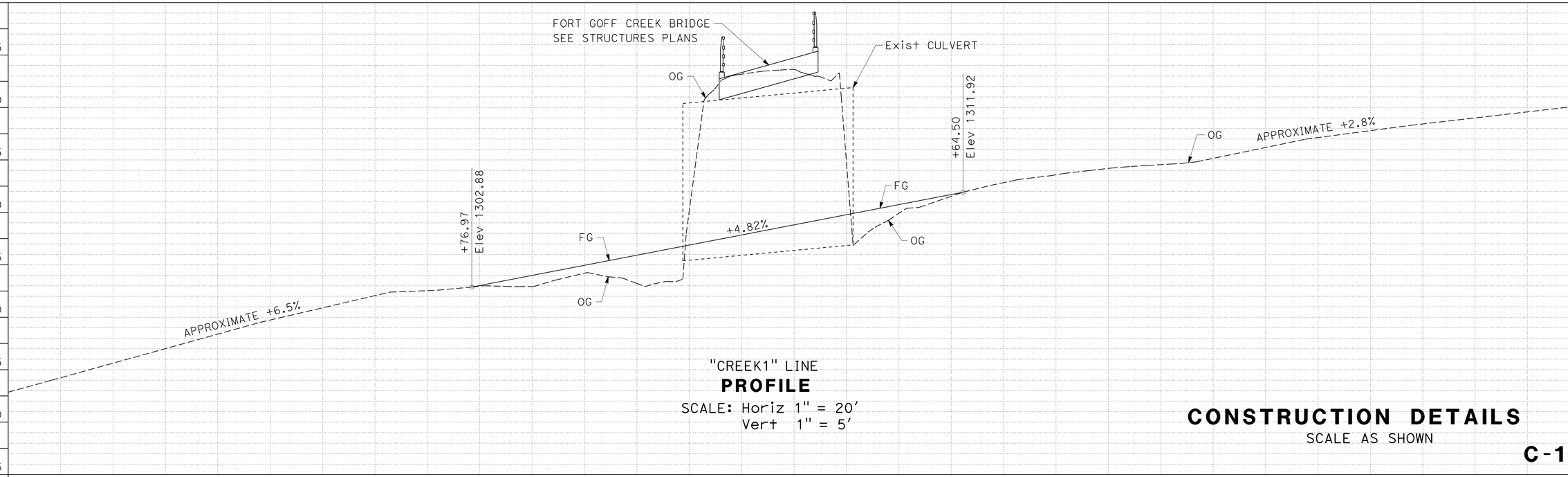


"CREEK1" LINE
**PROFILE**
SCALE: Horiz 1" = 20'
Vert 1" = 5'

| CY | | | TOTAL |
|---|---|---|---|
| Exc | | 954 | 954 |
| Emb | | 0 | 0 |

# CONSTRUCTION DETAILS

SCALE AS SHOWN

**C-1**

REVISED BY | DATE REVISED
BRETT DITZLER | ALEX PETERSON
CALCULATED-DESIGNED BY | CHECKED BY
FUNCTIONAL SUPERVISOR
STEVE THORNE

STATE OF CALIFORNIA - DEPARTMENT OF TRANSPORTATION
Caltrans® HYDRAULICS DESIGN

P:\proj\02\4E630_plans\pse\24e630ga001.dgn

LAST REVISION 10-23-13 | DATE PLOTTED => 24-OCT-2013 | TIME PLOTTED => 07:14

| Dist | COUNTY | ROUTE | POST MILES TOTAL PROJECT | SHEET No. | TOTAL SHEETS |
|---|---|---|---|---|---|
| 02 | Sis | 96 | 56.0 | 7 | 92 |

Brett Ditzler 10-23-13
REGISTERED CIVIL ENGINEER DATE

10-25-13
PLANS APPROVAL DATE

REGISTERED PROFESSIONAL ENGINEER
BRETT DITZLER
No. C74085
Exp. 6-30-15
CIVIL
STATE OF CALIFORNIA

*THE STATE OF CALIFORNIA OR ITS OFFICERS OR AGENTS SHALL NOT BE RESPONSIBLE FOR THE ACCURACY OR COMPLETENESS OF SCANNED COPIES OF THIS PLAN SHEET.*

NOTES:

1. RSP (STREAMBED RESTORATION) CONSISTS OF:

   5% BY VOLUME: RSP (4T, METHOD A)
   5% BY VOLUME: RSP (2T, METHOD A)
   10% BY VOLUME: RSP (1T, METHOD A)
   30% BY VOLUME: RSP (1/4 T, METHOD B)
   10% BY VOLUME: RSP (No. 1, METHOD B)
   10% BY VOLUME: RSP (No. 2, METHOD B)
   30% BY VOLUME: ENGINEERED STREAMBED MATERIAL

2. RSP (STREAMBED RESTORATION) GRADE CONTROL CONSISTS OF:

   20% BY VOLUME: RSP (4T, METHOD A)
   20% BY VOLUME: RSP (2T, METHOD A)
   10% BY VOLUME: RSP (1T, METHOD A)
   10% BY VOLUME: RSP (1/4 T, METHOD B)
   5% BY VOLUME: RSP (No. 1, METHOD B)
   5% BY VOLUME: RSP (No. 2, METHOD B)
   30% BY VOLUME: ENGINEERED STREAMBED MATERIAL

3. LIMIT EXCAVATION TO THE AMOUNT NECESSARY TO PLACE RSP.

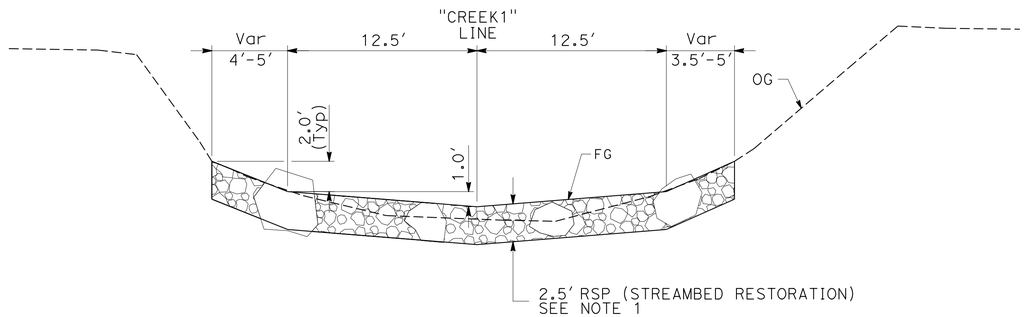


**RSP (STREAMBED RESTORATION)**
"CREEK1" 2+82.97 TO 3+20

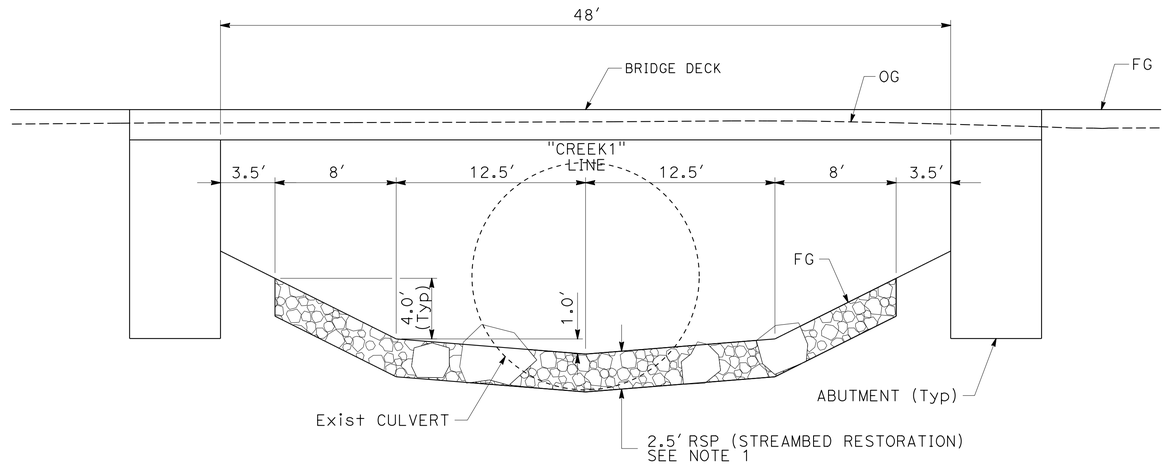


**RSP (STREAMBED RESTORATION)**
"CREEK1" 3+55 TO 4+05 Lt
"CREEK1" 3+75 TO 4+25 Rt

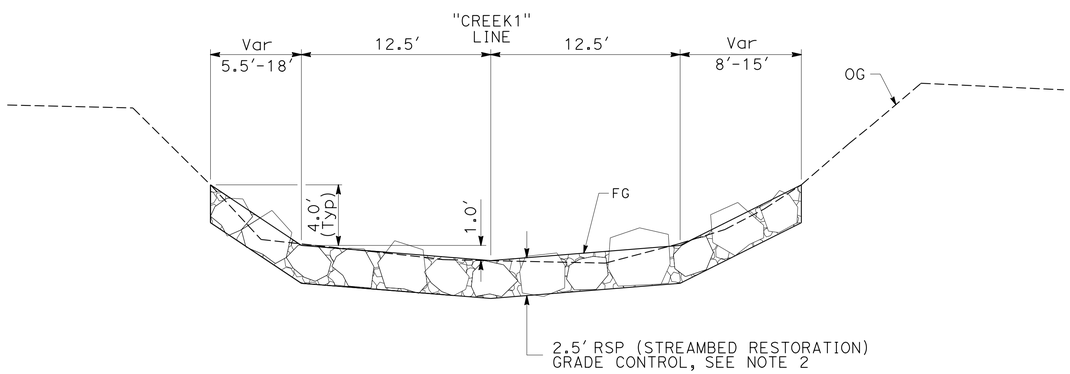


**RSP (STREAMBED RESTORATION) GRADE CONTROL**
"CREEK1" 2+76.97 TO 2+82.97
"CREEK1" 4+58.50 TO 4+64.50

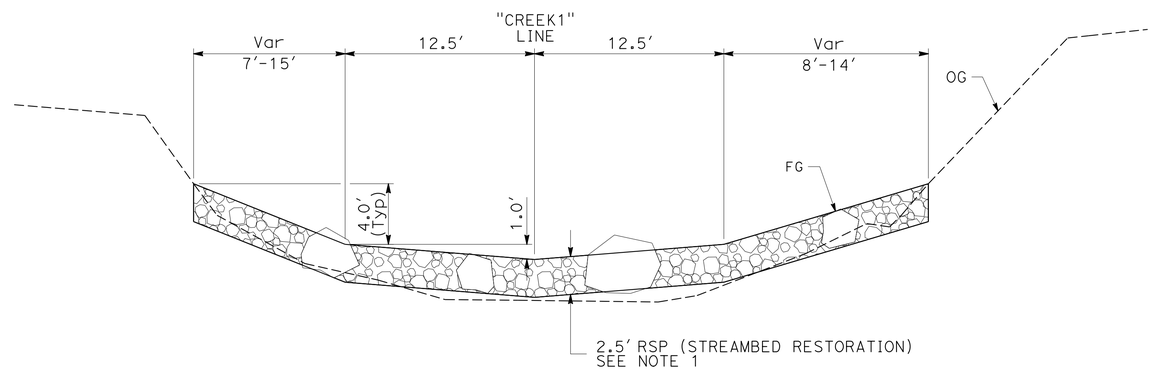


**RSP (STREAMBED RESTORATION)**
"CREEK1" 3+20 TO 3+55 Lt
"CREEK1" 3+20 TO 3+75 Rt
"CREEK1" 4+05 TO 4+58.50 Lt
"CREEK1" 4+25 TO 4+58.50 Rt

# CONSTRUCTION DETAILS

SCALE: 1" = 5'

C-2

REVISED BY | DATE REVISED
BRETT DITZLER | ALEX PETERSON
CALCULATED-DESIGNED BY | CHECKED BY
FUNCTIONAL SUPERVISOR: STEVE THORNE

STATE OF CALIFORNIA - DEPARTMENT OF TRANSPORTATION
Caltrans® HYDRAULICS DESIGN

P:\proj1\02\4E630_plans\pse\24e630ga002.dgn

LAST REVISION | DATE PLOTTED => 24-OCT-2013 | TIME PLOTTED => 07:14
10-23-13

BORDER LAST REVISED 7/2/2010 | USERNAME => s115152 | DGN FILE => 24e630ga002.dgn | RELATIVE BORDER SCALE IS IN INCHES 0 1 2 3 | UNIT 0361 | PROJECT NUMBER & PHASE 02-1200-0010-1 | EA: 02-4E6301

| Dist | COUNTY | ROUTE | POST MILES TOTAL PROJECT | SHEET No. | TOTAL SHEETS |
|---|---|---|---|---|---|
| 02 | Sis | 96 | 56.0 | 8 | 92 |

Brett Ditzler 10-23-13
REGISTERED CIVIL ENGINEER DATE

10-25-13
PLANS APPROVAL DATE

REGISTERED PROFESSIONAL ENGINEER BRETT DITZLER No. C74085 Exp. 6-30-15 CIVIL STATE OF CALIFORNIA

*THE STATE OF CALIFORNIA OR ITS OFFICERS OR AGENTS SHALL NOT BE RESPONSIBLE FOR THE ACCURACY OR COMPLETENESS OF SCANNED COPIES OF THIS PLAN SHEET.*

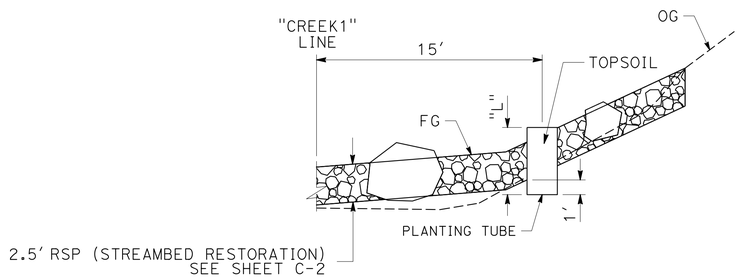


LEFT SIDE SIMILAR

## PLANTING TUBE DETAIL

SCALE: 1" = 5'

## PLANTING TUBE QUANTITIES

| ALIGNMENT | STATION | OFFSET | "L" LF |
|---|---|---|---|
| "CREEK1" | 2+85 | 15' L+ | 4.5 |
| "CREEK1" | 2+85 | 15' R+ | 4.3 |
| "CREEK1" | 3+03 | 15' R+ | 4.6 |
| "CREEK1" | 3+05 | 15' L+ | 4.4 |
| "CREEK1" | 3+21 | 15' R+ | 4.4 |
| "CREEK1" | 3+25 | 15' L+ | 4.3 |
| "CREEK1" | 3+39 | 15' R+ | 4.1 |
| "CREEK1" | 3+45 | 15' L+ | 4.4 |
| "CREEK1" | 3+57 | 15' R+ | 4.5 |
| "CREEK1" | 4+26 | 15' L+ | 4.5 |
| "CREEK1" | 4+38 | 15' R+ | 4.2 |
| "CREEK1" | 4+41 | 15' L+ | 4.4 |
| "CREEK1" | 4+56 | 15' L+ | 4.1 |
| "CREEK1" | 4+56 | 15' R+ | 4.1 |
| | | TOTAL | 60.8 |

## STREAMBED RESTORATION QUANTITIES

| STATION | DESCRIPTION | CHANNEL EXCAVATION | ROCK SLOPE PROTECTION (STREAMBED RESTORATION) | | | | | | | | | | | | | | | | |
|---|---|---|---|---|---|---|---|---|---|---|---|---|---|---|---|---|---|---|---|
| | | | (N) EXCAVATION FOR RSP (STREAMBED RESTORATION) | *** (N) ROCK SLOPE PROTECTION (4T, METHOD A) | | | *** (N) ROCK SLOPE PROTECTION (2T, METHOD A) | | | *** (N) ROCK SLOPE PROTECTION (1T, METHOD A) | | *** (N) ROCK SLOPE PROTECTION (1/4 T, METHOD B) | | *** (N) ROCK SLOPE PROTECTION (No. 1, METHOD B) | | *** (N) ROCK SLOPE PROTECTION (No. 2, METHOD B) | | (N) ENGINEERED STREAMBED MATERIAL | ROCK SLOPE PROTECTION (STREAMBED RESTORATION) |
| | | CY** | CY | CY | TON* | No. ROCKS* | CY | TON* | No. ROCKS* | CY | TON* | CY | TON* | CY | TON* | CY | TON* | CY | CY |
| "CREEK1" 2+76.97 TO 2+82.97 | GRADE CONTROL | | 19 | 4.4 | 9.8 | 2 | 4.4 | 9.8 | 5 | 2.2 | 4.9 | 2.2 | 4.9 | 1.1 | 2.5 | 1.1 | 2.5 | 6.6 | 22 |
| "CREEK1" 2+82.97 TO 3+50.00 | | | 134 | 10.3 | 23.0 | 6 | 10.3 | 23.0 | 12 | 20.5 | 45.8 | 61.5 | 137.3 | 20.5 | 45.8 | 20.5 | 45.8 | 61.5 | 205 |
| "CREEK1" 3+50.00 TO 4+30.00 | Exist ROADWAY | 954 | 278 | 16.0 | 35.7 | 9 | 16.0 | 35.7 | 18 | 32.0 | 71.4 | 96.0 | 214.3 | 32.0 | 71.4 | 32.0 | 71.4 | 96.0 | 320 |
| "CREEK1" 4+30.00 TO 4+58.50 | | | 77 | 7.7 | 17.2 | 4 | 7.7 | 17.2 | 9 | 15.4 | 34.4 | 46.2 | 103.1 | 15.4 | 34.4 | 15.4 | 34.4 | 46.2 | 154 |
| "CREEK1" 4+58.50 TO 4+64.50 | GRADE CONTROL | | 24 | 6.4 | 14.3 | 4 | 6.4 | 14.3 | 7 | 3.2 | 7.1 | 3.2 | 7.1 | 1.6 | 3.6 | 1.6 | 3.6 | 9.6 | 32 |
| | TOTAL | 954 | 532 | 44.8 | 100.0 | 25 | 44.8 | 100.0 | 51 | 73.3 | 163.6 | 209.1 | 466.7 | 70.6 | 157.7 | 70.6 | 157.7 | 219.9 | 733 |

(N) NOT A SEPARATE PAY ITEM, FOR INFORMATION ONLY
* QUANTITY IS APPROXIMATE AND IS BASED ON ROCK WITH A SPECIFIC GRAVITY OF 2.65
** QUANTITY DOES NOT INCLUDE THE VOLUME OF THE EXISTING 15' Dia SSPP CULVERT
*** QUANTITIES REPRESENT ACTUAL ROCK VOLUME AND DO NOT INCLUDE ANY VOIDS

# CONSTRUCTION DETAILS

SCALE: AS SHOWN

C-3

REVISED BY | DATE REVISED
BRETT DITZLER | ALEX PETERSON
CALCULATED-DESIGNED BY | CHECKED BY
FUNCTIONAL SUPERVISOR: STEVE THORNE

STATE OF CALIFORNIA - DEPARTMENT OF TRANSPORTATION
Caltrans HYDRAULICS DESIGN

P:\proj1\02\4E630_plans\pse\24e630ga003.dgn

LAST REVISION 10-23-13 | DATE PLOTTED => 24-OCT-2013 | TIME PLOTTED => 07:14

| Dist | COUNTY | ROUTE | POST MILES TOTAL PROJECT | SHEET No. | TOTAL SHEETS |
|---|---|---|---|---|---|
| 02 | Sis | 96 | 56.0 | 9 | 92 |

Brett Ditzler 10-23-13
REGISTERED CIVIL ENGINEER DATE

10-25-13
PLANS APPROVAL DATE

REGISTERED PROFESSIONAL ENGINEER
BRETT DITZLER
No. C74085
Exp. 6-30-15
CIVIL
STATE OF CALIFORNIA

*THE STATE OF CALIFORNIA OR ITS OFFICERS OR AGENTS SHALL NOT BE RESPONSIBLE FOR THE ACCURACY OR COMPLETENESS OF SCANNED COPIES OF THIS PLAN SHEET.*

## DRIVEWAY DATA

| No. # | STATION | OFFSET | FG Elev | OG Elev | R |
|---|---|---|---|---|---|
| 1 | 159+54.0 | 14.0′ LEFT | ** | | |
| 2 | 159+54.0 | 29.0′ LEFT | | | 15′ |
| 3 | 159+68.5 | 26.5′ LEFT | 1321.67 | 1320.81 | |
| 4 | 159+70.5 | 39.0′ LEFT | 1321.82 | 1321.66 | |
| 5 | 159+84.2 | 39.0′ LEFT | 1322.01 | 1321.75 | |
| 6 | 159+87.1 | 30.6′ LEFT | 1321.96 | 1320.92 | |
| 7 | 160+10.1 | 39.0′ LEFT | | | 25′ |
| 8 | 160+10.1 | 14.0′ LEFT | ** | | |
| 9 | 159+69.1 | 14.0′ RIGHT | ** | | |
| 10 | 159+65.2 | 39.0′ RIGHT | | | 25′ |
| 11 | 159+90.8 | 39.0′ RIGHT | * | 1317.40 | |
| 12 | 160+03.1 | 39.0′ RIGHT | * | 1317.15 | |
| 13 | 160+28.7 | 39.0′ RIGHT | | | 25′ |
| 14 | 160+24.8 | 14.0′ RIGHT | ** | | |

* MATCH EXISTING Elev
** MATCH ES Elev

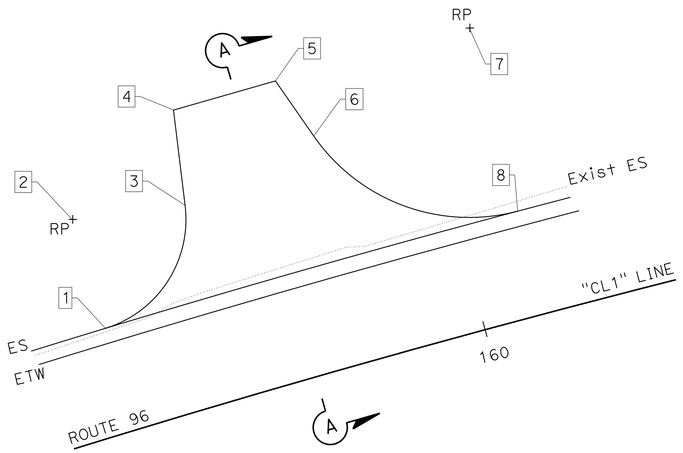


## DRIVEWAY 1
"CL1" 159+77.4

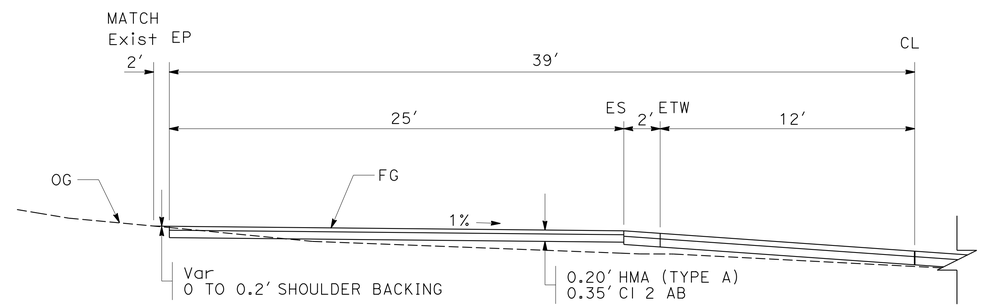


SECTION A-A
"CL1" 159+77.4

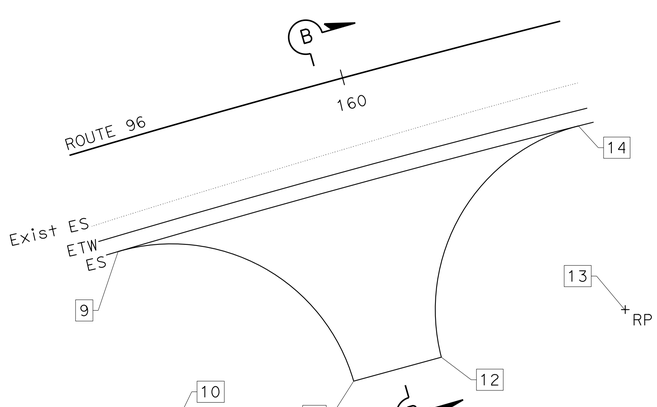


## DRIVEWAY 2
"CL1" 159+96.9

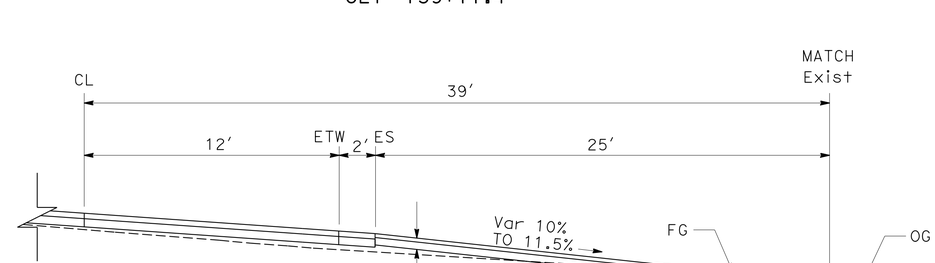


SECTION B-B
"CL1" 159+96.9

# CONSTRUCTION DETAILS
NO SCALE **C-4**

REVISED BY | DATE REVISED
ALEX PETERSON | BRETT DITZLER
CALCULATED-DESIGNED BY | CHECKED BY
FUNCTIONAL SUPERVISOR
STEVE THORNE
STATE OF CALIFORNIA - DEPARTMENT OF TRANSPORTATION
Caltrans® HYDRAULICS DESIGN
P:\proj1\02\4E630_plans\pse\24e630ga004.dgn

LAST REVISION 10-23-13 | DATE PLOTTED => 24-OCT-2013 | TIME PLOTTED => 07:14

| Dist | COUNTY | ROUTE | POST MILES TOTAL PROJECT | SHEET No. | TOTAL SHEETS |
|---|---|---|---|---|---|
| 02 | Sis | 96 | 56.0 | 10 | 92 |

Brett Ditzler 10-23-13
REGISTERED CIVIL ENGINEER DATE

10-25-13
PLANS APPROVAL DATE

REGISTERED PROFESSIONAL ENGINEER
BRETT DITZLER
No. C74085
Exp. 6-30-15
CIVIL
STATE OF CALIFORNIA

*THE STATE OF CALIFORNIA OR ITS OFFICERS OR AGENTS SHALL NOT BE RESPONSIBLE FOR THE ACCURACY OR COMPLETENESS OF SCANNED COPIES OF THIS PLAN SHEET.*

## DRIVEWAY DATA

| No. # | STATION | OFFSET | FG Elev | OG Elev | R |
|---|---|---|---|---|---|
| 1 | 163+04.8 | 16.0′ RIGHT | ** | | |
| 2 | 162+99.9 | 24.7′ RIGHT | | | 10′ |
| 3 | 163+09.8 | 22.9′ RIGHT | 1322.80 | 1323.14 | |
| 4 | 163+10.1 | 24.0′ RIGHT | 1322.72 | 1323.12 | |
| 5 | 163+10.8 | 28.0′ RIGHT | 1322.93 | 1323.06 | |
| 6 | 163+17.7 | 62.3′ RIGHT | 1323.32 | 1323.21 | |
| 7 | 163+95.5 | 52.2′ RIGHT | 1323.79 | 1323.54 | |
| 8 | 163+99.3 | 27.6′ RIGHT | 1323.58 | 1323.40 | |
| 9 | 164+00.5 | 23.5′ RIGHT | 1323.39 | 1323.55 | |
| 10 | 164+14.1 | 29.9′ RIGHT | | | 15′ |
| 11 | 164+13.4 | 14.9′ RIGHT | ** | | |
| 12 | 163+14.7 | 16.0′ LEFT | ** | | |
| 13 | 163+51.8 | 20.0′ LEFT | 1325.58 | 1324.03 | |
| 14 | 163+49.3 | 34.8′ LEFT | | | 15′ |
| 15 | 163+64.1 | 34.8′ LEFT | 1326.57 | 1325.50 | |
| 16 | 163+64.1 | 44.2′ LEFT | 1327.24 | 1326.66 | |
| 17 | 163+62.1 | 70.0′ LEFT | * | 1330.23 | |
| 18 | 163+74.1 | 70.0′ LEFT | * | 1330.68 | |
| 19 | 163+76.1 | 44.2′ LEFT | 1327.22 | 1327.33 | |
| 20 | 163+76.1 | 37.9′ LEFT | 1326.78 | 1326.55 | |
| 21 | 163+86.1 | 37.9′ LEFT | | | 10′ |
| 22 | 163+85.9 | 27.9′ LEFT | 1325.81 | 1325.33 | |
| 23 | 164+00.0 | 27.7′ LEFT | * | 1325.45 | |
| 24 | 164+02.2 | 21.7′ LEFT | * | 1325.37 | |
| 25 | 164+11.6 | 25.0′ LEFT | | | 10′ |
| 26 | 164+11.1 | 15.1′ LEFT | ** | | |

* MATCH EXISTING Elev
** MATCH ES Elev

## ABBREVIATIONS:

Super SUPERELEVATION

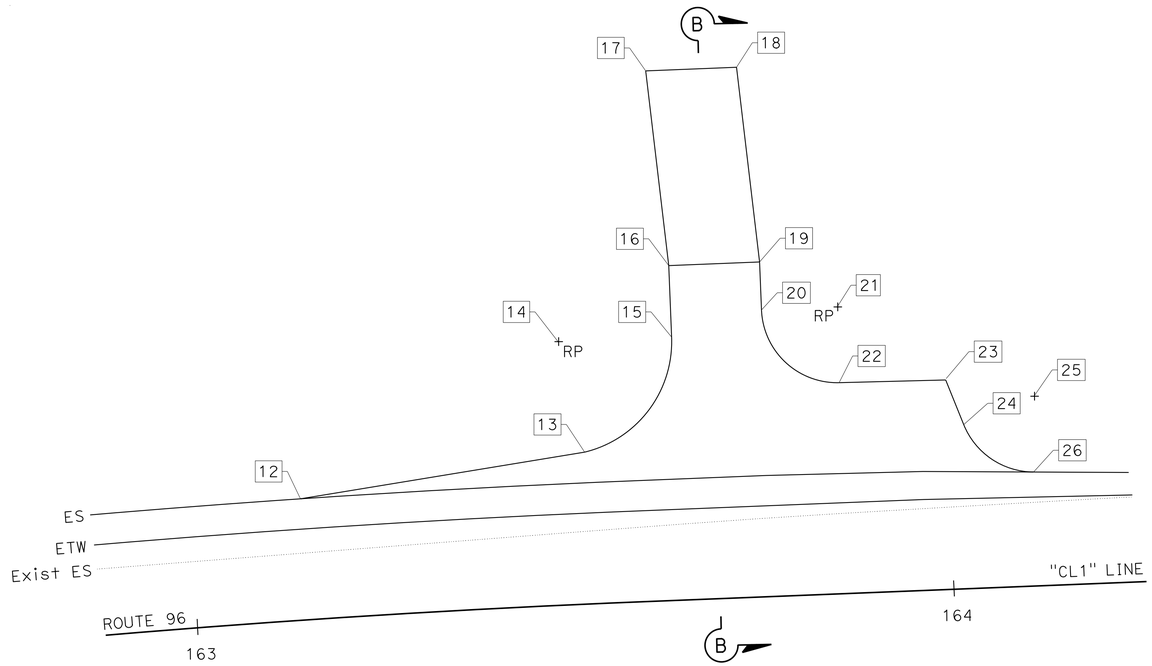


## DRIVEWAY 4
"CL1" 163+68.1

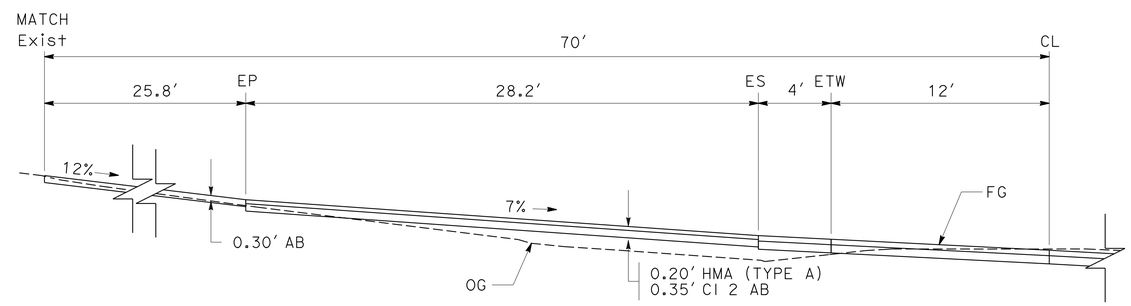


SECTION B-B
"CL1" 163+68.1

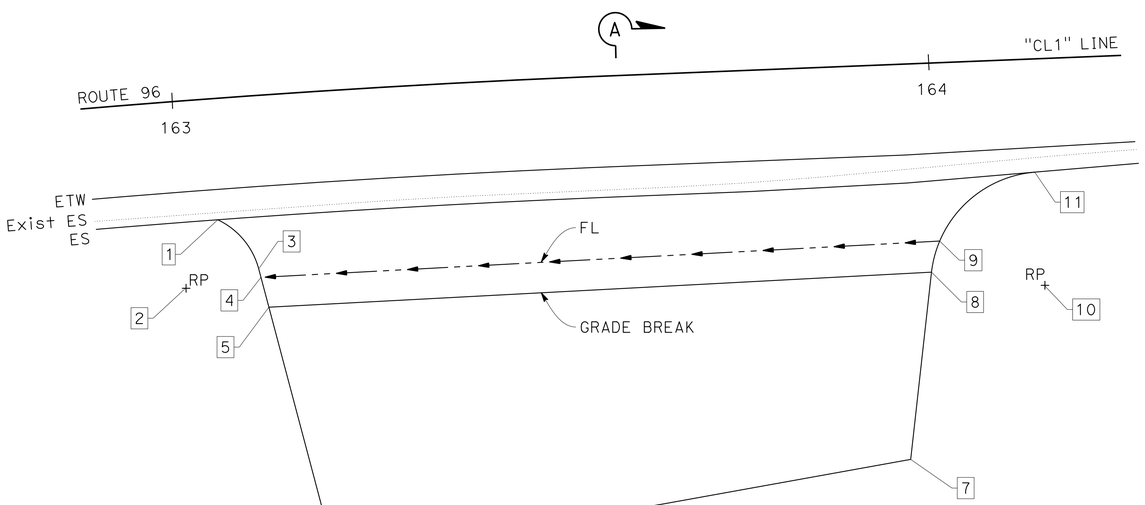


## DRIVEWAY 3
"CL1" 163+57.3

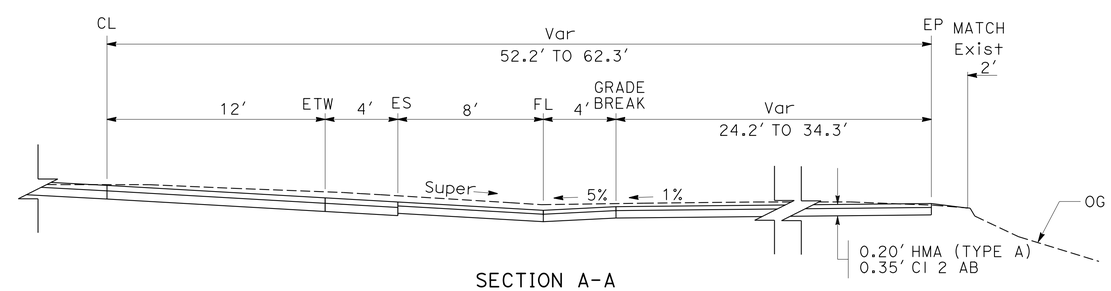


SECTION A-A
"CL1" 163+57.3

# CONSTRUCTION DETAILS
NO SCALE

C-5

REVISED BY | DATE REVISED
ALEX PETERSON | BRETT DITZLER
CALCULATED-DESIGNED BY | CHECKED BY
FUNCTIONAL SUPERVISOR | STEVE THORNE
STATE OF CALIFORNIA - DEPARTMENT OF TRANSPORTATION
Caltrans® HYDRAULICS DESIGN
P:\proj1\02\4E630_plans\pse\24e630ga005.dgn

LAST REVISION 10-23-13 | DATE PLOTTED => 24-OCT-2013 | TIME PLOTTED => 07:14

| Dist | COUNTY | ROUTE | POST MILES TOTAL PROJECT | SHEET No. | TOTAL SHEETS |
|---|---|---|---|---|---|
| 02 | Sis | 96 | 56.0 | 11 | 92 |

Brett Ditzler 10-23-13
REGISTERED CIVIL ENGINEER DATE

10-25-13
PLANS APPROVAL DATE

REGISTERED PROFESSIONAL ENGINEER BRETT DITZLER No. C74085 Exp. 6-30-15 CIVIL STATE OF CALIFORNIA

*THE STATE OF CALIFORNIA OR ITS OFFICERS OR AGENTS SHALL NOT BE RESPONSIBLE FOR THE ACCURACY OR COMPLETENESS OF SCANNED COPIES OF THIS PLAN SHEET.*

NOTES:

1. BOULDER MUST HAVE A COLOR AND TEXTURE CONSISTANT WITH BOULDERS FOUND IN LOCAL RIVERINE ENVIRONMENTS.
2. BOULDER MUST HAVE A FLAT SURFACE AREA SUITABLE FOR MOUNTING BRONZE PLAQUE.

## BOULDER MONUMENT QUANTITIES

| ALIGNMENT | STATION | OFFSET | EA |
|---|---|---|---|
| "CL1" | 162+80 | 41' Rt | 1 |
| | | TOTAL | 1 |

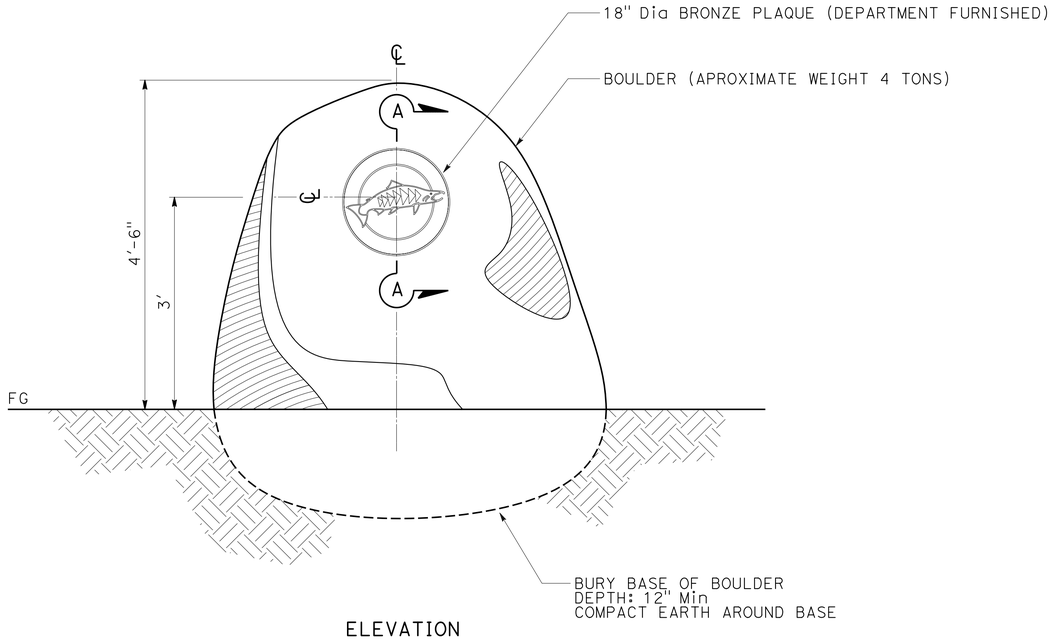


ELEVATION

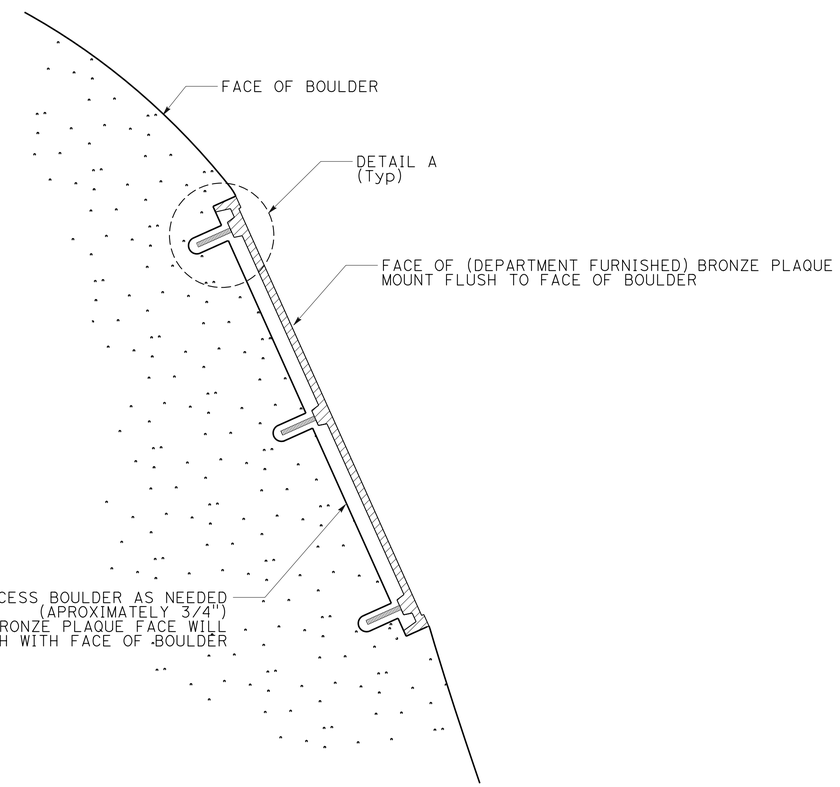


ENLARGED SECTION A-A

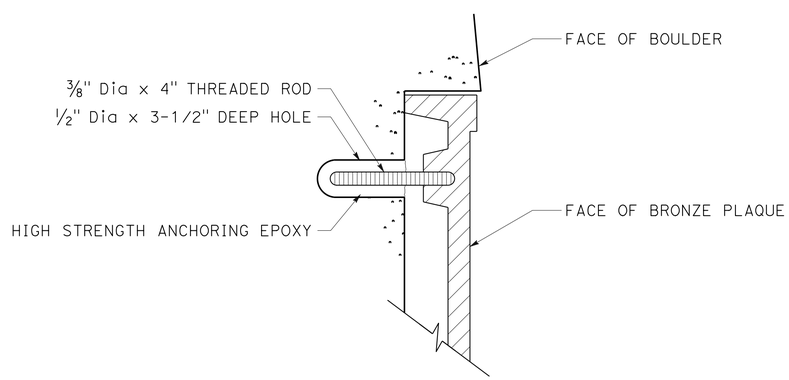


DETAIL A

# CONSTRUCTION DETAILS
## BOULDER MONUMENT
NO SCALE

**C-6**

| REVISED BY | DATE REVISED |
|---|---|
| ROBIN SOLARI | BRETT DITZLER |

| CALCULATED-DESIGNED BY | CHECKED BY |
|---|---|

FUNCTIONAL SUPERVISOR: STEVE THORNE

STATE OF CALIFORNIA - DEPARTMENT OF TRANSPORTATION
Caltrans® HYDRAULICS DESIGN

P:\proj1\02\4E630_plans\pse\24e630ga006.dgn

LAST REVISION 10-23-13 | DATE PLOTTED => 24-OCT-2013 | TIME PLOTTED => 07:14

| Dist | COUNTY | ROUTE | POST MILES TOTAL PROJECT | SHEET No. | TOTAL SHEETS |
|---|---|---|---|---|---|
| 02 | Sis | 96 | 56.0 | 12 | 92 |

Brett Ditzler 10-23-13
REGISTERED CIVIL ENGINEER DATE

10-25-13
PLANS APPROVAL DATE

REGISTERED PROFESSIONAL ENGINEER BRETT DITZLER No. C74085 Exp. 6-30-15 CIVIL STATE OF CALIFORNIA

*THE STATE OF CALIFORNIA OR ITS OFFICERS OR AGENTS SHALL NOT BE RESPONSIBLE FOR THE ACCURACY OR COMPLETENESS OF SCANNED COPIES OF THIS PLAN SHEET.*

## NOTES:

1. ALTERNATIVE 1 AND 2 MAY BE MIRRORED TO ALLOW WORK ON EITHER SIDE OF THE CREEK.
2. PIPE MUST HAVE WATERTIGHT JOINTS.
3. ANCHOR PIPE WITH STAKES OR GRAVEL BAGS AS NEEDED TO PREVENT MOVEMENT.
4. ANCHOR PLASTIC WITH SOIL STAPLES, GRAVEL BAGS, OR OTHER MEANS APPROVED BY THE ENGINEER.

## ALTERNATIVE 1 SIZING REQUIREMENTS

| | TCWD INSTALLED ON OR AFTER | TCWD REMOVED ON OR BEFORE | PIPE 1 Dia | PIPE 2 Dia |
|---|---|---|---|---|
| OPTION 1 | JUNE 15 | OCTOBER 31 | 48" | NONE |
| OPTION 2 | JUNE 15 | OCTOBER 31 | 36" | 36" |
| OPTION 1 | JULY 1 | OCTOBER 15 | 36" | NONE |
| OPTION 2 | JULY 1 | OCTOBER 15 | 24" | 24" |
| OPTION 1 | AUGUST 1 | SEPTEMBER 30 | 30" | NONE |
| OPTION 2 | AUGUST 1 | SEPTEMBER 30 | 18" | 18" |

## ALTERNATIVE 2 SIZING REQUIREMENTS

| | TCWD INSTALLED ON OR AFTER | TCWD REMOVED ON OR BEFORE | Min "w" | Min "d" |
|---|---|---|---|---|
| OPTION 1 | JUNE 15 | OCTOBER 31 | 6′ | 1.8′ |
| OPTION 2 | JUNE 15 | OCTOBER 31 | 4′ | 2.4′ |
| OPTION 1 | JULY 1 | OCTOBER 15 | 5′ | 1.5′ |
| OPTION 2 | JULY 1 | OCTOBER 15 | 3′ | 2.0′ |
| OPTION 1 | AUGUST 1 | SEPTEMBER 30 | 5′ | 1.1′ |
| OPTION 2 | AUGUST 1 | SEPTEMBER 30 | 3′ | 1.4′ |

## ABBREVIATIONS:

TCWD TEMPORARY CLEAR WATER DIVERSION

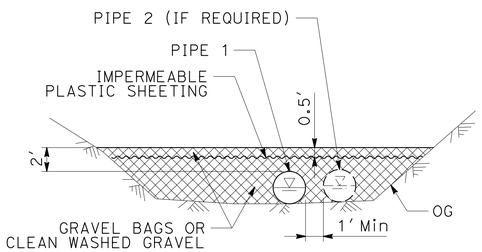


SECTION A-A

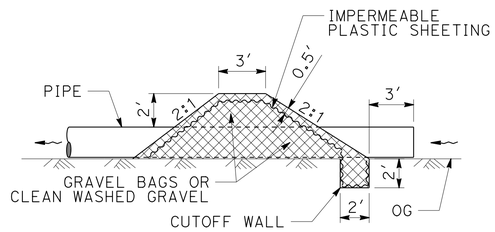


SECTION B-B

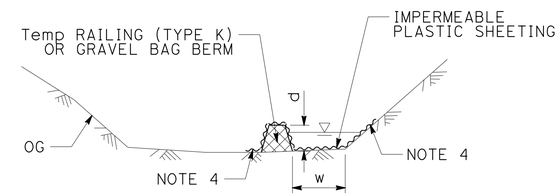


SECTION C-C

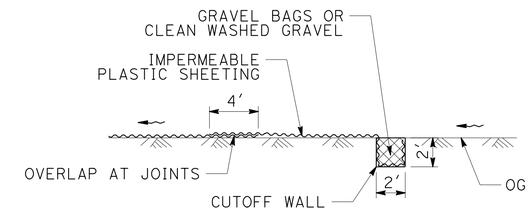


SECTION D-D

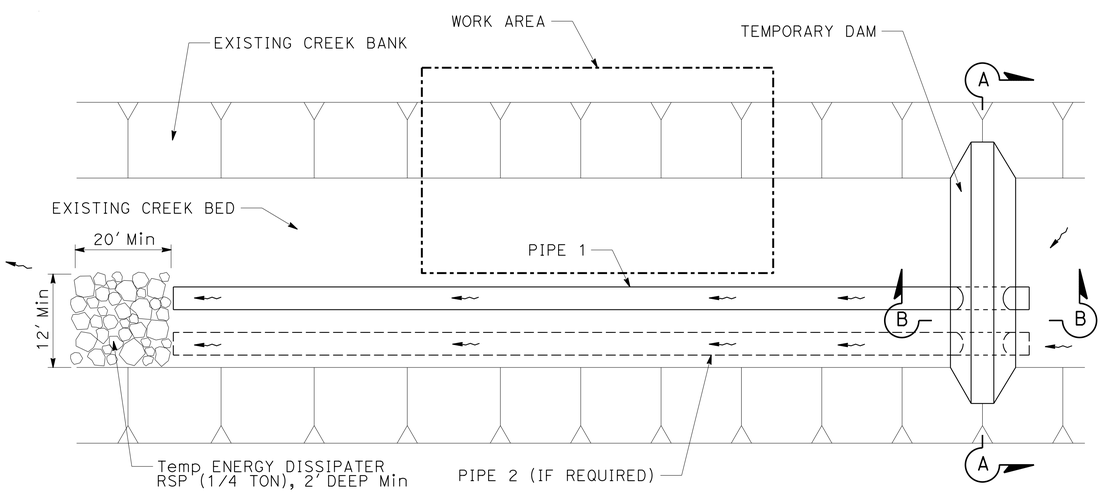


PLAN

## ALTERATIVE 1 - PIPE

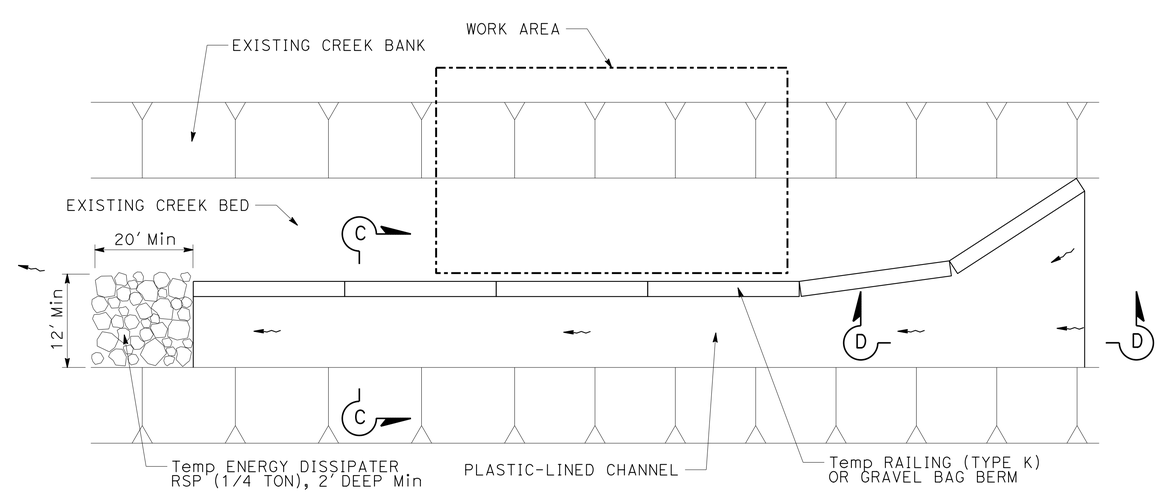


PLAN

## ALTERATIVE 2 - PLASTIC-LINED CHANNEL

# TEMPORARY WATER POLLUTION CONTROL DETAILS
## TEMPORARY CLEAR WATER DIVERSION
NO SCALE

**WPCD-1**

REVISED BY | DATE REVISED
BRETT DITZLER | ALEX PETERSON
CALCULATED-DESIGNED BY | CHECKED BY
FUNCTIONAL SUPERVISOR | STEVE THORNE
STATE OF CALIFORNIA - DEPARTMENT OF TRANSPORTATION
Caltrans HYDRAULICS DESIGN
P:\proj1\02\4E630_plans\pse\24e630gc001.dgn

LAST REVISION 10-23-13 | DATE PLOTTED => 24-OCT-2013 | TIME PLOTTED => 07:14

| Dist | COUNTY | ROUTE | POST MILES TOTAL PROJECT | SHEET No. | TOTAL SHEETS |
|---|---|---|---|---|---|
| 02 | Sis | 96 | 56.0 | 13 | 92 |

Brett Ditzler 10-23-13
REGISTERED CIVIL ENGINEER DATE

10-25-13
PLANS APPROVAL DATE

REGISTERED PROFESSIONAL ENGINEER
BRETT DITZLER
No. C74085
Exp. 6-30-15
CIVIL
STATE OF CALIFORNIA

*THE STATE OF CALIFORNIA OR ITS OFFICERS OR AGENTS SHALL NOT BE RESPONSIBLE FOR THE ACCURACY OR COMPLETENESS OF SCANNED COPIES OF THIS PLAN SHEET.*

NOTE:

1. FOR ACCURATE RIGHT OF WAY DATA, CONTACT RIGHT OF WAY ENGINEERING AT THE DISTRICT OFFICE.

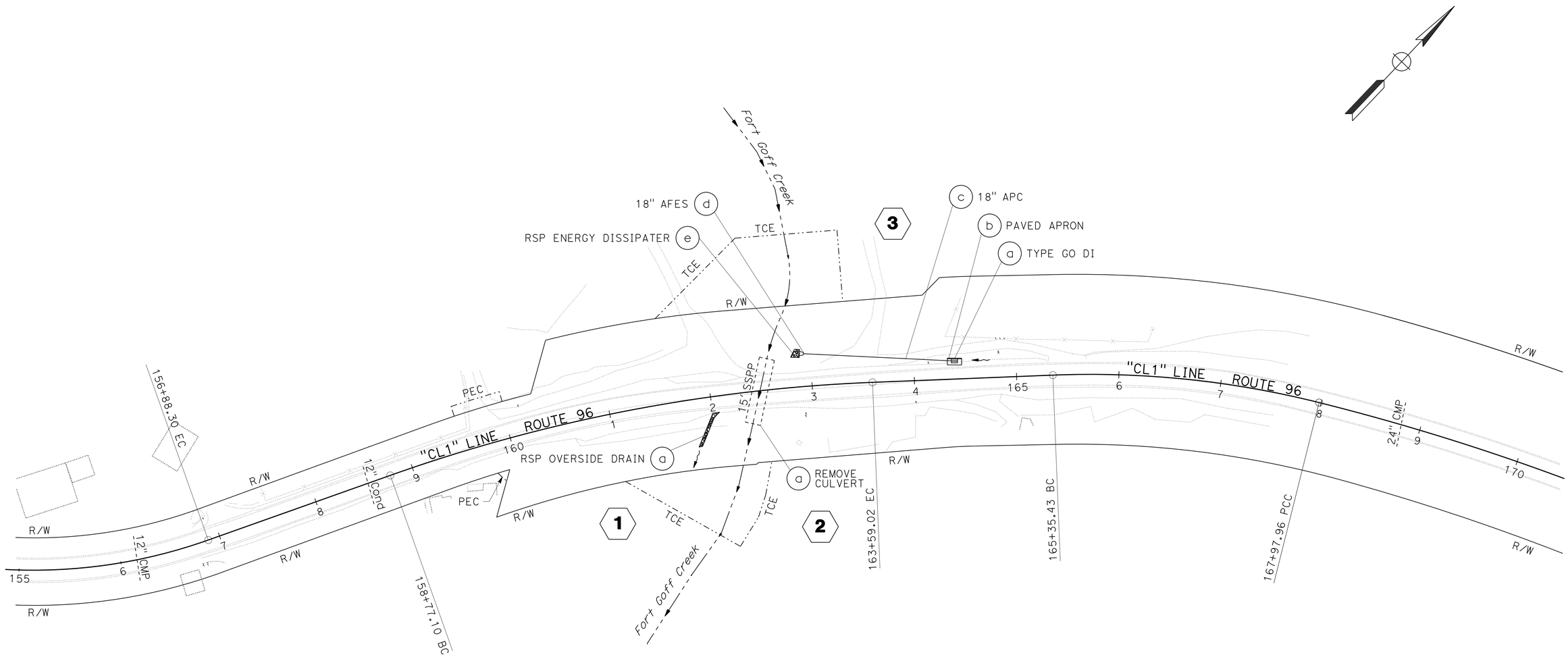


# DRAINAGE PLAN

SCALE: 1" = 50'

**D-1**

*APPROVED FOR DRAINAGE WORK ONLY*

STATE OF CALIFORNIA - DEPARTMENT OF TRANSPORTATION
Caltrans® **HYDRAULICS DESIGN**

FUNCTIONAL SUPERVISOR: STEVE THORNE
CALCULATED-DESIGNED BY: BRETT DITZLER
CHECKED BY: ALEX PETERSON
REVISED BY
DATE REVISED

P:\proj1\02\4E630_plans\pse\24e630ia001.dgn

LAST REVISION: 10-23-13
DATE PLOTTED => 24-OCT-2013
TIME PLOTTED => 07:14

| Dist | COUNTY | ROUTE | POST MILES TOTAL PROJECT | SHEET No. | TOTAL SHEETS |
|---|---|---|---|---|---|
| 02 | Sis | 96 | 56.0 | 14 | 92 |

Brett Ditzler 10-23-13
REGISTERED CIVIL ENGINEER DATE

10-25-13
PLANS APPROVAL DATE

REGISTERED PROFESSIONAL ENGINEER BRETT DITZLER No. C74085 Exp. 6-30-15 CIVIL STATE OF CALIFORNIA

*THE STATE OF CALIFORNIA OR ITS OFFICERS OR AGENTS SHALL NOT BE RESPONSIBLE FOR THE ACCURACY OR COMPLETENESS OF SCANNED COPIES OF THIS PLAN SHEET.*

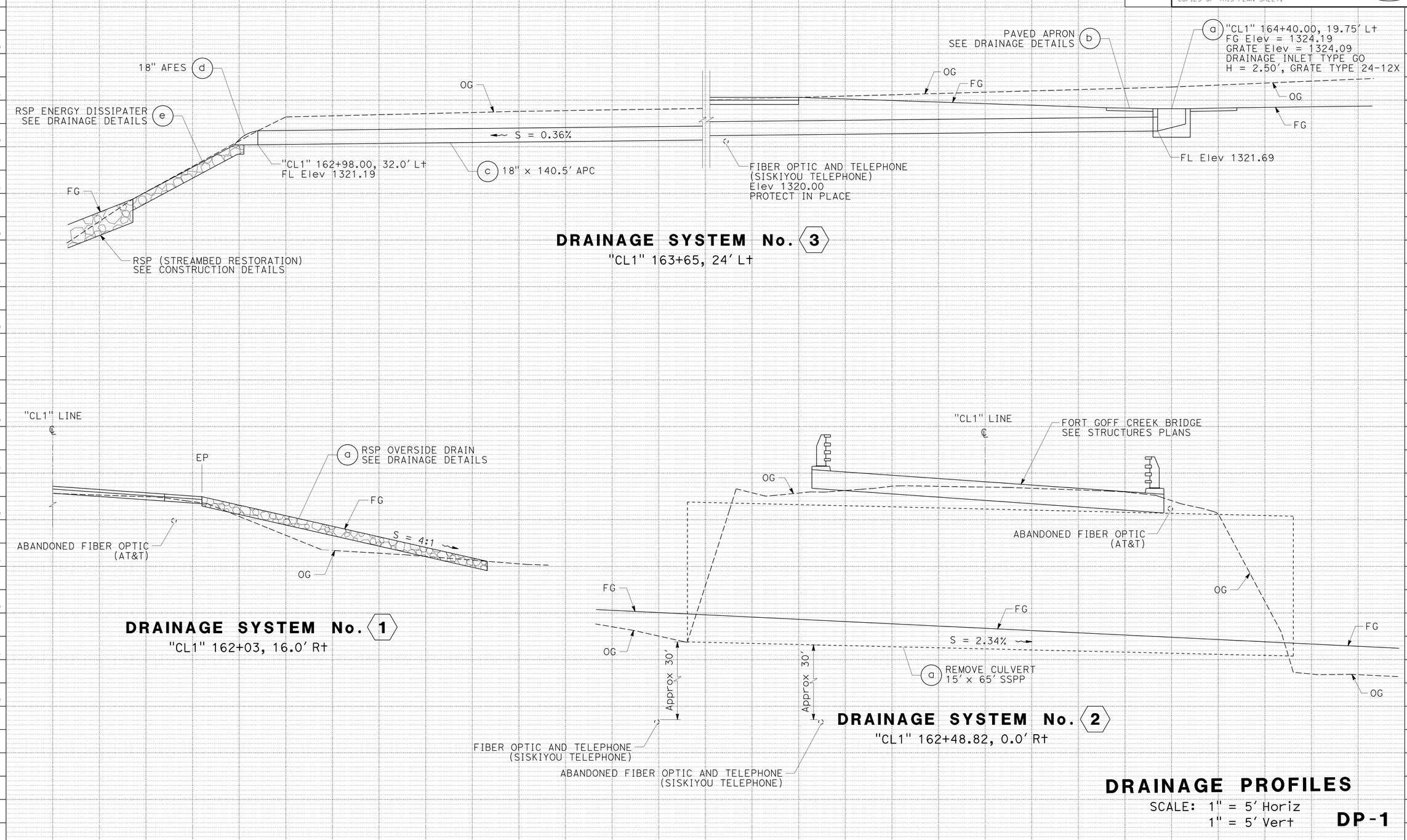


## DRAINAGE PROFILES

SCALE: 1" = 5' Horiz
1" = 5' Vert

**DP-1**

REVISED BY | DATE REVISED
BRETT DITZLER | ALEX PETERSON
CALCULATED-DESIGNED BY | CHECKED BY
FUNCTIONAL SUPERVISOR: STEVE THORNE

STATE OF CALIFORNIA - DEPARTMENT OF TRANSPORTATION
Caltrans® HYDRAULICS DESIGN

P:\proj1\02\4E630_plans\pse\24e630ib001.dgn

LAST REVISION 10-03-13 | DATE PLOTTED => 24-OCT-2013 | TIME PLOTTED => 07:14

| Dist | COUNTY | ROUTE | POST MILES TOTAL PROJECT | SHEET No. | TOTAL SHEETS |
|---|---|---|---|---|---|
| 02 | Sis | 96 | 56.0 | 15 | 92 |

Brett Ditzler 10-23-13
REGISTERED CIVIL ENGINEER DATE

10-25-13
PLANS APPROVAL DATE

REGISTERED PROFESSIONAL ENGINEER
BRETT DITZLER
No. C74085
Exp. 6-30-15
CIVIL
STATE OF CALIFORNIA

*THE STATE OF CALIFORNIA OR ITS OFFICERS OR AGENTS SHALL NOT BE RESPONSIBLE FOR THE ACCURACY OR COMPLETENESS OF SCANNED COPIES OF THIS PLAN SHEET.*

**NOTE:**

1. ROCK COLOR MUST BE SIMILAR TO THAT OF ROCKS FOUND AT THE PROJECT SITE.

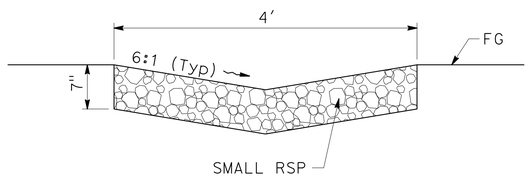


SECTION A-A

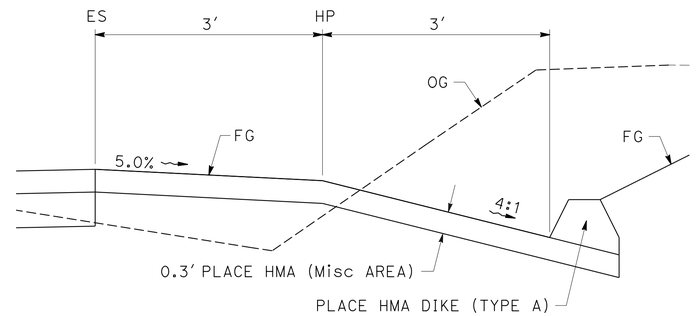


SECTION B-B

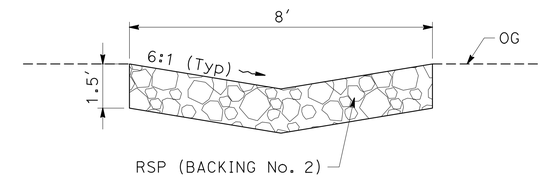


SECTION C-C

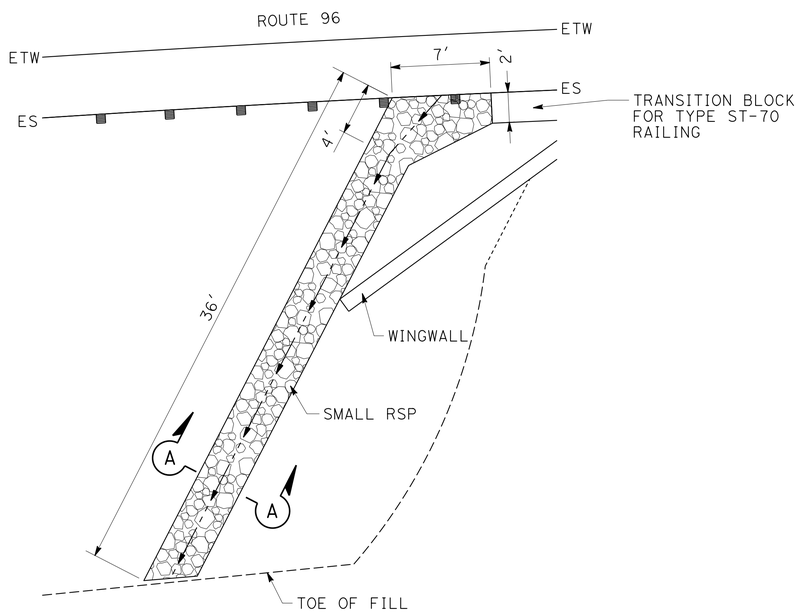


PLAN

**RSP OVERSIDE DRAIN DETAIL**

1 a

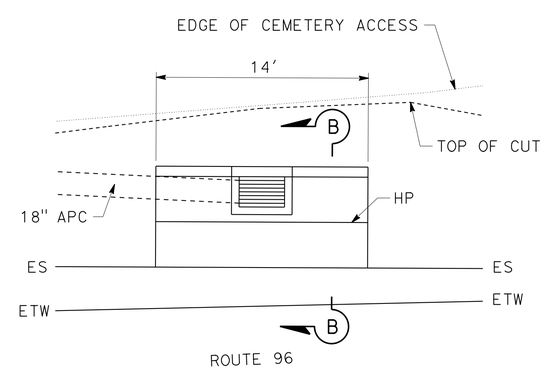


PLAN

**PAVED APRON DETAIL**

3 b

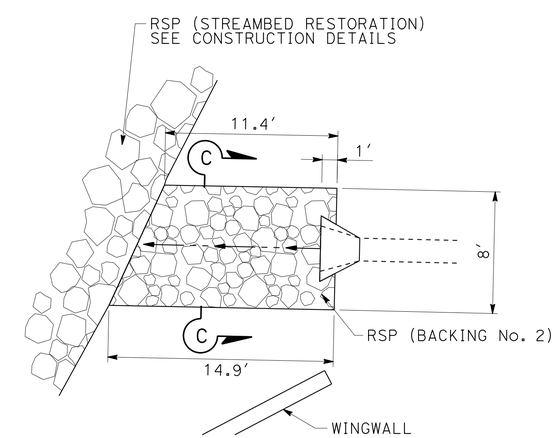


PLAN

**RSP ENERGY DISSIPATER DETAIL**

3 e

**DRAINAGE DETAILS**

NO SCALE

**DD-1**

| CALCULATED-DESIGNED BY | CHECKED BY | REVISED BY | DATE REVISED |
|---|---|---|---|
| BRETT DITZLER | ALEX PETERSON | | |

FUNCTIONAL SUPERVISOR: STEVE THORNE

STATE OF CALIFORNIA - DEPARTMENT OF TRANSPORTATION
Caltrans® HYDRAULICS DESIGN

P:\proj\02\4E630_plans\pse\24e630ic001.dgn

LAST REVISION 10-03-13 | DATE PLOTTED => 24-OCT-2013 | TIME PLOTTED => 07:14

| Dist | COUNTY | ROUTE | POST MILES TOTAL PROJECT | SHEET No. | TOTAL SHEETS |
|---|---|---|---|---|---|
| 02 | Sis | 96 | 56.0 | 16 | 92 |

Brett Ditzler 10-23-13
REGISTERED CIVIL ENGINEER DATE

10-25-13
PLANS APPROVAL DATE

REGISTERED PROFESSIONAL ENGINEER
BRETT DITZLER
No. C74085
Exp. 6-30-15
CIVIL
STATE OF CALIFORNIA

*THE STATE OF CALIFORNIA OR ITS OFFICERS OR AGENTS SHALL NOT BE RESPONSIBLE FOR THE ACCURACY OR COMPLETENESS OF SCANNED COPIES OF THIS PLAN SHEET.*

## ABBREVIATIONS

PS POLYMERIC SHEET COATING

| ALTERNATIVE PIPE CULVERT ALLOWABLE PIPE MATERIAL AND PROTECTION | | | | | | |
|---|---|---|---|---|---|---|
| DESIGNATION | RCP | CSP (TYPE 1) | | CSP (TYPE 2) | | PP |
| | | Min T | COATING | Min T | COATING | TYPE |
| 18" APC | YES | 0.079" | NONE | 0.052" | PS | S |

## DRAINAGE QUANTITIES

| DRAINAGE PLAN OR PROFILE SHEET No. | DRAINAGE SYSTEM No. (1) | DRAINAGE UNIT No. (1) | REMOVE CULVERT (LF) | HOT MIX ASPHALT (TYPE A) | PLACE HOT MIX ASPHALT DIKE (TYPE A) | PLACE HOT MIX ASPHALT (MISCELLANEOUS AREA) | MINOR CONCRETE (MINOR STRUCTURE) | 18" ALTERNATIVE PIPE CULVERT | 18" ALTERNATIVE FLARED END SECTION | SMALL-ROCK SLOPE PROTECTION | ROCK SLOPE PROTECTION (NO. 2, METHOD B) | MISCELLANEOUS IRON AND STEEL | (N) DI HEIGHT | (N) Max COVER | DRAINAGE SYSTEM No. (1) | DRAINAGE UNIT No. (1) | ALIGNMENT | STATION | DESCRIPTION |
|---|---|---|---|---|---|---|---|---|---|---|---|---|---|---|---|---|---|---|---|
| | | | LF | TON | LF | SQYD | CY | LF | EA | CY | CY | LB | FT | FT | | | | | |
| DP-1 | 1 | a | | | | | | | | 3.4 | | | | | 1 | a | CL1 | 162+03 | RSP OVERSIDE DRAIN |
| DP-1 | 2 | a | 65 | | | | | | | | | | | | 2 | a | CL1 | 162+48.82 | REMOVE 15' x 65' SSPP CULVERT |
| DP-1 | 3 | a | | | | | 1.1 | | | | | 239 | 2.50 | | 3 | a | CL1 | 164+40 | TYPE GO DI, W/GRATE TYPE 24-12X |
| DP-1 | 3 | b | | 2 | 10.0 | 9.6 | | | | | | | | | 3 | b | CL1 | 164+40 | PAVED APRON |
| DP-1 | 3 | c | | | | | | 140.5 | | | | | | 3.1 | 3 | c | CL1 | 163+65 | 18" X 140.5' APC |
| DP-1 | 3 | d | | | | | | | 1.0 | | | | | | 3 | d | CL1 | 162+98 | 18" AFES |
| DP-1 | 3 | e | | | | | | | | | 5.8 | | | | 3 | e | CL1 | 162+98 | RSP ENERGY DISSIPATER |
| TOTAL | | | 65 | 2* | 10.0 | 9.6 | 1.1 | 140.5 | 1.0 | 3.4 | 5.8 | 239 | | | | | | | |

(N) NOT A SEPARATE PAY ITEM, FOR INFORMATION ONLY
* ADDITIONAL QUANTITIES SHOWN ELSEWHERE. SEE SHEET Q-1 FOR TOTAL QUANTITIES.

# DRAINAGE QUANTITIES

DQ-1

REVISED BY | DATE REVISED
BRETT DITZLER | ALEX PETERSON
CALCULATED-DESIGNED BY | CHECKED BY
FUNCTIONAL SUPERVISOR: STEVE THORNE
STATE OF CALIFORNIA - DEPARTMENT OF TRANSPORTATION
Caltrans® HYDRAULICS DESIGN
P:\proj\02\4E630_plans\pse\24e630id001.dgn

LAST REVISION 10-03-13 | DATE PLOTTED => 24-OCT-2013 | TIME PLOTTED => 07:14

| Dist | COUNTY | ROUTE | POST MILES TOTAL PROJECT | SHEET No. | TOTAL SHEETS |
|---|---|---|---|---|---|
| 02 | Sis | 96 | 56.0 | 17 | 92 |

Brett Ditzler 10-23-13
REGISTERED CIVIL ENGINEER DATE

10-25-13
PLANS APPROVAL DATE

REGISTERED PROFESSIONAL ENGINEER BRETT DITZLER No. C74085 Exp. 6-30-15 CIVIL STATE OF CALIFORNIA

*THE STATE OF CALIFORNIA OR ITS OFFICERS OR AGENTS SHALL NOT BE RESPONSIBLE FOR THE ACCURACY OR COMPLETENESS OF SCANNED COPIES OF THIS PLAN SHEET.*

## NOTES:

1. FOR ACCURATE RIGHT OF WAY DATA, CONTACT RIGHT OF WAY ENGINEERING AT THE DISTRICT OFFICE.
2. UTILITY OWNERSHIP:

   ELECTRICAL - PACIFIC POWER
   FIBER OPTIC - AT&T
   FIBER OPTIC - SISKIYOU TELEPHONE
   TELEPHONE - SISKIYOU TELEPHONE
   WATER - SEIAD FIRE COUNCIL

## LEGEND:

▭ COMMUNICATION PULL BOX

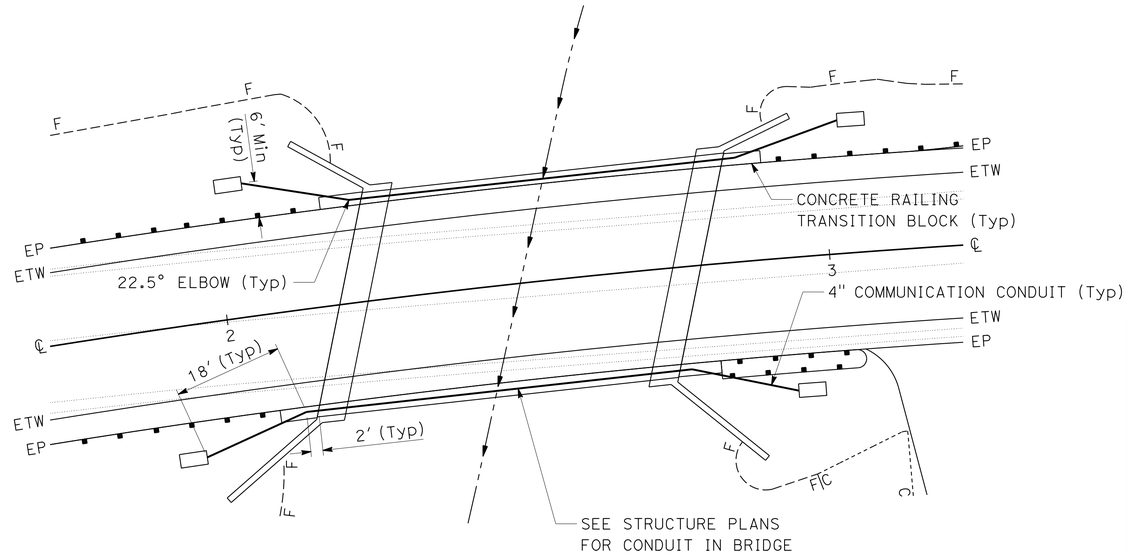


## DETAIL A
## 4" CONDUIT AT BRIDGE

## UTILITY QUANTITIES

| STATION | COMMUNICATION CONDUIT (BRIDGE) | COMMUNICATION PULL BOX |
|---|---|---|
| | LF | EA |
| "CL1" 161+93 TO 162+93 R† | 100 | 2 |
| "CL1" 162+05 TO 163+03 L† | 100 | 2 |
| TOTAL | 200 | 4 |

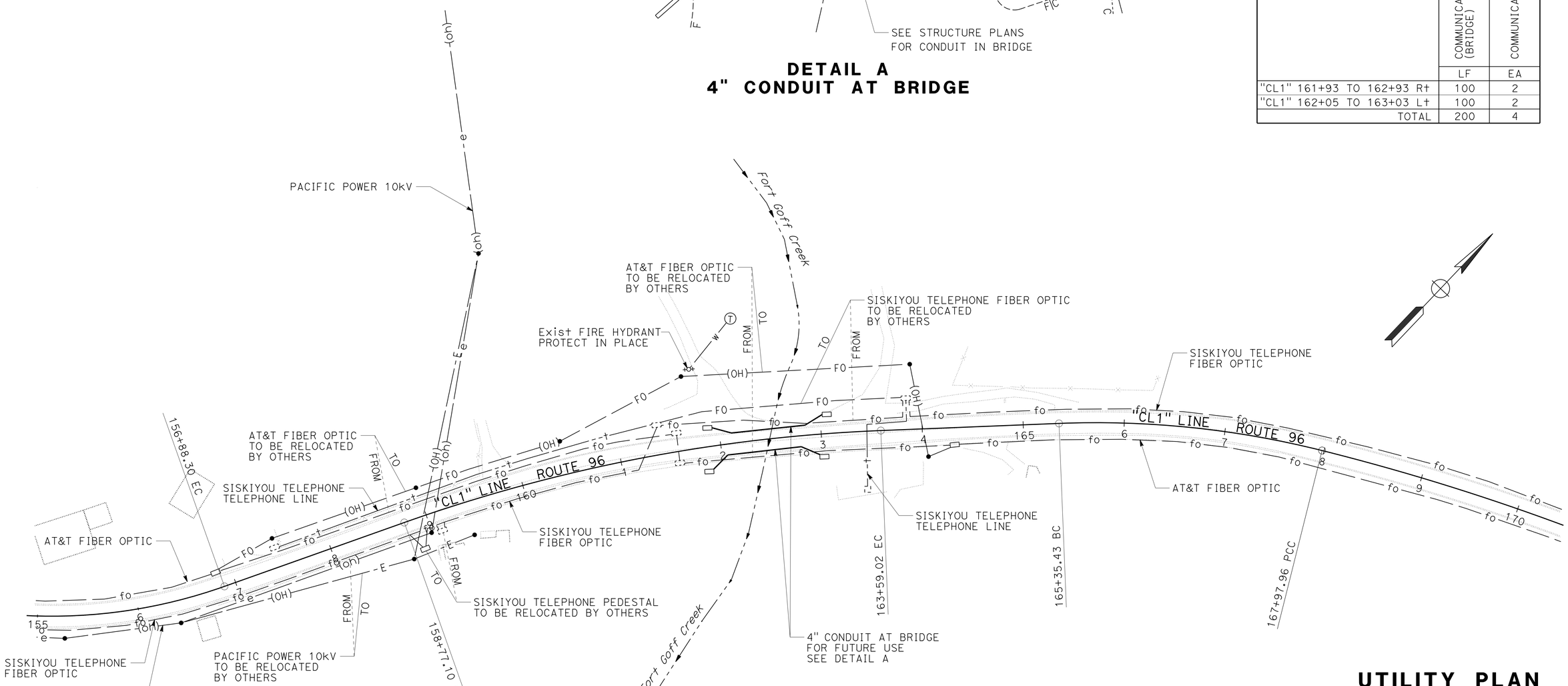


*APPROVED FOR UTILITY WORK ONLY*

## UTILITY PLAN
SCALE: 1" = 50'

**U-1**

STATE OF CALIFORNIA - DEPARTMENT OF TRANSPORTATION
Caltrans® HYDRAULICS DESIGN

FUNCTIONAL SUPERVISOR: STEVE THORNE
CALCULATED-DESIGNED BY: BRETT DITZLER
CHECKED BY: ALEX PETERSON
REVISED BY / DATE REVISED

P:\proj\02\4E630_plans\pse\24e630ka001.dgn

LAST REVISION DATE PLOTTED => 24-OCT-2013
TIME PLOTTED => 07:14

| Dist | COUNTY | ROUTE | POST MILES TOTAL PROJECT | SHEET No. | TOTAL SHEETS |
|---|---|---|---|---|---|
| 02 | Sis | 96 | 56.0 | 18 | 92 |

Brett Ditzler 10-23-13
REGISTERED CIVIL ENGINEER DATE

10-25-13
PLANS APPROVAL DATE

REGISTERED PROFESSIONAL ENGINEER BRETT DITZLER No. C74085 Exp. 6-30-15 CIVIL STATE OF CALIFORNIA

*THE STATE OF CALIFORNIA OR ITS OFFICERS OR AGENTS SHALL NOT BE RESPONSIBLE FOR THE ACCURACY OR COMPLETENESS OF SCANNED COPIES OF THIS PLAN SHEET.*

NOTES:

1. EXACT SIGN LOCATIONS TO BE DETERMINED BY THE ENGINEER.
2. CALIFORNIA CODES ARE DESIGNATED BY (CA), OTHERWISE FEDERAL CODES ARE SHOWN.
3. ALL SIGNS MUST BE BLACK ON ORANGE EXCEPT R1-1, R4-1, AND SPECIAL (PROCEED WHEN CLEAR).
4. SEE ELECTRICAL PLANS FOR TEMPORARY FLASHING BEACON SYSTEM.
5. SEE STAGE CONSTRUCTION AND TRAFFIC HANDLING DETAILS FOR WOOD POLE DETAILS.
6. # - REMOVE OR COVER SIGNS WHEN TEMPORARY DETOUR IS NOT IN USE.

## CONSTRUCTION AREA SIGNS (STATIONARY MOUNTED)

| NUMBER | TYPE | MESSAGE | POST (EACH) | No. OF SIGNS | PANEL SIZE | REMARKS |
|---|---|---|---|---|---|---|
| A | W20-1 | ROAD WORK AHEAD | 1- 6" x 6" | 2 | 48" x 48" | |
| | C23B(CA) | BRIDGE CONSTRUCTION | | | 36" x 18" | |
| B # | W20-4 | ONE LANE ROAD AHEAD | 1- 6" x 6" | 2 | 48" x 48" | |
| | R4-1 | DO NOT PASS | | | 24" x 30" | |
| C # | W3-1 | STOP AHEAD | MOUNT ON WOOD POLE | 2 | 48" x 48" | YELLOW FLASHING BEACON Temp CRASH CUSHION |
| | W16-2 | 500 FEET | | | 24" x 18" | |
| D # | R1-1 | STOP | MOUNT ON WOOD POLE | 2 | 36" x 36" | 2 RED FLASHING BEACONS Temp CRASH CUSHION |
| | SPECIAL | PROCEED WHEN CLEAR | | | 36" x 18" | |
| E | G20-2 | END ROAD WORK | 1- 4" x 4" | 2 | 36" x 18" | |
| F | SPECIAL | PROJECT FUNDING SIGN (SEE SHEET CS-2) | 2- 6" x 6" | 2 | 96" x 78" | |

## CONSTRUCTION AREA SIGNS (PORTABLE)

| NUMBER | TYPE | MESSAGE | No. OF SIGNS | PANEL SIZE | REMARKS |
|---|---|---|---|---|---|
| G # | R1-1 | STOP | 2 | 24" x 24" | |
| | SPECIAL | PROCEED WHEN CLEAR | | 24" x 12" | |

LEGEND:

- ROADSIDE SIGN (ONE POST)
- ROADSIDE SIGN (TWO POST)
- ROADSIDE SIGN (STRAP AND SADDLE BRACKET METHOD)
- FLASHING BEACON
- TEMPORARY LIMIT LINE
- CHANNELIZER
- TEMPORARY CRASH CUSHION MODULE (ARRAY 'TU11')

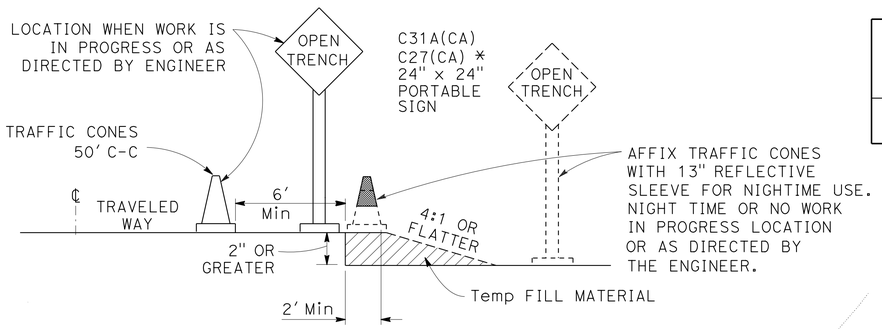


## OPEN TRENCH SIGNING AND MARKING

* PLACE AT 250' INTERVALS THROUGH THE OPEN TRENCH AREA, ALTERNATE C27(CA) (OPEN TRENCH) AND C31A(CA) (NO SHOULDER) SIGNS

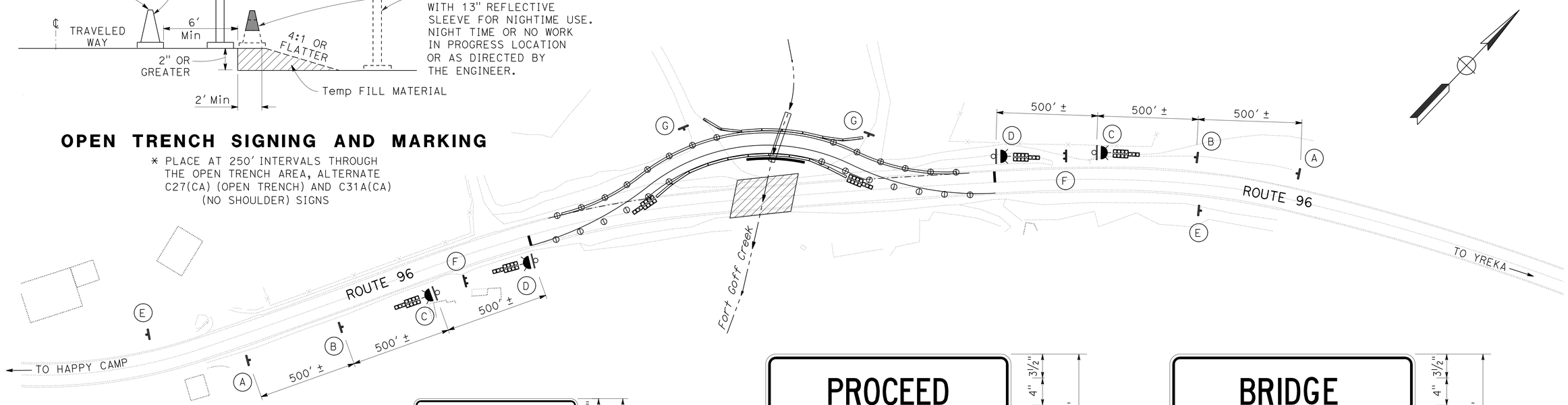


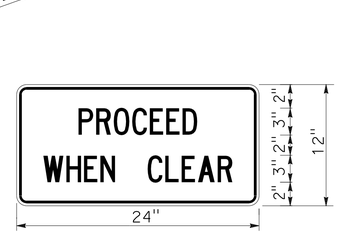


1.5" RADIUS, 0.4" BORDER, 0.4" INDENT, BLACK ON WHITE

**SPECIAL SIGN DETAIL (24" x 12")**

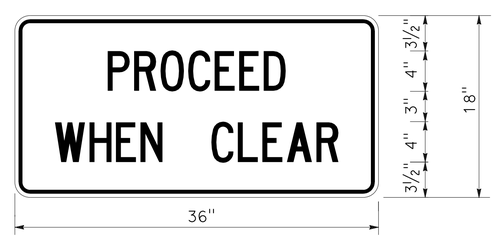


1.5" RADIUS, 0.4" BORDER, 0.4" INDENT, BLACK ON WHITE

**SPECIAL SIGN DETAIL (36" x 18")**

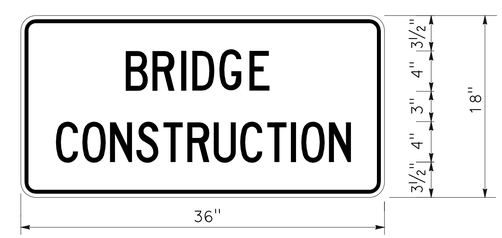


1.5" RADIUS, 0.4" BORDER, 0.4" INDENT, BLACK ON ORANGE

**C23B(CA) SIGN DETAIL**

# CONSTRUCTION AREA SIGNS

NO SCALE

CS-1

*APPROVED FOR CONSTRUCTION AREA SIGN WORK ONLY*

REVISED BY | DATE REVISED
BRETT DITZLER | ALEX PETERSON
CALCULATED-DESIGNED BY | CHECKED BY
FUNCTIONAL SUPERVISOR: STEVE THORNE
STATE OF CALIFORNIA - DEPARTMENT OF TRANSPORTATION
Caltrans® HYDRAULICS DESIGN

P:\proj1\02\4E6301_plans\pse\24e6301a001.dgn

LAST REVISION 10-23-13 | DATE PLOTTED => 24-OCT-2013 | TIME PLOTTED => 07:14

| Dist | COUNTY | ROUTE | POST MILES TOTAL PROJECT | SHEET No. | TOTAL SHEETS |
|---|---|---|---|---|---|
| 02 | Sis | 96 | 56.0 | 19 | 92 |

Brett Ditzler 10-23-13
REGISTERED CIVIL ENGINEER DATE

10-25-13
PLANS APPROVAL DATE

REGISTERED PROFESSIONAL ENGINEER
BRETT DITZLER
No. C74085
Exp. 6-30-15
CIVIL
STATE OF CALIFORNIA

*THE STATE OF CALIFORNIA OR ITS OFFICERS OR AGENTS SHALL NOT BE RESPONSIBLE FOR THE ACCURACY OR COMPLETENESS OF SCANNED COPIES OF THIS PLAN SHEET.*

## NOTES:

1. AGENCY LOGOS NOT DETAILED ON THIS SHEET WILL BE PROVIDED AS DECALS BY THE DEPARTMENT.
2. EXCEPT AS OTHERWISE SHOWN, THE LEGEND OF THE SIGN MUST BE BLACK ON A WHITE BACKGROUND (NON-REFLECTIVE).
3. THE BORDER OF THE SIGN AND DETAIL "B" MUST BE BLUE (NON-REFLECTIVE).
4. THE DIAMOND IN DETAIL "C" MUST BE BLUE FOR THE BACKGROUND OF THE MESSAGE, "SLOW FOR THE CONE ZONE", AND WHITE BACKGROUND FOR THE ORANGE CONES. THE COLOR AND TYPE OF FONT FOR THE "SLOW FOR THE CONE ZONE" MESSAGE MUST BE: "SLOW" WHITE D; "FOR THE" WHITE D; "CONE" ORANGE ARIAL FONT; "ZONE" WHITE ARIAL FONT.

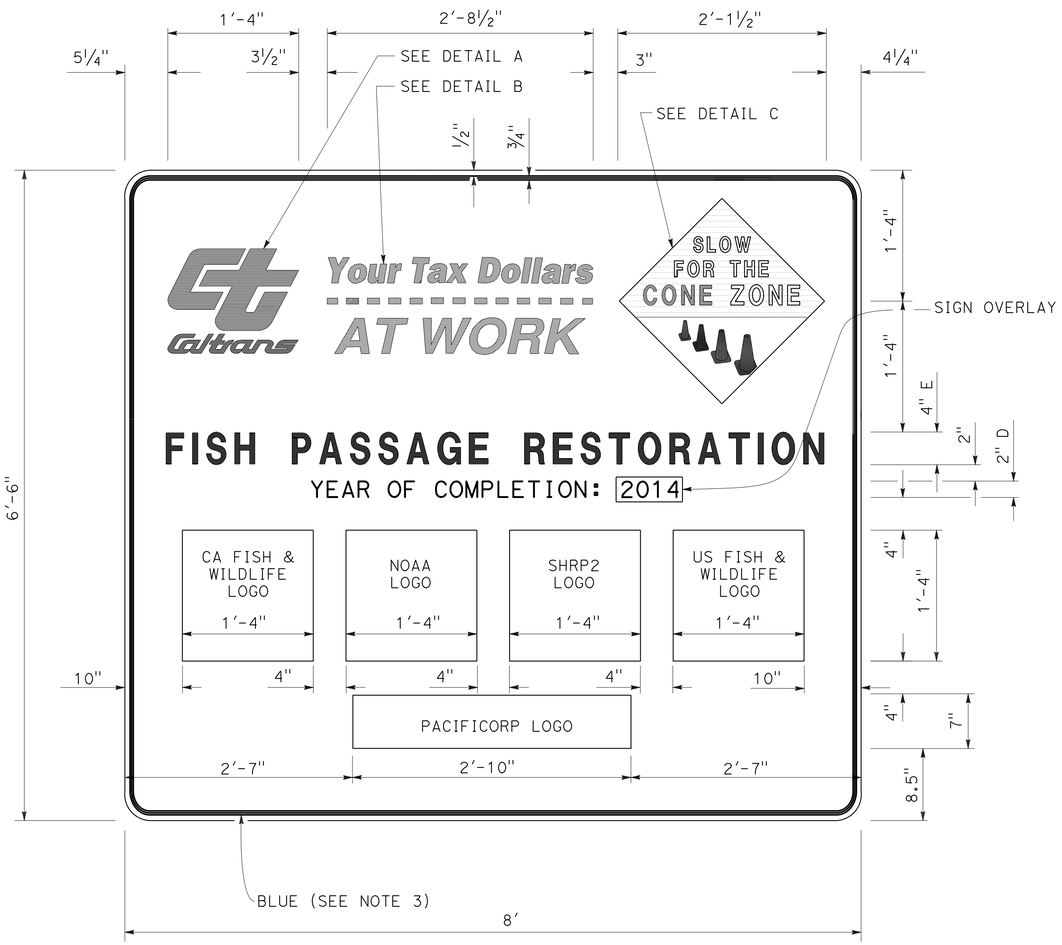


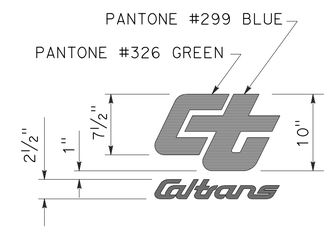


**DETAIL A**

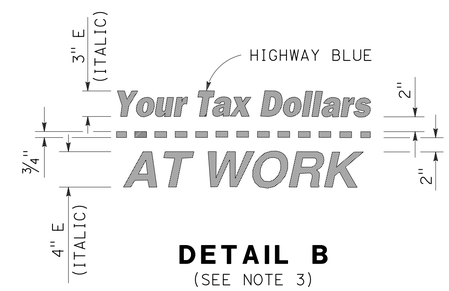


**DETAIL B**
(SEE NOTE 3)

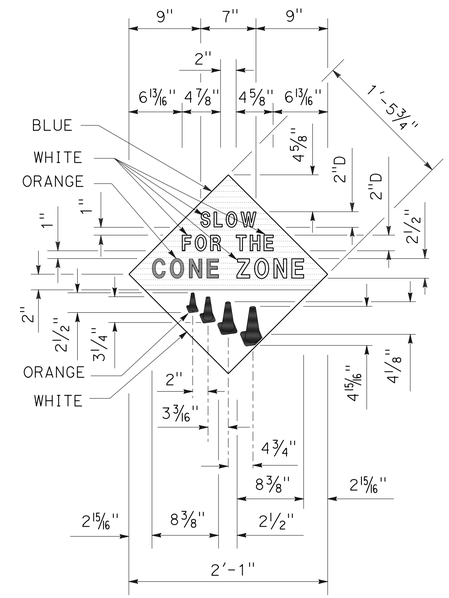


**DETAIL C**
(SEE NOTE 4)

# CONSTRUCTION AREA SIGNS

## CONSTRUCTION PROJECT FUNDING SIGNS

NO SCALE

**CS-2**

| REVISED BY | DATE REVISED |
|---|---|
| BRETT DITZLER | ALEX PETERSON |
| CALCULATED-DESIGNED BY | CHECKED BY |
| FUNCTIONAL SUPERVISOR | STEVE THORNE |

STATE OF CALIFORNIA - DEPARTMENT OF TRANSPORTATION
Caltrans HYDRAULICS DESIGN

P:\proj\02\4E630_plans\pse\24e6301a002.dgn

LAST REVISION 10-23-13 | DATE PLOTTED => 24-OCT-2013 | TIME PLOTTED => 07:14

| Dist | COUNTY | ROUTE | POST MILES TOTAL PROJECT | SHEET No. | TOTAL SHEETS |
|---|---|---|---|---|---|
| 02 | Sis | 96 | 56.0 | 20 | 92 |

Brett Ditzler 10-23-13
REGISTERED CIVIL ENGINEER DATE

10-25-13
PLANS APPROVAL DATE

REGISTERED PROFESSIONAL ENGINEER BRETT DITZLER No. C74085 Exp. 6-30-15 CIVIL STATE OF CALIFORNIA

*THE STATE OF CALIFORNIA OR ITS OFFICERS OR AGENTS SHALL NOT BE RESPONSIBLE FOR THE ACCURACY OR COMPLETENESS OF SCANNED COPIES OF THIS PLAN SHEET.*

## STAGE 1 TRAFFIC HANDLING

1. CONSTRUCT TEMPORARY DETOUR AND TEMPORARY FLASHING BEACON SYSTEM. PROVIDE FLAGGERS AT EACH END OF THE TEMPORARY DETOUR WHEN THERE ARE ACTIVE WORK OPERATIONS ON FORT GOFF CREEK BRIDGE AND ROADWAY APPROACHES BETWEEN THE LIMIT LINES OF THE TEMPORARY DETOUR.

## STAGE 1 CONSTRUCTION

1. EXCAVATE FOR BRIDGE CONSTRUCTION AND REMOVE UPPER PORTION OF EXISTING CULVERT
2. CONSTRUCT FORT GOFF CREEK BRIDGE

## STAGE 2 TRAFFIC HANDLING

1. UTILIZE TEMPORARY DETOUR WITH STANDARD PLAN T13 LANE CLOSURES WHILE FEASIBLE FOR WORK IN EB LANE. REMOVE WHEN NO LONGER NEEDED.
2. ONE-WAY REVERSING TRAFFIC CONTROL PER STANDARD PLAN T13.

## STAGE 2 CONSTRUCTION

1. CONSTRUCT ROADWAY APPROACHES.
2. INSTALL TEMPORARY CLEAR WATER DIVERSION AND EXCAVATE REMAINDER OF CHANNEL.
3. CONSTRUCT STREAMBED RESTORATION RSP.

## LEGEND:

- DIRECTION OF TRAVEL
- TEMPORARY LIMIT LINE
- CHANNELIZER (SURFACE MOUNTED) 25′ SPACING
- STAGE 1 CONSTRUCTION
- STAGE 2 CONSTRUCTION
- TEMPORARY CRASH CUSHION MODULE (ARRAY 'TU11')
- TEMPORARY MARKER (TYPE P)

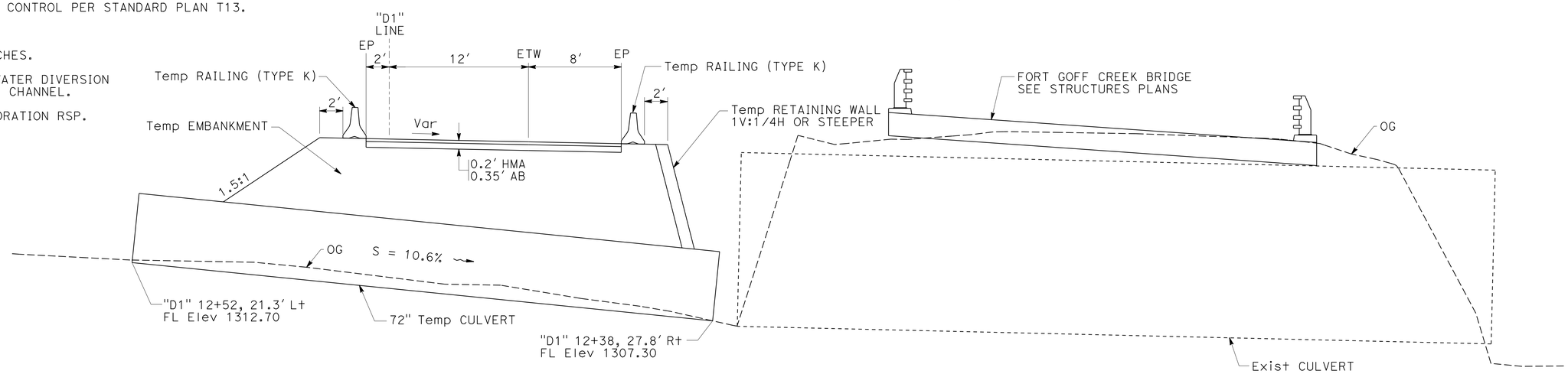


TYPICAL CROSS SECTION
**TEMPORARY DETOUR**
NO SCALE

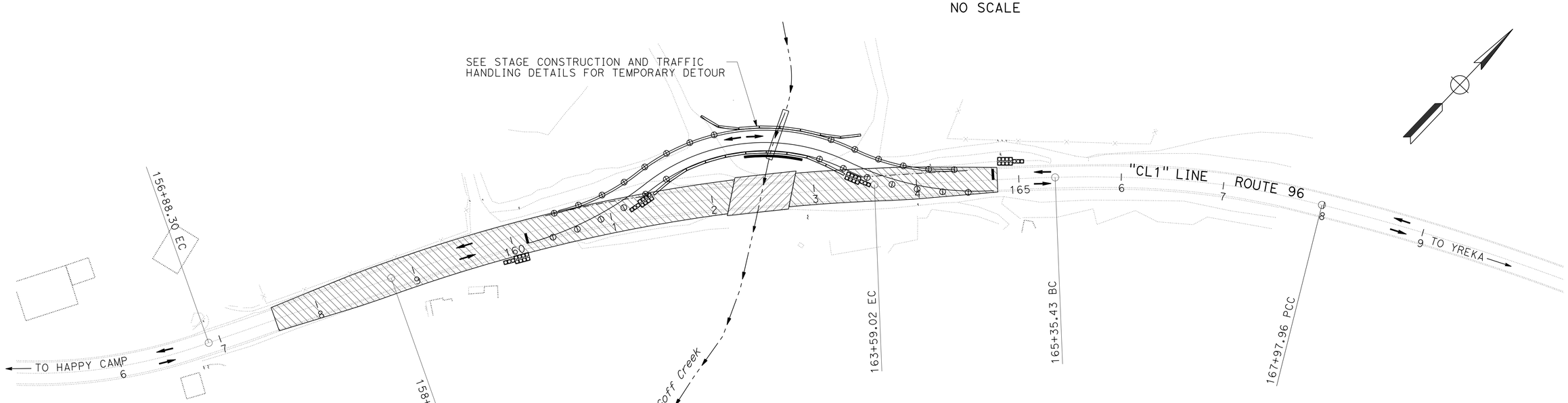


PLAN

# STAGE CONSTRUCTION AND TRAFFIC HANDLING PLAN

SCALE: 1" = 50′

**SC-1**

*APPROVED FOR STAGE CONSTRUCTION AND TRAFFIC HANDLING ONLY*

REVISED BY | DATE REVISED
BRETT DITZLER | ALEX PETERSON
CALCULATED-DESIGNED BY | CHECKED BY
FUNCTIONAL SUPERVISOR: STEVE THORNE

STATE OF CALIFORNIA - DEPARTMENT OF TRANSPORTATION
Caltrans® HYDRAULICS DESIGN

P:\proj1\02\4E630_plans\pse\24e630ma001.dgn

LAST REVISION 10-23-13 | DATE PLOTTED => 24-OCT-2013 | TIME PLOTTED => 07:14

| Dist | COUNTY | ROUTE | POST MILES TOTAL PROJECT | SHEET No. | TOTAL SHEETS |
|---|---|---|---|---|---|
| 02 | Sis | 96 | 56.0 | 21 | 92 |

Brett Ditzler 10-23-13
REGISTERED CIVIL ENGINEER DATE

10-25-13
PLANS APPROVAL DATE

REGISTERED PROFESSIONAL ENGINEER BRETT DITZLER No. C74085 Exp. 6-30-15 CIVIL STATE OF CALIFORNIA

*THE STATE OF CALIFORNIA OR ITS OFFICERS OR AGENTS SHALL NOT BE RESPONSIBLE FOR THE ACCURACY OR COMPLETENESS OF SCANNED COPIES OF THIS PLAN SHEET.*

## NOTE:

1. FOR ACCURATE RIGHT OF WAY DATA, CONTACT RIGHT OF WAY ENGINEERING AT THE DISTRICT OFFICE.

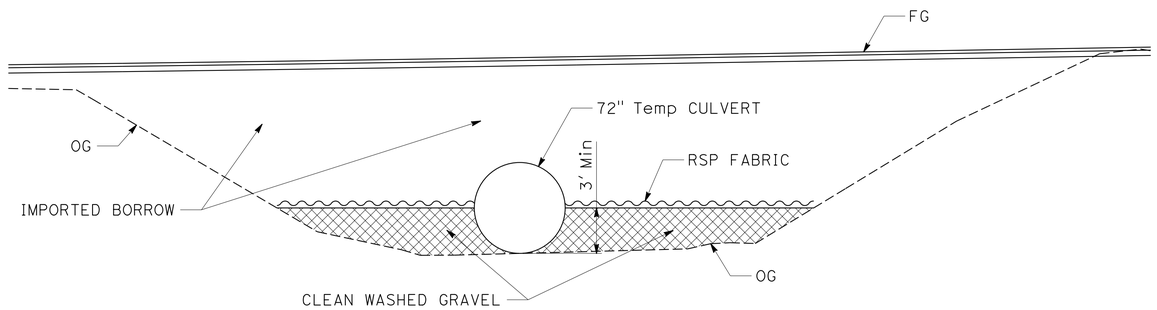


SECTION A-A

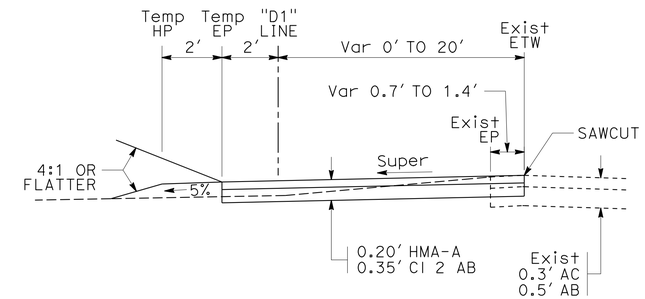


SECTION B-B

## ABBREVIATIONS:

| | |
|---|---|
| Super | SUPERELEVATION |
| HMA-A | HOT MIX ASPHALT (TYPE A) |

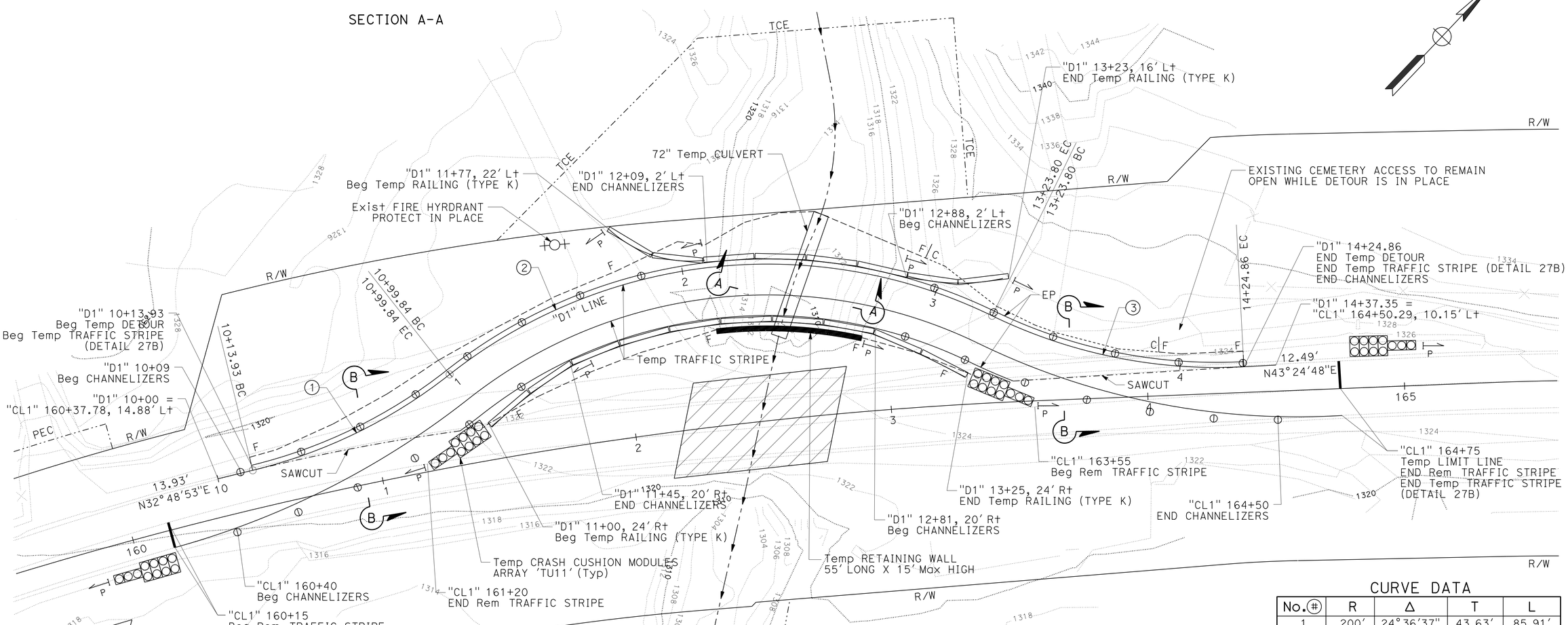


## CURVE DATA

| No. (#) | R | Δ | T | L |
|---|---|---|---|---|
| 1 | 200' | 24°36'37" | 43.63' | 85.91' |
| 2 | 200' | 64°9'37" | 125.36' | 223.96' |
| 3 | 200' | 28°57'05" | 51.63' | 101.06' |

# TEMPORARY DETOUR PLAN

*APPROVED FOR STAGE CONSTRUCTION AND TRAFFIC HANDLING ONLY*

# STAGE CONSTRUCTION AND TRAFFIC HANDLING DETAILS

SCALE: 1" = 20'

**SCD-1**

REVISED BY | DATE REVISED
BRETT DITZLER | ALEX PETERSON
CALCULATED-DESIGNED BY | CHECKED BY
FUNCTIONAL SUPERVISOR: STEVE THORNE

STATE OF CALIFORNIA - DEPARTMENT OF TRANSPORTATION
Caltrans HYDRAULICS DESIGN

P:\proj1\02\4E630_plans\pse\24e630mb001.dgn

LAST REVISION 10-23-13 | DATE PLOTTED => 24-OCT-2013 | TIME PLOTTED => 07:14

| Dist | COUNTY | ROUTE | POST MILES TOTAL PROJECT | SHEET No. | TOTAL SHEETS |
|---|---|---|---|---|---|
| 02 | Sis | 96 | 56.0 | 22 | 92 |

Brett Ditzler 10-23-13
REGISTERED CIVIL ENGINEER DATE

10-25-13
PLANS APPROVAL DATE

REGISTERED PROFESSIONAL ENGINEER BRETT DITZLER No. C74085 Exp. 6-30-15 CIVIL STATE OF CALIFORNIA

*THE STATE OF CALIFORNIA OR ITS OFFICERS OR AGENTS SHALL NOT BE RESPONSIBLE FOR THE ACCURACY OR COMPLETENESS OF SCANNED COPIES OF THIS PLAN SHEET.*

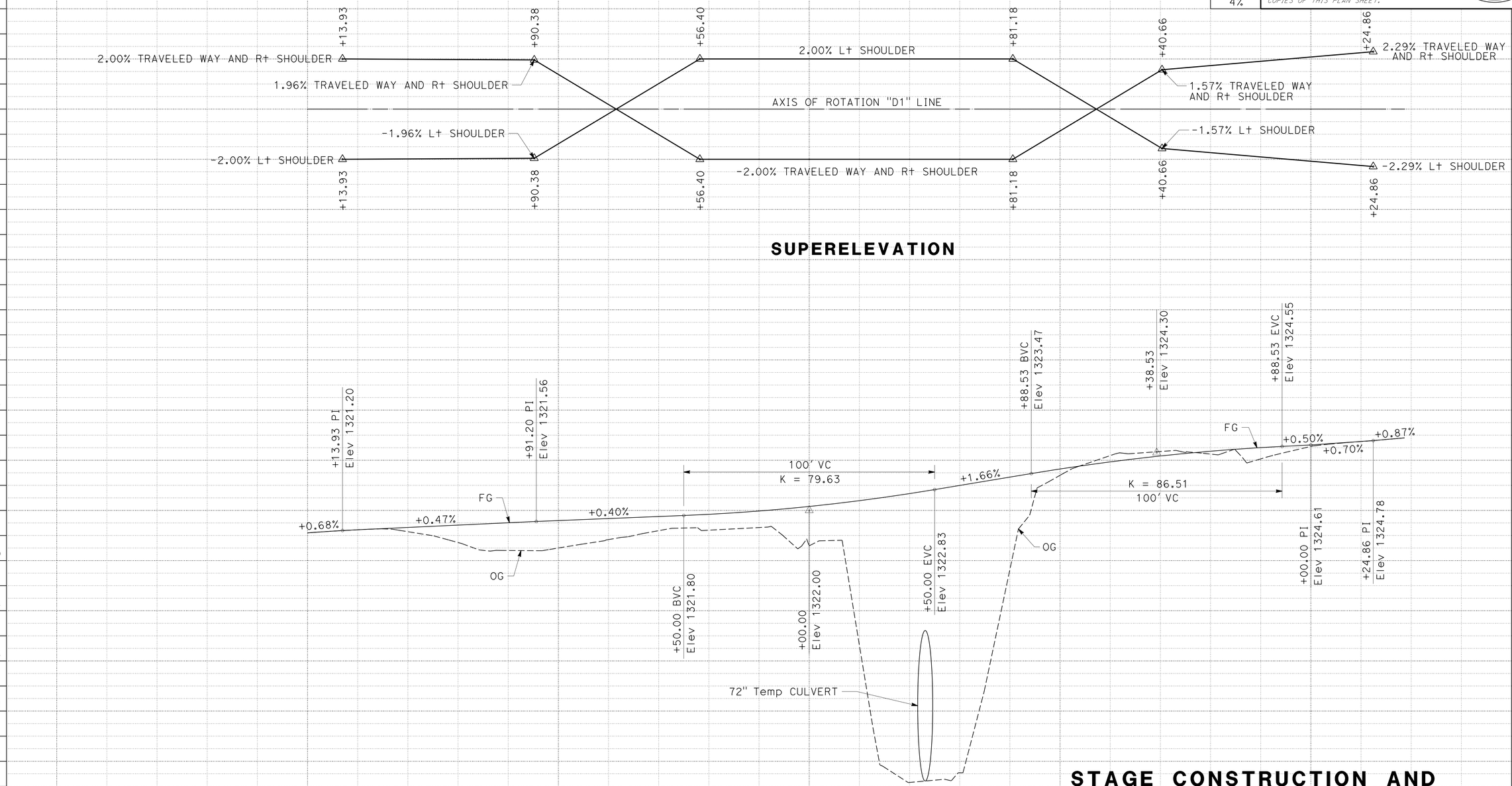


# STAGE CONSTRUCTION AND TRAFFIC HANDLING DETAILS

SCALE: 1" = 50' Horiz
1" = 5' Vert

**SCD-2**

BRETT DITZLER — REVISED BY
ALEX PETERSON — DATE REVISED
STEVE THORNE — FUNCTIONAL SUPERVISOR
CALCULATED-DESIGNED BY
CHECKED BY

STATE OF CALIFORNIA - DEPARTMENT OF TRANSPORTATION
Caltrans® HYDRAULICS DESIGN

P:\proj1\02\4E630_plans\pse\24e630mb002.dgn

LAST REVISION 10-23-13
DATE PLOTTED => 24-OCT-2013
TIME PLOTTED => 07:14

| Dist | COUNTY | ROUTE | POST MILES TOTAL PROJECT | SHEET No. | TOTAL SHEETS |
|---|---|---|---|---|---|
| 02 | Sis | 96 | 56.0 | 23 | 92 |

Brett Ditzler 10-23-13
REGISTERED CIVIL ENGINEER DATE

10-25-13
PLANS APPROVAL DATE

REGISTERED PROFESSIONAL ENGINEER BRETT DITZLER No. C74085 Exp. 6-30-15 CIVIL STATE OF CALIFORNIA

*THE STATE OF CALIFORNIA OR ITS OFFICERS OR AGENTS SHALL NOT BE RESPONSIBLE FOR THE ACCURACY OR COMPLETENESS OF SCANNED COPIES OF THIS PLAN SHEET.*

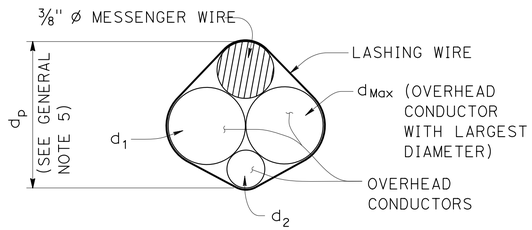


$d_p = 3/8'' + d_{Max} + 0.30 * (d_1 + d_2 + \ldots d_n)$

## PROJECTED DEPTH OF OVERHEAD BUNDLE, (dp)

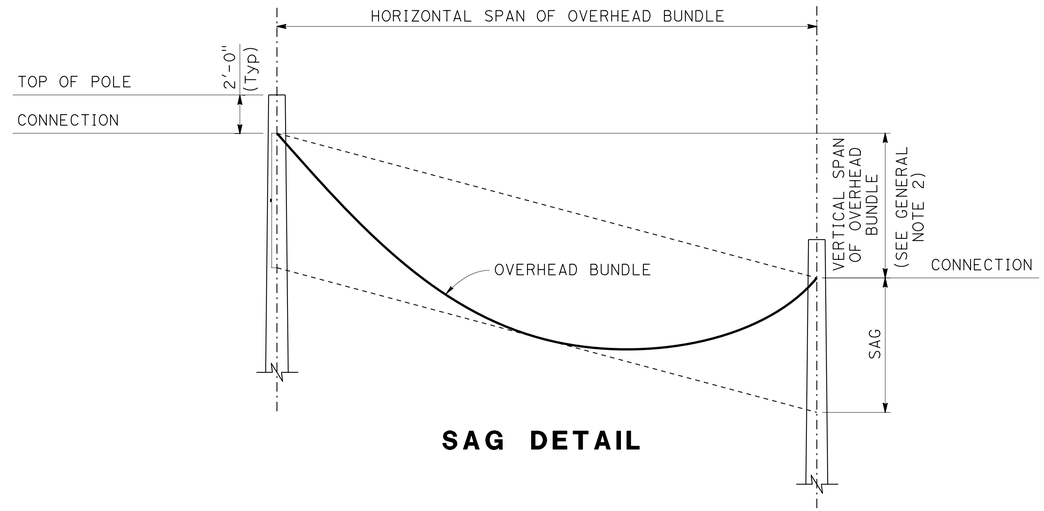


## SAG DETAIL

DESIGN: AASHTO STANDARD SPECIFICATIONS FOR STRUCTURAL SUPPORTS FOR HIGHWAY SIGNS, LUMINAIRES AND TRAFFIC SIGNALS, FIFTH EDITION (LTS-5).

GROUP LOAD COMBINATIONS:

I DEAD LOAD
II DEAD LOAD + WIND LOAD
III DEAD LOAD + 0.5 (WIND LOAD) + ICE LOAD
IV FATIGUE: NOT USED

LOADING:

WIND LOADING: 100 MPH (3-SECOND GUST)
WIND RECURRENCE INTERVAL: 10 YEARS
COMBINED HEIGHT, EXPOSURE, AND ELEVATED TERRAIN FACTOR = 1.05 (EXPOSURE C, STRUCTURE IS NOT LOCATED ON OR OVER THE TOP HALF OF A RIDGE, HILL, OR ESCARPMENT)

ICE LOADING: 3.0 PSF ON SURFACES, 0.60 IN RADIAL THICKNESS OF ICE AT A UNIT WEIGHT OF 60 PCF ON OVERHEAD BUNDLES

BASIC DESIGN VALUES:

Timber Poles: Fb = 1850 psi
Fv = 110 psi
Fcp = 230 psi
Fc = 950 psi
E = 1500 x $10^3$ psi

DESIGN WIRE BREAKING STRENGTHS:

ASTM A475, UTILITIES GRADE, 7 STRAND MODIFIED BY TERMINATION EFFICIENCY FACTOR OF 0.8

FOUNDATION DESIGN NOTES:

1. POLE EMBEDMENT DEPTH DESIGN IS BASED ON BROMS' APPROXIMATE PROCEDURE AS DESCRIBED IN ARTICLE 13.6 OF AASHTO LTS-5.

2. EMBEDMENT DEPTH IS CALCULATED BASED ON FOLLOWING SOIL PARAMETERS,
COHESIVE SOIL:
SHEAR STRENGTH OF SOIL C = 1500 PSF.
COHESIONLESS SOIL:
ø = 30 DEG, γ = 120 PCF.
SOIL ASSUMED TO BE UNSATURATED.

3. AN OVERLOAD FACTOR OF 2.0 AND AN UNDERCAPACITY FACTOR OF 0.7 WERE USED FOR SAFETY FACTOR OF 2.86.

4. ALLOWABLE VERTICAL BEARING PRESSURE AT THE END BEARING OF POLES IS 3000 PSF AT 6 FEET OR MORE EMBEDMENT.

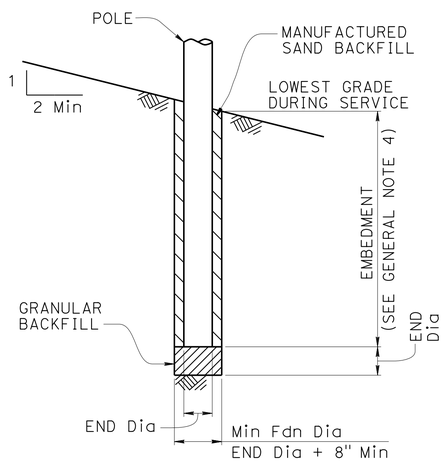


## POLE FOUNDATION

GENERAL NOTES:

1. THE MESSENGER WIRE AND ANY COMBINATION OF OVERHEAD CONDUCTORS MUST NOT EXCEED EITHER A SELF WEIGHT OF 3.0 LB/FT OR THE MAXIMUN $D_p$.

2. THE MAXIMUM VERTICAL SPAN IS 10% OF THE HORIZONTAL SPAN.

3. FOR POLES WITH ADJACENT UNBALANCED HORIZONTAL SPANS, THE SHORTEST HORIZONTAL SPAN MUST BE AT LEAST 50% OF THE LARGEST HORIZONTAL SPAN.

4. ADD 2'-0" FOR SLOPES ABOVE 1V:4H.

5. FOR A POLE SUPPORTING MULTIPLE SPANS, CALCULATE $D_p$ FOR EACH SPAN AND USE THE LARGEST VALUE.

6. DO NOT EXCEED THE ATTACHMENTS SHOWN.

## DIAMETERS AND SELF WEIGHT OF OVERHEAD CONDUCTORS

| CONDUCTOR OR CABLE TYPE | DIAMETER d (in) | WEIGHT w (plf) |
|---|---|---|
| 3 CONDUCTOR SIGNAL CABLE (3CSC) | 0.400 | 0.0980 |
| 5 CONDUCTOR SIGNAL CABLE (5CSC) | 0.500 | 0.1560 |
| 9 CONDUCTOR SIGNAL CABLE (9CSC) | 0.650 | 0.2760 |
| 12 CONDUCTOR SIGNAL CABLE (12CSC) | 0.800 | 0.3970 |
| 28 CONDUCTOR SIGNAL CABLE (28CSC) | 0.900 | 0.6490 |
| 1-#14 | 0.166 | 0.0235 |
| 1-#12 | 0.185 | 0.0330 |
| 1-#10 | 0.210 | 0.0476 |
| 1-#8 | 0.271 | 0.0774 |
| 1-#6 | 0.310 | 0.1130 |
| 1-#4 | 0.359 | 0.1690 |
| 1-#3 | 0.388 | 0.2080 |
| 1-#2 | 0.420 | 0.2560 |
| 1-#1 | 0.498 | 0.3340 |
| 6-CONDUCTOR SIGNAL INTERCONNECT CABLE (SIC) | 0.350 | 0.0860 |
| 12-CONDUCTOR SIGNAL INTERCONNECT CABLE (SIC) | 0.500 | 0.1440 |
| DETECTOR LEAD-IN CABLE (DLC) | 0.310 | 0.0440 |
| 12 to 48-STRAND FIBER OPTIC CABLE (48FOC) | 0.424 | 0.0600 |
| 72-STRAND FIBER OPTIC CABLE (72FOC) | 0.484 | 0.0770 |
| 96-STRAND FIBER OPTIC CABLE (96FOC) | 0.535 | 0.1050 |
| 144-STRAND FIBER OPTIC CABLE (144FOC) | 0.670 | 0.1890 |
| 3/8" ø MESSENGER WIRE | 0.375 | 0.2730 |

# STAGE CONSTRUCTION AND TRAFFIC HANDLING DETAILS

## TEMPORARY WOOD POLES GENERAL NOTES

NO SCALE

**SCD-3**

REVISED BY | DATE REVISED
BRETT DITZLER | ALEX PETERSON
CALCULATED-DESIGNED BY | CHECKED BY
FUNCTIONAL SUPERVISOR | STEVE THORNE

STATE OF CALIFORNIA - DEPARTMENT OF TRANSPORTATION
Caltrans® HYDRAULICS DESIGN

P:\proj1\02\4E630_plans\pse\24e630mb003.dgn

LAST REVISION 10-23-13 | DATE PLOTTED => 24-OCT-2013 | TIME PLOTTED => 07:14

| Dist | COUNTY | ROUTE | POST MILES TOTAL PROJECT | SHEET No. | TOTAL SHEETS |
|---|---|---|---|---|---|
| 02 | Sis | 96 | 56.0 | 24 | 92 |

Brett Ditzler 10-23-13
REGISTERED CIVIL ENGINEER DATE

10-25-13
PLANS APPROVAL DATE

REGISTERED PROFESSIONAL ENGINEER BRETT DITZLER No. C74085 Exp. 6-30-15 CIVIL STATE OF CALIFORNIA

*THE STATE OF CALIFORNIA OR ITS OFFICERS OR AGENTS SHALL NOT BE RESPONSIBLE FOR THE ACCURACY OR COMPLETENESS OF SCANNED COPIES OF THIS PLAN SHEET.*

## POLE SELECTION TABLE

**LEGEND:**

- WOOD POLE NO ATTACHMENTS
- A WOOD POLE WITH ATTACHMENTS
- —OH— OVERHEAD BUNDLE

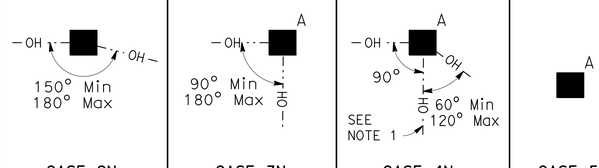


| | | CASE 1N | | | | CASE 2N | | | | CASE 3N | | | | CASE 4N | | | | CASE 5N |
|---|---|---|---|---|---|---|---|---|---|---|---|---|---|---|---|---|---|---|
| | MAXIMUM $d_p$ | 1" | 1.5" | 2.0" | 2.5" | 1" | 1.5" | 2.0" | 2.5" | 1.0" | 1.5" | 2.0" | 2.5" | 1" | 1.5" | 2.0" | 2.5" | N/A |
| OVERHEAD BUNDLE HORIZONTAL SPAN (Max) 50′ | MINIMUM POLE CLASS | H-1 | H-2 | H-2 | H-2 | 4 | 3 | 2 | 1 | H-2 | H-2 | H-3 | H-3 | H-4 | H-4 | H-4 | H-5 | CLASS 1 E = 10′ |
| | POLE EMBEDMENT (E) | 11′ | | | | 10′ | | | | 11′ | | | | 12′ | | | | |
| 100′ | MINIMUM POLE CLASS | H-2 | H-3 | H-4 | H-5 | 1 | H-1 | H-2 | H-3 | H-4 | H-5 | H-5 | H-6 | H-5 | H-5 | H-6 | | |
| | POLE EMBEDMENT (E) | 12′ | | | | 11′ | | | | 12′ | | | | 12′ | | | | |
| 150′ | MINIMUM POLE CLASS | H-4 | H-5 | H-6 | | H-1 | H-2 | H-3 | H-5 | H-6 | | | | H-6 | | | | |
| | POLE EMBEDMENT (E) | 12′ | | | | 12′ | | | | 12′ | | | | 12′ | | | | |
| 200′ | MINIMUM POLE CLASS | H-5 | H-6 | | | H-2 | H-3 | H-5 | | | | | | | | | | |
| | POLE EMBEDMENT (E) | 12′ | | | | 12′ | | | | | | | | | | | | |

1. CCTV CAMERA ASSEMBLY OR VEHICLE DETECTION SYSTEM
2. OVERHEAD BUNDLE CONSISTING OF A 3/8" Ø MESSENGER WIRE AND OVERHEAD CONDUCTORS AND LASHING WIRE.
3. LUMINAIRE WITH MAST ARM
4. PEDESTRIAN PUSHBUTTON
5. SIGNAL FACE WITH 3 INDICATIONS OR SINGLE SHEET SIGN PANEL (10 SQFT Max)
6. RISER WITH WEATHER HEAD AS REQUIRED
7. PULL BOX AS REQUIRED
8. GROUNDING AS REQUIRED
9. SINGLE SECTION FLASHING BEACON OR SINGLE SHEET SIGN PANEL (4 SQFT MAX)
10. SINGLE SHEET SIGN PANEL (4′ X 4′ Max) OR SIGNAL FACE WITH 3 INDICATIONS
11. FLASHING BEACON CONTROL ASSEMBLY
12. NEMA 3R ENCLOSURE, 26"(W) X 56"(H) X 12"(D) Max DIMENSIONS. Max WEIGHT INCLUDING BATTERIES, 450 LBS
13. 25′ SQFT Max TOTAL PHOTOVOLTAIC PANELS MOUNTED AS SHOWN AS REQUIRED
14. 2-SECTION 12" FLASHING BEACON

**NOTES:**

1. IN ADDITION TO OTHER RESTRICTIONS ON MAXIMUM HORIZONTAL SPAN, THIS HORIZONTAL SPAN MUST NOT EXCEED 100′.
2. CASES 1N, 3N AND 4N MAY SUBSTITUTE THE ATTACHMENTS SHOWN IN CASE 5N IF THE PHOTOVOLTAIC PANEL IS NOT INCLUDED.

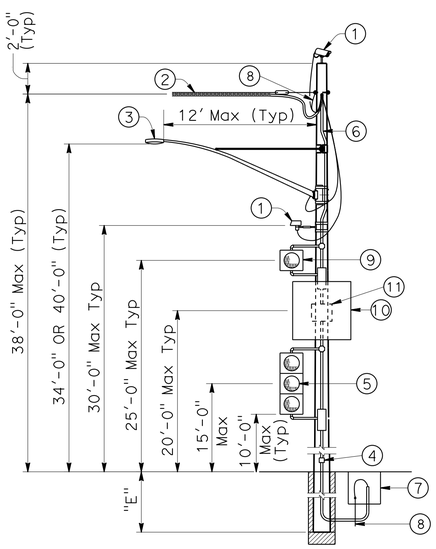


CASE 1N

**POLE AT DEAD END WITH ATTACHMENTS**

SEE NOTE 2

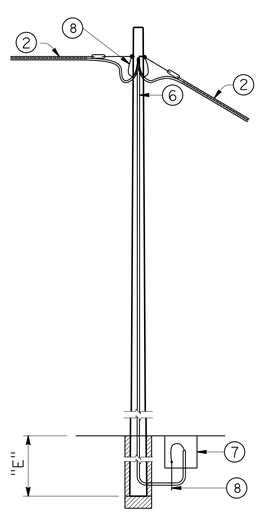


CASE 2N

**POLE AT TANGENT WITHOUT ATTACHMENTS**

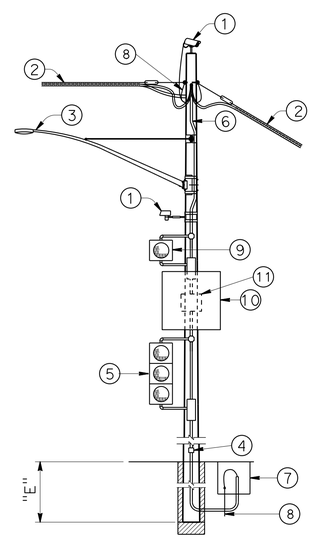


CASE 3N

**POLE AT TANGENT OR CORNER WITH ATTACHMENTS**

SEE NOTE 2

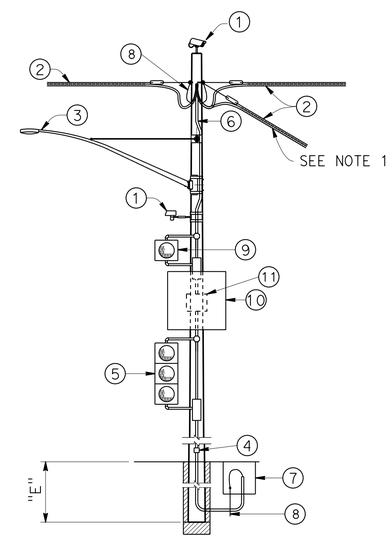


CASE 4N

**POLE AT JUNCTION WITH ATTACHMENTS**

SEE NOTE 2

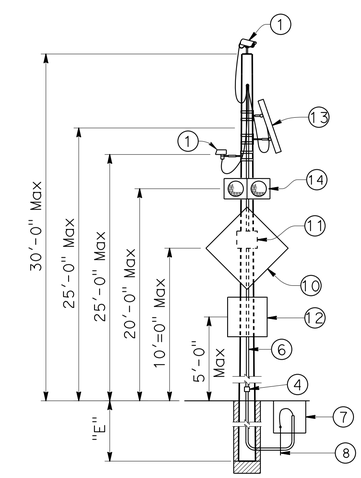


CASE 5N

**POLE WITHOUT OVERHEAD BUNDLE WITH ATTACHMENTS**

# STAGE CONSTRUCTION AND TRAFFIC HANDLING DETAILS

## TEMPORARY WOOD POLES

## NON-GUYED - NO SIGNALS ON SPANS

NO SCALE

**SCD-4**

STATE OF CALIFORNIA - DEPARTMENT OF TRANSPORTATION
Caltrans® HYDRAULICS DESIGN
FUNCTIONAL SUPERVISOR: STEVE THORNE
CALCULATED-DESIGNED BY: BRETT DITZLER
CHECKED BY: ALEX PETERSON
REVISED BY
DATE REVISED

P:\proj1\02\4E630_plans\pse\24e630mb004.dgn

LAST REVISION 10-23-13 | DATE PLOTTED => 24-OCT-2013 | TIME PLOTTED => 07:14

| Dist | COUNTY | ROUTE | POST MILES TOTAL PROJECT | SHEET No. | TOTAL SHEETS |
|---|---|---|---|---|---|
| 02 | Sis | 96 | 56.0 | 25 | 92 |

Brett Ditzler 10-23-13
REGISTERED CIVIL ENGINEER DATE

10-25-13
PLANS APPROVAL DATE

REGISTERED PROFESSIONAL ENGINEER BRETT DITZLER No. C74085 Exp. 6-30-15 CIVIL STATE OF CALIFORNIA

*THE STATE OF CALIFORNIA OR ITS OFFICERS OR AGENTS SHALL NOT BE RESPONSIBLE FOR THE ACCURACY OR COMPLETENESS OF SCANNED COPIES OF THIS PLAN SHEET.*

# POLE SELECTION TABLE

**LEGEND:**

- A — WOOD POLE WITH ATTACHMENTS
- —OH··— OVERHEAD BUNDLE
- GUY ANCHOR

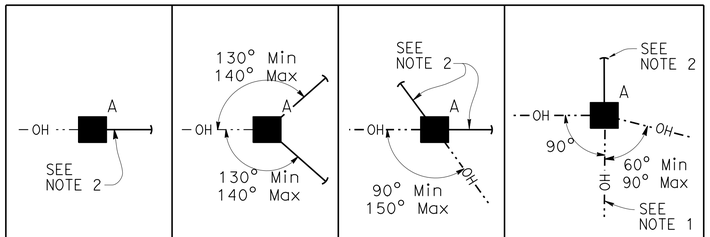


| OVERHEAD BUNDLE HORIZONTAL SPAN (Max) | | CASE 1G | | | | CASE 2G | | | | CASE 3G | | | | CASE 4G | | | |
|---|---|---|---|---|---|---|---|---|---|---|---|---|---|---|---|---|---|
| | MAXIMUM $d_p$ | 1" | 1.5" | 2.0" | 2.5" | 1" | 1.5" | 2.0" | 2.5" | 1" | 1.5" | 2.0" | 2.5" | 1" | 1.5" | 2.0" | 2.5" |
| 50' | MINIMUM POLE CLASS | H-1 | H-1 | H-2 | H-2 | 1 | 1 | 1 | 1 | 1 | 1 | 1 | H-1 | H-2 | H-2 | H-3 | H-3 |
| | POLE EMBEDMENT (E) | 10' | | | | 9' | | | | 9' | | | | 11' | | | |
| 100' | MINIMUM POLE CLASS | H-2 | H-2 | H-3 | H-4 | 1 | H-1 | H-1 | H-1 | 1 | H-1 | H-2 | H-2 | H-3 | H-3 | H-4 | H-4 |
| | POLE EMBEDMENT (E) | 11' | | | | 9' | | | | 9' | | | | 12' | | | |
| 150' | MINIMUM POLE CLASS | H-3 | H-3 | H-4 | H-5 | H-1 | H-1 | H-2 | H-2 | H-2 | H-3 | H-3 | H-3 | H-4 | H-5 | H-5 | H-6 |
| | POLE EMBEDMENT (E) | 11' | | | | 9' | | | | 9' | | | | 12' | | | |
| 200' | MINIMUM POLE CLASS | H-4 | H-4 | H-5 | H-6 | H-1 | H-2 | H-3 | H-3 | H-3 | H-3 | H-4 | H-4 | H-5 | H-6 | | |
| | POLE EMBEDMENT (E) | 11' | | | | 9' | | | | 9' | | | | 12' | | | |

1. CCTV CAMERA ASSEMBLY OR VEHICLE DETECTION SYSTEM
2. OVERHEAD BUNDLE CONSISTING OF A 3/8" ø MESSENGER WIRE AND OVERHEAD CONDUCTORS AND LASHING WIRE.
3. LUMINAIRE WITH MAST ARM
4. PEDESTRIAN PUSHBUTTON
5. SIGNAL FACE WITH 3 INDICATIONS OR SINGLE SHEET SIGN PANEL (10 SQFT MAX)
6. RISER WITH WEATHER HEAD AS REQUIRED
7. PULL BOX AS REQUIRED
8. GROUNDING AS REQUIRED
9. SINGLE SECTION FLASHING BEACON OR SINGLE SHEET SIGN PANEL (4 SQFT MAX)
10. SINGLE SHEET SIGN PANEL (4' X 4' MAX) OR SIGNAL FACE WITH 3 INDICATIONS
11. FLASHING BEACON CONTROL ASSEMBLY
12. 1/2" * GUY WIRE WITH WHITE GUY MARKER AND STRAIN INSULATOR (FOR ANCHORAGE SEE "TEMPORARY WOOD POLES-DETAILS NO. 2" SHEET)

**NOTES:**

1. IN ADDITION TO OTHER RESTRICTIONS ON MAXIMUM HORIZONTAL SPAN, THIS HORIZONTAL SPAN MUST NOT EXCEED 100'.
2. GUY WIRE IN LINE WITH OPPOSING SPAN ± 5°.

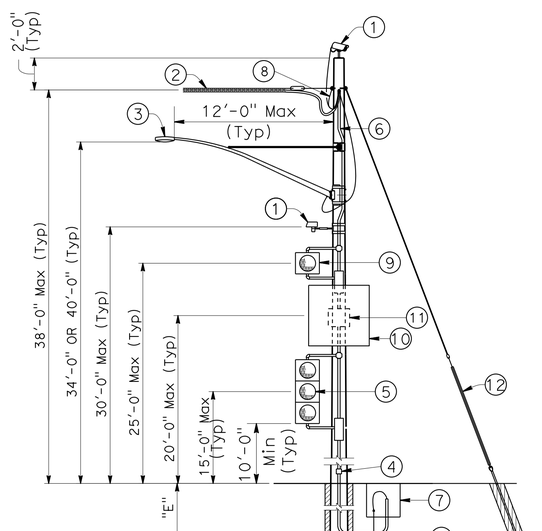


CASE 1G

**POLE AT DEAD END WITH ATTACHMENTS**

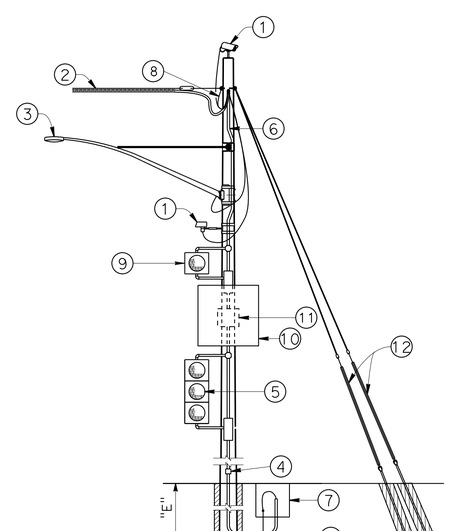


CASE 2G

**POLE AT DEAD END WITH ATTACHMENTS**

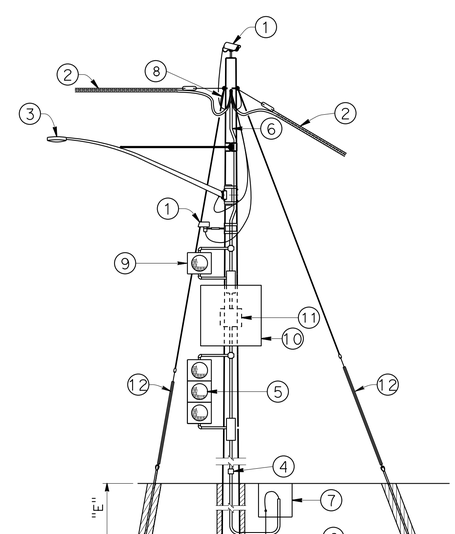


CASE 3G

**POLE AT CORNER WITH ATTACHMENTS**

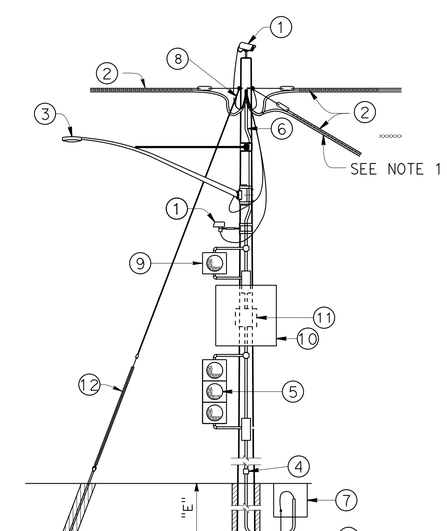


CASE 4G

**POLE AT JUNCTION WITH ATTACHMENTS**

# STAGE CONSTRUCTION AND TRAFFIC HANDLING DETAILS

## TEMPORARY WOOD POLES GUYED - NO SIGNALS ON SPANS

NO SCALE

**SCD-5**

STATE OF CALIFORNIA - DEPARTMENT OF TRANSPORTATION
Caltrans® HYDRAULICS DESIGN
FUNCTIONAL SUPERVISOR STEVE THORNE
BRETT DITZLER ALEX PETERSON
CALCULATED-DESIGNED BY
CHECKED BY
REVISED BY
DATE REVISED
P:\proj1\02\4E630_plans\pse\24e630mb005.dgn

LAST REVISION 10-23-13 DATE PLOTTED => 24-OCT-2013 TIME PLOTTED => 07:14

| Dist | COUNTY | ROUTE | POST MILES TOTAL PROJECT | SHEET No. | TOTAL SHEETS |
|---|---|---|---|---|---|
| 02 | Sis | 96 | 56.0 | 26 | 92 |

Brett Ditzler 10-23-13
REGISTERED CIVIL ENGINEER DATE

10-25-13
PLANS APPROVAL DATE

REGISTERED PROFESSIONAL ENGINEER BRETT DITZLER No. C74085 Exp. 6-30-15 CIVIL STATE OF CALIFORNIA

*THE STATE OF CALIFORNIA OR ITS OFFICERS OR AGENTS SHALL NOT BE RESPONSIBLE FOR THE ACCURACY OR COMPLETENESS OF SCANNED COPIES OF THIS PLAN SHEET.*

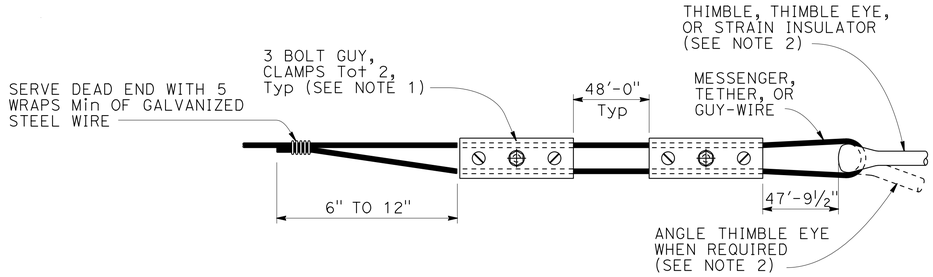


## ALTERNATIVE TERMINATION OF MESSENGER WIRES USING GUY CLAMPS

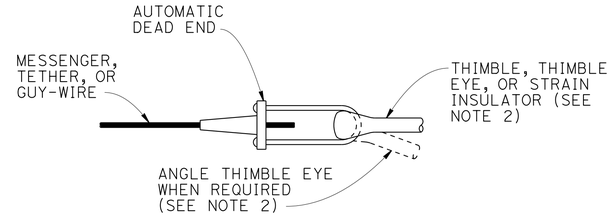


## TERMINATION OF WIRES USING AUTOMATIC DEAD END

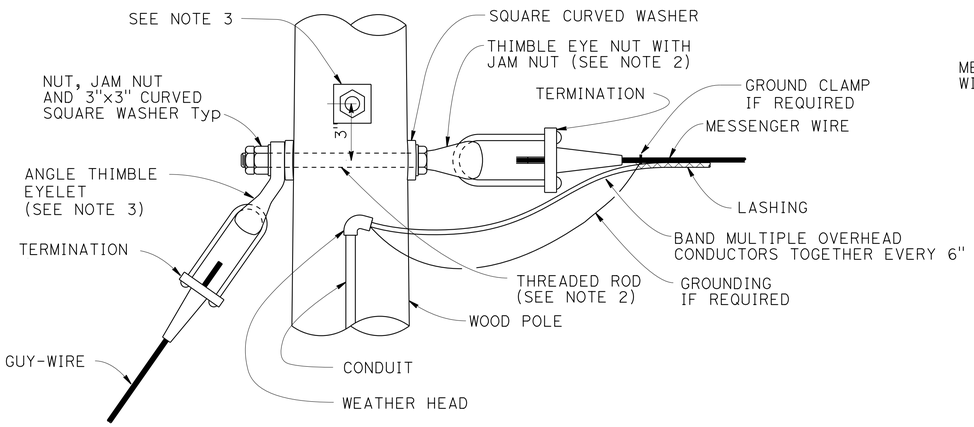


## POLE AT DEAD END WITH GUY-WIRE CONNECTION

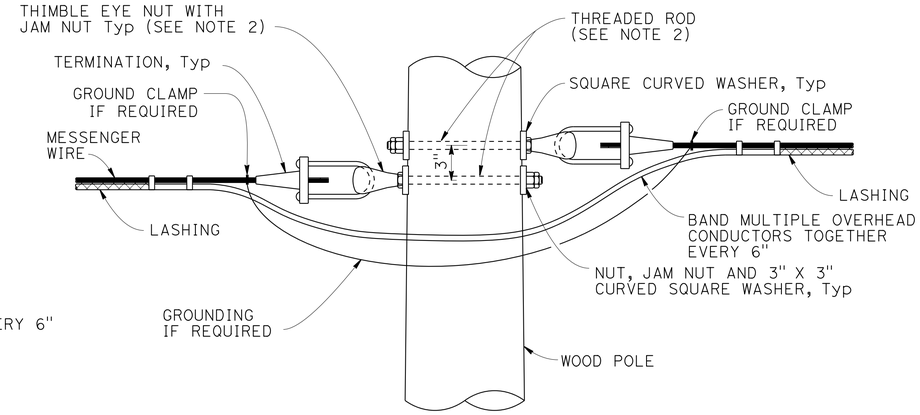


## POLE AT TANGENT OR CORNER CONNECTION

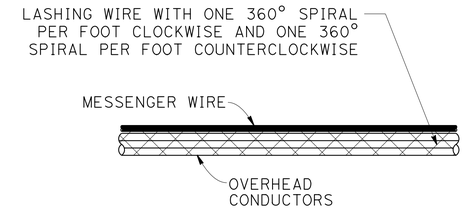


## DOUBLE LASHING DETAIL

USE IF $d_p$ IS GREATER THAN 1½"

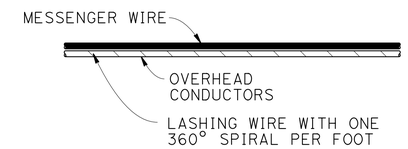


## TYPICAL LASHING DETAIL

USE IF $d_p$ IS 1½" OR LESS

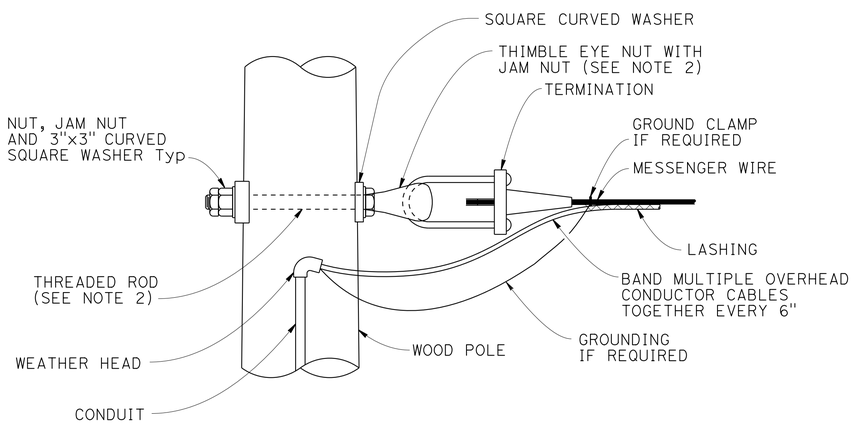


## POLE AT DEAD END CONNECTION

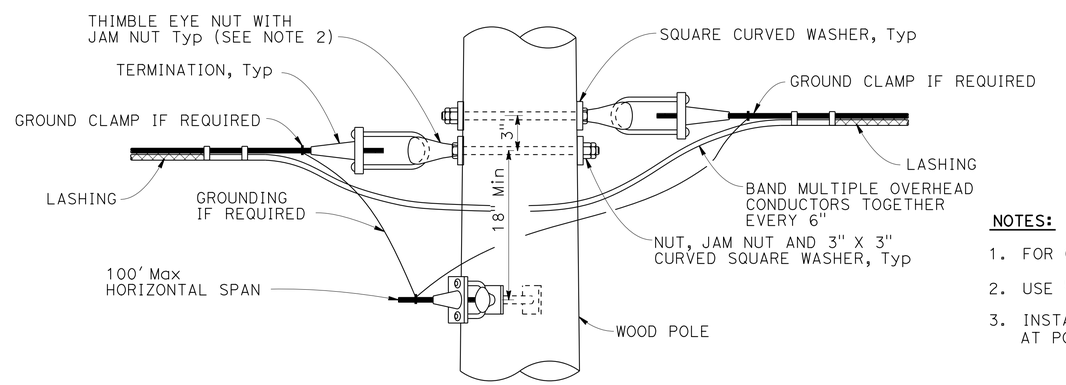


## POLE AT JUNCTION CONNECTION

**NOTES:**

1. FOR GUY WIRES USE 3 CLAMPS.
2. USE ⅝" Dia EXCEPT ¾" Dia AT GUYED WIRES
3. INSTALL ADDITIONAL ANGLE THIMBLE EYELET AT POLES WITH TWO GUY WIRES.

# STAGE CONSTRUCTION AND TRAFFIC HANDLING DETAILS

## TEMPORARY WOOD POLES DETAILS No. 1

NO SCALE

**SCD-6**

REVISED BY | DATE REVISED
BRETT DITZLER | ALEX PETERSON
CALCULATED-DESIGNED BY | CHECKED BY
FUNCTIONAL SUPERVISOR: STEVE THORNE

STATE OF CALIFORNIA - DEPARTMENT OF TRANSPORTATION
Caltrans® HYDRAULICS DESIGN

P:\proj1\02\4E630_plans\pse\24e630mb006.dgn

LAST REVISION 10-23-13 | DATE PLOTTED => 24-OCT-2013 | TIME PLOTTED => 07:14

| Dist | COUNTY | ROUTE | POST MILES TOTAL PROJECT | SHEET No. | TOTAL SHEETS |
|---|---|---|---|---|---|
| 02 | Sis | 96 | 56.0 | 27 | 92 |

Brett Ditzler 10-23-13
REGISTERED CIVIL ENGINEER DATE

10-25-13
PLANS APPROVAL DATE

REGISTERED PROFESSIONAL ENGINEER
BRETT DITZLER
No. C74085
Exp. 6-30-15
CIVIL
STATE OF CALIFORNIA

*THE STATE OF CALIFORNIA OR ITS OFFICERS OR AGENTS SHALL NOT BE RESPONSIBLE FOR THE ACCURACY OR COMPLETENESS OF SCANNED COPIES OF THIS PLAN SHEET.*

NOTES:

1. MINIMUM ALLOWABLE TENSION CAPACITY "QA" = 8,900 LBS.
2. MINIMUM INSTALLATION TORQUE "T" = 1780 LBS-FT.
3. HELICAL ANCHOR DETAIL MAY BE USED IN PLACE OF EXPANDED STEEL ANCHORS.

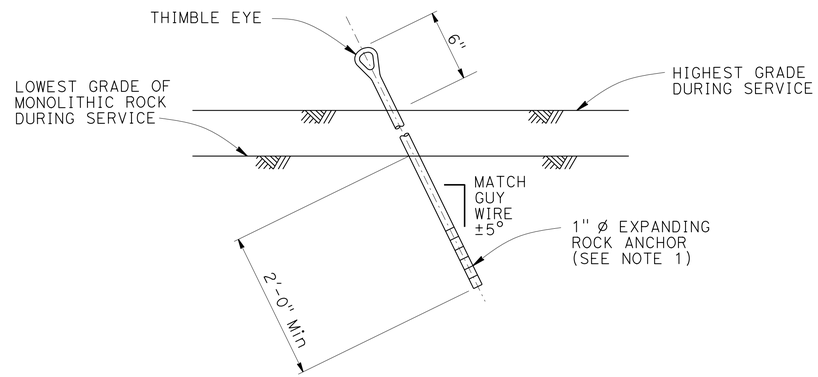


## EXPANDING ROCK ANCHOR DETAIL

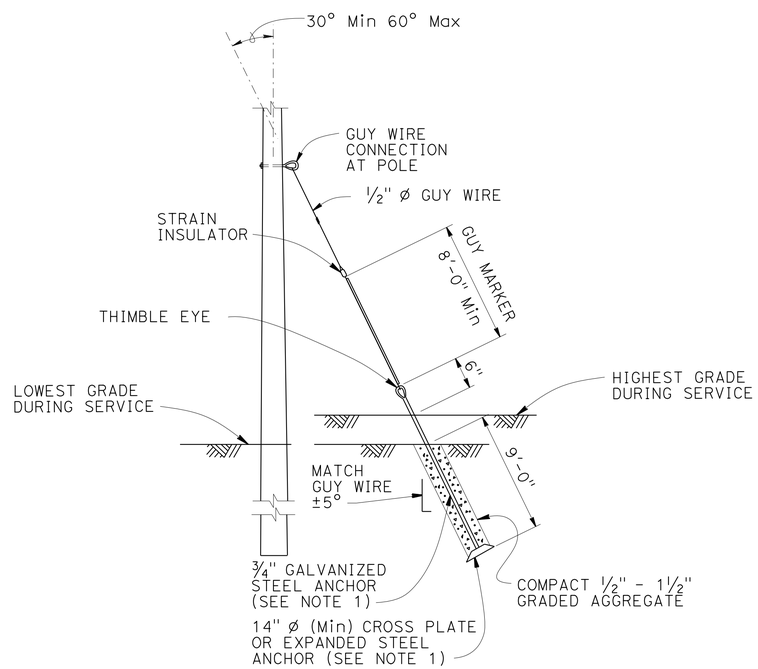


## EXPANDED STEEL ANCHOR DETAIL

SEE NOTE 3

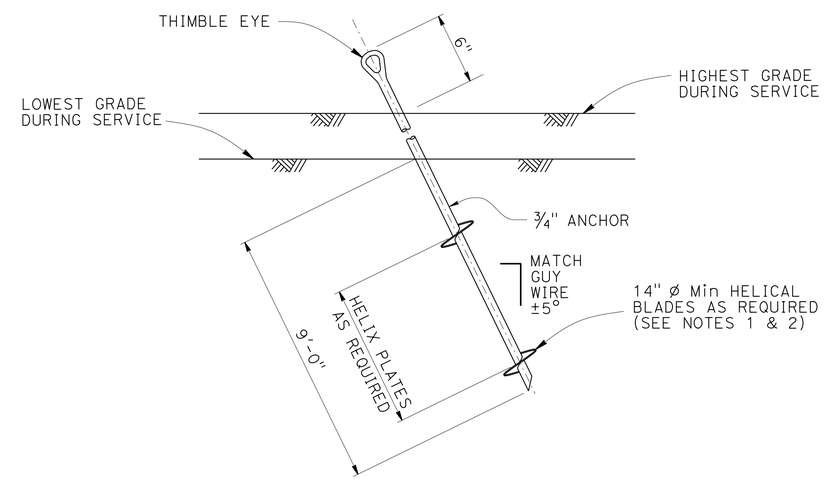


## HELICAL ANCHOR DETAIL

# STAGE CONSTRUCTION AND TRAFFIC HANDLING DETAILS

## TEMPORARY WOOD POLES DETAILS No. 2

NO SCALE

**SCD-7**

REVISED BY | DATE REVISED
BRETT DITZLER | ALEX PETERSON
CALCULATED-DESIGNED BY | CHECKED BY
FUNCTIONAL SUPERVISOR: STEVE THORNE

STATE OF CALIFORNIA - DEPARTMENT OF TRANSPORTATION
Caltrans® HYDRAULICS DESIGN

P:\proj\02\4E630_plans\pse\24e630mb007.dgn

LAST REVISION 10-23-13 | DATE PLOTTED => 24-OCT-2013 | TIME PLOTTED => 07:14

| Dist | COUNTY | ROUTE | POST MILES TOTAL PROJECT | SHEET No. | TOTAL SHEETS |
|---|---|---|---|---|---|
| 02 | Sis | 96 | 56.0 | 28 | 92 |

Brett Ditzler 10-23-13
REGISTERED CIVIL ENGINEER DATE

10-25-13
PLANS APPROVAL DATE

REGISTERED PROFESSIONAL ENGINEER BRETT DITZLER No. C74085 Exp. 6-30-15 CIVIL STATE OF CALIFORNIA

*THE STATE OF CALIFORNIA OR ITS OFFICERS OR AGENTS SHALL NOT BE RESPONSIBLE FOR THE ACCURACY OR COMPLETENESS OF SCANNED COPIES OF THIS PLAN SHEET.*

1. LUMINAIRE MAST ARMS MUST BE IN COMPLIANCE WITH STANDARD PLAN ES-6D WITH NOTED MODIFICATIONS.
2. VERIFY POLE DIMENSIONS AT TIE-ROD ATTACHMENT HEIGHT. FABRICATE 8" FLAT BAR WITH "L" DIMENSION TO MAINTAIN AN OPEN GAP BETWEEN FLANGES IN FINISHED INSTALLATION.
3. NOT ALL SCREW HEADS AND BOLT HEADS ARE SHOWN FOR CLARITY.
4. MAST ARM NOT SHOWN FOR CLARITY.

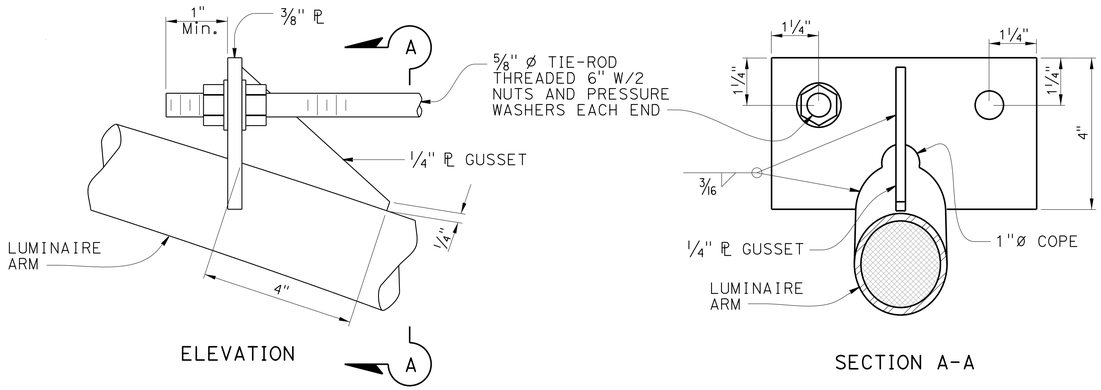


## DETAIL A
## TIE-ROD AT LUMINAIRE ARM

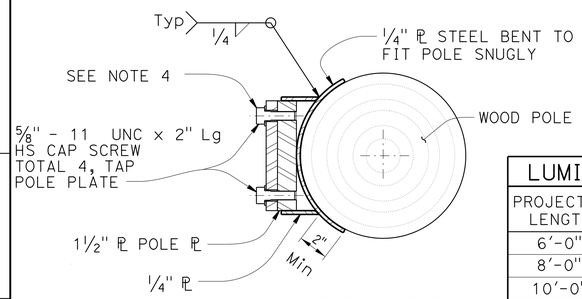


| LUMINAIRE MAST ARM DATA | | | |
|---|---|---|---|
| PROJECTED LENGTH | N RISE | Min OD AT POLE | NOMINAL THICKNESS |
| 6'-0" | 2'-0"± | 3 1/4" | 0.1196" |
| 8'-0" | 2'-6"± | 3 1/2" | |
| 10'-0" | 3'-3"± | 3 7/8" | |
| 12'-0" | 4'-3"± | | |

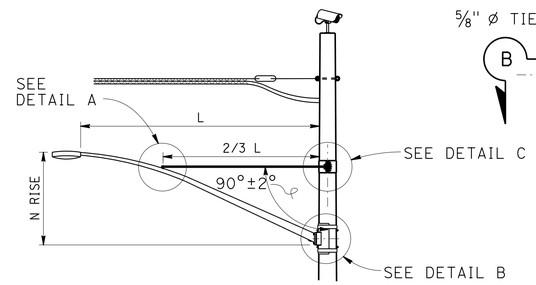


## LUMINAIRE MAST ARM

NOTE:
1. NOT ALL SCREW AND BOLT HEADS SHOWN FOR CLARITY.

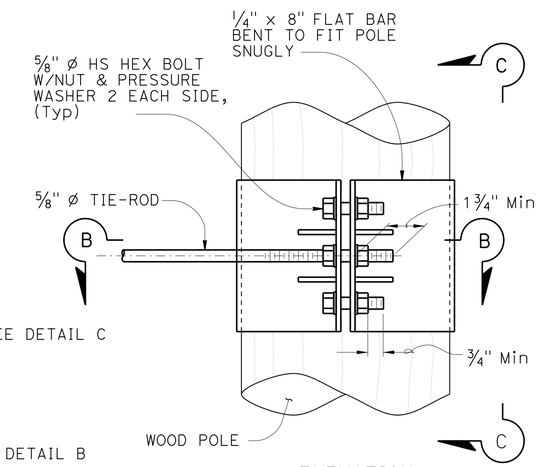


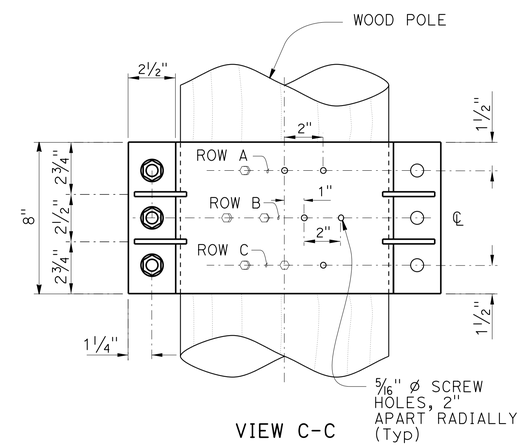


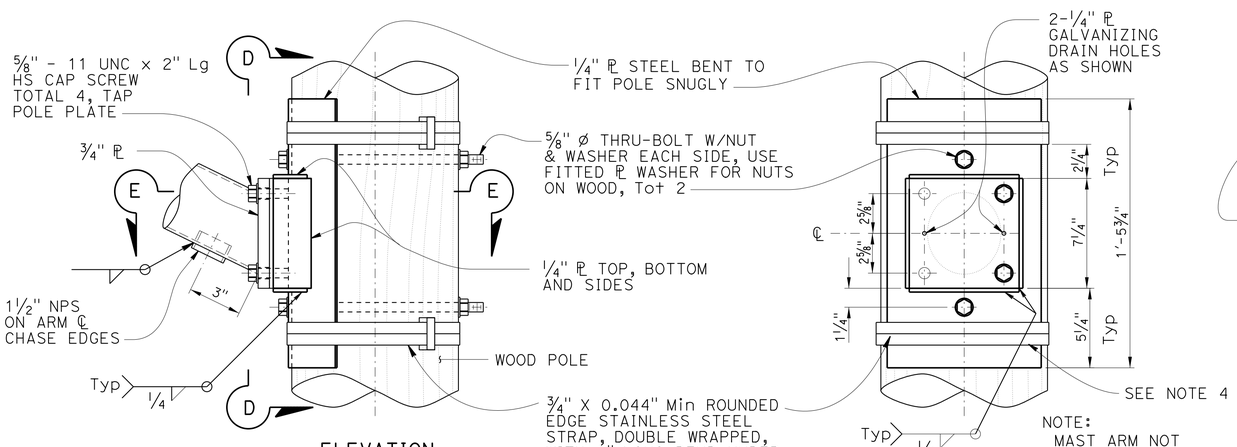


## DETAIL B
## ARM CONNECTION DETAILS

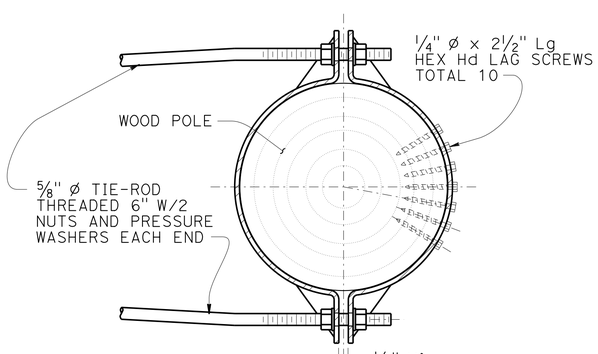


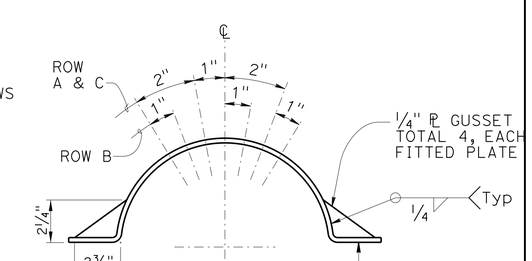


## LAG SCREW AND GUSSET PLATE LAYOUT

## DETAIL C
## TIE-ROD AT POLE

# STAGE CONSTRUCTION AND TRAFFIC HANDLING DETAILS
## TEMPORARY WOOD POLES DETAILS No. 3
NO SCALE

**SCD-8**

REVISED BY | DATE REVISED
BRETT DITZLER | ALEX PETERSON
CALCULATED-DESIGNED BY | CHECKED BY
FUNCTIONAL SUPERVISOR: STEVE THORNE

STATE OF CALIFORNIA - DEPARTMENT OF TRANSPORTATION
Caltrans® HYDRAULICS DESIGN

P:\proj1\02\4E630_plans\pse\24e630mb008.dgn

LAST REVISION 10-23-13 | DATE PLOTTED => 24-OCT-2013 | TIME PLOTTED => 07:14

| Dist | COUNTY | ROUTE | POST MILES TOTAL PROJECT | SHEET No. | TOTAL SHEETS |
|---|---|---|---|---|---|
| 02 | Sis | 96 | 56.0 | 29 | 92 |

Brett Ditzler 10-23-13
REGISTERED CIVIL ENGINEER DATE

10-25-13
PLANS APPROVAL DATE

REGISTERED PROFESSIONAL ENGINEER
BRETT DITZLER
No. C74085
Exp. 6-30-15
CIVIL
STATE OF CALIFORNIA

*THE STATE OF CALIFORNIA OR ITS OFFICERS OR AGENTS SHALL NOT BE RESPONSIBLE FOR THE ACCURACY OR COMPLETENESS OF SCANNED COPIES OF THIS PLAN SHEET.*

## NOTES:

1. VERIFY POLE DIMENSIONS AT TERMINAL COMPARTMENT FOR FABRICATION OF BACKING PLATE AND CURVED WASHER.
2. BACKING PLATE TO BE GALVANIZED AFTER FABRICATION.
3. ¾" X 0.044" MINIMUM, ROUNDED EDGE STAINLESS STEEL STRAPS, DOUBLE WRAPPED WITH 2" LONG BEND UNDER STAINLESS STEEL STRAP BUCKLE.
4. FOR DETAILS NOT SHOWN SEE STANDARD PLAN ES-4D.

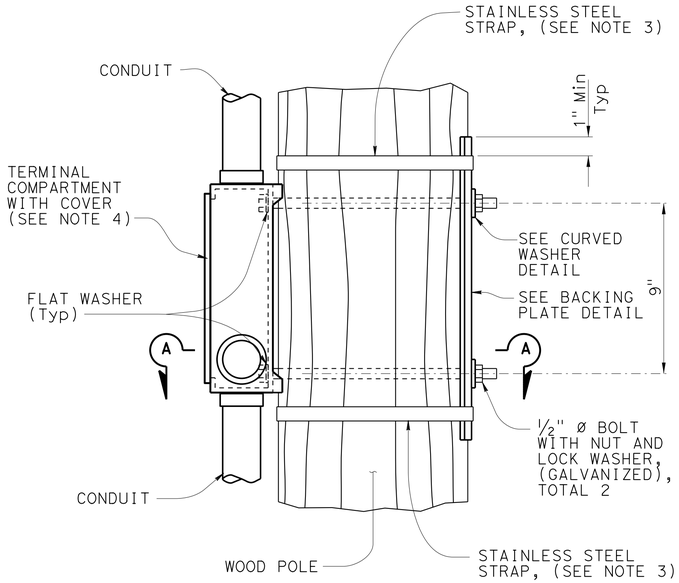


ELEVATION

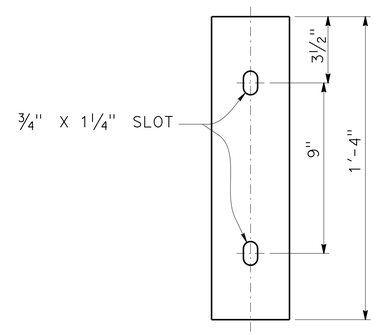


ELEVATION

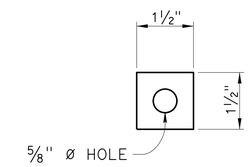


ELEVATION

PLAN

**BACKING PLATE DETAIL**

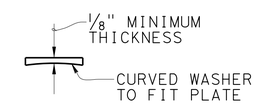


PLAN

**CURVED WASHER DETAIL**

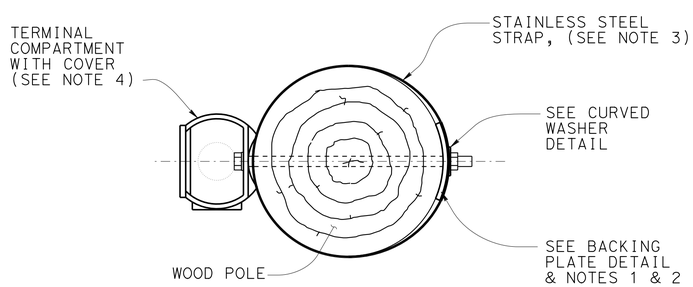


SECTION A-A

**SIDE MOUNTING TERMINAL COMPARTMENT**

# STAGE CONSTRUCTION AND TRAFFIC HANDLING DETAILS
## TEMPORARY WOOD POLES DETAILS No. 4

NO SCALE

**SCD-9**

| REVISED BY | DATE REVISED |
|---|---|
| BRETT DITZLER | ALEX PETERSON |
| CALCULATED-DESIGNED BY | CHECKED BY |
| FUNCTIONAL SUPERVISOR | STEVE THORNE |

STATE OF CALIFORNIA - DEPARTMENT OF TRANSPORTATION
Caltrans® HYDRAULICS DESIGN

P:\proj1\02\4E630_plans\pse\24e630mb009.dgn

LAST REVISION 10-23-13 | DATE PLOTTED => 24-OCT-2013 | TIME PLOTTED => 07:14

| Dist | COUNTY | ROUTE | POST MILES TOTAL PROJECT | SHEET No. | TOTAL SHEETS |
|---|---|---|---|---|---|
| 02 | Sis | 96 | 56.0 | 30 | 92 |

Brett Ditzler 10-23-13
REGISTERED CIVIL ENGINEER DATE

10-25-13
PLANS APPROVAL DATE

REGISTERED PROFESSIONAL ENGINEER BRETT DITZLER No. C74085 Exp. 6-30-15 CIVIL STATE OF CALIFORNIA

*THE STATE OF CALIFORNIA OR ITS OFFICERS OR AGENTS SHALL NOT BE RESPONSIBLE FOR THE ACCURACY OR COMPLETENESS OF SCANNED COPIES OF THIS PLAN SHEET.*

# STAGE CONSTRUCTION AND TRAFFIC HANDLING QUANTITIES

| STAGE | SHEET No. | ALIGNMENT | STATION BEGIN | | STATION END | LOCATION | TEMPORARY PAVEMENT MARKING (PAINT) | TEMPORARY TRAFFIC STRIPE (PAINT) | CHANNELIZER (SURFACE MOUNTED) | TEMPORARY RAILING (TYPE K) | TEMPORARY CRASH CUSHION MODULE | REMOVE YELLOW THERMOPLASTIC TRAFFIC STRIPE (HAZARDOUS WASTE) | ROADWAY EXCAVATION (DETOUR) | ROADWAY EXCAVATION (DETOUR REMOVAL) | IMPORTED BORROW | CLEAN WASHED GRAVEL | TEMPORARY RETAINING WALL | CLASS 2 AGGREGATE BASE | HOT MIX ASPHALT (TYPE A) | 72" TEMPORARY CULVERT | ROCK SLOPE PROTECTION FABRIC (CLASS 8) | (N) TEMPORARY MARKER (TYPE P) |
|---|---|---|---|---|---|---|---|---|---|---|---|---|---|---|---|---|---|---|---|---|---|---|
| | | | | | | L†/R† | SQFT | LF | EA | LF | EA | LF | CY | CY | CY | CY | SQFT | CY | TON | LF | SQYD | EA |
| 1 | SCD-1 | "CL1" | 160+15.00 | TO | 164+75.00 | BOTH | 22 | 485 | 13 | | | | | | | | | | | | | |
| | SCD-1 | "D1" | 10+13.93 | TO | 14+24.86 | L† | | 411 | 14 | | | | | | | | | | | | | |
| | SCD-1 | "D1" | 10+13.93 | TO | 14+24.86 | Both | | | | | | | 38 | | 786 | 109 | 565 | 94 | 113 | 51 | 204 | |
| | SCD-1 | "D1" | 11+00.00 | TO | 13+25.00 | R† | | | | 200 | 22 | | | | | | | | | | | 8 |
| | SCD-1 | "D1" | 11+77.22 | TO | 13+23.00 | L† | | | | 160 | | | | | | | | | | | | |
| | SCD-1 | "CL1" | 160+15.00 | TO | 161+20.00 | CL | | | | | | 210 | | | | | | | | | | |
| | SCD-1 | "CL1" | 163+55.00 | TO | 164+75.00 | CL | | | | | | 240 | | | | | | | | | | |
| | CS-1 | "CL1" | 155+00.00 | TO | 170+00.00 | BOTH | | | | | 44 | | | | | | | | | | | 4 |
| 2 | SCD-1 | "D1" | 10+13.93 | TO | 14+24.86 | BOTH | | | | | | | | 1081 | | | | | | | | |
| | | | | | | TOTAL | 22 | 896 | 27 | 360 | 66 | 450 | 38 | 1081 | 786 | 109 | 565 | 94* | 113* | 51 | 204 | 12 |

* ADDITIONAL QUANTITIES SHOWN ELSEWHERE. SEE SHEET Q-1 FOR TOTAL QUANTITIES.
(N) NOT A SEPARATE PAY ITEM, FOR INFORMATION ONLY

## STAGE CONSTRUCTION AND TRAFFIC HANDLING QUANTITIES

## SCQ-1

LAST REVISION 10-23-13 | DATE PLOTTED => 24-OCT-2013 | TIME PLOTTED => 07:14

FUNCTIONAL SUPERVISOR: STEVE THORNE
CALCULATED-DESIGNED BY: BRETT DITZLER
CHECKED BY: ALEX PETERSON
REVISED BY
DATE REVISED

STATE OF CALIFORNIA - DEPARTMENT OF TRANSPORTATION
Caltrans HYDRAULICS DESIGN

P:\proj1\02\4E630_plans\pse\24e630mc001.dgn

| Dist | COUNTY | ROUTE | POST MILES TOTAL PROJECT | SHEET No. | TOTAL SHEETS |
|---|---|---|---|---|---|
| 02 | Sis | 96 | 56.0 | 31 | 92 |

Brett Ditzler 10-23-13
REGISTERED CIVIL ENGINEER DATE

10-25-13
PLANS APPROVAL DATE

REGISTERED PROFESSIONAL ENGINEER BRETT DITZLER No. C74085 Exp. 6-30-15 CIVIL STATE OF CALIFORNIA

*THE STATE OF CALIFORNIA OR ITS OFFICERS OR AGENTS SHALL NOT BE RESPONSIBLE FOR THE ACCURACY OR COMPLETENESS OF SCANNED COPIES OF THIS PLAN SHEET.*

## NOTE:

1. FOR ACCURATE RIGHT OF WAY DATA, CONTACT RIGHT OF WAY ENGINEERING AT THE DISTRICT OFFICE.

## LEGEND

- BEGIN/END STRIPE
- DELINEATOR (TYPE E)
- MARKER (CULVERT)
- OBJECT MARKER (TYPE L-1)
- RESET MILEPOST MARKER
- RESET ROADSIDE SIGN
- #-# ROADSIDE SIGN
- - THERMOPLASTIC TRAFFIC STRIPE DETAIL No.
- ROADSIDE SIGN (1-POST)
- ROADSIDE SIGN (2-POST)

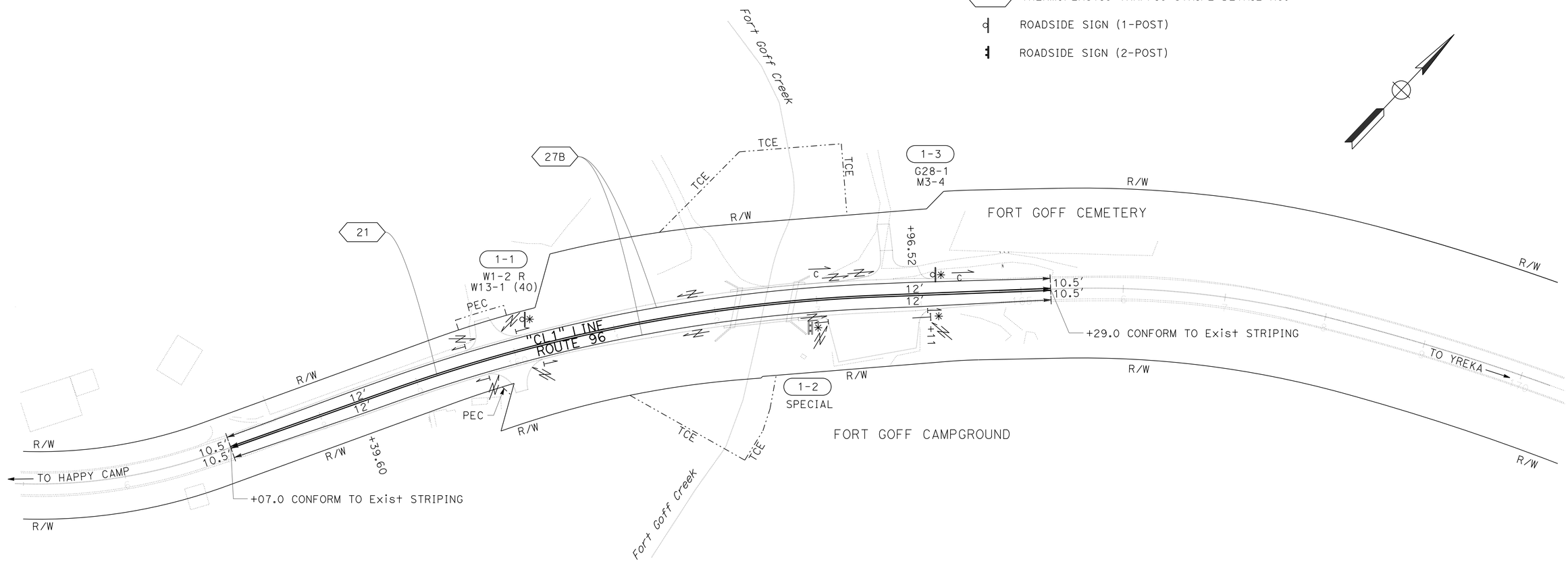


# PAVEMENT DELINEATION PLAN AND SIGN PLAN

SCALE: 1" = 50'

**PD-1**

REVISED BY | DATE REVISED
ALEX PETERSON | BRETT DITZLER
CALCULATED-DESIGNED BY | CHECKED BY
FUNCTIONAL SUPERVISOR: STEVE THORNE

STATE OF CALIFORNIA - DEPARTMENT OF TRANSPORTATION
Caltrans® HYDRAULICS DESIGN

P:\proj1\02\4E630_plans\pse\24e630na001.dgn

LAST REVISION 10-23-13 | DATE PLOTTED => 24-OCT-2013 | TIME PLOTTED => 07:14

| Dist | COUNTY | ROUTE | POST MILES TOTAL PROJECT | SHEET No. | TOTAL SHEETS |
|---|---|---|---|---|---|
| 02 | Sis | 96 | 56.0 | 32 | 92 |

Brett Ditzler 10-23-13
REGISTERED CIVIL ENGINEER DATE

10-25-13
PLANS APPROVAL DATE

REGISTERED PROFESSIONAL ENGINEER
BRETT DITZLER
No. C74085
Exp. 6-30-15
CIVIL
STATE OF CALIFORNIA

*THE STATE OF CALIFORNIA OR ITS OFFICERS OR AGENTS SHALL NOT BE RESPONSIBLE FOR THE ACCURACY OR COMPLETENESS OF SCANNED COPIES OF THIS PLAN SHEET.*

## NOTES:

1. USE A 3" Sq TUBE x 3' LONG, 3/16" THICK ANCHOR FOR 2 1/2" POSTS.
2. USE A 5/16" CORNER BOLT OR TWO DRIVE RIVETS TO FASTEN ASSEMBLED SIGN AND POST INTO ANCHOR. INSTALL CORNER BOLT OR DRIVE RIVETS INTO THE SIDES FACING TRAFFIC.
3. REMOVE EXISTING AC OR PCC, DRIVE ANCHOR SLEEVE INTO SOIL AND RECAP WITH LIKE MATERIAL, MATCHING EXISTING THICKNESS.
4. 2 1/2" POSTS ARE TO BE 1/8" THICK, PERFORATIONS OF 7/16" IN DIAMETER ARE 1" ON CENTER ON ALL SIDES, 2 1/2" POSTS ARE 12' AND 14' IN LENGTH.
5. FOR DETAILS NOT SHOWN, REFER TO THE STANDARD PLANS.
6. 2 1/2" POSTS SHALL BE USED IN SIDEWALK AND HIGH PEDESTRIAN USE PLACEMENTS.
7. ALL ANCHOR SLEEVES SHALL BE EMBEDDED IN PCC, EXCEPT FOR INSTALLATIONS IN PAVEMENTS OR SIDEWALKS.

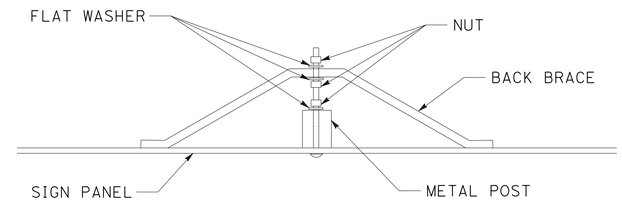


BACK BRACE MOUNTING DETAIL

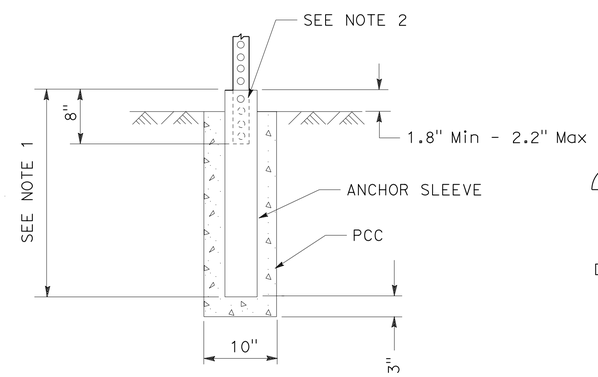


INSTALLATION IN SOIL (PCC)
(SEE NOTE 7)

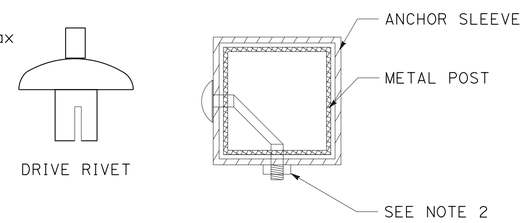


FASTENER DETAILS

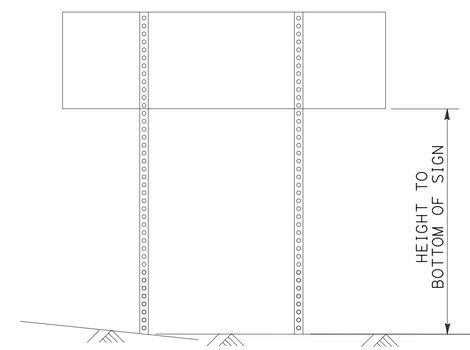


TWO POSTS INSTALLATION
(POST SIZE, SEE CHART BELOW)

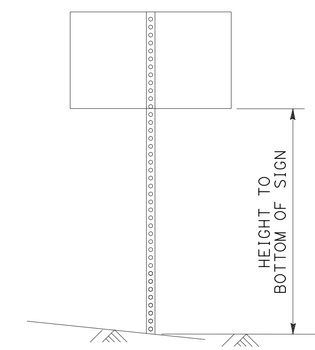


SINGLE POST INSTALLATION
(POST SIZE, SEE CHART BELOW)

Max Sq Ft OF SIGN

| POST SIZE | 60" | 72" | 84" | 96" | 108" | 120" |
|---|---|---|---|---|---|---|
| 2.5" | 35 | 32 | 28 | 24 | 21 | 21 |

HEIGHT TO BOTTOM OF SIGN
DOUBLE POST GROUND SIGNS
70 MPH WIND SPEED

Max Sq Ft OF SIGN

| POST SIZE | 60" | 72" | 84" | 96" | 108" | 120" |
|---|---|---|---|---|---|---|
| 2.5" | 16 | 16 | 16 | 16 | 12 | 12 |

HEIGHT TO BOTTOM OF SIGN
SINGLE POST GROUND SIGNS
70 MPH WIND SPEED

**METAL SIGN POST DETAIL**

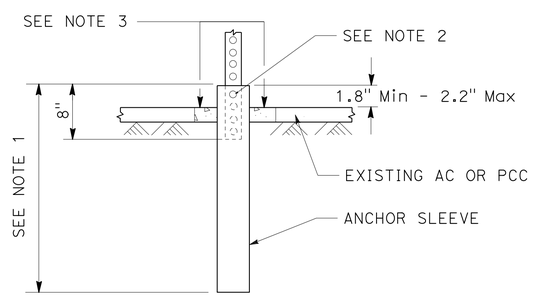


INSTALLATION IN EXISTING AC OR PCC

**METAL SIGN POST INSTALLATION DETAILS**

# PAVEMENT DELINEATION DETAILS AND SIGN DETAILS

NO SCALE

**PDD-1**

| REVISED BY | DATE REVISED |
|---|---|
| | |

| CALCULATED-DESIGNED BY | CHECKED BY |
|---|---|
| ALEX PETERSON | BRETT DITZLER |

FUNCTIONAL SUPERVISOR: STEVE THORNE

STATE OF CALIFORNIA - DEPARTMENT OF TRANSPORTATION
Caltrans
HYDRAULICS DESIGN

P:\proj1\02\4E630_plans\pse\24e630nb001.dgn

LAST REVISION 10-23-13 | DATE PLOTTED => 24-OCT-2013 | TIME PLOTTED => 07:14

| Dist | COUNTY | ROUTE | POST MILES TOTAL PROJECT | SHEET No. | TOTAL SHEETS |
|---|---|---|---|---|---|
| 02 | Sis | 96 | 56.0 | 33 | 92 |

Brett Ditzler 10-23-13
REGISTERED CIVIL ENGINEER DATE

10-25-13
PLANS APPROVAL DATE

REGISTERED PROFESSIONAL ENGINEER
BRETT DITZLER
No. C74085
Exp. 6-30-15
CIVIL
STATE OF CALIFORNIA

*THE STATE OF CALIFORNIA OR ITS OFFICERS OR AGENTS SHALL NOT BE RESPONSIBLE FOR THE ACCURACY OR COMPLETENESS OF SCANNED COPIES OF THIS PLAN SHEET.*

NOTE:

1. (N) - NOT A SEPARATE PAY ITEM, FOR INFORMATION ONLY

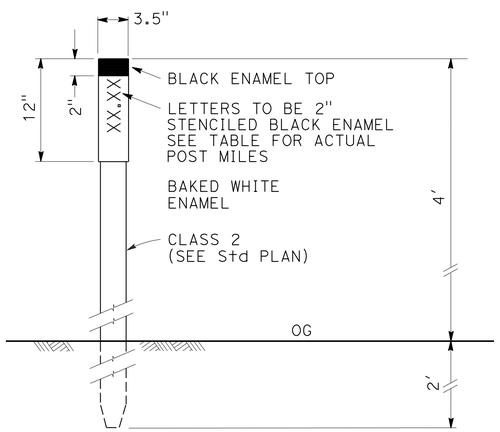


## MARKER (CULVERT)

NOTE:
1. PLACE MARKER 2' FROM EP AT EACH CULVERT LOCATION.

## MARKERS AND DELINEATORS

| STATION | DELINEATOR (CLASS 2) (TYPE E) | MARKER (CULVERT) | RESET MILEPOST MARKER | OBJECT MARKER (TYPE L-1) | COMMENTS |
|---|---|---|---|---|---|
| | EA | EA | EA | EA | |
| "CL1" 157+07.0 TO 164+29.0 | 6 | | | 11 | |
| "CL1" 162+98.0 | | 1 | | | PM 55.98 |
| "CL1" 164+40.0 | | 1 | | | PM 56.01 |
| "CL1" 164+11.0 | | | 1 | | |
| TOTAL | 6 | 2 | 1 | 11 | |

## PAVEMENT DELINEATION QUANTITIES

| STATION | THERMOPLASTIC TRAFFIC STRIPE (SPRAYABLE) | |
|---|---|---|
| | DETAIL 21 | DETAIL 27B |
| | LF | LF |
| "CL1" 157+07 TO 165+29 | 822 | 1644 |
| TOTAL | 2466 | |

## ROADSIDE SIGNS

| SHEET No. | STATION | SIGN No. (#-#) | SIGN CODE | RESET ROADSIDE SIGN (ONE POST) | RESET ROADSIDE SIGN (TWO POST) | (N) METAL POST SIZE AND LENGTH | COMMENTS |
|---|---|---|---|---|---|---|---|
| | | | | EA | EA | | |
| PD-1 | "CL1" 160+15.0 Lt | 1-1 | W1-2 W13-1 | 1 | | 12'x2½"x2½" | REPLACE WOOD POST WITH METAL POST |
| PD-1 | "CL1" 162+92.0 Rt | 1-2 | SPECIAL | | 1 | | RESET "FORT GOFF CAMPGROUND KLAMATH NATIONAL FOREST" SIGN USING EXISTING WOOD POSTS |
| PD-1 | "CL1" 164+14.0 Lt | 1-3 | G28-1 M3-4 | 1 | | 12'x2½"x2½" | REPLACE WOOD POST WITH METAL POST |
| | | | TOTAL | 2 | 1 | | |

# PAVEMENT DELINEATION AND SIGN DETAILS AND QUANTITIES

## PDQ-1

REVISED BY | DATE REVISED
ALEX PETERSON | BRETT DITZLER
CALCULATED-DESIGNED BY | CHECKED BY
FUNCTIONAL SUPERVISOR
STEVE THORNE

STATE OF CALIFORNIA - DEPARTMENT OF TRANSPORTATION
Caltrans HYDRAULICS DESIGN

P:\proj1\02\4E630_plans\pse\24e630nc001.dgn

LAST REVISION 10-23-13 | DATE PLOTTED => 24-OCT-2013 | TIME PLOTTED => 07:14

| Dist | COUNTY | ROUTE | POST MILES TOTAL PROJECT | SHEET No. | TOTAL SHEETS |
|---|---|---|---|---|---|
| 02 | Sis | 96 | 56.0 | 34 | 92 |

Brett Ditzler 10-23-13
REGISTERED CIVIL ENGINEER DATE

10-25-13
PLANS APPROVAL DATE

REGISTERED PROFESSIONAL ENGINEER BRETT DITZLER No. C74085 Exp. 6-30-15 CIVIL STATE OF CALIFORNIA

*THE STATE OF CALIFORNIA OR ITS OFFICERS OR AGENTS SHALL NOT BE RESPONSIBLE FOR THE ACCURACY OR COMPLETENESS OF SCANNED COPIES OF THIS PLAN SHEET.*

NOTE:

1. (N) - NOT A SEPARATE PAY ITEM, FOR INFORMATION ONLY

## SAFETY EDGE (N)

| SHEET No. | ALIGNMENT | STATION BEGIN | | STATION END | LOCATION L+/R+ | (N) SAFETY EDGE LF |
|---|---|---|---|---|---|---|
| L-1 | "CL1" | 157+57.10 | TO | 159+51.00 | L+ | 194 |
| | "CL1" | 157+57.10 | TO | 159+66.10 | R+ | 209 |
| | "CL1" | 160+13.10 | TO | 161+53.00 | L+ | 140 |
| | "CL1" | 160+27.80 | TO | 161+40.50 | R+ | 113 |
| | "CL1" | 164+14.10 | TO | 164+79.02 | R+ | 65 |
| | "CL1" | 164+16.40 | TO | 164+79.02 | L+ | 63 |
| | | | | | TOTAL | 784 |

## TEMPORARY FENCE (TYPE ESA)

| SHEET No. | ALIGNMENT | STATION BEGIN | | STATION END | LOCATION L+/R+ | TEMPORARY FENCE (TYPE ESA) LF |
|---|---|---|---|---|---|---|
| L-1 | "CL1" | 162+25 | TO | 164+90 | R+ | 302 |
| | "CL1" | 163+75 | TO | 165+65 | L+ | 190 |
| | "CL1" | 164+72 | TO | 165+30 | L+ | 65 |
| | | | | | TOTAL | 557 |

## TEMPORARY WATER POLLUTION CONTROL QUANTITIES

| ALIGNMENT | STATION BEGIN | | STATION END | LOCATION L+/R+ | TEMPORARY CHECK DAM LF | TEMPORARY FIBER ROLL LF | RAIN EVENT ACTION PLAN EA | STORM WATER SAMPLING AND ANALYSIS DAY EA | STORM WATER ANNUAL REPORT EA |
|---|---|---|---|---|---|---|---|---|---|
| "CL1" | 157+57.10 | TO | 164+79.02 | BOTH | 100 | 250 | 10 | 14 | 2 |
| | | | | TOTAL | 100 | 250 | 10 | 14 | 2 |

## ROADWAY QUANTITIES

| SHEET No. | ALIGNMENT | STATION BEGIN | | STATION END | LOCATION L+/R+ | ROADWAY EXCAVATION CY | (N) EMBANKMENT CY | SHOULDER BACKING TON | CLASS 2 AGGREGATE BASE CY | HOT MIX ASPHALT (TYPE A) TON | TACK COAT TON | TRANSITION RAILING (TYPE WB-31) EA | ALTERNATIVE IN-LINE TERMINAL SYSTEM EA | ALTERNATIVE FLARED TERMINAL SYSTEM EA | ALTERNATIVE CRASH CUSHION EA | STAIN GALVANIZED SURFACES LF | DESCRIPTION |
|---|---|---|---|---|---|---|---|---|---|---|---|---|---|---|---|---|---|
| L-1 | "CL1" | 157+57.10 | TO | 162+18.73 | BOTH | 115 | 721 | 52 | 222 | 309 | 0.31 | | | | | | MAINLINE EARTHWORK AND PAVING |
| L-1 | "CL1" | 162+78.13 | TO | 164+79.02 | BOTH | 283 | 58 | 26 | 101 | 140 | 0.14 | | | | | | MAINLINE EARTHWORK AND PAVING |
| C-4 | "CL1" | 159+54.00 | TO | 160+10.10 | L+ | | | | 8 | 9 | | | | | | | DRIVEWAY 1 |
| C-4 | "CL1" | 159+69.10 | TO | 160+24.80 | R+ | | | | 7 | 9 | | | | | | | DRIVEWAY 2 |
| C-5 | "CL1" | 163+04.80 | TO | 164+13.40 | R+ | | | | 46 | 55 | | | | | | | DRIVEWAY 3 |
| C-5 | "CL1" | 163+14.70 | TO | 164+11.10 | L+ | | | | 14 | 13 | | | | | | | DRIVEWAY 4 |
| L-1 | "CL1" | 161+28.50 | TO | 162+06.60 | R+ | | | | | | | 1 | 1 | | | 78 | EASTBOUND APPROACH - LAYOUT 12A |
| L-1 | "CL1" | 161+39.40 | TO | 162+17.50 | L+ | | | | | | | 1 | 1 | | | 78 | WESTBOUND DEPARTURE - LAYOUT 12AA |
| L-1 | "CL1" | 162+81.00 | TO | 163+05.00 | R+ | | | | | | | | | | 1 | 24 | EASTBOUND DEPARTURE |
| L-1 | "CL1" | 162+90.00 | TO | 163+52.00 | L+ | | | | | | | 1 | | 1 | | 63 | WESTBOUND APPROACH - LAYOUT 12B |
| SUBTOTAL FROM SHEET DQ-1 | | | | | | | | | | 2 | | | | | | | |
| SUBTOTAL FROM SHEET SCQ-1 | | | | | | | | | 94 | 113 | | | | | | | |
| SUBTOTAL FROM STRUCTURES PLANS | | | | | | | | | 30 | | | | | | | 120 | |
| | | | | | TOTAL | 398 | 779 | 78 | 522 | 650 | 0.45 | 3 | 2 | 1 | 1 | 363 | |

# SUMMARY OF QUANTITIES
# Q-1

BRETT DITZLER | REVISED BY
ALEX PETERSON | DATE REVISED
CALCULATED-DESIGNED BY
CHECKED BY
FUNCTIONAL SUPERVISOR
STEVE THORNE

STATE OF CALIFORNIA - DEPARTMENT OF TRANSPORTATION
Caltrans® HYDRAULICS DESIGN

P:\proj\02\4E630_plans\pse\24e630pa001.dgn

LAST REVISION 10-23-13 | DATE PLOTTED => 24-OCT-2013 | TIME PLOTTED => 07:14

| Dist | COUNTY | ROUTE | POST MILES TOTAL PROJECT | SHEET No. | TOTAL SHEETS |
|---|---|---|---|---|---|
| 02 | Sis | 96 | 56.0 | 35 | 92 |

LICENSED LANDSCAPE ARCHITECT

10-25-13

PLANS APPROVAL DATE

LICENSED LANDSCAPE ARCHITECT J. PATRICK SULLIVAN #3125 Signature 07/31/14 Renewal Date 10/21/13 Date STATE OF CALIFORNIA

*THE STATE OF CALIFORNIA OR ITS OFFICERS OR AGENTS SHALL NOT BE RESPONSIBLE FOR THE ACCURACY OR COMPLETENESS OF SCANNED COPIES OF THIS PLAN SHEET.*

**NOTE:**

1. FOR ACCURATE RIGHT OF WAY DATA, CONTACT RIGHT OF WAY ENGINEERING AT THE DISTRICT OFFICE.

**LEGEND:**

HYDROSEED

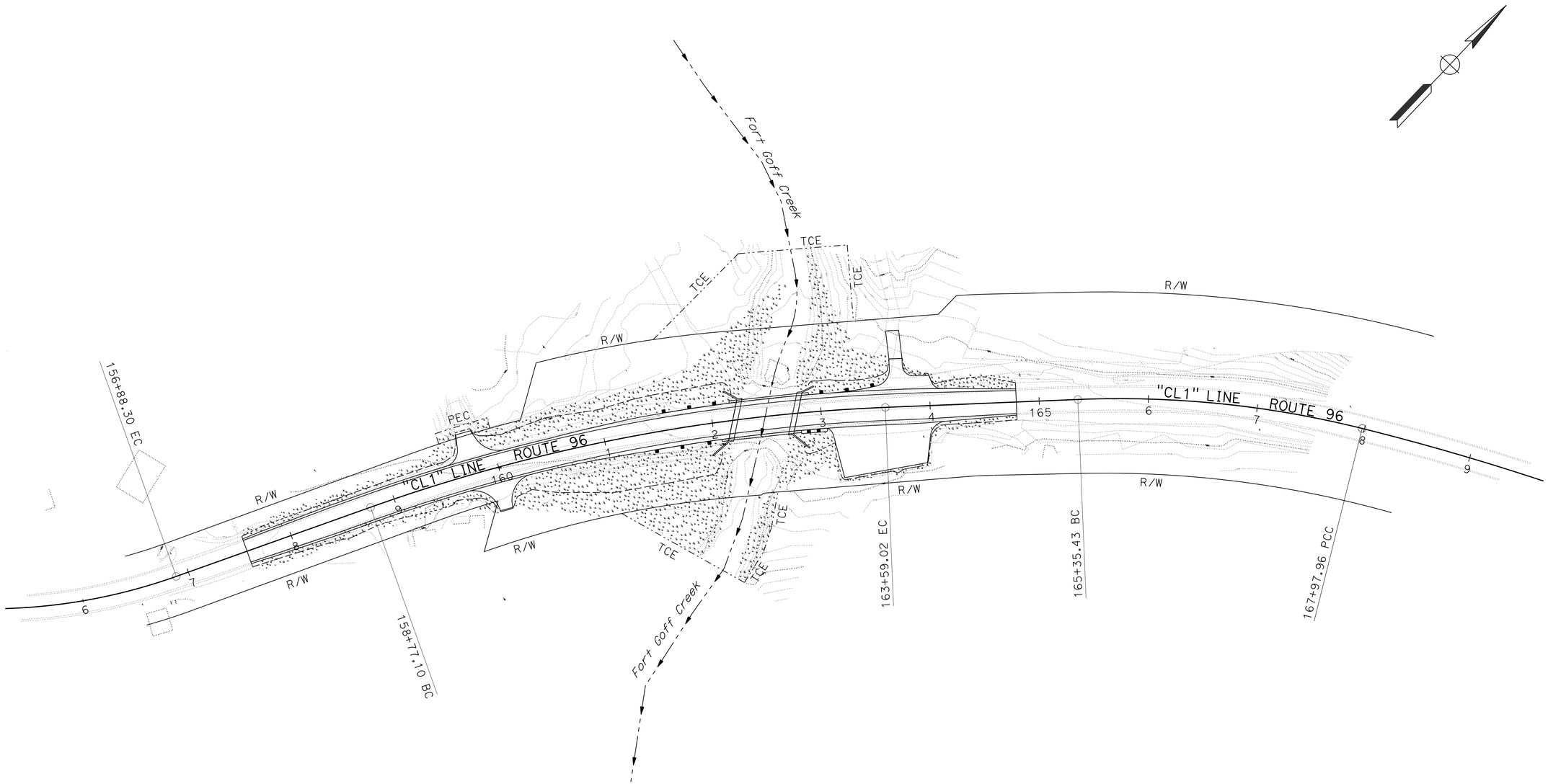


# EROSION CONTROL PLAN

SCALE: 1" = 50'

**EC-1**

*APPROVED FOR LANDSCAPE WORK ONLY*

| REVISED BY | DATE REVISED |
|---|---|
| | |

CALCULATED-DESIGNED BY

CHECKED BY

SENIOR LANDSCAPE ARCHITECT RON FLORY

J. PATRICK SULLIVAN

RON FLORY

STATE OF CALIFORNIA - DEPARTMENT OF TRANSPORTATION

Caltrans® LANDSCAPE ARCHITECTURE

P:\proj\02\4E630_plans\pse\24e630te001.dgn

LAST REVISION 10-23-13

DATE PLOTTED => 24-OCT-2013

TIME PLOTTED => 07:14

| Dist | COUNTY | ROUTE | POST MILES TOTAL PROJECT | SHEET No. | TOTAL SHEETS |
|---|---|---|---|---|---|
| 02 | Sis | 96 | 56.0 | 36 | 92 |

LICENSED LANDSCAPE ARCHITECT

10-25-13

PLANS APPROVAL DATE

LICENSED LANDSCAPE ARCHITECT J. PATRICK SULLIVAN #3125 Signature 07/31/14 Renewal Date 10/21/13 Date STATE OF CALIFORNIA

*THE STATE OF CALIFORNIA OR ITS OFFICERS OR AGENTS SHALL NOT BE RESPONSIBLE FOR THE ACCURACY OR COMPLETENESS OF SCANNED COPIES OF THIS PLAN SHEET.*

NOTE:

1. (N) - NOT A SEPARATE PAY ITEM, FOR INFORMATION ONLY

## HYDROSEED SEQUENCE/ APPLICATION RATES (N)

| SEQUENCE | ITEM | MATERIAL DESCRIPTION | MATERIAL TYPE | APPLICATION RATE (N) |
|---|---|---|---|---|
| STEP 1 | HYDROSEED APPLICATION | PURE LIVE SEED | MIX | 90 LB/ACRE |
| | | FIBER | ALTERNATE | 2000 LB/ACRE |
| | | SLOW RELEASE FERTLIZER | GRANULAR | 150 LB/ACRE |
| STEP 2 | HYDROSEED APPLICATION | COMPOST | RECYCLED WOOD PRODUCTS | 1.2 CY/ACRE |
| | | FIBER | ALTERNATE | 1500 LB/ACRE |
| | | TACKIFIER | PSYLLIUM | 150 LB/ACRE |

## PURE LIVE SEED MIX (N)

| BOTANICAL NAME (COMMON NAME) | PERCENT GERMINATION (MINIMUM) | POUNDS PURE LIVE SEED PER ACRE (N) (SLOPE MEASUREMENT) |
|---|---|---|
| ACHILLEA MILLEFOLIUM (COMMON YARROW) | 50 | 2 |
| DESCHAMPSIA CAEPITOSA (SLENDER HAIRGRASS) | 60 | 5 |
| ELYMUS GLAUCUS (CALIFORNIA WILD RYE) | 80 | 15 |
| FESTUCA IDAHOENSIS (WESTERN FESCUE) | 70 | 20 |
| LASTHENIA CALIFORNICA (DWARF GOLDFIELDS) | 50 | 2 |
| LOTUS PURSHIANUS (PURSHING) | 70 | 2 |
| POA SECUNDA (BLUE PINEGRASS) | 80 | 22 |
| VULPIA MICROSTACHYS (SMALL FESCUE) | 80 | 22 |

## HYDROSEED TOTALS

| MATERIAL DESCRIPTION | MATERIAL TYPE | TOTALS | |
|---|---|---|---|
| PURE LIVE SEED | MIX | 68.4 LBS (N) | HYDROSEED |
| FIBER | ALTERNATE | 2660 LBS (N) | |
| SLOW RELEASE FERTLIZER | GRANULAR | 114 LBS (N) | |
| COMPOST | RECYCLED WOOD PRODUCTS | .912 CY (N) | |
| TACKIFIER | PSYLLIUM | 114 LBS (N) | |
| FROM STA 157+57 TO 164+79 | | TOTAL SQFT | 33,000 |

# EROSION CONTROL QUANTITIES

ECQ-1

REVISED BY | DATE REVISED

J. PATRICK SULLIVAN | RON FLORY

CALCULATED-DESIGNED BY | CHECKED BY

SENIOR LANDSCAPE ARCHITECT | RON FLORY

STATE OF CALIFORNIA - DEPARTMENT OF TRANSPORTATION

Caltrans® LANDSCAPE ARCHITECTURE

P:\proj\02\4E630_plans\pse\24e630tg001.dgn

LAST REVISION 10-23-13 | DATE PLOTTED => 24-OCT-2013 | TIME PLOTTED => 07:14

| Dist | COUNTY | ROUTE | POST MILES TOTAL PROJECT | SHEET No. | TOTAL SHEETS |
|---|---|---|---|---|---|
| 02 | Sis | 96 | 56.0 | 37 | 92 |

ART 10-23-13
REGISTERED ELECTRICAL ENGINEER DATE

10-25-13
PLANS APPROVAL DATE

REGISTERED PROFESSIONAL ENGINEER
A.P. ROBLES
No. E15293
Exp. 3-31-15
ELECTRICAL
STATE OF CALIFORNIA

*THE STATE OF CALIFORNIA OR ITS OFFICERS OR AGENTS SHALL NOT BE RESPONSIBLE FOR THE ACCURACY OR COMPLETENESS OF SCANNED COPIES OF THIS PLAN SHEET.*

## NOTE:

1. FOR ACCURATE RIGHT OF WAY DATA, CONTACT RIGHT OF WAY ENGINEERING AT THE DISTRICT OFFICE.

## NOTES (THIS SHEET):

1. LOCATIONS ARE APPROXIMATE. EXACT LOCATIONS WILL BE DETERMINED BY THE ENGINEER.

2 TEMPORARY 120/ 240 VOLT, 3 WIRE, 1 PHASE, TYPE A SERVICE. SEE WIRING DIAGRAM, SHEET E-2.

3 2"C, 3#6, 1#6 G.

4 2"C, 4#10 (LTG), 1#10 G, 6#12 (FB).

5 WOOD POLE WITH 2 FLASHING BEACONS AND LIGHTING. SEE CONSTRUCTION AREA SIGN SHEETS FOR SIGN INFORMATION.

6 MESSENGER CABLE, 2#10 (LTG), 1#10 G, 3#12 (FB).

7 200 W MPS OR LED-ROADWAY 1. PROVIDE TYPE IV PEC.

8. INSTALL PHOTOVOLTAIC POWER FLASHING BEACON (WITH 2 YELLOW BEACONS) 500' FROM LIMIT LINE.

9. FOR WOOD POLE DETAILS, SEE STAGE CONSTRUCTION AND TRAFFIC HANDLING DETAILS SHEETS.

## LEGEND:

BACK-UP GENERATOR, ATS AND SUBPANEL

## ABBREVIATIONS;

ATS AUTOMATIC TRANSFER SWITCH

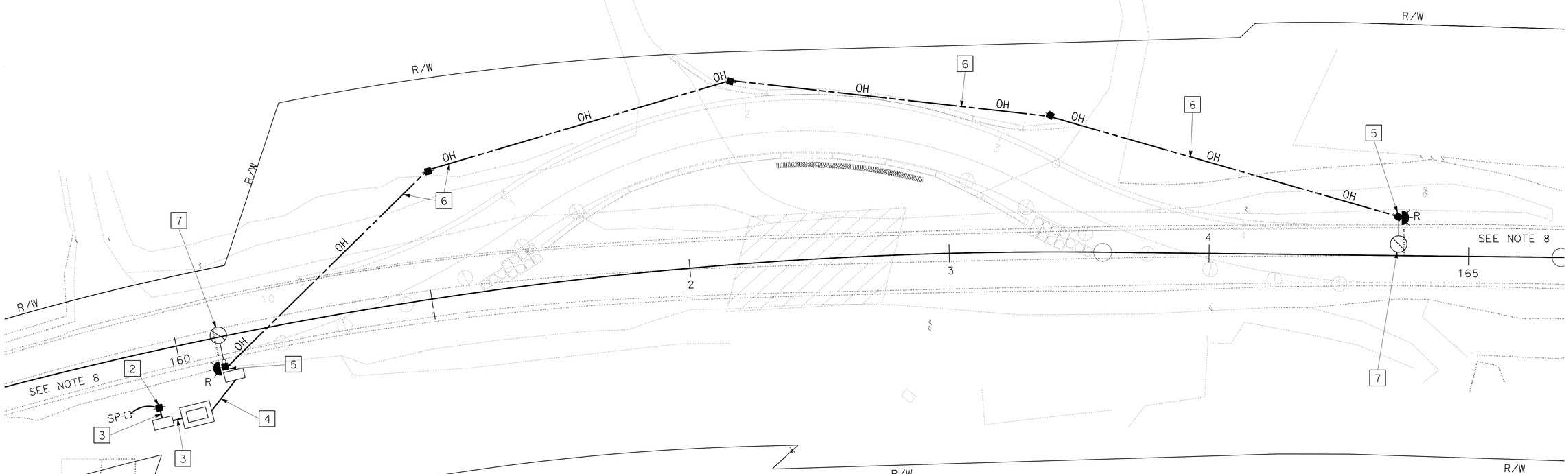


# TEMPORARY FLASHING BEACON SYSTEM

SCALE: 1" = 20'

E-1

*APPROVED FOR ELECTRICAL WORK ONLY*

REVISED BY | DATE REVISED
ARTURO P. ROBLES | JAMES M. HANNIGAN
CALCULATED-DESIGNED BY | CHECKED BY
FUNCTIONAL SUPERVISOR: ROB STINGER

STATE OF CALIFORNIA - DEPARTMENT OF TRANSPORTATION
Caltrans® ELECTRICAL DESIGN

P:\proj1\02\4E630_plans\pse\24e630ua001.dgn

LAST REVISION 10-23-13 | DATE PLOTTED => 24-OCT-2013 | TIME PLOTTED => 07:14

| Dist | COUNTY | ROUTE | POST MILES TOTAL PROJECT | SHEET No. | TOTAL SHEETS |
|---|---|---|---|---|---|
| 02 | Sis | 96 | 56.0 | 38 | 92 |

ART 10-23-13
REGISTERED ELECTRICAL ENGINEER DATE

10-25-13
PLANS APPROVAL DATE

REGISTERED PROFESSIONAL ENGINEER A.P. ROBLES No. E15293 Exp. 3-31-15 ELECTRICAL STATE OF CALIFORNIA

*THE STATE OF CALIFORNIA OR ITS OFFICERS OR AGENTS SHALL NOT BE RESPONSIBLE FOR THE ACCURACY OR COMPLETENESS OF SCANNED COPIES OF THIS PLAN SHEET.*

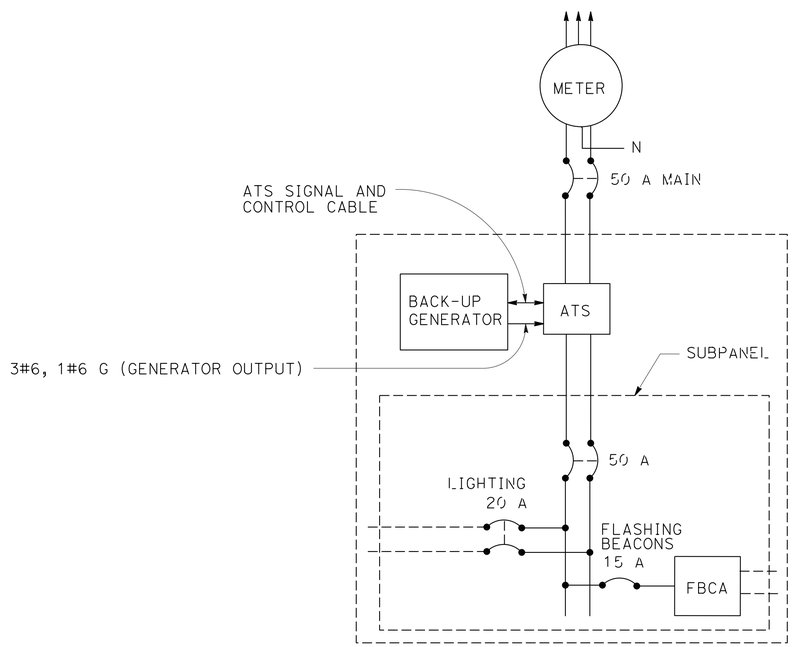


**WIRING DIAGRAM**

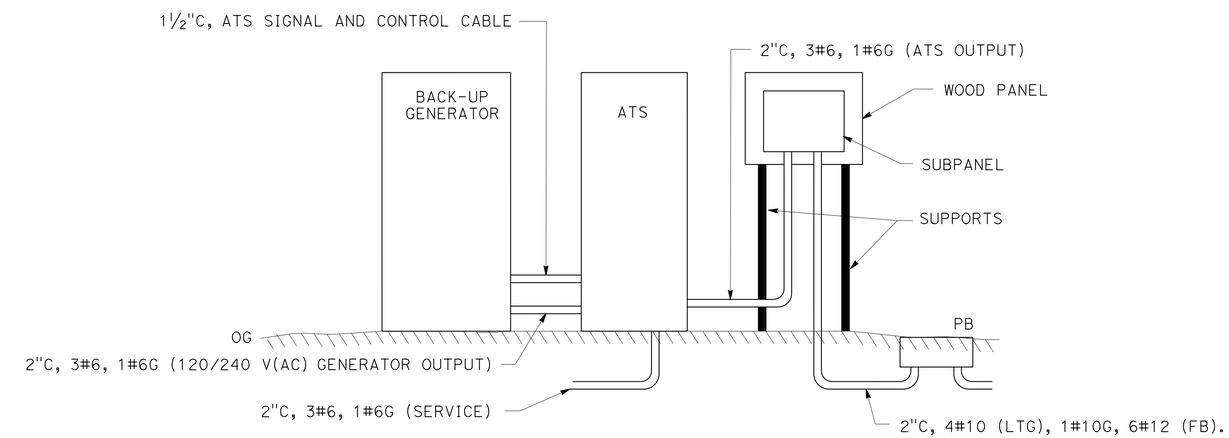


**ATS AND BACK-UP GENERATOR**

# TEMPORARY FLASHING BEACON SYSTEM
## (DETAILS)

NO SCALE

**E-2**

ARTURO P. ROBLES
JAMES M. HANNIGAN
REVISED BY
DATE REVISED
CALCULATED-DESIGNED BY
CHECKED BY
FUNCTIONAL SUPERVISOR
ROB STINGER

STATE OF CALIFORNIA - DEPARTMENT OF TRANSPORTATION
Caltrans® ELECTRICAL DESIGN

P:\proj1\02\4E630_plans\pse\24e630ua002.dgn

LAST REVISION 10-23-13 | DATE PLOTTED => 24-OCT-2013 | TIME PLOTTED => 07:14

| Dist | COUNTY | ROUTE | POST MILES TOTAL PROJECT | SHEET No. | TOTAL SHEETS |
|---|---|---|---|---|---|
| 02 | Sis | 96 | 56.0 | 39 | 92 |

ART 10-23-13
REGISTERED ELECTRICAL ENGINEER DATE

10-25-13
PLANS APPROVAL DATE

REGISTERED PROFESSIONAL ENGINEER
A.P. ROBLES
No. E15293
Exp. 3-31-15
ELECTRICAL
STATE OF CALIFORNIA

*THE STATE OF CALIFORNIA OR ITS OFFICERS OR AGENTS SHALL NOT BE RESPONSIBLE FOR THE ACCURACY OR COMPLETENESS OF SCANNED COPIES OF THIS PLAN SHEET.*

NOTE:

1. (N) - NOT A SEPARATE PAY ITEM. FOR INFORMATION ONLY

## TEMPORARY FLASHING BEACON SYSTEM

| | 1½" CONDUIT | 2" CONDUIT | MESSENGER CABLE | No. 6 CONDUCTOR | No. 6 GROUND | No. 10 CONDUCTOR | No. 10 GROUND | No. 12 CONDUCTOR | LUMINAIRE | 12' LMA | FLASHING BEACON | SIGNAL MOUNT | No. 5 PULL BOX | 45' WOOD POLE | 30' WOOD POLE | TYPE A SVC |
|---|---|---|---|---|---|---|---|---|---|---|---|---|---|---|---|---|
| | (N) | (N) | (N) | (N) | (N) | (N) | (N) | (N) | (N) | (N) | (N) | (N) | (N) | (N) | (N) | (N) |
| | LF | LF | LF | LF | LF | LF | LF | LF | EA | EA | EA | EA | EA | EA | EA | EA |
| TOTAL | 110 | 20 | 525 | 75 | 25 | 1200 | 600 | 1800 | 2 | 2 | 4 | 2 | 2 | 6 | 1 | 1 |

## ELECTRICAL QUANTITIES

E-3

REVISED BY | DATE REVISED
ARTURO P. ROBLES | JAMES M. HANNIGAN
CALCULATED-DESIGNED BY | CHECKED BY
FUNCTIONAL SUPERVISOR
ROB STINGER

STATE OF CALIFORNIA - DEPARTMENT OF TRANSPORTATION
Caltrans® ELECTRICAL DESIGN

P:\proj1\02\4E630_plans\pse\24e630ua003.dgn

LAST REVISION 10-23-13 | DATE PLOTTED => 24-OCT-2013 | TIME PLOTTED => 07:14

## M

| | |
|---|---|
| Maint | MAINTENANCE |
| Max | MAXIMUM |
| MB | METAL BEAM |
| MBB | METAL BEAM BARRIER |
| MBGR | METAL BEAM GUARD RAILING |
| Med | MEDIAN |
| MGS | MIDWEST GUARDRAIL SYSTEM |
| MH | MANHOLE |
| Min | MINIMUM |
| Misc | MISCELLANEOUS |
| Misc I & S | MISCELLANEOUS IRON AND STEEL |
| Mkr | MARKER |
| Mod | MODIFIED, |
| | MODIFY |
| Mon | MONUMENT |
| MP | METAL PLATE |
| MPGR | METAL PLATE GUARD RAILING |
| MR | MOVEMENT RATING |
| MSE | MECHANICALLY STABILIZED EMBANKMENT |
| Mt | MOUNTAIN, MOUNT |
| Mtl | MATERIAL |
| MVP | MAINTENANCE VEHICLE PULLOUT |

## N

| | |
|---|---|
| N | NORTH |
| NB | NORTHBOUND |
| No. | NUMBER (MUST HAVE PERIOD) |
| Nos. | NUMBERS (MUST HAVE PERIOD) |
| NPS | NOMINAL PIPE SIZE |
| NS | NEAR SIDE |
| NSP | NEW STANDARD PLAN |
| NTS | NOT TO SCALE |

## O

| | |
|---|---|
| Oblr | OBLITERATE |
| OC | OVERCROSSING |
| OD | OUTSIDE DIAMETER |
| OF | OUTSIDE FACE |
| OG | ORIGINAL GROUND |
| OGAC | OPEN GRADED ASPHALT CONCRETE |
| OGFC | OPEN GRADED FRICTION COURSE |
| OH | OVERHEAD |
| OHWM | ORDINARY HIGH WATER MARK |
| O-O | OUT TO OUT |
| Opp | OPPOSITE |
| OSD | OVERSIDE DRAIN |

## P

| | |
|---|---|
| P | PAGE |
| PAP | PERFORATED ALUMINUM PIPE |
| PB | PULL BOX |
| PC | POINT OF CURVATURE, |
| | PRECAST |
| PCC | POINT OF COMPOUND CURVE, |
| | PORTLAND CEMENT CONCRETE |
| PCMS | PORTABLE CHANGEABLE MESSAGE SIGN |
| PCP | PERFORATED CONCRETE PIPE, |
| | PRESTRESSED CONCRETE PIPE |
| PCVC | POINT OF COMPOUND VERTICAL CURVE |
| PEC | PERMIT TO ENTER AND CONSTRUCT |
| Ped | PEDESTRIAN |
| Ped OC | PEDESTRIAN OVERCROSSING |
| Ped UC | PEDESTRIAN UNDERCROSSING |
| Perm Mtl | PERMEABLE MATERIAL |

## P continued

| | |
|---|---|
| PG | PROFILE GRADE |
| PI | POINT OF INTERSECTION |
| PJP | PARTIAL JOINT PENETRATION |
| Pkwy | PARKWAY |
| ℙ,PL | PLATE |
| P/L | PROPERTY LINE |
| PM | POST MILE, |
| | TIME FROM NOON TO MIDNIGHT |
| PN | PAVING NOTCH |
| POC | POINT OF HORIZONTAL CURVE |
| POT | POINT OF TANGENT |
| POVC | POINT OF VERTICAL CURVE |
| PP | PIPE PILE, |
| | PLASTIC PIPE, |
| | POWER POLE |
| PPL | PREFORMED PERMEABLE LINER |
| PPP | PERFORATED PLASTIC PIPE |
| PRC | POINT OF REVERSE CURVE |
| PRF | PAVEMENT REINFORCING FABRIC |
| PRVC | POINT OF REVERSE VERTICAL CURVE |
| PS&E | PLANS, SPECIFICATIONS AND ESTIMATES |
| PS, P/S | PRESTRESSED |
| PSP | PERFORATED STEEL PIPE |
| PT | POINT OF TANGENCY |
| PVC | POLYVINYL CHLORIDE |
| Pvmt | PAVEMENT |

## Q

| | |
|---|---|
| Qty | QUANTITY |

## R

| | |
|---|---|
| R | RADIUS |
| R & D | REMOVE AND DISPOSE |
| R & S | REMOVE AND SALVAGE |
| R/C | RATE OF CHANGE |
| RCA | REINFORCED CONCRETE ARCH |
| RCB | REINFORCED CONCRETE BOX |
| RCP | REINFORCED CONCRETE PIPE |
| RCPA | REINFORCED CONCRETE PIPE ARCH |
| Rd | ROAD |
| Reinf | REINFORCED, |
| | REINFORCEMENT, |
| | REINFORCING |
| Rel | RELOCATE |
| Repl | REPLACEMENT |
| Ret | RETAINING |
| Rev | REVISED, REVISION |
| Rdwy | ROADWAY |
| RHMA | RUBBERIZED HOT MIX ASPHALT |
| Riv | RIVER |
| RM | ROAD-MIXED |
| RP | RADIUS POINT, |
| | REFERENCE POINT |
| RR | RAILROAD |
| RSP | ROCK SLOPE PROTECTION, |
| | REVISED STANDARD PLAN |
| Rt | RIGHT |
| Rte | ROUTE |
| RW | REDWOOD, |
| | RETAINING WALL |
| R/W | RIGHT OF WAY |
| Rwy | RAILWAY |

## S

| | |
|---|---|
| S | SOUTH, |
| | SUPPLEMENT |
| SAE | STRUCTURE APPROACH EMBANKMENT |
| Salv | SALVAGE |
| SAPP | STRUCTURAL ALUMINUM PLATE PIPE |
| SB | SOUTHBOUND |
| SC | SAND CUSHION |
| SCSP | SLOTTED CORRUGATED STEEL PIPE |
| SD | STORM DRAIN |
| Sec | SECOND, |
| | SECTION |
| Sep | SEPARATION |
| SG | SUBGRADE |
| Shld | SHOULDER |
| Sht | SHEET |
| Sim | SIMILAR |
| ₤ | STATION LINE |
| SM | SELECTED MATERIAL |
| Spec | SPECIAL, |
| | SPECIFICATIONS |
| SPP | SLOTTED PLASTIC PIPE |
| SS | SLOPE STAKE |
| SSBM | STRAP AND SADDLE BRACKET METHOD |
| SSD | STRUCTURAL SECTION DRAIN |
| SSPA | STRUCTURAL STEEL PLATE ARCH |
| SSPP | STRUCTURAL STEEL PLATE PIPE |
| SSPPA | STRUCTURAL STEEL PLATE PIPE ARCH |
| SSRP | STEEL SPIRAL RIB PIPE |
| St | STREET |
| Sta | STATION |
| STBB | SINGLE THRIE BEAM BARRIER |
| Std | STANDARD |
| Str | STRUCTURE |
| Surf | SURFACING |
| SW | SIDEWALK, |
| | SOUND WALL |
| Swr | SEWER |
| Sym | SYMMETRICAL |
| S4S | SURFACE 4 SIDES |

## T

| | |
|---|---|
| T | SEMI-TANGENT |
| Tan | TANGENT |
| TBB | THRIE BEAM BARRIER |
| Tbr | TIMBER |
| TC | TOP OF CURB |
| TCB | TRAFFIC CONTROL BOX |
| TCE | TEMPORARY CONSTRUCTION EASEMENT |
| Tel | TELEPHONE |
| Temp | TEMPORARY |
| TG | TOP OF GRADE |
| Tot | TOTAL |
| TP | TELEPHONE POLE |
| TPB | TREATED PERMEABLE BASE |
| TPM | TREATED PERMEABLE MATERIAL |
| Trans | TRANSITION |

## T continued

| | |
|---|---|
| TS | TRANSVERSE, |
| | TRAFFIC SIGNAL, |
| | TUBULAR STEEL |
| Typ | TYPICAL |

## U

| | |
|---|---|
| UC | UNDERCROSSING |
| UD | UNDERDRAIN |
| UG | UNDERGROUND |
| UON | UNLESS OTHERWISE NOTED |
| UP | UNDERPASS |

## V

| | |
|---|---|
| V | VALVE, |
| | DESIGN SPEED |
| Var | VARIABLE, |
| | VARIES |
| VC | VERTICAL CURVE |
| VCP | VITRIFIED CLAY PIPE |
| Vert | VERTICAL |
| Via | VIADUCT |
| Vol | VOLUME |

## W

| | |
|---|---|
| W | WEST, |
| | WIDTH |
| WB | WESTBOUND |
| WH | WEEP HOLE |
| WM | WIRE MESH |
| WS | WATER SURFACE |
| WSP | WELDED STEEL PIPE |
| Wt | WEIGHT |
| WV | WATER VALVE |
| WW | WINGWALL |
| WWLOL | WINGWALL LAYOUT LINE |

## X

| | |
|---|---|
| X Sec | CROSS SECTION |
| Xing | CROSSING |

## Y

| | |
|---|---|
| Yr | YEAR |
| Yrs | YEARS |

| Dist | COUNTY | ROUTE | POST MILES TOTAL PROJECT | SHEET No. | TOTAL SHEETS |
|---|---|---|---|---|---|
| 02 | Sis | 96 | 56.0 | 40 | 92 |

Grace M. Tsushima
REGISTERED CIVIL ENGINEER

July 19, 2013
PLANS APPROVAL DATE

REGISTERED PROFESSIONAL ENGINEER
Grace M. Tsushima
No. C49814
Exp. 9-30-14
CIVIL
STATE OF CALIFORNIA

*THE STATE OF CALIFORNIA OR ITS OFFICERS OR AGENTS SHALL NOT BE RESPONSIBLE FOR THE ACCURACY OR COMPLETENESS OF SCANNED COPIES OF THIS PLAN SHEET.*

TO ACCOMPANY PLANS DATED 10-25-13

### UNIT OF MEASUREMENT SYMBOLS:

Some of the symbols used in the project plan quantity tables and in the Bid Item List are:

TABLE A

| SYMBOL USED | DEFINITIONS |
|---|---|
| ACRE | ACRE |
| CF | CUBIC FOOT |
| CY | CUBIC YARD |
| EA | EACH |
| GAL | GALLON |
| LB | POUND |
| LF | LINEAR FOOT |
| SQFT | SQUARE FOOT |
| SQYD | SQUARE YARD |
| STA | 100 FEET |
| TAB | TABLET |
| TON | 2,000 POUNDS |

Some of the symbols used in the plans other than in the project plan quantity tables are:

TABLE B

| SYMBOL USED | DEFINITIONS |
|---|---|
| ksi | KIPS PER SQUARE INCH |
| ksf | KIPS PER SQUARE FOOT |
| psi | POUNDS PER SQUARE INCH |
| psf | POUNDS PER SQUARE FOOT |
| $lb/ft^3$, pcf | POUNDS PER CUBIC FOOT |
| tsf | TONS PER SQUARE FOOT |
| mph, MPH * | MILES PER HOUR |
| ø | NOMINAL DIAMETER |
| oz | OUNCE |
| lb | POUND |
| kip | 1,000 POUNDS |
| cal | CALORIE |
| ft | FOOT OR FEET |
| gal | GALLON |

* For use on a sign panel only

STATE OF CALIFORNIA
DEPARTMENT OF TRANSPORTATION

# ABBREVIATIONS (SHEET 2 OF 2)

NO SCALE

RSP A10B DATED JULY 19, 2013 SUPERSEDES STANDARD PLAN A10B DATED MAY 20, 2011 - PAGE 2 OF THE STANDARD PLANS BOOK DATED 2010.

**REVISED STANDARD PLAN RSP A10B**

**2010 REVISED STANDARD PLAN RSP A10B**

DATE PLOTTED => 24-OCT-2013
TIME PLOTTED => 07:14

| Dist | COUNTY | ROUTE | POST MILES TOTAL PROJECT | SHEET No. | TOTAL SHEETS |
|---|---|---|---|---|---|
| 02 | Sis | 96 | 56.0 | 41 | 92 |

REGISTERED CIVIL ENGINEER

July 20, 2012
PLANS APPROVAL DATE

REGISTERED PROFESSIONAL ENGINEER Roberta L. McLaughlin No. C40375 Exp. 3-31-13 CIVIL STATE OF CALIFORNIA

*THE STATE OF CALIFORNIA OR ITS OFFICERS OR AGENTS SHALL NOT BE RESPONSIBLE FOR THE ACCURACY OR COMPLETENESS OF SCANNED COPIES OF THIS PLAN SHEET.*

TO ACCOMPANY PLANS DATED 10-25-13

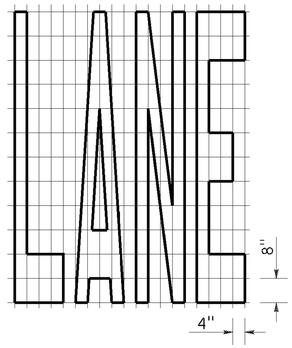


A=24 ft²

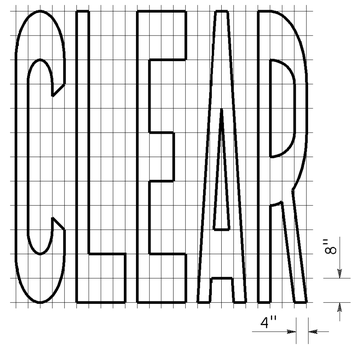


A=27 ft²

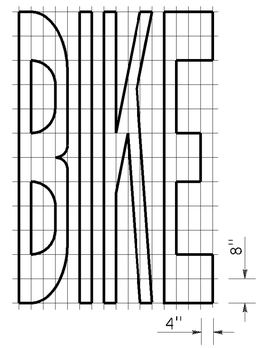


A=21 ft²

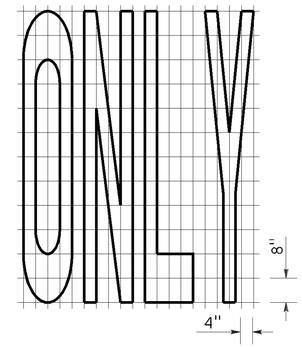


A=22 ft²

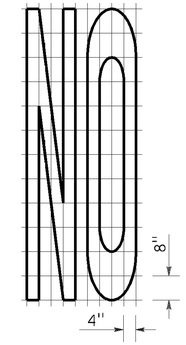


A=14 ft²

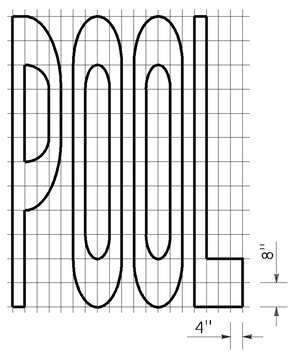


A=23 ft²

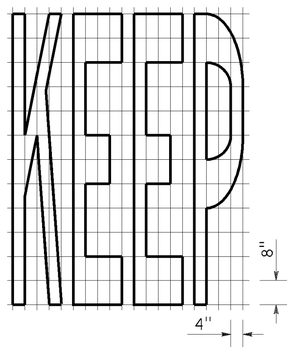


A=24 ft²

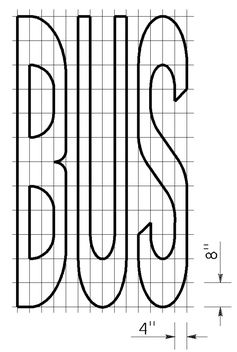


A=20 ft²

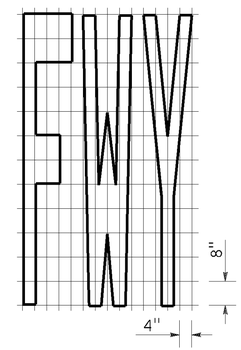


A=16 ft²

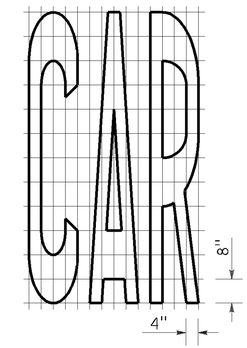


A=17 ft²

| WORD MARKINGS | | | |
|---|---|---|---|
| ITEM | ft² | ITEM | ft² |
| LANE | 24 | NO | 14 |
| POOL | 23 | BIKE | 21 |
| CAR | 17 | BUS | 20 |
| CLEAR | 27 | ONLY | 22 |
| KEEP | 24 | FWY | 16 |

A=2 ft²
See Notes 6 and 7

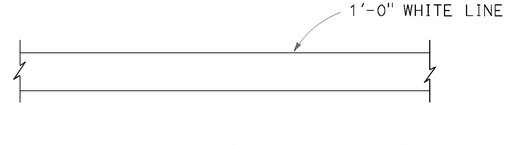


LIMIT LINE (STOP LINE)

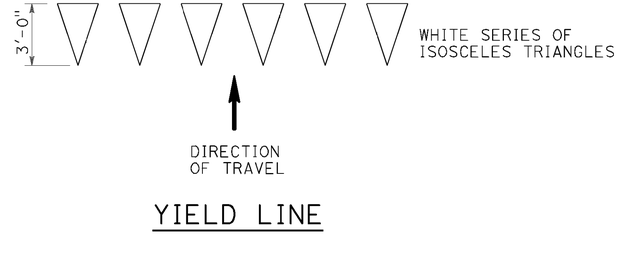


YIELD LINE

NOTES:

1. If a message consists of more than one word, it should read "UP", i.e., the first word should be nearest the driver.
2. The space between words should be at least four times the height of the characters for low speed roads, but not more than ten times the height of the characters. The space may be reduced appropriately where there is limited space because of local conditions.
3. Minor variations in dimensions may be accepted by the Engineer.
4. Portions of a letter, number or symbol may be separated by connecting segments not to exceed 2" in width.
5. The words "NO PARKING" pavement marking is to be used for parking facilities. For typical locations of markings, see Standard Plans A90A and A90B.
6. The words "NO PARKING", shall be painted in white letters no less than 1'-0" high on a contrasting background and located so that it is visible to traffic enforcement officials.

STATE OF CALIFORNIA
DEPARTMENT OF TRANSPORTATION

# PAVEMENT MARKINGS WORDS, LIMIT AND YIELD LINES

NO SCALE

RSP A24E DATED JULY 20, 2012 SUPERSEDES STANDARD PLAN A24E
DATED MAY 20, 2011 - PAGE 17 OF THE STANDARD PLANS BOOK DATED 2010.

**REVISED STANDARD PLAN RSP A24E**

**2010 REVISED STANDARD PLAN RSP A24E**

DATE PLOTTED => 24-OCT-2013
TIME PLOTTED => 07:14

| Dist | COUNTY | ROUTE | POST MILES TOTAL PROJECT | SHEET No. | TOTAL SHEETS |
|---|---|---|---|---|---|
| 02 | Sis | 96 | 56.0 | 42 | 92 |

Randell D. Hiatt
REGISTERED CIVIL ENGINEER

July 19, 2013
PLANS APPROVAL DATE

REGISTERED PROFESSIONAL ENGINEER
Randell D. Hiatt
No. C50200
Exp. 6-30-15
CIVIL
STATE OF CALIFORNIA

*THE STATE OF CALIFORNIA OR ITS OFFICERS OR AGENTS SHALL NOT BE RESPONSIBLE FOR THE ACCURACY OR COMPLETENESS OF SCANNED COPIES OF THIS PLAN SHEET.*

TO ACCOMPANY PLANS DATED 10-25-13

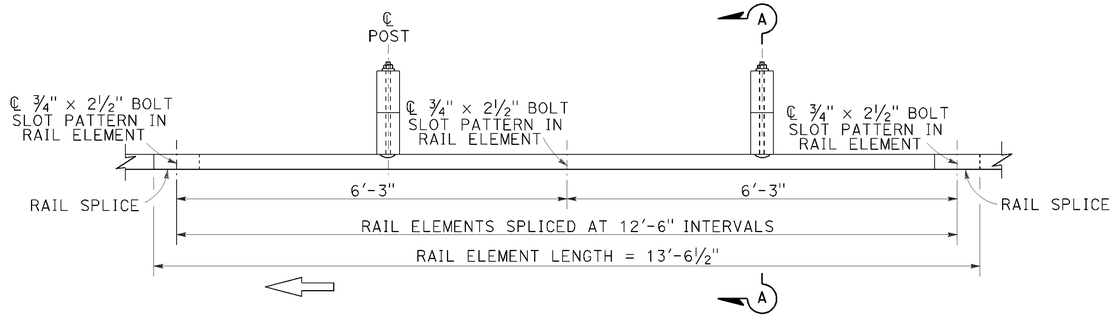


PLAN

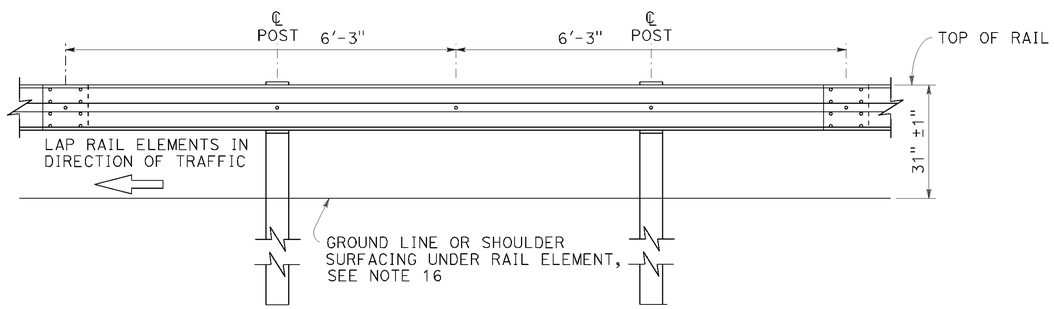


ELEVATION

## MIDWEST GUARDRAIL SYSTEM WITH WOOD POST AND BLOCKS

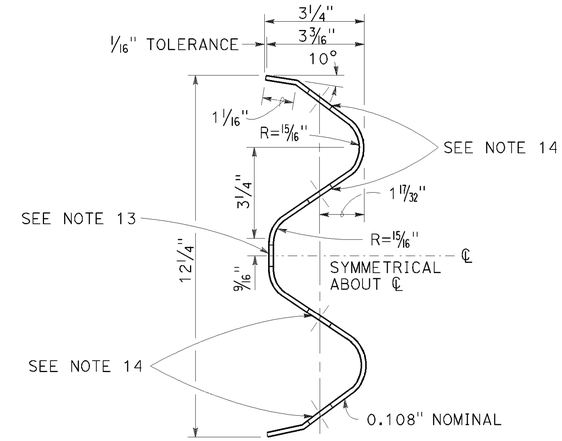


SECTION THRU RAIL ELEMENT

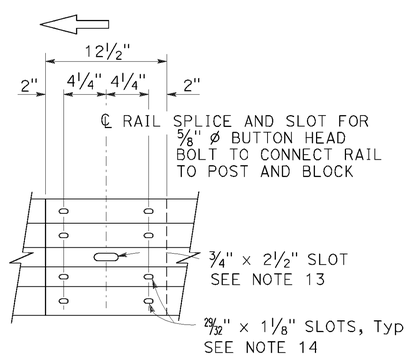


ELEVATION

## RAIL ELEMENT SPLICE DETAIL

a) Connect the over lapped end of the rail elements with ⅝" ø × 1⅜" button head oval shoulder splice bolts inserted into the 29⁄32" × 1⅛" slots and bolted together with ⅝" ø recessed hex nuts. Recess of hex nut points toward rail element. A total of 8 bolts and nuts are to be used at each rail splice connection.

b) The ends of the rail elements are to be overlapped in the direction of traffic (see details).

c) Where end cap is to be attached to the end of a rail element, a total of 4 of the above described splice bolts and nuts are to be used.

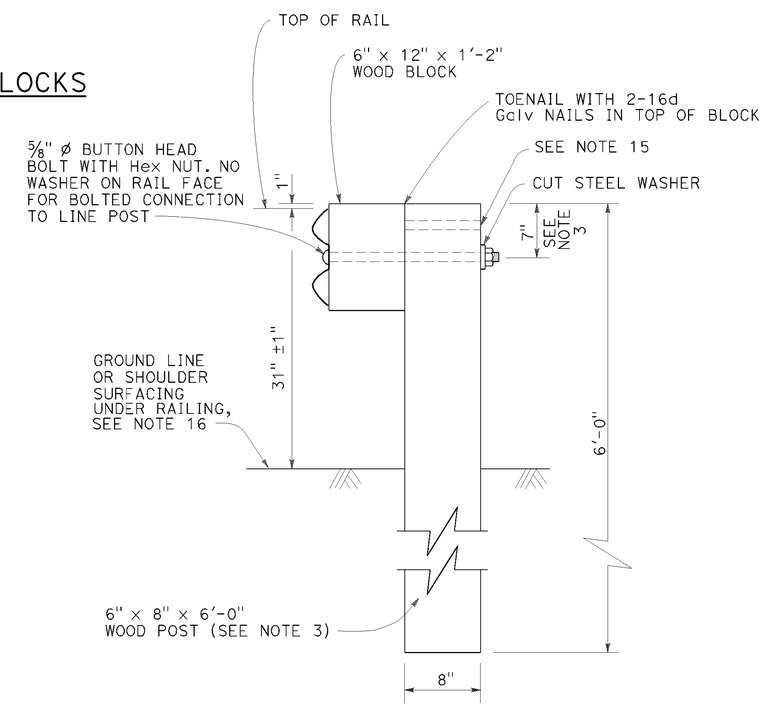


SECTION A-A

TYPICAL WOOD LINE POST INSTALLATION

See Note 4

## NOTES:

1. For details of steel post installations, see Revised Standard Plan RSP A77L2.
2. For details of standard hardware used to construct MGS, see Revised Standard Plan RSP A77M1.
3. For details of wood posts and wood blocks used to construct MGS, see Revised Standard Plan RSP A77N1.
4. For additional installation details, see Revised Standard Plan RSP A77N3.
5. MGS post spacing to be 6'-3" center to center, except as otherwise noted.
6. For MGS typical layouts, see the A77P, A77Q and A77R Series of Standard Plans.
7. If railing is connected to terminal system end treatment, use 31" height terminal system end treatment.
8. For MGS end anchor details, see Revised Standard Plans RSP A77S1 and RSP A77T2.
9. For details of MGS transition to bridge railing, see Revised Standard Plan RSP A77U4.
10. For additional details of MSG connection to bridge railing, see Revised Standard Plans RSP A77U1, RSP A77U2 and RSP A77V1.
11. For MGS connection details to abutments and walls, see Revised Standard Plan RSP A77U3.
12. For typical MGS delineation and dike positioning details, see Revised Standard Plan RSP A77N4.
13. Slotted hole for bolted connection of rail element to block and post. See "Section Thru Rail Element".
14. Slotted holes for splice bolts to overlap ends of rail element. See "Section Thru Rail Element".
15. Additional hole in uppermost portion of line post is for potential future adjustments of railing height. See Revised Standard Plan RSP A77N1.
16. Install posts in soil.

STATE OF CALIFORNIA
DEPARTMENT OF TRANSPORTATION

# MIDWEST GUARDRAIL SYSTEM STANDARD RAILING SECTION (WOOD POST WITH WOOD BLOCK)

NO SCALE

RSP A77L1 DATED JULY 19, 2013 SUPPLEMENTS STANDARD PLANS BOOK DATED 2010.

**REVISED STANDARD PLAN RSP A77L1**

**2010 REVISED STANDARD PLAN RSP A77L1**

DATE PLOTTED => 24-OCT-2013
TIME PLOTTED => 07:14

| Dist | COUNTY | ROUTE | POST MILES TOTAL PROJECT | SHEET No. | TOTAL SHEETS |
|---|---|---|---|---|---|
| 02 | Sis | 96 | 56.0 | 43 | 92 |

Randell D. Hiatt
REGISTERED CIVIL ENGINEER

July 19, 2013
PLANS APPROVAL DATE

REGISTERED PROFESSIONAL ENGINEER
Randell D. Hiatt
No. C50200
Exp. 6-30-15
CIVIL
STATE OF CALIFORNIA

*THE STATE OF CALIFORNIA OR ITS OFFICERS OR AGENTS SHALL NOT BE RESPONSIBLE FOR THE ACCURACY OR COMPLETENESS OF SCANNED COPIES OF THIS PLAN SHEET.*

TO ACCOMPANY PLANS DATED 10-25-13

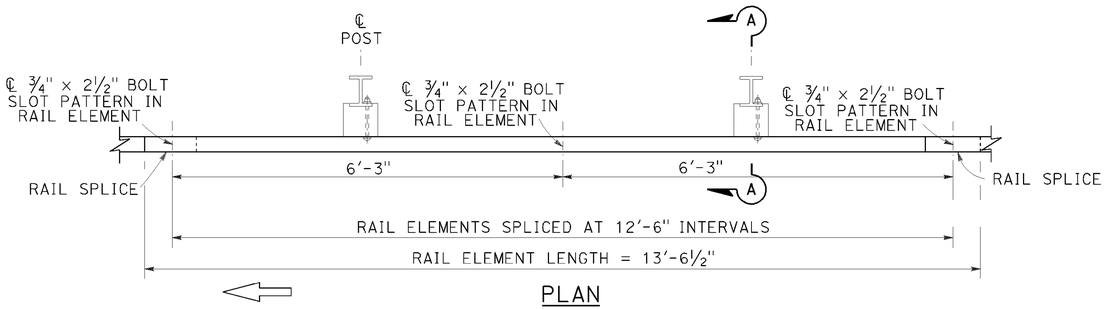


PLAN

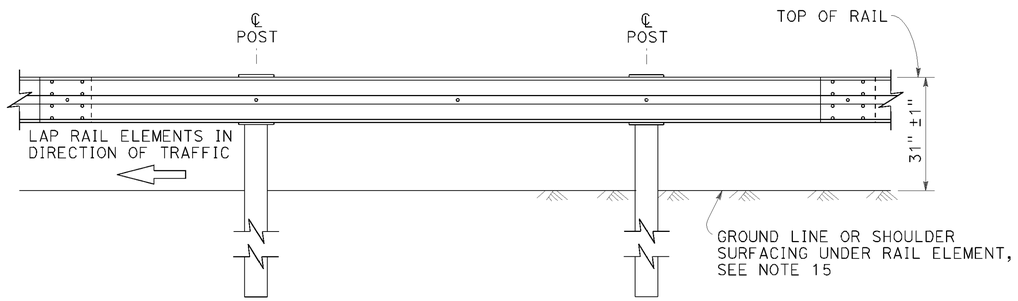


ELEVATION

## MIDWEST GUARDRAIL SYSTEM WITH STEEL POSTS AND NOTCHED WOOD OR NOTCHED RECYCLED PLASTIC BLOCKS

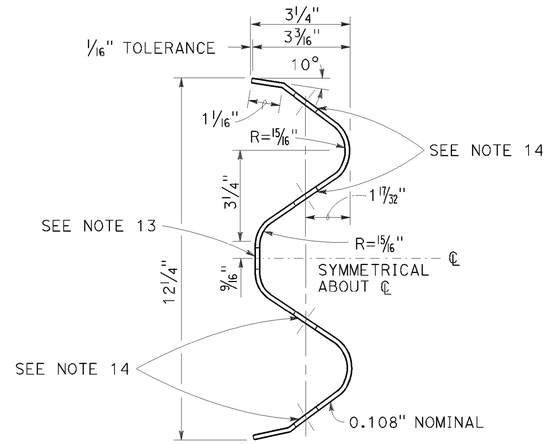


SECTION THRU RAIL ELEMENT

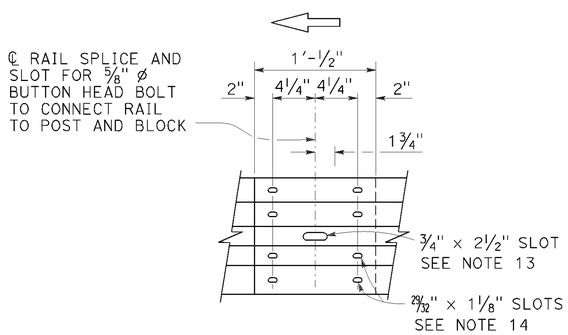


ELEVATION

## RAIL ELEMENT SPLICE DETAIL

a) Connect the over lapped end of the rail elements with ⅝" ø × 1⅜" button head oval shoulder splice bolts inserted into the 29⁄32" × 1⅛" slots and bolted together with ⅝" ø recessed hex nuts. Recess of hex nut points toward rail element. A total of 8 bolts and nuts are to be used at each rail splice connection.

b) The ends of the rail elements are to be overlapped in the direction of traffic (see details).

c) Where end cap is to be attached to the end of a rail element, a total of 4 of the above described splice bolts and nuts are to be used.

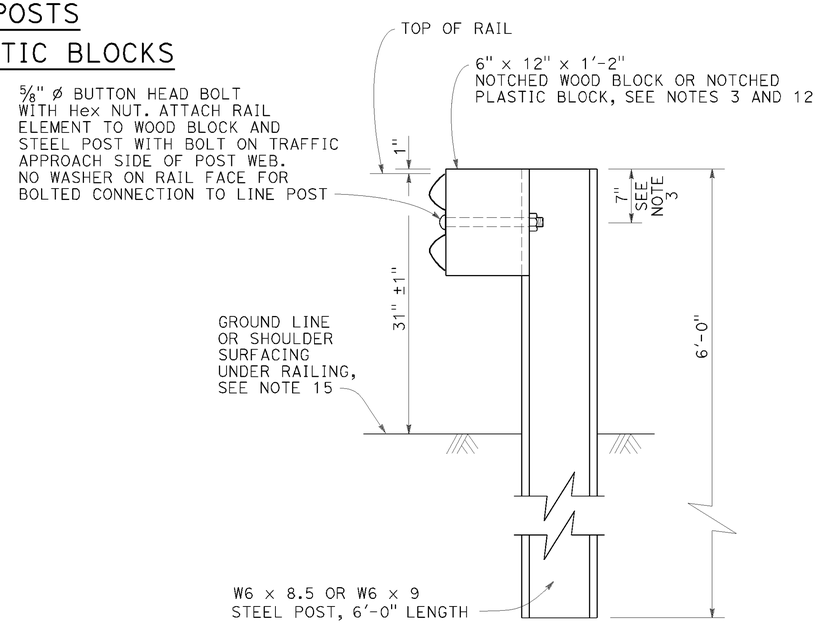


SECTION A-A

## TYPICAL STEEL LINE POST INSTALLATION

See Note 4

NOTES:

1. For details of wood post installations, see Revised Standard Plan RSP A77L1.
2. For details of standard hardware used to construct MGS, see Revised Standard Plan RSP A77M1.
3. For details of steel posts and notched wood blocks used to construct MGS, see Revised Standard Plan RSP A77N2.
4. For additional installation details, see Revised Standard Plan RSP A77N3.
5. MGS post spacing to be 6'-3" center to center, except as otherwise noted.
6. For MGS typical layouts, see the A77P, A77Q and A77R Series of Standard Plans.
7. If railing is connected to terminal system end treatment, use 31" height terminal system end treatment.
8. For MGS end anchor details, see Revised Standard Plans RSP A77S1 and RSP A77T2.
9. For details of MGS transition to bridge railing, see Revised Standard Plan RSP A77U4.
10. For additional details of MGS connection to bridge railings, see Revised Standard Plans RSP A77U1, RSP A77U2 and RSP A77V1.
11. For dike positioning and MGS delineation details, see Revised Standard Plan RSP A77N4.
12. Notched face of block faces steel post.
13. Slotted hole for bolted connection of rail element to block and post. See "Section Thru Rail Element".
14. Slotted holes for splice bolts to overlap ends of rail element. See "Section Thru Rail Element".
15. Install posts in soil.

STATE OF CALIFORNIA
DEPARTMENT OF TRANSPORTATION

# MIDWEST GUARDRAIL SYSTEM STANDARD RAILING SECTION (STEEL POST WITH NOTCHED WOOD OR NOTCHED RECYCLED PLASTIC BLOCK)

NO SCALE

RSP A77L2 DATED JULY 19, 2013 SUPPLEMENTS THE STANDARD PLANS BOOK DATED 2010.

**REVISED STANDARD PLAN RSP A77L2**

**2010 REVISED STANDARD PLAN RSP A77L2**

DATE PLOTTED => 24-OCT-2013
TIME PLOTTED => 07:15

| Dist | COUNTY | ROUTE | POST MILES TOTAL PROJECT | SHEET No. | TOTAL SHEETS |
|---|---|---|---|---|---|
| 02 | Sis | 96 | 56.0 | 44 | 92 |

Randell D. Hiatt
REGISTERED CIVIL ENGINEER

July 19, 2013
PLANS APPROVAL DATE

REGISTERED PROFESSIONAL ENGINEER
Randell D. Hiatt
No. C50200
Exp. 6-30-15
CIVIL
STATE OF CALIFORNIA

*THE STATE OF CALIFORNIA OR ITS OFFICERS OR AGENTS SHALL NOT BE RESPONSIBLE FOR THE ACCURACY OR COMPLETENESS OF SCANNED COPIES OF THIS PLAN SHEET.*

TO ACCOMPANY PLANS DATED 10-25-13

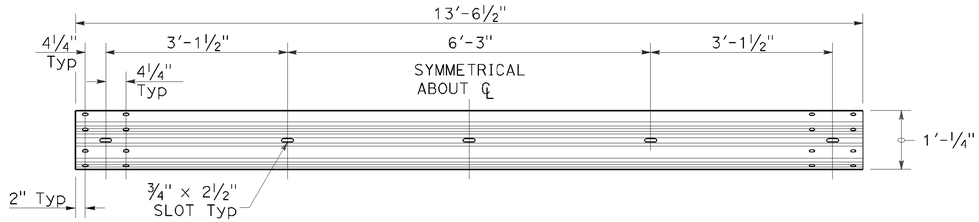


TYPICAL RAIL ELEMENT

NOTE:

1. Slotted holes for splice bolts to overlap ends of rail element.

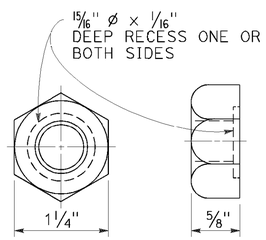


⅝" ø RECESS NUT

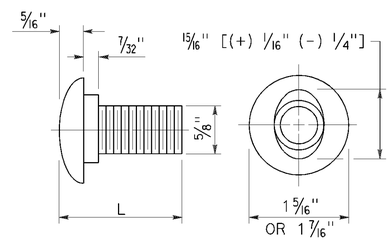


⅝" ø BUTTON HEAD BOLT

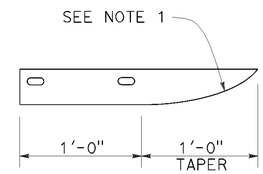


PLAN

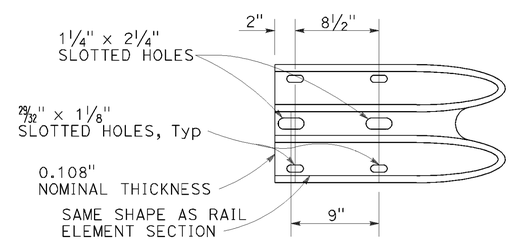


ELEVATION

END CAP
(TYPE A)

BUTTON HEAD BOLT

| L | THREAD LENGTH |
|---|---|
| 1⅜" | FULL THREAD LENGTH |
| 2" | FULL THREAD LENGTH |
| 10" | 4" Min THREAD LENGTH |
| 18" | 4" Min THREAD LENGTH |
| 20" | 4" Min THREAD LENGTH |
| 22" | 4" Min THREAD LENGTH |
| 26" | 4" Min THREAD LENGTH |
| 36" | 4" Min THREAD LENGTH |
| ** 2¾" | 2" Min THREAD LENGTH |
| ** 19" | 4" Min THREAD LENGTH |

** For nested rail applications.

STATE OF CALIFORNIA
DEPARTMENT OF TRANSPORTATION

# MIDWEST GUARDRAIL SYSTEM STANDARD HARDWARE

NO SCALE

RSP A77M1 DATED JULY 19, 2013 SUPPLEMENTS THE STANDARD PLANS BOOK DATED 2010.

**REVISED STANDARD PLAN RSP A77M1**

**2010 REVISED STANDARD PLAN RSP A77M1**

DATE PLOTTED => 24-OCT-2013
TIME PLOTTED => 07:15

USERNAME => s115152
DGN FILE => 24e630va005.dgn

P:\proj1\02\4E630_plans\pse\24e630va005.dgn

7-3-13

| Dist | COUNTY | ROUTE | POST MILES TOTAL PROJECT | SHEET No. | TOTAL SHEETS |
|---|---|---|---|---|---|
| 02 | Sis | 96 | 56.0 | 45 | 92 |

Randell D. Hiatt
REGISTERED CIVIL ENGINEER

July 19, 2013
PLANS APPROVAL DATE

REGISTERED PROFESSIONAL ENGINEER
Randell D. Hiatt
No. C50200
Exp. 6-30-15
CIVIL
STATE OF CALIFORNIA

*THE STATE OF CALIFORNIA OR ITS OFFICERS OR AGENTS SHALL NOT BE RESPONSIBLE FOR THE ACCURACY OR COMPLETENESS OF SCANNED COPIES OF THIS PLAN SHEET.*

TO ACCOMPANY PLANS DATED 10-25-13

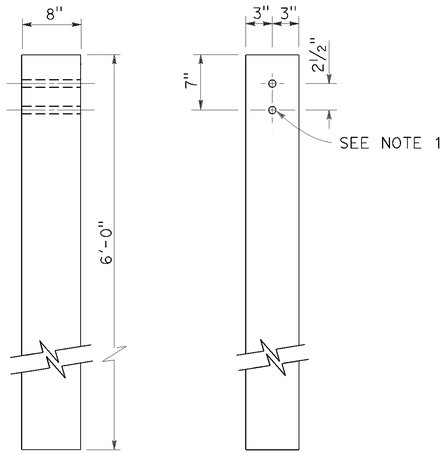


SIDE FRONT

6" x 8" WOOD POST
See Note 3

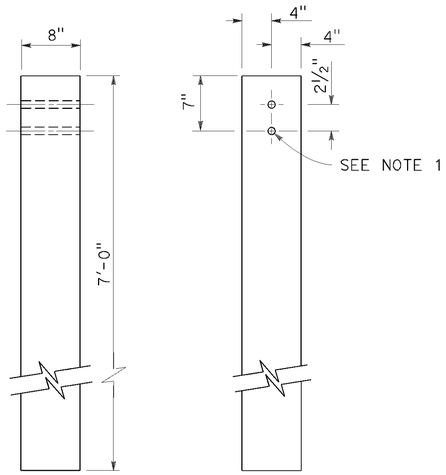


SIDE FRONT

8" x 8" WOOD POST
See Note 4

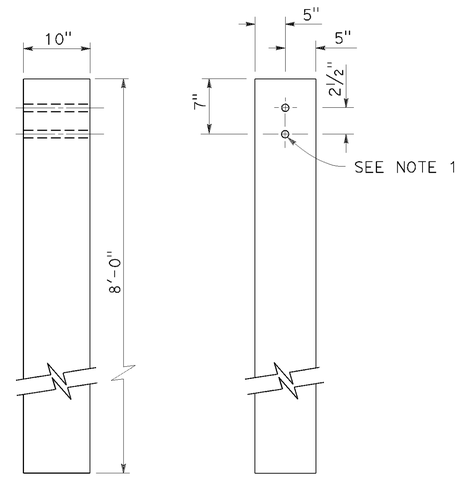


SIDE FRONT

10" x 10" WOOD POST
See Note 5

## NOTES:

1. All holes in wood posts and blocks shall be 3/4" Dia ± 1/16".
2. Dimensions shown for wood post are nominal.
3. This post and block combination used for standard line post sections of MGS.
4. This post and 8" x 12" block combination used for line post sections of MGS on narrow roadways.
5. This post and 8" x 12" block combination is typically used where strengthened line post sections of MGS are warranted to shield fixed objects.
6. See Revised Standard Plan RSP A77L3 for use of 6" x 8" and 8" x 8" wood blocks.

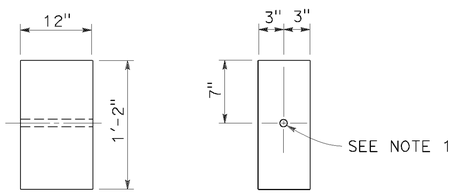


SIDE FRONT

6" x 12" WOOD BLOCK
See Note 3

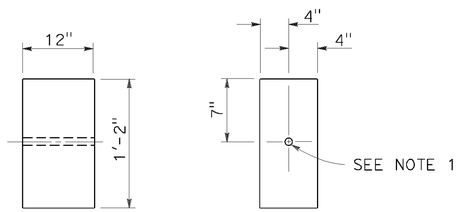


SIDE FRONT

8" x 12" WOOD BLOCK

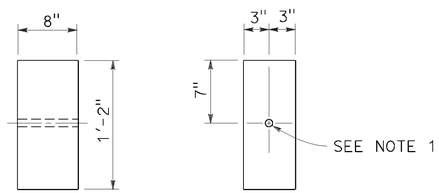


SIDE FRONT

6" x 8" WOOD BLOCK
Only for use with metal beam guard rail see Note 6

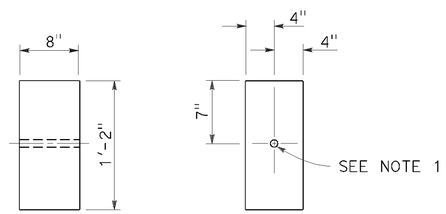


SIDE FRONT

8" x 8" WOOD BLOCK
Only for use with metal beam guard rail see Note 6

STATE OF CALIFORNIA
DEPARTMENT OF TRANSPORTATION

# MIDWEST GUARDRAIL SYSTEM WOOD POST AND WOOD BLOCK DETAILS

NO SCALE

RSP A77N1 DATED JULY 19, 2013 SUPPLEMENTS THE STANDARD PLANS BOOK DATED 2010.

**REVISED STANDARD PLAN RSP A77N1**

**2010 REVISED STANDARD PLAN RSP A77N1**

DATE PLOTTED => 24-OCT-2013
TIME PLOTTED => 07:15

USERNAME => s115152
DGN FILE => 24e630va006.dgn

P:\proj1\02\4E630_plans\pse\24e630va006.dgn

7-3-13

| Dist | COUNTY | ROUTE | POST MILES TOTAL PROJECT | SHEET No. | TOTAL SHEETS |
|---|---|---|---|---|---|
| 02 | Sis | 96 | 56.0 | 46 | 92 |

Randell D. Hiatt
REGISTERED CIVIL ENGINEER

July 19, 2013
PLANS APPROVAL DATE

REGISTERED PROFESSIONAL ENGINEER
Randell D. Hiatt
No. C50200
Exp. 6-30-15
CIVIL
STATE OF CALIFORNIA

*THE STATE OF CALIFORNIA OR ITS OFFICERS OR AGENTS SHALL NOT BE RESPONSIBLE FOR THE ACCURACY OR COMPLETENESS OF SCANNED COPIES OF THIS PLAN SHEET.*

TO ACCOMPANY PLANS DATED 10-25-13

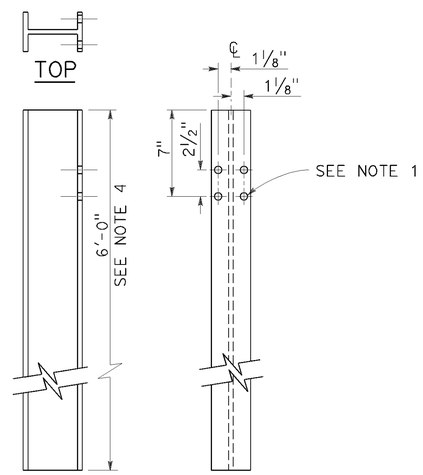


W6 x 9 OR W6 x 8.5
STEEL POST
See Note 4

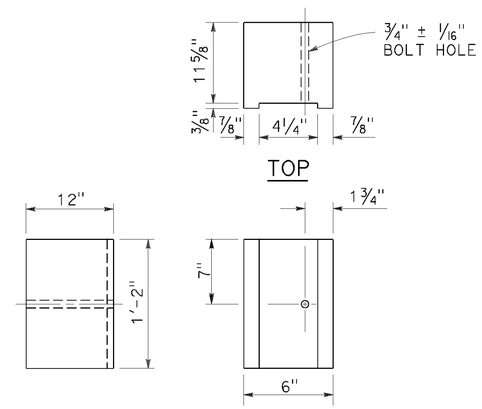


6" x 12"
NOTCHED WOOD BLOCK
See Notes 2 and 3

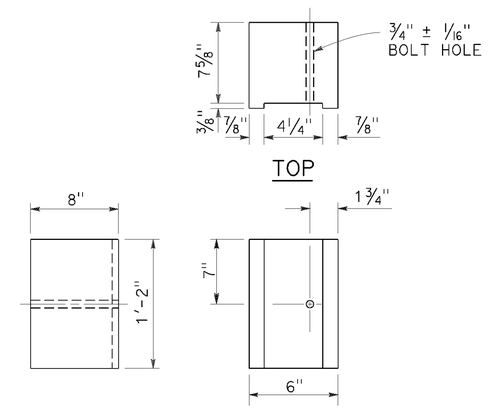


6" x 8"
NOTCHED WOOD BLOCK
Only for use with metal beam guard railing. See Note 5

## NOTES:

1. All holes in steel post shall be 13/16" Dia maximum.
2. Dimensions shown for wood block are nominal.
3. Notched face of block faces steel post.
4. 6'-0" length posts to be used for typical roadway installation. 7'-0" length posts to be used for narrow roadway installation. See Revised Standard Plan RSP A77N3.
5. See Revised Standard Plan RSP A77L3 for use of 6" x 8" and 8" x 8" notched wood blocks.
6. This post and 8" x 12" block combination to be used for line post sections of MGS on narrow roadways and where strengthened line post sections of MGS are warranted to shield fixed objects.

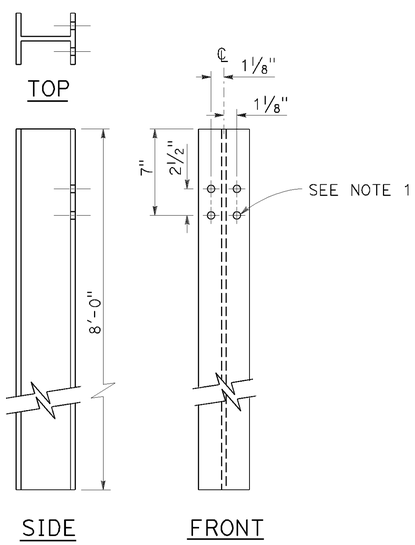


W6 x 15
STEEL POST
See Note 6

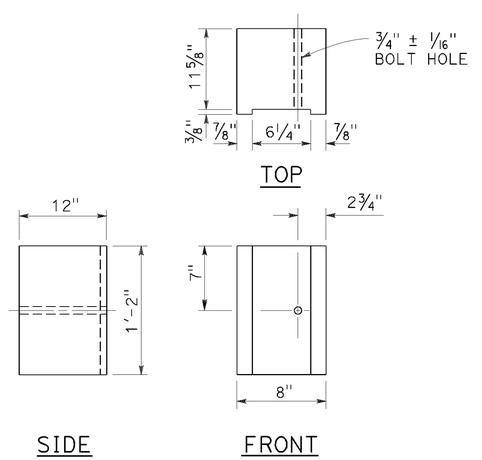


8" x 12"
NOTCHED WOOD BLOCK
See Notes 2 and 3

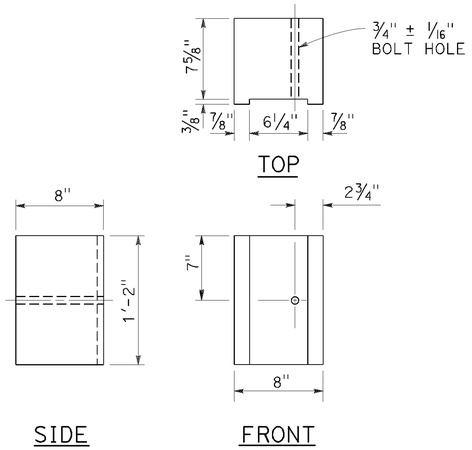


8" x 8"
NOTCHED WOOD BLOCK
Only for use with metal beam guard railing. See Note 5

STATE OF CALIFORNIA
DEPARTMENT OF TRANSPORTATION

# MIDWEST GUARDRAIL SYSTEM STEEL POST AND NOTCHED WOOD BLOCK DETAILS

NO SCALE

RSP A77N2 DATED JULY 19, 2013 SUPPLEMENTS THE STANDARD PLANS BOOK DATED 2010.

**REVISED STANDARD PLAN RSP A77N2**

**2010 REVISED STANDARD PLAN RSP A77N2**

DATE PLOTTED => 24-OCT-2013
TIME PLOTTED => 07:15

USERNAME => s115152
DGN FILE => 24e630va007.dgn

P:\proj1\02\4E630_plans\pse\24e630va007.dgn

7-3-13

| Dist | COUNTY | ROUTE | POST MILES TOTAL PROJECT | SHEET No. | TOTAL SHEETS |
|---|---|---|---|---|---|
| 02 | Sis | 96 | 56.0 | 47 | 92 |

Randell D. Hiatt
REGISTERED CIVIL ENGINEER

July 19, 2013
PLANS APPROVAL DATE

REGISTERED PROFESSIONAL ENGINEER
Randell D. Hiatt
No. C50200
Exp. 6-30-15
CIVIL
STATE OF CALIFORNIA

THE STATE OF CALIFORNIA OR ITS OFFICERS OR AGENTS SHALL NOT BE RESPONSIBLE FOR THE ACCURACY OR COMPLETENESS OF SCANNED COPIES OF THIS PLAN SHEET.

TO ACCOMPANY PLANS DATED 10-25-13

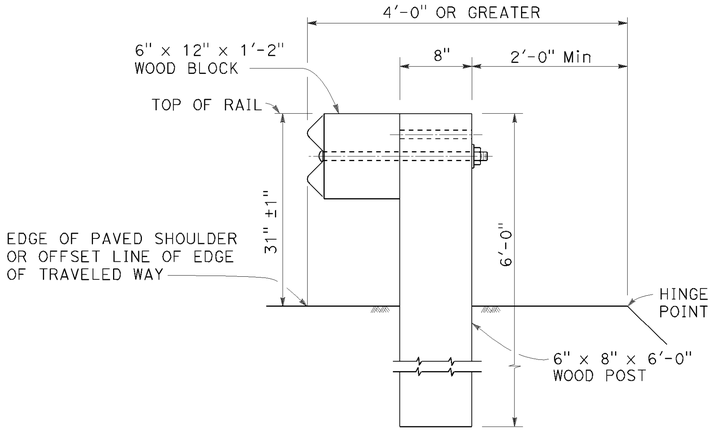


DETAIL A
TYPICAL ROADWAY INSTALLATION
See Note 1

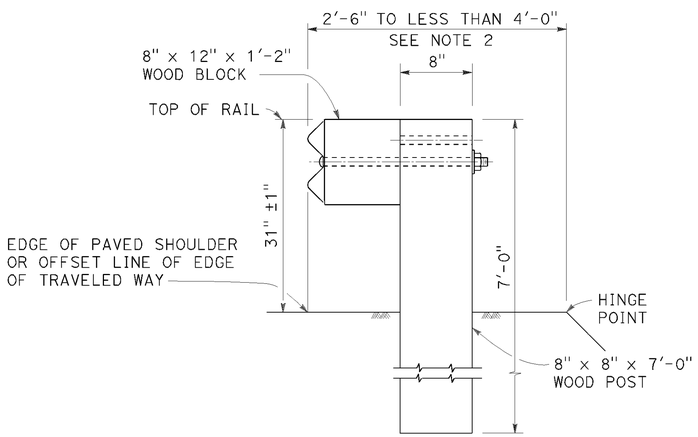


DETAIL B
NARROW ROADWAY INSTALLATION
See Note 1

POST EMBEDMENT

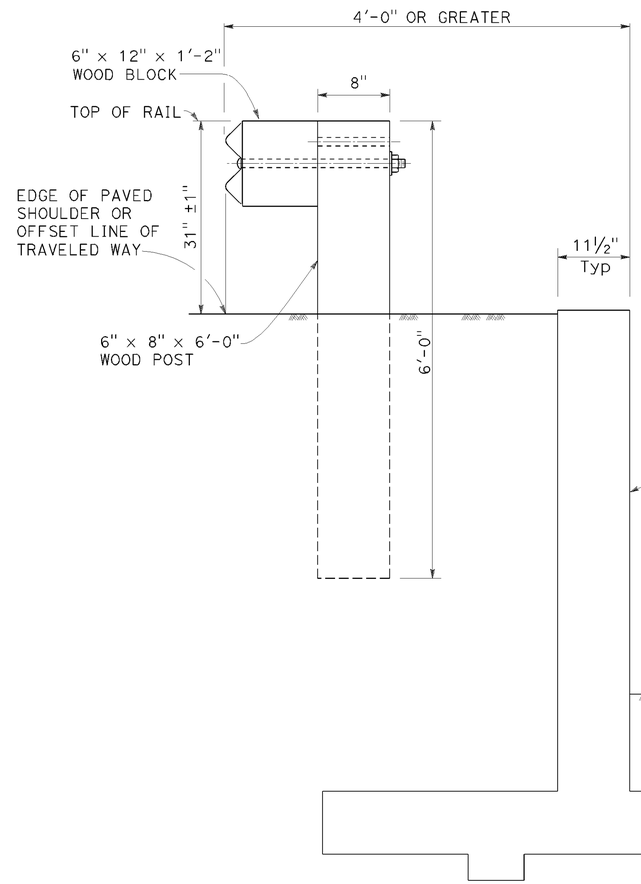


DETAIL C

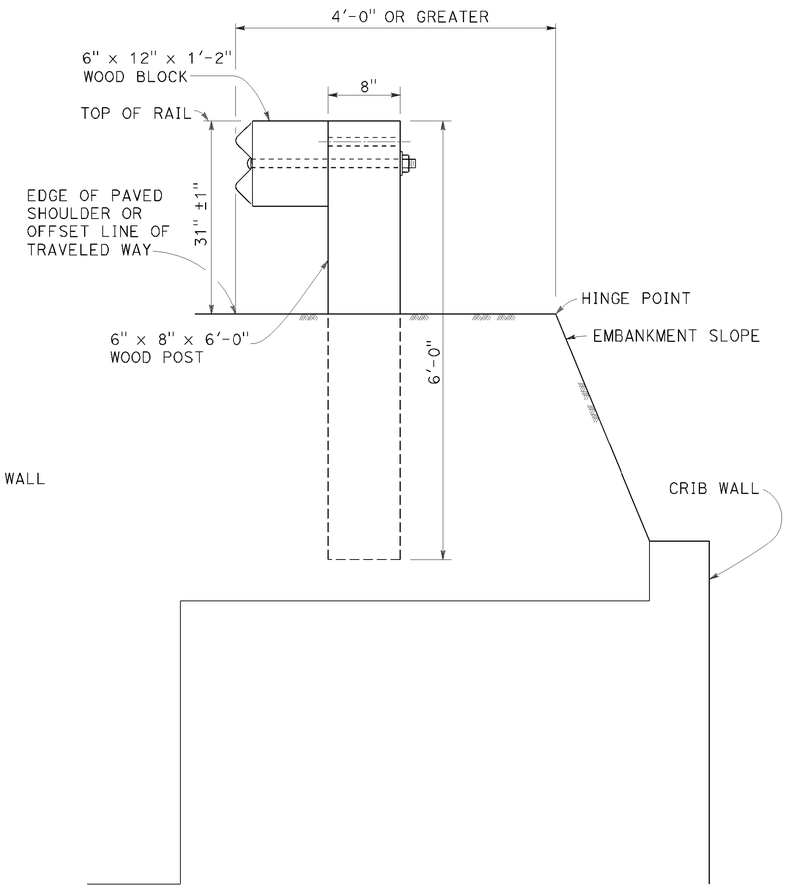


DETAIL D

INSTALLATION AT EARTH RETAINING WALLS

NOTES:

1. These installation details also applicable to steel line post installations. For Detail A, C, and D, where steel line post installations are constructed, W6 x 8.5 or W6 x 9 steel post, 6'-0" in length, with 6" x 12" x 1'-2" notched wood blocks or notched recycled plastic blocks are to be used in place of the size of wood post and wood block shown. For Detail B, where steel line post installations are constructed, or W6 x 15 steel post, 8'-0" in length, with 8" x 12" x 1'-2" notched wood blocks or notched recycled plastic blocks are to be used in place of the size of wood post and wood block shown. For additional installation details, see Revised Standard Plan RSP A77L1 and RSP A77L2.
2. Where the distance between the face of the rail and the hinge point is less than 2'-6", see the Project Plans for special details.
3. For dike positioning with MGS installations, see Revised Standard Plan RSP A77N4.

STATE OF CALIFORNIA
DEPARTMENT OF TRANSPORTATION

# MIDWEST GUARDRAIL SYSTEM TYPICAL LINE POST EMBEDMENT AND HINGE POINT OFFSET DETAILS

NO SCALE

RSP A77N3 DATED JULY 19, 2013 SUPPLEMENTS THE STANDARD PLANS BOOK DATED 2010.

**REVISED STANDARD PLAN RSP A77N3**

**2010 REVISED STANDARD PLAN RSP A77N3**

DATE PLOTTED => 24-OCT-2013
TIME PLOTTED => 07:15

| Dist | COUNTY | ROUTE | POST MILES TOTAL PROJECT | SHEET No. | TOTAL SHEETS |
|---|---|---|---|---|---|
| 02 | Sis | 96 | 56.0 | 48 | 92 |

Randell D. Hiatt
REGISTERED CIVIL ENGINEER

July 19, 2013
PLANS APPROVAL DATE

REGISTERED PROFESSIONAL ENGINEER
Randell D. Hiatt
No. C50200
Exp. 6-30-15
CIVIL
STATE OF CALIFORNIA

THE STATE OF CALIFORNIA OR ITS OFFICERS OR AGENTS SHALL NOT BE RESPONSIBLE FOR THE ACCURACY OR COMPLETENESS OF SCANNED COPIES OF THIS PLAN SHEET.

TO ACCOMPANY PLANS DATED 10-25-13

## NOTES:

1. When necessary to place dike more than 7" in front of face of MGS, only Type C dike may be used. For dike details, see Revised Standard Plan RSP A87B.
2. For standard railing post embedment, see Revised Standard Plan RSP A77N3.
3. MGS delineation to be used where shown on the Project Plans.
4. When dike or curb is placed under MGS, the maximum height of the dike or curb shall be 6". Mountable dike should not be used. For dike and curb details, see Revised Standard Plans RSP A87A and RSP A87B.
5. For details of typical distance between the face of rail and hinge point, see Revised Standard Plan RSP A77N3.
6. For steel line posts, use 1/4 - 20 self-tapping screws in 0.22" diameter holes or 1/4" bolts in 9/32" diameter holes.

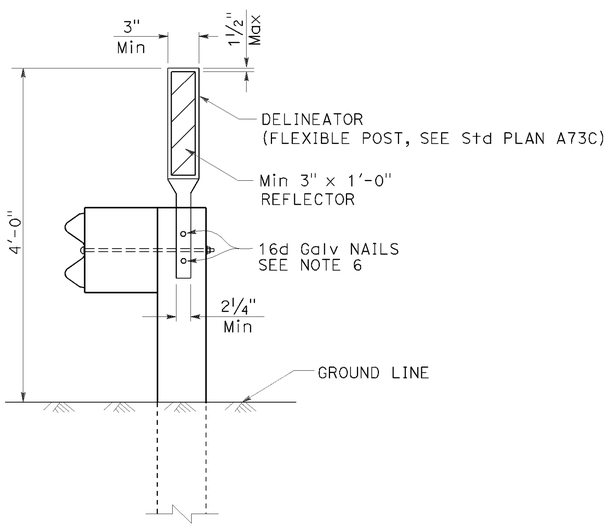


## MGS DELINEATION

See Note 3

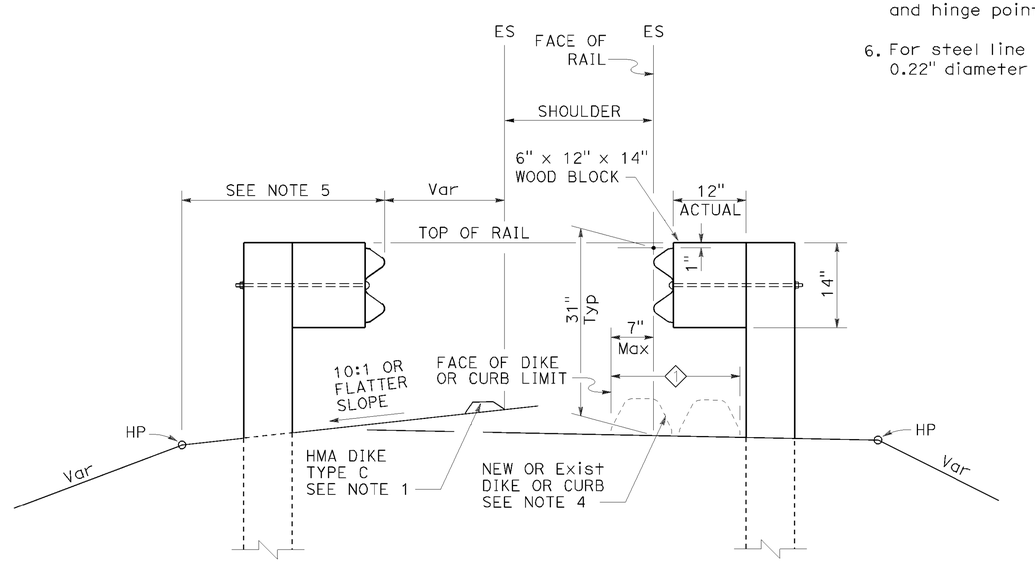


## DIKE POSITIONING

See Note 1

1 PERMISSIBLE DIKE OR CURB PLACEMENT AREA

STATE OF CALIFORNIA
DEPARTMENT OF TRANSPORTATION

# MIDWEST GUARDRAIL SYSTEM TYPICAL RAILING DELINEATION AND DIKE POSITIONING DETAILS

NO SCALE

RSP A77N4 DATED JULY 19, 2013 SUPPLEMENTS THE STANDARD PLANS BOOK DATED 2010.

**REVISED STANDARD PLAN RSP A77N4**

2010 REVISED STANDARD PLAN RSP A77N4

| Dist | COUNTY | ROUTE | POST MILES TOTAL PROJECT | SHEET No. | TOTAL SHEETS |
|---|---|---|---|---|---|
| 02 | Sis | 96 | 56.0 | 49 | 92 |

Randell D. Hiatt
REGISTERED CIVIL ENGINEER

July 19, 2013
PLANS APPROVAL DATE

REGISTERED PROFESSIONAL ENGINEER
Randell D. Hiatt
No. C50200
Exp. 6-30-15
CIVIL
STATE OF CALIFORNIA

*THE STATE OF CALIFORNIA OR ITS OFFICERS OR AGENTS SHALL NOT BE RESPONSIBLE FOR THE ACCURACY OR COMPLETENESS OF SCANNED COPIES OF THIS PLAN SHEET.*

TO ACCOMPANY PLANS DATED 10-25-13

**2010 REVISED STANDARD PLAN RSP A77Q1**

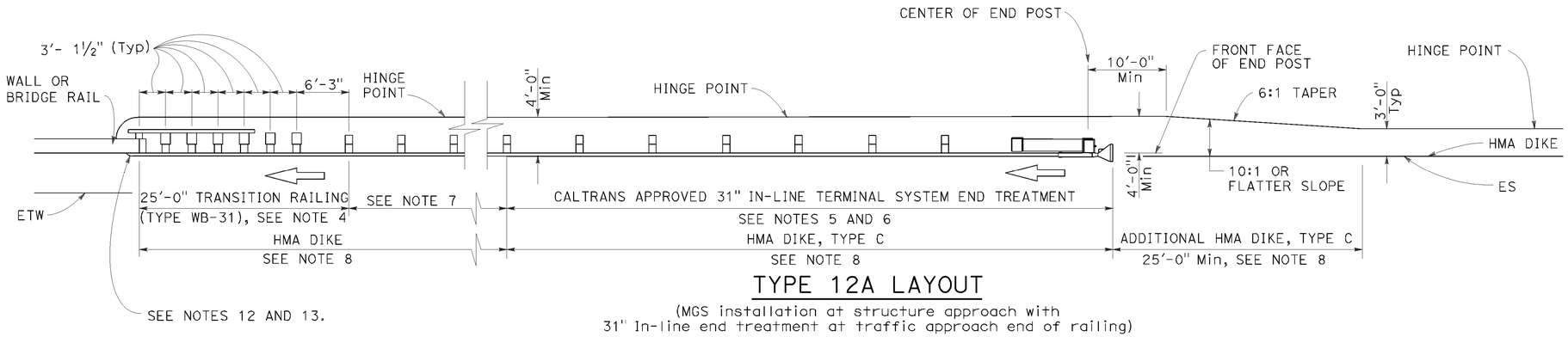


## TYPE 12A LAYOUT

(MGS installation at structure approach with
31" In-line end treatment at traffic approach end of railing)
See Notes 9

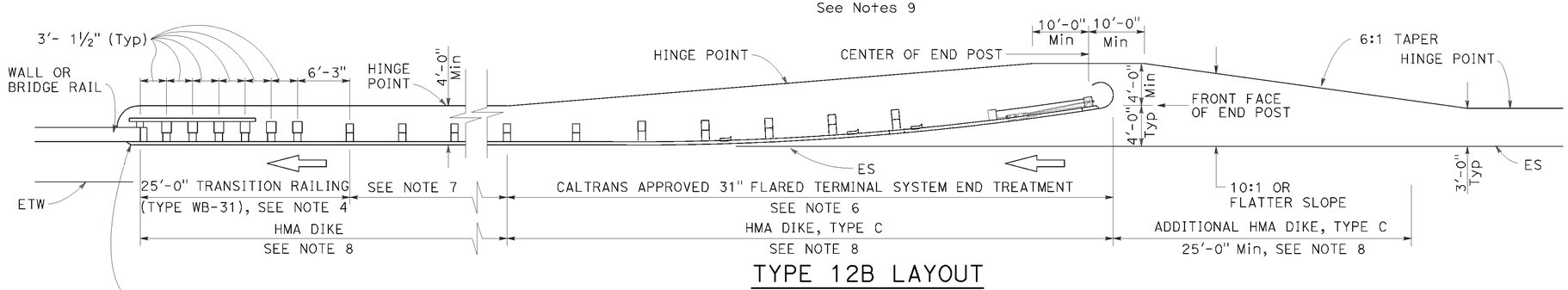


## TYPE 12B LAYOUT

(MGS installation at structure approach with
31" Flared end treatment at traffic approach end of railing)
See Notes 9

## NOTES:

1. Line post, blocks and hardware to be used are shown on Revised Standard Plans RSP A77L1, RSP A77L2, RSP A77M1, RSP A77N1 and RSP A77N2.
2. MGS post spacing to be 6'-3" center to center, except as otherwise noted.
3. Except as noted, line posts are 6" x 8" x 6'-0" wood with 6" x 12" x 1'-2" wood blocks. W6 x 8.5 or W6 x 9 steel posts, 6'-0" in length, with 6" x 12" x 1'-2" notched wood blocks or plastic blocks may be used for 6" x 8" x 6'-0" wood posts with 6" x 12" x 1'-2" wood blocks where applicable and when specified.
4. For Transition Railing (Type WB-31) details for Types 12A and 12B Layouts, see Revised Standard Plan RSP A77U4.
5. 31" in-line terminal system end treatments are used where site conditions will not accommodate a 31" flared end treatment.
6. The type 31" of terminal system end treatment to be used will be shown on the Project Plans.
7. Dependent on site conditions (embankment height, side slopes, or other fixed objects), it may be advisable to construct additional guard railing (a length equal to multiples of 12'-6" with 6'-3" post spacing) between the transition railing and end treatment. A 12.5 degree angle of departure can be drawn on the Project Plans from the edge of traveled way through the outer most point of the fixed object to determine the additional length of railing needed.
8. Where placement of dike is required with guard railing installations, see Revised Standard Plan RSP A77N4 for dike positioning details.
9. Type 12A or Type 12B Layouts are typically used:
   a. To the right of approaching traffic, at the end of a structure, on two-lane conventional highway where the roadbed width across the structure is less than 40 feet.
   b. To the left of approaching traffic, at the end of a structure, on two-lane conventional highway where the roadbed width across the structure is less than 40 feet.
   c. To the right of approaching traffic at the end of each structure on multilane freeways or expressways with separate adjacent or parallel bridges.
   d. To the right of approaching traffic at the end of the structure on multilane freeways or expressways with decked median on the bridge.
10. See Revised Standard Plan RSP A77Q3 for typical layout used left of approaching traffic at the ends of each structure on multilane freeways or expressways with separate adjacent or parallel bridges.
11. For additional details of typical connections to bridge rail, see Connection Detail AA on Revised Standard Plans RSP A77U1 and RSP A77U2 and Connection Detail FF on Revised Standard Plans RSP A77V1 and RSP A77V2.
12. For additional details of a typical connection to walls or abutments, see Revised Standard Plan RSP A77U3.

STATE OF CALIFORNIA
DEPARTMENT OF TRANSPORTATION

# MIDWEST GUARDRAIL SYSTEM TYPICAL LAYOUTS FOR STRUCTURE APPROACH

NO SCALE

RSP A77Q1 DATED JULY 19, 2013 SUPPLEMENTS THE STANDARD PLANS BOOK DATED 2010.

**REVISED STANDARD PLAN RSP A77Q1**

DATE PLOTTED => 24-OCT-2013
TIME PLOTTED => 07:15

| Dist | COUNTY | ROUTE | POST MILES TOTAL PROJECT | SHEET No. | TOTAL SHEETS |
|---|---|---|---|---|---|
| 02 | Sis | 96 | 56.0 | 50 | 92 |

Randell D. Hiatt
REGISTERED CIVIL ENGINEER

July 19, 2013
PLANS APPROVAL DATE

REGISTERED PROFESSIONAL ENGINEER
Randell D. Hiatt
No. C50200
Exp. 6-30-15
CIVIL
STATE OF CALIFORNIA

*THE STATE OF CALIFORNIA OR ITS OFFICERS OR AGENTS SHALL NOT BE RESPONSIBLE FOR THE ACCURACY OR COMPLETENESS OF SCANNED COPIES OF THIS PLAN SHEET.*

TO ACCOMPANY PLANS DATED 10-25-13

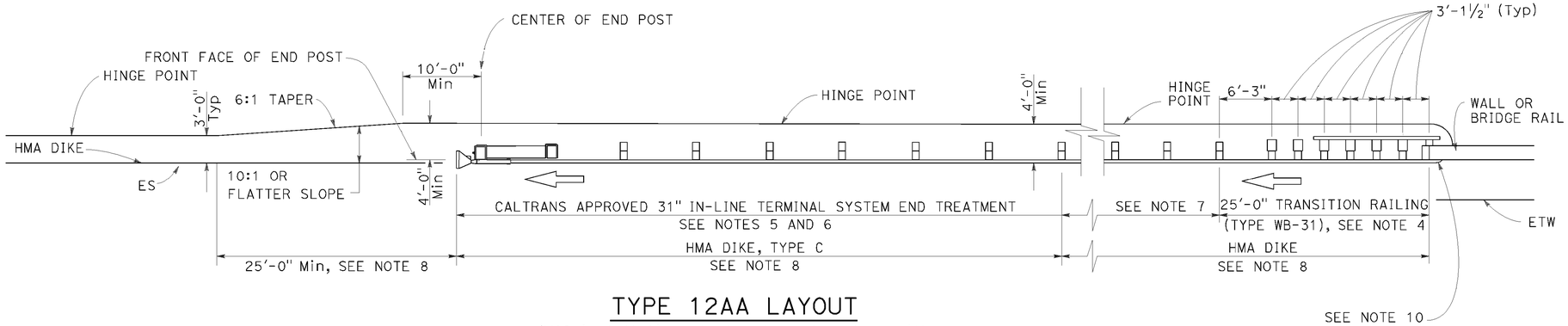


## TYPE 12AA LAYOUT

(MGS installation at structure departure with
31" in-line end treatment at trailing end of railing)
See Notes 8 and 9

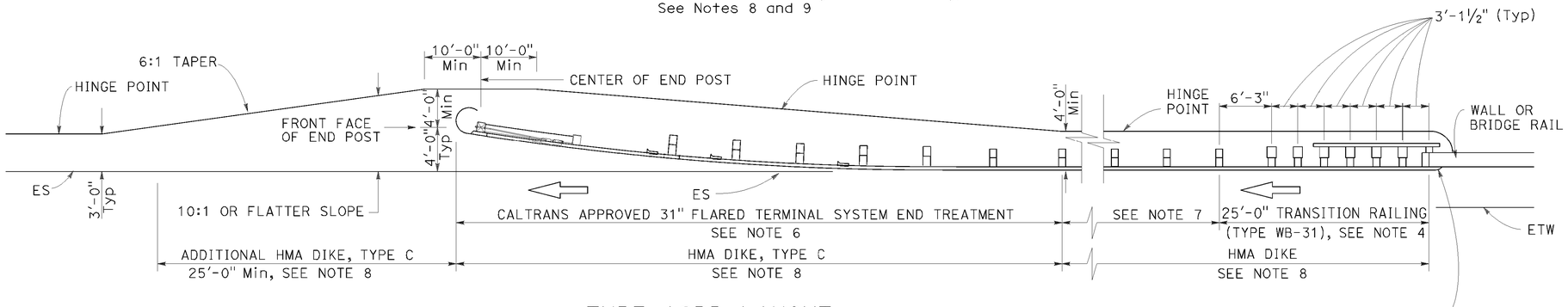


## TYPE 12BB LAYOUT

(MGS installation at structure departure with
31" flared end treatment at trailing end of railing)
See Notes 8 and 9

## NOTES:

1. Line post, blocks and hardware to be used are shown on Revised Standard Plans RSP A77L1, RSP A77L2, RSP A77M1, RSP A77N1 and RSP A77N2.
2. MGS post spacing to be 6'-3" center to center, except as otherwise noted.
3. Except as noted, line posts are 6" x 8" x 6'-0" wood with 6" x 12" x 1'-2" wood blocks. W6 x 8.5 or W6 x 9 steel posts, 6'-0" in length, with 6" x 12" x 1-2" notched wood blocks or notched recycled plastic blocks may be used for 6" x 8" x 6'-0" wood posts with 6" x 12" x 1'-2" wood blocks where applicable and when specified.
4. For Transition Railing (Type WB-31) details for Types 12AA and 12BB Layouts, see Revised Standard Plan RSP A77U4.
5. 31" in-line terminal system treatments are used where site conditions will not accommodate a 31" flared end treatment.
6. The type of 31" terminal system to be used will be shown on the Project Plans.
7. Dependent on site conditions (embankment height, side slopes, other fixed objects), it may be advisable to construct additional MGS (a length equal to multiples of 12'-6" with 6'-3" post spacing) between the transition railing and 31" end treatments.
8. Where placement of dike is required with MGS installations, see Revised Standard Plan RSP A77N4 for dike positioning details.
9. Type 12AA or Type 12BB Layouts are typically used to the right of traffic departing a structure on two-way conventional highways where the roadbed width across the structure is less than 40 feet.
10. For additional details of typical connections to bridge rail, see Connection Detail CC on Revised Standard Plan RSP A77U2 and Connection Detail HH on Revised Standard Plan RSP A77V2.

STATE OF CALIFORNIA
DEPARTMENT OF TRANSPORTATION

# MIDWEST GUARDRAIL SYSTEM TYPICAL LAYOUTS FOR STRUCTURE DEPARTURE

NO SCALE

RSP A77Q4 DATED JULY 19, 2013 SUPPLEMENTS THE STANDARD PLANS BOOK DATED 2010.

**REVISED STANDARD PLAN RSP A77Q4**

**2010 REVISED STANDARD PLAN RSP A77Q4**

DATE PLOTTED => 24-OCT-2013
TIME PLOTTED => 07:15

| Dist | COUNTY | ROUTE | POST MILES TOTAL PROJECT | SHEET No. | TOTAL SHEETS |
|---|---|---|---|---|---|
| 02 | Sis | 96 | 56.0 | 51 | 92 |

Randell D. Hiatt
REGISTERED CIVIL ENGINEER

July 19, 2013
PLANS APPROVAL DATE

REGISTERED PROFESSIONAL ENGINEER
Randell D. Hiatt
No. C50200
Exp. 6-30-15
CIVIL
STATE OF CALIFORNIA

*THE STATE OF CALIFORNIA OR ITS OFFICERS OR AGENTS SHALL NOT BE RESPONSIBLE FOR THE ACCURACY OR COMPLETENESS OF SCANNED COPIES OF THIS PLAN SHEET.*

TO ACCOMPANY PLANS DATED 10-25-13

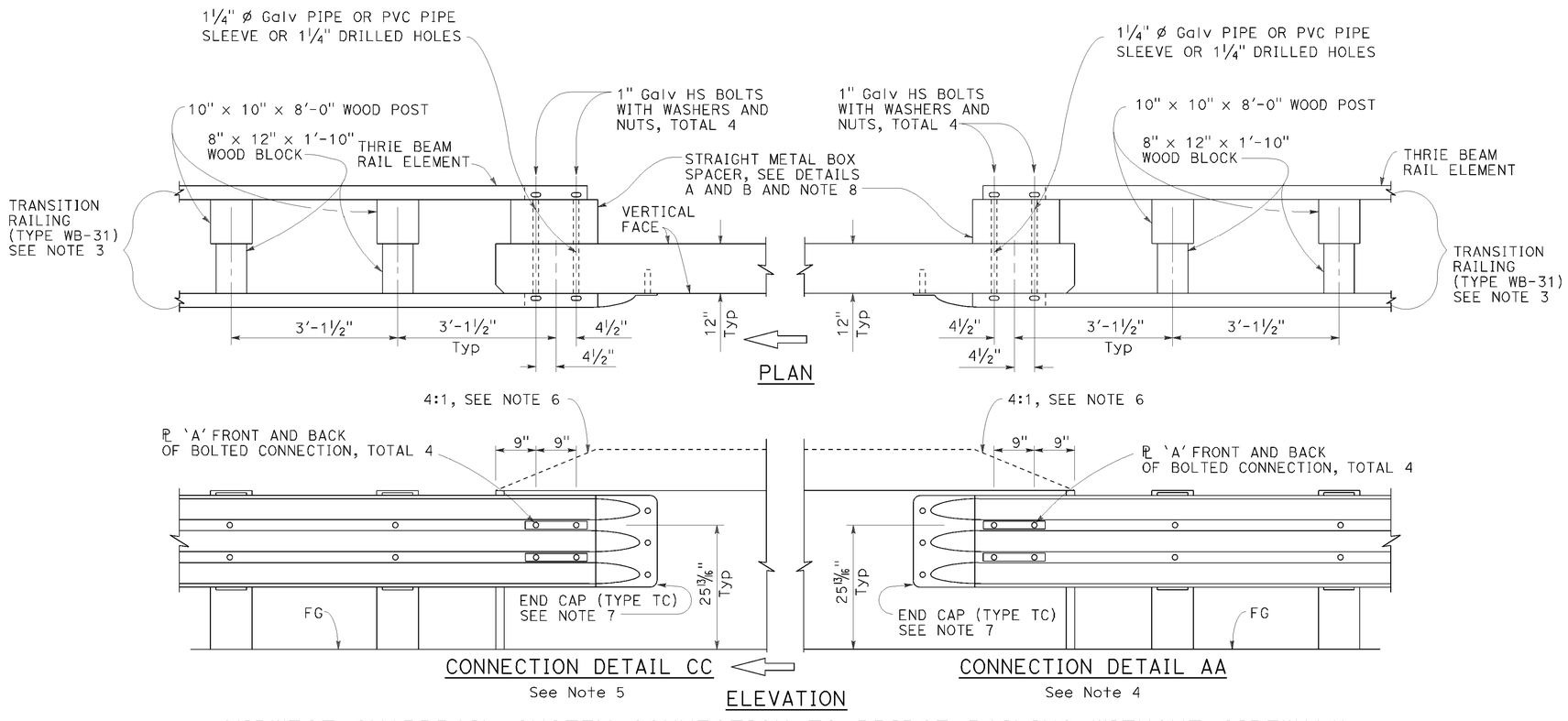


MIDWEST GUARDRAIL SYSTEM CONNECTION TO BRIDGE RAILING WITHOUT SIDEWALK

## NOTES:

1. See Revised Standard Plan RSP A77U1 for additional connection details to bridges without sidewalks.
2. Additional details of posts, blocks and hardware are shown on Revised Standard Plans RSP A77M1, RSP A77N1 and RSP A77N2.
3. For additional details of Transition Railing (Type WB-31), see Revised Standard Plan RSP A77U4. Transition Railing (Type WB-31) transitions the 12 gauge MGS railing section to a heavier gage nested thrie beam railing section which is connected to the concrete bridge railing.
4. For typical use of Connection Detail AA, see Layout Types 12A and 12B on Revised Standard Plan RSP A77Q1, Layout Types 12C and 12D on Revised Standard Plan RSP A77Q2, and Layout Type 12E on Revised Standard Plan RSP A77Q3.
5. For typical use of Connection Detail CC, see Layout Types 12AA and 12BB on Revised Standard Plan RSP A77Q4 and Layout Type 12CC on Revised Standard Plan RSP A77Q5.
6. Where the height of the bridge railing exceeds the height of the thrie beam railing by more than 1" at Connection Detail AA and connection Detail CC, taper the top of the end of the bridge railing at 4:1 to match the top elevation of the thrie beam railing.
7. For details of End Cap (Type TC), see Revised Standard Plan RSP A77U4.
8. See Revised Standard Plan RSP A77U4 for additional details regarding depth dimension for straight metal box spacer.

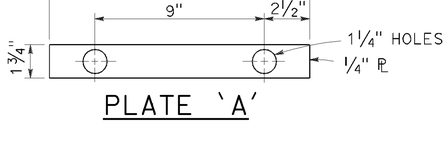


PLATE 'A'

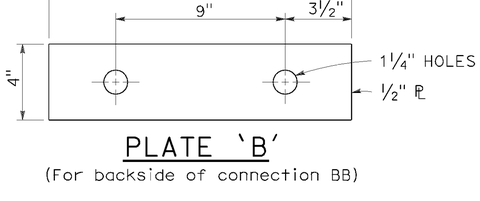


PLATE 'B'
(For backside of connection BB)

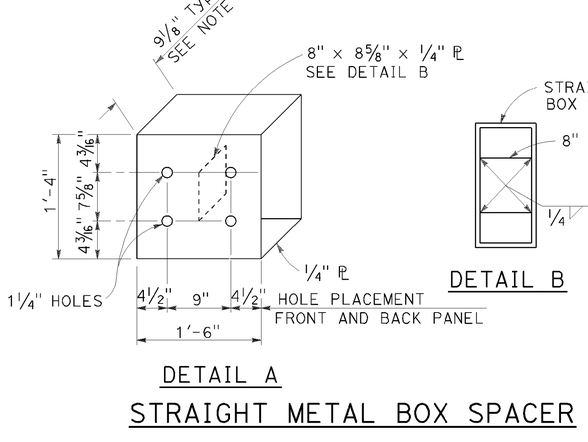


DETAIL A

STRAIGHT METAL BOX SPACER

STATE OF CALIFORNIA
DEPARTMENT OF TRANSPORTATION

# MIDWEST GUARDRAIL SYSTEM CONNECTIONS TO BRIDGE RAILINGS WITHOUT SIDEWALKS DETAILS No. 2

NO SCALE

RSP A77U2 DATED JULY 19, 2013 SUPPLEMENTS THE STANDARD PLANS BOOK DATED 2010.

**REVISED STANDARD PLAN RSP A77U2**

**2010 REVISED STANDARD PLAN RSP A77U2**

DATE PLOTTED => 24-OCT-2013
TIME PLOTTED => 07:15

| Dist | COUNTY | ROUTE | POST MILES TOTAL PROJECT | SHEET No. | TOTAL SHEETS |
|---|---|---|---|---|---|
| 02 | Sis | 96 | 56.0 | 52 | 92 |

Randell D. Hiatt
REGISTERED CIVIL ENGINEER

July 19, 2013
PLANS APPROVAL DATE

REGISTERED PROFESSIONAL ENGINEER
Randell D. Hiatt
No. C50200
Exp. 6-30-15
CIVIL
STATE OF CALIFORNIA

*THE STATE OF CALIFORNIA OR ITS OFFICERS OR AGENTS SHALL NOT BE RESPONSIBLE FOR THE ACCURACY OR COMPLETENESS OF SCANNED COPIES OF THIS PLAN SHEET.*

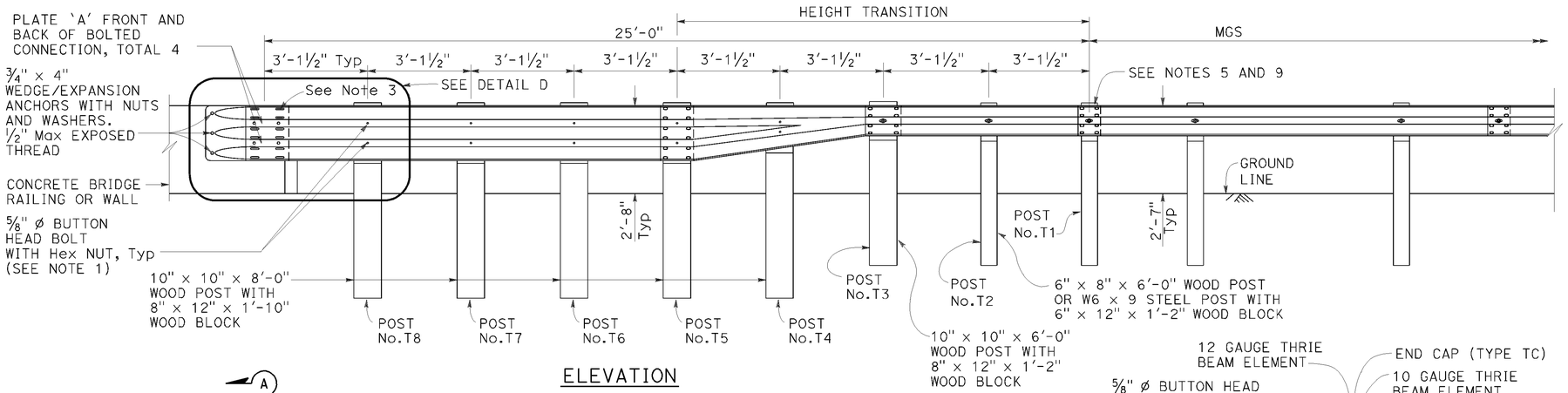


ELEVATION

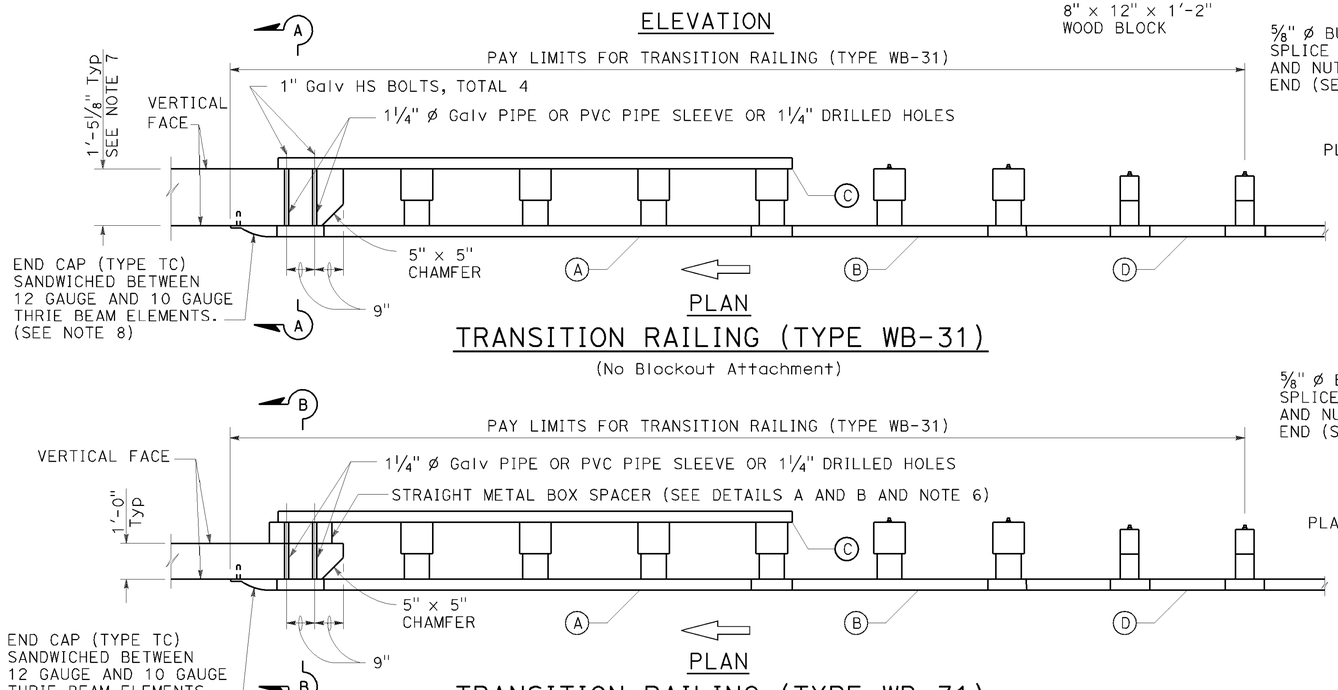


PLAN

TRANSITION RAILING (TYPE WB-31)

(No Blockout Attachment)

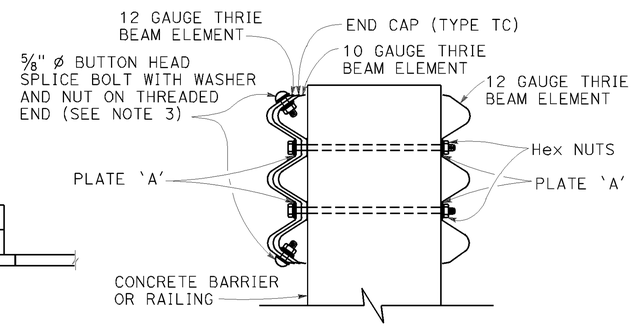


SECTION A-A




PLAN

TRANSITION RAILING (TYPE WB-31)

(Blockout Attachment)

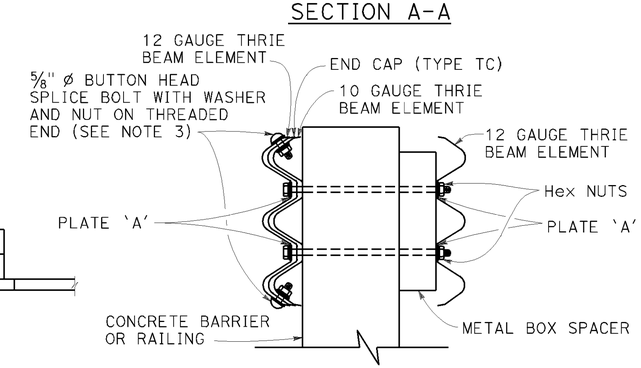


SECTION B-B

## LEGEND:

(A) NESTED THRIE BEAM ELEMENTS (ONE 12 GAUGE ELEMENT NESTED OVER ONE 10 GAUGE ELEMENT).

(B) ONE ASYMMETRICAL 10 GAUGE "W" BEAM TO THRIE BEAM ELEMENT.

(C) ONE 12 GAUGE THRIE BEAM ELEMENT.

(D) ONE 10 GAUGE "W" BEAM RAIL ELEMENT (7'-3 1/2"LENGTH)

10 GAUGE = 0.138" THICK
12 GAUGE = 0.108" THICK

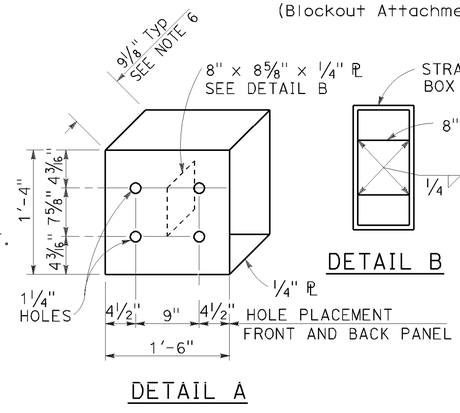


DETAIL A

STRAIGHT METAL BOX SPACER

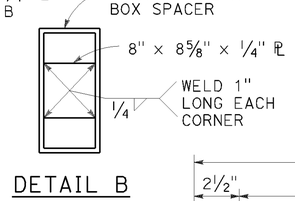


DETAIL B

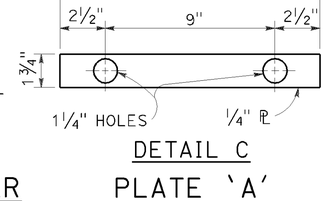


DETAIL C

PLATE 'A'

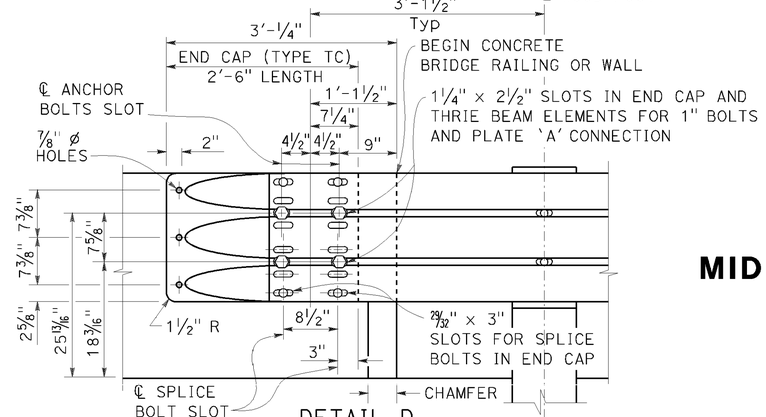


DETAIL D

## NOTES:

TO ACCOMPANY PLANS DATED 10-25-13

1. Use 5/8" ø Button head bolts and hex nuts for connections to posts. No washer on rail face for bolted connections to post.

2. The nested rail elements, end cap, and 'W' beam to thrie beam element may be spliced together prior to bolting the elements to the wood post and concrete barrier or railing.

3. Exterior splice bolt holes for rail element splices at Post No. T5 and the connection to the concrete barrier or railing shall be the standard 29/32" x 1 1/8" slot size. Interior splice bolt holes at these locations may be increased up to 1 1/4" ø. Only the top 4 and the bottom 4 splice bolts with washers and nuts are required for rail splices at Post No. T5 and the connection to the concrete barrier or railing.

4. The top elevation of Posts No. T2 through No. T7 shall not project more than 1" above the top elevation of the rail element.

5. Typically, the railing connected to Transition Railing (Type WB-31) will be either standard railing section of MGS with height transition ratio of 150:1 or a Caltrans approved 31" end treatment attached to Post No. T1.

6. The depth of the metal box spacer varies from the 9 1/8" to 1 1/2" and is dependent on the width of the concrete railing or wall. The combined dimension for the depth of the metal box spacer plus the width of railing or wall is typically 21 1/8". Where the space between the backside of the concrete railing or wall and the rear thrie beam element is less than 1 1/2", metal plates similar to Plate 'A' are to be used as spacers.

7. Where the width of the concrete railing or wall is greater than 17 1/8", wood blocks are to be used to fill the space created between the backside of Posts No. T4 through No. T7 and the rear thrie beam element. These wood blocks shall be 8" in width and 1'-2" in length. The dimension between the front thrie beam element and the rear thrie beam element is to match the width of the concrete railing or wall.

8. End cap may be installed over 12 gauge and 10 gauge thrie beam elements where transition railing is installed on the departure end of bridge railing.

9. Conform standard railing section height to 31" at Post No. T1 using height transition ratio of 150:1.

STATE OF CALIFORNIA
DEPARTMENT OF TRANSPORTATION

# MIDWEST GUARDRAIL SYSTEM TRANSITION RAILING (TYPE WB-31)

NO SCALE

RSP A77U4 DATED JULY 19, 2013 SUPPLEMENTS THE STANDARD PLANS BOOK DATED 2010.

**REVISED STANDARD PLAN RSP A77U4**

**2010 REVISED STANDARD PLAN RSP A77U4**

DATE PLOTTED => 24-OCT-2013
TIME PLOTTED => 07:15

| Dist | COUNTY | ROUTE | POST MILES TOTAL PROJECT | SHEET No. | TOTAL SHEETS |
|---|---|---|---|---|---|
| 02 | Sis | 96 | 56.0 | 53 | 92 |

Randell D. Hiatt
REGISTERED CIVIL ENGINEER

July 19, 2013
PLANS APPROVAL DATE

REGISTERED PROFESSIONAL ENGINEER
Randell D. Hiatt
No. C50200
Exp. 6-30-15
CIVIL
STATE OF CALIFORNIA

*THE STATE OF CALIFORNIA OR ITS OFFICERS OR AGENTS SHALL NOT BE RESPONSIBLE FOR THE ACCURACY OR COMPLETENESS OF SCANNED COPIES OF THIS PLAN SHEET.*

TO ACCOMPANY PLANS DATED 10-25-13

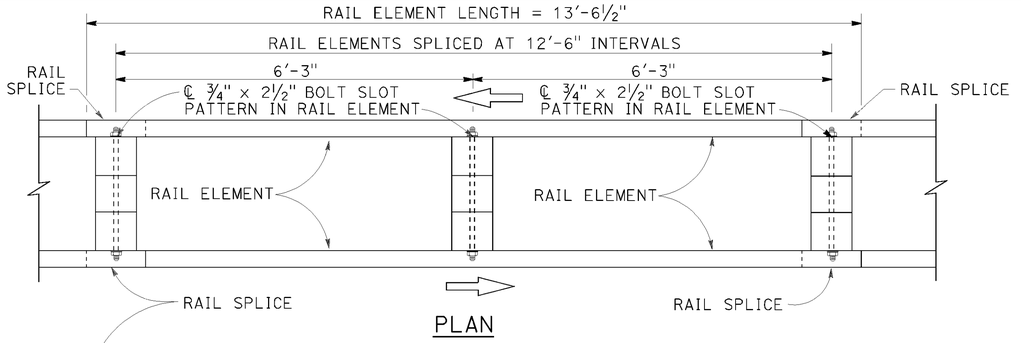


PLAN

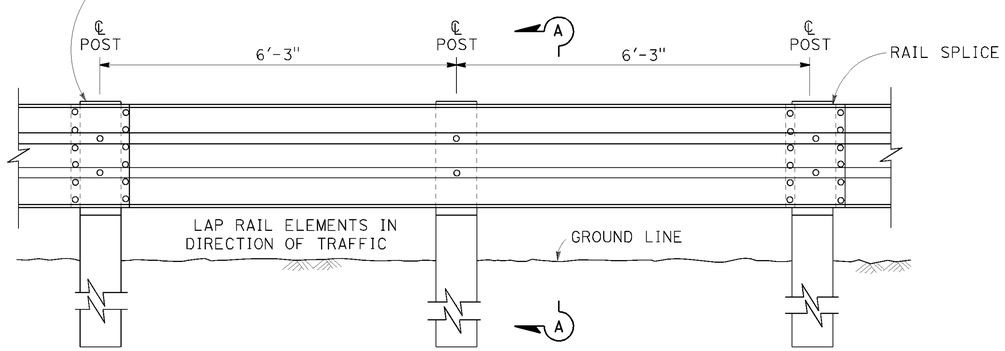


ELEVATION

## DOUBLE THRIE BEAM BARRIER

(Wood post and blocks)
See Note 1

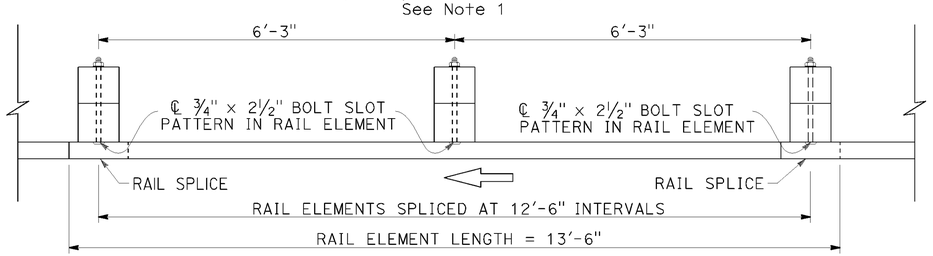


PLAN

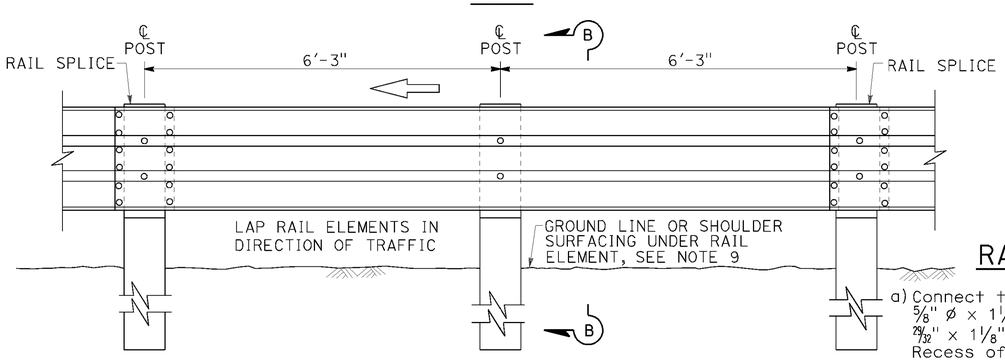


ELEVATION

## SINGLE THRIE BEAM BARRIER

(Wood post and blocks)
See Note 1

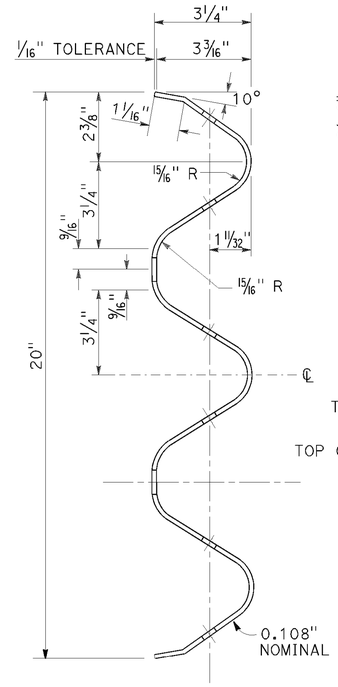


SECTION THRU
RAIL ELEMENT

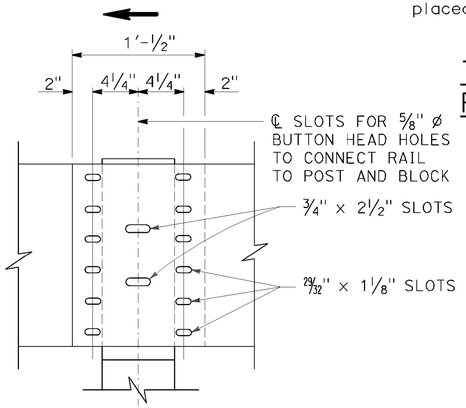


ELEVATION

## RAIL ELEMENT SPLICE DETAIL

a) Connect the overlapped ends of the thrie beam rail elements with ⅝" ø x 1¼" button head oval shoulder bolts inserted into the 29/32" x 1⅛" slots and bolted together with ⅝" ø recessed hex nuts. Recess of hex nut points toward rail element. A total of 12 bolts and nuts are to be used at each rail splice connection.

b) The ends of the rail elements are to be overlapped in the direction of traffic (see details).

c) Where end cap is to be attached to the end of a rail element, a total of 4 of the above described splice bolts and nuts are to be used. Where a return cap is to be attached to the ends of rail elements, a total of 8 of the above described splice bolts and nuts are to be used.

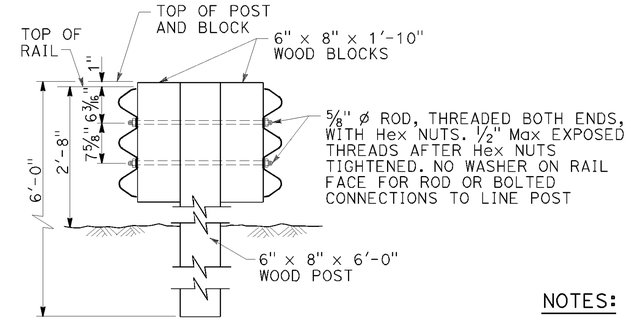


SECTION A-A

## TYPICAL WOOD LINE POST INSTALLATION

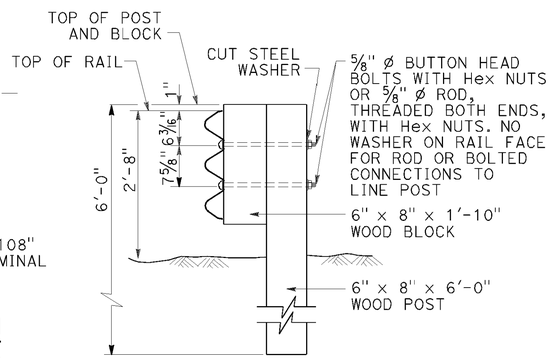


Where bolts are used, install so that the threaded end of the bolts and nuts are placed away from traffic side of rail.

SECTION B-B

## TYPICAL WOOD LINE POST INSTALLATION

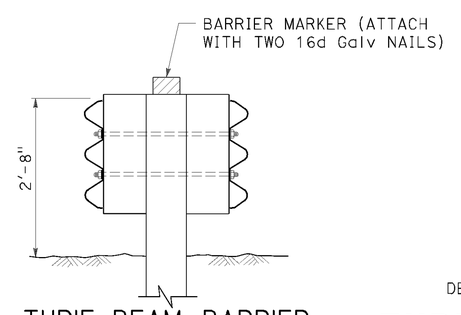


THRIE BEAM BARRIER
DELINEATION

See Note 8

NOTES:

1. For details of steel post thrie beam barrier, see Standard Plan A78B.
2. For details of standard hardware, posts and blocks used to construct thrie beam barrier, see Standard Plan A78C1 and Revised Standard Plan RSP A78C2.
3. Thrie beam barrier post spacing to be 6'-3" center to center, except as otherwise noted.
4. Top of barrier rail to be 2'-8" above ground line or shoulder surfacing under the rail element.
5. For barrier end treatments and barrier connections, see Standard Plans A78E3 and A78G, and Revised Standard Plans RSP A78E1, RSP A78E2 RSP A77Q1, RSP A77Q2 and RSP A78H.
6. For connection to Concrete Barrier (Type 60), see Standard Plans A78I.
7. For details of thrie beam barrier on bridge see Standard Plan A78D2. For details of thrie beam barrier at fixed object, see Revised Standard Plan RSP A78D1.
8. Median barrier delineation to be used when required by the Special Provisions. Spacing of barrier markers to match spacing of raised pavement markers on adjacent median edgeline pavement delineation.
9. Install posts in soil.

STATE OF CALIFORNIA
DEPARTMENT OF TRANSPORTATION

# THRIE BEAM BARRIER STANDARD BARRIER RAILING SECTION (WOOD POST WITH WOOD BLOCK)

NO SCALE

RSP A78A DATED JULY 19, 2013 SUPERSEDES STANDARD PLAN A78A DATED MAY 20, 2011 - PAGE 89 OF THE STANDARD PLANS BOOK DATED 2010.

# REVISED STANDARD PLAN RSP A78A

2010 REVISED STANDARD PLAN RSP A78A

DATE PLOTTED => 24-OCT-2013
TIME PLOTTED => 07:15

USERNAME => s115152
DGN FILE => 24e630va014.dgn

P:\proj1\02\4E630_plans\pse\24e630va014.dgn

6-27-11

| Dist | COUNTY | ROUTE | POST MILES TOTAL PROJECT | SHEET No. | TOTAL SHEETS |
|---|---|---|---|---|---|
| 02 | Sis | 96 | 56.0 | 54 | 92 |

Randell D. Hiatt
REGISTERED CIVIL ENGINEER

July 19, 2013
PLANS APPROVAL DATE

REGISTERED PROFESSIONAL ENGINEER
Randell D. Hiatt
No. C50200
Exp. 6-30-15
CIVIL
STATE OF CALIFORNIA

*THE STATE OF CALIFORNIA OR ITS OFFICERS OR AGENTS SHALL NOT BE RESPONSIBLE FOR THE ACCURACY OR COMPLETENESS OF SCANNED COPIES OF THIS PLAN SHEET.*

TO ACCOMPANY PLANS DATED 10-25-13

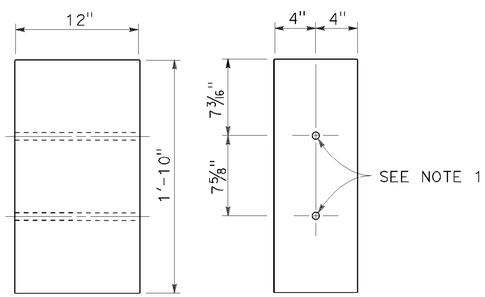


SIDE FRONT

8" x 12"
WOOD BLOCK

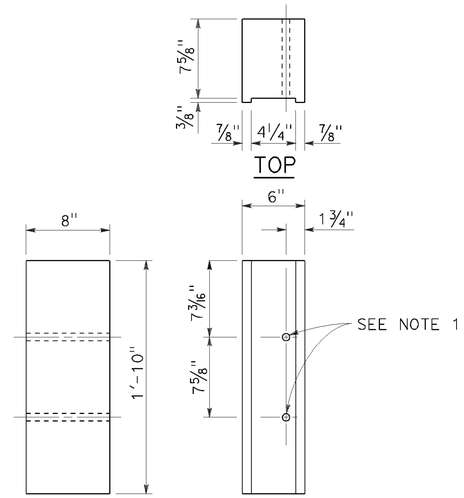


SIDE FRONT

6" x 8"
NOTCHED WOOD BLOCK
See Notes 3 and 5

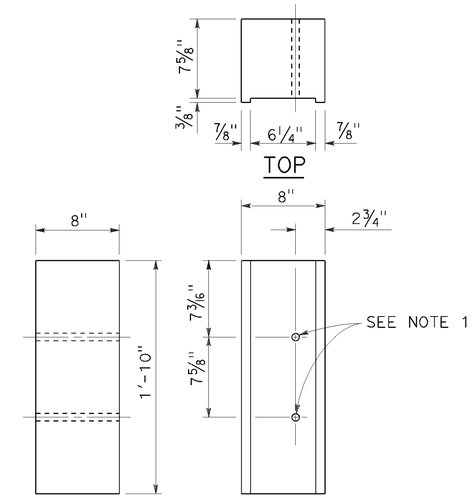


SIDE FRONT

8" x 8"
NOTCHED WOOD BLOCK
See Notes 4 and 5

## NOTES:

1. All holes in steel post to be 13/16" Dia maximum. Holes in wood posts and wood blocks to be 3/4" Dia ±1/16".
2. Dimensions shown for wood post are nominal.
3. For use with W6 x 8.5 or W6 x 9 steel post.
4. For use with W6 x 15 steel post.
5. Notched face of block faces steel post.

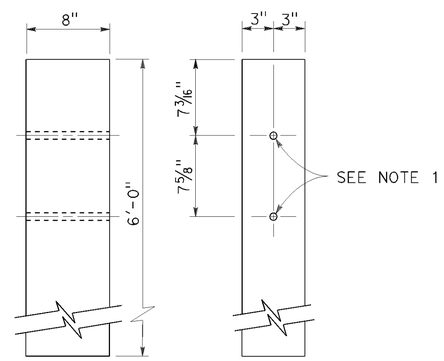


SIDE FRONT

6" x 8"
WOOD POST

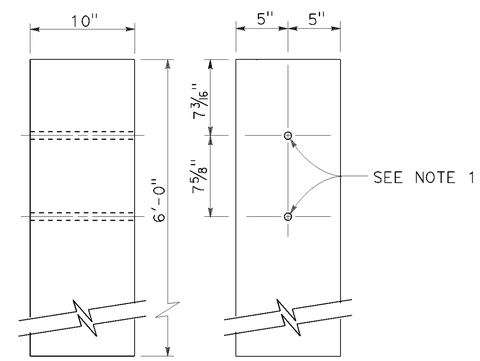


SIDE FRONT

10" x 10"
WOOD POST

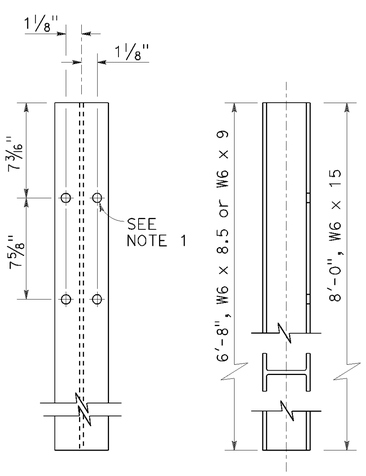


FRONT SIDE

STEEL POST
W6 x 9 or W6 x 8.5 and W6 x 15

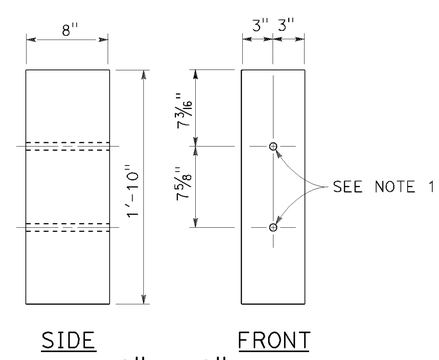


SIDE FRONT

6" x 8"
WOOD BLOCK

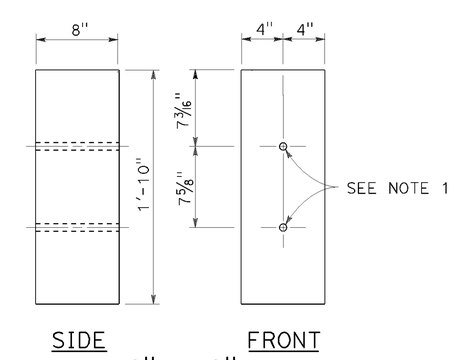


SIDE FRONT

8" x 8"
WOOD BLOCK

STATE OF CALIFORNIA
DEPARTMENT OF TRANSPORTATION

# THRIE BEAM BARRIER POST AND BLOCK DETAILS

NO SCALE

RSP A78C2 DATED JULY 19, 2013 SUPERSEDES STANDARD PLAN A78C2 DATED MAY 20, 2011 - PAGE 92 OF THE STANDARD PLANS BOOK DATED 2010.

**REVISED STANDARD PLAN RSP A78C2**

**2010 REVISED STANDARD PLAN RSP A78C2**

DATE PLOTTED => 24-OCT-2013
TIME PLOTTED => 07:15

USERNAME => s115152
DGN FILE => 24e630va015.dgn

P:\proj1\02\4E630_plans\pse\24e630va015.dgn

7-3-13

| Dist | COUNTY | ROUTE | POST MILES TOTAL PROJECT | SHEET No. | TOTAL SHEETS |
|---|---|---|---|---|---|
| 02 | Sis | 96 | 56.0 | 55 | 92 |

REGISTERED CIVIL ENGINEER

July 19, 2013
PLANS APPROVAL DATE

REGISTERED PROFESSIONAL ENGINEER
Michael Janzen
No. 44788
Exp. 03-31-14
CIVIL
STATE OF CALIFORNIA

*THE STATE OF CALIFORNIA OR ITS OFFICERS OR AGENTS SHALL NOT BE RESPONSIBLE FOR THE ACCURACY OR COMPLETENESS OF SCANNED COPIES OF THIS PLAN SHEET.*

TO ACCOMPANY PLANS DATED 10-25-13

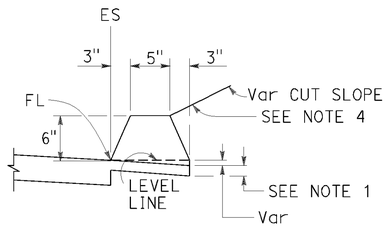


TYPE A
See Note 3

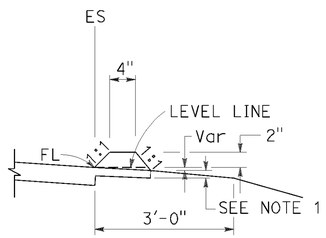


TYPE C

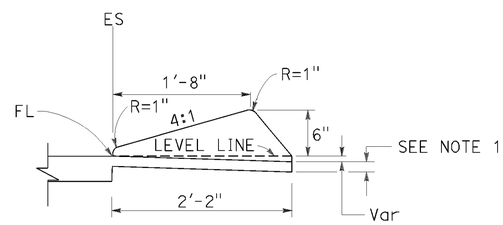


TYPE D

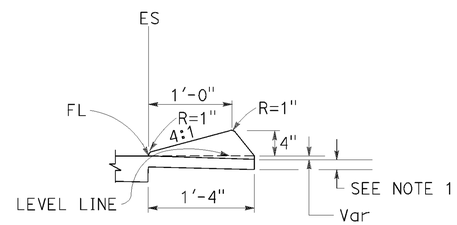


TYPE E

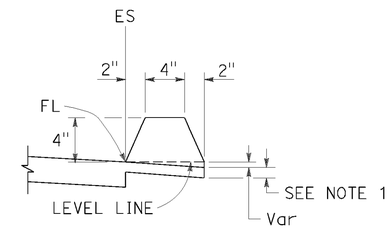


TYPE F
See Note 5

## DIKES

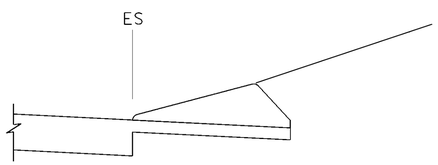


CASE C-1
Cut Slope

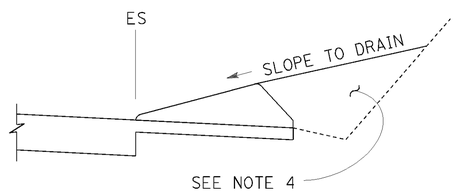


CASE C-2
Cut Slope

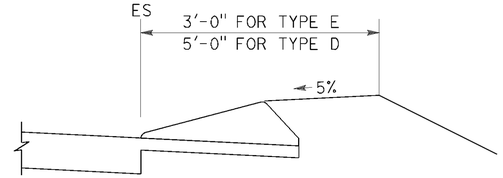


CASE F

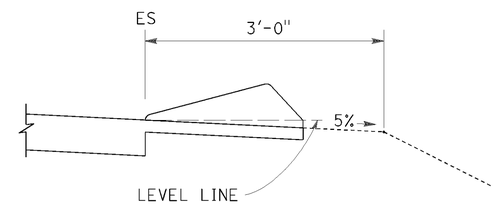


CASE R
See Note 2

## TYPE D AND E BACKFILL DETAILS

### NOTES:

1. For HMA shoulders only, extend top layer of HMA placed on the shoulder under dike with no joint at the ES. For projects with OGFC shoulders, do not extend OGFC under dike. See project plans for modified dike detail.
2. Case R applies to retrofit only projects where restrictive conditions do not provide enough width for Case F backfill.
3. Type A dike only to be used where restrictive slope conditions do not provide enough width to use Type D or Type E dike.
4. Fill and compact with excavated material to top of dike.
5. Use Type F dike, where dike is required with guard railing installations. See Revised Standard Plan RSP A77N4 for dike positioning details.

DIKE QUANTITIES

| TYPE | CUBIC YARDS PER LINEAR FOOT |
|---|---|
| A | 0.0135 |
| C | 0.0038 |
| D | 0.0293 |
| E | 0.0130 |
| F | 0.0066 |

Quantities based on 5% cross slope.

STATE OF CALIFORNIA
DEPARTMENT OF TRANSPORTATION

# HOT MIX ASPHALT DIKES

NO SCALE

RSP A87B DATED JULY 19, 2013 SUPERSEDES STANDARD PLAN A87B
DATED MAY 20, 2011 - PAGE 120 OF THE STANDARD PLANS BOOK DATED 2010.

**REVISED STANDARD PLAN RSP A87B**

**2010 REVISED STANDARD PLAN RSP A87B**

DATE PLOTTED => 24-OCT-2013
TIME PLOTTED => 07:15

USERNAME => s115152
DGN FILE => 24e630va016.dgn
P:\proj1\02\4E630_plans\pse\24e630va016.dgn
6-27-13

| DIST | COUNTY | ROUTE | POST MILES TOTAL PROJECT | SHEET No. | TOTAL SHEETS |
|---|---|---|---|---|---|
| 02 | Sis | 96 | 56.0 | 56 | 92 |

REGISTERED CIVIL ENGINEER

January 20, 2012
PLANS APPROVAL DATE

REGISTERED PROFESSIONAL ENGINEER
Cornelis M. Hakim
No. C55610
Exp. 12-31-12
CIVIL
STATE OF CALIFORNIA

*THE STATE OF CALIFORNIA OR ITS OFFICERS OR AGENTS SHALL NOT BE RESPONSIBLE FOR THE ACCURACY OR COMPLETENESS OF SCANNED COPIES OF THIS PLAN SHEET.*

TO ACCOMPANY PLANS DATED 10-25-13

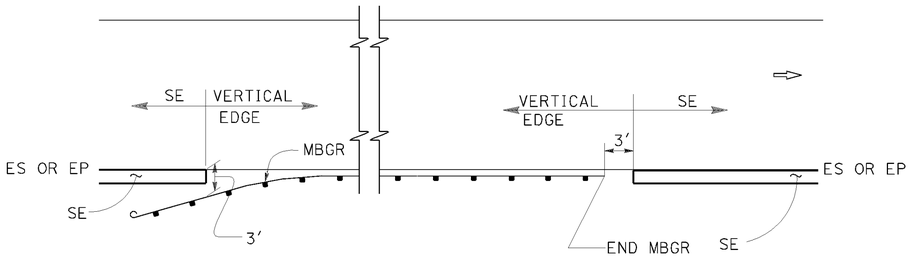


MBGR

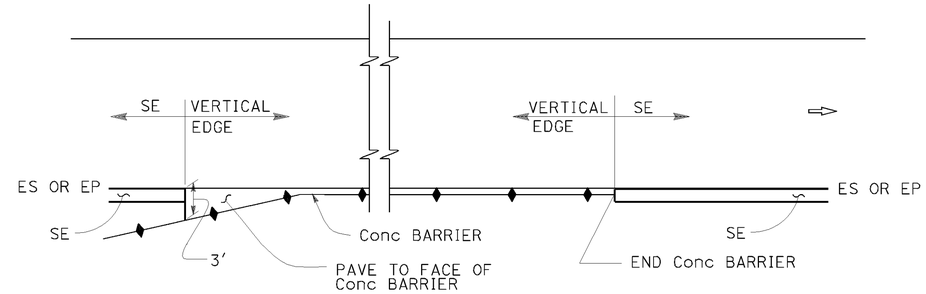


CONCRETE BARRIER

## ABBREVIATIONS:

SE SAFETY EDGE

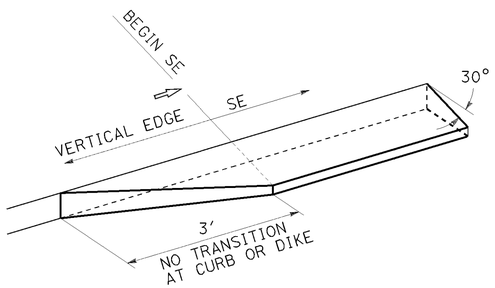


TRANSITION DETAIL
FOR CONCRETE ONLY

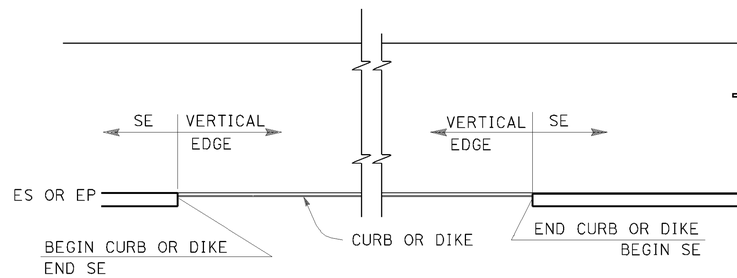


CURB OR DIKE

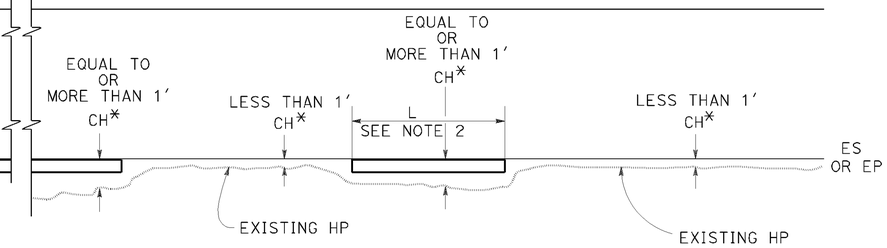


NARROW SIDE SLOPE

* CH = Distance from ES or EP to existing HP.

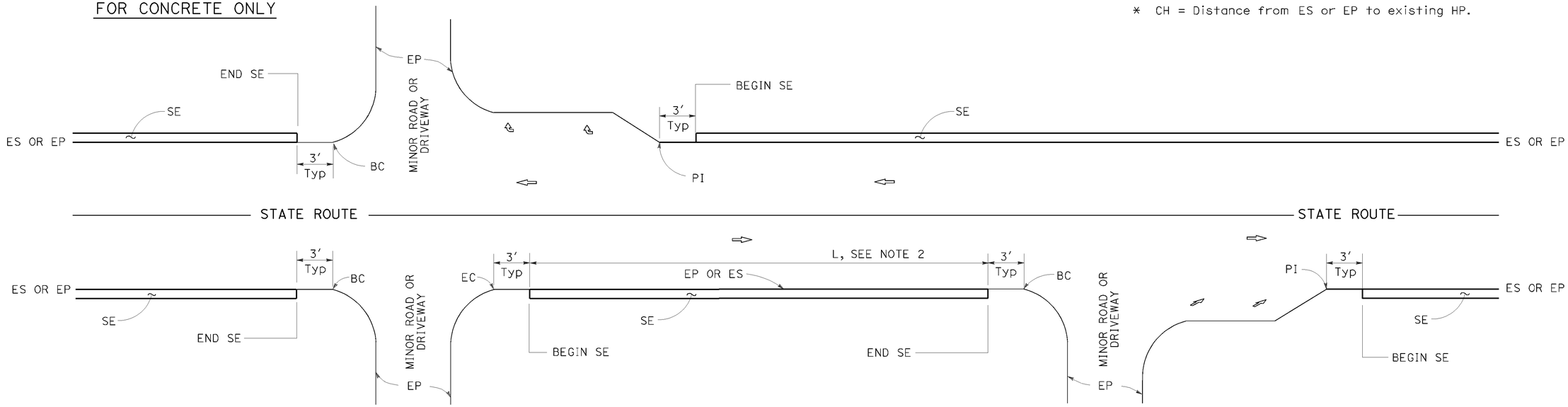


INTERSECTION

MINOR ROADWAY OR DRIVEWAY

DRIVEWAY AND INTERSECTION

## NOTES:

1. For details not shown, see Revised Standard Plans RSP P75 and RSP P76.
2. Safety edge is optional when L is less than 30′.

STATE OF CALIFORNIA
DEPARTMENT OF TRANSPORTATION

# PAVEMENT EDGE TREATMENTS

NO SCALE

RSP P74 DATED JANUARY 20, 2012 SUPPLEMENTS THE STANDARD PLANS BOOK DATED 2010.

**REVISED STANDARD PLAN RSP P74**

**2010 REVISED STANDARD PLAN RSP P74**

DATE PLOTTED => 24-OCT-2013
TIME PLOTTED => 07:15

| DIST | COUNTY | ROUTE | POST MILES TOTAL PROJECT | SHEET No. | TOTAL SHEETS |
|---|---|---|---|---|---|
| 02 | Sis | 96 | 56.0 | 57 | 92 |

REGISTERED CIVIL ENGINEER

January 20, 2012
PLANS APPROVAL DATE

REGISTERED PROFESSIONAL ENGINEER
Cornelis M. Hakim
No. C55610
Exp. 12-31-12
CIVIL
STATE OF CALIFORNIA

*THE STATE OF CALIFORNIA OR ITS OFFICERS OR AGENTS SHALL NOT BE RESPONSIBLE FOR THE ACCURACY OR COMPLETENESS OF SCANNED COPIES OF THIS PLAN SHEET.*

TO ACCOMPANY PLANS DATED 10-25-13

## LEGEND:

- HMA PAVEMENT
- HMA OR CONCRETE PAVEMENT
- CONCRETE PAVEMENT

## ABBREVIATIONS:

SE SAFETY EDGE
TT TOTAL THICKNESS OF SE
HW HINGE WIDTH, DISTANCE FROM ES OR EP TO HP

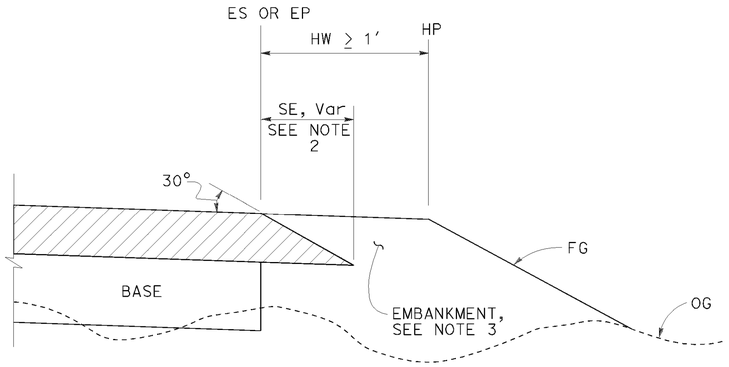


### CASE K
Safety Edge - Fill Section, HW ≥ 1′

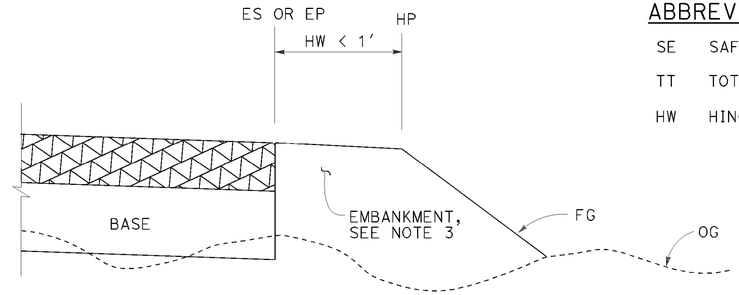


### CASE L
Vertical Edge - Fill Section, HW < 1′

## FILL SECTION

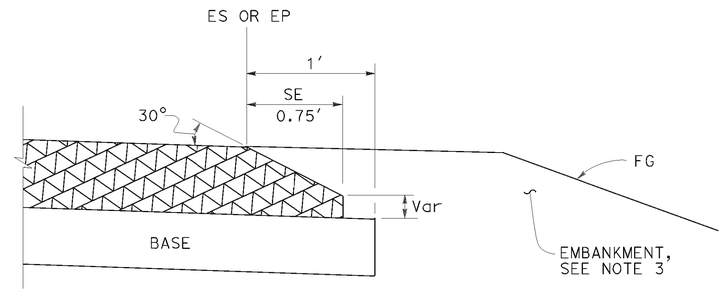


### DETAIL "B"
For HMA pavement thickness more than 0.43′ or concrete pavement

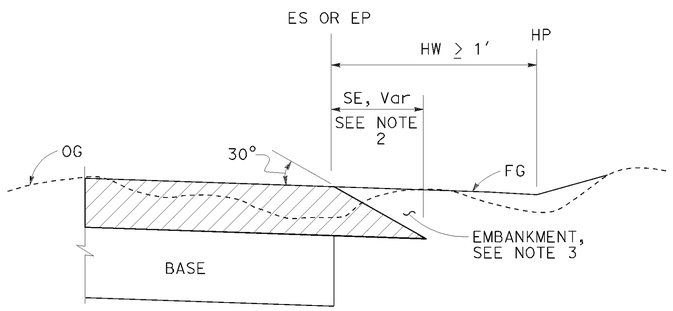


### CASE M
Safety Edge - Cut Section, HW ≥ 1′

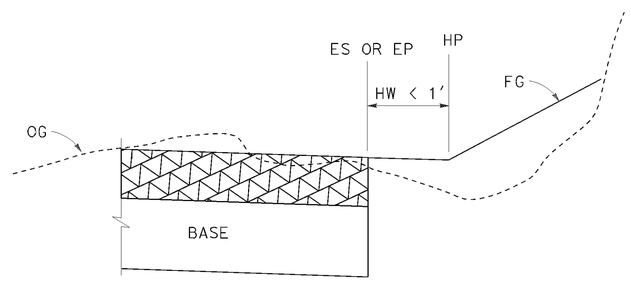


### CASE N
Vertical Edge - Cut Section, HW < 1′

## CUT SECTION

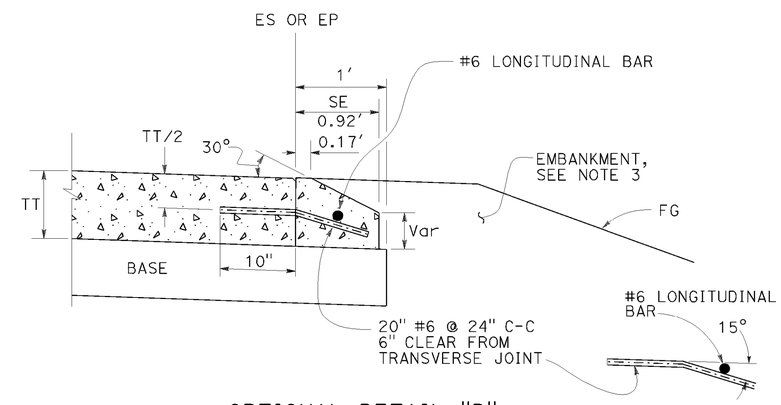


### OPTIONAL DETAIL "B"
For concrete pavement
See Note 4

## NOTES:

1. For limits of safety edge and vertical edge treatments, see Revised Standard Plan RSP P74
2. Details shown for HMA pavement thickness less than 0.43′. See Detail "B" for HMA pavement thickness more than 0.43′ or concrete pavement.
3. For locations and limits of embankment see project plans.
4. Safety edge transverse joint must match pavement transverse joint. End of #6 longitudinal bar must be 2" ±½" clear from transverse joint.
5. Safety edge is not needed in the area of MBGR, barrier, right turn lane and acceleration lane. See Revised Standard Plan RSP P74.

STATE OF CALIFORNIA
DEPARTMENT OF TRANSPORTATION

# PAVEMENT EDGE TREATMENTS-NEW CONSTRUCTION

NO SCALE

RSP P76 DATED JANUARY 20, 2012 SUPPLEMENTS THE STANDARD PLANS BOOK DATED 2010.

# REVISED STANDARD PLAN RSP P76

2010 REVISED STANDARD PLAN RSP P76

DATE PLOTTED => 24-OCT-2013
TIME PLOTTED => 07:16

| Dist | COUNTY | ROUTE | POST MILES TOTAL PROJECT | SHEET No. | TOTAL SHEETS |
|---|---|---|---|---|---|
| 02 | Sis | 96 | 56.0 | 58 | 92 |

Raymond Don Tsztoo
REGISTERED CIVIL ENGINEER

April 19, 2013
PLANS APPROVAL DATE

REGISTERED PROFESSIONAL ENGINEER Raymond Don Tsztoo No. C37332 Exp. 6-30-14 CIVIL STATE OF CALIFORNIA

*THE STATE OF CALIFORNIA OR ITS OFFICERS OR AGENTS SHALL NOT BE RESPONSIBLE FOR THE ACCURACY OR COMPLETENESS OF SCANNED COPIES OF THIS PLAN SHEET.*

TO ACCOMPANY PLANS DATED 10-25-13

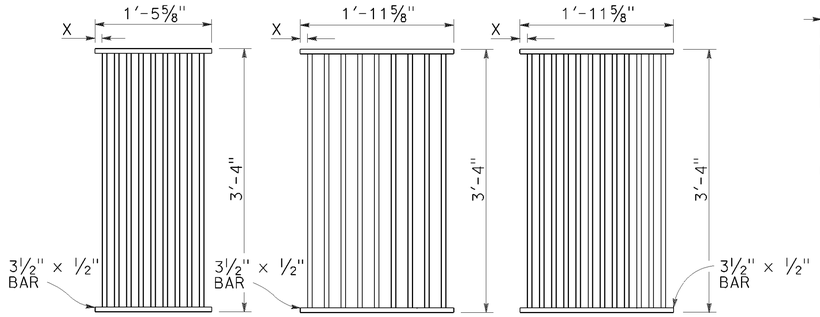


TYPE 18-9

1⅜" Clear spacing. Use within the roadbed on highways where bicycles and pedestrians are excluded.

TYPE 24-9

2" Clear spacing. Use in locations off the roadbed on all types of highways.

TYPE 24-12

1⅜" Clear spacing. Use within the roadbed on highways where bicycles and pedestrians are excluded.

## RECTANGULAR GRATE DETAILS

(See table below)

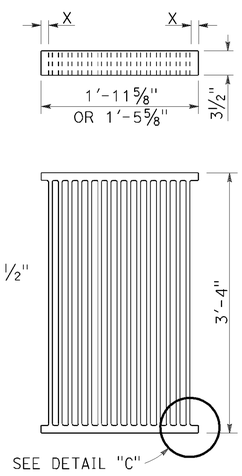


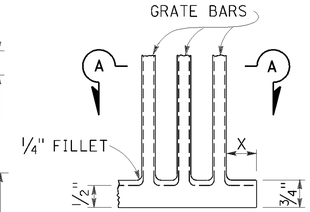


DETAIL "C"

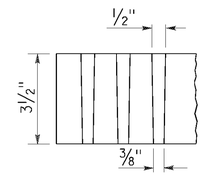


SECTION A-A

## ALTERNATIVE CAST DUCTILE IRON GRATE OR CAST CARBON STEEL GRATE

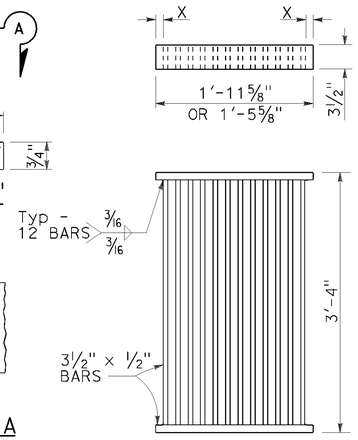


## ALTERNATIVE WELDED GRATE

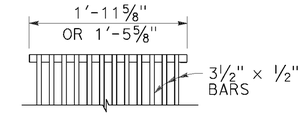


CAST END BLOCK

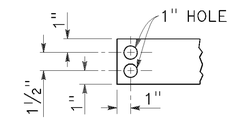


END OF BAR

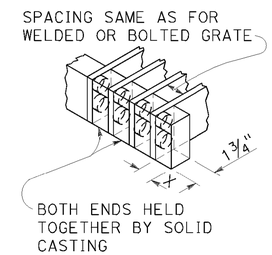


## ALTERNATIVE CAST DUCTILE IRON OR CAST CARBON STEEL END BLOCK GRATE

### NOTES:

1. Grate type numbers refer to approximate width of grate in inches and number of bars, respectively.
2. Contractor has the option of using cast ductile iron, cast carbon steel, welded, bolted, or cast end block grate.
3. Rounded top of bars optional on all grates.
4. Pipe inlets with a grate shall be placed so that bars parallel direction of principle surface flow.
5. Complete joint penetration butt welds may be substituted for the fillet welds on all anchors.
6. Standard square, hexagon, round or equivalent headed anchors may be substituted for the right angle hooks on the anchors shown on this plan.
7. Grate and frame weights are based on welded grates (weights of face angles, steps, protection bars, etc. are not included).
8. Connect chain to grate and frame only at locations shown on the plans. When chain is required, do not use cast ductile iron grates.

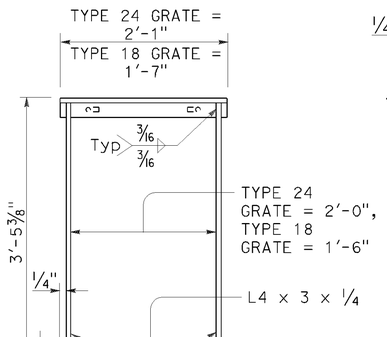


TYPICAL FRAME

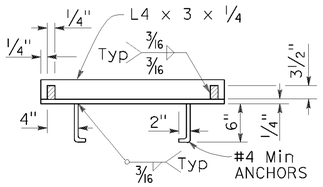


CROSS SECTION

(Thru frame)

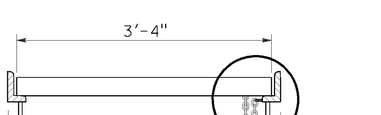


LONGITUDINAL SECTION

(Thru frame and grate)

## RECTANGULAR FRAME DETAILS

(For all rectangular grates)

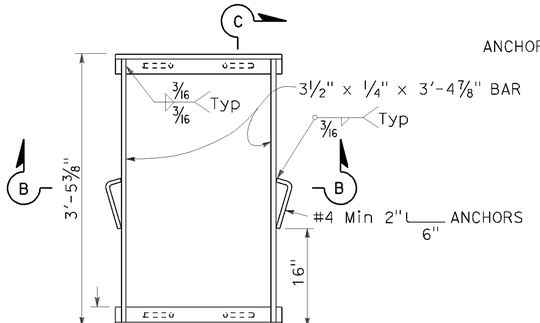


TYPICAL FRAME

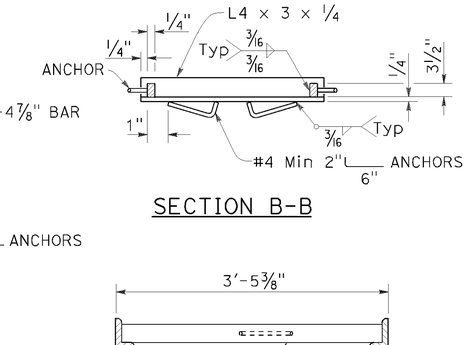


SECTION B-B

SECTION C-C

## ALTERNATIVE ANCHOR FOR RECTANGULAR FRAME

(For details not shown, See Rectangular Frame Details)

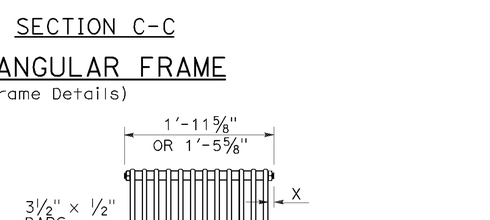


BOLTED END BLOCK

BOLTING DETAIL

## ALTERNATIVE BOLTED GRATE

BAR SPACER

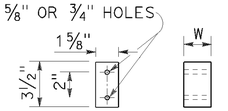


ALTERNATIVE SPACER

W = 1⅜" or 2"

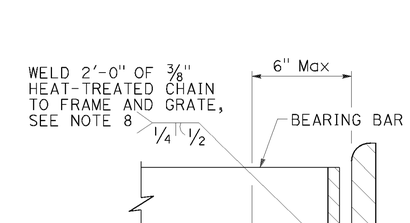


DETAIL "D"

(Steel grates only)

### GRATE BAR SPACING TABLE

| TYPE | No. OF BARS | CLEAR BAR SPACING | X |
|---|---|---|---|
| 18-9 | 9 | 1⅜" | 1 1/16" |
| 24-9 | 9 | 2" | 1 9/16" |
| 24-12 | 12 | 1⅜" | 1¼" |

| INLET TYPE | COVER TYPE | WEIGHT LB |
|---|---|---|
| OS | PLATE | 174 |
| OL-7 | PLATE | 170 |
| OL-10 | PLATE | 170 |
| OL-14 | PLATE | 170 |
| OL-21 | PLATE | 170 |
| OCP | PLATE | 112 |
| OCPI | PLATE | 112 |
| OCPI | REDWOOD | 42 |
| OMP | PLATE | 177 |
| OMPI | PLATE | 177 |

| INLET TYPE | GRATE TYPE | No. OF GRATES | WEIGHT LB |
|---|---|---|---|
| GDO | 24-12 | 2 | 634 |
| | | | |
| GOL-7 | 24-12 | 1 | 326 |
| | | | |
| GOL-10 | 24-12 | 1 | 326 |
| | | | |
| GO,G1,G2,G3,G4 (TYPE 24) | 24-9 | 1 | 263 |
| | 24-12 | 1 | 326 |
| | | | |
| G4 (TYPE 18),G5,G6 | 18-9 | 1 | 249 |
| GT1 | 18-9 | 2 | 498 |
| GT2 | 18-9 | 2 | 498 |
| GT3 | 24-12 | 2 | 652 |
| | | | |
| GT4 | 24-12 | 2 | 652 |
| | | | |
| TRASH RACK | | | 22 |
| GRATE CHAIN | | | 3 |

## BASIS FOR Misc IRON & STEEL FINAL PAY WEIGHTS FOR DRAINAGE INLETS

(See Note 7)

STATE OF CALIFORNIA
DEPARTMENT OF TRANSPORTATION

# GRATE DETAILS No. 1

NO SCALE

RSP D77A DATED APRIL 19, 2013 SUPERSEDES RSP D77A DATED JULY 20, 2012 AND STANDARD PLAN D77A DATED MAY 20, 2011 - PAGE 164 OF THE STANDARD PLANS BOOK DATED 2010.

**REVISED STANDARD PLAN RSP D77A**

**2010 REVISED STANDARD PLAN RSP D77A**

DATE PLOTTED => 24-OCT-2013
TIME PLOTTED => 07:16

| Dist | COUNTY | ROUTE | POST MILES TOTAL PROJECT | SHEET No. | TOTAL SHEETS |
|---|---|---|---|---|---|
| 02 | Sis | 96 | 56.0 | 59 | 92 |

REGISTERED CIVIL ENGINEER

July 19, 2013
PLANS APPROVAL DATE

REGISTERED PROFESSIONAL ENGINEER Gurinderpal Bhullar No. C48815 Exp. 9-30-14 CIVIL STATE OF CALIFORNIA

*THE STATE OF CALIFORNIA OR ITS OFFICERS OR AGENTS SHALL NOT BE RESPONSIBLE FOR THE ACCURACY OR COMPLETENESS OF SCANNED COPIES OF THIS PLAN SHEET.*

TO ACCOMPANY PLANS DATED 10-25-13

2010 REVISED STANDARD PLAN RSP T9

## TABLE 1

### TAPER LENGTH CRITERIA AND CHANNELIZING DEVICE SPACING

| SPEED (S) | MINIMUM TAPER LENGTH * FOR WIDTH OF OFFSET 12 FEET (W) | | | | MAXIMUM CHANNELIZING DEVICE SPACING | | |
|---|---|---|---|---|---|---|---|
| | | | | | X | Y | Z ** |
| | TANGENT 2L | MERGING L | SHIFTING L/2 | SHOULDER L/3 | TAPER | TANGENT | CONFLICT |
| mph | ft | ft | ft | ft | ft | ft | ft |
| 20 | 160 | 80 | 40 | 27 | 20 | 40 | 10 |
| 25 | 250 | 125 | 63 | 42 | 25 | 50 | 12 |
| 30 | 360 | 180 | 90 | 60 | 30 | 60 | 15 |
| 35 | 490 | 245 | 123 | 82 | 35 | 70 | 17 |
| 40 | 640 | 320 | 160 | 107 | 40 | 80 | 20 |
| 45 | 1080 | 540 | 270 | 180 | 45 | 90 | 22 |
| 50 | 1200 | 600 | 300 | 200 | 50 | 100 | 25 |
| 55 | 1320 | 660 | 330 | 220 | 55 | 110 | 27 |
| 60 | 1440 | 720 | 360 | 240 | 60 | 120 | 30 |
| 65 | 1560 | 780 | 390 | 260 | 65 | 130 | 32 |
| 70 | 1680 | 840 | 420 | 280 | 70 | 140 | 35 |

* - For other offsets, use the following merging taper length formula for L:
For speed of 40 mph or less, $L = WS^2/60$
For speed of 45 mph or more, $L = WS$

Where: L = Taper length in feet
W = Width of offset in feet
S = Posted speed limit, off-peak 85th-percentile speed prior to work starting, or the anticipated operating speed in mph

** - Use for taper and tangent sections where there are no pavement markings or where there is a conflict between existing pavement markings and channelizers (CA).

## TABLE 2

### LONGITUDINAL BUFFER SPACE AND FLAGGER STATION SPACING

| SPEED * | Min D ** | DOWNGRADE Min D *** | | |
|---|---|---|---|---|
| | | -3% | -6% | -9% |
| mph | ft | ft | ft | ft |
| 20 | 115 | 116 | 120 | 126 |
| 25 | 155 | 158 | 165 | 173 |
| 30 | 200 | 205 | 215 | 227 |
| 35 | 250 | 257 | 271 | 287 |
| 40 | 305 | 315 | 333 | 354 |
| 45 | 360 | 378 | 400 | 427 |
| 50 | 425 | 446 | 474 | 507 |
| 55 | 495 | 520 | 553 | 593 |
| 60 | 570 | 598 | 638 | 686 |
| 65 | 645 | 682 | 728 | 785 |
| 70 | 730 | 771 | 825 | 891 |

* - Speed is posted speed limit, off-peak 85th-percentile speed prior to work starting, or the anticipated operating speed in mph

** - Longitudinal buffer space or flagger station spacing

*** - Use on sustained downgrade steeper than -3 percent and longer than 1 mile.

## TABLE 3

### ADVANCE WARNING SIGN SPACING

| ROAD TYPE | DISTANCE BETWEEN SIGNS * | | |
|---|---|---|---|
| | A | B | C |
| | ft | ft | ft |
| URBAN - 25 mph OR LESS | 100 | 100 | 100 |
| URBAN - MORE THAN 25 mph TO 40 mph | 250 | 250 | 250 |
| URBAN - MORE THAN 40 mph | 350 | 350 | 350 |
| RURAL | 500 | 500 | 500 |
| EXPRESSWAY / FREEWAY | 1000 | 1500 | 2640 |

* - The distances are approximate, are intended for guidance purposes only, and should be applied with engineering judgment. These distances should be adjusted by the Engineer for field conditions, if necessary, by increasing or decreasing the recommmended distances.

STATE OF CALIFORNIA
DEPARTMENT OF TRANSPORTATION

# TRAFFIC CONTROL SYSTEM TABLES FOR LANE AND RAMP CLOSURES

NO SCALE

RSP T9 DATED JULY 19, 2013 SUPERSEDES RSP T9 DATED APRIL 19, 2013 THAT SUPPLEMENTS THE STANDARD PLANS BOOK DATED 2010.

# REVISED STANDARD PLAN RSP T9

| Dist | COUNTY | ROUTE | POST MILES TOTAL PROJECT | SHEET No. | TOTAL SHEETS |
|---|---|---|---|---|---|
| 02 | Sis | 96 | 56.0 | 60 | 92 |

REGISTERED CIVIL ENGINEER

April 19, 2013
PLANS APPROVAL DATE

REGISTERED PROFESSIONAL ENGINEER Gurinderpal Bhullar No. C48815 Exp. 9-30-14 CIVIL STATE OF CALIFORNIA

*THE STATE OF CALIFORNIA OR ITS OFFICERS OR AGENTS SHALL NOT BE RESPONSIBLE FOR THE ACCURACY OR COMPLETENESS OF SCANNED COPIES OF THIS PLAN SHEET.*

TO ACCOMPANY PLANS DATED 10-25-13

## NOTES:

See Revised Standard Plan RSP T9 for tables.

Use cone spacing X for taper segment, Y for tangent segment or Z for conflict situations, as approriate, per Table 1, unless X, Y, or Z cone spacing is shown on this sheet.

Unless otherwise specified in the special provisions, all temporary warning signs shall have black legend on fluorescent orange background.

California codes are designated by (CA). Otherwise, Federal (MUTCD) codes are shown.

## TYPICAL LANE CLOSURE WITH REVERSIBLE CONTROL

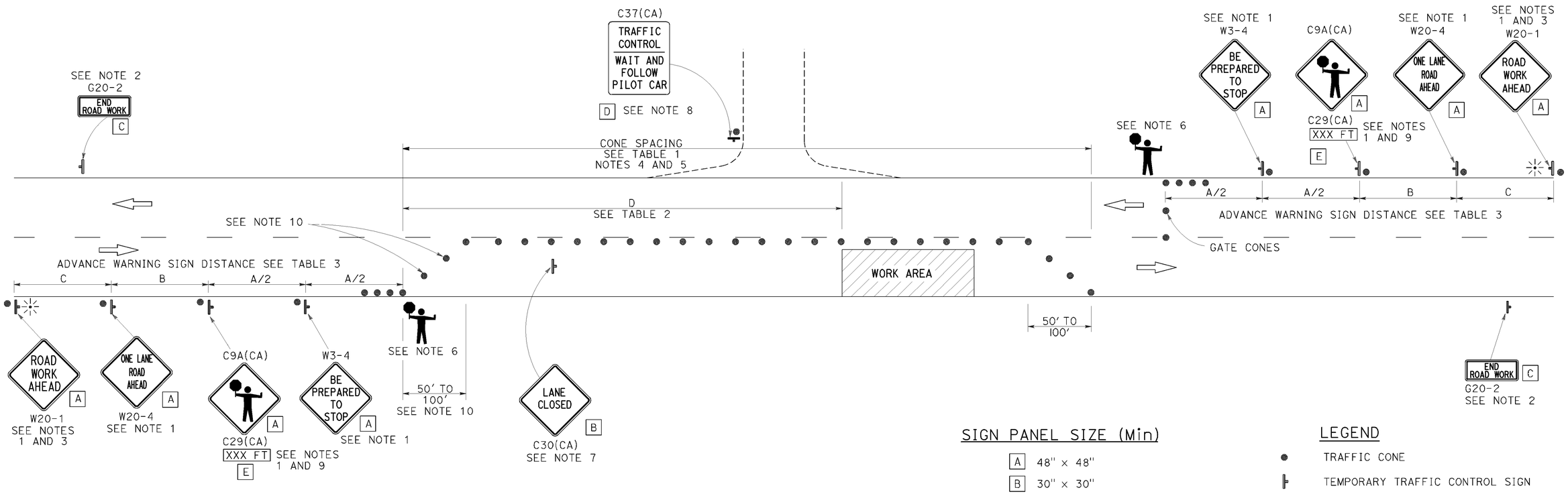


## SIGN PANEL SIZE (Min)

| | |
|---|---|
| A | 48" × 48" |
| B | 30" × 30" |
| C | 36" × 18" |
| D | 36" × 42" |
| E | 20" × 7" |

## LEGEND

- TRAFFIC CONE
- TEMPORARY TRAFFIC CONTROL SIGN
- PORTABLE FLASHING BEACON
- FLAGGER

## NOTES:

1. Each advance warning sign in each direction of travel shall be equipped with at least two flags for daytime closure. Each flag shall be at least 16" x 16" in size and shall be orange or fluorescent red-orange in color. Flashing beacons shall be placed at the locations indicated for lane closure during hours of darkness.
2. A G20-2 "END ROAD WORK" sign, as appropriate, shall be placed at the end of the lane control unless the end of work area is obvious, or ends within a larger project's limits.
3. If the W20-1 sign would follow within 2000' of a stationary W20-1 or G20-1 "ROAD WORK NEXT _____ MILES", use a W20-4 sign for the first advance warning sign.
4. All cones used for lane closures during the hours of darkness shall be fitted with retroreflective bands (or sleeves) as specified in the specifications.
5. Portable delineators, placed at one-half the spacing indicated for traffic cones, may be used instead of cones for daytime closures only.
6. Additional advance flaggers may be required. Flagger should stand in a conspicuous place, be visible to approaching traffic as well as approaching vehicles after the first vehicle has stopped. During the hours of darkness, the flagging-station and flagger shall be illuminated and clearly visible to approaching traffic. The illumination footprint of the lighting on the ground shall be at least 20' in diameter. Place a minimum of four cones at 50' intervals in advance of flagger station as shown.
7. Place C30(CA) "LANE CLOSED" sign at 500' to 1000' intervals throughout extended work areas. They are optional if the work area is visible from the flagger station.
8. When a pilot car is used, place a C37(CA) "TRAFFIC CONTROL-WAIT AND FOLLOW PILOT CAR" sign with black legend on white background at all intersections, driveways and alleys without a flagger within traffic control area. Signs shall be clean and visible at all times. Where traffic can not be effectively self-regulated, at least one flagger shall be used at each intersection within traffic control area.
9. An optional C29(CA) sign may be placed below the C9A(CA) sign.
10. Either traffic cones or barricades shall be placed on the taper. Barricades shall be Type I, II, or III.

STATE OF CALIFORNIA
DEPARTMENT OF TRANSPORTATION

# TRAFFIC CONTROL SYSTEM FOR LANE CLOSURE ON TWO LANE CONVENTIONAL HIGHWAYS

NO SCALE

RSP T13 DATED APRIL 19, 2013 SUPERSEDES STANDARD PLAN T13 DATED MAY 20, 2011 - PAGE 241 OF THE STANDARD PLANS BOOK DATED 2010.

**REVISED STANDARD PLAN RSP T13**

**2010 REVISED STANDARD PLAN RSP T13**

DATE PLOTTED => 24-OCT-2013
TIME PLOTTED => 07:16

| Dist | COUNTY | ROUTE | POST MILES TOTAL PROJECT | SHEET No. | TOTAL SHEETS |
|---|---|---|---|---|---|
| 02 | Sis | 96 | 56.0 | 61 | 92 |

REGISTERED CIVIL ENGINEER

October 21, 2011
PLANS APPROVAL DATE

REGISTERED PROFESSIONAL ENGINEER Tillat Satter No. C42892 Exp. 3-31-12 CIVIL STATE OF CALIFORNIA

*THE STATE OF CALIFORNIA OR ITS OFFICERS OR AGENTS SHALL NOT BE RESPONSIBLE FOR THE ACCURACY OR COMPLETENESS OF SCANNED COPIES OF THIS PLAN SHEET.*

TO ACCOMPANY PLANS DATED 10-25-13

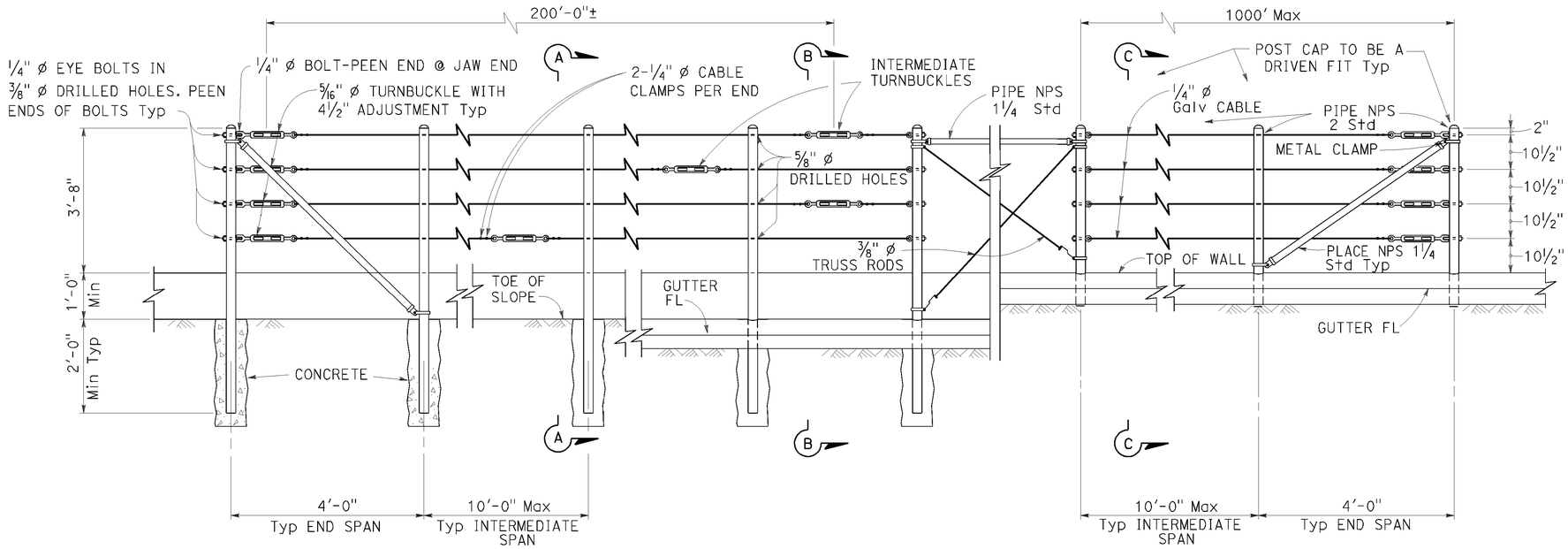


EXISTING WALL (WITHOUT GUTTER)
Existing

RETAINING WALL (WITH GUTTER)
Existing

RETAINING WALL (WITH GUTTER)
New construction

## ELEVATION

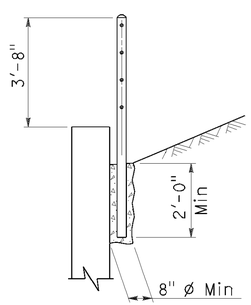


SECTION A-A
Existing

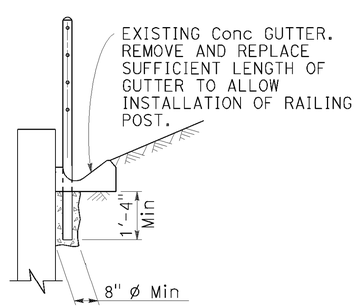


SECTION B-B
Existing

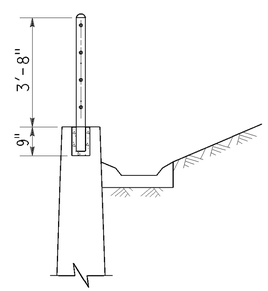


SECTION C-C
New construction

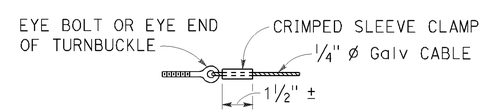


ALTERNATIVE CABLE CONNECTION

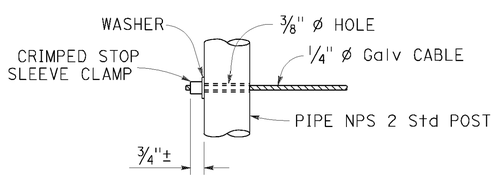


ALTERNATIVE DEAD END ANCHORAGE

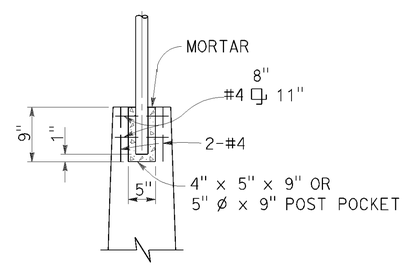


POST POCKET

## NOTES:

1. Maximum distance between turnbuckles shall be 200'-0"±.
2. Intermediate turnbuckles to be placed in adjacent spans.
3. Cable shall not be spliced between intermediate turnbuckles and end posts.
4. Posts to be vertical.
5. Alignment of holes in posts may vary to conform to slope of top of retaining wall.
6. The Contractor shall verify all dependent dimensions in the field before ordering or fabricating any material.
7. Line posts shall be braced horizontally and trussed diagonally in both directions at intervals not to exceed 1000'.
8. Post pockets to be centered in top of wall.
9. Typical end spans, braced in both directions, shall be constructed at changes in line where the angle of deflection is 15° or more.
10. Provide thimbles at all cable loops.

STATE OF CALIFORNIA
DEPARTMENT OF TRANSPORTATION

# CABLE RAILING

NO SCALE

RSP B11-47 DATED OCTOBER 21, 2011 SUPERSEDES STANDARD PLAN B11-47 DATED MAY 20, 2011 - PAGE 293 OF THE STANDARD PLANS BOOK DATED 2010.

**REVISED STANDARD PLAN RSP B11-47**

**2010 REVISED STANDARD PLAN RSP B11-47**

DATE PLOTTED => 24-OCT-2013
TIME PLOTTED => 07:16

| Dist | COUNTY | ROUTE | POST MILES TOTAL PROJECT | SHEET No. | TOTAL SHEETS |
|---|---|---|---|---|---|
| 02 | Sis | 96 | 56.0 | 62 | 92 |

Theresa Gabriel
REGISTERED ELECTRICAL ENGINEER

July 19, 2013
PLANS APPROVAL DATE

REGISTERED PROFESSIONAL ENGINEER Theresa Aziz Gabriel No. E15129 Exp. 6-30-14 ELECTRICAL STATE OF CALIFORNIA

THE STATE OF CALIFORNIA OR ITS OFFICERS OR AGENTS SHALL NOT BE RESPONSIBLE FOR THE ACCURACY OR COMPLETENESS OF SCANNED COPIES OF THIS PLAN SHEET.

TO ACCOMPANY PLANS DATED 10-25-13

## LEGEND:

- AB — ABANDON. IF APPLIED TO CONDUIT, REMOVE CONDUCTORS
- BC — INSTALL PULL BOX IN EXISTING CONDUIT RUN
- BP — PEDESTRIAN BARRICADE, TYPE AS INDICATED ON PLAN
- CB — INSTALL CONDUIT INTO EXISTING PULL BOX
- CC — CONNECT NEW AND EXISTING CONDUIT. REMOVE EXISTING CONDUCTORS AND INSTALL CONDUCTORS AS INDICATED
- CF — CONDUIT TO REMAIN FOR FUTURE USE. REMOVE CONDUCTORS. INSTALL PULL TAPE
- DH — DETECTOR HANDHOLE
- FA — FOUNDATION TO BE ABANDONED
- IS — INSTALL SIGN ON SIGNAL MAST ARM
- NS — NO SLIP BASE ON STANDARD
- PEC — PHOTOELECTRIC CONTROL
- PEU — PHOTOELECTRIC UNIT
- RC — EQUIPMENT OR MATERIAL TO BE REMOVED AND BECOME THE PROPERTY OF THE CONTRACTOR
- RE — REMOVE ELECTROLIER, FUSES AND BALLAST. TAPE ENDS OF CONDUCTORS
- RL — RELOCATE EQUIPMENT
- RR — REMOVE AND REUSE EQUIPMENT
- RS — REMOVE AND SALVAGE EQUIPMENT
- SC — SPLICE NEW TO EXISTING CONDUCTORS
- SD — SERVICE DISCONNECT
- TSP — TELEPHONE SERVICE POINT

## ABBREVIATIONS

| | |
|---|---|
| APS | ACCESSIBLE PEDESTRIAN SIGNAL |
| BBS | BATTERY BACKUP SYSTEM |
| BC | BOLT CIRCLE |
| BPB | BICYCLE PUSH BUTTON |
| C | CONDUIT |
| CB | CIRCUIT BREAKER |
| CCTV | CLOSED CIRCUIT TELEVISION |
| Ckt | CIRCUIT |
| CMS | CHANGEABLE MESSAGE SIGN |
| Ctid | CALTRANS IDENTIFICATION |
| Comm | COMMUNICATION |
| DLC | LOOP DETECTOR LEAD-IN CABLE |
| EMS | EXTINGUISHABLE MESSAGE SIGN |
| EVUC | EMERGENCY VEHICLE UNIT CABLE |
| EVUD | EMERGENCY VEHICLE UNIT DETECTOR |
| FB | FLASHING BEACON |
| FBCA | FLASHING BEACON CONTROL ASSEMBLY |
| FBS | FLASHING BEACON WITH SLIP BASE |
| FO | FIBER OPTIC |
| G | EQUIPMENT GROUNDING CONDUCTOR |
| GB | GROUND BUS |
| GFCI | GROUND FAULT CIRCUIT INTERRUPTER |
| HAR | HIGHWAY ADVISORY RADIO |
| Hex | HEXAGONAL |
| HPS | HIGH PRESSURE SODIUM |
| IISNS | INTERNALLY ILLUMINATED STREET NAME SIGN |
| ISL | INDUCTION SIGN LIGHTING |
| LED | LIGHT EMITTING DIODE |
| LMA | LUMINAIRE MAST ARM |
| LPS | LOW PRESSURE SODIUM |
| Ltg | LIGHTING |
| Lum | LUMINAIRE |
| M | METERED |
| MAT | MAST ARM MOUNTING TOP ATTACHMENT |
| MAS | MAST ARM MOUNTING SIDE ATTACHMENT |
| M/M | MULTIPLE TO MULTIPLE TRANSFORMER |
| Mtg | MOUNTING |
| MV | MERCURY VAPOR LIGHTING FIXTURE |
| MVDS | MICROWAVE VEHICLE DETECTION SYSTEM |
| N | NEUTRAL (GROUNDED CONDUCTOR) |
| NB | NEUTRAL BUS |
| NC | NORMALLY CLOSE |
| NO | NORMALLY OPEN |
| P | CIRCUIT BREAKER'S POLE |
| PB | PULL BOX |
| PBA | PUSH BUTTON ASSEMBLY |
| PEC | PHOTOELECTRIC CONTROL |
| Ped | PEDESTRIAN |
| PEU | PHOTOELECTRIC UNIT |
| PT | CONDUIT WITH PULL TAPE |
| RE | RELOCATED EQUIPMENT |
| RM | RAMP METERING |
| RWIS | ROADSIDE WEATHER INFORMATION SYSTEM |
| SB | SLIP BASE |
| SIC | SIGNAL INTERCONNECT CABLE |
| Sig | SIGNAL |
| SMA | SIGNAL MAST ARM |
| SNS | STREET NAME SIGN |
| SP | SERVICE POINT |
| TDC | TELEPHONE DEMARCATION CABINET |
| TMS | TRAFFIC MONITORING STATION |
| TOS | TRAFFIC OPERATIONS SYSTEM |
| Veh | VEHICLE |
| VIVDS | VIDEO IMAGE VEHICLE DETECTION SYSTEM |
| WIM | WEIGH-IN-MOTION |
| Xfmr | TRANSFORMER |

## SOFFIT AND WALL MOUNTED LUMINAIRES

- PENDANT, 70 W HPS UNLESS OTHERWISE SPECIFIED
- FLUSH, 70 W HPS UNLESS OTHERWISE SPECIFIED
- WALL SURFACE, 70 W HPS UNLESS OTHERWISE SPECIFIED
- EXISTING SOFFIT OR WALL LUMINAIRE TO REMAIN UNMODIFIED
- EXISTING SOFFIT OR WALL LUMINAIRE TO BE MODIFIED AS SPECIFIED

NOTE:
Arrow indicates "street side" of luminaire.

## MISCELLANEOUS ELECTROLIERS

| NEW | EXISTING | |
|---|---|---|
| | | LUMINAIRE ON WOOD POLE |
| | | NON-STANDARD ELECTROLIER (SEE PROJECT NOTES OR PROJECT PLANS) |
| | | CITY ELECTROLIER |
| | | ELECTROLIER FOUNDATION (FUTURE INSTALLATION) |

## STANDARD ELECTROLIER

| NEW | EXISTING | STANDARD TYPE |
|---|---|---|
| | | 15 |
| | | 15D |
| | | 15 STRUCTURE |
| | | 15D STRUCTURE |
| | | 21 |
| | | 21D |
| | | 21 STRUCTURE |
| | | 21D STRUCTURE |
| | | 30 |
| | | 31 |
| | | 32 |

NOTES:

1. HPS luminaires shall be 310 W HPS when installed on Type 21, 21D, 30, 31 and 32 Standards, unless otherwise specified. HPS luminaires shall be 200 W when installed on other type standards or poles, unless otherwise specified.
2. LED luminaires shall be 235 W when installed on Type 21, 21D, 30, 31 and 32 Standards, unless otherwise specified. LED luminaires shall be 165 W when installed on other type standards or poles, unless otherwise specified.
3. Luminaires shall be the cutoff type, ANSI Type III medium cutoff lighting distribution, unless otherwise specified.

COMMONLY USED SYMBOLS FOR UNITED STATES CUSTOMARY UNITS OF MEASUREMENT:

| SYMBOL USED | DEFINITIONS |
|---|---|
| Ω | OHMS |
| min | MINUTE |
| s | SECOND |
| bps | BITS PER SECOND |
| Bps | BYTES PER SECOND |
| A | AMPERE |
| V | VOLT |
| V(dc) | VOLT (DIRECT CURRENT) |
| V(ac) | VOLT (ALTERNATING CURRENT) |
| FC | FOOT - CANDLE |
| W | WATTS |
| VA | VOLT-AMPERE |
| M | MEGA |
| k | KILO |
| m | MILLI |
| μ | MICRO |
| P | PICO |
| Hz | HERTZ |

STATE OF CALIFORNIA
DEPARTMENT OF TRANSPORTATION

# ELECTRICAL SYSTEMS (LEGEND AND ABBREVIATIONS)

NO SCALE

RSP ES-1A DATED JULY 19, 2013 SUPERSEDES STANDARD PLAN ES-1A DATED MAY 20, 2011 - PAGE 425 OF THE STANDARD PLANS BOOK DATED 2010.

**REVISED STANDARD PLAN RSP ES-1A**

2010 REVISED STANDARD PLAN RSP ES-1A

DATE PLOTTED => 24-OCT-2013
TIME PLOTTED => 07:16

| Dist | COUNTY | ROUTE | POST MILES TOTAL PROJECT | SHEET No. | TOTAL SHEETS |
|---|---|---|---|---|---|
| 02 | Sis | 96 | 56.0 | 63 | 92 |

Theresa Gabriel
REGISTERED ELECTRICAL ENGINEER

July 19, 2013
PLANS APPROVAL DATE

REGISTERED PROFESSIONAL ENGINEER Theresa Aziz Gabriel No. E15129 Exp. 6-30-14 ELECTRICAL STATE OF CALIFORNIA

*THE STATE OF CALIFORNIA OR ITS OFFICERS OR AGENTS SHALL NOT BE RESPONSIBLE FOR THE ACCURACY OR COMPLETENESS OF SCANNED COPIES OF THIS PLAN SHEET.*

TO ACCOMPANY PLANS DATED 10-25-13

## CONDUIT

| NEW | EXISTING | |
|---|---|---|
| | | LIGHTING CONDUIT, UNLESS OTHERWISE INDICATED OR NOTED |
| | | TRAFFIC SIGNAL CONDUIT |
| C | c | COMMUNICATION CONDUIT |
| T | t | TELEPHONE CONDUIT |
| F | f | FIRE ALARM CONDUIT |
| FO | fo | FIBER OPTIC CONDUIT |
| | | CONDUIT TERMINATION |
| R | r | CONDUIT RISER ATTACHED TO THE STRUCTURE OR SERVICE POLE |

## SERVICE EQUIPMENT

| NEW | EXISTING | |
|---|---|---|
| OH | oh | OVERHEAD LINES |
| U | U | WOOD POLE, "U" INDICATES UTILITY OWNED |
| | | POLE GUY WITH ANCHOR |
| | | UTILITY TRANSFORMER - GROUND MOUNTED |
| III | III | SERVICE EQUIPMENT ENCLOSURE TYPE. DOOR INDICATES FRONT OF ENCLOSURE |
| T | t | TELEPHONE DEMARCATION CABINET |

## POLE-MOUNTED SERVICE DESIGNATION

TYPE H SERVICE, 28'-10" — TYPE OF INSTALLATION AND POLE HEIGHT ABOVE GRADE

## FLASHING BEACON

| NEW | EXISTING | |
|---|---|---|
| R | R | FLASHING BEACON (ONE VEHICLE SIGNAL HEAD WITH BACKPLATE AND VISOR) "R" INDICATES RED INDICATION, "Y" INDICATES YELLOW INDICATION |
| Y Y | Y Y | FLASHING BEACON WITH TYPE 15-FBS STANDARD AND A SIGN. |
| R R | R R | FLASHING BEACON WITH TYPES 9, 9A OR 9B SIGN UNLESS OTHERWISE SPECIFIED OR INDICATED |

## SIGNAL EQUIPMENT

| NEW | EXISTING | |
|---|---|---|
| C | C | PEDESTRIAN SIGNAL HEAD "C" INDICATES COUNTDOWN PEDESTRIAN HEAD |
| | | PUSH BUTTON ASSEMBLY POST |
| | | PEDESTRIAN BARRICADE |
| | | VEHICLE SIGNAL HEAD (WITH BACKPLATE AND 3-SECTIONS: RED, YELLOW AND GREEN) |
| | | VEHICLE SIGNAL HEAD WITH ANGLE VISOR |
| PV | PV | MODIFICATIONS OF BASIC SYMBOL: "L" INDICATES ALL NON-ARROW SECTIONS LOUVERED "LG" INDICATES LOUVERED GREEN SECTION ONLY "PV" INDICATES ALL 12" SECTIONS PROGRAMMED VISIBILITY "8" INDICATES ALL 8" SECTIONS (ONLY WHEN SPECIFIED) |
| | | VEHICLE SIGNAL HEAD CONSISTING OF RED, YELLOW AND GREEN LEFT ARROW SECTIONS |
| | | VEHICLE SIGNAL HEAD CONSISTING OF RED AND YELLOW SECTIONS WITH AN UP GREEN ARROW SECTION |
| | | VEHICLE SIGNAL HEAD (5 SECTION) CONSISTING OF RED, YELLOW AND GREEN SECTIONS WITH YELLOW AND GREEN RIGHT ARROW SECTIONS |
| | | TYPE 15TS STANDARD WITH VEHICLE SIGNAL HEAD AND LUMINAIRE |
| | | TYPE 21TS STANDARD WITH VEHICLE SIGNAL HEAD AND LUMINAIRE |
| | | STANDARD WITH LUMINAIRE AND SIGNAL MAST ARMS AND ATTACHED VEHICLE SIGNAL HEADS |
| | | TYPE 1 STANDARD WITH ATTACHED VEHICLE SIGNAL HEADS |
| | | STANDARD WITH A SIGNAL MAST ARM, ATTACHED VEHICLE SIGNAL HEADS AND INTERNALLY ILLUMINATED STREET NAME SIGN |
| | | CONTROLLER ASSEMBLY. DOOR INDICATES FRONT OF CABINET |

## SIGNAL EQUIPMENT Cont

| NEW | EXISTING | |
|---|---|---|
| | | GUARD POST |
| | | TYPE 1 STANDARD WITH RAMP METERING SIGN |
| | | OPTICAL DETECTOR FOR THE EMERGENCY VEHICLE DETECTION SYSTEM |

### NOTES:

1. All signal sections shall be 12" unless shown otherwise.
2. Signal heads shall be provided with backplates unless shown otherwise.

## ILLUMINATED OVERHEAD SIGN

| NEW | EXISTING | |
|---|---|---|
| | | SINGLE POST, SINGLE ILLUMINATED SIGN, BALANCED BUTTERFLY |
| | | SINGLE POST, DOUBLE ILLUMINATED SIGN, BALANCED BUTTERFLY |
| | | SINGLE POST, SINGLE ILLUMINATED SIGN, FULL CANTILEVER |
| | | DOUBLE POST, SINGLE ILLUMINATED SIGN |
| | | SINGLE ILLUMINATED SIGN MOUNTED ON STRUCTURE |
| | | DOUBLE POST, SINGLE ILLUMINATED SIGN WITH ELECTROLIER |

STATE OF CALIFORNIA
DEPARTMENT OF TRANSPORTATION

# ELECTRICAL SYSTEMS (LEGEND AND ABBREVIATIONS)

NO SCALE

RSP ES-1B DATED JULY 19, 2013 SUPERSEDES STANDARD PLAN ES-1B DATED MAY 20, 2011 - PAGE 426 OF THE STANDARD PLANS BOOK DATED 2010.

**REVISED STANDARD PLAN RSP ES-1B**

**2010 REVISED STANDARD PLAN RSP ES-1B**

| Dist | COUNTY | ROUTE | POST MILES TOTAL PROJECT | SHEET No. | TOTAL SHEETS |
|---|---|---|---|---|---|
| 02 | Sis | 96 | 56.0 | 64 | 92 |

Theresa Gabriel
REGISTERED ELECTRICAL ENGINEER

July 19, 2013
PLANS APPROVAL DATE

REGISTERED PROFESSIONAL ENGINEER
Theresa Aziz Gabriel
No. E15129
Exp. 6-30-14
ELECTRICAL
STATE OF CALIFORNIA

*THE STATE OF CALIFORNIA OR ITS OFFICERS OR AGENTS SHALL NOT BE RESPONSIBLE FOR THE ACCURACY OR COMPLETENESS OF SCANNED COPIES OF THIS PLAN SHEET.*

TO ACCOMPANY PLANS DATED 10-25-13

# EQUIPMENT IDENTIFICATION

## ILLUMINATED SIGN IDENTIFICATION NUMBER:

SIGN No. 12345
10 ISL SCI 1.0

- SIGN NUMBER - PLACE ON POST OR STRUCTURE
- TRANSFORMER RATING (kVA)
- LIGHTING CONTROL TYPE
- NUMBER AND TYPE OF FIXTURES

} DO NOT PLACE ON STANDARD OR STRUCTURE

## ELECTROLIER OR EQUIPMENT IDENTIFICATION NUMBER:

12345 - 15'-0"

- MAST ARM LENGTH, IF SHOWN. DO NOT PLACE ON STANDARD OR STRUCTURE
- EQUIPMENT NUMBER - PLACE ON STANDARD OR STRUCTURE. EXISTING EQUIPMENT NUMBERS ARE SHOWN IN PARENTHESIS

## CONDUIT AND CONDUCTOR IDENTIFICATION:

1½"C, 2#10, 15#14, 2 DLC, 12P#18 (PAIR)

- NUMBER AND SIZE OF CONDUCTORS AND CABLES
- SIZE OF CONDUIT IN INCHES

| | |
|---|---|
| ø1, ø2, ø2P, etc. | TRAFFIC PHASE IDENTIFICATION FOR SIGNAL FACES, DETECTORS AND PHASE DIAGRAMS |
| 1 2 3 | LEGEND NUMBERS |
| A B C | EQUIPMENT, SIGNAL POLES, INSTALLATION OR ITEMS |
| 1 2 3 | CONDUIT RUN NUMBERS |

## SIGNAL AND LIGHTING STANDARD (TYPICAL DESIGNATION):

19A - 3 - 100

- WIND VELOCITY = 100 mph
- CASE 3 ARM LOADING
- STANDARD TYPE
- STANDARD PLAN SHEET NUMBER
- DETAIL, NUMBER, SECTION, TYPE OR ELEVATION

# MISCELLANEOUS EQUIPMENT

| NEW | EXISTING | |
|---|---|---|
| CMS | cms | CHANGEABLE MESSAGE SIGN |
| | | CLOSED CIRCUIT TELEVISION CAMERA |
| | | HIGHWAY ADVISORY RADIO POLE AND ANTENNA |
| EMS | ems | EXTINGUISHABLE MESSAGE SIGN |
| M V | m v | DETECTION DEVICE<br>M = MICROWAVE SENSOR<br>V = VIDEO IMAGE SENSOR |

# WIRING DIAGRAM LEGEND

| | |
|---|---|
| ---- | EXTERNAL CONDUCTOR |
| | CONDUCTOR OR BUS |
| | TIE POINT |
| | CONTACTOR COIL |
| | CONTACTOR, NO CONTACT |
| | TERMINAL BLOCKS |
| | CONTACTOR, NC CONTACT |
| | ENCLOSURE BOND |
| | GROUNDING ELECTRODE |
| | CIRCUIT BREAKER |
| | RECEPTACLE |

# PULL BOXES

| NEW | EXISTING | |
|---|---|---|
| | | PULL BOX, No. 5 UNLESS OTHERWISE INDICATED OR NOTED |
| 3 | 9A(21) | PULL BOX, ADDITIONAL DESIGNATIONS OR DESCRIPTIONS |

3 No. 3½ PULL BOX
5 No. 5 PULL BOX
6 No. 6 PULL BOX
7 No. 7 (CEILING PULL BOX)
8 No. 8 (PENDANT SOFFIT PULL BOX)
9 No. 9 PULL BOX
9A No. 9A PULL BOX

(C) COMMUNICATIONS PULL BOX
(E) PULL BOX WITH EXTENSION
(S) SPRINKLER CONTROL PULL BOX
(21) ANCHOR BOLTS AND CONDUIT FOR FUTURE INSTALLATION OF TYPE 21 STANDARD
(T) TRAFFIC PULL BOX

# VEHICLE DETECTORS

5 J 9 U

- VEHICLE DETECTOR DESIGNATION
- U = UPPER
  L = LOWER
- SLOT NUMBER IN INPUT FILE
- INPUT FILE (I OR J)
- PHASE

| NEW | EXISTING | |
|---|---|---|
| | | TYPE A DETECTOR LOOP. OUTLINE OF SAWCUT SHOWN |
| | | TYPE B DETECTOR LOOP. OUTLINE OF SAWCUT SHOWN |
| | | TYPE C DETECTOR LOOP. OUTLINE OF SAWCUT SHOWN |
| | | TYPE D DETECTOR LOOP. OUTLINE OF SAWCUT SHOWN |
| | | TYPE E DETECTOR LOOP. OUTLINE OF SAWCUT SHOWN |
| | | TYPE Q DETECTOR LOOP. OUTLINE OF SAWCUT SHOWN |
| | | MAGNETIC DETECTOR |
| DH | dh | DETECTOR HANDHOLE |
| | | MICROWAVE OR VIDEO DETECTION ZONE |

STATE OF CALIFORNIA
DEPARTMENT OF TRANSPORTATION

# ELECTRICAL SYSTEMS (LEGEND AND ABBREVIATIONS)

NO SCALE

RSP ES-1C DATED JULY 19, 2013 SUPERSEDES STANDARD PLAN ES-1C DATED MAY 20, 2011 - PAGE 427 OF THE STANDARD PLANS BOOK DATED 2010.

**REVISED STANDARD PLAN RSP ES-1C**

**2010 REVISED STANDARD PLAN RSP ES-1C**

DATE PLOTTED => 24-OCT-2013
TIME PLOTTED => 07:16

| Dist | COUNTY | ROUTE | POST MILES TOTAL PROJECT | SHEET No. | TOTAL SHEETS |
|---|---|---|---|---|---|
| 02 | Sis | 96 | 56.0 | 65 | 92 |

Theresa Gabriel
REGISTERED ELECTRICAL ENGINEER

July 19, 2013
PLANS APPROVAL DATE

REGISTERED PROFESSIONAL ENGINEER
Theresa Aziz Gabriel
No. E15129
Exp. 6-30-14
ELECTRICAL
STATE OF CALIFORNIA

*THE STATE OF CALIFORNIA OR ITS OFFICERS OR AGENTS SHALL NOT BE RESPONSIBLE FOR THE ACCURACY OR COMPLETENESS OF SCANNED COPIES OF THIS PLAN SHEET.*

TO ACCOMPANY PLANS DATED 10-25-13

**2010 REVISED STANDARD PLAN RSP ES-4A**

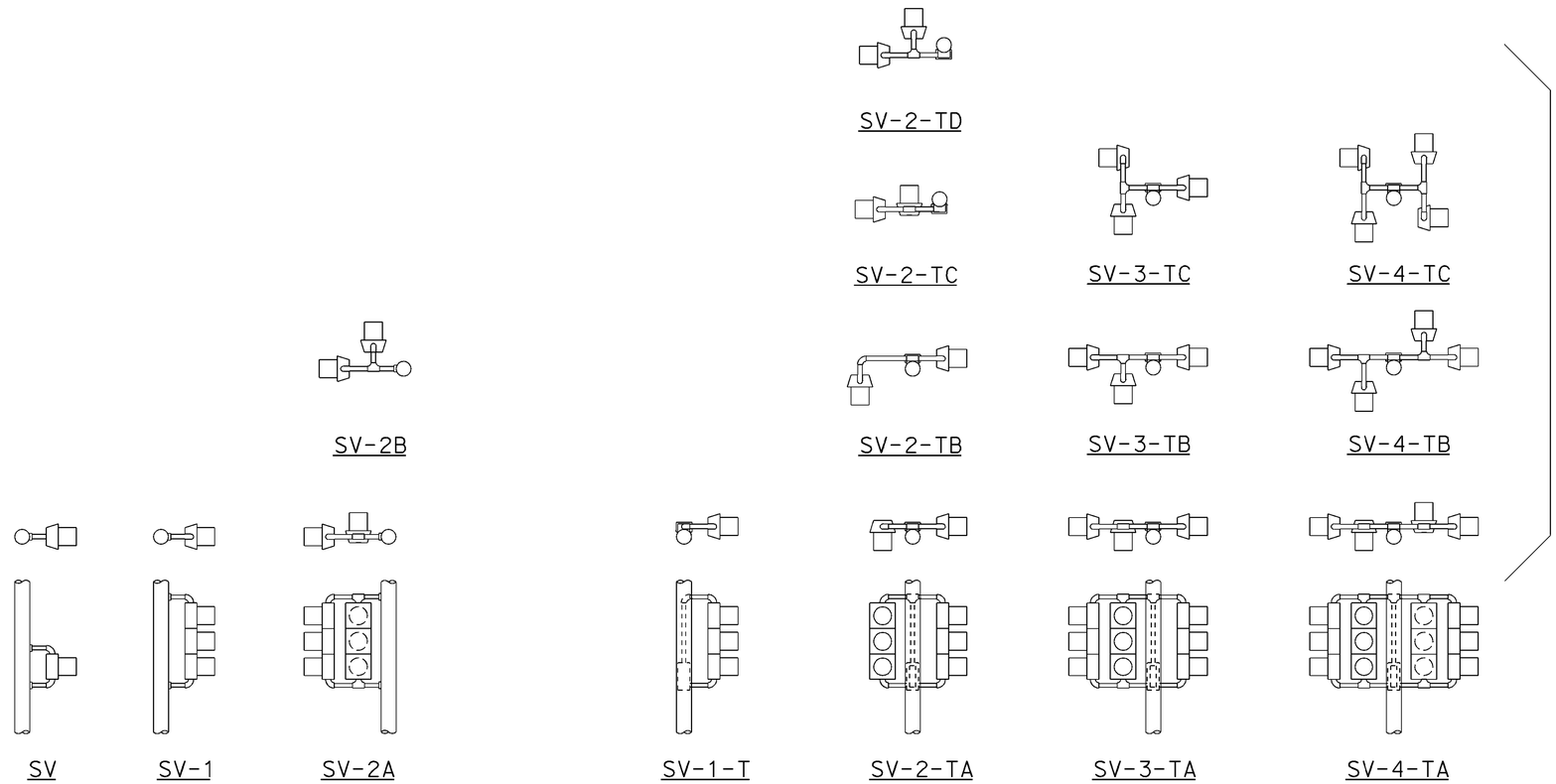


SIDE MOUNTINGS

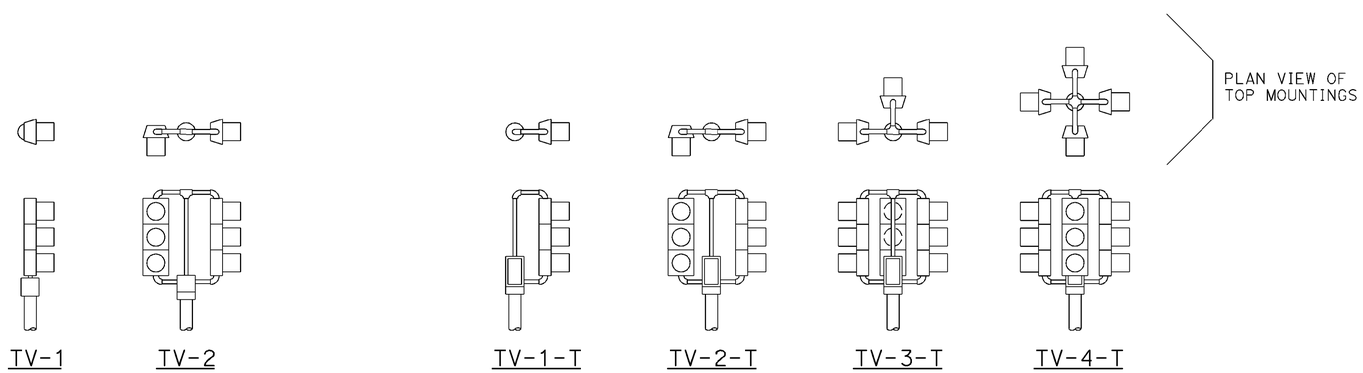


TOP MOUNTINGS

## ABBREVIATIONS:

| | |
|---|---|
| SV | SIDE MOUNTED VEHICLE SIGNALS |
| T | TERMINAL COMPARTMENT |
| TV | TOP MOUNTED VEHICLE SIGNALS |
| 1, 2, 3, 4 | NUMBER OF SIGNAL FACES (3 - SECTION, UNLESS OTHERWISE INDICATED) |
| A, B, C, D | CONFIGURATION OF SIGNALS |

## NOTES:

1. Mountings shall be oriented to provide maximum horizontal clearance to adjacent roadway.
2. Bracket arms shall be long enough to permit proper alignment of signals and backplate installation.
3. See Standard Plans ES-4D and ES-4E for attachment fitting details.

STATE OF CALIFORNIA
DEPARTMENT OF TRANSPORTATION

# ELECTRICAL SYSTEMS (VEHICULAR SIGNAL HEADS AND MOUNTINGS)

NO SCALE

RSP ES-4A DATED JULY 19, 2013 SUPERSEDES STANDARD PLAN ES-4A
DATED MAY 20, 2011 - PAGE 443 OF THE STANDARD PLANS BOOK DATED 2010.

**REVISED STANDARD PLAN RSP ES-4A**

DATE PLOTTED => 24-OCT-2013
TIME PLOTTED => 07:16

USERNAME => s115152
DGN FILE => 24e630va026.dgn

P:\proj1\02\4E630_plans\pse\24e630va026.dgn

7-9-13

| Dist | COUNTY | ROUTE | POST MILES TOTAL PROJECT | SHEET No. | TOTAL SHEETS |
|---|---|---|---|---|---|
| 02 | Sis | 96 | 56.0 | 66 | 92 |

Theresa Gabriel
REGISTERED ELECTRICAL ENGINEER

July 19, 2013
PLANS APPROVAL DATE

Theresa Aziz Gabriel No. E15129 Exp. 6-30-14 ELECTRICAL — REGISTERED PROFESSIONAL ENGINEER — STATE OF CALIFORNIA

*THE STATE OF CALIFORNIA OR ITS OFFICERS OR AGENTS SHALL NOT BE RESPONSIBLE FOR THE ACCURACY OR COMPLETENESS OF SCANNED COPIES OF THIS PLAN SHEET.*

TO ACCOMPANY PLANS DATED 10-25-13

## VISORS

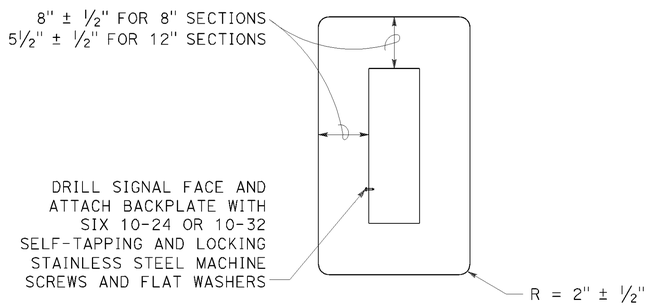


8" AND 12" SECTIONS

## BACKPLATE

1/16" minimum thickness
3001-14 aluminum or plastic when specified

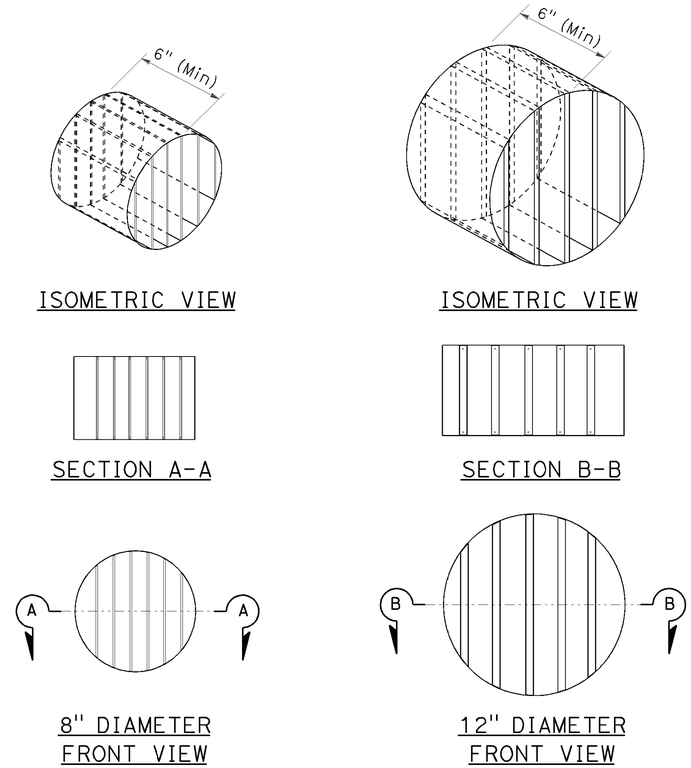


## DIRECTIONAL LOUVER

Directional louvers shall be oriented as directed by the Engineer and secured in place with one plated brass machine screw and nut.

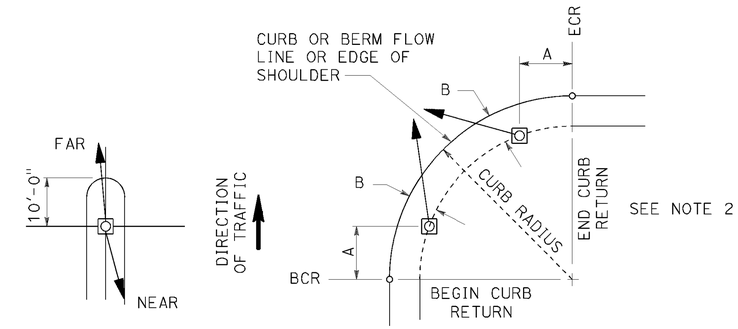


NOTES:

1. Typical signal pole placement unless dimensioned on plans.
2. For A and B dimensions, see Pole Schedule, or as directed by the Engineer.

## SIGNAL STANDARD PLACEMENT DIMENSIONS AND EQUIPMENT LOCATIONS

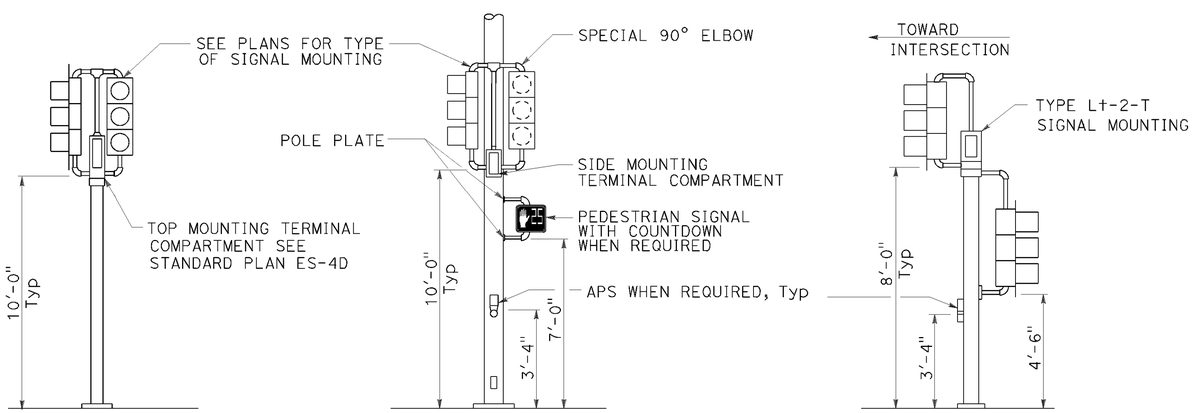


TOP MOUNTED SIGNALS (TV)
Type 1-A, 1-B, 1-C and 1-D standard as indicated on the plans

SIDE MOUNTED SIGNALS (SV AND SP)
Normally used on standards with luminaire or signal mast arm

LEFT TURN LANE SIGNAL
Type 1-A, 1-B, 1-C and 1-D standard as indicated on plans

## TYPICAL SIGNAL INSTALLATIONS

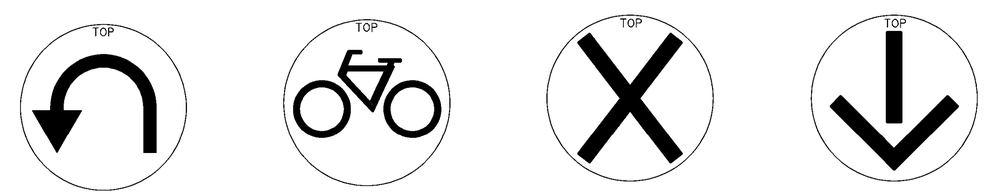


U-TURN | BICYCLE | LANE CONTROL | LANE CONTROL

## SIGNAL FACES

STATE OF CALIFORNIA
DEPARTMENT OF TRANSPORTATION

# ELECTRICAL SYSTEMS (VEHICULAR SIGNAL HEADS AND MOUNTINGS)

NO SCALE

RSP ES-4C DATED JULY 19, 2013 SUPERSEDES STANDARD PLAN ES-04C DATED MAY 20, 2011 - PAGE 445 OF THE STANDARD PLANS BOOK DATED 2010.

**REVISED STANDARD PLAN RSP ES-4C**

**2010 REVISED STANDARD PLAN RSP ES-4C**

DATE PLOTTED => 24-OCT-2013
TIME PLOTTED => 07:16

USERNAME => s115152
DGN FILE => 24e630va027.dgn
P:\proj1\02\4E630_plans\pse\24e630va027.dgn
7-10-13

| DIST | COUNTY | ROUTE | POST MILES TOTAL PROJECT | SHEET NO. | TOTAL SHEETS |
|---|---|---|---|---|---|
| 02 | Sis | 96 | 56.0 | 67 | 92 |

Theresa Gabriel
REGISTERED ELECTRICAL ENGINEER

July 19, 2013
PLANS APPROVAL DATE

REGISTERED PROFESSIONAL ENGINEER Theresa Aziz Gabriel No. E15129 Exp. 6-30-14 ELECTRICAL STATE OF CALIFORNIA

THE STATE OF CALIFORNIA OR ITS OFFICERS OR AGENTS SHALL NOT BE RESPONSIBLE FOR THE ACCURACY OR COMPLETENESS OF SCANNED COPIES OF THIS PLAN SHEET.

TO ACCOMPANY PLANS DATED 10-25-13

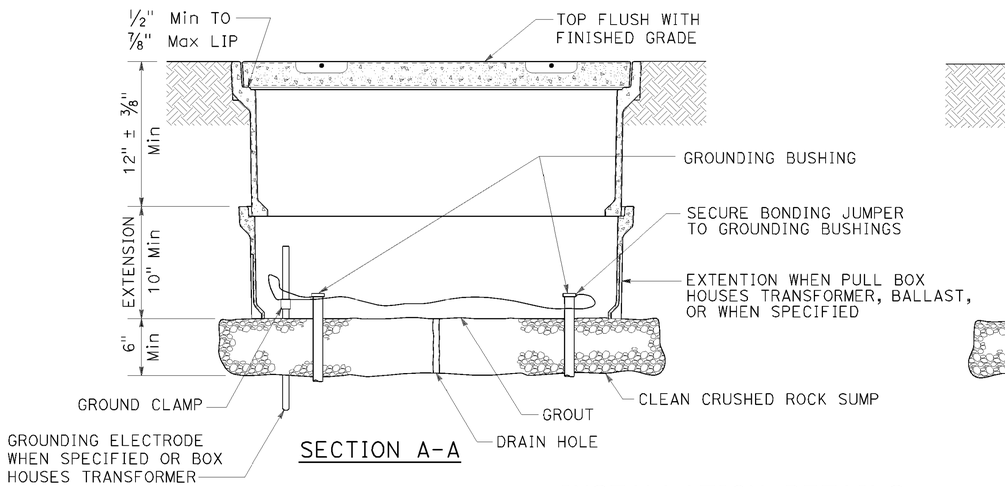


SECTION A-A

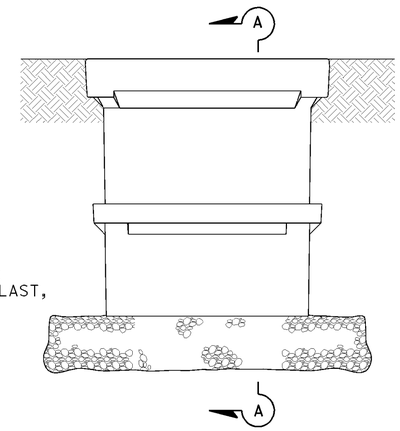


SIDE VIEW

## INSTALLATION DETAILS

### DETAIL A

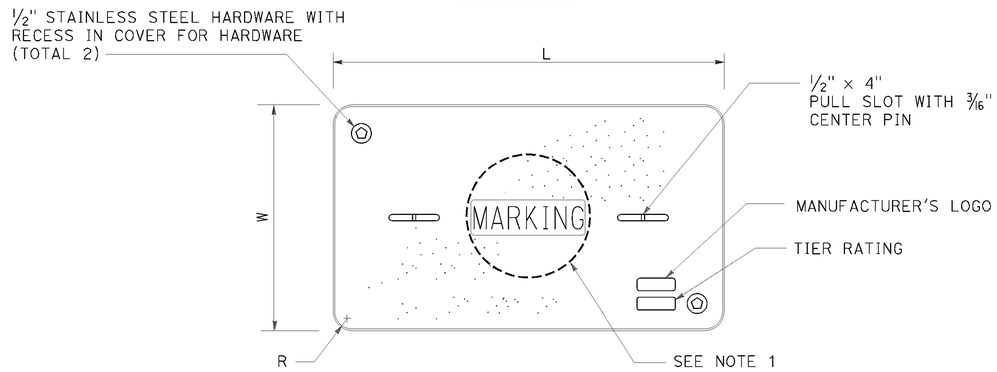


COVER TOP VIEW

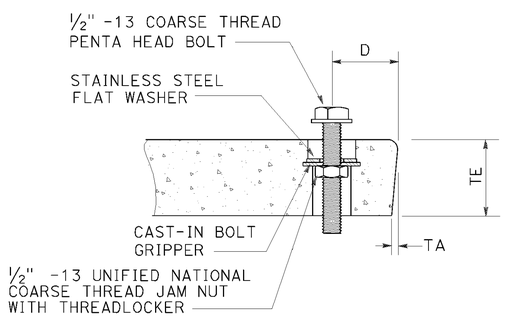


TYPICAL COVER CAPTIVE BOLT

OR SIMILAR

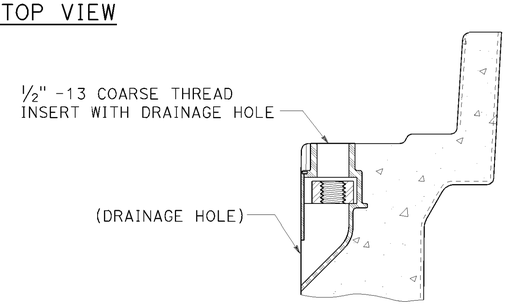


TYPICAL THREADED INSERT

OR SIMILAR

### DIMENSION TABLE

| PULL BOX | PULL BOX | | | COVER | | | | | | |
|---|---|---|---|---|---|---|---|---|---|---|
| | MINIMUM DEPTH BOX | MINIMUM DEPTH EXTENSION | MAXIMUM WEIGHT | L | W | R | TE | TA | D | MAXIMUM WEIGHT |
| No. 3 1/2 | 12" | N/A | 40 lb | 1' - 3 3/8" | 10 1/8" | 1 3/8" | 2" | 1/8" | 1 3/4" | 30 lb |
| No. 5 | 12" | 10" | 55 lb | 1' - 11 1/4" | 1' - 1 3/4" | 1 3/8" | 2" | 1/8" | 1 3/4" | 60 lb |
| No. 6 | 12" | 10" | 70 lb | 2' - 6 1/2" | 1' - 5 1/2" | 1 3/8" | 2" | 1/8" | 2" | 85 lb |

## NOTES:

1. Pull box covers shall be marked as follows: "SERVICE" Service circuits between service point and service disconnect; "SPRINKLER-CONTROL" sprinkler control circuits, 50 V or less; "CALTRANS" on all pull boxes, except pull boxes marked "SPRINKLER-CONTROL"; and "TELEPHONE" Telephone service;
   - A) No. 3 1/2 pull box.
     - 1) "SIGNAL" - Traffic signal circuits with or without lighting or sign lighting circuits.
     - 2) "LIGHTING" - Lighting or sign lighting circuits where voltage is under 600 V.
   - B) No. 5, 6, 9 or 9A pull box.
     - 1) "TRAFFIC SIGNAL" - Traffic signal circuits with or without lighting or sign lighting circuits.
     - 2) "LIGHTING" - Lighting or sign lighting circuits where voltage is under 600 V.
     - 3) "LIGHTING-HIGH VOLTAGE" - Lighting or sign lighting circuits where voltage is above 600 V.
     - 4) "IRRIGATION" - Circuits to irrigation controller 120 V or more.
     - 5) "RAMP METER" - Ramp meter circuits.
     - 6) "COUNT STATION" - Count or speed monitor circuits.
     - 7) "COMMUNICATIONS" - Communication circuits.
     - 8) "TOS COMMUNICATIONS" - TOS communication line.
     - 9) "TOS POWER" - TOS power.
     - 10) "TDC POWER" - Telephone demarcation cabinet power.
     - 11) "CCTV" - Closed circuit television circuits.
     - 12) "TMS" - Traffic monitoring station circuits.
     - 13) "CMS" - Changeable message sign circuits.
     - 14) "HAR" - Highway advisory radio circuits.
     - 15) "BOOSTER PUMP" - Booster pump circuit.
2. The nominal dimensions of the opening in which the cover sets shall be the same as the cover dimensions except the length and width dimensions shall be 1/8" greater.
3. Covers and boxes shall be interchangeable with California standard male and female gages. When interchanged with a standard male or female gage, the top surfaces shall be flush within 1/8". Top outside radius of covers and pull boxes shall have a 1/8" radius.
4. Pull box extension may be another pull box as long as the bottom edge of the pull box can fit into the cover opening.
5. All dimensions for the cover for non-traffic pull box are nominal values.

STATE OF CALIFORNIA
DEPARTMENT OF TRANSPORTATION

# ELECTRICAL SYSTEMS (NON-TRAFFIC PULL BOX)

NO SCALE

RSP ES-8A DATED JULY 19, 2013 SUPERSEDES RSP ES-8A DATED JANUARY 20, 2012 THAT SUPPLEMENTS THE STANDARD PLANS BOOK DATED 2010.

**REVISED STANDARD PLAN RSP ES-8A**

**2010 REVISED STANDARD PLAN RSP ES-8A**

| Dist | COUNTY | ROUTE | POST MILES TOTAL PROJECT | SHEET No. | TOTAL SHEETS |
|---|---|---|---|---|---|
| 02 | Sis | 96 | 56.0 | 68 | 92 |

Theresa Gabriel
REGISTERED ELECTRICAL ENGINEER

July 19, 2013
PLANS APPROVAL DATE

REGISTERED PROFESSIONAL ENGINEER
Theresa Aziz Gabriel
No. E15129
Exp. 6-30-14
ELECTRICAL
STATE OF CALIFORNIA

*THE STATE OF CALIFORNIA OR ITS OFFICERS OR AGENTS SHALL NOT BE RESPONSIBLE FOR THE ACCURACY OR COMPLETENESS OF SCANNED COPIES OF THIS PLAN SHEET.*

TO ACCOMPANY PLANS DATED 10-25-13

## ISOFOOTCANDLE CURVE - MINIMUM

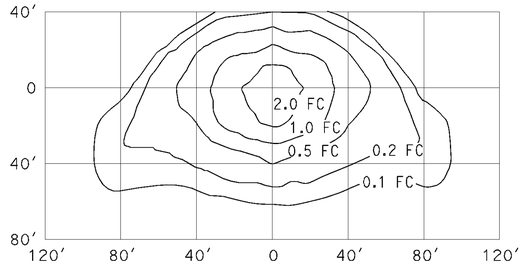


**TYPE III MEDIUM CUTOFF**

Cutoff Luminaire
34′ Mounting Height
Lamp operated at 22,000 lm
200-W high pressure sodium lamp
ANSI Designation S66

## ISOFOOTCANDLE CURVE - MINIMUM

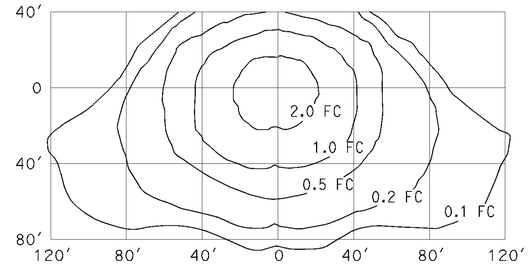


**TYPE III MEDIUM CUTOFF**

Cutoff Luminaire
40′ Mounting Height
Lamp operated at 37,000 lm
310-W high pressure sodium lamp
ANSI Designation S67

## ISOFOOTCANDLE CURVE - MINIMUM

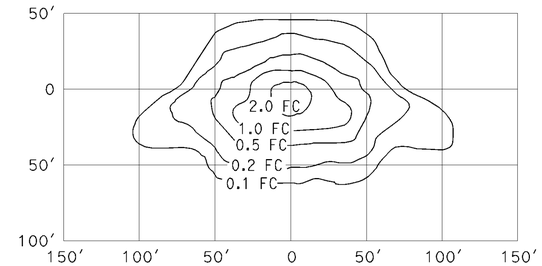


**TYPE III MEDIUM CUTOFF**

Cutoff Luminaire
30′ Mounting Height
Lamp operated at 16,000 lm
150-W high pressure sodium lamp
ANSI Designation S55

## ISOFOOTCANDLE CURVE - MINIMUM

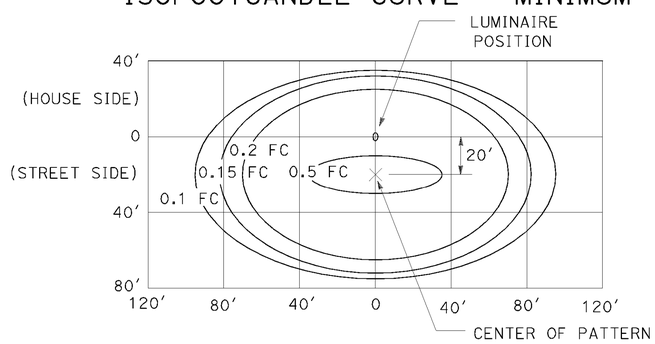


**LED LUMINAIRE ROADWAY 1**

165-W at 34′ Mounting Height

## ISOFOOTCANDLE CURVE - MINIMUM

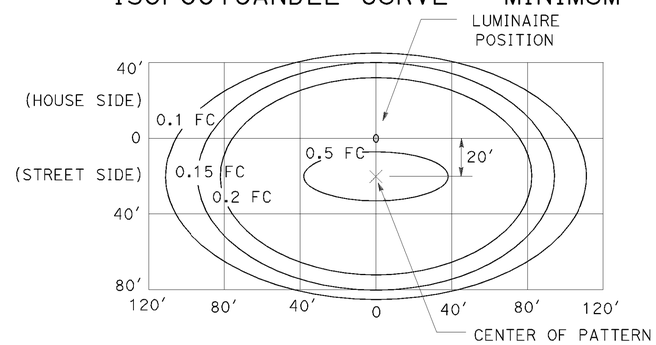


**LED LUMINAIRE ROADWAY 2**

235-W at 40′ Mounting Height

## ISOFOOTCANDLE CURVE - MINIMUM

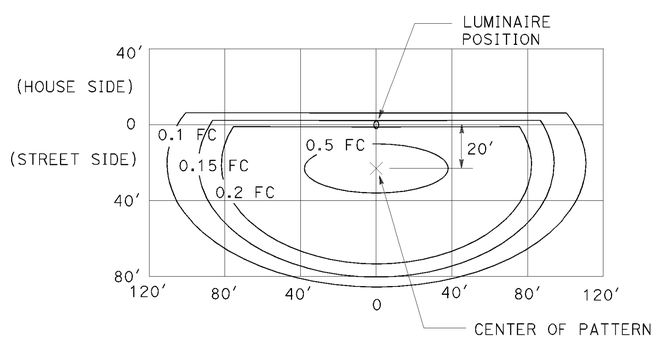


**LED LUMINAIRE ROADWAY 3**

235-W at 40′ Mounting Height
with back side control

## ISOFOOTCANDLE CURVE - MINIMUM

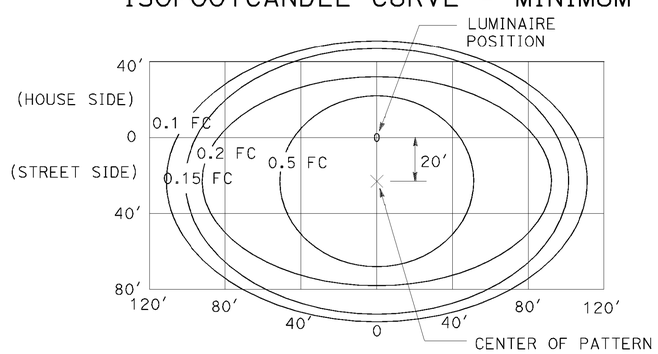


**LED LUMINAIRE ROADWAY 4**

300-W at 40′ Mounting Height

## ISOFOOTCANDLE CURVE - MINIMUM

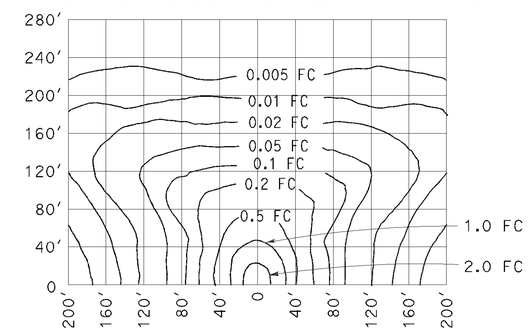


**LOW PRESSURE SODIUM LUMINAIRE**

40′ Mounting Height
Lamp operated at 33,000 lm
180-W low pressure sodium lamp

STATE OF CALIFORNIA
DEPARTMENT OF TRANSPORTATION

# ELECTRICAL SYSTEMS (ISOFOOTCANDLE DIAGRAMS)

NO SCALE

RSP ES-10A DATED JULY 19, 2013 SUPERSEDES RSP ES-10A DATED JULY 20, 2012 THAT SUPPLEMENTS THE STANDARD PLANS BOOK DATED 2010.

**REVISED STANDARD PLAN RSP ES-10A**

**2010 REVISED STANDARD PLAN RSP ES-10A**

DATE PLOTTED => 24-OCT-2013
TIME PLOTTED => 07:16

USERNAME => s115152
DGN FILE => 24e630va029.dgn

P:\proj1\02\4E630_plans\pse\24e630va029.dgn

7-9-13

| Dist | COUNTY | ROUTE | POST MILES TOTAL PROJECT | SHEET No. | TOTAL SHEETS |
|---|---|---|---|---|---|
| 02 | Sis | 96 | 56.0 | 69 | 92 |

REGISTERED ELECTRICAL ENGINEER

July 20, 2012
PLANS APPROVAL DATE

REGISTERED PROFESSIONAL ENGINEER
Jeffery G. McRae
No. E14512
Exp. 6-30-14
ELECTRICAL
STATE OF CALIFORNIA

*THE STATE OF CALIFORNIA OR ITS OFFICERS OR AGENTS SHALL NOT BE RESPONSIBLE FOR THE ACCURACY OR COMPLETENESS OF SCANNED COPIES OF THIS PLAN SHEET.*

TO ACCOMPANY PLANS DATED 10-25-13

## ISOFOOTCANDLE CURVE - MINIMUM

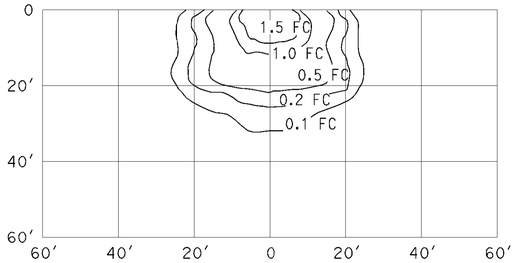


WALL LUMINAIRE
15′ Mounting Height
Lamp operated at 5,800 lm
70-W high pressure sodium lamp
ANSI Designation S62

## ISOFOOTCANDLE CURVE - MINIMUM

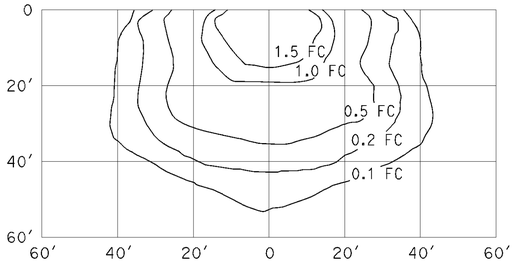


WALL LUMINAIRE
15′ Mounting Height
Lamp operated at 9,500 lm
100-W high pressure sodium lamp
ANSI Designation S54

## ISOFOOTCANDLE CURVE - MINIMUM

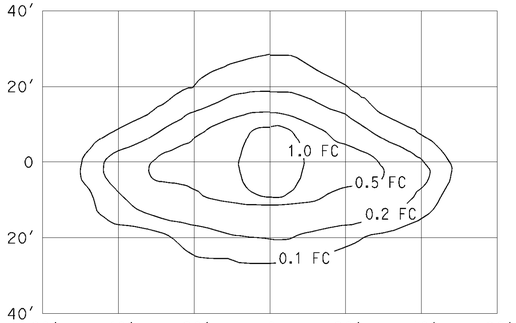


PENDANT SOFFIT LUMINAIRE
TYPE III SHORT
17′ Mounting Height
Lamp operated at 5,800 lm
70-W high pressure sodium lamp
ANSI Designation S62

## ISOFOOTCANDLE CURVE - MINIMUM

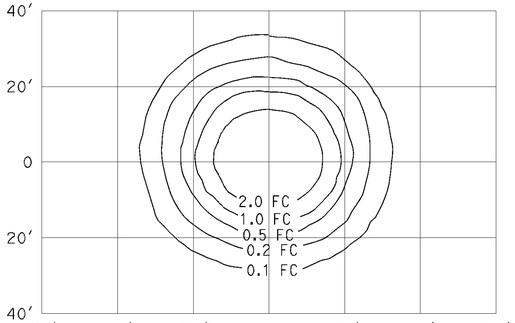


PENDANT SOFFIT LUMINAIRE
17′ Mounting Height
Lamp operated at 5,800 lm
70-W high pressure sodium lamp
ANSI Designation S62

## ISOFOOTCANDLE CURVE - MINIMUM

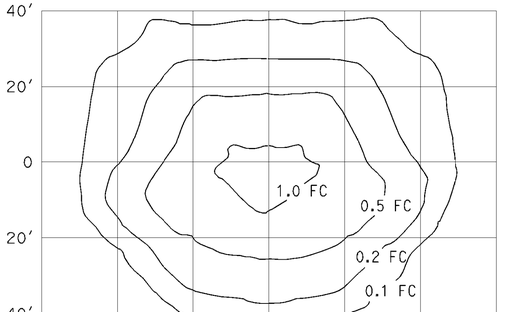


FLUSH SOFFIT LUMINAIRE
17′ Mounting Height
Lamp operated at 5,800 lm
70-W high pressure sodium lamp
ANSI Designation S62

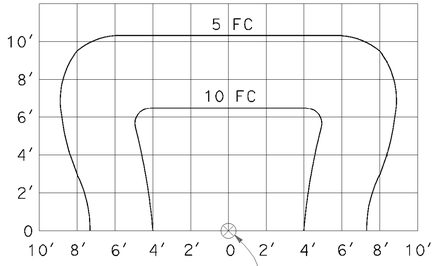


SIGN LIGHTING FIXTURE
ISOFOOTCANDLE DIAGRAM

NOTES:

1. Curves represent the minimum footcandle (FC) of initial illumination on a 10′-0" x 20′-0" panel.
2. The FC shown are with the fixture attached to the light fixture mounting channel which places the center of the source 4′-8" in front of panel and 1′-0" below the bottom edge.
3. Applicable lamp: 85-W fluorescent phosphor coated induction lamp.

STATE OF CALIFORNIA
DEPARTMENT OF TRANSPORTATION

# ELECTRICAL SYSTEMS (ISOFOOTCANDLE DIAGRAMS)

NO SCALE

RSP ES-10B DATED JULY 20, 2012 SUPPLEMENTS THE STANDARD PLANS BOOK DATED 2010.

**REVISED STANDARD PLAN RSP ES-10B**

**2010 REVISED STANDARD PLAN RSP ES-10B**

DATE PLOTTED => 24-OCT-2013
TIME PLOTTED => 07:16

| DIST | COUNTY | ROUTE | POST MILES TOTAL PROJECT | SHEET No. | TOTAL SHEETS |
|---|---|---|---|---|---|
| 02 | Sis | 96 | 56.0 | 70 | 92 |

REGISTERED CIVIL ENGINEER — DATE 10-09-2013

10-25-2013
PLANS APPROVAL DATE

REGISTERED PROFESSIONAL ENGINEER — Mario Guadamuz — No. 57992 — Exp. 06-30-2014 — CIVIL — STATE OF CALIFORNIA

*The State of California or its officers or agents shall not be responsible for the accuracy or completeness of electronic copies of this plan sheet.*

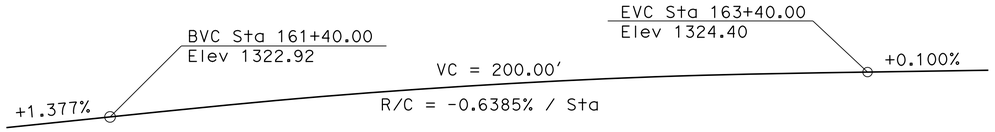


## PROFILE GRADE
No Scale

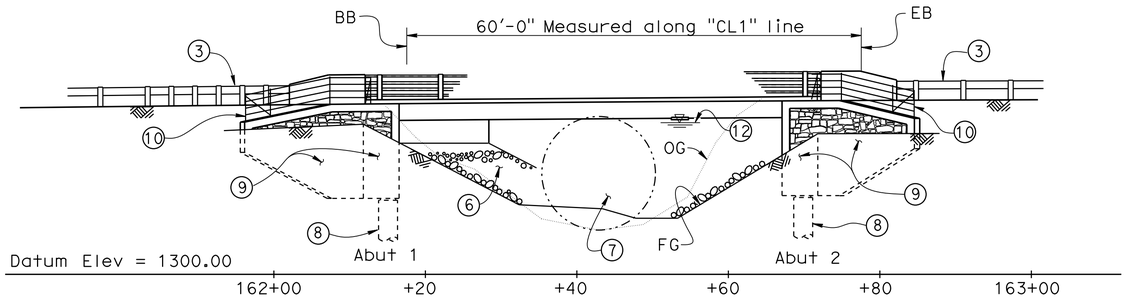


## ELEVATION
1" = 10'

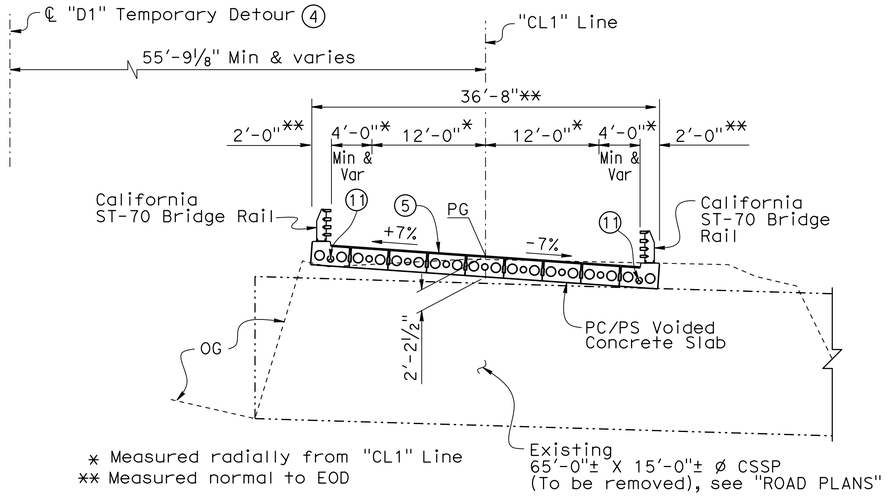


* Measured radially from "CL1" Line
** Measured normal to EOD

## TYPICAL SECTION
⅛" = 1'-0"

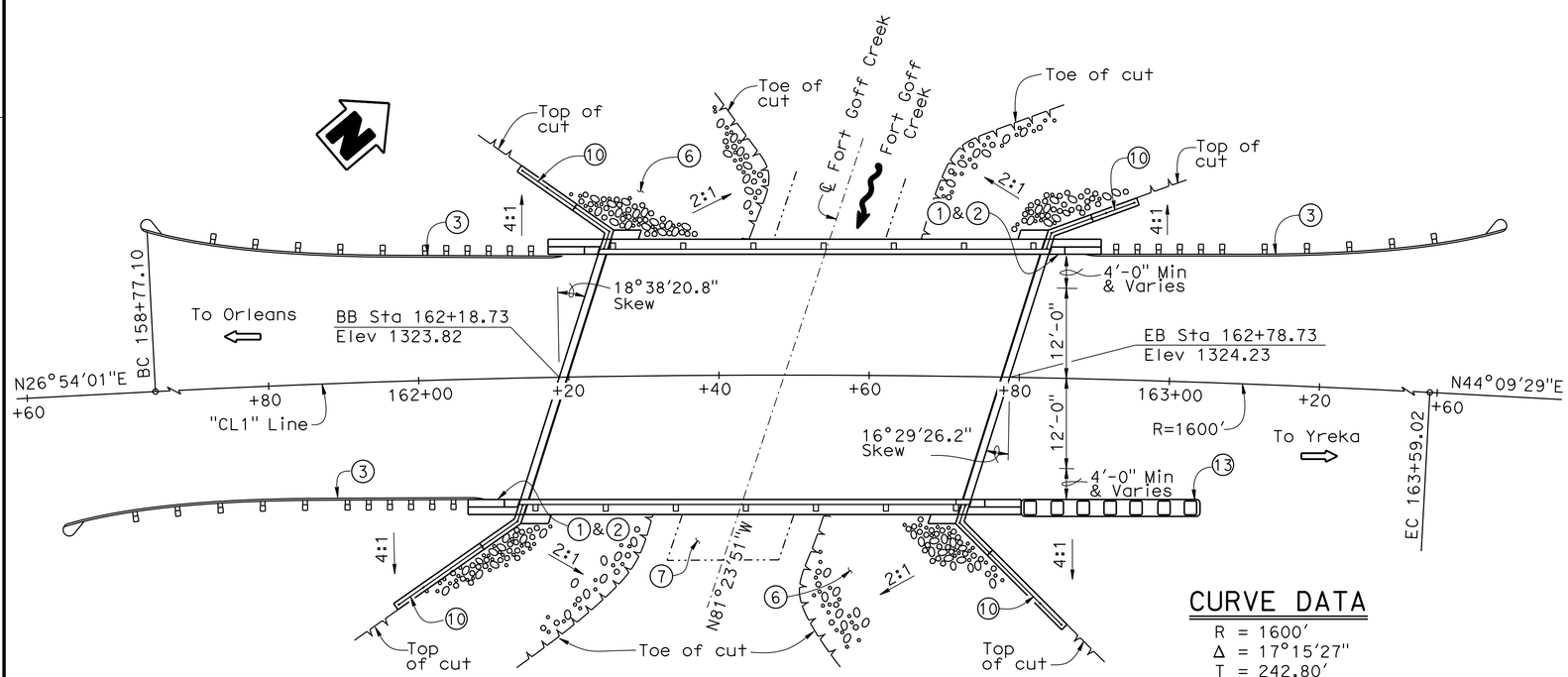


## PLAN
1" = 10'

## CURVE DATA
R = 1600'
Δ = 17°15'27"
T = 242.80'
L = 481.92'

NOTE:
For "GENERAL NOTES", "INDEX TO PLANS" and "STANDARD PLANS" list, see "INDEX TO PLANS" sheet.

NOTES:

1. Paint "Fort Goff Creek Bridge"
2. Paint " Br. No. 02-0200"
3. MBGR, see "Road Plans"
4. Temporary traffic detour to be constructed, see "Road Plans"
5. 1½" Polyester Concrete Overlay
6. Rock slope protection, see "Road Plans"
7. Existing 15'-0"± ø Corrugated Structural Steel Plate to be removed, see "Road Plans"
8. CIDH concrete pile in permanent steel casing
9. Precast Abutment and Wingwall
10. Cable railing, see "PRECAST ABUTMENT DETAILS NO. 2" sheet
11. 4"ø Conduit for telephone & fiber optic cable, Tot. 1 per Ext girder.
12. For Hydrologic summary, see "FOUNDATION PLAN" sheet
13. Crash Cushion, see "ROAD PLANS"

LEGEND:
—·—·— Indicates existing structure

CALTRANS ACCELERATED BRIDGE CONSTRUCTION

# FORT GOFF CREEK BRIDGE
## GENERAL PLAN

| | BY | CHECKED | | BY | CHECKED |
|---|---|---|---|---|---|
| DESIGN | Mario Guadamuz | Tracy Sanderson | LOAD & RESISTANCE FACTOR DESIGN — LIVE LOADING: HL93 W/"LOW-BOY"; PERMIT DESIGN VEHICLE | | |
| DETAILS | G. Dickerson / B. Jenko | Tracy Sanderson | LAYOUT | Mario Guadamuz | Tracy Sanderson |
| QUANTITIES | B. Jenko | G. Dickerson | SPECIFICATIONS | Karen Doll | PLANS AND SPECS COMPARED Mario Guadamuz |

DESIGN ENGINEER

STATE OF CALIFORNIA
DEPARTMENT OF TRANSPORTATION

DIVISION OF ENGINEERING SERVICES
STRUCTURE DESIGN
DESIGN BRANCH 7

BRIDGE NO. 02-0200
POST MILE 56.0

ORIGINAL SCALE IN INCHES FOR REDUCED PLANS 0 1 2 3

UNIT: 3592
PROJECT NUMBER & PHASE: 0212000010 1
CONTRACT NO.: 02-4E6301

DISREGARD PRINTS BEARING EARLIER REVISION DATES

REVISION DATES: 2-18-13 8-7-13 9/30/13

SHEET 1 OF 23

FILE => 02-4e6300-a-gp_gp.dgn

STRUCTURES DESIGN GENERAL PLAN SHEET (ENGLISH) (REV.09-01-10)

USERNAME => s136697 DATE PLOTTED => 22-OCT-2013 TIME PLOTTED => 13:16

| DIST | COUNTY | ROUTE | POST MILES TOTAL PROJECT | SHEET No. | TOTAL SHEETS |
|---|---|---|---|---|---|
| 02 | Sis | 96 | 56.0 | 71 | 92 |

REGISTERED CIVIL ENGINEER 10-09-2013 DATE

10-25-2013
PLANS APPROVAL DATE

REGISTERED PROFESSIONAL ENGINEER Mario Guadamuz No. 57992 Exp. 06-30-2014 CIVIL STATE OF CALIFORNIA

*The State of California or its officers or agents shall not be responsible for the accuracy or completeness of electronic copies of this plan sheet.*

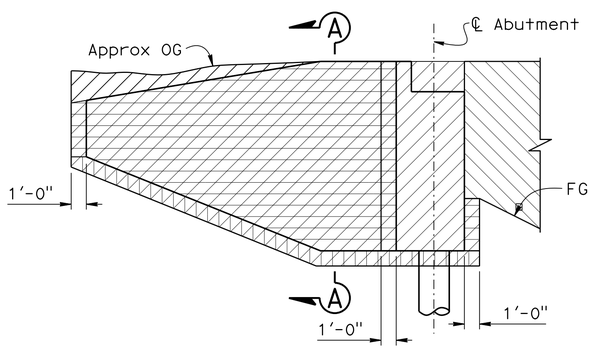


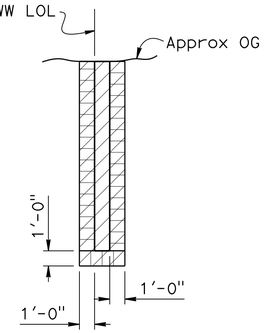


SECTION A-A

## LIMITS OF PAYMENT FOR EXCAVATION AND BACKFILL

No Scale

- Structure Excavation
- Structure Backfill
- Class 2 Aggregate Base Material (Leveling Pad)
- Roadway Excavation, see "Road Plans"

## CONSTRUCTION SEQUENCE

1. Construct CIDH concrete piling; confirm that top of piles are correctly positioned and within 3 inches of the alignment shown on plans.
2. Prepare leveling pads.
3. Place abutment stems on leveling pads.
4. Verify abutment stems are correctly positioned and grout keyways with non-shrink grout.
5. Stress abutment tie rods to the specified Pjack. Grout ducts after stressing with prestress grout.
6. Fill abutment post-tensioning block-outs with rapid setting concrete (patch).
7. Grout abutment stem voids, vents and grout holes with bearing grout.
8. After the bearing grout has reached 2.6 ksi, place the girders.
9. Place transverse tie rods through girder diaphragms.
10. Fill longitudinal keyways with non-shrink grout. Grout shall attain a minimum compressive strength of 5.0ksi in 24 hours.
11. Stress tie rods to Pjack force after grout in longitudinal keyways has attained a minimum compressive strength of 5.0 ksi.
12. Grout tie rod ducts with prestress grout.
13. Fill girder tie rod anchorage block-outs with rapid setting concrete (patch).
14. Install wing walls.
15. Construct cast-in-place back wall and shear keys.
16. Install bridge rail and cable railing.
17. Prepare concrete deck surface and place polyester concrete overlay.

## NOTES:

1. Precast elements must be pre-assembled before shipping to the job site to verify tolerances and assure proper fit-up between elements.
2. Keyways must be sandblasted prior to erection.
3. The procedure for leveling and making vertical adjustments in the abutment elements must be provided and approved by the engineer prior to pre-assembly.
4. Final pile positions must not deviate from the locations designated in these plans by more than 3 inches in any direction.
5. Abutment seat surface must conform to the bridge cross slope and profile grade.
6. Contractor to provide temporary bracing for all precast elements until grout has attained minimum strength for load transfer. For minimum strength for laod transfer, see "DECK CONTOURS" sheet.

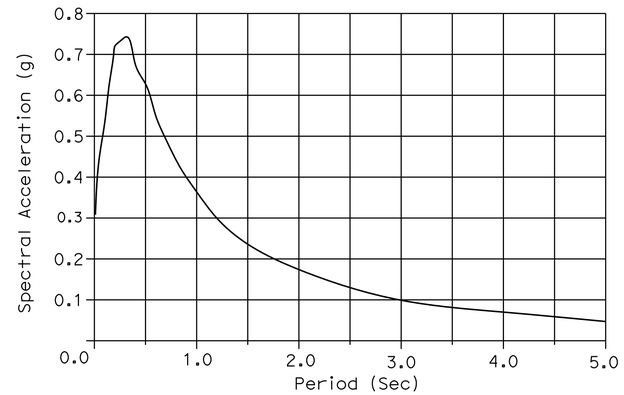


## SITE SPECIFIC ACCELERATION RESPONSE SPECTRUM

## GENERAL NOTES LOAD AND RESISTANCE FACTOR DESIGN

**DESIGN:** AASHTO LRFD Bridge Design Specifications, 4th edition and the California Amendments preface dated 2011

**SEISMIC DESIGN:**
Caltrans Seismic Design Criteria (SDC), Version 1.6 dated 2010

**DEAD LOAD:**
Includes 35 psf for future wearing surface.

**LIVE LOADING:**
HL93 w/"LOW-BOY" and permit design load.

**SEISMIC LOADING:**
Soil profile: Type D
Moment Magnitude: 6.5
Peak Rock Acceleration 0.31g
Site Specific ARS

**CONCRETE:**
fy = 60 ksi
f'c = 4 ksi
n = 8

For girder pretensioning, see "GIRDER DETAIL" sheet.
For end diaphragm and intermediate diaphragm post-tensioning, see "GIRDER LAYOUT" sheet.

**Abutment post-tensioning:**
1⅜" High strength Tie Rod 150 ksi ASTM A722
Pjack = 100 k per Tie Rod

**STRUCTURAL STEEL (new construction):**
fy = ASTM A709 Grade 50
Steel Pipe Piles: ASTM 252

## INDEX TO PLANS


| SHEET NO. | TITLE |
|---|---|
| 1. | GENERAL PLAN |
| 2. | INDEX TO PLANS |
| 3. | DECK CONTOURS |
| 4. | FOUNDATION PLAN |
| 5. | PRECAST ABUTMENT LAYOUT |
| 6. | PRECAST ABUTMENT DETAILS NO. 1 |
| 7. | PRECAST ABUTMENT DETAILS NO. 2 |
| 8. | PRECAST ABUTMENT DETAILS NO. 3 |
| 9. | PRECAST ABUTMENT DETAILS NO. 4 |
| 10. | CIDH CONCRETE PILE DETAILS |
| 11. | TYPICAL SECTION |
| 12. | GIRDER LAYOUT |
| 13. | GIRDER DETAILS |
| 14. | TIE ROD BLOCKOUT DETAILS |
| 15. | CALIFORNIA ST-70 BRIDGE RAIL DETAILS NO. 1 |
| 16. | CALIFORNIA ST-70 BRIDGE RAIL DETAILS NO. 2 |
| 17. | CALIFORNIA ST-70 BRIDGE RAIL DETAILS NO. 3 |
| 18. | CALIFORNIA ST-70 BRIDGE RAIL DETAILS NO. 4 |
| 19. | ARCHITECTURAL TREATMENT NO. 1 |
| 20. | ARCHITECTURAL TREATMENT NO. 2 |
| 21. | ARCHITECTURAL TREATMENT NO. 3 |
| 22. | ARCHITECTURAL TREATMENT NO. 4 |
| 23. | LOG OF TEST BORINGS |


## STANDARD PLANS DATED 2010

| | | |
|---|---|---|
| | A10A | ABBREVIATIONS (SHEET 1 OF 2) |
| RSP | A10B | ABBREVIATIONS (SHEET 2 OF 2) |
| | A10C | LINES AND SYMBOLS (SHEET 1 OF 3) |
| | A10D | LINES AND SYMBOLS (SHEET 2 OF 3) |
| | A10E | LINES AND SYMBOLS (SHEET 3 OF 3) |
| | A10F | LEGEND - SOIL (SHEET 1 OF 2) |
| | A10G | LEGEND - SOIL (SHEET 2 OF 2) |
| | A10H | LEGEND - ROCK |
| | B0-3 | BRIDGE DETAILS |
| RSP | B11-47 | CABLE RAILING |
| | B0-13 | BRIDGE DETAILS |
| | B6-21 | JOINT SEALS (MAXIMUM MOVEMENT RATING = 2") |
| | B7-10 | UTILITY OPENING - BOX GIRDER |

STANDARD PLAN SHEET No.

DETAIL No.

| | | | |
|---|---|---|---|
| DESIGN | BY Mario Guadamuz | CHECKED Tracy Sanderson | |
| DETAILS | BY Gerald Dickerson | CHECKED Tracy Sanderson | |
| QUANTITIES | BY Bruno Jenko | CHECKED Gerald Dickerson | |

STATE OF CALIFORNIA
DEPARTMENT OF TRANSPORTATION

DIVISION OF ENGINEERING SERVICES
STRUCTURE DESIGN
DESIGN BRANCH 7

BRIDGE NO. 02-0200
POST MILE 56.0

# FORT GOFF CREEK BRIDGE
## INDEX TO PLANS

STRUCTURES DESIGN DETAIL SHEET (ENGLISH) (REV. 09-01-10)

ORIGINAL SCALE IN INCHES FOR REDUCED PLANS 0 1 2 3

UNIT: 3592
PROJECT NUMBER & PHASE: 0212000010 1
CONTRACT NO.: 02-4E6301

DISREGARD PRINTS BEARING EARLIER REVISION DATES

REVISION DATES 2-14-13 9/30/13 10/3/13

SHEET 2 OF 23

FILE => 02-4e6300-b-itp.dgn

USERNAME => s136697 DATE PLOTTED => 22-OCT-2013 TIME PLOTTED => 13:16

| DIST | COUNTY | ROUTE | POST MILES TOTAL PROJECT | SHEET No. | TOTAL SHEETS |
|---|---|---|---|---|---|
| 02 | Sis | 96 | 56.0 | 72 | 92 |

REGISTERED CIVIL ENGINEER 10-09-2013 DATE

10-25-2013
PLANS APPROVAL DATE

REGISTERED PROFESSIONAL ENGINEER Mario Guadamuz No. 57992 Exp. 6-30-14 CIVIL STATE OF CALIFORNIA

*The State of California or its officers or agents shall not be responsible for the accuracy or completeness of electronic copies of this plan sheet.*

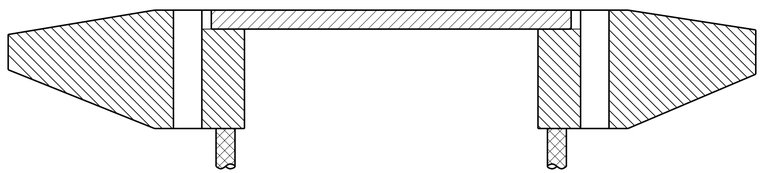

## CONCRETE STRENGTH AND TYPE LIMITS

No Scale

- PC/PS Concrete Slab. See "GIRDER DETAILS" sheet
- PC Abutment / Wingwall (4.0 ksi @ 28 days)
- CIDH Concrete Pile
- Structural Concrete Bridge (2.5 ksi @ 3 days. Required for load transfer for temporary support 4 ksi @ 28 days)

| LOCATION | GROUT TYPE | MINIMUM STRENGTH FOR LOAD TRANSFER | STRENGTH AT 28 DAYS |
|---|---|---|---|
| Abutment Keyway | Non-shrink | 5 ksi @ 24 Hrs | 14 ksi |
| Abutment Tie-Rod | Post-tensioning | 3 ksi @ 7 days | 5 ksi |
| Abutment Stem Voids | Bearing | 2.6 ksi @ 24 Hrs | 6 ksi |
| Girder Longitudinal keyways | Non-shrink | 5 ksi @ 24 Hrs | 14 ksi |
| Girder Diaphragm Tie Rods | Post-tensioning | 3 ksi @ 7 days | 5 ksi |

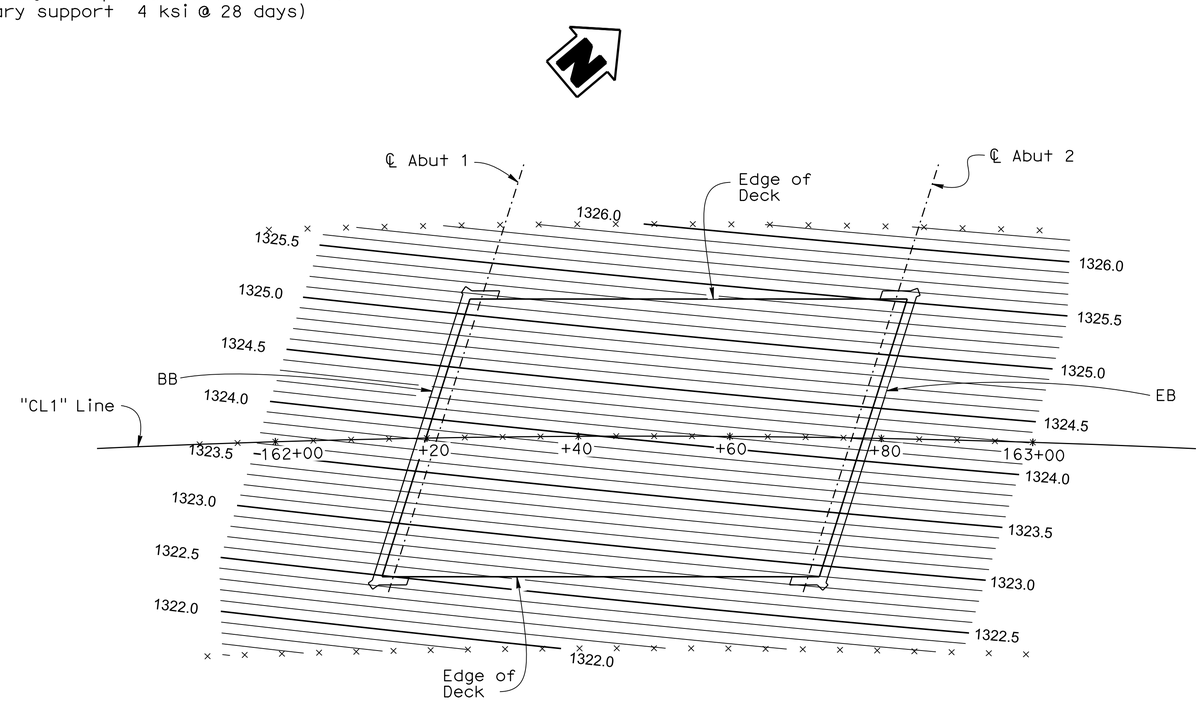


## PLAN

1" = 10'

### QUANTITIES

| | | |
|---|---|---|
| PREPARE CONCRETE BRIDGE DECK SURFACE | 1,995 | SQFT |
| FURNISH POLYESTER CONCRETE OVERLAY | 250 | CF |
| PLACE POLYESTER CONCRETE OVERLAY | 1,995 | SQFT |
| STRUCTURE EXCAVATION (BRIDGE) | 350 | CY |
| STRUCTURE BACKFILL (BRIDGE) | 145 | CY |
| CLASS 2 AGGREGATE BASE (CY) | 30 | CY |
| 30" PERMANENT STEEL CASING | 210 | LF |
| 30" CAST-IN-DRILLED-HOLE CONCRETE PILING | 210 | LF |
| 24" CAST-IN-DRILLED-HOLE CONCRETE PILING (ROCK SOCKET) | 183 | LF |
| PRESTRESSING (TRANSVERSE TIE RODS) | LUMP | SUM |
| STRUCTURAL CONCRETE, BRIDGE | 24 | CY |
| BEARING GROUT | 4 | CY |
| ARCHITECTURAL TREATMENT | 680 | SQFT |
| FURNISH PRECAST PRESTRESSED CONCRETE VOIDED SLAB | 2,130 | SQFT |
| FURNISH PRECAST ABUTMENT | 6 | EA |
| FURNISH PRECAST WINGWALL | 4 | EA |
| ERECT PRECAST PRESTRESSED CONCRETE VOIDED SLAB | 9 | EA |
| ERECT PRECAST ABUTMENT | 6 | EA |
| ERECT PRECAST WINGWALL | 4 | EA |
| JOINT SEAL (MR 1") | 77 | LF |
| BAR REINFORCING STEEL (BRIDGE) | 16,530 | LB |
| BAR REINFORCING STEEL (EPOXY COATED) (BRIDGE) | 3,950 | LB |
| PREPARE AND STAIN CONCRETE | 680 | SQFT |
| CABLE RAILING | 68 | LF |
| CALIFORNIA ST-70 BRIDGE RAIL (MODIFIED) | 120 | LF |
| CONCRETE BARRIER (TRANSITION ANCHOR BLOCK) | 26 | LF |

NOTES:

× - Indicates 5'-0" intervals along station line

Contours do not include camber

Contour interval = 0.1'

Contours include 1½" Polyester Concrete Overlay

| | BY | CHECKED |
|---|---|---|
| DESIGN | Mario Guadamuz | Tracy Sanderson |
| DETAILS | Gerald Dickerson | Tracy Sanderson |
| QUANTITIES | Bruno Jenko | Gerald Dickerson |

STATE OF CALIFORNIA
DEPARTMENT OF TRANSPORTATION

DIVISION OF ENGINEERING SERVICES
STRUCTURE DESIGN
DESIGN BRANCH 7

BRIDGE NO. 02-0200
POST MILE 56.0

# FORT GOFF CREEK BRIDGE
## DECK CONTOURS

STRUCTURES DESIGN DETAIL SHEET (ENGLISH) (REV. 09-01-10)

ORIGINAL SCALE IN INCHES FOR REDUCED PLANS 0 1 2 3

UNIT: 3592
PROJECT NUMBER & PHASE: 0212000010 1
CONTRACT NO.: 02-4E6301

DISREGARD PRINTS BEARING EARLIER REVISION DATES

REVISION DATES: 3-07-13 10/3/13 9/30/13

SHEET 3 OF 23

FILE => 02-4e6300-d-dc.dgn

USERNAME => s136697 DATE PLOTTED => 22-OCT-2013 TIME PLOTTED => 13:16

| DIST | COUNTY | ROUTE | POST MILES TOTAL PROJECT | SHEET No. | TOTAL SHEETS |
|---|---|---|---|---|---|
| 02 | Sis | 96 | 56.0 | 73 | 92 |

REGISTERED CIVIL ENGINEER — DATE 10-09-2013

10-25-2013
PLANS APPROVAL DATE

REGISTERED PROFESSIONAL ENGINEER — Mario Guadamuz — No. 57992 — Exp. 06-30-2014 — CIVIL — STATE OF CALIFORNIA

*The State of California or its officers or agents shall not be responsible for the accuracy or completeness of electronic copies of this plan sheet.*

## CURVE DATA

| No. | R | Δ | T | L |
|---|---|---|---|---|
| Ⓐ | 1600.00 | 17°15'27" | 242.80 | 481.92 |

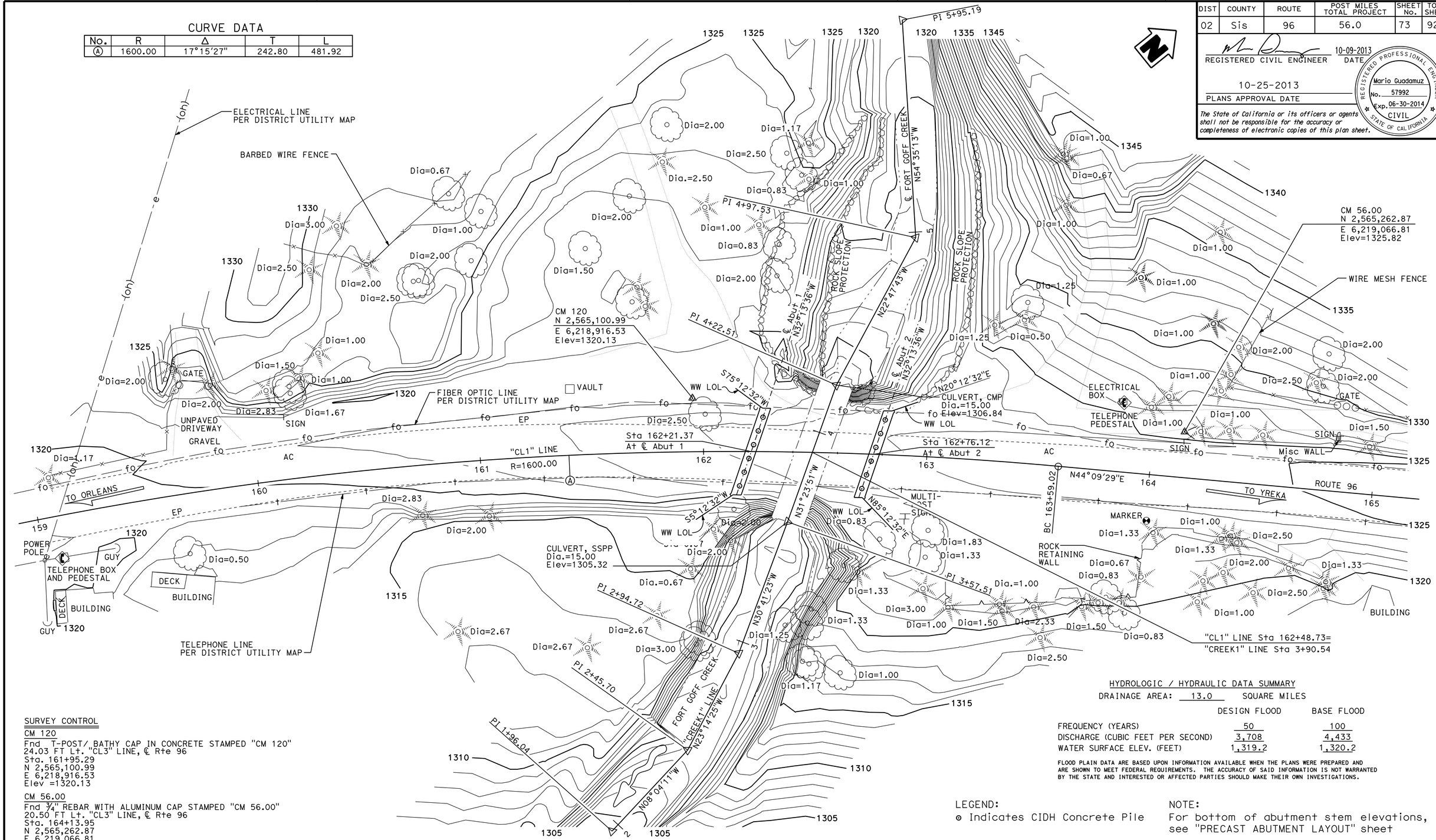


## HYDROLOGIC / HYDRAULIC DATA SUMMARY

DRAINAGE AREA: 13.0 SQUARE MILES

| | DESIGN FLOOD | BASE FLOOD |
|---|---|---|
| FREQUENCY (YEARS) | 50 | 100 |
| DISCHARGE (CUBIC FEET PER SECOND) | 3,708 | 4,433 |
| WATER SURFACE ELEV. (FEET) | 1,319.2 | 1,320.2 |

FLOOD PLAIN DATA ARE BASED UPON INFORMATION AVAILABLE WHEN THE PLANS WERE PREPARED AND ARE SHOWN TO MEET FEDERAL REQUIREMENTS. THE ACCURACY OF SAID INFORMATION IS NOT WARRANTED BY THE STATE AND INTERESTED OR AFFECTED PARTIES SHOULD MAKE THEIR OWN INVESTIGATIONS.

## SURVEY CONTROL

CM 120
Fnd T-POST/ BATHY CAP IN CONCRETE STAMPED "CM 120"
24.03 FT Lt. "CL3" LINE, ℄ Rte 96
Sta. 161+95.29
N 2,565,100.99
E 6,218,916.53
Elev =1320.13

CM 56.00
Fnd ¾" REBAR WITH ALUMINUM CAP STAMPED "CM 56.00"
20.50 FT Lt. "CL3" LINE, ℄ Rte 96
Sta. 164+13.95
N 2,565,262.87
E 6,219,066.81
Elev =1325.82

LEGEND:
⊙ Indicates CIDH Concrete Pile

NOTE:
For bottom of abutment stem elevations, see "PRECAST ABUTMENT LAYOUT" sheet

PRELIMINARY INVESTIGATION SECTION

| SCALE | VERT.DATUM NAVD88 | PHOTOGRAMMETRY AS OF: X | | | |
|---|---|---|---|---|---|
| 1"=20' | HORZ.DATUM NAD83 (2004.69) | SURVEYED | BY DISTRICT/D.IVY | CHECKED | BY D.IVY 01/2012 |
| ALIGNMENT TIES Dist. Traverse Sheet | | DRAFTED | BY T.ZOLNIKOV 01/2012 | CHECKED | BY T.SCHMALZ 01/2012 |

| | | |
|---|---|---|
| DESIGN | BY Mario Guadamuz | CHECKED Tracy Sanderson |
| DETAILS | BY Gerald Dickerson | CHECKED Tracy Sanderson |
| QUANTITIES | BY Bruno Jenko | CHECKED Gerald Dickerson |

STATE OF CALIFORNIA
DEPARTMENT OF TRANSPORTATION

DIVISION OF ENGINEERING SERVICES
STRUCTURE DESIGN
DESIGN BRANCH 7

BRIDGE NO. 02-0200
POST MILE 56.00

# FORT GOFF CREEK BRIDGE
# FOUNDATION PLAN

STRUCTURES FOUNDATION PLAN SHEET (ENGLISH) (REV. 09-01-10)

ORIGINAL SCALE IN INCHES FOR REDUCED PLANS 0 1 2 3

UNIT: 3646
PROJECT NUMBER & PHASE: 0212000010 1
CONTRACT NO.: 02-4E6301

DISREGARD PRINTS BEARING EARLIER REVISION DATES → 03/05/12 10/3/13 10/01/13

SHEET 4 OF 23

FILE => 02-4e6300-e-fp102.dgn

USERNAME => s136697 DATE PLOTTED => 22-OCT-2013 TIME PLOTTED => 13:16

NOTES:

1. For "SECTION A-A" and "SECTION B-B", see "PRECAST ABUTMENT DETAILS NO. 1" sheet. For "SECTION C-C" and "SECTION D-D", see "PRECAST ABUTMENT DETAILS NO. 2" sheet.
2. For precast abutment and wingwall installation sequence, see "Construction Sequence" on "INDEX TO PLANS" sheet.
3. Location of vent hole may be adjusted with approval by the Engineer.
4. See "ROAD PLANS" for 4" ø conduit layout beyond abutments.
5. Cable Railing, Concrete Barrier (Transition Anchor Block) and superstructure not shown

LEGEND:

Indicates closure pour

| DIST | COUNTY | ROUTE | POST MILES TOTAL PROJECT | SHEET No. | TOTAL SHEETS |
|---|---|---|---|---|---|
| 02 | Sis | 96 | 56.0 | 74 | 92 |

REGISTERED CIVIL ENGINEER — DATE 10-09-2013

10-25-2013
PLANS APPROVAL DATE

REGISTERED PROFESSIONAL ENGINEER — Mario Guadamuz No. 57992 Exp. 06-30-2014 CIVIL — STATE OF CALIFORNIA

*The State of California or its officers or agents shall not be responsible for the accuracy or completeness of electronic copies of this plan sheet.*

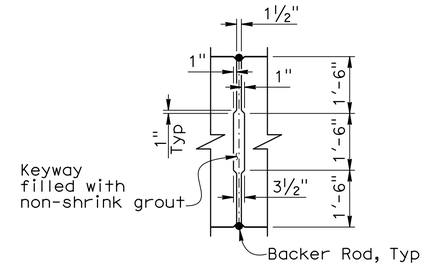


## KEYWAY DETAIL

No Scale

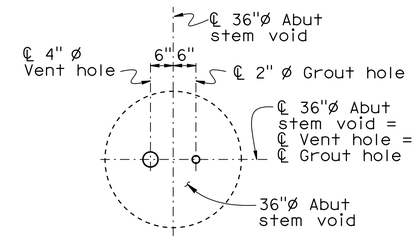


## VENT AND GROUT HOLE DETAIL

No Scale

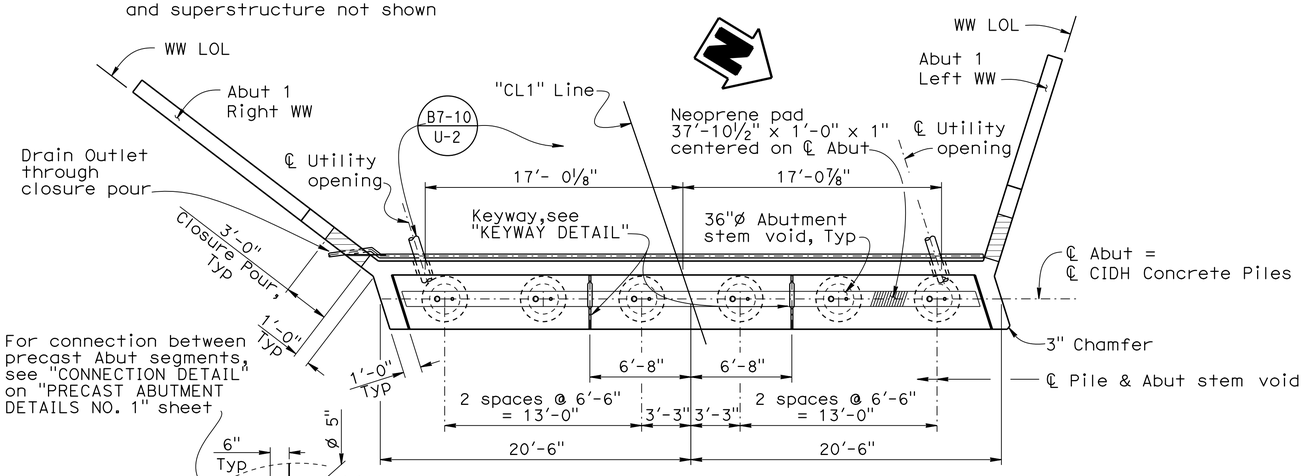


## ABUTMENT 1 PLAN

1" = 5'

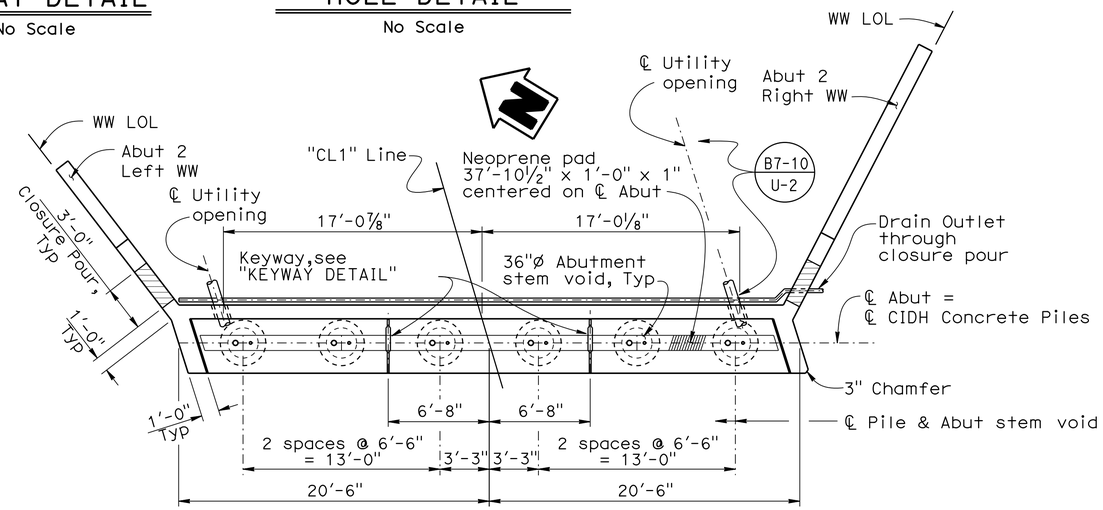


## ABUTMENT 2 PLAN

1" = 5'

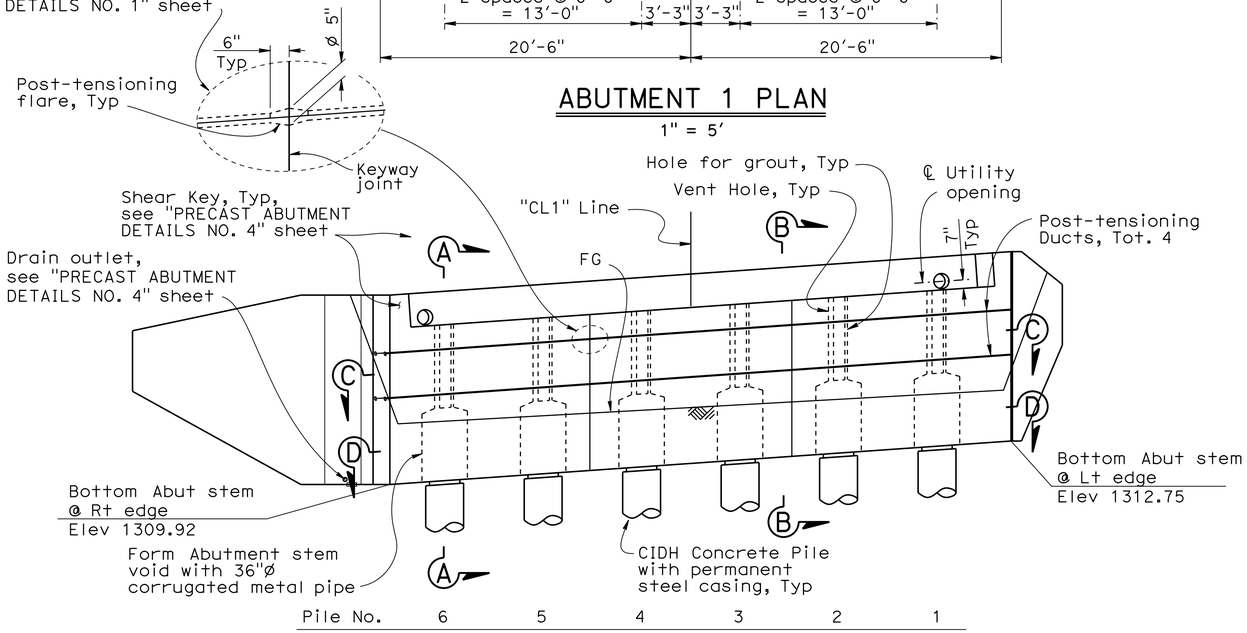


## ABUTMENT 1 ELEVATION

1" = 5'

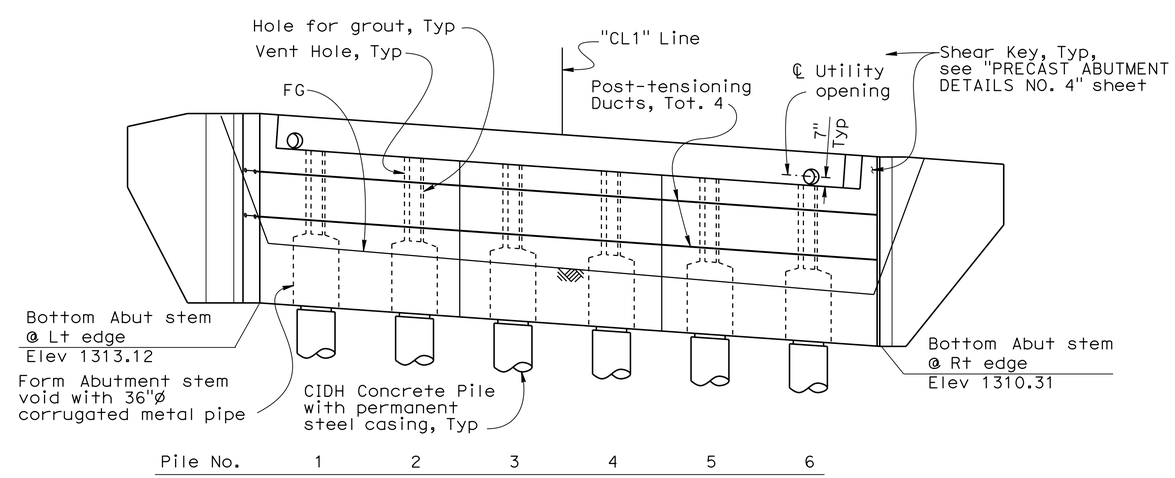


## ABUTMENT 2 ELEVATION

1" = 5'

| | BY | CHECKED |
|---|---|---|
| DESIGN | Mario Guadamuz | Tracy Sanderson |
| DETAILS | Gerald Dickerson | Tracy Sanderson |
| QUANTITIES | Bruno Jenko | Gerald Dickerson |

STATE OF CALIFORNIA
DEPARTMENT OF TRANSPORTATION

DIVISION OF ENGINEERING SERVICES
STRUCTURE DESIGN
DESIGN BRANCH 7

BRIDGE NO. 02-0200
POST MILE 56.0

# FORT GOFF CREEK BRIDGE
## PRECAST ABUTMENT LAYOUT

STRUCTURES DESIGN DETAIL SHEET (ENGLISH) (REV. 09-01-10)

ORIGINAL SCALE IN INCHES FOR REDUCED PLANS 0 1 2 3

UNIT: 3592
PROJECT NUMBER & PHASE: 0212000010 1
CONTRACT NO.: 02-4E6301

DISREGARD PRINTS BEARING EARLIER REVISION DATES

REVISION DATES: 2-18-13 9/30/13 10/3/13

SHEET 5 OF 23

FILE => 02-4e6300-f-a01-lo01.dgn

USERNAME => s136697 DATE PLOTTED => 22-OCT-2013 TIME PLOTTED => 13:16

| DIST | COUNTY | ROUTE | POST MILES TOTAL PROJECT | SHEET No. | TOTAL SHEETS |
|---|---|---|---|---|---|
| 02 | Sis | 96 | 56.0 | 75 | 92 |

REGISTERED CIVIL ENGINEER 10-09-2013 DATE

10-25-2013
PLANS APPROVAL DATE

REGISTERED PROFESSIONAL ENGINEER Mario Guadamuz No. 57992 Exp. 06-30-2014 CIVIL STATE OF CALIFORNIA

*The State of California or its officers or agents shall not be responsible for the accuracy or completeness of electronic copies of this plan sheet.*

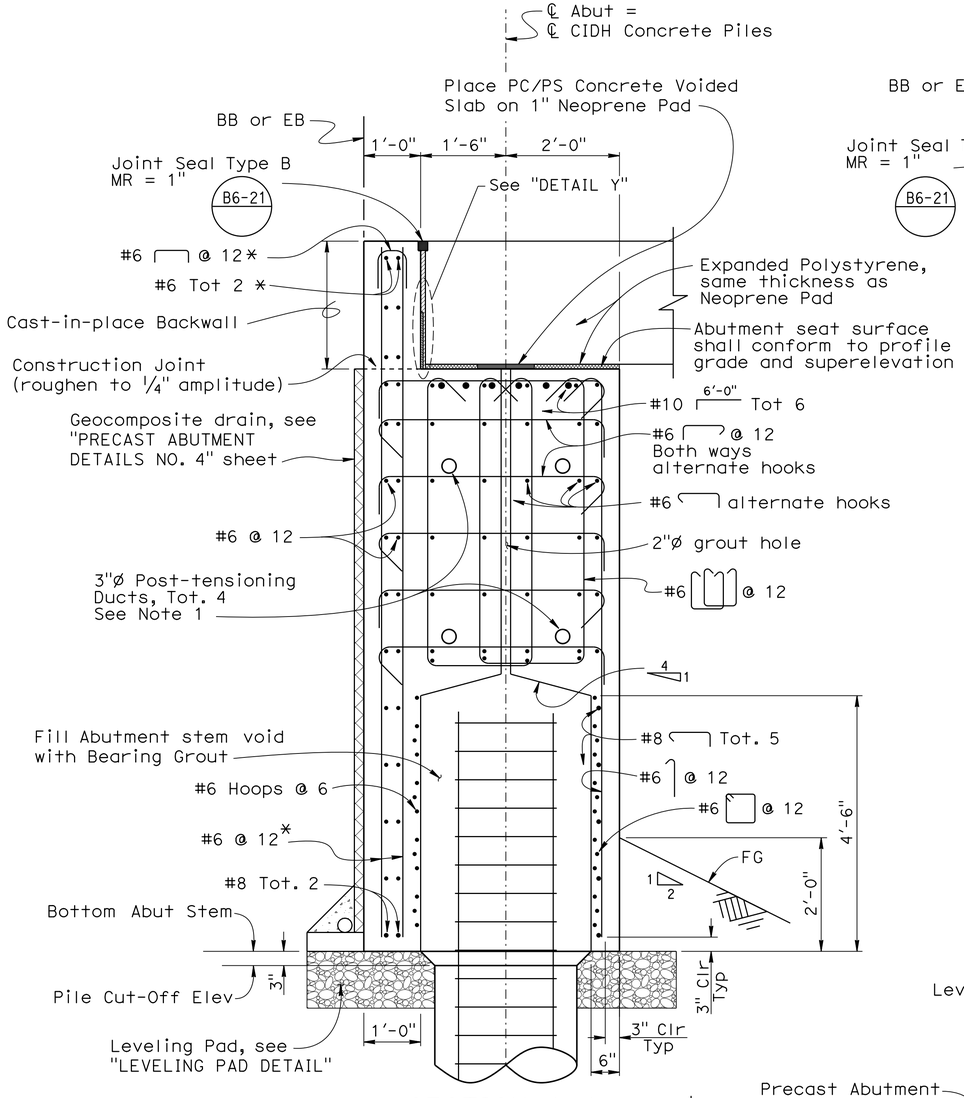


SECTION A-A
3/4" = 1'-0"

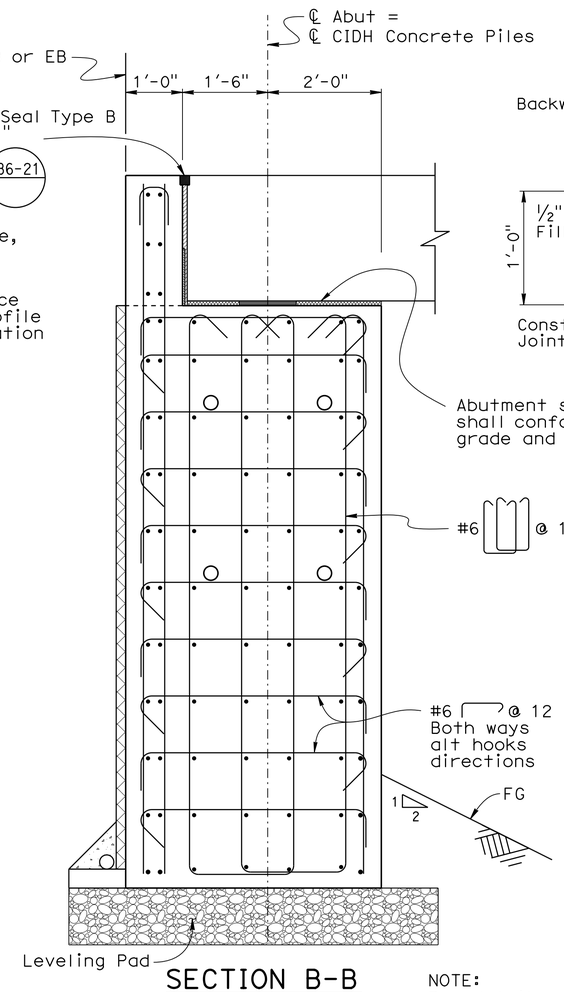


SECTION B-B
3/4" = 1'-0"

NOTE:
For details not shown, see "SECTION A-A"

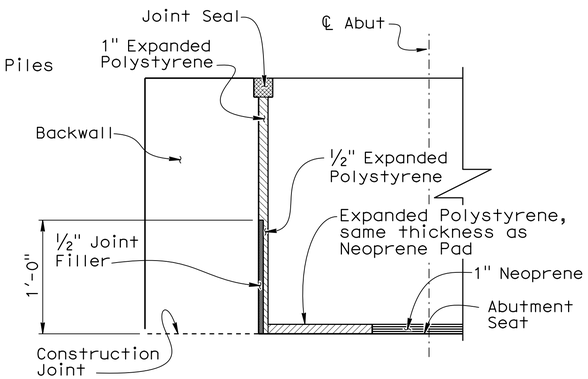


DETAIL Y
1 1/2" = 1'-0"
B0-13 13-2

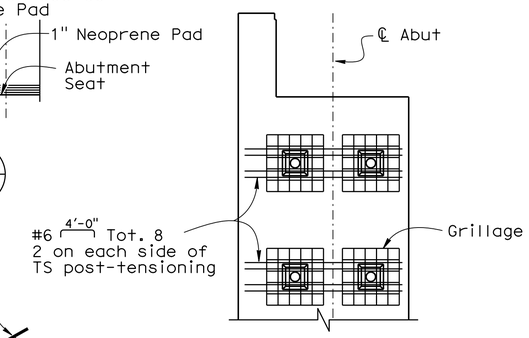


ADDITIONAL BLOCKOUT REINFORCEMENT
1/2" = 1'-0"

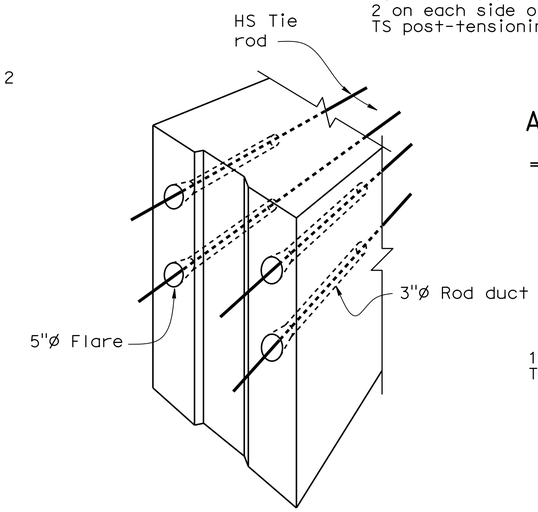


CONNECTION DETAIL (ORTHOGRAPHIC VIEW)
No scale

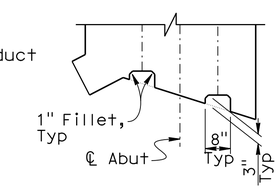


SECTION Z-Z
1/2" = 1'-0"

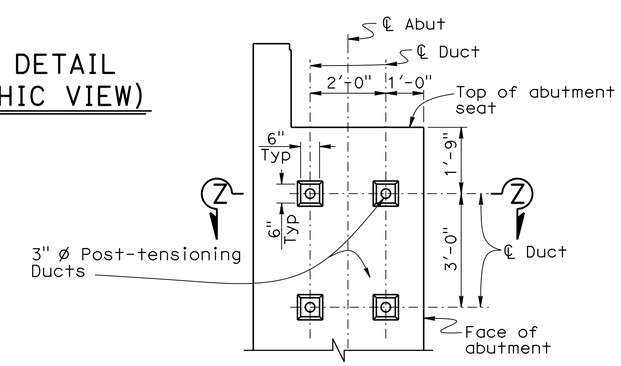


BLOCKOUT ELEVATION
1/2" = 1'-0"

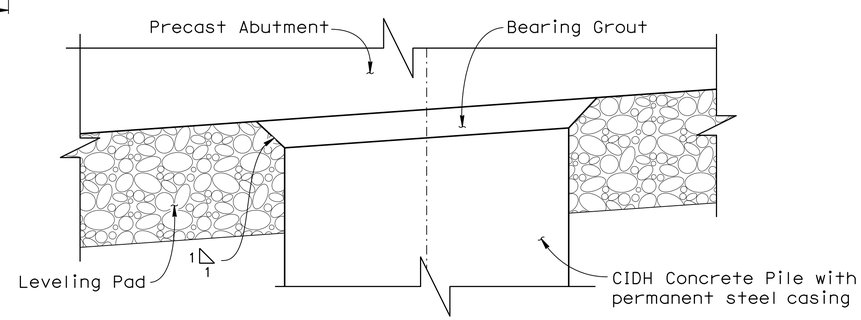


LEVELING PAD DETAIL
1 1/2" = 1'-0"

NOTES:
1. Reinforcement may be adjusted to avoid conflicts with post-tensioning ducts.

LEGEND:
* indicates epoxy coated reinforcement

| | BY | CHECKED |
|---|---|---|
| DESIGN | Mario Guadamuz | Tracy Sanderson |
| DETAILS | Gerald Dickerson | Tracy Sanderson |
| QUANTITIES | Bruno Jenko | Gerald Dickerson |

STATE OF CALIFORNIA
DEPARTMENT OF TRANSPORTATION

DIVISION OF ENGINEERING SERVICES
STRUCTURE DESIGN
DESIGN BRANCH 7

BRIDGE NO. 02-0200
POST MILE 56.0

# FORT GOFF CREEK BRIDGE
## PRECAST ABUTMENT DETAILS NO. 1

STRUCTURES DESIGN DETAIL SHEET (ENGLISH) (REV. 09-01-10)

ORIGINAL SCALE IN INCHES FOR REDUCED PLANS 0 1 2 3

UNIT: 3592
PROJECT NUMBER & PHASE: 0212000010 1
CONTRACT NO.: 02-4E6301

DISREGARD PRINTS BEARING EARLIER REVISION DATES

REVISION DATES: 2-19-13 10/3/13 9/30/13

SHEET 6 OF 23

FILE => 02-4e6300-f-adt01.dgn

USERNAME => s136697 DATE PLOTTED => 22-OCT-2013 TIME PLOTTED => 13:16

| DIST | COUNTY | ROUTE | POST MILES TOTAL PROJECT | SHEET No. | TOTAL SHEETS |
|---|---|---|---|---|---|
| 02 | Sis | 96 | 56.0 | 76 | 92 |

REGISTERED CIVIL ENGINEER — DATE 10-09-2013

10-25-2013
PLANS APPROVAL DATE

REGISTERED PROFESSIONAL ENGINEER — Mario Guadamuz — No. 57992 — Exp. 06-30-2014 — CIVIL — STATE OF CALIFORNIA

*The State of California or its officers or agents shall not be responsible for the accuracy or completeness of electronic copies of this plan sheet.*

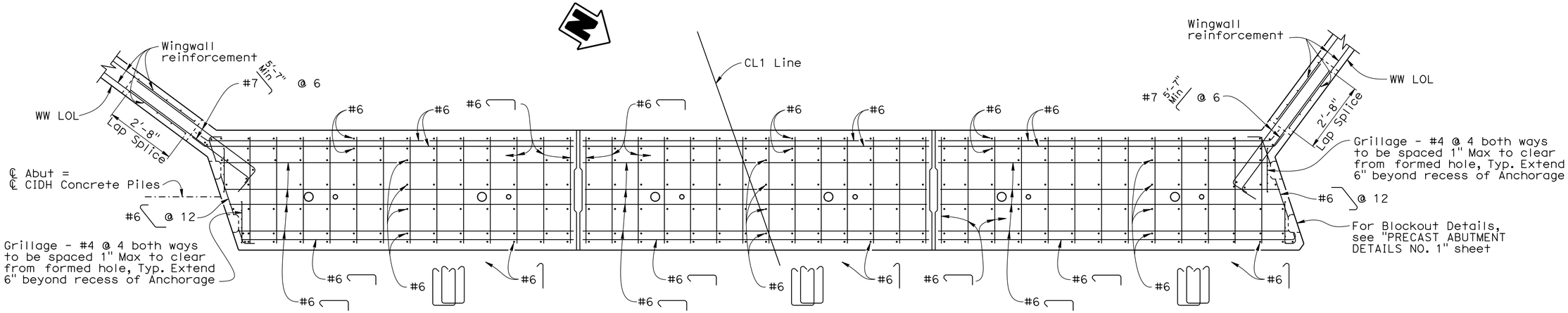


## SECTION C-C

½" = 1'-0"

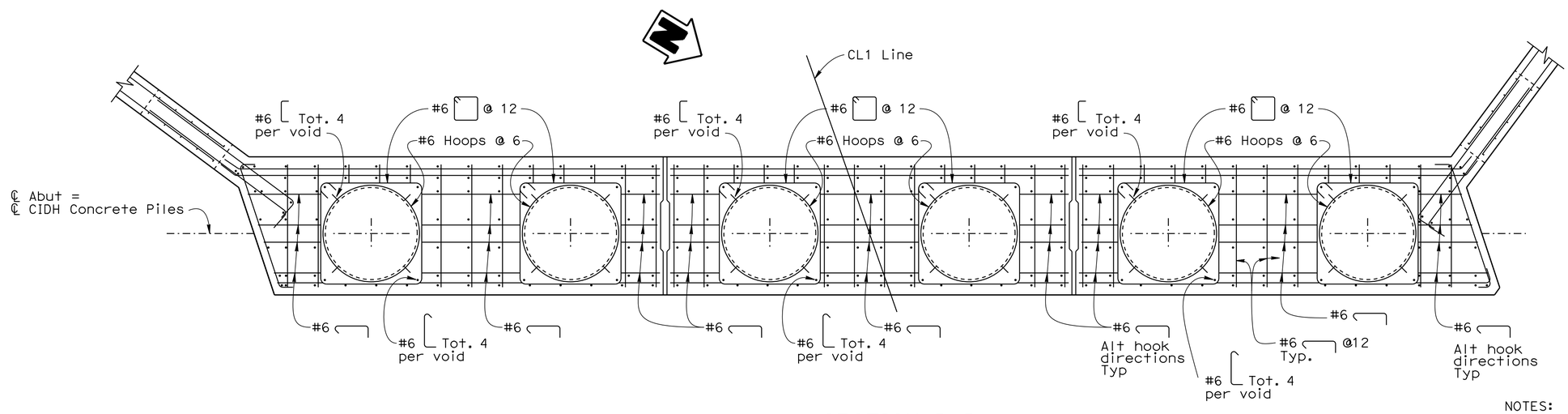


## SECTION D-D

½" = 1'-0"

NOTES:
Abutment 1 shown, Abutment 2 similar
For details not shown, see "SECTION C-C"

NOTES:
For location of "SECTION C-C" and "SECTION D-D", see "PRECAST ABUTMENT LAYOUT" sheet

CIDH concrete pile reinforcement not shown, see "CIDH CONCRETE PILE DETAILS" sheet

| | BY | CHECKED |
|---|---|---|
| DESIGN | Mario Guadamuz | Tracy Sanderson |
| DETAILS | Gerald Dickerson | Tracy Sanderson |
| QUANTITIES | Bruno Jenko | Gerald Dickerson |

STATE OF CALIFORNIA
DEPARTMENT OF TRANSPORTATION

DIVISION OF ENGINEERING SERVICES
STRUCTURE DESIGN
DESIGN BRANCH 7

BRIDGE NO. 02-0200
POST MILE 56.0

# FORT GOFF CREEK BRIDGE
## PRECAST ABUTMENT DETAILS NO. 2

STRUCTURES DESIGN DETAIL SHEET (ENGLISH) (REV. 09-01-10)

ORIGINAL SCALE IN INCHES FOR REDUCED PLANS 0 1 2 3

UNIT: 3592
PROJECT NUMBER & PHASE: 0212000010 1
CONTRACT NO.: 02-4E6301

DISREGARD PRINTS BEARING EARLIER REVISION DATES

REVISION DATES: 2-22-13 09/30/13 10/3/13

SHEET 7 OF 23

FILE => 02-4e6300-f-adt02.dgn

USERNAME => s136697 DATE PLOTTED => 22-OCT-2013 TIME PLOTTED => 13:17

| DIST | COUNTY | ROUTE | POST MILES TOTAL PROJECT | SHEET No. | TOTAL SHEETS |
|---|---|---|---|---|---|
| 02 | Sis | 96 | 56.0 | 77 | 92 |

REGISTERED CIVIL ENGINEER 10-09-2013 DATE

10-25-2013
PLANS APPROVAL DATE

REGISTERED PROFESSIONAL ENGINEER Mario Guadamuz No. 57992 Exp. 06-30-2014 CIVIL STATE OF CALIFORNIA

*The State of California or its officers or agents shall not be responsible for the accuracy or completeness of electronic copies of this plan sheet.*

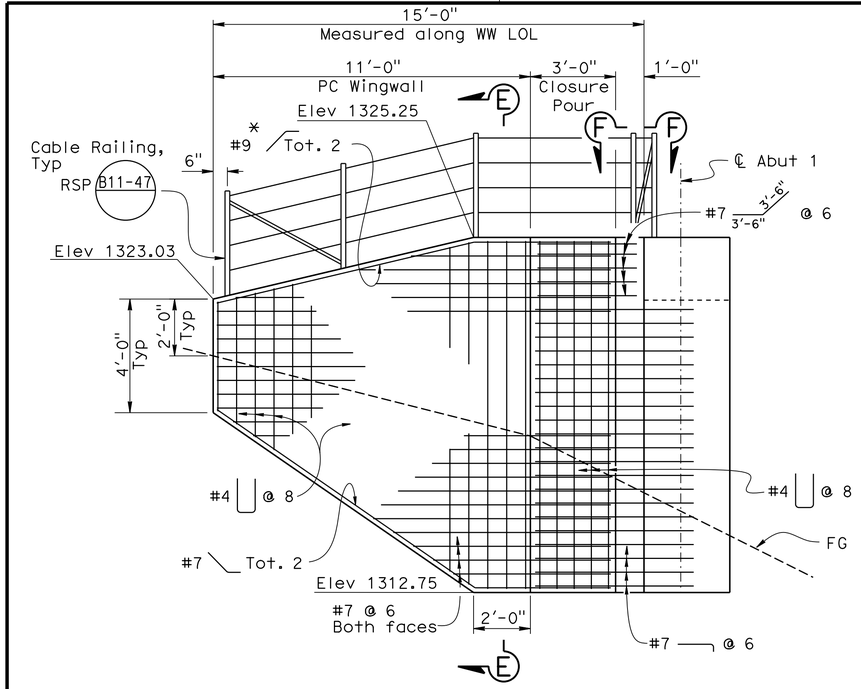


## ABUTMENT 1 LEFT WINGWALL MIRRORED ELEVATION

3/8" = 1'-0"

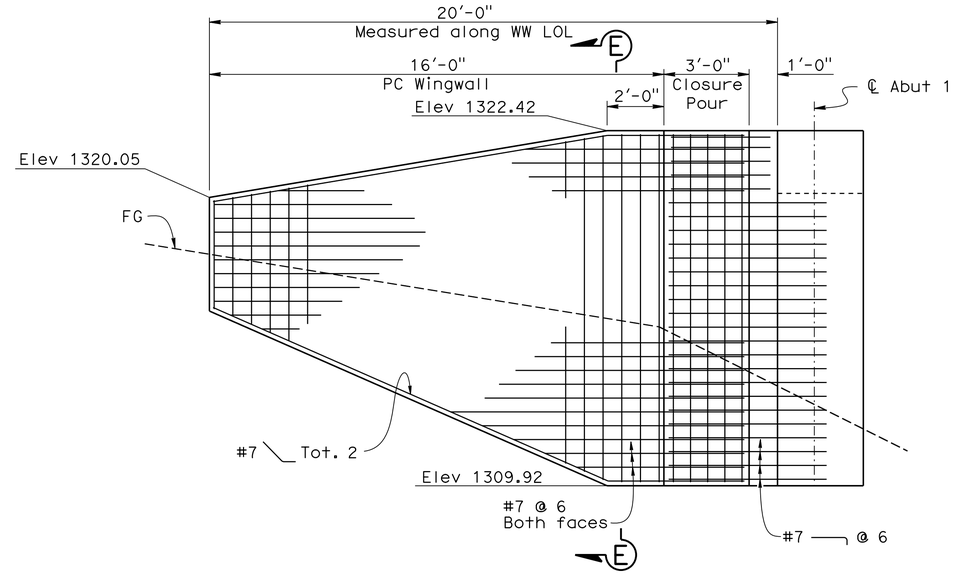


## ABUTMENT 1 RIGHT WINGWALL ELEVATION

3/8" = 1'-0"

NOTES:

1. For details not shown, see "ABUTMENT 1 LEFT WINGWALL MIRRORED ELEVATION".
2. Cable railing not shown.

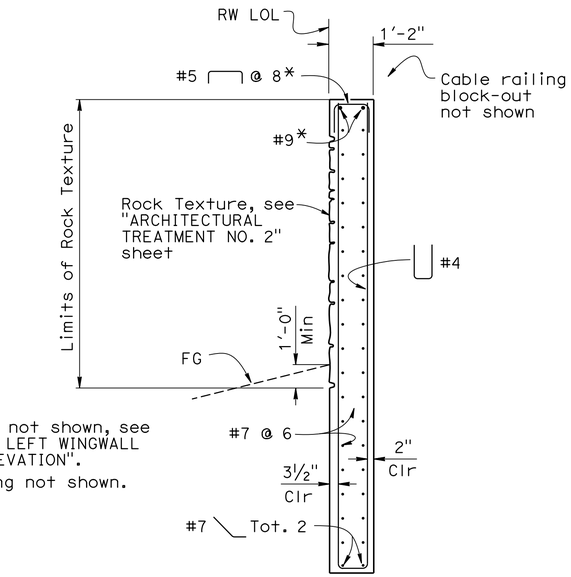


## SECTION E-E

1/2" = 1'-0"

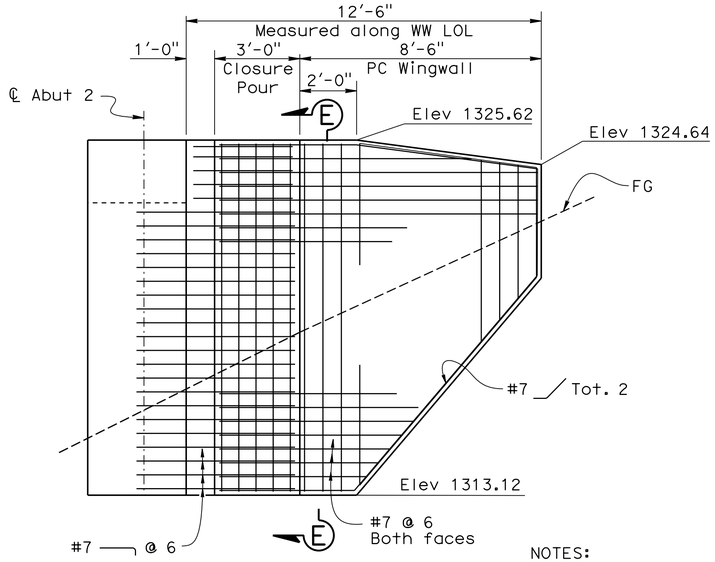


## ABUTMENT 2 LEFT WINGWALL MIRRORED ELEVATION

3/8" = 1'-0"

NOTES:

1. For details not shown, see "ABUTMENT 1 LEFT WINGWALL MIRRORED ELEVATION".
2. Cable railing not shown.

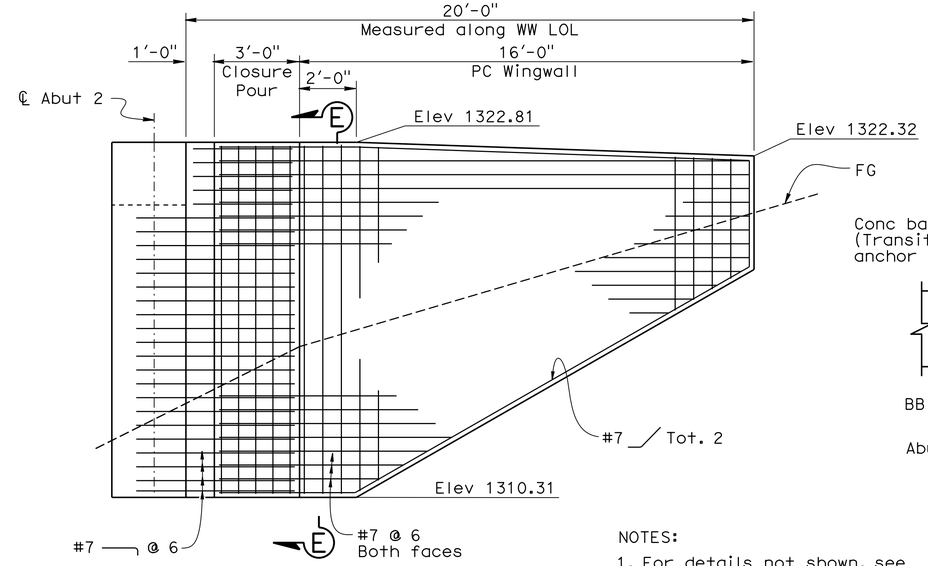


## ABUTMENT 2 RIGHT WINGWALL ELEVATION

3/8" = 1'-0"

NOTES:

1. For details not shown, see "ABUTMENT 1 LEFT WINGWALL MIRRORED ELEVATION".
2. Cable railing not shown.

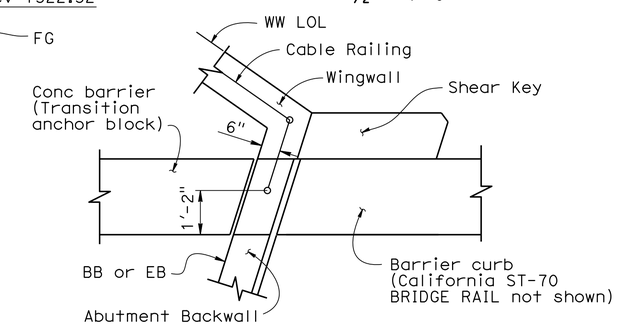


## VIEW F-F

1/2" = 1'-0"

NOTE:
Abut 1 Left Wingwall shown, others similar

NOTE:
Provide temporary support of the precast elements until the concrete has been placed and cured to achieve the compression strength

LEGEND:
* Indicates epoxy-coated reinforcement

| | BY | CHECKED |
|---|---|---|
| DESIGN | Mario Guadamuz | Tracy Sanderson |
| DETAILS | G. Dickerson / B. Jenko | Tracy Sanderson |
| QUANTITIES | Bruno Jenko | Gerald Dickerson |

STATE OF CALIFORNIA
DEPARTMENT OF TRANSPORTATION

DIVISION OF ENGINEERING SERVICES
STRUCTURE DESIGN
DESIGN BRANCH 7

BRIDGE NO. 02-0200
POST MILE 56.0

# FORT GOFF CREEK BRIDGE
## PRECAST ABUTMENT DETAILS NO. 3

STRUCTURES DESIGN DETAIL SHEET (ENGLISH) (REV. 09-01-10)

ORIGINAL SCALE IN INCHES FOR REDUCED PLANS 0 1 2 3

UNIT: 3592
PROJECT NUMBER & PHASE: 0212000010 1
CONTRACT NO.: 02-4E6301

DISREGARD PRINTS BEARING EARLIER REVISION DATES

REVISION DATES: 2-20-13 10/01/13 9/30/13

SHEET 8 OF 23

FILE => 02-4e6300-f-adt03.dgn

USERNAME => s136697 DATE PLOTTED => 22-OCT-2013 TIME PLOTTED => 13:17

| DIST | COUNTY | ROUTE | POST MILES TOTAL PROJECT | SHEET No. | TOTAL SHEETS |
|---|---|---|---|---|---|
| 02 | Sis | 96 | 56.0 | 78 | 92 |

REGISTERED CIVIL ENGINEER 10-09-2013 DATE

10-25-2013
PLANS APPROVAL DATE

REGISTERED PROFESSIONAL ENGINEER Mario Guadamuz No. 57992 Exp. 06-30-2014 CIVIL STATE OF CALIFORNIA

*The State of California or its officers or agents shall not be responsible for the accuracy or completeness of electronic copies of this plan sheet.*

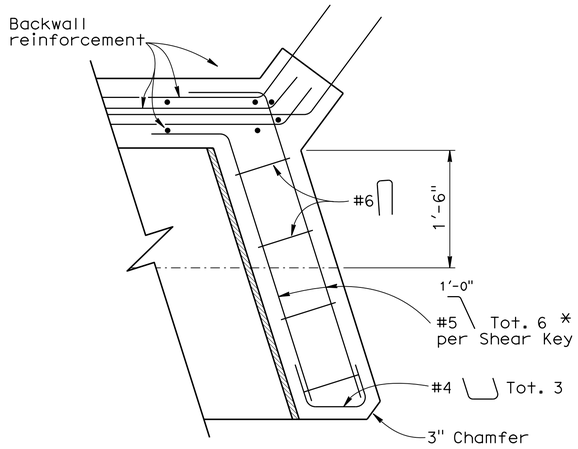


## TYPICAL SHEAR KEY PLAN

1" = 1'-0"

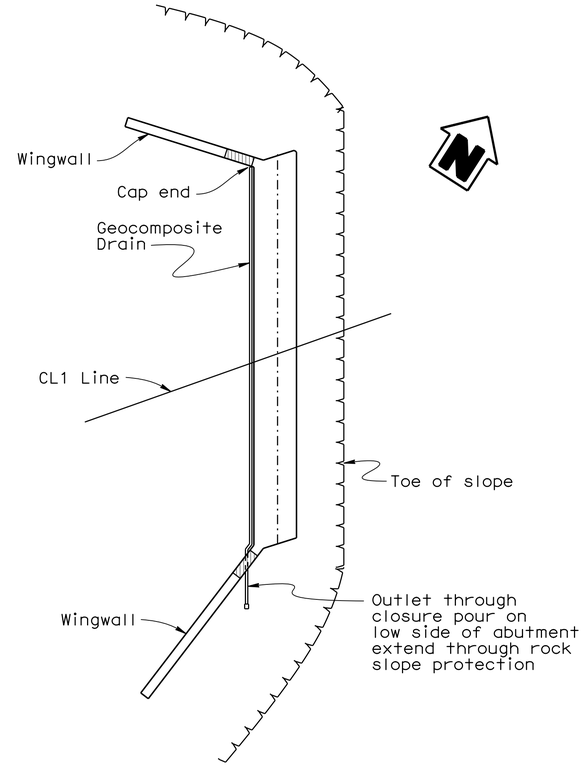


## DRAINAGE DETAILS-PLAN

1/8" = 1'-0"

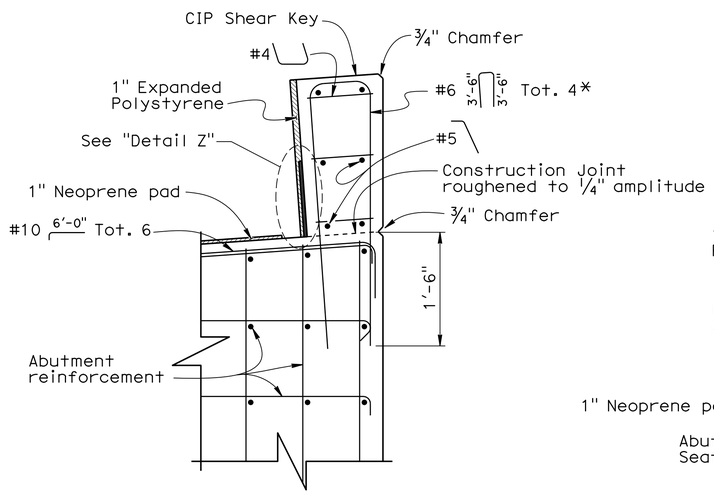


## TYPICAL SHEAR KEY ELEVATION

1" = 1'-0"

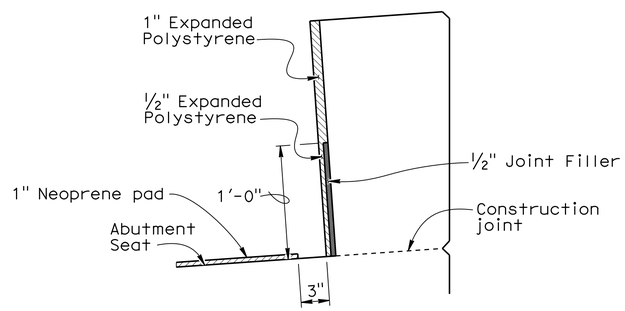


## DETAIL Z

1 1/2" = 1'-0"

B0-13
13-2

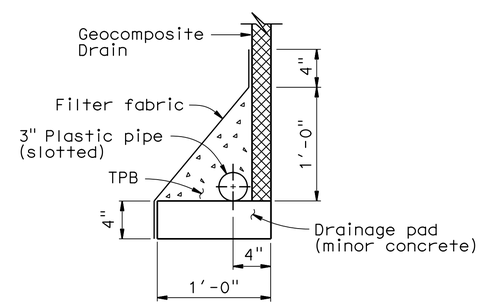


## WITHOUT FOOTING

## DRAINAGE DETAILS

1 1/2" = 1'-0"

NOTE:
Cast-In-Place Shear Key to be placed after girder erection. For construction sequence, see "INDEX TO PLANS" sheet

* Indicates epoxy coated reinforcement

| | BY | CHECKED |
|---|---|---|
| DESIGN | Mario Guadamuz | Tracy Sanderson |
| DETAILS | Gerald Dickerson | Tracy Sanderson |
| QUANTITIES | Bruno Jenko | Gerald Dickerson |

STATE OF CALIFORNIA
DEPARTMENT OF TRANSPORTATION

DIVISION OF ENGINEERING SERVICES
STRUCTURE DESIGN
DESIGN BRANCH 7

BRIDGE NO. 02-0200
POST MILE 56.0

# FORT GOFF CREEK BRIDGE
## PRECAST ABUTMENT DETAILS NO. 4

STRUCTURES DESIGN DETAIL SHEET (ENGLISH) (REV. 09-01-10)

ORIGINAL SCALE IN INCHES FOR REDUCED PLANS 0 1 2 3

UNIT: 3592
PROJECT NUMBER & PHASE: 0212000010 1
CONTRACT NO.: 02-4E6301

DISREGARD PRINTS BEARING EARLIER REVISION DATES

REVISION DATES: 2-20-13 9/30/13 10/3/13

SHEET 9 OF 23

FILE => 02-4e6300-f-adt04.dgn

USERNAME => s136697 DATE PLOTTED => 22-OCT-2013 TIME PLOTTED => 13:17

| DIST | COUNTY | ROUTE | POST MILES TOTAL PROJECT | SHEET No. | TOTAL SHEETS |
|---|---|---|---|---|---|
| 02 | Sis | 96 | 56.0 | 79 | 92 |

REGISTERED CIVIL ENGINEER 10-09-2013 DATE

10-25-2013
PLANS APPROVAL DATE

REGISTERED PROFESSIONAL ENGINEER Mario Guadamuz No. 57992 Exp. 06-30-2014 CIVIL STATE OF CALIFORNIA

*The State of California or its officers or agents shall not be responsible for the accuracy or completeness of electronic copies of this plan sheet.*

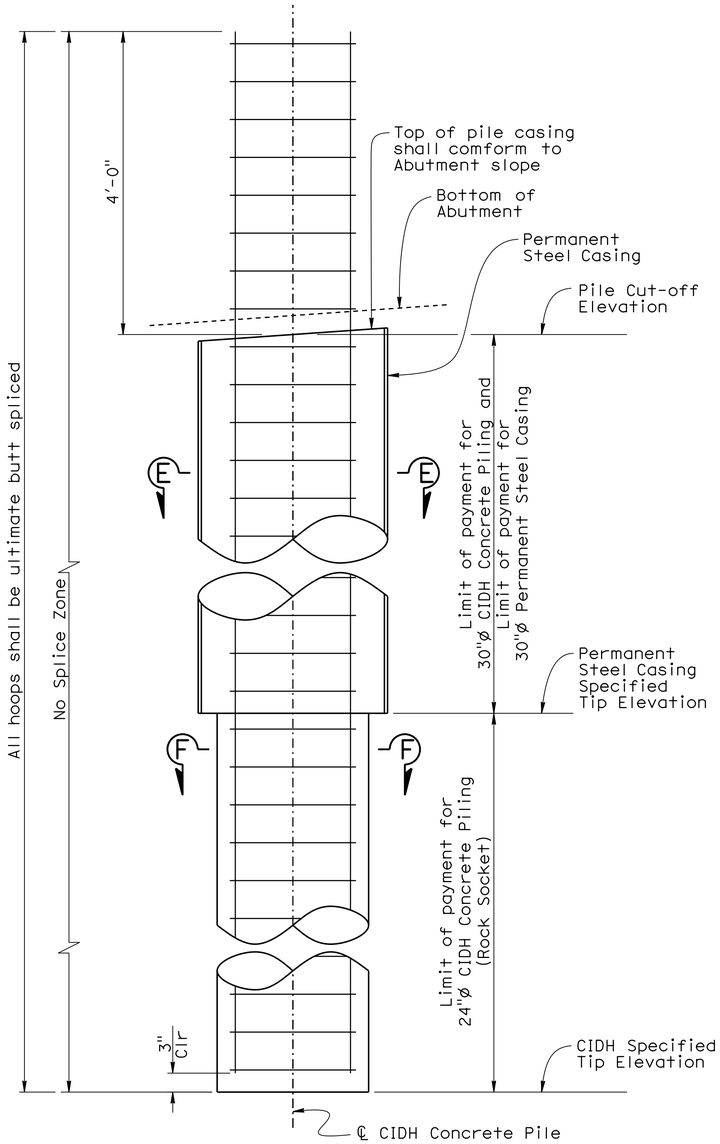


## PILE ELEVATION

1" = 1'-0"

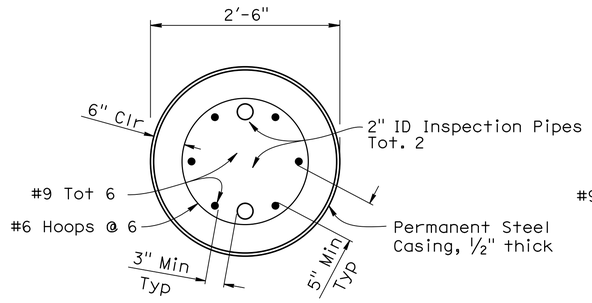


## SECTION E-E

1" = 1'-0"

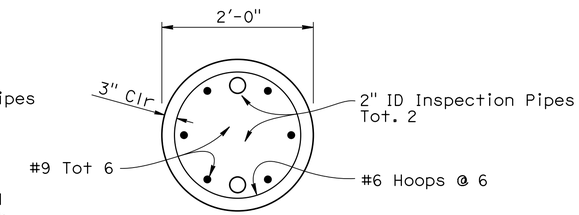


## SECTION F-F

1" = 1'-0"

NOTES:

* For Pile Designation, see "PRECAST ABUTMENT LAYOUT" sheet

** Pile cut-off elevations at center pile along the centerline of abutment

## PILE DATA TABLE

| LOCATION | PILE TYPE | NOMINAL RESISTANCE (kips) | | PILE CUT-OFF ELEVATION (ft) ** | PERMANENT STEEL CASING SPECIFIED TIP ELEVATION (ft) | DESIGN TIP ELEVATION (ft) | CIDH SPECIFIED TIP ELEVATION (ft) |
|---|---|---|---|---|---|---|---|
| | | COMPRESSION | TENSION | | | | |
| Abut 1 | 30"ø CIDH concrete pile with 30" permanent steel casing 24"ø CIDH concrete pile (Rock Socket) | 400 | 0 | Pile 1* 1312.21<br>Pile 2* 1311.76<br>Pile 3* 1311.31<br>Pile 4* 1310.86<br>Pile 5* 1310.41<br>Pile 6* 1309.97 | 1295.50 | (a) 1281.00<br>(b) 1284.00 | 1281.00 |
| Abut 2 | 30"ø CIDH concrete pile with 30" permanent steel casing 24"ø CIDH concrete pile (Rock Socket) | 400 | 0 | Pile 1* 1312.58<br>Pile 2* 1312.13<br>Pile 3* 1311.69<br>Pile 4* 1311.24<br>Pile 5* 1310.80<br>Pile 6* 1310.35 | 1292.00 | (a) 1276.00<br>(b) 1279.00 | 1276.00 |

NOTES:

1. Design Tip Elevations for Abutments are controlled by: (a) Compression and (b) Lateral Load.
2. Scour potential exists to Elevation 1306.0 ft @ Abut 1 and Abut 2.
3. Minimum rock socket length is 14.5 feet for Abutment 1 and 16.0 feet for Abutment 2.

| | BY | CHECKED |
|---|---|---|
| DESIGN | Mario Guadamuz | Tracy Sanderson |
| DETAILS | Gerald Dickerson | Tracy Sanderson |
| QUANTITIES | Bruno Jenko | Gerald Dickerson |

STATE OF CALIFORNIA
DEPARTMENT OF TRANSPORTATION

DIVISION OF ENGINEERING SERVICES
STRUCTURE DESIGN
DESIGN BRANCH 7

BRIDGE NO. 02-0200
POST MILE 56.0

# FORT GOFF CREEK BRIDGE
## CIDH CONCRETE PILE DETAILS

STRUCTURES DESIGN DETAIL SHEET (ENGLISH) (REV. 09-01-10)

ORIGINAL SCALE IN INCHES FOR REDUCED PLANS 0 1 2 3

UNIT: 3592
PROJECT NUMBER & PHASE: 0212000010 1
CONTRACT NO.: 02-4E6301

DISREGARD PRINTS BEARING EARLIER REVISION DATES

REVISION DATES: 3-06-13 10/2/13 10/04/13

SHEET 10 OF 23

FILE => 02-4e6300-g-cidh.dgn

USERNAME => s136697 DATE PLOTTED => 22-OCT-2013 TIME PLOTTED => 13:17

| DIST | COUNTY | ROUTE | POST MILES TOTAL PROJECT | SHEET No. | TOTAL SHEETS |
|---|---|---|---|---|---|
| 02 | Sis | 96 | 56.0 | 80 | 92 |

REGISTERED CIVIL ENGINEER 10-09-2013 DATE

10-25-2013
PLANS APPROVAL DATE

REGISTERED PROFESSIONAL ENGINEER Mario Guadamuz No. 57992 Exp. 06-30-2014 CIVIL STATE OF CALIFORNIA

*The State of California or its officers or agents shall not be responsible for the accuracy or completeness of scanned copies of this plan sheet.*

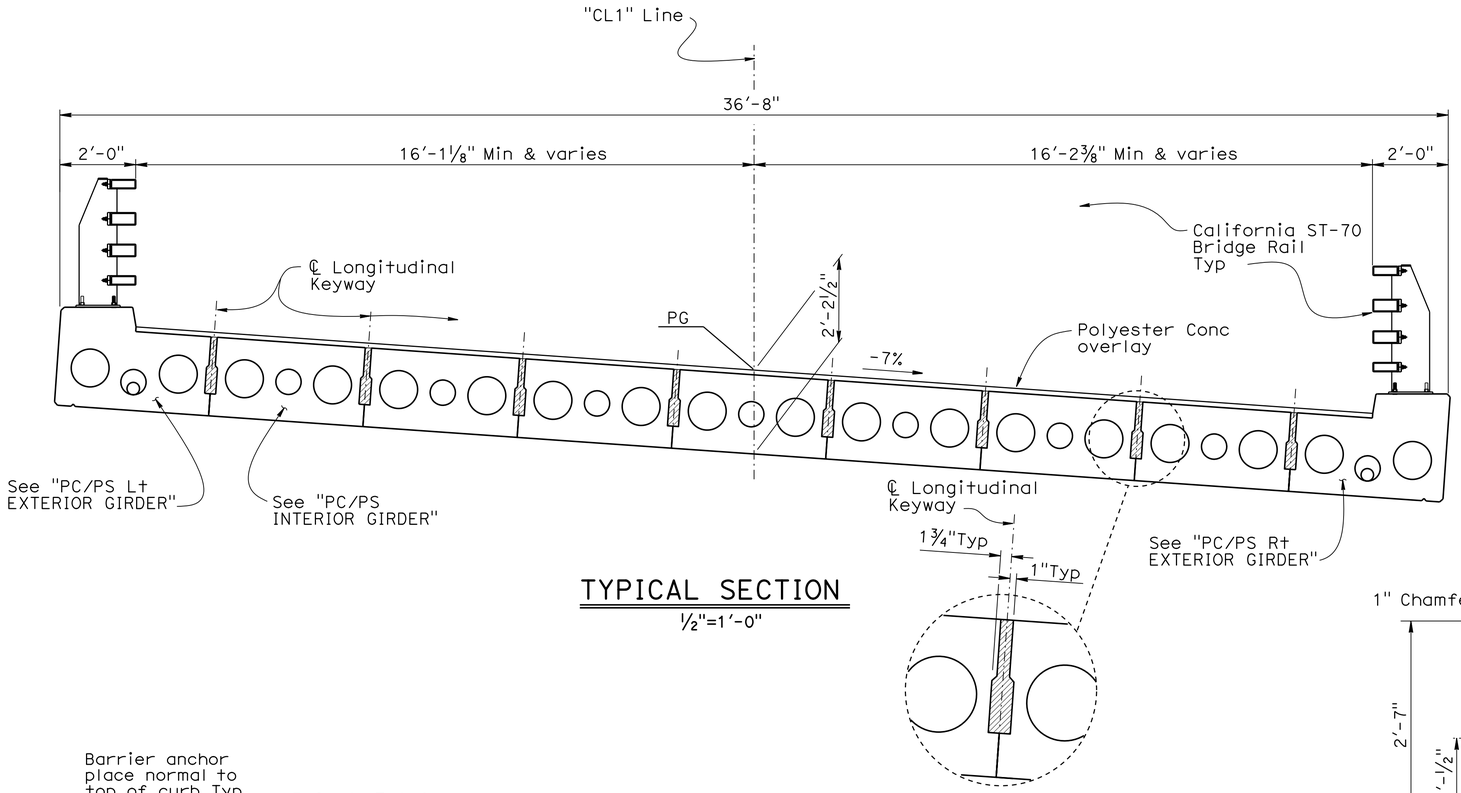


## TYPICAL SECTION

½"=1'-0"

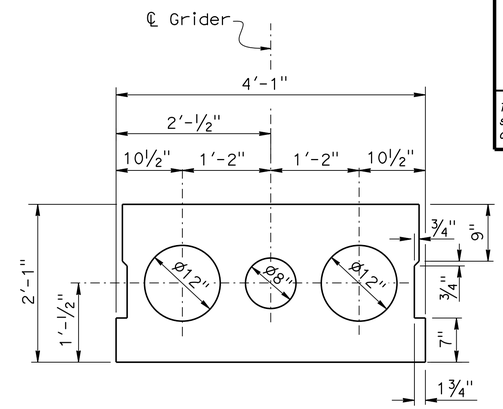


## PC/PS INTERIOR GIRDER

1"=1'-0"

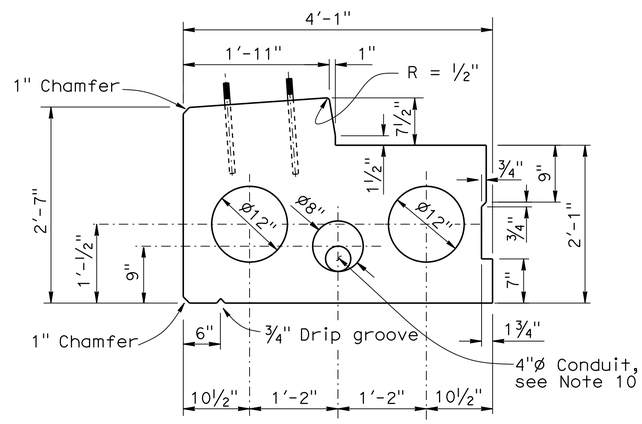


## PC/PS LT EXTERIOR GIRDER

(Girder Ⓐ)

1"=1'-0"

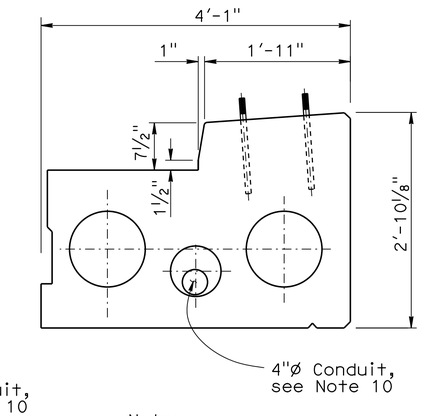


Note:
For details not shown, see "PC/PS LT EXTERIOR GIRDER"

## PC/PS RT EXTERIOR GIRDER

(Girder Ⓘ)

1"=1'-0"

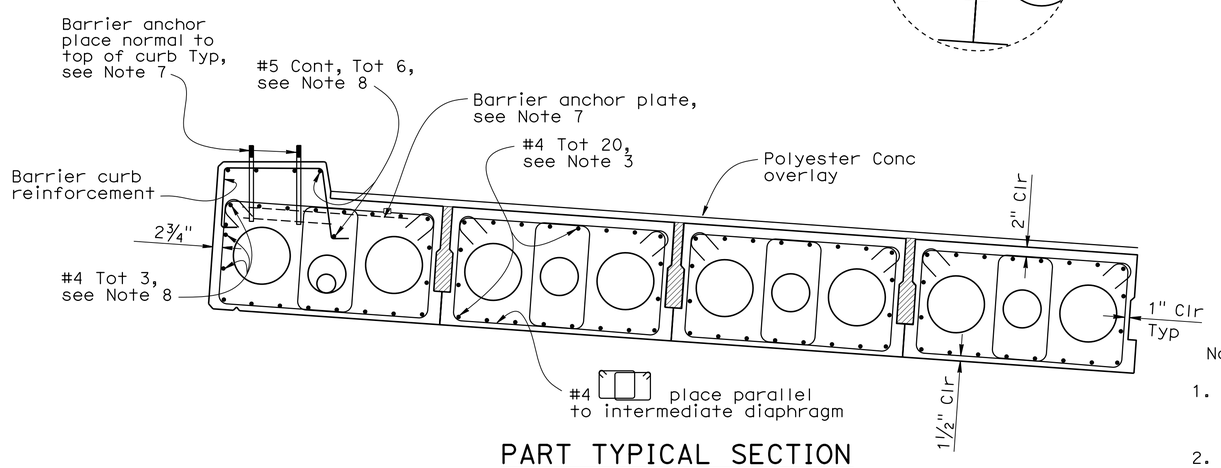


## PART TYPICAL SECTION

¾"=1'-0"

Notes:

1. All longitudinal keyways and diaphragm blockouts shall be cleaned in the precasting plant to remove surface laitance and curing compounds.
2. Area around keyways shall be kept moist for 24 hours prior to grouting between girders.
3. Adjust reinforcement spacing to avoid conflict with P/S strands.
4. All reinforcement shall be epoxy coated.
5. For end and intermediate diaphragms Reinf, see "GIRDER DETAILS" sheet.
6. P/S strands not shown.
7. For barrier curb Reinf and anchorage details, see "CALIFORNIA ST-70 BRIDGE RAIL" details sheets.
8. Stop bars within girder blockout.
9. For details not shown, see "GIRDER DETAILS" sheet.
10. 4"Ø Conduit for telephone and fiber optic cable.

Legend:

Indicates non-shrink grout.

| | | | |
|---|---|---|---|
| DESIGN | BY Mario Guadamuz | CHECKED Tracy Sanderson | |
| DETAILS | BY Bruno Jenko | CHECKED Tracy Sanderson | |
| QUANTITIES | BY Bruno Jenko | CHECKED Gerald Dickerson | |

STATE OF CALIFORNIA
DEPARTMENT OF TRANSPORTATION

DIVISION OF ENGINEERING SERVICES
STRUCTURE DESIGN
DESIGN BRANCH 7

BRIDGE NO. 02-0200
POST MILE 56.0

# FORT GOFF CREEK BRIDGE
## TYPICAL SECTION

STRUCTURES DESIGN DETAIL SHEET (ENGLISH) (REV. 09-01-10)

ORIGINAL SCALE IN INCHES FOR REDUCED PLANS 0 1 2 3

UNIT: 3592
PROJECT NUMBER & PHASE: 02120000010 1
CONTRACT NO.: 02-4E6301

DISREGARD PRINTS BEARING EARLIER REVISION DATES

REVISION DATES: ~~3-6-13~~ 10/2/13 ~~10/01/13~~

SHEET 11 OF 23

FILE => 02-4e6300-k-ts01.dgn

USERNAME => s136697 DATE PLOTTED => 22-OCT-2013 TIME PLOTTED => 13:17

| DIST | COUNTY | ROUTE | POST MILES TOTAL PROJECT | SHEET No. | TOTAL SHEETS |
|---|---|---|---|---|---|
| 02 | Sis | 96 | 56.0 | 81 | 92 |

REGISTERED CIVIL ENGINEER 10-09-2013 DATE

10-25-2013
PLANS APPROVAL DATE

REGISTERED PROFESSIONAL ENGINEER Mario Guadamuz No. 57992 Exp. 06-30-2014 CIVIL STATE OF CALIFORNIA

*The State of California or its officers or agents shall not be responsible for the accuracy or completeness of scanned copies of this plan sheet.*

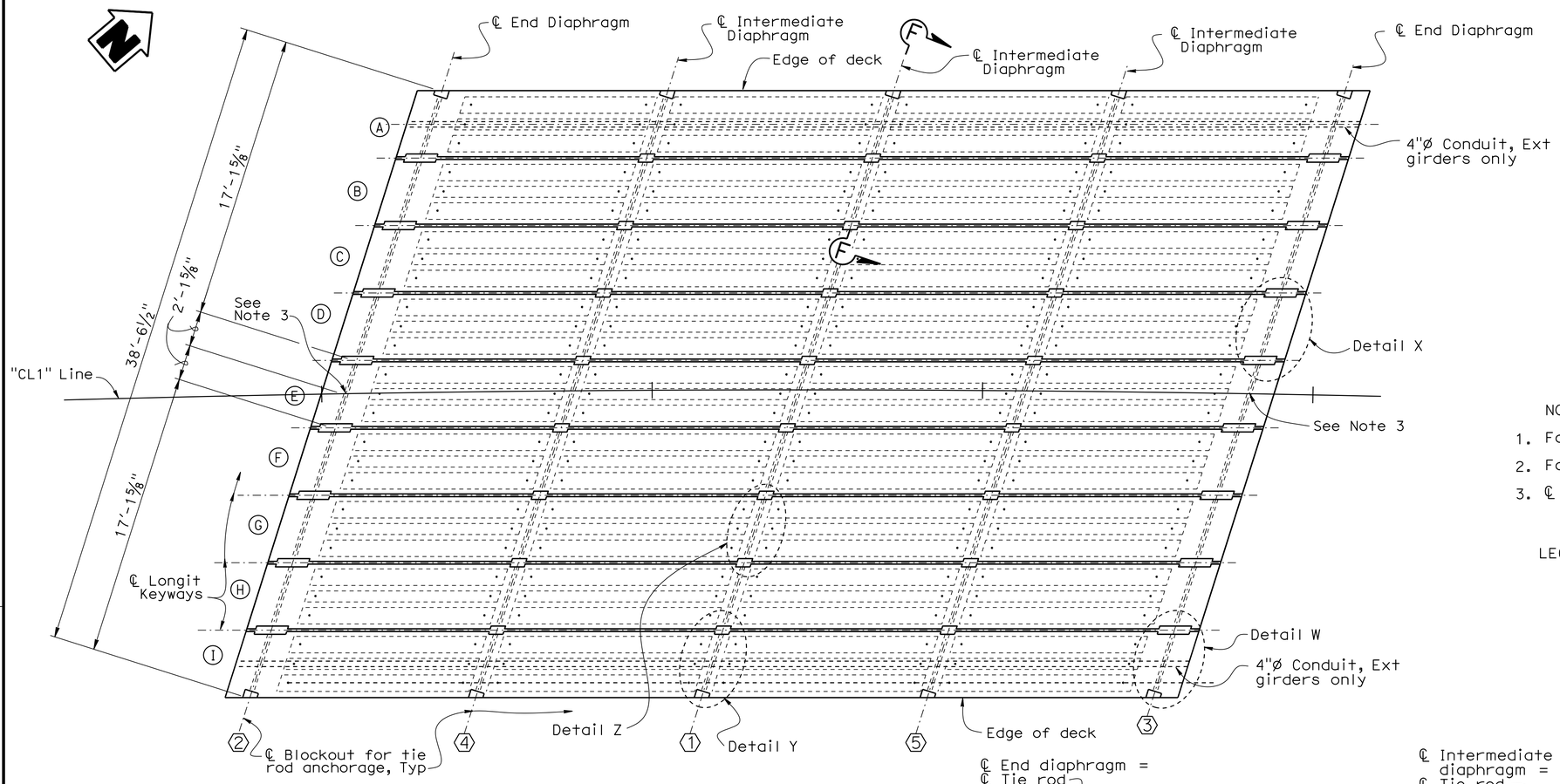


## GIRDER LAYOUT

1/4"=1'-0'

TRANSVERSE POST TENSIONING NOTES:

1 3/8" High Strength Tie Rod 150 ksi ASTM A722

End Diaphragms and Intermediate Diaphragms:
Pjack = 150 k per Tie Rod

NOTES:

1. For Details W through Z, see "TIE ROD BLOCKOUT DETAILS" sheet.
2. For "SECTION F-F", see "GIRDER DETAILS" sheet.
3. ℄ Girder (E) intersects "CL1" Line at ℄ End Diaphragm.

LEGEND:

(A) Indicates girder identification

⟨1⟩ Indicates sequence of post-tensioning

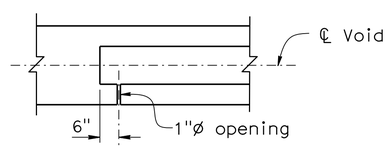


## VENT HOLE DETAIL

No scale

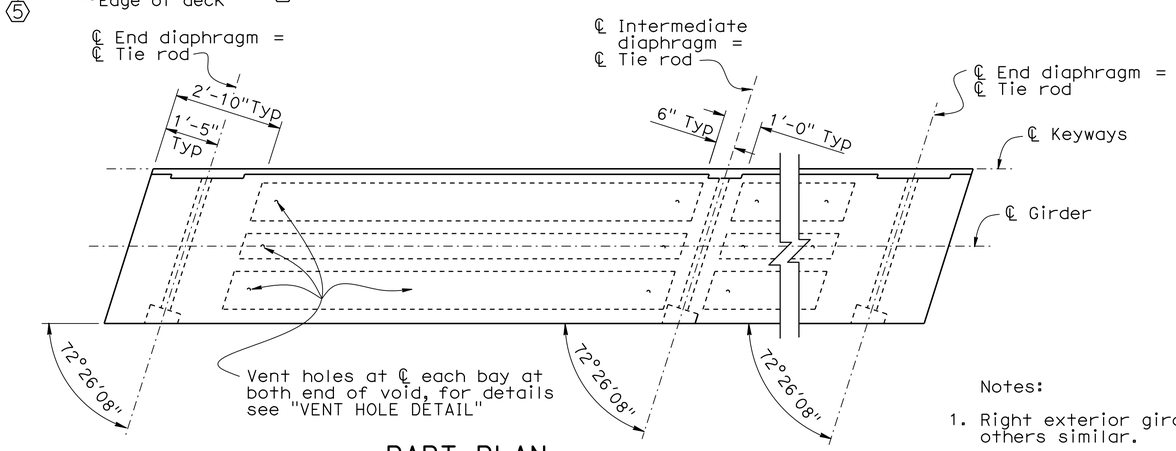


## PART PLAN

1/2"=1'-0"

Notes:

1. Right exterior girder shown, others similar.
2. Utility conduit not shown.

| | | | |
|---|---|---|---|
| DESIGN | BY Mario Guadamuz | CHECKED Tracy Sandrerson | |
| DETAILS | BY Bruno Jenko | CHECKED Tracy Sandrerson | |
| QUANTITIES | BY Bruno Jenko | CHECKED Gerald Dickerson | |

STATE OF CALIFORNIA
DEPARTMENT OF TRANSPORTATION

DIVISION OF ENGINEERING SERVICES
STRUCTURE DESIGN
DESIGN BRANCH 7

BRIDGE NO. 02-0200
POST MILE 56.0

# FORT GOFF CREEK BRIDGE
## GIRDER LAYOUT

STRUCTURES DESIGN DETAIL SHEET (ENGLISH) (REV. 09-01-10)

ORIGINAL SCALE IN INCHES FOR REDUCED PLANS 0 1 2 3

UNIT: 3592
PROJECT NUMBER & PHASE: 02120000010 1 CONTRACT NO.: 02-4E6301

DISREGARD PRINTS BEARING EARLIER REVISION DATES

REVISION DATES: 3-7-13 10-2-13 5-2-13

SHEET 12 OF 23

FILE => 02-4e6300-1-g_lo01.dgn

USERNAME => s136697 DATE PLOTTED => 22-OCT-2013 TIME PLOTTED => 13:17

| DIST | COUNTY | ROUTE | POST MILES TOTAL PROJECT | SHEET No. | TOTAL SHEETS |
|---|---|---|---|---|---|
| 02 | Sis | 96 | 56.0 | 82 | 92 |

REGISTERED CIVIL ENGINEER 10-09-2013 DATE

10-25-2013
PLANS APPROVAL DATE

REGISTERED PROFESSIONAL ENGINEER Mario Guadamuz No. 57992 Exp. 06-30-2014 CIVIL STATE OF CALIFORNIA

*The State of California or its officers or agents shall not be responsible for the accuracy or completeness of scanned copies of this plan sheet.*

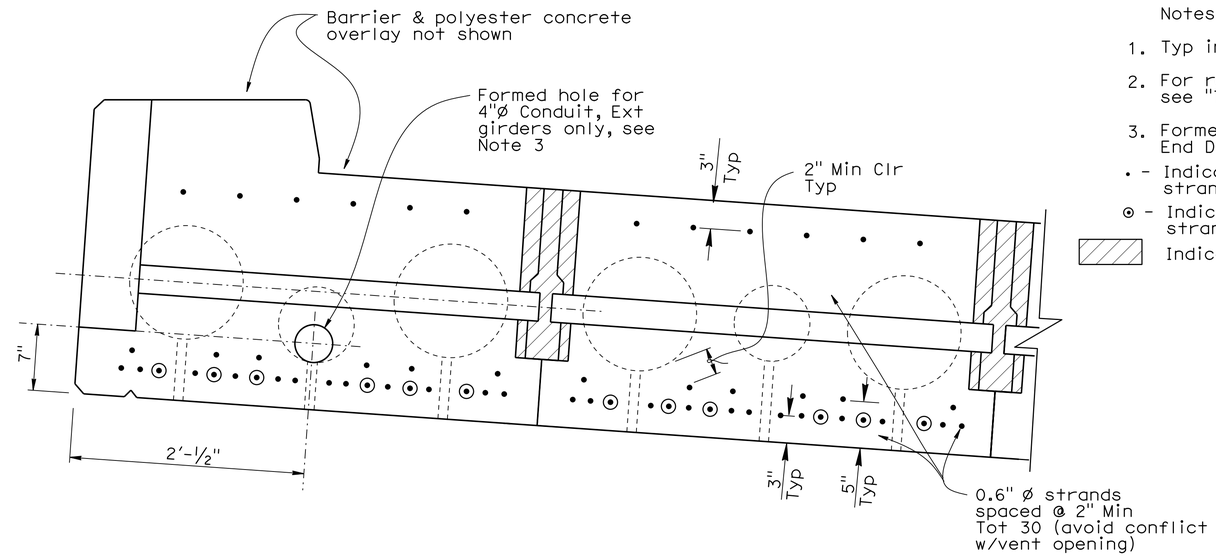


## SECTION F-F

1½"=1'-0"

Notes:

1. Typ interior girder segment shown, exterior similar.
2. For reinforcement and details not shown, see "TYPICAL SECTION" sheet.
3. Formed hole at Intermediate Diaphragm shown, End Diaphragm similar.

• - Indicates continuously bonded strand location.

⊙ - Indicates permissible debonded strand location.

Indicates Non-Shrink grout.

## PRETENSIONING INFORMATION TABLE

| Girder ID | Length (ft) | Jacking Force (P) "X" (inches) | Jacking Force (P) (kips) per Girder | Concrete Strength (ksi) $f'_{ci}$ | Concrete Strength (ksi) $f'_c$ | Deflection Components (inches) ① Overlay DL | Deflection Components (inches) ② Rail DL | Debond length "A" Amount kips | Debond length "A" Length (ft) |
|---|---|---|---|---|---|---|---|---|---|
| A through I | 57'-8" | 7.20 | 1320 | 4 | 7 | 0.16 | 0.16 | 263 | 10'-0" |

"X" indicates CG of prestressing strands (all strands to be straight)

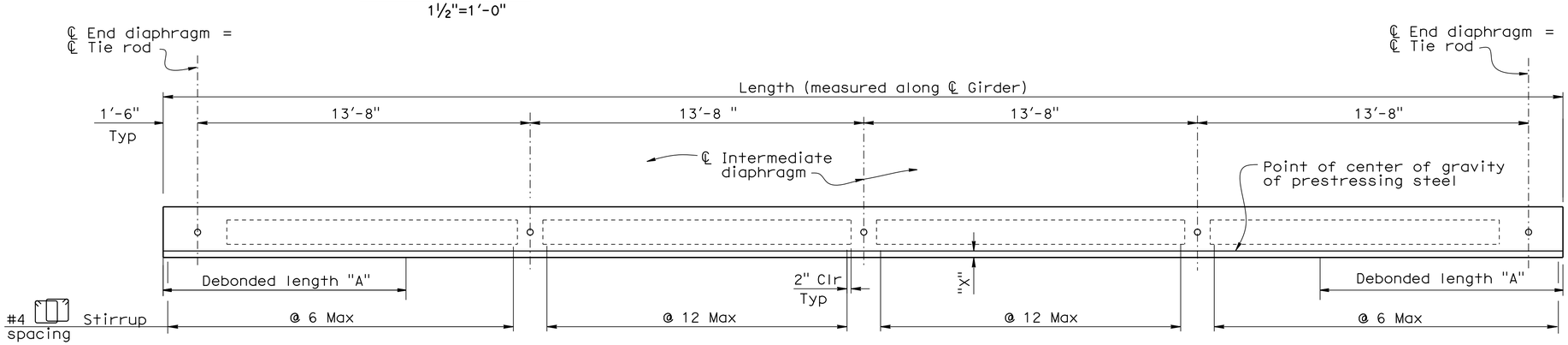


## LONGITUDINAL SECTION

No scale

## PRESTRESSING NOTES

Jacking Force (P) :

The manufacture jacking force required at point of control along the span. The jacking force does not include any fabrication specific losses

Concrete Strength:

f'ci (ksi) is at time of initial stressing

f'c (ksi) is at 28 days

Deflection Components:

Informational-to be used in setting screed line elevations

Screed line elevations for deck concrete will be determined by the Engineer

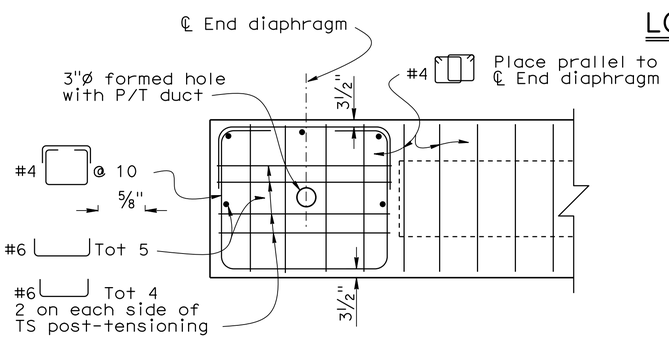


## END DIAPHRAGM

1" = 1'-0"

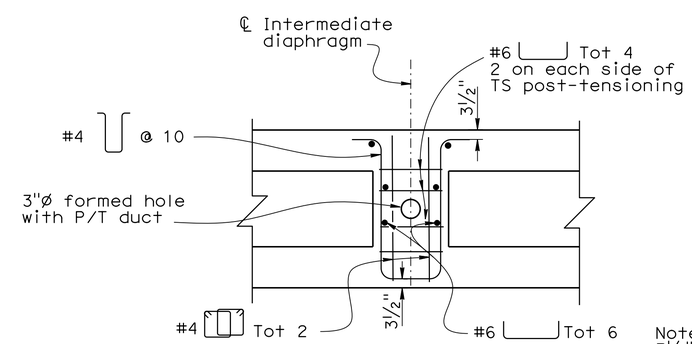


## INTERMEDIATE DIAPHRAGM

1" = 1'-0"

Note:
3½" Min clear adjust cover to avoid conflict with PS strands

| | BY | CHECKED |
|---|---|---|
| DESIGN | Mario Guadamuz | Tracy Sanderson |
| DETAILS | Bruno Jenko | Tracy Sanderson |
| QUANTITIES | Bruno Jenko | Gerald Dickerson |

STATE OF CALIFORNIA
DEPARTMENT OF TRANSPORTATION

DIVISION OF ENGINEERING SERVICES
STRUCTURE DESIGN
DESIGN BRANCH 7

BRIDGE NO. 02-0200
POST MILE 56.0

# FORT GOFF CREEK BRIDGE
## GIRDER DETAILS

STRUCTURES DESIGN DETAIL SHEET (ENGLISH) (REV. 09-01-10)

ORIGINAL SCALE IN INCHES FOR REDUCED PLANS 0 1 2 3

UNIT: 3592
PROJECT NUMBER & PHASE: 02120000010 1 CONTRACT NO.: 02-4E6301

DISREGARD PRINTS BEARING EARLIER REVISION DATES

REVISION DATES 3-6-13 6-16-13 6-26-13

SHEET 13 OF 23

FILE => 02-4e6300-1-gdt01.dgn

USERNAME => s136697 DATE PLOTTED => 22-OCT-2013 TIME PLOTTED => 13:17

| DIST | COUNTY | ROUTE | POST MILES TOTAL PROJECT | SHEET No. | TOTAL SHEETS |
|---|---|---|---|---|---|
| 02 | Sis | 96 | 56.0 | 83 | 92 |

REGISTERED CIVIL ENGINEER 10-09-2013 DATE

10-25-2013
PLANS APPROVAL DATE

REGISTERED PROFESSIONAL ENGINEER Mario Guadamuz No. 57992 Exp. 06-30-2014 CIVIL STATE OF CALIFORNIA

*The State of California or its officers or agents shall not be responsible for the accuracy or completeness of electronic copies of this plan sheet.*

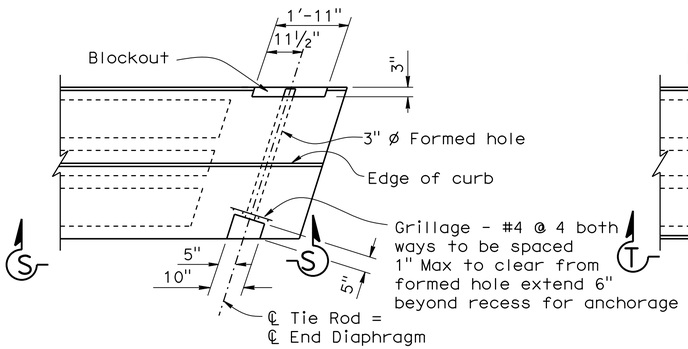


## DETAIL W

½" = 1'-0"

Abut 2 exterior right girder shown others simitar

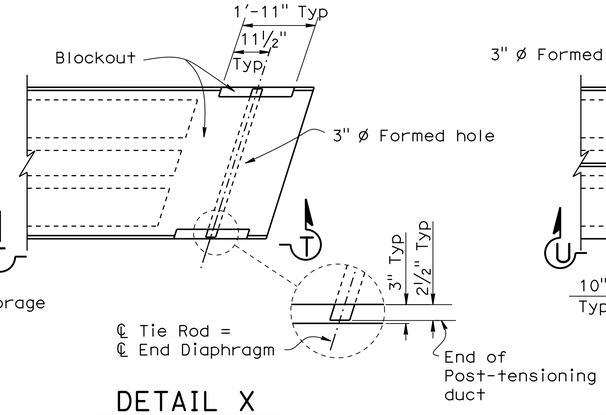


## DETAIL X

½" = 1'-0"

Interior girder @ Abut 2 shown Abut 1 simitar

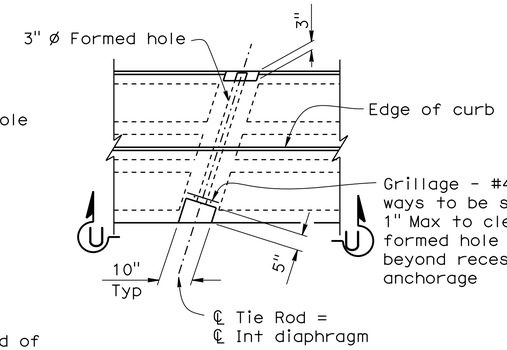


## DETAIL Y

½" = 1'-0"

Interior diaphragm @ Rt exterior girder shown, left exterior girder similer

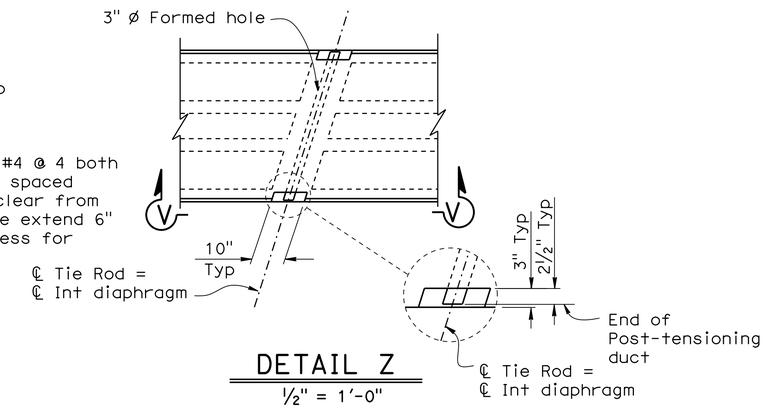


## DETAIL Z

½" = 1'-0"

Typical interior girder @ interior diaphragm

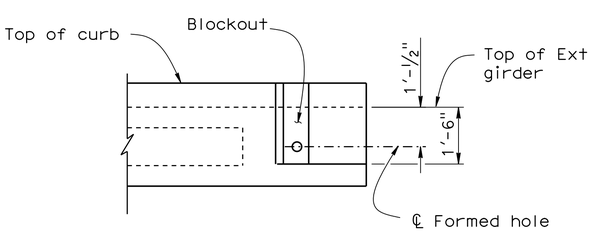


## VIEW S-S

½" = 1'-0"

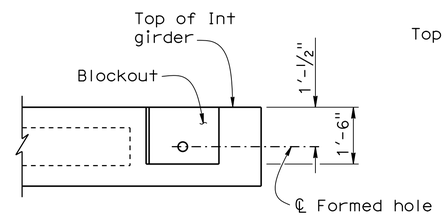


## VIEW T-T

½" = 1'-0"

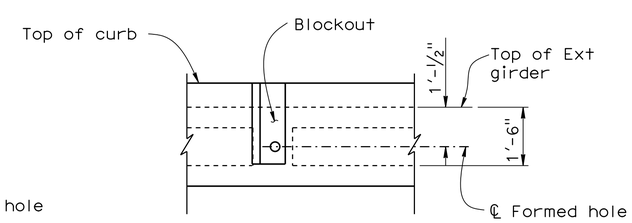


## VIEW U-U

½" = 1'-0"

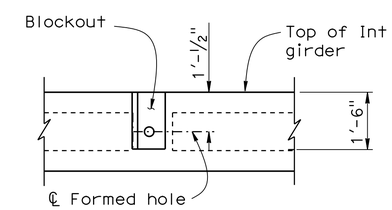


## VIEW V-V

½" = 1'-0"

Notes:

1. For location of Detail W through Z, see "GIRDER LAYOUT" sheet.
2. Utility conduit not shown for clarity.
3. Dimensions of blockout may be adjusted for P/S system with approval by the Engineer.

| | | | |
|---|---|---|---|
| DESIGN | BY Mario Guadamuz | CHECKED Tracy Sanderson | |
| DETAILS | BY Bruno Jenko | CHECKED Tracy Sanderson | |
| QUANTITIES | BY Bruno Jenko | CHECKED Gerald Dickerson | |

STATE OF CALIFORNIA
DEPARTMENT OF TRANSPORTATION

DIVISION OF ENGINEERING SERVICES
STRUCTURE DESIGN
DESIGN BRANCH 7

BRIDGE NO. 02-0200
POST MILE 56.0

# FORT GOFF CREEK BRIDGE
## TIE ROD BLOCKOUT DETAILS

STRUCTURES DESIGN DETAIL SHEET (ENGLISH) (REV. 09-01-10)

ORIGINAL SCALE IN INCHES FOR REDUCED PLANS 0 1 2 3

UNIT: 3592
PROJECT NUMBER & PHASE: 0212000010 1
CONTRACT NO.: 02-4E6301

DISREGARD PRINTS BEARING EARLIER REVISION DATES

REVISION DATES: ~~5-24-13~~ 10/01/13

SHEET 14 OF 23

FILE => 02-4e6300-1-trbd.dgn

USERNAME => s136697 DATE PLOTTED => 22-OCT-2013 TIME PLOTTED => 13:17

| DIST | COUNTY | ROUTE | POST MILES TOTAL PROJECT | SHEET No. | TOTAL SHEETS |
|---|---|---|---|---|---|
| 02 | Sis | 96 | 56.0 | 84 | 92 |

REGISTERED CIVIL ENGINEER — DATE 10-09-2013

10-25-2013
PLANS APPROVAL DATE

REGISTERED PROFESSIONAL ENGINEER — Mario Guadamuz — No. 57992 — Exp. 06-30-2014 — CIVIL — STATE OF CALIFORNIA

*The State of California or its officers or agents shall not be responsible for the accuracy or completeness of electronic copies of this plan sheet.*

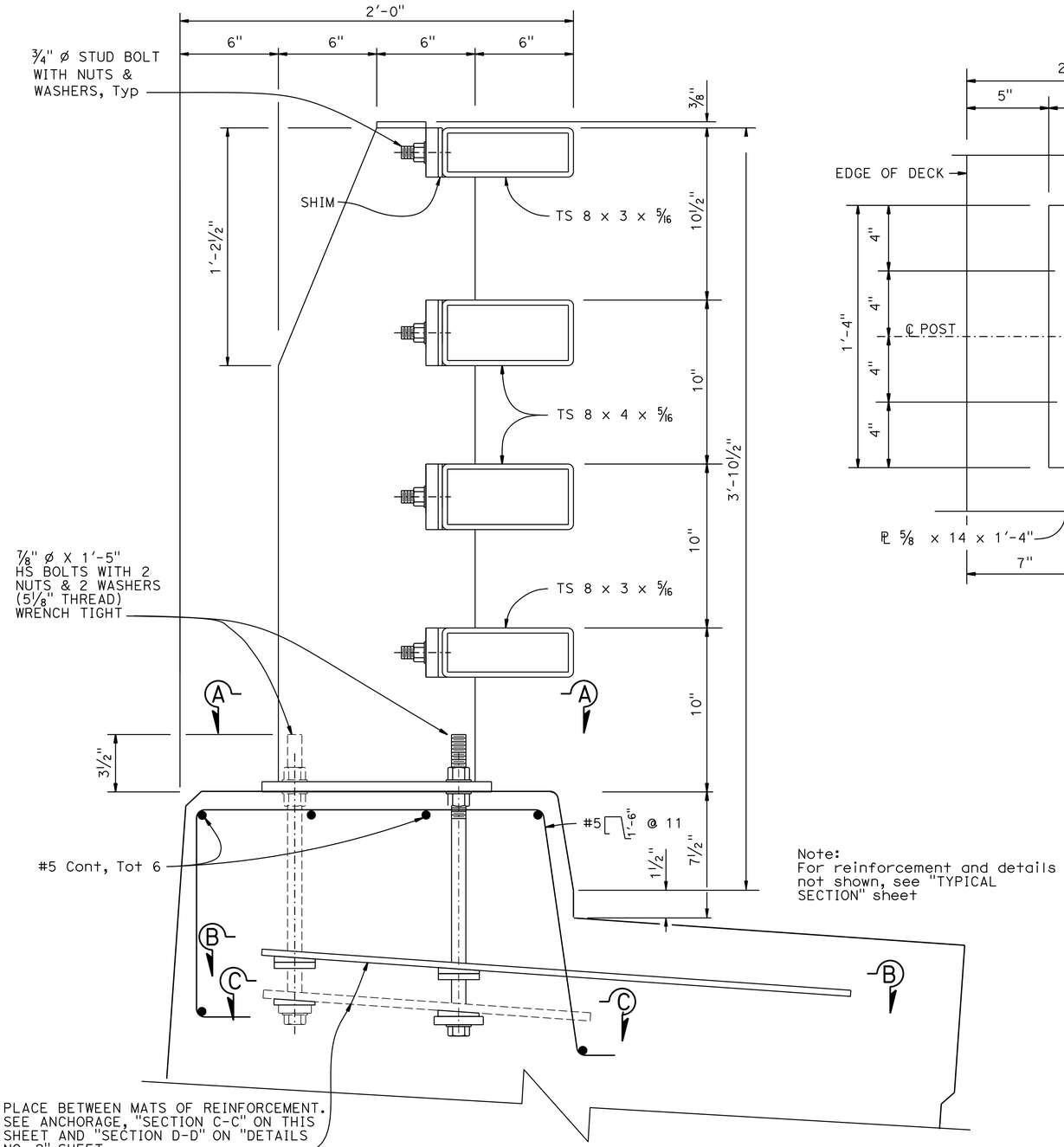


Note:
For reinforcement and details not shown, see "TYPICAL SECTION" sheet

## TYPICAL RAIL SYSTEM

3" = 1'-0"

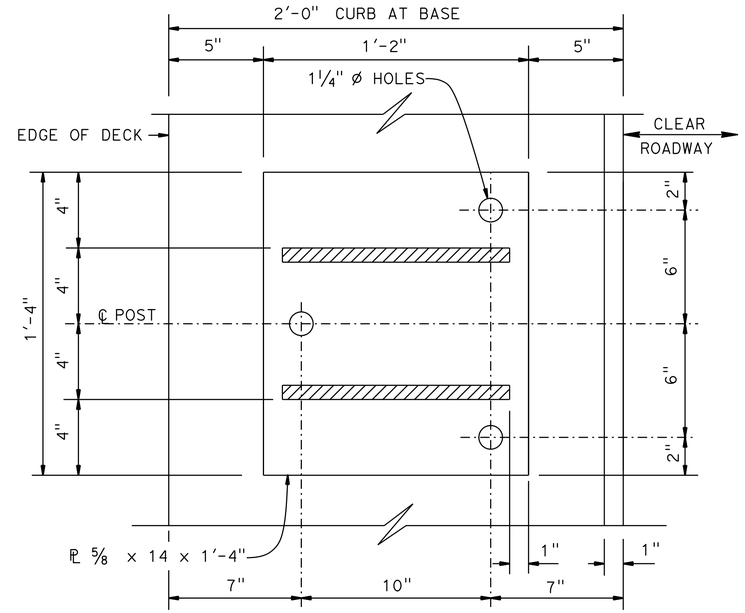


## SECTION A-A

3' = 1'-0"

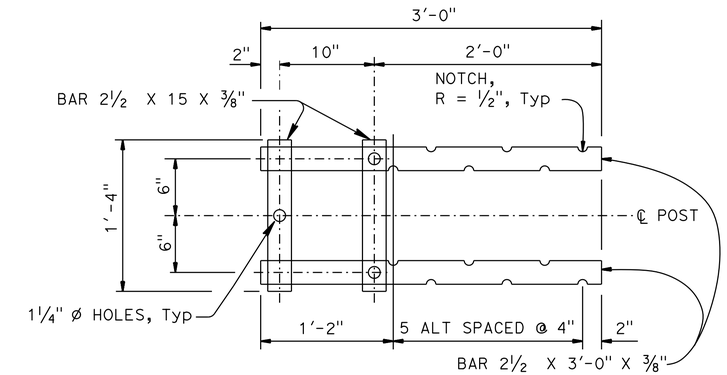


TOP ANCHORAGE

## SECTION B-B

1 1/2" = 1'-0"

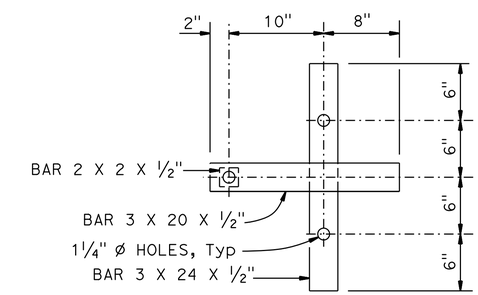


LOWER ANCHORAGE

## SECTION C-C

1 1/2" = 1'-0"

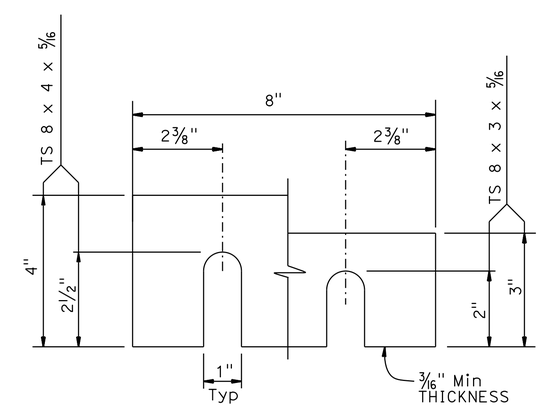


## SHIMS REQUIRED FOR ALL RAILS

6" = 1'-0"

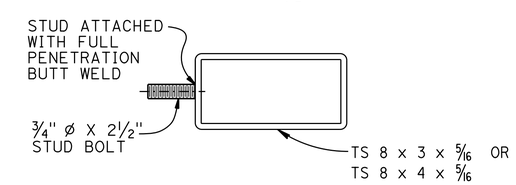


## SECTION AT POST

| | BY | CHECKED |
|---|---|---|
| DESIGN | Mario Guadamuz | Tracy Sanderson |
| DETAILS | Bruno Jenko | Tracy Sanderson |
| QUANTITIES | Bruno Jenko | Gerald Dickerson |

STATE OF CALIFORNIA
DEPARTMENT OF TRANSPORTATION

DIVISION OF ENGINEERING SERVICES
STRUCTURE DESIGN
DESIGN BRANCH 7

BRIDGE NO. 02-0200
POST MILE 56.0

# FORT GOFF CREEK BRIDGE
# CALIFORNIA ST-70 BRIDGE RAIL (MOD)
# DETAILS NO. 1

STRUCTURES DESIGN DETAIL SHEET (ENGLISH) (REV. 09-01-10)

ORIGINAL SCALE IN INCHES FOR REDUCED PLANS 0 1 2 3

UNIT: 3592
PROJECT NUMBER & PHASE: 0212000010 1
CONTRACT NO.: 02-4E6301

DISREGARD PRINTS BEARING EARLIER REVISION DATES 3-20-13

REVISION DATES | SHEET 15 | OF 23

FILE => 02-4e6300-u_bardt01.dgn

USERNAME => s136697 DATE PLOTTED => 22-OCT-2013 TIME PLOTTED => 13:17

| DIST | COUNTY | ROUTE | POST MILES TOTAL PROJECT | SHEET No. | TOTAL SHEETS |
|---|---|---|---|---|---|
| 02 | Sis | 96 | 56.0 | 85 | 92 |

REGISTERED CIVIL ENGINEER 10-09-2013 DATE

10-25-2013
PLANS APPROVAL DATE

REGISTERED PROFESSIONAL ENGINEER
Mario Guadamuz
No. 57992
Exp. 06-30-2014
CIVIL
STATE OF CALIFORNIA

*The State of California or its officers or agents shall not be responsible for the accuracy or completeness of electronic copies of this plan sheet.*

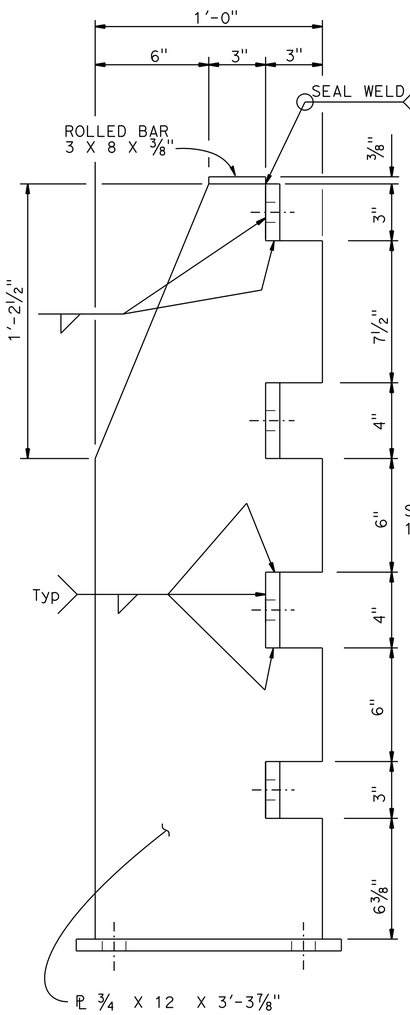


## SECTION D-D

3" = 1'-0"

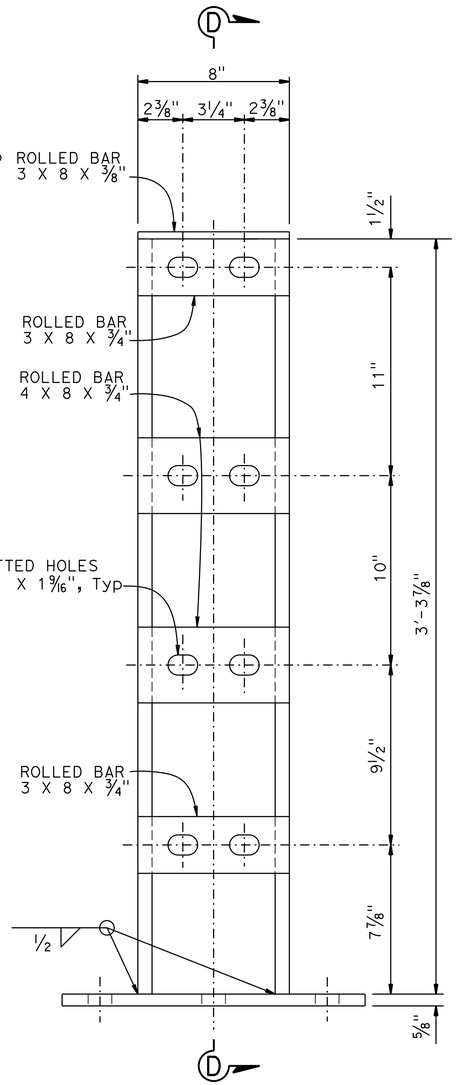


## ELEVATION

3" = 1'-0"

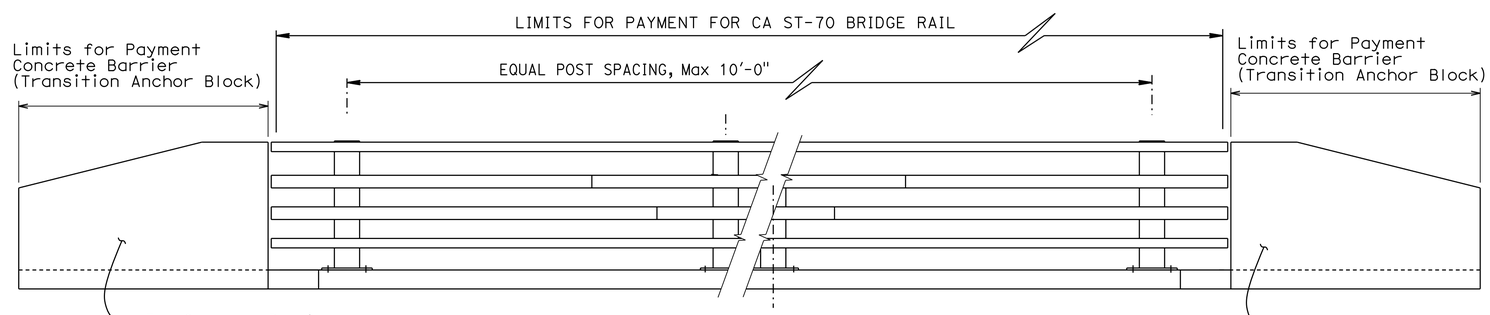


## RAIL POST LAYOUT W/O MEDIA
## RAIL TWO WAY TRAFFIC ON BRIDGE

1/2" = 1'-0"

| | | | |
|---|---|---|---|
| DESIGN | BY Mario Guadamuz | CHECKED Tracy Sanderson | |
| DETAILS | BY Bruno Jenko | CHECKED Tracy Sanderson | |
| QUANTITIES | BY Bruno Jenko | CHECKED Gerald Dickerson | |

STATE OF CALIFORNIA
DEPARTMENT OF TRANSPORTATION

DIVISION OF ENGINEERING SERVICES
STRUCTURE DESIGN
DESIGN BRANCH 7

BRIDGE NO. 02-0200
POST MILE 56.0

# FORT GOFF CREEK BRIDGE
# CALIFORNIA ST-70 BRIDGE RAIL (MOD)
# DETAILS NO. 2

STRUCTURES DESIGN DETAIL SHEET (ENGLISH) (REV. 09-01-10)

ORIGINAL SCALE IN INCHES FOR REDUCED PLANS 0 1 2 3

UNIT: 3592
PROJECT NUMBER & PHASE: 0212000010 1
CONTRACT NO.: 02-4E6301

DISREGARD PRINTS BEARING EARLIER REVISION DATES

REVISION DATES: 3-26-13 10/01/13

SHEET 16 OF 23

FILE => 02-4e6300-u_bardt02.dgn

USERNAME => s136697 DATE PLOTTED => 22-OCT-2013 TIME PLOTTED => 13:17

| DIST | COUNTY | ROUTE | POST MILES TOTAL PROJECT | SHEET No. | TOTAL SHEETS |
|---|---|---|---|---|---|
| 02 | Sis | 96 | 56.0 | 86 | 92 |

REGISTERED CIVIL ENGINEER 10-09-2013 DATE

10-25-2013
PLANS APPROVAL DATE

REGISTERED PROFESSIONAL ENGINEER Mario Guadamuz No. 57992 Exp. 06-30-2014 CIVIL STATE OF CALIFORNIA

*The State of California or its officers or agents shall not be responsible for the accuracy or completeness of electronic copies of this plan sheet.*

* Indicates epoxy coated reinforcement.

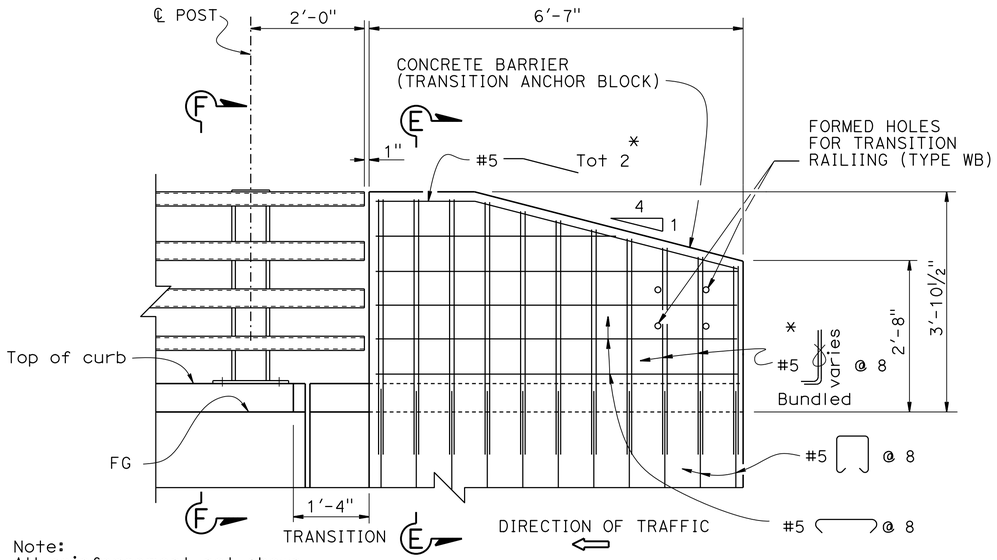


Note:
All reinforcement not shown.

## ELEVATION
¾" = 1'-0"

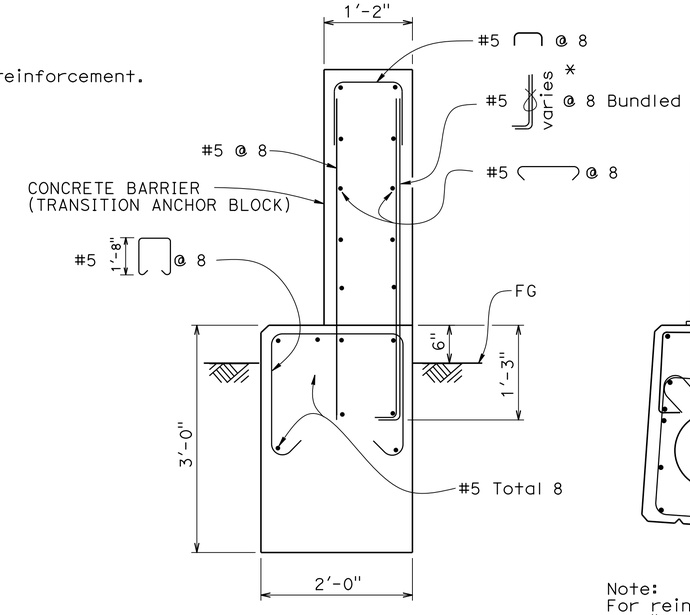


Note:
Utility conduit not shown.

## SECTION E-E
1" = 1'-0"

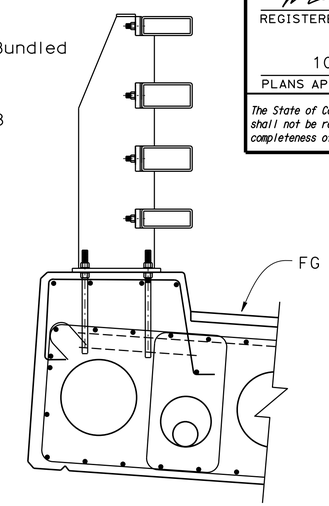


Note:
For reinforcement not shown, see "CALIFORNIA ST-70 BRIDGE RAIL DETAILS NO. 1" sheet.

## SECTION F-F
1" = 1'-0"

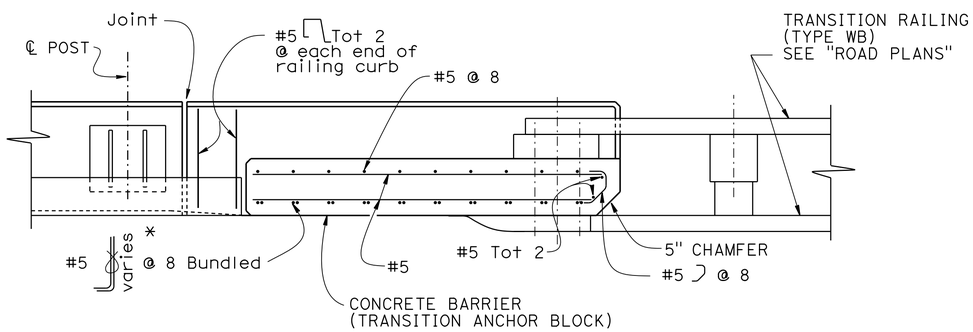


## PLAN
¾" = 1'-0"

Note:
Abutment 2 Lt transition shown, others similar.

## GENERAL NOTES

1) All structural steel shall be galvanized after fabrication.
2) Railing layout shown is approximate. Final layout shall be reviewed by engineer before fabrication.
3) Venting and pick-up holes in rails and sleeves shall be shown on fabricator's shop plans.
4) Anchor bolts may be tack welded (shop or field) to anchorage.
5) All rough edges on posts and rails shall be ground smooth.
6) After installation of rail, the exposed rail bolt threads shall be painted with two coats of zinc rich paint conforming to the requirement of section 75-1.05 galvanizing of The Standard Specifications.
7) The alternative welded splice may be used in lieu of The Standard Splice.
8) Each rail length shall be continuous over a minimum of two posts.
9) The fabricator shall check that the tubular sleeves splices conform to the dimensions indicated to assure proper clearance.
10) Except for expansion splices, not more than one splice shall be permitted per same side of post.

# FORT GOFF CREEK BRIDGE
# CALIFORNIA ST-70 BRIDGE RAIL (MOD)
# DETAILS NO. 3

| | BY | CHECKED |
|---|---|---|
| DESIGN | Mario Guadamuz | Tracy Sanderson |
| DETAILS | Bruno Jenko | Tracy Sanderson |
| QUANTITIES | Bruno Jenko | Gerald Dickerson |

STATE OF CALIFORNIA
DEPARTMENT OF TRANSPORTATION

DIVISION OF ENGINEERING SERVICES
STRUCTURE DESIGN
DESIGN BRANCH 7

BRIDGE NO. 02-0200
POST MILE 56.0

STRUCTURES DESIGN DETAIL SHEET (ENGLISH) (REV. 09-01-10)

ORIGINAL SCALE IN INCHES FOR REDUCED PLANS 0 1 2 3

UNIT: 3592
PROJECT NUMBER & PHASE: 0212000010 1
CONTRACT NO.: 02-4E6301

DISREGARD PRINTS BEARING EARLIER REVISION DATES

REVISION DATES: ~~2-20-13~~ 10/2/13 ~~10/01/13~~

SHEET 17 OF 23

FILE => 02-4e6300-u_bardt03.dgn

USERNAME => s136697 DATE PLOTTED => 22-OCT-2013 TIME PLOTTED => 13:17

| DIST | COUNTY | ROUTE | POST MILES TOTAL PROJECT | SHEET No. | TOTAL SHEETS |
|---|---|---|---|---|---|
| 02 | Sis | 96 | 56.0 | 87 | 92 |

Greg Kaderabek 9-03-13
REGISTERED CIVIL ENGINEER DATE

10-25-2013
PLANS APPROVAL DATE

REGISTERED PROFESSIONAL ENGINEER
Greg Kaderabek
No. C40814
Exp. 3-31-2015
CIVIL
STATE OF CALIFORNIA

*The State of California or its officers or agents shall not be responsible for the accuracy or completeness of electronic copies of this plan sheet.*

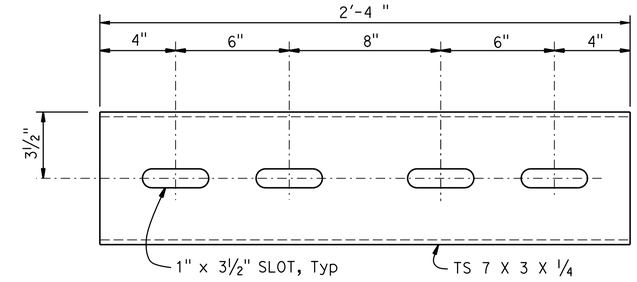


## STANDARD SLEEVE DETAIL

3" = 1'-0"
(FOR TS 8 X 4 X 5/16 RAIL)

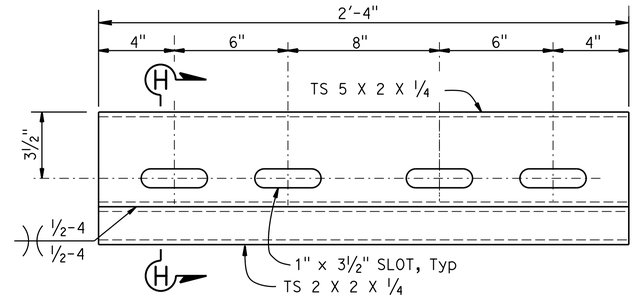


## STANDARD SLEEVE DETAIL

3" = 1'-0"
(FOR TS 8 X 3 X 5/16 RAIL)

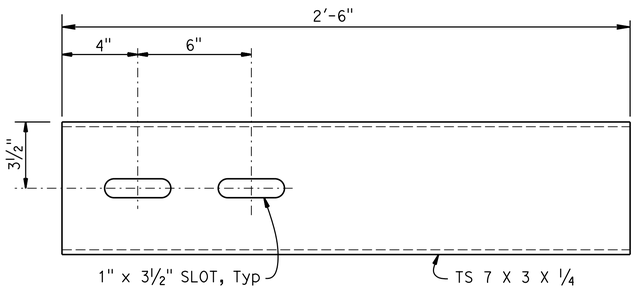


## EXPANSION SLEEVE DETAIL

3" = 1'-0"
(FOR TS 8 X 4 X 5/16 RAIL)

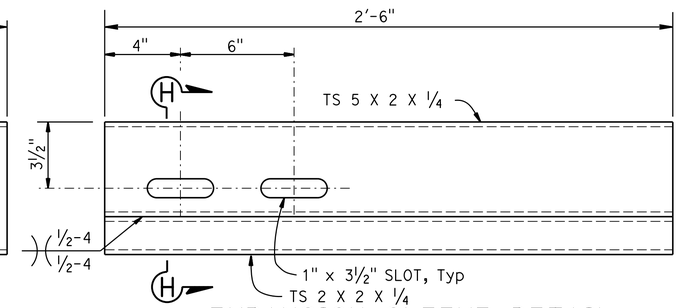


## EXPANSION SLEEVE DETAIL

3" = 1'-0"
(FOR TS 8 X 3 X 5/16 RAIL)

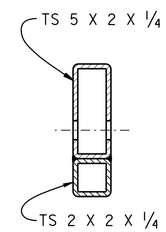


## SECTION H-H

3" = 1'-0"

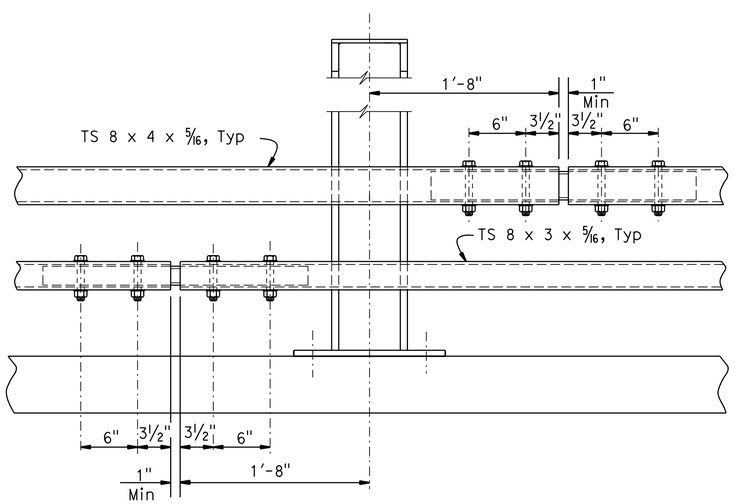


## STANDARD SPLICE

1½"= 1'-0"

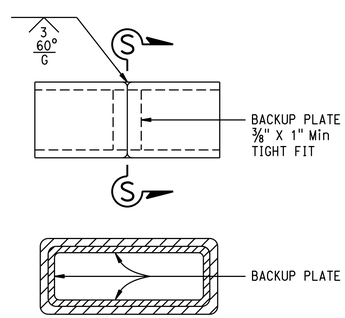


## SECTION S-S

## ALTERNATE TUBE WELDED SPLICE

3" = 1'-0"

NOTES:
HS bolts with washers, wrench tightened
Use ¾" ø X 5¼ (TS 8 X 4 X 5/16)
Use ¾" ø X 4¼ (TS 8 X 3 X 5/16)

2 rails are not shown for clarity

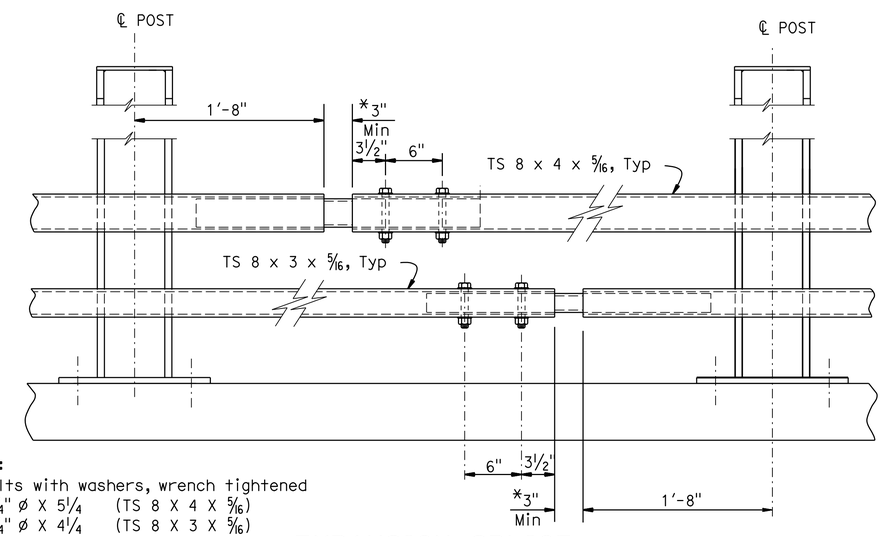


## EXPANSION SPLICE

1½"= 1'-0"
* MATCH DECK OR WALL JOINT

STANDARD DRAWING
FILE NO. xs16-130-4
APPROVAL DATE July 2011

STATE OF CALIFORNIA
DEPARTMENT OF TRANSPORTATION

DIVISION OF ENGINEERING SERVICES

BRIDGE NO. 02-0200
POST MILE 56.0

# FORT GOFF CREEK BRIDGE
## CALIFORNIA ST-70 BRIDGE RAIL (MOD)
## DETAILS NO. 4

DS OSD 2147A (ENGLISH STANDARD DRAWING "XS" BORDER REV. (02-02-11)

ORIGINAL SCALE IN INCHES FOR REDUCED PLANS 0 1 2 3

UNIT: 3592
PROJECT NUMBER & PHASE: 0212000010 1
CONTRACT NO.: 02-4E6301

DISREGARD PRINTS BEARING EARLIER REVISION DATES

REVISION DATES

SHEET 18 OF 23

FILE => 02-4e6300-u_bardt04.dgn

USERNAME => s136697 DATE PLOTTED => 22-OCT-2013 TIME PLOTTED => 13:17

| DIST | COUNTY | ROUTE | POST MILES TOTAL PROJECT | SHEET No. | TOTAL SHEETS |
|---|---|---|---|---|---|
| 02 | Sis | 96 | 56.0 | 88 | 92 |

REGISTERED CIVIL ENGINEER 10-09-2013 DATE

10-25-2013
PLANS APPROVAL DATE

REGISTERED PROFESSIONAL ENGINEER Mario Guadamuz No. 57992 Exp. 06-30-2014 CIVIL STATE OF CALIFORNIA

*The State of California or its officers or agents shall not be responsible for the accuracy or completeness of scanned copies of this plan sheet.*

EXTERIOR SECTION A-A
NO SCALE

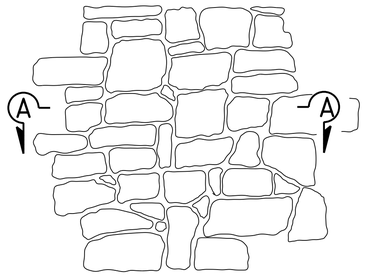


PATTERN ELEVATION
NO SCALE

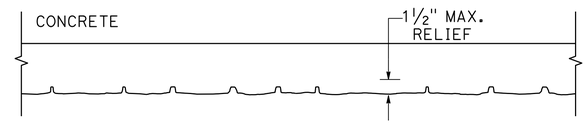


INTERIOR SECTION A-A
NO SCALE

## RANDOM ROUGH STACKED ROCK TEXTURE DETAILS

NO SCALE

TEXTURE NOTES:

1. RANDOM ROUGH STACKED ROCK TEXTURE:
   Texture relief to be ½" maximum at interior pattern
   Stone sizes shall be random
   2½" to 18" in width
   2" to 12" in height

2. RANDOM ROUGH STACKED ROCK TEXTURE:
   Texture relief to be 1½" maximum at exterior pattern
   Stone sizes shall be random
   2½" to 18" in width
   2" to 12" in height

3. For "DETAIL A" and "DETAIL B", see "ARCHITECTURAL TREATMENT NO. 3" sheet.

CONCRETE NOTES:

1. For staining pattern, see "ARCHITECTURAL TREATMENT NO. 4" sheet

2. Barrier and wingwall concrete surface textures to have stain applied after construction

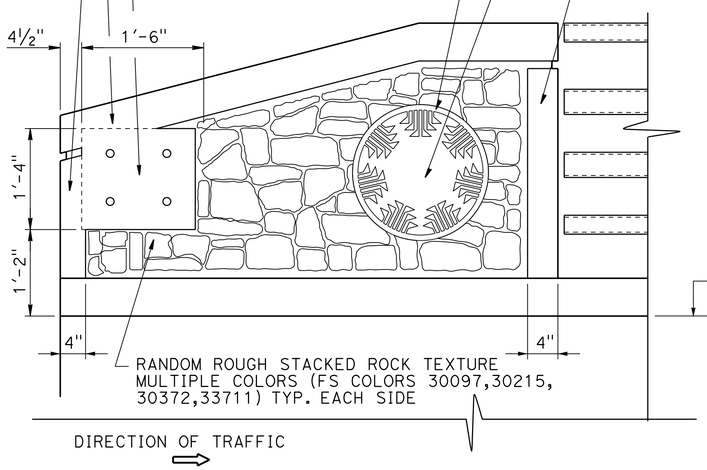


EXTERIOR ELEVATION
1" = 1'-0"

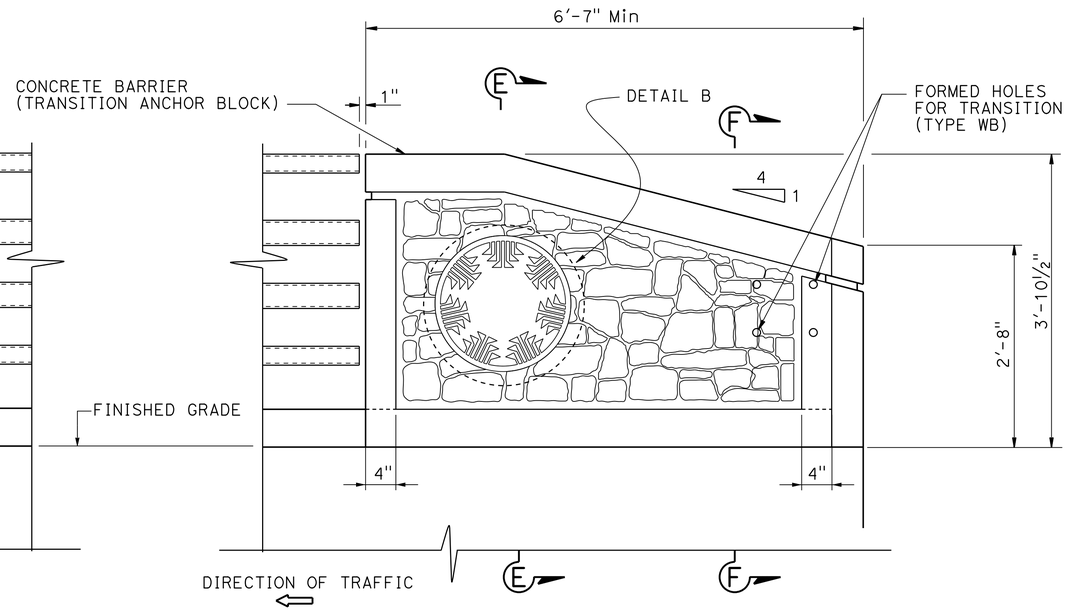


INTERIOR ELEVATION
1" = 1'-0"

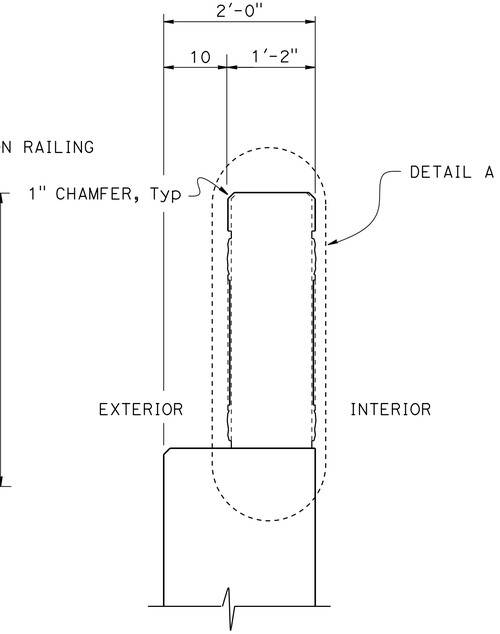


SECTION E-E
1" = 1'-0"

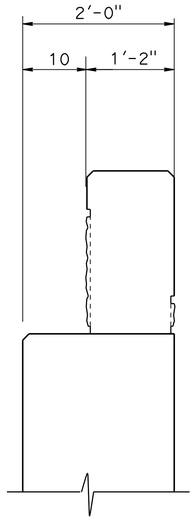


SECTION F-F
1" = 1'-0"

| | BY | CHECKED |
|---|---|---|
| DESIGN | Mario Guadamuz | Tracy Sanderson |
| DETAILS | Bruno Jenko | Tracy Sanderson |
| QUANTITIES | Bruno Jenko | Gerald Dickerson |

STATE OF CALIFORNIA
DEPARTMENT OF TRANSPORTATION

DIVISION OF ENGINEERING SERVICES
STRUCTURE DESIGN
DESIGN BRANCH 7

BRIDGE NO. 02-0200
POST MILE 56.0

# FORT GOFF CREEK BRIDGE
## ARCHITECTURAL TREATMENT NO. 1

STRUCTURES DESIGN DETAIL SHEET (ENGLISH) (REV. 09-01-10)

ORIGINAL SCALE IN INCHES FOR REDUCED PLANS 0 1 2 3

UNIT: 3592
PROJECT NUMBER & PHASE: 02120000010 1
CONTRACT NO.: 02-4E6301

DISREGARD PRINTS BEARING EARLIER REVISION DATES

REVISION DATES: 7-2-13 10-2-13

SHEET 19 OF 22

FILE => 02-4e6300-u-archdet01.dgn

USERNAME => s136697 DATE PLOTTED => 22-OCT-2013 TIME PLOTTED => 13:17

| DIST | COUNTY | ROUTE | POST MILES TOTAL PROJECT | SHEET No. | TOTAL SHEETS |
|---|---|---|---|---|---|
| 02 | Sis | 96 | 56.0 | 89 | 92 |

REGISTERED CIVIL ENGINEER 10-09-2013 DATE

10-25-2013
PLANS APPROVAL DATE

REGISTERED PROFESSIONAL ENGINEER
Mario Guadamuz
No. 57992
Exp. 06-30-2014
CIVIL
STATE OF CALIFORNIA

*The State of California or its officers or agents shall not be responsible for the accuracy or completeness of scanned copies of this plan sheet.*

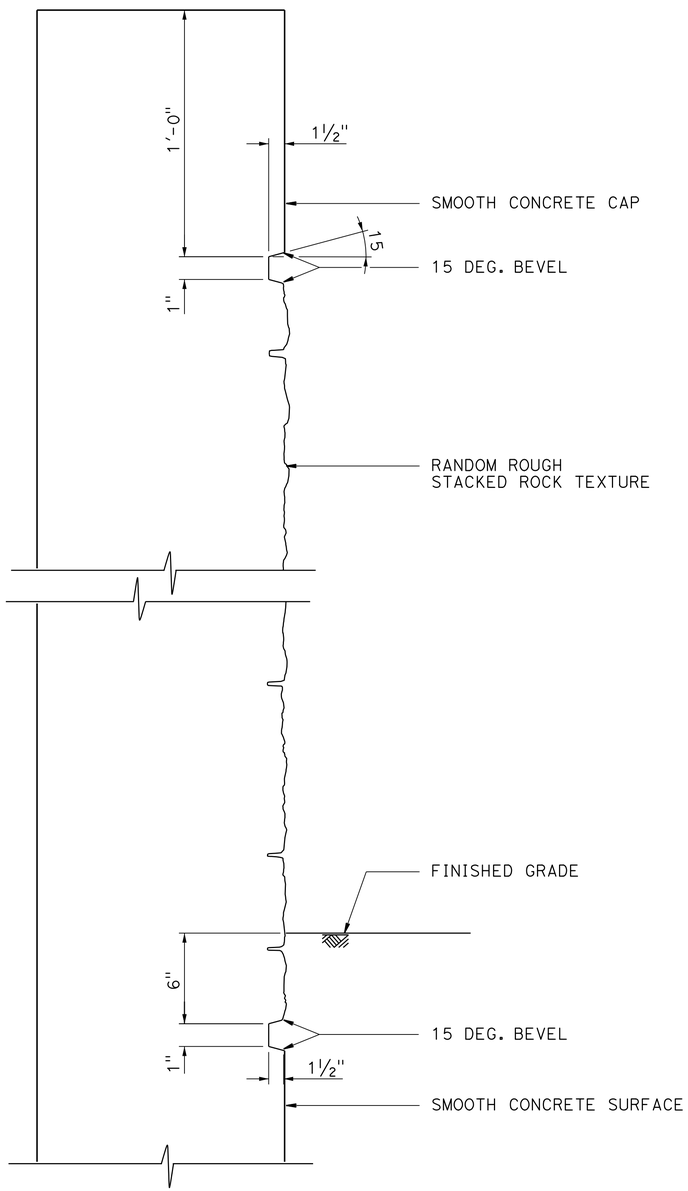


## WINGWALL SECTION

NO SCALE

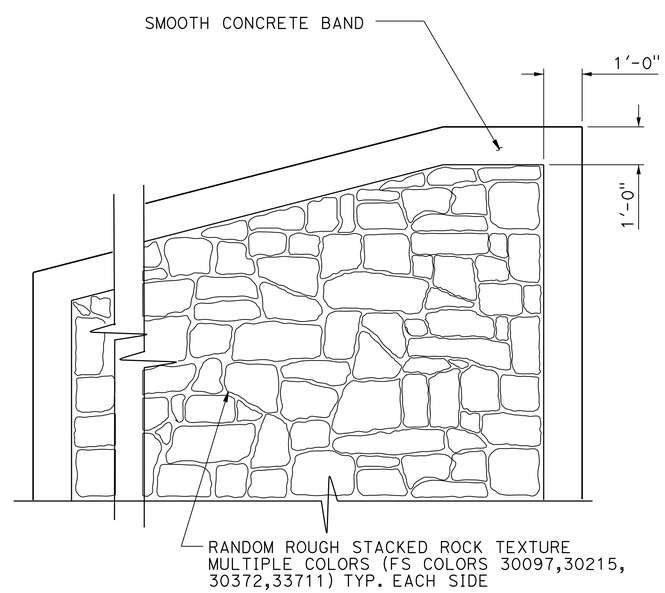


## PARTIAL WINGWALL ELEVATION

NO SCALE

TEXTURE NOTES:

1. For texture details, see "RANDOM ROUGH STACKED ROCK TEXTURE DETAILS" on "ARCHITECTURAL TREATMENT NO. 1"sheet.

NOTES:

1. For staining pattern, see, "ARCHITECTURAL TREATMENT NO. 4" sheet.
2. Wingwall concrete surface texture to have stain applied after construction

| | | | |
|---|---|---|---|
| DESIGN | BY Mario Guadamuz | CHECKED Tracy Sanderson | |
| DETAILS | BY Bruno Jenko | CHECKED Tracy Sanderson | |
| QUANTITIES | BY Bruno Jenko | CHECKED Gerald Dickerson | |

STATE OF CALIFORNIA
DEPARTMENT OF TRANSPORTATION

DIVISION OF ENGINEERING SERVICES
STRUCTURE DESIGN
DESIGN BRANCH 7

BRIDGE NO. 02-0200
POST MILE 56.0

# FORT GOFF CREEK BRIDGE
## ARCHITECTURAL TREATMENT NO. 2

STRUCTURES DESIGN DETAIL SHEET (ENGLISH) (REV. 09-01-10)

ORIGINAL SCALE IN INCHES FOR REDUCED PLANS 0 1 2 3

UNIT: 3592
PROJECT NUMBER & PHASE: 02120000010 1 CONTRACT NO.: 02-4E6301

DISREGARD PRINTS BEARING EARLIER REVISION DATES

REVISION DATES: 7-2-13 10/2/13

SHEET 20 OF 23

FILE => 02-4e6300-u-archdet02.dgn

USERNAME => s136897 DATE PLOTTED => 22-OCT-2013 TIME PLOTTED => 13:17

| DIST | COUNTY | ROUTE | POST MILES TOTAL PROJECT | SHEET No. | TOTAL SHEETS |
|---|---|---|---|---|---|
| 02 | Sis | 96 | 56.0 | 90 | 92 |

REGISTERED CIVIL ENGINEER 10-09-2013 DATE

10-25-2013
PLANS APPROVAL DATE

REGISTERED PROFESSIONAL ENGINEER Mario Guadamuz No. 57992 Exp. 06-30-2014 CIVIL STATE OF CALIFORNIA

*The State of California or its officers or agents shall not be responsible for the accuracy or completeness of scanned copies of this plan sheet.*

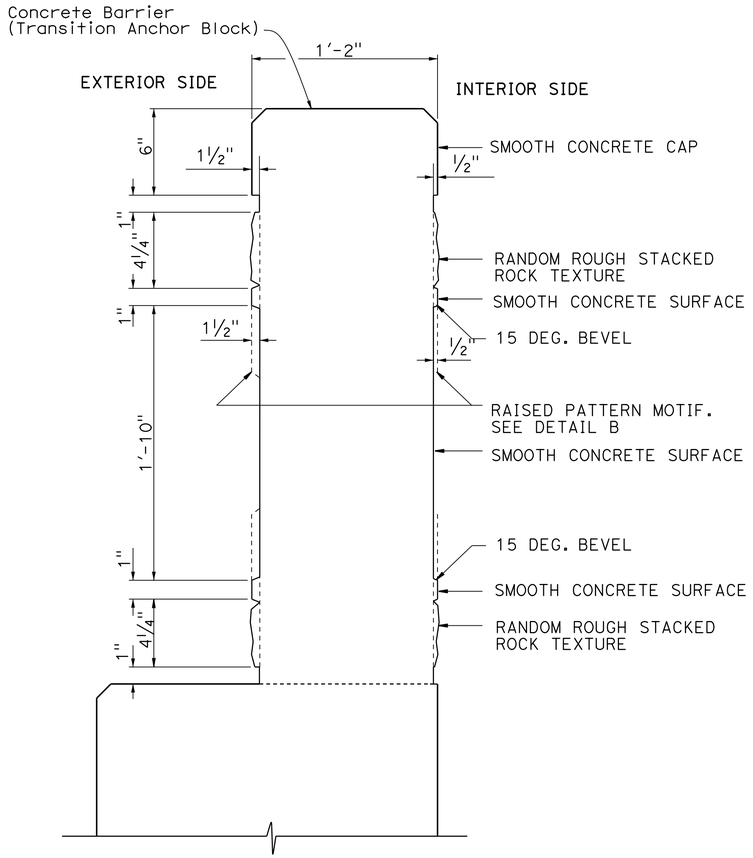


DETAIL A
NOT TO SCALE

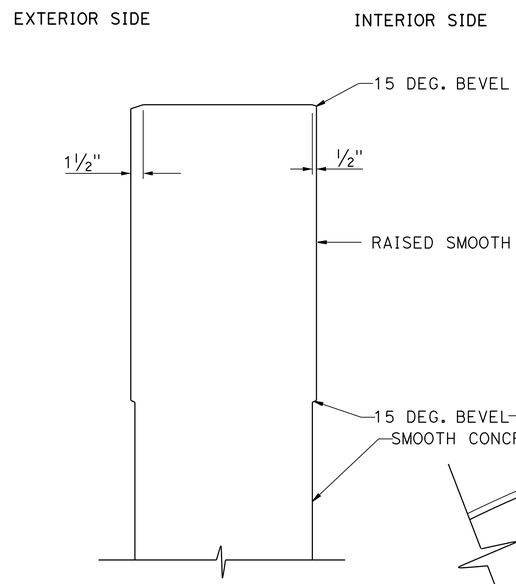


SECTION B-B
NOT TO SCALE

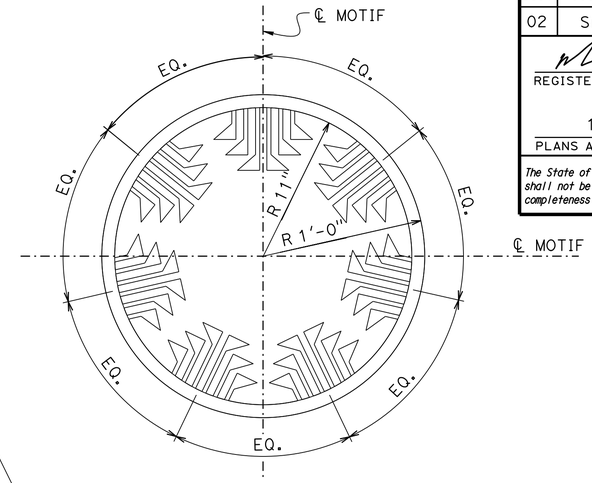


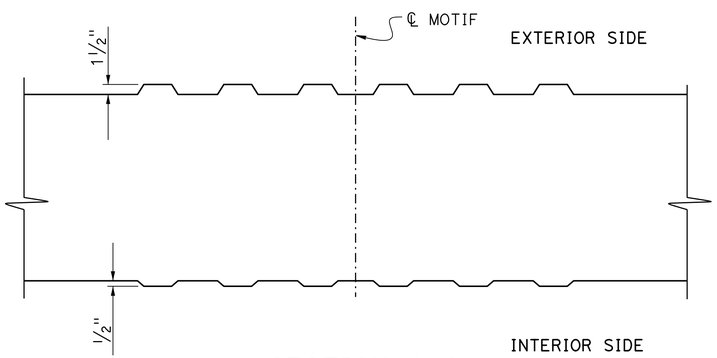


SECTION A-A
NOT TO SCALE

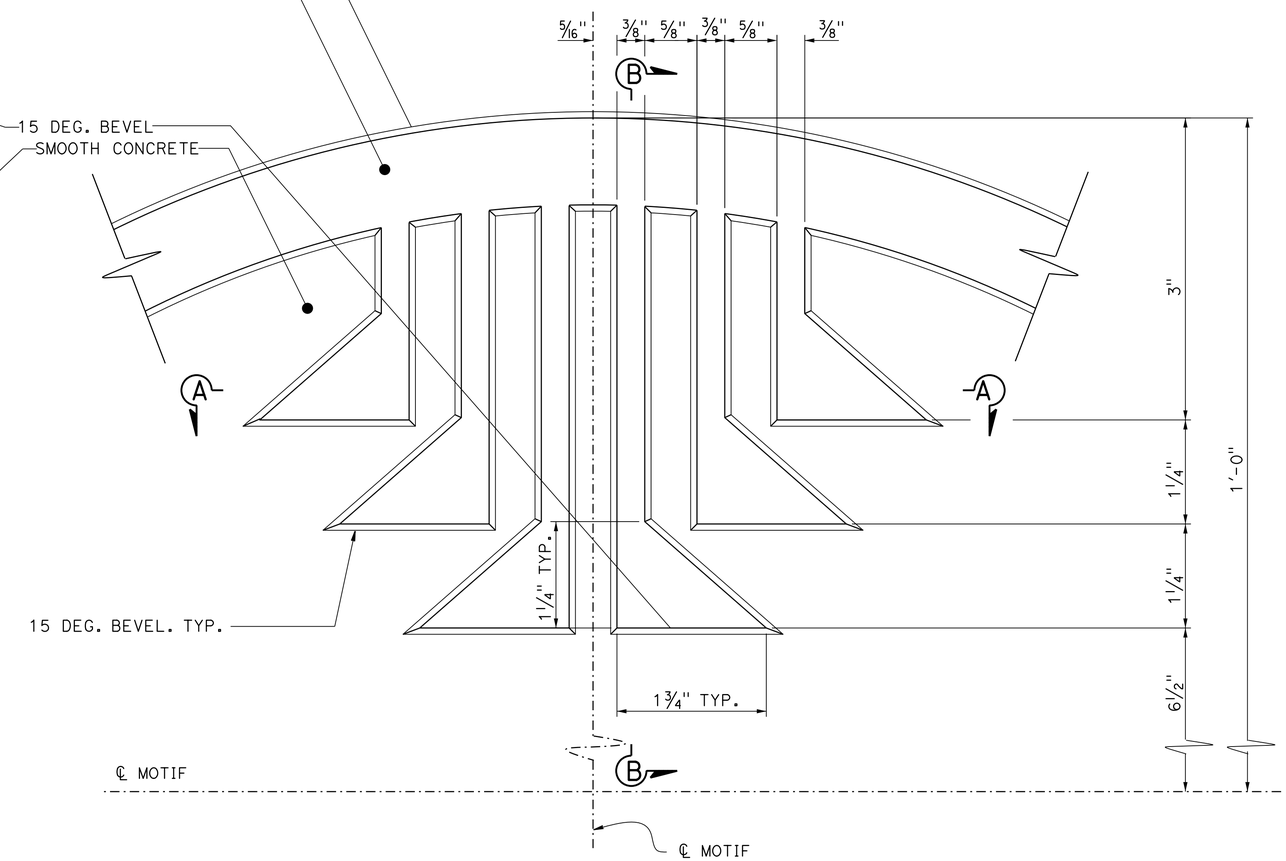


DETAIL B
NOT TO SCALE

| | | | |
|---|---|---|---|
| DESIGN | BY Mario Guadamuz | CHECKED Tracy Sanderson | |
| DETAILS | BY Bruno Jenko | CHECKED Tracy Sanderson | |
| QUANTITIES | BY Bruno Jenko | CHECKED Gerald Dickerson | |

STATE OF CALIFORNIA
DEPARTMENT OF TRANSPORTATION

DIVISION OF ENGINEERING SERVICES
STRUCTURE DESIGN
DESIGN BRANCH 7

BRIDGE NO. 02-0200
POST MILE 56.0

# FORT GOFF CREEK BRIDGE
## ARCHITECTURAL TREATMENT NO. 3

STRUCTURES DESIGN DETAIL SHEET (ENGLISH) (REV. 09-01-10)

ORIGINAL SCALE IN INCHES FOR REDUCED PLANS 0 1 2 3

UNIT: 3592
PROJECT NUMBER & PHASE: 02120000010 1
CONTRACT NO.: 02-4E6301

DISREGARD PRINTS BEARING EARLIER REVISION DATES

REVISION DATES: 7-2-13 8-7-13 10/2/13

SHEET 21 OF 23

FILE => 02-4e6300-u-archdet03.dgn

USERNAME => s136697 DATE PLOTTED => 22-OCT-2013 TIME PLOTTED => 13:17

| DIST | COUNTY | ROUTE | POST MILES TOTAL PROJECT | SHEET No. | TOTAL SHEETS |
|---|---|---|---|---|---|
| 02 | Sis | 96 | 56.0 | 91 | 92 |

REGISTERED CIVIL ENGINEER 10-09-2013 DATE

10-25-2013
PLANS APPROVAL DATE

REGISTERED PROFESSIONAL ENGINEER
Mario Guadamuz
No. 57992
Exp. 06-30-2014
CIVIL
STATE OF CALIFORNIA

*The State of California or its officers or agents shall not be responsible for the accuracy or completeness of scanned copies of this plan sheet.*

LEGEND:

- 25% CONCRETE STAIN FEDERAL STANDARD 595C #30097 (DARK BROWN)
- 25% CONCRETE STAIN FEDERAL STANDARD 595C #30215 (RED BROWN)
- 25% CONCRETE STAIN FEDERAL STANDARD 595C #30372 (MEDIUM TAN)
- 25% CONCRETE STAIN FEDERAL STANDARD 595C #33711 (LIGHT TAN)

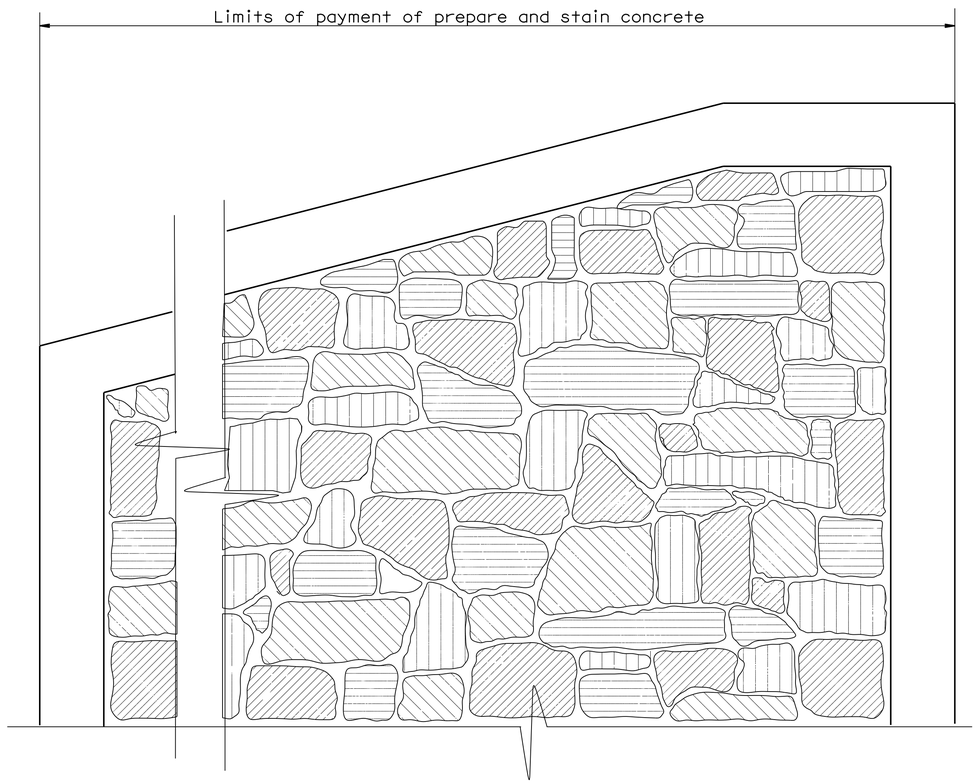


PARTIAL WINGWALL ELEVATION

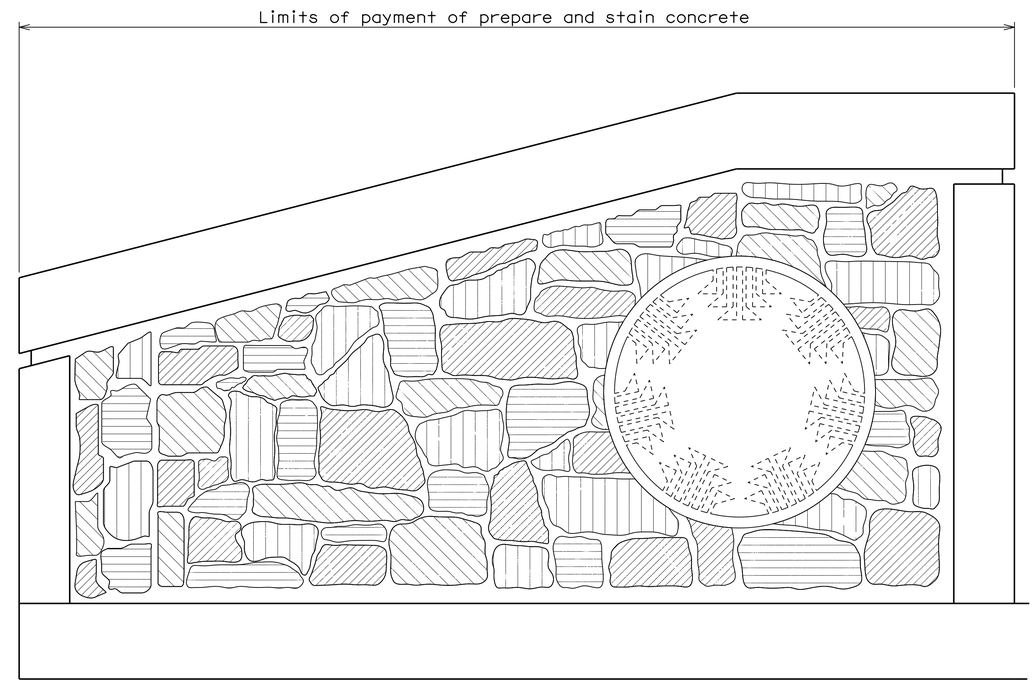


CONCRETE BARRIER (TRANSITION ANCHOR BLOCK) ELEVATION

| | BY | CHECKED |
|---|---|---|
| DESIGN | Mario Guadamuz | Tracy Sanderson |
| DETAILS | Bruno Jenko | Tracy Sanderson |
| QUANTITIES | Bruno Jenko | Gerald Dickerson |

STATE OF CALIFORNIA
DEPARTMENT OF TRANSPORTATION

DIVISION OF ENGINEERING SERVICES
STRUCTURE DESIGN
DESIGN BRANCH 7

BRIDGE NO. 02-0200
POST MILE 56.0

# FORT GOFF CREEK BRIDGE
## ARCHITECTURAL TREATMENT NO. 4

STRUCTURES DESIGN DETAIL SHEET (ENGLISH) (REV. 09-01-10)

ORIGINAL SCALE IN INCHES FOR REDUCED PLANS 0 1 2 3

UNIT: 3592
PROJECT NUMBER & PHASE: 02120000010 1 CONTRACT NO.: 02-4E6301

DISREGARD PRINTS BEARING EARLIER REVISION DATES

REVISION DATES: 7-2-13 10/2/13

SHEET 22 OF 23

FILE => 02-4e6300-u-archdet04t.dgn

USERNAME => s136697 DATE PLOTTED => 22-OCT-2013 TIME PLOTTED => 13:17

| DIST | COUNTY | ROUTE | POST MILES TOTAL PROJECT | SHEET No. | TOTAL SHEETS |
|---|---|---|---|---|---|
| 02 | Sis | 96 | 56.0 | 92 | 92 |

CERTIFIED ENGINEERING GEOLOGIST — DATE 6-5-13

PROFESSIONAL GEOLOGIST — Reid Buell — No. 1481 — Exp. 4-30-15 — CERTIFIED ENGINEERING GEOLOGIST — STATE OF CALIFORNIA

10-25-2013
PLANS APPROVAL DATE

*The State of California or its officers or agents shall not be responsible for the accuracy or completeness of electronic copies of this plan sheet.*

This LOTB sheet was prepared in accordance with the Caltrans Soil & Rock Logging, Classification, & Presentation Manual (2010 Edition).

See 2010 Standard Plans A10F and A10G for Soil Legend, and A10H for Rock Legend.

## BENCH MARK

CM 120 Elev 1320.13
Fnd metal cap in concrete stamped "CM 120." 24.03 Ft Lt "CL1" Line ℄
Rte 96 Sta 161+95.29
N 2,565.100.99
E 6,218.916.53
Vertical Datum: NAVD88

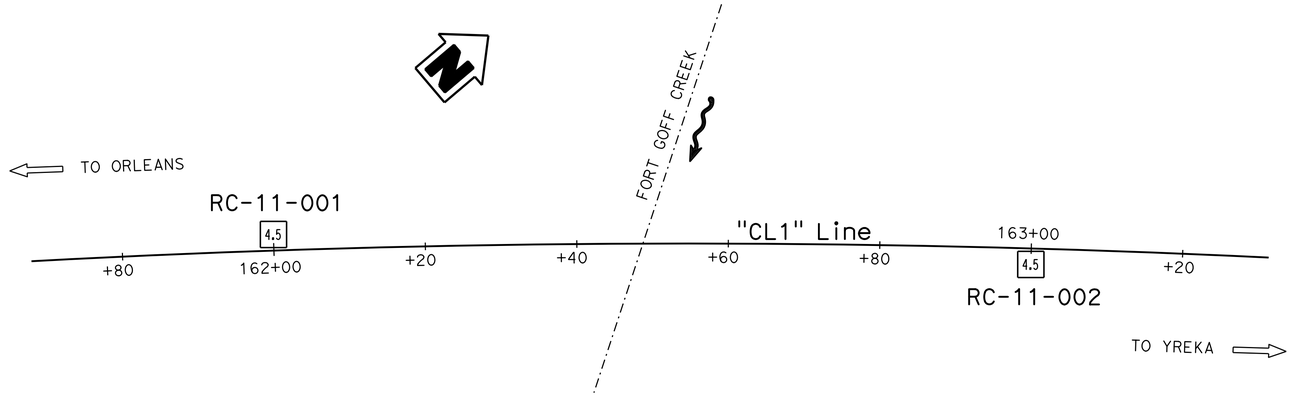


## PLAN

1" = 100'

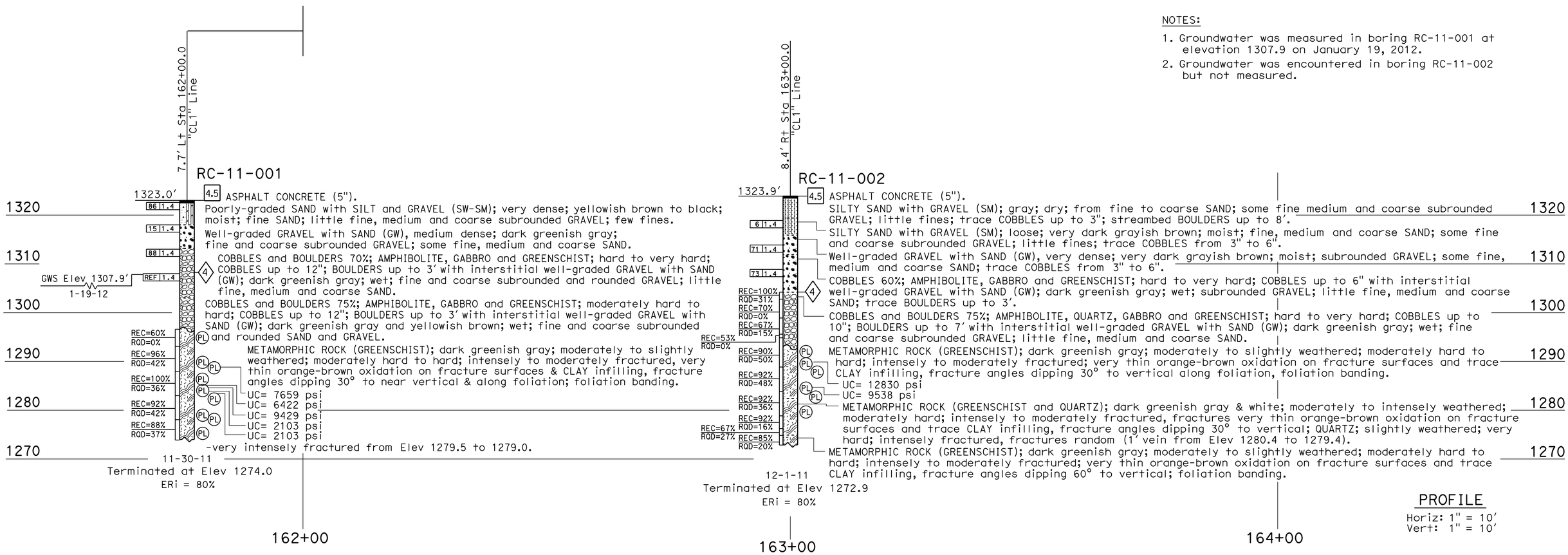


NOTES:

1. Groundwater was measured in boring RC-11-001 at elevation 1307.9 on January 19, 2012.
2. Groundwater was encountered in boring RC-11-002 but not measured.

## PROFILE

Horiz: 1" = 10'
Vert: 1" = 10'

| ENGINEERING SERVICES | MATERIALS AND GEOTECHNICAL SERVICES | STATE OF CALIFORNIA DEPARTMENT OF TRANSPORTATION | DIVISION OF ENGINEERING SERVICES STRUCTURE DESIGN DESIGN BRANCH 7 | BRIDGE NO. 02-0200 POST MILE 56.0 | FORT GOFF CREEK BRIDGE LOG OF TEST BORINGS |
|---|---|---|---|---|---|
| FUNCTIONAL SUPERVISOR NAME: R. Buell | DRAWN BY: W. Tang 04/12, I.G-Remmen CHECKED BY: L. Paredes-Mejia | FIELD INVESTIGATION BY: J. Thorne | | | |

OGS CIVIL LOG OF TEST BORINGS SHEET

ORIGINAL SCALE IN INCHES FOR REDUCED PLANS 0 1 2 3

UNIT: 3643
PROJECT NUMBER & PHASE: 02120000101 CONTRACT NO.: 02-4E6301

DISREGARD PRINTS BEARING EARLIER REVISION DATES

REVISION DATES: 01-15-13 03-29-13 04-04-13 05-31-13

SHEET 23 OF 23

FILE => 02-4e6300-z-lltb.dgn

USERNAME => s136697 DATE PLOTTED => 22-OCT-2013 TIME PLOTTED => 13:17