Dist	COUNTY	ROUTE	POST MILES TOTAL PROJECT	SHEET No.	TOTAL SHEETS
02	Sha	44	R21.0/R21.4	1	40

STATE OF CALIFORNIA

DEPARTMENT OF TRANSPORTATION

PROJECT PLANS FOR CONSTRUCTION ON

STATE HIGHWAY

IN SHASTA COUNTY
ABOUT 6 MILES WEST OF SHINGLETOWN
FROM 0.2 MILE WEST
TO 0.3 MILE EAST OF BLACK BUTTE ROAD

TO BE SUPPLEMENTED BY STANDARD PLANS DATED 2010

INDEX OF PLANS

SHEET No.	DESCRIPTION
1	TITLE
2,3	TYPICAL CROSS SECTIONS
4,5	LAYOUT
6-8	PROFILE AND SUPERELEVATION DIAGRAM
9-13	CONSTRUCTION DETAILS
14-16	EROSION CONTROL PLAN, QUANTITIES
17-23	DRAINAGE PLAN, PROFILES, DETAILS, QUANTITIES
24	UTILITY PLAN
25	CONSTRUCTION AREA SIGNS
26, 27	STAGE CONSTRUCTION
28-30	PAVEMENT DELINEATION AND SIGN PLAN, QUANTITIES
31	SUMMARY OF QUANTITIES
32	LIGHTING
33	ELECTRICAL QUANTITIES
34	TRAFFIC CONTROL SYSTEM
35-40	REVISED STANDARD PLANS

THE STANDARD PLANS LIST APPLICABLE TO THIS CONTRACT IS INCLUDED IN THE NOTICE TO BIDDERS AND SPECIAL PROVISIONS BOOK.

LOCATION MAP

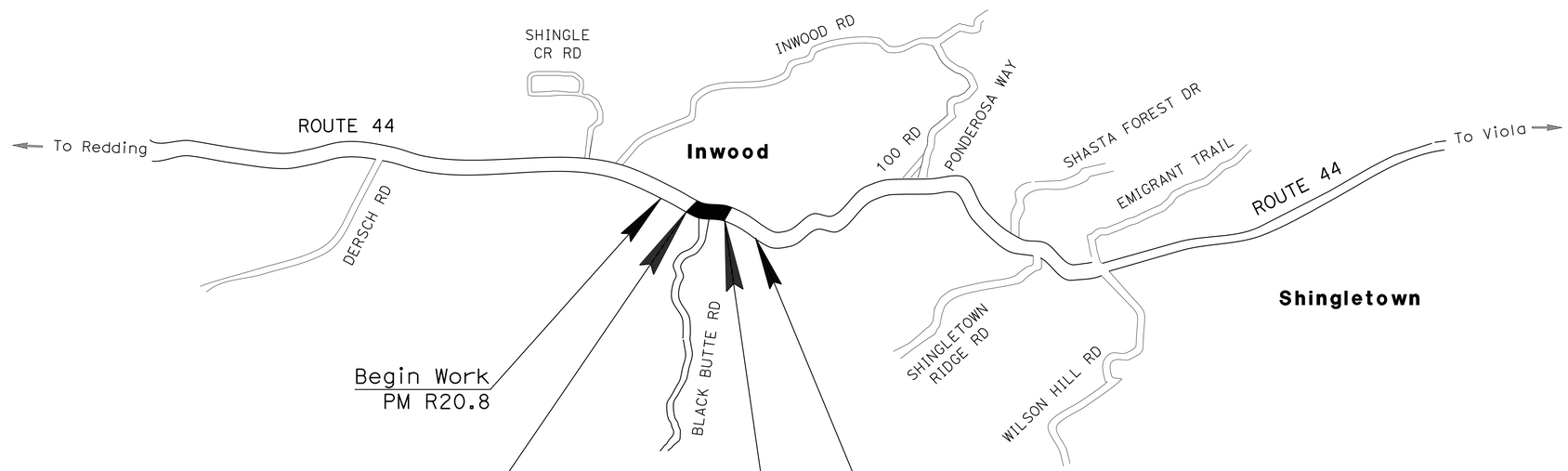

BEGIN CONSTRUCTION
STA "CL1" 1209+80
PM R21.0

END CONSTRUCTION
STA "CL1" 1226+13
PM R21.4

THE CONTRACTOR SHALL POSSESS THE CLASS (OR CLASSES) OF LICENSE AS SPECIFIED IN THE "NOTICE TO BIDDERS."

NO SCALE

PROJECT MANAGER: STEVE ROGERS
DESIGN ENGINEER: JOHN L. MARTIN

PROJECT ENGINEER REGISTERED CIVIL ENGINEER — DATE 12-12-12

December 17, 2012
PLANS APPROVAL DATE

REGISTERED PROFESSIONAL ENGINEER — TRAVIS A. GURNEY — No. C77417 — Exp. 06-30-13 — CIVIL — STATE OF CALIFORNIA

THE STATE OF CALIFORNIA OR ITS OFFICERS OR AGENTS SHALL NOT BE RESPONSIBLE FOR THE ACCURACY OR COMPLETENESS OF SCANNED COPIES OF THIS PLAN SHEET.

CONTRACT No.	02-4E5204
PROJECT ID	0200020317

LAST REVISION 12-12-12 — DATE PLOTTED => 20-DEC-2012 — TIME PLOTTED => 11:12

P:\proj1\02\4E520_plans\pse\0200020317ab001.dgn

Dist	COUNTY	ROUTE	POST MILES TOTAL PROJECT	SHEET No.	TOTAL SHEETS
02	Sha	44	R21.0/R21.4	2	40

REGISTERED CIVIL ENGINEER 12-12-12 DATE

12-17-12
PLANS APPROVAL DATE

REGISTERED PROFESSIONAL ENGINEER TRAVIS A. GURNEY No. C77417 Exp. 6-30-13 CIVIL STATE OF CALIFORNIA

THE STATE OF CALIFORNIA OR ITS OFFICERS OR AGENTS SHALL NOT BE RESPONSIBLE FOR THE ACCURACY OR COMPLETENESS OF SCANNED COPIES OF THIS PLAN SHEET.

NOTES:

1. DIMENSIONS OF THE PAVEMENT STRUCTURES (STRUCTURAL SECTIONS) ARE SUBJECT TO TOLERANCES SPECIFIED IN THE STANDARD SPECIFICATIONS.
2. SUPERELEVATIONS ARE SHOWN ON THE SUPERELEVATION DIAGRAM.
3. FOR EDGE DRAIN DETAILS SEE SHEET C-4.

LEGEND

* "CL1" STA 1217+80.00 TO 1220+00.00 WB EDGE DRAIN LOCATION, CEMENT TREATED PERMEABLE MATERIAL SEE SHEET C-4

ABBREVIATIONS:

LTLL	LEFT TURN LANE LINE
SEG	SUBGRADE ENHANCEMENT GEOTEXTILE CLASS B2
(E)	EXISTING

DESIGN DESIGNATION (ROUTE 44)

ADT (2009) = 4550	D = 74%
ADT (2013) = 4800	T = 7.0%
ADT (2023) = 5300	V = 55 MPH
ADT (2033) = 6000	
DHV (2023) = 530	
DHV (2033) = 580	

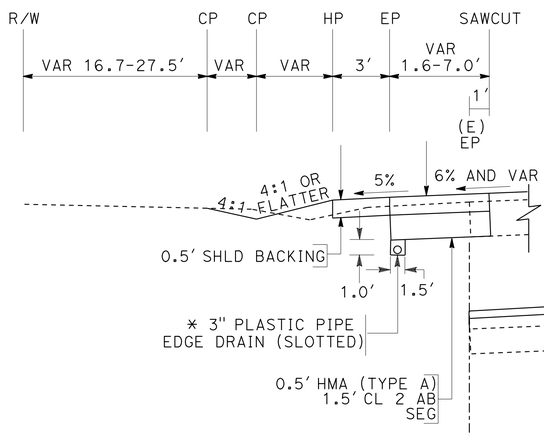

"CL1" STA 1218+00.00 TO 1222+17.08

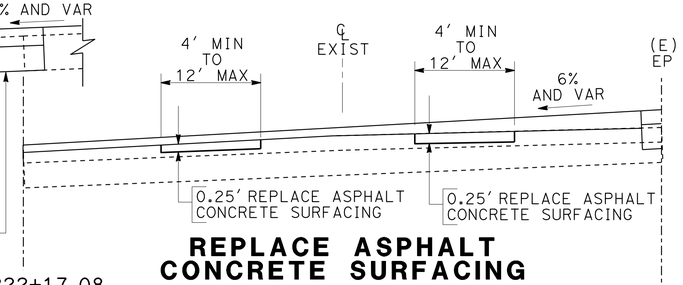

REPLACE ASPHALT CONCRETE SURFACING
LOCATIONS TO BE DETERMINED BY THE ENGINEER

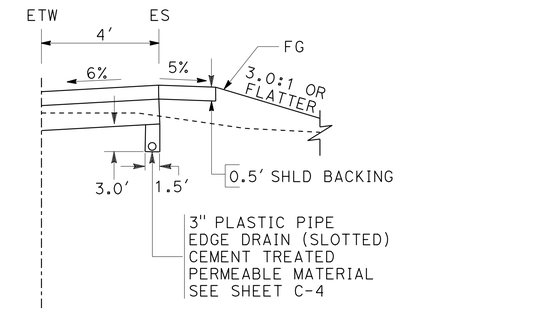

"CL1" STA 1217+70.00 TO 1220+00.00

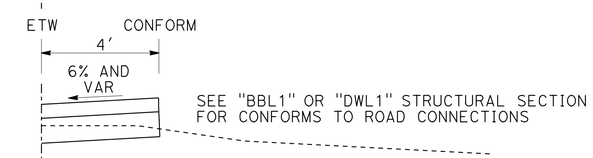

"CL1" STA 1216+68.77 TO 1217+77.43
"CL1" STA 1221+54.40 TO 1222+51.10

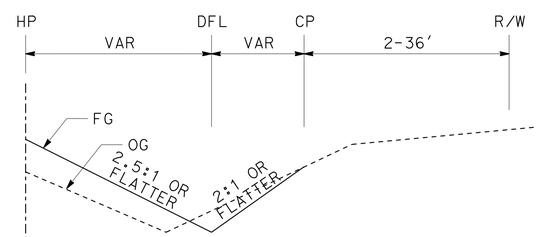

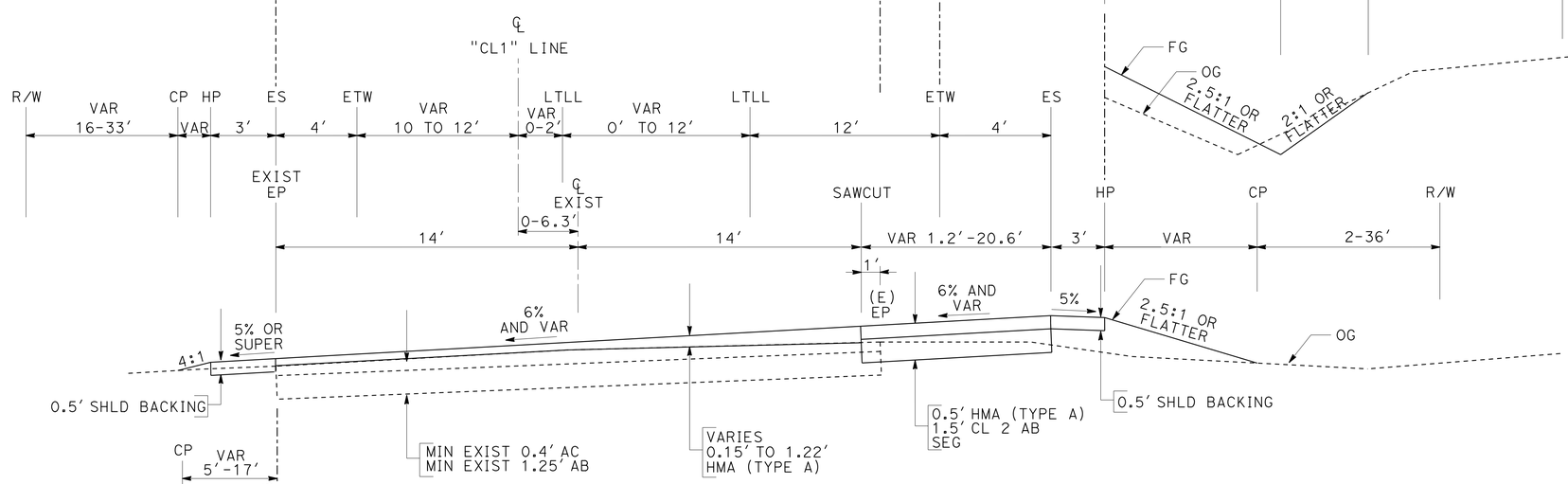

ROUTE 44
"CL1" STA 1209+80.00 TO 1226+12.74

"CL1" STA 1211+93.25 TO 1213+00.00
"CL1" STA 1215+07.84 TO 1218+00.00
"CL1" STA 1222+37.82 TO 1223+51.30

TYPICAL CROSS SECTIONS
NO SCALE

X-1

REVISED BY	DATE REVISED

CALCULATED-DESIGNED BY	CHECKED BY
TRAVIS A. GURNEY	JOHN L. MARTIN

FUNCTIONAL SUPERVISOR: JOHN L. MARTIN

STATE OF CALIFORNIA - DEPARTMENT OF TRANSPORTATION
Caltrans®
DESIGN

P:\proj1\02\4E520_plans\pse\0200020317ca001.dgn

LAST REVISION 08-30-12 | DATE PLOTTED => 20-DEC-2012 | TIME PLOTTED => 11:12

Dist	COUNTY	ROUTE	POST MILES TOTAL PROJECT	SHEET No.	TOTAL SHEETS
02	Sha	44	R21.0/R21.4	3	40

REGISTERED CIVIL ENGINEER 12-12-12 DATE

12-17-12
PLANS APPROVAL DATE

REGISTERED PROFESSIONAL ENGINEER TRAVIS A. GURNEY No. C77417 Exp. 6-30-13 CIVIL STATE OF CALIFORNIA

THE STATE OF CALIFORNIA OR ITS OFFICERS OR AGENTS SHALL NOT BE RESPONSIBLE FOR THE ACCURACY OR COMPLETENESS OF SCANNED COPIES OF THIS PLAN SHEET.

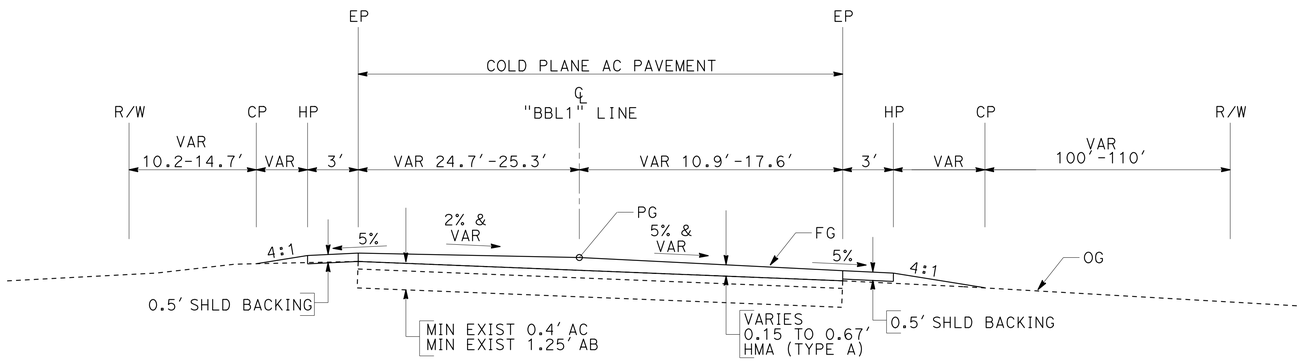

BLACK BUTTE ROAD

"BBL1" STA 18+15.00 TO 18+40.00

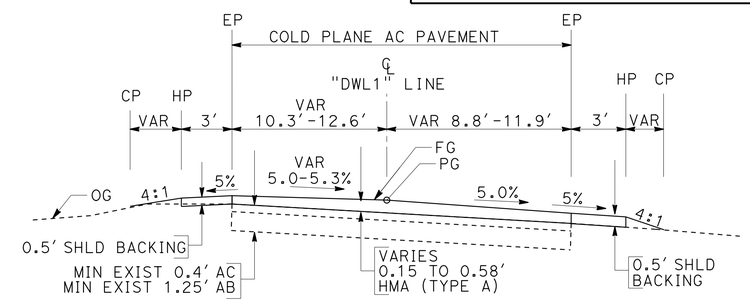

DRIVEWAY 1

"DWL1" STA 21+70.00 TO 21+95.00

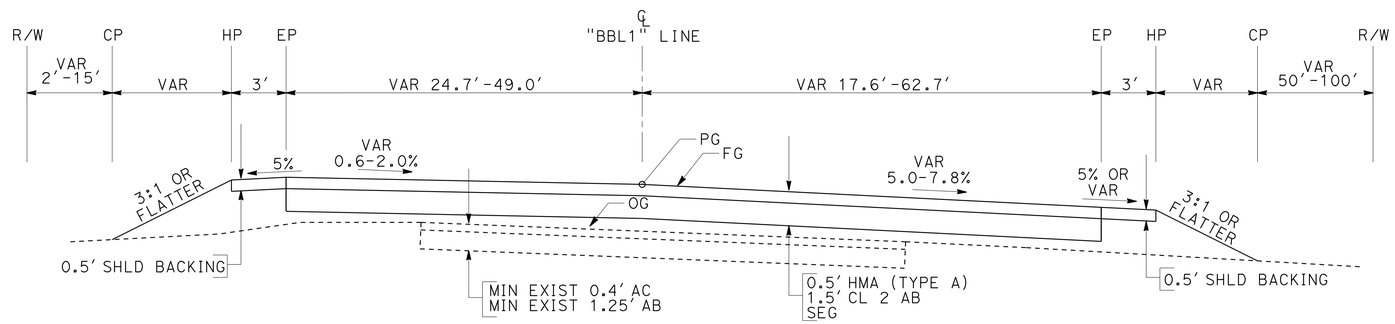

BLACK BUTTE ROAD

"BBL1" STA 17+42.16 TO 18+15.00

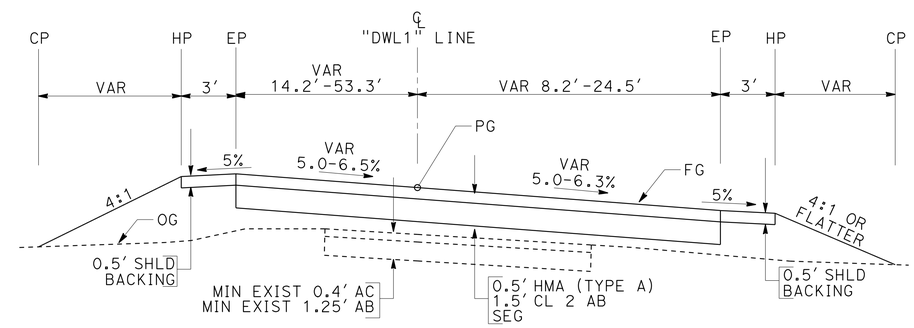

DRIVEWAY 1

"DWL1" STA 21+36.78 TO 21+70.00

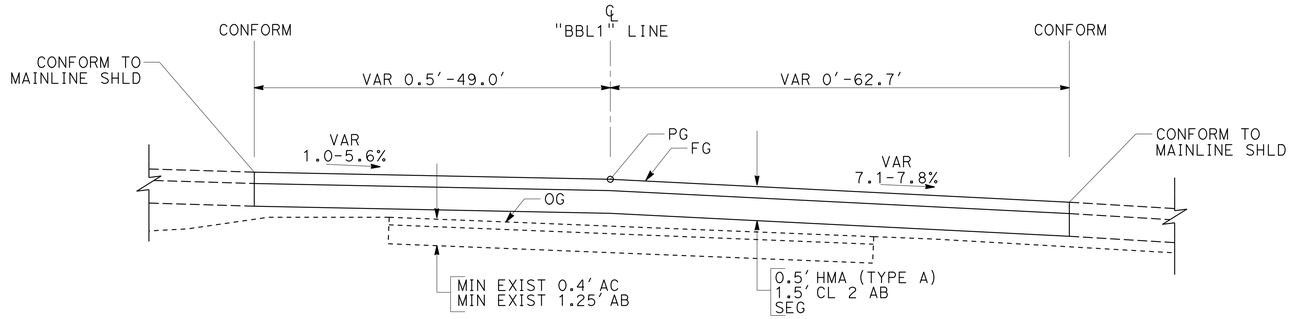

BLACK BUTTE ROAD

"BBL1" STA 17+24.61 TO 17+42.16

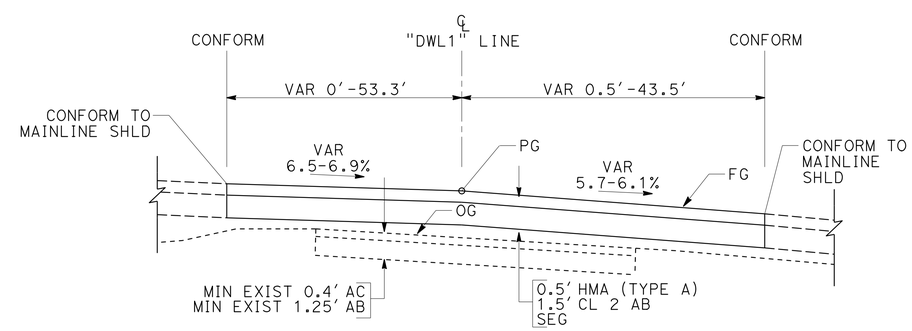

DRIVEWAY 1

"DWL1" STA 21+25.06 TO 21+36.78

TYPICAL CROSS SECTIONS

NO SCALE

X-2

REVISED BY	DATE REVISED
TRAVIS A. GURNEY	JOHN L. MARTIN
CALCULATED-DESIGNED BY	CHECKED BY
FUNCTIONAL SUPERVISOR	JOHN L. MARTIN

STATE OF CALIFORNIA - DEPARTMENT OF TRANSPORTATION
Caltrans DESIGN

P:\proj1\02\4E520_plans\pse\02000203171ca002.dgn

LAST REVISION 08-30-12 | DATE PLOTTED => 20-DEC-2012 | TIME PLOTTED => 11:12

Dist	COUNTY	ROUTE	POST MILES TOTAL PROJECT	SHEET No.	TOTAL SHEETS
02	Sha	44	R21.0/R21.4	4	40

REGISTERED CIVIL ENGINEER 12-12-12 DATE

12-17-12
PLANS APPROVAL DATE

REGISTERED PROFESSIONAL ENGINEER TRAVIS A. GURNEY No. C77417 Exp. 6-30-13 CIVIL STATE OF CALIFORNIA

THE STATE OF CALIFORNIA OR ITS OFFICERS OR AGENTS SHALL NOT BE RESPONSIBLE FOR THE ACCURACY OR COMPLETENESS OF SCANNED COPIES OF THIS PLAN SHEET.

NOTES:

1. FOR ACCURATE RIGHT OF WAY DATA, CONTACT RIGHT OF WAY ENGINEERING AT THE DISTRICT OFFICE.
2. ELEVATIONS SHOWN ARE REFERENCED TO THE NORTH AMERICAN VERTICAL DATUM 1988

LEGEND:

- (1) CURVE NUMBER
- NEW STRUCTURAL SECTION
- COLD PLANE/CONFORM
- VARIABLE DEPTH HMA OVERLAY
- BENCHMARK
- PERMIT TO ENTER AND CONSTRUCT (PEC)

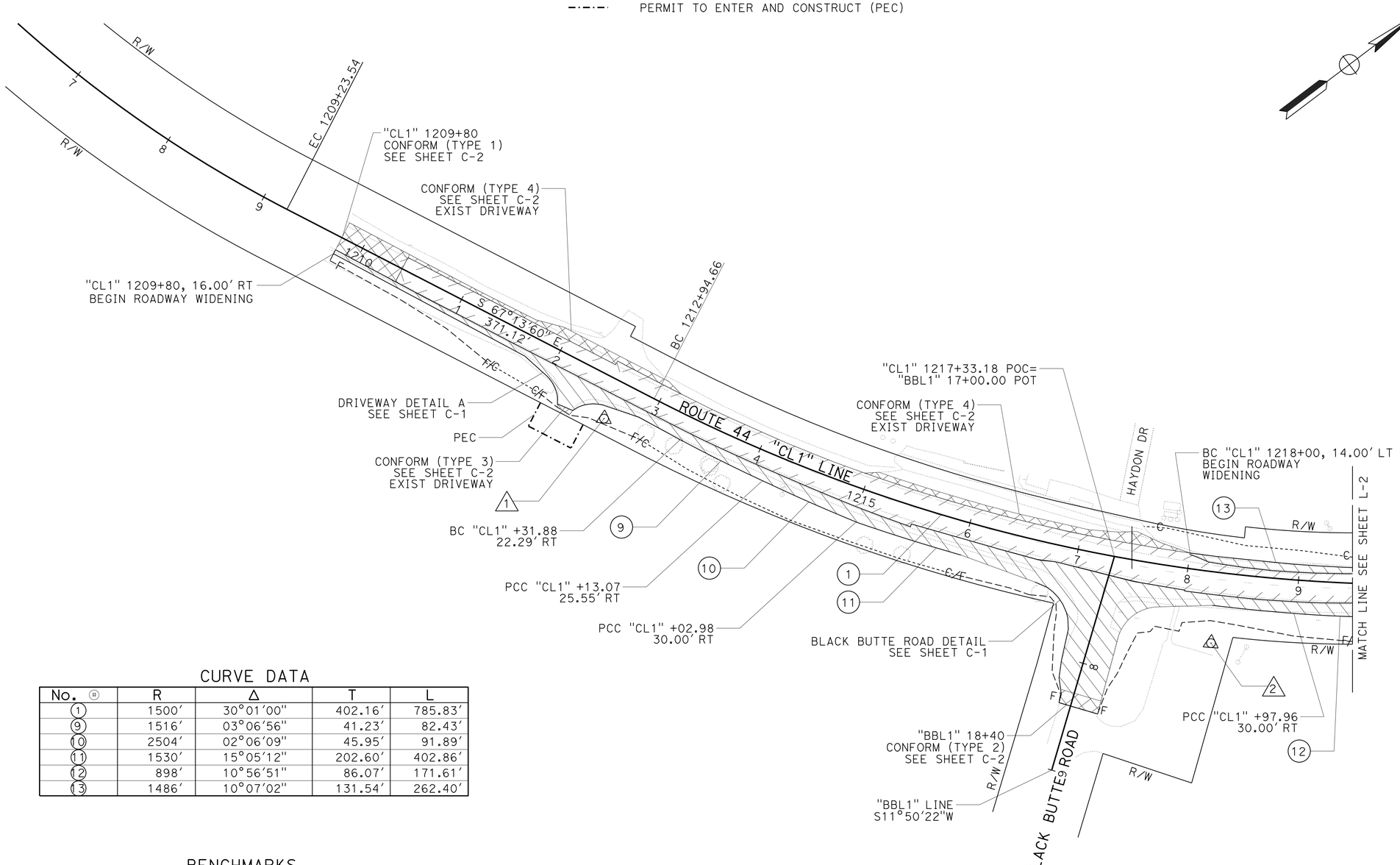

CURVE DATA

No.	R	Δ	T	L
1	1500'	30°01'00"	402.16'	785.83'
9	1516'	03°06'56"	41.23'	82.43'
10	2504'	02°06'09"	45.95'	91.89'
11	1530'	15°05'12"	202.60'	402.86'
12	898'	10°56'51"	86.07'	171.61'
13	1486'	10°07'02"	131.54'	262.40'

BENCHMARKS

NO.	NAME	STATION	OFFSET	ELEVATION	DESCRIPTION
1	6-44-24D	1212+62.79	36.468' RT	1857.362'	BRASS DISC IN CONC
2	HPGN 02-18	1218+28.69	63.824' RT	1890.259'	ALUM DISC IN MON WELL

LAYOUT

SCALE: 1" = 50'

L-1

REVISED BY | DATE REVISED
TRAVIS A. GURNEY | JOHN L. MARTIN
CALCULATED-DESIGNED BY | CHECKED BY
FUNCTIONAL SUPERVISOR: JOHN L. MARTIN

STATE OF CALIFORNIA - DEPARTMENT OF TRANSPORTATION
Caltrans DESIGN

P:\proj1\02\4E520_plans\pse\02000203171ea001.dgn

LAST REVISION 08-30-12 | DATE PLOTTED => 20-DEC-2012 | TIME PLOTTED => 11:12

Dist	COUNTY	ROUTE	POST MILES TOTAL PROJECT	SHEET No.	TOTAL SHEETS
02	Sha	44	R21.0/R21.4	5	40

REGISTERED CIVIL ENGINEER DATE 12-12-12

12-17-12
PLANS APPROVAL DATE

REGISTERED PROFESSIONAL ENGINEER TRAVIS A. GURNEY No. C77417 Exp. 6-30-13 CIVIL STATE OF CALIFORNIA

THE STATE OF CALIFORNIA OR ITS OFFICERS OR AGENTS SHALL NOT BE RESPONSIBLE FOR THE ACCURACY OR COMPLETENESS OF SCANNED COPIES OF THIS PLAN SHEET.

NOTE:

1. FOR ACCURATE RIGHT OF WAY DATA, CONTACT RIGHT OF WAY ENGINEERING AT THE DISTRICT OFFICE.

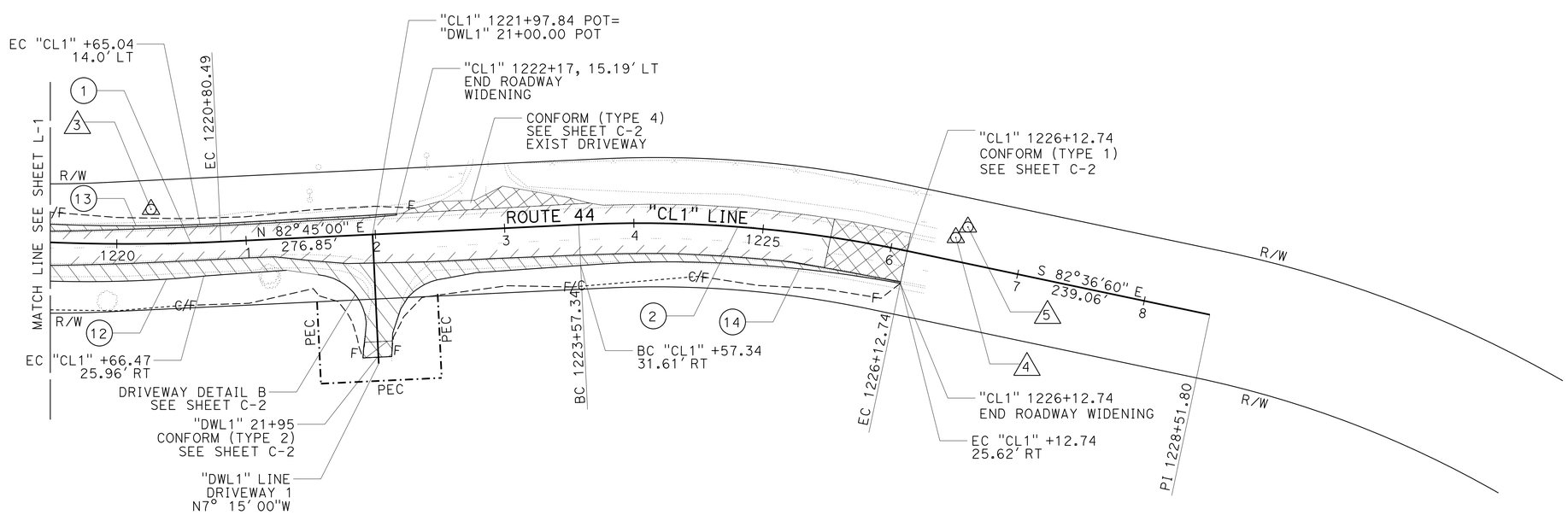

CURVE DATA

No. ⊕	R	Δ	T	L
1	1500'	30°01'00"	402.16'	785.83'
2	1000'	14°38'00"	128.40'	255.40'
12	898'	10°56'51"	86.07'	171.61'
13	1486'	10°07'02"	131.54'	2262.40'
14	990'	14°21'22"	124.72'	248.14'

BENCHMARKS

NO.	NAME	STATION	OFFSET	ELEVATION	DESCRIPTION
3	6-44-25A	1220+26.74	26.620' LT	1904.035	BRASS DISC IN CONC
4	G-9-16	1226+47.39	17.918' LT	1939.514	T-BAR W/ CAP
5	6-44-25B	1226+54.85	27.808' LT	1939.543	BRASS DISC IN CONC

LAYOUT

SCALE: 1" = 50'

L-2

STATE OF CALIFORNIA - DEPARTMENT OF TRANSPORTATION
Caltrans
DESIGN

FUNCTIONAL SUPERVISOR: JOHN L. MARTIN
CALCULATED-DESIGNED BY: TRAVIS A. GURNEY
CHECKED BY: JOHN L. MARTIN
REVISED BY
DATE REVISED

P:\proj\02\4E520_plans\pse\0200020317ea002.dgn

LAST REVISION 08-30-12
DATE PLOTTED => 20-DEC-2012
TIME PLOTTED => 11:12

Dist	COUNTY	ROUTE	POST MILES TOTAL PROJECT	SHEET No.	TOTAL SHEETS
02	Sha	44	R21.0/R21.4	6	40

REGISTERED CIVIL ENGINEER 12-17-12 DATE

12-17-12
PLANS APPROVAL DATE

REGISTERED PROFESSIONAL ENGINEER
TRAVIS A. GURNEY
No. C77417
Exp. 06-30-13
CIVIL
STATE OF CALIFORNIA

THE STATE OF CALIFORNIA OR ITS OFFICERS OR AGENTS SHALL NOT BE RESPONSIBLE FOR THE ACCURACY OR COMPLETENESS OF SCANNED COPIES OF THIS PLAN SHEET.

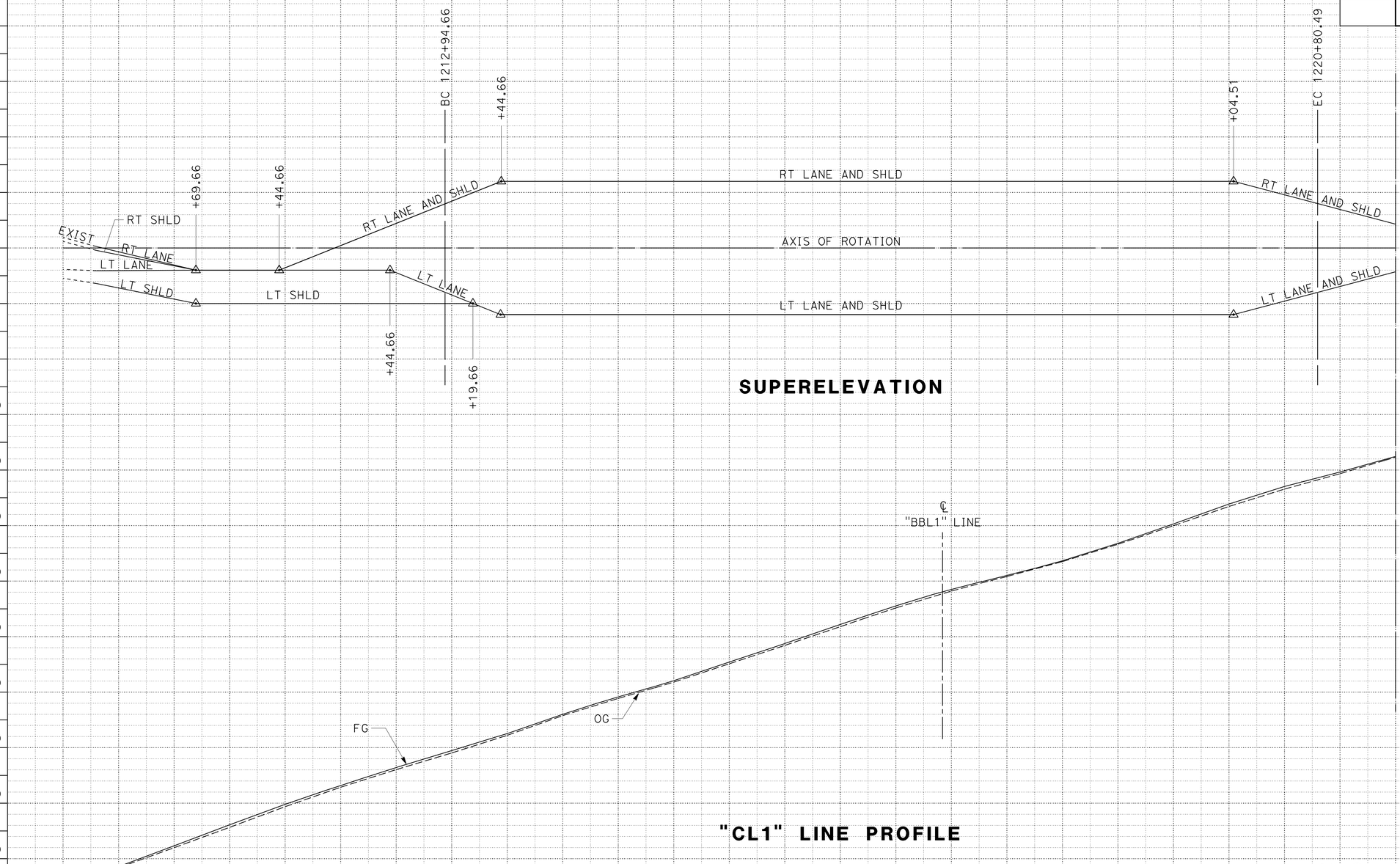

STATION		1210	1	2	3	4	1215	6	7	8	9	1220	1	2	3	SHEET TOTAL
CY	Exc	319					241					81				641
	Emb	196					496					154				846

PROFILE AND SUPERELEVATION DIAGRAM

SCALE: 1" = 50' HORIZ
1" = 10' VERT

PS-1

REVISED BY	DATE REVISED

TRAVIS GURNEY — JOHN MARTIN

CALCULATED-DESIGNED BY — CHECKED BY

FUNCTIONAL SUPERVISOR: JOHN MARTIN

STATE OF CALIFORNIA - DEPARTMENT OF TRANSPORTATION
Caltrans
DESIGN

P:\proj1\02\4E520_plans\pse\0200020317fb001.dgn

LAST REVISION — DATE PLOTTED => 20-DEC-2012 TIME PLOTTED => 11:12
09-04-12

Dist	COUNTY	ROUTE	POST MILES TOTAL PROJECT	SHEET No.	TOTAL SHEETS
02	Sha	44	R21.0/R21.4	7	40

REGISTERED CIVIL ENGINEER 12-12-12 DATE

12-17-12
PLANS APPROVAL DATE

REGISTERED PROFESSIONAL ENGINEER TRAVIS A. GURNEY No. C77417 Exp. 6-30-13 CIVIL STATE OF CALIFORNIA

THE STATE OF CALIFORNIA OR ITS OFFICERS OR AGENTS SHALL NOT BE RESPONSIBLE FOR THE ACCURACY OR COMPLETENESS OF SCANNED COPIES OF THIS PLAN SHEET.

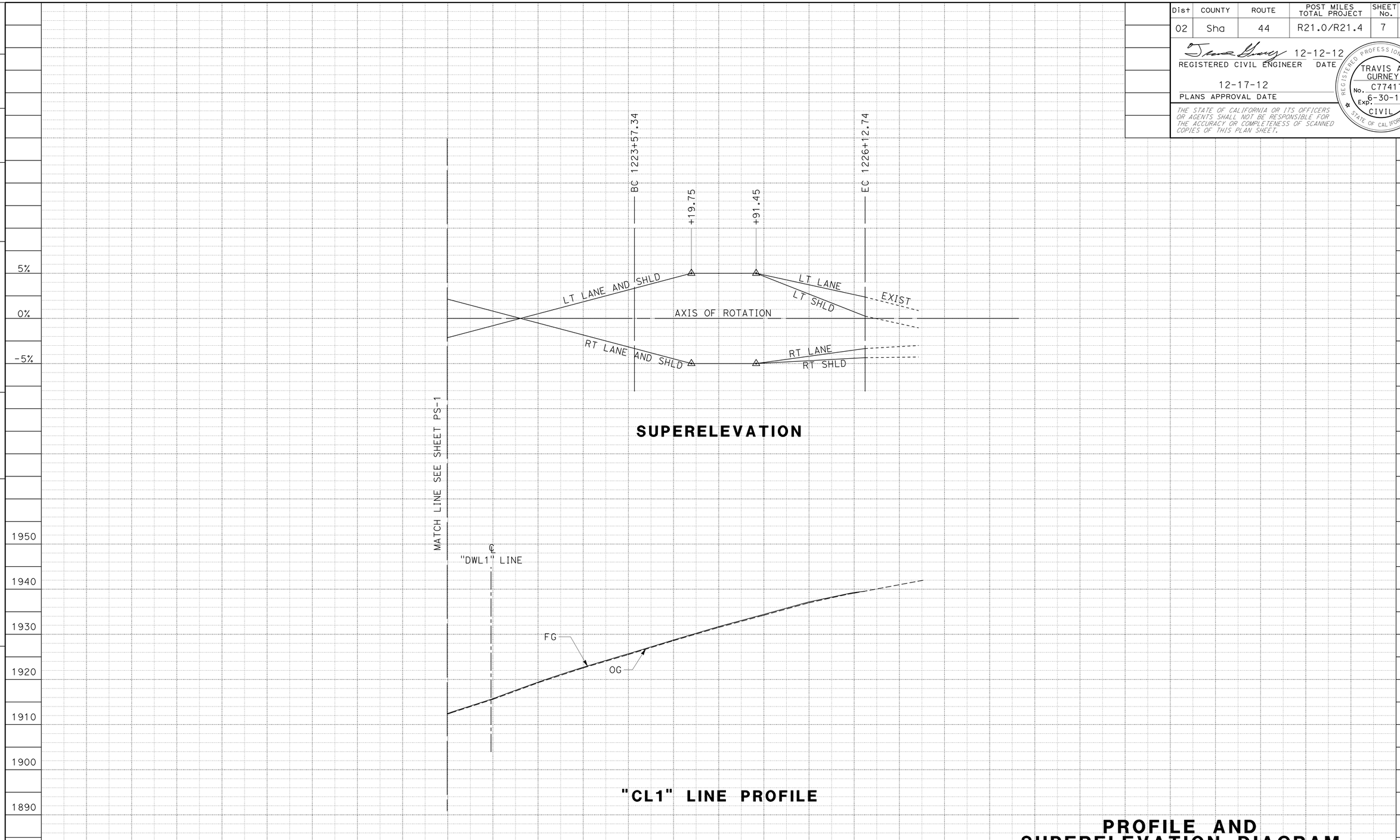

PROFILE AND SUPERELEVATION DIAGRAM

SCALE: 1" = 50' HORIZ
1" = 10' VERT

PS-2

STATION		8	9	1220	1	2	3	4	1225	6	7	8	9	1230	SHEET TOTAL	TOTAL
CY	Exc					152			29						181	822
	Emb					110			7						117	963

REVISED BY | DATE REVISED
TRAVIS A. GURNEY | JOHN L. MARTIN
CALCULATED-DESIGNED BY | CHECKED BY
FUNCTIONAL SUPERVISOR: JOHN L. MARTIN

STATE OF CALIFORNIA - DEPARTMENT OF TRANSPORTATION
Caltrans® DESIGN

P:\proj1\02\4E520\plans\pse\02000203171fb002.dgn

LAST REVISION 09-04-12 | DATE PLOTTED => 20-DEC-2012 | TIME PLOTTED => 11:12

Dist	COUNTY	ROUTE	POST MILES TOTAL PROJECT	SHEET No.	TOTAL SHEETS
02	Sha	44	R21.0/R21.4	8	40

REGISTERED CIVIL ENGINEER 12-12-12 DATE

12-17-12
PLANS APPROVAL DATE

REGISTERED PROFESSIONAL ENGINEER TRAVIS A GURNEY No. C77417 Exp. 06-30-13 CIVIL STATE OF CALIFORNIA

THE STATE OF CALIFORNIA OR ITS OFFICERS OR AGENTS SHALL NOT BE RESPONSIBLE FOR THE ACCURACY OR COMPLETENESS OF SCANNED COPIES OF THIS PLAN SHEET.

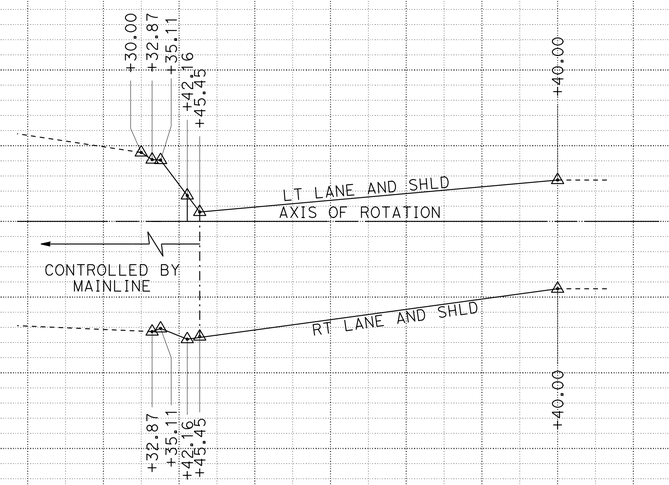

SUPERELEVATION

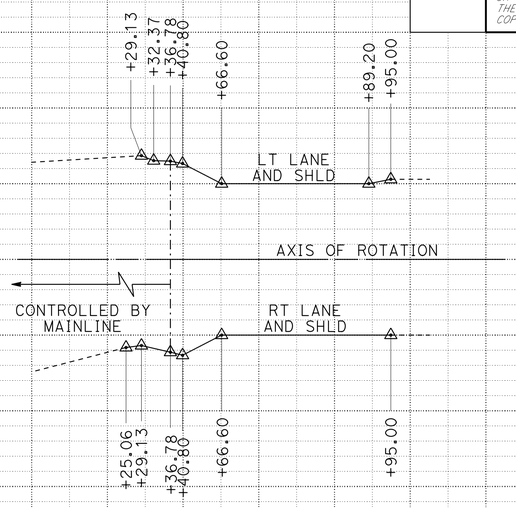

SUPERELEVATION

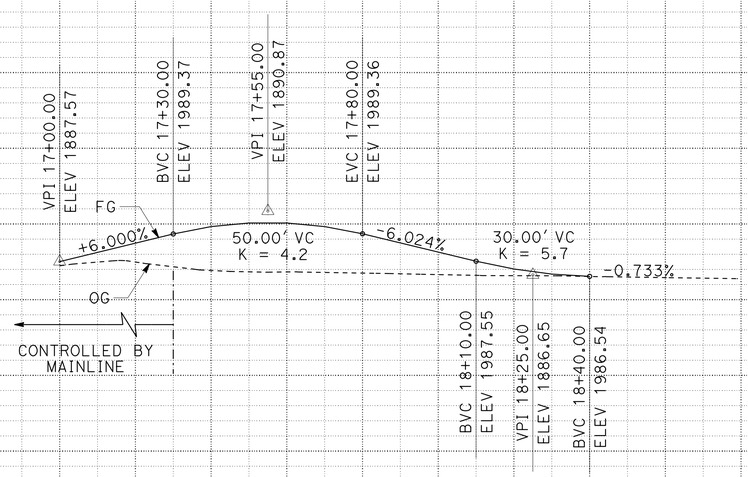

"BBL1" LINE PROFILE

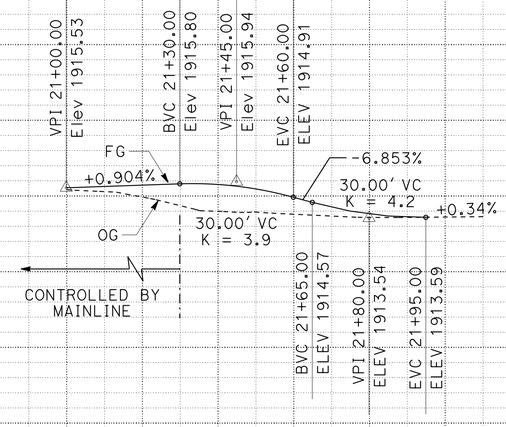

"DWL1" LINE PROFILE

PROFILE AND SUPERELEVATION DIAGRAM

SCALE: 1" = 20' HORIZ
1" = 5' VERT

PS-3

STATION		17	+40	+80	18	+40	21	+40	+80	SHEET TOTAL	TOTAL
CY	Exc		29					31		60	882
	Emb		314					73		387	1350

REVISED BY | DATE REVISED
TRAVIS GURNEY | JOHN MARTIN
CALCULATED-DESIGNED BY | CHECKED BY
FUNCTIONAL SUPERVISOR: JOHN MARTIN

STATE OF CALIFORNIA - DEPARTMENT OF TRANSPORTATION
Caltrans
DESIGN

P:\proj1\02\4E520_plans\pse\020002031 7fb003.dgn

LAST REVISION DATE PLOTTED => 20-DEC-2012
TIME PLOTTED => 11:12
09-04-12

Dist	COUNTY	ROUTE	POST MILES TOTAL PROJECT	SHEET No.	TOTAL SHEETS
02	Sha	44	R21.0/R21.4	9	40

REGISTERED CIVIL ENGINEER 12-12-12 DATE

12-17-12
PLANS APPROVAL DATE

REGISTERED PROFESSIONAL ENGINEER TRAVIS A. GURNEY No. C77417 Exp. 6-30-13 CIVIL STATE OF CALIFORNIA

THE STATE OF CALIFORNIA OR ITS OFFICERS OR AGENTS SHALL NOT BE RESPONSIBLE FOR THE ACCURACY OR COMPLETENESS OF SCANNED COPIES OF THIS PLAN SHEET.

NOTE:

1. FOR ACCURATE RIGHT OF WAY DATA, CONTACT RIGHT OF WAY ENGINEERING AT THE DISTRICT OFFICE.

CURVE DATA

No. ⊕	R	Δ	T	L
1	1500′	30°01′00"	402.16′	785.83′
3	30′	50°09′05"	14.04′	26.26′
4	30′	50°28′01"	14.46′	26.95′
5	40′	82°45′21"	35.24′	57.77′
6	38′	73°17′12"	28.53′	49.05′

DRIVEWAY DATA

A	"CL1" +74.33, 19.33′ RT ELEV= 1851.33	I	BC "CL1" +72.54, 37.55′ RT = BC "BBL1" +42.41, 58.18′ RT ELEV= 1885.40
B	BC "CL1" +99.31, 25.95′ RT ELEV= 1852.91	J	"CL1" +85.87, 41.94′ RT = "BBL1" +45.90, 44.19′ RT ELEV= 1886.66
C	"CL1" +10.88, 31.94′ RT ELEV= 1853.61	K	"CL1" +96.71, 50.97′ RT = "BBL1" +54.08, 32.39′ RT ELEV= 1887.74
D	EC "CL1" +18.82, 42.27′ RT ELEV= 1853.87	L	"CL1" +03.63, 63.41′ RT = "BBL1" +65.91, 24.23′ RT ELEV= 1888.29
E	BC "CL1" +35.76, 40.67′ RT ELEV= 1854.68	M	"CL1" +52.95, 57.53′ RT = "BBL1" +55.00, 26.24′ LT ELEV= 1890.33
F	"CL1" +44.83, 30.86′ RT ELEV= 1855.75	N	"CL1" +63.09, 45.15′ RT = "BBL1" 41.48, 35.20′ LT ELEV= 1890.56
G	EC "CL1" +57.26, 25.95′ RT ELEV= 1856.95		
H	"CL1" +88.96, 21.12′ RT ELEV= 1859.52		

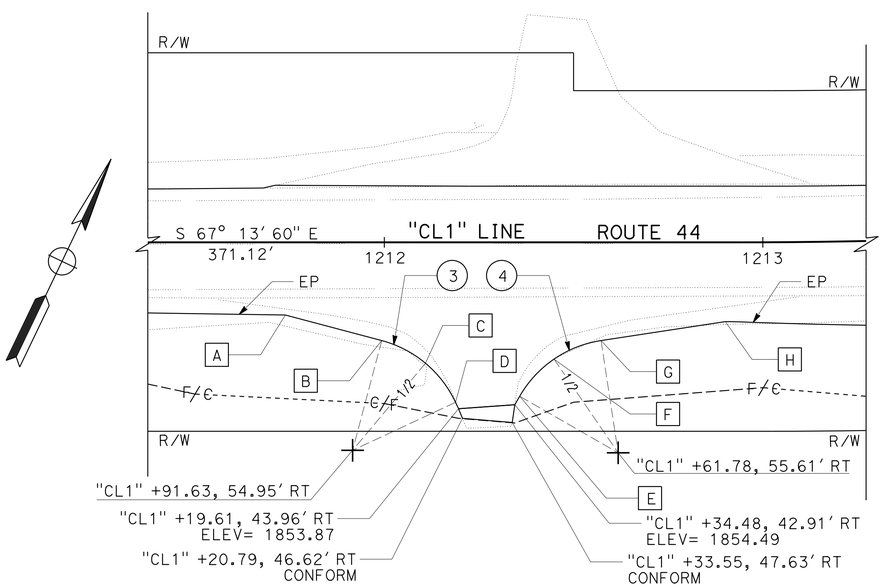

DRIVEWAY DETAIL A

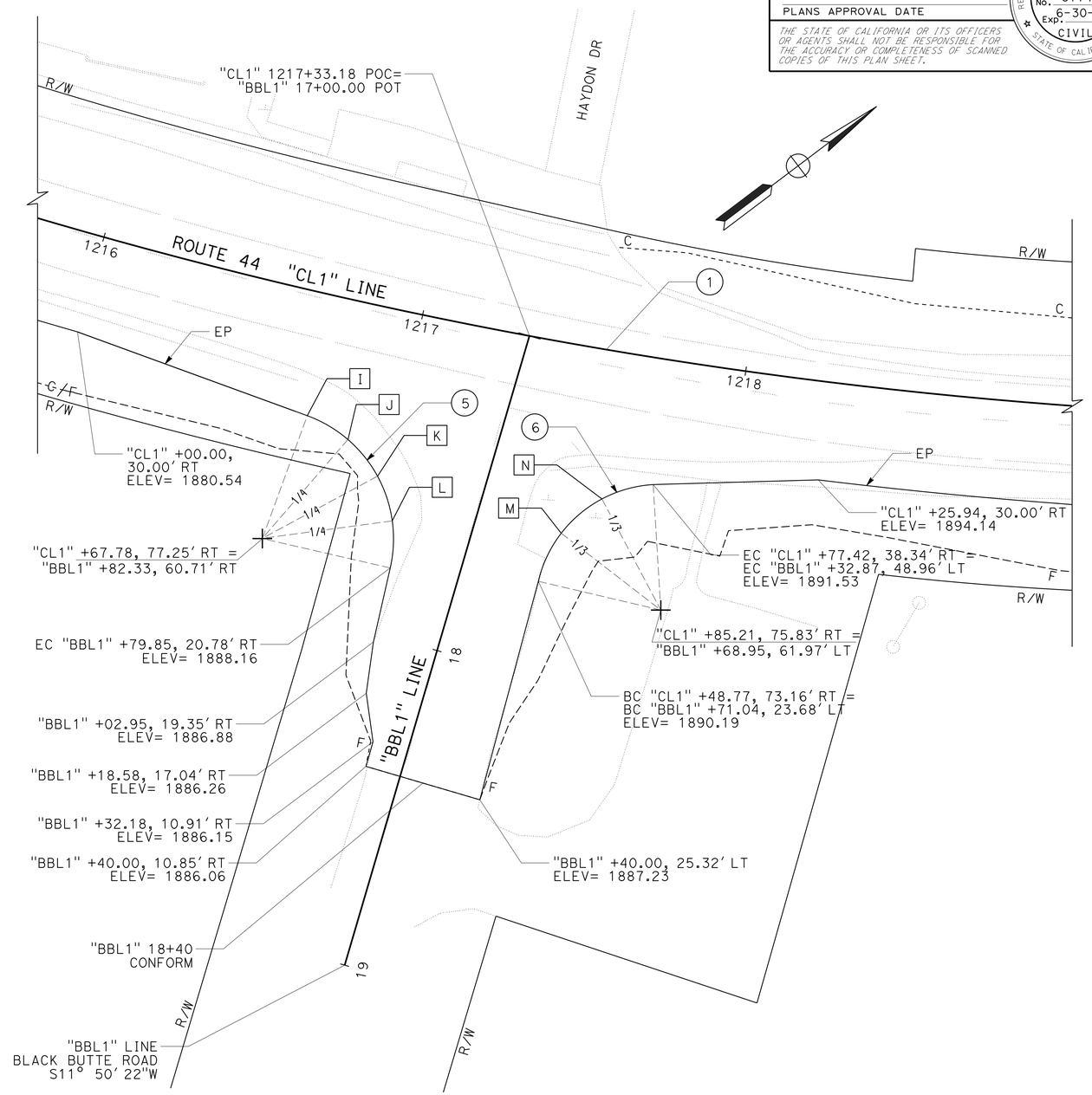

BLACK BUTTE ROAD DETAIL

CONSTRUCTION DETAILS

SCALE: 1" = 20′

C-1

REVISED BY	DATE REVISED
TRAVIS A. GURNEY	JOHN L. MARTIN
CALCULATED-DESIGNED BY	CHECKED BY
FUNCTIONAL SUPERVISOR	JOHN L. MARTIN

STATE OF CALIFORNIA - DEPARTMENT OF TRANSPORTATION
Caltrans
DESIGN

P:\proj\02\4E520_plans\pse\02000203171ga001.dgn

LAST REVISION 08-30-12 | DATE PLOTTED => 20-DEC-2012 | TIME PLOTTED => 11:12

Dist	COUNTY	ROUTE	POST MILES TOTAL PROJECT	SHEET No.	TOTAL SHEETS
02	Sha	44	R21.0/R21.4	10	40

REGISTERED CIVIL ENGINEER 12-12-12 DATE

12-17-12
PLANS APPROVAL DATE

REGISTERED PROFESSIONAL ENGINEER TRAVIS A. GURNEY No. C77417 Exp. 6-30-13 CIVIL STATE OF CALIFORNIA

THE STATE OF CALIFORNIA OR ITS OFFICERS OR AGENTS SHALL NOT BE RESPONSIBLE FOR THE ACCURACY OR COMPLETENESS OF SCANNED COPIES OF THIS PLAN SHEET.

NOTE:

1. FOR ACCURATE RIGHT OF WAY DATA, CONTACT RIGHT OF WAY ENGINEERING AT THE DISTRICT OFFICE.

LEGEND:

COLD PLANE AC PVMT

DRIVEWAY DATA

O	"CL1" +71.26, 35.36' RT = "DWL1" +35.36, 26.57' RT ELEV= 1914.21
P	"CL1" +82.25, 45.93' RT = "DWL1" +45.93, 15.59' RT ELEV= 1914.68
Q	"CL1" +88.48, 59.85' RT = "DWL1" +59.85, 9.36' RT ELEV= 1914.42
R	"CL1" +21.62, 51.14' RT = "DWL1" +51.14, 23.78' LT ELEV= 1916.80
S	"CL1" +32.89, 41.95' RT = "DWL1" +41.95, 35.04' LT ELEV= 1917.93

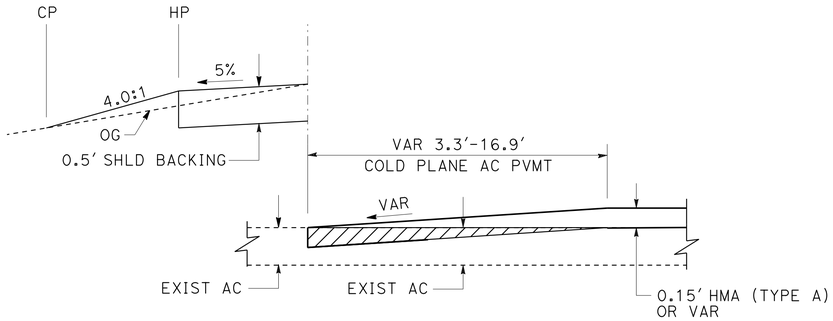

PAVEMENT CONFORM (TYPE 4)
NO SCALE

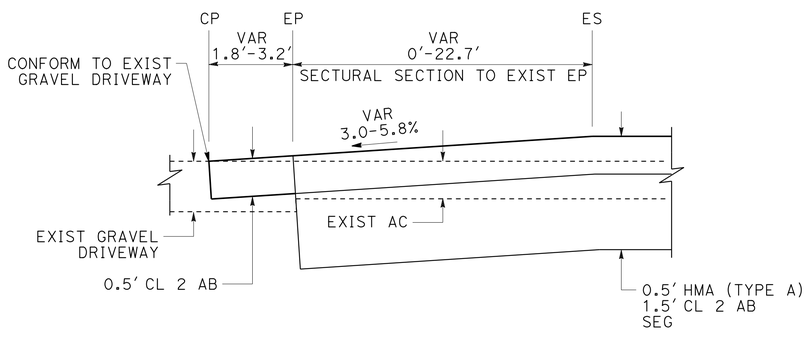

PAVEMENT CONFORM (TYPE 3)
NO SCALE

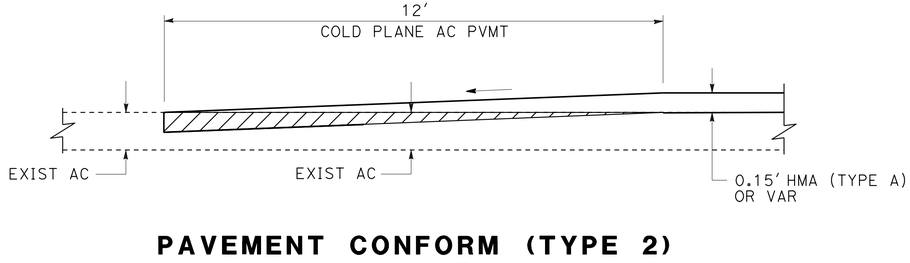

PAVEMENT CONFORM (TYPE 2)
NO SCALE

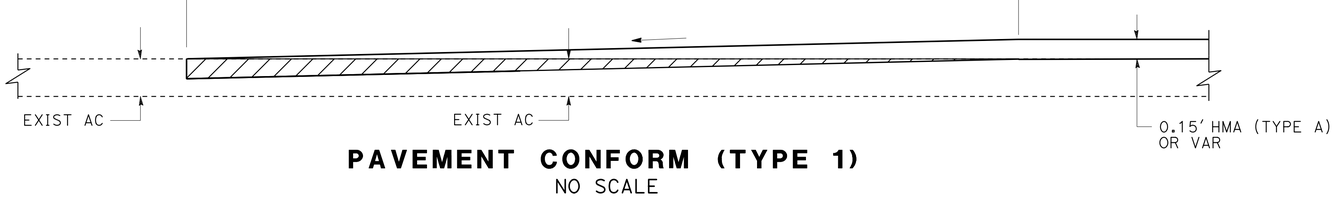

PAVEMENT CONFORM (TYPE 1)
NO SCALE

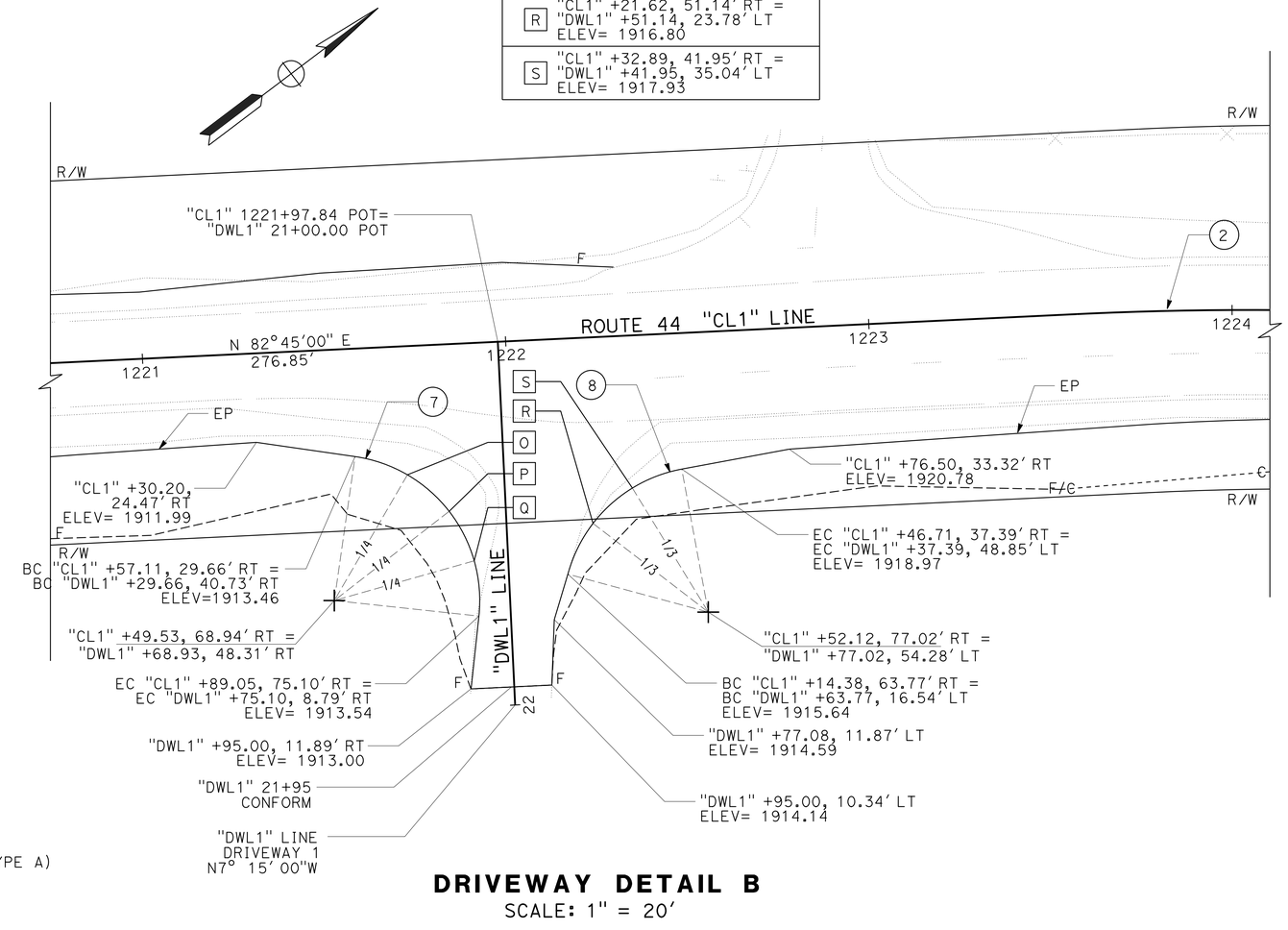

DRIVEWAY DETAIL B
SCALE: 1" = 20'

CURVE DATA

No. ⊕	R	Δ	T	L
2	1000'	14°38'00"	128.40'	255.40'
7	40'	87°55'52"	38.58'	61.39'
8	40'	62°52'22"	24.45'	43.89'

CONSTRUCTION DETAILS
SCALE: AS SHOWN

C-2

REVISED BY | DATE REVISED
TRAVIS A. GURNEY | JOHN L. MARTIN
CALCULATED-DESIGNED BY | CHECKED BY
FUNCTIONAL SUPERVISOR: JOHN L. MARTIN
STATE OF CALIFORNIA - DEPARTMENT OF TRANSPORTATION
DESIGN

P:\proj1\02\4E520_plans\pse\02000203171ga002.dgn

LAST REVISION 08-30-12 | DATE PLOTTED => 20-DEC-2012 | TIME PLOTTED => 11:12

Dist	COUNTY	ROUTE	POST MILES TOTAL PROJECT	SHEET No.	TOTAL SHEETS
02	Sha	44	R21.0/R21.4	11	40

REGISTERED CIVIL ENGINEER 12-12-12 DATE

12-17-12
PLANS APPROVAL DATE

REGISTERED PROFESSIONAL ENGINEER TRAVIS A. GURNEY No. C77417 Exp. 6-30-13 CIVIL STATE OF CALIFORNIA

THE STATE OF CALIFORNIA OR ITS OFFICERS OR AGENTS SHALL NOT BE RESPONSIBLE FOR THE ACCURACY OR COMPLETENESS OF SCANNED COPIES OF THIS PLAN SHEET.

NOTE:

1. FOR ACCURATE RIGHT OF WAY DATA, CONTACT RIGHT OF WAY ENGINEERING AT THE DISTRICT OFFICE.

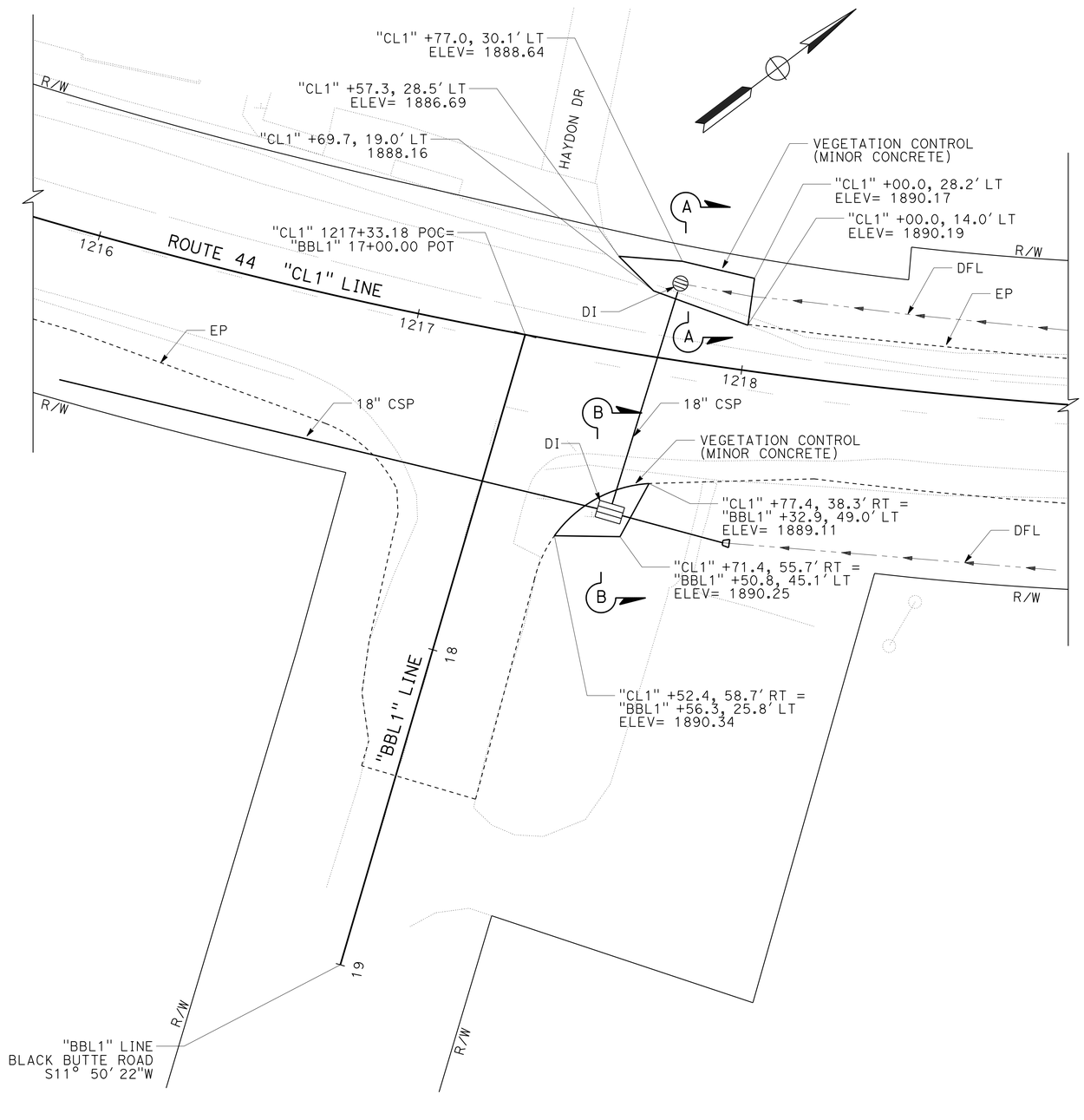

VEGETATION CONTROL (MINOR CONCRETE)
SCALE: 1" = 20'

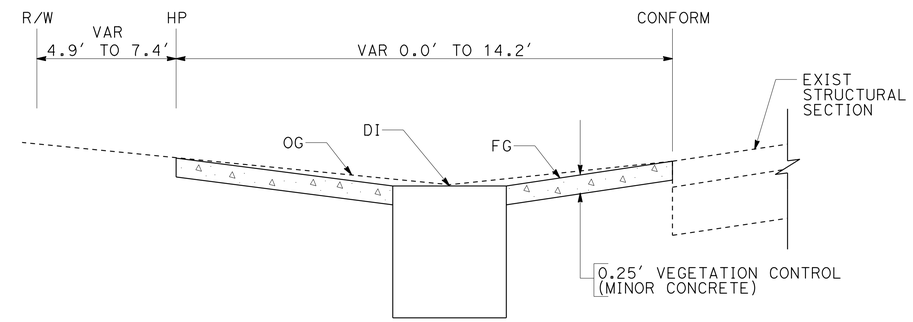

SECTION A-A
NO SCALE

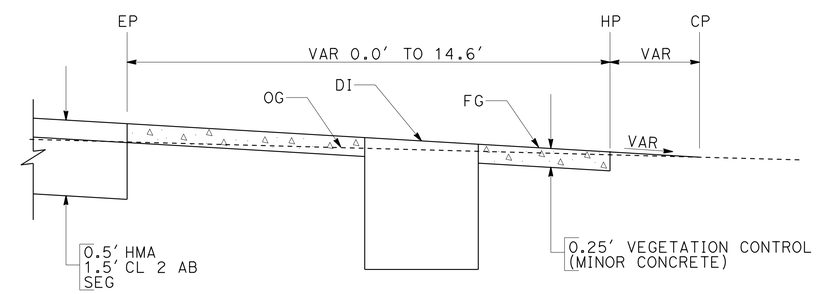

SECTION B-B
NO SCALE

CONSTRUCTION DETAILS
SCALE: AS SHOWN

C-3

REVISED BY	DATE REVISED

CALCULATED-DESIGNED BY	CHECKED BY
TRAVIS A. GURNEY	JOHN L. MARTIN

FUNCTIONAL SUPERVISOR: JOHN L. MARTIN

STATE OF CALIFORNIA - DEPARTMENT OF TRANSPORTATION
Caltrans
DESIGN

P:\proj1\02\4E520_plans\pse\02000203171ga003.dgn

LAST REVISION 08-30-12 | DATE PLOTTED => 20-DEC-2012 | TIME PLOTTED => 11:12

Dist	COUNTY	ROUTE	POST MILES TOTAL PROJECT	SHEET No.	TOTAL SHEETS
02	Sha	44	R21.0/R21.4	12	40

REGISTERED CIVIL ENGINEER 12-12-12 DATE

12-17-12
PLANS APPROVAL DATE

REGISTERED PROFESSIONAL ENGINEER TRAVIS A. GURNEY No. C77417 Exp. 6-30-13 CIVIL STATE OF CALIFORNIA

THE STATE OF CALIFORNIA OR ITS OFFICERS OR AGENTS SHALL NOT BE RESPONSIBLE FOR THE ACCURACY OR COMPLETENESS OF SCANNED COPIES OF THIS PLAN SHEET.

NOTES:

1. FOR ACCURATE RIGHT OF WAY DATA, CONTACT RIGHT OF WAY ENGINEERING AT THE DISTRICT OFFICE.
2. SEE DRAINAGE PROFILE DP-1 SHEET FOR FLOW LINE ELEVATION AT DRAINAGE INLET
3. (N) - NOT A SEPARATE PAY ITEM, FOR INFORMATION ONLY

LEGEND

+80	STATION
V2	VENT TYPE 2 MODIFIED, (SEE NOTE 3)
25	LENGTH OF VENT
+70	STATION
0	OUTLET CONNECTION TO DRAINAGE INLET, (SEE NOTE 2)
10	LENGTH OF OUTLET

EDGE DRAIN

CONCRETE PULL BOX (TYPE 3, 1/2T)

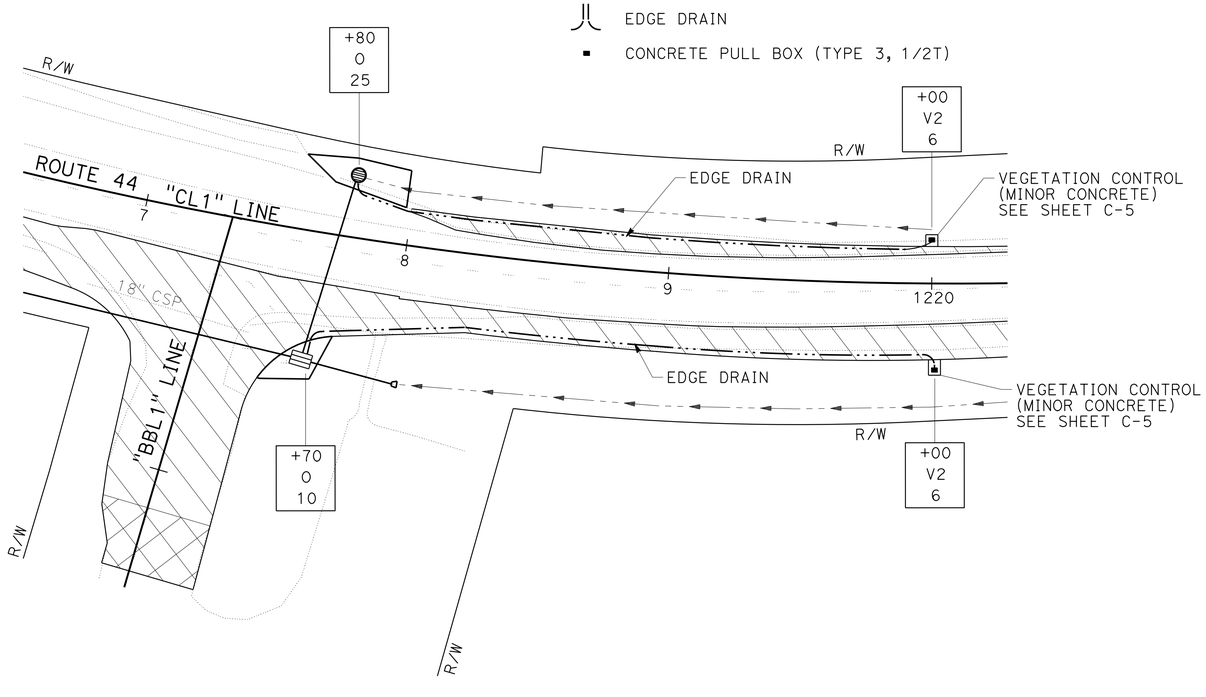

EDGE DRAIN LOCATIONS

EDGE DRAIN QUANTITIES

STATION	LOCATION	SIZE	UNIT	LENGTH	(N) FILTER FABRIC	(N) CEMENT TREATED PERMEABLE MATERIAL
	LT/RT			FT	SQYD	CY
"CL1" STA 1217+70 TO 1220+00	RT	3"	LF	230	230	38
"CL1" STA 1218+00 TO 1220+00	LT	3"	LF	200	111	11
TOTAL				430	341	49

EDGE DRAIN OUTLET/VENT QUANTITIES

STATION	LOCATION		VENT TYPE		(N) VENT LENGTH	OUTLET LENGTH	VEGETATION CONTROL (MINOR CONCRETE)
	LT	RT	1	2			
					FT	FT	SQYD
"CL1" STA 1217+70		X				10	
"CL1" STA 1220+00		X		X	6		3.9
"CL1" STA 1217+80	X					25	
"CL1" STA 1220+00	X			X	6		2.6
TOTAL					12	35	6.5*

* ADDITIONAL QUANTITIES SHOWN ELSEWHERE, SEE SHEET DQ-1

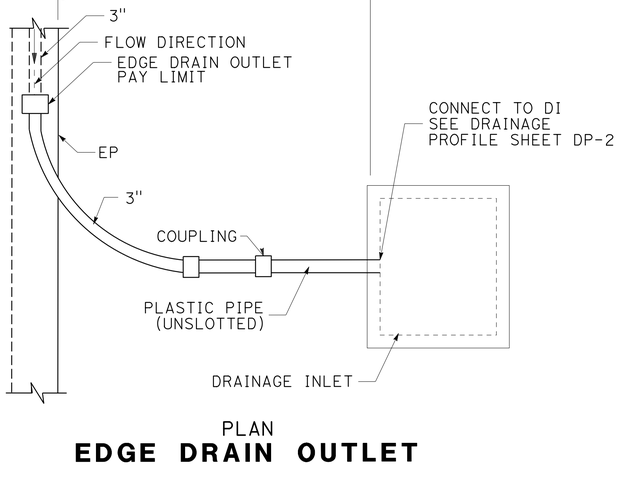

PLAN

EDGE DRAIN OUTLET

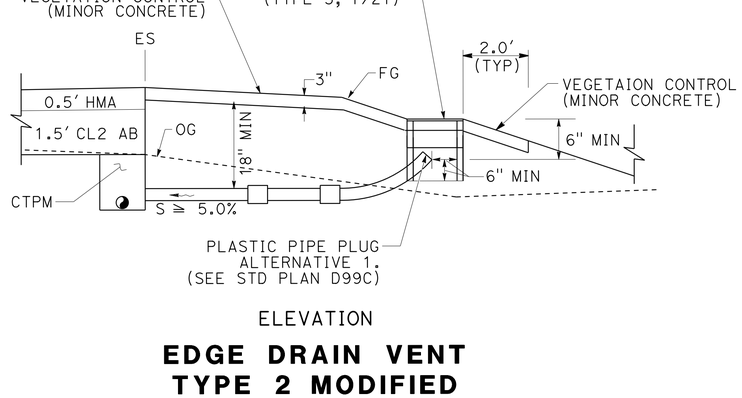

ELEVATION

EDGE DRAIN VENT TYPE 2 MODIFIED

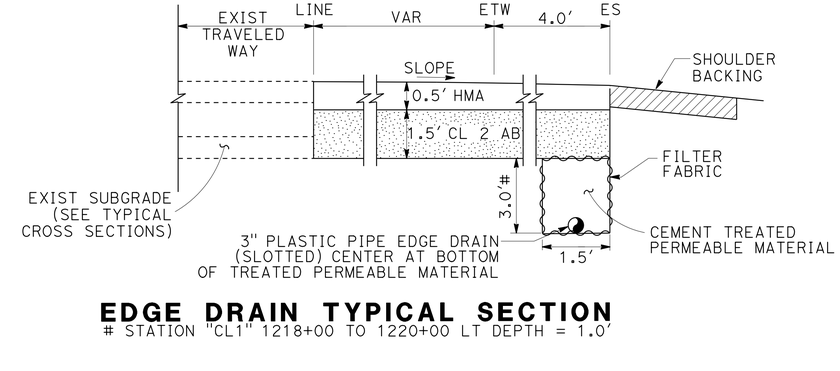

EDGE DRAIN TYPICAL SECTION

STATION "CL1" 1218+00 TO 1220+00 LT DEPTH = 1.0'

CONSTRUCTION DETAILS

NO SCALE

C-4

STATE OF CALIFORNIA - DEPARTMENT OF TRANSPORTATION
Caltrans DESIGN

FUNCTIONAL SUPERVISOR: JOHN L. MARTIN
CALCULATED-DESIGNED BY: TRAVIS A. GURNEY
CHECKED BY: JOHN L. MARTIN
REVISED BY
DATE REVISED

P:\proj\02\4E520_plans\pse\02000203171ga004.dgn

LAST REVISION 08-30-12 | DATE PLOTTED => 20-DEC-2012 | TIME PLOTTED => 11:12

Dist	COUNTY	ROUTE	POST MILES TOTAL PROJECT	SHEET No.	TOTAL SHEETS
02	Sha	44	R21.0/R21.4	13	40

REGISTERED CIVIL ENGINEER 12-12-12 DATE

12-17-12
PLANS APPROVAL DATE

REGISTERED PROFESSIONAL ENGINEER
TRAVIS A. GURNEY
No. C77417
Exp. 6-30-13
CIVIL
STATE OF CALIFORNIA

THE STATE OF CALIFORNIA OR ITS OFFICERS OR AGENTS SHALL NOT BE RESPONSIBLE FOR THE ACCURACY OR COMPLETENESS OF SCANNED COPIES OF THIS PLAN SHEET.

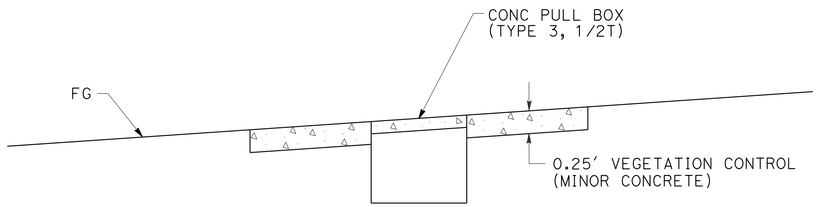

SECTION A-A

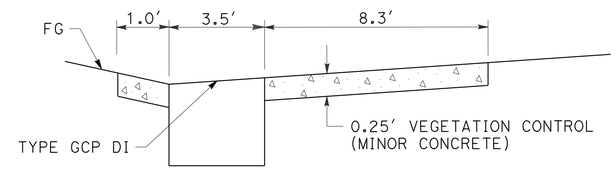

SECTION B-B

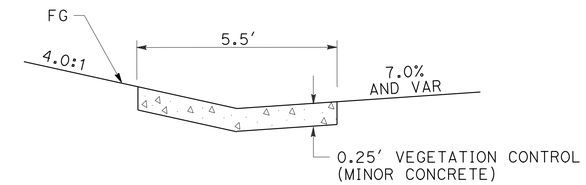

SECTION C-C

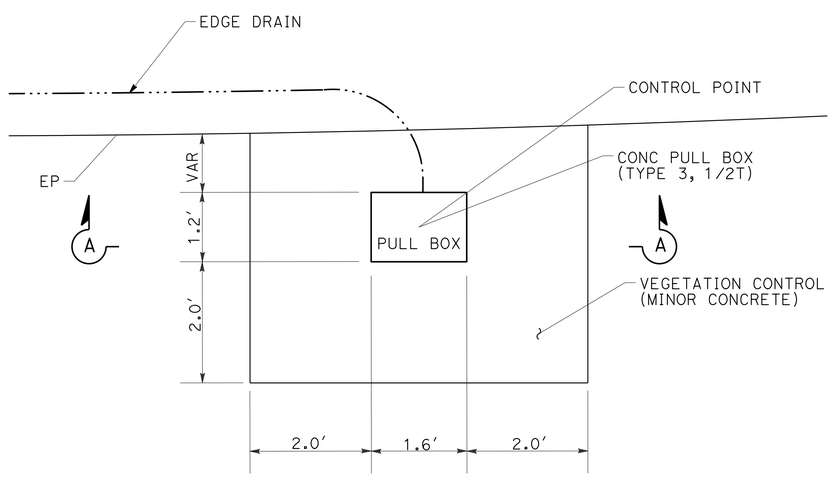

VEGETATION CONTROL (MINOR CONCRETE)

"CL1" 1220+00.00, 15.60′ LT
"CL1" 1220+00.00, 32.77′ RT

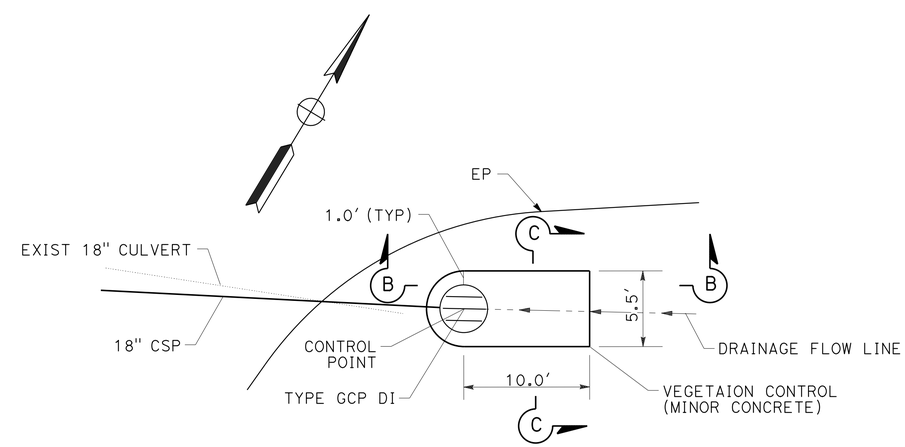

VEGETATION CONTROL (MINOR CONCRETE)

"CL1" 1212+51.70, 33.99′ RT

CONSTRUCTION DETAILS

NO SCALE

C-5

REVISED BY	DATE REVISED

CALCULATED-DESIGNED BY	CHECKED BY
TRAVIS A. GURNEY	JOHN L. MARTIN

FUNCTIONAL SUPERVISOR: JOHN L. MARTIN

STATE OF CALIFORNIA - DEPARTMENT OF TRANSPORTATION

Caltrans® DESIGN

P:\proj1\02\4E520_plans\pse\02000203171ga005.dgn

LAST REVISION 08-30-12 | DATE PLOTTED => 20-DEC-2012 | TIME PLOTTED => 11:12

Dist	COUNTY	ROUTE	POST MILES TOTAL PROJECT	SHEET No.	TOTAL SHEETS
02	Sha	44	R21.0/R21.4	14	40

REGISTERED CIVIL ENGINEER 12-12-12 DATE

12-17-12
PLANS APPROVAL DATE

REGISTERED PROFESSIONAL ENGINEER
TRAVIS A. GURNEY
No. C77417
Exp. 6-30-13
CIVIL
STATE OF CALIFORNIA

THE STATE OF CALIFORNIA OR ITS OFFICERS OR AGENTS SHALL NOT BE RESPONSIBLE FOR THE ACCURACY OR COMPLETENESS OF SCANNED COPIES OF THIS PLAN SHEET.

NOTE:

1. FOR ACCURATE RIGHT OF WAY DATA, CONTACT RIGHT OF WAY ENGINEERING AT THE DISTRICT OFFICE.

LEGEND:

HYDROSEED

CUT LINE

FILL LINE

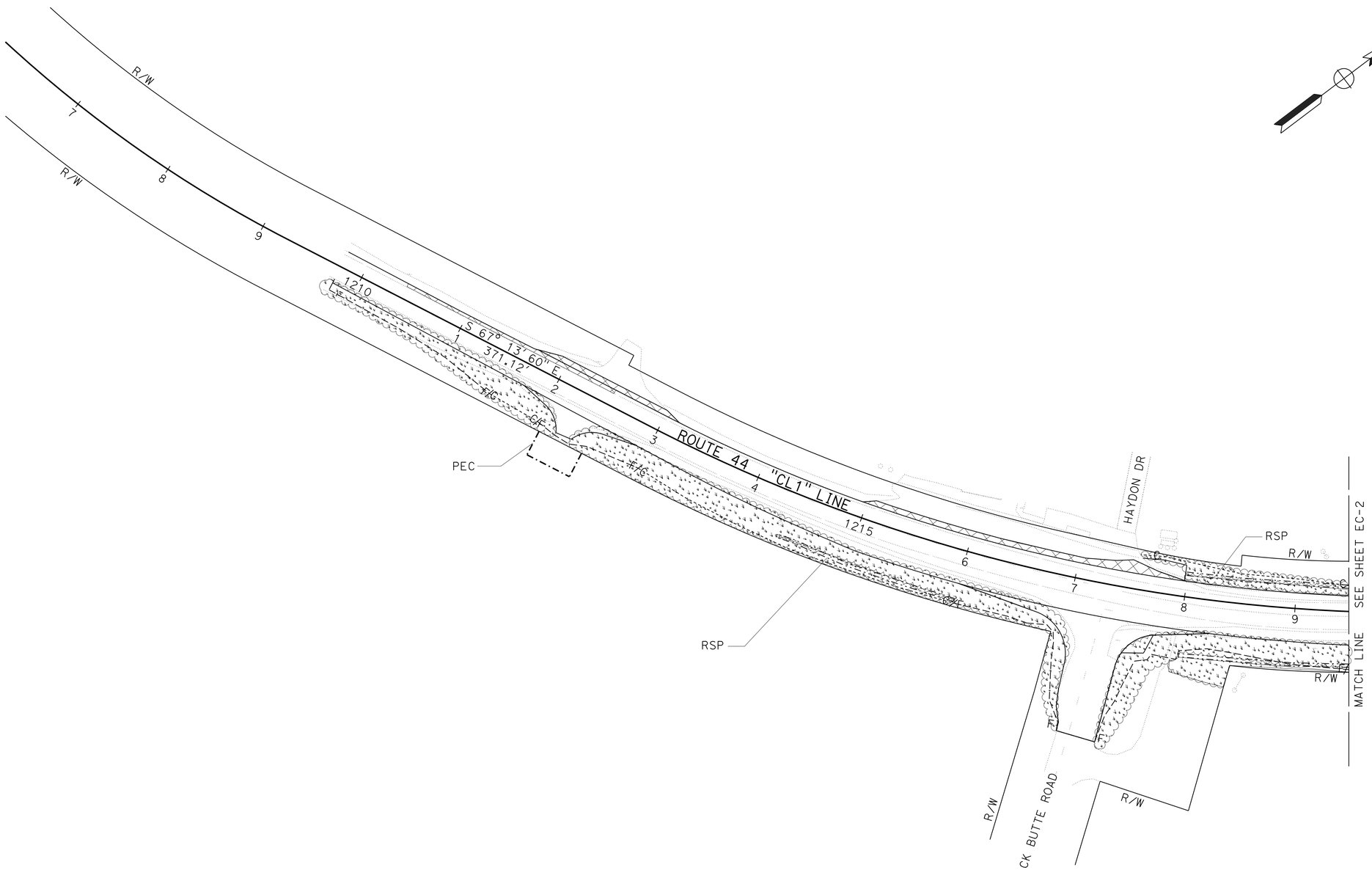

EROSION CONTROL PLAN

SCALE: 1" = 50'

EC-1

APPROVED FOR EROSION CONTROL WORK ONLY

STATE OF CALIFORNIA - DEPARTMENT OF TRANSPORTATION
Caltrans
DESIGN

FUNCTIONAL SUPERVISOR: JOHN L. MARTIN
CALCULATED-DESIGNED BY: TRAVIS A. GURNEY
CHECKED BY: JOHN L. MARTIN
REVISED BY
DATE REVISED

P:\proj1\02\4E520_plans\pse\02000203171ge001.dgn

LAST REVISION 08-30-12
DATE PLOTTED => 20-DEC-2012
TIME PLOTTED => 11:12

Dist	COUNTY	ROUTE	POST MILES TOTAL PROJECT	SHEET No.	TOTAL SHEETS
02	Sha	44	R21.0/R21.4	15	40

REGISTERED CIVIL ENGINEER 12-12-12 DATE

12-17-12
PLANS APPROVAL DATE

REGISTERED PROFESSIONAL ENGINEER
TRAVIS A. GURNEY
No. C77417
Exp. 6-30-13
CIVIL
STATE OF CALIFORNIA

THE STATE OF CALIFORNIA OR ITS OFFICERS OR AGENTS SHALL NOT BE RESPONSIBLE FOR THE ACCURACY OR COMPLETENESS OF SCANNED COPIES OF THIS PLAN SHEET.

NOTE:

1. FOR ACCURATE RIGHT OF WAY DATA, CONTACT RIGHT OF WAY ENGINEERING AT THE DISTRICT OFFICE.

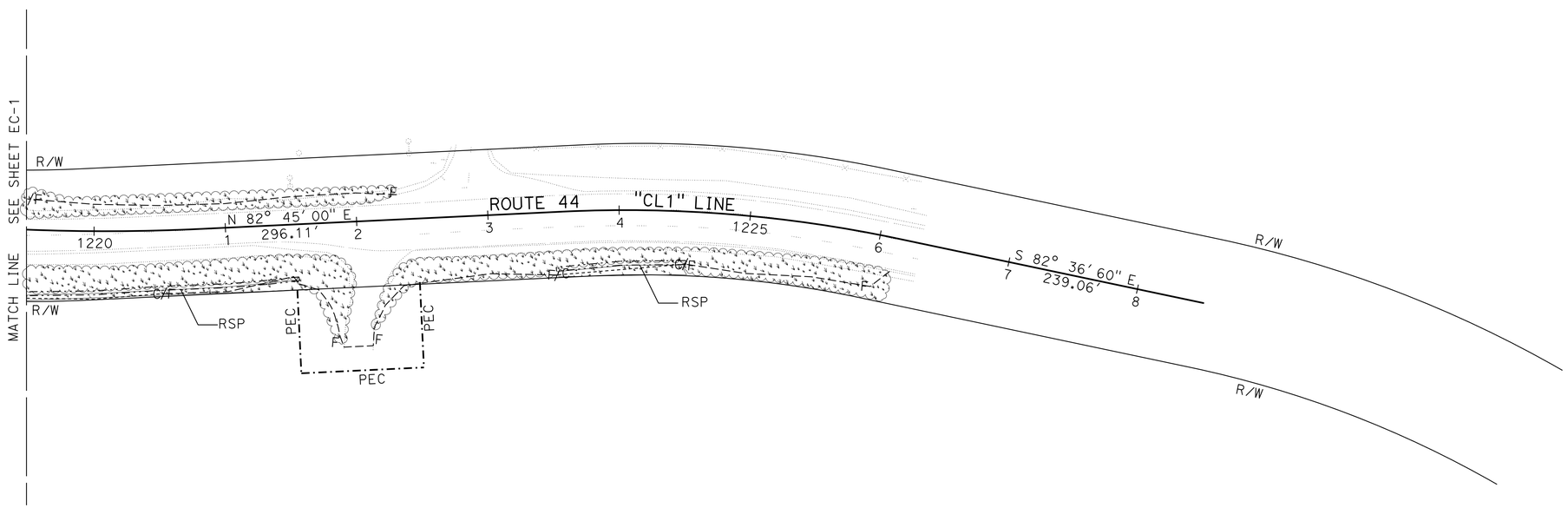

EROSION CONTROL PLAN

SCALE: 1" = 50'

APPROVED FOR EROSION CONTROL WORK ONLY

EC-2

REVISED BY	TRAVIS A. GURNEY
DATE REVISED	
CALCULATED-DESIGNED BY	TRAVIS A. GURNEY
CHECKED BY	JOHN L. MARTIN
FUNCTIONAL SUPERVISOR	JOHN L. MARTIN

STATE OF CALIFORNIA - DEPARTMENT OF TRANSPORTATION
Caltrans
DESIGN

P:\proj1\02\4E520_plans\pse\02000203171ge002.dgn

LAST REVISION DATE PLOTTED => 20-DEC-2012
TIME PLOTTED => 11:12

Dist	COUNTY	ROUTE	POST MILES TOTAL PROJECT	SHEET No.	TOTAL SHEETS
02	Sha	44	R21.0/21.4	16	40

LICENSED LANDSCAPE ARCHITECT

12-17-12

PLANS APPROVAL DATE

LICENSED LANDSCAPE ARCHITECT J. PATRICK SULLIVAN #3125 Signature 07/31/14 Renewal Date 12/12/12 Date STATE OF CALIFORNIA

THE STATE OF CALIFORNIA OR ITS OFFICERS OR AGENTS SHALL NOT BE RESPONSIBLE FOR THE ACCURACY OR COMPLETENESS OF SCANNED COPIES OF THIS PLAN SHEET.

NOTE:

1. (N) - NOT A SEPARATE PAY ITEM, FOR INFORMATION ONLY

HYDROSEED SEQUENCE/ APPLICATION RATES (N)

SEQUENCE	ITEM	MATERIAL DESCRIPTION	MATERIAL TYPE	APPLICATION RATE (N)
STEP 1	HYDROSEED	PURE LIVE SEED	MIX	94 LB/ACRE
		FIBER	ALTERNATE	2000 LB/ACRE
		SLOW RELEASE FERTILIZER	GRANULAR	100 LB/ACRE
STEP 2	HYDROSEED	COMPOST	RECYCLED WOOD PRODUCTS	1.2 CY/ACRE
		FIBER	ALTERNATE	2000 LB/ACRE
		TACKIFIER	PSYLLIUM	100 LB/ACRE

SEED MIX (N)

BOTANICAL NAME (COMMON NAME)	PERCENT GERMINATION (MINIMUM)	POUNDS PURE LIVE SEED PER ACRE (N) (SLOPE MEASUREMENT)
ACHILLEA MILLEFOLIUM (COMMON YARROW)	50	2
ESCHSCHOLZIA CALIFORNICA (CALIFORNIA POPPIES)	70	3
FESTUCA IDAHOENSIS (WESTERN FESCUE)	70	20
LOTUS PURSHIANUS (PURSHING)	70	10
LUPINUS BICOLOR (SKY LUPINES)	60	2
LUPINUS NANA (DWARF LUPINES)	60	2
POA SECUNDA (BLUE PINE GRASS)	60	15
TRIFOLIUM (ROSE CLOVER)	80	15
VULPIA MICROSTACHYS (SMALL FESCUE)	80	25
	TOTAL	94

HYDROSEED

MATERIAL DESCRIPTION	MATERIAL TYPE	TOTALS	
PURE LIVE SEED	MIX	113.74 LB (N)	HYDROSEED
FIBER	ALTERNATE	4840 LB (N)	
SLOW RELEASE FERTILIZER	GRANULAR	121 LB (N)	
COMPOST	RECYCLED WOOD PRODUCTS	1.452 CY (N)	
TACKIFIER	PSYLLIUM	121 LB (N)	
FROM STA 1209+80 TO 1226+13		TOTAL SQFT	52,800

APPROVED FOR EROSION CONTROL WORK ONLY

EROSION CONTROL QUANTITIES

ECQ-1

REVISED BY	DATE REVISED
J. PATRICK SULLIVAN	RON FLORY
CALCULATED-DESIGNED BY	CHECKED BY
SENIOR LANDSCAPE ARCHITECT	RON FLORY

STATE OF CALIFORNIA - DEPARTMENT OF TRANSPORTATION

Caltrans® LANDSCAPE ARCHITECTURE

P:\proj1\02\4E520_plans\pse\020002031fgn001.dgn

USERNAME => s115152

RELATIVE BORDER SCALE 0 1 2 3

LAST REVISION | PLOT SCALE: 1:20 PLOT DATE: 1/22/2013

Dist	COUNTY	ROUTE	POST MILES TOTAL PROJECT	SHEET No.	TOTAL SHEETS
02	Sha	44	R21.0/R21.4	17	40

REGISTERED CIVIL ENGINEER DATE 12-12-12

12-17-12
PLANS APPROVAL DATE

REGISTERED PROFESSIONAL ENGINEER TRAVIS A. GURNEY No. C77417 Exp. 6-30-13 CIVIL STATE OF CALIFORNIA

THE STATE OF CALIFORNIA OR ITS OFFICERS OR AGENTS SHALL NOT BE RESPONSIBLE FOR THE ACCURACY OR COMPLETENESS OF SCANNED COPIES OF THIS PLAN SHEET.

NOTE:

1. FOR COMPLETE RIGHT OF WAY AND ACCURATE ACCESS DATA, SEE RIGHT OF WAY RECORD MAPS AT DISTRICT OFFICE.

ABBREVIATIONS:

FL FLOW LINE
RSP ROCK SLOPE PROTECTION (BACKING NO. 3, METHOD B)

LEGEND:

- DRAINAGE SYSTEM NUMBER
- DRAINAGE UNIT
- DIRECTION OF FLOW
- FL
- RSP
- MARKER (CULVERT)

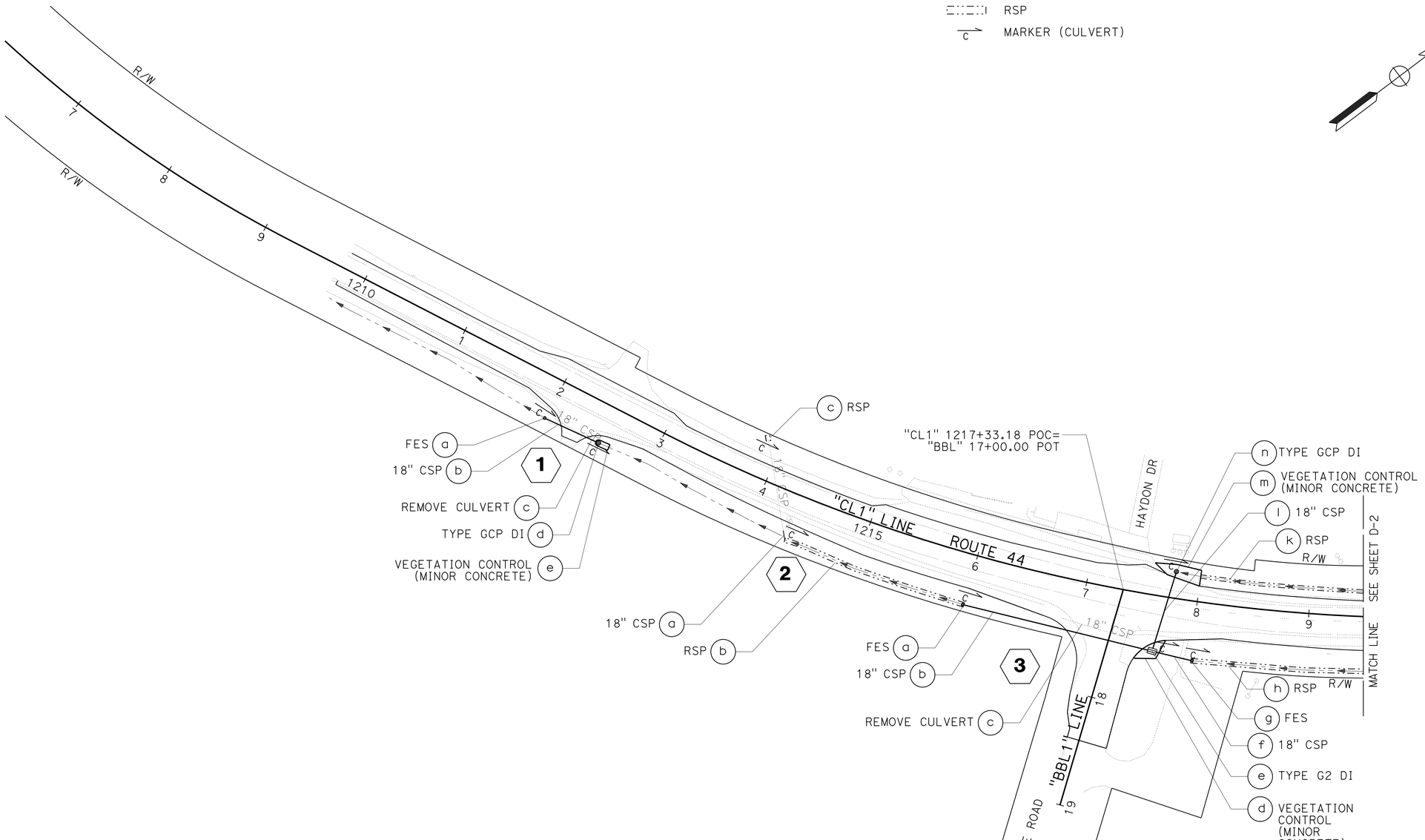

DRAINAGE PLAN

SCALE: 1" = 50'

D-1

APPROVED FOR DRAINAGE WORK ONLY

REVISED BY	DATE REVISED
JOLENA ASTIN	TRAVIS A. GURNEY
CALCULATED-DESIGNED BY	CHECKED BY
FUNCTIONAL SUPERVISOR	JOHN L. MARTIN

STATE OF CALIFORNIA - DEPARTMENT OF TRANSPORTATION
Caltrans
DESIGN

P:\proj\02\4E520_plans\pse\02000203171ia001.dgn

LAST REVISION 07-31-12 | DATE PLOTTED => 20-DEC-2012 | TIME PLOTTED => 11:12

Dist	COUNTY	ROUTE	POST MILES TOTAL PROJECT	SHEET No.	TOTAL SHEETS
02	Sha	44	R21.0/R21.4	18	40

REGISTERED CIVIL ENGINEER DATE 12-12-12

12-17-12
PLANS APPROVAL DATE

REGISTERED PROFESSIONAL ENGINEER
TRAVIS A. GURNEY
No. C77417
Exp. 6-30-13
CIVIL
STATE OF CALIFORNIA

THE STATE OF CALIFORNIA OR ITS OFFICERS OR AGENTS SHALL NOT BE RESPONSIBLE FOR THE ACCURACY OR COMPLETENESS OF SCANNED COPIES OF THIS PLAN SHEET.

NOTE:

1. FOR ACCURATE RIGHT OF WAY DATA, CONTACT RIGHT OF WAY ENGINEERING AT THE DISTRICT OFFICE.

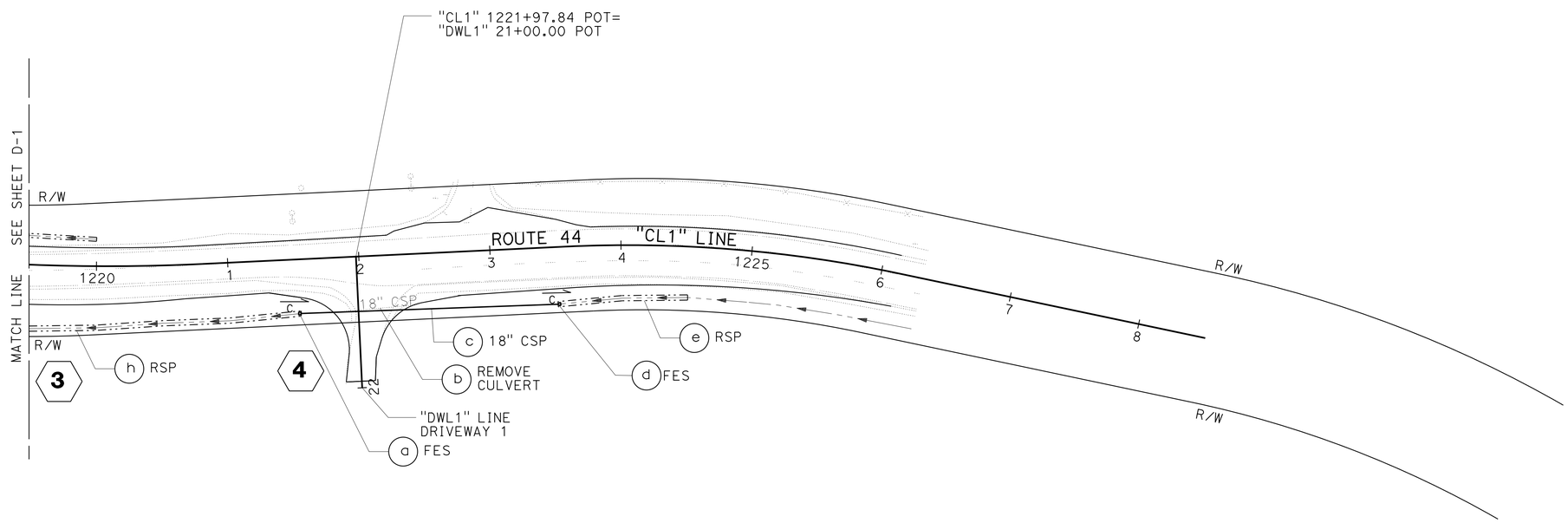

DRAINAGE PLAN

SCALE: 1" = 50'

D-2

APPROVED FOR DRAINAGE WORK ONLY

REVISED BY	
DATE REVISED	
CALCULATED-DESIGNED BY	JOLENA ASTIN
CHECKED BY	TRAVIS A. GURNEY
FUNCTIONAL SUPERVISOR	JOHN L. MARTIN

STATE OF CALIFORNIA - DEPARTMENT OF TRANSPORTATION
Caltrans
DESIGN

P:\proj\02\4E520_plans\pse\02000203171ia002.dgn

LAST REVISION 07-31-12
DATE PLOTTED => 20-DEC-2012
TIME PLOTTED => 11:12

Dist	COUNTY	ROUTE	POST MILES TOTAL PROJECT	SHEET No.	TOTAL SHEETS
02	Sha	44	R21.0/R21.4	19	40

REGISTERED CIVIL ENGINEER DATE 12-12-12

12-17-12
PLANS APPROVAL DATE

REGISTERED PROFESSIONAL ENGINEER TRAVIS A. GURNEY No. C77417 Exp. 6-30-13 CIVIL STATE OF CALIFORNIA

THE STATE OF CALIFORNIA OR ITS OFFICERS OR AGENTS SHALL NOT BE RESPONSIBLE FOR THE ACCURACY OR COMPLETENESS OF SCANNED COPIES OF THIS PLAN SHEET.

LEGEND:

- (1) DRAINAGE SYSTEM No.
- (a) DRAINAGE UNIT
- FLOW DIRECTION

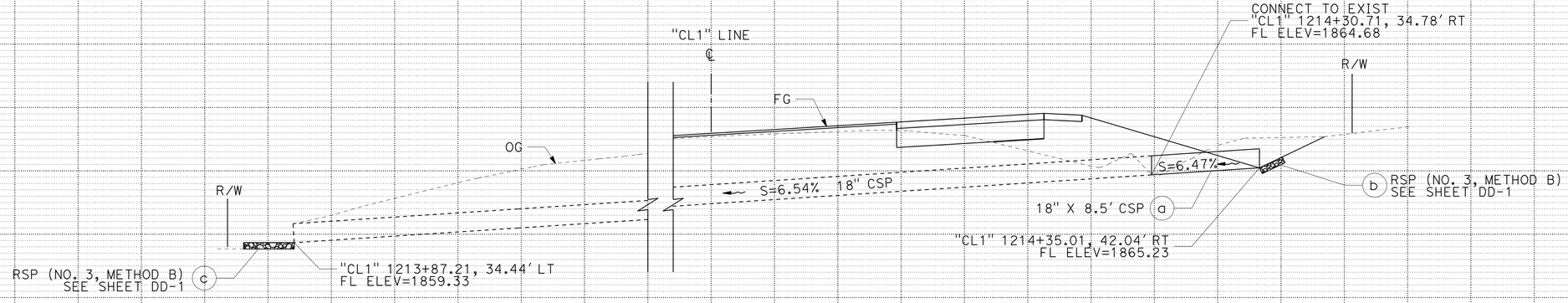

DRAINAGE SYSTEM NO. 2

"CL1" 1213+87.21, 34.44' LT TO "CL1" 1214+35.01, 42.04' RT

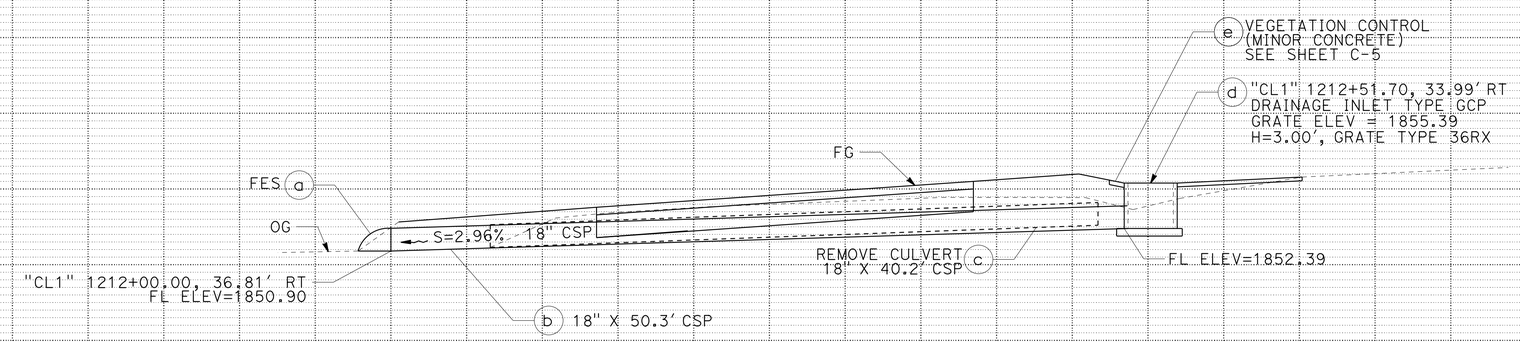

DRAINAGE SYSTEM NO. 1

"CL1" 1212+00.00, 36.81' RT TO "CL1" 1212+51.70, 33.99' RT

DRAINAGE PROFILES

SCALE: 1" = 5' HORIZ
1" = 5' VERT

DP-1

STATE OF CALIFORNIA - DEPARTMENT OF TRANSPORTATION
Caltrans
DESIGN

FUNCTIONAL SUPERVISOR: JOHN L. MARTIN
CALCULATED-DESIGNED BY: JOLENA ASTIN
CHECKED BY: TRAVIS A. GURNEY
REVISED BY
DATE REVISED

P:\proj\02\4E520_plans\pse\02000203171ib001.dgn

LAST REVISION 08-16-12 DATE PLOTTED => 20-DEC-2012 TIME PLOTTED => 11:12

Dist	COUNTY	ROUTE	POST MILES TOTAL PROJECT	SHEET No.	TOTAL SHEETS
02	Sha	44	R21.0/R21.4	20	40

REGISTERED CIVIL ENGINEER 12-12-12 DATE

12-17-12
PLANS APPROVAL DATE

REGISTERED PROFESSIONAL ENGINEER TRAVIS A. GURNEY No. C77417 Exp. 6-30-13 CIVIL STATE OF CALIFORNIA

THE STATE OF CALIFORNIA OR ITS OFFICERS OR AGENTS SHALL NOT BE RESPONSIBLE FOR THE ACCURACY OR COMPLETENESS OF SCANNED COPIES OF THIS PLAN SHEET.

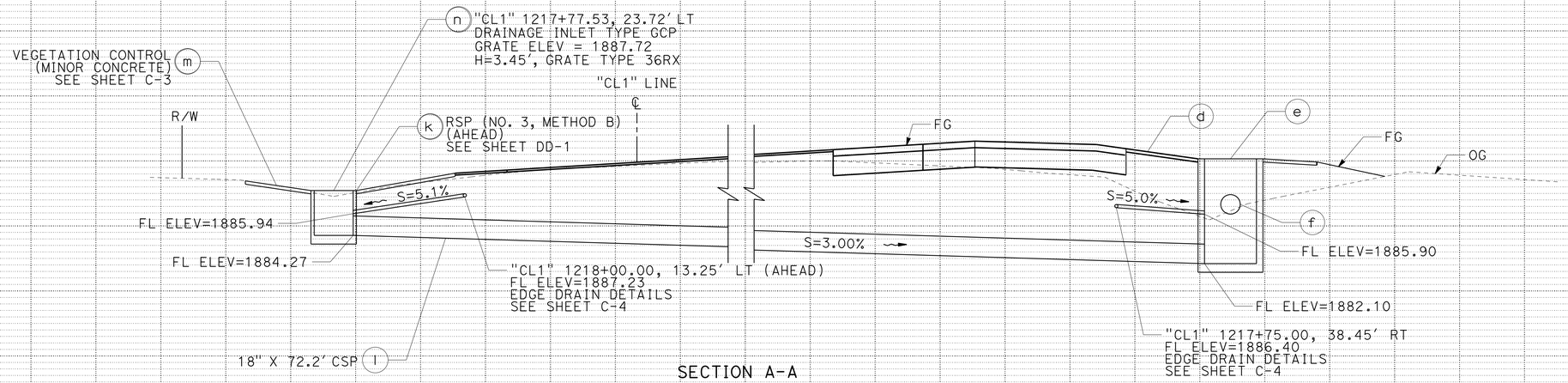

SECTION A-A

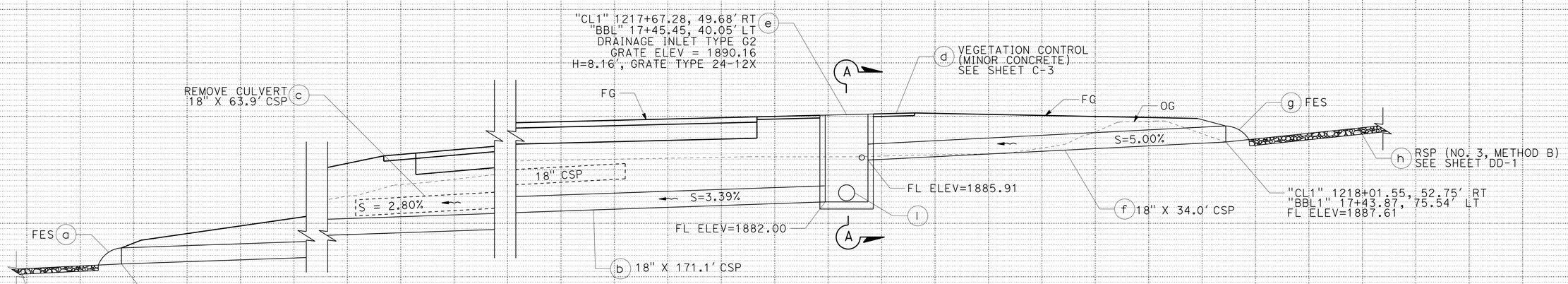

DRAINAGE SYSTEM NO. 3

"CL1" 1216+00.00, 45.58' RT TO "CL1" 1218+01.55, 52.75' RT
"BBL1" 17+43.87, 75.54' LT TO "BBL1" 17+53.11, 132.33' RT

DRAINAGE PROFILES

SCALE: 1" = 5' HORIZ
1" = 5' VERT

DP-2

REVISED BY | DATE REVISED
JOLENA ASTIN | TRAVIS A. GURNEY
CALCULATED-DESIGNED BY | CHECKED BY
FUNCTIONAL SUPERVISOR: JOHN L. MARTIN

STATE OF CALIFORNIA - DEPARTMENT OF TRANSPORTATION
Caltrans
DESIGN

P:\proj\02\4E520_plans\pse\02000203171b002.dgn

LAST REVISION 08-16-12 | DATE PLOTTED => 20-DEC-2012 | TIME PLOTTED => 11:12

Dist	COUNTY	ROUTE	POST MILES TOTAL PROJECT	SHEET No.	TOTAL SHEETS
02	Sha	44	R21.0/R21.4	21	40

REGISTERED CIVIL ENGINEER DATE 12-12-12

12-17-12
PLANS APPROVAL DATE

REGISTERED PROFESSIONAL ENGINEER TRAVIS A. GURNEY No. C77417 Exp. 6-30-13 CIVIL STATE OF CALIFORNIA

THE STATE OF CALIFORNIA OR ITS OFFICERS OR AGENTS SHALL NOT BE RESPONSIBLE FOR THE ACCURACY OR COMPLETENESS OF SCANNED COPIES OF THIS PLAN SHEET.

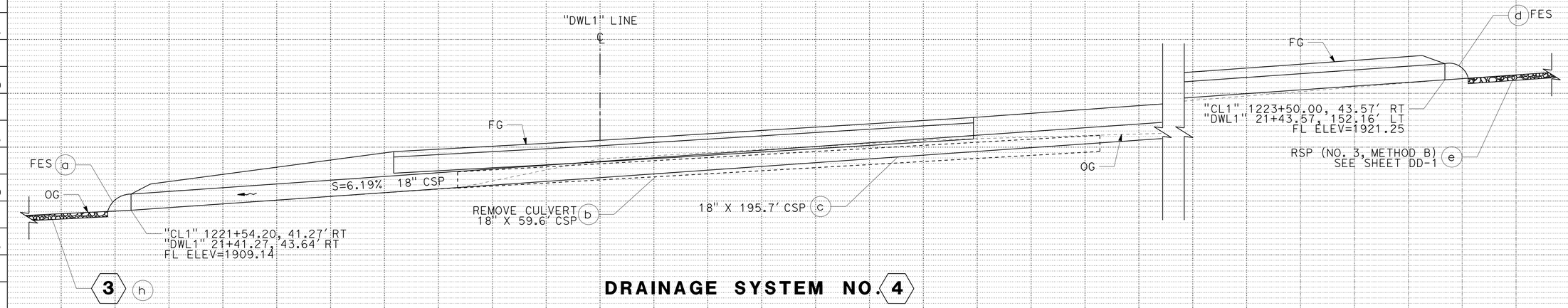

DRAINAGE SYSTEM NO. 4

"CL1" 1221+54.20, 41.27' RT TO "CL1" 1223+50.00, 43.57' RT
"DWL1" 21+41.27, 43.64' RT TO "DWL1" 21+43.57, 152.16' LT

DRAINAGE PROFILES

SCALE: 1" = 5' HORIZ
1" = 5' VERT

DP-3

REVISED BY | DATE REVISED

JOLENA ASTIN | TRAVIS A. GURNEY

CALCULATED-DESIGNED BY | CHECKED BY

FUNCTIONAL SUPERVISOR: JOHN L. MARTIN

STATE OF CALIFORNIA - DEPARTMENT OF TRANSPORTATION
Caltrans
DESIGN

P:\proj1\02\4E520_plans\pse\02000203171ib003.dgn

LAST REVISION 08-16-12 | DATE PLOTTED => 20-DEC-2012 | TIME PLOTTED => 11:12

Dist	COUNTY	ROUTE	POST MILES TOTAL PROJECT	SHEET No.	TOTAL SHEETS
02	Sha	44	R21.0/R21.4	22	40

REGISTERED CIVIL ENGINEER 12-12-12 DATE

12-17-12
PLANS APPROVAL DATE

REGISTERED PROFESSIONAL ENGINEER TRAVIS A. GURNEY No. C77417 Exp. 6-30-13 CIVIL STATE OF CALIFORNIA

THE STATE OF CALIFORNIA OR ITS OFFICERS OR AGENTS SHALL NOT BE RESPONSIBLE FOR THE ACCURACY OR COMPLETENESS OF SCANNED COPIES OF THIS PLAN SHEET.

NOTE:

1. FOR ACCURATE RIGHT OF WAY DATA, CONTACT RIGHT OF WAY ENGINEERING AT THE DISTRICT OFFICE.

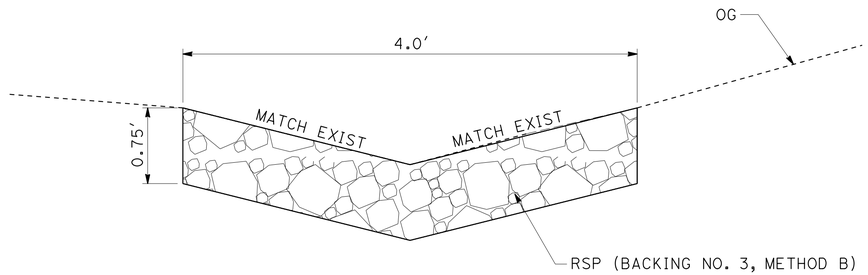

SECTION B-B

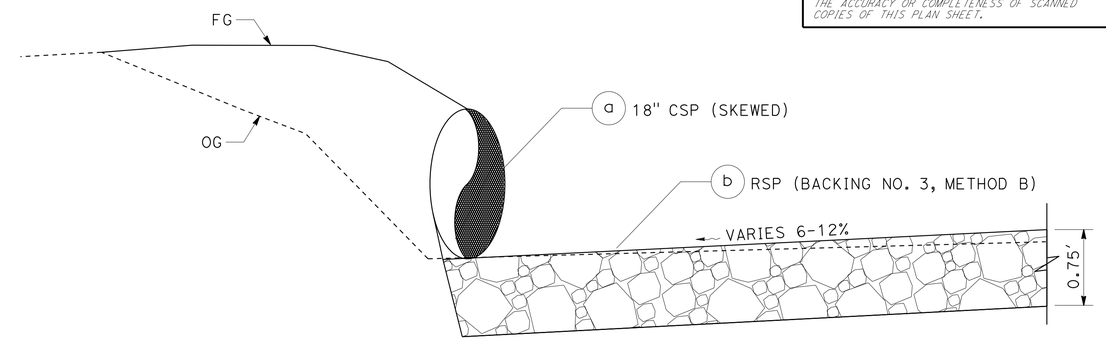

ELEVATION

ROCK SLOPE PROTECTION 2 b

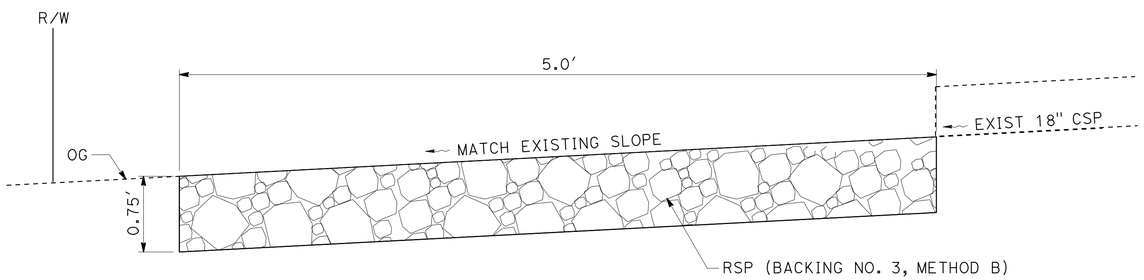

SECTION A-A

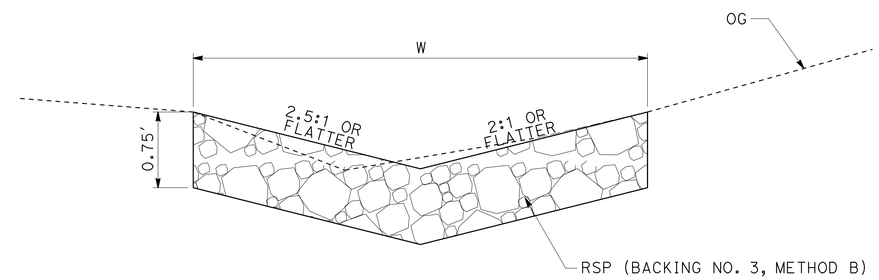

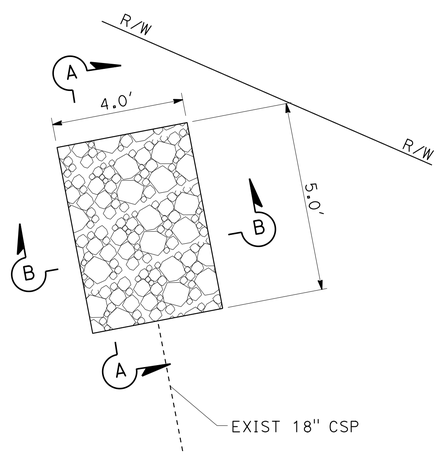

PLAN

ROCK SLOPE PROTECTION 2 c

ROCK SLOPE PROTECTION

DRAINAGE SYSTEM NO.-UNIT	STATION	LT/RT	W (FT)	LENGTH (FT)
2b	"CL1" 1214+35 TO 1216+00	RT	4	170
3h	"CL1" 1218+01 TO 1221+54	RT	4	362
3k	"CL1" 1217+00 TO 1219+50	LT	3	148
4e	"CL1" 1223+50 TO 1224+50	RT	4	100

DRAINAGE DETAILS

NO SCALE

DD-1

REVISED BY | DATE REVISED
TRAVIS A. GURNEY | JOHN L. MARTIN
CALCULATED-DESIGNED BY | CHECKED BY
FUNCTIONAL SUPERVISOR: JOHN L. MARTIN

STATE OF CALIFORNIA - DEPARTMENT OF TRANSPORTATION
Caltrans
DESIGN

P:\proj1\02\4E520_plans\pse\02000203171ic001.dgn

LAST REVISION 07-31-12 | DATE PLOTTED => 20-DEC-2012 | TIME PLOTTED => 11:12

Dist	COUNTY	ROUTE	POST MILES TOTAL PROJECT	SHEET No.	TOTAL SHEETS
02	Sha	44	R21.0/R21.4	23	40

REGISTERED CIVIL ENGINEER DATE 12-12-12

12-17-12
PLANS APPROVAL DATE

REGISTERED PROFESSIONAL ENGINEER TRAVIS A. GURNEY No. C77417 Exp. 6-30-13 CIVIL STATE OF CALIFORNIA

THE STATE OF CALIFORNIA OR ITS OFFICERS OR AGENTS SHALL NOT BE RESPONSIBLE FOR THE ACCURACY OR COMPLETENESS OF SCANNED COPIES OF THIS PLAN SHEET.

NOTES:
1. (N) NOT A SEPARATE PAY ITEM, FOR INFORMATION ONLY.
2. ALL CULVERT PIPES SHALL HAVE POSITIVE WATERTIGHT JOINTS.

MARKER (CULVERT)

DRAINAGE SYSTEM NO. AND UNIT NO.	ALIGNMENT	STATION	POST MILE	LEFT	RIGHT	MARKER (CULVERT) EA
1b	"CL1"	1212+00.00	21.07		X	1
1b	"CL1"	1212+51.70	21.08		X	1
2a	"CL1"	1213+87.21	21.10	X		1
2a	"CL1"	1214+35.01	21.11		X	1
3b	"CL1"	1216+00.00	21.14		X	1
3b	"CL1"	1217+67.28	21.17		X	1
3f	"CL1"	1218+01.50	21.18		X	1
3l	"CL1"	1217+77.53	21.18	X		1
4b	"CL1"	1221+54.20	21.25		X	1
4b	"CL1"	1223+50.00	21.28		X	1
					TOTAL	10

DRAINAGE QUANTITIES

DRAINAGE PROFILE SHEET NO.	# DRAINAGE SYSTEM NO.	# DRAINAGE UNIT NO.	REMOVE CULVERT (EA) EA	MINOR CONCRETE (MINOR STRUCTURE) CY	18" CORRUGATED STEEL PIPE (.109" THICK) LF	18" STEEL FLARED END SECTION EA	36" PRECAST CONCRETE PIPE INLET LF	ROCK SLOPE PROTECTION (NO. 3, METHOD B) CY	MISCELLANEOUS IRON AND STEEL LB	VEGETATION CONTROL (MINOR CONCRETE) SQYD	DI HEIGHT FT	(N) MAX. COVER FT	# DRAINAGE SYSTEM NO.	# DRAINAGE UNIT NO.	ALIGNMENT	STATION	DESCRIPTION
DP-1	1	a				1							1	a	CL1	1212+00.00	FLARED END SECTION
DP-1	1	b			50.3							2.14	1	b	CL1	1212+00.00	18′ x 50.3′ CSP
DP-1	1	c	1										1	c	CL1	1212+46.70	REMOVE CULVERT 18" X 40.2′ CSP
DP-1	1	d		0.7			3.5		215		3.00		1	d	CL1	1212+51.70	TYPE GCP DI, W/ (1) GRATE TYPE 36RX
DP-1	1	e								6.3			1	e	CL1	1212+51.70	VEGETATION CONTROL (MINOR CONCRETE)
DP-1	2	a			8.5							1.57	2	a	CL1	1214+30.71	18′ x 8.5′ CSP
DP-1	2	b						18.9					2	b	CL1	1214+35.01	RSP 4′ X 170′ X 0.75′
DP-1	2	c						0.6					2	c	CL1	1213+87.21	RSP 4′ X 5′ X 0.75′
DP-2	3	a				1							3	a	CL1	1216+00.00	FLARED END SECTION
DP-2	3	b			171.1							6.60	3	b	CL1	1216+00.00	18′ x 171.1′ CSP
DP-2	3	c	1										3	c	CL1	1216+84.59	REMOVE CULVERT 18" X 63.9′ CSP
DP-2	3	d								26.2			3	d	CL1	1217+67.28	VEGETATION CONTROL (MINOR CONCRETE)
DP-2	3	e		3.5					239		8.16		3	e	CL1	1217+67.28	TYPE G2 DI, W/ (1) GRATE TYPE 24-12X
DP-2	3	f			34.0							3.63	3	f	CL1	1217+67.28	18′ x 34.0′ CSP
DP-2	3	g				1							3	g	CL1	1218+01.50	FLARED END SECTION
DP-2	3	h						40.2					3	h	CL1	1218+01.50	RSP 4′ X 362′ X 0.75′
DP-2	3	k						12.3					3	k	CL1	1217+77.56	RSP 3′ X 148′ X 0.75′
DP-2	3	l			72.2							7.33	3	l	CL1	1217+77.56	18′ x 72.2′ CSP
DP-2	3	m								44.0			3	m	CL1	1217+77.56	VEGETATION CONTROL (MINOR CONCRETE)
DP-2	3	n		0.7			4.0		215		3.45		3	n	CL1	1217+77.56	TYPE GCP DI, W/ (1) GRATE TYPE 36RX
DP-3	4	a				1							4	a	CL1	1221+54.31	FLARED END SECTION
DP-3	4	b	1										4	b	CL1	1221+84.58	REMOVE CULVERT 18" X 59.6′ CSP
DP-3	4	c			195.7							1.38	4	c	CL1	1221+54.31	18′ x 195.7′ CSP
DP-3	4	d				1							4	d	CL1	1223+50.00	FLARED END SECTION
DP-3	4	e						11.1					4	e	CL1	1223+50.00	RSP 4′ X 100′ X 0.75′
CONSTRUCTION DETAIL SHEET C-4										5.8					CL1	1220+00.00	VEGETATION CONTROL (MINOR CONCRETE)
TOTAL			3	4.9	531.8	5	7.5	83.1	669	82.3							

DRAINAGE QUANTITIES

DQ-1

REVISED BY | DATE REVISED
TRAVIS A. GURNEY | JOHN L. MARTIN
CALCULATED-DESIGNED BY | CHECKED BY
FUNCTIONAL SUPERVISOR: JOHN L. MARTIN

STATE OF CALIFORNIA - DEPARTMENT OF TRANSPORTATION
Caltrans DESIGN

P:\proj1\02\4E520_plans\pse\02000203171d001.dgn

LAST REVISION 08-21-12 | DATE PLOTTED => 20-DEC-2012 TIME PLOTTED => 11:12

Dist	COUNTY	ROUTE	POST MILES TOTAL PROJECT	SHEET No.	TOTAL SHEETS
02	Sha	44	R21.0/R21.4	24	40

REGISTERED CIVIL ENGINEER DATE 12-12-12

12-17-12
PLANS APPROVAL DATE

REGISTERED PROFESSIONAL ENGINEER TRAVIS A. GURNEY No. C77417 Exp. 6-30-13 CIVIL STATE OF CALIFORNIA

THE STATE OF CALIFORNIA OR ITS OFFICERS OR AGENTS SHALL NOT BE RESPONSIBLE FOR THE ACCURACY OR COMPLETENESS OF SCANNED COPIES OF THIS PLAN SHEET.

NOTE:

1. FOR ACCURATE RIGHT OF WAY DATA, CONTACT RIGHT OF WAY ENGINEERING AT THE DISTRICT OFFICE.

LEGEND:

- --tc— FRONTIER COMMUNICATION UG CONDUIT
- —fo— FRONTIER COMMUNICATION OVERHEAD FIBER OPTIC
- ---t— FRONTIER COMMUNICATION UG TELEPHONE
- —e— OVERHEAD PG&E

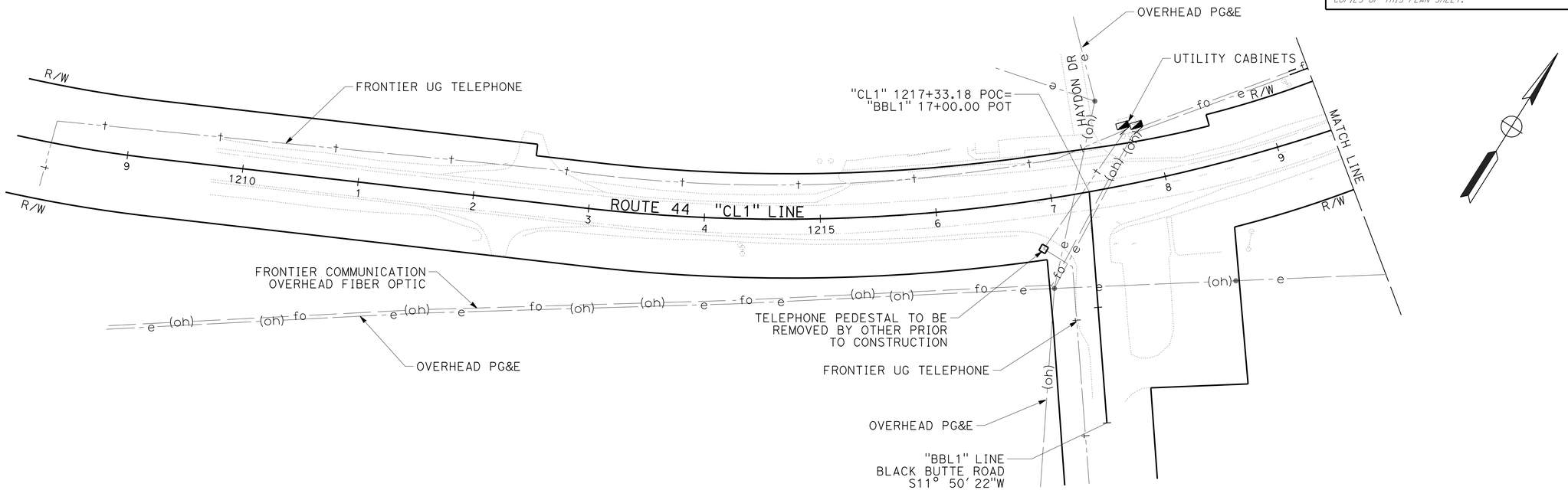

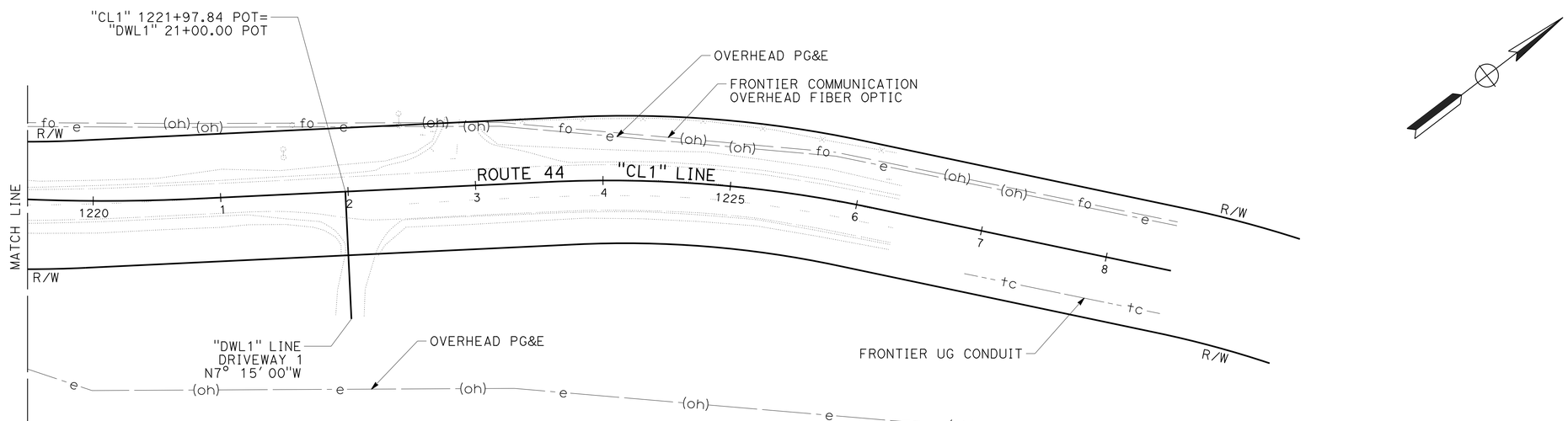

UTILITY PLAN

SCALE: 1" = 50'

U-1

APPROVED FOR UTILITY WORK ONLY

REVISED BY | DATE REVISED
TRAVIS A. GURNEY | JOHN L. MARTIN
CALCULATED-DESIGNED BY | CHECKED BY
FUNCTIONAL SUPERVISOR: JOHN L. MARTIN

STATE OF CALIFORNIA - DEPARTMENT OF TRANSPORTATION
Caltrans
DESIGN

P:\proj1\02\4E520_plans\pse\02000203171ka001.dgn

LAST REVISION | DATE PLOTTED => 20-DEC-2012 | TIME PLOTTED => 11:12
08-30-12

Dist	COUNTY	ROUTE	POST MILES TOTAL PROJECT	SHEET No.	TOTAL SHEETS
02	Sha	44	R21.0/R21.4	25	40

REGISTERED CIVIL ENGINEER 12-12-12 DATE

12-17-12
PLANS APPROVAL DATE

REGISTERED PROFESSIONAL ENGINEER TRAVIS A. GURNEY No. C77417 Exp. 6-30-13 CIVIL STATE OF CALIFORNIA

THE STATE OF CALIFORNIA OR ITS OFFICERS OR AGENTS SHALL NOT BE RESPONSIBLE FOR THE ACCURACY OR COMPLETENESS OF SCANNED COPIES OF THIS PLAN SHEET.

NOTES:

1. EXACT LOCATION OF ALL SIGNS TO BE DETERMINED BY THE ENGINEER.
2. ALL SIGNS SHALL BE BLACK ON ORANGE.
3. CALIFORNIA CODES ARE DESIGNATED BY (CA) OTHERWISE FEDERAL CODES ARE SHOWN.
4. TRAFFIC CONE SPACING SHALL BE 25 FT PARALLEL TO MAINLINE AND 12 FT THRU TAPERS AND AROUND INTERSECTION CORNERS.

CONSTRUCTION AREA SIGNS (STATIONARY MOUNTED)

SIGN NO. (X)	SIGN CODE	PANEL SIZE (INCHES)	SIGN MESSAGE	NUMBER OF POSTS AND SIZE	NUMBER OF SIGNS (N)
A	W20-1	48" X 48"	ROAD WORK AHEAD	1 - 4" X 6"	5
B	C23B (CA)	36" X 18"	HIGHWAY WIDENING	ATTACH TO W20-1 POST	2
C	G20-2	36" X 18"	END ROAD WORK	1 - 4" X 4"	5

(N) - NOT A SEPARATE PAY ITEM, FOR INFORMATION ONLY

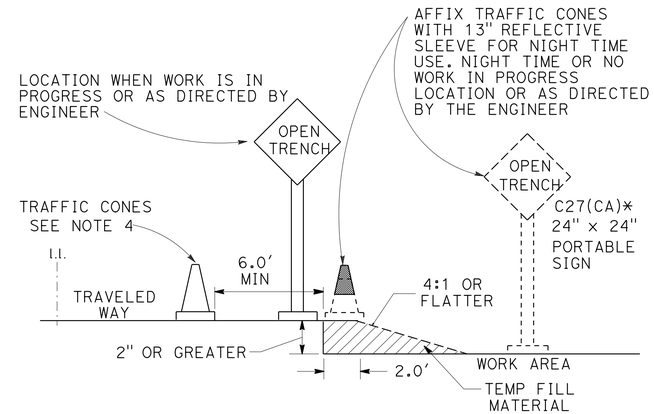

OPEN TRENCH SIGNING AND MARKING

* PLACE AT 250' INTERVALS THROUGH THE OPEN TRENCH AREA

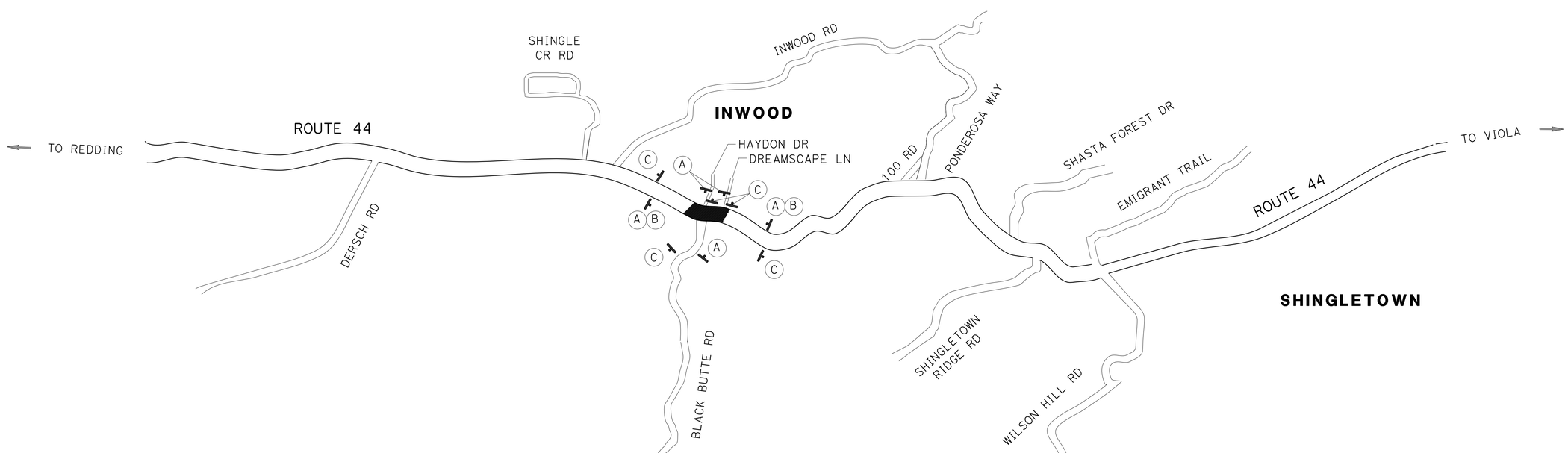

CONSTRUCTION AREA SIGNS

NO SCALE

CS-1

STATE OF CALIFORNIA - DEPARTMENT OF TRANSPORTATION
DESIGN
FUNCTIONAL SUPERVISOR JOHN L. MARTIN
CALCULATED-DESIGNED BY TRAVIS A. GURNEY
CHECKED BY JOHN L. MARTIN
REVISED BY
DATE REVISED

P:\proj1\02\4E520_plans\pse\02000203171a001.dgn

LAST REVISION 08-30-12
DATE PLOTTED => 20-DEC-2012
TIME PLOTTED => 11:12

Dist	COUNTY	ROUTE	POST MILES TOTAL PROJECT	SHEET No.	TOTAL SHEETS
02	Sha	44	R21.0/R21.4	26	40

REGISTERED CIVIL ENGINEER DATE 12-12-12

12-17-12
PLANS APPROVAL DATE

REGISTERED PROFESSIONAL ENGINEER TRAVIS A. GURNEY No. C77417 Exp. 6-30-13 CIVIL STATE OF CALIFORNIA

THE STATE OF CALIFORNIA OR ITS OFFICERS OR AGENTS SHALL NOT BE RESPONSIBLE FOR THE ACCURACY OR COMPLETENESS OF SCANNED COPIES OF THIS PLAN SHEET.

NOTE:

1. FOR CONSTRUCTION AREAS USE LANE CLOSURE PER SHEET TCS-1.

LEGEND:

- STAGE 1
- STAGE 2
- STAGE 3
- WORK AREA

STAGE 1 CONSTRUCTION

1. WIDEN ON THE LEFT EXCEPT TOP LAYER OF HMA
   STA 1218+00 TO 1222+17

STAGE 2 CONSTRUCTION

1. WIDEN ON THE RIGHT EXCEPT TOP LAYER OF HMA
   STA 1209+80 TO 1226+13
2. CONSTRUCT ROAD APPROACH AT BLACK BUTTE ROAD
3. CONSTRUCT PRIVATE DRIVEWAY APPROACHES

STAGE 3 CONSTRUCTION

1. PLACE VARIABLE THICKNESS LOWER LAYER HMA OVERLAY
   STA 1209+80 TO 1226+13
2. PLACE 0.15' FULL WIDTH HMA TOP LAYER
   STA 1209+80 TO 1226+13

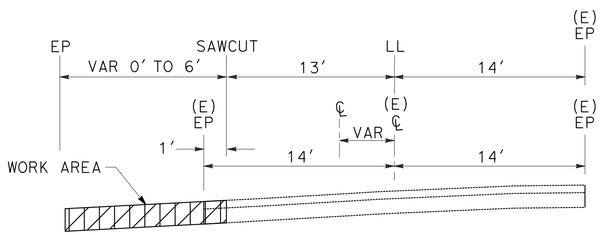

STAGE 1

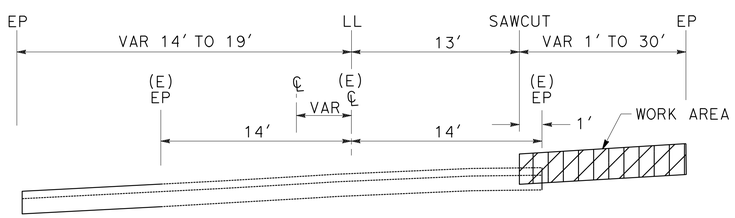

STAGE 2

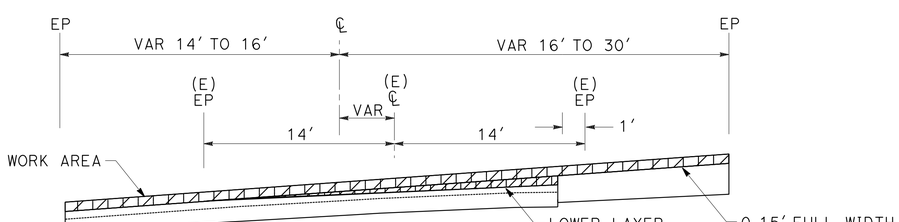

STAGE 3

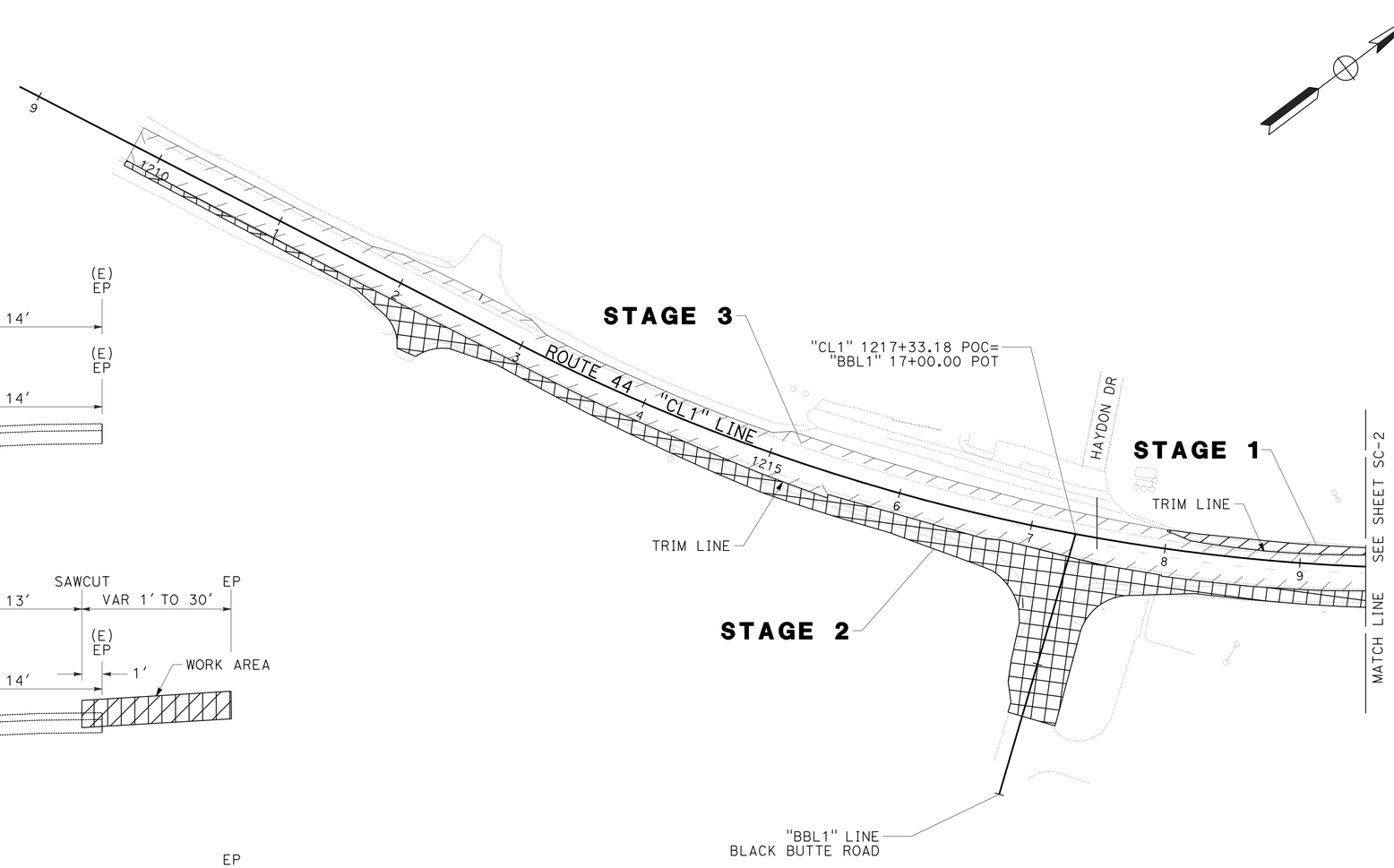

APPROVED FOR STAGE CONSTRUCTION WORK ONLY

STAGE CONSTRUCTION

NO SCALE

SC-1

REVISED BY | DATE REVISED
TRAVIS A. GURNEY | JOHN L. MARTIN
CALCULATED-DESIGNED BY | CHECKED BY
FUNCTIONAL SUPERVISOR | JOHN L. MARTIN
STATE OF CALIFORNIA - DEPARTMENT OF TRANSPORTATION
Caltrans DESIGN

P:\proj\02\4E520_plans\pse\02000203171ma001.dgn

LAST REVISION 08-30-12 | DATE PLOTTED => 20-DEC-2012 | TIME PLOTTED => 11:12

BORDER LAST REVISED 7/2/2010 | USERNAME => s115152 | DGN FILE => 02000203171ma001.dgn | RELATIVE BORDER SCALE IS IN INCHES 0 1 2 3 | UNIT 0315 | PROJECT NUMBER & PHASE 02000203171 | EA: 02-4E520

Dist	COUNTY	ROUTE	POST MILES TOTAL PROJECT	SHEET No.	TOTAL SHEETS
02	Sha	44	R21.0/R21.4	27	40

REGISTERED CIVIL ENGINEER 12-12-12 DATE

12-17-12
PLANS APPROVAL DATE

REGISTERED PROFESSIONAL ENGINEER
TRAVIS A. GURNEY
No. C77417
Exp. 6-30-13
CIVIL
STATE OF CALIFORNIA

THE STATE OF CALIFORNIA OR ITS OFFICERS OR AGENTS SHALL NOT BE RESPONSIBLE FOR THE ACCURACY OR COMPLETENESS OF SCANNED COPIES OF THIS PLAN SHEET.

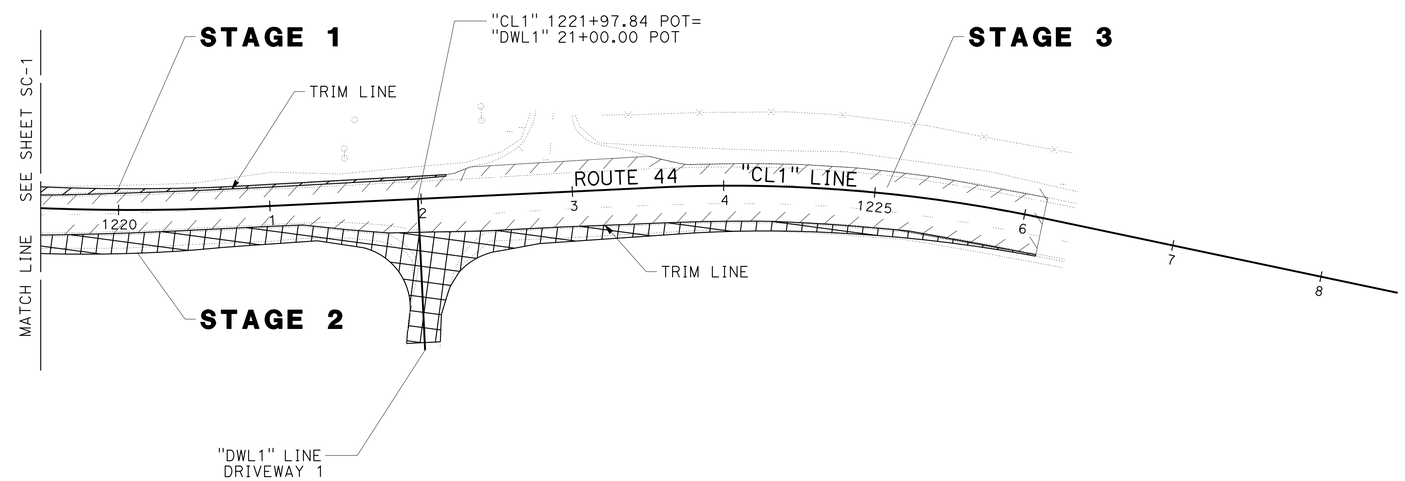

STAGE CONSTRUCTION

NO SCALE

SC-2

REVISED BY	DATE REVISED

CALCULATED-DESIGNED BY	TRAVIS A. GURNEY
CHECKED BY	JOHN L. MARTIN

FUNCTIONAL SUPERVISOR: JOHN L. MARTIN

STATE OF CALIFORNIA - DEPARTMENT OF TRANSPORTATION

Caltrans®

DESIGN

P:\proj\02\4E520_plans\pse\02000203171ma002.dgn

LAST REVISION 08-30-12 | DATE PLOTTED => 20-DEC-2012 | TIME PLOTTED => 11:12

Dist	COUNTY	ROUTE	POST MILES TOTAL PROJECT	SHEET No.	TOTAL SHEETS
02	Sha	44	R21.0/R21.4	28	40

REGISTERED CIVIL ENGINEER 12-12-12 DATE

12-17-12
PLANS APPROVAL DATE

REGISTERED PROFESSIONAL ENGINEER TRAVIS A. GURNEY No. C77417 Exp. 6-30-13 CIVIL STATE OF CALIFORNIA

THE STATE OF CALIFORNIA OR ITS OFFICERS OR AGENTS SHALL NOT BE RESPONSIBLE FOR THE ACCURACY OR COMPLETENESS OF SCANNED COPIES OF THIS PLAN SHEET.

NOTES:

1. ALL EXISTING SIGNS NOT SHOWN FOR REMOVAL, RELOCATION OR RESETTING SHALL REMAIN IN PLACE.
2. ALL SIGN CODES SHOWN ARE FEDERAL SIGN CODES UNLESS OTHERWISE DESIGNATED AS CALIFORNIA SIGN CODES. CALIFORNIA SIGN CODES ARE DESIGNATED BY (CA)
3. FOR COMPLETE RIGHT OF WAY AND ACCURATE ACCESS DATA, SEE RIGHT OF WAY RECORD MAPS AT DISTRICT OFFICE.

LEGEND

- #-# ROADSIDE SIGN NUMBER
- #-# PAVEMENT DELINEATION STRIPE DETAIL NUMBER
- LL LIMIT LINE
- SINGLE STRIPE MARKER
- STRIPE CHANGE LOCATION
- TYPE III (L) ARROW
- (##') SPACING TO SUBSEQUENT DELINEATOR
- EXISTING ROADSIDE SIGN ONE POST
- EXISTING ROADSIDE SIGN TWO POST
- NEW ROADSIDE SIGN ONE POST
- NEW ROADSIDE SIGN TWO POST
- EXISTING SIGN TO REMAIN
- REMOVE ROADSIDE SIGN
- RELOCATE ROADSIDE SIGN
- DELINEATOR (TYPE E)
- DELINEATOR (TYPE F)
- OBJECT MARKER (TYPE L)

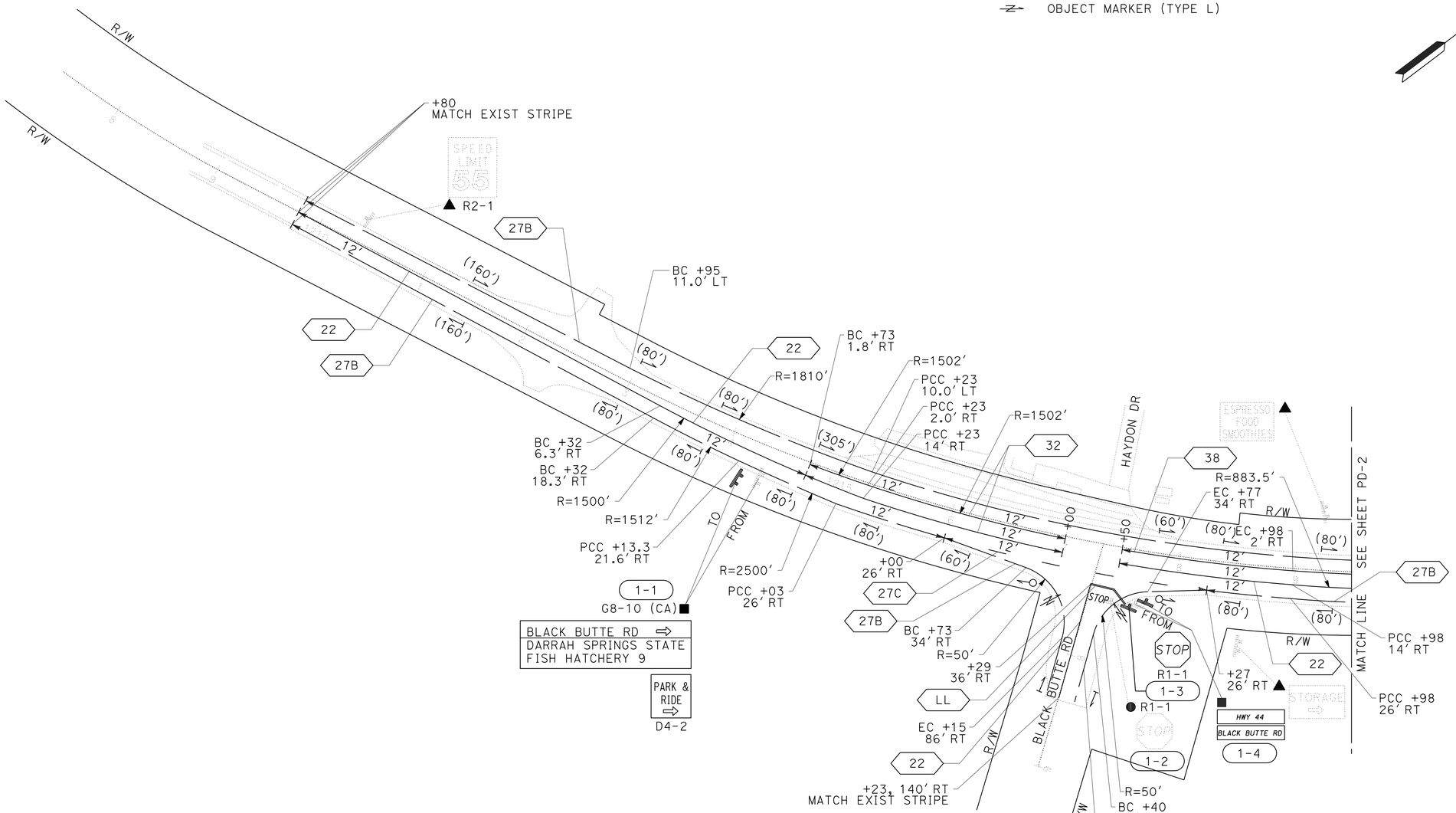

PAVEMENT DELINEATION AND SIGN PLAN

SCALE: 1" = 50'

PD-1

APPROVED FOR PAVEMENT DELINEATION AND SIGN WORK ONLY

STATE OF CALIFORNIA - DEPARTMENT OF TRANSPORTATION
DESIGN
FUNCTIONAL SUPERVISOR: JOHN L. MARTIN
CALCULATED-DESIGNED BY: TRAVIS A. GURNEY
CHECKED BY: JOHN L. MARTIN
REVISED BY / DATE REVISED

P:\proj1\02\4E520_plans\pse\02000203171na001.dgn

LAST REVISION 08-30-12 | DATE PLOTTED => 20-DEC-2012 | TIME PLOTTED => 11:12

Dist	COUNTY	ROUTE	POST MILES TOTAL PROJECT	SHEET No.	TOTAL SHEETS
02	Sha	44	R21.0/R21.4	29	40

REGISTERED CIVIL ENGINEER 12-12-12 DATE

12-17-12
PLANS APPROVAL DATE

REGISTERED PROFESSIONAL ENGINEER
TRAVIS A. GURNEY
No. C77417
Exp. 6-30-13
CIVIL
STATE OF CALIFORNIA

THE STATE OF CALIFORNIA OR ITS OFFICERS OR AGENTS SHALL NOT BE RESPONSIBLE FOR THE ACCURACY OR COMPLETENESS OF SCANNED COPIES OF THIS PLAN SHEET.

NOTE:

1. FOR ACCURATE RIGHT OF WAY DATA, CONTACT RIGHT OF WAY ENGINEERING AT THE DISTRICT OFFICE.

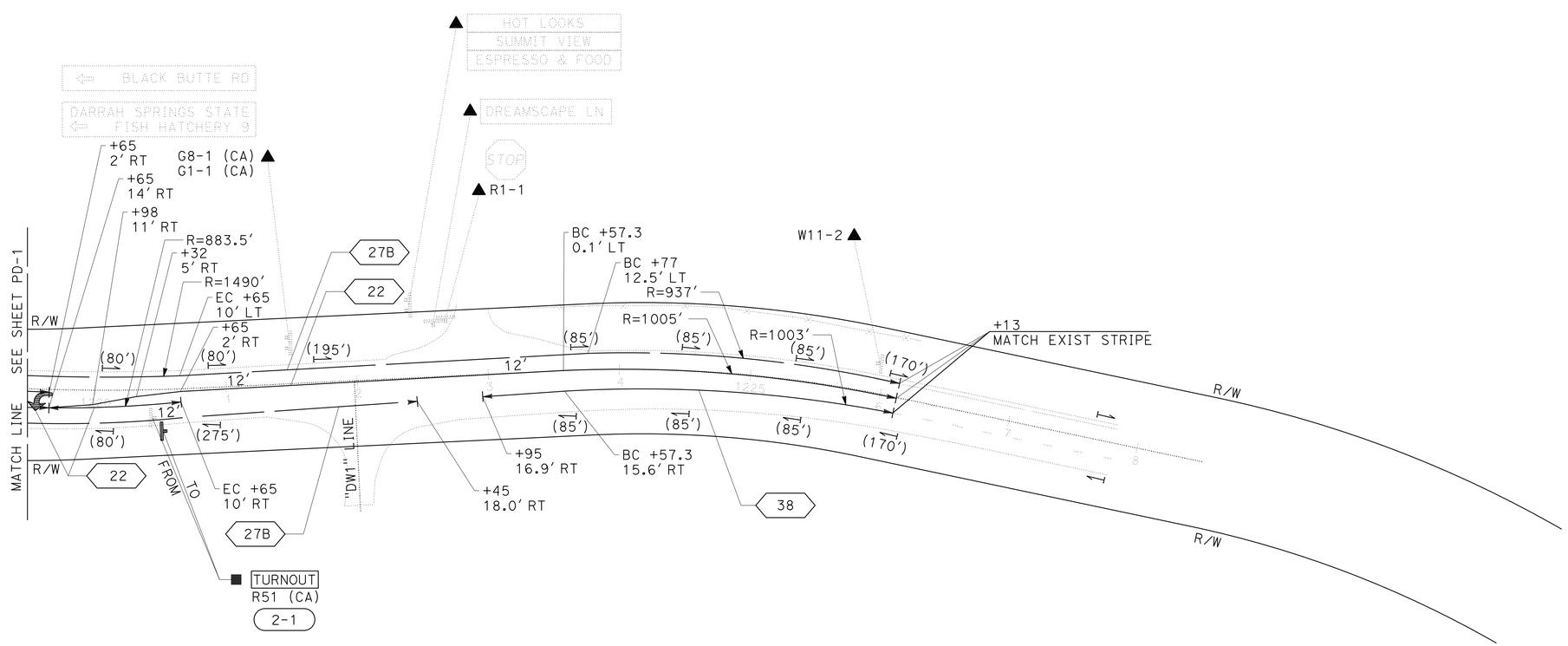

PAVEMENT DELINEATION AND SIGN PLAN

SCALE: 1" = 50'

PD-2

APPROVED FOR PAVEMENT DELINEATION AND SIGN WORK ONLY

REVISED BY	TRAVIS A. GURNEY
DATE REVISED	JOHN L. MARTIN
CALCULATED-DESIGNED BY	JOHN L. MARTIN
CHECKED BY	

FUNCTIONAL SUPERVISOR

STATE OF CALIFORNIA - DEPARTMENT OF TRANSPORTATION
Caltrans
DESIGN

P:\proj1\02\4E520_plans\pse\02000203171na002.dgn

LAST REVISION 08-30-12 | DATE PLOTTED => 20-DEC-2012 | TIME PLOTTED => 11:12

Dist	COUNTY	ROUTE	POST MILES TOTAL PROJECT	SHEET No.	TOTAL SHEETS
02	Sha	44	R21.0/R21.4	30	40

REGISTERED CIVIL ENGINEER 12-12-12 DATE

12-17-12
PLANS APPROVAL DATE

REGISTERED PROFESSIONAL ENGINEER TRAVIS A. GURNEY No. C77417 Exp. 6-30-13 CIVIL STATE OF CALIFORNIA

THE STATE OF CALIFORNIA OR ITS OFFICERS OR AGENTS SHALL NOT BE RESPONSIBLE FOR THE ACCURACY OR COMPLETENESS OF SCANNED COPIES OF THIS PLAN SHEET.

TRAFFIC STRIPE, PAVEMENT MARKERS, DELINEATORS, AND OBJECT MARKERS

SHEET NO.	LOCATION			LT/RT	THERMOPLASTIC TRAFFIC STRIPE (SPRAYABLE) YELLOW 4" DETAIL 22 LF	YELLOW 4" DETAIL 32 LF	WHITE 4" DETAIL 27B LF	WHITE 8" DETAIL 38 LF	WHITE 4" (BROKEN 12-3) DETAIL 27C LF	PAVEMENT MARKER (RETROREFLECTIVE-RECESSED) TYPE D EA	PAVEMENT MARKER TYPE G EA	DELINEATOR (CLASS 2) TYPE E EA	DELINEATOR TYPE F EA	OBJECT MARKER TYPE L EA
PD-1	"CL1"	1209+80	1219+50	LT			970						7	
	"CL1"	1209+80	1216+00	RT	493	254	620			58			6	
	"CL1"	1216+00	1219+50	RT	200	200	123	200	227	31	9		2	
	"BBL1"	17+36	18+40	LT/RT	104		350			11		2	2	2
PD-2	"CL1"	1219+50	1226+13	LT			663						8	
	"CL1"	1219+50	1226+13	RT	763		295	318		66	14		7	
SUBTOTAL					1560	454	3021	518	227	166	24	2	32	2
TOTAL					5780					190		34		2

(N) - NOT A SEPARATE PAY ITEM, FOR INFORMATION ONLY

ROADSIDE SIGNS

SHEET NO.	SIGN NO. #-#	SIGN CODE	PANEL SIZE (INCH x INCH)	(N) POST SIZE AND LENGTH (FT) METAL POST 2 1/2" x 2 1/2"	ROADSIDE SIGN ONE POST EA	REMOVE ROADSIDE SIGN EA	RELOCATE ROADSIDE SIGN ONE POST EA	RELOCATE ROADSIDE SIGN TWO POST EA	DESCRIPTION/REMARKS
PD-1	1-1	GB-10 (CA) D4-2						1	BLACK BUTTE ROAD ⇨ PARK & RIDE ⇨
	1-2	R1-1				1			STOP
	1-3	R1-1	30 X 30	14	1				STOP
	1-4						1		HWY 44 BLACK BUTTE RD
PD-2	2-1	R51 (CA)					1		TURNOUT
TOTAL					1	1	2	1	

(N) - NOT A SEPARATE PAY ITEM, FOR INFORMATION ONLY

CONTRACTOR FURNISHED SIGNS

No.	SIGN CODE	SIGN SIZE L x D (In x In)	SINGLE FACED	SIGN FACING MATERIAL BACKGROUND SHEETING COLOR	BACKGROUND RETROREFLECTIVE ASTM TYPE	LEGEND SHEETING COLOR	LEGEND RETROREFLECTIVE ASTM TYPE	SIGN PANEL SUBSTRATE MATERIAL (SQFT) ROADSIDE SINGLE-SHEET UNFRAMED ALUMINUM 0.063"	DESCRIPTION (REMARKS)
1-3	R1-1	30 x 30	X	RED	III	WHITE	III	6.3	STOP
TOTAL (SQFT)								6.3	

THERMOPLASTIC PAVEMENT MARKING

SHEET NO.	LOCATION	TYPE III (L) ARROW SQFT	WORD MARKING STOP SQFT	LIMIT LINE SQFT
PD-1	"CL1" 1219+65 RT	42		
PD-1	"CL1" 1217+50 RT		22	
PD-1	"CL1" 1217+50 RT			37
SUBTOTAL		42	22	37
TOTAL		101		

PAVEMENT DELINEATION AND SIGN QUANTITIES

PDQ-1

REVISED BY | DATE REVISED
TRAVIS A. GURNEY | JOHN L. MARTIN
CALCULATED-DESIGNED BY | CHECKED BY
FUNCTIONAL SUPERVISOR: JOHN L. MARTIN
STATE OF CALIFORNIA - DEPARTMENT OF TRANSPORTATION
Caltrans DESIGN

P:\proj1\02\4E520_plans\pse\02000203171nc001.dgn

LAST REVISION 08-30-12 | DATE PLOTTED => 20-DEC-2012 | TIME PLOTTED => 11:12

Dist	COUNTY	ROUTE	POST MILES TOTAL PROJECT	SHEET No.	TOTAL SHEETS
02	Sha	44	R21.0/R21.4	31	40

REGISTERED CIVIL ENGINEER 12-12-12 DATE

12-17-12
PLANS APPROVAL DATE

REGISTERED PROFESSIONAL ENGINEER TRAVIS A. GURNEY No. C77417 Exp. 6-30-13 CIVIL STATE OF CALIFORNIA

THE STATE OF CALIFORNIA OR ITS OFFICERS OR AGENTS SHALL NOT BE RESPONSIBLE FOR THE ACCURACY OR COMPLETENESS OF SCANNED COPIES OF THIS PLAN SHEET.

STORM WATER PREVENTION

ITEM	UNIT	QTY
TEMPORARY CHECK DAM	LF	500
TEMPORARY DRAINAGE INLET PROTECTION	EA	3

ROADWAY ITEMS

STATION					STAGE	LOCATION	COLD PLANE ASPHALT CONCRETE PAVEMENT	ROADWAY EXCAVATION	ROADWAY EMBANKMENT (N)	SHOULDER BACKING	IMPORTED BORROW	SUBGRADE ENHANCEMENT GEOTEXTILE CLASS B2	CLASS 2 AGGREGATE BASE	REPLACE ASPHALT CONCRETE SURFACING	HOT MIX ASPHALT (TYPE A)	VARIABLE DEPTH HOT MIX ASPHALT (TYPE A) (N)	TACK COAT
						LT/RT	SQYD	CY	CY	TON	CY	SQYD	CY	CY	TON	TON	TON
"CL1"	1218+00	TO	"CL1"	1222+17	1	LT		100	25			170	85		42		0.1
"CL1"	1209+80	TO	"CL1"	1211+86	2	RT		75	17			104	52		25		0.1
"CL1"	1211+86	TO	"CL1"	1212+90	2	RT		105	31			192	96		47		0.1
"CL1"	1212+90	TO	"CL1"	1216+00	2	RT		185	285			400	200		98		0.3
"CL1"	1216+00	TO	"CL1"	1218+26	2	RT		67	181		40	300	160		79		0.1
"CL1"	1218+26	TO	"CL1"	1221+30	2	RT		106	292		101	403	224		106		0.3
"CL1"	1221+30	TO	"CL1"	1223+77	2	RT		97	118			120	67		33		0.1
"CL1"	1223+77	TO	"CL1"	1226+13	2	RT		87	14			216	108		53		0.2
"BBL1"	17+24	TO	"BBL1"	18+40	2	LT/RT	107	29	314	18	285	527	273		191		0.3
"DWL1"	21+25	TO	"DWL1"	21+95	2	LT/RT	60	31	73	15	42	240	108		75		0.1
"CL1"	1209+80	TO	"CL1"	1210+40	3	LT/RT	213			6					22		0.1
"CL1"	1210+40	TO	"CL1"	1225+53	3	LT/RT	456			254				45	1424	687	2.1
"CL1"	1225+53	TO	"CL1"	1226+13	3	LT/RT	270			6					28		0.1
TOTAL							1106	882	1350*	299	468	2672	1373	45	2223	687	4.0

(N) NOT A SEPARATE PAY ITEM, FOR INFORMATION ONLY.
* ROADWAY EMBANKMENT QUANTITY INCLUDES 10% SHRINKAGE FACTOR.

SUMMARY OF QUANTITIES

Q-1

TRAVIS A. GURNEY — REVISED BY
JOHN L. MARTIN — DATE REVISED
CALCULATED-DESIGNED BY
CHECKED BY
FUNCTIONAL SUPERVISOR: JOHN L. MARTIN

STATE OF CALIFORNIA - DEPARTMENT OF TRANSPORTATION
Caltrans® DESIGN

P:\proj\02\4E520_plans\pse\02000203171pa001.dgn

LAST REVISION 08-30-12 | DATE PLOTTED => 20-DEC-2012 | TIME PLOTTED => 11:12

Dist	COUNTY	ROUTE	POST MILES TOTAL PROJECT	SHEET No.	TOTAL SHEETS
02	Sha	44	R21.0/R21.4	32	40

J. Hannigan 12-12-12
REGISTERED ELECTRICAL ENGINEER DATE

12-17-12
PLANS APPROVAL DATE

REGISTERED PROFESSIONAL ENGINEER J.M. HANNIGAN No. E13665 Exp. 6-30-13 ELECTRICAL STATE OF CALIFORNIA

THE STATE OF CALIFORNIA OR ITS OFFICERS OR AGENTS SHALL NOT BE RESPONSIBLE FOR THE ACCURACY OR COMPLETENESS OF SCANNED COPIES OF THIS PLAN SHEET.

NOTE:

1. FOR ACCURATE RIGHT OF WAY DATA, CONTACT RIGHT OF WAY ENGINEERING AT THE DISTRICT OFFICE.

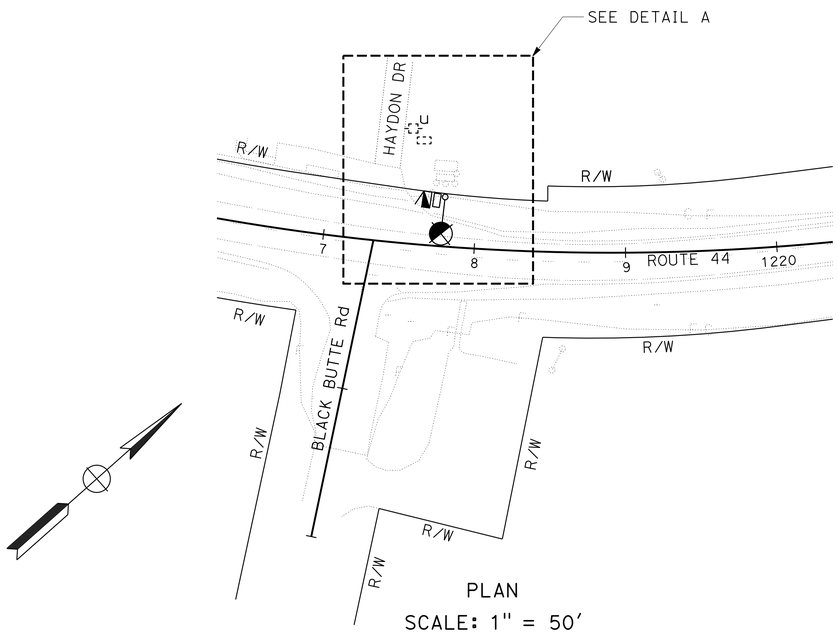

PLAN
SCALE: 1" = 50'

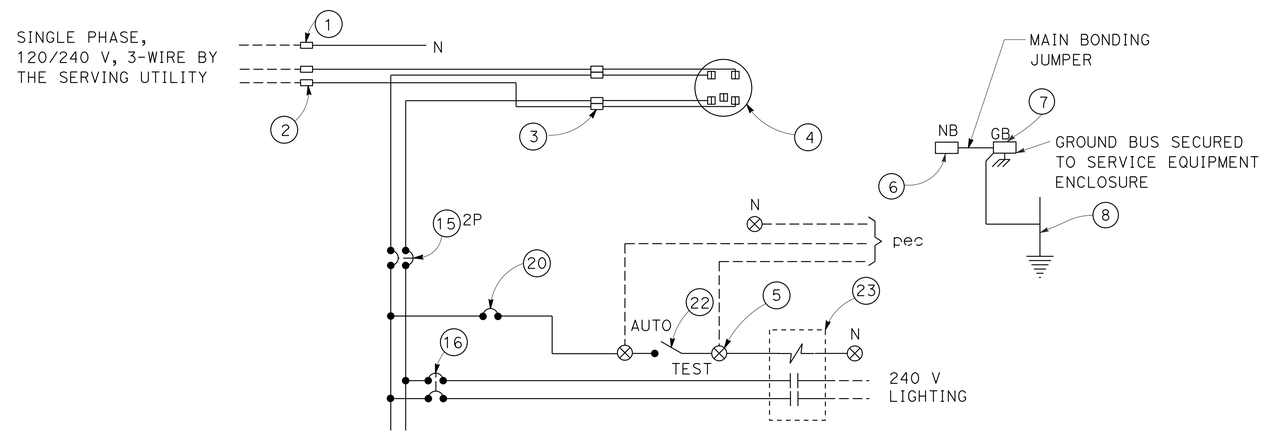

SERVICE WIRING DIAGRAM
SEE Std PLANS FOR DETAILS NOT SHOWN

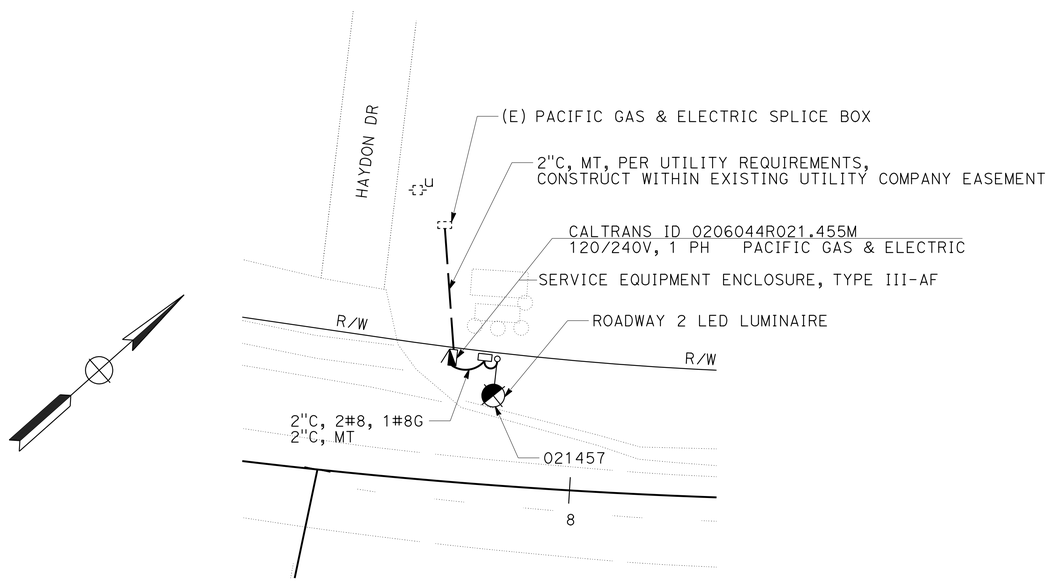

DETAIL A
SCALE: 1" = 20'

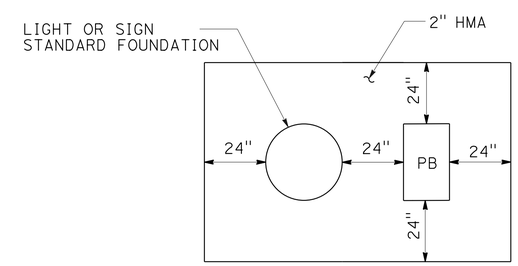

NOTE: APPLIES TO ALL INSTALLATIONS IN UNPAVED AREAS

PULL BOX AND LIGHT OR SIGN STANDARD PAVING

APPROVED FOR ELECTRICAL WORK ONLY

LIGHTING
SCALE: AS NOTED

E-1

REVISED BY	DATE REVISED

CALCULATED-DESIGNED BY	CHECKED BY
J.M. HANNIGAN	ARTURO ROBLES

FUNCTIONAL SUPERVISOR: ROB STINGER

STATE OF CALIFORNIA - DEPARTMENT OF TRANSPORTATION
Caltrans® **ELECTRICAL DESIGN**

P:\proj1\02\4E520_plans\pse\02000203171ua001.dgn

LAST REVISION 12-12-12 | DATE PLOTTED => 20-DEC-2012 | TIME PLOTTED => 11:12

Dist	COUNTY	ROUTE	POST MILES TOTAL PROJECT	SHEET No.	TOTAL SHEETS
02	Sha	44	R21.0/R21.4	33	40

J. Hannigan 12-12-12
REGISTERED ELECTRICAL ENGINEER DATE

12-17-12
PLANS APPROVAL DATE

REGISTERED PROFESSIONAL ENGINEER J.M. HANNIGAN No. E13665 Exp. 6-30-13 ELECTRICAL STATE OF CALIFORNIA

THE STATE OF CALIFORNIA OR ITS OFFICERS OR AGENTS SHALL NOT BE RESPONSIBLE FOR THE ACCURACY OR COMPLETENESS OF SCANNED COPIES OF THIS PLAN SHEET.

LIGHTING

	SHEET No.	TRENCH	1½" CONDUIT (TYPE 1)	2" CONDUIT (TYPE 1)	2" CONDUIT (TYPE 3)	No. 5 PULL BOX	PULL BOX PAVING	No. 8 CONDUCTORS	TYPE 32 LIGHTING STANDARD	ROADWAY 2 LED LUMINAIRE	FOUNDATION - TYPE 32 LIGHTING STANDARD	ANCHOR BOLTS - TYPE 32 LIGHTING STANDARD	TYPE III-A SERVICE ENCLOSURE	FOUNDATION - TYPE III-A SERVICE ENCLOSURE	ANCHOR BOLTS - TYPE III-A SERVICE ENCLOSURE
		(N)	(N)	(N)	(N)	(N)	(N)	(N)	(N)	(N)	(N)	(N)	(N)	(N)	
		LF	LF	LF	LF	EA	EA	LF	EA	EA	EA	EA	EA	EA	EA
	E-1	100	20	20	40	1	1	150	1	1	1	1	1	1	1

ELECTRICAL QUANTITIES

E-2

STATE OF CALIFORNIA - DEPARTMENT OF TRANSPORTATION
Caltrans ELECTRICAL DESIGN

FUNCTIONAL SUPERVISOR: ROB STINGER
CALCULATED-DESIGNED BY: J.M. HANNIGAN
CHECKED BY: ARTURO ROBLES
REVISED BY
DATE REVISED

P:\proj1\02\4E520_plans\pse\02000203171ua002.dgn

LAST REVISION | DATE PLOTTED => 20-DEC-2012
12-12-12 | TIME PLOTTED => 11:12

Dist	COUNTY	ROUTE	POST MILES TOTAL PROJECT	SHEET No.	TOTAL SHEETS
02	Sha	44	R21.0/R21.4	34	40

REGISTERED CIVIL ENGINEER 12-7-12 DATE

12-17-12
PLANS APPROVAL DATE

REGISTERED PROFESSIONAL ENGINEER Gurinderpal Bhullar No. C48815 Exp. 9-30-14 CIVIL STATE OF CALIFORNIA

THE STATE OF CALIFORNIA OR ITS OFFICERS OR AGENTS SHALL NOT BE RESPONSIBLE FOR THE ACCURACY OR COMPLETENESS OF SCANNED COPIES OF THIS PLAN SHEET.

NOTES:

Unless otherwise specified in the special provisions, all temporary warning signs shall have black legend on orange background.

California code are designated by (CA). Otherwise, Federal (MUTCD) codes are shown.

TYPICAL LANE CLOSURE WITH REVERSIBLE CONTROL

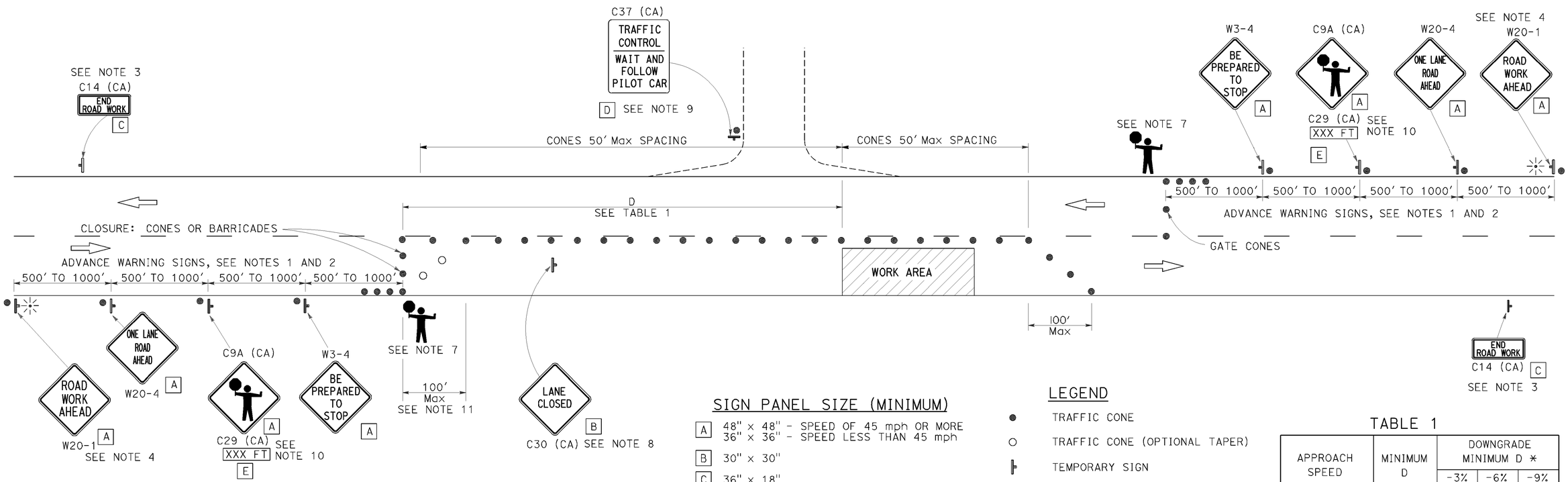

SIGN PANEL SIZE (MINIMUM)

- A: 48" x 48" - SPEED OF 45 mph OR MORE; 36" x 36" - SPEED LESS THAN 45 mph
- B: 30" x 30"
- C: 36" x 18"
- D: 36" x 42"
- E: 36" x 9"

LEGEND

- TRAFFIC CONE
- TRAFFIC CONE (OPTIONAL TAPER)
- TEMPORARY SIGN
- PORTABLE FLASHING BEACON
- FLAGGER

TABLE 1

APPROACH SPEED	MINIMUM D	DOWNGRADE MINIMUM D *		
		-3%	-6%	-9%
mph	ft	ft	ft	ft
25 AND BELOW	155	158	165	173
30	200	205	215	227
35	250	257	271	287
40	305	315	333	354
45	360	378	400	427
50	425	446	474	507
55	495	520	553	593
60	570	598	638	686
65	645	682	728	785

* USE ON SUSTAINED DOWNGRADE STEEPER THAN -3 PERCENT AND LONGER THAN 1 MILE.

NOTES:

1. Where approach speeds are low, advance warning signs may be placed at 300' spacing, and closer in urban areas.
2. Each advance warning sign in each direction of travel shall be equipped with at least two flags for daytime closure. Each flag shall be at least 16" x 16" in size and shall be orange or fluorescent red-orange in color. Flashing beacons shall be placed at the locations indicated for lane closure during hours of darkness.
3. A C14 (CA) "END ROAD WORK" sign, as appropriate, shall be placed at the end of the lane control unless the end of work area is obvious, or ends within a larger project's limits.
4. If the W20-1 sign would follow within 2000' of a stationary W20-1 or C11 (CA) "ROAD WORK NEXT _____MILES", use a W20-4 sign for the first advance warning sign.
5. All cones used for lane closures during the hours of darkness shall be fitted with retroreflective bands (or sleeves) as specified in the specifications.
6. Portable delineators, placed at one-half the spacing indicated for traffic cones, may be used instead of cones for daytime closures only.
7. Additional advance flaggers may be required. Flagger should stand in a conspicuous place, be visible to approaching traffic as well as approaching vehicles after the first vehicle has stopped. During the hours of darkness, the flagging-station and flagger shall be illuminated and clearly visible to approaching traffic. The illumination footprint of the lighting on the ground shall be at least 20' in diameter. Place a minimum of four cones at 50' intervals in advance of flagger station as shown.
8. Place C30 (CA) "LANE CLOSED" sign at 500' to 1000' intervals throughout extended work areas. They are optional if the work area is visible from the flagger station.
9. When a pilot car is used, place a C37 (CA) "TRAFFIC CONTROL-WAIT AND FOLLOW PILOT CAR" sign at all intersections within traffic control area. Signs shall be clean and visible at all times.
10. An optional C29 (CA) sign may be placed below the C9A (CA) sign.
11. Traffic cones or barricades may be placed on the optional taper as shown, barricades shall be Type I, II, or III.

STATE OF CALIFORNIA
DEPARTMENT OF TRANSPORTATION

TRAFFIC CONTROL SYSTEM FOR LANE CLOSURE ON TWO LANE CONVENTIONAL HIGHWAYS

NO SCALE

TCS-1

STATE OF CALIFORNIA - DEPARTMENT OF TRANSPORTATION
Caltrans DESIGN

FUNCTIONAL SUPERVISOR: JOHN L. MARTIN
CALCULATED-DESIGNED BY: GURINDERPAL BHULLAR
CHECKED BY: TRAVIS A. GURNEY
REVISED BY / DATE REVISED

P:\proj1\02\4E520_plans\pse\02000203171uj001.dgn

DATE PLOTTED => 20-DEC-2012
TIME PLOTTED => 11:12

LAST REVISION 12-13-12

Dist	COUNTY	ROUTE	POST MILES TOTAL PROJECT	SHEET No.	TOTAL SHEETS
02	Sha	44	R21.0/R21.4	35	40

REGISTERED CIVIL ENGINEER

July 20, 2012
PLANS APPROVAL DATE

REGISTERED PROFESSIONAL ENGINEER
Roberta L. McLaughlin
No. C40375
Exp. 3-31-13
CIVIL
STATE OF CALIFORNIA

THE STATE OF CALIFORNIA OR ITS OFFICERS OR AGENTS SHALL NOT BE RESPONSIBLE FOR THE ACCURACY OR COMPLETENESS OF SCANNED COPIES OF THIS PLAN SHEET.

TO ACCOMPANY PLANS DATED 12-17-12

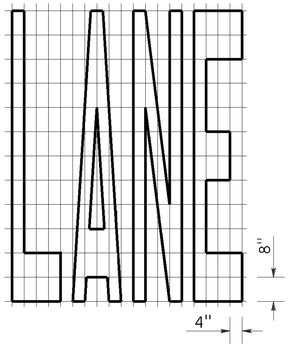

A=24 ft²

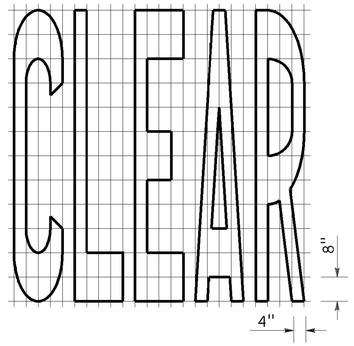

A=27 ft²

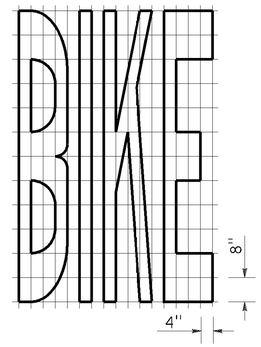

A=21 ft²

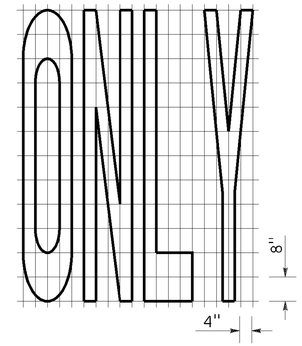

A=22 ft²

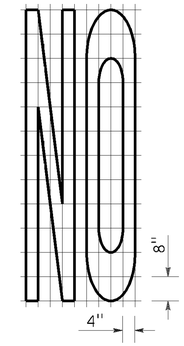

A=14 ft²

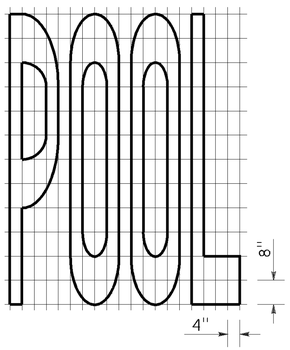

A=23 ft²

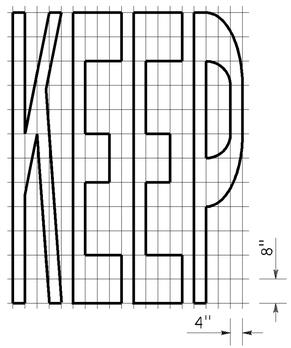

A=24 ft²

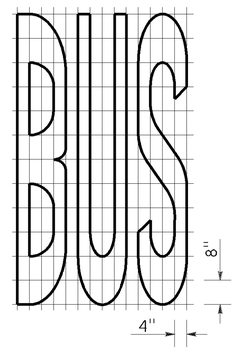

A=20 ft²

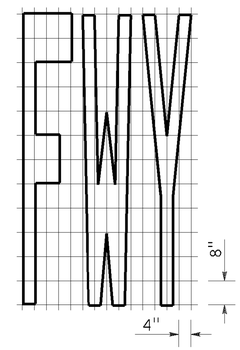

A=16 ft²

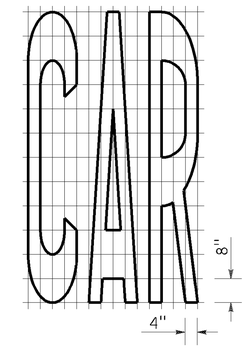

A=17 ft²

WORD MARKINGS			
ITEM	ft²	ITEM	ft²
LANE	24	NO	14
POOL	23	BIKE	21
CAR	17	BUS	20
CLEAR	27	ONLY	22
KEEP	24	FWY	16

A=2 ft²
See Notes 6 and 7

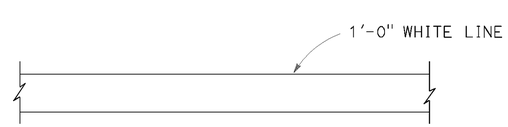

LIMIT LINE (STOP LINE)

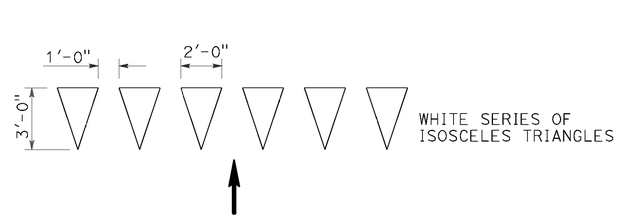

YIELD LINE

NOTES:

1. If a message consists of more than one word, it should read "UP", i.e., the first word should be nearest the driver.
2. The space between words should be at least four times the height of the characters for low speed roads, but not more than ten times the height of the characters. The space may be reduced appropriately where there is limited space because of local conditions.
3. Minor variations in dimensions may be accepted by the Engineer.
4. Portions of a letter, number or symbol may be separated by connecting segments not to exceed 2" in width.
5. The words "NO PARKING" pavement marking is to be used for parking facilities. For typical locations of markings, see Standard Plans A90A and A90B.
6. The words "NO PARKING", shall be painted in white letters no less than 1'-0" high on a contrasting background and located so that it is visible to traffic enforcement officials.

STATE OF CALIFORNIA
DEPARTMENT OF TRANSPORTATION

PAVEMENT MARKINGS WORDS, LIMIT AND YIELD LINES

NO SCALE

RSP A24E DATED JULY 20, 2012 SUPERSEDES STANDARD PLAN A24E DATED MAY 20, 2011 - PAGE 17 OF THE STANDARD PLANS BOOK DATED 2010.

REVISED STANDARD PLAN RSP A24E

2010 REVISED STANDARD PLAN RSP A24E

P:\proj1\02\4E520_plans\pse\0200020317va001.dgn

USERNAME => s115152
DGN FILE => 0200020317va001.dgn

DATE PLOTTED => 20-DEC-2012
TIME PLOTTED => 11:12

6-12-12

TO ACCOMPANY PLANS DATED 12-17-12

Dist	COUNTY	ROUTE	POST MILES TOTAL PROJECT	SHEET No.	TOTAL SHEETS
02	Sha	44	R21.0/R21.4	36	40

REGISTERED CIVIL ENGINEER

October 19, 2012
PLANS APPROVAL DATE

REGISTERED PROFESSIONAL ENGINEER Glenn DeCou No. C34547 Exp. 9-30-13 CIVIL STATE OF CALIFORNIA

THE STATE OF CALIFORNIA OR ITS OFFICERS OR AGENTS SHALL NOT BE RESPONSIBLE FOR THE ACCURACY OR COMPLETENESS OF SCANNED COPIES OF THIS PLAN SHEET.

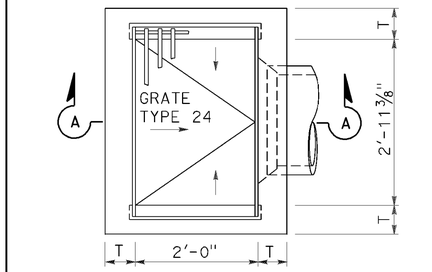

TYPE G1

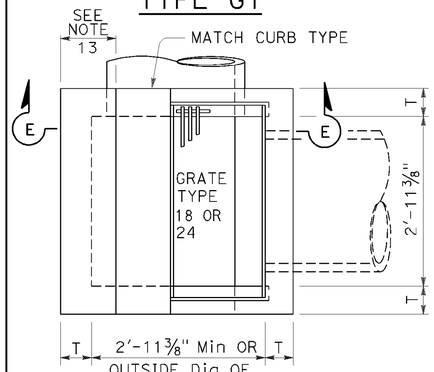

TYPE G4

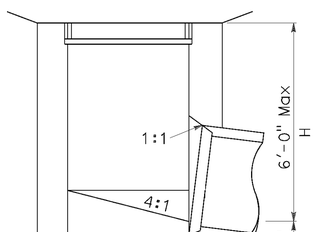

SECTION A-A

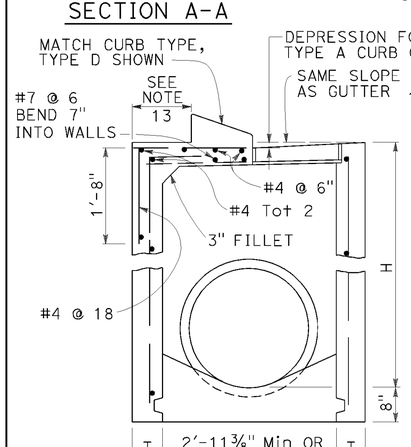

SECTION E-E

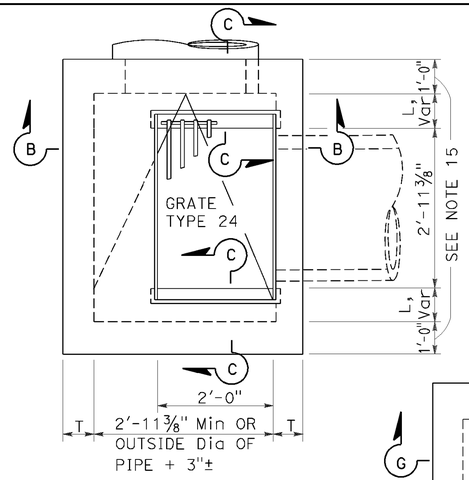

TYPE G2

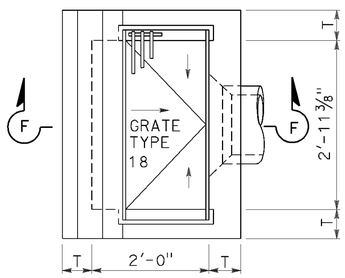

TYPE G5

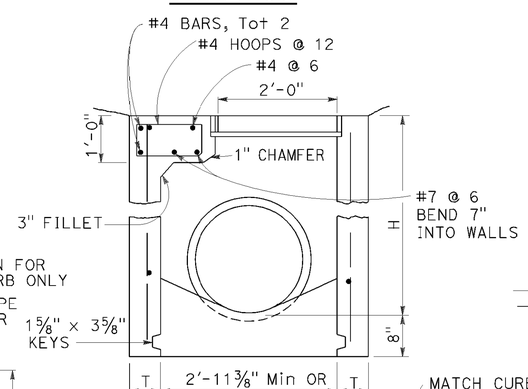

SECTION B-B

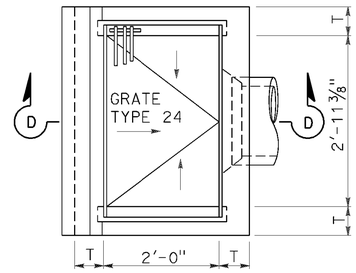

TYPE G3

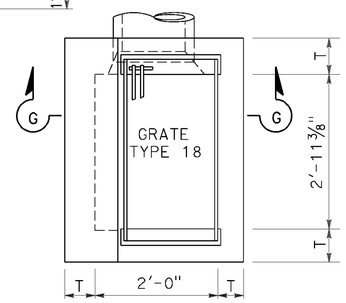

TYPE G6

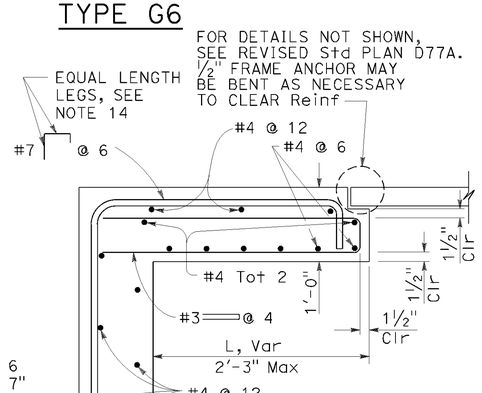

SECTION C-C

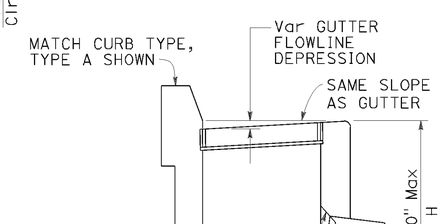

SECTION D-D

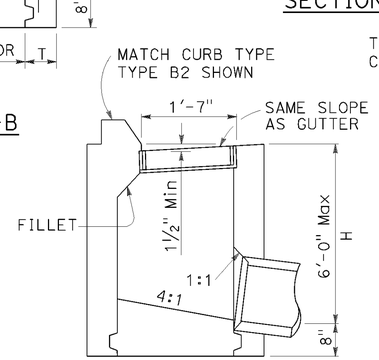

SECTION F-F

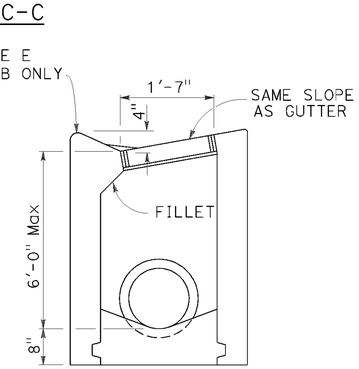

SECTION G-G

NOTES:

1. "H" is the difference in elevation between the outlet pipe flow line and the normal gutter grade line undepressed.
2. For "T" wall thickness, see Table A below.
3. Wall reinforcing not required when "H" is 8'-0" or less and the unsupported width or length is 7'-0" or less. Walls exceeding these limits shall be reinforced with #4 bars @ 1'-6" ± centers placed 1½" clear to inside of box unless otherwise shown.
4. Inlet bottom reinforcing not required. See Standard Plan D74C for alternative reinforced bottom and alternative half round bottom.
5. Steps-None required where "H" is less than 2'-6". Where "H" is 2'-6" or more, install steps with lowest rung 1'-0" above the floor and highest rung not more than 6" below top of inlet. The distance between steps shall not exceed 1'-0" and shall be uniform throughout the length of the wall. Place steps in the wall without an opening. Steps inserts may be substituted for the bar steps. Step inserts shall comply with State Industrial Safety requirements. See Standard Plan D74C for step details.
6. Details shown apply to both metal and concrete pipe.
7. Pipe(s) can be placed in any wall.
8. Curb section shall match adjacent curb.
9. Basin floors shall have wood trowel finish and a minimum slope of 12:3 from all directions toward outlet pipe.
10. Set inlet so that grate bars are parallel to direction of principal surface flow.
11. See Revised Standard Plans D77A and D77B for grate and frame details and weights of miscellaneous iron and steel.
12. See Standard Plan D78A for gutter depression details.
13. This dimenison will vary with different grates, curbs types, box width and wall thickness.
14. Bar may be rotated as necessary to clear opening. Where "L" is 6" or less, bar may be omitted.
15. Where "L" is 6" or less, wall thickness shall be as shown in Table A.
16. Cast-in-place inlets to be formed around all pipes/stubs intersecting the inlet, and concrete poured in one continuous operation. Precast inlets shall have mortared connections conforming to details for Type GCP Inlet shown on Standard Plan D75B. See Standard Specifications for mortar composition.

TABLE A

CONCRETE QUANTITIES				
TYPE	H=3'-0" TO 8'-0" (T=6")		H=8'-1" TO 20'-0" (T=8")	
	H=3'-0" (CY)	ADDITIONAL PCC PER FOOT (CY)	H=8'-1" (CY)	ADDITIONAL PCC PER FOOT (CY)
G-1	0.95	0.220	See Note A	SEE NOTE A
G-2*	1.31	0.255	3.50	0.357
G-3	1.03	0.220	See Note A	SEE NOTE A
G-4* (TYPE 24)	1.27	0.255	3.48	0.357
G-4* (TYPE 18)	1.30	0.255	3.50	0.357
G-5	1.02	0.220	SEE NOTE A	SEE NOTE A
G-6	1.04	0.220	SEE NOTE A	SEE NOTE A

TABLE BASED ON 8" FLOOR SLAB. NO DEDUCTIONS ARE TO BE MADE TO THESE QUANTITIES BECAUSE OF PIPE OPENINGS, DIFFERENT FLOOR ALTERNATIVES OR DIFFERENT CURB TYPES. * QUANTITIES FOR TYPE G-2 AND G-4 INLETS BASED ON THE MINIMUM INTERIOR DIMENSIONS.

NOTE A:

Maximum allowable height 6'-0".

STATE OF CALIFORNIA
DEPARTMENT OF TRANSPORTATION

DRAINAGE INLETS

NO SCALE

RSP D73 DATED OCTOBER 19, 2012 SUPERSEDES STANDARD PLAN D73 DATED MAY 20, 2011 - PAGE 156 OF THE STANDARD PLANS BOOK DATED 2010.

REVISED STANDARD PLAN RSP D73

2010 REVISED STANDARD PLAN RSP D73

P:\proj11\02\4E520_plans\pse\0200020317va002.dgn

USERNAME => s115152
DGN FILE => 0200020317va002.dgn

DATE PLOTTED => 20-DEC-2012
TIME PLOTTED => 11:12

7-19-12

Dist	COUNTY	ROUTE	POST MILES TOTAL PROJECT	SHEET No.	TOTAL SHEETS
02	Sha	44	R21.0/R21.4	37	40

Raymond Don Tsztoo
REGISTERED CIVIL ENGINEER

July 20, 2012
PLANS APPROVAL DATE

REGISTERED PROFESSIONAL ENGINEER Raymond Don Tsztoo No. C37332 Exp. 6-30-14 CIVIL STATE OF CALIFORNIA

THE STATE OF CALIFORNIA OR ITS OFFICERS OR AGENTS SHALL NOT BE RESPONSIBLE FOR THE ACCURACY OR COMPLETENESS OF SCANNED COPIES OF THIS PLAN SHEET.

TO ACCOMPANY PLANS DATED 12-17-12

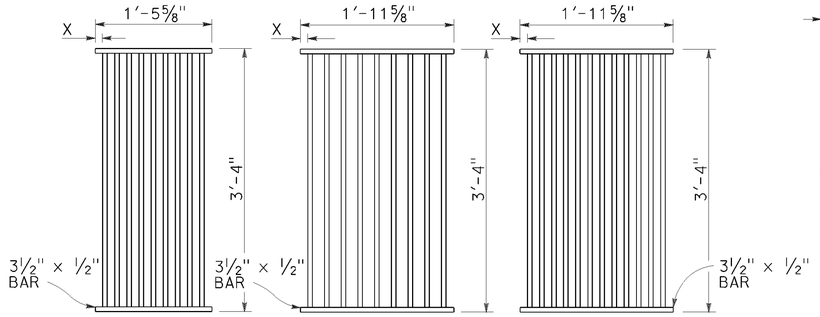

TYPE 18-9
1⅜" Clear spacing. Use within the roadbed on highways where bicycles and pedestrians are excluded.

TYPE 24-9
2" Clear spacing. Use in locations off the roadbed on all types of highways.

TYPE 24-12
1⅜" Clear spacing. Use within the roadbed on highways where bicycles and pedestrians are excluded.

RECTANGULAR GRATE DETAILS
(See table below)

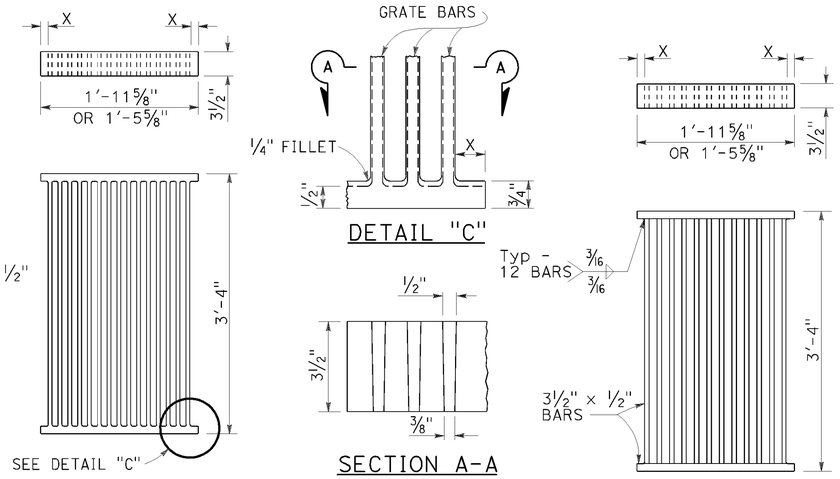

ALTERNATIVE CAST DUCTILE IRON GRATE OR CAST CARBON STEEL GRATE

ALTERNATIVE WELDED GRATE

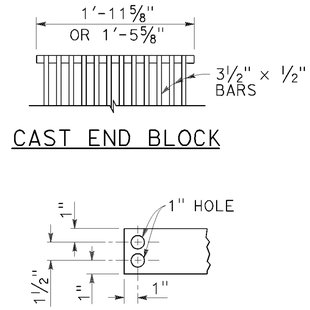

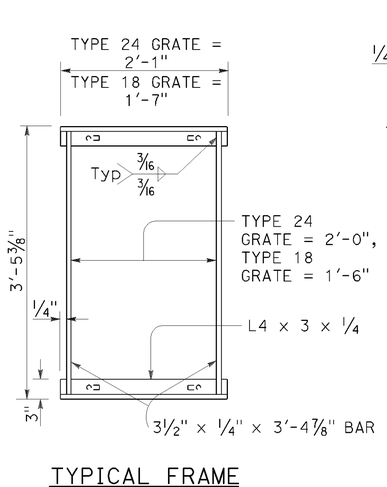

TYPICAL FRAME

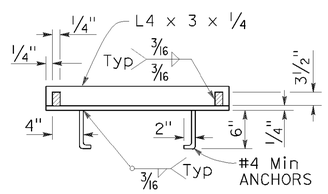

CROSS SECTION
(Thru frame)

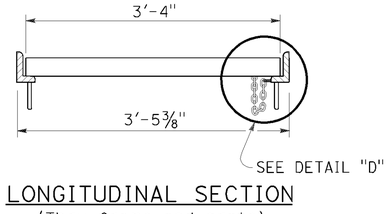

LONGITUDINAL SECTION
(Thru frame and grate)

RECTANGULAR FRAME DETAILS
(For all rectangular grates)

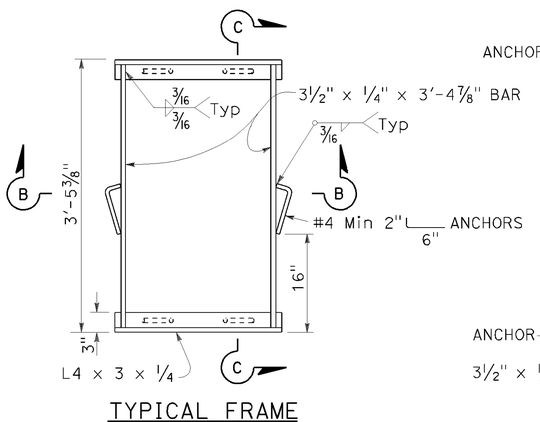

TYPICAL FRAME

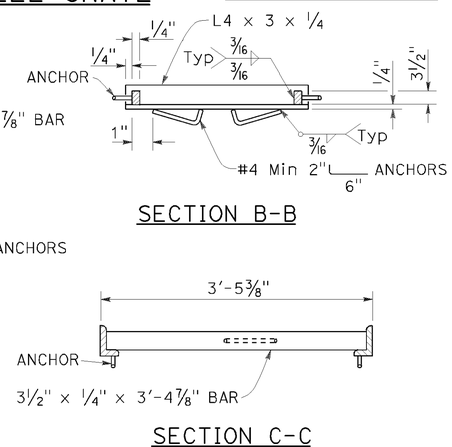

SECTION B-B

SECTION C-C

ALTERNATIVE ANCHOR FOR RECTANGULAR FRAME
(For details not shown, See Rectangular Frame Details)

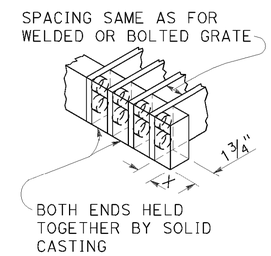

ALTERNATIVE CAST DUCTILE IRON OR CAST CARBON STEEL END BLOCK GRATE

NOTES:

1. Grate type numbers refer to approximate width of grate in inches and number of bars, respectively.
2. Contractor has the option of using cast ductile iron, cast carbon steel, welded, bolted, or cast end block grate.
3. Rounded top of bars optional on all grates.
4. Pipe inlets with a grate shall be placed so that bars parallel direction of principle surface flow.
5. Complete joint penetration butt welds may be substituted for the fillet welds on all anchors.
6. Standard square, hexagon, round or equivalent headed anchors may be substituted for the right angle hooks on the anchors shown on this plan.
7. Grate and frame weights are based on welded grates (weights of face angles, steps, protection bars, etc. are not included).
8. Connect chain to grate and frame only at locations shown on the plans. When chain is required, do not use cast ductile iron grates.

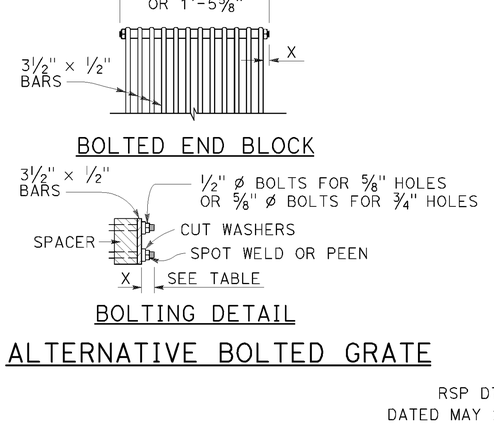

ALTERNATIVE BOLTED GRATE

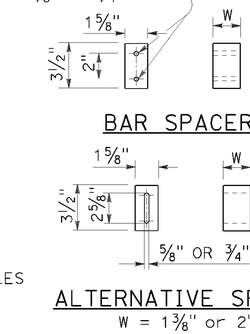

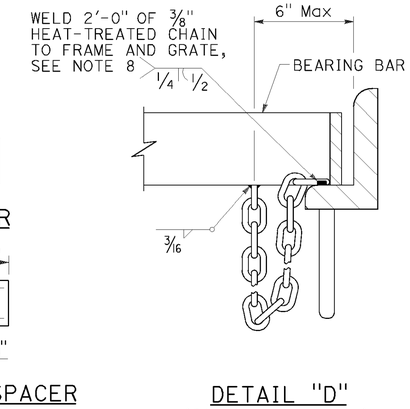

GRATE BAR SPACING TABLE

TYPE	No. OF BARS	CLEAR BAR SPACING	X
18-9	9	1⅜"	1 1/16"
24-9	9	2"	1 9/16"
24-12	12	1⅜"	1¼"

INLET TYPE	COVER TYPE	WEIGHT LB
OS	PLATE	174
OL-7	PLATE	170
OL-10	PLATE	170
OL-14	PLATE	170
OL-21	PLATE	170
OCP	PLATE	112
OCPI	PLATE	112
OCPI	REDWOOD	42
OMP	PLATE	177
OMPI	PLATE	177

INLET TYPE	GRATE TYPE	No. OF GRATES	WEIGHT LB
GDO	24-12	2	634
GOL-7	24-12	1	326
GOL-10	24-12	1	326
GO,G1,G2,G3,G4 (TYPE 24)	24-9	1	263
	24-12	1	326
G4 (TYPE 18),G5,G6	18-9	1	249
GT1	18-9	2	498
GT2	18-9	2	498
GT3	24-12	2	652
GT4	24-12	2	652
TRASH RACK			22
GRATE CHAIN			3

BASIS FOR Misc IRON & STEEL FINAL PAY WEIGHTS FOR DRAINAGE INLETS
(See Note 7)

STATE OF CALIFORNIA
DEPARTMENT OF TRANSPORTATION

GRATE DETAILS

NO SCALE

RSP D77A DATED JULY 20, 2012 SUPERSEDES STANDARD PLAN D77A DATED MAY 20, 2011 - PAGE 164 OF THE STANDARD PLANS BOOK DATED 2010.

REVISED STANDARD PLAN RSP D77A

2010 REVISED STANDARD PLAN RSP D77A

P:\proj1\02\4E520_plans\pse\0200020317va003.dgn

USERNAME => s115152
DGN FILE => 0200020317va003.dgn

DATE PLOTTED => 20-DEC-2012
TIME PLOTTED => 11:13

6-13-12

Dist	COUNTY	ROUTE	POST MILES TOTAL PROJECT	SHEET No.	TOTAL SHEETS
02	Sha	44	R21.0/R21.4	38	40

Raymond Don Tsztoo
REGISTERED CIVIL ENGINEER

July 20, 2012
PLANS APPROVAL DATE

REGISTERED PROFESSIONAL ENGINEER Raymond Don Tsztoo No. C37332 Exp. 6-30-14 CIVIL STATE OF CALIFORNIA

THE STATE OF CALIFORNIA OR ITS OFFICERS OR AGENTS SHALL NOT BE RESPONSIBLE FOR THE ACCURACY OR COMPLETENESS OF SCANNED COPIES OF THIS PLAN SHEET.

TO ACCOMPANY PLANS DATED 12-17-12

2010 REVISED STANDARD PLAN RSP D77B

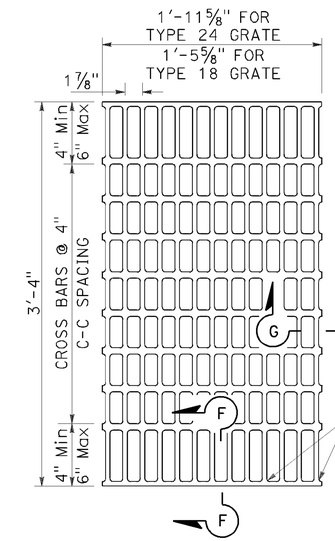

NOTES:

Bearing bars to be 3½" × ¼" bars on 1⅞" centers.

⅜"± ø Cross bars may be fillet welded, resistance welded or electroforged to bearing bars.

Weight of Type 24 grate = 141 LBS.

Weight of Type 18 grate = 107 LBS. (Type 24 grate shown).

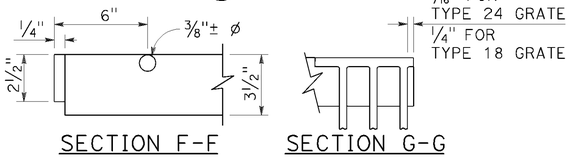

SECTION F-F SECTION G-G

TYPE 18-10 AND 24-13 GRATE

(Welded Steel)

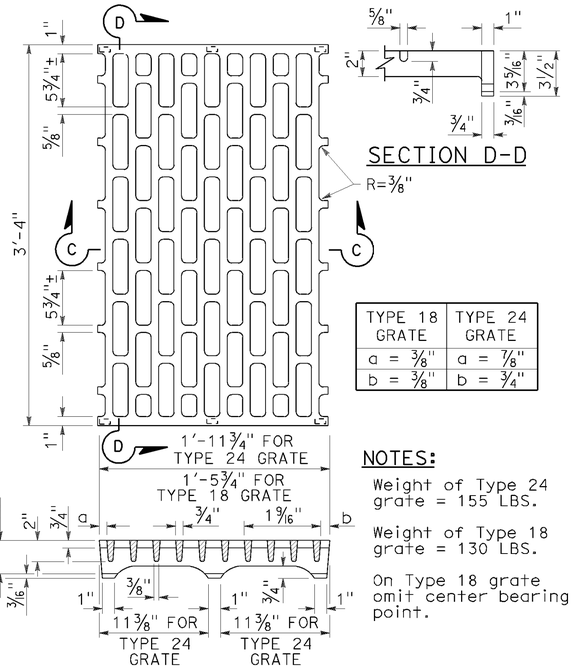

SECTION D-D

TYPE 18 GRATE	TYPE 24 GRATE
a = ⅜"	a = ⅞"
b = ⅜"	b = ¾"

NOTES:

Weight of Type 24 grate = 155 LBS.

Weight of Type 18 grate = 130 LBS.

On Type 18 grate omit center bearing point.

SECTION C-C

TYPE 18-8C AND 24-10C GRATE

(Cast ductile iron)

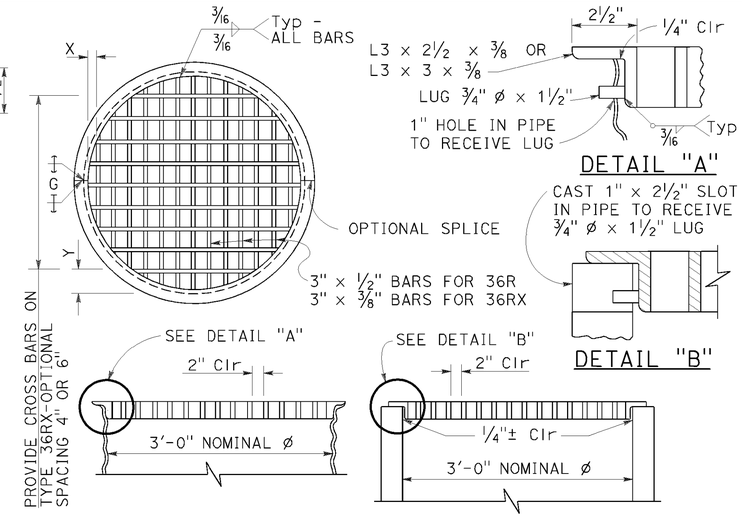

TYPE 36R AND 36RX GRATE DETAILS

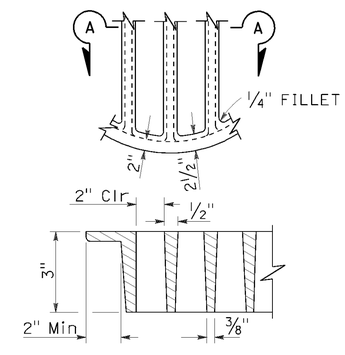

SECTION A-A

ALTERNATIVE CAST DUCTILE IRON GRATE OR CAST CARBON STEEL GRATE TYPE 36R AND 36RX

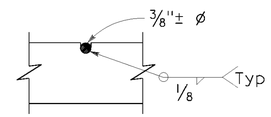

⅜"± ø Cross bars may be fillet welded, resistance welded or electroforged to bearing bars.

CROSS BAR DETAIL TYPE 36RX GRATE (WELDED STEEL)

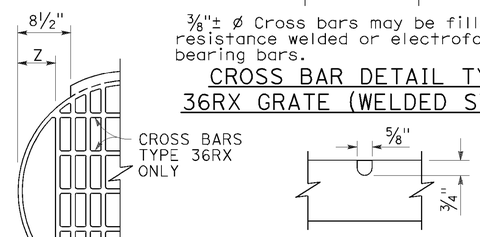

CROSS BAR DETAIL ALTERNATIVE CAST DUCTILE IRON GRATE OR CAST CARBON STEEL GRATE TYPE 36RX

MODIFIED TYPE 36R AND 36RX GRATE FOR ODI INLET

BASIS FOR Misc IRON AND STEEL FINAL PAY WEIGHTS FOR DRAINAGE INLETS

INLET TYPE	GRATE TYPE	No. OF GRATES	WEIGHT LB
GDO (SEE NOTE 4)	24-10C	2	391
	24-10S	2	456
	24-12X	2	473
	24-13	2	374
GO,GOL,G1,G2, G3,G4 (TYPE 24)	24-10C	1	202
	24-10S	1	229
	24-12X	1	239
	24-13	1	188
G4 (TYPE 18) G5,G6	18-8S	1	187
	18-9X	1	187
	18-10	1	149
GT1,GT2	18-8S	2	374
	18-9X	2	374
	18-10	2	298
GT3,GT4	24-10C	2	404
	24-10S	2	458
	24-12X	2	478
	24-13	2	376
ODI	36RX (Mod)	1	196
GMP,GCP,GCPI	36RX	1	215
ODI	36R (Mod)	1	220
GMP,GCP,GCPI	36R	1	236
TRASH RACK			22
GRATE CHAIN			3

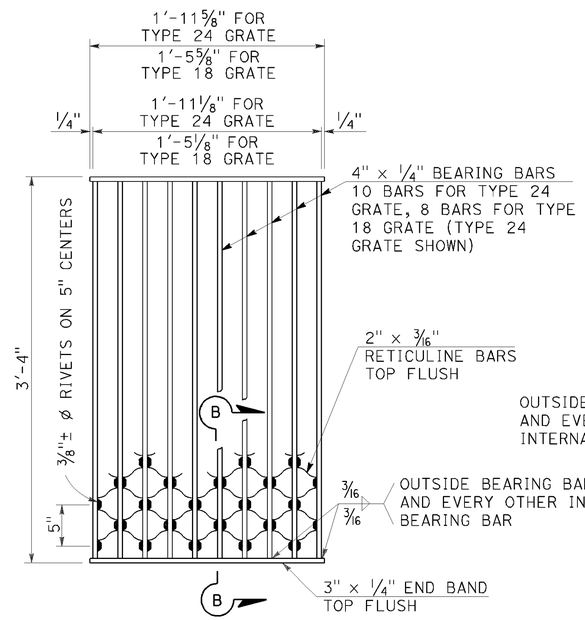

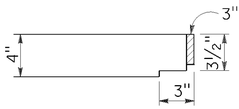

NOTES:

Weight of Type 24 grate = 182 LBS.
Weight of Type 18 grate = 145 LBS.

SECTION B-B

TYPE 18-8S AND 24-10S GRATE

(Welded Steel) Reticuline type

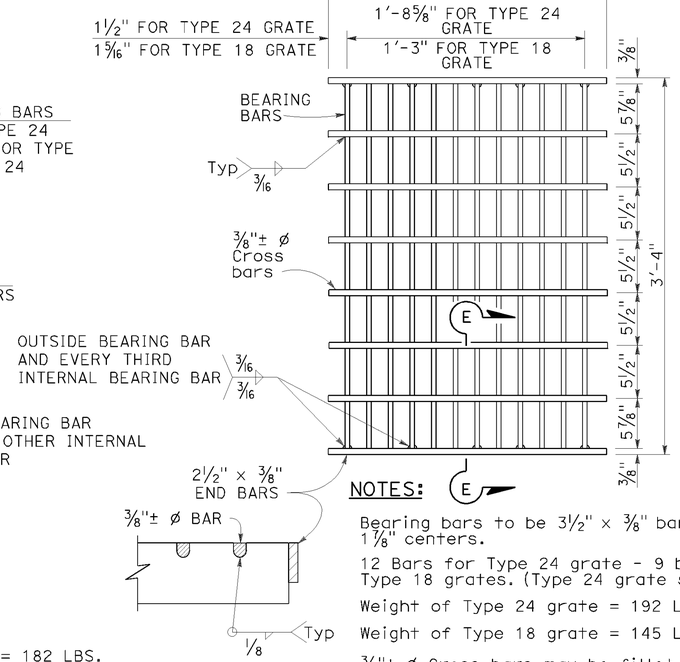

SECTION E-E

NOTES:

Bearing bars to be 3½" × ⅜" bars on 1⅞" centers.

12 Bars for Type 24 grate - 9 bars for Type 18 grates. (Type 24 grate shown).

Weight of Type 24 grate = 192 LBS.

Weight of Type 18 grate = 145 LBS.

⅜"± ø Cross bars may be fillet welded, resistance welded or electroforged to bearing bars.

TYPE 18-9X AND 24-12X GRATE

(Welded Steel)

NOTES:

1. When alternative grates are allowed - Final pay based on alternative with the lesser weight.
2. Use frame shown on Standard Plan D74A, D74B or RSP D77A as appropriate.
3. When Type 24-10S, 24-12X or 24-13 grates are used with GDO Inlets, a ¼" × 3½" × 3'-4⅞" steel bar shall be welded across the center of inlet frame to separate the individual grates.
4. See Revised Standard Plan RSP D77A for connecting chain to welded grate and frame. When chain is required, do not use cast ductile iron grate.

GRATE BAR SPACING TABLE

TYPE	No. OF BARS	CLEAR BAR SPACING	X	Y 4" SPACING	Y 6" SPACING	Z
36R	13	2"	2⅛"	–	–	–
36RX (STEEL)	15	2"	9/16"	3¾"	5¾"	–
36RX (CAST)	13	2"	2⅛"	3¾"	5¾"	–
36R Mod	12	2"	2⅛"	–	–	5"
36RX Mod (STEEL)	13	2"	9/16"	3¾"	5¾"	5 11/16"
36RX Mod (CAST)	12	2"	2⅛"	3¾"	5¾"	5"

STATE OF CALIFORNIA
DEPARTMENT OF TRANSPORTATION

BICYCLE TRAVERSABLE GRATE DETAILS

NO SCALE

RSP D77B DATED JULY 20, 2012 SUPERSEDES STANDARD PLAN D77B DATED MAY 20, 2011 - PAGE 165 OF THE STANDARD PLANS BOOK DATED 2010.

REVISED STANDARD PLAN RSP D77B

P:\proj1\02\4E520_plans\pse\0200020317va004.dgn

USERNAME => s115152
DGN FILE => 0200020317va004.dgn

DATE PLOTTED => 20-DEC-2012
TIME PLOTTED => 11:13

4-17-12

DIST	COUNTY	ROUTE	POST MILES TOTAL PROJECT	SHEET NO.	TOTAL SHEETS
02	Sha	44	R21.0/R21.4	39	40

REGISTERED ELECTRICAL ENGINEER

January 20, 2012
PLANS APPROVAL DATE

REGISTERED PROFESSIONAL ENGINEER Jeffery G. McRae No. E14512 Exp. 6-30-12 ELECTRICAL STATE OF CALIFORNIA

THE STATE OF CALIFORNIA OR ITS OFFICERS OR AGENTS SHALL NOT BE RESPONSIBLE FOR THE ACCURACY OR COMPLETENESS OF SCANNED COPIES OF THIS PLAN SHEET.

TO ACCOMPANY PLANS DATED 12-17-12

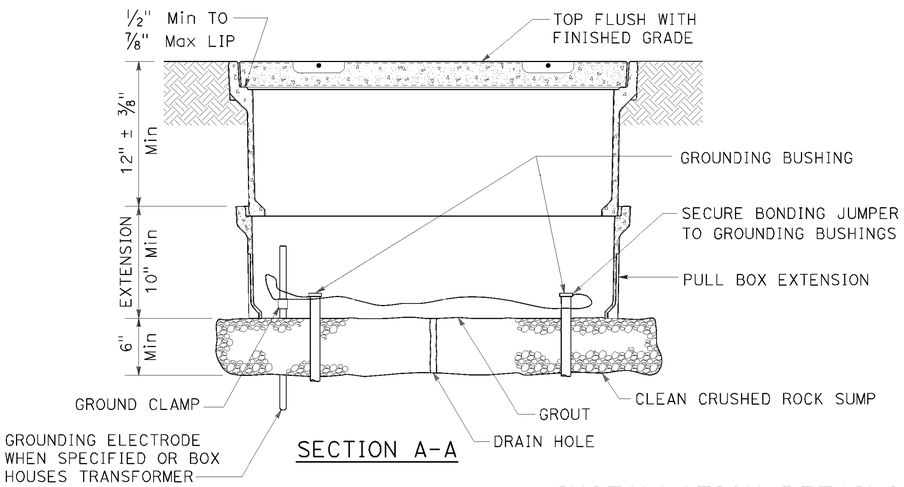

SECTION A-A

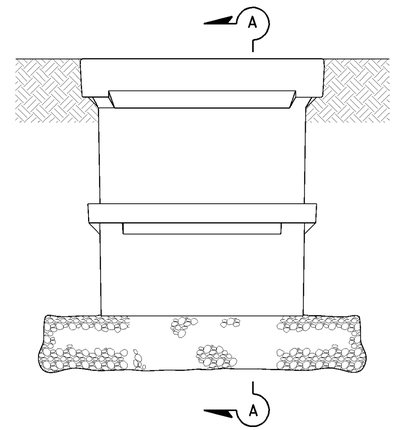

SIDE VIEW

INSTALLATION DETAILS

DETAIL A

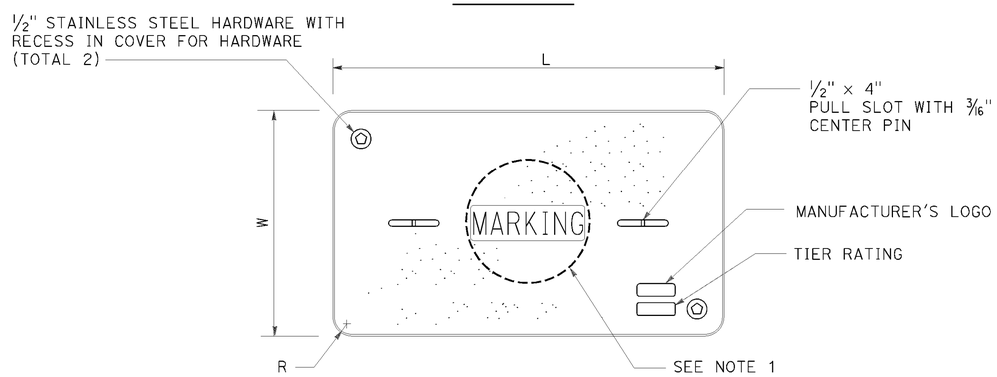

COVER TOP VIEW

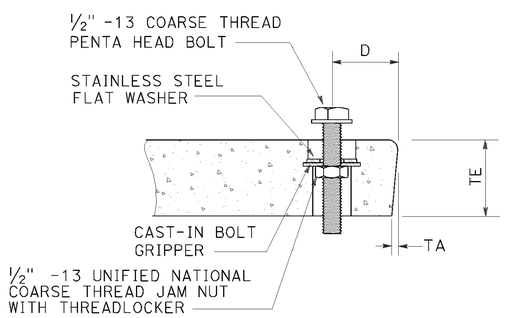

TYPICAL COVER CAPTIVE BOLT

OR SIMILAR

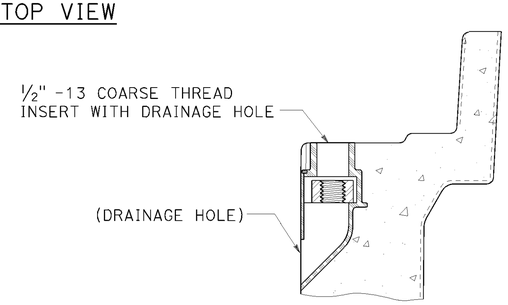

TYPICAL THREADED INSERT

OR SIMILAR

DIMENSION TABLE										
PULL BOX	PULL BOX			COVER						
	MINIMUM DEPTH BOX	MINIMUM DEPTH EXTENSION	MAXIMUM WEIGHT	L	W	R	TE	TA	D	MAXIMUM WEIGHT
No. 3½	12"	N/A	40 lb	1' - 3⅜"	10⅛"	1⅜"	2"	⅛"	1¾"	30 lb
No. 5	12"	10"	55 lb	1' - 11¼"	1' - 1¾"	1⅜"	2"	⅛"	1¾"	60 lb
No. 6	12"	10"	70 lb	2' - 6½"	1' - 5½"	1⅜"	2"	⅛"	2"	85 lb

NOTES ON PULL BOXES:

1. Pull box covers must be marked as follows: "SERVICE" Service circuits between service point and service disconnect; "SPRINKLER-CONTROL" sprinkler control circuits, 50 V or less; "CALTRANS" on all pull boxes, except pull boxes marked "SPRINKLER-CONTROL"; and "TELEPHONE" Telephone service;

   A) No. 3½ pull box.
      1) "SIGNAL" - Traffic signal circuits with or without street or sign lighting circuits.
      2) "ST LIGHTING" - Street or sign lighting circuits where voltage is under 600 V.

   B) No. 5, 6, 9 or 9A pull box.
      1) "TRAFFIC SIGNAL" - Traffic signal circuits with or without street or sign lighting circuits.
      2) "STREET LIGHTING" - Street or sign lighting circuits where voltage is under 600 V.
      3) "STREET LIGHTING-HIGH VOLTAGE" - Street or sign lighting circuits where voltage is above 600 V.
      4) "IRRIGATION" - Circuits to irrigation controller 120 V or more.
      5) "RAMP METER" - Ramp meter circuits.
      6) "COUNT STATION" - Count or speed monitor circuits.
      7) "COMMUNICATIONS" - Communication circuits.
      8) "TOS COMMUNICATIONS" - TOS communication line.
      9) "TOS POWER" - TOS power.
      10) "TDC POWER" - Telephone demarcation cabinet power.
      11) "CCTV" - Closed circuit television circuits.
      12) "TMS" - Traffic monitoring station circuits.
      13) "CMS" - Changeable message sign circuits.
      14) "HAR" - Highway advisory radio circuits.

2. The nominal dimensions of the opening in which the cover sets must be the same as the cover dimensions (L and W) plus ⅛" or greater.

3. Covers and boxes must be interchangeable with California Standard. When interchanged with a standard, the top surfaces must be flush within ⅛". Top outside radius of covers and pull boxes must have a ⅛" radius.

4. Pull box extension may be another pull box as long as the bottom edge of the pull box can fit into the cover opening.

STATE OF CALIFORNIA
DEPARTMENT OF TRANSPORTATION

ELECTRICAL SYSTEMS (PULL BOX)

NO SCALE

RSP ES-8A DATED JANUARY 20, 2012 SUPPLEMENTS THE STANDARD PLANS BOOK DATED 2010.

REVISED STANDARD PLAN RSP ES-8A

2010 REVISED STANDARD PLAN RSP ES-8A

P:\proj1\02\4E520_plans\pse\0200020317va005.dgn
USERNAME => s115152
DGN FILE => 0200020317va005.dgn
DATE PLOTTED => 20-DEC-2012
TIME PLOTTED => 11:13
01-09-12

Dist	COUNTY	ROUTE	POST MILES TOTAL PROJECT	SHEET No.	TOTAL SHEETS
02	Sha	44	R21.0/R21.4	40	40

REGISTERED ELECTRICAL ENGINEER

July 20, 2012
PLANS APPROVAL DATE

REGISTERED PROFESSIONAL ENGINEER
Jeffery G. McRae
No. E14512
Exp. 6-30-14
ELECTRICAL
STATE OF CALIFORNIA

THE STATE OF CALIFORNIA OR ITS OFFICERS OR AGENTS SHALL NOT BE RESPONSIBLE FOR THE ACCURACY OR COMPLETENESS OF SCANNED COPIES OF THIS PLAN SHEET.

TO ACCOMPANY PLANS DATED 12-17-12

ISOFOOTCANDLE CURVE - MINIMUM

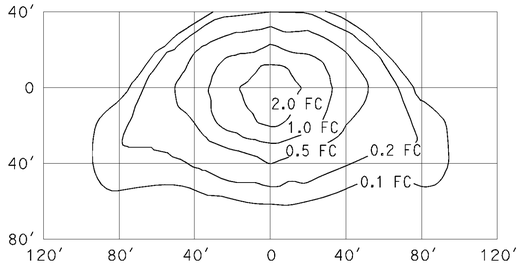

TYPE III MEDIUM CUTOFF

Cutoff Luminaire
34′ Mounting Height
Lamp operated at 22,000 lm
200-W high pressure sodium lamp
ANSI Designation S66

ISOFOOTCANDLE CURVE - MINIMUM

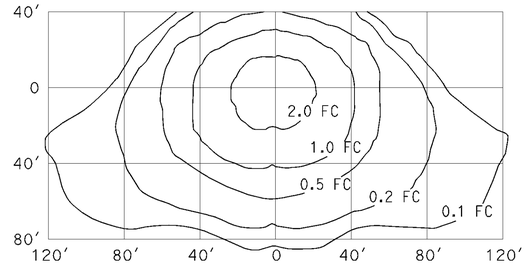

TYPE III MEDIUM CUTOFF

Cutoff Luminaire
40′ Mounting Height
Lamp operated at 37,000 lm
310-W high pressure sodium lamp
ANSI Designation S67

ISOFOOTCANDLE CURVE - MINIMUM

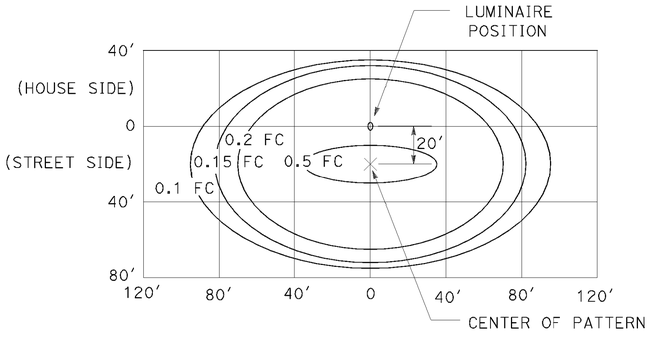

LED LUMINAIRE ROADWAY 1

200-W HPS Equivalent at 34′ Mounting Height

ISOFOOTCANDLE CURVE - MINIMUM

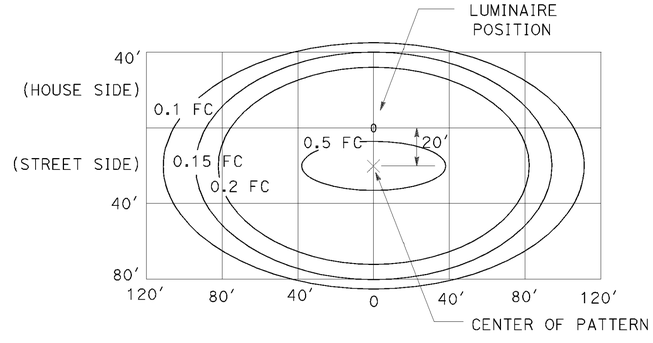

LED LUMINAIRE ROADWAY 2

310-W HPS Equivalent at 40′ Mounting Height

ISOFOOTCANDLE CURVE - MINIMUM

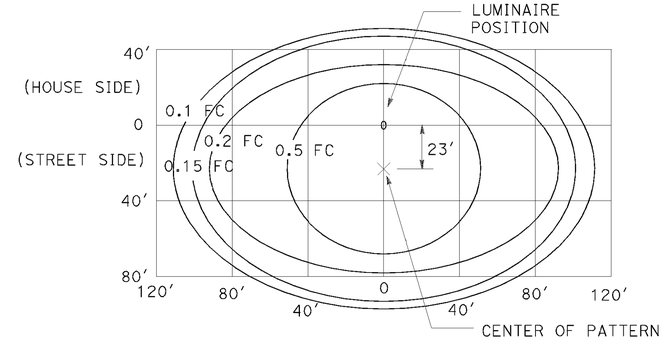

LED LUMINAIRE ROADWAY 4

400-W HPS Equivalent at 40′ Mounting Height

ISOFOOTCANDLE CURVE - MINIMUM

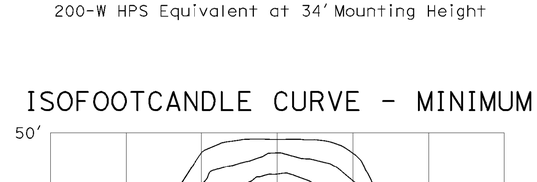

TYPE III MEDIUM CUTOFF

Cutoff Luminaire
30′ Mounting Height
Lamp operated at 16,000 lm
150-W high pressure sodium lamp
ANSI Designation S55

ISOFOOTCANDLE CURVE - MINIMUM

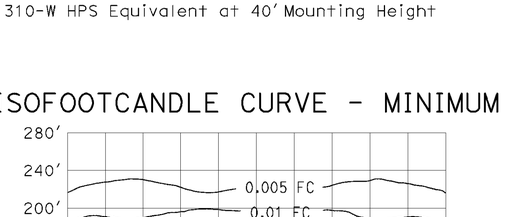

LOW PRESSURE SODIUM LUMINAIRE

40′ Mounting Height
Lamp operated at 33,000 lm
180-W low pressure sodium lamp

STATE OF CALIFORNIA
DEPARTMENT OF TRANSPORTATION

ELECTRICAL SYSTEMS (ISOFOOTCANDLE DIAGRAMS)

NO SCALE

RSP ES-10A DATED JULY 20, 2012 SUPPLEMENTS THE STANDARD PLANS BOOK DATED 2010.

REVISED STANDARD PLAN RSP ES-10A

2010 REVISED STANDARD PLAN RSP ES-10A

P:\proj11\02\4E520_plans\pse\0200020317va006.dgn

USERNAME => s115152
DGN FILE => 0200020317va006.dgn

DATE PLOTTED => 20-DEC-2012
TIME PLOTTED => 11:13

2-16-12