Dist	COUNTY	ROUTE	POST MILES TOTAL PROJECT	SHEET No.	TOTAL SHEETS
02	Tri	299	53.5/64.0	1	70

INDEX OF PLANS

SHEET No.	DESCRIPTION
1	TITLE AND LOCATION MAP
2	TYPICAL CROSS SECTIONS
3-6	LAYOUTS
7-22	CONSTRUCTION DETAILS
23-31	DRAINAGE PROFILES, DETAILS AND QUANTITIES
32	CONSTRUCTION AREA SIGNS
33-37	PAVEMENT DELINEATION DETAILS AND QUANTITIES
38-44	SIGN DETAILS AND QUANTITIES
45-47	SUMMARY OF QUANTITIES
48	EROSION CONTROL QUANTITIES
49-51	ELECTRICAL PLANS
52-70	REVISED STANDARD PLANS

THE STANDARD PLANS LIST APPLICABLE TO THIS CONTRACT IS INCLUDED IN THE NOTICE TO BIDDERS AND SPECIAL PROVISIONS BOOK.

STATE OF CALIFORNIA

DEPARTMENT OF TRANSPORTATION

PROJECT PLANS FOR CONSTRUCTION ON

STATE HIGHWAY

IN TRINITY COUNTY AT AND NEAR WEAVERVILLE FROM INDUSTRIAL PARKWAY TO 0.5 MILE EAST OF LEWISTON ROAD

TO BE SUPPLEMENTED BY STANDARD PLANS DATED MAY 2010

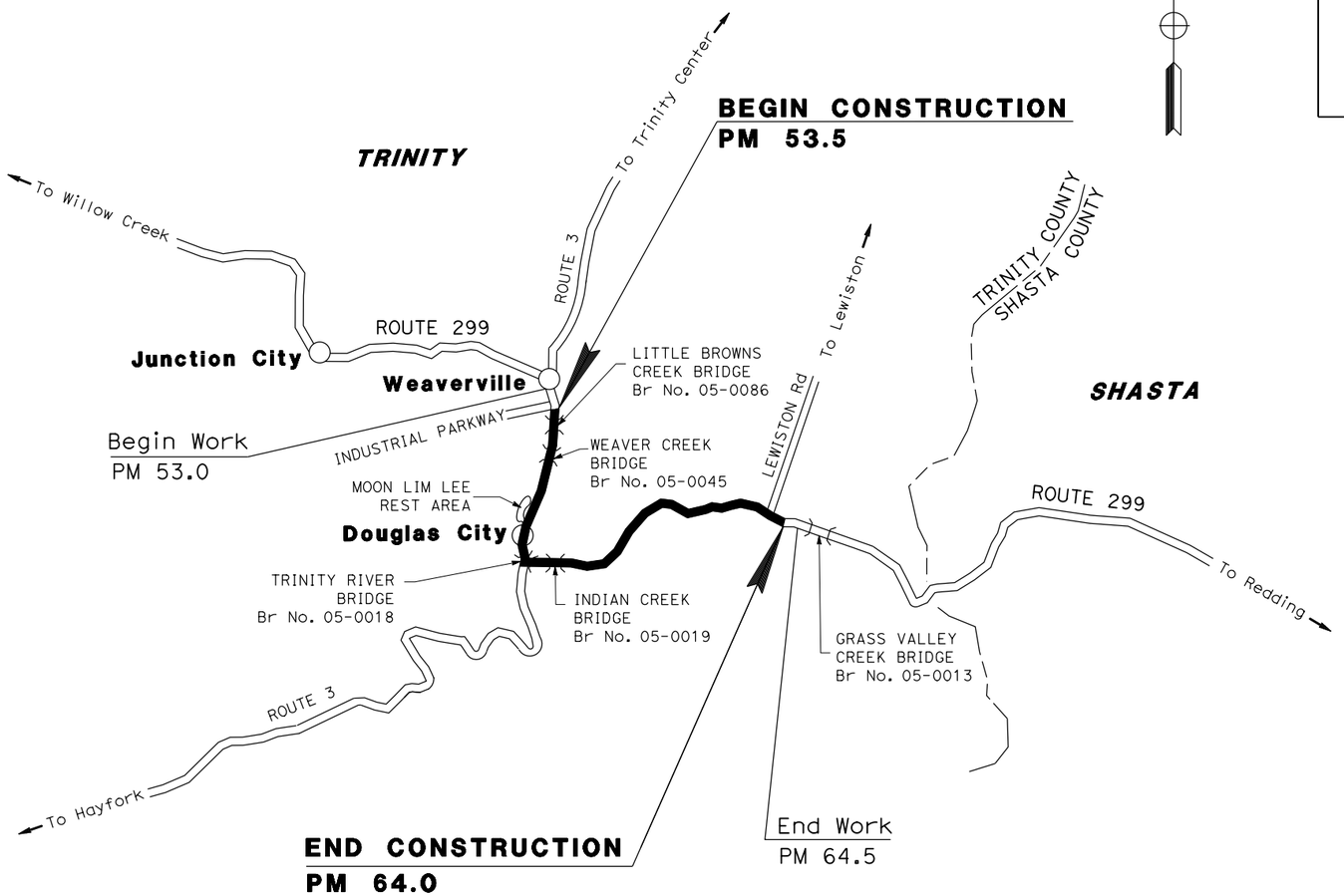

Heidi Borders 09-16-13
PROJECT ENGINEER DATE
REGISTERED CIVIL ENGINEER

November 6, 2013
PLANS APPROVAL DATE

REGISTERED PROFESSIONAL ENGINEER HEIDI E. BORDERS No. C64194 Exp. 6-30-15 CIVIL STATE OF CALIFORNIA

THE STATE OF CALIFORNIA OR ITS OFFICERS OR AGENTS SHALL NOT BE RESPONSIBLE FOR THE ACCURACY OR COMPLETENESS OF SCANNED COPIES OF THIS PLAN SHEET.

CONTRACT No.	02-4E4104
PROJECT ID	0200020282

LAST REVISION 11-06-13

DATE PLOTTED => 07-NOV-2013
TIME PLOTTED => 07:20

PROJECT MANAGER STEVE ROGERS
DESIGN ENGINEER JULIE CASEY

P:\proj1\02\4E410_plans\pse\24e410db001.dgn

THE CONTRACTOR SHALL POSSESS THE CLASS (OR CLASSES) OF LICENSE AS SPECIFIED IN THE "NOTICE TO BIDDERS."

NO SCALE

Dist	COUNTY	ROUTE	POST MILES TOTAL PROJECT	SHEET No.	TOTAL SHEETS
02	Tri	299	53.5/64.0	2	70

REGISTERED CIVIL ENGINEER 11-06-13 DATE

11-06-13
PLANS APPROVAL DATE

REGISTERED PROFESSIONAL ENGINEER HEIDI E. BORDERS No. C64194 Exp. 6-30-15 CIVIL STATE OF CALIFORNIA

THE STATE OF CALIFORNIA OR ITS OFFICERS OR AGENTS SHALL NOT BE RESPONSIBLE FOR THE ACCURACY OR COMPLETENESS OF SCANNED COPIES OF THIS PLAN SHEET.

NOTES:

1. DIMENSIONS OF THE PAVEMENT STRUCTURES (STRUCTURAL SECTIONS) ARE SUBJECT TO TOLERANCES SPECIFIED IN THE STANDARD SPECIFICATIONS.
2. LOCATIONS OF REPLACE ASPHALT CONCRETE SURFACING TO BE DETERMINED IN THE FIELD BY THE ENGINEER.
3. FOR ACCURATE RIGHT OF WAY DATA, CONTACT RIGHT OF WAY ENGINEERING AT THE DISTRICT OFFICE.
4. ALL EXISTING UTILITY FACILITIES HAVE NOT BEEN PLOTTED ON THESE PLANS.

DESIGN DESIGNATION:

ADT (2014)	4600	D	56%
ADT (2034)	6800	T	7%
DHV	700	V	55 MPH
ESAL	1933300	TI	9.5

CLIMATE REGION = LOW MOUNTAIN

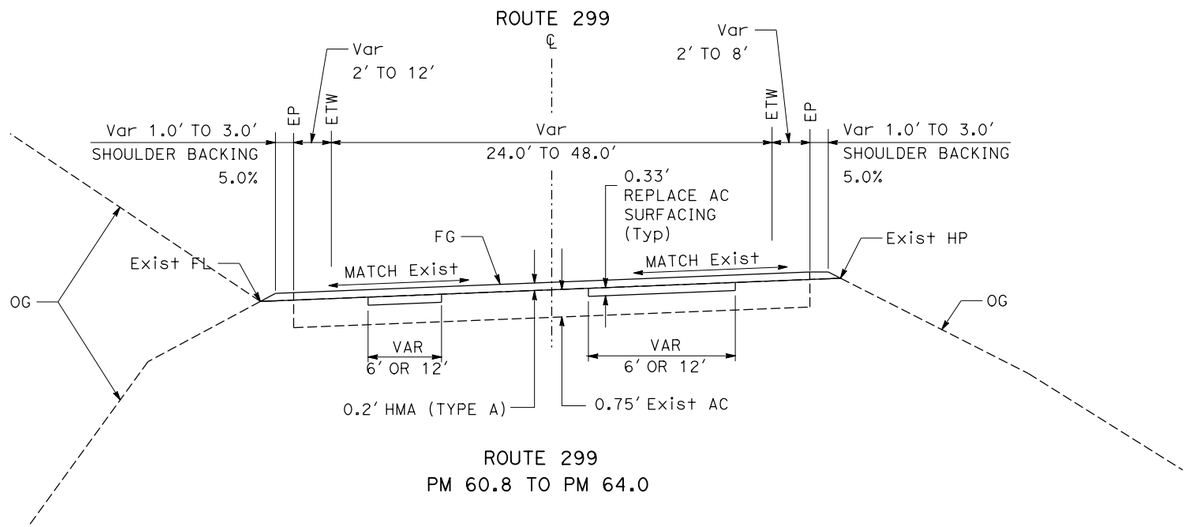

ROUTE 299
PM 60.8 TO PM 64.0

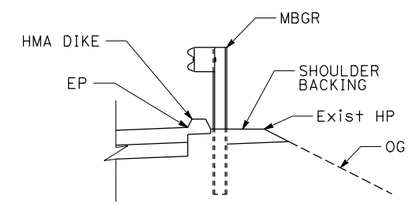

MBGR LOCATIONS
(SEE CONSTRUCTION DETAILS FOR PM LIMITS)

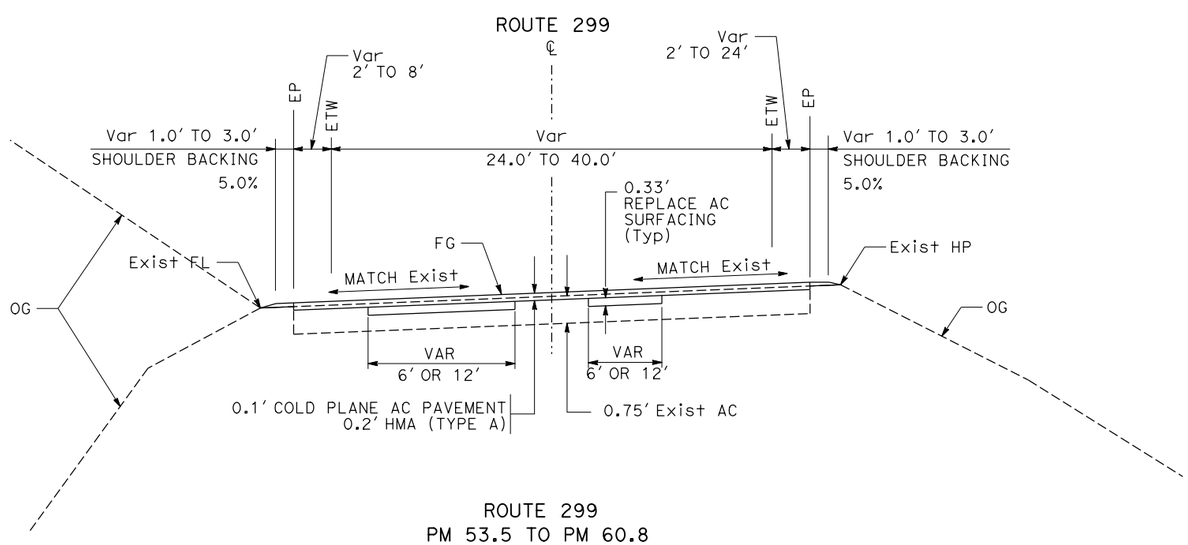

ROUTE 299
PM 53.5 TO PM 60.8

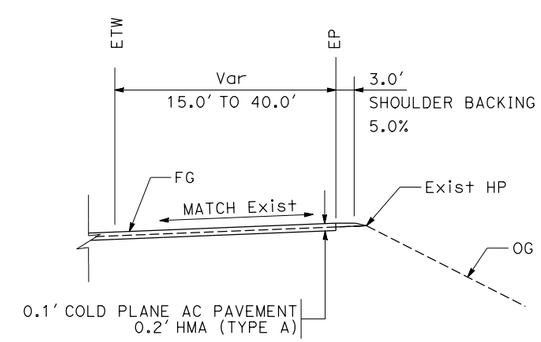

ADDITIONAL SHOULDER WIDTH LOCATIONS

PM 54.17 TO PM 54.28, EB
PM 56.61 TO PM 56.72, EB
PM 57.47 TO PM 57.56, WB
PM 59.43 TO PM 59.58, EB
PM 59.87 TO PM 59.93, EB
PM 60.10 TO PM 60.23, EB

TYPICAL CROSS SECTIONS

NO SCALE

X-1

REVISED BY	DATE REVISED
JEANNIE STEFFAN	HEIDI BORDERS
CALCULATED-DESIGNED BY	CHECKED BY
FUNCTIONAL SUPERVISOR	JULIE CASEY

STATE OF CALIFORNIA - DEPARTMENT OF TRANSPORTATION
Caltrans® DESIGN

P:\proj1\02\4E410_plans\pse\24e410ca001.dgn

LAST REVISION 11-06-13 | DATE PLOTTED => 07-NOV-2013 | TIME PLOTTED => 07:20

Dist	COUNTY	ROUTE	POST MILES TOTAL PROJECT	SHEET No.	TOTAL SHEETS
02	Tri	299	53.5/64.0	3	70

Heidi Borders 11-06-13
REGISTERED CIVIL ENGINEER DATE

11-06-13
PLANS APPROVAL DATE

REGISTERED PROFESSIONAL ENGINEER HEIDI E. BORDERS No. C64194 Exp. 6-30-15 CIVIL STATE OF CALIFORNIA

THE STATE OF CALIFORNIA OR ITS OFFICERS OR AGENTS SHALL NOT BE RESPONSIBLE FOR THE ACCURACY OR COMPLETENESS OF SCANNED COPIES OF THIS PLAN SHEET.

LEGEND:

- BRIDGE CONFORM COLD PLANE AC PAVEMENT (PROFILE CORRECTION) 0.5′ HMA (TYPE A)
- COLD PLANE AC PAVEMENT
- —fo— —fo— Exist FIBER OPTIC
- -e— —(oh)— Exist Elec OVERHEAD
- —w— —w Exist WATER
- Exist SURVEY MONUMENT (PROTECT IN PLACE)
- METAL SIGN (1 POST)
- METAL SIGN (1 POST) SIGN PANELS ON 2 SIDES

ABBREVIATIONS:

(E) Exist

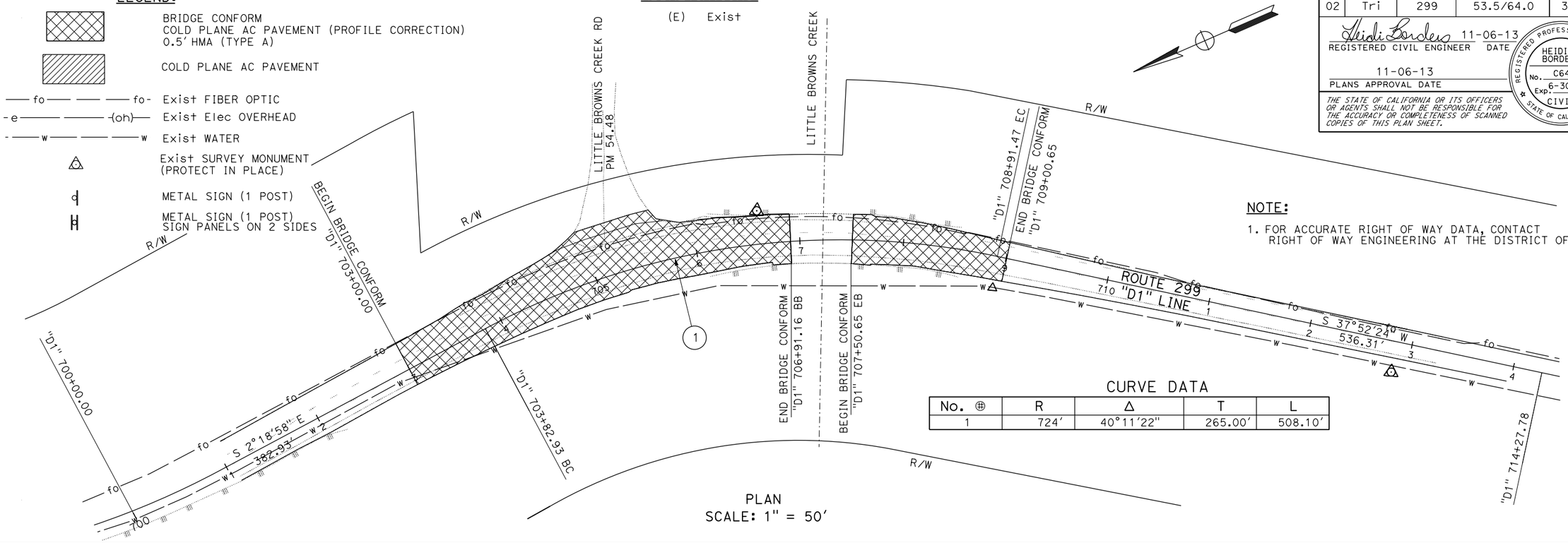

PLAN
SCALE: 1" = 50′

NOTE:

1. FOR ACCURATE RIGHT OF WAY DATA, CONTACT RIGHT OF WAY ENGINEERING AT THE DISTRICT OFFICE.

CURVE DATA

No. ⊕	R	Δ	T	L
1	724′	40°11′22"	265.00′	508.10′

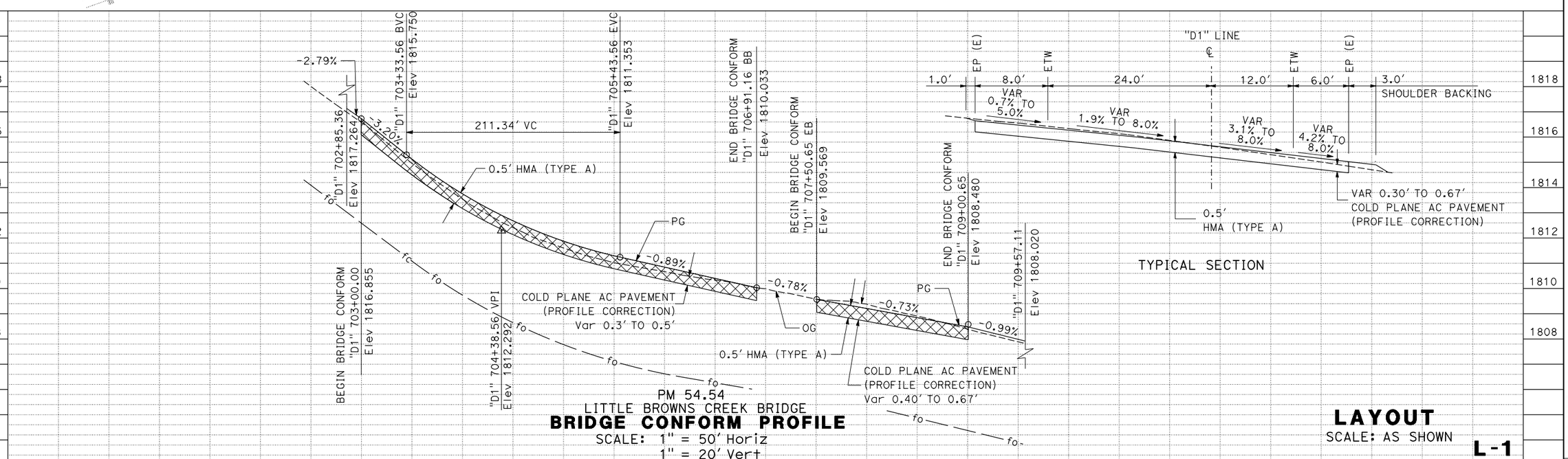

PM 54.54
LITTLE BROWNS CREEK BRIDGE
BRIDGE CONFORM PROFILE
SCALE: 1" = 50′ Horiz
1" = 20′ Vert

TYPICAL SECTION

LAYOUT
SCALE: AS SHOWN

L-1

REVISED BY | DATE REVISED
JEANNIE STEFFAN | HEIDI BORDERS
CALCULATED-DESIGNED BY | CHECKED BY
FUNCTIONAL SUPERVISOR
JULIE CASEY

STATE OF CALIFORNIA - DEPARTMENT OF TRANSPORTATION
DESIGN
Caltrans

P:\proj1\02\4E410_plans\pse\24e410ea001.dgn

DATE PLOTTED => 07-NOV-2013
TIME PLOTTED => 07:20
LAST REVISION 11-06-13

Dist	COUNTY	ROUTE	POST MILES TOTAL PROJECT	SHEET No.	TOTAL SHEETS
02	Tri	299	53.5/64.0	4	70

Heidi Borders 11-06-13
REGISTERED CIVIL ENGINEER DATE

11-06-13
PLANS APPROVAL DATE

REGISTERED PROFESSIONAL ENGINEER HEIDI E. BORDERS No. C64194 Exp. 6-30-15 CIVIL STATE OF CALIFORNIA

THE STATE OF CALIFORNIA OR ITS OFFICERS OR AGENTS SHALL NOT BE RESPONSIBLE FOR THE ACCURACY OR COMPLETENESS OF SCANNED COPIES OF THIS PLAN SHEET.

NOTE:

1. FOR ACCURATE RIGHT OF WAY DATA, CONTACT RIGHT OF WAY ENGINEERING AT THE DISTRICT OFFICE.

CURVE DATA

No. ⊕	R	Δ	T	L
2	2700′	10°02′59″	237.40′	473.58′

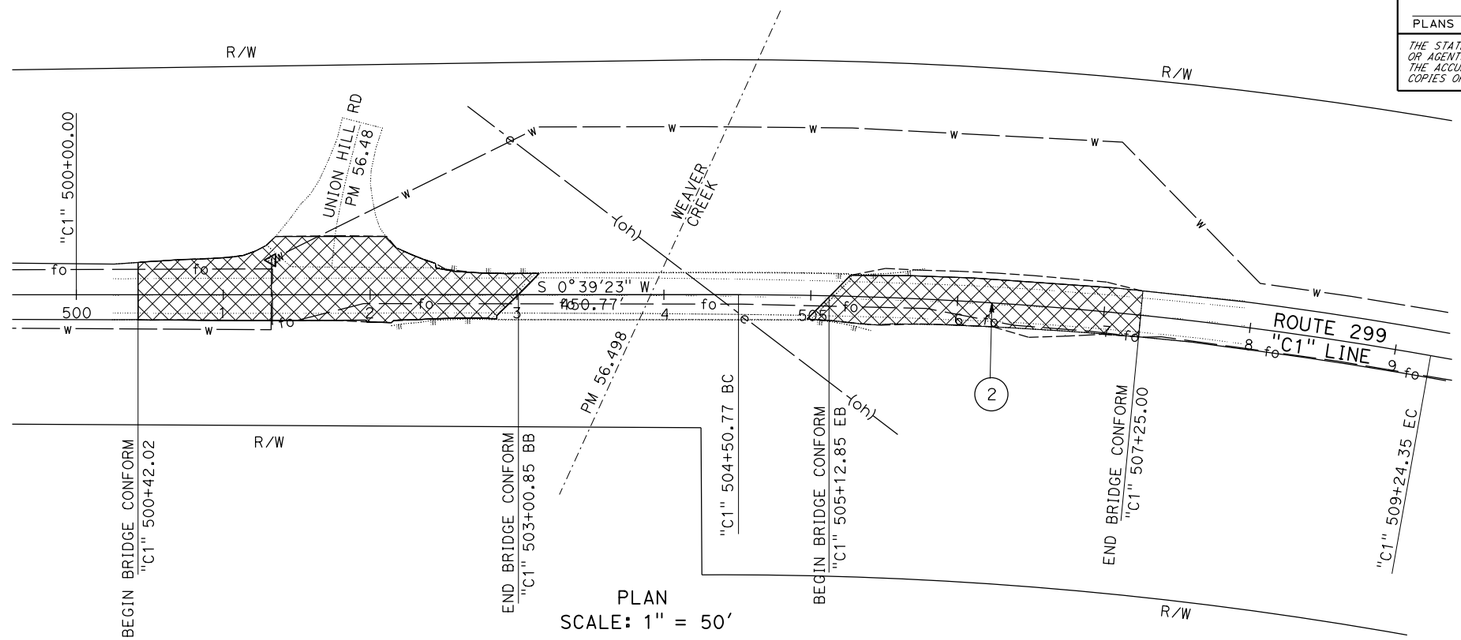

PLAN
SCALE: 1" = 50′

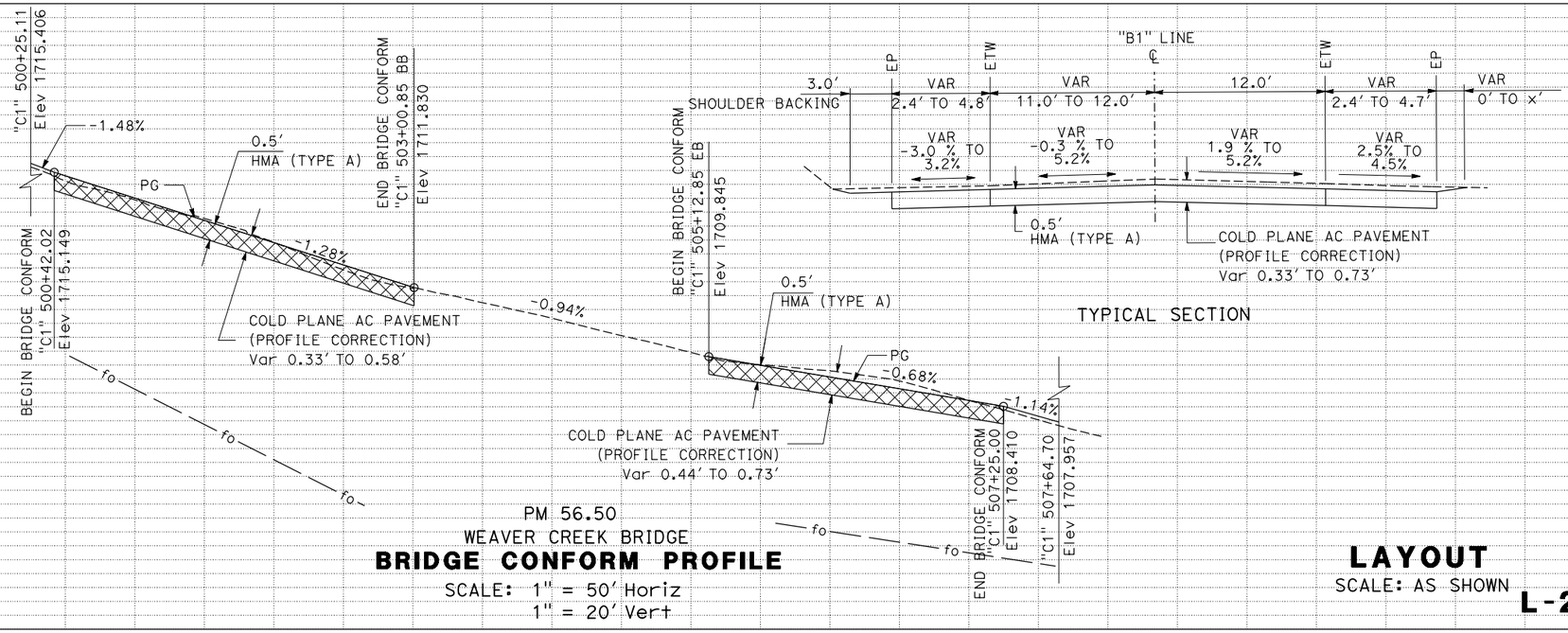

PM 56.50
WEAVER CREEK BRIDGE
BRIDGE CONFORM PROFILE
SCALE: 1" = 50′ Horiz
1" = 20′ Vert

LAYOUT
SCALE: AS SHOWN
L-2

STATION		501+00	502+00	503+00	504+00	505+00	506+00	507+00	TOTAL
CY	Exc	5							
	Emb	0							

REVISED BY | DATE REVISED
JEANNIE STEFFAN | HEIDI BORDERS
CALCULATED-DESIGNED BY | CHECKED BY
FUNCTIONAL SUPERVISOR: JULIE CASEY

STATE OF CALIFORNIA - DEPARTMENT OF TRANSPORTATION
Caltrans® **DESIGN**

P:\proj1\02\4E410_plans\pse\24e410ea002.dgn

DATE PLOTTED => 07-NOV-2013
TIME PLOTTED => 07:20
LAST REVISION 11-06-13

Dist	COUNTY	ROUTE	POST MILES TOTAL PROJECT	SHEET No.	TOTAL SHEETS
02	Tri	299	53.5/64.0	5	70

Heidi Borders 11-06-13
REGISTERED CIVIL ENGINEER DATE

11-06-13
PLANS APPROVAL DATE

REGISTERED PROFESSIONAL ENGINEER HEIDI E. BORDERS No. C64194 Exp. 6-30-15 CIVIL STATE OF CALIFORNIA

THE STATE OF CALIFORNIA OR ITS OFFICERS OR AGENTS SHALL NOT BE RESPONSIBLE FOR THE ACCURACY OR COMPLETENESS OF SCANNED COPIES OF THIS PLAN SHEET.

NOTE:

1. FOR ACCURATE RIGHT OF WAY DATA, CONTACT RIGHT OF WAY ENGINEERING AT THE DISTRICT OFFICE.

CURVE DATA

No. ⊕	R	Δ	T	L
3	735′	73°22′59″	547.68′	941.37′

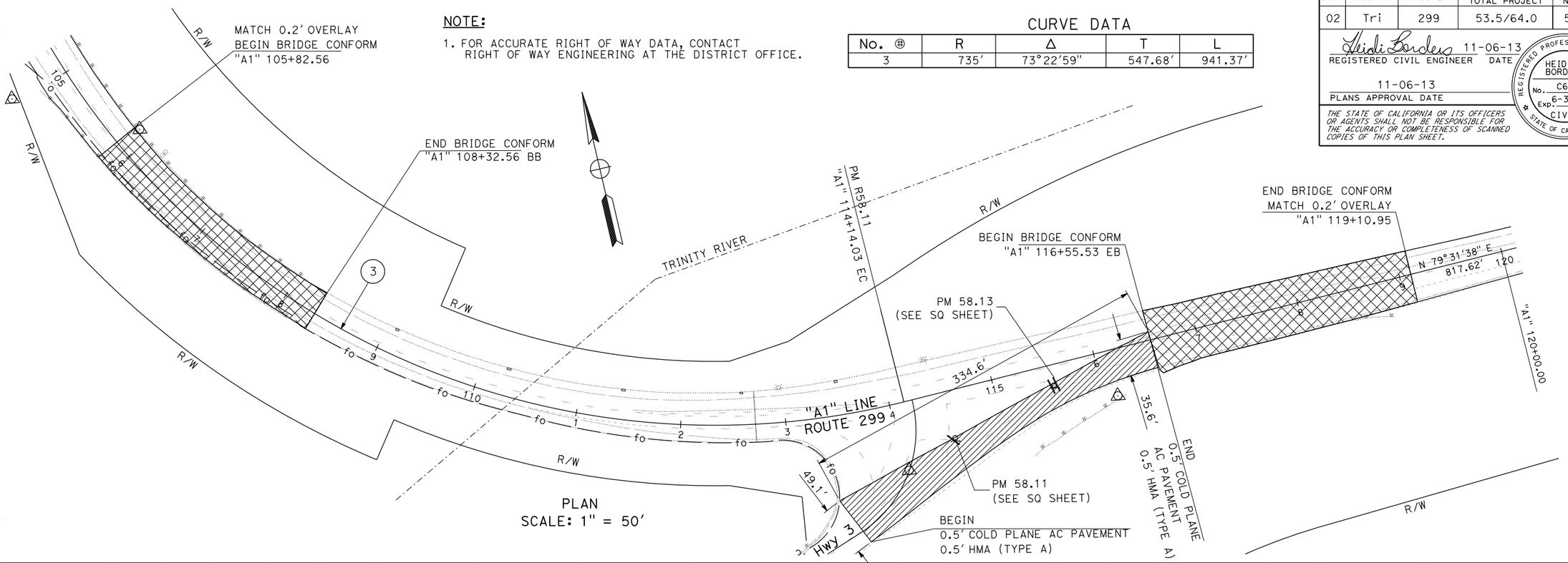

PLAN
SCALE: 1" = 50′

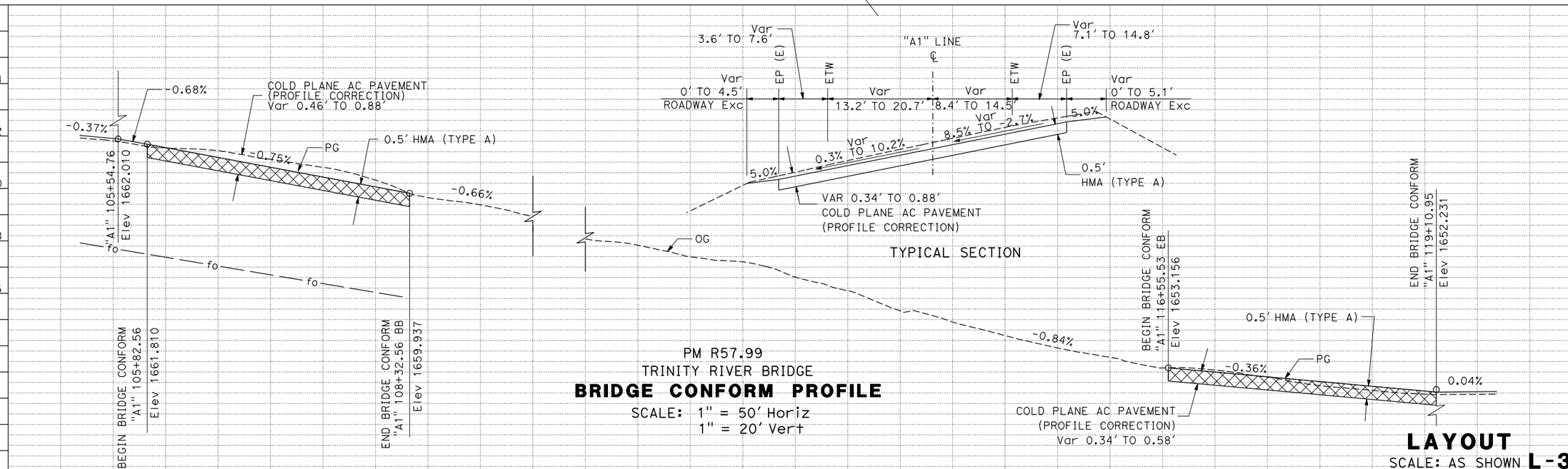

PM R57.99
TRINITY RIVER BRIDGE
BRIDGE CONFORM PROFILE
SCALE: 1" = 50′ Horiz
1" = 20′ Vert

LAYOUT
SCALE: AS SHOWN **L-3**

STATION	105+00	106+00	107+00	108+00	109+00	111+00	112+00	113+00	114+00	115+00	116+00	117+00	118+00	119+00	TOTAL
CY Exc		8													
CY Emb		0													

REVISED BY	DATE REVISED
JEANNIE STEFFAN	HEIDI BORDERS
CALCULATED-DESIGNED BY	CHECKED BY
FUNCTIONAL SUPERVISOR	JULIE CASEY

STATE OF CALIFORNIA - DEPARTMENT OF TRANSPORTATION
Caltrans® **DESIGN**

P:\proj1\02\4E410_plans\pse\24e410ea003.dgn

DATE PLOTTED => 07-NOV-2013
TIME PLOTTED => 07:20
LAST REVISION 11-06-13

Dist	COUNTY	ROUTE	POST MILES TOTAL PROJECT	SHEET No.	TOTAL SHEETS
02	Tri	299	53.5/64.0	6	70

Heidi Borders 11-06-13
REGISTERED CIVIL ENGINEER DATE

11-06-13
PLANS APPROVAL DATE

REGISTERED PROFESSIONAL ENGINEER HEIDI E. BORDERS No. C64194 Exp. 6-30-15 CIVIL STATE OF CALIFORNIA

THE STATE OF CALIFORNIA OR ITS OFFICERS OR AGENTS SHALL NOT BE RESPONSIBLE FOR THE ACCURACY OR COMPLETENESS OF SCANNED COPIES OF THIS PLAN SHEET.

NOTE:

1. FOR ACCURATE RIGHT OF WAY DATA, CONTACT RIGHT OF WAY ENGINEERING AT THE DISTRICT OFFICE.

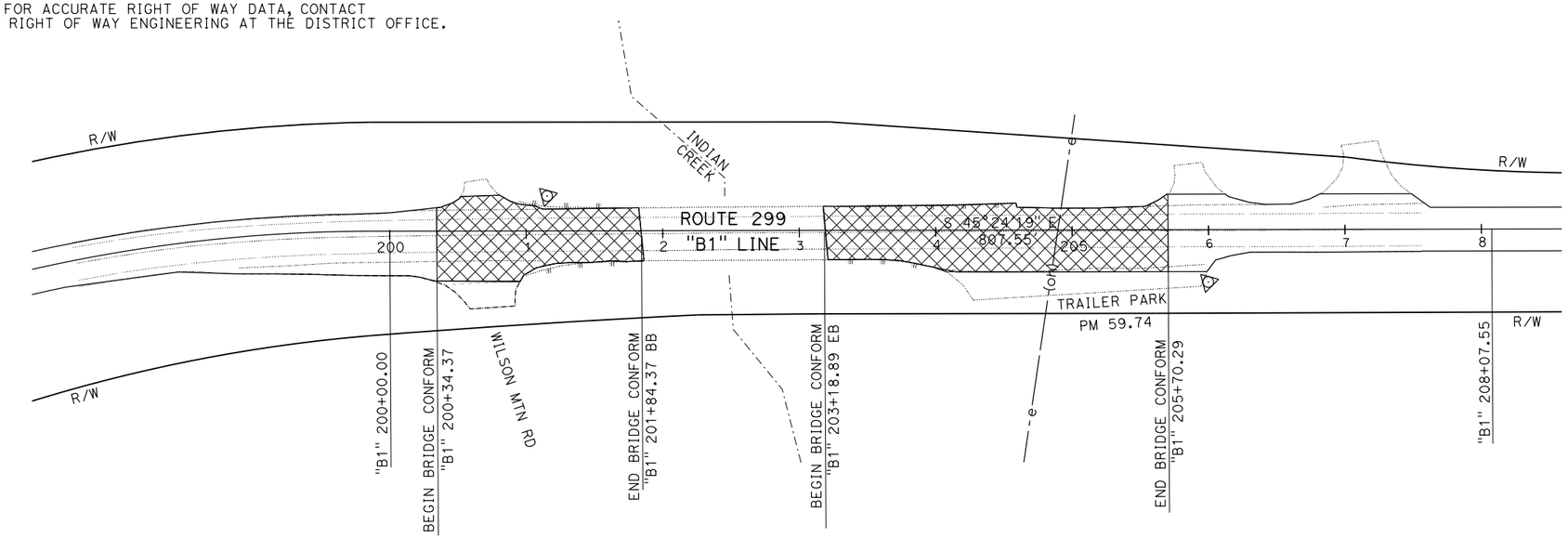

PLAN
SCALE: 1" = 50'

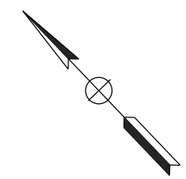

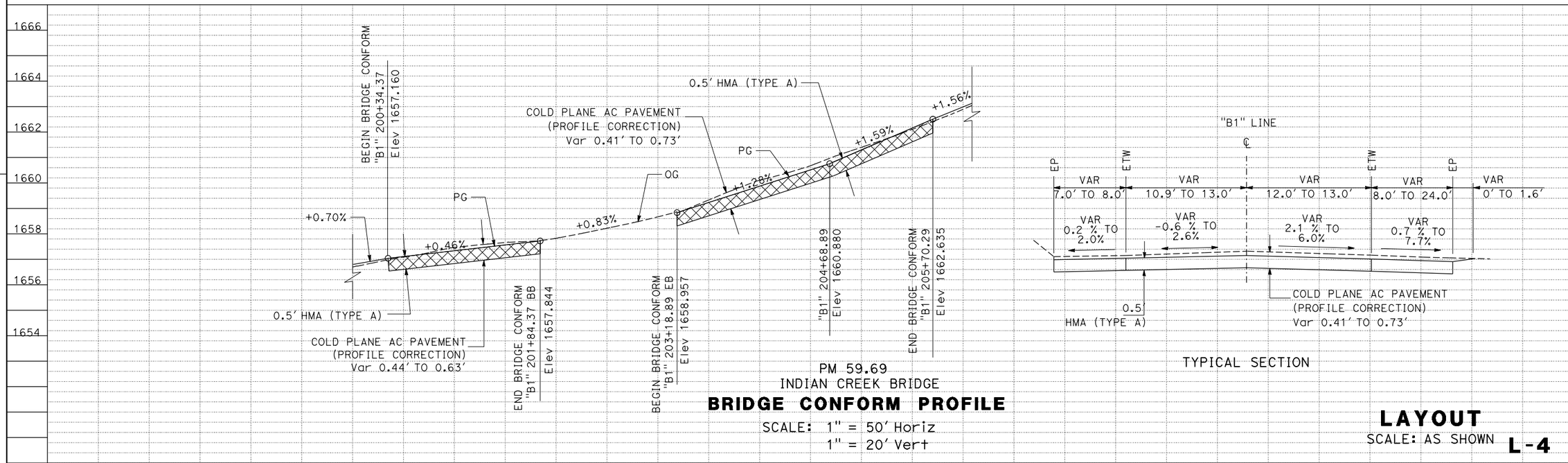

PM 59.69
INDIAN CREEK BRIDGE
BRIDGE CONFORM PROFILE
SCALE: 1" = 50' Horiz
1" = 20' Vert

LAYOUT
SCALE: AS SHOWN **L-4**

REVISED BY	DATE REVISED

CALCULATED-DESIGNED BY	CHECKED BY
JEANNIE STEFFAN	HEIDI BORDERS

FUNCTIONAL SUPERVISOR: JULIE CASEY

STATE OF CALIFORNIA - DEPARTMENT OF TRANSPORTATION
DESIGN
Caltrans

P:\proj1\02\4E410_plans\pse\24e410ea004.dgn

DATE PLOTTED => 07-NOV-2013
TIME PLOTTED => 07:20
LAST REVISION 11-06-13

Dist	COUNTY	ROUTE	POST MILES TOTAL PROJECT	SHEET No.	TOTAL SHEETS
02	Tri	299	53.5/64.0	7	70

Heidi Borders 11-06-13
REGISTERED CIVIL ENGINEER DATE

11-06-13
PLANS APPROVAL DATE

REGISTERED PROFESSIONAL ENGINEER HEIDI E. BORDERS No. C64194 Exp. 6-30-15 CIVIL STATE OF CALIFORNIA

THE STATE OF CALIFORNIA OR ITS OFFICERS OR AGENTS SHALL NOT BE RESPONSIBLE FOR THE ACCURACY OR COMPLETENESS OF SCANNED COPIES OF THIS PLAN SHEET.

NOTE:

1. FOR ACCURATE RIGHT OF WAY DATA, CONTACT RIGHT OF WAY ENGINEERING AT THE DISTRICT OFFICE.

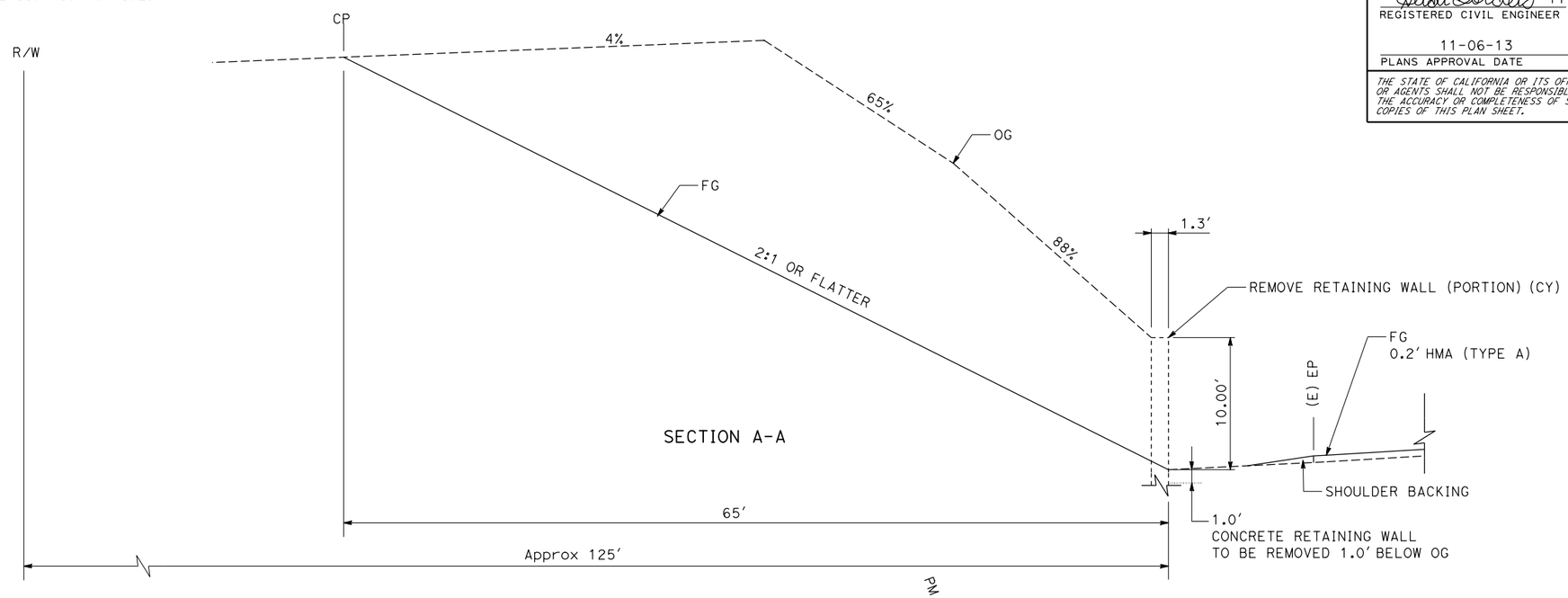

SECTION A-A

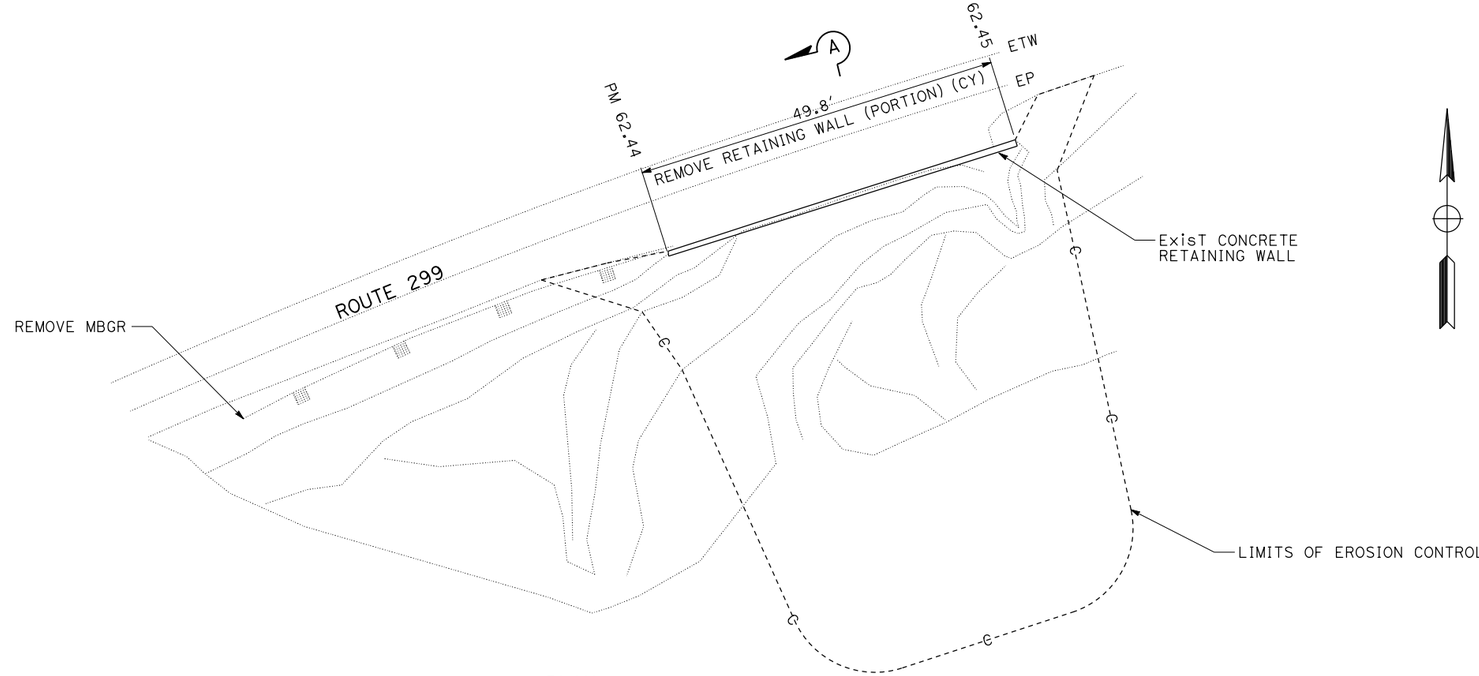

PLAN

REMOVE CONCRETE WALL

PM 62.44 TO PM 62.45, Rt

CONSTRUCTION DETAILS

NO SCALE

C-1

REVISED BY	DATE REVISED

JEANNIE STEFFAN	HEIDI BORDERS
CALCULATED-DESIGNED BY	CHECKED BY

FUNCTIONAL SUPERVISOR: JULIE CASEY

STATE OF CALIFORNIA - DEPARTMENT OF TRANSPORTATION

Caltrans® **DESIGN**

P:\proj1\02\4E410_plans\pse\24e410ga001.dgn

LAST REVISION 11-06-13 | DATE PLOTTED => 07-NOV-2013 | TIME PLOTTED => 07:20

Dist	COUNTY	ROUTE	POST MILES TOTAL PROJECT	SHEET No.	TOTAL SHEETS
02	Tri	299	53.5/64.0	8	70

Heidi Borders 11-06-13
REGISTERED CIVIL ENGINEER DATE

11-06-13
PLANS APPROVAL DATE

REGISTERED PROFESSIONAL ENGINEER HEIDI E. BORDERS No. C64194 Exp. 6-30-15 CIVIL STATE OF CALIFORNIA

THE STATE OF CALIFORNIA OR ITS OFFICERS OR AGENTS SHALL NOT BE RESPONSIBLE FOR THE ACCURACY OR COMPLETENESS OF SCANNED COPIES OF THIS PLAN SHEET.

LEGEND:

COLD PLANE AC PAVEMENT

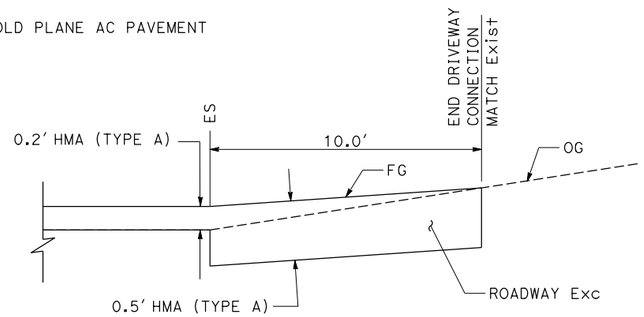

SECTION B-B
PM 62.14

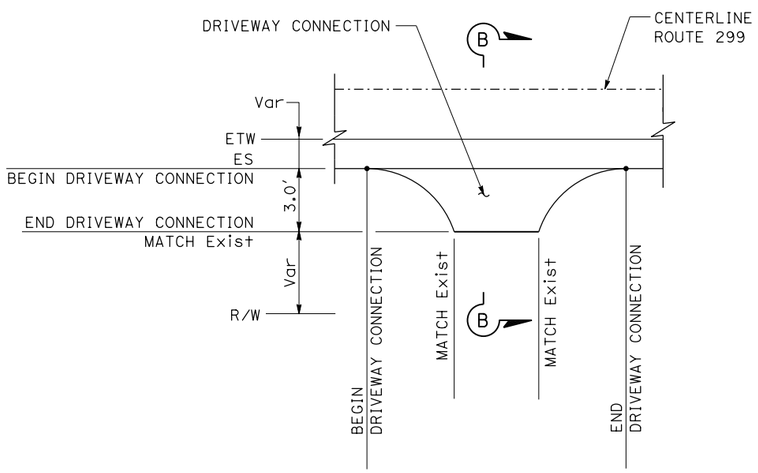

PLAN
DRIVEWAY CONNECTION

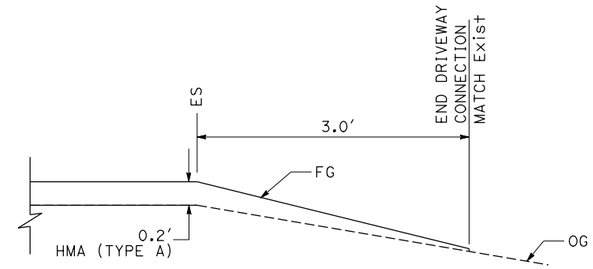

SECTION B-B
PM 60.8 TO 64.0
TYPICAL FOR PAVED DRIVEWAY CONNECTIONS

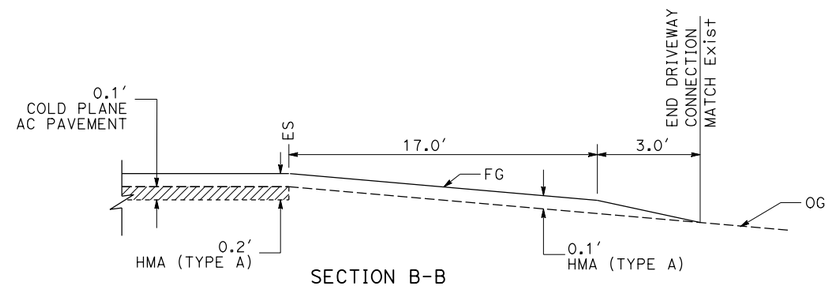

SECTION B-B
PM 54.75

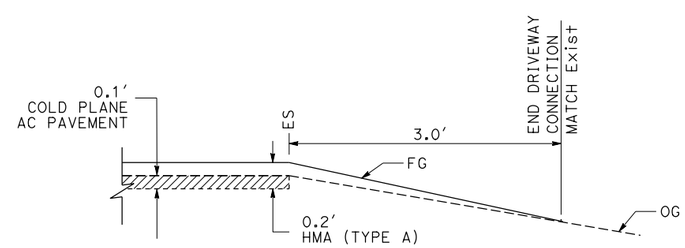

SECTION B-B
PM 53.5 TO 60.8
TYPICAL FOR PAVED DRIVEWAY CONNECTIONS

DRIVEWAY CONNECTIONS

POST MILE	R+/L+	DESCRIPTION
53.85	R+	
53.93	L+	
54.75	L+	
55.35	R+	
55.54	L+	
55.70	L+	
56.12	L+	
56.39	L+	
58.55	L+	
58.80	R+	
58.82	L+	RIFLE LANE
59.09	R+	RED BARN ART
59.13	R+	
59.18	R+	
59.20	R+	
59.24	R+	
59.71	R+	INDIAN CREEK TRAILER PARK
59.75	R+	INDIAN CREEK TRAILER PARK
59.75	L+	INDIAN CREEK LODGE
59.77	L+	INDIAN CREEK LODGE
60.02	L+	
60.03	L+	
61.09	R+	VITZTHUM GULCH RD
61.80	R+	
62.14	R+	TOP OF GRADE
63.12	L+	AT WEST END OF MBGR
63.16	R+	
63.60	R+	
63.76	R+	

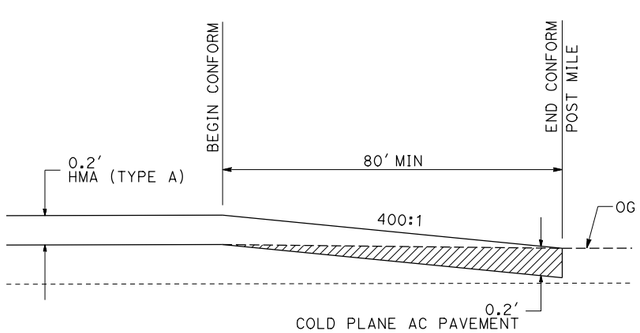

PM 64.0

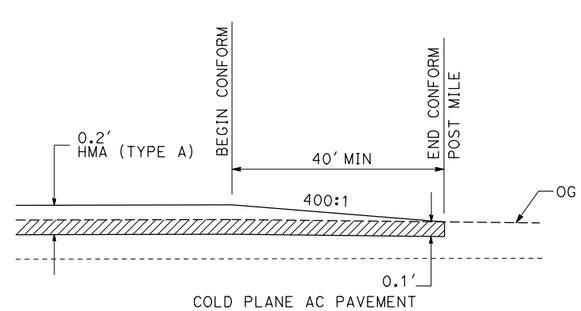

PM 53.5

MAINLINE CONFORM

CONSTRUCTION DETAILS

NO SCALE

C-2

REVISED BY | DATE REVISED
JEANNIE STEFFAN | HEIDI BORDERS
CALCULATED-DESIGNED BY | CHECKED BY
FUNCTIONAL SUPERVISOR | JULIE CASEY

STATE OF CALIFORNIA - DEPARTMENT OF TRANSPORTATION
Caltrans® DESIGN

P:\proj\02\4E410_plans\pse\24e410ga002.dgn

LAST REVISION 11-06-13 | DATE PLOTTED => 07-NOV-2013 | TIME PLOTTED => 07:20

Dist	COUNTY	ROUTE	POST MILES TOTAL PROJECT	SHEET No.	TOTAL SHEETS
02	Tri	299	53.5/64.0	9	70

REGISTERED CIVIL ENGINEER 11-06-13 DATE

11-06-13
PLANS APPROVAL DATE

REGISTERED PROFESSIONAL ENGINEER HEIDI E. BORDERS No. C64194 Exp. 6-30-15 CIVIL STATE OF CALIFORNIA

THE STATE OF CALIFORNIA OR ITS OFFICERS OR AGENTS SHALL NOT BE RESPONSIBLE FOR THE ACCURACY OR COMPLETENESS OF SCANNED COPIES OF THIS PLAN SHEET.

LEGEND:

COLD PLANE AC PAVEMENT

COLD PLANE AC PAVEMENT (PROFILE CORRECTION)

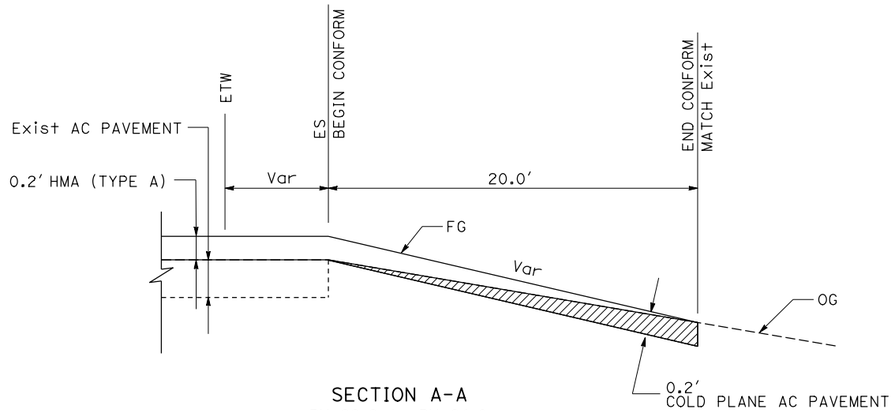

SECTION A-A
PM 60.8 to PM 64.0

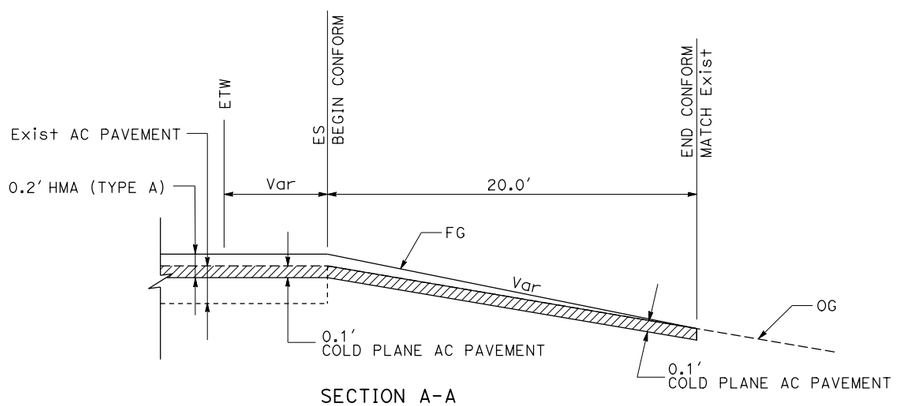

SECTION A-A
PM 53.5 TO PM 60.8

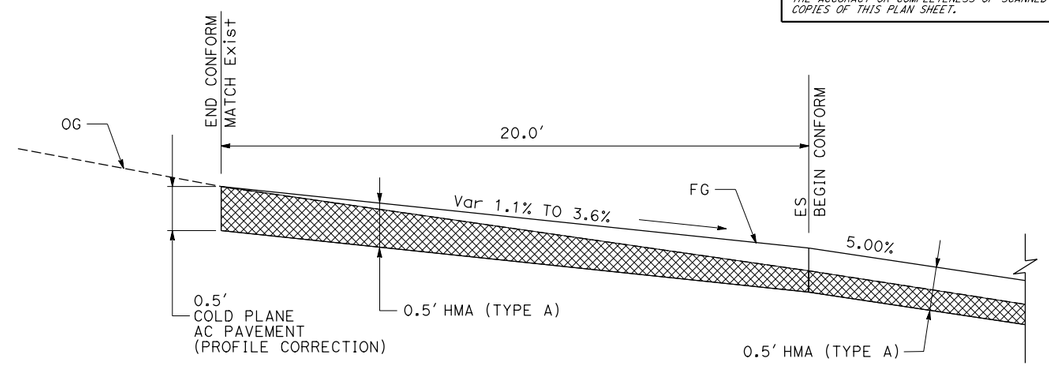

SECTION A-A
PM 54.48

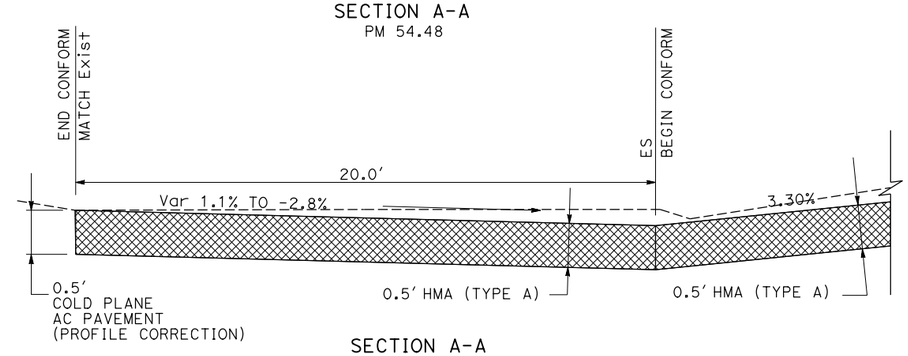

SECTION A-A
PM 56.48

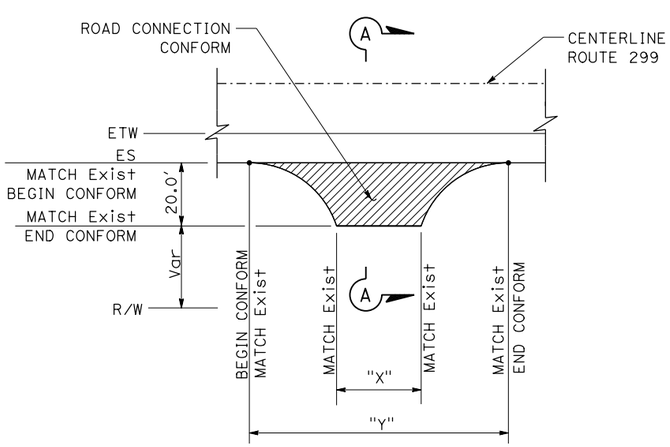

PLAN

ROAD CONNECTION CONFORM

ROAD CONNECTION CONFORM

POST MILE	R†/L†	COLD PLANE AC PAVEMENT (SQYD)	DESCRIPTION	"X" LF	"Y" LF
* 54.48	L†	186	LITTLE BROWNS CREEK ROAD	65	110
* 56.48	L†	225	UNION HILL ROAD	70	155
56.93	R†	125	TUCKER HILL ROAD	50	65
57.88	R†	235	STEINER FLAT ROAD	80	130
58.84	L†	178	RIVER RANCH ROAD	40	145
59.19	L†	100	RIVER RANCH ROAD	35	60
* 59.66	R†	133	WILSON MOUNTAIN ROAD	30	60
* 59.66	L†	154	RIVER ACCESS PARKING	28	70
61.00	L†	156	STEEL BRIDGE ROAD	40	100
62.50	L†	262	POKER BAR ROAD	85	150
63.50	L†	203	LEWISTON ROAD	70	130

* SEE COLD PLANE AC PAVEMENT (PROFILE CORRECTION) FOR MORE DETAIL

CONSTRUCTION DETAILS

NO SCALE

C-3

REVISED BY | DATE REVISED
JEANNIE STEFFAN | HEIDI BORDERS
CALCULATED-DESIGNED BY | CHECKED BY
FUNCTIONAL SUPERVISOR | JULIE CASEY

STATE OF CALIFORNIA - DEPARTMENT OF TRANSPORTATION
Caltrans® DESIGN

P:\proj1\02\4E410_plans\pse\24e410ga003.dgn

LAST REVISION 11-06-13 | DATE PLOTTED => 07-NOV-2013 | TIME PLOTTED => 07:20

Dist	COUNTY	ROUTE	POST MILES TOTAL PROJECT	SHEET No.	TOTAL SHEETS
02	Tri	299	53.5/64.0	10	47

REGISTERED CIVIL ENGINEER 10-16-13 DATE

PLANS APPROVAL DATE 11-06-13

REGISTERED PROFESSIONAL ENGINEER JEFF STEFFAN No. C60260 Exp. 6-30-14 CIVIL STATE OF CALIFORNIA

THE STATE OF CALIFORNIA OR ITS OFFICERS OR AGENTS SHALL NOT BE RESPONSIBLE FOR THE ACCURACY OR COMPLETENESS OF SCANNED COPIES OF THIS PLAN SHEET.

NOTE:

1. COORDINATES ARE NAD83 NAVD88 CA SPC ZONE 1 US FOOT

LEGEND:

0.2' COLD PLANE AC PAVEMENT (2924 SQYD)

COLD PLANE AC PAVEMENT (PROFILE CORRECTION) (288 SQYD)

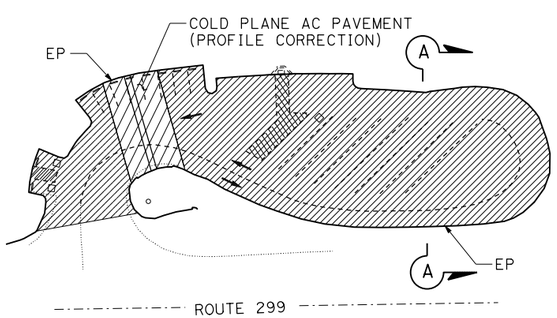

PLAN
SCALE: 1" = 50'

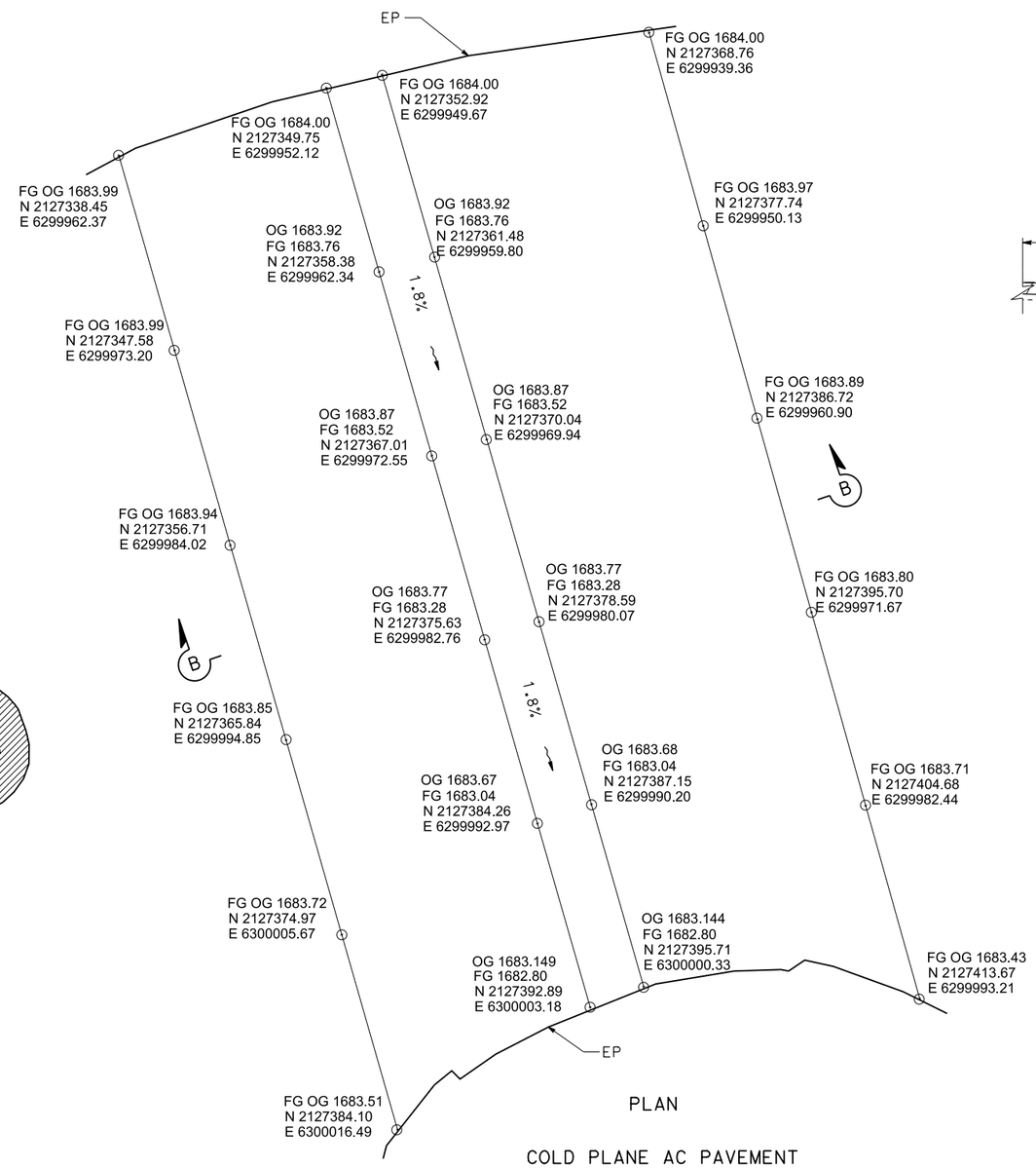

PLAN

COLD PLANE AC PAVEMENT
(PROFILE CORRECTION)

SCALE: 1" = 5'

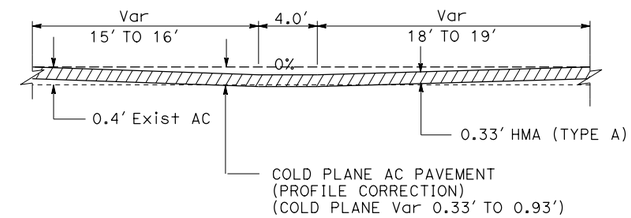

SECTION B-B

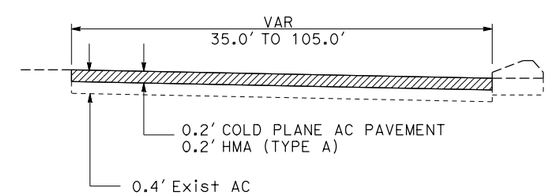

SECTION A-A

MOON LIM LEE REST AREA

PM 56.67

CONSTRUCTION DETAILS

SCALE: AS NOTED **C-4**

REVISED BY	DATE REVISED
JEANNIE STEFFAN	HEIDI BORDERS

CALCULATED-DESIGNED BY / CHECKED BY

FUNCTIONAL SUPERVISOR: JULIE CASEY

STATE OF CALIFORNIA - DEPARTMENT OF TRANSPORTATION

Caltrans® **DESIGN**

P:\proj1\02\4E410_plans\pse\24e410ga004.dgn

LAST REVISION 10-16-13 | DATE PLOTTED => 07-NOV-2013 | TIME PLOTTED => 07:20

Dist	COUNTY	ROUTE	POST MILES TOTAL PROJECT	SHEET No.	TOTAL SHEETS
02	Tri	299	53.5/64.0	11	70

Heidi Borders 11-06-13
REGISTERED CIVIL ENGINEER DATE

11-06-13
PLANS APPROVAL DATE

REGISTERED PROFESSIONAL ENGINEER HEIDI E. BORDERS No. C64194 Exp. 6-30-15 CIVIL STATE OF CALIFORNIA

THE STATE OF CALIFORNIA OR ITS OFFICERS OR AGENTS SHALL NOT BE RESPONSIBLE FOR THE ACCURACY OR COMPLETENESS OF SCANNED COPIES OF THIS PLAN SHEET.

LEGEND:

DETECTABLE WARNING SURFACE 4.5' X 3.0'

SAWCUT
LIMITS OF REMOVE CONCRETE SIDEWALK (SQYD)
LIMITS OF MINOR CONCRETE (SIDEWALK)

ABBREVIATIONS:

(E) EXISTING

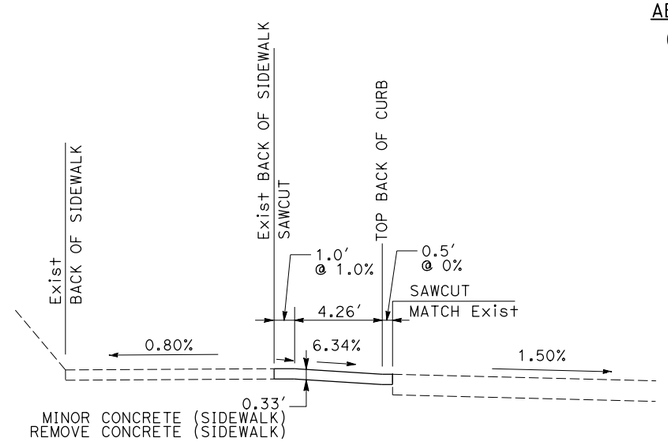

SECTION B-B

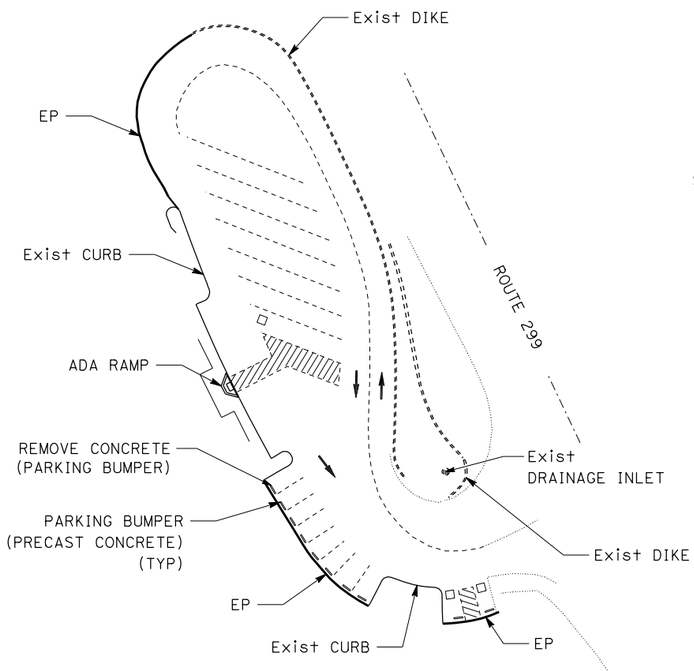

PLAN

MOON LIM LEE REST AREA

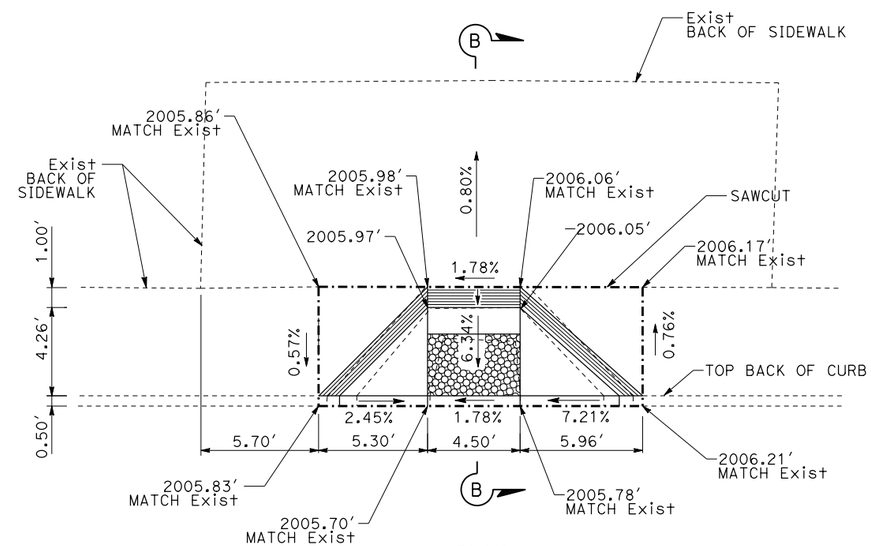

PLAN

ADA RAMP

CASE A CURB RAMP
MOON LIM LEE REST AREA

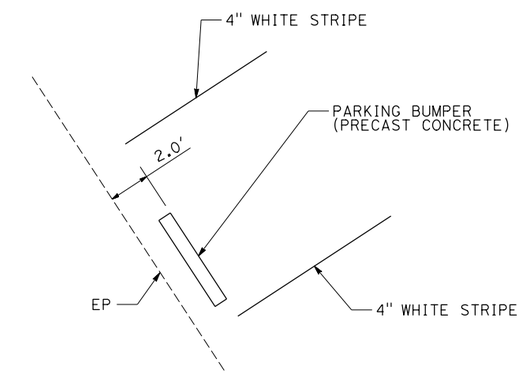

PLAN

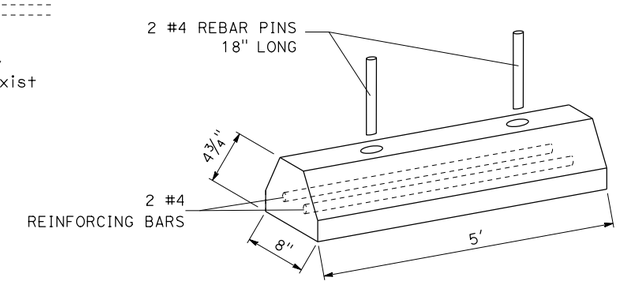

PARKING BUMPER (PRECAST CONCRETE)

TYPICAL

CONSTRUCTION DETAILS

NO SCALE

C-5

REVISED BY	DATE REVISED

CALCULATED-DESIGNED BY	CHECKED BY
JEANNIE STEFFAN	HEIDI BORDERS

FUNCTIONAL SUPERVISOR: JULIE CASEY

STATE OF CALIFORNIA - DEPARTMENT OF TRANSPORTATION
Caltrans® **DESIGN**

P:\proj1\02\4E410_plans\pse\24e410ga005.dgn

LAST REVISION 11-06-13 | DATE PLOTTED => 07-NOV-2013 | TIME PLOTTED => 07:20

Dist	COUNTY	ROUTE	POST MILES TOTAL PROJECT	SHEET No.	TOTAL SHEETS
02	Tri	299	53.5/64.0	12	70

Heidi Borders 11-06-13
REGISTERED CIVIL ENGINEER DATE

11-06-13
PLANS APPROVAL DATE

REGISTERED PROFESSIONAL ENGINEER HEIDI E. BORDERS No. C64194 Exp. 6-30-15 CIVIL STATE OF CALIFORNIA

THE STATE OF CALIFORNIA OR ITS OFFICERS OR AGENTS SHALL NOT BE RESPONSIBLE FOR THE ACCURACY OR COMPLETENESS OF SCANNED COPIES OF THIS PLAN SHEET.

LEGEND:

COLD PLANE AC PAVEMENT

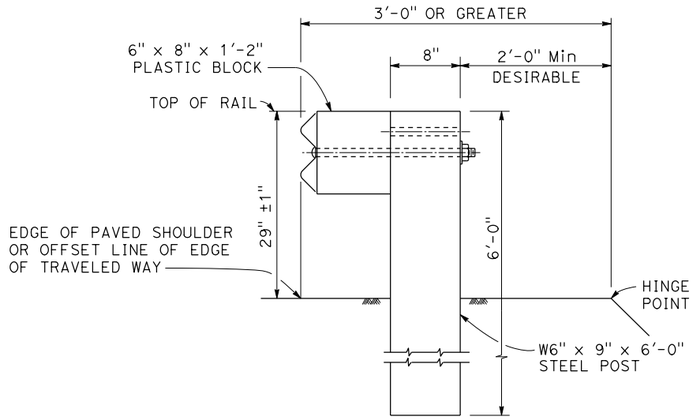

MBGR POST EMBEDMENT
TYPICAL ROADWAY INSTALLATION

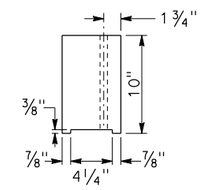

6" x 10" NOTCHED
PLASTIC BLOCK

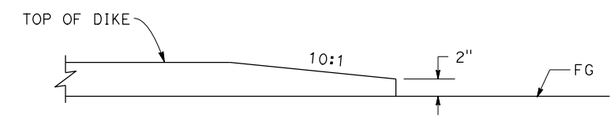

DIKE END TAPER
TYPICAL

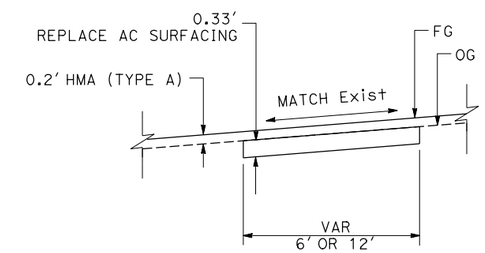

REPLACE AC SURFACING
PM 60.8 TO 64.0

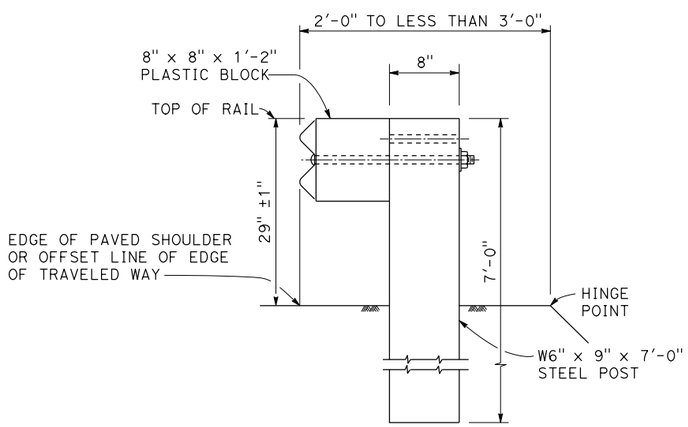

MBGR POST EMBEDMENT
NARROW ROADWAY INSTALLATION

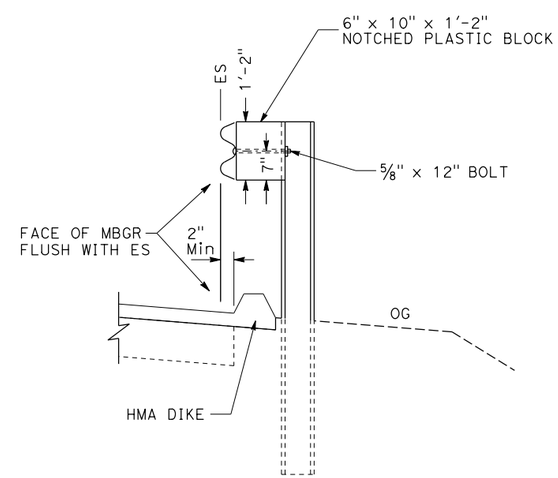

MBGR WITH DIKE
TYPICAL FOR MBGR WITH DIKE

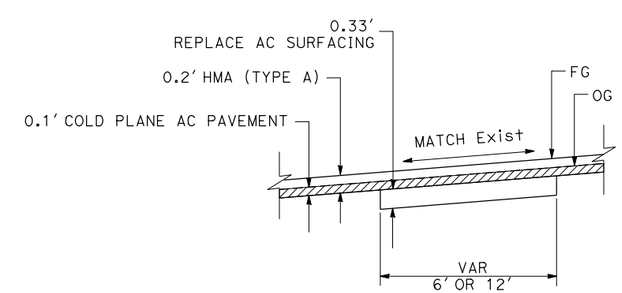

REPLACE AC SURFACING
PM 53.5 TO 60.8

CONSTRUCTION DETAILS
NO SCALE **C-6**

REVISED BY	DATE REVISED

JEANNIE STEFFAN	HEIDI BORDERS
CALCULATED-DESIGNED BY	CHECKED BY
FUNCTIONAL SUPERVISOR	JULIE CASEY

STATE OF CALIFORNIA - DEPARTMENT OF TRANSPORTATION
Caltrans® **DESIGN**

P:\proj\02\4E410_plans\pse\24e410ga006.dgn

LAST REVISION 11-06-13 DATE PLOTTED => 07-NOV-2013 TIME PLOTTED => 07:20

Dist	COUNTY	ROUTE	POST MILES TOTAL PROJECT	SHEET No.	TOTAL SHEETS
02	Tri	299	53.5/64.0	13	70

Heidi Borders 11-06-13
REGISTERED CIVIL ENGINEER DATE

11-06-13
PLANS APPROVAL DATE

REGISTERED PROFESSIONAL ENGINEER HEIDI E. BORDERS No. C64194 Exp. 6-30-15 CIVIL STATE OF CALIFORNIA

THE STATE OF CALIFORNIA OR ITS OFFICERS OR AGENTS SHALL NOT BE RESPONSIBLE FOR THE ACCURACY OR COMPLETENESS OF SCANNED COPIES OF THIS PLAN SHEET.

NOTES:

1. LAP ALL RAILS AT EXISTING RAIL LAPS.

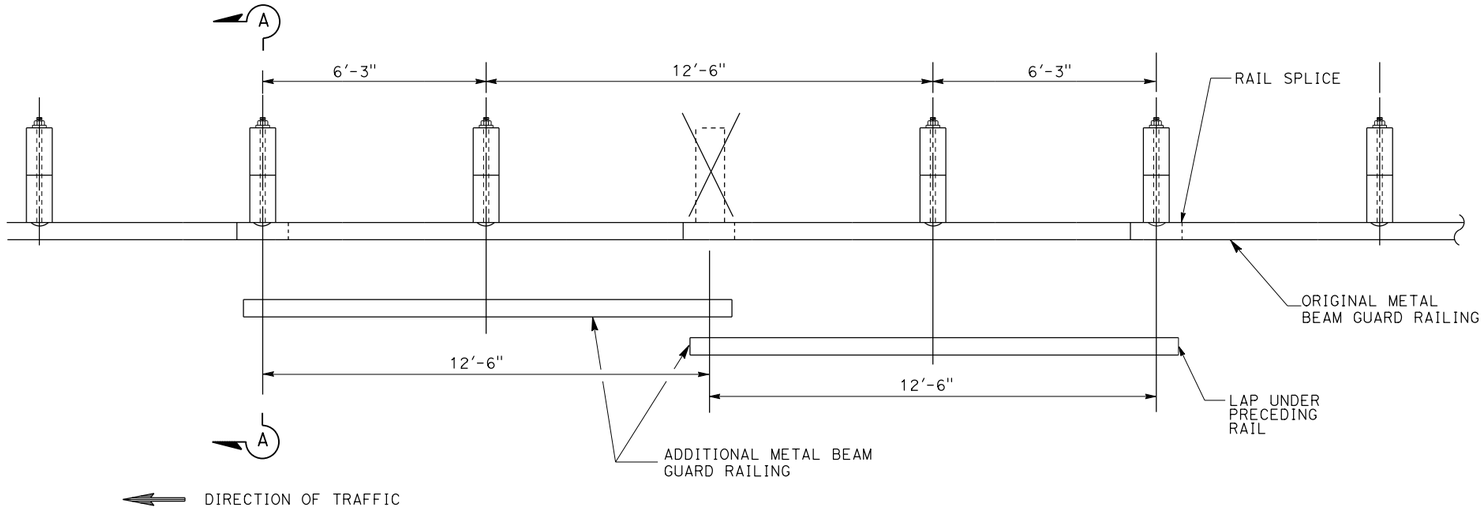

CASE 2

(ONE POST OMITTED AT JUNCTION OF TWO ELEMENTS)

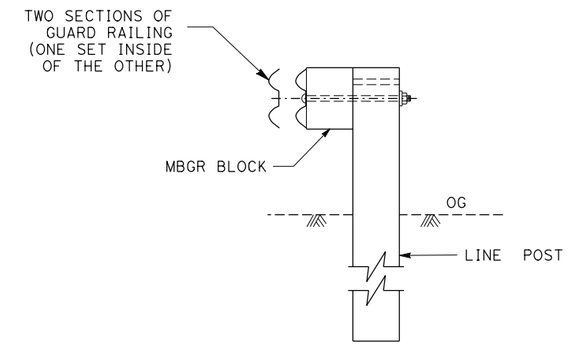

SECTION A-A

TYPICAL RAILING OVERLAP INSTALLATION AT POST

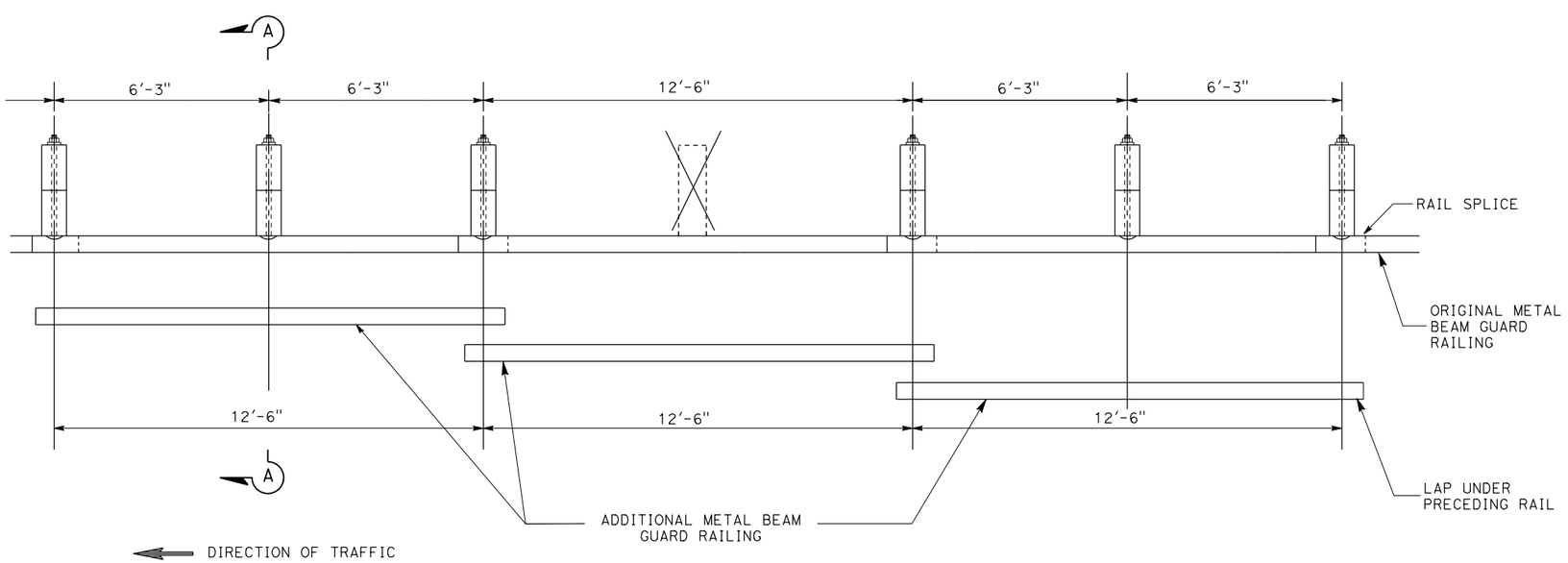

CASE 3

(ONE POST OMITTED AT CENTER OF OF ELEMENT)

LONG SPAN NESTED GUARD RAILING

CONSTRUCTION DETAILS

NO SCALE

C-7

REVISED BY	DATE REVISED

JEANNIE STEFFAN — HEIDI BORDERS

CALCULATED-DESIGNED BY — CHECKED BY

FUNCTIONAL SUPERVISOR — JULIE CASEY

STATE OF CALIFORNIA - DEPARTMENT OF TRANSPORTATION

Caltrans® DESIGN

P:\proj1\02\4E410_plans\pse\24e410ga007.dgn

LAST REVISION 11-06-13 — DATE PLOTTED => 07-NOV-2013 TIME PLOTTED => 07:20

Dist	COUNTY	ROUTE	POST MILES TOTAL PROJECT	SHEET No.	TOTAL SHEETS
02	Tri	299	53.5/64.0	14	70

Heidi Borders 11-06-13
REGISTERED CIVIL ENGINEER DATE

11-06-13
PLANS APPROVAL DATE

REGISTERED PROFESSIONAL ENGINEER HEIDI E. BORDERS No. C64194 Exp. 6-30-15 CIVIL STATE OF CALIFORNIA

THE STATE OF CALIFORNIA OR ITS OFFICERS OR AGENTS SHALL NOT BE RESPONSIBLE FOR THE ACCURACY OR COMPLETENESS OF SCANNED COPIES OF THIS PLAN SHEET.

LEGEND:

ROADWAY Exc

ABBREVIATIONS;

(E) Exist
ERS EARTH RETAINING SYSTEM (RAILING COMPONENTS)

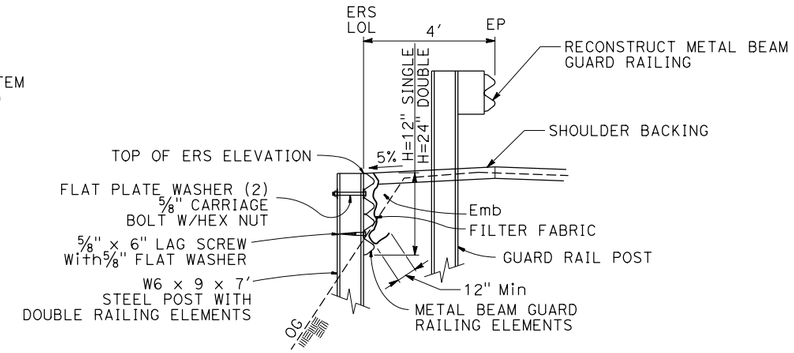

EARTH RETAINING SYSTEM (RAILING COMPONENTS) DETAIL

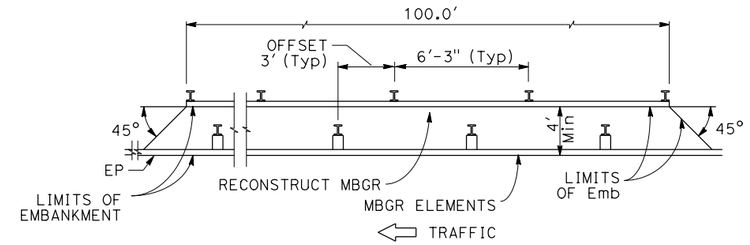

EARTH RETAINING SYSTEM (RAILING COMPONENTS)

PLAN

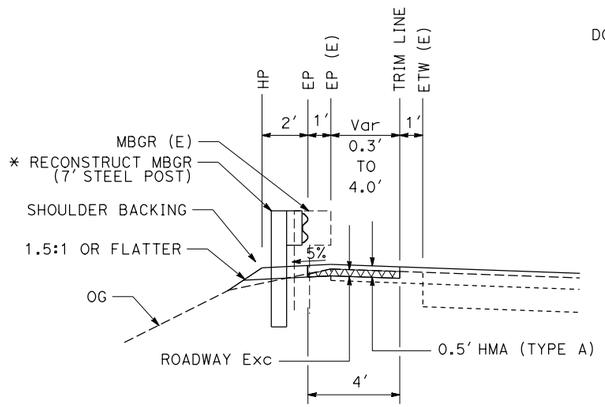

SECTION A-A

PM 62.28 TO PM 62.32
PM 62.37 TO PM 62.38
PM 62.50 TO PM 62.57

* 640 LF OF Exist MBGR POSTS ARE TO BE RECONSTRUCTED WITH 7' STEEL POSTS. EXACT POST LOCATIONS TO BE DETERMINED BY THE ENGINEER.

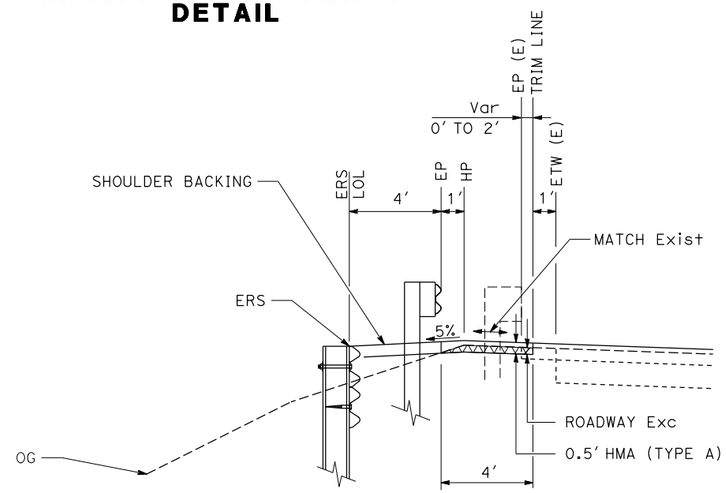

SECTION B-B
PM 62.32 TO PM 62.37

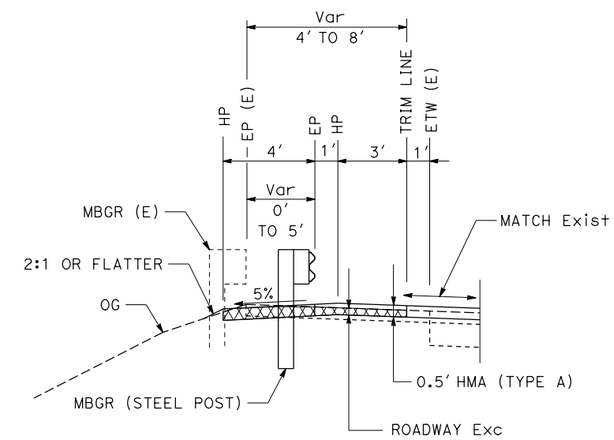

SECTION C-C
PM 62.38 TO PM 62.50

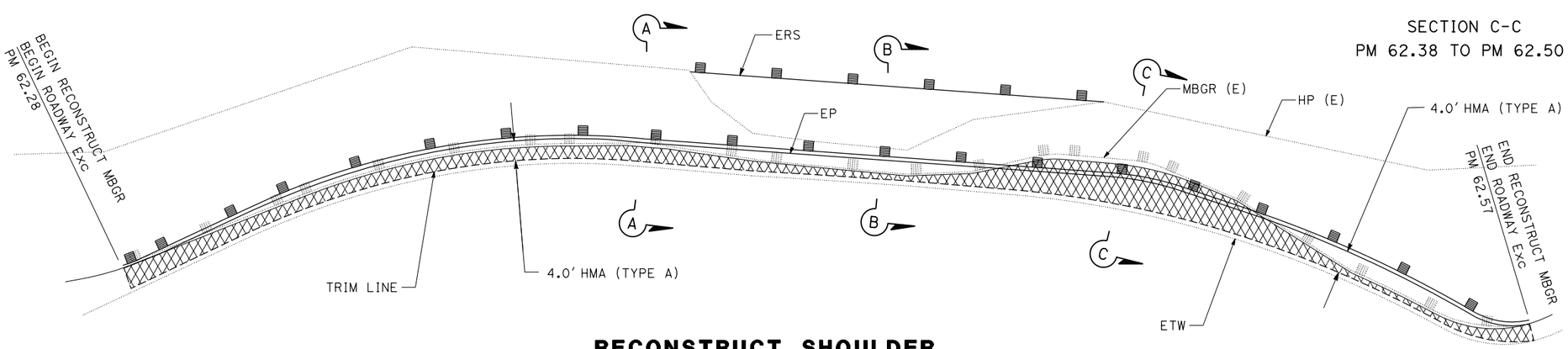

RECONSTRUCT SHOULDER

PLAN

PM 62.28 TO PM 62.57

CONSTRUCTION DETAILS

NO SCALE

C-8

REVISED BY	DATE REVISED

JEANNIE STEFFAN	HEIDI BORDERS
CALCULATED-DESIGNED BY	CHECKED BY
FUNCTIONAL SUPERVISOR	JULIE CASEY

STATE OF CALIFORNIA - DEPARTMENT OF TRANSPORTATION
Caltrans® **DESIGN**

P:\proj1\02\4E410_plans\pse\24e410ga008.dgn

LAST REVISION 11-06-13 | DATE PLOTTED => 07-NOV-2013 TIME PLOTTED => 07:20

Dist	COUNTY	ROUTE	POST MILES TOTAL PROJECT	SHEET No.	TOTAL SHEETS
02	Tri	299	53.5/64.0	15	70

Heidi Borders 11-06-13
REGISTERED CIVIL ENGINEER DATE

11-06-13
PLANS APPROVAL DATE

REGISTERED PROFESSIONAL ENGINEER HEIDI E. BORDERS No. C64194 Exp. 6-30-15 CIVIL STATE OF CALIFORNIA

THE STATE OF CALIFORNIA OR ITS OFFICERS OR AGENTS SHALL NOT BE RESPONSIBLE FOR THE ACCURACY OR COMPLETENESS OF SCANNED COPIES OF THIS PLAN SHEET.

NOTE:

1. THE CONTRACTOR SHALL VERIFY ALL CONTROLLING FIELD DIMENSIONS BEFORE ORDERING OR FABRICATING ANY MATERIAL.

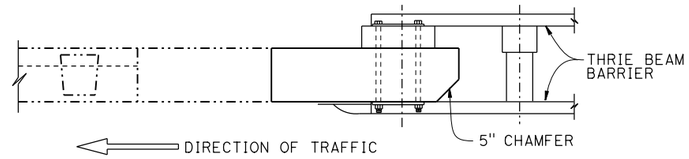

PLAN

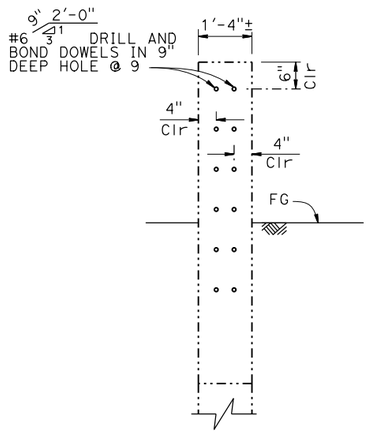

SECTION C-C

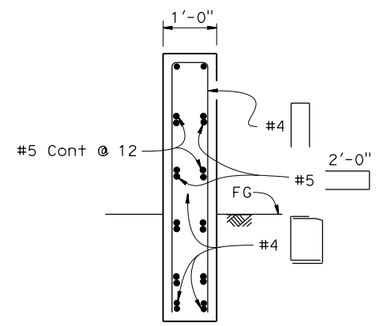

NOTE:
Drill and bond dowels not shown

SECTION B-B

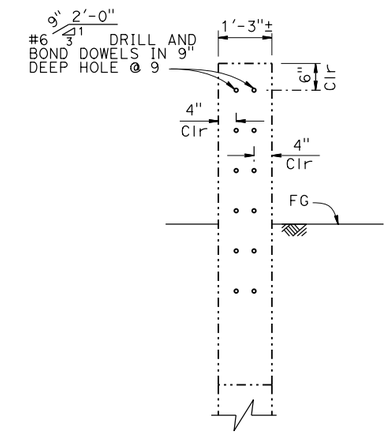

SECTION A-A

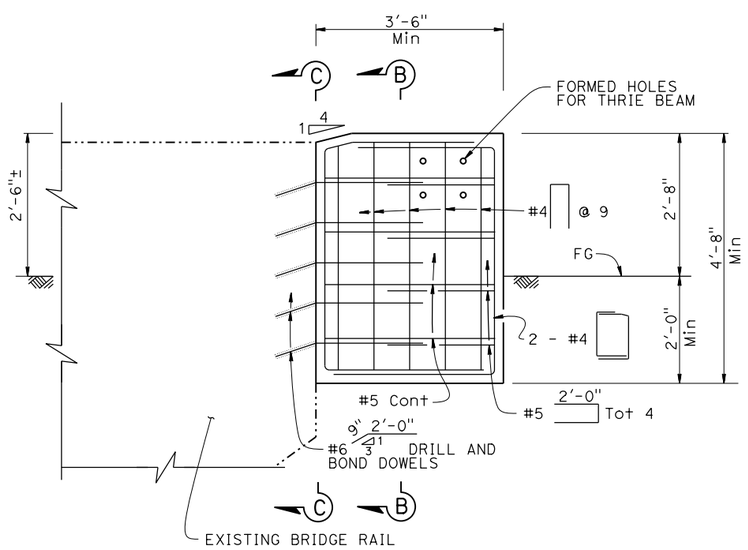

ELEVATION
PM 58.00

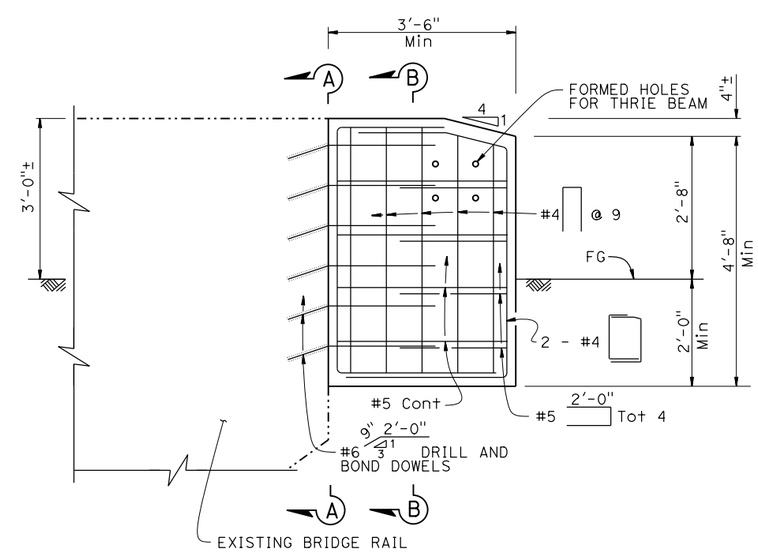

ELEVATION
PM 57.93

CONSTRUCTION DETAILS
TRANSITION BLOCK
NO SCALE

C-9

REVISED BY	DATE REVISED

JEANNIE STEFFAN — HEIDI BORDERS — CALCULATED-DESIGNED BY / CHECKED BY

FUNCTIONAL SUPERVISOR: JULIE CASEY

STATE OF CALIFORNIA - DEPARTMENT OF TRANSPORTATION
Caltrans® DESIGN

P:\proj1\02\4E410_plans\pse\24e410ga009.dgn

LAST REVISION 11-06-13 — DATE PLOTTED => 07-NOV-2013 — TIME PLOTTED => 07:20

Dist	COUNTY	ROUTE	POST MILES TOTAL PROJECT	SHEET No.	TOTAL SHEETS
02	Tri	299	53.5/64.0	16	70

REGISTERED CIVIL ENGINEER 11-06-13 DATE

11-06-13
PLANS APPROVAL DATE

REGISTERED PROFESSIONAL ENGINEER HEIDI E. BORDERS No. C64194 Exp. 6-30-15 CIVIL STATE OF CALIFORNIA

THE STATE OF CALIFORNIA OR ITS OFFICERS OR AGENTS SHALL NOT BE RESPONSIBLE FOR THE ACCURACY OR COMPLETENESS OF SCANNED COPIES OF THIS PLAN SHEET.

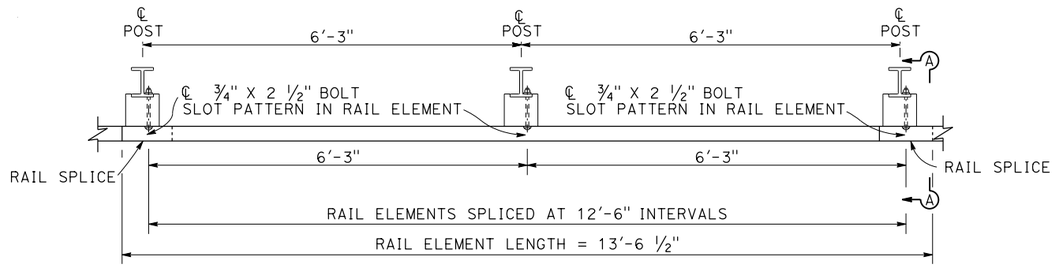

PLAN

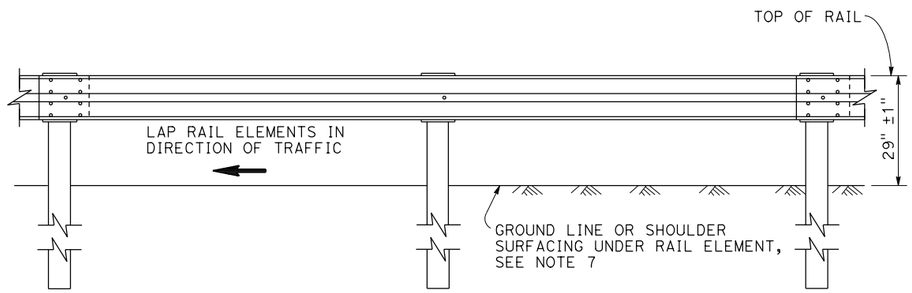

ELEVATION

METAL BEAM GUARD RAILING WITH STEEL POSTS AND NOTCHED WOOD OR NOTCHED RECYCLED PLASTIC BLOCKS

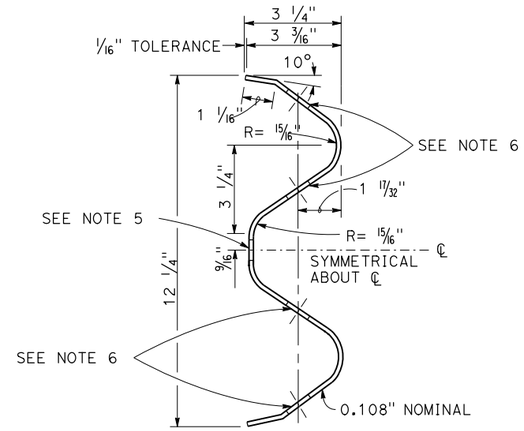

SECTION THRU RAIL ELEMENT

NOTES:

1. GUARD RAILING POST SPACING TO BE 6′-3″ CENTER TO CENTER, EXCEPT AS OTHERWISE NOTED.
2. TO CONNECT RAILING TO TERMINAL SYSTEM END TREATMENT, TRANSITION THE TOP OF RAILING HEIGHT AT A RATIO OF 120:1 TO TERMINAL SYSTEM END TREATMENT HEIGHT PLUS ONE 12′-6″ STANDARD RAILING SECTION AT THE TRANSITIONED HEIGHT FOR A HORIZONTAL CONNECTION TO THE END TREATMENT.
3. DIRECTION OF ADJACENT TRAFFIC INDICATED BY →
4. NOTCHED FACE OF BLOCK FACES STEEL POST.
5. SLOTTED HOLE FOR BOLTED CONNECTION OF RAIL ELEMENT TO BLOCK AND POST. SEE "SECTION THRU RAIL ELEMENT".
6. SLOTTED HOLES FOR SPLICE BOLTS TO OVERLAP ENDS OF RAIL ELEMENT. SEE "RAIL ELEMENT SPLICE DETAIL".
7. INSTALL POSTS IN SOIL.

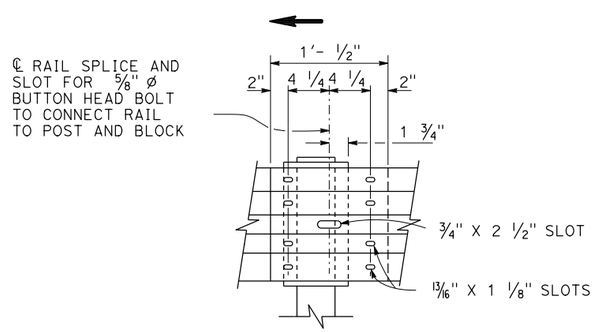

ELEVATION

RAIL ELEMENT SPLICE DETAIL

A) CONNECT THE OVER LAPPED END OF THE RAIL ELEMENTS WITH ⅝″ ø X 1 ⅜″ BUTTON HEAD OVAL SHOULDER SPLICE BOLTS INSERTED INTO THE 13/16″ X 1 ⅛″ SLOTS AND BOLTED TOGETHER WITH ⅝″ ø RECESSED HEX NUTS. RECESS OF HEX NUT POINTS TOWARD RAIL ELEMENT. A TOTAL OF 8 BOLTS AND NUTS ARE TO BE USED AT EACH RAIL SPLICE CONNECTION.

B) THE ENDS OF THE RAIL ELEMENTS ARE TO BE OVERLAPPED IN THE DIRECTION OF TRAFFIC (SEE DETAILS).

C) WHERE END CAP IS TO BE ATTACHED TO THE END OF A RAIL ELEMENT, A TOTAL OF 4 OF THE ABOVE DESCRIBED SPLICE BOLTS AND NUTS ARE TO BE USED.

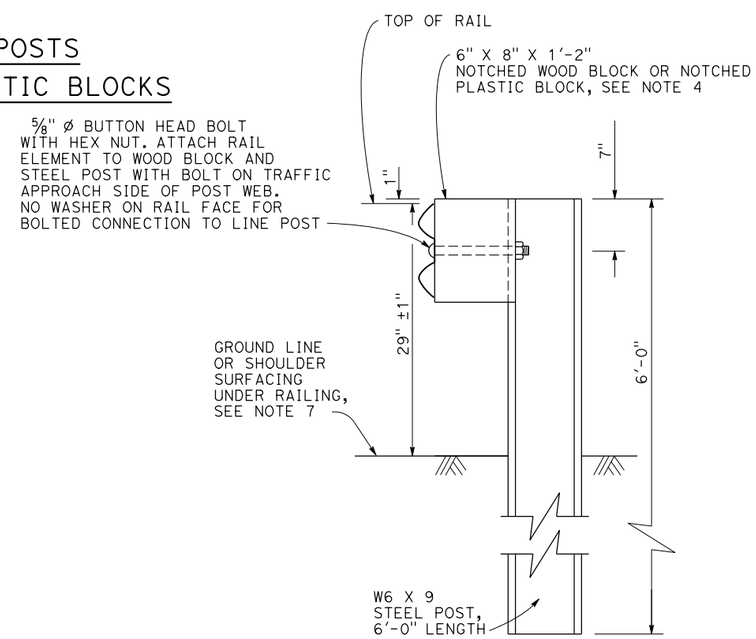

SECTION A-A

TYPICAL STEEL LINE POST INSTALLATION

SEE NOTE 4

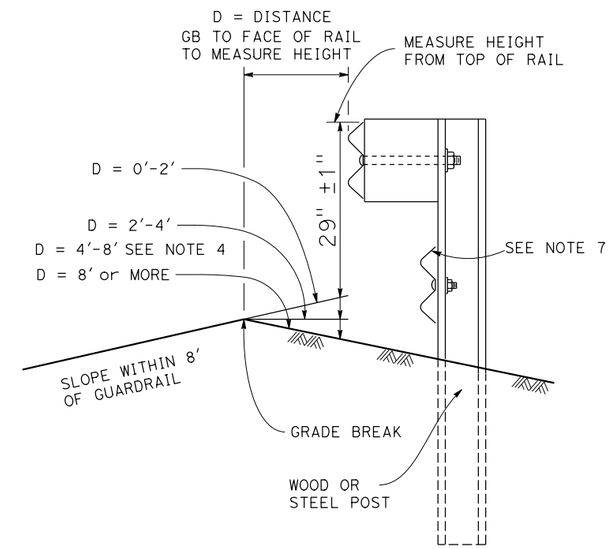

MEASURE HEIGHT DETAIL AT GRADE BREAK (GB)

WHEN THERE IS A BREAK POINT IN FRONT OF GUARDRAIL MEASURE HEIGHT OF GUARD RAIL BASED ON DISTANCE FROM GRADE BREAK TO ADJUST FOR TRAJECTORY.

CONSTRUCTION DETAILS METAL BEAM GUARD RAILING STANDARD RAILING SECTION (STEEL POST WITH NOTCHED WOOD OR NOTCHED RECYCLED PLASTIC BLOCK)

NO SCALE

C-10

REVISED BY	DATE REVISED

CALCULATED-DESIGNED BY	CHECKED BY
JEANNIE STEFFAN	HEIDI BORDERS

FUNCTIONAL SUPERVISOR: JULIE CASEY

STATE OF CALIFORNIA - DEPARTMENT OF TRANSPORTATION
Caltrans® DESIGN

P:\proj1\02\4E410_plans\pse\24e410ga010.dgn

LAST REVISION 11-06-13 DATE PLOTTED => 07-NOV-2013 TIME PLOTTED => 07:20

Dist	COUNTY	ROUTE	POST MILES TOTAL PROJECT	SHEET No.	TOTAL SHEETS
02	Tri	299	53.5/64.0	17	70

Heidi Borders 11-06-13
REGISTERED CIVIL ENGINEER DATE

11-06-13
PLANS APPROVAL DATE

REGISTERED PROFESSIONAL ENGINEER HEIDI E. BORDERS No. C64194 Exp. 6-30-15 CIVIL STATE OF CALIFORNIA

THE STATE OF CALIFORNIA OR ITS OFFICERS OR AGENTS SHALL NOT BE RESPONSIBLE FOR THE ACCURACY OR COMPLETENESS OF SCANNED COPIES OF THIS PLAN SHEET.

NOTE:

1. SLOTTED HOLES FOR SPLICE BOLTS TO OVERLAP ENDS OF RAIL ELEMENT.

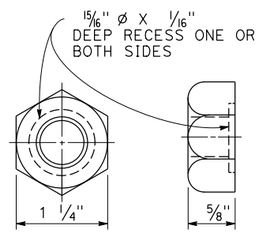

5/8" Ø RECESS NUT

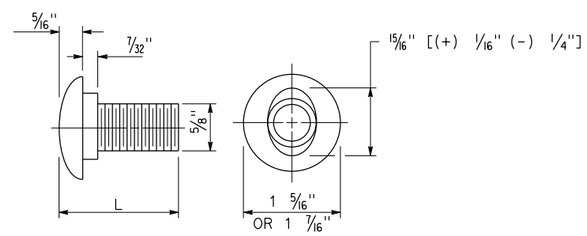

5/8" Ø BUTTON HEAD BOLT

L	THREAD LENGTH
1 3/8"	FULL THREAD LENGTH
2"	FULL THREAD LENGTH
10"	4" MIN THREAD LENGTH
18"	4" MIN THREAD LENGTH
20"	4" MIN THREAD LENGTH
22"	4" MIN THREAD LENGTH
** 2 3/4"	2" MIN THREAD LENGTH
** 19"	4" MIN THREAD LENGTH

** FOR NESTED RAIL APPLICATIONS.

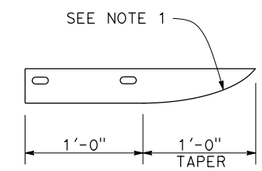

PLAN

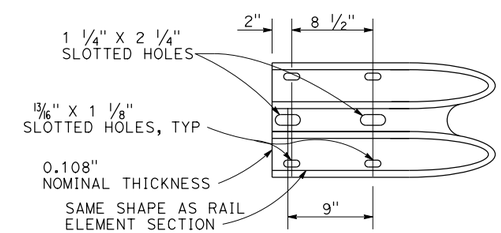

ELEVATION
END CAP
(TYPE A)

CONSTRUCTION DETAILS
METAL BEAM GUARD RAILING
STANDARD HARDWARE

NO SCALE

C-11

JEANNIE STEFFAN — HEIDI BORDERS — CALCULATED-DESIGNED BY — CHECKED BY
FUNCTIONAL SUPERVISOR — JULIE CASEY
REVISED BY — DATE REVISED
STATE OF CALIFORNIA - DEPARTMENT OF TRANSPORTATION — Caltrans® DESIGN
P:\proj1\02\4E410_plans\pse\24e410ga011.dgn

LAST REVISION 11-06-13 — DATE PLOTTED => 07-NOV-2013 — TIME PLOTTED => 07:20

Dist	COUNTY	ROUTE	POST MILES TOTAL PROJECT	SHEET No.	TOTAL SHEETS
02	Tri	299	53.5/64.0	18	70

REGISTERED CIVIL ENGINEER 11-06-13 DATE

11-06-13
PLANS APPROVAL DATE

REGISTERED PROFESSIONAL ENGINEER HEIDI E. BORDERS No. C64194 Exp. 6-30-15 CIVIL STATE OF CALIFORNIA

THE STATE OF CALIFORNIA OR ITS OFFICERS OR AGENTS SHALL NOT BE RESPONSIBLE FOR THE ACCURACY OR COMPLETENESS OF SCANNED COPIES OF THIS PLAN SHEET.

NOTES:

1. ALL HOLES IN STEEL POST SHALL BE 13/16" Dia MAXIMUM.
2. NOTCHED FACE OF BLOCK FACES STEEL POST.
3. 6'-0" LENGTH POSTS TO BE USED FOR TYPICAL ROADWAY INSTALLATION. 7'-0" LENGTH POSTS TO BE USED WHERE INDICATED ON PLANS.
4. W6 X 15 STEEL POST, 8'-0" IN LENGTH, WITH 8" NOTCHED BLOCKS MAY BE USED IN PLACE OF THE 10" X 10" X 8'-0" WOOD POST WITH 8" BLOCK SHOWN IN THE "STRENGTHENED RAILING SECTIONS DETAILS".
5. DIRECTION OF ADJACENT TRAFFIC INDICATED BY ←.

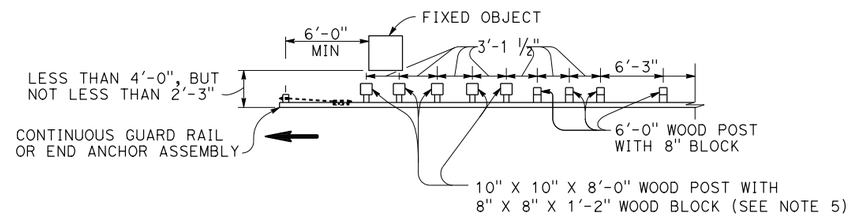

NOTE A: FOR A SERIES OF FIXED OBJECTS (BRIDGE COLUMNS, OVERHEAD SIGN SUPPORTS, ETC.) ADDITIONAL 10" X 10" X 8'-0" WOOD POST WITH 8" X 8" X 1'-2" WOOD BLOCKS AT 3'-1 1/2" CENTER TO CENTER SPACING ARE TO BE USED BETWEEN FIXED OBJECTS.

STRENGTHENED RAILING SECTIONS FOR FIXED OBJECT

USE STRENGTHENED RAILING SECTIONS WHERE MINIMUM CLEARANCE BETWEEN THE FACE OF THE GUARD RAILING AND FIXED OBJECT(S) IS LESS THAN 4'-0", BUT NOT LESS THAN 2'-3".

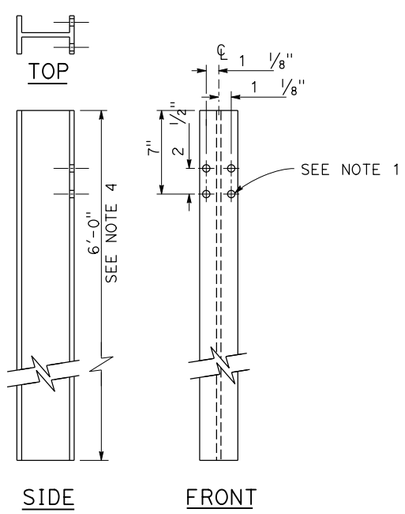

W6 X 9
STEEL POST
SEE NOTE 4

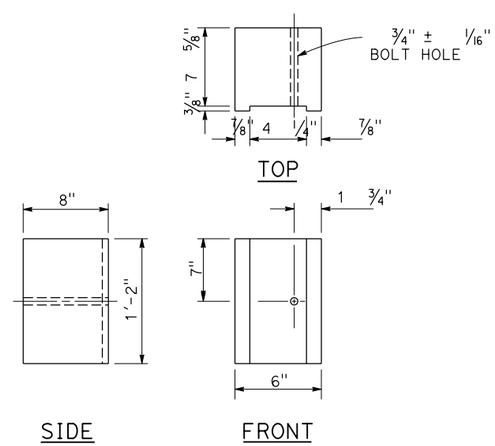

6" X 8"
NOTCHED PLASTIC BLOCK
SEE NOTES 2 AND 3

METAL BEAM GUARD RAILING STEEL POST AND NOTCHED PLASTIC BLOCK DETAILS

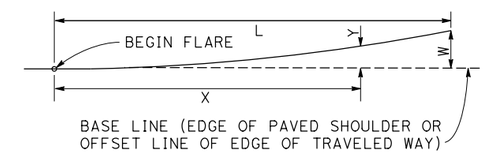

$$Y = \frac{WX^2}{L^2}$$

Y = OFFSET FROM BASE LINE
W = MAXIMUM OFFSET
X = DISTANCE ALONG BASE LINE
L = LENGTH OF FLARE

PARABOLIC FLARE OFFSETS

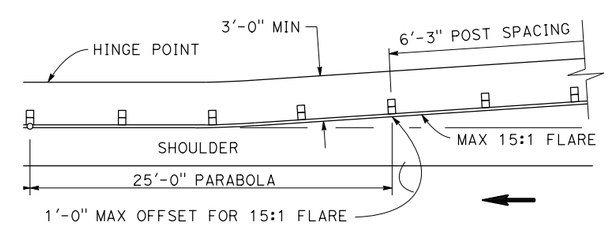

GUARDRAIL WITH FLARED ALIGNMENT DETAIL

CONSTRUCTION DETAILS

NO SCALE

C-12

REVISED BY	DATE REVISED

CALCULATED-DESIGNED BY	CHECKED BY
JEANNIE STEFFAN	HEIDI BORDERS

FUNCTIONAL SUPERVISOR: JULIE CASEY

STATE OF CALIFORNIA - DEPARTMENT OF TRANSPORTATION
Caltrans® DESIGN

P:\proj1\02\4E410_plans\pse\24e410ga012.dgn

LAST REVISION 11-06-13 | DATE PLOTTED => 07-NOV-2013 | TIME PLOTTED => 07:20

Dist	COUNTY	ROUTE	POST MILES TOTAL PROJECT	SHEET No.	TOTAL SHEETS
02	Tri	299	53.5/64.0	19	70

REGISTERED CIVIL ENGINEER 11-06-13 DATE

11-06-13
PLANS APPROVAL DATE

REGISTERED PROFESSIONAL ENGINEER HEIDI E. BORDERS No. C64194 Exp. 6-30-15 CIVIL STATE OF CALIFORNIA

THE STATE OF CALIFORNIA OR ITS OFFICERS OR AGENTS SHALL NOT BE RESPONSIBLE FOR THE ACCURACY OR COMPLETENESS OF SCANNED COPIES OF THIS PLAN SHEET.

NOTES:

1. DIRECTION OF ADJACENT TRAFFIC INDICATED BY →

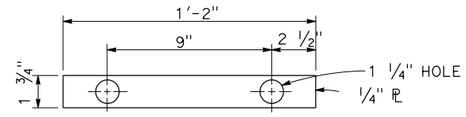

PLATE 'A'

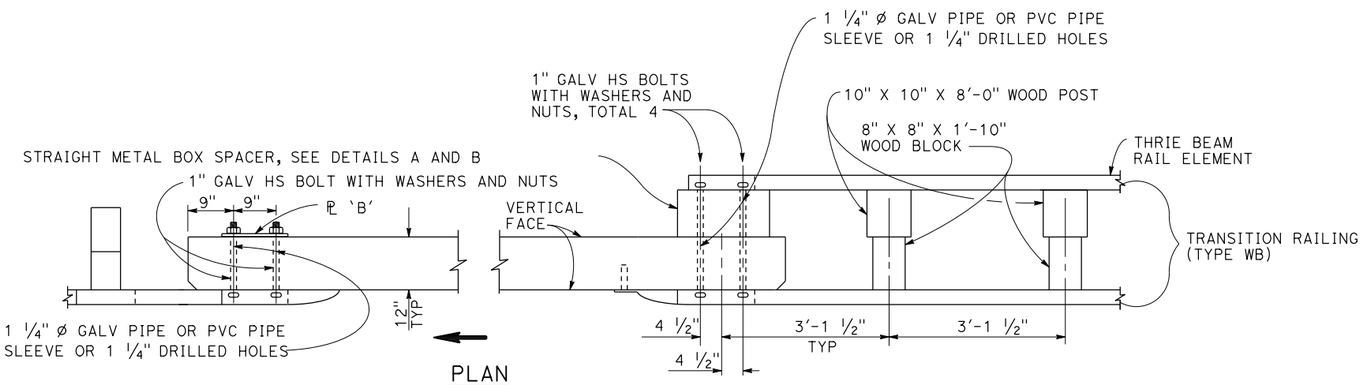

PLAN

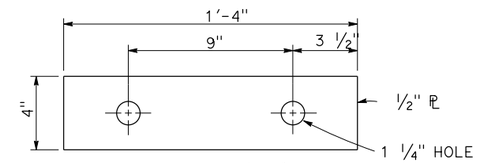

PLATE 'B'

(FOR BACKSIDE OF CONNECTION BB)

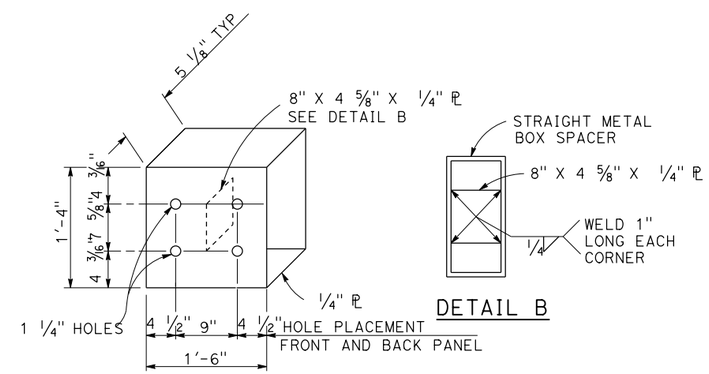

DETAIL B

DETAIL A

STRAIGHT METAL BOX SPACER

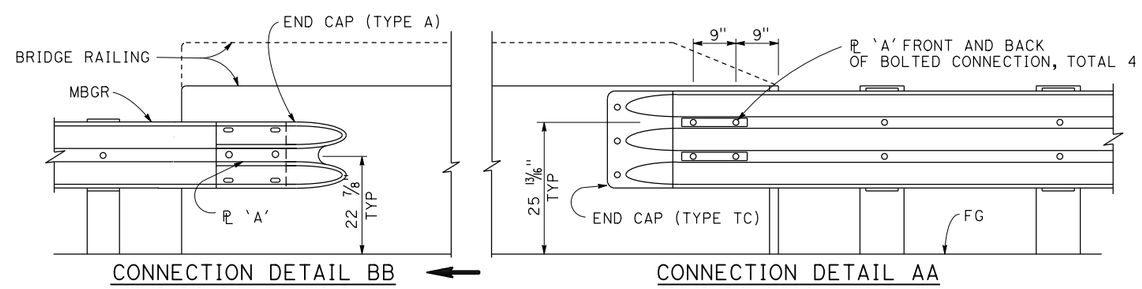

CONNECTION DETAIL BB

CONNECTION DETAIL AA

ELEVATION

GUARD RAILING CONNECTION TO BRIDGE RAILING WITHOUT SIDEWALK

CONSTRUCTION DETAILS METAL BEAM GUARD RAILING CONNECTIONS TO BRIDGE RAILINGS WITHOUT SIDEWALKS DETAILS NO. 1

NO SCALE

C-13

REVISED BY	DATE REVISED
JEANNIE STEFFAN	HEIDI BORDERS
CALCULATED-DESIGNED BY	CHECKED BY
FUNCTIONAL SUPERVISOR	JULIE CASEY

STATE OF CALIFORNIA - DEPARTMENT OF TRANSPORTATION
Caltrans® DESIGN

P:\proj1\02\4E410_plans\pse\24e410ga013.dgn

LAST REVISION 11-06-13 | DATE PLOTTED => 07-NOV-2013 | TIME PLOTTED => 07:20

Dist	COUNTY	ROUTE	POST MILES TOTAL PROJECT	SHEET No.	TOTAL SHEETS
02	Tri	299	53.5/64.0	20	70

Heidi Borders 11-06-13
REGISTERED CIVIL ENGINEER DATE

11-06-13
PLANS APPROVAL DATE

REGISTERED PROFESSIONAL ENGINEER HEIDI E. BORDERS No. C64194 Exp. 6-30-15 CIVIL STATE OF CALIFORNIA

THE STATE OF CALIFORNIA OR ITS OFFICERS OR AGENTS SHALL NOT BE RESPONSIBLE FOR THE ACCURACY OR COMPLETENESS OF SCANNED COPIES OF THIS PLAN SHEET.

NOTES:

1. DIRECTION OF ADJACENT TRAFFIC INDICATED BY →

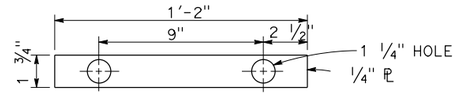

PLATE 'A'

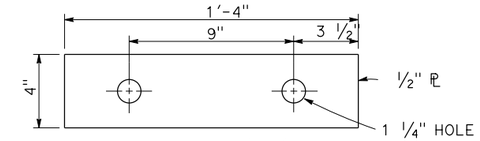

PLATE 'B'
(FOR BACKSIDE OF CONNECTION BB)

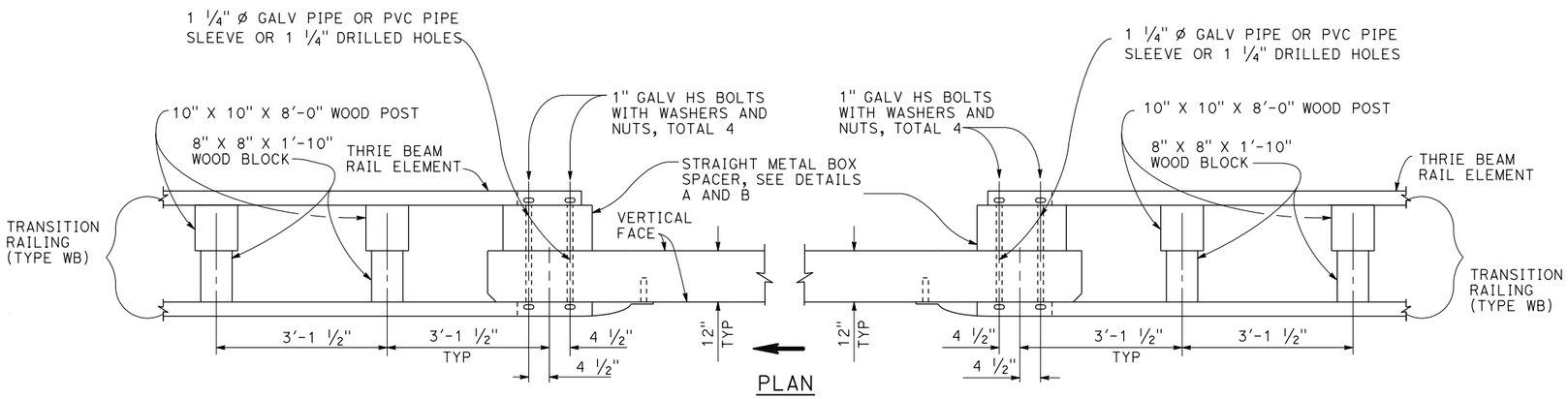

PLAN

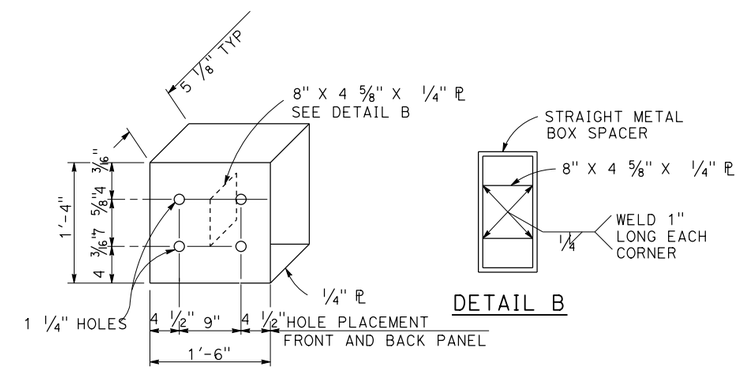

DETAIL A

DETAIL B

STRAIGHT METAL BOX SPACER

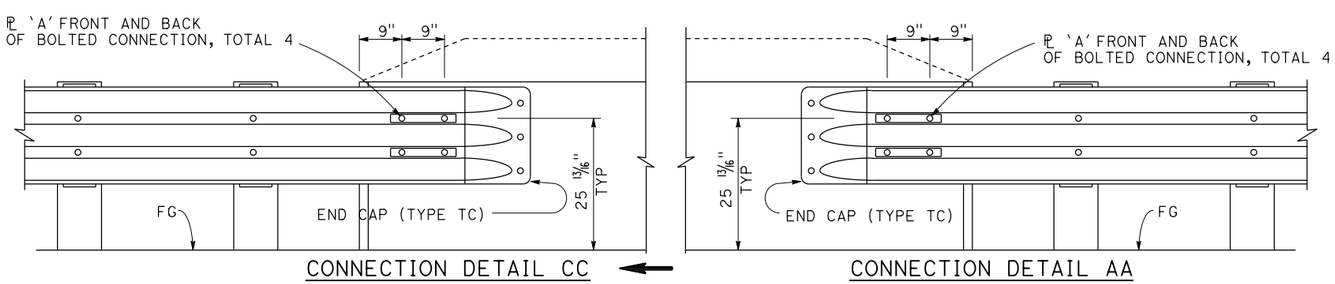

CONNECTION DETAIL CC

CONNECTION DETAIL AA

ELEVATION

GUARD RAILING CONNECTION TO BRIDGE RAILING WITHOUT SIDEWALK

CONSTRUCTION DETAILS
METAL BEAM GUARD RAILING CONNECTIONS TO BRIDGE RAILINGS WITHOUT SIDEWALKS DETAILS NO. 2

NO SCALE

C-14

REVISED BY	DATE REVISED

JEANNIE STEFFAN	HEIDI BORDERS
CALCULATED-DESIGNED BY	CHECKED BY
FUNCTIONAL SUPERVISOR	JULIE CASEY

STATE OF CALIFORNIA - DEPARTMENT OF TRANSPORTATION
Caltrans® DESIGN

P:\proj1\02\4E410_plans\pse\24e410ga014.dgn

LAST REVISION 11-06-13
DATE PLOTTED => 07-NOV-2013
TIME PLOTTED => 07:20

Dist	COUNTY	ROUTE	POST MILES TOTAL PROJECT	SHEET No.	TOTAL SHEETS
02	Tri	299	53.5/64.0	21	70

REGISTERED CIVIL ENGINEER — DATE: 11-06-13

PLANS APPROVAL DATE: 11-06-13

REGISTERED PROFESSIONAL ENGINEER — HEIDI E. BORDERS — No. C64194 — Exp. 6-30-15 — CIVIL — STATE OF CALIFORNIA

THE STATE OF CALIFORNIA OR ITS OFFICERS OR AGENTS SHALL NOT BE RESPONSIBLE FOR THE ACCURACY OR COMPLETENESS OF SCANNED COPIES OF THIS PLAN SHEET.

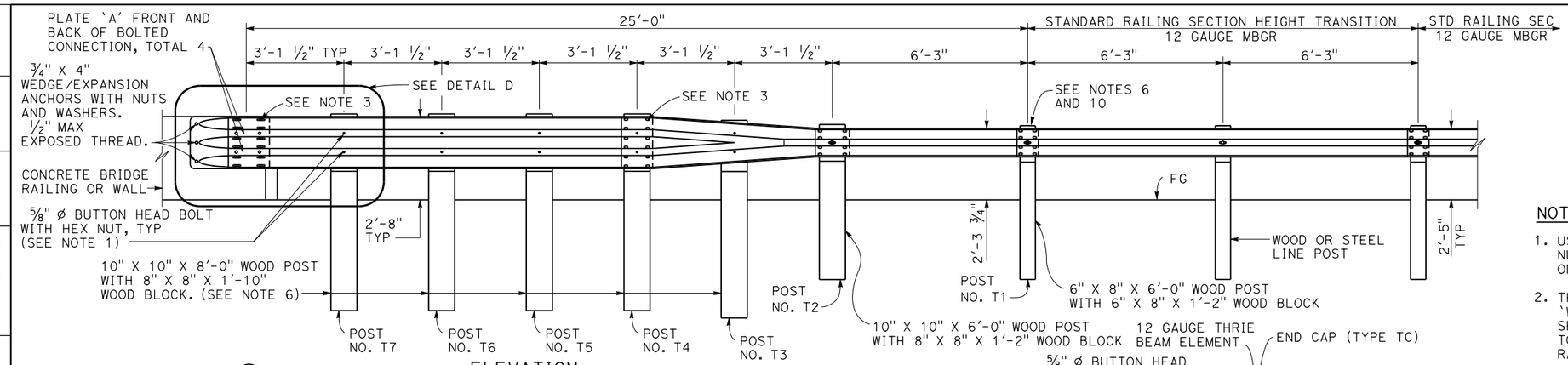

ELEVATION

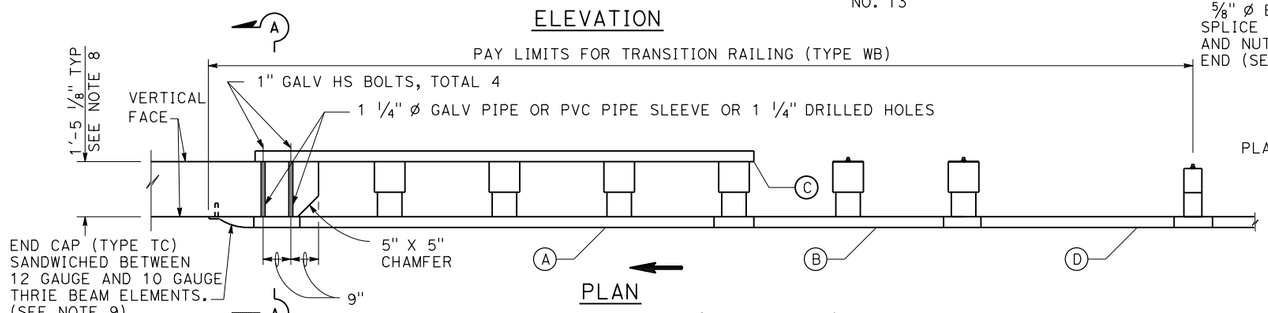

PLAN

TRANSITION RAILING (TYPE WB)

(NO BLOCKOUT ATTACHMENT)

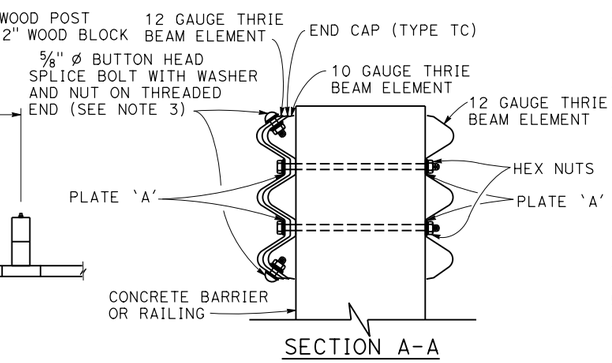

SECTION A-A

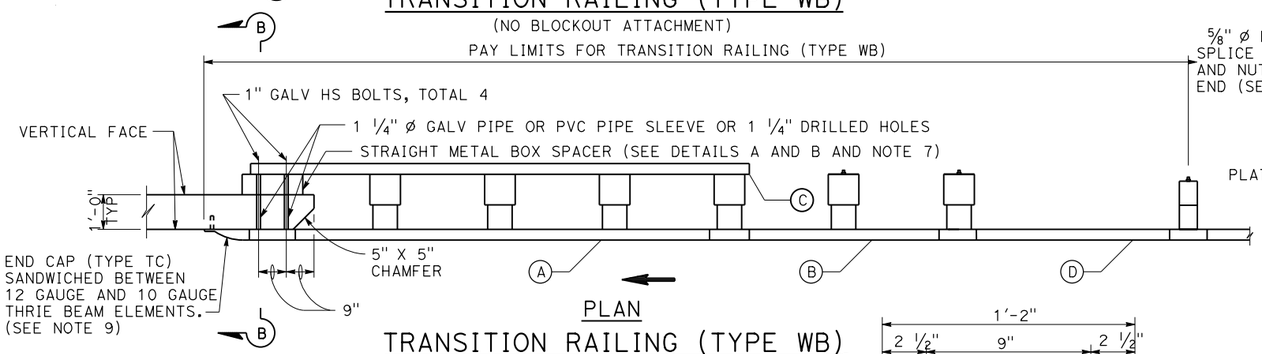

PLAN

TRANSITION RAILING (TYPE WB)

(BLOCKOUT ATTACHMENT)

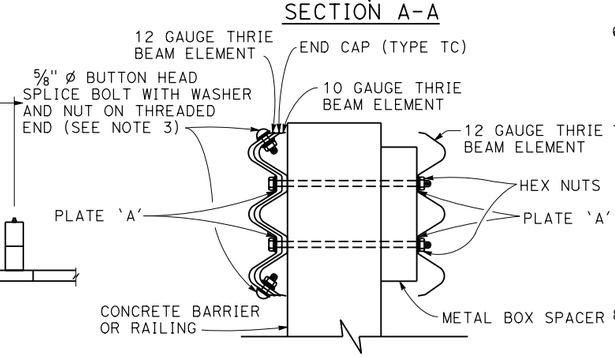

SECTION B-B

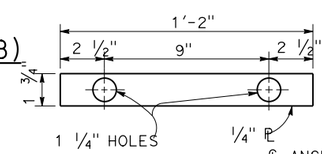

DETAIL C

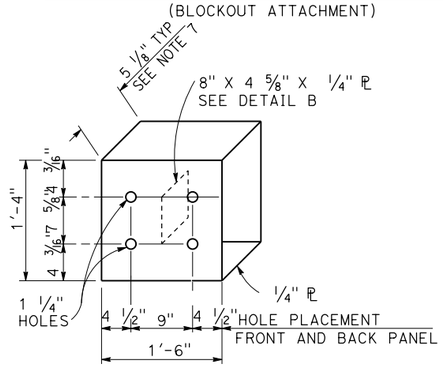

DETAIL A

STRAIGHT METAL BOX SPACER

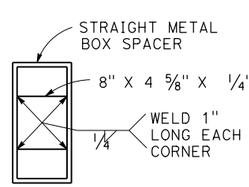

DETAIL B

PLATE 'A'

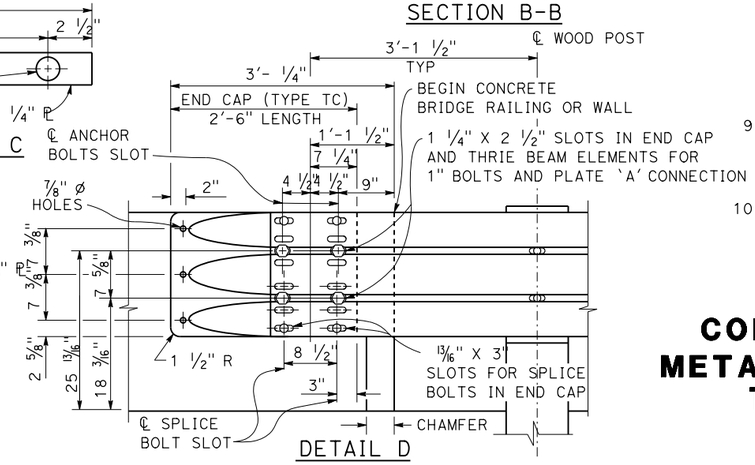

DETAIL D

LEGEND

- (A) NESTED THRIE BEAM ELEMENTS (ONE 12 GAUGE ELEMENT NESTED OVER ONE 10 GAUGE ELEMENT).
- (B) ONE 10 GAUGE "W" BEAM TO THRIE BEAM ELEMENT.
- (C) ONE 12 GAUGE THRIE BEAM ELEMENT.
- (D) ONE 10 GAUGE "W" BEAM RAIL ELEMENT (7'-3 1/2" LENGTH)

10 GAUGE = 0.135" THICK

12 GAUGE = 0.108" THICK

NOTES:

1. USE 5/8" * BUTTON HEAD BOLTS AND HEX NUTS FOR CONNECTIONS TO POSTS. NO WASHER ON RAIL FACE FOR BOLTED CONNECTIONS TO POST.
2. THE NESTED RAIL ELEMENTS, END CAP, AND 'W' BEAM TO THRIE BEAM ELEMENT MAY BE SPLICED TOGETHER PRIOR TO BOLTING THE ELEMENTS TO THE WOOD POST AND CONCRETE BARRIER OR RAILING.
3. EXTERIOR SPLICE BOLT HOLES FOR RAIL ELEMENT SPLICES AT POST NO. T4 AND THE CONNECTION TO THE CONCRETE BARRIER OR RAILING SHALL BE THE STANDARD 13/16" X 1 1/8" SLOT SIZE. INTERIOR SPLICE BOLT HOLES AT THESE LOCATIONS MAY BE INCREASED UP TO 1 1/4" *. ONLY THE TOP 2 AND THE BOTTOM 2 SPLICE BOLTS WITH WASHERS AND NUTS ARE REQUIRED FOR RAIL SPLICES AT POST NO. T4 AND THE CONNECTION TO THE CONCRETE BARRIER OR RAILING.
4. DIRECTION OF ADJACENT TRAFFIC INDICATED BY ⟶.
5. THE TOP ELEVATION OF POSTS NO. T2 THROUGH NO. T7 SHALL NOT PROJECT MORE THAN 1" ABOVE THE TOP ELEVATION OF THE RAIL ELEMENT.
6. TYPICALLY, THE RAILING CONNECTED TO TRANSITION RAILING (TYPE WB) WILL BE EITHER STANDARD RAILING SECTION OF METAL BEAM GUARD RAILING WITH HEIGHT TRANSITION RATIO OF 120:1 OR AN APPROVED CALTRANS END TREATMENT ATTACHED TO POST NO. T1.
7. THE DEPTH OF THE METAL BOX SPACER VARIES FROM THE 5 1/8" TO 1 1/2" AND IS DEPENDENT ON THE WIDTH OF THE CONCRETE RAILING OR WALL. THE COMBINED DIMENSION FOR THE DEPTH OF THE METAL BOX SPACER PLUS THE WIDTH OF RAILING OR WALL IS TYPICALLY 17 1/8". WHERE THE SPACE BETWEEN THE BACKSIDE OF THE CONCRETE RAILING OR WALL AND THE REAR THRIE BEAM ELEMENT IS LESS THAN 1 1/2", METAL PLATES SIMILAR TO PLATE 'A' ARE TO BE USED AS SPACERS.
8. WHERE THE WIDTH OF THE CONCRETE RAILING OR WALL IS GREATER THAN 17 1/8", WOOD BLOCKS ARE TO BE USED TO FILL THE SPACE CREATED BETWEEN THE BACKSIDE OF POSTS NO. T4 THROUGH NO. T7 AND THE REAR THRIE BEAM ELEMENT. THESE WOOD BLOCKS SHALL BE 8" IN WIDTH AND 1'-2" IN LENGTH. THE DIMENSION BETWEEN THE FRONT THRIE BEAM ELEMENT AND THE REAR THRIE BEAM ELEMENT IS TO MATCH THE WIDTH OF THE CONCRETE RAILING OR WALL.
9. END CAP MAY BE INSTALLED OVER 12 GAUGE AND 10 GAUGE THRIE BEAM ELEMENTS WHERE TRANSITION RAILING IS INSTALLED ON THE DEPARTURE END OF BRIDGE RAILING.
10. CONFORM STANDARD RAILING SECTION HEIGHT TO 2'-3 3/4" AT POST NO. T1 USING HEIGHT TRANSITION RATIO OF 120:1.

CONSTRUCTION DETAILS
METAL BEAM GUARD RAILING TRANSITION RAILING (TYPE WB)

NO SCALE

C-15

REVISED BY	DATE REVISED	JEANNIE STEFFAN	HEIDI BORDERS	CALCULATED-DESIGNED BY	CHECKED BY	FUNCTIONAL SUPERVISOR	JULIE CASEY

STATE OF CALIFORNIA - DEPARTMENT OF TRANSPORTATION — Caltrans® DESIGN

P:\proj1\02\4E410_plans\pse\24e410ga015.dgn

LAST REVISION 11-06-13 — DATE PLOTTED => 07-NOV-2013 — TIME PLOTTED => 07:20

Dist	COUNTY	ROUTE	POST MILES TOTAL PROJECT	SHEET No.	TOTAL SHEETS
02	Tri	299	53.5/64.0	22	70

Heidi Borders 11-06-13
REGISTERED CIVIL ENGINEER DATE

11-06-13
PLANS APPROVAL DATE

REGISTERED PROFESSIONAL ENGINEER HEIDI E. BORDERS No. C64194 Exp. 6-30-15 CIVIL STATE OF CALIFORNIA

THE STATE OF CALIFORNIA OR ITS OFFICERS OR AGENTS SHALL NOT BE RESPONSIBLE FOR THE ACCURACY OR COMPLETENESS OF SCANNED COPIES OF THIS PLAN SHEET.

NOTES:

1. DIRECTION OF TRAFFIC INDICATED BY ➡.
2. INTERMEDIATE ANCHOR ASSEMBLY IS TYPICALLY USED AT END OF SHOP BENT GUARD RAILING TO PROVIDE TENSION FOR THE NON SHOP BENT GUARD RAILING.

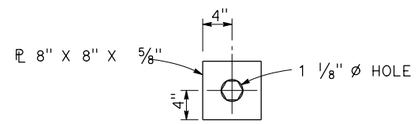

DETAIL "A"
CABLE CONNECTION
END PLATE

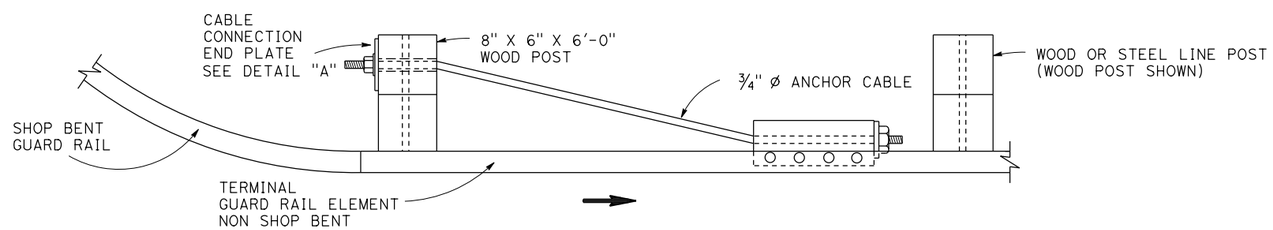

PLAN

INTERMEDIATE ANCHOR ASSEMBLY
SEE NOTE 2

REVISED BY	DATE REVISED
JEANNIE STEFFAN	HEIDI BORDERS
CALCULATED-DESIGNED BY	CHECKED BY
FUNCTIONAL SUPERVISOR	JULIE CASEY

STATE OF CALIFORNIA - DEPARTMENT OF TRANSPORTATION
Caltrans® DESIGN

P:\proj1\02\4E410_plans\pse\24e410ga016.dgn

CONSTRUCTION DETAILS
GUARD RAILING
NO SCALE

C-16

LAST REVISION 10-06-13 | DATE PLOTTED => 07-NOV-2013 | TIME PLOTTED => 07:20

Dist	COUNTY	ROUTE	POST MILES TOTAL PROJECT	SHEET No.	TOTAL SHEETS
02	Tri	299	53.5/64.0	23	70

Heidi Borders 11-06-13
REGISTERED CIVIL ENGINEER DATE

11-06-13
PLANS APPROVAL DATE

REGISTERED PROFESSIONAL ENGINEER HEIDI E. BORDERS No. C64194 Exp. 6-30-15 CIVIL STATE OF CALIFORNIA

THE STATE OF CALIFORNIA OR ITS OFFICERS OR AGENTS SHALL NOT BE RESPONSIBLE FOR THE ACCURACY OR COMPLETENESS OF SCANNED COPIES OF THIS PLAN SHEET.

LEGEND:

—— fo —— Exist FIBER OPTIC (AT&T)
- —— w —— — Exist WATERLINE

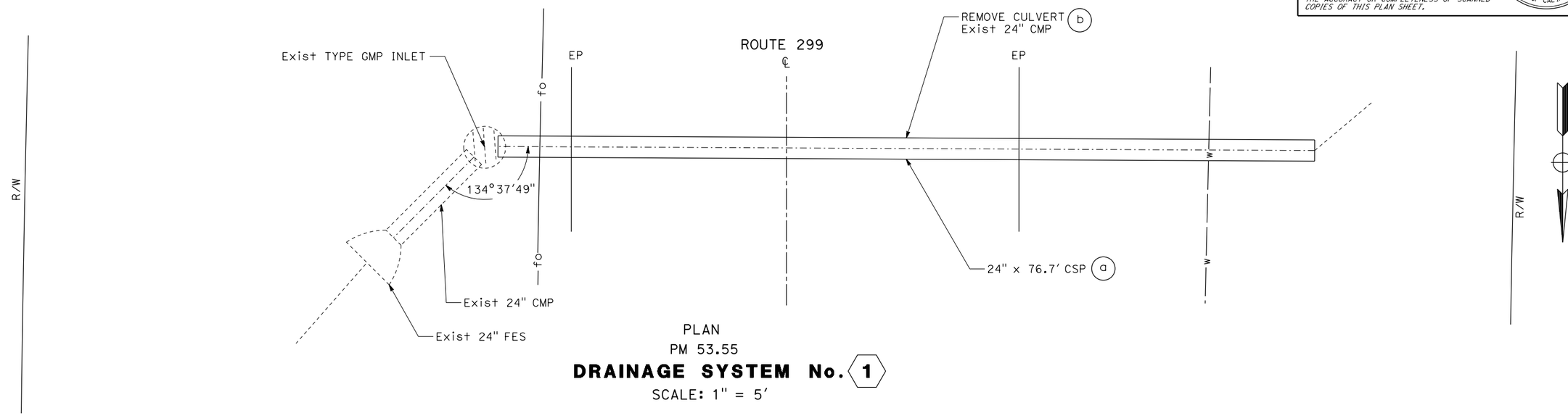

PLAN
PM 53.55
DRAINAGE SYSTEM No. 1
SCALE: 1" = 5'

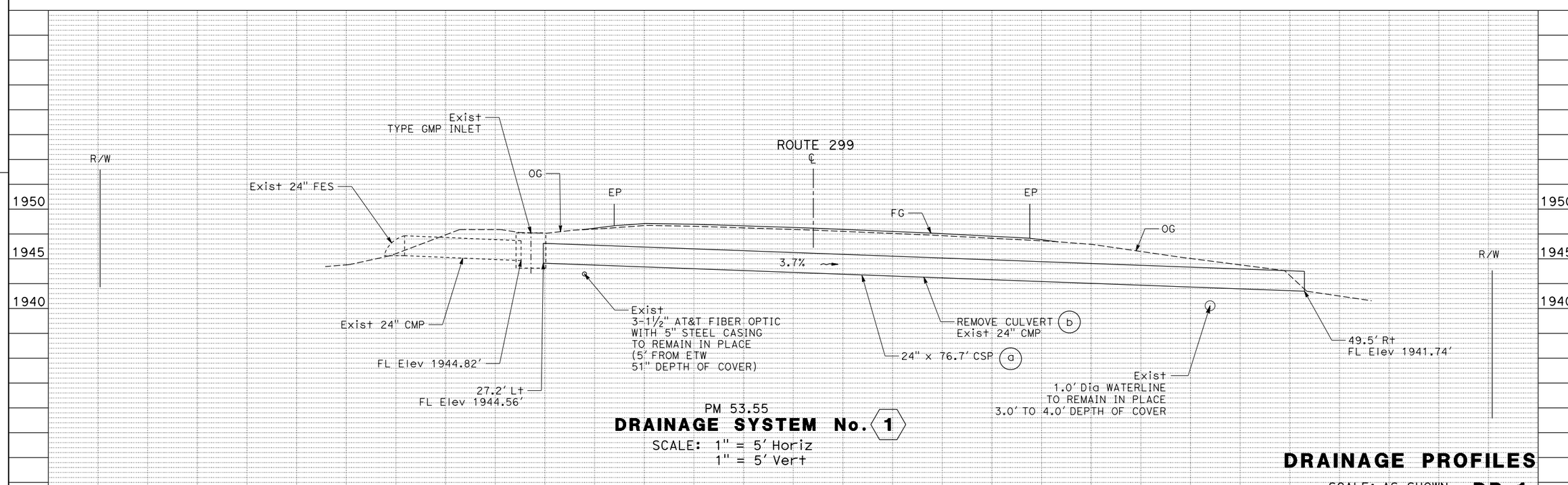

PM 53.55
DRAINAGE SYSTEM No. 1
SCALE: 1" = 5' Horiz
1" = 5' Vert

DRAINAGE PROFILES
SCALE: AS SHOWN **DP-1**

REVISED BY	DATE REVISED

JEANNIE STEFFAN	HEIDI BORDERS
CALCULATED-DESIGNED BY	CHECKED BY
FUNCTIONAL SUPERVISOR	JULIE CASEY

STATE OF CALIFORNIA - DEPARTMENT OF TRANSPORTATION
Caltrans® **DESIGN**

P:\proj\02\4E410_plans\pse\24e4101b001.dgn

LAST REVISION 11-06-13
DATE PLOTTED => 07-NOV-2013
TIME PLOTTED => 07:20

Dist	COUNTY	ROUTE	POST MILES TOTAL PROJECT	SHEET No.	TOTAL SHEETS
02	Tri	299	53.5/64.0	24	70

Heidi Borders 11-06-13
REGISTERED CIVIL ENGINEER DATE

11-06-13
PLANS APPROVAL DATE

REGISTERED PROFESSIONAL ENGINEER HEIDI E. BORDERS No. C64194 Exp. 6-30-15 CIVIL STATE OF CALIFORNIA

THE STATE OF CALIFORNIA OR ITS OFFICERS OR AGENTS SHALL NOT BE RESPONSIBLE FOR THE ACCURACY OR COMPLETENESS OF SCANNED COPIES OF THIS PLAN SHEET.

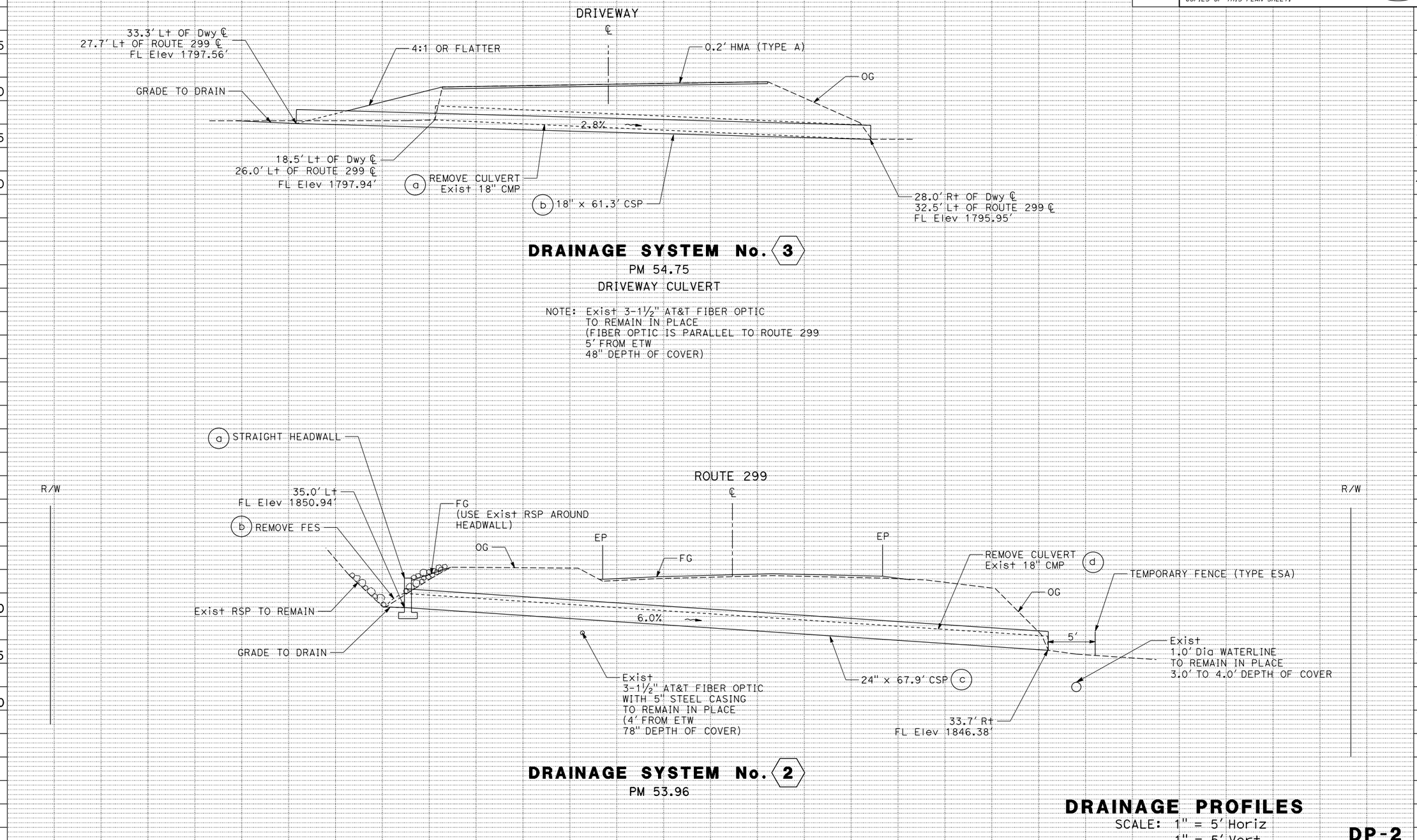

DRAINAGE PROFILES

SCALE: 1" = 5' Horiz
1" = 5' Vert

DP-2

REVISED BY | DATE REVISED
JEANNIE STEFFAN | HEIDI BORDERS
CALCULATED-DESIGNED BY | CHECKED BY
FUNCTIONAL SUPERVISOR: JULIE CASEY

STATE OF CALIFORNIA - DEPARTMENT OF TRANSPORTATION
Caltrans
DESIGN

P:\proj1\02\4E410_plans\pse\24e4101b002.dgn

LAST REVISION 11-06-13 | DATE PLOTTED => 07-NOV-2013 | TIME PLOTTED => 07:20

Dist	COUNTY	ROUTE	POST MILES TOTAL PROJECT	SHEET No.	TOTAL SHEETS
02	Tri	299	53.5/64.0	25	70

Heidi Borders 11-06-13
REGISTERED CIVIL ENGINEER DATE

11-06-13
PLANS APPROVAL DATE

REGISTERED PROFESSIONAL ENGINEER HEIDI E. BORDERS No. C64194 Exp. 6-30-15 CIVIL STATE OF CALIFORNIA

THE STATE OF CALIFORNIA OR ITS OFFICERS OR AGENTS SHALL NOT BE RESPONSIBLE FOR THE ACCURACY OR COMPLETENESS OF SCANNED COPIES OF THIS PLAN SHEET.

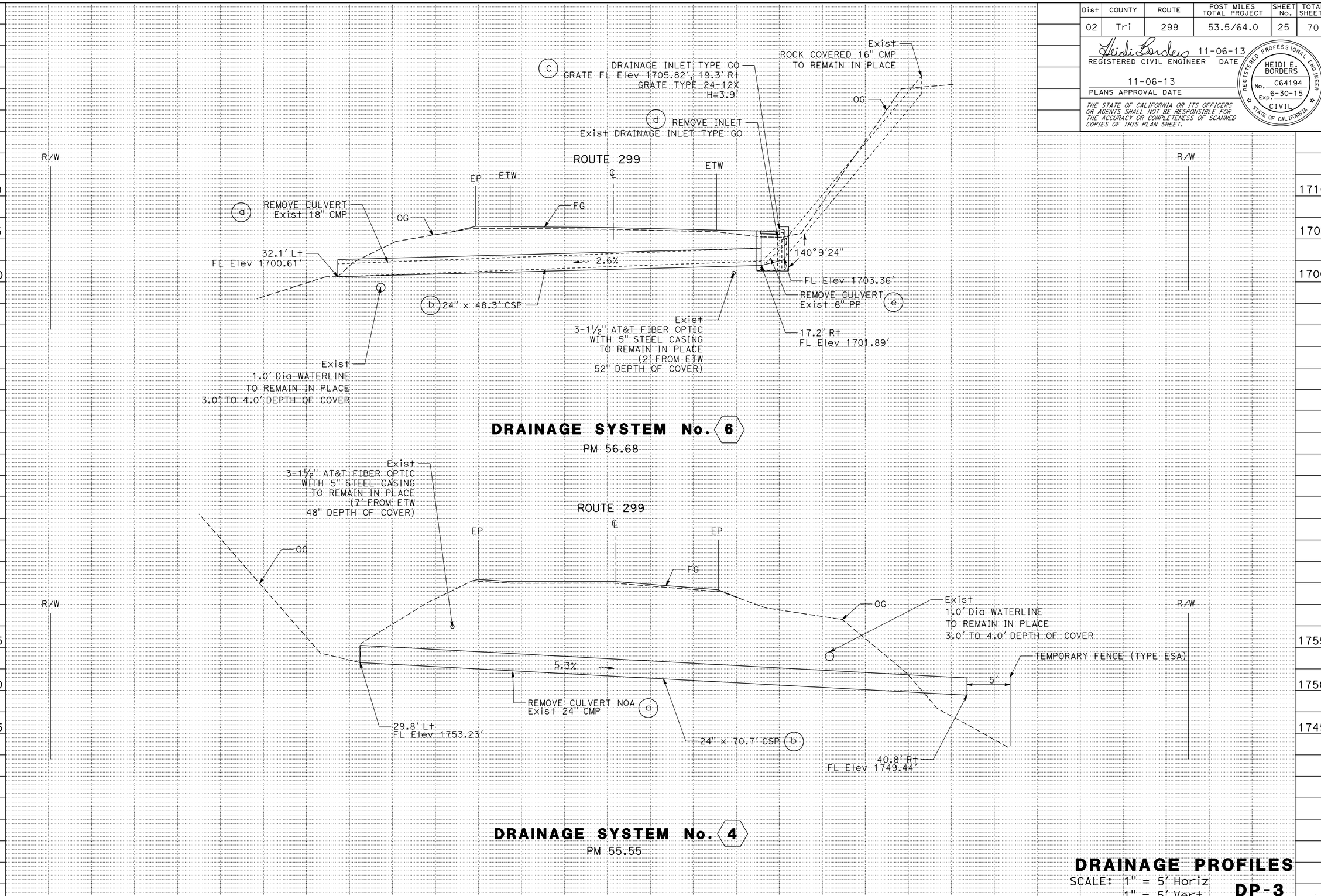

DRAINAGE PROFILES

SCALE: 1" = 5' Horiz
1" = 5' Vert

DP-3

REVISED BY	DATE REVISED
JEANNIE STEFFAN	HEIDI BORDERS
CALCULATED-DESIGNED BY	CHECKED BY
FUNCTIONAL SUPERVISOR	JULIE CASEY

STATE OF CALIFORNIA - DEPARTMENT OF TRANSPORTATION
Caltrans® **DESIGN**

P:\proj\02\4E410_plans\pse\24e4101b003.dgn

LAST REVISION 11-06-13 | DATE PLOTTED => 07-NOV-2013 | TIME PLOTTED => 07:20

Dist	COUNTY	ROUTE	POST MILES TOTAL PROJECT	SHEET No.	TOTAL SHEETS
02	Tri	299	53.5/64.0	26	70

Heidi Borders 11-06-13
REGISTERED CIVIL ENGINEER DATE

11-06-13
PLANS APPROVAL DATE

REGISTERED PROFESSIONAL ENGINEER HEIDI E. BORDERS No. C64194 Exp. 6-30-15 CIVIL STATE OF CALIFORNIA

THE STATE OF CALIFORNIA OR ITS OFFICERS OR AGENTS SHALL NOT BE RESPONSIBLE FOR THE ACCURACY OR COMPLETENESS OF SCANNED COPIES OF THIS PLAN SHEET.

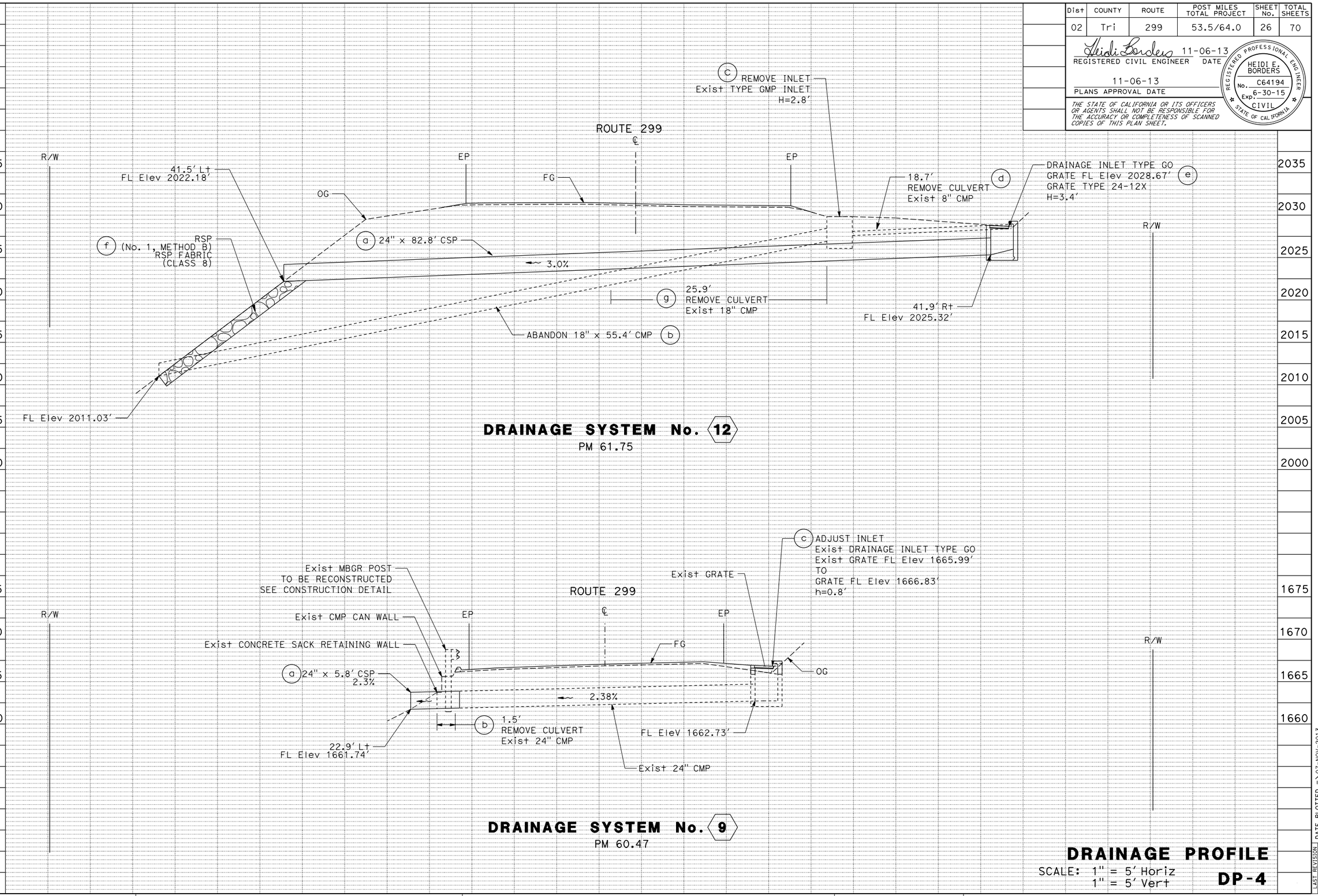

DRAINAGE PROFILE

SCALE: 1" = 5' Horiz
1" = 5' Vert

DP-4

REVISED BY	DATE REVISED
JEANNIE STEFFAN	HEIDI BORDERS
CALCULATED-DESIGNED BY	CHECKED BY
FUNCTIONAL SUPERVISOR	JULIE CASEY

STATE OF CALIFORNIA - DEPARTMENT OF TRANSPORTATION
Caltrans® **DESIGN**

P:\proj\02\4E410_plans\pse\24e410ib004.dgn

LAST REVISION 11-06-13
DATE PLOTTED => 07-NOV-2013
TIME PLOTTED => 07:20

Dist	COUNTY	ROUTE	POST MILES TOTAL PROJECT	SHEET No.	TOTAL SHEETS
02	Tri	299	53.5/64.0	27	70

Heidi Borders 11-06-13
REGISTERED CIVIL ENGINEER DATE

11-06-13
PLANS APPROVAL DATE

REGISTERED PROFESSIONAL ENGINEER
HEIDI E. BORDERS
No. C64194
Exp. 6-30-15
CIVIL
STATE OF CALIFORNIA

THE STATE OF CALIFORNIA OR ITS OFFICERS OR AGENTS SHALL NOT BE RESPONSIBLE FOR THE ACCURACY OR COMPLETENESS OF SCANNED COPIES OF THIS PLAN SHEET.

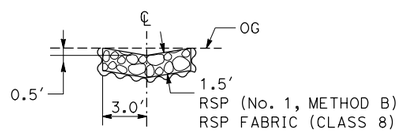

SECTION A-A

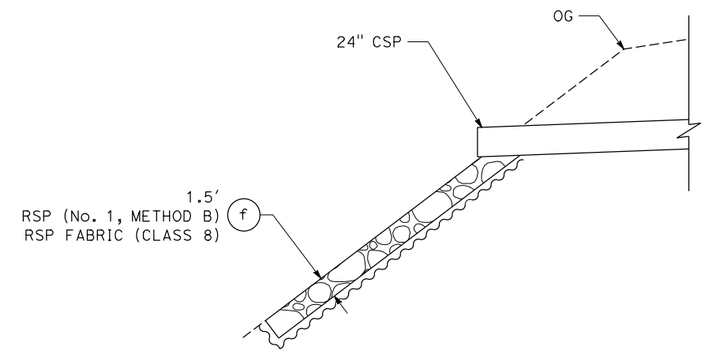

PROFILE

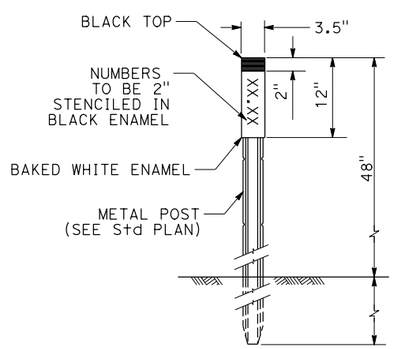

MARKER (CULVERT)

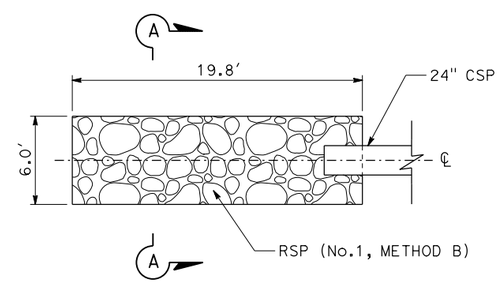

PLAN

RSP (BACKING No.1, METHOD B)

DRAINAGE SYSTEM 12 f

DRAINAGE DETAILS

NO SCALE

DD-1

REVISED BY	DATE REVISED

JEANNIE STEFFAN	HEIDI BORDERS
CALCULATED-DESIGNED BY	CHECKED BY

FUNCTIONAL SUPERVISOR: JULIE CASEY

STATE OF CALIFORNIA - DEPARTMENT OF TRANSPORTATION
Caltrans® DESIGN

P:\proj1\02\4E410_plans\pse\24e410ic001.dgn

LAST REVISION 11-06-13 | DATE PLOTTED => 07-NOV-2013 | TIME PLOTTED => 07:20

Dist	COUNTY	ROUTE	POST MILES TOTAL PROJECT	SHEET No.	TOTAL SHEETS
02	Tri	299	53.5/64.0	28	70

Heidi Borders 11-06-13
REGISTERED CIVIL ENGINEER DATE

11-06-13
PLANS APPROVAL DATE

REGISTERED PROFESSIONAL ENGINEER HEIDI E. BORDERS No. C64194 Exp. 6-30-15 CIVIL STATE OF CALIFORNIA

THE STATE OF CALIFORNIA OR ITS OFFICERS OR AGENTS SHALL NOT BE RESPONSIBLE FOR THE ACCURACY OR COMPLETENESS OF SCANNED COPIES OF THIS PLAN SHEET.

NOTES:

1. FOR DETAILS NOT SHOWN, REFER TO STANDARD PLANS.
2. SEE DRAINAGE QUANTITIES FOR LOCATIONS OF APPLICABLE INLETS AND ADJUSTMENT HEIGHTS.
3. CONTRACTOR SHALL FIELD VERIFY HEIGHTS PRIOR TO ADJUSTING INLETS.
4. TAPER DIKE HEIGHT FROM CURB HEIGHT TO 2".

LEGEND:

PCC

ABBREVIATIONS:

(E) EXISTING

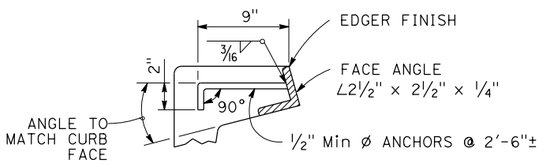

DETAIL B
(FACE ANGLE ANCHOR)

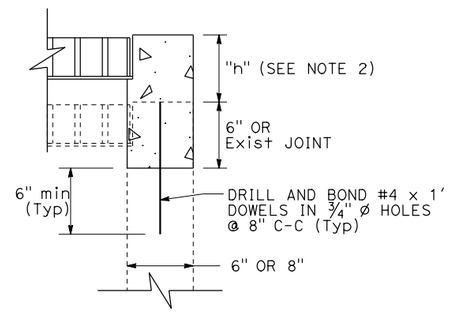

DETAIL A
(TYPICAL)

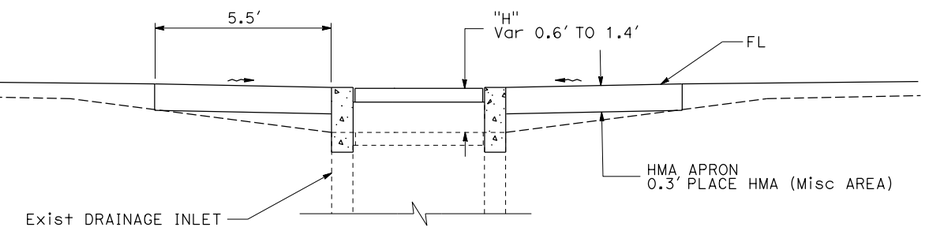

FRONT VIEW

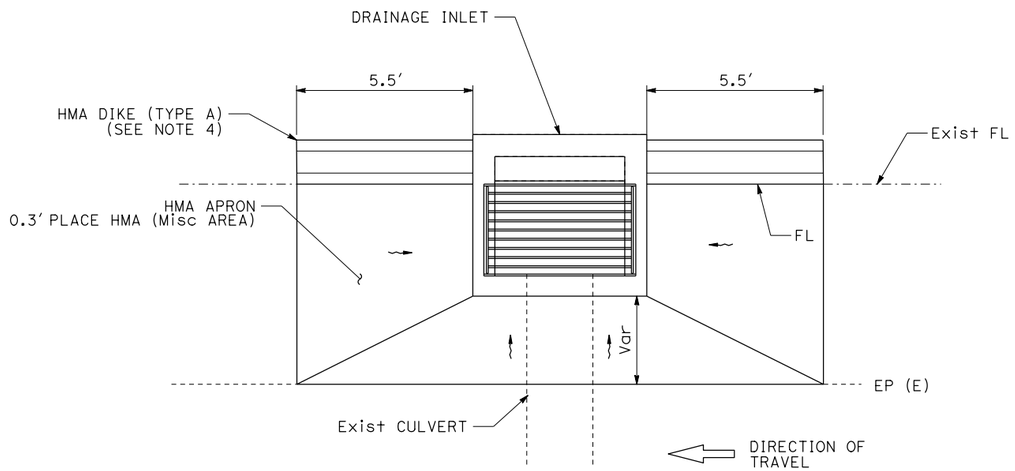

HMA APRON & DIKE

5 a 6 c 7 a 9 c

10 a 11 a 12 e

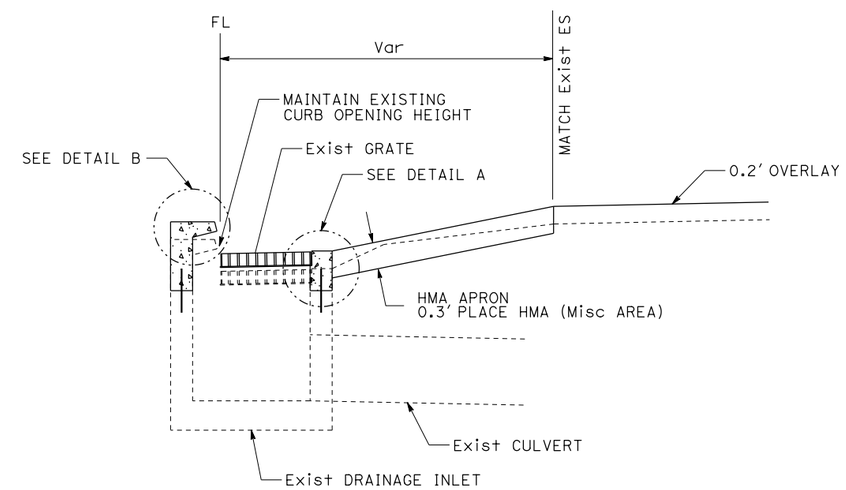

SIDE VIEW

ADJUST INLET

5 a 7 a 9 c 10 a 11 a

DRAINAGE DETAILS

NO SCALE

DD-2

REVISED BY | DATE REVISED
JEANNIE STEFFAN | HEIDI BORDERS
CALCULATED-DESIGNED BY | CHECKED BY
FUNCTIONAL SUPERVISOR | JULIE CASEY
STATE OF CALIFORNIA - DEPARTMENT OF TRANSPORTATION
Caltrans® DESIGN
P:\proj1\02\4E410_plans\pse\24e410ic002.dgn

LAST REVISION 11-06-13 | DATE PLOTTED => 07-NOV-2013 | TIME PLOTTED => 07:20

Dist	COUNTY	ROUTE	POST MILES TOTAL PROJECT	SHEET No.	TOTAL SHEETS
02	Tri	299	53.5/64.0	29	70

Heidi Borders 11-06-13
REGISTERED CIVIL ENGINEER DATE

11-06-13
PLANS APPROVAL DATE

REGISTERED PROFESSIONAL ENGINEER
HEIDI E. BORDERS
No. C64194
Exp. 6-30-15
CIVIL
STATE OF CALIFORNIA

THE STATE OF CALIFORNIA OR ITS OFFICERS OR AGENTS SHALL NOT BE RESPONSIBLE FOR THE ACCURACY OR COMPLETENESS OF SCANNED COPIES OF THIS PLAN SHEET.

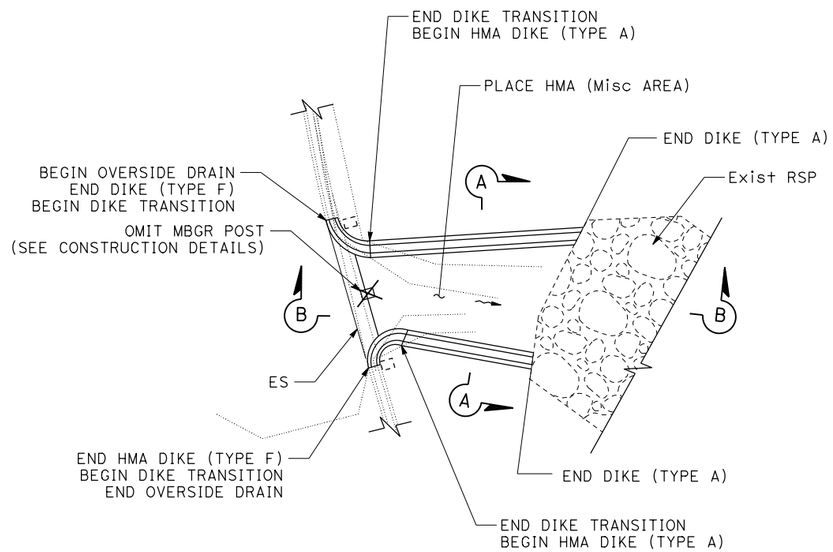

PLAN

OVERSIDE DRAIN 8 a

PM 60.07

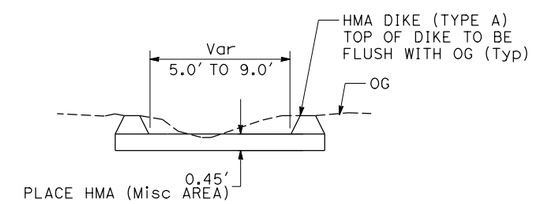

SECTION A-A

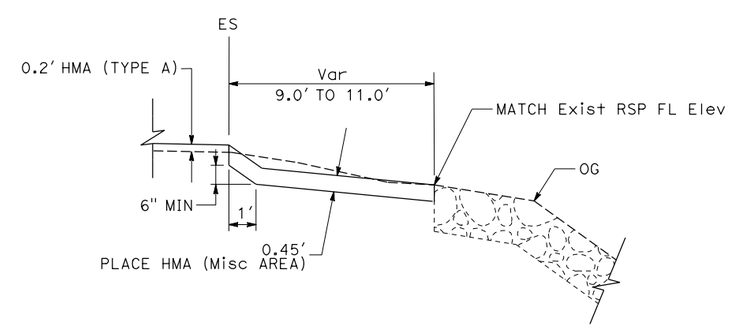

SECTION B-B

DRAINAGE DETAILS

NO SCALE

DD-3

REVISED BY	DATE REVISED
JEANNIE STEFFAN	HEIDI BORDERS
CALCULATED-DESIGNED BY	CHECKED BY
FUNCTIONAL SUPERVISOR	JULIE CASEY

STATE OF CALIFORNIA - DEPARTMENT OF TRANSPORTATION
Caltrans® **DESIGN**

P:\proj\02\4E410_plans\pse\24e410ic003.dgn

LAST REVISION 11-06-13 | DATE PLOTTED => 07-NOV-2013 | TIME PLOTTED => 07:20

Dist	COUNTY	ROUTE	POST MILES TOTAL PROJECT	SHEET No.	TOTAL SHEETS
02	Tri	299	53.5/64.0	30	70

Heidi Borders 11-06-13
REGISTERED CIVIL ENGINEER DATE

11-06-13
PLANS APPROVAL DATE

REGISTERED PROFESSIONAL ENGINEER HEIDI E. BORDERS No. C64194 Exp. 6-30-15 CIVIL STATE OF CALIFORNIA

THE STATE OF CALIFORNIA OR ITS OFFICERS OR AGENTS SHALL NOT BE RESPONSIBLE FOR THE ACCURACY OR COMPLETENESS OF SCANNED COPIES OF THIS PLAN SHEET.

LEGEND:

SMALL RSP

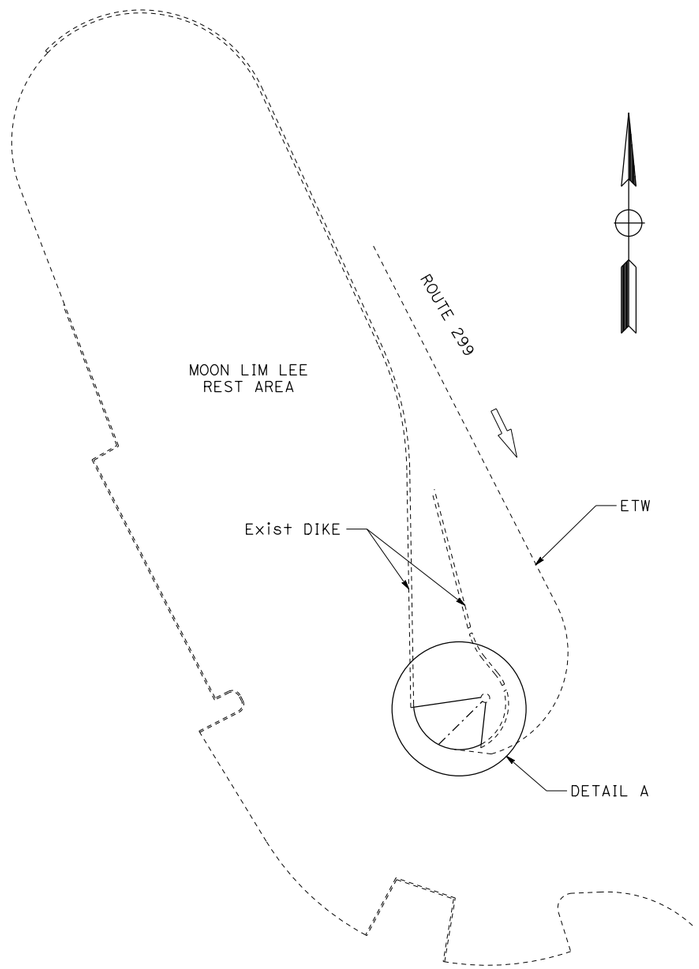

PLAN

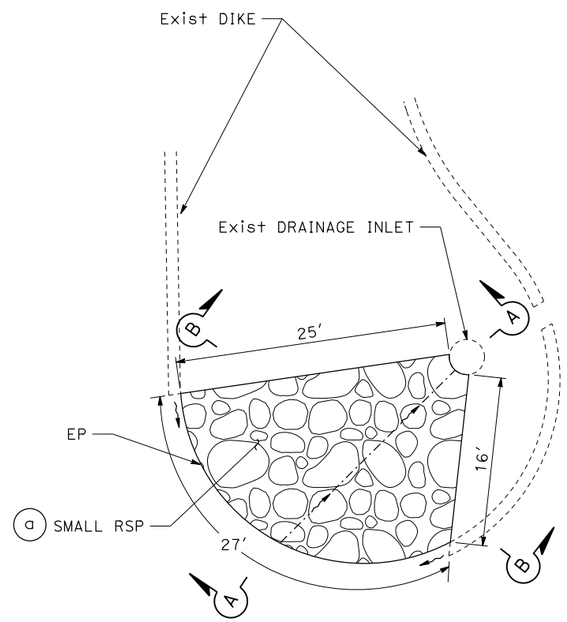

DETAIL A

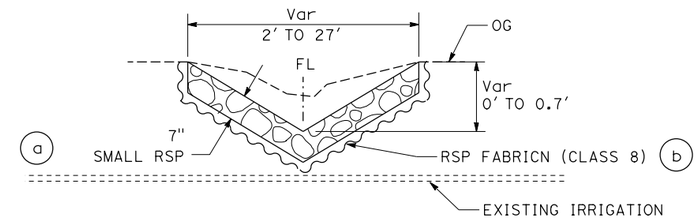

SECTION B-B

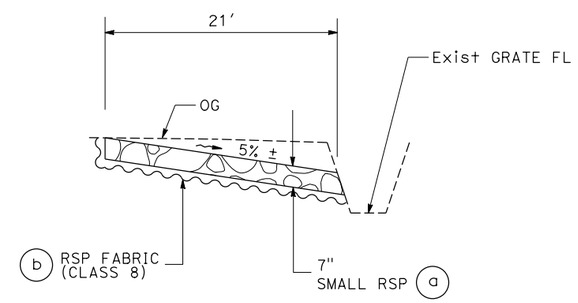

SECTION A-A

MOON LIM LEE REST AREA RSP 13

PM 56.67

DRAINAGE DETAILS

NO SCALE

DD-4

REVISED BY	DATE REVISED

JEANNIE STEFFAN	HEIDI BORDERS
CALCULATED-DESIGNED BY	CHECKED BY

FUNCTIONAL SUPERVISOR
JULIE CASEY

STATE OF CALIFORNIA - DEPARTMENT OF TRANSPORTATION
Caltrans® **DESIGN**

P:\proj\02\4E410_plans\pse\24e410ic004.dgn

LAST REVISION 11-06-13 | DATE PLOTTED => 07-NOV-2013 | TIME PLOTTED => 07:20

Dist	COUNTY	ROUTE	POST MILES TOTAL PROJECT	SHEET No.	TOTAL SHEETS
02	Tri	299	53.5/64.0	31	70

Heidi Borders 11-06-13
REGISTERED CIVIL ENGINEER DATE

11-06-13
PLANS APPROVAL DATE

REGISTERED PROFESSIONAL ENGINEER HEIDI E. BORDERS No. C64194 Exp. 6-30-15 CIVIL STATE OF CALIFORNIA

THE STATE OF CALIFORNIA OR ITS OFFICERS OR AGENTS SHALL NOT BE RESPONSIBLE FOR THE ACCURACY OR COMPLETENESS OF SCANNED COPIES OF THIS PLAN SHEET.

NOTES:

1. ALL JOINTS ARE STANDARD JOINT TYPE.
2. (N) - NOT A SEPARATE PAY ITEM, FOR INFORMATION ONLY

DRAINAGE QUANTITIES

POST MILE	DRAINAGE SYSTEM No.	DRAINAGE UNIT No.	ABANDON CULVERT (EA)	REMOVE CULVERT (EA)	REMOVE CULVERT NOA	REMOVE FLARED END SECTION	REMOVE INLET	ADJUST INLET	18" CORRUGATED STEEL PIPE (.138" THICK)	24" CORRUGATED STEEL PIPE (.138" THICK)	MINOR CONCRETE (MINOR STRUCTURE) **	PLACE HOT MIX ASPHALT (MISCELLANEOUS AREA) **	MISCELLANEOUS IRON & STEEL	PLACE HMA DIKE (TYPE A) **	RSP (No.1, METHOD B) (CY)	SMALL-ROCK SLOPE PROTECTION	RSP FABRIC (CLASS 8)	MARKER (CULVERT)	ADJUST DI "h" (N)	DRAINAGE INLET "H" (N)	MAX HEIGHT OF COVER (N)	DESCRIPTION
			EA	EA	EA	EA	EA	EA	LF	LF	CY	SQYD	LB	LF	CY	CY	SQYD	EA	FT	FT	LF	
53.55	1	a								77								2			2.6	
		b		1																		Exist 24" CMP, L=76.7′
53.96	2	a									1.20											STRAIGHT HEADWALL
		b				1																
		c								68								2			4.6	
		d		1																		Exist 18" CMP, L=67.9′
54.75	3	a		1																		Exist 18" CMP, L=46.6′
		b							62									2			4.5	
55.55	4	a			1																	Exist 24" CMP, L=70.7′
		b								71								2				
56.65	5	a						1				7.8		11				2	0.6			W/HMA APRON & DIKE
56.68	6	a		1																		Exist 18" CMP, L=48.3′
		b								49								2				
		c									1.46	7.8	239	11						3.9		DI TYPE GO, GRATE TYPE 24-12X, W/HMA APRON & DIKE
		d					1															
		e		1																		Exist 6" PP, L=3.5′
56.71	7	a						1				7.8		11				2	1.3			W/HMA APRON & DIKE
60.07	8	a										8.4		26								OVERSIDE DRAIN
60.47	9	a								6								1				
		b		1																		Exist 24" CMP, L=1.5′
		c						1				7.8		11				1	0.8			W/HMA APRON & DIKE
60.77	10	a						1				7.8		11				2	0.4			W/HMA APRON & DIKE
60.81	11	a						1				7.8		11				2	1.4			W/HMA APRON & DIKE
61.75	12	a								83								2				
		b	1																			Exist 18" CMP, L=55.4′
		c					1															Exist TYPE GMP INLET
		d		1																		Exist 8" CMP, L=18.7′
		e									1.34	7.8	239	11						3.4		DI TYPE GO, GRATE TYPE 24-12X, W/HMA APRON & DIKE
		f													7		21					
		g		1																		Exist 18" CMP, L=25.9′
56.9	13	a														7						MOON LIM LEE REST AREA RSP
		b															39					
TOTAL			1	9	1	1	2	5	62	354	4.00	63.0	478	103	7	7	60	22				

** ADDITIONAL QUANTITY ALSO INCLUDED ON SUMMARY OF QUANTITY SHEETS

JEANNIE STEFFAN — REVISED BY
HEIDI BORDERS — DATE REVISED
CALCULATED-DESIGNED BY
CHECKED BY
FUNCTIONAL SUPERVISOR
JULIE CASEY

STATE OF CALIFORNIA - DEPARTMENT OF TRANSPORTATION
Caltrans® DESIGN

P:\proj1\02\4E410_plans\pse\24e410id001.dgn

LAST REVISION 11-06-13
DATE PLOTTED => 07-NOV-2013
TIME PLOTTED => 07:20

DRAINAGE QUANTITIES

DQ-1

Dist	COUNTY	ROUTE	POST MILES TOTAL PROJECT	SHEET No.	TOTAL SHEETS
02	Tri	299	53.5/64.0	32	70

Heidi Borders 11-06-13
REGISTERED CIVIL ENGINEER DATE

11-06-13
PLANS APPROVAL DATE

REGISTERED PROFESSIONAL ENGINEER HEIDI E. BORDERS No. C64194 Exp. 6-30-15 CIVIL STATE OF CALIFORNIA

THE STATE OF CALIFORNIA OR ITS OFFICERS OR AGENTS SHALL NOT BE RESPONSIBLE FOR THE ACCURACY OR COMPLETENESS OF SCANNED COPIES OF THIS PLAN SHEET.

NOTE:

1. EXACT LOCATION OF ALL SIGNS TO BE DETERMINED BY THE ENGINEER.

CONSTRUCTION AREA SIGNS (STATIONARY MOUNTED)

TYPE	CODE	PANEL SIZE	SIGN MESSAGE	No. AND SIZE OF POSTS	No. OF SIGNS
A	G20-1 C23B	36" x 18" 36" x 24"	ROAD WORK AHEAD NEXT XX MILES HIGHWAY IMPROVEMENTS	1 - 4" x 6"	2
B	G20-2	36" x 18"	END ROAD WORK	1 - 4" x 4"	5
C	W20-1	48" x 48"	ROAD WORK AHEAD	1 - 4" x 6"	13
D	G20-1	36" x 18"	ROAD WORK AHEAD NEXT XX MILES	1 - 4" x 4"	2

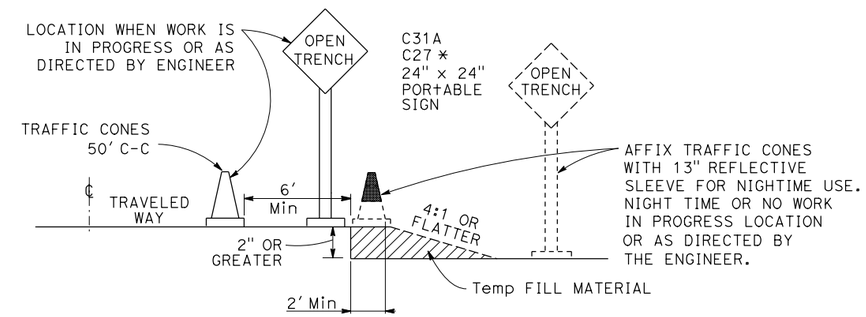

OPEN TRENCH SIGNING AND MARKING

* PLACE AT 250' INTERVALS THROUGH THE OPEN TRENCH AREA, ALTERNATE C27 (OPEN TRENCH) AND C31A (NO SHOULDER) SIGNS

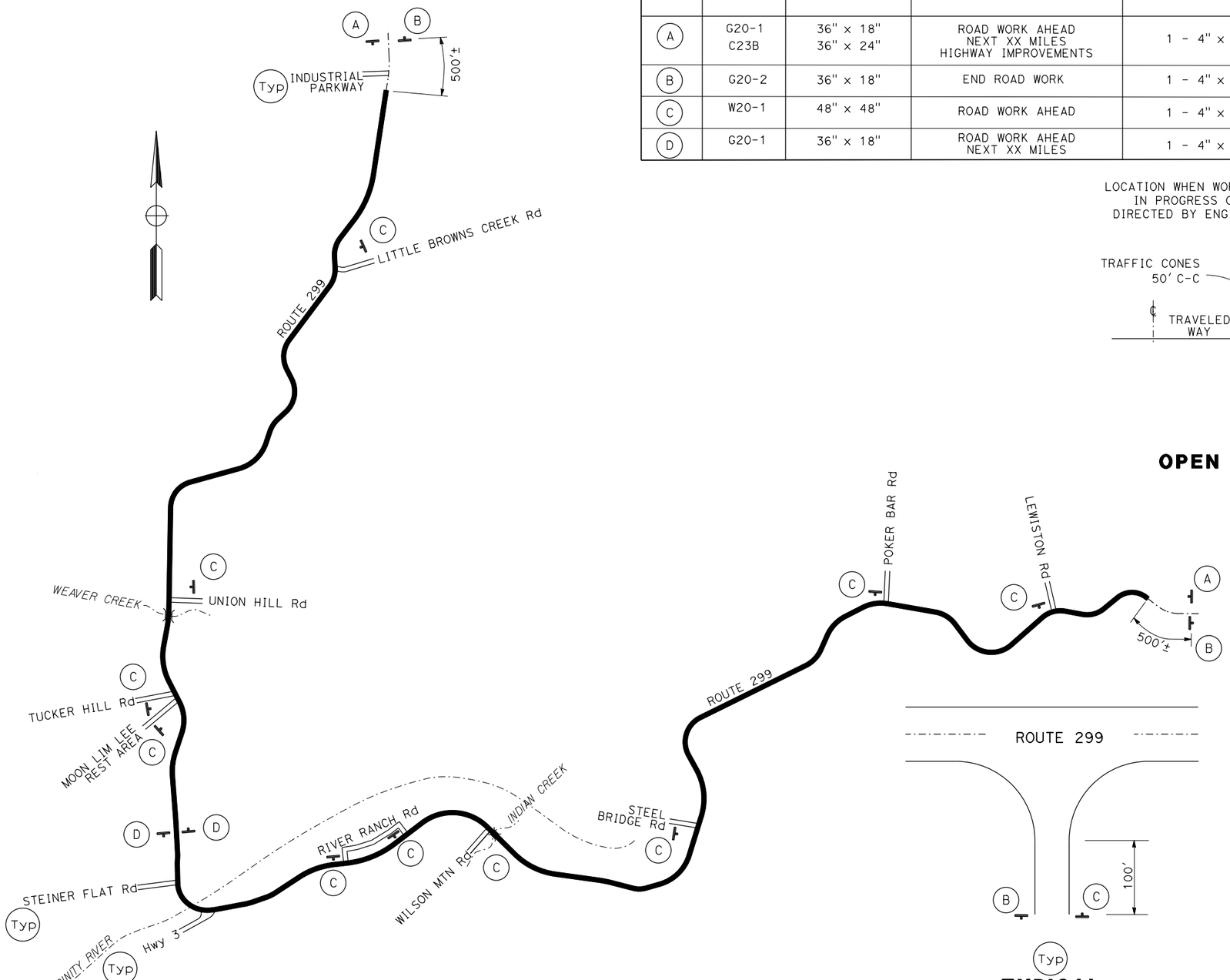

CONSTRUCTION AREA SIGN PLAN

TYPICAL ROAD CONNECTION CONSTRUCTION AREA SIGN DETAIL

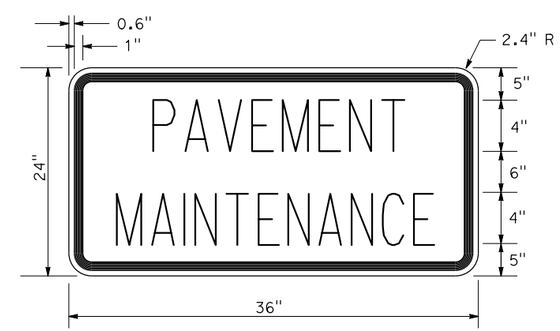

C23B SIGN PANEL DETAIL

CONSTRUCTION AREA SIGNS

NO SCALE

CS-1

STATE OF CALIFORNIA - DEPARTMENT OF TRANSPORTATION
Caltrans DESIGN

FUNCTIONAL SUPERVISOR: JULIE CASEY
CALCULATED-DESIGNED BY: JEANNIE STEFFAN
CHECKED BY: HEIDI BORDERS
REVISED BY / DATE REVISED

P:\proj1\02\4E410_plans\pse\24e4101a001.dgn

LAST REVISION 11-06-13
DATE PLOTTED => 07-NOV-2013
TIME PLOTTED => 07:20

Dist	COUNTY	ROUTE	POST MILES TOTAL PROJECT	SHEET No.	TOTAL SHEETS
02	Tri	299	53.5/64.0	33	70

Heidi Borders 11-06-13
REGISTERED CIVIL ENGINEER DATE

11-06-13
PLANS APPROVAL DATE

REGISTERED PROFESSIONAL ENGINEER HEIDI E. BORDERS No. C64194 Exp. 6-30-15 CIVIL STATE OF CALIFORNIA

THE STATE OF CALIFORNIA OR ITS OFFICERS OR AGENTS SHALL NOT BE RESPONSIBLE FOR THE ACCURACY OR COMPLETENESS OF SCANNED COPIES OF THIS PLAN SHEET.

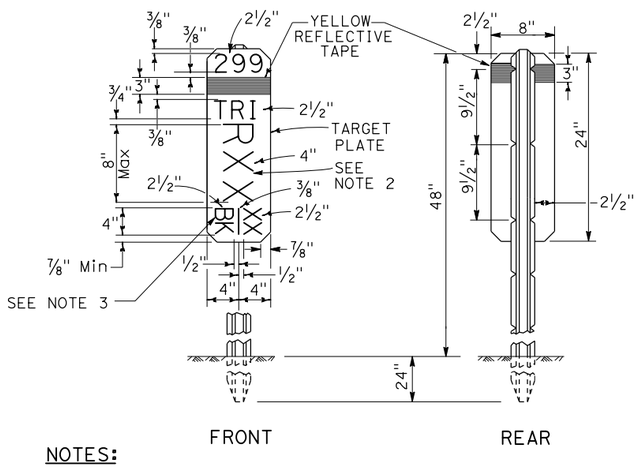

NOTES:

1. THE MARKER SHALL BE WHITE (NON-REFLECTIVE) TARGET PLATE WITH BLACK SERIES D NUMERALS AND LETTERS.
2. A POST MILE PREFIX, SUCH AS "R", SHALL APPLY ONLY WHEN DIRECTED BY THE ENGINEER.
3. "BK" (BACK), "AH" (AHEAD), OR A BLANK SPACE SHALL APPLY AS DIRECTED BY THE ENGINEER.
4. ALL INFORMATION SHALL BE IN ENGLISH UNITS (MILES).

MILE POST MARKER DETAIL

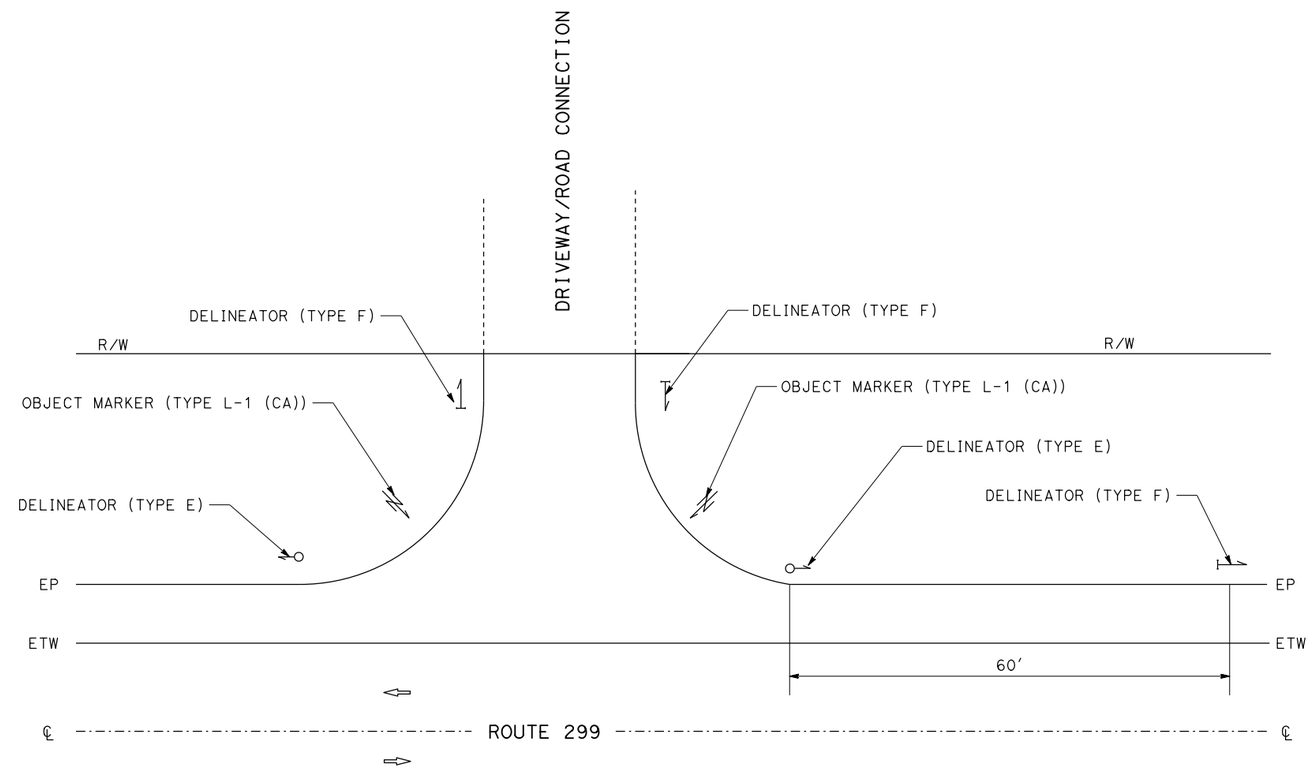

DRIVEWAY / ROAD CONNECTION DELINEATOR PLACEMENT DETAIL

PAVEMENT DELINEATION DETAILS

NO SCALE

PDD-1

JEANNIE STEFFAN — REVISED BY
HEIDI BORDERS — DATE REVISED
CALCULATED-DESIGNED BY
CHECKED BY
FUNCTIONAL SUPERVISOR
JULIE CASEY

STATE OF CALIFORNIA - DEPARTMENT OF TRANSPORTATION
Caltrans® DESIGN

P:\proj1\02\4E410_plans\pse\24e410nb001.dgn

LAST REVISION 11-06-13 | DATE PLOTTED => 07-NOV-2013 | TIME PLOTTED => 07:20

Dist	COUNTY	ROUTE	POST MILES TOTAL PROJECT	SHEET No.	TOTAL SHEETS
02	Tri	299	53.5/64.0	34	70

Heidi Borders 11-06-13
REGISTERED CIVIL ENGINEER DATE

11-06-13
PLANS APPROVAL DATE

REGISTERED PROFESSIONAL ENGINEER HEIDI E. BORDERS No. C64194 Exp. 6-30-15 CIVIL STATE OF CALIFORNIA

THE STATE OF CALIFORNIA OR ITS OFFICERS OR AGENTS SHALL NOT BE RESPONSIBLE FOR THE ACCURACY OR COMPLETENESS OF SCANNED COPIES OF THIS PLAN SHEET.

LEGEND:

- # — PAVEMENT DELINEATION STRIPE DETAIL No.
- TYPE V ARROW
- STRIPE CHANGE LOCATION
- TYPE III ARROW
- EXISTING ROADSIDE SIGN (1-POST)
- NEW ROADSIDE SIGN (1-POST)

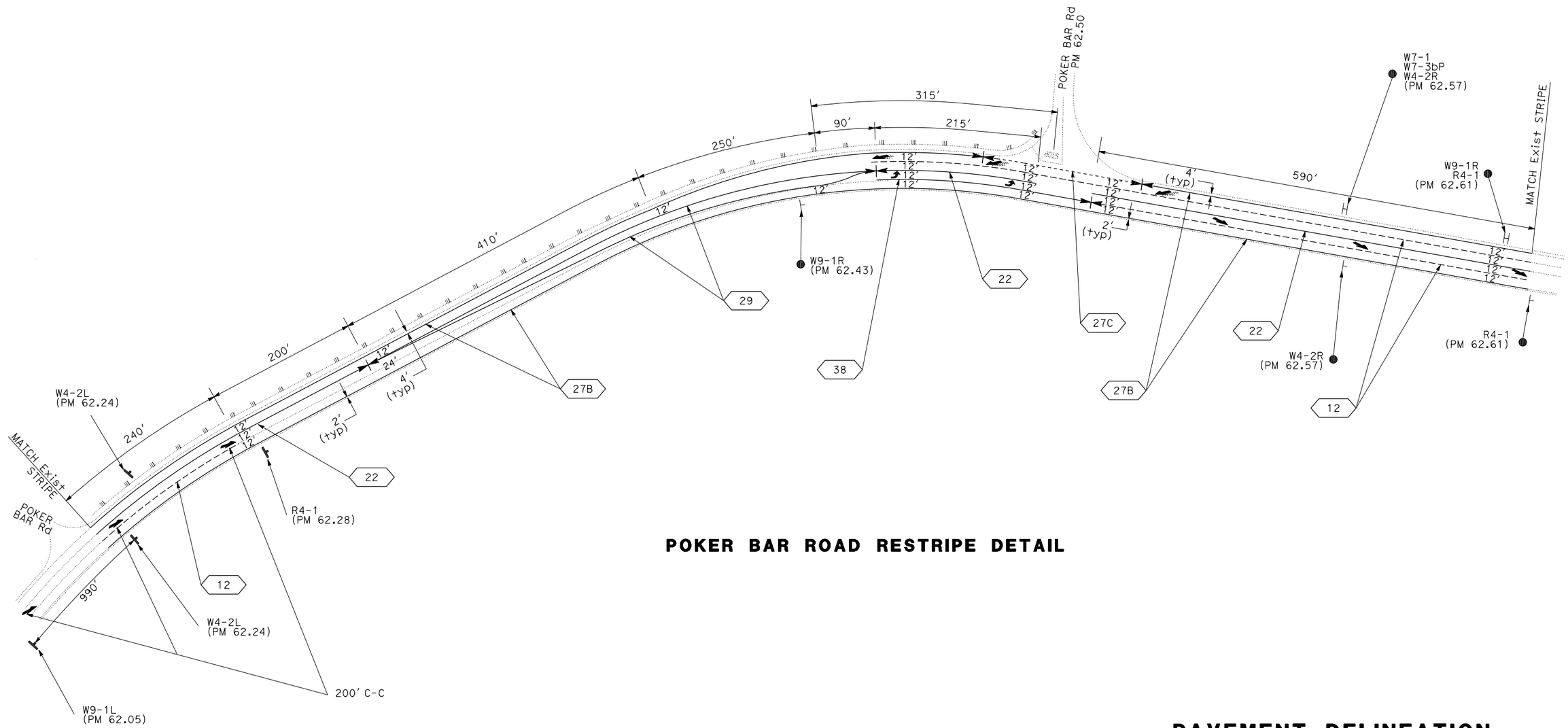

POKER BAR ROAD RESTRIPE DETAIL

PAVEMENT DELINEATION DETAILS

NO SCALE

PDD-2

APPROVED FOR PAVEMENT DELINEATION WORK ONLY

REVISED BY	DATE REVISED

JEANNIE STEFFAN	HEIDI BORDERS
CALCULATED-DESIGNED BY	CHECKED BY
FUNCTIONAL SUPERVISOR	JULIE CASEY

STATE OF CALIFORNIA - DEPARTMENT OF TRANSPORTATION
Caltrans® **DESIGN**

P:\proj\02\4E410_plans\pse\24e410nb002.dgn

LAST REVISION 11-06-13 DATE PLOTTED => 07-NOV-2013 TIME PLOTTED => 07:20

Dist	COUNTY	ROUTE	POST MILES TOTAL PROJECT	SHEET No.	TOTAL SHEETS
02	Tri	299	53.5/64.0	35	70

Heidi Borders 11-06-13
REGISTERED CIVIL ENGINEER DATE

11-06-13
PLANS APPROVAL DATE

REGISTERED PROFESSIONAL ENGINEER
HEIDI E. BORDERS
No. C64194
Exp. 6-30-15
CIVIL
STATE OF CALIFORNIA

THE STATE OF CALIFORNIA OR ITS OFFICERS OR AGENTS SHALL NOT BE RESPONSIBLE FOR THE ACCURACY OR COMPLETENESS OF SCANNED COPIES OF THIS PLAN SHEET.

LEGEND

⇦ Dir OF TRAFFIC

⟨XXX⟩ TRAFFIC STRIPE DETAIL No.

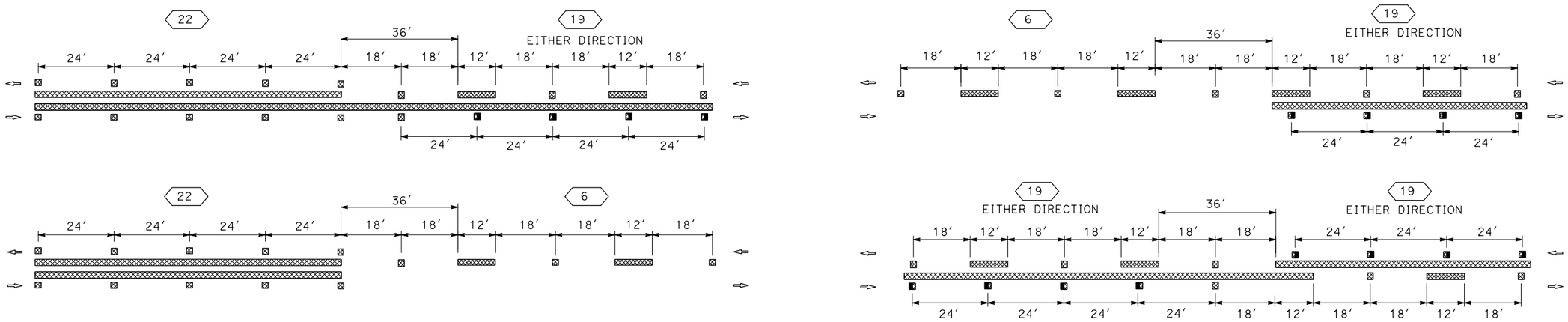

TYPICAL STRIPE TRANSITION DETAILS

PAVEMENT DELINEATION DETAILS (CONVENTIONAL ROADWAY)

NO SCALE

PDD-3

REVISED BY	DATE REVISED

CALCULATED-DESIGNED BY	CHECKED BY
JEANNIE STEFFAN	HEIDI BORDERS

FUNCTIONAL SUPERVISOR: JULIE CASEY

STATE OF CALIFORNIA - DEPARTMENT OF TRANSPORTATION
Caltrans® DESIGN

P:\proj\02\4E410_plans\pse\24e410nb003.dgn

LAST REVISION 11-06-13
DATE PLOTTED => 07-NOV-2013
TIME PLOTTED => 07:20

Dist	COUNTY	ROUTE	POST MILES TOTAL PROJECT	SHEET No.	TOTAL SHEETS
02	Tri	299	53.5/64.0	36	70

Heidi Borders 11-06-13
REGISTERED CIVIL ENGINEER DATE

11-06-13
PLANS APPROVAL DATE

REGISTERED PROFESSIONAL ENGINEER
HEIDI E. BORDERS
No. C64194
Exp. 6-30-15
CIVIL
STATE OF CALIFORNIA

THE STATE OF CALIFORNIA OR ITS OFFICERS OR AGENTS SHALL NOT BE RESPONSIBLE FOR THE ACCURACY OR COMPLETENESS OF SCANNED COPIES OF THIS PLAN SHEET.

THERMOPLASTIC PAVEMENT MARKING

LOCATION		DESCRIPTION / MESSAGE	SQFT
POST MILE	DESCRIPTION		
53.50	INDUSTRIAL PARKWAY	(2) TYPE III (L) ARROWS	84
54.48	LITTLE BROWNS CREEK ROAD	(2) TYPE III (L) ARROWS	84
		STOP BAR	38
		STOP	22
55.63	END PASSING LANE	(3) TYPE VI ARROWS	126
56.48	UNION HILL ROAD	STOP BAR	44
		STOP	22
56.67	MOON LIM LEE REST AREA	(2) TYPE III (L) ARROWS	84
		STOP BAR	56
		STOP	22
		(4) TYPE I ARROWS	100
		PARKING: 4" WHITE STRIPE	197
		(3) ISA MARKINGS	69
		8" WHITE STRIPE	42
		4" BLUE STRIPE	156
56.93	TUCKER HILL ROAD	STOP BAR	35
		STOP	22
57.33	END PASSING LANE	(3) TYPE VI ARROWS	126
57.88	STEINER FLAT RD	STOP BAR	50
		STOP	22
		(2) TYPE III (L) ARROWS	84
R58.11	HWY 3 INTERSECTION	(2) TYPE III (L) ARROWS	84
		(3) TYPE VI ARROWS	126
		8" WHITE STRIPE (ISLAND MARKINGS)	600
58.84	RIVER RANCH ROAD	STOP BAR	35
		STOP	22
59.19	RIVER RANCH ROAD	STOP BAR	35
		STOP	22
61.00	STEEL BRIDGE ROAD	(5) TYPE III (L) ARROWS	210
		STOP BAR	45
		STOP	22
62.20	END PASSING LANE	(3) TYPE VI ARROWS	126
62.50	POKER BAR ROAD	(3) TYPE VI ARROWS	126
		STOP BAR	52
		STOP	22
		(2) TYPE III (L) ARROWS	84
62.52	END PASSING LANE	(3) TYPE VI ARROWS	126
63.33	WIDE RIGHT SHOULDER (PAINTED)	8" WHITE STRIPE	110
63.50	LEWISTON ROAD	TYPE III (L) ARROW	42
		STOP BAR	42
		STOP	22
TOTAL			3438

REMOVE THERMOPLASTIC PAVEMENT MARKING

LOCATION		DESCRIPTION / MESSAGE	SQFT
POST MILE	DESCRIPTION		
61.00	STEEL BRIDGE ROAD	(5) TYPE III (L) ARROWS	210
62.50	POKER BAR ROAD	(3) TYPE VI ARROWS	126
62.52	END PASSING LANE	(3) TYPE VI ARROWS	126
63.33	WIDE RIGHT SHOULDER (PAINTED)	8" WHITE STRIPE	110
63.50	LEWISTON ROAD	TYPE III (L) ARROW	42
TOTAL			614

PAVEMENT DELINEATION QUANTITIES

PDQ-1

REVISED BY	DATE REVISED
JEANNIE STEFFAN	HEIDI BORDERS
CALCULATED-DESIGNED BY	CHECKED BY
FUNCTIONAL SUPERVISOR	JULIE CASEY

STATE OF CALIFORNIA - DEPARTMENT OF TRANSPORTATION
Caltrans® DESIGN

P:\proj1\02\4E410_plans\pse\24e410nc001.dgn

LAST REVISION 11-06-13 | DATE PLOTTED => 07-NOV-2013 | TIME PLOTTED => 07:20

Dist	COUNTY	ROUTE	POST MILES TOTAL PROJECT	SHEET No.	TOTAL SHEETS
02	Tri	299	53.5/64.0	37	70

Heidi Borders 11-06-13
REGISTERED CIVIL ENGINEER DATE

11-06-13
PLANS APPROVAL DATE

REGISTERED PROFESSIONAL ENGINEER HEIDI E. BORDERS No. C64194 Exp. 6-30-15 CIVIL STATE OF CALIFORNIA

THE STATE OF CALIFORNIA OR ITS OFFICERS OR AGENTS SHALL NOT BE RESPONSIBLE FOR THE ACCURACY OR COMPLETENESS OF SCANNED COPIES OF THIS PLAN SHEET.

PAVEMENT DELINEATION QUANTITIES

THERMOPLASTIC TRAFFIC STRIPE (SPRAYABLE)													PAVEMENT MARKERS (RETROREFLECTIVE-RECESSED)						
LOCATION DESCRIPTION / POST MILE				DETAIL 6	DETAIL 12	DETAIL 19	DETAIL 22	DETAIL 27B	DETAIL 27C	DETAIL 29	DETAIL 38	TYPE D				TYPE G		TYPE H
												DETAIL 6	DETAIL 19	DETAIL 22	DETAIL 29	DETAIL 12	DETAIL 38	DETAIL 19
BEGIN		END		LF	LF	LF	LF	LF	LF	LF	LF	EA	EA	EA	EA	EA	EA	EA
BEGIN	PM 53.50	LITTLE BROWNS CREEK RD	PM 54.48	6636	490	2140	4450	10982	220	2740	980	25	23	190	61	12	23	46
LITTLE BROWNS CREEK RD	PM 54.48	WEAVER CREEK	PM 56.50		2498	730	13484	20690	282	14252			9	566	299	53		16
WEAVER CREEK	PM 56.50	STEINER FLAT RD	PM R57.88		1695	534	6602	14047	395	5088	1910		7	281	110	36	42	12
STEINER FLAT RD	PM R57.88	STEEL BRIDGE RD	PM 61.00	1105		1146	7190	30832	293	4852	2020	24	14	308	160		47	26
STEEL BRIDGE RD	PM 61.00	END	PM 64.00		10003	840	23590	32035	318	11460	1740		10	1002	148	214	39	19
SUBTOTAL				7741	14,686	5390	55,316	108,586	1508	38,392	6650	49	62	2345	826	315	152	118
TOTAL				238,269								3866						

PAVEMENT DELINEATION QUANTITIES

PDQ-2

REVISED BY	DATE REVISED

JEANNIE STEFFAN	HEIDI BORDERS
CALCULATED-DESIGNED BY	CHECKED BY
FUNCTIONAL SUPERVISOR	JULIE CASEY

STATE OF CALIFORNIA - DEPARTMENT OF TRANSPORTATION
Caltrans DESIGN

P:\proj\02\4E410_plans\pse\24e410nc002.dgn

LAST REVISION 11-06-13 DATE PLOTTED => 07-NOV-2013 TIME PLOTTED => 07:20

Dist	COUNTY	ROUTE	POST MILES TOTAL PROJECT	SHEET No.	TOTAL SHEETS
02	Tri	299	53.5/64.0	38	70

Frank J. Rivas 11-06-13
REGISTERED CIVIL ENGINEER DATE

11-06-13
PLANS APPROVAL DATE

REGISTERED PROFESSIONAL ENGINEER FRANK RIVAS No. C53592 Exp. 6/30/15 CIVIL STATE OF CALIFORNIA

THE STATE OF CALIFORNIA OR ITS OFFICERS OR AGENTS SHALL NOT BE RESPONSIBLE FOR THE ACCURACY OR COMPLETENESS OF SCANNED COPIES OF THIS PLAN SHEET.

NOTE:

1. ALL DIMENSIONS ARE IN INCHES.

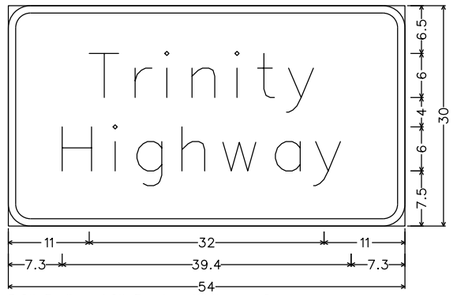

3.0" Radius, 1.0" Border, White on Green;
[Trinity] E Mod; [Highway] E Mod;

G7(CA)
PM 53.15

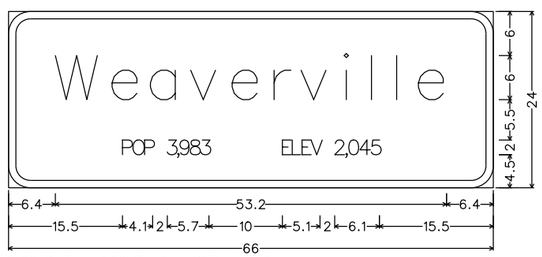

3.0" Radius, 1.0" Border, White on Green;
[Weaverville] E Mod; [POP] C; [3,983 ELEV 2,045] C;

G9(CA)
PM 53.66

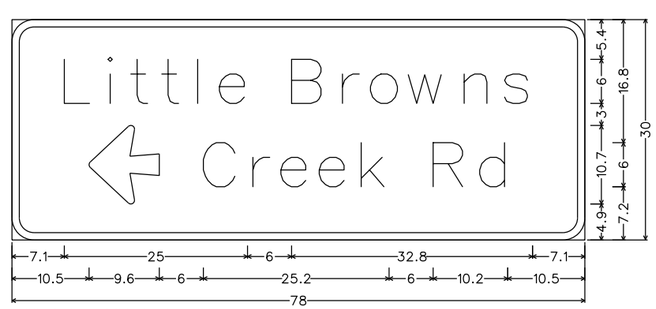

3.0" Radius, 1.0" Border, White on Green;
[Little Browns] E Mod; Arrow 6UC-2LH - 9.6" 180; [Creek Rd] E Mod;

G8(CA)
PM 54.40

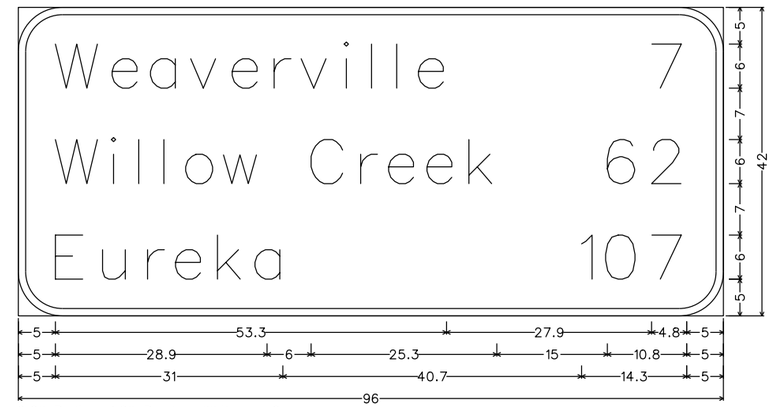

6.0" Radius, 1.0" Border, White on Green;
[Weaverville] E Mod; [Willow Creek] E Mod; [Eureka] E Mod; [7] E Mod; [62] E Mod; [107] E Mod;

G5(CA)
PM 57.64

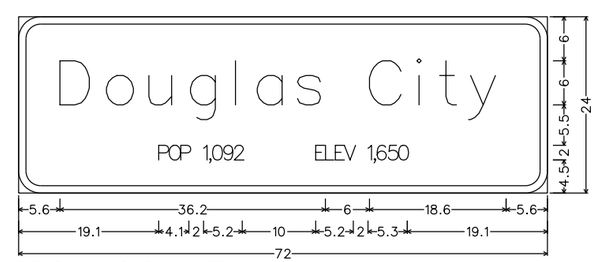

3.0" Radius, 1.0" Border, White on Green;
[Douglas City] E Mod; [POP] C; [1,092 ELEV 1,650] C;

G9(CA)
PM 57.65 & PM 57.95

SIGN DETAILS
NO SCALE

SD-1

REVISED BY	FRANK RIVAS
DATE REVISED	ROB STINGER
CALCULATED-DESIGNED BY	
CHECKED BY	
FUNCTIONAL SUPERVISOR	ROB STINGER

STATE OF CALIFORNIA - DEPARTMENT OF TRANSPORTATION
Caltrans® TRAFFIC OERATIONS

P:\proj1\02\4E410_plans\pse\24e410ob001.dgn

LAST REVISION 11-06-13 | DATE PLOTTED => 07-NOV-2013 | TIME PLOTTED => 07:20

Dist	COUNTY	ROUTE	POST MILES TOTAL PROJECT	SHEET No.	TOTAL SHEETS
02	Tri	299	53.5/64.0	39	70

Frank J. Rivas 11-06-13
REGISTERED CIVIL ENGINEER DATE

11-06-13
PLANS APPROVAL DATE

REGISTERED PROFESSIONAL ENGINEER FRANK RIVAS No. C53592 Exp. 6/30/15 CIVIL STATE OF CALIFORNIA

THE STATE OF CALIFORNIA OR ITS OFFICERS OR AGENTS SHALL NOT BE RESPONSIBLE FOR THE ACCURACY OR COMPLETENESS OF SCANNED COPIES OF THIS PLAN SHEET.

NOTE:

1. ALL DIMENSIONS ARE IN INCHES.

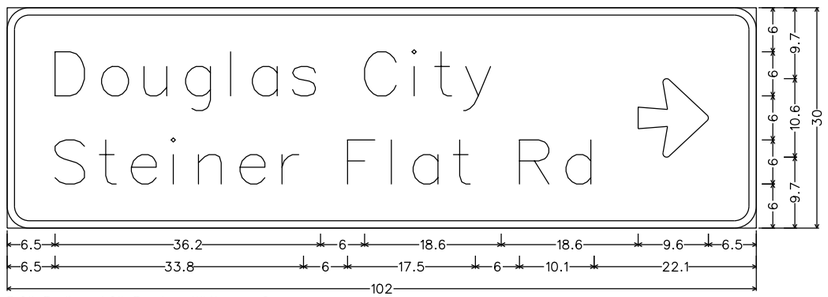

3.0" Radius, 1.0" Border, White on Green;
[Douglas City] E Mod; [Steiner Flat Rd] E Mod; Arrow 6UC-2LH - 9.6" 0l;

G8(CA)
PM 57.79

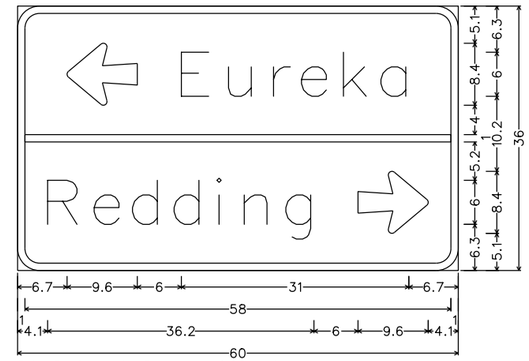

3.0" Radius, 1.0" Border, White on Green;
Arrow 6UC-1L - 9.6" 180l; [Eureka] E Mod; [Redding] E Mod;
Arrow 6UC-1L - 9.6" 0l;

G8(CA)
PM 57.88

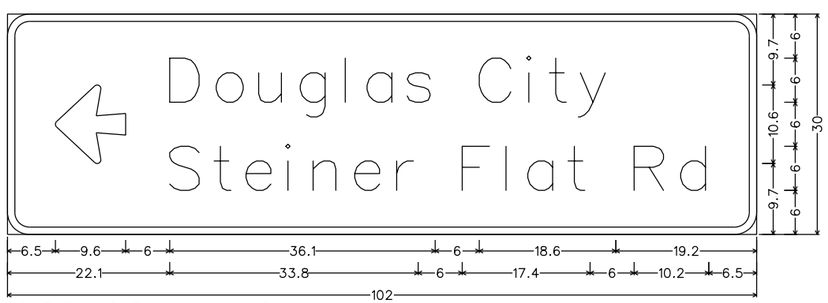

3.0" Radius, 1.0" Border, White on Green;
Arrow 6UC-2LH - 9.6" 180l; [Douglas City] E Mod; [Steiner Flat Rd] E Mod;

G8(CA)
PM 57.93

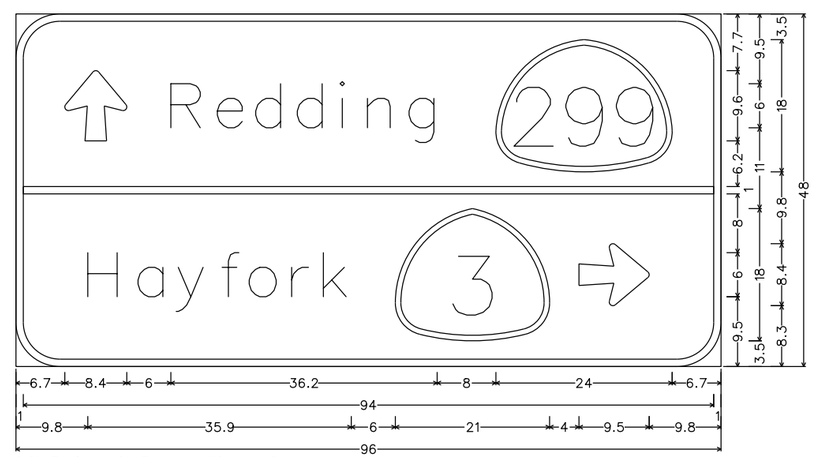

6.0" Radius, 1.0" Border, White on Green;
Arrow 6UC-1L - 9.6" 90l; [Redding] E Mod; [Hayfork] E Mod; Arrow 6UC-1L - 9.6" 0l;

G78(CA)
PM 57.98

SIGN DETAILS

NO SCALE

SD-2

REVISED BY	DATE REVISED
FRANK RIVAS	ROB STINGER

CALCULATED-DESIGNED BY
CHECKED BY

FUNCTIONAL SUPERVISOR
ROB STINGER

STATE OF CALIFORNIA - DEPARTMENT OF TRANSPORTATION
Caltrans® TRAFFIC OERATIONS

P:\proj1\02\4E410_plans\pse\24e410ob002.dgn

LAST REVISION 11-06-13
DATE PLOTTED => 07-NOV-2013
TIME PLOTTED => 07:20

Dist	COUNTY	ROUTE	POST MILES TOTAL PROJECT	SHEET No.	TOTAL SHEETS
02	Tri	299	53.5/64.0	40	70

Frank J. Rivas 11-06-13
REGISTERED CIVIL ENGINEER DATE

11-06-13
PLANS APPROVAL DATE

REGISTERED PROFESSIONAL ENGINEER
FRANK RIVAS
No. C53592
Exp. 6/30/15
CIVIL
STATE OF CALIFORNIA

THE STATE OF CALIFORNIA OR ITS OFFICERS OR AGENTS SHALL NOT BE RESPONSIBLE FOR THE ACCURACY OR COMPLETENESS OF SCANNED COPIES OF THIS PLAN SHEET.

NOTE:

1. ALL DIMENSIONS ARE IN INCHES.

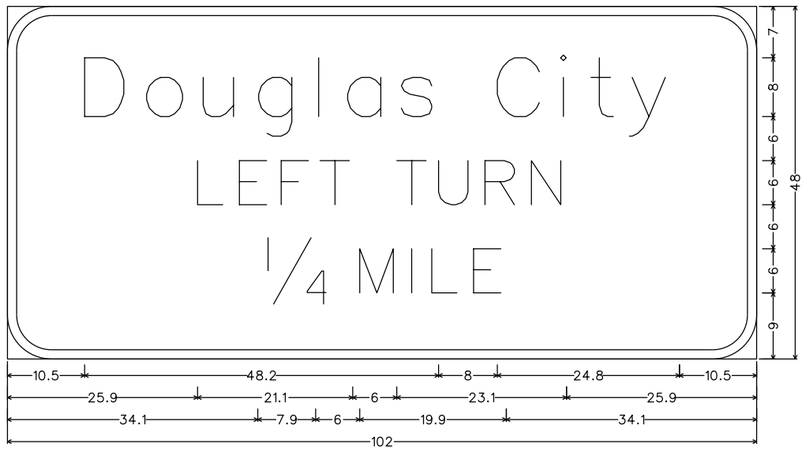

6.0" Radius, 1.3" Border, White on Green;
[Douglas City] E Mod; [LEFT TURN] E Mod; [57/64 MILE] E Mod;

G22(CA)
PM 57.99

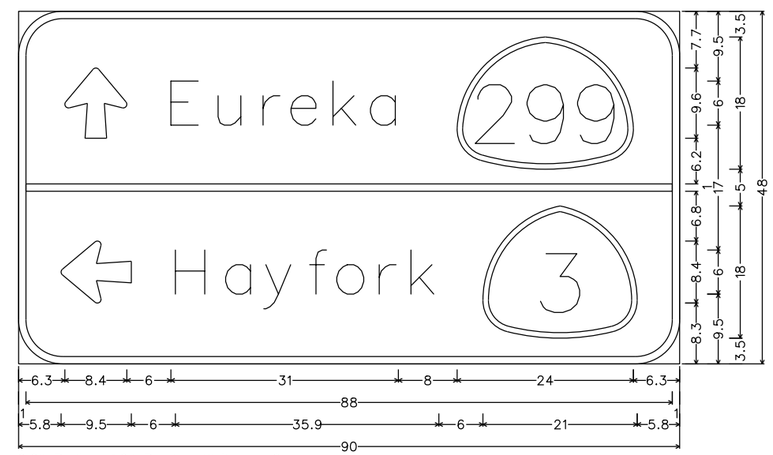

6.0" Radius, 1.0" Border, White on Green;
Arrow 6UC-1L - 9.6" 90l; [Eureka] E Mod; Arrow 6UC-1L - 9.6" 180l; [Hayfork] E Mod;

G78(CA)
PM 58.33

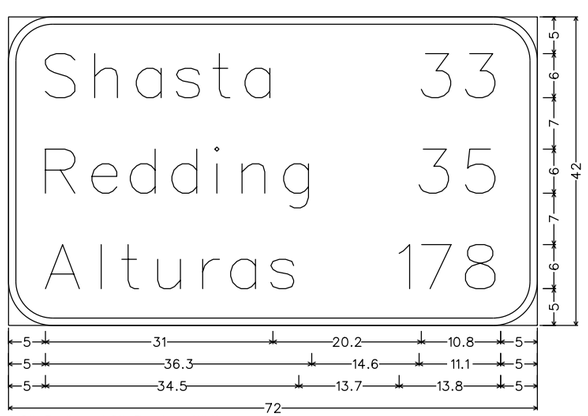

6.0" Radius, 1.0" Border, White on Green;
[Shasta] E Mod; [Redding] E Mod; [Alturas] E Mod; [33] E Mod; [35] E Mod;
[178] E Mod;

G5(CA)
PM 58.28

SIGN DETAILS

NO SCALE

SD-3

CALCULATED-DESIGNED BY	CHECKED BY	FUNCTIONAL SUPERVISOR	FRANK RIVAS	REVISED BY	DATE REVISED
		ROB STINGER	ROB STINGER		

STATE OF CALIFORNIA - DEPARTMENT OF TRANSPORTATION
Caltrans® TRAFFIC OERATIONS

P:\proj11\02\4E410_plans\pse\24e410ob003.dgn

LAST REVISION 11-06-13 | DATE PLOTTED => 07-NOV-2013 | TIME PLOTTED => 07:20

Dist	COUNTY	ROUTE	POST MILES TOTAL PROJECT	SHEET No.	TOTAL SHEETS
02	Tri	299	53.5/64.0	41	70

REGISTERED CIVIL ENGINEER 11-06-13 DATE

11-06-13
PLANS APPROVAL DATE

REGISTERED PROFESSIONAL ENGINEER FRANK RIVAS No. C53592 Exp. 6/30/15 CIVIL STATE OF CALIFORNIA

THE STATE OF CALIFORNIA OR ITS OFFICERS OR AGENTS SHALL NOT BE RESPONSIBLE FOR THE ACCURACY OR COMPLETENESS OF SCANNED COPIES OF THIS PLAN SHEET.

NOTES:

1. USE A 2¼" Sq TUBE x 30" LONG, 3/16" THICK ANCHOR FOR 2" POSTS.
   USE A 3" Sq TUBE x 3′ LONG, 3/16" THICK ANCHOR FOR 2-1/2 " POSTS.
2. USE A 5/16" CORNER BOLT OR TWO DRIVE RIVETS TO FASTEN ASSEMBLED SIGN AND POST INTO ANCHOR. INSTALL CORNER BOLT OR DRIVE RIVETS INTO THE SIDES FACING TRAFFIC.
3. REMOVE EXISTING AC OR PCC, DRIVE ANCHOR SLEEVE INTO SOIL AND RECAP WITH LIKE MATERIAL, MATCHING EXISTING THICKNESS.
4. 2" POSTS ARE TO BE 1/8" THICK, PERFORATIONS OF 7/16" IN DIAMETER ARE 1" ON CENTER ON ALL SIDES, LENGTHS ARE 10′ AND 12′.
5. 2-1/2" POSTS ARE TO BE 1/8" THICK, PERFORATIONS OF 7/16" IN DIAMETER ARE 1" ON CENTER ON ALL SIDES, 2-1/2" POSTS ARE 12′ AND 14′ IN LENGTH.
6. FOR DETAILS NOT SHOWN, REFER TO THE STANDARD PLANS.
7. 2-1/2" POSTS SHALL BE USED IN SIDEWALK AND HIGH PEDESTRIAN USE PLACEMENTS.
8. ALL ANCHOR SLEEVES SHALL BE EMBEDDED IN PCC, EXCEPT FOR INSTALLATIONS IN PAVEMENTS OR SIDEWALKS.

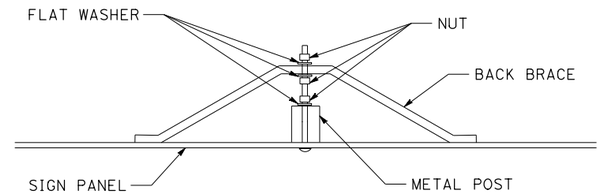

BACK BRACE MOUNTING DETAIL

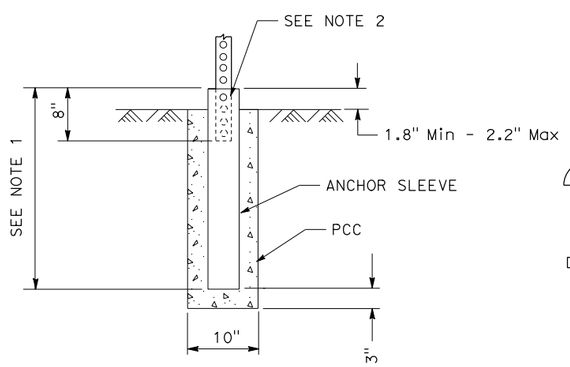

INSTALLATION IN SOIL (PCC)
(SEE NOTE 8)

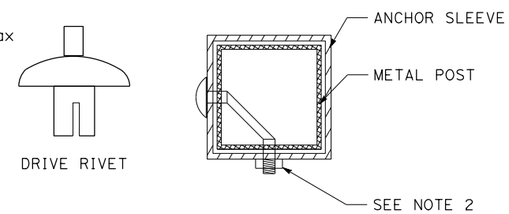

FASTENER DETAILS

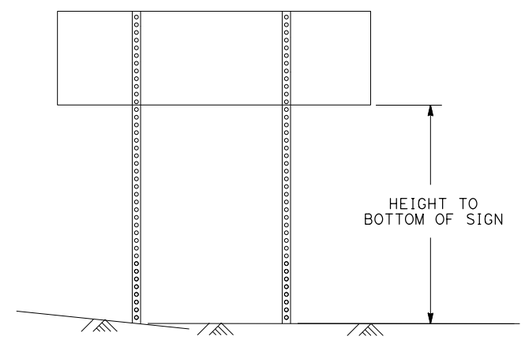

TWO POSTS INSTALLATION
(POST SIZE, SEE CHART BELOW)

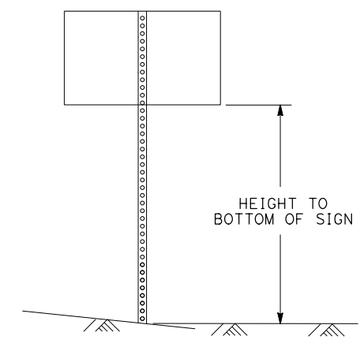

SINGLE POST INSTALLATION
(POST SIZE, SEE CHART BELOW)

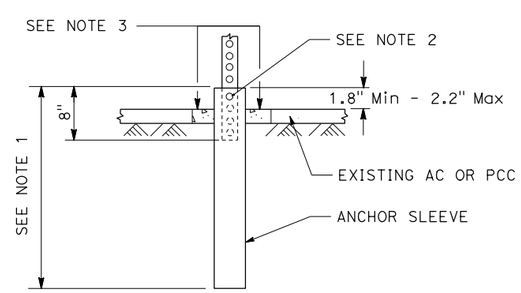

INSTALLATION IN EXISTING AC OR PCC

Max Sq Ft OF SIGN

POST SIZE	60"	72"	84"	96"	108"	120"
2"	18	16	14	12	10	8
2.5"	35	32	28	24	21	21

HEIGHT TO BOTTOM OF SIGN
DOUBLE POST GROUND SIGNS
70 MPH WIND SPEED

Max Sq Ft OF SIGN

POST SIZE	60"	72"	84"	96"	108"	120"
2"	10.5	10	8.7	7.4	6.2	5
2.5"	16	16	16	16	12	12

HEIGHT TO BOTTOM OF SIGN
SINGLE POST GROUND SIGNS
70 MPH WIND SPEED

METAL SIGN POST DETAIL

METAL SIGN POST INSTALLATION DETAILS

SIGN DETAILS
NO SCALE

SD-4

CALCULATED-DESIGNED BY	FRANK RIVAS	REVISED BY
CHECKED BY	ROB STINGER	DATE REVISED
FUNCTIONAL SUPERVISOR	ROB STINGER	

STATE OF CALIFORNIA - DEPARTMENT OF TRANSPORTATION
Caltrans® TRAFFIC OERATIONS

P:\proj11\02\4E410_plans\pse\24e410ob004.dgn

LAST REVISION 11-06-13 | DATE PLOTTED => 07-NOV-2013 | TIME PLOTTED => 07:20

Dist	COUNTY	ROUTE	POST MILES TOTAL PROJECT	SHEET No.	TOTAL SHEETS
02	Tri	299	53.5/64.0	42	70

REGISTERED CIVIL ENGINEER 11-06-13 DATE

11-06-13
PLANS APPROVAL DATE

REGISTERED PROFESSIONAL ENGINEER FRANK RIVAS No. C53592 Exp. 6/30/15 CIVIL STATE OF CALIFORNIA

THE STATE OF CALIFORNIA OR ITS OFFICERS OR AGENTS SHALL NOT BE RESPONSIBLE FOR THE ACCURACY OR COMPLETENESS OF SCANNED COPIES OF THIS PLAN SHEET.

NOTES:

1. EXACT LOCATION AND POSITION OF ROADSIDE SIGN TO BE DETERMINED BY THE ENGINEER.
2. POST SIZE AND LENGTH GIVEN ARE APPROXIMATE, POST LENGTH AND SIZE TO BE DETERMINED BY ENGINEER.
3. CALIFORNIA CODES ARE DESIGNATED BY (CA), OTHERWISE FEDERAL CODES ARE SHOWN.
4. (N) NOT A SEPARATE PAY ITEM, FOR INFORMATION ONLY.

ROADSIDE SIGNS

SIGN PM	SIGN CODE	PANEL SIZE In x In	REMOVE ROADSIDE SIGN EA	REMOVE SIGN PANEL EA	ROADSIDE SIGN ONE POST EA	ROADSIDE SIGN TWO POST EA	(N) POST SIZE AND LENGTH (LF) METAL POST 2½" x 2½"	(N) POST SIZE AND LENGTH (LF) WOOD POST 4" x 6"	COMMENTS
53.15	G7(CA)	54 x 28	1						
	G7(CA)	54 x 30			1		9		
53.66	G9(CA)	72 x 24	1						
	G81-61(CA)	66 x 6							
	G9(CA)	66 x 24				1	9, 8		
54.40	G8(CA)	78 x 30	1						
	G8(CA)	78 x 30				1	9, 10		
54.95	G79(CA)	60 x 30	1						
	D5-1	78 x 36				1	9, 9		
56.90	G80(CA)	60 x 30	1						
	D9-6	24 x 24							
	D5-5	42 x 48			1		12		
	D9-6	24 x 24							
57.03	G80(CA)	60 x 30	1						
	D9-6	24 x 24							
	D5-5	42 x 48			1		12		
	D9-6	24 x 24							
57.64	G5(CA)	96 x 42	1						
	G5(CA)	96 x 42				1	10, 10		
57.65	G9(CA)	72 x 24	1						
	G81-61(CA)	72 x 8							
	G9(CA)	72 x 24				1	8, 9		
57.79	G8(CA)	96 x 30	1						
	D4-2	24 x 30							PERMIT SIGN, SAVE & REINSTALL
	RW-020	24 x 24							
	RM-010	24 x 24							
	RW-050	24 x 24							
	G8(CA)	102 x 30							
	D9-18b	84 x 24				1		11, 10	
	D4-2	24 x 30							INSTALL SAVED PERMIT SIGN
57.84	G79(CA)	60 x 30	1						
	D5-1	78 x 36				1	9, 10		
57.88	G8(CA)	60 x 36	1						
	G28(299)(CA)	28 x 25							
	M6-4	21 x 15							
		SUBTOTAL	11		3	7			

ROADSIDE SIGNS

SIGN PM	SIGN CODE	PANEL SIZE In x In	REMOVE ROADSIDE SIGN EA	REMOVE SIGN PANEL EA	ROADSIDE SIGN ONE POST EA	ROADSIDE SIGN TWO POST EA	(N) POST SIZE AND LENGTH (LF) METAL POST 2½" x 2½"	(N) POST SIZE AND LENGTH (LF) WOOD POST 4" x 6"	COMMENTS
57.88	G8(CA)	60 x 36			1		9, 9		
	G28(299)(CA)	28 x 25							
	M6-4	21 x 15							
57.93	G8(CA)	96 x 30	1						
	D4-2	24 x 30							PERMIT SIGN, SAVE & REINSTALL
	RW-020	24 x 24							
	RM-010	24 x 24							
	RM-120	24 x 24							
	RW-050	24 x 24							
57.93	G8(CA)	102 x 30				1		14, 15	
	D9-18b	84 x 24							BOTTOM OF PANEL 5′ ABOVE GROUND
	D4-2	24 x 30							INSTALL SAVED PERMIT SIGN
57.95	G9(CA)	72 x 24	1						
	G81-61(CA)	84 x 12							
	G9(CA)	72 x 24				1	8, 10		
57.98	G78(CA)	96 x 48	1						
	G78(CA)	96 x 48				1	10, 11		
57.99	G22(CA)	108 x 48	1						
	D9-7	24 x 24							
	D9-9	30 x 30							
	G22(CA)	102 x 48				1		15, 16	
	D9-7	24 x 24							
	D9-9	24 x 24							
58.11	R1-1	30 x 30	1						
58.11	R1-1	30 x 30			1		9		
58.13	W4-1	36 x 36	1						
	R5-1	30 x 30							
	R5-1a	30 x 18							
58.13	W4-1	36 x 36			1		9		FEBT
	R5-1	30 x 30							BACK TO BACK WITH THE W4-1, FWBT
	R5-1a	30 x 18							BACK TO BACK WITH THE W4-1, FWBT
		SUBTOTAL	6		3	4			
		TOTAL THIS SHEET	16		6	11			

SIGN QUANTITIES

SQ-1

REVISED BY | DATE REVISED
FRANK RIVAS | ROB STINGER
CALCULATED-DESIGNED BY | CHECKED BY
FUNCTIONAL SUPERVISOR | ROB STINGER

STATE OF CALIFORNIA - DEPARTMENT OF TRANSPORTATION
Caltrans® TRAFFIC OERATIONS

P:\proj1\02\4E410_plans\pse\24e410oc001.dgn

LAST REVISION 11-06-13 | DATE PLOTTED => 07-NOV-2013 | TIME PLOTTED => 07:20

Dist	COUNTY	ROUTE	POST MILES TOTAL PROJECT	SHEET No.	TOTAL SHEETS
02	Tri	299	53.5/64.0	43	70

Frank J. Rivas 11-06-13
REGISTERED CIVIL ENGINEER DATE

11-06-13
PLANS APPROVAL DATE

REGISTERED PROFESSIONAL ENGINEER FRANK RIVAS No. C53592 Exp. 6/30/15 CIVIL STATE OF CALIFORNIA

THE STATE OF CALIFORNIA OR ITS OFFICERS OR AGENTS SHALL NOT BE RESPONSIBLE FOR THE ACCURACY OR COMPLETENESS OF SCANNED COPIES OF THIS PLAN SHEET.

NOTES:

1. EXACT LOCATION AND POSITION OF ROADSIDE SIGN TO BE DETERMINED BY THE ENGINEER.
2. POST SIZE AND LENGTH GIVEN ARE APPROXIMATE, POST LENGTH AND SIZE TO BE DETERMINED BY ENGINEER.
3. CALIFORNIA CODES ARE DESIGNATED BY (CA), OTHERWISE FEDERAL CODES ARE SHOWN.
4. (N) NOT A SEPARATE PAY ITEM, FOR INFORMATION ONLY.

ROADSIDE SIGNS

SIGN PM	SIGN CODE	PANEL SIZE In x In	REMOVE ROADSIDE SIGN EA	REMOVE SIGN PANEL EA	ROADSIDE SIGN ONE POST EA	ROADSIDE SIGN TWO POST EA	(N) POST SIZE AND LENGTH (LF) METAL POST 2½" x 2½"	(N) POST SIZE AND LENGTH (LF) WOOD POST 4" x 6"	COMMENTS
58.36	G5(CA)	72 x 42	1						
	G28(299)(CA)	28 x 25							
	M3-2	24 x 12							
	G5(CA)	72 x 42				1		11, 11	
	G28(299)(CA)	28 x 25							
	M3-2	24 x 12							
58.43	G78(CA)	84 x 54	1						
	G28(3)(CA)	24 x 25							
	M2-1	21 x 15							
	G78(CA)	90 x 48				1	11, 11		BOTTOM OF PANEL 5' ABOVE GROUND
	G28(3)(CA)	24 x 25							
	M2-1	21 x 15							
62.05	W9-1L	36 x 36			1		11		
62.24	W4-2L	36 x 36			1		11		
62.24	W4-2L	36 x 36			1		11		
62.28	R4-1	24 x 30			1		9		
62.43	W9-1R	36 x 36	1						
62.57	W7-1	36 x 36							SIGN PANEL TO REMAIN IN PLACE
	W7-3bP	24 x 18							SIGN PANEL TO REMAIN IN PLACE
	W4-2R	36 x 36		1					
62.57	W4-2R	36 x 36	1						
62.61	W9-1R	36 x 36							SIGN PANEL TO REMAIN IN PLACE
	R4-1	24 x 30		1					
62.61	R4-1	24 x 30	1						
SUBTOTAL			5	2	4	2			
TOTAL			21	2	10	13			

SIGN QUANTITIES

SQ-2

REVISED BY | DATE REVISED
FRANK RIVAS | ROB STINGER
CALCULATED-DESIGNED BY | CHECKED BY
FUNCTIONAL SUPERVISOR
ROB STINGER
STATE OF CALIFORNIA - DEPARTMENT OF TRANSPORTATION
Caltrans® TRAFFIC OERATIONS

P:\proj1\02\4E410_plans\pse\24e410oc002.dgn

LAST REVISION 11-06-13 | DATE PLOTTED => 07-NOV-2013 | TIME PLOTTED => 07:20

Dist	COUNTY	ROUTE	POST MILES TOTAL PROJECT	SHEET No.	TOTAL SHEETS
02	Tri	299	53.5/64.0	44	70

Frank J. Rivas 11-06-13
REGISTERED CIVIL ENGINEER DATE

11-06-13
PLANS APPROVAL DATE

REGISTERED PROFESSIONAL ENGINEER FRANK RIVAS No. C53592 Exp. 6/30/15 CIVIL STATE OF CALIFORNIA

THE STATE OF CALIFORNIA OR ITS OFFICERS OR AGENTS SHALL NOT BE RESPONSIBLE FOR THE ACCURACY OR COMPLETENESS OF SCANNED COPIES OF THIS PLAN SHEET.

NOTE:

1.CALIFORNIA SIGN CODES ARE DESIGNATED BY (CA), OTHERWISE, FEDERAL MUTCD SIGN CODES ARE SHOWN.

CONTRACTOR FURNISHED SIGNS

SIGN PM	SIGN CODE	SIGN SIZE L x D (In x In)	SINGLE FACED	SIGN FACING MATERIAL						SIGN PANEL SUBSTRATE MATERIAL (SQFT) SINGLE-SHEET				DESCRIPTION (REMARKS)
				BACKGROUND		LEGEND		PROTECTIVE FILM		ALUMINUM FRAMED		ALUMINUM UNFRAMED		
				SHEETING COLOR	RETROREFLECTIVE ASTM TYPE	SHEETING COLOR	RETROREFLECTIVE ASTM TYPE	STANDARD	PREMIUM	0.063"	0.080"	0.063"	0.080"	
53.15	G7(CA)	54 x 30	X	GREEN	III	WHITE	III		X	11.3				TRINITY HIGHWAY
53.66	G9(CA)	66 x 24	X	GREEN	III	WHITE	III		X	11				WEAVERVILLE, POP 3,983 ELEV 2,045
54.40	G8(CA)	78 x 30	X	GREEN	III	WHITE	III		X	16.3				LITTLE BROWNS, 180° ARROW CREEK RD
54.95	D5-1	78 x 36	X	BLUE	III	WHITE	III		X	19.5				REST AREA, 2 MILES
56.90	D5-5	42 x 48	X	BLUE	III	WHITE	III		X				14	REST, AREA, 0° ARROW
56.90	D9-6	24 x 24	X	BLUE	III	WHITE	III						4	HANDICAP SYMBOL
57.03	D5-5	42 x 48	X	BLUE	III	WHITE	III		X				14	REST, AREA, 180° ARROW
57.03	D9-6	24 x 24	X	BLUE	III	WHITE	III						4	HANDICAP SYMBOL
57.64	G5(CA)	96 x 42	X	GREEN	III	WHITE	III		X		28			WEAVERVILLE 7, WILLOW CREEK 62, EUREKA 107
57.65	G9(CA)	72 x 24	X	GREEN	III	WHITE	III		X	12				DOUGLAS CITY, POP 1,092 ELEV 1,650
57.79	G8(CA)	102 x 30	X	GREEN	III	WHITE	III		X		21.3			DOUGLAS CITY, STEINER FLAT RD, 0° ARROW
57.79	D9-18b	84 x 24	X	BROWN	III	WHITE	III		X		14			CANOE TENT FISHING SYMBOLS
57.84	D5-1	78 x 36	X	BLUE	III	WHITE	III		X	19.5				REST AREA, 1 MILE
57.88	G8(CA)	60 x 36	X	GREEN	III	WHITE	III		X	15				180° ARROW EUREKA, REDDING 0° ARROW
57.88	G28(299)(CA)	28 x 25	X	GREEN	III	WHITE	III						4.9	299 ROUTE SHIELD
57.88	M6-4	21 x 15	X	GREEN	III	WHITE	III						2.2	2 HEADED ARROW
57.93	G8(CA)	102 x 30	X	GREEN	III	WHITE	III		X		21.3			DOUGLAS CITY, STEINER FLAT RD, 180° ARROW
57.93	D9-18b	84 x 24	X	BROWN	III	WHITE	III		X		14			CANOE TENT FISHING SYMBOLS
57.95	G9(CA)	72 x 24	X	GREEN	III	WHITE	III		X	12				DOUGLAS CITY, POP 1,092 ELEV 1,650
57.98	G78(CA)	96 x 48	X	GREEN	III	WHITE	III		X		32			90° ARROW REDDING 299 SHIELD, HAYFORK 3 SHIELD 0° ARROW
57.99	G22(CA)	102 x 48	X	GREEN	III	WHITE	III		X		34			DOUGLAS CITY, LEFT TURN, 1/4MILE
57.99	D9-7	24 x 24	X	BLUE	III	WHITE	III						4	FUEL SYMBOL
57.99	D9-9	24 x 24	X	BLUE	III	WHITE	III						4	LODGING SYMBOL
58.11	R1-1	30 x 30	X	RED	III	WHITE	III						6.3	STOP
58.13	W4-1	36 x 36	X	YELLOW	III	BLACK	II						9	MERGE SYMBOL
58.13	R5-1	30 x 30	X	RED	III	WHITE	III						6.3	DO NOT ENTER
58.13	R5-1a	30 x 18	X	RED	III	WHITE	III						3.8	WRONG WAY
58.36	G5(CA)	72 x 42	X	GREEN	III	WHITE	III		X	21				SHASTA 33, REDDING 35, ALTURAS 178
58.36	G28(299)(CA)	28 x 25	X	GREEN	III	WHITE	III						4.9	299 ROUTE SHIELD
58.36	M3-2	24 x 12	X	GREEN	III	WHITE	III						2.2	EAST
58.43	G78(CA)	90 x 48	X	GREEN	III	WHITE	III		X		30			135° ARROW 3 ROUTE SHIELD HAYFORK, 299 ROUTE SHIELD EUREKA 45° ARROW
58.43	G28(3)(CA)	24 x 25	X	GREEN	III	WHITE	III						4.2	3 ROUTE SHIELD
58.43	M2-1	21 x 15	X	GREEN	III	WHITE	III						2.2	JUNCTION
62.05	W9-1L	36 x 36	X	YELLOW	III	BLACK	II						9	LEFT LANE ENDS
62.24	W4-2L	36 x 36	X	YELLOW	III	BLACK	II						9	LEFT LANE DROP SYMBOL
62.24	W4-2L	36 x 36	X	YELLOW	III	BLACK	II						9	LEFT LANE DROP SYMBOL
62.28	R4-1	24 x 30	X	WHITE	III	BLACK	II						4.8	DO NOT PASS
									TOTAL (SQFT)	137.6	194.6		121.8	

SIGN QUANTITIES

SQ-3

REVISED BY	DATE REVISED
FRANK RIVAS	ROB STINGER
CALCULATED-DESIGNED BY	CHECKED BY
FUNCTIONAL SUPERVISOR	ROB STINGER

STATE OF CALIFORNIA - DEPARTMENT OF TRANSPORTATION
Caltrans TRAFFIC OERATIONS

P:\proj\02\4E410_plans\pse\24e410oc003.dgn

LAST REVISION 11-06-13 DATE PLOTTED => 07-NOV-2013 TIME PLOTTED => 07:20

Dist	COUNTY	ROUTE	POST MILES TOTAL PROJECT	SHEET No.	TOTAL SHEETS
02	Tri	299	53.5/64.0	45	70

Heidi Borders 11-06-13
REGISTERED CIVIL ENGINEER DATE

11-06-13
PLANS APPROVAL DATE

REGISTERED PROFESSIONAL ENGINEER HEIDI E. BORDERS No. C64194 Exp. 6-30-15 CIVIL STATE OF CALIFORNIA

THE STATE OF CALIFORNIA OR ITS OFFICERS OR AGENTS SHALL NOT BE RESPONSIBLE FOR THE ACCURACY OR COMPLETENESS OF SCANNED COPIES OF THIS PLAN SHEET.

COLD PLANE AC PAVEMENT

LOCATION	(N) DEPTH (LF)	SQYD	DESCRIPTION
PM 53.5	0.1	200	MAINLINE CONFORM
* PM 53.5 TO 60.8	0.1	182,988	REMOVE MAINLINE OPEN GRADE AC EP TO EP
MOON LIM LEE REST AREA	0.2	2924	
PM 53.5 TO PM 64.0	0.2	1311	ROAD CONNECTION CONFORMS
PM R58.11	0.5	1135	ROUTE 299/Hwy 3
PM 64.0	0.2	320	MAINLINE CONFORM
TOTAL		188,878	

* QUANTITIY FOR ADDITIONAL SHOULDER WIDTH LOCATIONS INCLUDED

REPLACE AC SURFACING

LOCATION	EB/WB LANES	(N) DEPTH (FT)	(N) WIDTH (FT)	(N) Avg LENGTH (FT)	CY
PM 53.5 TO PM 54.0	WB	0.33	6.0	25.0	67
PM 53.5 TO PM 54.0	EB	0.33	6.0	25.0	67
PM 58.0 TO PM 59.0	WB	0.33	6.0	25.0	390
PM 58.0 TO PM 59.0	EB	0.33	6.0	25.0	390
PM 62.0 TO PM 63.0	WB	0.33	6.0	25.0	190
PM 62.0 TO PM 63.0	EB	0.33	6.0	25.0	190
TOTAL					1294

REMOVE CONCRETE (PARKING BUMPER)

LOCATION	EA	DESCRIPTION
MOON LIM LEE REST AREA	10	PARKING BUMPERS
TOTAL	10	

REMOVE CONCRETE SIDEWALK (SQYD)

LOCATION	SQYD	DESCRIPTION
MOON LIM LEE REST AREA	10.1	ADA RAMP
TOTAL	10.1	

COLD PLANE AC PAVEMENT (PROFILE CORRECTION)

LOCATION	(N) DEPTH (LF)	SQYD	DESCRIPTION
* LITTLE BROWNS CREEK BRIDGE, PM 54.54	0 TO 0.37'	3045	BRIDGE PROFILE CONFORM
* WEAVER CREEK BRIDGE, PM 56.50	0.03' TO 0.43'	2055	BRIDGE PROFILE CONFORM
TRINITY RIVER BRIDGE, PM R57.99	0.04' TO 0.58'	4752	BRIDGE PROFILE CONFORM
INDIAN CREEK BRIDGE, PM 59.69	0.11' TO 0.43'	3527	BRIDGE PROFILE CONFORM
MOON LIM LEE REST AREA, PM 56.67	0.33' TO 0.93'	288	DRAINAGE CORRECTION
TOTAL		13,667	

* QUANTITY FOR ROAD CONNECTION CONFORM IS INCLUDED

ROADWAY ITEMS

LOCATION	(N) LANE WIDTH LF	(N) (Typ) SHLDR WIDTH LF	HMA TON	TACK COAT TON	SHOULDER BACKING TON	ROADWAY EXCAVATION CY	REMOVE RETAINING WALL (PORTION)(CY) CY
** PM 53.5 TO PM 54.3	24.0 - 36.0	4.0	2502.7		274		
PM 54.3 TO PM 54.6	36.0	8.0	1235.5		103		
PM 54.6 TO PM 56.4	24.0 - 40.0	2.0 - 4.0	5290.4		616		
PM 56.4 TO PM 56.8	24.0	4.0 - 8.0	1045.4		137		
PM 56.8 TO PM 57.0	48.0	4.0 - 10.0	1203.8		68		
PM 57.0 TO PM 57.8	24.0 - 40.0	4.0 - 8.0	2946.1		274		
PM 57.8 TO PM 58.4	48.0	2.0 - 6.0	2756.2	40	205		
PM 58.4 TO PM 60.8	24.0	4.0 - 6.0	6494.4		821		
PM 60.8 TO PM 61.1	60.0	2.0 - 4.0	1568.2		103		
PM 61.1 TO PM 62.2	37.0	2.0	3589.3		376		
PM 62.2 TO PM 63.6	24.0 - 48.0	4.0 - 8.0	5449.0		479		
** PM 63.6 TO PM 64.0	24.0	6.0 - 12.0	1235.5		137		
ADDITIONAL SHOULDER WIDTH LOCATIONS		15.0 - 40.0	1228.9		111		
MOON LIM LEE REST AREA			458.9				
HMA DIKE			170.0				
COLD PLANE AC PAVEMENT: ROUTE 299/Hwy 3			383.4				
COLD PLANE AC PAVEMENT (PROFILE CORRECTION)			4554.3		89	15	
RECONSTRUCT SHOULDER: PM 62.28 TO PM 62.57			206.0		49	41	
PLACE HMA (Misc AREA) FROM DRAINAGE ITEMS			11.8				
DRIVEWAY CONNECTIONS			93.6			4	
ROAD CONNECTION CONFORMS			154.3				
REMOVE CONCRETE WALL: PM 62.44 TO PM 62.45						940	25.2
TOTAL			42,577.7	40	3842	1000	25.2

** HMA QUANTITY FOR MAINLINE CONFORMS IS INCLUDED

HMA DIKE

LOCATION	PLACE HMA DIKE TYPE A LF	TYPE C LF	TYPE D LF	TYPE E LF	TYPE F LF	REMOVE AC DIKE LF	*** HMA TON
PM R57.78, Lt					1153		
PM 60.05, Lt					3010	3010	
PM 60.85, Lt		59		345	319	723	
PM 61.07, Lt		31		245	855	1131	
PM 62.70, Lt					265	265	170
PM 62.70, Rt					435	435	
PM 63.12, Rt			898			898	
PM 63.64, Lt					1210	1210	
FROM DRAINAGE QUANTITY SHEET	103						
TOTAL	103	90	898	590	7247	7672	170

*** SEE ROADWAY QUANTITIES FOR HMA

MINOR CONCRETE SIDEWALK

LOCATION	CY	(N) DEPTH (LF)	DESCRIPTION
MOON LIM LEE REST AREA	1.1	0.33	ADA RAMP
TOTAL	1.1		

SUMMARY OF QUANTITIES

Q-1

REVISED BY	DATE REVISED

JEANNIE STEFFAN	HEIDI BORDERS
CALCULATED-DESIGNED BY	CHECKED BY

FUNCTIONAL SUPERVISOR	JULIE CASEY

STATE OF CALIFORNIA - DEPARTMENT OF TRANSPORTATION
Caltrans DESIGN

P:\proj1\02\4E410_plans\pse\24e410pa001.dgn

LAST REVISION 11-06-13
DATE PLOTTED => 07-NOV-2013
TIME PLOTTED => 07:20

Dist	COUNTY	ROUTE	POST MILES TOTAL PROJECT	SHEET No.	TOTAL SHEETS
02	Tri	299	53.5/64.0	46	70

Heidi Borders 11-06-13
REGISTERED CIVIL ENGINEER DATE

11-06-13
PLANS APPROVAL DATE

REGISTERED PROFESSIONAL ENGINEER HEIDI E. BORDERS No. C64194 Exp. 6-30-15 CIVIL STATE OF CALIFORNIA

THE STATE OF CALIFORNIA OR ITS OFFICERS OR AGENTS SHALL NOT BE RESPONSIBLE FOR THE ACCURACY OR COMPLETENESS OF SCANNED COPIES OF THIS PLAN SHEET.

NOTE:

1. (N) - NOT A SEPARATE PAY ITEM, FOR INFORMATION ONLY

METAL BEAM GUARD RAILING

LOCATION BEGIN POST MILE	LOCATION DESCRIPTION	R/L	RECONSTRUCT METAL BEAM GUARD RAILING LF	ADJUST METAL BEAM GUARD RAILING LF	RECONSTRUCT TRANSITION RAILING (TYPE WB) EA	(N) BURIED END ANCHOR EA	RECONSTRUCT END ANCHOR (TYPE SFT) EA	RECONSTRUCT TYPE ET TERMINAL SYSTEM EA	RECONSTRUCT TYPE SRT TERMINAL SYSTEM EA	TREATED WOOD WASTE LB	TRANSITION RAILING (TYPE WB) EA	REMOVE METAL BEAM GUARD RAILING LF	RECONSTRUCT METAL BEAM GUARD RAILING (7' STEEL POST) LF	* MINOR CONCRETE MINOR STRUCTURE CY	EARTH RETAINING SYSTEM (RAILING COMPONENTS) SQFT	NOTES
54.36		R	375			1			1							
54.52	LITTLE BROWNS CREEK BRIDGE	R	80		1				1							
54.52	LITTLE BROWNS CREEK BRIDGE	L	75		1				1							
54.55	LITTLE BROWNS CREEK BRIDGE	R	105		1				1							
54.55	LITTLE BROWNS CREEK BRIDGE	L	105		1				1							
56.48	WEAVER CREEK BRIDGE	R	75		1				1							
56.49	WEAVER CREEK BRIDGE	L	70		1											
56.55	WEAVER CREEK BRIDGE	L	60		1	1			1							
56.54	WEAVER CREEK BRIDGE	R	50		1	1										
R57.78	TRINITY RIVER BRIDGE	L	1153						1							SEE MBGR WITH DIKE DETAIL
57.93	TRINITY RIVER BRIDGE	R	345						1		1			0.90		SEE TRANSITION BLOCK DETAIL
R58.19	TRINITY RIVER BRIDGE	R	38			1										AT Exist CONCRETE BARRIER
58.00	TRINITY RIVER BRIDGE	L	360						1		1			0.80		SEE TRANSITION BLOCK DETAIL
59.67	INDIAN CREEK BRIDGE	L	90		1				1							
59.67	INDIAN CREEK BRIDGE	R	90		1				1							
59.71	INDIAN CREEK BRIDGE	L	140		1				1							
59.71	INDIAN CREEK BRIDGE	R	85		1			1								
60.05		L	3010				2									SEE MBGR WITH DIKE DETAIL
60.85	STEEL BRIDGE ROAD	L	528					1	1							SEE MBGR WITH DIKE DETAIL
60.87	STEEL BRIDGE ROAD	R		580		2										
61.07		L	900			1			1							SEE MBGR WITH DIKE DETAIL
61.09	VITZTHUM GULCH Rd	R	370			1			1							
62.28	POKER BAR Rd	L	1400						2				640		200	SEE RECONSTRUCT SHOULDER DETAIL **
61.38		L	634			1			1							
62.43		R										63				AT LOCATION OF REMOVE CONCRETE WALL
62.70		R	525			2										SEE MBGR WITH DIKE DETAIL
63.12		R		263					2							
63.51	LEWISTON Rd	L		237		1										SEE MBGR WITH DIKE DETAIL
63.64		L		1210		2			1							SEE MBGR WITH DIKE DETAIL
63.65		R		594					2							
TOTAL			10,663	2884	12	14	2	2	24	177,432	2	63	640	1.70	200	

* FOR ADDITIONAL QUANTITY SEE DRAINAGE QUANTITIES
** EXACT POST LOCATION TO BE DETERMINED BY ENGINEER

SUMMARY OF QUANTITIES

Q-2

REVISED BY | DATE REVISED
JEANNIE STEFFAN | HEIDI BORDERS
CALCULATED-DESIGNED BY | CHECKED BY
FUNCTIONAL SUPERVISOR: JULIE CASEY
STATE OF CALIFORNIA - DEPARTMENT OF TRANSPORTATION
Caltrans DESIGN
P:\proj1\02\4E410_plans\pse\24e410pa002.dgn

LAST REVISION 11-06-13 | DATE PLOTTED => 07-NOV-2013 | TIME PLOTTED => 07:21

Dist	COUNTY	ROUTE	POST MILES TOTAL PROJECT	SHEET No.	TOTAL SHEETS
02	Tri	299	53.5/64.0	47	70

REGISTERED CIVIL ENGINEER 11-06-13 DATE

11-06-13
PLANS APPROVAL DATE

REGISTERED PROFESSIONAL ENGINEER HEIDI E. BORDERS No. C64194 Exp. 6-30-15 CIVIL STATE OF CALIFORNIA

THE STATE OF CALIFORNIA OR ITS OFFICERS OR AGENTS SHALL NOT BE RESPONSIBLE FOR THE ACCURACY OR COMPLETENESS OF SCANNED COPIES OF THIS PLAN SHEET.

NOTE:

1. (N) - NOT A SEPARATE PAY ITEM, FOR INFORMATION ONLY

WATER POLLUTION CONTROL

LOCATION	Temp GRAVEL BAG BERM	Temp DRAINAGE INLET PROTECTION	Temp FIBER ROLL
	LF	EA	LF
PM 53.5 TO PM 64.0	200	11	2610
TOTAL	200	11	2610

PARKING BUMPERS (PRECAST CONCRETE)

LOCATION DESCRIPTION	EA
MOON LIM LEE REST AREA	10
TOTAL	10

DETECTABLE WARNING SURFACE

LOCATION DESCRIPTION	SQFT
MOON LIM LEE REST AREA	13.5
TOTAL	13.5

TEMPORARY FENCE (TYPE ESA)

DRAINAGE SYSTEM NO.	POST MILE	LF	NOTE
2	53.96	40	SEE DP-2
4	55.55	40	SEE DP-3
TOTAL		80	

DELINEATORS

LOCATION	DELINEATOR (CLASS 2)	
	TYPE E	TYPE F
	EA	EA
MAINLINE		536
DRIVEWAYS	72	108
ROAD CONNECTIONS	18	27
SUBTOTAL	90	671
TOTAL	761	

MILE POST MARKER

PM	EA
53.5	1
54.0	1
54.5	1
55.0	1
55.5	1
56.0	1
56.5	1
57.0	1
57.5	1
58.5	1
59.0	1
60.0	1
60.5	1
61.0	1
61.5	1
62.0	1
62.5	1
63.0	1
63.5	1
64.0	1
TOTAL	20

OBJECT MARKERS

LOCATION	TYPE L-1 (CA)
	EA
DRIVEWAYS	72
ROAD CONNECTIONS	18
MBGR TERMINAL SYSTEMS	30
TOTAL	120

REMOVE DELINEATOR

LOCATION	EA
MAINLINE	495
TOTAL	495

SUMMARY OF QUANTITIES

Q-3

REVISED BY	DATE REVISED

JEANNIE STEFFAN — HEIDI BORDERS — CALCULATED-DESIGNED BY — CHECKED BY

FUNCTIONAL SUPERVISOR: JULIE CASEY

STATE OF CALIFORNIA - DEPARTMENT OF TRANSPORTATION

Caltrans® DESIGN

P:\proj1\02\4E410_plans\pse\24e410pa003.dgn

LAST REVISION 11-06-13 — DATE PLOTTED => 07-NOV-2013 — TIME PLOTTED => 07:21

Dist	COUNTY	ROUTE	POST MILES TOTAL PROJECT	SHEET No.	TOTAL SHEETS
02	Tri	299	53.5/64.0	48	70

Heidi Borders 11-06-13
REGISTERED CIVIL ENGINEER DATE

11-06-13
PLANS APPROVAL DATE

REGISTERED PROFESSIONAL ENGINEER HEIDI E. BORDERS No. C64194 Exp. 6-30-15 CIVIL STATE OF CALIFORNIA

THE STATE OF CALIFORNIA OR ITS OFFICERS OR AGENTS SHALL NOT BE RESPONSIBLE FOR THE ACCURACY OR COMPLETENESS OF SCANNED COPIES OF THIS PLAN SHEET.

SEED MIX (N)

BOTANICAL NAME (COMMON NAME)	PERCENT GERMINATION (MINIMUM)	POUNDS PURE LIVE SEED PER ACRE (N) (SLOPE MEASUREMENT)
ACHILLEA MILLEFOLIUM (COMMON YARROW)	50	2
ELYMUS GLAUCUS (CALIFORNIA WILD RYE)	70	20
FESTUCA IDAHOENSIS (WESTERN FESCUE)	70	20
HORDEUM VULGARE UC 937 (COMMON WINTER BARLEY)	70	25
VULPIA MICROSTACHYS (SMALL FESCUE)	80	25
	TOTAL	92

EROSION CONTROL (DRY SEED) / STRAW SEQUENCE / APPLICATION RATES (N)

SEQUENCE	ITEM	MATERIAL		APPLICATION RATE (N)
		DESCRIPTION	TYPE	
STEP 1	SEED APPLICATION	PURE LIVE SEED	MIX	92 LB/ACRE
STEP 2	FERTILIZER APPLICATION	SLOW RELEASE FERTLIZER	GRANULAR	200 LB/ACRE
STEP 3	STRAW APPLICATION	STRAW	RICE	8000 LB/ACRE

EROSION CONTROL

SHEET	LOCATION			DESCRIPTION	EROSION CONTROL (DRY SEED)(SQFT)	STRAW
	No	L†	R†		SQFT	SQFT
C-1	-	-	X	DRY APPLIED SEEDS & FERTILIZER	3900	3900
				TOTAL	3900	3900

NOTES:
1. APPLY STRAW 2" THICK OR SUFFICIENT TO COVER SEEDS & FERTILIZER.
2. AT THE OPTION OF THE CONTRACTOR, RICE STRAW CAN BE HAND APPLIED.

EROSION CONTROL QUANTITIES

ECQ-1

REVISED BY | DATE REVISED
JEANNIE STEFFAN | HEIDI BORDERS
CALCULATED-DESIGNED BY | CHECKED BY
FUNCTIONAL SUPERVISOR | JULIE CASEY
STATE OF CALIFORNIA - DEPARTMENT OF TRANSPORTATION
Caltrans® DESIGN
P:\proj1\02\4E410_plans\pse\24e410tg001.dgn

LAST REVISION 11-06-13 | DATE PLOTTED => 07-NOV-2013 | TIME PLOTTED => 07:21

Dist	COUNTY	ROUTE	POST MILES TOTAL PROJECT	SHEET No.	TOTAL SHEETS
02	Tri	299	53.5/64.0	49	70

REGISTERED ELECTRICAL ENGINEER 11-06-13 DATE

PLANS APPROVAL DATE 11-06-13

REGISTERED PROFESSIONAL ENGINEER A.P. ROBLES No. E15293 Exp. 3-31-15 ELECTRICAL STATE OF CALIFORNIA

THE STATE OF CALIFORNIA OR ITS OFFICERS OR AGENTS SHALL NOT BE RESPONSIBLE FOR THE ACCURACY OR COMPLETENESS OF SCANNED COPIES OF THIS PLAN SHEET.

NOTES:

1. LOCATIONS SHOWN ARE APPROXIMATE. ENGINEER WILL DETERMINE EXACT LOCATION.
2. AB Exist LOOPS AND AXLE SENSORS.

LEGEND:

STC SCREENED TRANSMISSION CABLE

(PB) OBJECT MARKER (TYPE PB) AND PULL BOX PAVING

1. REMOVE 4 STC, 2 DLC. INSTALL 3 STC, 6 DLC.
2. COIL 10′ OF CABLES IN CABINET.
3. SEE TYPICAL AXLE SENSOR INSTALLATION DETAIL, SHEET E-2
4. REPLACE PB.
5. PLACE PULL BOX PAVING.

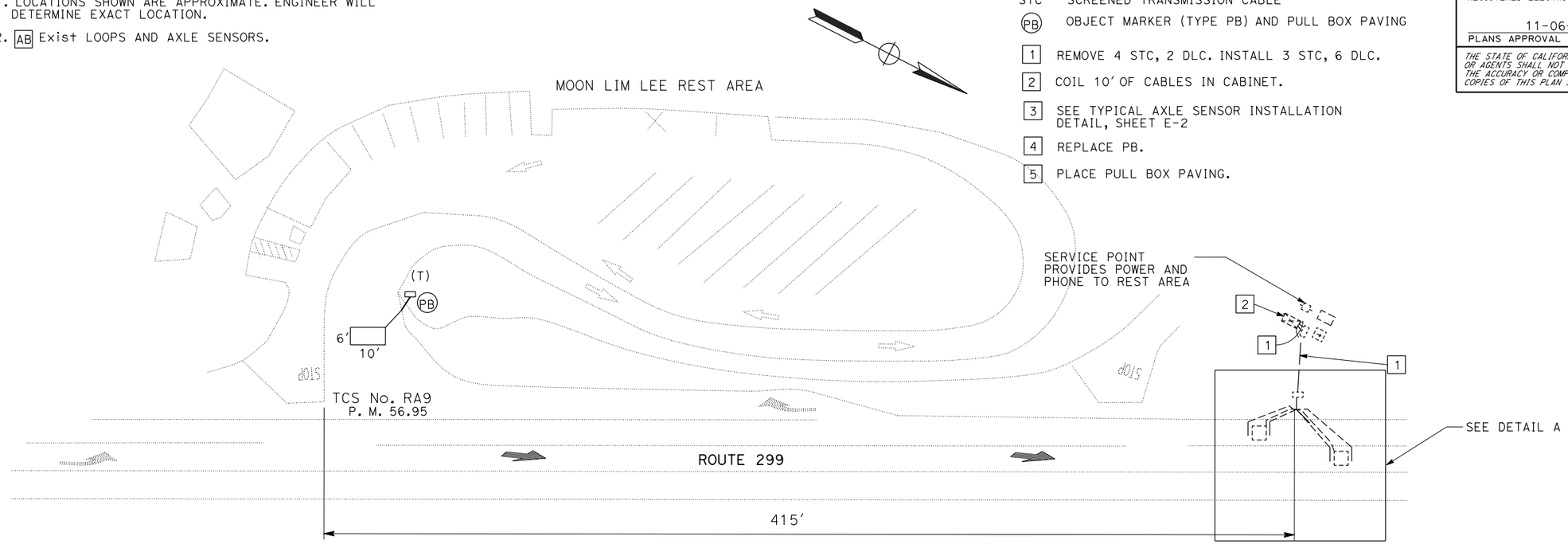

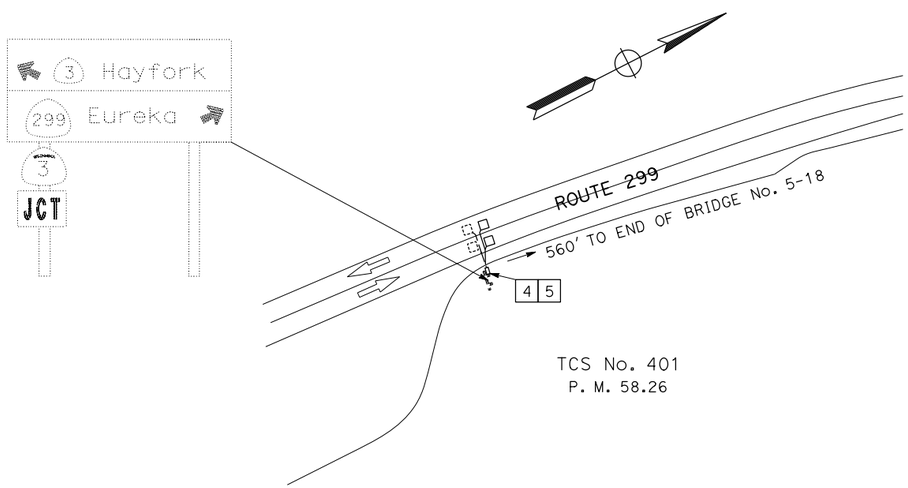

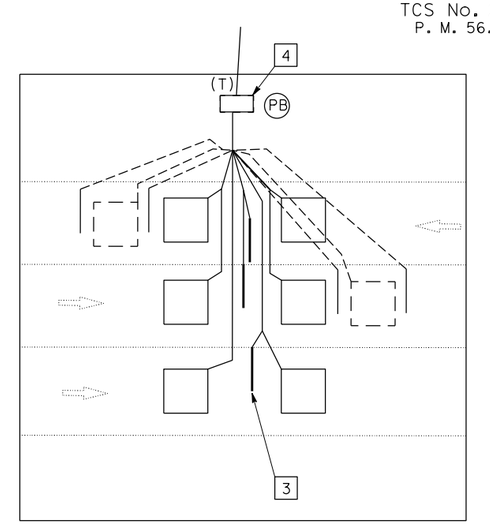

DETAIL A

MODIFY TRAFFIC COUNT STATION

NO SCALE

E-1

APPROVED FOR ELECTRICAL WORK ONLY

REVISED BY	DATE REVISED
ARTURO P. ROBLES	KAREN LAW
CALCULATED-DESIGNED BY	CHECKED BY
FUNCTIONAL SUPERVISOR	ROB STINGER

STATE OF CALIFORNIA - DEPARTMENT OF TRANSPORTATION

Caltrans® ELECTRICAL DESIGN

P:\proj1\02\4E410_plans\pse\24e410ua001.dgn

LAST REVISION 11-06-13 DATE PLOTTED => 07-NOV-2013 TIME PLOTTED => 07:21

Dist	COUNTY	ROUTE	POST MILES TOTAL PROJECT	SHEET No.	TOTAL SHEETS
02	Tri	299	53.5/64.0	50	70

REGISTERED ELECTRICAL ENGINEER 11-06-13 DATE

11-06-13
PLANS APPROVAL DATE

REGISTERED PROFESSIONAL ENGINEER A.P. ROBLES No. E15293 Exp. 3-31-15 ELECTRICAL STATE OF CALIFORNIA

THE STATE OF CALIFORNIA OR ITS OFFICERS OR AGENTS SHALL NOT BE RESPONSIBLE FOR THE ACCURACY OR COMPLETENESS OF SCANNED COPIES OF THIS PLAN SHEET.

LEGEND

(PB) OBJECT MARKER (TYPE PB)

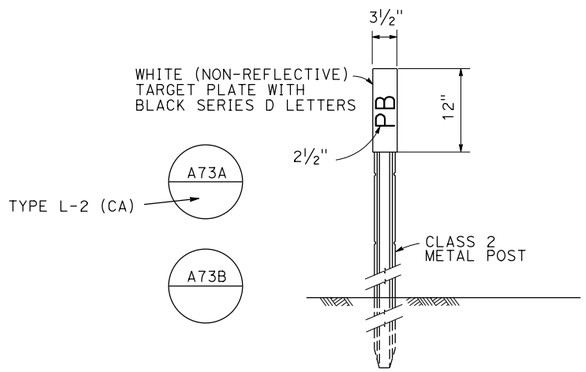

NOTE: MARKERS SHALL COMPLY WITH TYPE L-2 MODIFIED WITH A SNOW POLE BRACKET. PLACE MARKER 2" OUTSIDE PULL BOX PAVING ON SIDE AWAY FROM TRAFFIC. SEE PULL BOX PAVING DETAIL.

OBJECT MARKER (TYPE PB)

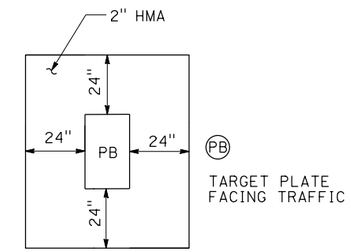

NOTE: APPLIES TO ALL INSTALLATIONS IN UNPAVED AREAS

PULL BOX PAVING

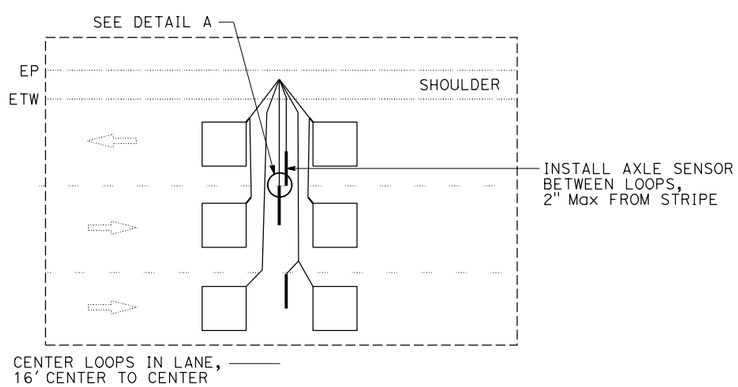

TYPICAL AXLE SENSOR INSTALLATION

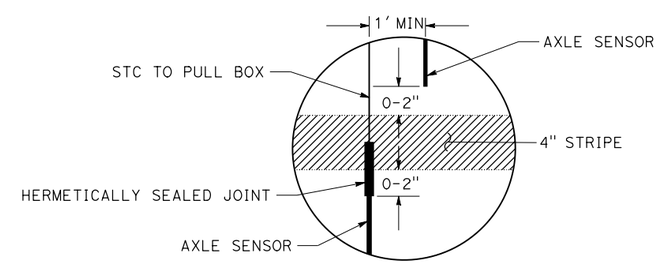

DETAIL A

APPROVED FOR ELECTRICAL WORK ONLY

MODIFY TRAFFIC COUNT STATION

NO SCALE

E-2

REVISED BY	DATE REVISED
ARTURO P. ROBLES	KAREN LAW

CALCULATED-DESIGNED BY / CHECKED BY

FUNCTIONAL SUPERVISOR: ROB STINGER

STATE OF CALIFORNIA - DEPARTMENT OF TRANSPORTATION
Caltrans® ELECTRICAL DESIGN

P:\proj1\02\4E410_plans\pse\24e410ua002.dgn

LAST REVISION 11-06-13 | DATE PLOTTED => 07-NOV-2013 | TIME PLOTTED => 07:21

Dist	COUNTY	ROUTE	POST MILES TOTAL PROJECT	SHEET No.	TOTAL SHEETS
02	Tri	299	53.5/64.0	51	70

ART 11-06-13
REGISTERED ELECTRICAL ENGINEER DATE

11-06-13
PLANS APPROVAL DATE

REGISTERED PROFESSIONAL ENGINEER A.P. ROBLES No. E15293 Exp. 3-31-15 ELECTRICAL STATE OF CALIFORNIA

THE STATE OF CALIFORNIA OR ITS OFFICERS OR AGENTS SHALL NOT BE RESPONSIBLE FOR THE ACCURACY OR COMPLETENESS OF SCANNED COPIES OF THIS PLAN SHEET.

NOTE:

1. (N) - NOT A SEPARATE PAY ITEM, FOR INFORMATION ONLY

MODIFY TRAFFIC COUNT STATION

	(N)	(N)	(N)	(N)	(N)
SHEET E-1	TYPE A LOOP	AXLE SENSOR	TRAFFIC RATED PB	NON-TRAFFIC RATED PB	6' x 10' LOOP
TOTAL	8	3	2	1	1

ELECTRICAL QUANTITIES

E-3

APPROVED FOR ELECTRICAL WORK ONLY

REVISED BY	DATE REVISED

CALCULATED-DESIGNED BY	ARTURO P. ROBLES
CHECKED BY	KAREN LAW
FUNCTIONAL SUPERVISOR	ROB STINGER

STATE OF CALIFORNIA - DEPARTMENT OF TRANSPORTATION
Caltrans® ELECTRICAL DESIGN

P:\proj1\02\4E410_plans\pse\24e410ua003.dgn

LAST REVISION 11-06-13 DATE PLOTTED => 07-NOV-2013 TIME PLOTTED => 07:21

M

Maint	MAINTENANCE
Max	MAXIMUM
MB	METAL BEAM
MBB	METAL BEAM BARRIER
MBGR	METAL BEAM GUARD RAILING
Med	MEDIAN
MGS	MIDWEST GUARDRAIL SYSTEM
MH	MANHOLE
Min	MINIMUM
Misc	MISCELLANEOUS
Misc I & S	MISCELLANEOUS IRON AND STEEL
Mkr	MARKER
Mod	MODIFIED,
	MODIFY
Mon	MONUMENT
MP	METAL PLATE
MPGR	METAL PLATE GUARD RAILING
MR	MOVEMENT RATING
MSE	MECHANICALLY STABILIZED EMBANKMENT
Mt	MOUNTAIN, MOUNT
Mtl	MATERIAL
MVP	MAINTENANCE VEHICLE PULLOUT

N

N	NORTH
NB	NORTHBOUND
No.	NUMBER (MUST HAVE PERIOD)
Nos.	NUMBERS (MUST HAVE PERIOD)
NPS	NOMINAL PIPE SIZE
NS	NEAR SIDE
NSP	NEW STANDARD PLAN
NTS	NOT TO SCALE

O

Oblr	OBLITERATE
OC	OVERCROSSING
OD	OUTSIDE DIAMETER
OF	OUTSIDE FACE
OG	ORIGINAL GROUND
OGAC	OPEN GRADED ASPHALT CONCRETE
OGFC	OPEN GRADED FRICTION COURSE
OH	OVERHEAD
OHWM	ORDINARY HIGH WATER MARK
O-O	OUT TO OUT
Opp	OPPOSITE
OSD	OVERSIDE DRAIN

P

P	PAGE
PAP	PERFORATED ALUMINUM PIPE
PB	PULL BOX
PC	POINT OF CURVATURE,
	PRECAST
PCC	POINT OF COMPOUND CURVE,
	PORTLAND CEMENT CONCRETE
PCMS	PORTABLE CHANGEABLE MESSAGE SIGN
PCP	PERFORATED CONCRETE PIPE,
	PRESTRESSED CONCRETE PIPE
PCVC	POINT OF COMPOUND VERTICAL CURVE
PEC	PERMIT TO ENTER AND CONSTRUCT
Ped	PEDESTRIAN
Ped OC	PEDESTRIAN OVERCROSSING
Ped UC	PEDESTRIAN UNDERCROSSING
Perm Mtl	PERMEABLE MATERIAL

P continued

PG	PROFILE GRADE
PI	POINT OF INTERSECTION
PJP	PARTIAL JOINT PENETRATION
Pkwy	PARKWAY
ℙ,PL	PLATE
P/L	PROPERTY LINE
PM	POST MILE,
	TIME FROM NOON TO MIDNIGHT
PN	PAVING NOTCH
POC	POINT OF HORIZONTAL CURVE
POT	POINT OF TANGENT
POVC	POINT OF VERTICAL CURVE
PP	PIPE PILE,
	PLASTIC PIPE,
	POWER POLE
PPL	PREFORMED PERMEABLE LINER
PPP	PERFORATED PLASTIC PIPE
PRC	POINT OF REVERSE CURVE
PRF	PAVEMENT REINFORCING FABRIC
PRVC	POINT OF REVERSE VERTICAL CURVE
PS&E	PLANS, SPECIFICATIONS AND ESTIMATES
PS, P/S	PRESTRESSED
PSP	PERFORATED STEEL PIPE
PT	POINT OF TANGENCY
PVC	POLYVINYL CHLORIDE
Pvmt	PAVEMENT

Q

Qty	QUANTITY

R

R	RADIUS
R & D	REMOVE AND DISPOSE
R & S	REMOVE AND SALVAGE
R/C	RATE OF CHANGE
RCA	REINFORCED CONCRETE ARCH
RCB	REINFORCED CONCRETE BOX
RCP	REINFORCED CONCRETE PIPE
RCPA	REINFORCED CONCRETE PIPE ARCH
Rd	ROAD
Reinf	REINFORCED,
	REINFORCEMENT,
	REINFORCING
Rel	RELOCATE
Repl	REPLACEMENT
Ret	RETAINING
Rev	REVISED, REVISION
Rdwy	ROADWAY
RHMA	RUBBERIZED HOT MIX ASPHALT
Riv	RIVER
RM	ROAD-MIXED
RP	RADIUS POINT,
	REFERENCE POINT
RR	RAILROAD
RSP	ROCK SLOPE PROTECTION,
	REVISED STANDARD PLAN
Rt	RIGHT
Rte	ROUTE
RW	REDWOOD,
	RETAINING WALL
R/W	RIGHT OF WAY
Rwy	RAILWAY

S

S	SOUTH,
	SUPPLEMENT
SAE	STRUCTURE APPROACH EMBANKMENT
Salv	SALVAGE
SAPP	STRUCTURAL ALUMINUM PLATE PIPE
SB	SOUTHBOUND
SC	SAND CUSHION
SCSP	SLOTTED CORRUGATED STEEL PIPE
SD	STORM DRAIN
Sec	SECOND,
	SECTION
Sep	SEPARATION
SG	SUBGRADE
Shld	SHOULDER
Sht	SHEET
Sim	SIMILAR
℄	STATION LINE
SM	SELECTED MATERIAL
Spec	SPECIAL,
	SPECIFICATIONS
SPP	SLOTTED PLASTIC PIPE
SS	SLOPE STAKE
SSBM	STRAP AND SADDLE BRACKET METHOD
SSD	STRUCTURAL SECTION DRAIN
SSPA	STRUCTURAL STEEL PLATE ARCH
SSPP	STRUCTURAL STEEL PLATE PIPE
SSPPA	STRUCTURAL STEEL PLATE PIPE ARCH
SSRP	STEEL SPIRAL RIB PIPE
St	STREET
Sta	STATION
STBB	SINGLE THRIE BEAM BARRIER
Std	STANDARD
Str	STRUCTURE
Surf	SURFACING
SW	SIDEWALK,
	SOUND WALL
Swr	SEWER
Sym	SYMMETRICAL
S4S	SURFACE 4 SIDES

T

T	SEMI-TANGENT
Tan	TANGENT
TBB	THRIE BEAM BARRIER
Tbr	TIMBER
TC	TOP OF CURB
TCB	TRAFFIC CONTROL BOX
TCE	TEMPORARY CONSTRUCTION EASEMENT
Tel	TELEPHONE
Temp	TEMPORARY
TG	TOP OF GRADE
Tot	TOTAL
TP	TELEPHONE POLE
TPB	TREATED PERMEABLE BASE
TPM	TREATED PERMEABLE MATERIAL
Trans	TRANSITION

T continued

TS	TRANSVERSE,
	TRAFFIC SIGNAL,
	TUBULAR STEEL
Typ	TYPICAL

U

UC	UNDERCROSSING
UD	UNDERDRAIN
UG	UNDERGROUND
UON	UNLESS OTHERWISE NOTED
UP	UNDERPASS

V

V	VALVE,
	DESIGN SPEED
Var	VARIABLE,
	VARIES
VC	VERTICAL CURVE
VCP	VITRIFIED CLAY PIPE
Vert	VERTICAL
Via	VIADUCT
Vol	VOLUME

W

W	WEST,
	WIDTH
WB	WESTBOUND
WH	WEEP HOLE
WM	WIRE MESH
WS	WATER SURFACE
WSP	WELDED STEEL PIPE
Wt	WEIGHT
WV	WATER VALVE
WW	WINGWALL
WWLOL	WINGWALL LAYOUT LINE

X

X Sec	CROSS SECTION
Xing	CROSSING

Y

Yr	YEAR
Yrs	YEARS

DIST	COUNTY	ROUTE	POST MILES TOTAL PROJECT	SHEET No.	TOTAL SHEETS
02	Tri	299	53.5/64.0	52	70

Grace M. Tsushima
REGISTERED CIVIL ENGINEER

July 19, 2013
PLANS APPROVAL DATE

REGISTERED PROFESSIONAL ENGINEER
Grace M. Tsushima
No. C49814
Exp. 9-30-14
CIVIL
STATE OF CALIFORNIA

THE STATE OF CALIFORNIA OR ITS OFFICERS OR AGENTS SHALL NOT BE RESPONSIBLE FOR THE ACCURACY OR COMPLETENESS OF SCANNED COPIES OF THIS PLAN SHEET.

TO ACCOMPANY PLANS DATED 11-06-13

UNIT OF MEASUREMENT SYMBOLS:

Some of the symbols used in the project plan quantity tables and in the Bid Item List are:

TABLE A

SYMBOL USED	DEFINITIONS
ACRE	ACRE
CF	CUBIC FOOT
CY	CUBIC YARD
EA	EACH
GAL	GALLON
LB	POUND
LF	LINEAR FOOT
SQFT	SQUARE FOOT
SQYD	SQUARE YARD
STA	100 FEET
TAB	TABLET
TON	2,000 POUNDS

Some of the symbols used in the plans other than in the project plan quantity tables are:

TABLE B

SYMBOL USED	DEFINITIONS
ksi	KIPS PER SQUARE INCH
ksf	KIPS PER SQUARE FOOT
psi	POUNDS PER SQUARE INCH
psf	POUNDS PER SQUARE FOOT
lb/ft^3, pcf	POUNDS PER CUBIC FOOT
tsf	TONS PER SQUARE FOOT
mph, MPH *	MILES PER HOUR
ø	NOMINAL DIAMETER
oz	OUNCE
lb	POUND
kip	1,000 POUNDS
cal	CALORIE
ft	FOOT OR FEET
gal	GALLON

* For use on a sign panel only

STATE OF CALIFORNIA
DEPARTMENT OF TRANSPORTATION

ABBREVIATIONS (SHEET 2 OF 2)

NO SCALE

RSP A10B DATED JULY 19, 2013 SUPERSEDES STANDARD PLAN A10B DATED MAY 20, 2011 - PAGE 2 OF THE STANDARD PLANS BOOK DATED 2010.

REVISED STANDARD PLAN RSP A10B

2010 REVISED STANDARD PLAN RSP A10B

DATE PLOTTED => 07-NOV-2013
TIME PLOTTED => 07:21

DIST	COUNTY	ROUTE	POST MILES TOTAL PROJECT	SHEET No.	TOTAL SHEETS
02	Tri	299	53.5/64.0	53	70

REGISTERED CIVIL ENGINEER

April 20, 2012
PLANS APPROVAL DATE

REGISTERED PROFESSIONAL ENGINEER
Roberta L. McLaughlin
No. C40375
Exp. 3-31-13
CIVIL
STATE OF CALIFORNIA

THE STATE OF CALIFORNIA OR ITS OFFICERS OR AGENTS SHALL NOT BE RESPONSIBLE FOR THE ACCURACY OR COMPLETENESS OF SCANNED COPIES OF THIS PLAN SHEET.

TC ACCOMPANY PLANS DATED 11-06-13

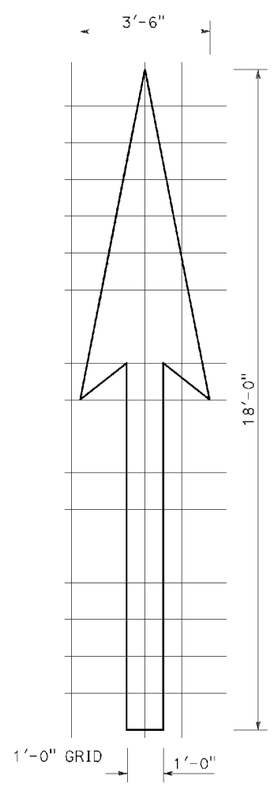

A=25 ft²

TYPE I 18'-0" ARROW

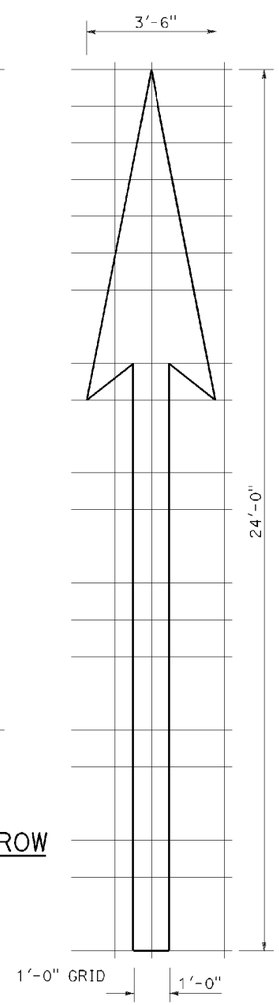

A=31 ft²

TYPE I 24'-0" ARROW

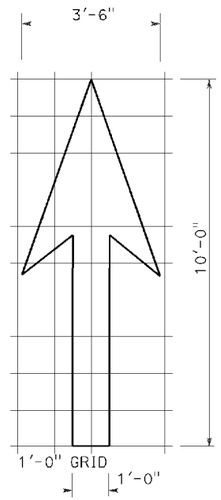

A=14 ft²

TYPE I 10'-0" ARROW

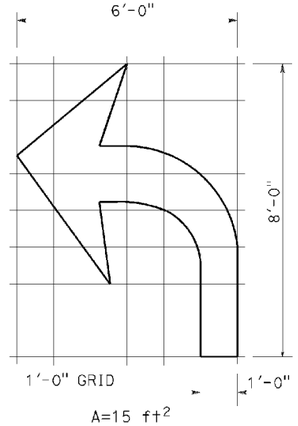

A=15 ft²

TYPE IV (L) ARROW

(For Type IV (R) arrow, use mirror image)

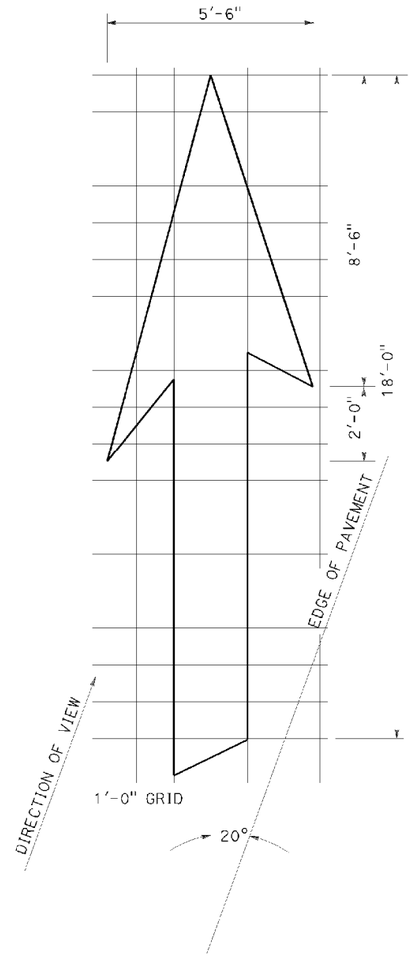

A=42 ft²

TYPE VI ARROW

Right lane drop arrow (For left lane, use mirror image)

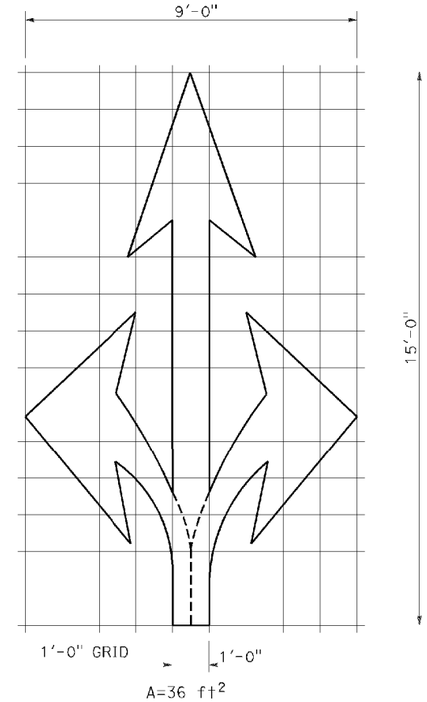

A=36 ft²

TYPE VIII ARROW

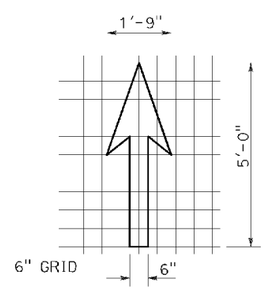

A=3.5 ft²

BIKE LANE ARROW

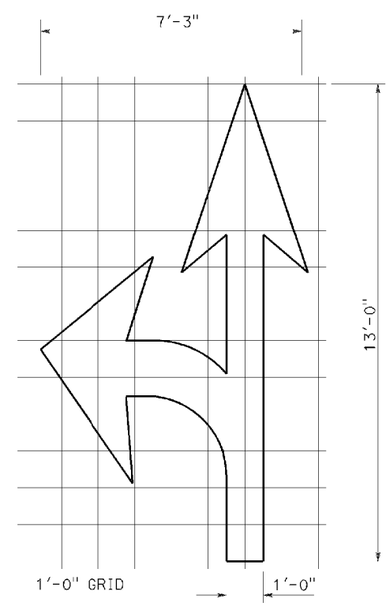

A=27 ft²

TYPE VII (L) ARROW

(For Type VII (R) arrow, use mirror image)

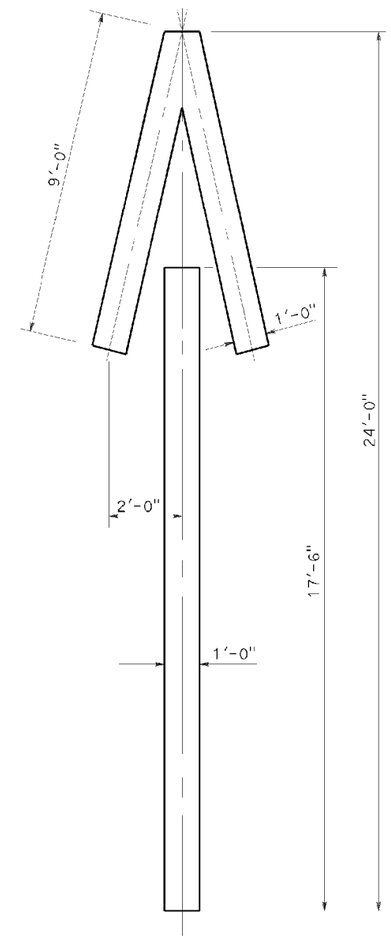

A=33 ft²

TYPE V ARROW

NOTE:
Minor variations in dimensions may be accepted by the Engineer.

STATE OF CALIFORNIA
DEPARTMENT OF TRANSPORTATION

PAVEMENT MARKINGS ARROWS

NO SCALE

RSP A24A DATED APRIL 20, 2012 SUPERSEDES STANDARD PLAN A24A DATED MAY 20, 2011 - PAGE 13 OF THE STANDARD PLANS BOOK DATED 2010.

REVISED STANDARD PLAN RSP A24A

2010 REVISED STANDARD PLAN RSP A24A

DATE PLOTTED => 07-NOV-2013
TIME PLOTTED => 07:21

DIST	COUNTY	ROUTE	POST MILES TOTAL PROJECT	SHEET No.	TOTAL SHEETS
02	Tri	299	53.5/64.0	54	70

REGISTERED CIVIL ENGINEER

October 19, 2012
PLANS APPROVAL DATE

REGISTERED PROFESSIONAL ENGINEER
Roberta L. McLaughlin
No. C40375
Exp. 3-31-13
CIVIL
STATE OF CALIFORNIA

THE STATE OF CALIFORNIA OR ITS OFFICERS OR AGENTS SHALL NOT BE RESPONSIBLE FOR THE ACCURACY OR COMPLETENESS OF SCANNED COPIES OF THIS PLAN SHEET.

NOTE: TO ACCOMPANY PLANS DATED 11-06-13

Minor variations in dimensions may be accepted by the Engineer.

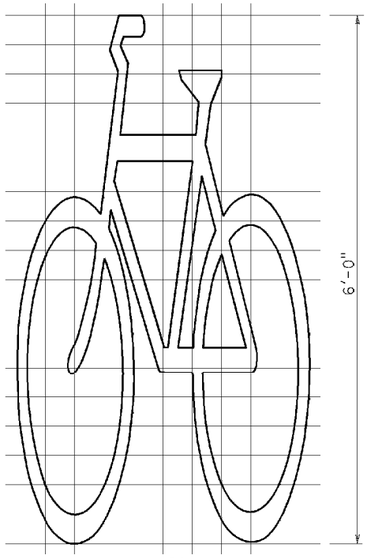

BIKE LANE SYMBOL WITHOUT PERSON

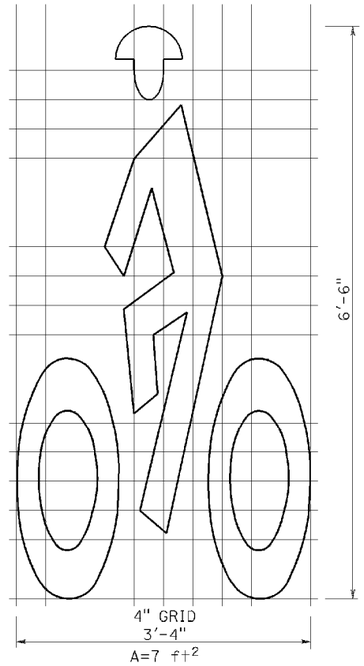

BIKE LANE SYMBOL WITH PERSON

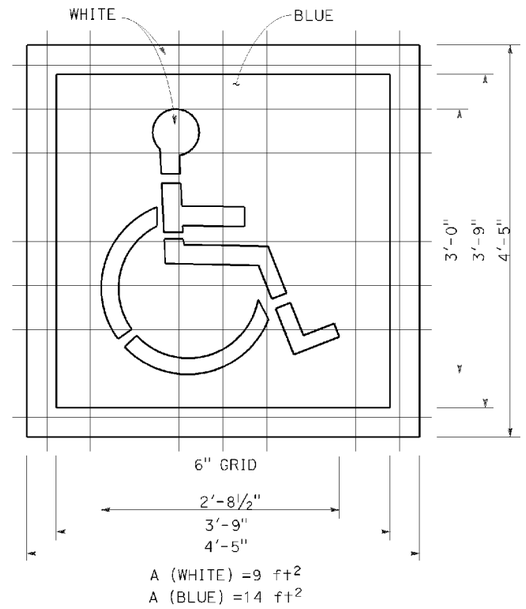

INTERNATIONAL SYMBOL OF ACCESSIBILITY (ISA) MARKING

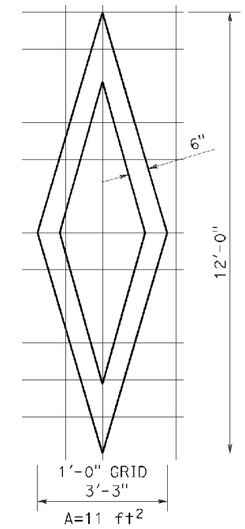

DIAMOND SYMBOL

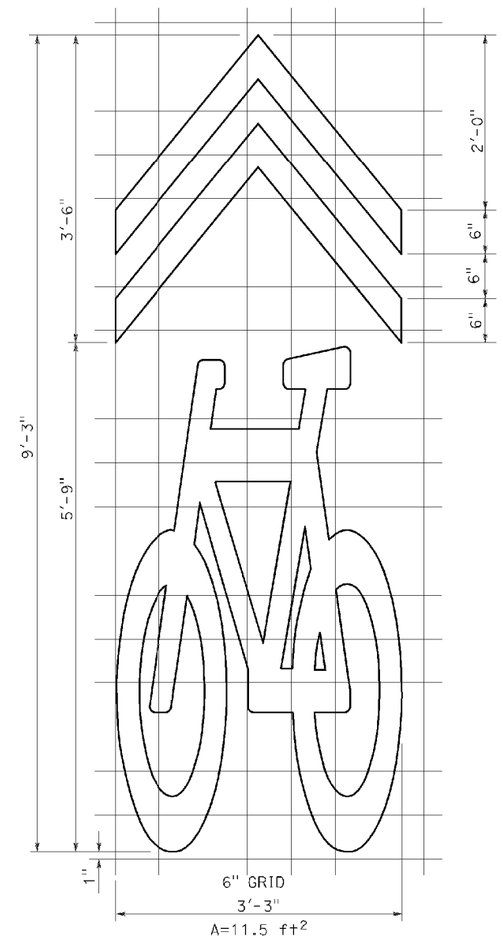

SHARED ROADWAY BICYCLE MARKING

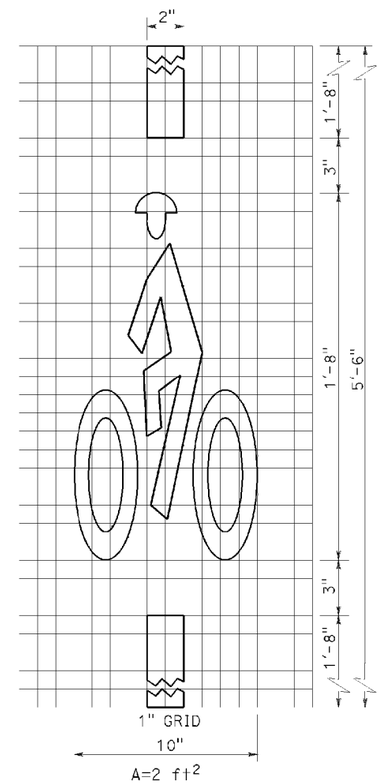

BICYCLE LOOP DETECTOR SYMBOL

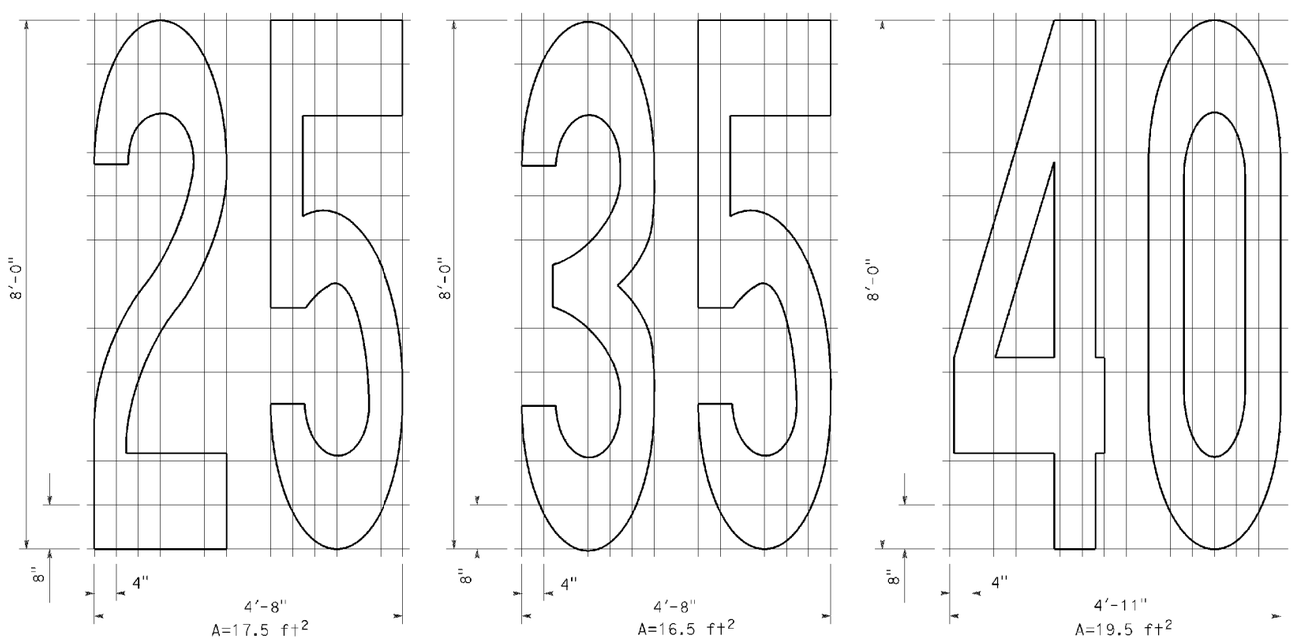

NUMERALS

STATE OF CALIFORNIA
DEPARTMENT OF TRANSPORTATION

PAVEMENT MARKINGS SYMBOLS AND NUMERALS

NO SCALE

RSP A24C DATED OCTOBER 19, 2012 SUPERSEDES STANDARD PLAN A24C DATED MAY 20, 2011 - PAGE 15 OF THE STANDARD PLANS BOOK DATED 2010.

REVISED STANDARD PLAN RSP A24C

2010 REVISED STANDARD PLAN RSP A24C

DATE PLOTTED => 07-NOV-2013
TIME PLOTTED => 07:21

DIST	COUNTY	ROUTE	POST MILES TOTAL PROJECT	SHEET No.	TOTAL SHEETS
02	Tri	299	53.5/64.0	55	70

REGISTERED CIVIL ENGINEER

July 20, 2012
PLANS APPROVAL DATE

REGISTERED PROFESSIONAL ENGINEER
Roberta L. McLaughlin
No. C40375
Exp. 3-31-13
CIVIL
STATE OF CALIFORNIA

THE STATE OF CALIFORNIA OR ITS OFFICERS OR AGENTS SHALL NOT BE RESPONSIBLE FOR THE ACCURACY OR COMPLETENESS OF SCANNED COPIES OF THIS PLAN SHEET.

TC ACCOMPANY PLANS DATED 11-06-13

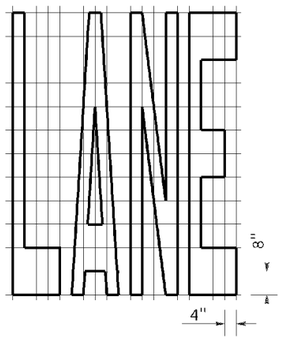

A=24 ft^2

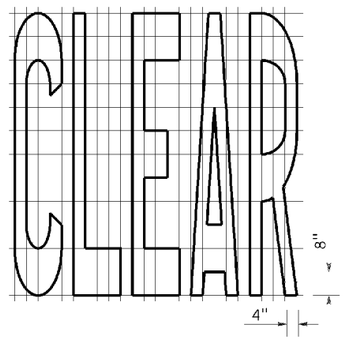

A=27 ft^2

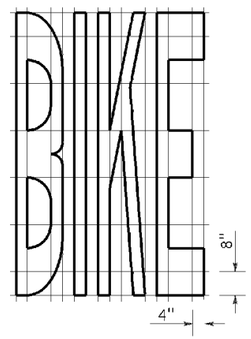

A=21 ft^2

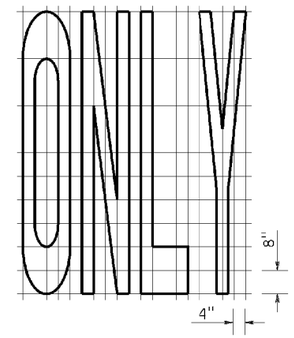

A=22 ft^2

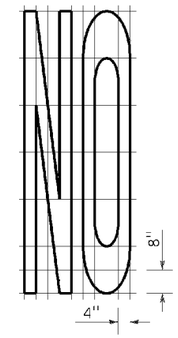

A=14 ft^2

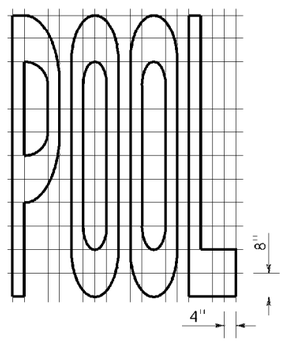

A=23 ft^2

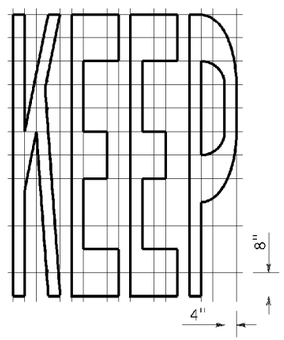

A=24 ft^2

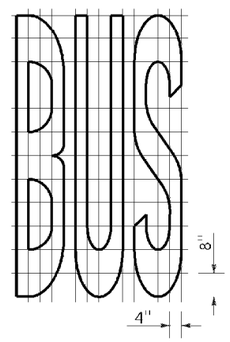

A=20 ft^2

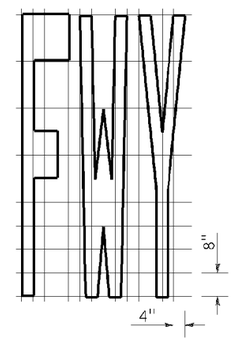

A=16 ft^2

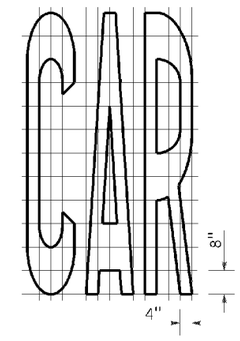

A=17 ft^2

WORD MARKINGS			
ITEM	ft^2	ITEM	ft^2
LANE	24	NO	14
POOL	23	BIKE	21
CAR	17	BUS	20
CLEAR	27	ONLY	22
KEEP	24	FWY	16

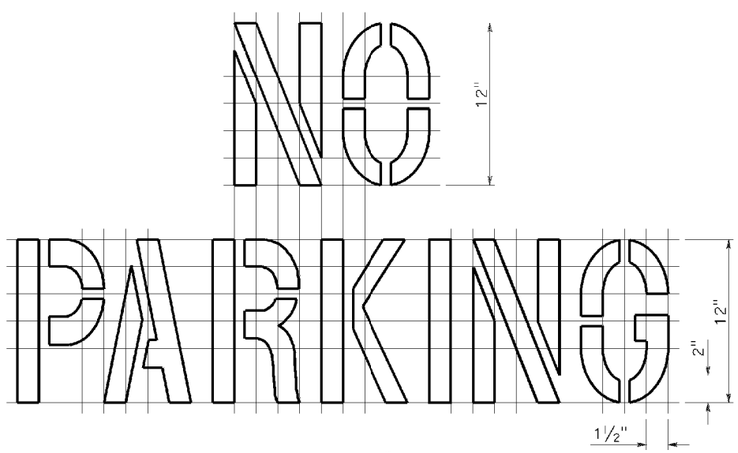

A=2 ft^2
See Notes 6 and 7

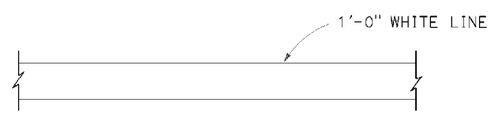

LIMIT LINE (STOP LINE)

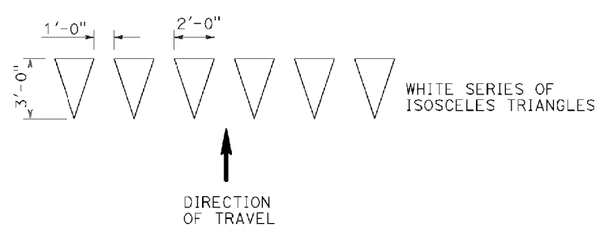

YIELD LINE

NOTES:

1. If a message consists of more than one word, it should read "UP", i.e., the first word should be nearest the driver.
2. The space between words should be at least four times the height of the characters for low speed roads, but not more than ten times the height of the characters. The space may be reduced appropriately where there is limited space because of local conditions.
3. Minor variations in dimensions may be accepted by the Engineer.
4. Portions of a letter, number or symbol may be separated by connecting segments not to exceed 2" in width.
5. The words "NO PARKING" pavement marking is to be used for parking facilities. For typical locations of markings, see Standard Plans A90A and A90B.
6. The words "NO PARKING", shall be painted in white letters no less than 1'-0" high on a contrasting background and located so that it is visible to traffic enforcement officials.

STATE OF CALIFORNIA
DEPARTMENT OF TRANSPORTATION

PAVEMENT MARKINGS
WORDS, LIMIT AND YIELD LINES

NO SCALE

RSP A24E DATED JULY 20, 2012 SUPERSEDES STANDARD PLAN A24E
DATED MAY 20, 2011 - PAGE 17 OF THE STANDARD PLANS BOOK DATED 2010.

REVISED STANDARD PLAN RSP A24E

2010 REVISED STANDARD PLAN RSP A24E

DATE PLOTTED => 07-NOV-2013
TIME PLOTTED => 07:21

DIST	COUNTY	ROUTE	POST MILES TOTAL PROJECT	SHEET No.	TOTAL SHEETS
02	Tri	299	53.5/64.0	56	70

Randell D. Hiatt
REGISTERED CIVIL ENGINEER

July 19, 2013
PLANS APPROVAL DATE

REGISTERED PROFESSIONAL ENGINEER
Randell D. Hiatt
No. C50200
Exp. 6-30-15
CIVIL
STATE OF CALIFORNIA

THE STATE OF CALIFORNIA OR ITS OFFICERS OR AGENTS SHALL NOT BE RESPONSIBLE FOR THE ACCURACY OR COMPLETENESS OF SCANNED COPIES OF THIS PLAN SHEET.

TO ACCOMPANY PLANS DATED 11-06-13

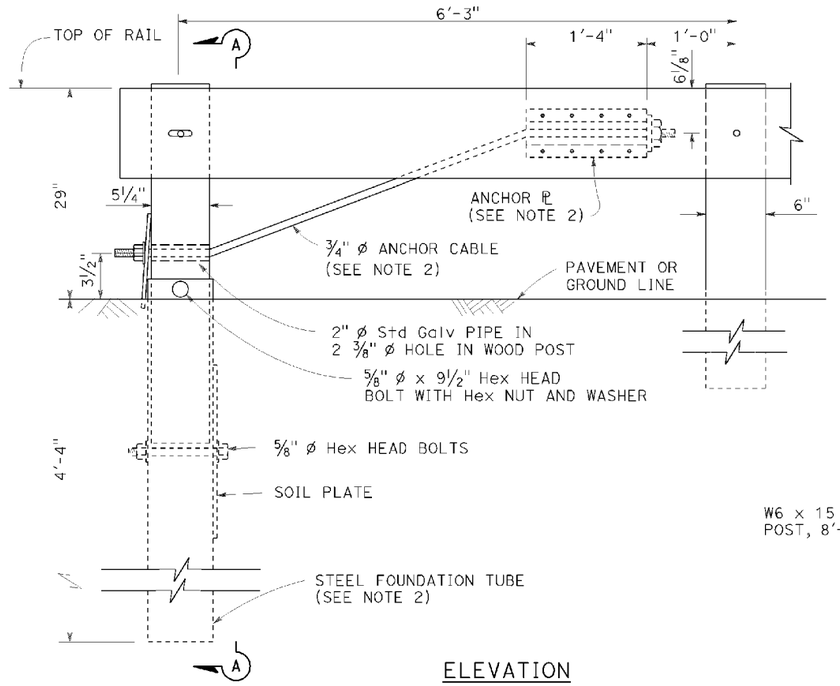

ELEVATION
END ANCHOR
ASSEMBLY (TYPE SFT)

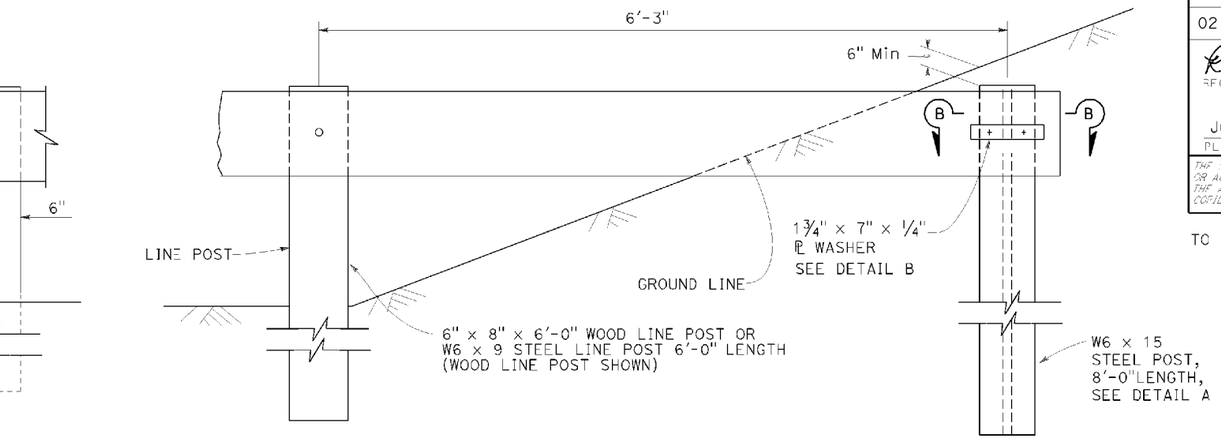

BURIED POST END ANCHOR

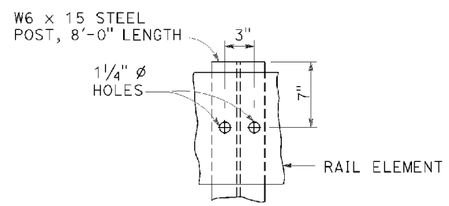

DETAIL A

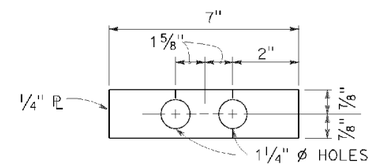

DETAIL B

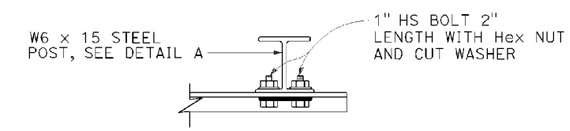

SECTION B-B

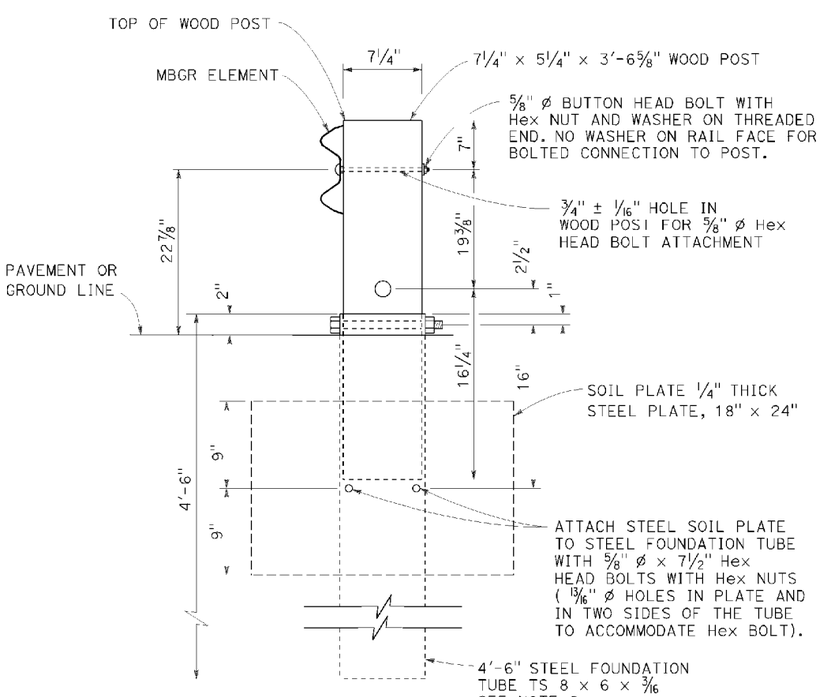

SECTION A-A

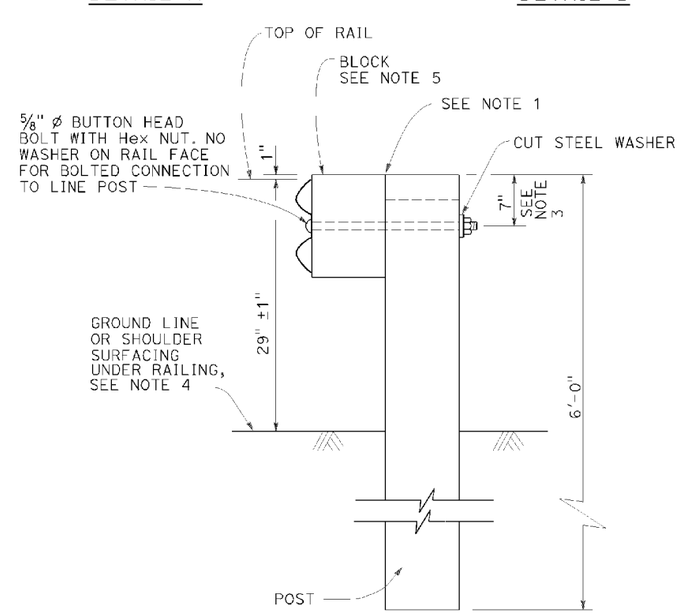

TYPICAL LINE
POST INSTALLATION

NOTES:

1. For wood post and wood block, toenail with 2-16d Galv nails in top of block. For steel post and notched wood or plastic block, notched face of block faces steel post.
2. A 6'-0" Length steel foundation tube, TS 8 x 6 x 3/16, without a soil plate, may be furnished and installed in place of the 4'-6" length steel foundation tube and soil plate shown, Minimum embadment of the 6'-0" length tube shall be 5'-9". A 5/8" Ø Hex head bolt and nut shall be installed in the hole in the 6'-0" length tube to keep the wood post from dropping into the tube.
3. To connect railing to 27" terminal system end treatment, transition the top of railing height at a ratio of 120:1 to terminal system end treatment height plus one 12'-6" standard railing section at the transitioned height for a horizontal connection to the end treatment.
4. Install posts in soil.
5. See Revised Standard Plans RSP A77N1 and RSP A77N2 for details.
6. Holes excavation in the slope to construct the buried post end anchor shall be backfilled with selected earth, placed in layers approximately 1'-0" thick. Each layer shall be moistened and thoroughly compacted.

STATE OF CALIFORNIA
DEPARTMENT OF TRANSPORTATION

METAL BEAM GUARD RAILING RECONSTRUCT INSTALLATION

NO SCALE

RSP A77L3 DATED JULY 19, 2013 SUPPLEMENTS THE STANDARD PLANS BOOK DATED 2010.

REVISED STANDARD PLAN RSP A77L3

2010 REVISED STANDARD PLAN RSP A77L3

DATE PLOTTED => 07-NOV-2013
TIME PLOTTED => 07:21

USERNAME => s115152
DGN FILE => 24e410va005.dgn

P:\proj1\02\4E410_plans\pse\24e410va005.dgn

7 16 13

Dist	COUNTY	ROUTE	POST MILES TOTAL PROJECT	SHEET No.	TOTAL SHEETS
02	Tri	299	53.5/64.0	57	70

REGISTERED CIVIL ENGINEER

April 19, 2013

PLANS APPROVAL DATE

REGISTERED PROFESSIONAL ENGINEER Raymond Don Tsztoo No. C37332 Exp. 6-30-14 CIVIL STATE OF CALIFORNIA

THE STATE OF CALIFORNIA OR ITS OFFICERS OR AGENTS SHALL NOT BE RESPONSIBLE FOR THE ACCURACY OR COMPLETENESS OF SCANNED COPIES OF THIS PLAN SHEET.

TO ACCOMPANY PLANS DATED 11-06-13

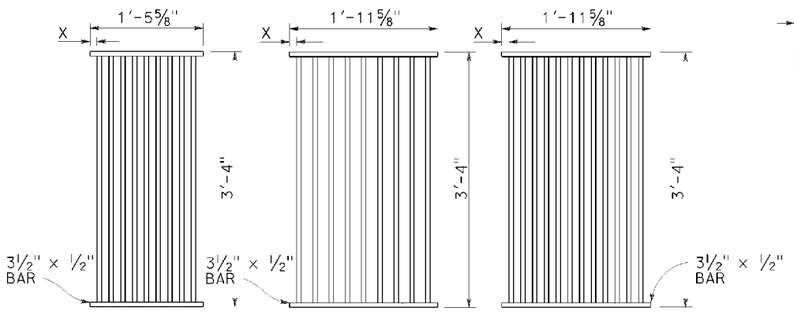

TYPE 18-9

1⅜" Clear spacing. Use within the roadbed on highways where bicycles and pedestrians are excluded.

TYPE 24-9

2" Clear spacing. Use in locations off the roadbed on all types of highways.

TYPE 24-12

1⅜" Clear spacing. Use within the roadbed on highways where bicycles and pedestrians are excluded.

RECTANGULAR GRATE DETAILS

(See table below)

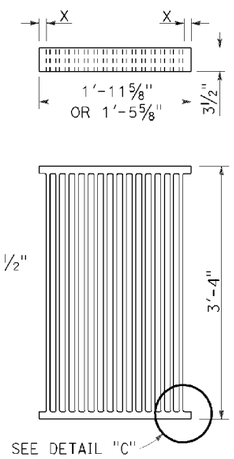

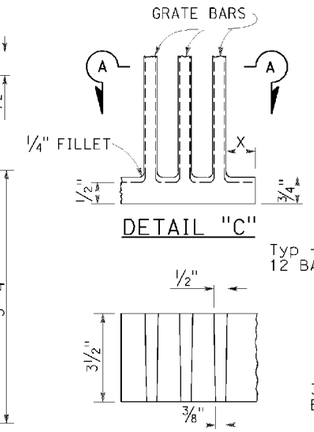

DETAIL "C"

SECTION A-A

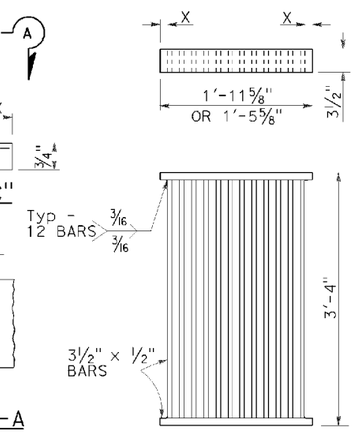

ALTERNATIVE CAST DUCTILE IRON GRATE OR CAST CARBON STEEL GRATE

ALTERNATIVE WELDED GRATE

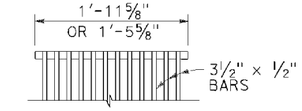

CAST END BLOCK

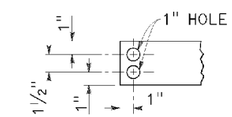

END OF BAR

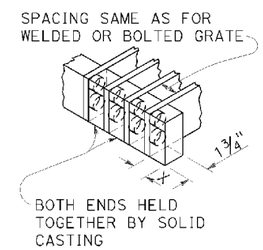

ALTERNATIVE CAST DUCTILE IRON OR CAST CARBON STEEL END BLOCK GRATE

NOTES:

1. Grate type numbers refer to approximate width of grate in inches and number of bars, respectively.
2. Contractor has the option of using cast ductile iron, cast carbon steel, welded, bolted, or cast end block grate.
3. Rounded top of bars optional on all grates.
4. Pipe inlets with a grate shall be placed so that bars parallel direction of principle surface flow.
5. Complete joint penetration butt welds may be substituted for the fillet welds on all anchors.
6. Standard square, hexagon, round or equivalent headed anchors may be substituted for the right angle hooks on the anchors shown on this plan.
7. Grate and frame weights are based on welded grates (weights of face angles, steps, protection bars, etc. are not included).
8. Connect chain to grate and frame only at locations shown on the plans. When chain is required, do not use cast ductile iron grates.

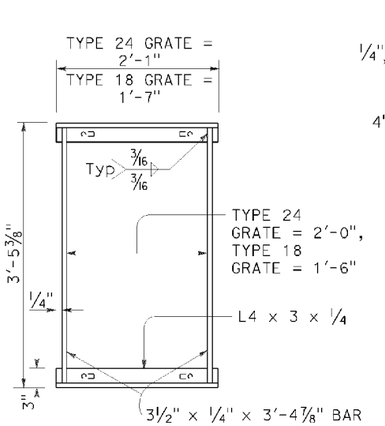

TYPICAL FRAME

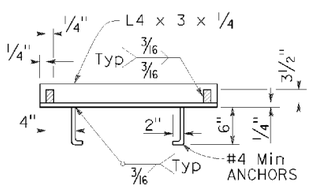

CROSS SECTION

(Thru frame)

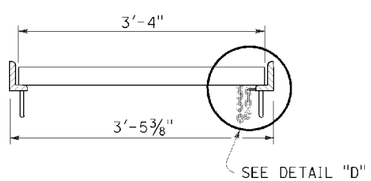

LONGITUDINAL SECTION

(Thru frame and grate)

RECTANGULAR FRAME DETAILS

(For all rectangular grates)

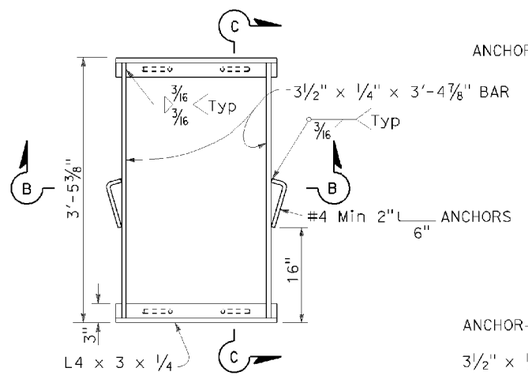

TYPICAL FRAME

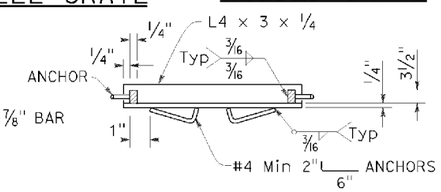

SECTION B-B

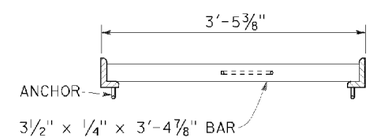

SECTION C-C

ALTERNATIVE ANCHOR FOR RECTANGULAR FRAME

(For details not shown, See Rectangular Frame Details)

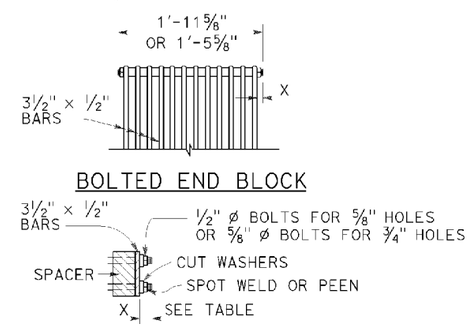

BOLTED END BLOCK

BOLTING DETAIL

ALTERNATIVE BOLTED GRATE

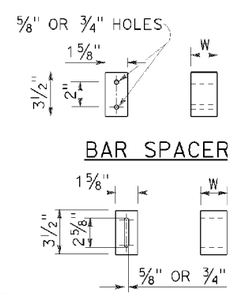

BAR SPACER

ALTERNATIVE SPACER

W = 1⅜" or 2"

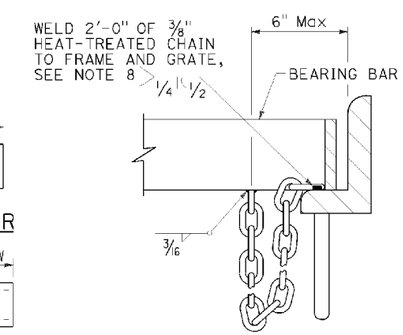

DETAIL "D"

(Steel grates only)

GRATE BAR SPACING TABLE

TYPE	No. OF BARS	CLEAR BAR SPACING	X
18-9	9	1⅜"	1 1/16"
24-9	9	2"	1 9/16"
24-12	12	1⅜"	1¼"

INLET TYPE	COVER TYPE	WEIGHT LB
OS	PLATE	174
OL-7	PLATE	170
OL-10	PLATE	170
OL-14	PLATE	170
OL-21	PLATE	170
OCP	PLATE	112
OCPI	PLATE	112
OCPI	REDWOOD	42
OMP	PLATE	177
OMPI	PLATE	177

INLET TYPE	GRATE TYPE	No. OF GRATES	WEIGHT LB
GDO	24-12	2	634
GOL-7	24-12	1	326
GOL-10	24-12	1	326
GO,G1,G2,G3,G4 (TYPE 24)	24-9	1	263
	24-12	1	326
G4 (TYPE 18),G5,G6	18-9	1	249
GT1	18-9	2	498
GT2	18-9	2	498
GT3	24-12	2	652
GT4	24-12	2	652
TRASH RACK			22
GRATE CHAIN			3

BASIS FOR Misc IRON & STEEL FINAL PAY WEIGHTS FOR DRAINAGE INLETS

(See Note 7)

STATE OF CALIFORNIA
DEPARTMENT OF TRANSPORTATION

GRATE DETAILS No. 1

NO SCALE

RSP D77A DATED APRIL 19, 2013 SUPERSEDES RSP D77A DATED JULY 20, 2012 AND STANDARD PLAN D77A DATED MAY 20, 2011 - PAGE 164 OF THE STANDARD PLANS BOOK DATED 2010.

REVISED STANDARD PLAN RSP D77A

2010 REVISED STANDARD PLAN RSP D77A

DATE PLOTTED => 07-NOV-2013
TIME PLOTTED => 07:21

USERNAME => s115152
DGN FILE => 24e410va006.dgn

P:\proj1\02\4E410_plans\pse\24e410va006.dgn

4 4 13

DIST	COUNTY	ROUTE	POST MILES TOTAL PROJECT	SHEET No.	TOTAL SHEETS
02	Tri	299	53.5/64.0	58	70

REGISTERED CIVIL ENGINEER

April 19, 2013

PLANS APPROVAL DATE

REGISTERED PROFESSIONAL ENGINEER Raymond Don Tsztoo No. C37332 Exp. 6-30-14 CIVIL STATE OF CALIFORNIA

THE STATE OF CALIFORNIA OR ITS OFFICERS OR AGENTS SHALL NOT BE RESPONSIBLE FOR THE ACCURACY OR COMPLETENESS OF SCANNED COPIES OF THIS PLAN SHEET.

TO ACCOMPANY PLANS DATED 11-06-13

2010 REVISED STANDARD PLAN RSP D77B

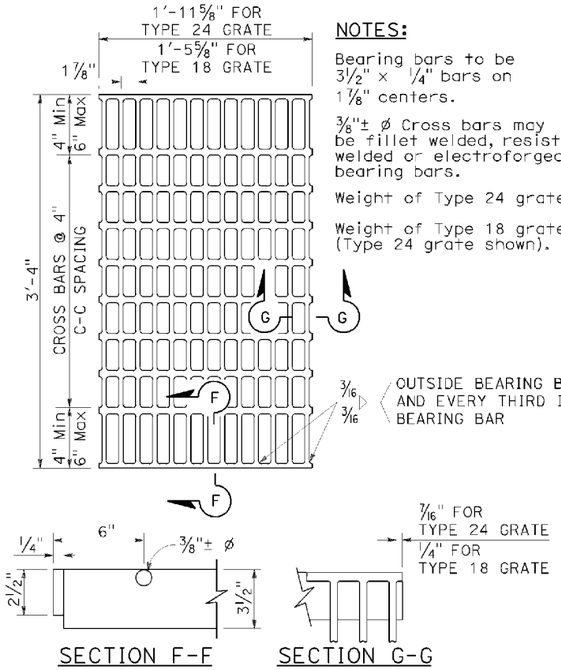

NOTES:

Bearing bars to be 3½" x ¼" bars on 1⅞" centers.

3/8"± ø Cross bars may be fillet welded, resistance welded or electroforged to bearing bars.

Weight of Type 24 grate = 141 LBS.

Weight of Type 18 grate = 107 LBS. (Type 24 grate shown).

SECTION F-F

SECTION G-G

TYPE 18-10 AND 24-13 GRATE

(Welded Steel)

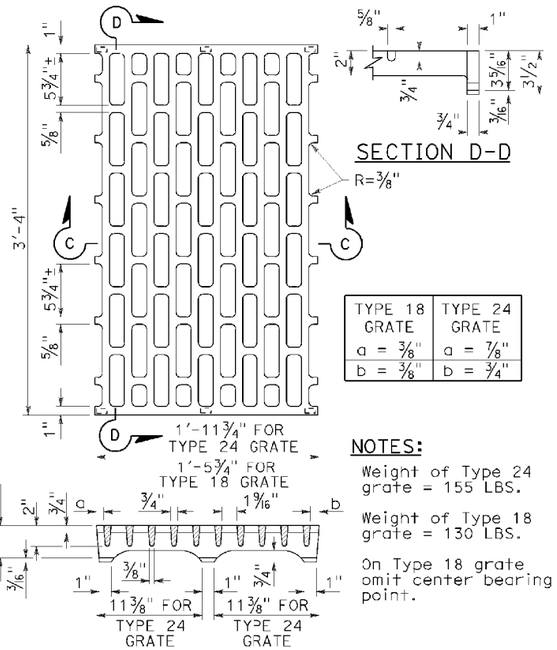

TYPE 18 GRATE	TYPE 24 GRATE
a = 3/8"	a = 7/8"
b = 3/8"	b = ¾"

NOTES:

Weight of Type 24 grate = 155 LBS.

Weight of Type 18 grate = 130 LBS.

On Type 18 grate omit center bearing point.

SECTION C-C

TYPE 18-8C AND 24-10C GRATE

(Cast ductile iron)

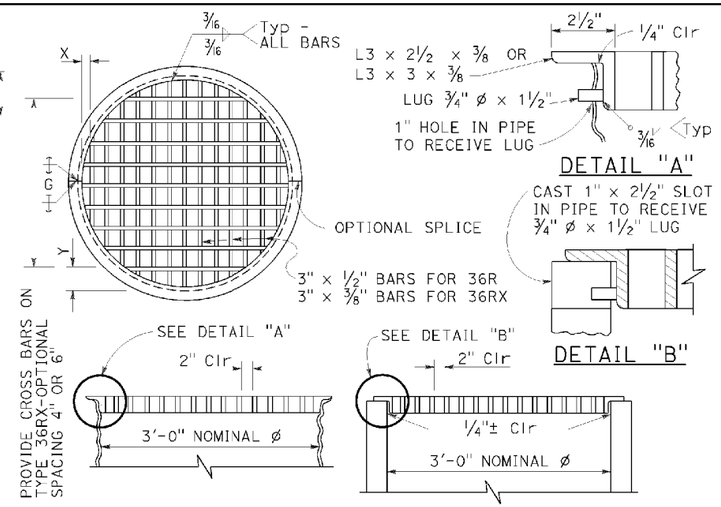

TYPE 36R AND 36RX GRATE DETAILS

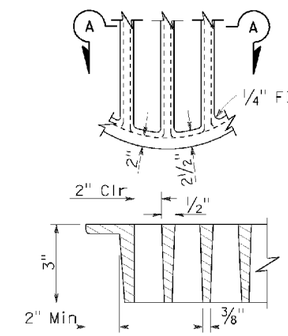

SECTION A-A

ALTERNATIVE CAST DUCTILE IRON GRATE OR CAST CARBON STEEL GRATE TYPE 36R AND 36RX

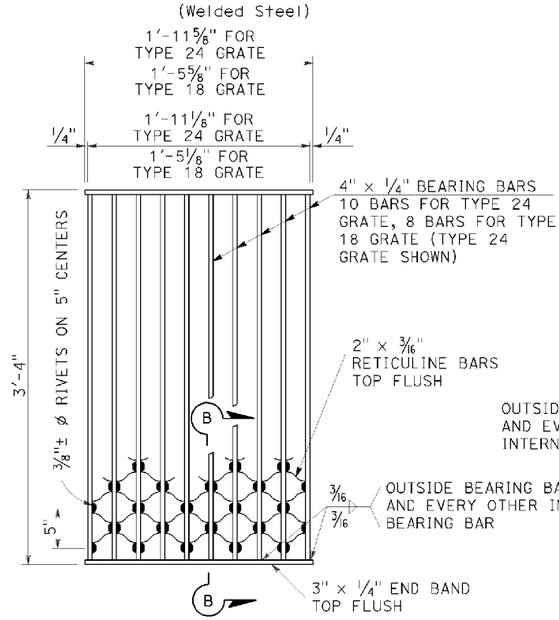

SECTION B-B

NOTES:

Weight of Type 24 grate = 182 LBS.
Weight of Type 18 grate = 145 LBS.

TYPE 18-8S AND 24-10S GRATE

(Welded Steel) Reticuline type

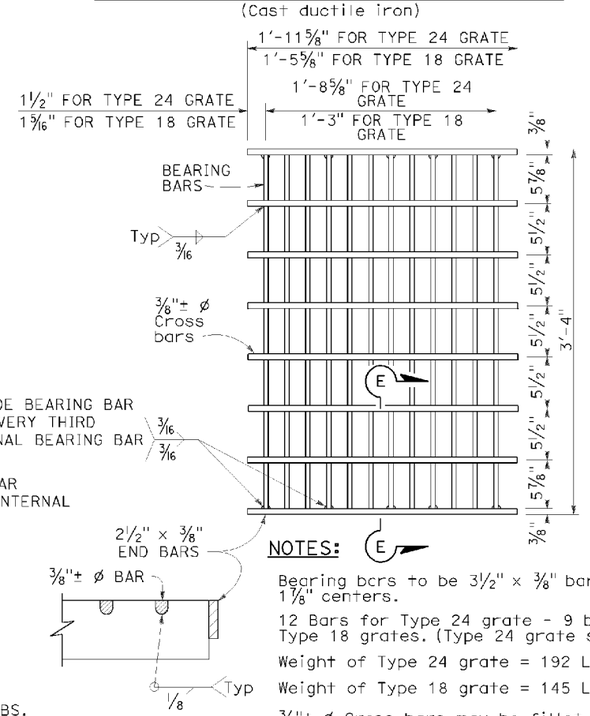

NOTES:

Bearing bars to be 3½" x ⅜" bars on 1⅞" centers.

12 Bars for Type 24 grate - 9 bars for Type 18 grates. (Type 24 grate shown).

Weight of Type 24 grate = 192 LBS.

Weight of Type 18 grate = 145 LBS.

3/8"± ø Cross bars may be fillet welded, resistance welded or electroforged to bearing bars.

TYPE 18-9X AND 24-12X GRATE

(Welded Steel)

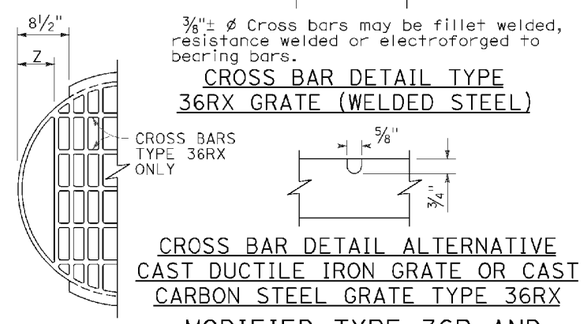

MODIFIED TYPE 36R AND 36RX GRATE FOR ODI INLET

NOTES:

1. When alternative grates are allowed - Final pay based on alternative with the lesser weight.
2. Use frame shown on Standard Plan D74A, D74B or RSP D77A as appropriate.
3. When Type 24-10S, 24-12X or 24-13 grates are used with GDO Inlets, a ¼" x 3½" x 3'-4⅞" steel bar shall be welded across the center of inlet frame to separate the individual grates.
4. See Revised Standard Plan RSP D77A for connecting chain to welded grate and frame. When chain is required, do not use cast ductile iron grate.

GRATE BAR SPACING TABLE

TYPE	No. OF BARS	CLEAR BAR SPACING	X	Y 4" SPACING	Y 6" SPACING	Z
36R	13	2"	2⅛"	-	-	-
36RX (STEEL)	15	2"	9/16"	3¾"	5¾"	-
36RX (CAST)	13	2"	2⅛"	3¾"	5¾"	-
36R Mod	12	2"	2⅛"	-	-	5"
36RX Mod (STEEL)	13	2"	9/16"	3¾"	5¾"	5 11/16"
36RX Mod (CAST)	12	2"	2⅛"	3¾"	5¾"	5"

BASIS FOR Misc IRON AND STEEL FINAL PAY WEIGHTS FOR DRAINAGE INLETS

INLET TYPE	GRATE TYPE	No. OF GRATES	WEIGHT LB
GDO (SEE NOTE 4)	24-10C	2	391
	24-10S	2	456
	24-12X	2	473
	24-13	2	374
GO,GOL,G1,G2, G3,G4 (TYPE 24)	24-10C	1	202
	24-10S	1	229
	24-12X	1	239
G4 (TYPE 18) G5,G6	24-13	1	188
	18-8S	1	187
	18-9X	1	187
	18-10	1	149
GT1,GT2	18-8S	2	374
	18-9X	2	374
	18-10	2	298
GT3,GT4	24-10C	2	404
	24-10S	2	458
	24-12X	2	478
	24-13	2	376
ODI	36RX (Mod)	1	196
GMP,GCP,GCPI	36RX	1	215
ODI	36R (Mod)	1	220
GMP,GCP,GCPI	36R	1	236
TRASH RACK			22
GRATE CHAIN			3

STATE OF CALIFORNIA
DEPARTMENT OF TRANSPORTATION

GRATE DETAILS No. 2

NO SCALE

RSP D77B DATED APRIL 19, 2013 SUPERSEDES RSP D77B DATED JULY 20, 2012 AND STANDARD PLAN D77B DATED MAY 20, 2011 - PAGE 165 OF THE STANDARD PLANS BOOK DATED 2010.

REVISED STANDARD PLAN RSP D77B

DATE PLOTTED => 07-NOV-2013
TIME PLOTTED => 07:21

DIST	COUNTY	ROUTE	POST MILES TOTAL PROJECT	SHEET No.	TOTAL SHEETS
02	Tri	299	53.5/64.0	59	70

REGISTERED CIVIL ENGINEER

July 19, 2013

PLANS APPROVAL DATE

REGISTERED PROFESSIONAL ENGINEER Gurinderpal Bhullar No. C48815 Exp. 9-30-14 CIVIL STATE OF CALIFORNIA

THE STATE OF CALIFORNIA OR ITS OFFICERS OR AGENTS SHALL NOT BE RESPONSIBLE FOR THE ACCURACY OR COMPLETENESS OF SCANNED COPIES OF THIS PLAN SHEET.

TO ACCOMPANY PLANS DATED 11-06-13

TABLE 1

TAPER LENGTH CRITERIA AND CHANNELIZING DEVICE SPACING

SPEED (S)	MINIMUM TAPER LENGTH * FOR WIDTH OF OFFSET 12 FEET (W)				MAXIMUM CHANNELIZING DEVICE SPACING		
					X	Y	Z **
	TANGENT 2L	MERGING L	SHIFTING L/2	SHOULDER L/3	TAPER	TANGENT	CONFLICT
mph	ft	ft	ft	ft	ft	ft	ft
20	160	80	40	27	20	40	10
25	250	125	63	42	25	50	12
30	360	180	90	60	30	60	15
35	490	245	123	82	35	70	17
40	640	320	160	107	40	80	20
45	1080	540	270	180	45	90	22
50	1200	600	300	200	50	100	25
55	1320	660	330	220	55	110	27
60	1440	720	360	240	60	120	30
65	1560	780	390	260	65	130	32
70	1680	840	420	280	70	140	35

* - For other offsets, use the following merging taper length formula for L:
For speed of 40 mph or less, $L = WS^2/60$
For speed of 45 mph or more, $L = WS$

Where: L = Taper length in feet
W = Width of offset in feet
S = Posted speed limit, off-peak 85th-percentile speed prior to work starting, or the anticipated operating speed in mph

** - Use for taper and -angent sections where there are no pavement markings or where there is a conflict between existing pavement markings and channelizers (CA).

TABLE 2

LONGITUDINAL BUFFER SPACE AND FLAGGER STATION SPACING

SPEED *	Min D **	DOWNGRADE Min D ***		
		-3%	-6%	-9%
mph	ft	ft	ft	ft
20	115	116	120	126
25	155	158	165	173
30	200	205	215	227
35	250	257	271	287
40	305	315	333	354
45	360	378	400	427
50	425	446	474	507
55	495	520	553	593
60	570	598	638	686
65	645	682	728	785
70	730	771	825	891

* - Speed is posted speed limit, off-peak 85th-percentile speed prior to work starting, or the anticipated operating speed in mph

** - Longitudinal buffer space or flagger station spacing

*** - Use on sustained downgrade steeper than -3 percent and longer than 1 mile.

TABLE 3

ADVANCE WARNING SIGN SPACING

ROAD TYPE	DISTANCE BETWEEN SIGNS *		
	A	B	C
	ft	ft	ft
URBAN - 25 mph OR LESS	100	100	100
URBAN - MORE THAN 25 mph TO 40 mph	250	250	250
URBAN - MORE THAN 40 mph	350	350	350
RURAL	500	500	500
EXPRESSWAY / FREEWAY	1000	1500	2640

* - The distances are approximate, are intended for guidance purposes only, and should be applied with engineering judgment. These distances should be adjusted by the Engineer for field conditions, if necessary, by increasing or decreasing the recommmended distances.

STATE OF CALIFORNIA
DEPARTMENT OF TRANSPORTATION

TRAFFIC CONTROL SYSTEM TABLES FOR LANE AND RAMP CLOSURES

NO SCALE

RSP T9 DATED JULY 19, 2013 SUPERSEDES RSP T9 DATED APRIL 19, 2013 THAT SUPPLEMENTS THE STANDARD PLANS BOOK DATED 2010.

REVISED STANDARD PLAN RSP T9

2010 REVISED STANDARD PLAN RSP T9

DATE PLOTTED => 07-NOV-2013
TIME PLOTTED => 07:21

DIST	COUNTY	ROUTE	POST MILES TOTAL PROJECT	SHEET No.	TOTAL SHEETS
02	Tri	299	53.5/64.0	60	70

REGISTERED CIVIL ENGINEER

April 19, 2013

PLANS APPROVAL DATE

REGISTERED PROFESSIONAL ENGINEER Gurinderpal Bhullar No. C48815 Exp. 9-30-14 CIVIL STATE OF CALIFORNIA

THE STATE OF CALIFORNIA OR ITS OFFICERS OR AGENTS SHALL NOT BE RESPONSIBLE FOR THE ACCURACY OR COMPLETENESS OF SCANNED COPIES OF THIS PLAN SHEET.

TO ACCOMPANY PLANS DATED 11-06-13

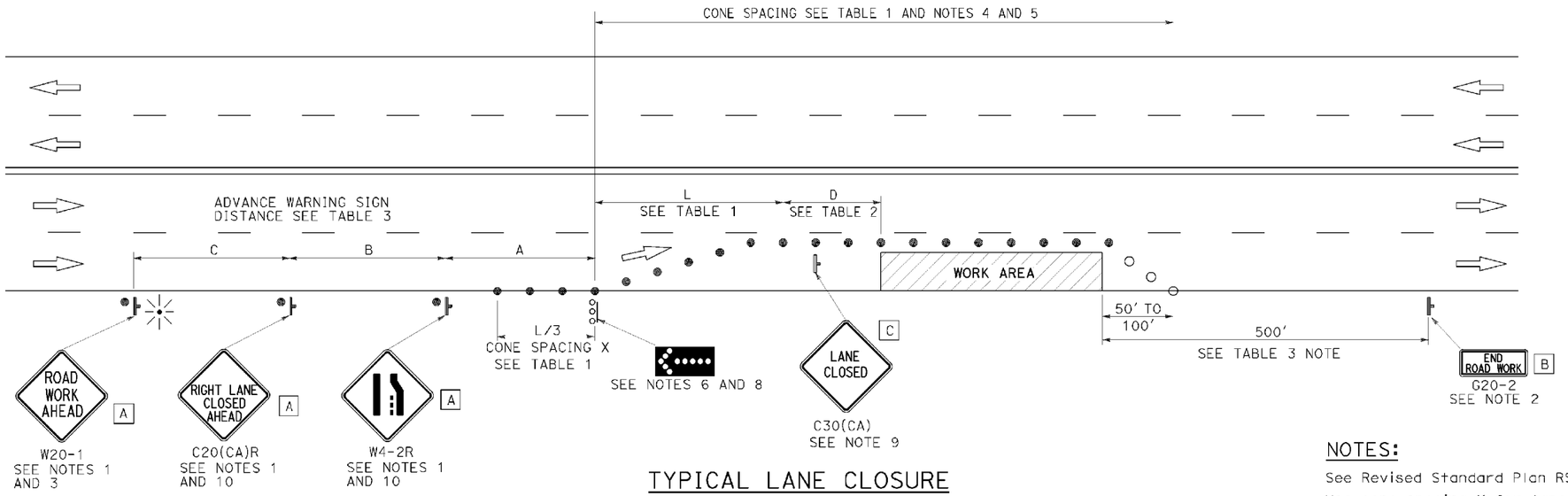

TYPICAL LANE CLOSURE

NOTES:

See Revised Standard Plan RSP T9 for tables.

Use cone spacing X for taper segment, Y for tangent segment or Z for conflict situations, as appropriate, per Table 1, unless X, Y, or Z cone spacing is shown on this sheet.

Unless otherwise specified in the special provisions, all temporary warning signs shall have black legend on fluorescent orange background.

California codes are designated by (CA). Otherwise, Federal (MUTCD) codes are shown.

NOTES:

1. Each advance warning sign shall be equipped with at least two flags for daytime closure. Each flag shall be at least 16" x 16" in size and shall be orange or fluorescent red-orange in color. Flashing beacons shall be placed at the locations indicated for lane closure during hours of darkness.
2. A G20-2 "END ROAD WORK" sign, as appropriate, shall be placed at the end of the lane closure unless the end of work area is obvious, or ends within a larger project's limits.
3. If the W20-1 sign would follow within 2000' of a stationary W20-1 or G20-1 "ROAD WORK NEXT _____ MILES", use a C20(CA) sign for the first advance warning sign.
4. All cones used for lane closures during the hours of darkness shall be fitted with retroreflective bands (or sleeves) as specified in the specifications.
5. Portable delineators, placed at one-half the spacing indicated for traffic cones, may be used instead of cones for daytime closures only.
6. Flashing arrow sign shall be either Type I or Type II.
7. For approach speeds over 50 mph, use the "Traffic Control System for Lane Closure On Freeways And Expressways" plan for lane closure details and requirements.
8. A minimum 1500' of sight distance shall be provided where possible for vehicles approaching the first flashing arrow sign. Lane closures shall not begin at the top of crest vertical curve or on a horizontal curve.
9. Place a C30(CA) sign every 2000' throughout length of lane closure.
10. Median lane closures shall conform to the details as shown except that C20(CA)L and W4-2L signs shall be used.
11. At least one person shall be assigned to provide full time maintenance of traffic control devices for lane closure unless, otherwise directed by the Engineer.

LEGEND

- TRAFFIC CONE
- TRAFFIC CONE (OPTIONAL TAPER)
- TEMPORARY TRAFFIC CONTROL SIGN
- FLASHING ARROW SIGN (FAS)
- FAS SUPPORT OR TRAILER
- PORTABLE FLASHING BEACON

SIGN PANEL SIZE (Min)

A	48" x 48"
B	36" x 18"
C	30" x 30"

STATE OF CALIFORNIA
DEPARTMENT OF TRANSPORTATION

TRAFFIC CONTROL SYSTEM FOR LANE CLOSURE ON MULTILANE CONVENTIONAL HIGHWAYS

NO SCALE

RSP T11 DATED APRIL 19, 2013 SUPERSEDES STANDARD PLAN T11
DATED MAY 20, 2011 - PAGE 239 OF THE STANDARD PLANS BOOK DATED 2010.

REVISED STANDARD PLAN RSP T11

2010 REVISED STANDARD PLAN RSP T11

DATE PLOTTED => 07-NOV-2013
TIME PLOTTED => 07:21

DIST	COUNTY	ROUTE	POST MILES TOTAL PROJECT	SHEET No.	TOTAL SHEETS
02	Tri	299	53.5/64.0	61	70

REGISTERED CIVIL ENGINEER

April 19, 2013

PLANS APPROVAL DATE

REGISTERED PROFESSIONAL ENGINEER Gurinderpal Bhullar No. C48815 Exp. 9-30-14 Civil STATE OF CALIFORNIA

THE STATE OF CALIFORNIA OR ITS OFFICERS OR AGENTS SHALL NOT BE RESPONSIBLE FOR THE ACCURACY OR COMPLETENESS OF SCANNED COPIES OF THIS PLAN SHEET.

TO ACCOMPANY PLANS DATED 11-06-13

LEGEND

- TRAFFIC CONE
- TEMPORARY TRAFFIC CONTROL SIGN
- FLASHING ARROW SIGN (FAS)
- FAS SUPPORT OR TRAILER
- PORTABLE FLASHING BEACON

SIGN PANEL SIZE (Min)

- A 48" x 48"
- B 24" x 24"
- C 36" x 18"

NOTES:

See Revised Standard Plan RSP T9 for tables.

Use cone spacing X for taper segment, Y for tangent segment or Z for conflict situations, as approriate, per Table 1, unless X, Y, or Z cone spacing is shown on this sheet.

Unless otherwise specified in the special provisions, all temporary warning signs shall have black legend on fluorescent orange background.

California codes are designated by (CA). Otherwise, Federal (MUTCD) codes are shown.

TYPICAL HALF ROAD CLOSURE

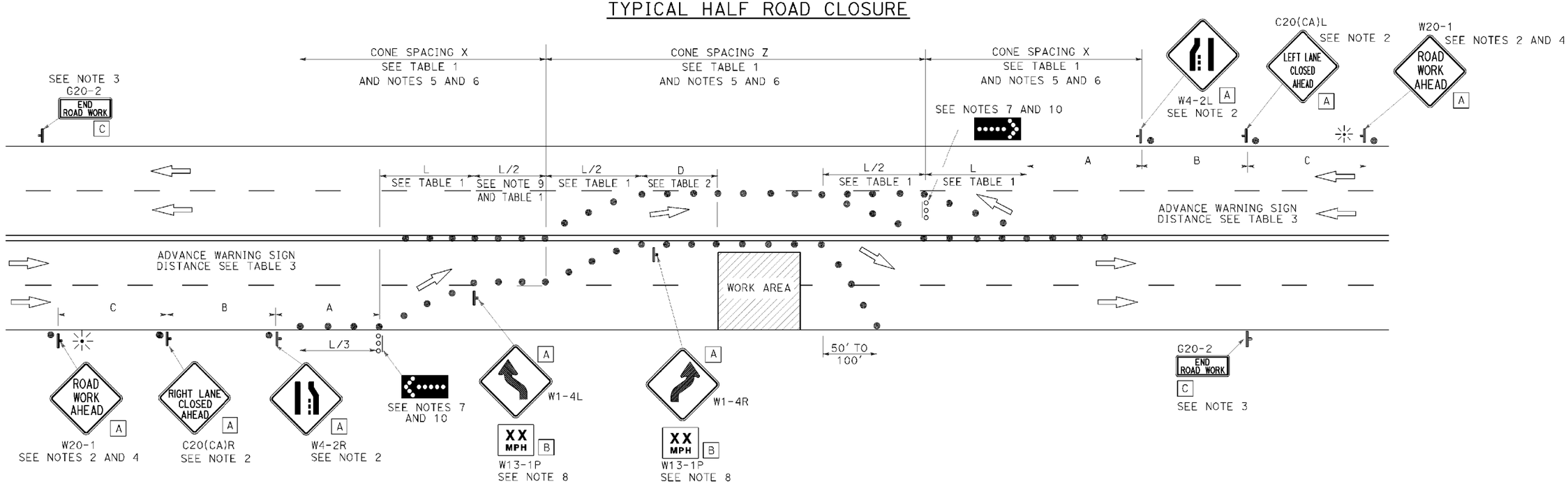

NOTES:

1. At least one person shall be assigned to provide full time maintenance of traffic control devices for lane closure unless, otherwise directed by the Engineer.
2. Each advance warning sign in each direction of travel shall be equipped with at least two flags for daytime closure. Each flag shall be at least 16" x 16" in size and shall be orange or fluorescent red-orange in color. Flashing beacons shall be placed at the locations indicated for lane closure during hours of darkness.
3. A G20-2 "END ROAD WORK" sign, as appropriate, shall be placed at the end of the lane closure unless the end of work area is obvious, or ends within a larger project's limits.
4. If the W20-1 sign would follow within 2000' of a stationary W20-1 or C20-1 "ROAD WORK NEXT _____ MILES", use a C20(CA) sign for the first advance warning sign.
5. All cones used for lane closures during the hours of darkness shall be fitted with retroreflective bands (or sleeves) as specified in the specifications.
6. Portable delineators, placed at one-half the spacing indicated for traffic cones, may be used instead of cones for daytime closures only.
7. Flashing arrow signs shall be either Type I or Type II.
8. Advisory speed will be determined by the Engineer. The W13-1P Plaque will not be required when advisory speed is more than the posted or maximum speed limit.
9. Unless otherwise specified in the special provisions, the tangent (L/2) shall be used.
10. A minimum 1500' of sight distance shall be provided where possible for vehicles approaching the first flashing arrow sign. Lane closures shall not begin at the top of crest vertical curve or on a horizontal curve.

STATE OF CALIFORNIA
DEPARTMENT OF TRANSPORTATION

TRAFFIC CONTROL SYSTEM FOR HALF ROAD CLOSURE ON MULTILANE CONVENTIONAL HIGHWAYS AND EXPRESSWAYS

NO SCALE

RSP T12 DATED APRIL 19, 2013 SUPERSEDES STANDARD PLAN T12 DATED MAY 20, 2011 - PAGE 240 OF THE STANDARD PLANS BOOK DATED 2010.

REVISED STANDARD PLAN RSP T12

2010 REVISED STANDARD PLAN RSP T12

DATE PLOTTED => 07-NOV-2013
TIME PLOTTED => 07:21

USERNAME => s115152
DGN FILE => 24e410va010.dgn

P:\proj1\02\4E410_plans\pse\24e410va010.dgn

4 2 13

DIST	COUNTY	ROUTE	POST MILES TOTAL PROJECT	SHEET No.	TOTAL SHEETS
02	Tri	299	53.5/64.0	62	70

REGISTERED CIVIL ENGINEER

April 19, 2013

PLANS APPROVAL DATE

REGISTERED PROFESSIONAL ENGINEER Gurinderpal Bhullar No. C48815 Exp. 9-30-14 CIVIL STATE OF CALIFORNIA

THE STATE OF CALIFORNIA OR ITS OFFICERS OR AGENTS SHALL NOT BE RESPONSIBLE FOR THE ACCURACY OR COMPLETENESS OF SCANNED COPIES OF THIS PLAN SHEET.

TO ACCOMPANY PLANS DATED 11-06-13

NOTES:

See Revised Standard Plan RSP T9 for tables.

Use cone spacing X for taper segment, Y for tangent segment or Z for conflict situations, as appropriate, per Table 1, unless X, Y, or Z cone spacing is shown on this sheet.

Unless otherwise specified in the special provisions, all temporary warning signs shall have black legend on fluorescent orange background.

California codes are designated by (CA). Otherwise, Federal (MUTCD) codes are shown.

TYPICAL LANE CLOSURE WITH REVERSIBLE CONTROL

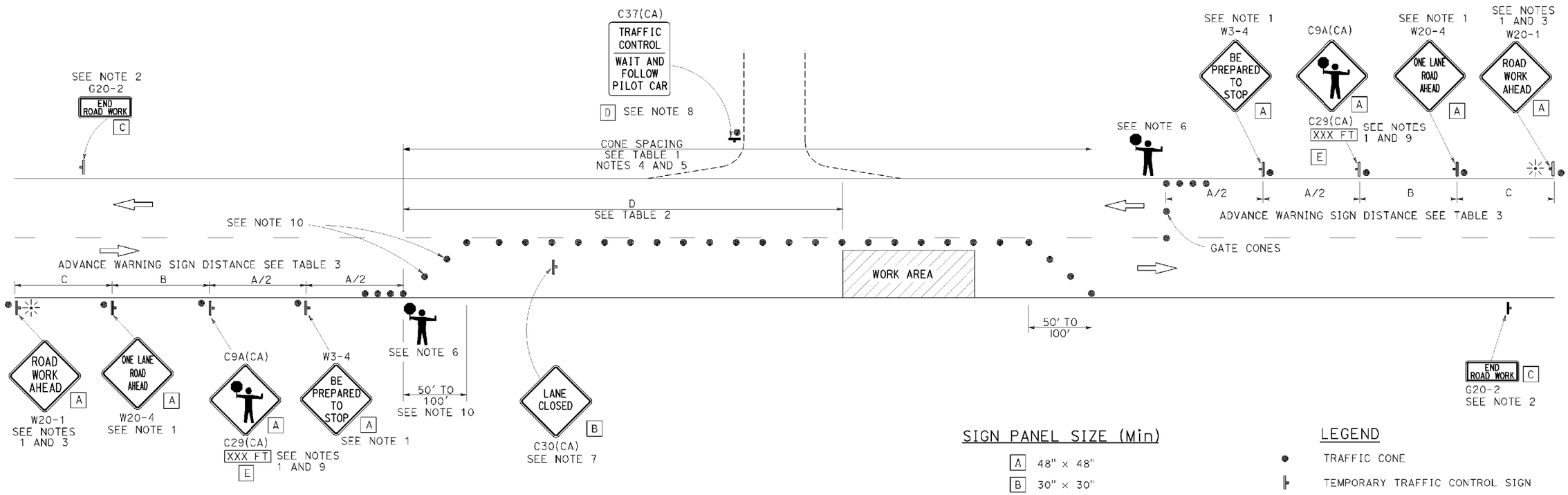

SIGN PANEL SIZE (Min)

A	48" x 48"
B	30" x 30"
C	36" x 18"
D	36" x 42"
E	20" x 7"

LEGEND

- TRAFFIC CONE
- TEMPORARY TRAFFIC CONTROL SIGN
- PORTABLE FLASHING BEACON
- FLAGGER

NOTES:

1. Each advance warning sign in each direction of travel shall be equipped with at least two flags for daytime closure. Each flag shall be at least 16" x 16" in size and shall be orange or fluorescent red-orange in color. Flashing beacons shall be placed at the locations indicated for lane closure during hours of darkness.
2. A G20-2 "END ROAD WORK" sign, as appropriate, shall be placed at the end of the lane control unless the end of work area is obvious, or ends within a larger project's limits.
3. If the W20-1 sign would follow within 2000' of a stationary W20-1 or G20-1 "ROAD WORK NEXT _____ MILES", use a W20-4 sign for the first advance warning sign.
4. All cones used for lane closures during the hours of darkness shall be fitted with retroreflective bands (or sleeves) as specified in the specifications.
5. Portable delineators, placed at one-half the spacing indicated for traffic cones, may be used instead of cones for daytime closures only.
6. Additional advance flaggers may be required. Flagger should stand in a conspicuous place, be visible to approaching traffic as well as approaching vehicles after the first vehicle has stopped. During the hours of darkness, the flagging-station and flagger shall be illuminated and clearly visible to approaching traffic. The illumination footprint of the lighting on the ground shall be at least 20' in diameter. Place a minimum of four cones at 50' intervals in advance of flagger station as shown.
7. Place C30(CA) "LANE CLOSED" sign at 500' to 1000' intervals throughout extended work areas. They are optional if the work area is visible from the flagger station.
8. When a pilot car is used, place a C37(CA) "TRAFFIC CONTROL-WAIT AND FOLLOW PILOT CAR" sign with black legend on white background at all intersections, driveways and alleys without a flagger within traffic control area. Signs shall be clean and visible at all times. Where traffic can not be effectively self-regulated, at least one flagger shall be used at each intersection within traffic control area.
9. An optional C29(CA) sign may be placed below the C9A(CA) sign.
10. Either traffic cones or barricades shall be placed on the taper. Barricades shall be Type I, II, or III.

STATE OF CALIFORNIA
DEPARTMENT OF TRANSPORTATION

TRAFFIC CONTROL SYSTEM FOR LANE CLOSURE ON TWO LANE CONVENTIONAL HIGHWAYS

NO SCALE

RSP T13 DATED APRIL 19, 2013 SUPERSEDES STANDARD PLAN T13 DATED MAY 20, 2011 - PAGE 241 OF THE STANDARD PLANS BOOK DATED 2010.

REVISED STANDARD PLAN RSP T13

2010 REVISED STANDARD PLAN RSP T13

DATE PLOTTED => 07-NOV-2013
TIME PLOTTED => 07:21

DIST	COUNTY	ROUTE	POST MILES TOTAL PROJECT	SHEET No.	TOTAL SHEETS
02	Tri	299	53.5/64.0	63	70

REGISTERED CIVIL ENGINEER

April 19, 2013
PLANS APPROVAL DATE

REGISTERED PROFESSIONAL ENGINEER
Gurinderpal Bhullar
No. C48815
Exp. 9-30-14
CIVIL
STATE OF CALIFORNIA

THE STATE OF CALIFORNIA OR ITS OFFICERS OR AGENTS SHALL NOT BE RESPONSIBLE FOR THE ACCURACY OR COMPLETENESS OF SCANNED COPIES OF THIS PLAN SHEET.

TO ACCOMPANY PLANS DATED 11-06-13

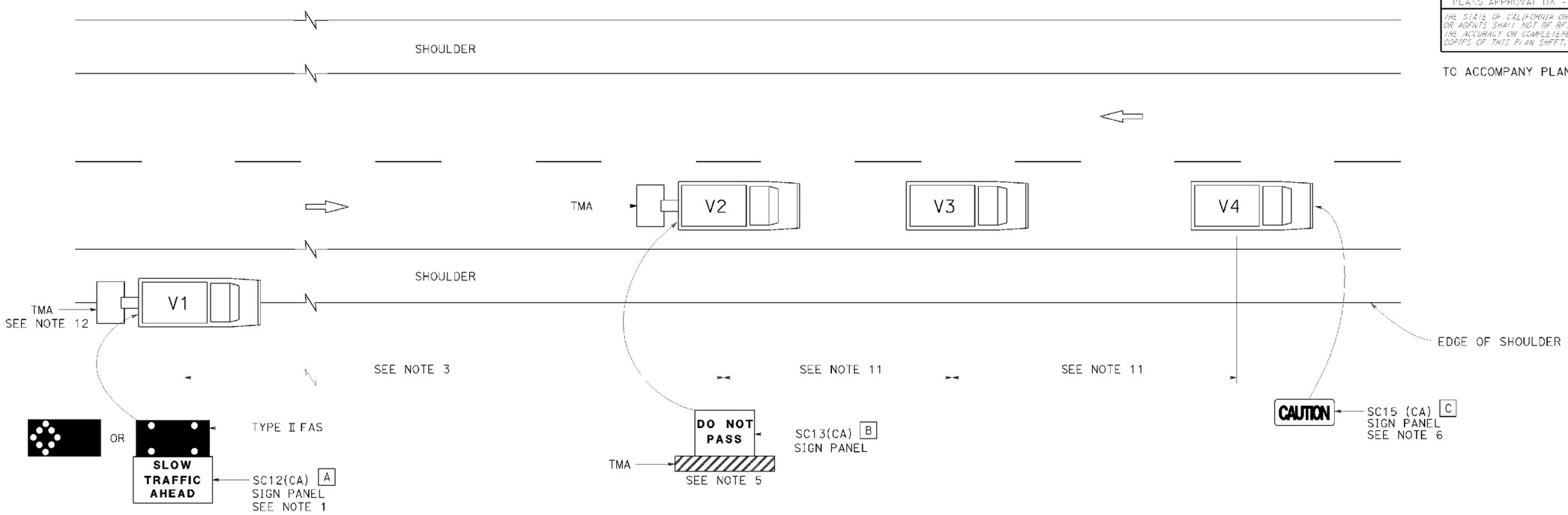

LEGEND

V1	SIGN VEHICLE
V2	SHADOW VEHICLE
V3	WORK/APPLICATION VEHICLE
V4	SIGN VEHICLE
TMA	TRUCK-MOUNTED ATTENUATOR
	FLASHING ARROW SIGN (FAS) IN FLASHING CAUTION MODE
	FLASHING ARROW SIGN (FAS) IN ALTERNATING DIAMOND CAUTION

SIGN PANEL SIZE (Min)

A	72" x 42"
B	54" x 42"
C	54" x 24"

NOTES:

1. Either a changeable message sign or a SC12(CA) "SLOW TRAFFIC AHEAD" sign shall be mounted on the rear of sign vehicle V1. The changeable message sign shall be sequenced to show the "CAUTION" message first, follow by the "SLOW TRAFFIC AHEAD" message. A Type II flashing arrow sign may be used with the SC12(CA) sign panel.
2. Sign vehicle V1 should be positioned where highly visible when shoulders are not available.
3. If traffic queues develop, sign vehicle V1 should be positioned upstream from the end of queue.
4. Vehicle-mounted sign panels shall have Type III or above retroreflective sheeting, black on white, or black on fluorescent orange, with 6" minimum series D letters per Caltrans sign specifications.
5. Shadow vehicle shall be equipped with a truck-mounted attenuator. The sign panel shown shall be mounted on the rear of shadow vehicle V2. The message "LANE CLOSED" may be used in place of the "DO NOT PASS" message.
6. The sign panel shown shall be mounted on the front of sign vehicle V4, facing opposing traffic.
7. All vehicles shall be equipped with flashing or rotating amber lights.
8. Sign vehicle V4 will not be required when the work and vehicles V2 and V3 are 2' or more from the centerline of the highway during the work or application operations.
9. All vehicles used for lane closures shall be equipped with two-way radios and the vehicle operators shall maintain communication during the work or application operation.
10. This plan shall not be used where workers would be on foot in the work area. Use a stationary type lane closure (Revised Standard Plan T13) for this condition.
11. Minimize spacing between vehicles V2 and V3 and vehicles V3 and V4 to deter road users from driving in between them.
12. If sign vehicle V1 encroaches into the traffic lane due to insufficient shoulder width, sign vehicle V1 shall be equipped with a truck-mounted attenuator. Sign vehicle V1 shall stay as close to the edge of shoulder as practicable.

STATE OF CALIFORNIA
DEPARTMENT OF TRANSPORTATION

TRAFFIC CONTROL SYSTEM FOR MOVING LANE CLOSURE ON TWO LANE HIGHWAYS

NO SCALE

RSP T17 DATED APRIL 19, 2013 SUPERSEDES STANDARD PLAN T17
DATED MAY 20, 2011 - PAGE 245 OF THE STANDARD PLANS BOOK DATED 2010.

REVISED STANDARD PLAN RSP T17

2010 REVISED STANDARD PLAN RSP T17

DATE PLOTTED => 07-NOV-2013
TIME PLOTTED => 07:21

Dist	COUNTY	ROUTE	POST MILES TOTAL PROJECT	SHEET No.	TOTAL SHEETS
02	Tri	299	53.5/64.0	64	70

REGISTERED ELECTRICAL ENGINEER

July 19, 2013
PLANS APPROVAL DATE

REGISTERED PROFESSIONAL ENGINEER
Theresa Aziz Gabriel
No. E15129
Exp. 6-30-14
ELECTRICAL
STATE OF CALIFORNIA

THE STATE OF CALIFORNIA OR ITS OFFICERS OR AGENTS SHALL NOT BE RESPONSIBLE FOR THE ACCURACY OR COMPLETENESS OF SCANNED COPIES OF THIS PLAN SHEET.

TO ACCOMPANY PLANS DATED 11-06-13

LEGEND:

- AB — ABANDON. IF APPLIED TO CONDUIT, REMOVE CONDUCTORS
- BC — INSTALL PULL BOX IN EXISTING CONDUIT RUN
- BP — PEDESTRIAN BARRICADE, TYPE AS INDICATED ON PLAN
- CB — INSTALL CONDUIT INTO EXISTING PULL BOX
- CC — CONNECT NEW AND EXISTING CONDUIT. REMOVE EXISTING CONDUCTORS AND INSTALL CONDUCTORS AS INDICATED
- CF — CONDUIT TO REMAIN FOR FUTURE USE. REMOVE CONDUCTORS. INSTALL PULL TAPE
- DH — DETECTOR HANDHOLE
- FA — FOUNDATION TO BE ABANDONED
- IS — INSTALL SIGN ON SIGNAL MAST ARM
- NS — NO SLIP BASE ON STANDARD
- PEC — PHOTOELECTRIC CONTROL
- PEU — PHOTOELECTRIC UNIT
- RC — EQUIPMENT OR MATERIAL TO BE REMOVED AND BECOME THE PROPERTY OF THE CONTRACTOR
- RE — REMOVE ELECTROLIER, FUSES AND BALLAST. TAPE ENDS OF CONDUCTORS
- RL — RELOCATE EQUIPMENT
- RR — REMOVE AND REUSE EQUIPMENT
- RS — REMOVE AND SALVAGE EQUIPMENT
- SC — SPLICE NEW TO EXISTING CONDUCTORS
- SD — SERVICE DISCONNECT
- TSP — TELEPHONE SERVICE POINT

ABBREVIATIONS

APS	ACCESSIBLE PEDESTRIAN SIGNAL
BBS	BATTERY BACKUP SYSTEM
BC	BOLT CIRCLE
BPB	BICYCLE PUSH BUTTON
C	CONDUIT
CB	CIRCUIT BREAKER
CCTV	CLOSED CIRCUIT TELEVISION
Ckt	CIRCUIT
CMS	CHANGEABLE MESSAGE SIGN
Ctid	CALTRANS IDENTIFICATION
Comm	COMMUNICATION
DLC	LOOP DETECTOR LEAD-IN CABLE
EMS	EXTINGUISHABLE MESSAGE SIGN
EVUC	EMERGENCY VEHICLE UNIT CABLE
EVUD	EMERGENCY VEHICLE UNIT DETECTOR
FB	FLASHING BEACON
FBCA	FLASHING BEACON CONTROL ASSEMBLY
FBS	FLASHING BEACON WITH SLIP BASE
FO	FIBER OPTIC
G	EQUIPMENT GROUNDING CONDUCTOR
GB	GROUND BUS
GFCI	GROUND FAULT CIRCUIT INTERRUPTER
HAR	HIGHWAY ADVISORY RADIO
Hex	HEXAGONAL
HPS	HIGH PRESSURE SODIUM
IISNS	INTERNALLY ILLUMINATED STREET NAME SIGN
ISL	INDUCTION SIGN LIGHTING
LED	LIGHT EMITTING DIODE
LMA	LUMINAIRE MAST ARM
LPS	LOW PRESSURE SODIUM
Ltg	LIGHTING
Lum	LUMINAIRE
M	METERED
MAT	MAST ARM MOUNTING TOP ATTACHMENT
MAS	MAST ARM MOUNTING SIDE ATTACHMENT
M/M	MULTIPLE TO MULTIPLE TRANSFORMER
Mtg	MOUNTING
MV	MERCURY VAPOR LIGHTING FIXTURE
MVDS	MICROWAVE VEHICLE DETECTION SYSTEM
N	NEUTRAL (GROUNDED CONDUCTOR)
NB	NEUTRAL BUS
NC	NORMALLY CLOSE
NO	NORMALLY OPEN
P	CIRCUIT BREAKER'S POLE
PB	PULL BOX
PBA	PUSH BUTTON ASSEMBLY
PEC	PHOTOELECTRIC CONTROL
Ped	PEDESTRIAN
PEU	PHOTOELECTRIC UNIT
PT	CONDUIT WITH PULL TAPE
RE	RELOCATED EQUIPMENT
RM	RAMP METERING
RWIS	ROADSIDE WEATHER INFORMATION SYSTEM
SB	SLIP BASE
SIC	SIGNAL INTERCONNECT CABLE
Sig	SIGNAL
SMA	SIGNAL MAST ARM
SNS	STREET NAME SIGN
SP	SERVICE POINT
TDC	TELEPHONE DEMARCATION CABINET
TMS	TRAFFIC MONITORING STATION
TOS	TRAFFIC OPERATIONS SYSTEM
Veh	VEHICLE
VIVDS	VIDEO IMAGE VEHICLE DETECTION SYSTEM
WIM	WEIGH-IN-MOTION
Xfmr	TRANSFORMER

SOFFIT AND WALL MOUNTED LUMINAIRES

- PENDANT, 70 W HPS UNLESS OTHERWISE SPECIFIED
- FLUSH, 70 W HPS UNLESS OTHERWISE SPECIFIED
- WALL SURFACE, 70 W HPS UNLESS OTHERWISE SPECIFIED
- EXISTING SOFFIT OR WALL LUMINAIRE TO REMAIN UNMODIFIED
- EXISTING SOFFIT OR WALL LUMINAIRE TO BE MODIFIED AS SPECIFIED

NOTE:
Arrow indicates "street side" of luminaire.

COMMONLY USED SYMBOLS FOR UNITED STATES CUSTOMARY UNITS OF MEASUREMENT:

SYMBOL USED	DEFINITIONS
Ω	OHMS
min	MINUTE
s	SECOND
bps	BITS PER SECOND
Bps	BYTES PER SECOND
A	AMPERE
V	VOLT
V(dc)	VOLT (DIRECT CURRENT)
V(ac)	VOLT (ALTERNATING CURRENT)
FC	FOOT - CANDLE
W	WATTS
VA	VOLT-AMPERE
M	MEGA
k	KILO
m	MILLI
μ	MICRO
P	PICO
Hz	HERTZ

MISCELLANEOUS ELECTROLIERS

NEW | EXISTING

- LUMINAIRE ON WOOD POLE
- NON-STANDARD ELECTROLIER (SEE PROJECT NOTES OR PROJECT PLANS)
- CITY ELECTROLIER
- ELECTROLIER FOUNDATION (FUTURE INSTALLATION)

NOTES:

1. HPS luminaires shall be 310 W HPS when installed on Type 21, 21D, 30, 31 and 32 Standards, unless otherwise specified. HPS luminaires shall be 200 W when installed on other type standards or poles, unless otherwise specified.
2. LED luminaires shall be 235 W when installed on Type 21, 21D, 30, 31 and 32 Standards, unless otherwise specified. LED luminaires shall be 165 W when installed on other type standards or poles, unless otherwise specified.
3. Luminaires shall be the cutoff type, ANSI Type III medium cutoff lighting distribution, unless otherwise specified.

STANDARD ELECTROLIER

NEW	EXISTING	STANDARD TYPE
		15
		15D
		15 STRUCTURE
		15D STRUCTURE
		21
		21D
		21 STRUCTURE
		21D STRUCTURE
		30
		31
		32

STATE OF CALIFORNIA
DEPARTMENT OF TRANSPORTATION

ELECTRICAL SYSTEMS (LEGEND AND ABBREVIATIONS)

NO SCALE

RSP ES-1A DATED JULY 19, 2013 SUPERSEDES STANDARD PLAN ES-1A DATED MAY 20, 2011 - PAGE 425 OF THE STANDARD PLANS BOOK DATED 2010.

REVISED STANDARD PLAN RSP ES-1A

2010 REVISED STANDARD PLAN RSP ES-1A

DATE PLOTTED => 07-NOV-2013
TIME PLOTTED => 07:21

Dist	COUNTY	ROUTE	POST MILES TOTAL PROJECT	SHEET No.	TOTAL SHEETS
02	Tri	299	53.5/64.0	65	70

REGISTERED ELECTRICAL ENGINEER

July 19, 2013
PLANS APPROVAL DATE

Theresa Aziz Gabriel No. E15129 Exp. 6-30-14 ELECTRICAL STATE OF CALIFORNIA REGISTERED PROFESSIONAL ENGINEER

THE STATE OF CALIFORNIA OR ITS OFFICERS OR AGENTS SHALL NOT BE RESPONSIBLE FOR THE ACCURACY OR COMPLETENESS OF SCANNED COPIES OF THIS PLAN SHEET.

TC ACCOMPANY PLANS DATED 11-06-13

CONDUIT

NEW	EXISTING	
		LIGHTING CONDUIT, UNLESS OTHERWISE INDICATED OR NOTED
		TRAFFIC SIGNAL CONDUIT
C	c	COMMUNICATION CONDUIT
T	t	TELEPHONE CONDUIT
F	f	FIRE ALARM CONDUIT
FO	fo	FIBER OPTIC CONDUIT
		CONDUIT TERMINATION
R	r	CONDUIT RISER ATTACHED TO THE STRUCTURE OR SERVICE POLE

SERVICE EQUIPMENT

NEW	EXISTING	
OH	oh	OVERHEAD LINES
U	U	WOOD POLE, "U" INDICATES UTILITY OWNED
		POLE GUY WITH ANCHOR
		UTILITY TRANSFORMER - GROUND MOUNTED
III	III	SERVICE EQUIPMENT ENCLOSURE TYPE. DOOR INDICATES FRONT OF ENCLOSURE
T	t	TELEPHONE DEMARCATION CABINET

POLE-MOUNTED SERVICE DESIGNATION

TYPE H SERVICE, 28'-10" — TYPE OF INSTALLATION AND POLE HEIGHT ABOVE GRADE

FLASHING BEACON

NEW	EXISTING	
R	R	FLASHING BEACON (ONE VEHICLE SIGNAL HEAD WITH BACKPLATE AND VISOR) "R" INDICATES RED INDICATION, "Y" INDICATES YELLOW INDICATION
Y Y	Y Y	FLASHING BEACON WITH TYPE 15-FBS STANDARD AND A SIGN.
R R	R R	FLASHING BEACON WITH TYPES 9, 9A OR 9B SIGN UNLESS OTHERWISE SPECIFIED OR INDICATED

SIGNAL EQUIPMENT

NEW	EXISTING	
C	C	PEDESTRIAN SIGNAL HEAD "C" INDICATES COUNTDOWN PEDESTRIAN HEAD
		PUSH BUTTON ASSEMBLY POST
		PEDESTRIAN BARRICADE
		VEHICLE SIGNAL HEAD (WITH BACKPLATE AND 3-SECTIONS: RED, YELLOW AND GREEN)
		VEHICLE SIGNAL HEAD WITH ANGLE VISOR
PV	PV	MODIFICATIONS OF BASIC SYMBOL: "L" INDICATES ALL NON-ARROW SECTIONS LOUVERED "LG" INDICATES LOUVERED GREEN SECTION ONLY "PV" INDICATES ALL 12" SECTIONS PROGRAMMED VISIBILITY "8" INDICATES ALL 8" SECTIONS (ONLY WHEN SPECIFIED)
		VEHICLE SIGNAL HEAD CONSISTING OF RED, YELLOW AND GREEN LEFT ARROW SECTIONS
		VEHICLE SIGNAL HEAD CONSISTING OF RED AND YELLOW SECTIONS WITH AN UP GREEN ARROW SECTION
		VEHICLE SIGNAL HEAD (5 SECTION) CONSISTING OF RED, YELLOW AND GREEN SECTIONS WITH YELLOW AND GREEN RIGHT ARROW SECTIONS
		TYPE 15TS STANDARD WITH VEHICLE SIGNAL HEAD AND LUMINAIRE
		TYPE 21TS STANDARD WITH VEHICLE SIGNAL HEAD AND LUMINAIRE
		STANDARD WITH LUMINAIRE AND SIGNAL MAST ARMS AND ATTACHED VEHICLE SIGNAL HEADS
		TYPE 1 STANDARD WITH ATTACHED VEHICLE SIGNAL HEADS
		STANDARD WITH A SIGNAL MAST ARM, ATTACHED VEHICLE SIGNAL HEADS AND INTERNALLY ILLUMINATED STREET NAME SIGN
		CONTROLLER ASSEMBLY. DOOR INDICATES FRONT OF CABINET

SIGNAL EQUIPMENT Cont

NEW	EXISTING	
		GUARD POST
		TYPE 1 STANDARD WITH RAMP METERING SIGN
		OPTICAL DETECTOR FOR THE EMERGENCY VEHICLE DETECTION SYSTEM

NOTES:

1. All signal sections shall be 12" unless shown otherwise.
2. Signal heads shall be provided with backplates unless shown otherwise.

ILLUMINATED OVERHEAD SIGN

NEW	EXISTING	
		SINGLE POST, SINGLE ILLUMINATED SIGN, BALANCED BUTTERFLY
		SINGLE POST, DOUBLE ILLUMINATED SIGN, BALANCED BUTTERFLY
		SINGLE POST, SINGLE ILLUMINATED SIGN, FULL CANTILEVER
		DOUBLE POST, SINGLE ILLUMINATED SIGN
		SINGLE ILLUMINATED SIGN MOUNTED ON STRUCTURE
		DOUBLE POST, SINGLE ILLUMINATED SIGN WITH ELECTROLIER

STATE OF CALIFORNIA
DEPARTMENT OF TRANSPORTATION

ELECTRICAL SYSTEMS (LEGEND AND ABBREVIATIONS)

NO SCALE

RSP ES-1B DATED JULY 19, 2013 SUPERSEDES STANDARD PLAN ES-1B DATED MAY 20, 2011 - PAGE 426 OF THE STANDARD PLANS BOOK DATED 2010.

REVISED STANDARD PLAN RSP ES-1B

2010 REVISED STANDARD PLAN RSP ES-1B

DATE PLOTTED => 07-NOV-2013
TIME PLOTTED => 07:21

Dist	COUNTY	ROUTE	POST MILES TOTAL PROJECT	SHEET No.	TOTAL SHEETS
02	Tri	299	53.5/64.0	66	70

Theresa Gabriel
REGISTERED ELECTRICAL ENGINEER

July 19, 2013
PLANS APPROVAL DATE

REGISTERED PROFESSIONAL ENGINEER
Theresa Aziz Gabriel
No. E15129
Exp. 6-30-14
ELECTRICAL
STATE OF CALIFORNIA

THE STATE OF CALIFORNIA OR ITS OFFICERS OR AGENTS SHALL NOT BE RESPONSIBLE FOR THE ACCURACY OF COMPLETENESS OF SCANNED COPIES OF THIS PLAN SHEET.

TO ACCOMPANY PLANS DATED 11-06-13

EQUIPMENT IDENTIFICATION

ILLUMINATED SIGN IDENTIFICATION NUMBER:

SIGN No. 12345 — SIGN NUMBER - PLACE ON POST OR STRUCTURE

10 ISL SCI 1.0

- 10 — TRANSFORMER RATING (kVA)
- ISL — LIGHTING CONTROL TYPE
- SCI — NUMBER AND TYPE OF FIXTURES

DO NOT PLACE ON STANDARD OR STRUCTURE

ELECTROLIER OR EQUIPMENT IDENTIFICATION NUMBER:

12345 - 15'-0"

- 15'-0" — MAST ARM LENGTH, IF SHOWN. DO NOT PLACE ON STANDARD OR STRUCTURE
- 12345 — EQUIPMENT NUMBER - PLACE ON STANDARD OR STRUCTURE. EXISTING EQUIPMENT NUMBERS ARE SHOWN IN PARENTHESIS

CONDUIT AND CONDUCTOR IDENTIFICATION:

1½"C, 2#10, 15#14, 2 DLC, 12P#18

- PAIR
- 2#10, 15#14, 2 DLC, 12P#18 — NUMBER AND SIZE OF CONDUCTORS AND CABLES
- 1½"C — SIZE OF CONDUIT IN INCHES
- Ø1, Ø2, Ø2P, etc. — TRAFFIC PHASE IDENTIFICATION FOR SIGNAL FACES, DETECTORS AND PHASE DIAGRAMS
- 1 2 3 — LEGEND NUMBERS
- A B C — EQUIPMENT, SIGNAL POLES, INSTALLATION OR ITEMS
- 1 2 3 — CONDUIT RUN NUMBERS

SIGNAL AND LIGHTING STANDARD (TYPICAL DESIGNATION):

19A - 3 - 100

- 100 — WIND VELOCITY = 100 mph
- 3 — CASE 3 ARM LOADING
- 19A — STANDARD TYPE
- STANDARD PLAN SHEET NUMBER
- DETAIL, NUMBER, SECTION, TYPE OR ELEVATION

MISCELLANEOUS EQUIPMENT

NEW	EXISTING	
CMS	cms	CHANGEABLE MESSAGE SIGN
		CLOSED CIRCUIT TELEVISION CAMERA
		HIGHWAY ADVISORY RADIO POLE AND ANTENNA
EMS	ems	EXTINGUISHABLE MESSAGE SIGN
M V	m v	DETECTION DEVICE M = MICROWAVE SENSOR V = VIDEO IMAGE SENSOR

WIRING DIAGRAM LEGEND

- EXTERNAL CONDUCTOR
- CONDUCTOR OR BUS
- TIE POINT
- CONTACTOR COIL
- CONTACTOR, NO CONTACT
- TERMINAL BLOCKS
- CONTACTOR, NC CONTACT
- ENCLOSURE BOND
- GROUNDING ELECTRODE
- CIRCUIT BREAKER
- RECEPTACLE

PULL BOXES

NEW	EXISTING	
		PULL BOX, No. 5 UNLESS OTHERWISE INDICATED OR NOTED
3	9A(21)	PULL BOX, ADDITIONAL DESIGNATIONS OR DESCRIPTIONS

3 No. 3½ PULL BOX
5 No. 5 PULL BOX
6 No. 6 PULL BOX
7 No. 7 (CEILING PULL BOX)
8 No. 8 (PENDANT SOFFIT PULL BOX)
9 No. 9 PULL BOX
9A No. 9A PULL BOX

(C) COMMUNICATIONS PULL BOX
(E) PULL BOX WITH EXTENSION
(S) SPRINKLER CONTROL PULL BOX
(21) ANCHOR BOLTS AND CONDUIT FOR FUTURE INSTALLATION OF TYPE 21 STANDARD
(T) TRAFFIC PULL BOX

VEHICLE DETECTORS

5 J 9 U

- VEHICLE DETECTOR DESIGNATION
- U = UPPER, L = LOWER
- SLOT NUMBER IN INPUT FILE
- INPUT FILE (I OR J)
- PHASE

NEW	EXISTING	
		TYPE A DETECTOR LOOP. OUTLINE OF SAWCUT SHOWN
		TYPE B DETECTOR LOOP. OUTLINE OF SAWCUT SHOWN
		TYPE C DETECTOR LOOP. OUTLINE OF SAWCUT SHOWN
		TYPE D DETECTOR LOOP. OUTLINE OF SAWCUT SHOWN
		TYPE E DETECTOR LOOP. OUTLINE OF SAWCUT SHOWN
		TYPE Q DETECTOR LOOP. OUTLINE OF SAWCUT SHOWN
		MAGNETIC DETECTOR
DH	dh	DETECTOR HANDHOLE
		MICROWAVE OR VIDEO DETECTION ZONE

STATE OF CALIFORNIA
DEPARTMENT OF TRANSPORTATION

ELECTRICAL SYSTEMS (LEGEND AND ABBREVIATIONS)

NO SCALE

RSP ES-1C DATED JULY 19, 2013 SUPERSEDES STANDARD PLAN ES-1C DATED MAY 20, 2011 - PAGE 427 OF THE STANDARD PLANS BOOK DATED 2010.

REVISED STANDARD PLAN RSP ES-1C

2010 REVISED STANDARD PLAN RSP ES-1C

DATE PLOTTED => 07-NOV-2013
TIME PLOTTED => 07:21

Dist	COUNTY	ROUTE	POST MILES TOTAL PROJECT	SHEET No.	TOTAL SHEETS
02	Tri	299	53.5/64.0	67	70

REGISTERED ELECTRICAL ENGINEER

July 19, 2013
PLANS APPROVAL DATE

REGISTERED PROFESSIONAL ENGINEER
Theresa Aziz Gabriel
No. E15129
Exp. 6-30-14
ELECTRICAL
STATE OF CALIFORNIA

THE STATE OF CALIFORNIA OR ITS OFFICERS OR AGENTS SHALL NOT BE RESPONSIBLE FOR THE ACCURACY OR COMPLETENESS OF SCANNED COPIES OF THIS PLAN SHEET.

TC ACCOMPANY PLANS DATED 11-06-13

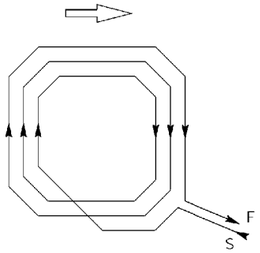

WINDING DETAIL

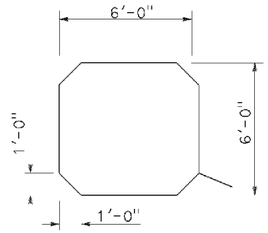

SAWCUT DETAIL

TYPE A LOOP DETECTOR CONFIGURATION

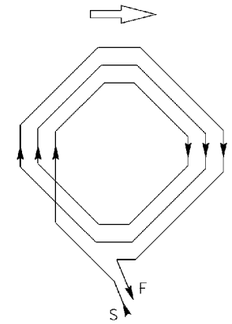

WINDING DETAIL

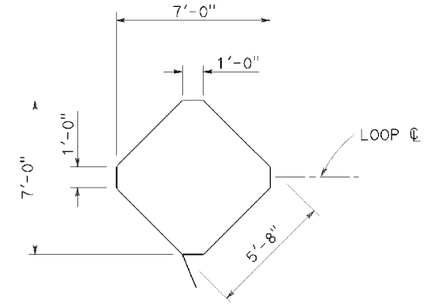

SAWCUT DETAIL

TYPE B LOOP DETECTOR CONFIGURATION

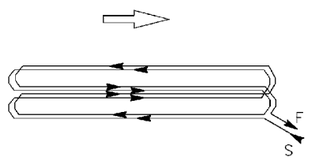

WINDING DETAIL

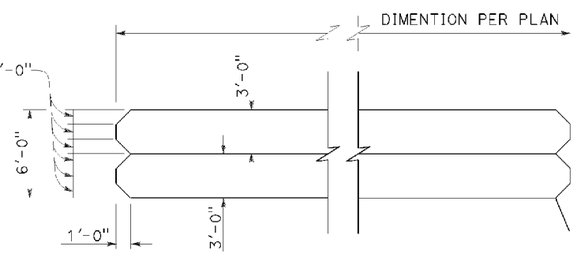

SAWCUT DETAIL

TYPE C LOOP DETECTOR CONFIGURATION

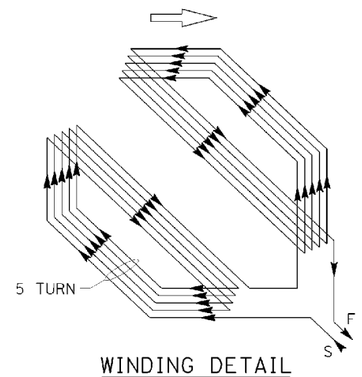

WINDING DETAIL

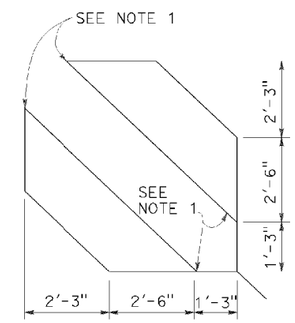

SAWCUT DETAIL

TYPE D LOOP DETECTOR CONFIGURATION

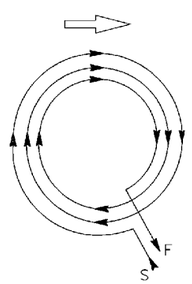

WINDING DETAIL

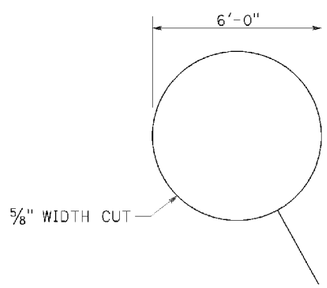

SAWCUT DETAIL

TYPE E LOOP DETECTOR CONFIGURATION

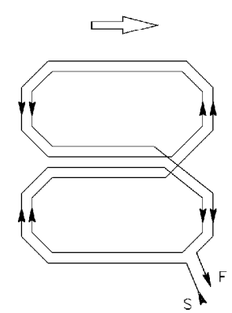

WINDING DETAIL

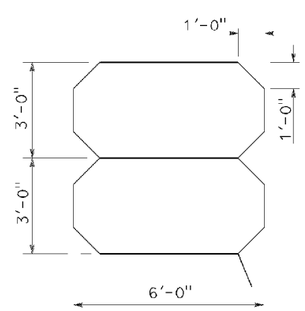

SAWCUT DETAIL

TYPE Q LOOP DETECTOR CONFIGURATION

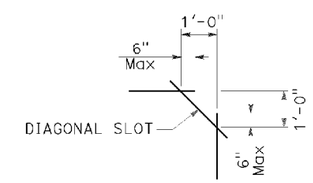

PLAN VIEW OF DIAGONAL SLOT AT CORNERS

NOTES:

1. Round corners of acute angle sawcuts to prevent damage to conductors.
2. Typical distance separating loops from edge to edge is 10' for Type A, B, D and E installation in single lane.

STATE OF CALIFORNIA
DEPARTMENT OF TRANSPORTATION

ELECTRICAL SYSTEMS (DETECTORS)

NO SCALE

RSP ES-5B DATED JULY 19, 2013 SUPERSEDES STANDARD PLAN ES-5B
DATED MAY 20, 2011 - PAGE 449 OF THE STANDARD PLANS BOOK DATED 2010.

REVISED STANDARD PLAN RSP ES-5B

2010 REVISED STANDARD PLAN RSP ES-5B

DATE PLOTTED => 07-NOV-2013
TIME PLOTTED => 07:21

Dist	COUNTY	ROUTE	POST MILES TOTAL PROJECT	SHEET No.	TOTAL SHEETS
02	Tri	299	53.5/64.0	68	70

Theresa Gabriel
REGISTERED ELECTRICAL ENGINEER

July 19, 2013
PLANS APPROVAL DATE

REGISTERED PROFESSIONAL ENGINEER
Theresa Aziz Gabriel
No. E15129
Exp. 6-30-14
ELECTRICAL
STATE OF CALIFORNIA

THE STATE OF CALIFORNIA OR ITS OFFICERS OR AGENTS SHALL NOT BE RESPONSIBLE FOR THE ACCURACY OR COMPLETENESS OF SCANNED COPIES OF THIS PLAN SHEET.

TO ACCOMPANY PLANS DATED 11-06-13

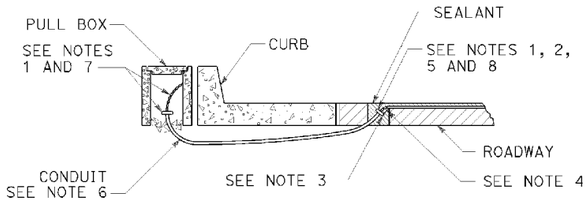

TYPE A
CURB TERMINATION DETAIL

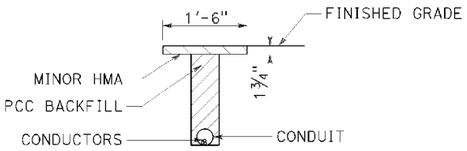

"T" TRENCH
DETAIL T

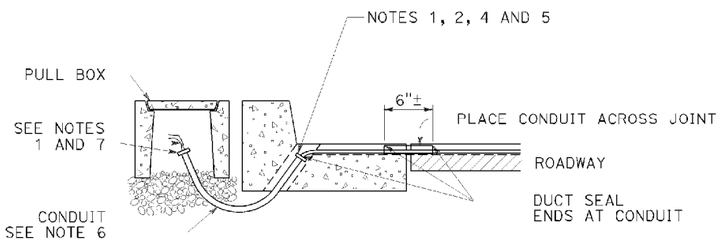

CROSS SECTION

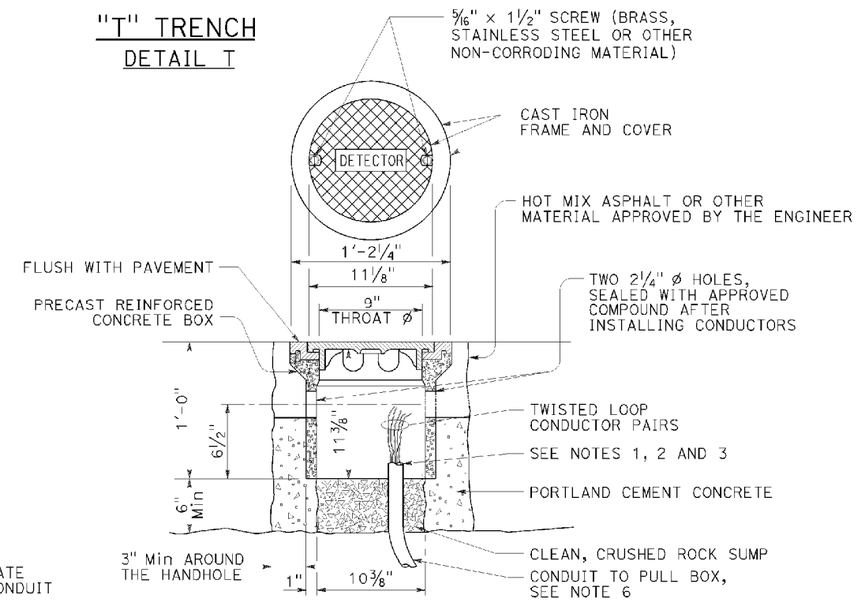

DETECTOR HANDHOLE DETAIL

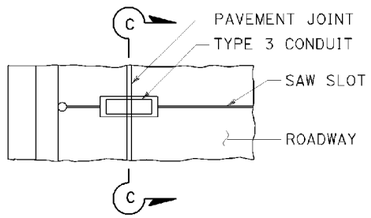

PLAN VIEW

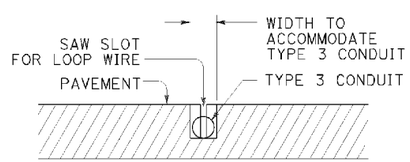

SECTION C-C

TYPE B
CURB TERMINATION DETAIL

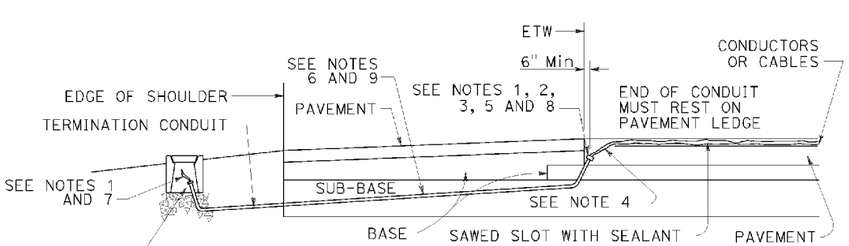

CROSS SECTION

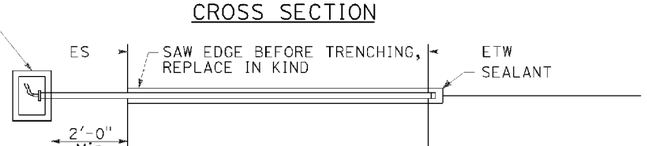

PLAN VIEW

SHOULDER TERMINATION DETAILS

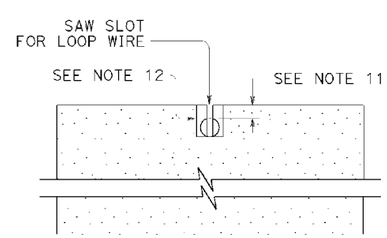

SECTION A-A

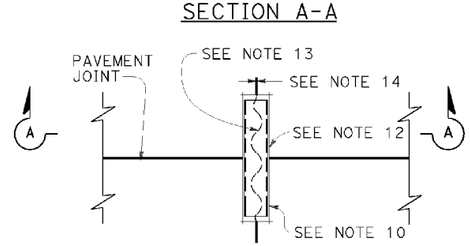

PLAN VIEW

TYPICAL LOOP LEAD-IN DETAIL
AT PAVEMENT JOINT

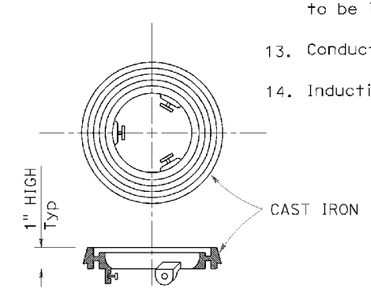

LOCKING GRADE RING

NOTES:

1. Bushing shall be used at end of conduit.
2. Tape detector conductors or cables 3" each side of bushings.
3. Install duct seal compound to each end of termination conduit before installing sealant.
4. Round all sharp edges where detector conductors or cables have to pass.
5. End of conduit shall be 3⅛" below roadway surface.
6.

Conduit size	Loop conductors
1"C minimum	1 to 2 pairs
1½"C minimum	3 to 4 pairs
2"C minimum	5 or more pairs

7. Splice detector conductors or cables to detector lead-in-cable.
8. Location of detector handhole when shown on plans.
9. When the shoulder and traveled way are paved with the same material and there is no joint between them, the conduit shall extend only 2'-0" into the shoulder pavement.
10. ¾"C, Type 3 conduit 6" long minimum, plug both ends with duct compound to keep out sealant.
11. ½" Minimum between top of conduit and pavement surface.
12. Sawcut shall not exceed 1" in width and ⅛" longer than conduit to be installed.
13. Conductors with ½" minimum slack inside conduit.
14. Inductive loop detector saw slot.

STATE OF CALIFORNIA
DEPARTMENT OF TRANSPORTATION

ELECTRICAL SYSTEMS (CURB TERMINATION AND HANDHOLE)

NO SCALE

RSP ES-5D DATED JULY 19, 2013 SUPERSEDES STANDARD PLAN ES-5D DATED MAY 20, 2011 - PAGE 451 OF THE STANDARD PLANS BOOK DATED 2010.

REVISED STANDARD PLAN RSP ES-5D

2010 REVISED STANDARD PLAN RSP ES-5D

DATE PLOTTED => 07-NOV-2013
TIME PLOTTED => 07:21

USERNAME => s115152
DGN FILE => 24e410va017.dgn

P:\proj1\02\4E410_plans\pse\24e410va017.dgn

7 9 13

DIST	COUNTY	ROUTE	POST MILES TOTAL PROJECT	SHEET NO.	TOTAL SHEETS
02	Tri	299	53.5/64.0	69	70

Theresa Gabriel
REGISTERED ELECTRICAL ENGINEER

July 19, 2013
PLANS APPROVAL DATE

REGISTERED PROFESSIONAL ENGINEER
Theresa Aziz Gabriel
No. E15129
Exp. 6-30-14
ELECTRICAL
STATE OF CALIFORNIA

THE STATE OF CALIFORNIA OR ITS OFFICERS OR AGENTS SHALL NOT BE RESPONSIBLE FOR THE ACCURACY OR COMPLETENESS OF SCANNED COPIES OF THIS PLAN SHEET.

TO ACCOMPANY PLANS DATED 11-06-13

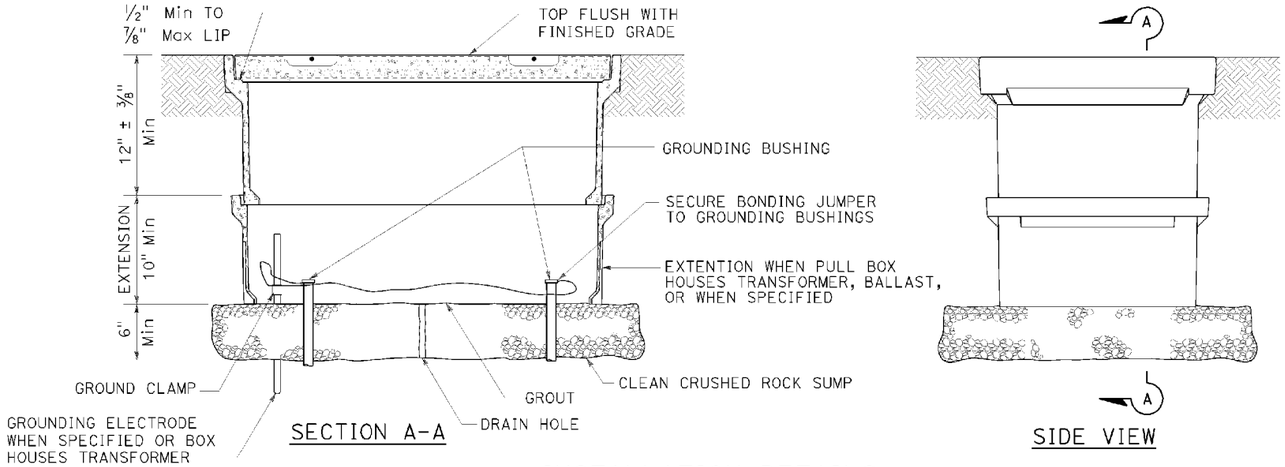

SECTION A-A

SIDE VIEW

INSTALLATION DETAILS

DETAIL A

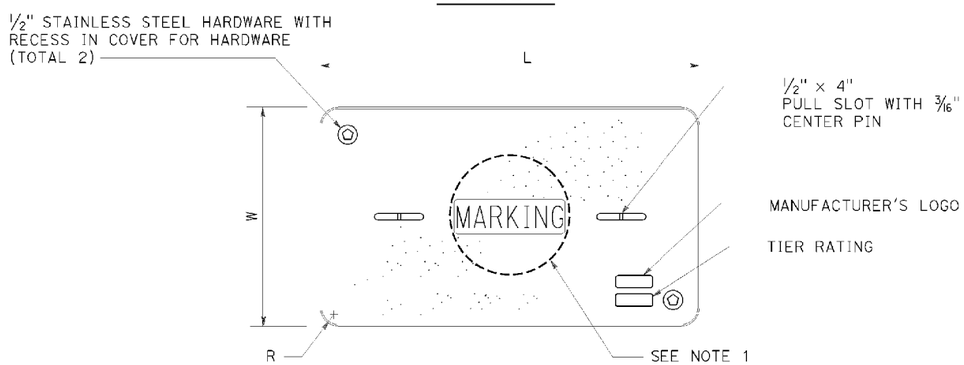

COVER TOP VIEW

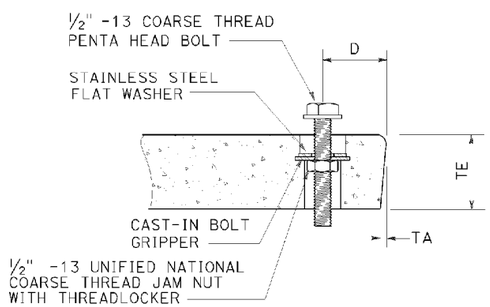

TYPICAL COVER CAPTIVE BOLT

OR SIMILAR

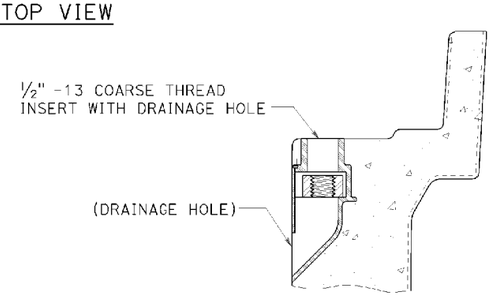

TYPICAL THREADED INSERT

OR SIMILAR

DIMENSION TABLE

PULL BOX	PULL BOX			COVER						
	MINIMUM DEPTH BOX	MINIMUM DEPTH EXTENSION	MAXIMUM WEIGHT	L	W	R	TE	TA	D	MAXIMUM WEIGHT
No. 3½	12"	N/A	40 lb	1' - 3⅜"	10⅛"	1⅜"	2"	⅛"	1¾"	30 lb
No. 5	12"	10"	55 lb	1' - 11¼"	1' - 1¾"	1⅜"	2"	⅛"	1¾"	60 lb
No. 6	12"	10"	70 lb	2' - 6½"	1' - 5½"	1⅜"	2"	⅛"	2"	85 lb

NOTES:

1. Pull box covers shall be marked as follows: "SERVICE" Service circuits between service point and service disconnect; "SPRINKLER-CONTROL" sprinkler control circuits, 50 V or less; "CALTRANS" on all pull boxes, except pull boxes marked "SPRINKLER-CONTROL"; and "TELEPHONE" Telephone service;

   A) No. 3½ pull box.

      1) "SIGNAL" - Traffic signal circuits with or without lighting or sign lighting circuits.

      2) "LIGHTING" - Lighting or sign lighting circuits where voltage is under 600 V.

   B) No. 5, 6, 9 or 9A pull box.

      1) "TRAFFIC SIGNAL" - Traffic signal circuits with or without lighting or sign lighting circuits.
      2) "LIGHTING" - Lighting or sign lighting circuits where voltage is under 600 V.
      3) "LIGHTING-HIGH VOLTAGE" - Lighting or sign lighting circuits where voltage is above 600 V.
      4) "IRRIGATION" - Circuits to irrigation controller 120 V or more.
      5) "RAMP METER" - Ramp meter circuits.
      6) "COUNT STATION" - Count or speed monitor circuits.
      7) "COMMUNICATIONS" - Communication circuits.
      8) "TOS COMMUNICATIONS" - TOS communication line.
      9) "TOS POWER" - TOS power.
      10) "TDC POWER" - Telephone demarcation cabinet power.
      11) "CCTV" - Closed circuit television circuits.
      12) "TMS" - Traffic monitoring station circuits.
      13) "CMS" - Changeable message sign circuits.
      14) "HAR" - Highway advisory radio circuits.
      15) "BOOSTER PUMP" - Booster pump circuit.

2. The nominal dimensions of the opening in which the cover sets shall be the same as the cover dimensions except the length and width dimensions shall be ⅛" greater.

3. Covers and boxes shall be interchangeable with California standard male and female gages. When interchanged with a standard male or female gage, the top surfaces shall be flush within ⅛". Top outside radius of covers and pull boxes shall have a ⅛" radius.

4. Pull box extension may be another pull box as long as the bottom edge of the pull box can fit into the cover opening.

5. All dimensions for the cover for non-traffic pull box are nominal values.

STATE OF CALIFORNIA
DEPARTMENT OF TRANSPORTATION

ELECTRICAL SYSTEMS (NON-TRAFFIC PULL BOX)

NO SCALE

RSP ES-8A DATED JULY 19, 2013 SUPERSEDES RSP ES-8A DATED JANUARY 20, 2012 THAT SUPPLEMENTS THE STANDARD PLANS BOOK DATED 2010.

REVISED STANDARD PLAN RSP ES-8A

2010 REVISED STANDARD PLAN RSP ES-8A

DATE PLOTTED => 07-NOV-2013
TIME PLOTTED => 07:21

DIST	COUNTY	ROUTE	POST MILES TOTAL PROJECT	SHEET NO.	TOTAL SHEETS
02	Tri	299	53.5/64.0	70	70

Theresa Gabriel
REGISTERED ELECTRICAL ENGINEER

July 19, 2013
PLANS APPROVAL DATE

REGISTERED PROFESSIONAL ENGINEER
Theresa Aziz Gabriel
No. E15129
Exp. 6-30-14
ELECTRICAL
STATE OF CALIFORNIA

THE STATE OF CALIFORNIA OR ITS OFFICERS OR AGENTS SHALL NOT BE RESPONSIBLE FOR THE ACCURACY OR COMPLETENESS OF SCANNED COPIES OF THIS PLAN SHEET.

TO ACCOMPANY PLANS DATED 11-06-13

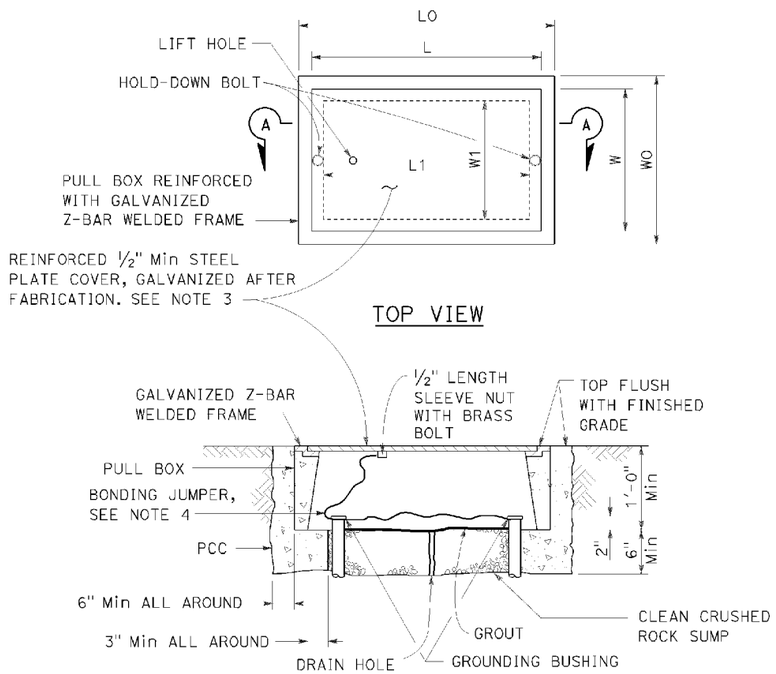

SECTION A-A

No. 3½(T), No. 5(T) AND No. 6(T) TRAFFIC PULL BOX

NOTES:

1. Traffic pull box shall be provided with steel cover and special concrete footing. Steel cover shall have embossed non-skid pattern.
2. Steel reinforcing shall be as regularly used in the standard products of the respective manufacturer.
3. Pull box covers shall be marked as follows: "SERVICE" Service circuits between service point and service disconnect; "SPRINKLER-CONTROL" Sprinkler control circuits, 50 V or less; "CALTRANS" On all pull boxes, except pull boxes marked "SPRINKLER-CONTROL"; and "TELEPHONE" Telephone service.
   A) No. 3½(T) pull box.
      1) "SIGNAL" - Traffic signal circuits with or without lighting or sign lighting circuits.
      2) "LIGHTING" - Lighting or sign lighting circuits where voltage is under 600 V.
   B) No. 5(T) or 6(T) pull box.
      1) "TRAFFIC SIGNAL" - Traffic signal circuits with or without lighting or sign lighting circuits.
      2) "LIGHTING" - Lighting or sign lighting circuits where voltage is under 600 V.
      3) "LIGHTING-HIGH VOLTAGE" - Lighting or sign lighting circuits where voltage is above 600 V.
      4) "IRRIGATION" - Circuits to irrigation controller 120 V or more.
      5) "RAMP METER" - Ramp meter circuits.
      6) "COUNT STATION" - Count or speed monitor circuits.
      7) "COMMUNICATION" - Communication circuits.
      8) "TOS COMMUNICATIONS" - TOS communications line.
      9) "TOS POWER" - TOS power.
      10) "TDC POWER" - Telephone demarcation cabinet power.
      11) "CCTV" - Closed circuit television circuits.
      12) "TMS" - Traffic monitoring station circuits.
      13) "CMS" - Changeable message sign circuits.
      14) "HAR" - Highway advisory radio circuits.
      15) "BOOSTER PUMP" - Booster pump circuit.
4. Bonding jumper for metal covers shall be 3' long, minimum.
5. The nominal dimensions of the opening in which the cover sets shall be the same as the cover dimensions except the length and width dimensions shall be ⅛" greater.
6. Covers and boxes shall be interchangeable with California standard male and female gages. When interchanged with a standard male or female gage, the top surfaces shall be flush within ⅛".

DIMENSION TABLE

PULL BOX	PULL BOX						COVER				
	MINIMUM * THICKNESS	MINIMUM DEPTH BOX AND EXTENSION	WO	LO	L1	W1	L **	W **	R	EDGE THICKNESS	EDGE TAPER
No. 3½(T)	1½"	1'-0"	1'-5"± 1"	1'-8⅞"±	1'-2½"±	10⅝"± 1"	1'-8"±	1'-1¾"±	0"	½"	NONE
No. 5(T)	1¾"	1'-0"	1'-11½"± 1"	2'-5½"±	1'-7"±	1'-1"± 1"	2'-3"±	1'-4"±	0"	½"	NONE
No. 6(T)	2"	1'-0"	2'-6"± 1"	2'-11½"±	1'-11½"±	1'-5"± 1"	2'-9"±	1'-8"±	0"	½"	NONE

* EXCLUDING CONDUIT WEB ** TOP DIMENSION

STATE OF CALIFORNIA
DEPARTMENT OF TRANSPORTATION

ELECTRICAL SYSTEMS (TRAFFIC PULL BOX)

NO SCALE

RSP ES-8B DATED JULY 19, 2013 SUPERSEDES RSP ES-8B DATED JANUARY 20, 2012 THAT SUPPLEMENTS THE STANDARD PLANS BOOK DATED 2010.

REVISED STANDARD PLAN RSP ES-8B

2010 REVISED STANDARD PLAN RSP ES-8B

DATE PLOTTED => 07-NOV-2013
TIME PLOTTED => 07:21