Dist	COUNTY	ROUTE	POST MILES TOTAL PROJECT	SHEET No.	TOTAL SHEETS
02	Tri	3	7.1/8.3	1	40

STATE OF CALIFORNIA

DEPARTMENT OF TRANSPORTATION

ACSTPE-P003(032)E

PROJECT PLANS FOR CONSTRUCTION ON

STATE HIGHWAY

IN TRINITY COUNTY AT HAYFORK FROM MAIN STREET TO 0.1 MILE NORTH OF FOREST AVENUE

TO BE SUPPLEMENTED BY STANDARD PLANS DATED MAY 2006

INDEX OF PLANS

SHEET No.	DESCRIPTION
1	TITLE SHEET AND LOCATION
2-3	TYPICAL CROSS SECTIONS
4-7	LAYOUT
8	CONSTRUCTION DETAILS
9-10	EROSION CONTROL PLANS
11-13	DRAINAGE PROFILES
14-16	DRAINAGE DETAILS
17-19	DRAINAGE QUANTITIES
20-23	UTILITY PLANS
24	CONSTRUCTION AREA SIGNS
25-26	PAVEMENT DELINEATION AND SIGN PLANS
27-28	PAVEMENT DELINEATION AND SIGN QUANTITIES
29	SIGN DETAILS
30	SUMMARY OF QUANTITIES
31-40	REVISED STANDARD PLANS

THE STANDARD PLANS LIST APPLICABLE TO THIS CONTRACT IS INCLUDED IN THE NOTICE TO BIDDERS AND SPECIAL PROVISIONS BOOK.

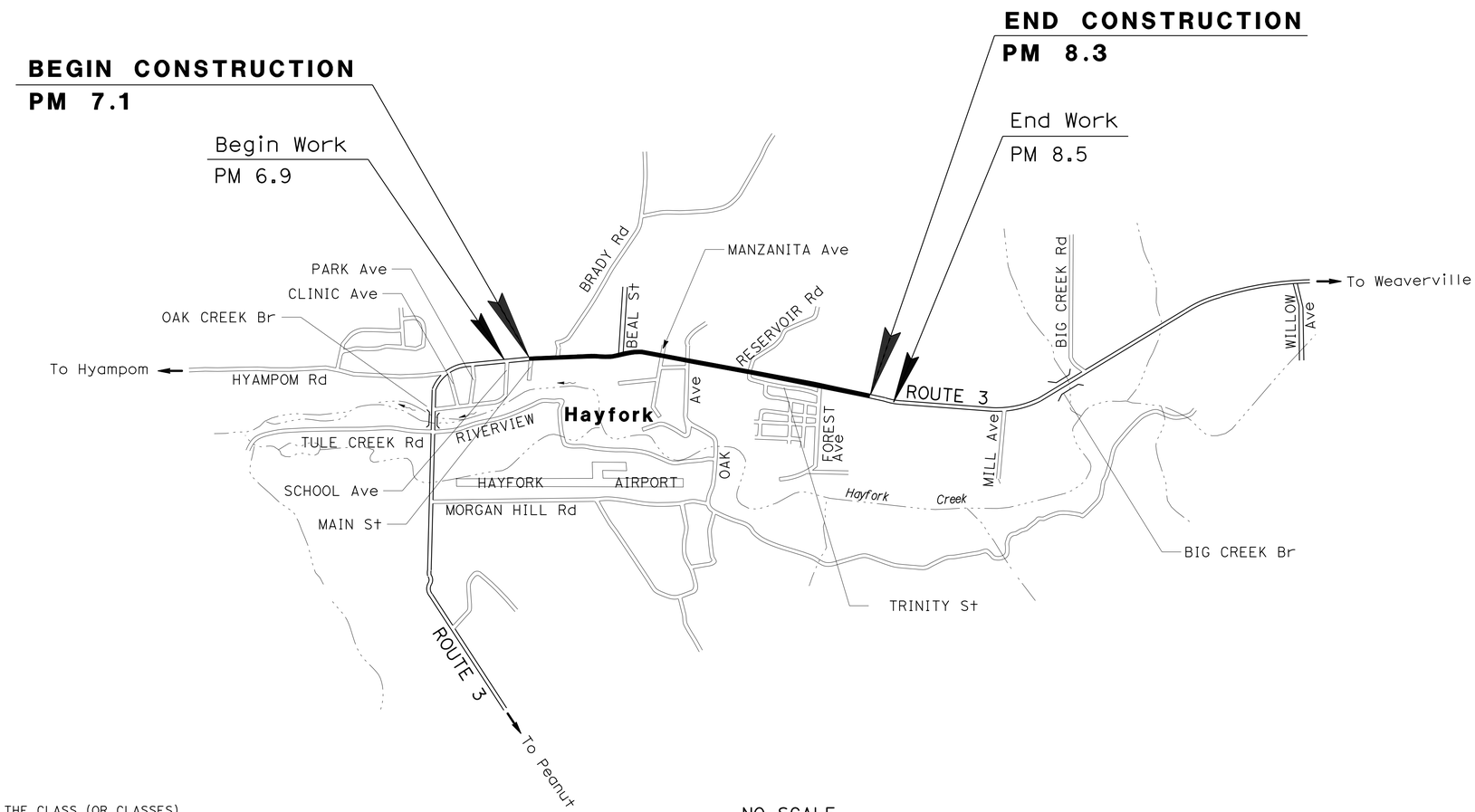

NO SCALE

THE CONTRACTOR SHALL POSSESS THE CLASS (OR CLASSES) OF LICENSE AS SPECIFIED IN THE "NOTICE TO BIDDERS."

PROJECT MANAGER: STEVE ROGERS

DESIGN ENGINEER: JULIE CASEY

P:\proj2\02\4c960_plans\pse\24c960ab001.dgn

Michael J Mogen 05-02-12
PROJECT ENGINEER DATE
REGISTERED CIVIL ENGINEER

JUNE 25, 2012
PLANS APPROVAL DATE

REGISTERED PROFESSIONAL ENGINEER MIKE MOGEN No. 67018 Exp. 09-30-12 CIVIL STATE OF CALIFORNIA

THE STATE OF CALIFORNIA OR ITS OFFICERS OR AGENTS SHALL NOT BE RESPONSIBLE FOR THE ACCURACY OR COMPLETENESS OF SCANNED COPIES OF THIS PLAN SHEET.

CONTRACT No.	02-4C9604
PROJECT ID	0200000487

LAST REVISION 05-02-12

DATE PLOTTED => 27-AUG-2012
TIME PLOTTED => 13:56

Dist	COUNTY	ROUTE	POST MILES TOTAL PROJECT	SHEET No.	TOTAL SHEETS
02	Tri	3	7.1/8.3	2	40

REGISTERED CIVIL ENGINEER 06-12-12 DATE

06-25-12
PLANS APPROVAL DATE

REGISTERED PROFESSIONAL ENGINEER MIKE MOGEN No. 67018 Exp. 09-30-12 CIVIL STATE OF CALIFORNIA

THE STATE OF CALIFORNIA OR ITS OFFICERS OR AGENTS SHALL NOT BE RESPONSIBLE FOR THE ACCURACY OR COMPLETENESS OF SCANNED COPIES OF THIS PLAN SHEET.

NOTES:

1. DIMENSIONS OF THE PAVEMENT STRUCTURES (STRUCTURAL SECTIONS) ARE SUBJECT TO TOLERANCES SPECIFIED IN THE STANDARD SPECIFICATIONS.
2. FOR ACCURATE RIGHT OF WAY DATA, CONTACT RIGHT OF WAY ENGINEERING AT THE DISTRICT OFFICE.

DESIGN DESIGNATION

ADT (2012)	2012	D	67%
ADT (2032)	2577	T	4%
DHV	302	V	35 mph
ESAL	464,500	TI_{20}	8.0

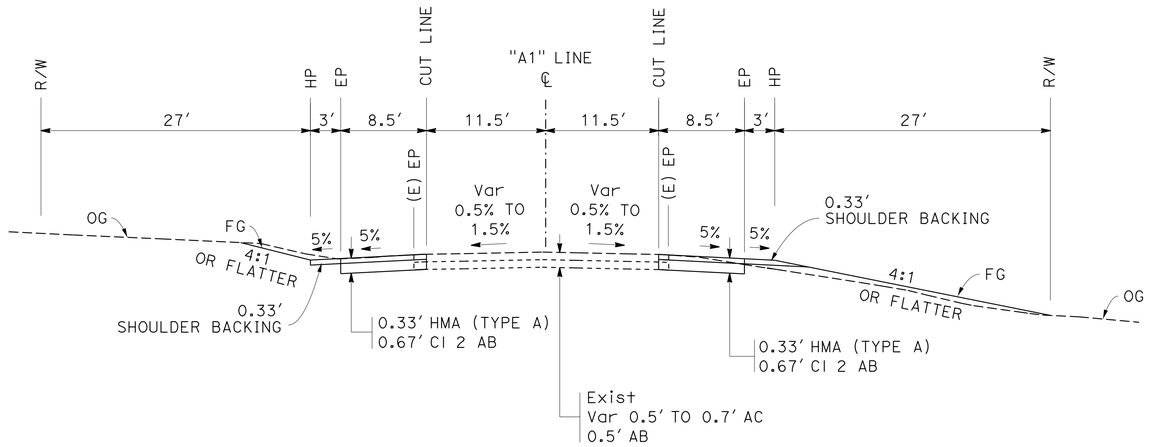

ROUTE 3

"A1" 115+31.24 TO "A1" 119+72.91
"A1" 120+70.01 TO "A1" 121+91.63
"A1" 124+39.34 TO "A1" 124+87.59
"A1" 125+75.50 TO "A1" 135+54.50
"A1" 136+74.80 TO "A1" 137+04.30

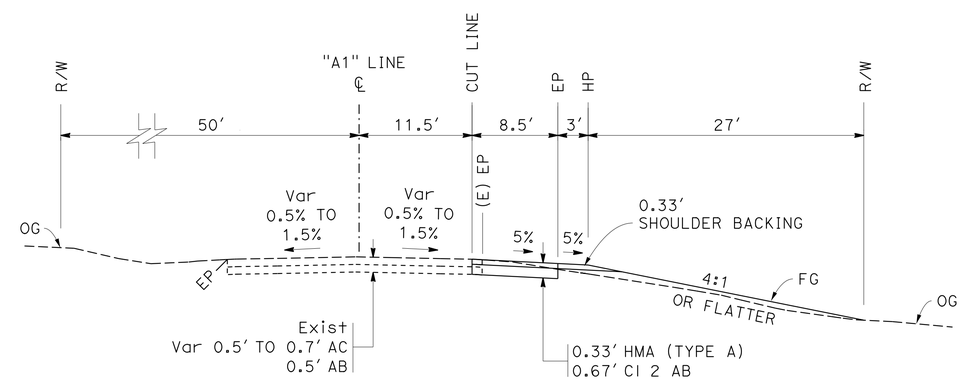

ROUTE 3

"A1" 120+19.75 TO "A1" 120+70.01
"A1" 121+91.63 TO "A1" 124+39.34
"A1" 137+04.30 TO "A1" 137+32.80

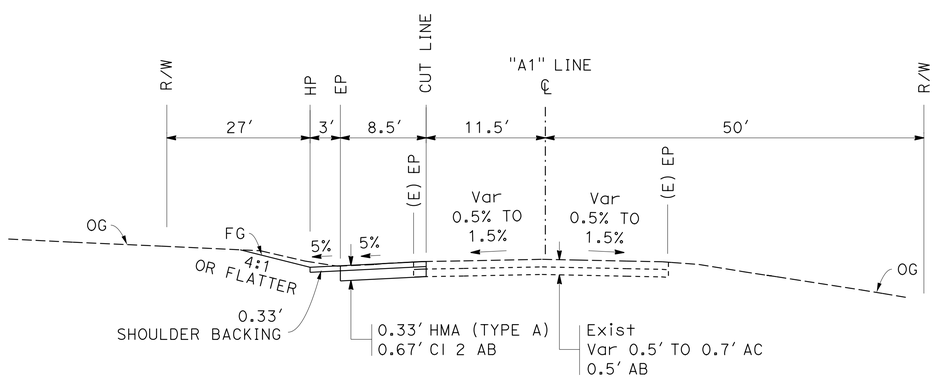

ROUTE 3

"A1" 112+90.00 TO "A1" 115+31.24
"A1" 119+72.91 TO "A1" 119+79.14
"A1" 124+87.59 TO "A1" 125+01.50
"A1" 125+58.44 TO "A1" 125+75.50
"A1" 135+54.50 TO "A1" 136+74.80

TYPICAL CROSS SECTIONS

NO SCALE

X-1

REVISED BY | DATE REVISED
JAVED IQBAL | MIKE MOGEN
CALCULATED-DESIGNED BY | CHECKED BY
FUNCTIONAL SUPERVISOR: JULIE CASEY

STATE OF CALIFORNIA - DEPARTMENT OF TRANSPORTATION
Caltrans
DESIGN

P:\proj2\02\4c960_plans\pse\24c960ca001.dgn

LAST REVISION 06-12-12 | DATE PLOTTED => 27-JUN-2012 | TIME PLOTTED => 10:33

Dist	COUNTY	ROUTE	POST MILES TOTAL PROJECT	SHEET No.	TOTAL SHEETS
02	Tri	3	7.1/8.3	3	40

Michael J. Mogen 06-12-12
REGISTERED CIVIL ENGINEER DATE

06-25-12
PLANS APPROVAL DATE

REGISTERED PROFESSIONAL ENGINEER
MIKE MOGEN
No. 67018
Exp. 09-30-12
CIVIL
STATE OF CALIFORNIA

THE STATE OF CALIFORNIA OR ITS OFFICERS OR AGENTS SHALL NOT BE RESPONSIBLE FOR THE ACCURACY OR COMPLETENESS OF SCANNED COPIES OF THIS PLAN SHEET.

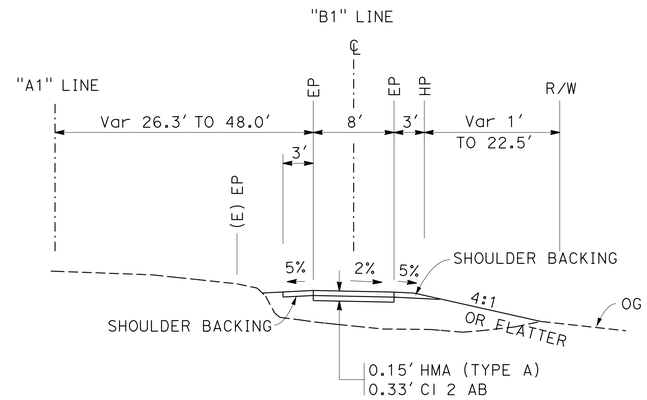

BIKE ROUTE

"B1" 1+00.00 TO "B1" 2+49.14

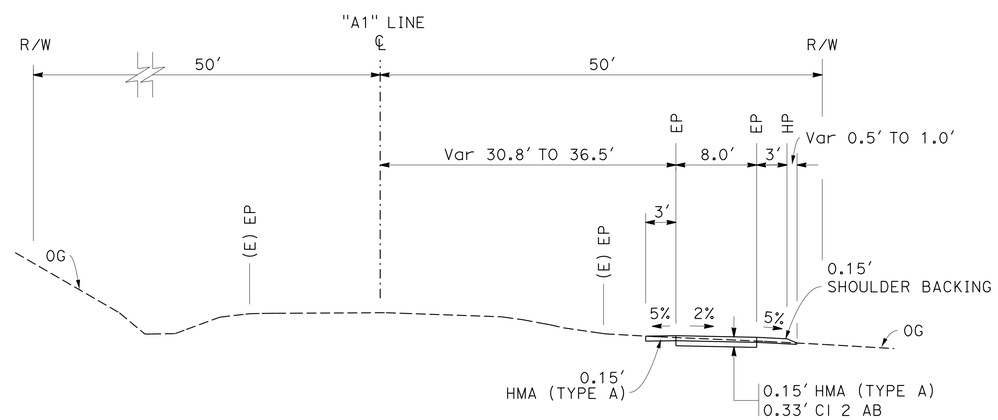

ROUTE 3

"A1" 150+79.56 TO "A1" 151+83.92

TYPICAL CROSS SECTIONS

NO SCALE

X-2

REVISED BY	DATE REVISED
JAVED IQBAL	MIKE MOGEN

CALCULATED-DESIGNED BY	CHECKED BY

FUNCTIONAL SUPERVISOR: JULIE CASEY

STATE OF CALIFORNIA - DEPARTMENT OF TRANSPORTATION

Caltrans® **DESIGN**

P:\proj2\02\4c960_plans\pse\24c960ca002.dgn

LAST REVISION 06-12-12 | DATE PLOTTED => 27-JUN-2012 TIME PLOTTED => 10:33

Dist	COUNTY	ROUTE	POST MILES TOTAL PROJECT	SHEET No.	TOTAL SHEETS
02	Tri	3	7.1/8.3	4	40

Michael J. Mogen 06-12-12
REGISTERED CIVIL ENGINEER DATE

06-25-12
PLANS APPROVAL DATE

REGISTERED PROFESSIONAL ENGINEER MIKE MOGEN No. 67018 Exp. 09-30-12 CIVIL STATE OF CALIFORNIA

THE STATE OF CALIFORNIA OR ITS OFFICERS OR AGENTS SHALL NOT BE RESPONSIBLE FOR THE ACCURACY OR COMPLETENESS OF SCANNED COPIES OF THIS PLAN SHEET.

NOTE:

1. FOR ACCURATE RIGHT OF WAY DATA, CONTACT RIGHT OF WAY ENGINEERING AT THE DISTRICT OFFICE.

LEGEND:

- SHOULDER WIDENING
- DRAINAGE SYSTEM No.
- DRAINAGE UNIT
- FLOW DIRECTION

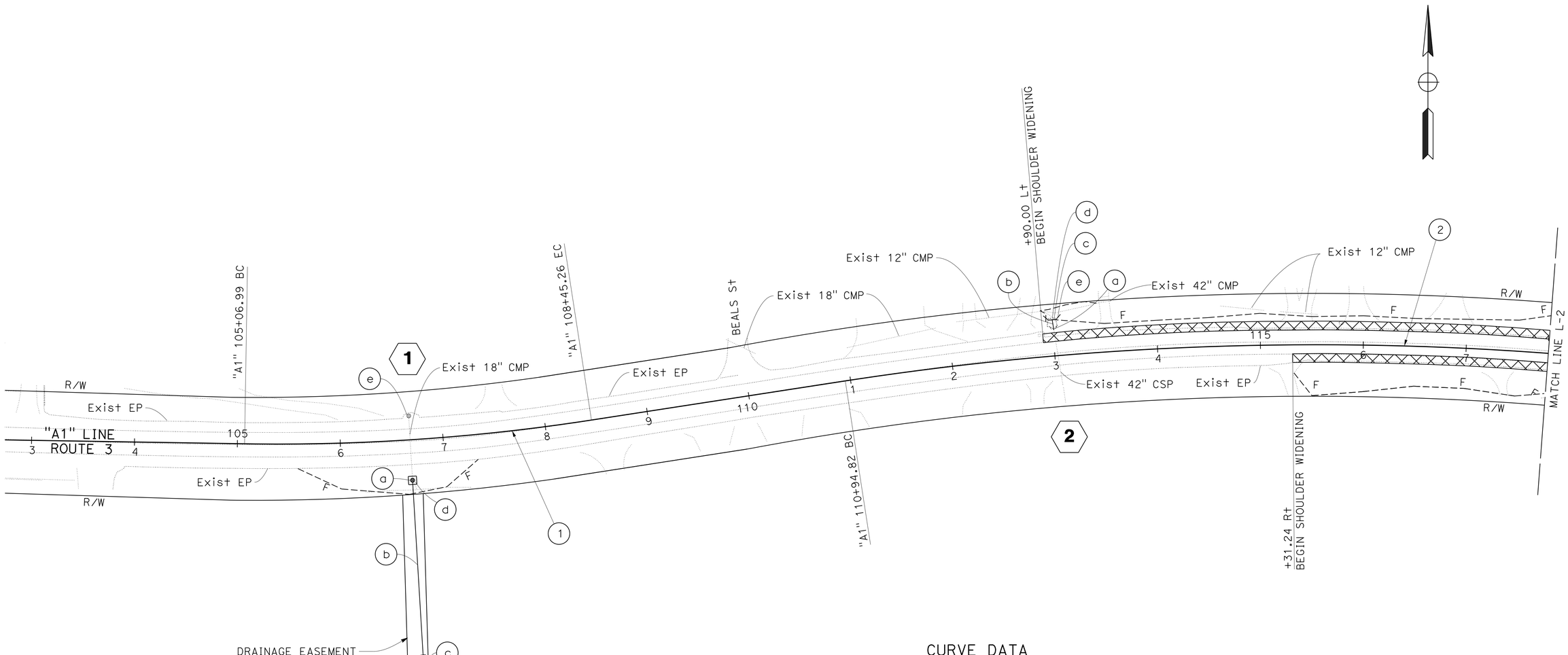

CURVE DATA

No.	R	Δ	T	L
1	1998′	9°42′01″	169.54′	338.27′
2	3010′	21°2′16″	558.90′	1105.21′

LAYOUT

SCALE: 1" = 50′ **L-1**

REVISED BY | DATE REVISED
JAVED IQBAL | MIKE MOGEN
CALCULATED-DESIGNED BY | CHECKED BY
FUNCTIONAL SUPERVISOR: JULIE CASEY

STATE OF CALIFORNIA - DEPARTMENT OF TRANSPORTATION
Caltrans
DESIGN

P:\proj2\02\4c960_plans\pse\24c960ea001.dgn

LAST REVISION 06-12-12 | DATE PLOTTED => 27-JUN-2012 | TIME PLOTTED => 10:33

BORDER LAST REVISED 7/2/2010 | USERNAME => s115152 | DGN FILE => 24c960ea001.dgn | RELATIVE BORDER SCALE IS IN INCHES 0 1 2 3 | UNIT 0318 | PROJECT NUMBER & PHASE: 02000004871

Dist	COUNTY	ROUTE	POST MILES TOTAL PROJECT	SHEET No.	TOTAL SHEETS
02	Tri	3	7.1/8.3	5	40

REGISTERED CIVIL ENGINEER 06-12-12 DATE

06-25-12
PLANS APPROVAL DATE

REGISTERED PROFESSIONAL ENGINEER MIKE MOGEN No. 67018 Exp. 09-30-12 CIVIL STATE OF CALIFORNIA

THE STATE OF CALIFORNIA OR ITS OFFICERS OR AGENTS SHALL NOT BE RESPONSIBLE FOR THE ACCURACY OR COMPLETENESS OF SCANNED COPIES OF THIS PLAN SHEET.

NOTE:

1. FOR ACCURATE RIGHT OF WAY DATA, CONTACT RIGHT OF WAY ENGINEERING AT THE DISTRICT OFFICE.

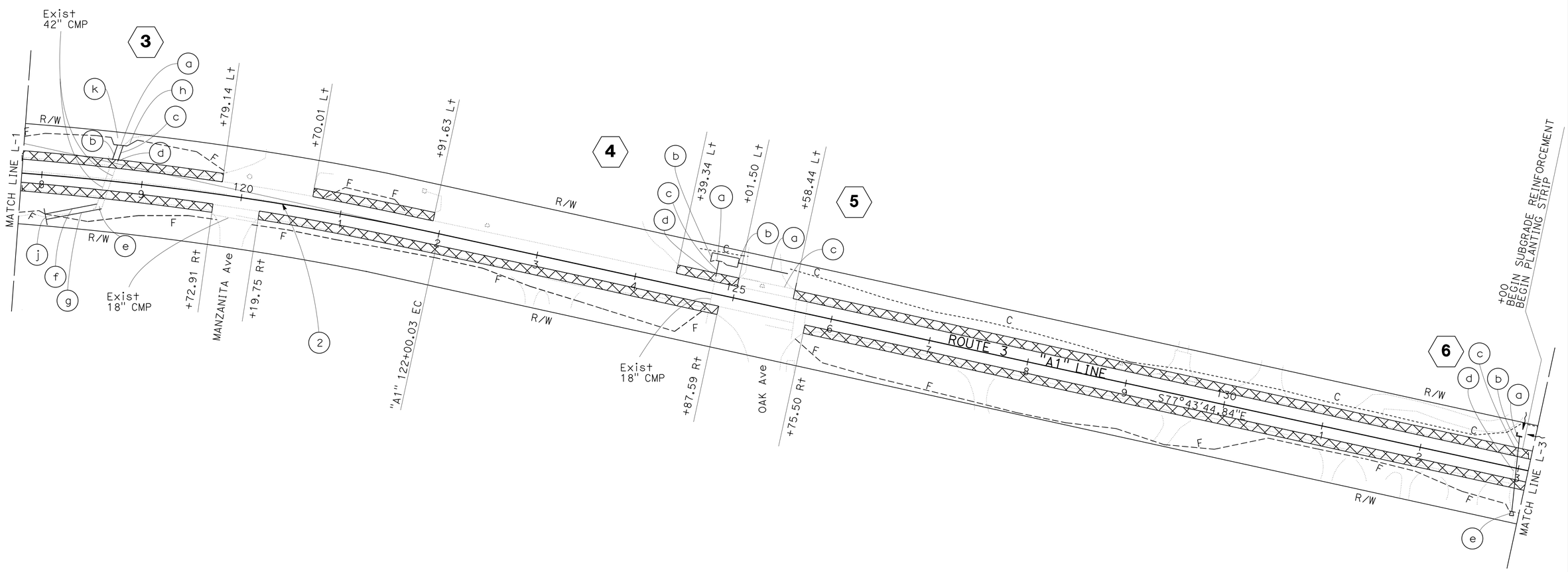

CURVE DATA

No	R	Δ	T	L
2	3010′	21°2′16"	558.90′	1105.21′

LAYOUT
SCALE: 1" = 50′

L-2

REVISED BY | DATE REVISED
JAVED IQBAL | MIKE MOGEN
CALCULATED-DESIGNED BY | CHECKED BY
FUNCTIONAL SUPERVISOR: JULIE CASEY

STATE OF CALIFORNIA - DEPARTMENT OF TRANSPORTATION
Caltrans
DESIGN

P:\proj2\02\4c960_plans\pse\24c960ea002.dgn

LAST REVISION 06-12-12 | DATE PLOTTED => 27-JUN-2012 | TIME PLOTTED => 10:33

BORDER LAST REVISED 7/2/2010 | USERNAME => s115152 | DGN FILE => 24c960ea002.dgn | RELATIVE BORDER SCALE IS IN INCHES 0 1 2 3 | UNIT 0318 | PROJECT NUMBER & PHASE: 02000004871

Dist	COUNTY	ROUTE	POST MILES TOTAL PROJECT	SHEET No.	TOTAL SHEETS
02	Tri	3	7.1/8.3	6	40

REGISTERED CIVIL ENGINEER 06-12-12 DATE

06-25-12
PLANS APPROVAL DATE

REGISTERED PROFESSIONAL ENGINEER MIKE MOGEN No. 67018 Exp. 09-30-12 CIVIL STATE OF CALIFORNIA

THE STATE OF CALIFORNIA OR ITS OFFICERS OR AGENTS SHALL NOT BE RESPONSIBLE FOR THE ACCURACY OR COMPLETENESS OF SCANNED COPIES OF THIS PLAN SHEET.

NOTE:

1. FOR ACCURATE RIGHT OF WAY DATA, CONTACT RIGHT OF WAY ENGINEERING AT THE DISTRICT OFFICE.

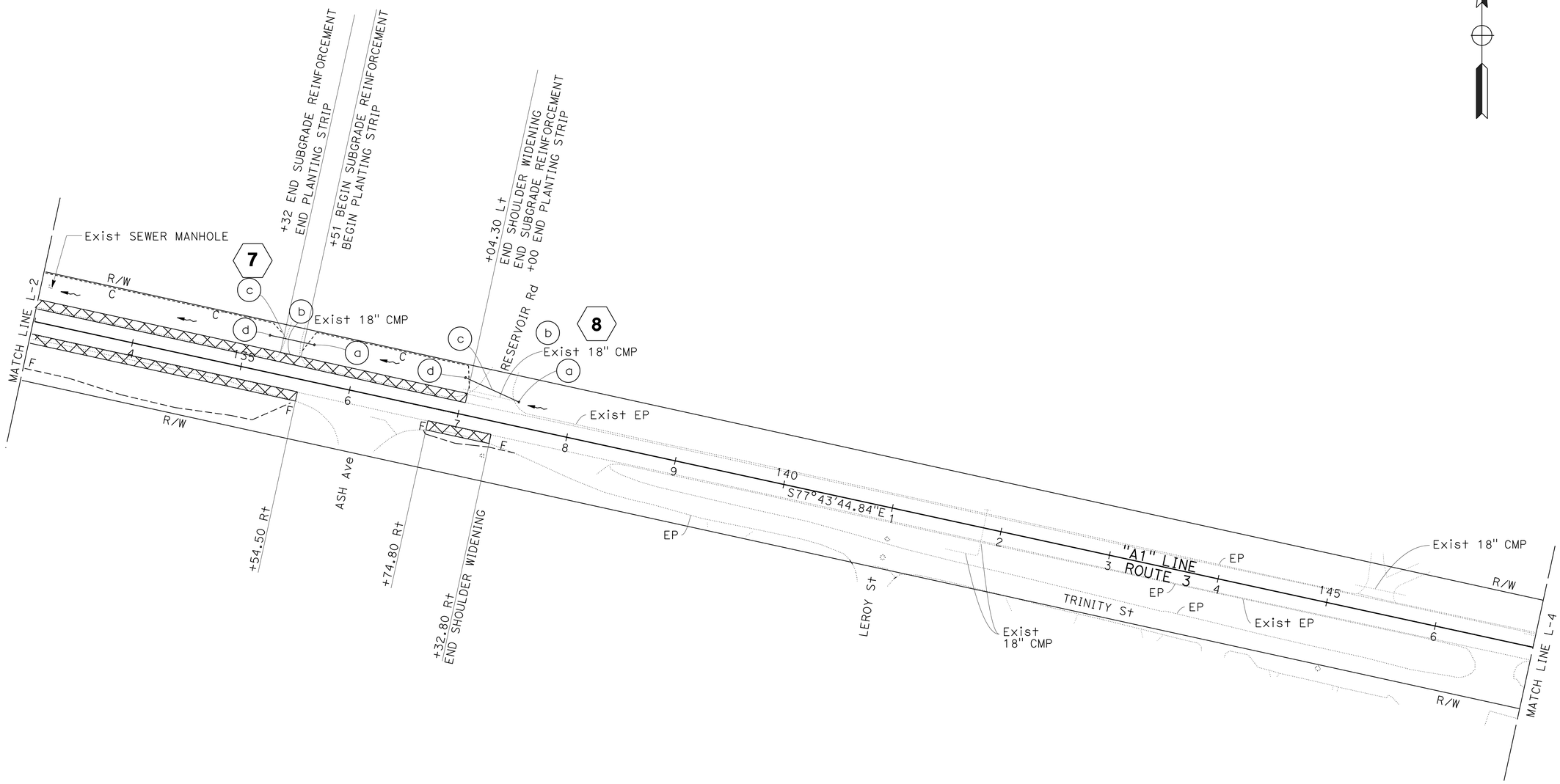

LAYOUT

SCALE: 1" = 50'

L-3

STATE OF CALIFORNIA - DEPARTMENT OF TRANSPORTATION	FUNCTIONAL SUPERVISOR	CALCULATED-DESIGNED BY	REVISED BY
Caltrans DESIGN	JULIE CASEY	JAVED IQBAL	
		MIKE MOGEN	DATE REVISED

P:\proj2\02\4c960_plans\pse\24c960ea003.dgn

LAST REVISION 06-12-12 | DATE PLOTTED => 27-JUN-2012 | TIME PLOTTED => 10:33

BORDER LAST REVISED 7/2/2010 | USERNAME => s115152 | DGN FILE => 24c960ea003.dgn | RELATIVE BORDER SCALE IS IN INCHES 0 1 2 3 | UNIT 0318 | PROJECT NUMBER & PHASE: 02000004871

Dist	COUNTY	ROUTE	POST MILES TOTAL PROJECT	SHEET No.	TOTAL SHEETS
02	Tri	3	7.1/8.3	7	40

REGISTERED CIVIL ENGINEER 06-12-12 DATE

06-25-12
PLANS APPROVAL DATE

REGISTERED PROFESSIONAL ENGINEER MIKE MOGEN No. 67018 Exp. 09-30-12 CIVIL STATE OF CALIFORNIA

THE STATE OF CALIFORNIA OR ITS OFFICERS OR AGENTS SHALL NOT BE RESPONSIBLE FOR THE ACCURACY OR COMPLETENESS OF SCANNED COPIES OF THIS PLAN SHEET.

NOTE:

1. FOR ACCURATE RIGHT OF WAY DATA, CONTACT RIGHT OF WAY ENGINEERING AT THE DISTRICT OFFICE.

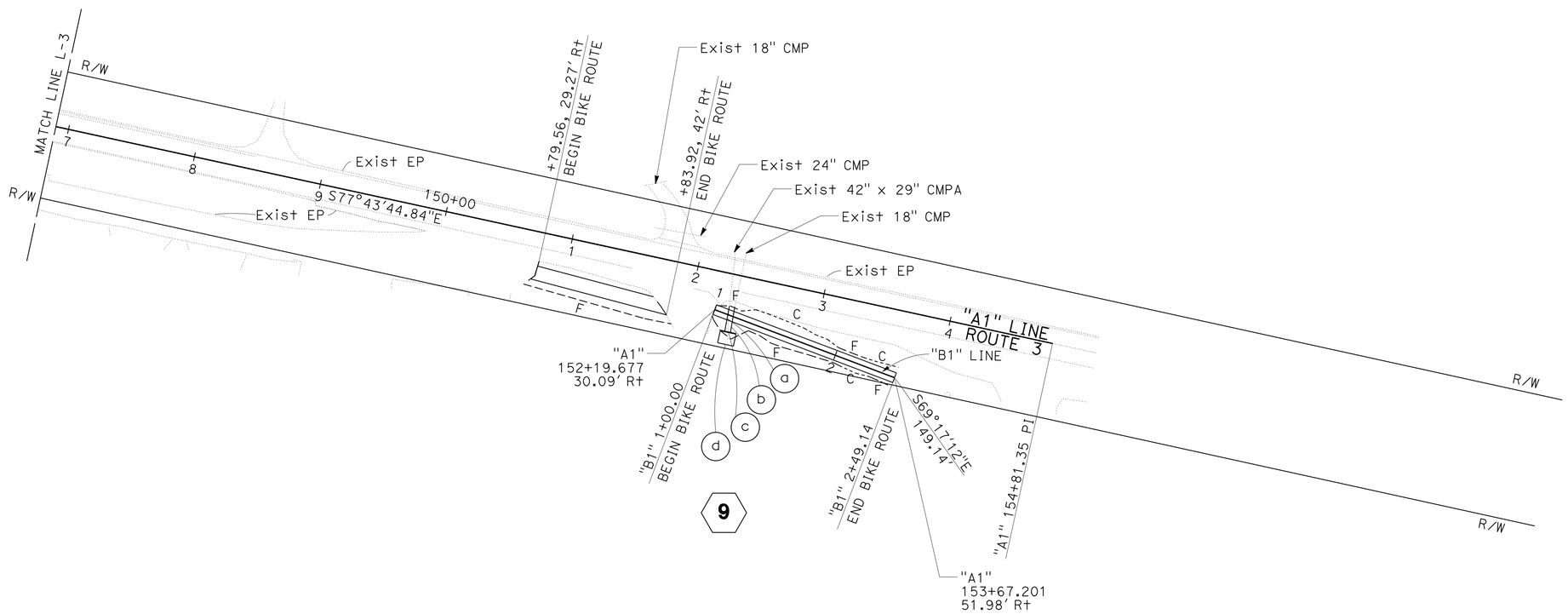

LAYOUT
SCALE: 1" = 50'

L-4

STATE OF CALIFORNIA - DEPARTMENT OF TRANSPORTATION
Caltrans
DESIGN

FUNCTIONAL SUPERVISOR: JULIE CASEY
CALCULATED-DESIGNED BY: JAVED IQBAL
CHECKED BY: MIKE MOGEN
REVISED BY
DATE REVISED

P:\proj2\02\4c960_plans\pse\24c960ea004.dgn

LAST REVISION 06-12-12
DATE PLOTTED => 27-JUN-2012
TIME PLOTTED => 10:33

Dist	COUNTY	ROUTE	POST MILES TOTAL PROJECT	SHEET No.	TOTAL SHEETS
02	Tri	3	7.1/8.3	8	40

REGISTERED CIVIL ENGINEER 06-12-12 DATE

06-25-12
PLANS APPROVAL DATE

REGISTERED PROFESSIONAL ENGINEER MIKE MOGEN No. 67018 Exp. 09-30-12 CIVIL STATE OF CALIFORNIA

THE STATE OF CALIFORNIA OR ITS OFFICERS OR AGENTS SHALL NOT BE RESPONSIBLE FOR THE ACCURACY OR COMPLETENESS OF SCANNED COPIES OF THIS PLAN SHEET.

NOTE:

1. FOR INFORMATION NOT SHOWN SEE STANDARD PLANS.

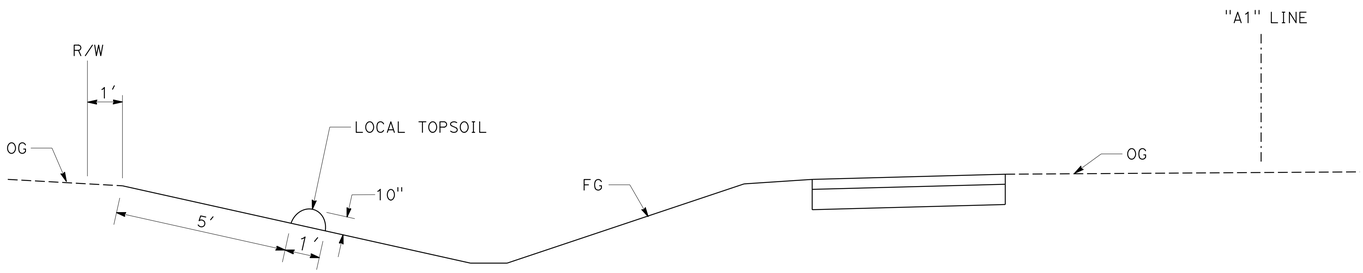

PLANTING STRIP

"A1" 133+00 Lt TO "A1" 135+32 Lt
"A1" 135+51 Lt TO "A1" 137+00 Lt

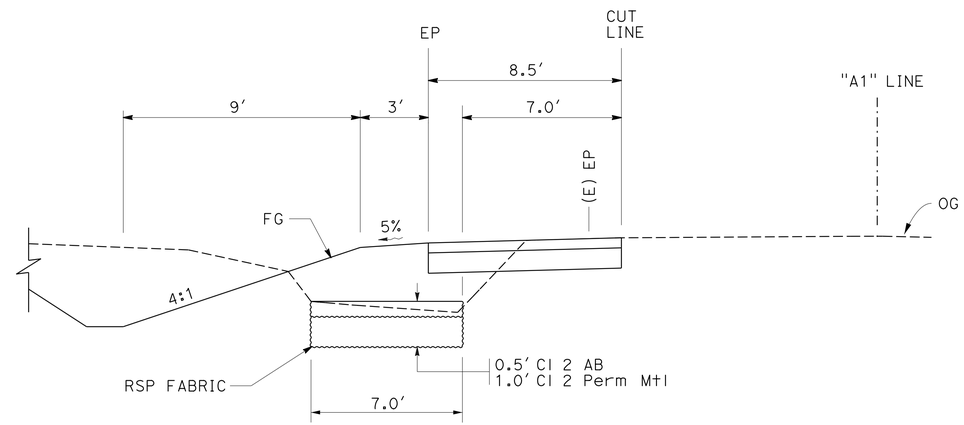

SUBGRADE REINFORCEMENT

"A1" 133+00 Lt TO "A1" 135+32 Lt
"A1" 135+51 Lt TO "A1" 137+04.30 Lt

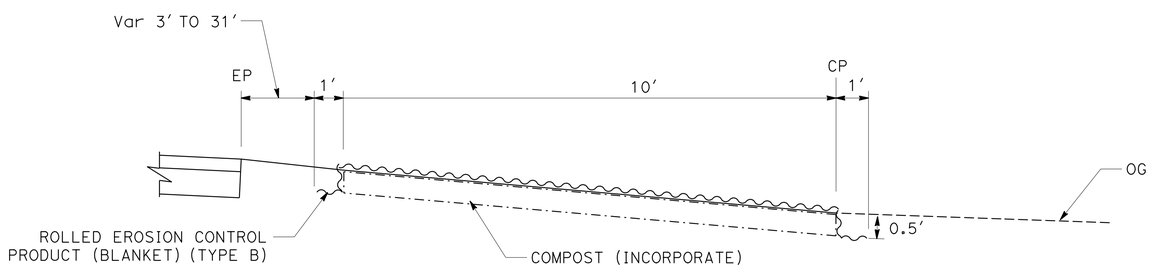

SOIL INCORPORATION

"A1" 105+72 Rt TO "A1" 107+25 Rt
"A1" 115+50 Rt TO "A1" 117+16.14 Rt
"A1" 133+20 Rt TO "A1" 135+50 Rt

CONSTRUCTION DETAILS

NO SCALE

C-1

REVISED BY	DATE REVISED
JAVED IQBAL	MIKE MOGEN
CALCULATED-DESIGNED BY	CHECKED BY
FUNCTIONAL SUPERVISOR	JULIE CASEY

STATE OF CALIFORNIA - DEPARTMENT OF TRANSPORTATION
Caltrans® DESIGN

P:\proj2\02\4c960_plans\pse\24c960ga001.dgn

LAST REVISION 06-12-12 | DATE PLOTTED => 27-JUN-2012 | TIME PLOTTED => 10:33

Dist	COUNTY	ROUTE	POST MILES TOTAL PROJECT	SHEET No.	TOTAL SHEETS
02	Tri	3	7.1/8.3	9	40

Michael J. Mogen 06-12-12
REGISTERED CIVIL ENGINEER DATE

06-25-12
PLANS APPROVAL DATE

REGISTERED PROFESSIONAL ENGINEER
MIKE MOGEN
No. 67018
Exp. 09-30-12
CIVIL
STATE OF CALIFORNIA

THE STATE OF CALIFORNIA OR ITS OFFICERS OR AGENTS SHALL NOT BE RESPONSIBLE FOR THE ACCURACY OR COMPLETENESS OF SCANNED COPIES OF THIS PLAN SHEET.

NOTE:

1. FOR ACCURATE RIGHT OF WAY DATA, CONTACT RIGHT OF WAY ENGINEERING AT THE DISTRICT OFFICE.

LEGEND:

COMPOST (INCORPORATE)

FLOW DIRECTION

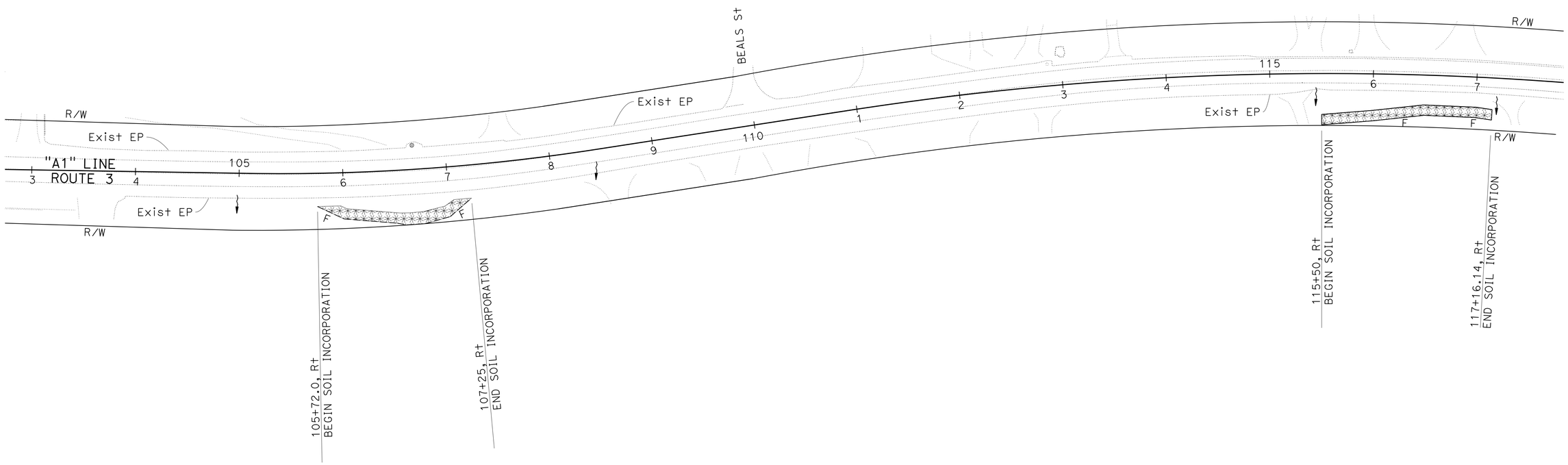

EROSION CONTROL PLAN

SCALE: 1" = 50'

EC-1

APPROVED FOR EROSION CONTROL WORK ONLY

STATE OF CALIFORNIA - DEPARTMENT OF TRANSPORTATION
Caltrans
DESIGN

FUNCTIONAL SUPERVISOR: JULIE CASEY
CALCULATED-DESIGNED BY: JAVED IQBAL
CHECKED BY: MIKE MOGEN
REVISED BY
DATE REVISED

P:\proj2\02\4c960_plans\pse\24c960ge001.dgn

LAST REVISION 06-12-12
DATE PLOTTED => 27-JUN-2012
TIME PLOTTED => 10:33

Dist	COUNTY	ROUTE	POST MILES TOTAL PROJECT	SHEET No.	TOTAL SHEETS
02	Tri	3	7.1/8.3	10	40

REGISTERED CIVIL ENGINEER 06-12-12 DATE

06-25-12
PLANS APPROVAL DATE

REGISTERED PROFESSIONAL ENGINEER MIKE MOGEN No. 67018 Exp. 09-30-12 CIVIL STATE OF CALIFORNIA

THE STATE OF CALIFORNIA OR ITS OFFICERS OR AGENTS SHALL NOT BE RESPONSIBLE FOR THE ACCURACY OR COMPLETENESS OF SCANNED COPIES OF THIS PLAN SHEET.

NOTE:

1. FOR ACCURATE RIGHT OF WAY DATA, CONTACT RIGHT OF WAY ENGINEERING AT THE DISTRICT OFFICE.

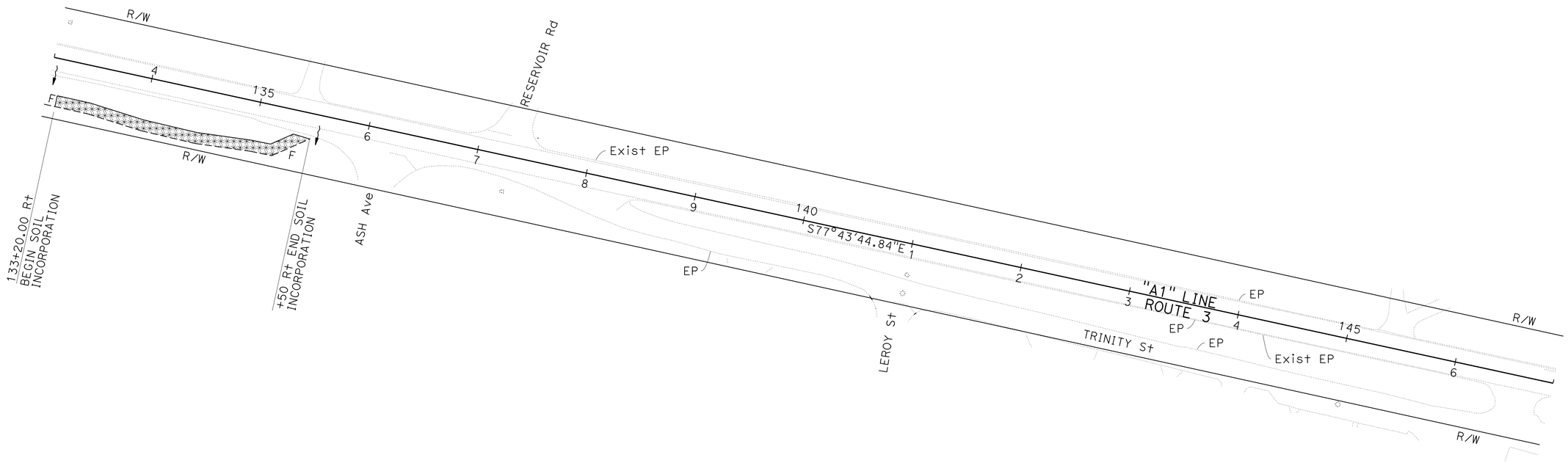

EROSION CONTROL PLAN

SCALE: 1" = 50'

EC-2

APPROVED FOR EROSION CONTROL WORK ONLY

REVISED BY	DATE REVISED

JAVED IQBAL	MIKE MOGEN
CALCULATED-DESIGNED BY	CHECKED BY

FUNCTIONAL SUPERVISOR: JULIE CASEY

STATE OF CALIFORNIA - DEPARTMENT OF TRANSPORTATION

Caltrans® DESIGN

P:\proj2\02\4c960_plans\pse\24c960ge002.dgn

LAST REVISION 06-12-12 | DATE PLOTTED => 27-JUN-2012 | TIME PLOTTED => 10:33

Dist	COUNTY	ROUTE	POST MILES TOTAL PROJECT	SHEET No.	TOTAL SHEETS
02	Tri	3	7.1/8.3	11	40

REGISTERED CIVIL ENGINEER 06-12-12 DATE

06-25-12
PLANS APPROVAL DATE

REGISTERED PROFESSIONAL ENGINEER MIKE MOGEN No. 67018 Exp. 09-30-12 CIVIL STATE OF CALIFORNIA

THE STATE OF CALIFORNIA OR ITS OFFICERS OR AGENTS SHALL NOT BE RESPONSIBLE FOR THE ACCURACY OR COMPLETENESS OF SCANNED COPIES OF THIS PLAN SHEET.

LEGEND:

- DITCH EXCAVATION
- RSP ENERGY DISSIPATOR
- DRAINAGE SYSTEM No.
- DRAINAGE UNIT
- FLOW DIRECTION

ABBREVIATIONS:

SFEPAS STEEL FLARED END PIPE ARCH SECTION

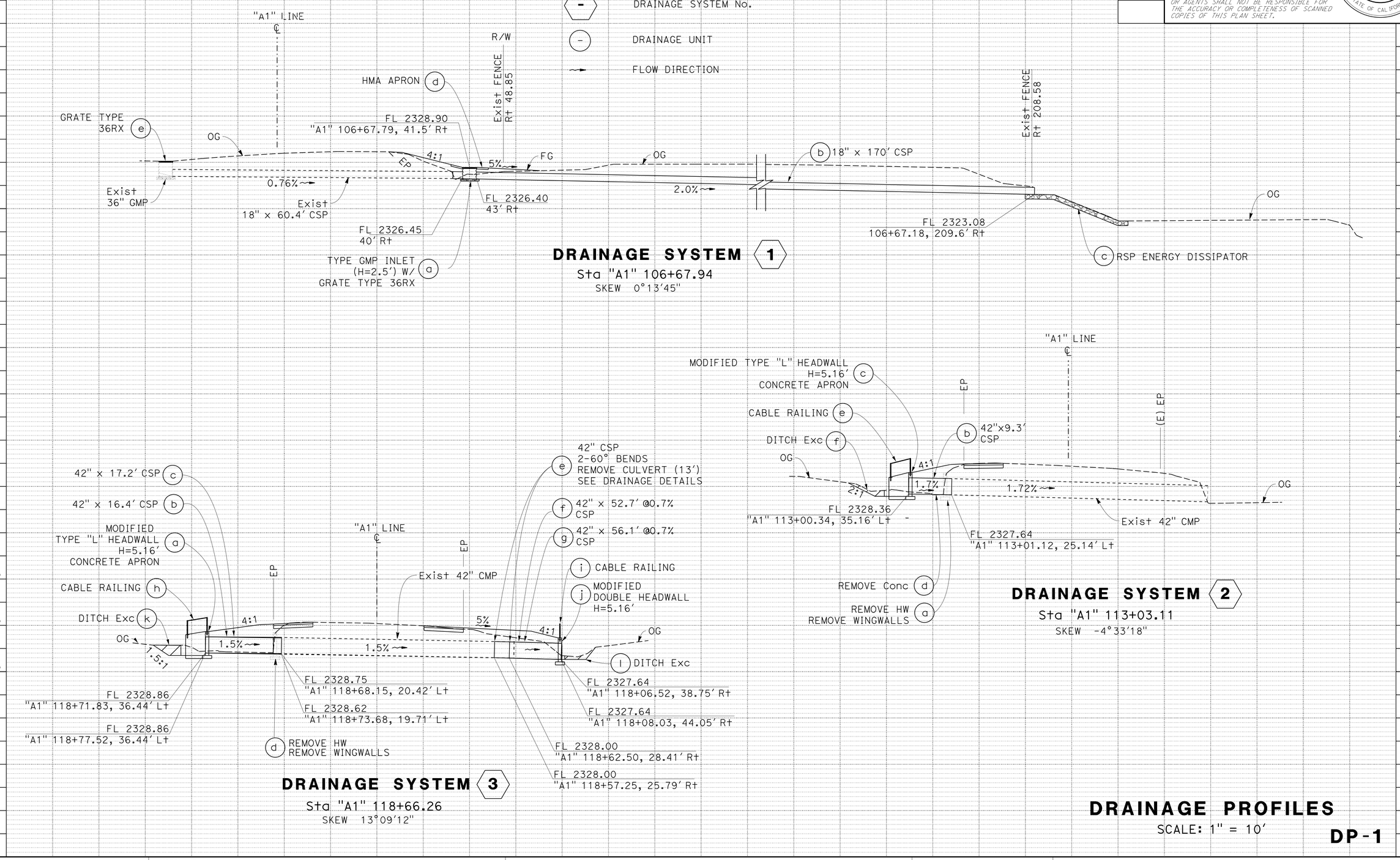

DRAINAGE PROFILES

SCALE: 1" = 10'

DP-1

REVISED BY | DATE REVISED
JAVED IQBAL | MIKE MOGEN
CALCULATED-DESIGNED BY | CHECKED BY
FUNCTIONAL SUPERVISOR: JULIE CASEY

STATE OF CALIFORNIA - DEPARTMENT OF TRANSPORTATION
DESIGN

P:\proj2\02\4c960_plans\pse\24c960ib001.dgn

LAST REVISION 06-12-12 | DATE PLOTTED => 27-JUN-2012 | TIME PLOTTED => 10:33

BORDER LAST REVISED 7/2/2010 | USERNAME => s115152 | DGN FILE => 24c960ib001.dgn | RELATIVE BORDER SCALE IS IN INCHES 0 1 2 3 | UNIT 0318 | PROJECT NUMBER & PHASE: 02000004871

Dist	COUNTY	ROUTE	POST MILES TOTAL PROJECT	SHEET No.	TOTAL SHEETS
02	Tri	3	7.1/8.3	12	40

REGISTERED CIVIL ENGINEER 06-12-12 DATE

06-25-12
PLANS APPROVAL DATE

REGISTERED PROFESSIONAL ENGINEER MIKE MOGEN No. 67018 Exp. 09-30-12 CIVIL STATE OF CALIFORNIA

THE STATE OF CALIFORNIA OR ITS OFFICERS OR AGENTS SHALL NOT BE RESPONSIBLE FOR THE ACCURACY OR COMPLETENESS OF SCANNED COPIES OF THIS PLAN SHEET.

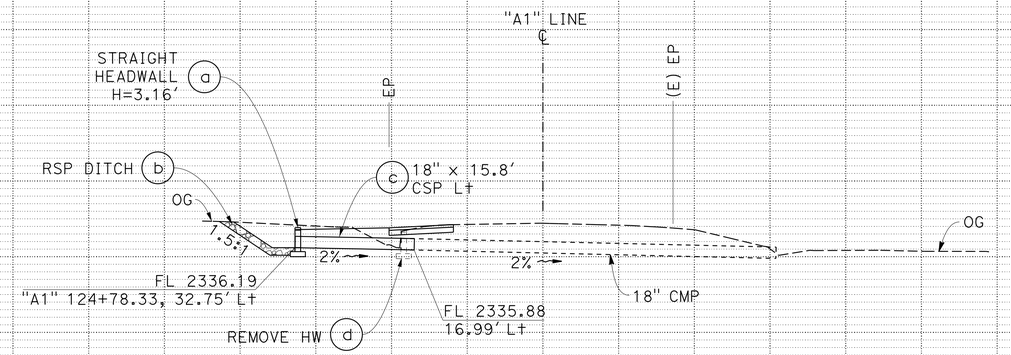

DRAINAGE SYSTEM 4

Sta "A1" 124+78.54

SKEW -0°22′10"

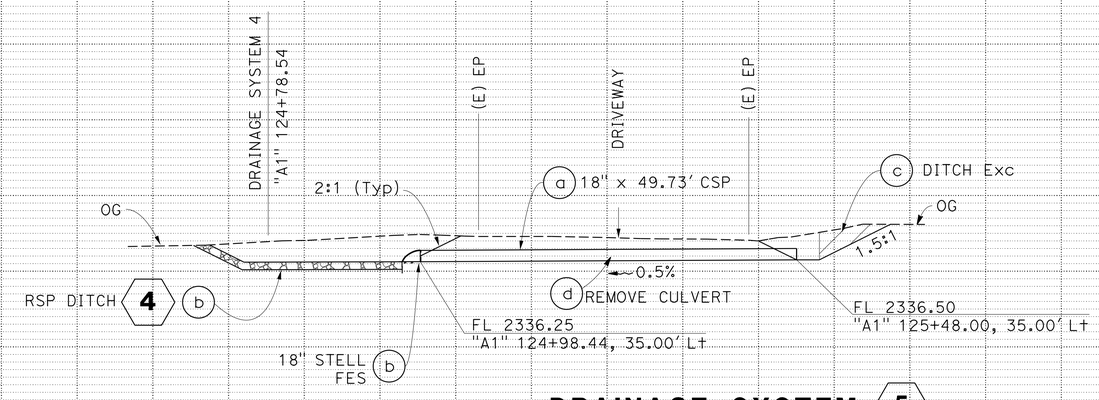

DRAINAGE SYSTEM 5

DRIVEWAY
Sta "A1" 125+23.17

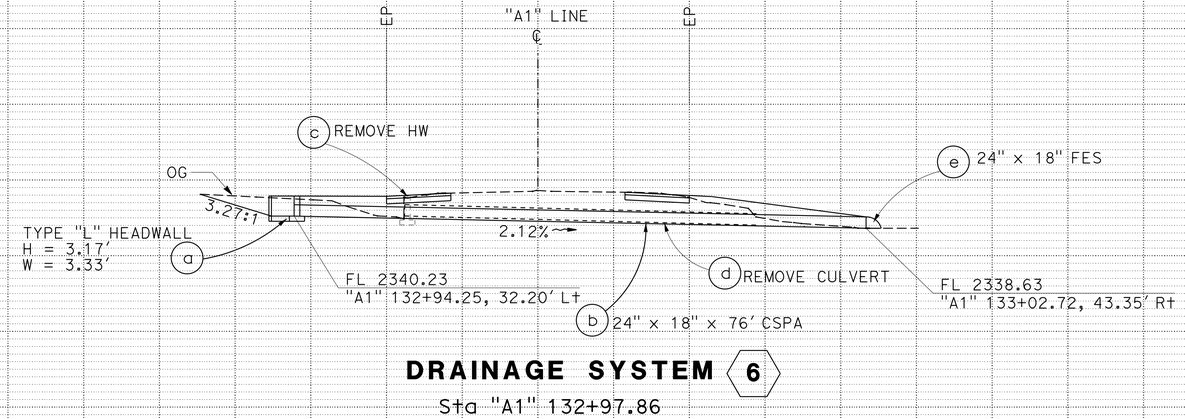

DRAINAGE SYSTEM 6

Sta "A1" 132+97.86

SKEW 6° 26′ 1.094"

DRAINAGE PROFILES

SCALE: 1" = 10′ **DP-2**

REVISED BY | DATE REVISED
JAVED IQBAL | MIKE MOGEN
CALCULATED-DESIGNED BY | CHECKED BY
FUNCTIONAL SUPERVISOR: JULIE CASEY

STATE OF CALIFORNIA - DEPARTMENT OF TRANSPORTATION
Caltrans® DESIGN

P:\proj2\02\4c960_plans\pse\24c960ib002.dgn

LAST REVISION 06-12-12 | DATE PLOTTED => 27-JUN-2012 | TIME PLOTTED => 10:33

Dist	COUNTY	ROUTE	POST MILES TOTAL PROJECT	SHEET No.	TOTAL SHEETS
02	Tri	3	7.1/8.3	13	40

REGISTERED CIVIL ENGINEER 06-12-12 DATE

06-25-12
PLANS APPROVAL DATE

REGISTERED PROFESSIONAL ENGINEER MIKE MOGEN No. 67018 Exp. 09-30-12 CIVIL STATE OF CALIFORNIA

THE STATE OF CALIFORNIA OR ITS OFFICERS OR AGENTS SHALL NOT BE RESPONSIBLE FOR THE ACCURACY OR COMPLETENESS OF SCANNED COPIES OF THIS PLAN SHEET.

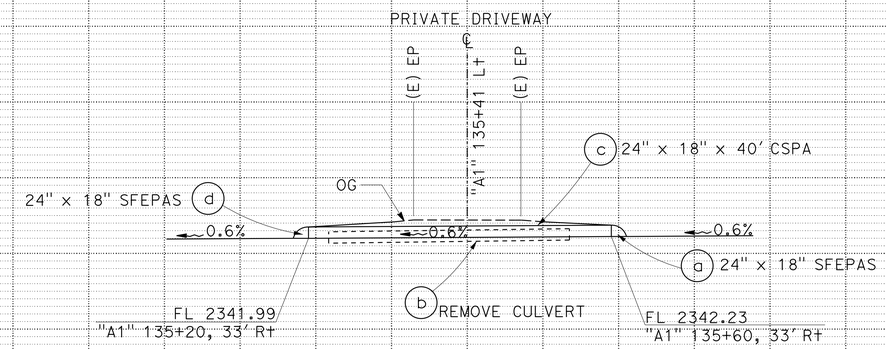

DRAINAGE SYSTEM 7
Sta "A1" 135+20 TO 135+60

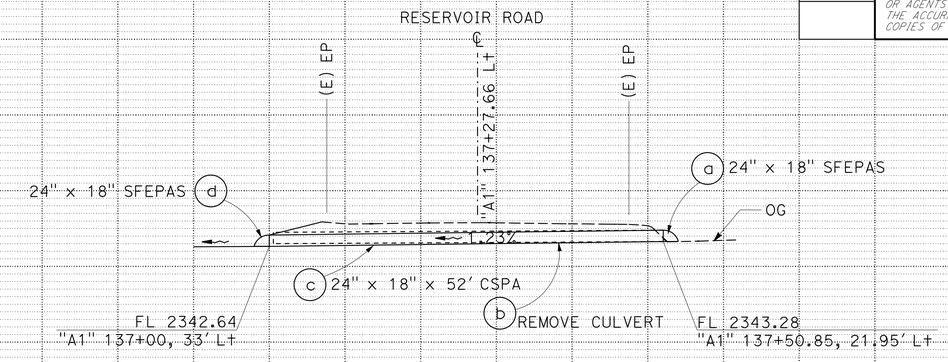

DRAINAGE SYSTEM 8
Sta "A1" 135+56.19

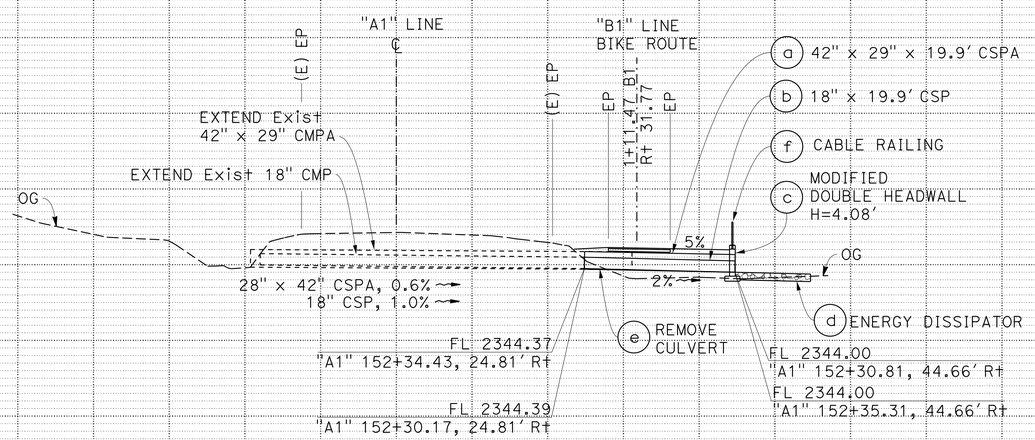

DRAINAGE SYSTEM 9
Sta "A1" 152+31.02
SKEW -3°15'04"

DRAINAGE PROFILES

SCALE: 1" = 10'

DP-3

REVISED BY | DATE REVISED
JAVED IQBAL | MIKE MOGEN
CALCULATED-DESIGNED BY | CHECKED BY
FUNCTIONAL SUPERVISOR: JULIE CASEY

STATE OF CALIFORNIA - DEPARTMENT OF TRANSPORTATION
Caltrans
DESIGN

P:\proj2\02\4c960_plans\pse\24c960ib003.dgn

LAST REVISION DATE PLOTTED => 27-JUN-2012
06-12-12 TIME PLOTTED => 10:33

Dist	COUNTY	ROUTE	POST MILES TOTAL PROJECT	SHEET No.	TOTAL SHEETS
02	Tri	3	7.1/8.3	14	40

REGISTERED CIVIL ENGINEER 06-12-12 DATE

06-25-12
PLANS APPROVAL DATE

REGISTERED PROFESSIONAL ENGINEER MIKE MOGEN No. 67018 Exp. 09-30-12 CIVIL STATE OF CALIFORNIA

THE STATE OF CALIFORNIA OR ITS OFFICERS OR AGENTS SHALL NOT BE RESPONSIBLE FOR THE ACCURACY OR COMPLETENESS OF SCANNED COPIES OF THIS PLAN SHEET.

NOTES:

1. FOR ADDITIONAL DETAILS NOT SHOWN, SEE STANDARD PLANS D89.
2. RSP TO BE PLACED A MINIMUM OF 2 INCHES BELOW CULVERT INVERT.

MODIFIED TYPE "L" HEADWALL DETAIL

DRAINAGE SYSTEM No. (-)	UNIT No. (-)	A (DEGREE)	B (DEGREE)	C (LF)	D (LF)	E (LF)
2	c	45	45	6.5	6.5	7.5
3	a	25	55	7.5	12	13

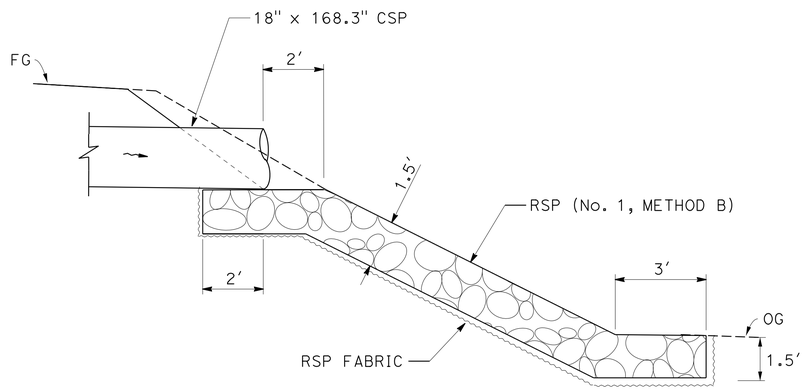

RSP ENERGY DISSIPATOR 1 c

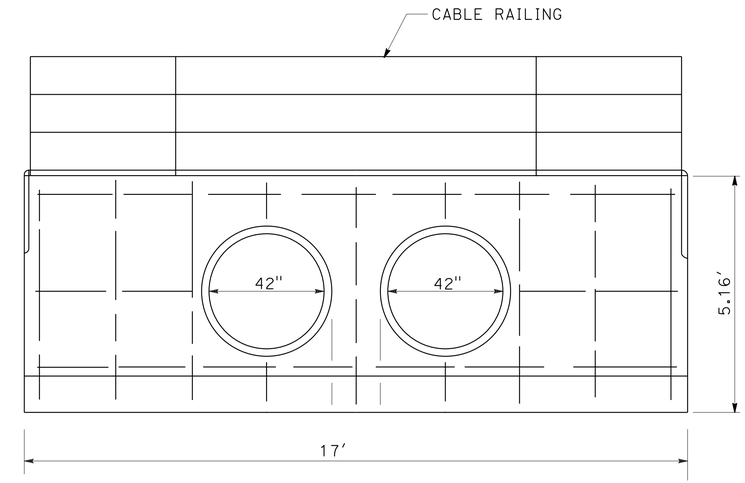

MODIFIED DOUBLE HEADWALL 3 j

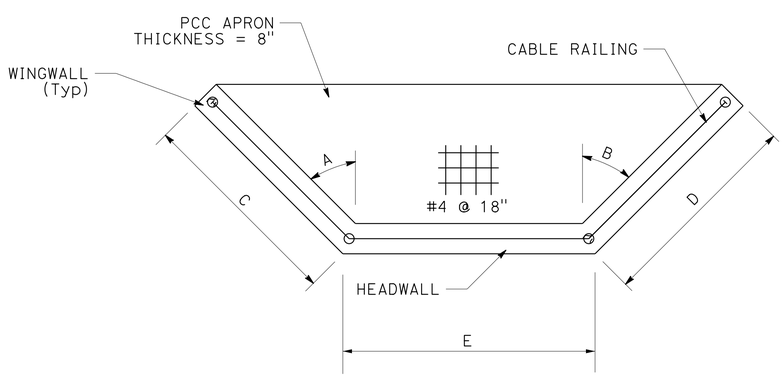

PLAN

MODIFIED TYPE "L" HEADWALL

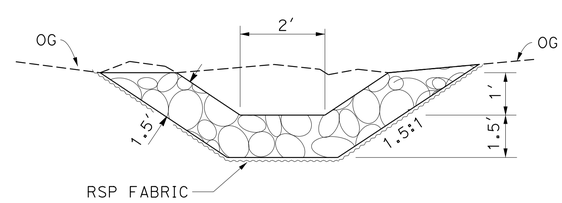

SECTION 1 c

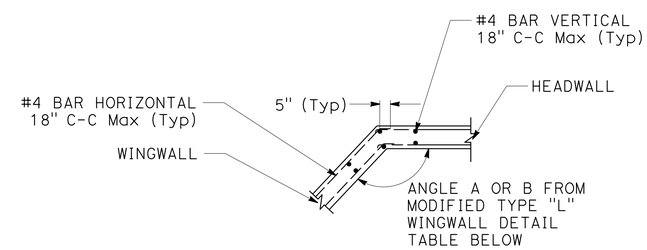

MODIFIED TYPE "L" WINGWALL CORNER CONNECTION

DRAINAGE DETAILS

NO SCALE

DD-1

REVISED BY | DATE REVISED
JAVED IQBAL | MIKE MOGEN
CALCULATED-DESIGNED BY | CHECKED BY
FUNCTIONAL SUPERVISOR: JULIE CASEY
STATE OF CALIFORNIA - DEPARTMENT OF TRANSPORTATION
Caltrans DESIGN

P:\proj2\02\4c960_plans\pse\24c960ic001.dgn

LAST REVISION 06-12-12 | DATE PLOTTED => 27-JUN-2012 | TIME PLOTTED => 10:33

Dist	COUNTY	ROUTE	POST MILES TOTAL PROJECT	SHEET No.	TOTAL SHEETS
02	Tri	3	7.1/8.3	15	40

REGISTERED CIVIL ENGINEER 06-12-12 DATE

06-25-12
PLANS APPROVAL DATE

REGISTERED PROFESSIONAL ENGINEER MIKE MOGEN No. 67018 Exp. 09-30-12 CIVIL STATE OF CALIFORNIA

THE STATE OF CALIFORNIA OR ITS OFFICERS OR AGENTS SHALL NOT BE RESPONSIBLE FOR THE ACCURACY OR COMPLETENESS OF SCANNED COPIES OF THIS PLAN SHEET.

NOTES:

1. FOR ADDITIONAL DETAILS NOT SHOWN, SEE STANDARD PLANS D89, D90.
2. RSP TO BE PLACED A MINIMUM OF 2 INCHES BELOW CULVERT INVERT.

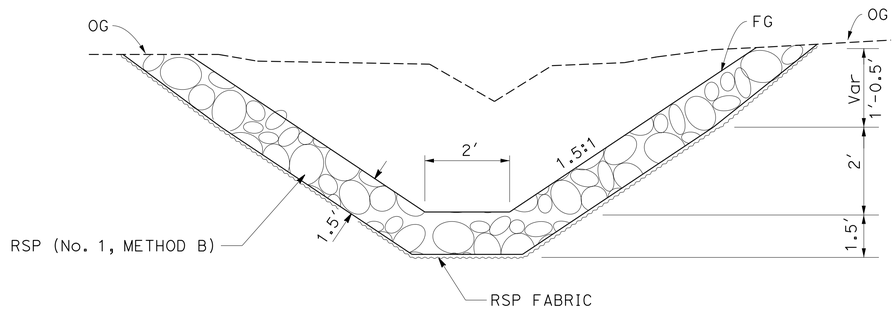

RSP DITCH DETAIL 4 b

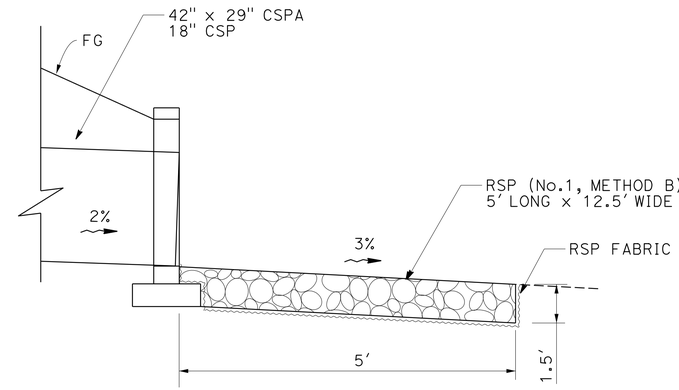

ENERGY DISSIPATOR 9 d

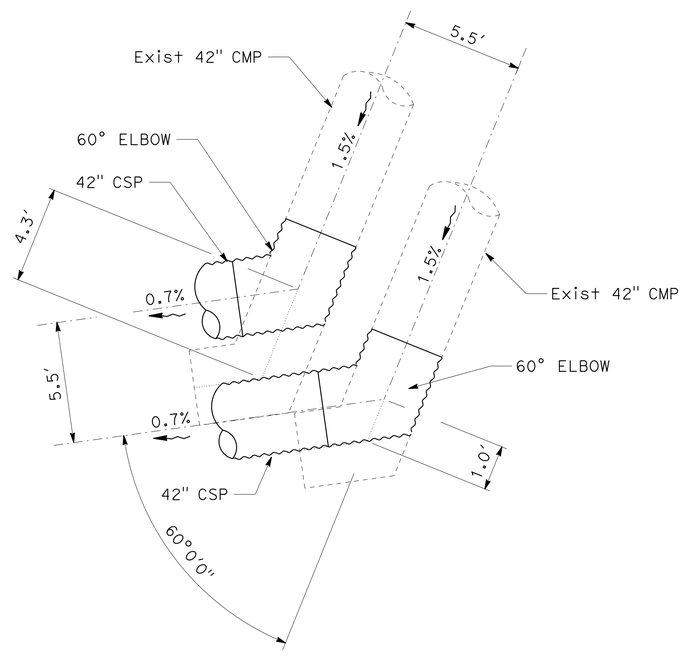

42" CORRUGATED STEEL PIPE 3
60° BEND

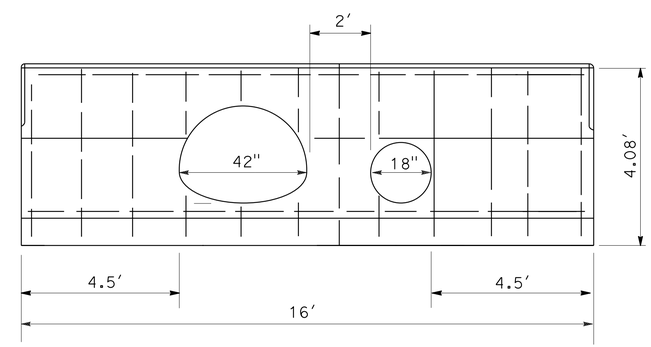

MODIFIED DOUBLE HEADWALL 9 c

DRAINAGE DETAILS
NO SCALE

DD-2

REVISED BY	DATE REVISED
JAVED IQBAL	MIKE MOGEN
CALCULATED-DESIGNED BY	CHECKED BY
FUNCTIONAL SUPERVISOR	JULIE CASEY

STATE OF CALIFORNIA - DEPARTMENT OF TRANSPORTATION
Caltrans
DESIGN

P:\proj2\02\4c960_plans\pse\24c960ic002.dgn

LAST REVISION 06-12-12 | DATE PLOTTED => 27-JUN-2012 | TIME PLOTTED => 10:33

Dist	COUNTY	ROUTE	POST MILES TOTAL PROJECT	SHEET No.	TOTAL SHEETS
02	Tri	3	7.1/8.3	16	40

REGISTERED CIVIL ENGINEER 06-12-12 DATE

06-25-12
PLANS APPROVAL DATE

REGISTERED PROFESSIONAL ENGINEER MIKE MOGEN No. 67018 Exp. 09-30-12 CIVIL STATE OF CALIFORNIA

THE STATE OF CALIFORNIA OR ITS OFFICERS OR AGENTS SHALL NOT BE RESPONSIBLE FOR THE ACCURACY OR COMPLETENESS OF SCANNED COPIES OF THIS PLAN SHEET.

NOTE:

1. FOR ADDITIONAL DETAILS NOT SHOWN, SEE STANDARD PLANS

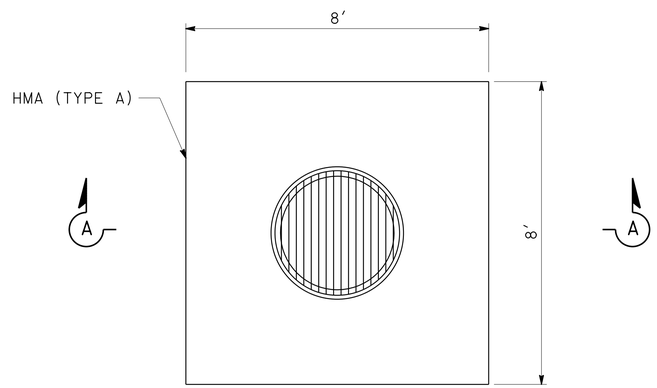

PLAN

HMA APRON

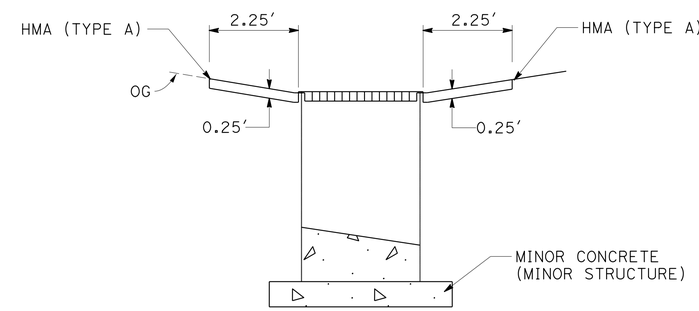

SECTION A-A

HMA APRON

DRAINAGE SYSTEM No. 1
GMP

DRAINAGE DETAILS

NO SCALE

DD-3

STATE OF CALIFORNIA - DEPARTMENT OF TRANSPORTATION
Caltrans® **DESIGN**

FUNCTIONAL SUPERVISOR: JULIE CASEY
CALCULATED-DESIGNED BY: JAVED IQBAL
CHECKED BY: MIKE MOGEN
REVISED BY
DATE REVISED

P:\proj2\02\4c960_plans\pse\24c960ic003.dgn

LAST REVISION 06-12-12 | DATE PLOTTED => 27-JUN-2012 | TIME PLOTTED => 10:33

Dist	COUNTY	ROUTE	POST MILES TOTAL PROJECT	SHEET No.	TOTAL SHEETS
02	Tri	3	7.1/8.3	17	40

REGISTERED CIVIL ENGINEER 06-12-12 DATE

06-25-12
PLANS APPROVAL DATE

REGISTERED PROFESSIONAL ENGINEER MIKE MOGEN No. 67018 Exp. 09-30-12 CIVIL STATE OF CALIFORNIA

THE STATE OF CALIFORNIA OR ITS OFFICERS OR AGENTS SHALL NOT BE RESPONSIBLE FOR THE ACCURACY OR COMPLETENESS OF SCANNED COPIES OF THIS PLAN SHEET.

NOTE:

1. ALL 42" CSP JOINTS SHALL BE POSITIVE.

DRAINAGE QUANTITIES

LAYOUT SHEET No.	DRAINAGE SYSTEM No. ⬡	DRAINAGE UNIT No. ◯	REMOVE WINGWALL EA	REMOVE CULVERT LF	REMOVE HEADWALL EA	HOT MIX ASPHALT (TYPE A) * TON	PLACE HOT MIX ASPHALT (MISCELLANEOUS AREA) SQYD	MINOR CONCRETE (MINOR STRUCTURE) CY	CABLE RAILING LF	18" CORRUGATED STEEL PIPE (.079" THICK) LF	42" CORRUGATED STEEL PIPE (.079" THICK) LF	24" x 18" CORRUGATED STEEL PIPE ARCH (.079" THICK) LF	42" x 29" CORRUGATED STEEL PIPE ARCH (.079" THICK) LF	36" CORRUGATED STEEL PIPE INLET (.109" THICK) LF	18" STEEL FLARED END SECTION EA	24"x18" STEEL FLARED END PIPE ARCH SECTION EA	ROCK SLOPE PROTECTION (No. 1, METHOD B) CY	ROCK SLOPE PROTECTION FABRIC (CLASS 8) * SQYD	MISCELLANEOUS IRON AND STEEL LB	42" CORRUGATED STEEL PIPE 60° BEND (N) EA	DITCH EXCAVATION CY	REMOVE CONCRETE CY	DRAINAGE SYSTEM No. ⬡	DRAINAGE UNIT No. ◯	STATION	DESCRIPTION
L-1	1	a						0.27						3.0					215				1	a	106+67, R+	36" GMP INLET AND BICYCLE GRATE (H=2.5′)
		b								170														b	106+67, R+	18" CORRUGATED STEEL PIPE
		c															6.3	35.1						c	106+67, R+	RSP ENERGY DISSIPATOR
		d				1.0	6.9																	d	106+67, R+	HMA APRON
		e																	215					e	106+67, L+	BICYCLE GRATE FOR Exist GMP INLET
L-1	2	a	2		1																		2	a	113+03, L+	Exist HEADWALL, L=4′. WINGWALLS, L=12′
		b									10													b	113+03, L+	42" CORRUGATED STEEL PIPE
		c						9.24																c	113+03, L+	MODIFIED TYPE "L" HEADWALL WITH CONC APRON
		d																				2.7		d	113+03, L+	REMOVE CONCRETE APRON
		e							20.5															e	113+03, L+	CABLE RAILING
		f																			1.0			f	113+03, L+	DITCH Exc AT INLET
SHEET TOTAL			2		1	1.0	6.9	9.51	20.5	170	10			3.0			6.3	35.1	430		1.0	2.7				

(N) - NOT A SEPARATE PAY ITEM, FOR INFORMATION ONLY.
* - FOR INFORMATION ONLY - QUANTITY SHOWN IN ROADWAY ITEMS TABLE ON SHEET Q-1

CALCULATED-DESIGNED BY JAVED IQBAL
CHECKED BY MIKE MOGEN
REVISED BY
DATE REVISED
FUNCTIONAL SUPERVISOR JULIE CASEY

STATE OF CALIFORNIA - DEPARTMENT OF TRANSPORTATION
Caltrans DESIGN

P:\proj2\02\4c960_plans\pse\24c960id001.dgn

DRAINAGE QUANTITIES
DQ-1

LAST REVISION 06-12-12 DATE PLOTTED => 27-JUN-2012 TIME PLOTTED => 10:33

Dist	COUNTY	ROUTE	POST MILES TOTAL PROJECT	SHEET No.	TOTAL SHEETS
02	Tri	3	7.1/8.3	18	40

REGISTERED CIVIL ENGINEER 06-12-12 DATE

06-25-12
PLANS APPROVAL DATE

REGISTERED PROFESSIONAL ENGINEER MIKE MOGEN No. 67018 Exp. 09-30-12 CIVIL STATE OF CALIFORNIA

THE STATE OF CALIFORNIA OR ITS OFFICERS OR AGENTS SHALL NOT BE RESPONSIBLE FOR THE ACCURACY OR COMPLETENESS OF SCANNED COPIES OF THIS PLAN SHEET.

DRAINAGE QUANTITIES

LAYOUT SHEET No.	DRAINAGE SYSTEM No. ⬡	DRAINAGE UNIT No. ◯	REMOVE WINGWALL EA	REMOVE CULVERT LF	REMOVE HEADWALL EA	HOT MIX ASPHALT (TYPE A) * TON	PLACE HOT MIX ASPHALT (MISCELLANEOUS AREA) SQYD	MINOR CONCRETE (MINOR STRUCTURE) CY	CABLE RAILING LF	18" CORRUGATED STEEL PIPE (.079" THICK) LF	42" CORRUGATED STEEL PIPE (.079" THICK) LF	24" x 18" CORRUGATED STEEL PIPE ARCH (.079" THICK) LF	42" x 29" CORRUGATED STEEL PIPE ARCH (.079" THICK) LF	36" CORRUGATED STEEL PIPE INLET (.109" THICK) LF	18" STEEL FLARED END SECTION EA	24" x 18" STEEL FLARED END PIPE ARCH SECTION EA	ROCK SLOPE PROTECTION (No. 1, METHOD B) CY	ROCK SLOPE PROTECTION FABRIC (CLASS 8) * SQYD	MISCELLANEOUS IRON AND STEEL LB	42" CORRUGATED STEEL PIPE 60° ELBOW (N) EA	DITCH EXCAVATION CY	REMOVE CONCRETE CY	DRAINAGE SYSTEM No. ⬡	DRAINAGE UNIT No. ◯	STATION	DESCRIPTION
L-2	3	a						10.19															3	a	118+74, Lt	Mod DOUBLE TYPE "L" HW AND Conc APRON
		b									20													b	118+77, Lt	42" CSP
		c									20													c	118+71, Lt	42" CSP
		d	2		1																			d	118+66, Lt	Exist HEADWALL, L=10.6', WINGWALLS L = 6.3'
		e		13																2				e	118+60, Rt	42" CSP 60° BENDS (2 EA), REMOVE 13' OF CULVERT
		f									54													f	118+62, Rt	42" CSP
		g									58													g	118+57, Rt	42" CSP
		h							32.5															h	118+07, Lt	CABLE RAILING
		i							17															i	118+74, Rt	CABLE RAILING
		j						2.75																j	118+07, Rt	Mod DOUBLE HW, L=17'
		k																			1.0			k	118+74, Lt	DITCH Exc AT INLET
		l																			0.5			l	118+07, Rt	DITCH Exc AT OUTLET
L-2	4	a						0.91															4	a	124+78, Lt	STRAIGHT HEADWALL
		b															10.7	64.6						b	124+86, Lt	RSP DITCH CONNECTING DRAINAGE SYSTEM 4 & 5
		c								16														c	124+78, Lt	18" CSP
		d			1																			d	124+78, Lt	Exist HEADWALL, L=6.8'
L-2	5	a								50													5	a	125+23, Lt	18" CSP
		b													1									b	124+98, Lt	18" STEEL FLARED END SECTION
		c																			7.1			c	125+48, Lt	DITCH EXC AT INLET
		d		74.5																				d	125+23, Lt	Exist 18" CMP DRIVEWAY CULVERT
SHEET TOTAL			2	87.5	2			13.85	49.5	66	152				1		10.7	64.6		2	8.6					

(N) - NOT A SEPARATE PAY ITEM, FOR INFORMATION ONLY.
* - FOR INFORMATION ONLY - QUANTITY SHOWN IN ROADWAY ITEMS TABLE ON SHEET Q-1

DRAINAGE QUANTITIES
DQ-2

JAVED IQBAL — REVISED BY
MIKE MOGEN — DATE REVISED
CALCULATED-DESIGNED BY
CHECKED BY
FUNCTIONAL SUPERVISOR
JULIE CASEY

STATE OF CALIFORNIA - DEPARTMENT OF TRANSPORTATION
Caltrans
DESIGN

P:\proj2\02\4c960_plans\pse\24c960id002.dgn

LAST REVISION 06-12-12
DATE PLOTTED => 27-JUN-2012
TIME PLOTTED => 10:33

Dist	COUNTY	ROUTE	POST MILES TOTAL PROJECT	SHEET No.	TOTAL SHEETS
02	Tri	3	7.1/8.3	19	40

REGISTERED CIVIL ENGINEER 06-12-12 DATE

06-25-12
PLANS APPROVAL DATE

REGISTERED PROFESSIONAL ENGINEER MIKE MOGEN No. 67018 Exp. 09-30-12 CIVIL STATE OF CALIFORNIA

THE STATE OF CALIFORNIA OR ITS OFFICERS OR AGENTS SHALL NOT BE RESPONSIBLE FOR THE ACCURACY OR COMPLETENESS OF SCANNED COPIES OF THIS PLAN SHEET.

DRAINAGE QUANTITIES

LAYOUT SHEET No.	DRAINAGE SYSTEM No. ⬡	DRAINAGE UNIT No. ◯	REMOVE WINGWALL (EA)	REMOVE CULVERT (LF)	REMOVE HEADWALL (EA)	* HOT MIX ASPHALT (TYPE A) (TON)	PLACE HOT MIX ASPHALT (MISCELLANEOUS AREA) (SQYD)	MINOR CONCRETE (MINOR STRUCTURE) (CY)	CABLE RAILING (LF)	18" CORRUGATED STEEL PIPE (.079" THICK) (LF)	42" CORRUGATED STEEL PIPE (.079" THICK) (LF)	24" x 18" CORRUGATED STEEL PIPE ARCH (.079" THICK) (LF)	42" x 29" CORRUGATED STEEL PIPE ARCH (.079" THICK) (LF)	36" CORRUGATED STEEL PIPE INLET (.109" THICK) (LF)	18" STEEL FLARED END SECTION (EA)	24" x 18" STEEL FLARED END PIPE ARCH SECTION (EA)	ROCK SLOPE PROTECTION (No. 1, METHOD B) (CY)	* ROCK SLOPE PROTECTION FABRIC (CLASS 8) (SQYD)	MISCELLANEOUS IRON AND STEEL (LB)	(N) 42" CORRUGATED STEEL PIPE 60° BEND (EA)	DITCH EXCAVATION (CY)	REMOVE CONCRETE (CY)	DRAINAGE SYSTEM No. ⬡	DRAINAGE UNIT No. ◯	STATION	DESCRIPTION
L-2	6	a						1.70															6	a	132+94, Lt	TYPE L HEADWALL FOR 24" x 18" CMPA
		b										76												b	132+94, Lt	24" x 18" CSPA
		c			1																			c	132+94, Lt	Exist HEADWALL, L=6.0′
		d		50																				d	132+94	Exist 18" CULVERT
		e														1								e	133+02, Lt	24" x 18" CSPA FES
L-3	7	a														1							7	a	135+60, Lt	24" x 18" CSPA FES
		b		32																				b	135+40, Lt	18" CORRUGATED STEEL PIPE IN DRIVEWAY
		c										40												c	136+50, Lt	NEW DRIVEWAY CULVERT
		d														1								d	135+20, Lt	24" x 18" CSPA FES
L-3	8	a														1							8	a	137+51, Lt	24" x 18" CSPA FES
		b		52																				b	135+40, Lt	18" CORRUGATED STEEL PIPE UNDER ROADWAY
		c										52												c	137+28, Lt	NEW CULVERT UNDER RESERVOIR ROAD
		d														1								d	137+00, Lt	24" x 18" CSPA FES
L-4	9	a								20													9	a	152+35, Rt	42" x 29" CORRUGATED STEEL PIPE ARCH
		b											20											b	152+30, Rt	18" CORRUGATED STEEL PIPE
		c						2.30																c	152+32, Rt	MODIFIED STRAIGHT HEADWALL
		d															6.7	12.8						d	152+32, Rt	ENERGY DISSIPATOR, 5′ LONG x 12.5′ WIDE
		e		6.3																				e	152+34, Rt	42" x 29" CMPA
		f							16															f	152+33, Rt	CABLE RAILING
SHEET TOTAL				140.3	1			4.00	16	20		168	20			5	6.7	12.8								
PROJECT TOTAL			4	227.8	4	1.0	6.9	27.36	86	256.0	162	168	20	3.0	1	5	23.7	112.5	430	2	9.6	2.7				

(N) - NOT A SEPERATE PAY ITEM, FOR INFORMATION ONLY.
* - FOR INFORMATION ONLY - QUANTITY SHOWN IN ROADWAY ITEMS TABLE ON SHEET Q-1

DRAINAGE QUANTITIES
DQ-3

REVISED BY | DATE REVISED
JAVED IQBAL | MIKE MOGEN
CALCULATED-DESIGNED BY | CHECKED BY
FUNCTIONAL SUPERVISOR: JULIE CASEY

STATE OF CALIFORNIA - DEPARTMENT OF TRANSPORTATION
Caltrans DESIGN

P:\proj2\02\4c960_plans\pse\24c960id003.dgn

LAST REVISION 06-12-12 | DATE PLOTTED => 27-JUN-2012 | TIME PLOTTED => 10:33

Dist	COUNTY	ROUTE	POST MILES TOTAL PROJECT	SHEET No.	TOTAL SHEETS
02	Tri	3	7.1/8.3	20	40

REGISTERED CIVIL ENGINEER 06-12-12 DATE

06-25-12
PLANS APPROVAL DATE

REGISTERED PROFESSIONAL ENGINEER MIKE MOGEN No. 67018 Exp. 09-30-12 CIVIL STATE OF CALIFORNIA

THE STATE OF CALIFORNIA OR ITS OFFICERS OR AGENTS SHALL NOT BE RESPONSIBLE FOR THE ACCURACY OR COMPLETENESS OF SCANNED COPIES OF THIS PLAN SHEET.

NOTE:

1. FOR ACCURATE RIGHT OF WAY DATA, CONTACT RIGHT OF WAY ENGINEERING AT THE DISTRICT OFFICE.

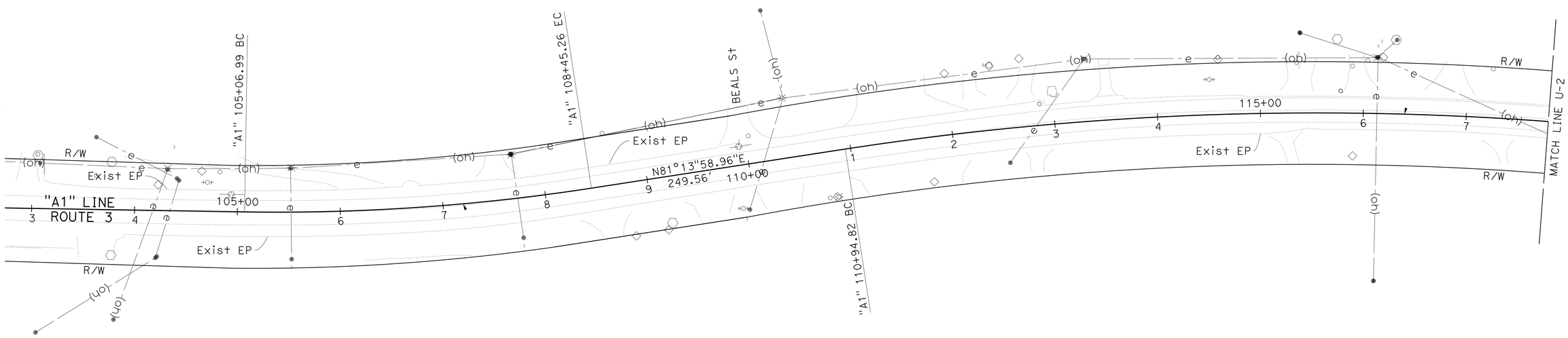

UTILITY PLAN

SCALE: 1" = 50'

U-1

APPROVED FOR UTILITY WORK ONLY

REVISED BY	DATE REVISED

CALCULATED-DESIGNED BY: JAVED IQBAL
CHECKED BY: MIKE MOGEN
FUNCTIONAL SUPERVISOR: JULIE CASEY

STATE OF CALIFORNIA - DEPARTMENT OF TRANSPORTATION
Caltrans
DESIGN

P:\proj2\02\4c960_plans\pse\24c960ka001.dgn

LAST REVISION 06-12-12 | DATE PLOTTED => 27-JUN-2012 | TIME PLOTTED => 10:33

BORDER LAST REVISED 7/2/2010 | USERNAME => s115152 | DGN FILE => 24c960ka001.dgn | RELATIVE BORDER SCALE IS IN INCHES 0 1 2 3 | UNIT 0318 | PROJECT NUMBER & PHASE: 02000004871

Dist	COUNTY	ROUTE	POST MILES TOTAL PROJECT	SHEET No.	TOTAL SHEETS
02	Tri	3	7.1/8.3	21	40

Michael J. Mogen 06-12-12
REGISTERED CIVIL ENGINEER DATE

06-25-12
PLANS APPROVAL DATE

REGISTERED PROFESSIONAL ENGINEER
MIKE MOGEN
No. 67018
Exp. 09-30-12
CIVIL
STATE OF CALIFORNIA

THE STATE OF CALIFORNIA OR ITS OFFICERS OR AGENTS SHALL NOT BE RESPONSIBLE FOR THE ACCURACY OR COMPLETENESS OF SCANNED COPIES OF THIS PLAN SHEET.

NOTE:

1. FOR ACCURATE RIGHT OF WAY DATA, CONTACT RIGHT OF WAY ENGINEERING AT THE DISTRICT OFFICE.

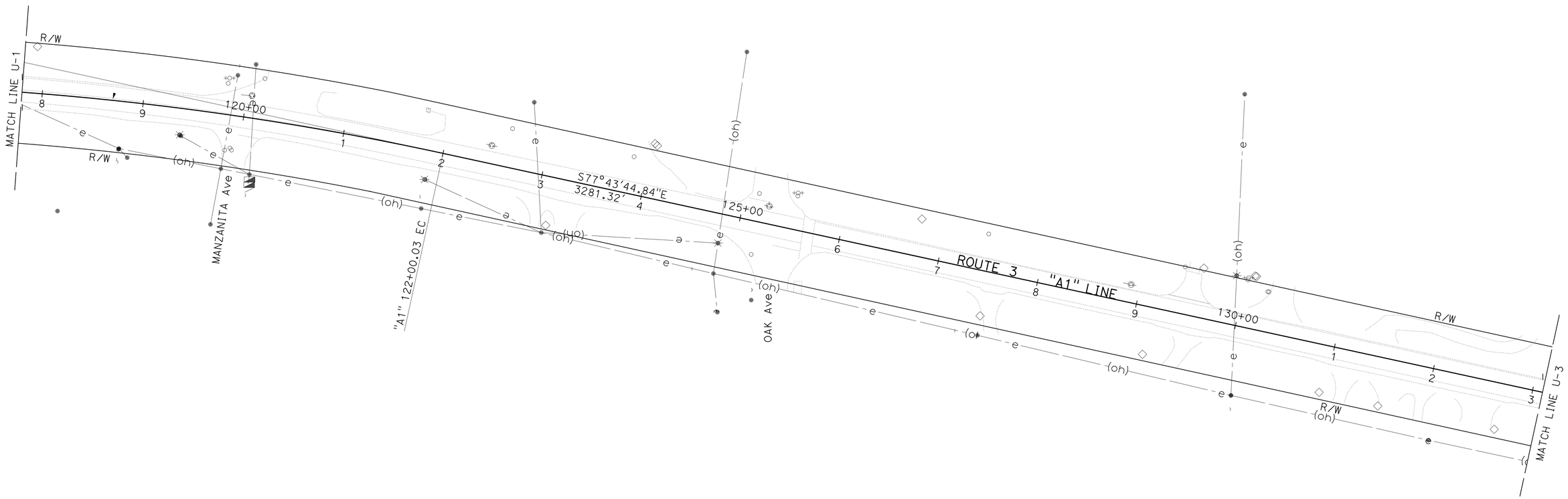

UTILITY PLAN

SCALE: 1" = 50'

U-2

APPROVED FOR UTILITY WORK ONLY

REVISED BY | DATE REVISED
JAVED IQBAL | MIKE MOGEN
CALCULATED-DESIGNED BY | CHECKED BY
FUNCTIONAL SUPERVISOR: JULIE CASEY

STATE OF CALIFORNIA - DEPARTMENT OF TRANSPORTATION
Caltrans
DESIGN

P:\proj2\02\4c960_plans\pse\24c960ka002.dgn

LAST REVISION 06-12-12 | DATE PLOTTED => 27-JUN-2012 | TIME PLOTTED => 10:33

BORDER LAST REVISED 7/2/2010 | USERNAME => s115152 | DGN FILE => 24c960ka002.dgn | RELATIVE BORDER SCALE IS IN INCHES 0 1 2 3 | UNIT 0318 | PROJECT NUMBER & PHASE: 02000004871

Dist	COUNTY	ROUTE	POST MILES TOTAL PROJECT	SHEET No.	TOTAL SHEETS
02	Tri	3	7.1/8.3	22	40

Michael J Mogen 06-12-12
REGISTERED CIVIL ENGINEER DATE

06-25-12
PLANS APPROVAL DATE

REGISTERED PROFESSIONAL ENGINEER
MIKE MOGEN
No. 67018
Exp. 09-30-12
CIVIL
STATE OF CALIFORNIA

THE STATE OF CALIFORNIA OR ITS OFFICERS OR AGENTS SHALL NOT BE RESPONSIBLE FOR THE ACCURACY OR COMPLETENESS OF SCANNED COPIES OF THIS PLAN SHEET.

NOTE:

1. FOR ACCURATE RIGHT OF WAY DATA, CONTACT RIGHT OF WAY ENGINEERING AT THE DISTRICT OFFICE.

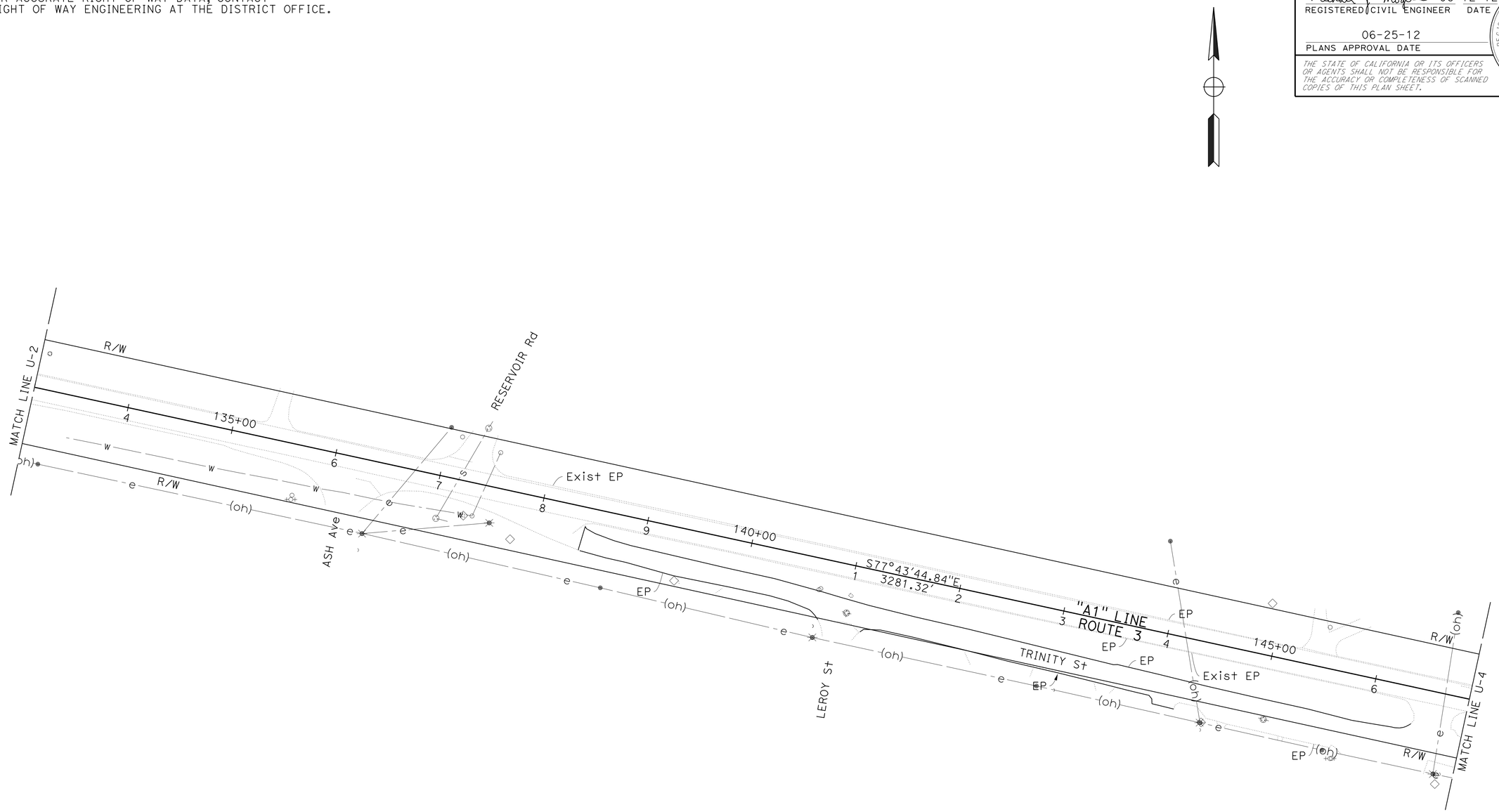

UTILITY PLAN

SCALE: 1" = 50'

U-3

APPROVED FOR UTILITY WORK ONLY

STATE OF CALIFORNIA - DEPARTMENT OF TRANSPORTATION
Caltrans
DESIGN

FUNCTIONAL SUPERVISOR: JULIE CASEY
CALCULATED-DESIGNED BY: JAVED IQBAL
CHECKED BY: MIKE MOGEN
REVISED BY
DATE REVISED

P:\proj2\02\4c960_plans\pse\24c960ka003.dgn

LAST REVISION 06-12-12
DATE PLOTTED => 27-JUN-2012
TIME PLOTTED => 10:33

BORDER LAST REVISED 7/2/2010
USERNAME => s115152
DGN FILE => 24c960ka003.dgn
RELATIVE BORDER SCALE IS IN INCHES 0 1 2 3
UNIT 0318
PROJECT NUMBER & PHASE: 02000004871

Dist	COUNTY	ROUTE	POST MILES TOTAL PROJECT	SHEET No.	TOTAL SHEETS
02	Tri	3	7.1/8.3	23	40

Michael J. Mogen 06-12-12
REGISTERED CIVIL ENGINEER DATE

06-25-12
PLANS APPROVAL DATE

REGISTERED PROFESSIONAL ENGINEER
MIKE MOGEN
No. 67018
Exp. 09-30-12
CIVIL
STATE OF CALIFORNIA

THE STATE OF CALIFORNIA OR ITS OFFICERS OR AGENTS SHALL NOT BE RESPONSIBLE FOR THE ACCURACY OR COMPLETENESS OF SCANNED COPIES OF THIS PLAN SHEET.

NOTE:

1. FOR ACCURATE RIGHT OF WAY DATA, CONTACT RIGHT OF WAY ENGINEERING AT THE DISTRICT OFFICE.

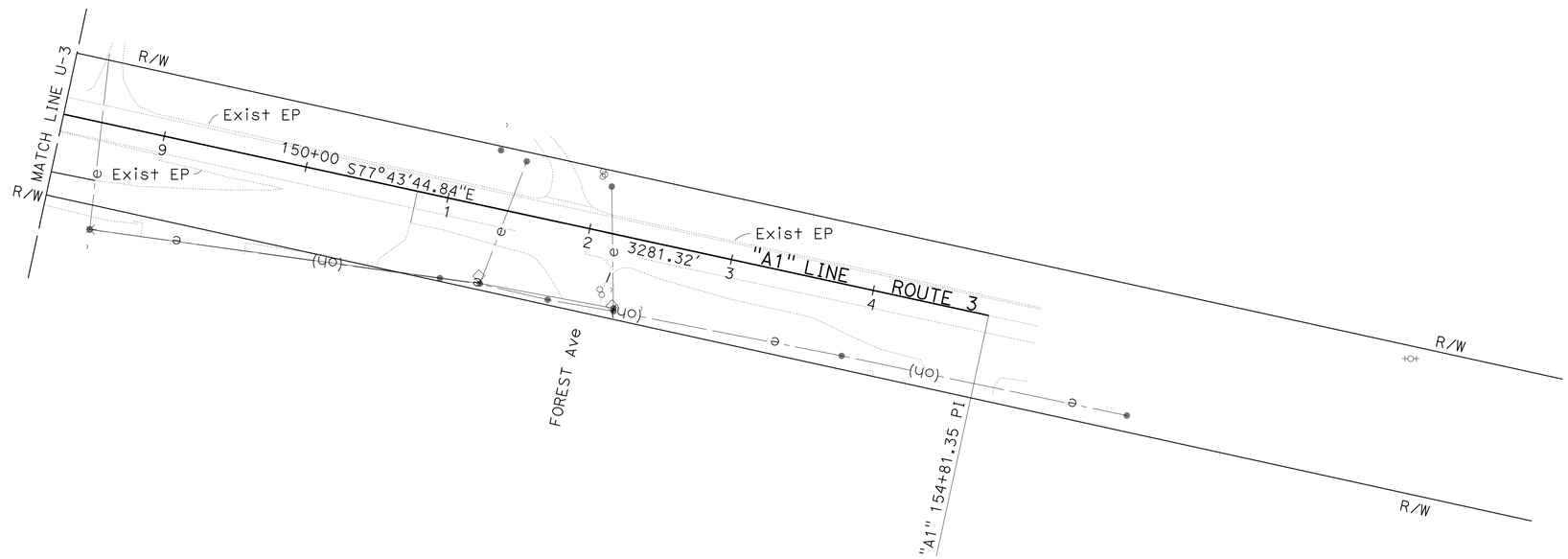

UTILITY PLAN

SCALE: 1" = 50'

U-4

APPROVED FOR UTILITY WORK ONLY

REVISED BY | DATE REVISED
JAVED IQBAL | MIKE MOGEN
CALCULATED-DESIGNED BY | CHECKED BY
FUNCTIONAL SUPERVISOR: JULIE CASEY

STATE OF CALIFORNIA - DEPARTMENT OF TRANSPORTATION
Caltrans
DESIGN

P:\proj2\02\4c960_plans\pse\24c960ka004.dgn

LAST REVISION 06-12-12 | DATE PLOTTED => 27-JUN-2012 | TIME PLOTTED => 10:33

BORDER LAST REVISED 7/2/2010 | USERNAME => s115152 | DGN FILE => 24c960ka004.dgn | RELATIVE BORDER SCALE IS IN INCHES 0 1 2 3 | UNIT 0318 | PROJECT NUMBER & PHASE: 02000004871

Dist	COUNTY	ROUTE	POST MILES TOTAL PROJECT	SHEET No.	TOTAL SHEETS
02	Tri	3	7.1/8.3	24	40

REGISTERED CIVIL ENGINEER 06-12-12 DATE

06-25-12
PLANS APPROVAL DATE

REGISTERED PROFESSIONAL ENGINEER MIKE MOGEN No. 67018 Exp. 09-30-12 CIVIL STATE OF CALIFORNIA

THE STATE OF CALIFORNIA OR ITS OFFICERS OR AGENTS SHALL NOT BE RESPONSIBLE FOR THE ACCURACY OR COMPLETENESS OF SCANNED COPIES OF THIS PLAN SHEET.

NOTES:

1. EXACT LOCATION OF ALL SIGNS TO BE DETERMINED BY THE ENGINEER.
2. CALIFORNIA CODES ARE DESIGNATED BY (CA), OTHERWISE FEDERAL CODES ARE SHOWN.

LEGEND

ONE POST STATIONARY MOUNTED SIGN

DIRECTION OF TRAFFIC

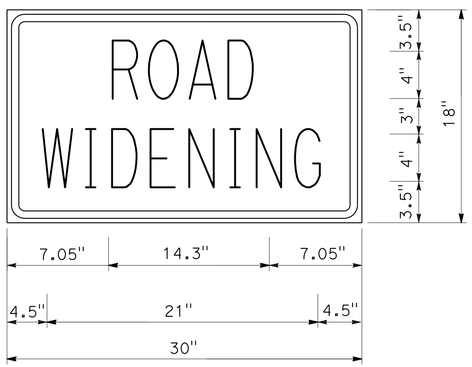

1.5" RADIUS, 0.6" BORDERS, 0.4" INDENT, BLACK ON ORANGE;

C23B SIGN PANEL DETAIL

ROAD CONNECTIONS

PM	LOCATION	Qty
7.41	BEALS St - Lt	1
7.60	MANZANITA Ave - Rt	1
7.70	OAK Ave - Rt & Lt	2
7.83	TRINITY St - Rt	1
7.90	ASH Ave - Rt	1
7.92	RESERVOIR Rd - Lt	1
7.94	TRINITY St - Rt	1
8.20	TRINITY St - Rt	1
8.21	FOREST Ave - Rt	1
8.21	RESERVOIR Rd - Lt	1
	MAIN LINE	2
	TOTAL	13

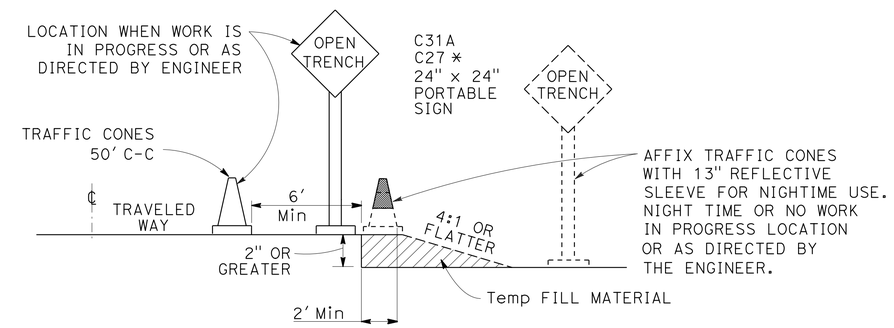

OPEN TRENCH SIGNING AND MARKING

NO SCALE

* PLACE AT 250' INTERVALS THROUGH THE OPEN TRENCH AREA, ALTERNATE C27 (OPEN TRENCH) AND C31A (NO SHOULDER) SIGNS

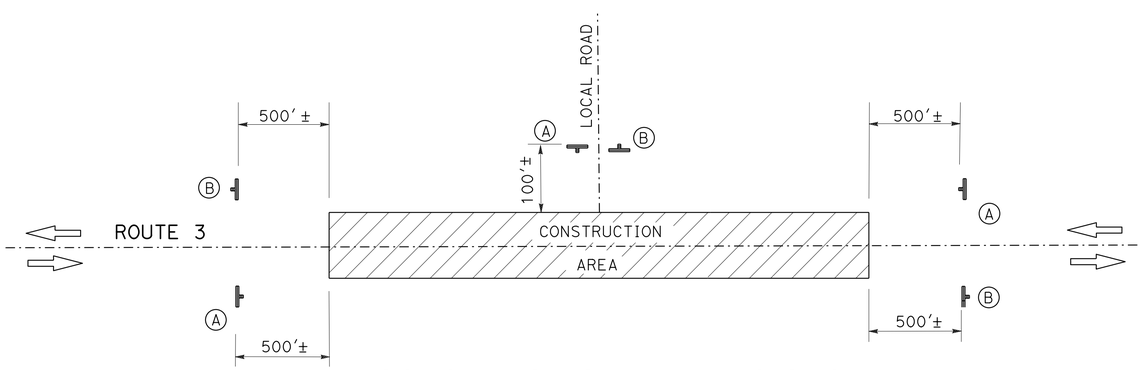

CONSTRUCTION AREA SIGNS (STATIONARY MOUNTED)

CONSTRUCTION AREA SIGNS (STATIONARY MOUNTED)

TYPE	CODE	PANEL SIZE	SIGN MESSAGE	NUMBER AND SIZE OF POST	No. OF SIGNS
A	W20-1 C23B(CA)	48" x 48" 30" x 18"	ROAD WORK AHEAD ROAD WIDENING	1-4" x 6"	13
B	G20-2	36" x 18"	END ROAD WORK	1-4" x 4"	13

CONSTRUCTION AREA SIGNS

NO SCALE

CS-1

REVISED BY | DATE REVISED
JAVED IQBAL | MIKE MOGEN
CALCULATED-DESIGNED BY | CHECKED BY
FUNCTIONAL SUPERVISOR: JULIE CASEY

STATE OF CALIFORNIA - DEPARTMENT OF TRANSPORTATION
Caltrans
DESIGN

P:\proj2\02\4c960_plans\pse\24c9601a001.dgn

LAST REVISION 06-12-12 | DATE PLOTTED => 27-JUN-2012 | TIME PLOTTED => 10:33

Dist	COUNTY	ROUTE	POST MILES TOTAL PROJECT	SHEET No.	TOTAL SHEETS
02	Tri	3	7.1/8.3	25	40

REGISTERED CIVIL ENGINEER 06-12-12 DATE

06-25-12
PLANS APPROVAL DATE

REGISTERED PROFESSIONAL ENGINEER MIKE MOGEN No. 67018 Exp. 09-30-12 CIVIL STATE OF CALIFORNIA

THE STATE OF CALIFORNIA OR ITS OFFICERS OR AGENTS SHALL NOT BE RESPONSIBLE FOR THE ACCURACY OR COMPLETENESS OF SCANNED COPIES OF THIS PLAN SHEET.

NOTES:

1. ALL EXISTING SIGNS NOT SHOWN SHALL REMAIN IN PLACE.
2. ALL SIGN CODES SHOWN ARE FEDERAL SIGN CODES, UNLESS OTHERWISE DESIGNATED AS CALIFORNIA SIGN CODES. CALIFORNIA SIGN CODES ARE DESIGNATED BY (CA).
3. FOR COMPLETE RIGHT OF WAY AND ACCURATE ACCESS DATA, SEE RIGHT OF WAY RECORD MAPS AT DISTRICT OFFICE.

LEGEND

- # — PAVEMENT DELINEATION STRIPE DETAIL NUMBER
- #-# — SIGN NUMBER
- SINGLE STRIPE MARKER
- STRIPE CHANGE LOCATION
- NEW ROADSIDE SIGN ONE POST

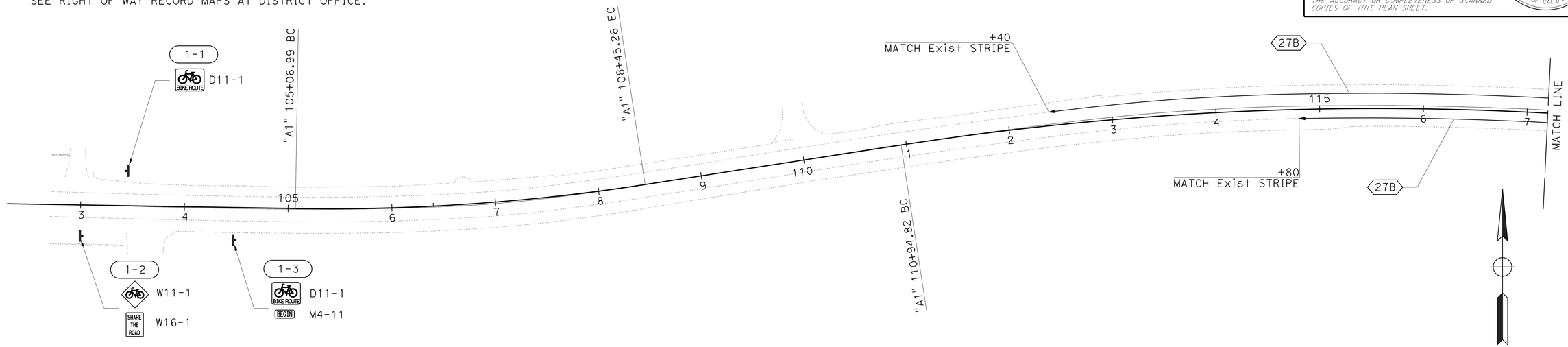

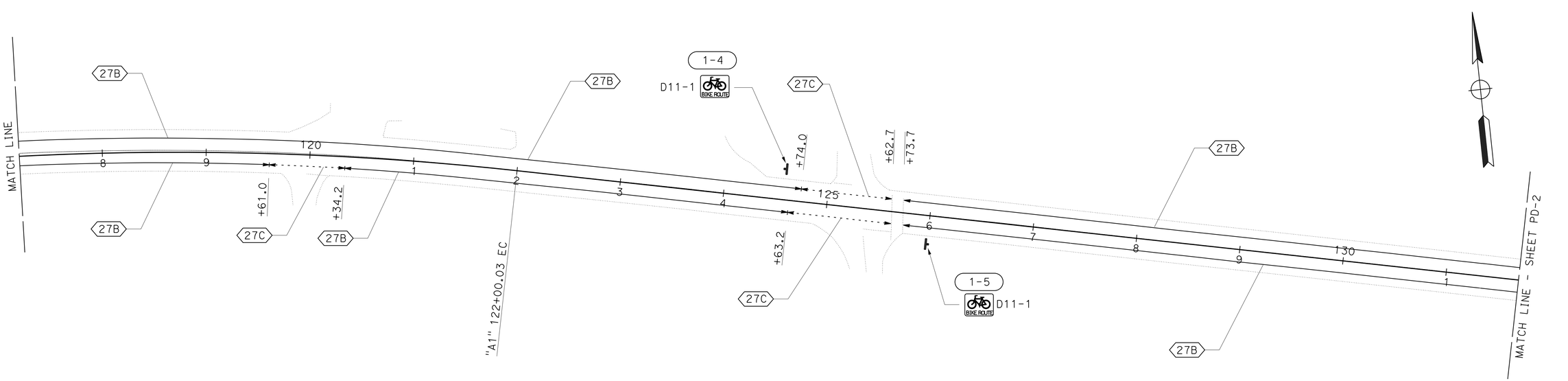

PAVEMENT DELINEATION AND SIGN PLAN

SCALE: 1" = 50'

PD-1

APPROVED FOR PAVEMENT DELINEATION AND SIGN WORK ONLY

REVISED BY	DATE REVISED
JAVED IQBAL	MIKE MOGEN
CALCULATED-DESIGNED BY	CHECKED BY
FUNCTIONAL SUPERVISOR	JULIE CASEY

STATE OF CALIFORNIA - DEPARTMENT OF TRANSPORTATION

Caltrans®

DESIGN

P:\proj2\02\4c960_plans\pse\24c960na001.dgn

LAST REVISION 06-12-12 | DATE PLOTTED => 27-JUN-2012 TIME PLOTTED => 10:33

Dist	COUNTY	ROUTE	POST MILES TOTAL PROJECT	SHEET No.	TOTAL SHEETS
02	Tri	3	7.1/8.3	26	40

REGISTERED CIVIL ENGINEER 06-12-12 DATE

06-25-12
PLANS APPROVAL DATE

REGISTERED PROFESSIONAL ENGINEER MIKE MOGEN No. 67018 Exp. 09-30-12 CIVIL STATE OF CALIFORNIA

THE STATE OF CALIFORNIA OR ITS OFFICERS OR AGENTS SHALL NOT BE RESPONSIBLE FOR THE ACCURACY OR COMPLETENESS OF SCANNED COPIES OF THIS PLAN SHEET.

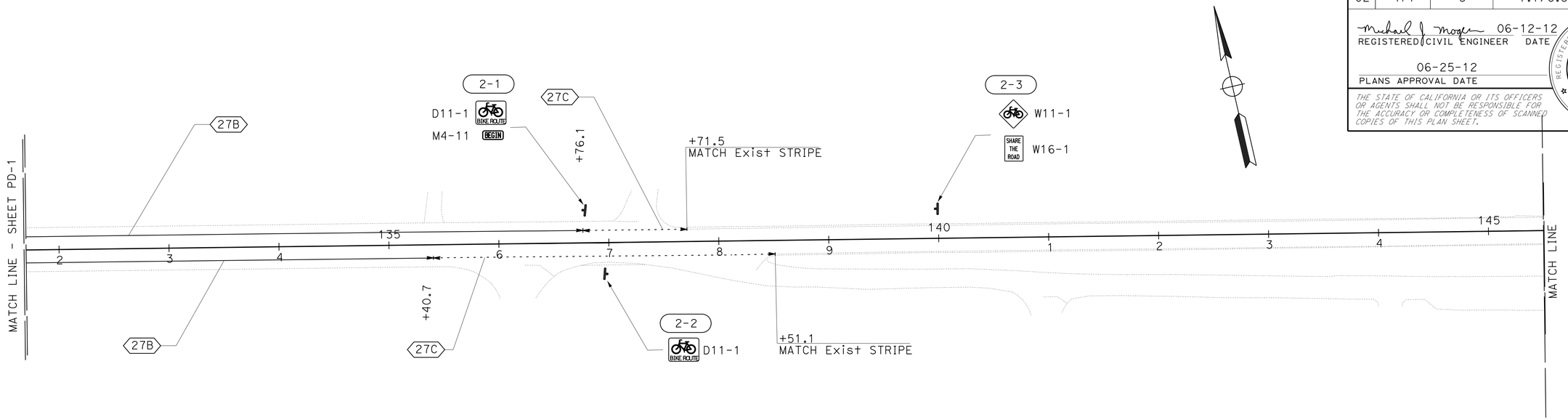

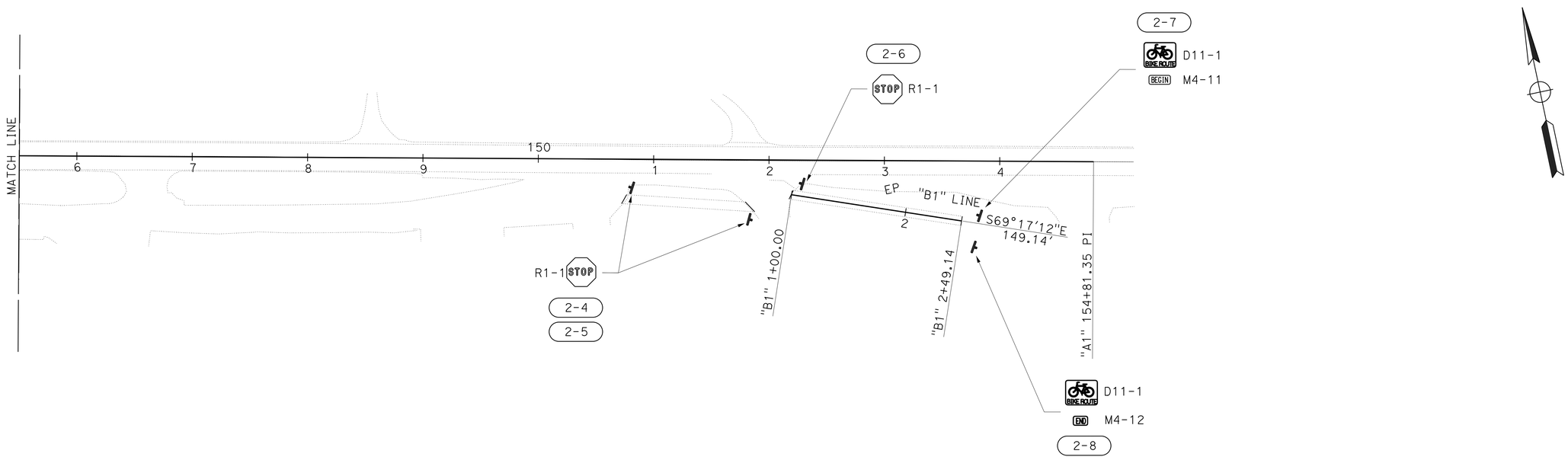

PAVEMENT DELINEATION AND SIGN PLAN

SCALE: 1" = 50'

PD-2

APPROVED FOR PAVEMENT DELINEATION AND SIGN WORK ONLY

REVISED BY	DATE REVISED
JAVED IQBAL	MIKE MOGEN
CALCULATED-DESIGNED BY	CHECKED BY
FUNCTIONAL SUPERVISOR	JULIE CASEY

STATE OF CALIFORNIA - DEPARTMENT OF TRANSPORTATION

Caltrans® **DESIGN**

P:\proj2\02\4c960_plans\pse\24c960na002.dgn

LAST REVISION 06-12-12 | DATE PLOTTED => 27-JUN-2012 TIME PLOTTED => 10:33

Dist	COUNTY	ROUTE	POST MILES TOTAL PROJECT	SHEET No.	TOTAL SHEETS
02	Tri	3	7.1/8.3	27	40

REGISTERED CIVIL ENGINEER 06-12-12 DATE

06-25-12
PLANS APPROVAL DATE

REGISTERED PROFESSIONAL ENGINEER MIKE MOGEN No. 67018 Exp. 09-30-12 CIVIL STATE OF CALIFORNIA

THE STATE OF CALIFORNIA OR ITS OFFICERS OR AGENTS SHALL NOT BE RESPONSIBLE FOR THE ACCURACY OR COMPLETENESS OF SCANNED COPIES OF THIS PLAN SHEET.

NOTE:

1. (N) - NOT A SEPARATE PAY ITEM, FOR INFORMATION ONLY

ABBREVIATIONS;

FYG FLOURESCENT YELLOW GREEN

ROADSIDE SIGNS

SHEET No.	STATION	SIGN No.	(N) POST SIZE (METAL) (In x In)	(N) POST LENGTH (LF)	ROADSIDE SIGN ONE POST (EA)	COMMENTS
PD-1	"A1" 103+46.5 L†	1-1	2½ x 2½	9.5	1	BIKE ROUTE
	"A1" 103+00 R†	1-2	2½ x 2½	11.5	1	BICYCLE WARNING
						SHARE THE ROAD PLAQUE
	"A1" 104+46.75 R†	1-3	2½ x 2½	9.5	1	BIKE ROUTE
						BEGIN
	"A1" 124+63.0 L†	1-4	2½ x 2½	9.5	1	BIKE ROUTE
	"A1" 126+00 R†	1-5	2½ x 2½	9.5	1	BIKE ROUTE
PD-2	"A1" 136+76.0 L†	2-1	2½ x 2½	9.5	1	BIKE ROUTE
						BEGIN
	"A1" 136+98.0 R†	2-2	2½ x 2½	9.5	1	BIKE ROUTE
	"A1" 140+00 L†	2-3	2½ x 2½	11.5	1	BICYCLE WARNING
						SHARE THE ROAD PLAQUE
	"A1" 150+80 R†	2-4	2½ x 2½	10.5	1	STOP
	"A1" 151+85.0 R†	2-5	2½ x 2½	10.5	1	STOP
	"A1" 152+28.1 R†	2-6	2½ x 2½	10.5	1	STOP
	"A1" 153+78.5 R†	2-7	2½ x 2½	9.5	1	BIKE ROUTE
						BEGIN
	"A1" 153+82.5 R†	2-8	2½ x 2½	9.5	1	BIKE ROUTE
						END
				TOTAL	13	

CONTRACTOR FURNISHED SIGNS

No.	SIGN CODE	SIGN SIZE L x D (In x In)	SINGLE FACED	DOUBLE FACED	SIGN FACING MATERIAL: BACKGROUND: SHEETING COLOR	SIGN FACING MATERIAL: BACKGROUND: RETROREFLECTIVE ASTM TYPE	SIGN FACING MATERIAL: LEGEND: SHEETING COLOR	SIGN FACING MATERIAL: LEGEND: RETROREFLECTIVE ASTM TYPE	SIGN PANEL SUBSTRATE MATERIAL (SQFT) ROADSIDE SINGLE-SHEET: FRP 0.135"	FRAMED ALUMINUM 0.063"	FRAMED ALUMINUM 0.080"	UNFRAMED ALUMINUM 0.063"	UNFRAMED ALUMINUM 0.080"	UNFRAMED ALUMINUM 0.125"
1-1	D11-1	24 x 18	X		GREEN	3	WHITE	3					3	
1-2	W11-1	36 x 36	X		FYG	3	BLACK	3					9	
	W16-1	18 x 24	X		YELLOW	3	BLACK	3					3	
1-3	D11-1	24 x 18	X		GREEN	3	WHITE	3					3	
	M4-11	12 x 4	X		GREEN	3	WHITE	3					0.3	
1-4	D11-1	24 x 18	X		GREEN	3	WHITE	3					3	
1-5	D11-1	24 x 18	X		GREEN	3	WHITE	3					3	
2-1	D11-1	24 x 18	X		GREEN	3	WHITE	3					3	
	M4-11	12 x 4	X		GREEN	3	WHITE	3					0.3	
2-2	D11-1	24 x 18	X		GREEN	3	WHITE	3					3	
2-3	W11-1	36 x 36	X		FYG	3	BLACK	3					9	
	W16-1	18 x 24	X		YELLOW	3	BLACK	3					3	
2-4	R1-1	30 x 30	X		RED	3	WHITE	3					6.3	
2-5	R1-1	30 x 30	X		RED	3	WHITE	3					6.3	
2-6	R1-1	30 x 30	X		RED	3	WHITE	3					6.3	
2-7	D11-1	24 x 18	X		GREEN	3	WHITE	3					3	
	M4-11	12 x 4	X		GREEN	3	WHITE	3					0.3	
2-8	D11-1	24 x 18	X		GREEN	3	WHITE	3					3	
	M4-12	12 x 4	X		GREEN	3	WHITE	3					0.3	
					TOTAL								68.1	

PAVEMENT DELINEATION AND SIGN QUANTITIES

PDQ-1

REVISED BY | DATE REVISED
JAVED IQBAL | MIKE MOGEN
CALCULATED-DESIGNED BY | CHECKED BY
FUNCTIONAL SUPERVISOR: JULIE CASEY

STATE OF CALIFORNIA - DEPARTMENT OF TRANSPORTATION
Caltrans® DESIGN

P:\proj2\02\4c960_plans\pse\24c960nc001.dgn

LAST REVISION 06-12-12 | DATE PLOTTED => 27-JUN-2012 | TIME PLOTTED => 10:33

Dist	COUNTY	ROUTE	POST MILES TOTAL PROJECT	SHEET No.	TOTAL SHEETS
02	Tri	3	7.1/8.3	28	40

REGISTERED CIVIL ENGINEER 06-12-12 DATE

06-25-12
PLANS APPROVAL DATE

REGISTERED PROFESSIONAL ENGINEER MIKE MOGEN No. 67018 Exp. 09-30-12 CIVIL STATE OF CALIFORNIA

THE STATE OF CALIFORNIA OR ITS OFFICERS OR AGENTS SHALL NOT BE RESPONSIBLE FOR THE ACCURACY OR COMPLETENESS OF SCANNED COPIES OF THIS PLAN SHEET.

NOTE:

1. (N) - NOT A SEPARATE PAY ITEM, FOR INFORMATION ONLY

THERMOPLASTIC TRAFFIC STRIPE (SPRAYABLE)

STATION	4" WHITE	
	DETAIL	DETAIL
	27B	27C
	LF	LF
"A1" 112+40 TO 138+51	4620	630
SUBTOTAL	4620	630
TOTAL	5250	

CULVERT MARKER

LAYOUT SHEET No.	DRAINAGE SYSTEM No.	ALIGNMENT	STATION	POST MILE	LEFT	RIGHT	MARKER (CULVERT)
							EA
L-1	2	"A1"	113+03	7.48	X		1
L-2	3	"A1"	118+66	7.59	X	X	2
	4	"A1"	124+78	7.69	X		1
	5	"A1"	125+00	7.70	X		1
	5	"A1"	125+54	7.71	X		1
	6	"A1"	132+95	7.85	X	X	2
L-3	7	"A1"	135+56	7.90	X		1
L-4	8	"A1"	152+31	8.22		X	1
						TOTAL	10

PAVEMENT DELINEATION AND SIGN QUANTITIES

PDQ-2

REVISED BY | DATE REVISED

JAVED IQBAL | MIKE MOGEN

CALCULATED-DESIGNED BY | CHECKED BY

FUNCTIONAL SUPERVISOR: JULIE CASEY

STATE OF CALIFORNIA - DEPARTMENT OF TRANSPORTATION

Caltrans® DESIGN

P:\proj2\02\4c960_plans\pse\24c960nc002.dgn

LAST REVISION 06-12-12 | DATE PLOTTED => 27-JUN-2012 TIME PLOTTED => 10:33

Dist	COUNTY	ROUTE	POST MILES TOTAL PROJECT	SHEET No.	TOTAL SHEETS
02	Tri	3	7.1/8.3	29	40

REGISTERED CIVIL ENGINEER 06-12-12 DATE

06-25-12
PLANS APPROVAL DATE

REGISTERED PROFESSIONAL ENGINEER MIKE MOGEN No. 67018 Exp. 09-30-12 CIVIL STATE OF CALIFORNIA

THE STATE OF CALIFORNIA OR ITS OFFICERS OR AGENTS SHALL NOT BE RESPONSIBLE FOR THE ACCURACY OR COMPLETENESS OF SCANNED COPIES OF THIS PLAN SHEET.

NOTES:

1. USE A 2¼" Sq TUBE x 30" LONG, 3/16" THICK ANCHOR FOR 2" POSTS.
   USE A 3" Sq TUBE x 3' LONG, 3/16" THICK ANCHOR FOR 2-1/2 " POSTS.
2. USE A 5/16" CORNER BOLT OR TWO DRIVE RIVETS TO FASTEN ASSEMBLED SIGN AND POST INTO ANCHOR. INSTALL CORNER BOLT OR DRIVE RIVETS INTO THE SIDES FACING TRAFFIC.
3. REMOVE EXISTING AC OR PCC, DRIVE ANCHOR SLEEVE INTO SOIL AND RECAP WITH LIKE MATERIAL, MATCHING EXISTING THICKNESS.
4. 2" POSTS ARE TO BE 1/8" THICK, PERFORATIONS OF 7/16" IN DIAMETER ARE 1" ON CENTER ON ALL SIDES, LENGTHS ARE 10' AND 12'.
5. 2-1/2" POSTS ARE TO BE 1/8" THICK, PERFORATIONS OF 7/16" IN DIAMETER ARE 1" ON CENTER ON ALL SIDES, 2-1/2" POSTS ARE 12' AND 14' IN LENGTH.
6. FOR DETAILS NOT SHOWN, REFER TO THE STANDARD PLANS.
7. 2-1/2" POSTS SHALL BE USED IN SIDEWALK AND HIGH PEDESTRIAN USE PLACEMENTS.
8. ALL ANCHOR SLEEVES SHALL BE EMBEDDED IN PCC, EXCEPT FOR INSTALLATIONS IN PAVEMENTS OR SIDEWALKS.

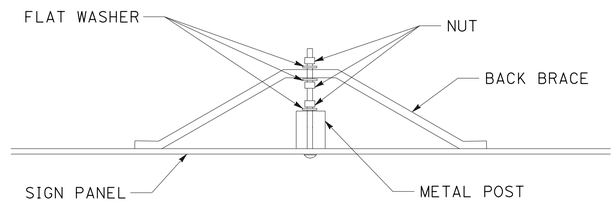

BACK BRACE MOUNTING DETAIL

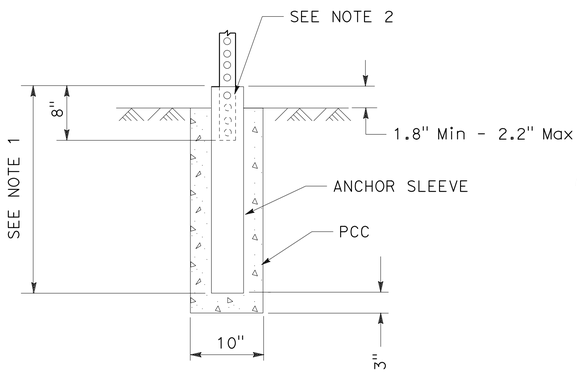

INSTALLATION IN SOIL (PCC)
(SEE NOTE 8)

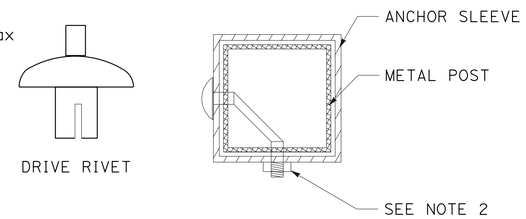

FASTENER DETAILS

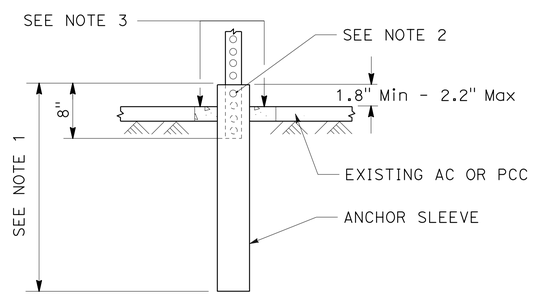

INSTALLATION IN EXISTING AC OR PCC

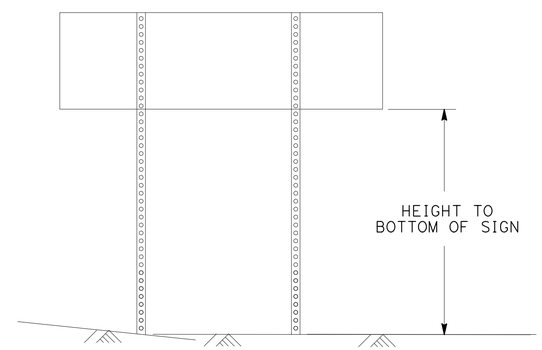

TWO POSTS INSTALLATION
(POST SIZE, SEE CHART BELOW)

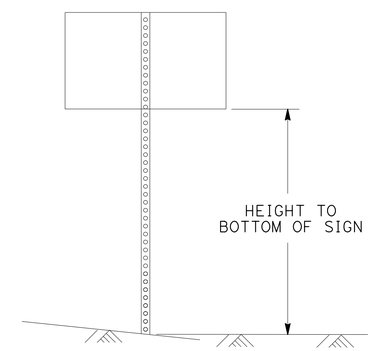

SINGLE POST INSTALLATION
(POST SIZE, SEE CHART BELOW)

Max Sq Ft OF SIGN

POST SIZE	60"	72"	84"	96"	108"	120"
2"	18	16	14	12	10	8
2.5"	35	32	28	24	21	21

HEIGHT TO BOTTOM OF SIGN
DOUBLE POST GROUND SIGNS
70 MPH WIND SPEED

Max Sq Ft OF SIGN

POST SIZE	60"	72"	84"	96"	108"	120"
2"	10.5	10	8.7	7.4	6.2	5
2.5"	16	16	16	16	12	12

HEIGHT TO BOTTOM OF SIGN
SINGLE POST GROUND SIGNS
70 MPH WIND SPEED

METAL SIGN POST DETAIL

METAL SIGN POST INSTALLATION DETAILS

SIGN DETAILS

NO SCALE **SD-1**

REVISED BY	DATE REVISED

CALCULATED-DESIGNED BY: JAVED IQBAL
CHECKED BY: MIKE MOGEN
FUNCTIONAL SUPERVISOR: JULIE CASEY

STATE OF CALIFORNIA - DEPARTMENT OF TRANSPORTATION
Caltrans
DESIGN

P:\proj2\02\4c960_plans\pse\24c960ob001.dgn

LAST REVISION 06-12-12 | DATE PLOTTED => 27-JUN-2012 | TIME PLOTTED => 10:33

Dist	COUNTY	ROUTE	POST MILES TOTAL PROJECT	SHEET No.	TOTAL SHEETS
02	Tri	3	7.1/8.3	30	40

REGISTERED CIVIL ENGINEER 06-12-12 DATE

06-25-12
PLANS APPROVAL DATE

REGISTERED PROFESSIONAL ENGINEER MIKE MOGEN No. 67018 Exp. 09-30-12 CIVIL STATE OF CALIFORNIA

THE STATE OF CALIFORNIA OR ITS OFFICERS OR AGENTS SHALL NOT BE RESPONSIBLE FOR THE ACCURACY OR COMPLETENESS OF SCANNED COPIES OF THIS PLAN SHEET.

NOTE:

1. (N) - NOT A SEPARATE PAY ITEM, FOR INFORMATION ONLY

EROSION CONTROL

STATION	LOCATION	EROSION CONTROL (DRY SEED)	(N) LOCAL TOPSOIL	COMPOST (INCORPORATE)	ROLLED EROSION CONTROL PRODUCT (BLANKET) (TYPE B)
	R†/L†	SQFT	CY	SQYD	SQFT
"A1" 105+72 TO "A1" 107+25	R†	1160		130	1890
"A1" 115+50 TO "A1" 117+16.14	R†	1600		180	2205
"A1" 133+20 TO "A1" 135+50	R†	2290		255	3105
"A1" 133+00 TO "A1" 135+32	L†		7		
"A1" 135+51 TO "A1" 137+00	L†		5		
TOTAL		5050	12	565	7200

EROSION CONTROL (HYDROSEED)

STATION	LOCATION	EROSION CONTROL (HYDROSEED)
	R†/L†	ACRE
"A1" 105+00 TO "A1" 153+70	R† & L†	1.2

ROADWAY ITEMS

STATION	LOCATION	ROADWAY EXCAVATION	(N) EMBANKMENT	SHOULDER BACKING	CLASS 2 AGGREGATE BASE	HOT MIX ASPHALT (TYPE A)	ROCK SLOPE PROTECTION FABRIC (CLASS 8)	CLASS 2 PERMEABLE MATERIAL (BLANKET)	TACK COAT	COMMENTS
	R†/L†	CY	CY	TON	CY	TON	SQYD	CY	TON	
"A1" 106+00.00 TO "A1" 137+32.80	R†/L†	1383	1057	235	910	948			0.8	SHOULDER WIDENING
"A1" 133+00.00 TO "A1" 137+04.32	L†	150	356		55		520	100		SUBGRADE REINFORCEMENT
"A1" 133+00.00 TO "A1" 135+32	L†	7								LOCAL TOPSOIL
"A1" 135+51 TO "A1" 137+00	L†	5								LOCAL TOPSOIL
"A1" 150+72.44 TO "A1" 151+87.79	R†	6	150	7	15	23			0.1	BIKE ROUTE
"B1" 1+00.00 TO "B1" 2+94.14	R†	34	160	10	20	24			0.1	BIKE ROUTE
SHEET DQ-3						1	112.5			DRAINAGE SYSTEM No. 1,4,9
TOTAL		1735	1723	252	1000	996	632.5	100	1.0	

SUMMARY OF QUANTITIES

Q-1

REVISED BY | DATE REVISED
JAVED IQBAL | MIKE MOGEN
CALCULATED-DESIGNED BY | CHECKED BY
FUNCTIONAL SUPERVISOR: JULIE CASEY
STATE OF CALIFORNIA - DEPARTMENT OF TRANSPORTATION
Caltrans DESIGN

P:\proj2\02\4c960_plans\pse\24c960pa001.dgn

LAST REVISION 06-12-12 | DATE PLOTTED => 27-JUN-2012 TIME PLOTTED => 10:33

DIST	COUNTY	ROUTE	POST MILES TOTAL PROJECT	SHEET NO.	TOTAL SHEETS
02	Tri	3	7.1/8.3	31	40

Robert B Schott
LICENSED LANDSCAPE ARCHITECT

April 3, 2009
PLANS APPROVAL DATE

The State of California or its officers or agents shall not be responsible for the accuracy or completeness of electronic copies of this plan sheet.

LICENSED LANDSCAPE ARCHITECT
Robert B. Schott 3695
Signature
11-30-10
Renewal Date
2-25-09
Date
STATE OF CALIFORNIA

To accompany plans dated 6-25-12

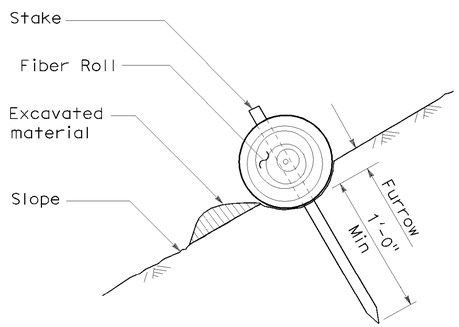

SECTION

TEMPORARY FIBER ROLL (TYPE 1)

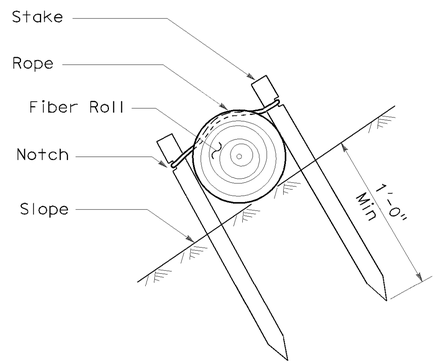

SECTION

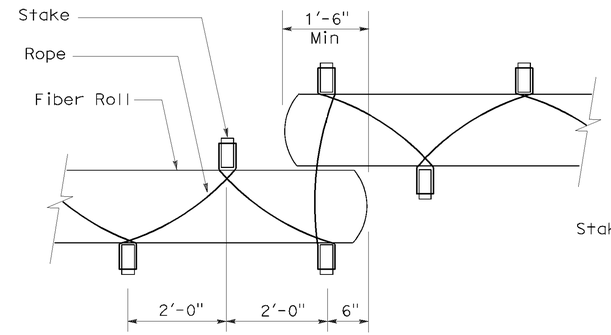

PLAN

TEMPORARY FIBER ROLL (TYPE 2)

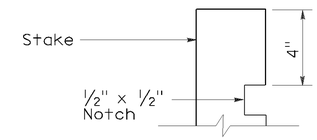

ELEVATION

STAKE NOTCH DETAIL

NOTES:

1. Temporary fiber roll spacing varies depending upon slope inclination.
2. Installations shown in the perspectives are for slope inclination of 10:1 and steeper.

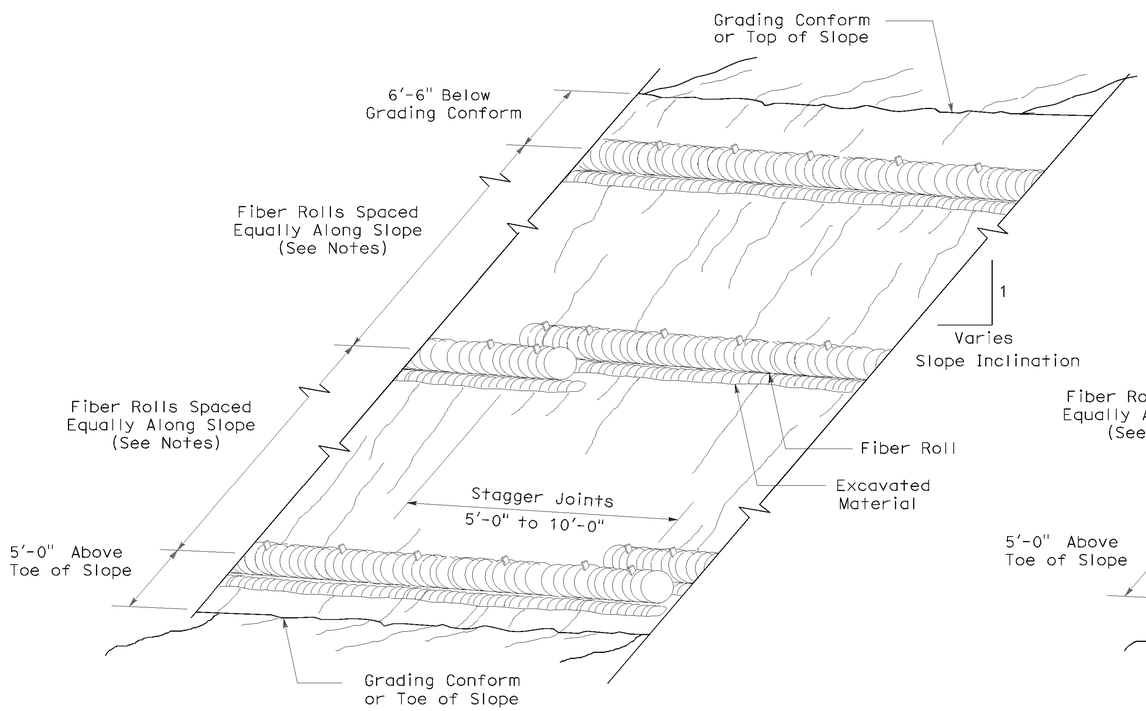

PERSPECTIVE

TEMPORARY FIBER ROLL (TYPE 1)

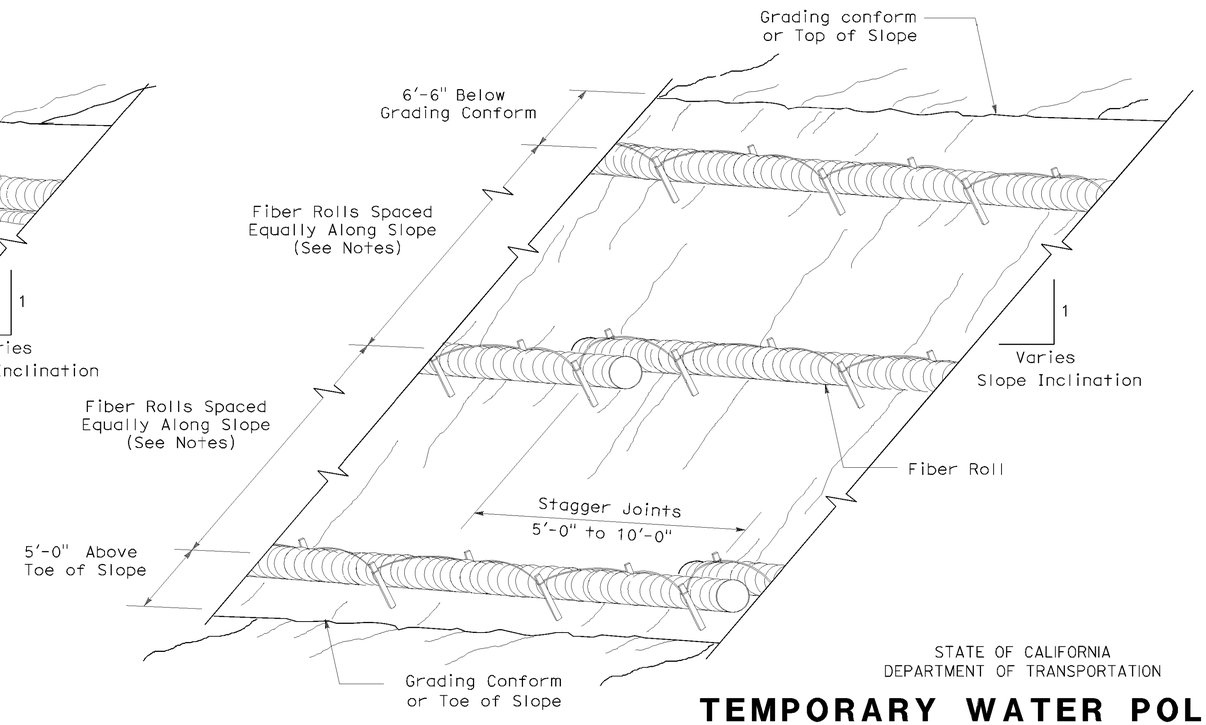

PERSPECTIVE

TEMPORARY FIBER ROLL (TYPE 2)

STATE OF CALIFORNIA
DEPARTMENT OF TRANSPORTATION

TEMPORARY WATER POLLUTION CONTROL DETAILS (TEMPORARY FIBER ROLL)

NO SCALE

RSP T56 DATED APRIL 3, 2009 SUPERSEDES STANDARD PLAN T56 DATED MAY 1, 2006 - PAGE 232 OF THE STANDARD PLANS BOOK DATED MAY 2006.

REVISED STANDARD PLAN RSP T56

2006 REVISED STANDARD PLAN RSP T56

P:\proj2\02\4c960_plans\pse\24c960va001.dgn

USERNAME => s115152
DGN FILE => 24c960va001.dgn

DATE PLOTTED => 27-JUN-2012
TIME PLOTTED => 10:33

2-23-09

DIST	COUNTY	ROUTE	POST MILES TOTAL PROJECT	SHEET NO.	TOTAL SHEETS
02	Tri	3	7.1/8.3	32	40

Robert B Schott
LICENSED LANDSCAPE ARCHITECT

August 15, 2008
PLANS Approval DATE

LICENSED LANDSCAPE ARCHITECT
Robert B. Schott 3855
Signature
11-04-08
Renewal Date
08-11-08
Date
STATE OF CALIFORNIA

The State of California or its officers or agents shall not be responsible for the accuracy or completeness of electronic copies of this plan sheet.

To accompany plans dated 6-25-12

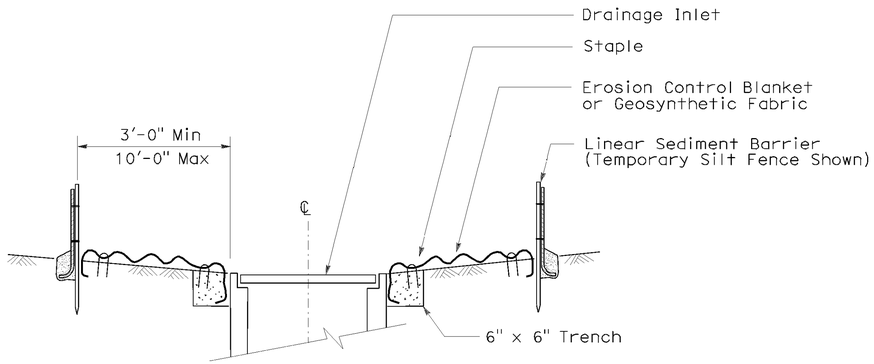

SECTION A-A

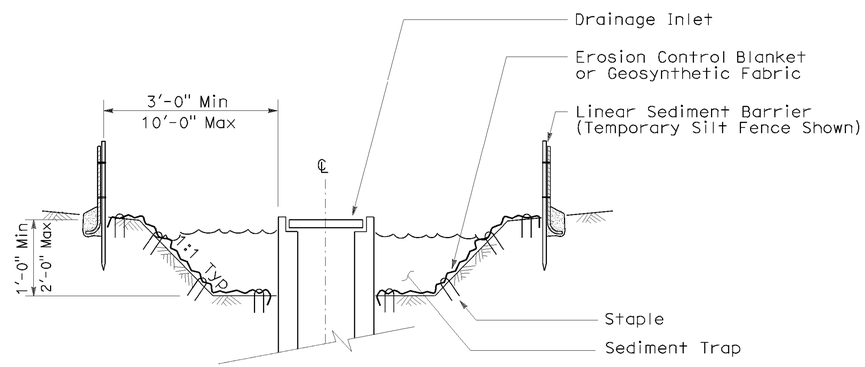

SECTION B-B

NOTES:

1. See Standard Plan T51 for Temporary Silt Fence.
2. Dimensions may vary to fit field conditions.

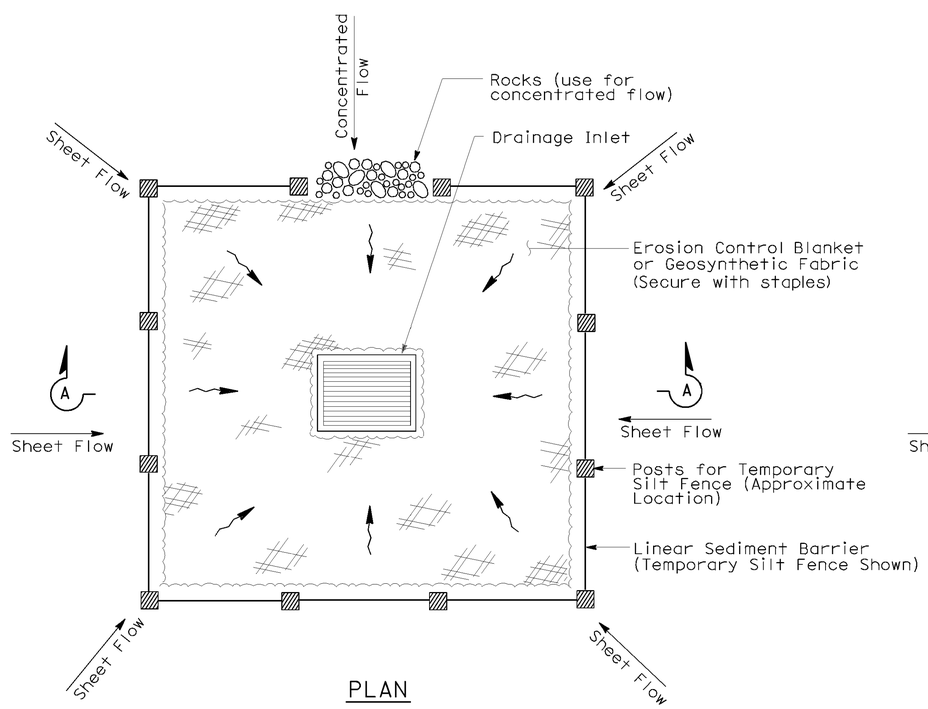

PLAN

TEMPORARY DRAINAGE INLET PROTECTION (TYPE 1)

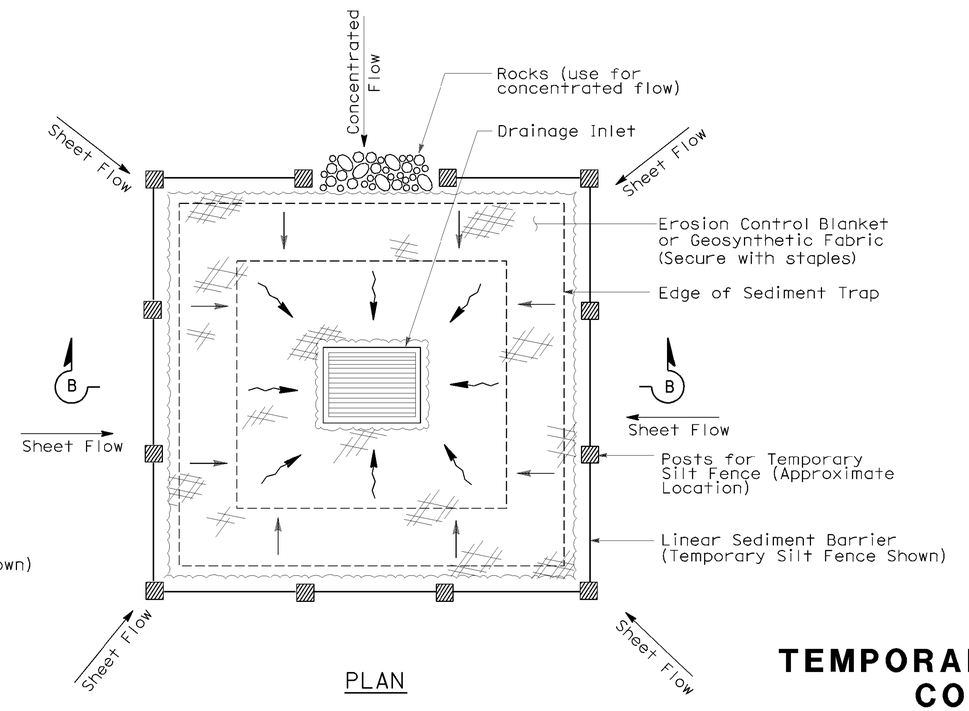

PLAN

TEMPORARY DRAINAGE INLET PROTECTION (TYPE 2) (EXCAVATED SEDIMENT TRAP)

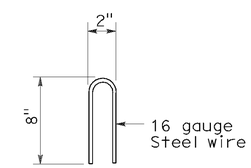

STAPLE DETAIL

STATE OF CALIFORNIA
DEPARTMENT OF TRANSPORTATION

TEMPORARY WATER POLLUTION CONTROL DETAILS (TEMPORARY DRAINAGE INLET PROTECTION)

NO SCALE

Nsp t61 dated august 15, 2008 supplements the standard plans book dated may 2006.

NEW STANDARD PLAN NSP T61

2006 NEW STANDARD PLAN NSP T61

DATE PLOTTED => 27-JUN-2012
TIME PLOTTED => 10:33

P:\proj2\02\4c960_plans\pse\24c960va002.dgn

USERNAME => s115152
DGN FILE => 24c960va002.dgn

7-11-08

DIST	COUNTY	ROUTE	POST MILES TOTAL PROJECT	SHEET NO.	TOTAL SHEETS
02	Tri	3	7.1/8.3	33	40

LICENSED LANDSCAPE ARCHITECT

August 15, 2008
PLANS APPROVAL DATE

The State of California or its officers or agents shall not be responsible for the accuracy or completeness of electronic copies of this plan sheet.

LICENSED LANDSCAPE ARCHITECT — Robert B. Schott — Signature — 11-04-08 Renewal Date — 08-11-08 Date — STATE OF CALIFORNIA

To accompany plans dated 6-25-12

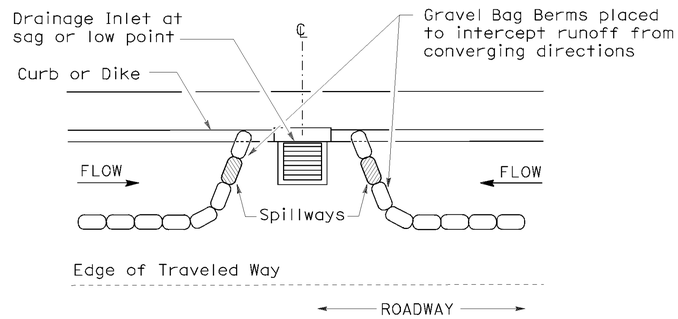

PLAN

CONFIGURATION FOR SAG POINT INLET (GRAVEL BAG BERM)

GRAVEL BAG BERM (TYPE 3A) SPACING TABLE

SLOPE OF ROADWAY (PERCENT)	1 to 3.9	4 to 5.9	6 to 7.9	8 to 10	10+
INTERVAL BETWEEN BERM	100′	75′	50′	25′	12′

For slope of less than 1%, install barriers only if erosion/sediment is prevalent

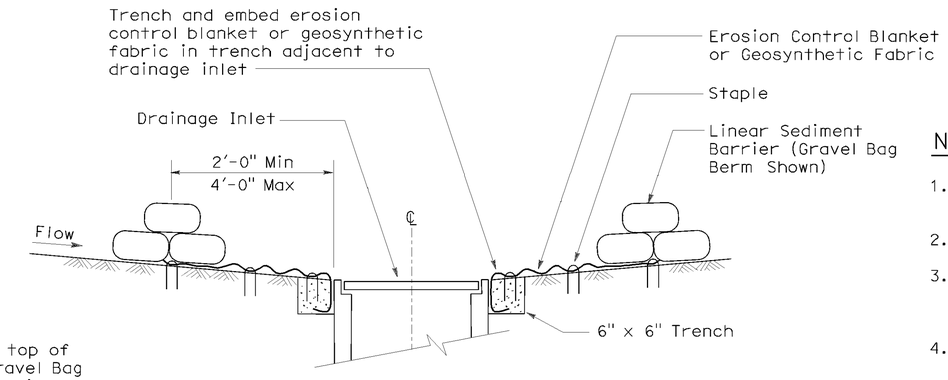

SECTION A-A

NOTES:

1. Place safety cones adjacent to drainage inlet protection.
2. Dimensions may vary to fit field conditions.
3. Install a minimum of 3 gravel bag berms upstream of each drainage inlet to be protected.
4. Position erosion control blanket or geosynthetic fabric at edge of concrete apron and secure in trench.
5. Erosion control blanket or geosynthetic fabric is not required if the area adjacent to the drainage inlet is vegetated or paved.

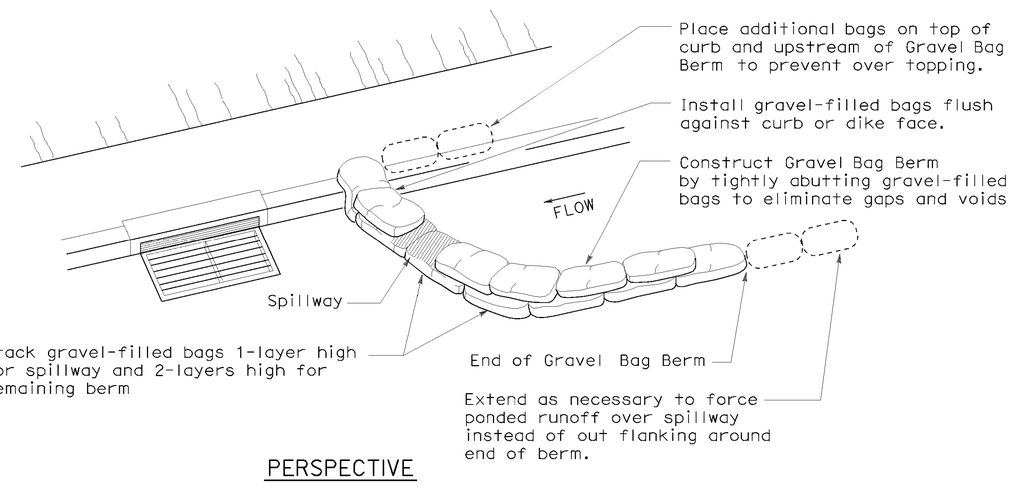

PERSPECTIVE

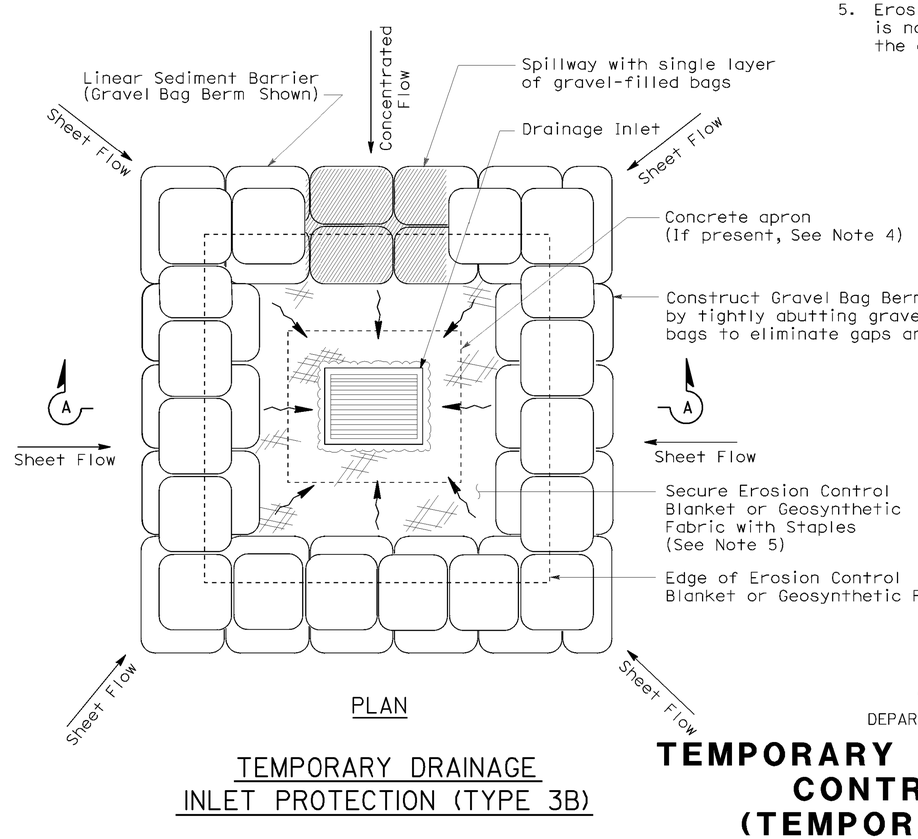

PLAN

TEMPORARY DRAINAGE INLET PROTECTION (TYPE 3B)

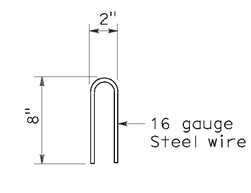

STAPLE DETAIL

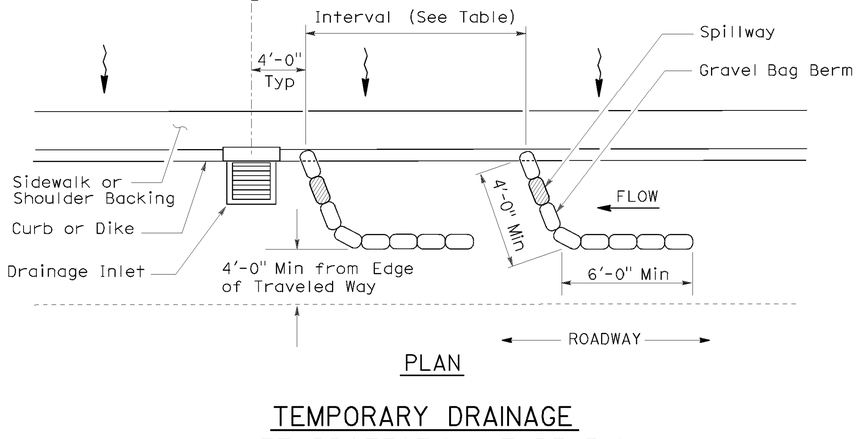

PLAN

TEMPORARY DRAINAGE INLET PROTECTION (TYPE 3A) (GRAVEL BAG BERM)

STATE OF CALIFORNIA
DEPARTMENT OF TRANSPORTATION

TEMPORARY WATER POLLUTION CONTROL DETAILS (TEMPORARY DRAINAGE INLET PROTECTION)

NO SCALE

NSP T62 DATED AUGUST 15, 2008 SUPPLEMENTS THE STANDARD PLANS BOOK DATED MAY 2006.

NEW STANDARD PLAN NSP T62

2006 NEW STANDARD PLAN NSP T62

P:\proj2\02\4c960_plans\pse\24c960va003.dgn
USERNAME => s115152
DGN FILE => 24c960va003.dgn
DATE PLOTTED => 27-JUN-2012
TIME PLOTTED => 10:33
7-11-08

DIST	COUNTY	ROUTE	POST MILES TOTAL PROJECT	SHEET NO.	TOTAL SHEETS
02	Tri	3	7.1/8.3	34	40

LICENSED LANDSCAPE ARCHITECT

August 15, 2008
PLANS APPROVAL DATE

The State of California or its officers or agents shall not be responsible for the accuracy or completeness of electronic copies of this plan sheet.

LICENSED LANDSCAPE ARCHITECT — Robert B. Schott — Signature — 11-04-08 Renewal Date — 08-11-08 Date — STATE OF CALIFORNIA

To accompany plans dated 6-25-12

FLEXIBLE SEDIMENT BARRIER SPACING TABLE

SLOPE OF ROADWAY (PERCENT)	0 to 0.9	1 to 1.9	2 to 2.9	3 to 4	5+
INTERVAL BETWEEN BARRIERS	50′	35′	30′	25′	20′
ANGLE FROM FACE OF CURB	70°	70°	70°	45°	45°
SUGGESTED BARRIER LENGTH	6′	6′	6′	6′	6′

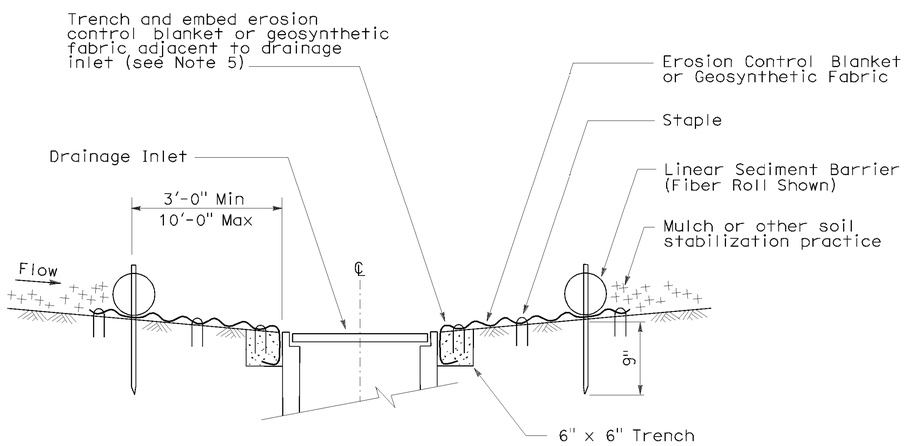

SECTION A-A

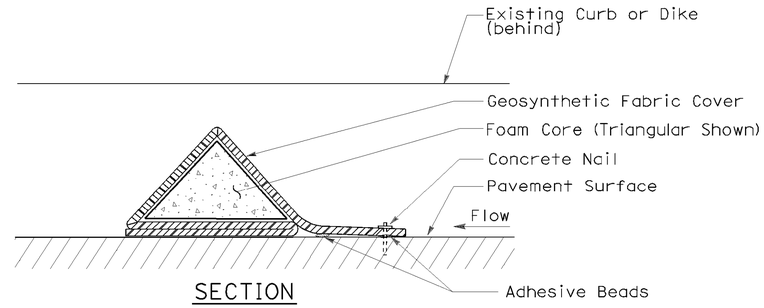

SECTION

FLEXIBLE SEDIMENT BARRIER DETAIL (FOAM BARRIER SHOWN)

NOTES:

1. See Standard Plan T51 for Temporary Silt Fence.
2. Dimensions may vary to fit field conditions.
3. Install a minimum of 3 flexible sediment barriers upstream of each drainage inlet to be protected.
4. Position erosion control blanket or geosynthetic fabric at edge of concrete apron and secure in trench.
5. Erosion control blanket or geosynthetic fabric is not required if the area adjacent to the drainage inlet is vegetated.

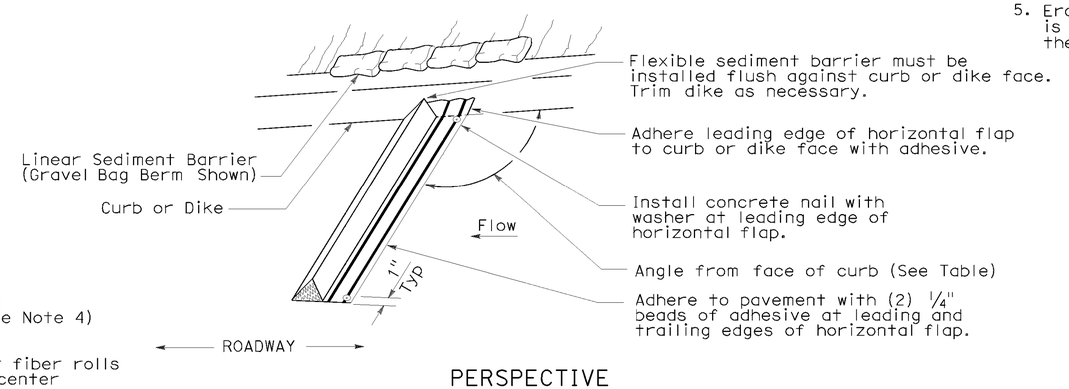

PERSPECTIVE

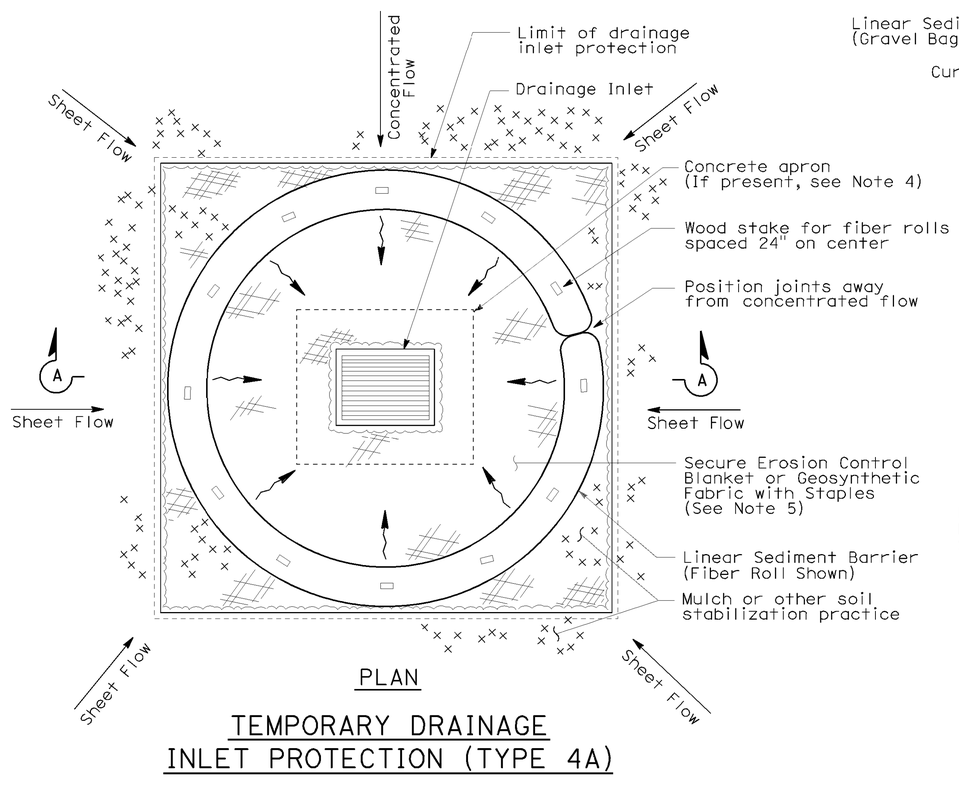

PLAN

TEMPORARY DRAINAGE INLET PROTECTION (TYPE 4A)

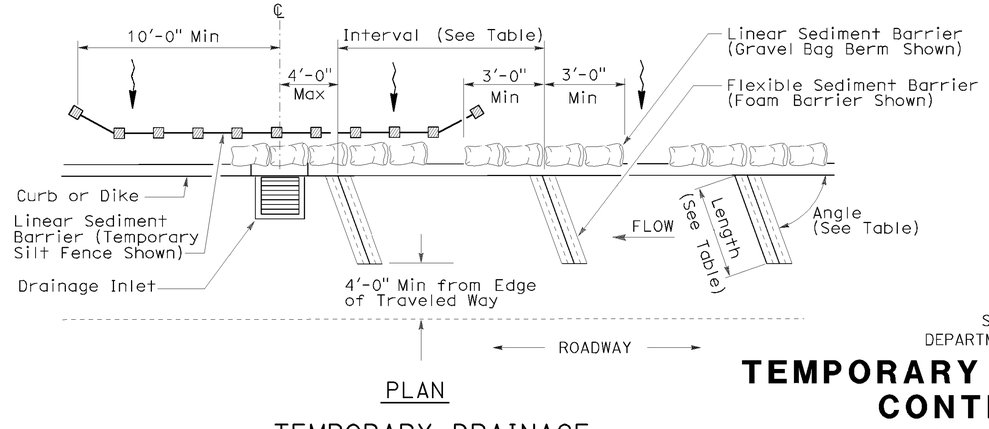

PLAN

TEMPORARY DRAINAGE INLET PROTECTION (TYPE 4B) FLEXIBLE SEDIMENT BARRIER

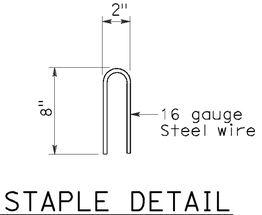

STAPLE DETAIL

STATE OF CALIFORNIA
DEPARTMENT OF TRANSPORTATION

TEMPORARY WATER POLLUTION CONTROL DETAILS (TEMPORARY DRAINAGE INLET PROTECTION)

NO SCALE

NSP T63 DATED AUGUST 15, 2008 SUPPLEMENTS THE STANDARD PLANS BOOK DATED MAY 2006.

NEW STANDARD PLAN NSP T63

2006 NEW STANDARD PLAN NSP T63

P:\proj2\02\4c960_plans\pse\24c960va004.dgn

USERNAME => s115152
DGN FILE => 24c960va004.dgn

DATE PLOTTED => 27-JUN-2012
TIME PLOTTED => 10:34

7-11-03

DIST	COUNTY	ROUTE	POST MILES TOTAL PROJECT	SHEET NO.	TOTAL SHEETS
02	Tri	3	7.1/8.3	35	40

LICENSED LANDSCAPE ARCHITECT

August 15, 2008
PLANS APPROVAL DATE

The State of California or its officers or agents shall not be responsible for the accuracy or completeness of electronic copies of this plan sheet.

LICENSED LANDSCAPE ARCHITECT — Robert B. Schott — Signature — 11-04-08 Renewal Date — 08-11-08 Date — STATE OF CALIFORNIA

To accompany plans dated 6-25-12

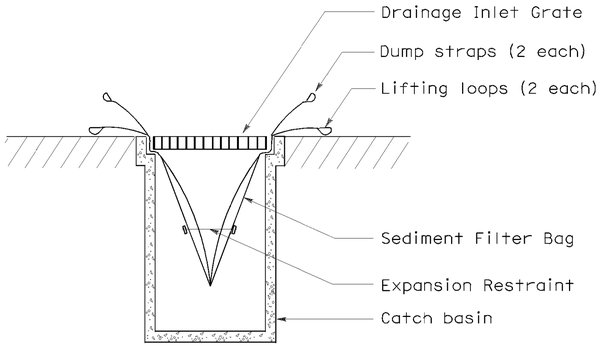

SECTION B-B

SEDIMENT FILTER BAG DETAIL

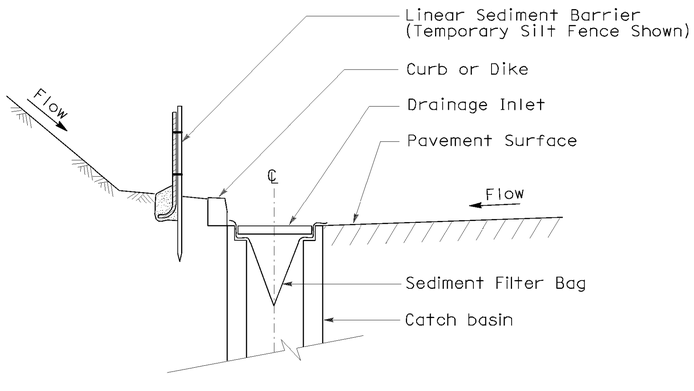

SECTION A-A

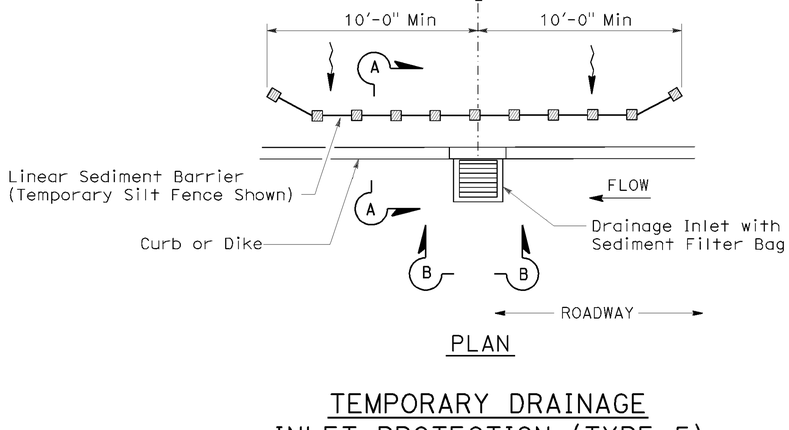

PLAN

TEMPORARY DRAINAGE INLET PROTECTION (TYPE 5) (SEDIMENT FILTER BAG)

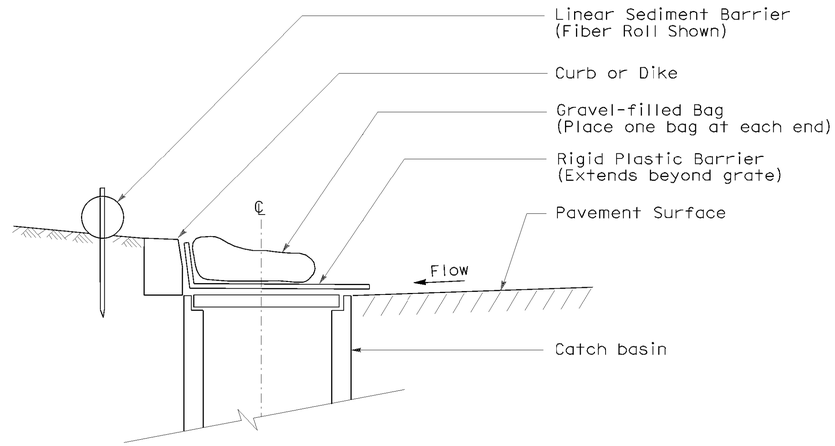

SECTION

TEMPORARY DRAINAGE INLET PROTECTION (TYPE 6A) (CATCH BASIN WITH GRATE)

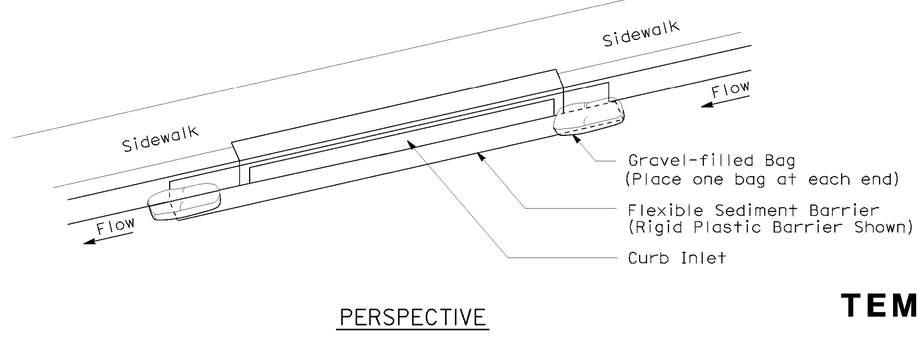

PERSPECTIVE

TEMPORARY DRAINAGE INLET PROTECTION (TYPE 6B) (CURB INLET WITHOUT GRATE)

NOTES:

1. See Standard Plan T51 for Temporary Silt Fence.
2. Dimensions may vary to fit field conditions.

STATE OF CALIFORNIA
DEPARTMENT OF TRANSPORTATION

TEMPORARY WATER POLLUTION CONTROL DETAILS (TEMPORARY DRAINAGE INLET PROTECTION)

NO SCALE

NSP T64 DATED AUGUST 15, 2008 SUPPLEMENTS
THE STANDARD PLANS BOOK DATED MAY 2006.

NEW STANDARD PLAN NSP T64

2006 NEW STANDARD PLAN NSP T64

P:\proj2\02\4c960_plans\pse\24c960va005.dgn
USERNAME => s115152
DGN FILE => 24c960va005.dgn
DATE PLOTTED => 27-JUN-2012
TIME PLOTTED => 10:34
7-11-08

DIST	COUNTY	ROUTE	POST MILES TOTAL PROJECT	SHEET NO.	TOTAL SHEETS
02	Tri	3	7.1/8.3	36	40

Gregory A Balzer
LICENSED LANDSCAPE ARCHITECT

June 5, 2009
PLANS APPROVAL DATE

LICENSED LANDSCAPE ARCHITECT
Gregory A. Balzer 2576
Signature
2-28-11
Renewal Date
5-14-09
Date
STATE OF CALIFORNIA

The State of California or its officers or agents shall not be responsible for the accuracy or completeness of electronic copies of this plan sheet.

To accompany plans dated 6-25-12

NOTE:

1. Fiber Roll/Compost Sock shown for reference purposes only.
2. If transverse rolled erosion control product joints are required on slopes, see Detail B.

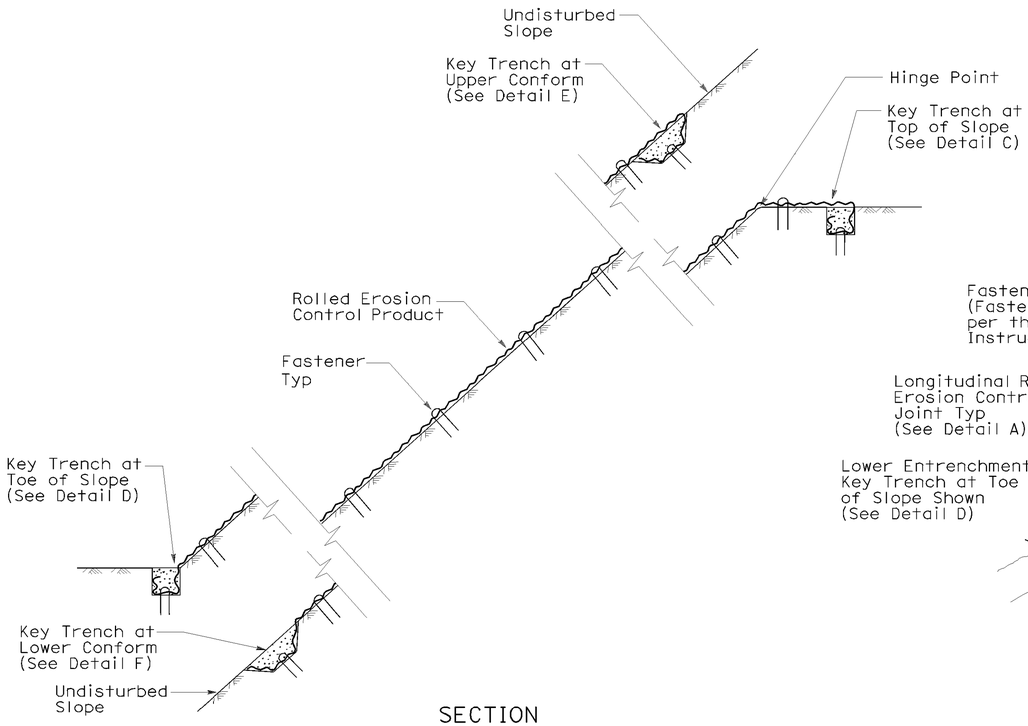

SECTION

ROLLED EROSION CONTROL PRODUCT
ON SLOPE WITH VARIOUS KEY ENTRENCHMENTS

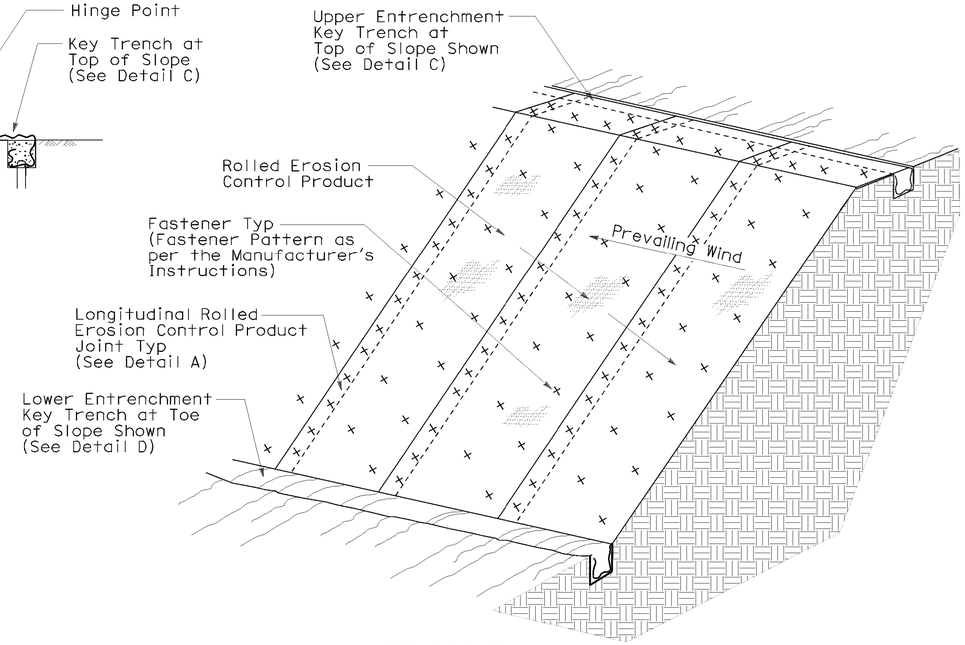

ISOMETRIC

ROLLED EROSION CONTROL PRODUCT
ON SLOPE

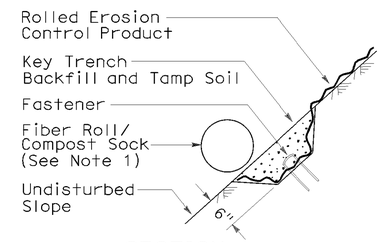

SECTION

DETAIL F
KEY TRENCH AT
LOWER CONFORM

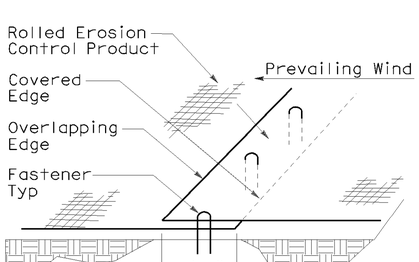

PERSPECTIVE

DETAIL A
LONGITUDINAL ROLLED EROSION
CONTROL PRODUCT JOINT

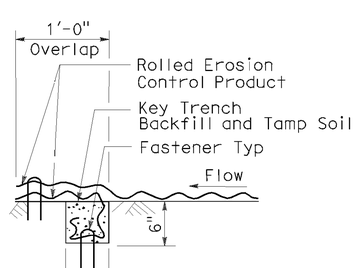

SECTION

DETAIL B
TRANSVERSE ROLLED EROSION
CONTROL PRODUCT JOINT

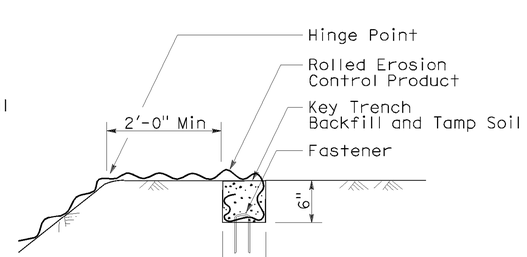

SECTION

DETAIL C
KEY TRENCH AT
TOP OF SLOPE

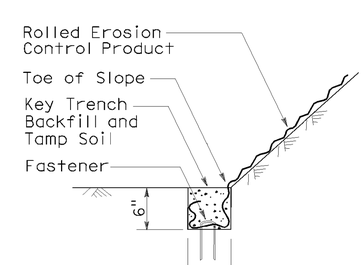

SECTION

DETAIL D
KEY TRENCH AT
TOE OF SLOPE

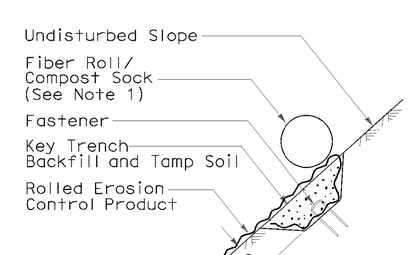

SECTION

DETAIL E
KEY TRENCH AT
UPPER CONFORM

STATE OF CALIFORNIA
DEPARTMENT OF TRANSPORTATION

ROLLED EROSION CONTROL PRODUCT

NO SCALE

NSP H53 DATED JUNE 5, 2009 SUPPLEMENTS
THE STANDARD PLANS BOOK DATED MAY 2006.

NEW STANDARD PLAN NSP H53

2006 NEW STANDARD PLAN NSP H53

P:\proj2\02\4c960_plans\pse\24c960va006.dgn

USERNAME => s115152
DGN FILE => 24c960va006.dgn

DATE PLOTTED => 27-JUN-2012
TIME PLOTTED => 10:34

3-4-09

DIST	COUNTY	ROUTE	POST MILES TOTAL PROJECT	SHEET NO.	TOTAL SHEETS
02	Tri	3	7.1/8.3	37	40

Randell D. Hiatt
REGISTERED CIVIL ENGINEER

June 6, 2008
PLANS APPROVAL DATE

REGISTERED PROFESSIONAL ENGINEER
Randell D. Hiatt
No. C50200
Exp. 6-30-09
CIVIL
STATE OF CALIFORNIA

The State of California or its officers or agents shall not be responsible for the accuracy or completeness of electronic copies of this plan sheet.

To accompany plans dated 6-25-12

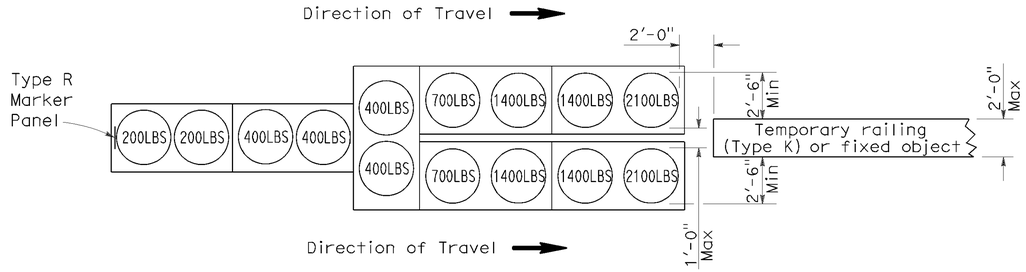

ARRAY 'TU14'

Approach speed 45 mph or more

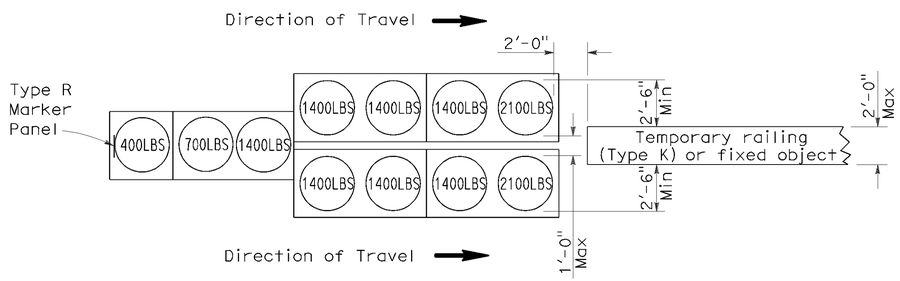

ARRAY 'TU11'

Approach speed less than 45 mph

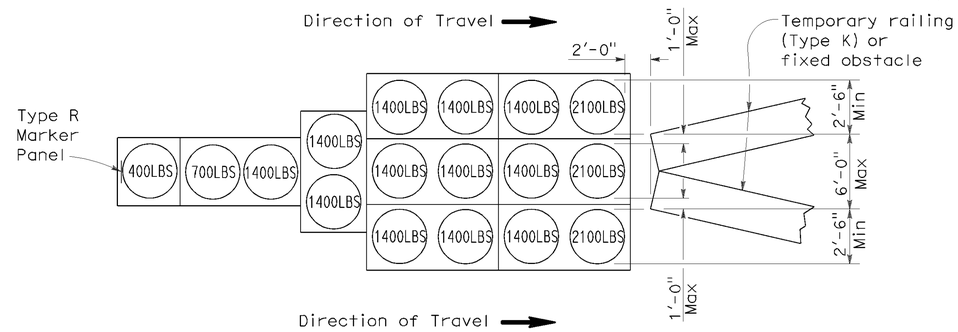

ARRAY 'TU17'

Approach speed less than 45 mph

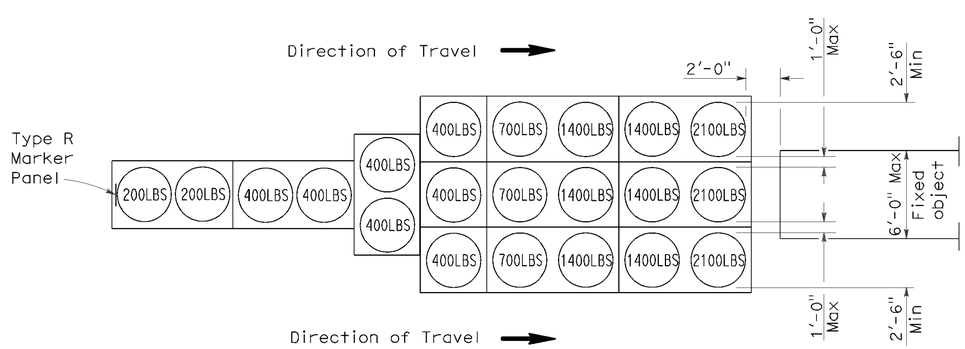

ARRAY 'TU21'

Approach speed 45 mph or more

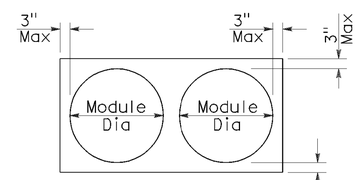

PLAN

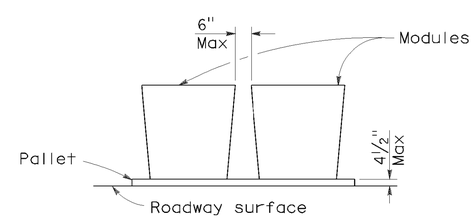

ELEVATION

CRASH CUSHION PALLET DETAIL

See Note 7

NOTES:

1. (XXX) Indicates sand filled module location and weight of sand in pounds for each module. Module spacing is based on the greater diameter of the module.
2. All sand weights are nominal.
3. Temporary crash cushion arrays shall not encroach on the traveled way.
4. Place the top of Type R marker panel 1" below the module lid.
5. Refer to Standard Plan A73B for marker details.
6. Approach speeds indicated conform to NCHRP 350 Report criteria.
7. Use of pallets is optional.

STATE OF CALIFORNIA
DEPARTMENT OF TRANSPORTATION

TEMPORARY CRASH CUSHION, SAND FILLED (UNIDIRECTIONAL)

NO SCALE

RSP T1A DATED JUNE 6, 2008 SUPERSEDES STANDARD PLAN T1A
DATED MAY 1, 2006 - PAGE 211 OF THE STANDARD PLANS BOOK DATED MAY 2006.

REVISED STANDARD PLAN RSP T1A

2006 REVISED STANDARD PLAN RSP T1A

P:\proj2\02\4c960_plans\pse\24c960va007.dgn
USERNAME => s115152
DGN FILE => 24c960va007.dgn
DATE PLOTTED => 27-JUN-2012
TIME PLOTTED => 10:34
5-15-08

DIST	COUNTY	ROUTE	POST MILES TOTAL PROJECT	SHEET NO.	TOTAL SHEETS
02	Tri	3	7.1/8.3	38	40

Randell D. Hiatt
REGISTERED CIVIL ENGINEER

June 6, 2008
PLANS APPROVAL DATE

REGISTERED PROFESSIONAL ENGINEER
Randell D. Hiatt
No. C50200
Exp. 6-30-09
CIVIL
STATE OF CALIFORNIA

The State of California or its officers or agents shall not be responsible for the accuracy or completeness of electronic copies of this plan sheet.

To accompany plans dated 6-25-12

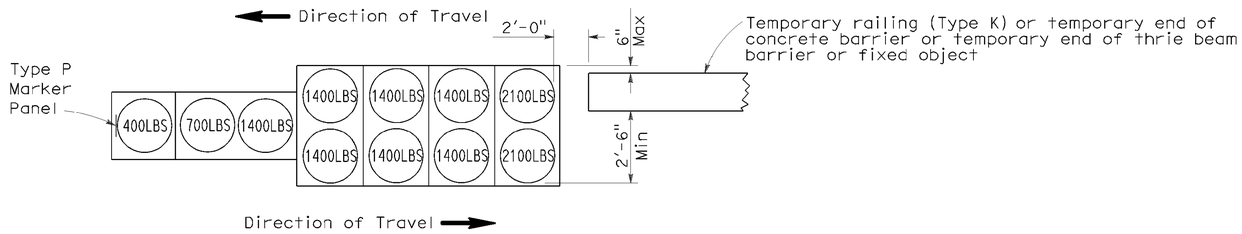

ARRAY 'TB11'

Approach speed less than 45 mph

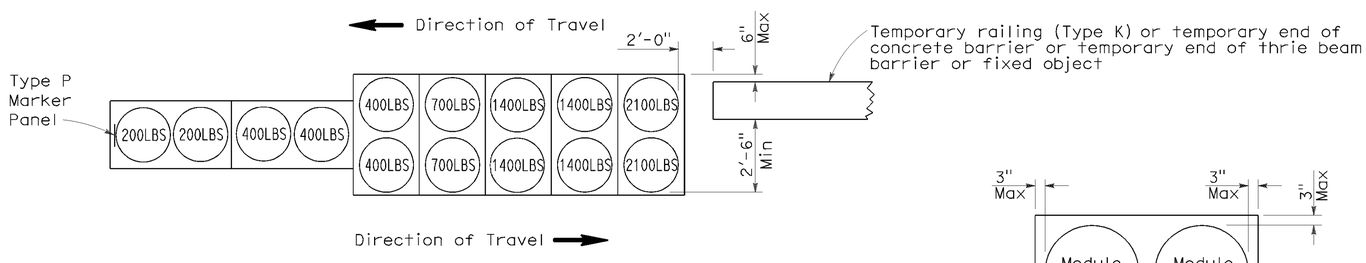

ARRAY 'TB14'

Approach speed 45 mph or more

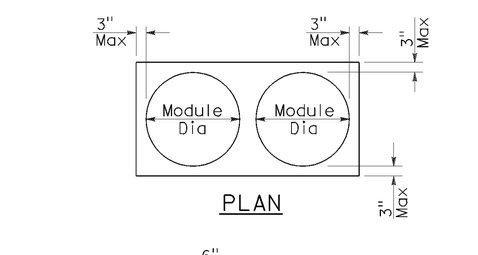

PLAN

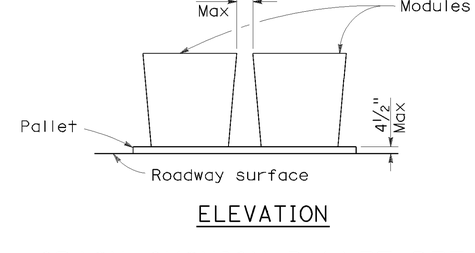

ELEVATION

CRASH CUSHION PALLET DETAIL

See Note 7

NOTES:

1. (XXX) Indicates sand filled module location and weight of sand in pounds for each module. Module spacing is based on the greater diameter of the module.
2. All sand weights are nominal.
3. Temporary crash cushion arrays shall not encroach on the traveled way.
4. Place the Type P marker panel so that the bottom of the panel rests upon the pallet.
5. Refer to Standard Plan A73B for marker details.
6. Approach speeds indicated conform to NCHRP 350 Report criteria.
7. Use of pallets is optional.

STATE OF CALIFORNIA
DEPARTMENT OF TRANSPORTATION

TEMPORARY CRASH CUSHION, SAND FILLED (BIDIRECTIONAL)

NO SCALE

RSP T1B DATED JUNE 6, 2008 SUPERSEDES STANDARD PLAN T1B
DATED MAY 1, 2006 - PAGE 212 OF THE STANDARD PLANS BOOK DATED MAY 2006.

REVISED STANDARD PLAN RSP T1B

2006 REVISED STANDARD PLAN RSP T1B

P:\proj2\02\4c960_plans\pse\24c960va008.dgn
USERNAME => s115152
DGN FILE => 24c960va008.dgn
DATE PLOTTED => 27-JUN-2012
TIME PLOTTED => 10:34
5-15-08

DIST	COUNTY	ROUTE	POST MILES TOTAL PROJECT	SHEET NO.	TOTAL SHEETS
02	Tri	3	7.1/8.3	39	40

Randell D. Hiatt
REGISTERED CIVIL ENGINEER

June 6, 2008
PLANS APPROVAL DATE

REGISTERED PROFESSIONAL ENGINEER
Randell D. Hiatt
No. C50200
Exp. 6-30-09
CIVIL
STATE OF CALIFORNIA

The State of California or its officers or agents shall not be responsible for the accuracy or completeness of electronic copies of this plan sheet.

To accompany plans dated 6-25-12

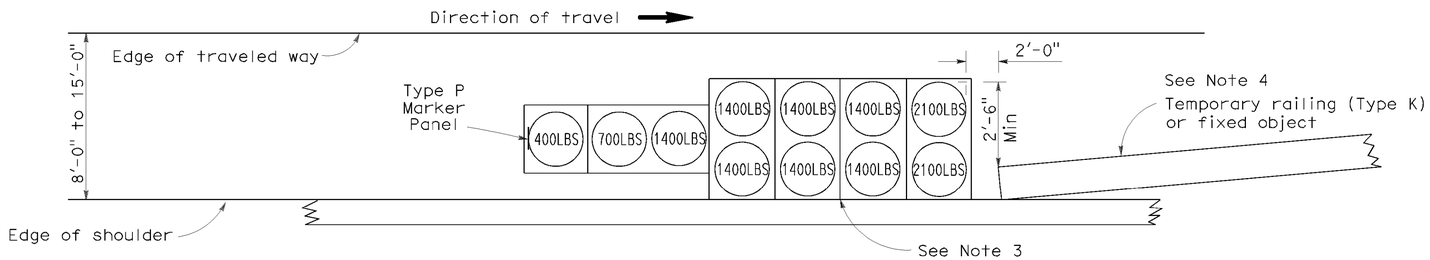

ARRAY 'TS11'

Approach speed less than 45 mph
See Note 9

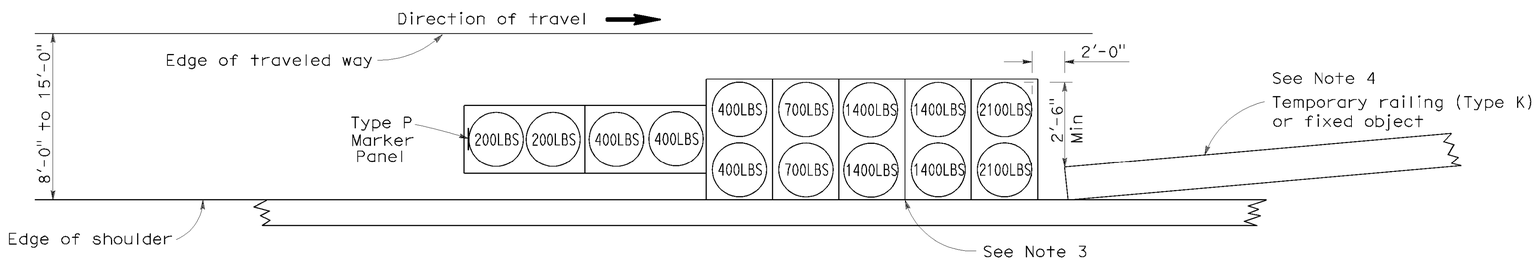

ARRAY 'TS14'

Approach speed 45 mph or more
See Note 9

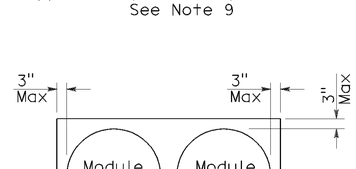

PLAN

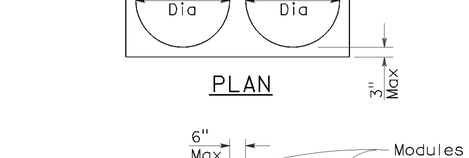

ELEVATION

CRASH CUSHION PALLET DETAIL

See Note 11

NOTES:

1. (XXX) Indicates sand filled module location and weight of sand in pounds for each module. Module spacing is based on the greater diameter of the module.
2. All sand weights are nominal.
3. The temporary crash cushion arrays shown on this plan shall be used only in locations where there will be traffic on one side of the temporary crash cushion array.
4. If the fixed object or approach end of the temporary railing is less than 15'-0" from the edge of traveled way, a temporary crash cushion is required in a construction or work zone.
5. Temporary crash cushion arrays shall not encroach on the traveled way.
6. Arrays for median shoulders shall conform to details shown on this plan for outside shoulders.
7. Place the Type P marker panel so that the bottom of the panel rests upon the pallet and faces traffic.
8. Refer to Standard Plan A73B for marker details.
9. For shoulder widths less than 8'-0", appropriate approved crash cushion protection, other than sand filled modules, shall be provided at fixed objects and at approach ends of temporary railing. The specific type of crash cushion shall be as shown on the project plans or as specified in the Special Provisions, or if not shown on the project plans or specified in the Special Provisions, shall be as approved by the Engineer.
10. Approach speeds indicated conform to NCHRP 350 Report criteria.
11. Use of pallets is optional.

STATE OF CALIFORNIA
DEPARTMENT OF TRANSPORTATION

TEMPORARY CRASH CUSHION, SAND FILLED (SHOULDER INSTALLATIONS)

NO SCALE

RSP T2 DATED JUNE 6, 2008 SUPERSEDES STANDARD PLAN T2
DATED MAY 1, 2006 - PAGE 213 OF THE STANDARD PLANS BOOK DATED MAY 2006.

REVISED STANDARD PLAN RSP T2

2006 REVISED STANDARD PLAN RSP T2

Dist	COUNTY	ROUTE	POST MILES TOTAL PROJECT	SHEET No.	TOTAL SHEETS
02	Tri	3	7.1/8.3	40	40

Randell D. Hiatt
REGISTERED CIVIL ENGINEER

May 20, 2011
PLANS APPROVAL DATE

REGISTERED PROFESSIONAL ENGINEER
Randell D. Hiatt
No. C50200
Exp. 6-30-11
CIVIL
STATE OF CALIFORNIA

The State of California or its officers or agents shall not be responsible for the accuracy or completeness of electronic copies of this plan sheet.

To accompany plans dated 6-25-12

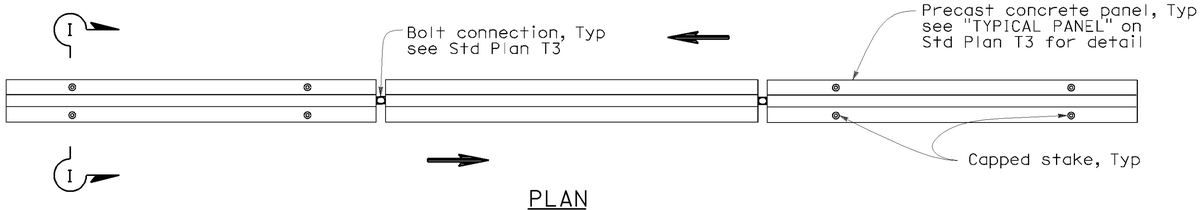

PLAN

RAILING STAKING CONFIGURATION FOR TWO-WAY TRAFFIC

See Note 1

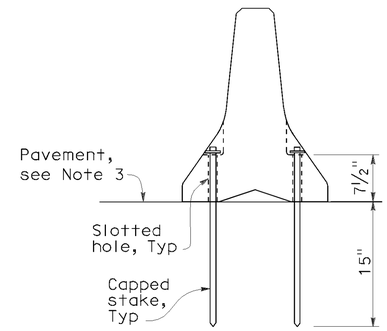

SECTION I-I

NOTES:

1. Where Type K Temporary Railing is placed as a temporary or long term barrier in two-way traffic on highways with less than 24" from the edge of traveled way, use four capped stakes per every other panel with end panels staked.
2. Where Type K Temporary Railing is placed 3" to 24" from the edge of an excavation on highways, use two capped stakes per panel along the traffic side.
3. Staked Type K Temporary Railing must be supported by at least 4" thick concrete, hot mix asphalt or existing asphalt concrete pavement.
4. The minimum yield strength for the washer must be 60,000 psi.
5. Direction of adjacent traffic indicated by ⟹.

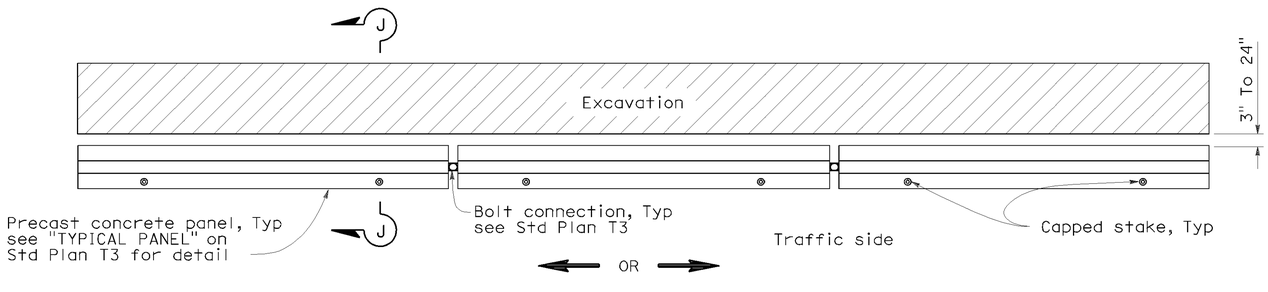

PLAN

RAILING STAKING CONFIGURATION ADJACENT TO AN EXCAVATION

See Note 2

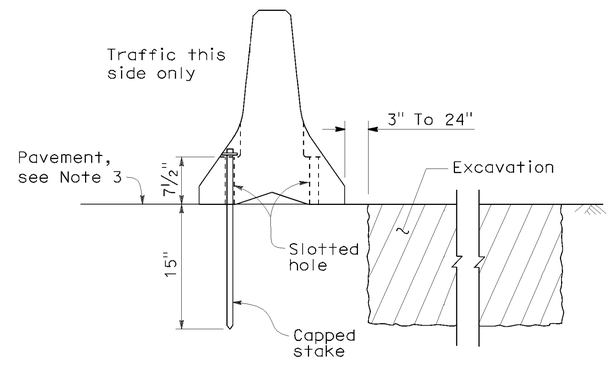

SECTION J-J

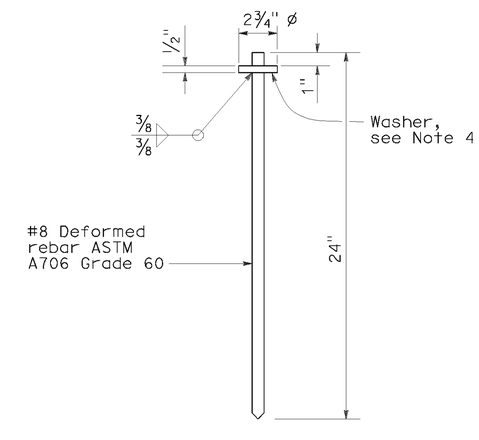

CAPPED STAKE DETAIL

STATE OF CALIFORNIA
DEPARTMENT OF TRANSPORTATION

TEMPORARY RAILING (TYPE K)

NO SCALE

NSP T3A DATED MAY 20, 2011 SUPPLEMENTS
THE STANDARD PLANS BOOK DATED MAY 2006.

NEW STANDARD PLAN NSP T3A

2006 NEW STANDARD PLAN NSP T3A

DATE PLOTTED => 27-JUN-2012
TIME PLOTTED => 10:34

P:\proj2\02\4c960_plans\pse\24c960va010.dgn

USERNAME => s115152
DGN FILE => 24c960va010.dgn

8-31-10