Dist	COUNTY	ROUTE	POST MILES TOTAL PROJECT	SHEET No.	TOTAL SHEETS
02	SHA	5	R10.5/R17.5	101	311

REGISTERED CIVIL ENGINEER 10-15-10 DATE

12-13-10
PLANS APPROVAL DATE

REGISTERED PROFESSIONAL ENGINEER KRISTEN A. KINGSLEY No. C72250 Exp. 6-30-12 CIVIL STATE OF CALIFORNIA

THE STATE OF CALIFORNIA OR ITS OFFICERS OR AGENTS SHALL NOT BE RESPONSIBLE FOR THE ACCURACY OR COMPLETENESS OF SCANNED COPIES OF THIS PLAN SHEET.

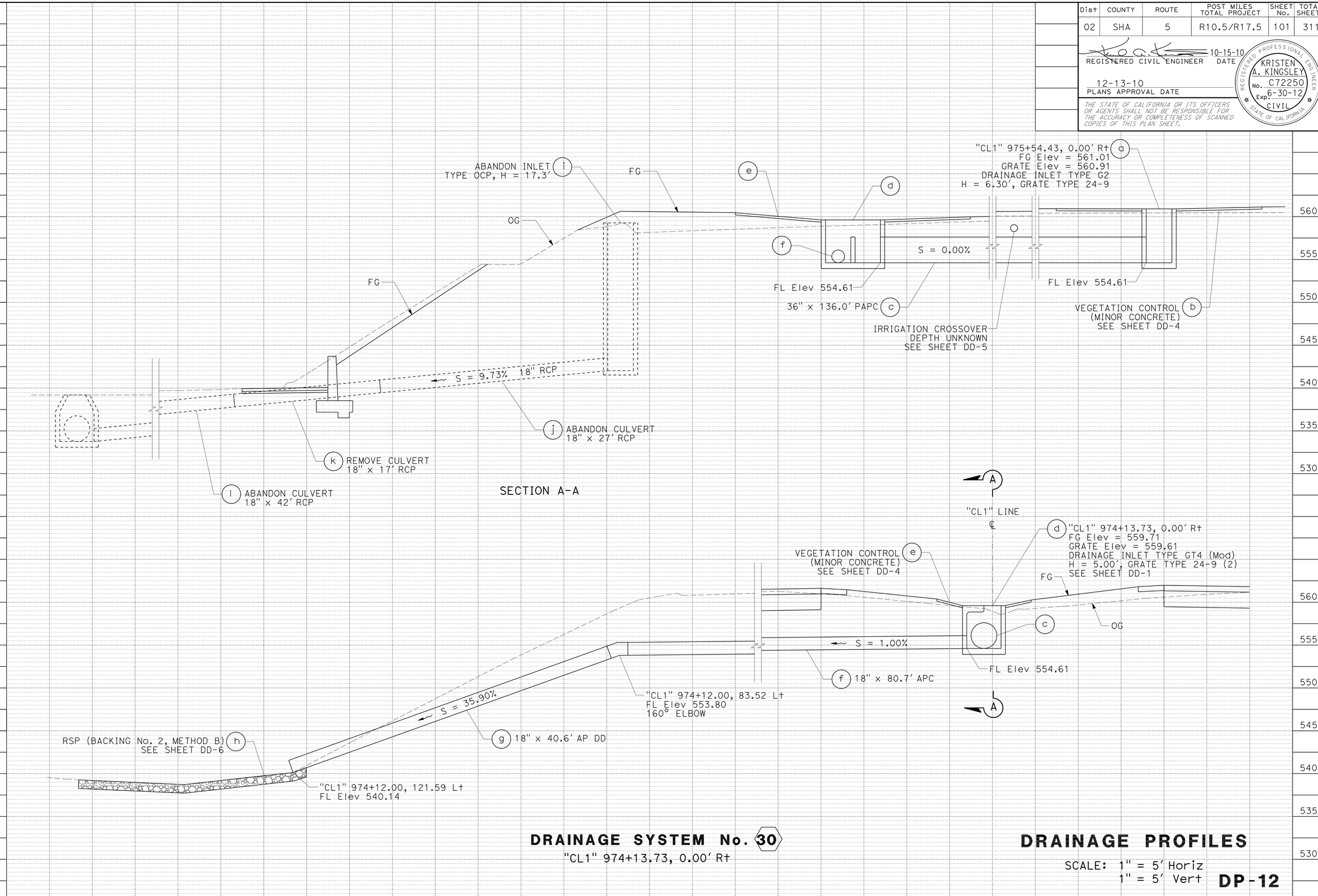

DRAINAGE SYSTEM No. 30
"CL1" 974+13.73, 0.00' Rt

DRAINAGE PROFILES

SCALE: 1" = 5' Horiz
1" = 5' Vert

DP-12

REVISED BY | DATE REVISED
BRETT DITZLER | KRISTEN KINGSLEY
CALCULATED-DESIGNED BY | CHECKED BY
FUNCTIONAL SUPERVISOR | STEVE THORNE

STATE OF CALIFORNIA - DEPARTMENT OF TRANSPORTATION
Caltrans
HYDRAULICS

P:\proj2\02\4c401\design\PS&E\24c401ib012.dgn

LAST REVISION | DATE PLOTTED => 14-DEC-2010 | TIME PLOTTED => 12:34
07-07-10

Dist	COUNTY	ROUTE	POST MILES TOTAL PROJECT	SHEET No.	TOTAL SHEETS
02	SHA	5	R10.5/R17.5	102	311

REGISTERED CIVIL ENGINEER 10-15-10 DATE

12-13-10
PLANS APPROVAL DATE

REGISTERED PROFESSIONAL ENGINEER KRISTEN A. KINGSLEY No. C72250 Exp. 6-30-12 CIVIL STATE OF CALIFORNIA

THE STATE OF CALIFORNIA OR ITS OFFICERS OR AGENTS SHALL NOT BE RESPONSIBLE FOR THE ACCURACY OR COMPLETENESS OF SCANNED COPIES OF THIS PLAN SHEET.

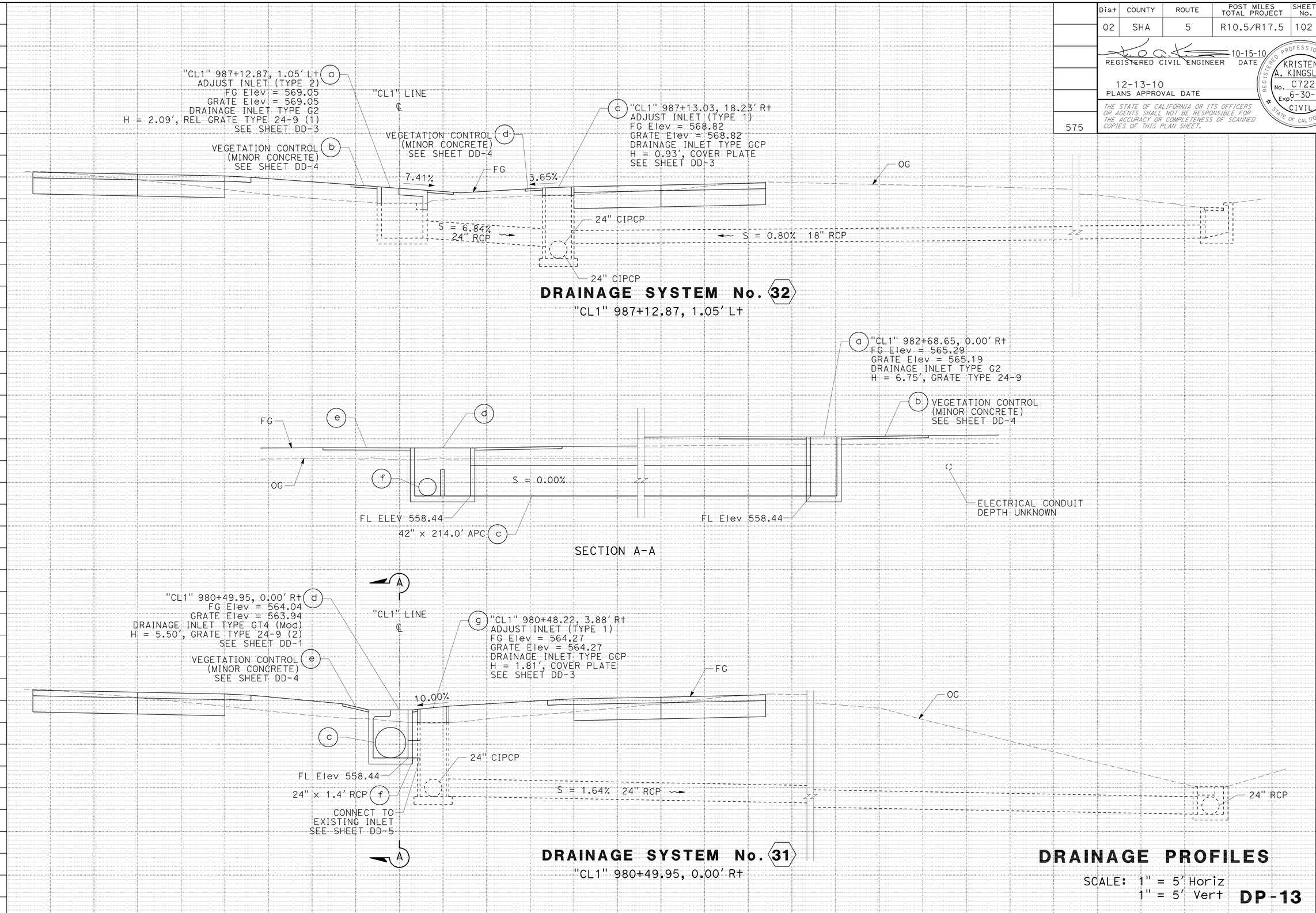

DRAINAGE PROFILES

SCALE: 1" = 5' Horiz
1" = 5' Vert

DP-13

REVISED BY | DATE REVISED
BRETT DITZLER | KRISTEN KINGSLEY
CALCULATED-DESIGNED BY | CHECKED BY
FUNCTIONAL SUPERVISOR: STEVE THORNE

STATE OF CALIFORNIA - DEPARTMENT OF TRANSPORTATION
Caltrans® HYDRAULICS

P:\proj2\02\4c401\design\PS&E\24c401ib013.dgn

LAST REVISION DATE PLOTTED => 14-DEC-2010
07-07-10 TIME PLOTTED => 12:34

Dist	COUNTY	ROUTE	POST MILES TOTAL PROJECT	SHEET No.	TOTAL SHEETS
02	SHA	5	R10.5/R17.5	103	311

REGISTERED CIVIL ENGINEER 10-15-10 DATE

12-13-10
PLANS APPROVAL DATE

REGISTERED PROFESSIONAL ENGINEER KRISTEN A. KINGSLEY No. C72250 Exp. 6-30-12 CIVIL STATE OF CALIFORNIA

THE STATE OF CALIFORNIA OR ITS OFFICERS OR AGENTS SHALL NOT BE RESPONSIBLE FOR THE ACCURACY OR COMPLETENESS OF SCANNED COPIES OF THIS PLAN SHEET.

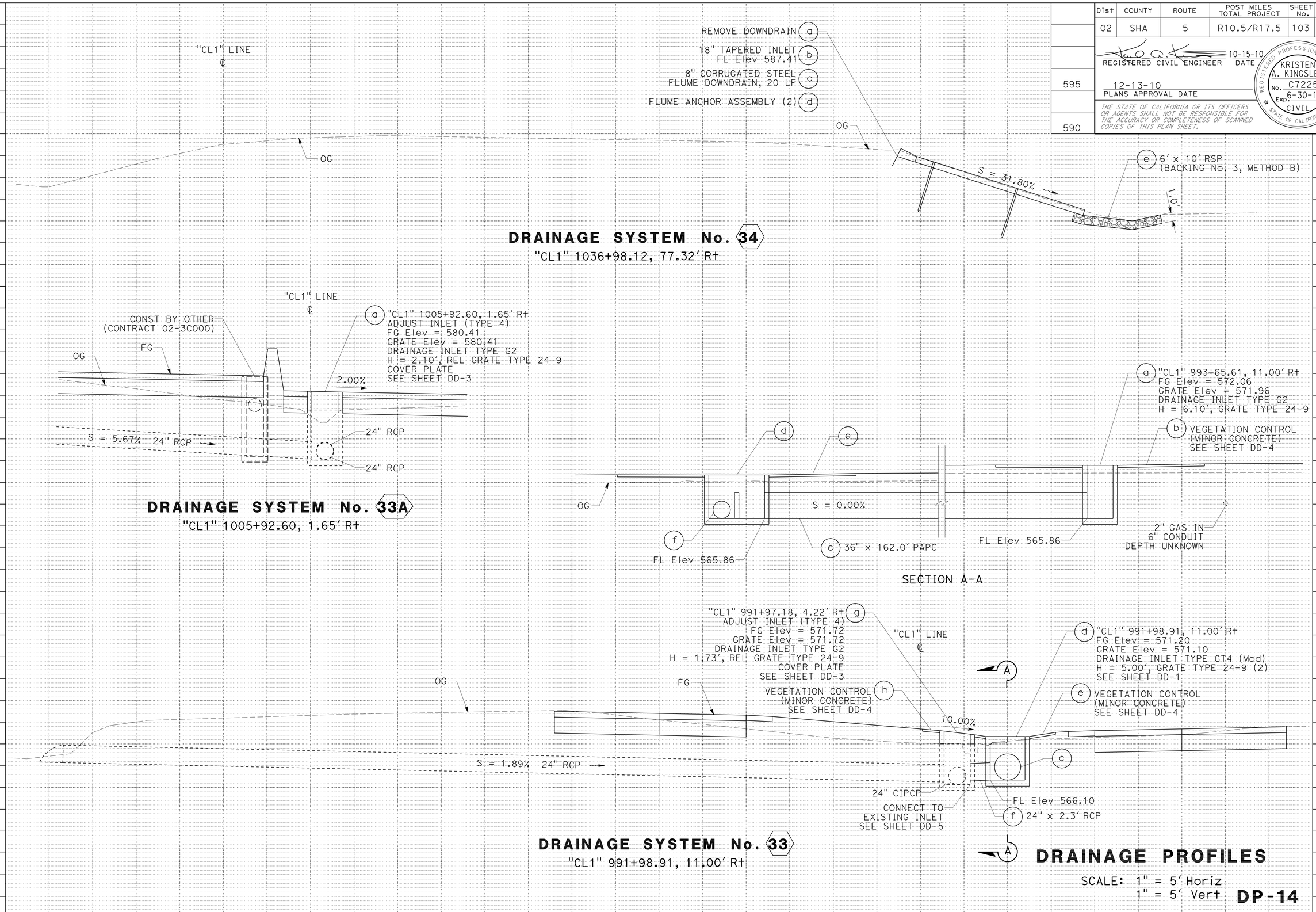

REVISED BY | DATE REVISED
BRETT DITZLER | KRISTEN KINGSLEY
CALCULATED-DESIGNED BY | CHECKED BY
FUNCTIONAL SUPERVISOR: STEVE THORNE

STATE OF CALIFORNIA - DEPARTMENT OF TRANSPORTATION
Caltrans® HYDRAULICS

P:\proj2\02\4c401\design\PS&E\24c401ib014.dgn

DATE PLOTTED => 14-DEC-2010
TIME PLOTTED => 12:34
LAST REVISION 07-07-10

Dist	COUNTY	ROUTE	POST MILES TOTAL PROJECT	SHEET No.	TOTAL SHEETS
02	SHA	5	R10.5/R17.5	104	311

REGISTERED CIVIL ENGINEER 10-15-10 DATE

12-13-10
PLANS APPROVAL DATE

REGISTERED PROFESSIONAL ENGINEER KRISTEN A. KINGSLEY No. C72250 Exp. 6-30-12 CIVIL STATE OF CALIFORNIA

THE STATE OF CALIFORNIA OR ITS OFFICERS OR AGENTS SHALL NOT BE RESPONSIBLE FOR THE ACCURACY OR COMPLETENESS OF SCANNED COPIES OF THIS PLAN SHEET.

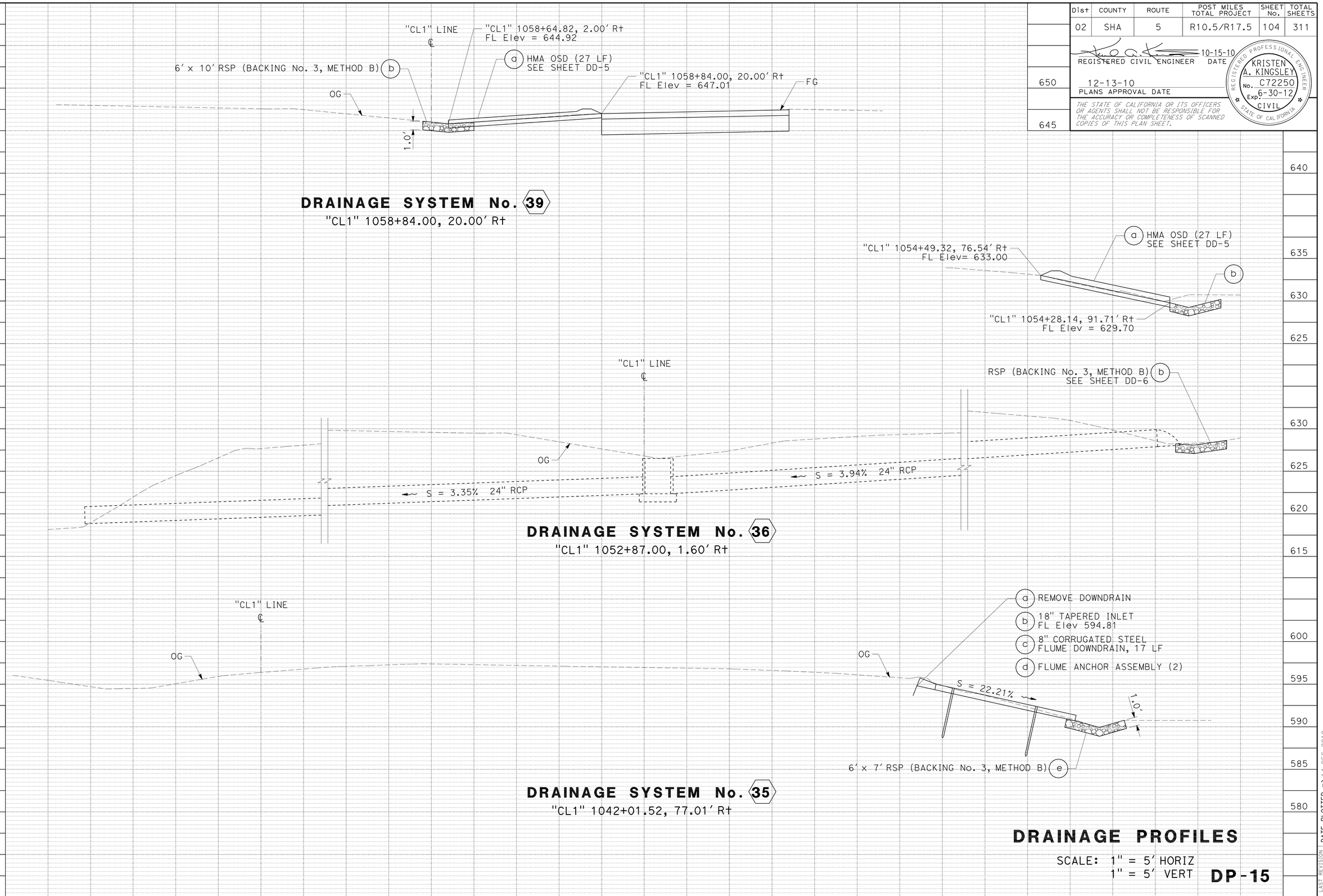

DRAINAGE PROFILES

SCALE: 1" = 5′ HORIZ
1" = 5′ VERT

DP-15

REVISED BY | DATE REVISED
BRETT DITZLER | KRISTEN KINGSLEY
CALCULATED-DESIGNED BY | CHECKED BY
FUNCTIONAL SUPERVISOR
STEVE THORNE

STATE OF CALIFORNIA - DEPARTMENT OF TRANSPORTATION
Caltrans
HYDRAULICS

P:\proj2\02\4c401\design\PS&E\24c401ib015.dgn

LAST REVISION 07-07-10
DATE PLOTTED => 14-DEC-2010
TIME PLOTTED => 12:34

Dist	COUNTY	ROUTE	POST MILES TOTAL PROJECT	SHEET No.	TOTAL SHEETS
02	SHA	5	R10.5/R17.5	105	311

REGISTERED CIVIL ENGINEER 10-15-10 DATE

12-13-10
PLANS APPROVAL DATE

REGISTERED PROFESSIONAL ENGINEER KRISTEN A. KINGSLEY No. C72250 Exp. 6-30-12 CIVIL STATE OF CALIFORNIA

THE STATE OF CALIFORNIA OR ITS OFFICERS OR AGENTS SHALL NOT BE RESPONSIBLE FOR THE ACCURACY OR COMPLETENESS OF SCANNED COPIES OF THIS PLAN SHEET.

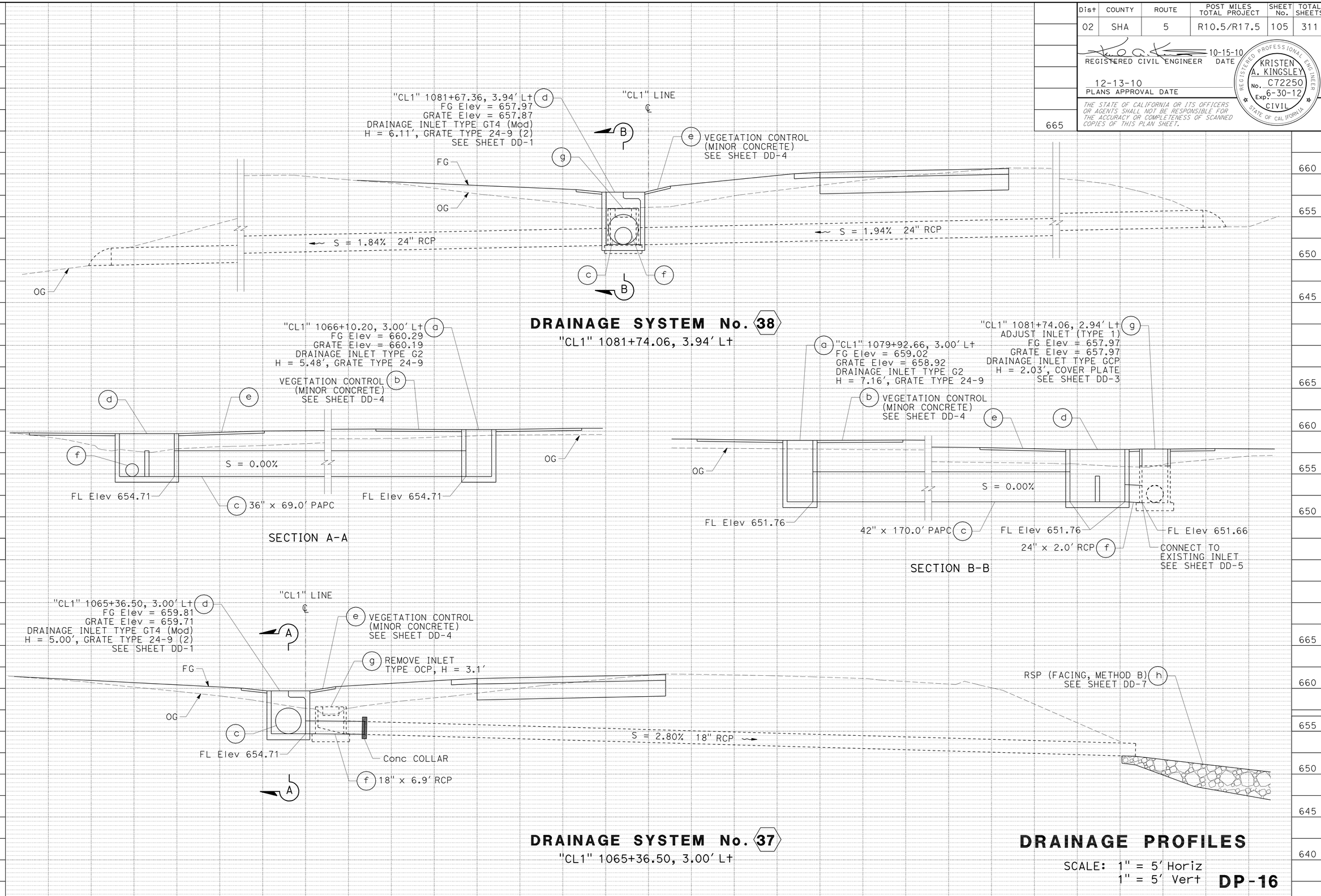

DRAINAGE PROFILES

SCALE: 1" = 5' Horiz
1" = 5' Vert

DP-16

REVISED BY	DATE REVISED
BRETT DITZLER	KRISTEN KINGSLEY

CALCULATED-DESIGNED BY
CHECKED BY

FUNCTIONAL SUPERVISOR: STEVE THORNE

STATE OF CALIFORNIA - DEPARTMENT OF TRANSPORTATION
Caltrans® HYDRAULICS

P:\proj2\02\4c401\design\PS&E\24c401ib016.dgn

LAST REVISION 07-07-10
DATE PLOTTED => 14-DEC-2010
TIME PLOTTED => 12:34

Dist	COUNTY	ROUTE	POST MILES TOTAL PROJECT	SHEET No.	TOTAL SHEETS
02	SHA	5	R10.5/R17.5	106	311

REGISTERED CIVIL ENGINEER 10-15-10 DATE

12-13-10
PLANS APPROVAL DATE

REGISTERED PROFESSIONAL ENGINEER KRISTEN A. KINGSLEY No. C72250 Exp. 6-30-12 CIVIL STATE OF CALIFORNIA

THE STATE OF CALIFORNIA OR ITS OFFICERS OR AGENTS SHALL NOT BE RESPONSIBLE FOR THE ACCURACY OR COMPLETENESS OF SCANNED COPIES OF THIS PLAN SHEET.

LEGEND

- DRAINAGE SYSTEM NUMBER
- DRAINAGE UNIT
- DIRECTION OF FLOW
- CONCRETE COLLAR, SEE SHEET DD-3

ABBREVIATIONS

OSD OVERSIDE DRAIN
DFL DRAINAGE FLOW LINE

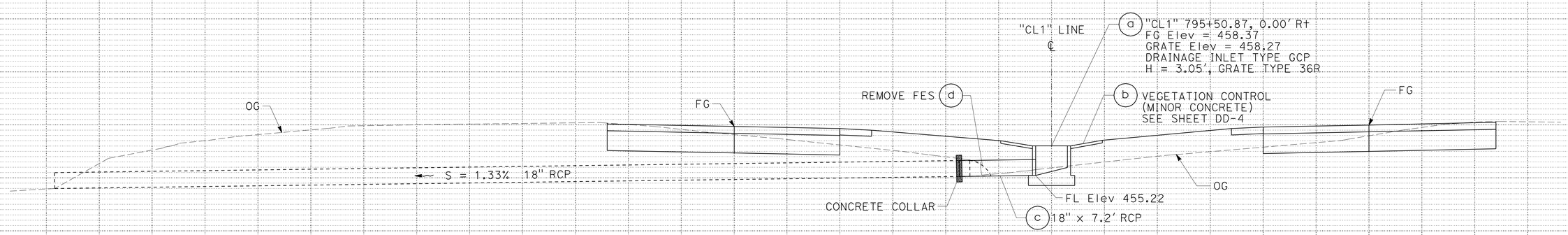

DRAINAGE SYSTEM No. A2
"CL1" 795+50.87, 0.00' Rt

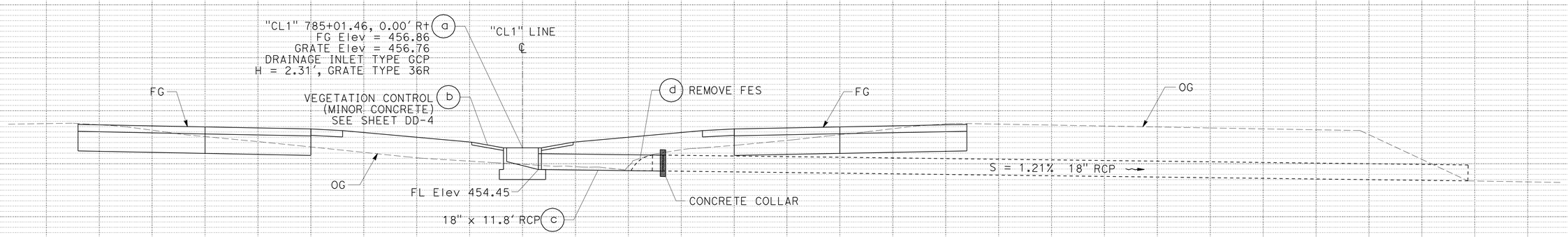

DRAINAGE SYSTEM No. A1
"CL1" 785+01.46, 0.00' Rt

ADDITIVE 1
DRAINAGE PROFILES

SCALE: 1" = 5' Horiz
1" = 5' Vert

DP-17

REVISED BY | DATE REVISED
BRETT DITZLER | KRISTEN KINGSLEY
CALCULATED-DESIGNED BY | CHECKED BY
FUNCTIONAL SUPERVISOR: STEVE THORNE

STATE OF CALIFORNIA - DEPARTMENT OF TRANSPORTATION
Caltrans® HYDRAULICS

P:\proj2\02\4c401\design\PS&E\24c401ib017.dgn

LAST REVISION 07-07-10 | DATE PLOTTED => 14-DEC-2010 | TIME PLOTTED => 12:34

BORDER LAST REVISED 7/2/2010 | USERNAME => trcarol | DGN FILE => 24c401ib017.dgn | RELATIVE BORDER SCALE IS IN INCHES 0 1 2 3 | UNIT 0361 | PROJECT NUMBER & PHASE 02000004581

Dist	COUNTY	ROUTE	POST MILES TOTAL PROJECT	SHEET No.	TOTAL SHEETS
02	SHA	5	R10.5/R17.5	107	311

REGISTERED CIVIL ENGINEER 10-15-10 DATE

12-13-10
PLANS APPROVAL DATE

REGISTERED PROFESSIONAL ENGINEER KRISTEN A. KINGSLEY No. C72250 Exp. 6-30-12 CIVIL STATE OF CALIFORNIA

THE STATE OF CALIFORNIA OR ITS OFFICERS OR AGENTS SHALL NOT BE RESPONSIBLE FOR THE ACCURACY OR COMPLETENESS OF SCANNED COPIES OF THIS PLAN SHEET.

LEGEND

- DRAINAGE SYSTEM NUMBER
- DRAINAGE UNIT
- DIRECTION OF FLOW
- CONCRETE COLLAR, SEE SHEET DD-3

ABBREVIATIONS

OSD OVERSIDE DRAIN
DFL DRAINAGE FLOW LINE

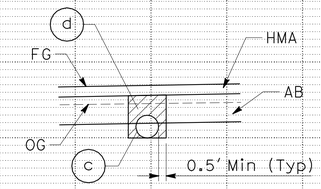

SECTION A-A

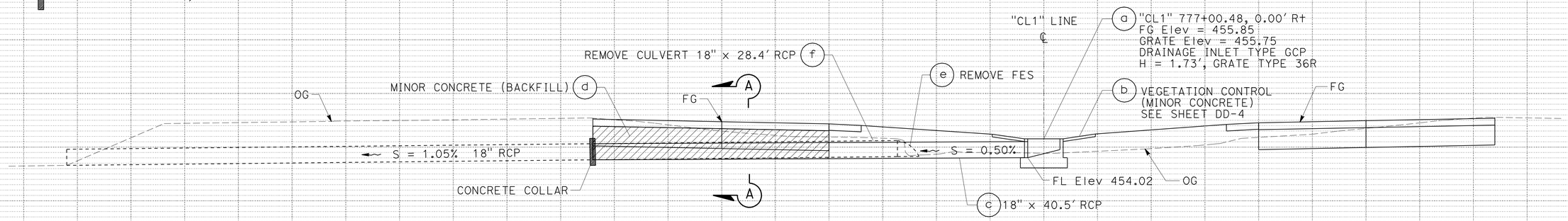

DRAINAGE SYSTEM No. A5
"CL1" 777+00.48, 0.00′ Rt

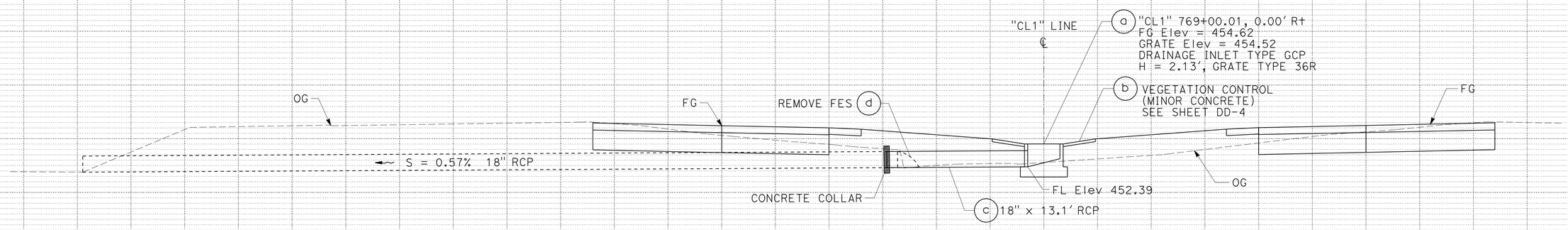

DRAINAGE SYSTEM No. A4
"CL1" 769+00.01, 0.00′ Rt

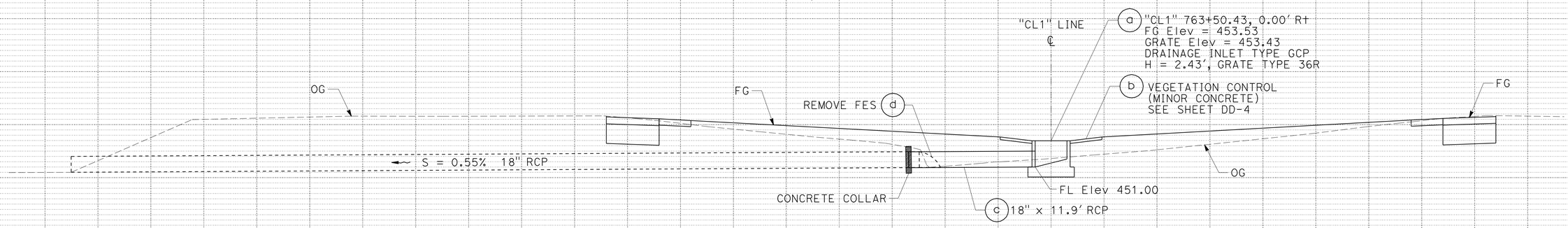

DRAINAGE SYSTEM No. A3
"CL1" 763+50.43, 0.00′ Rt

ADDITIVE 2
DRAINAGE PROFILES

SCALE: 1" = 5′ Horiz
1" = 5′ Vert

DP-18

REVISED BY | DATE REVISED
BRETT DITZLER | KRISTEN KINGSLEY
CALCULATED-DESIGNED BY | CHECKED BY
FUNCTIONAL SUPERVISOR: STEVE THORNE
STATE OF CALIFORNIA - DEPARTMENT OF TRANSPORTATION
Caltrans® HYDRAULICS

P:\proj2\02\4c401\design\PS&E\24c401ib018.dgn

LAST REVISION 07-07-10
DATE PLOTTED => 14-DEC-2010
TIME PLOTTED => 12:34

Dist	COUNTY	ROUTE	POST MILES TOTAL PROJECT	SHEET No.	TOTAL SHEETS
02	SHA	5	R10.5/R17.5	108	311

REGISTERED CIVIL ENGINEER 10-15-10 DATE

12-13-10
PLANS APPROVAL DATE

REGISTERED PROFESSIONAL ENGINEER KRISTEN A. KINGSLEY No. C72250 Exp. 6-30-12 CIVIL STATE OF CALIFORNIA

THE STATE OF CALIFORNIA OR ITS OFFICERS OR AGENTS SHALL NOT BE RESPONSIBLE FOR THE ACCURACY OR COMPLETENESS OF SCANNED COPIES OF THIS PLAN SHEET.

NOTE:

PARTIAL DI REINFORCEMENT REQUIREMENTS SHOWN.
FURTHER REINFORCEMENT DETAIL FOR TYPE GT4 (Mod) DI. SEE STANDARD PLAN FOR TYPE GT4 DI.

ABBREVIATIONS

HTCB	HIGH TENSION CABLE BARRIER
OSD	OVERSIDE DRAIN
PAPC	PERFORATED ALTERNATIVE PIPE CULVERT
DFL	DRAINAGE FLOW LINE

LEGEND

- # — DRAINAGE SYSTEM No.
- # — DRAINAGE UNIT
- FLOW DIRECTION

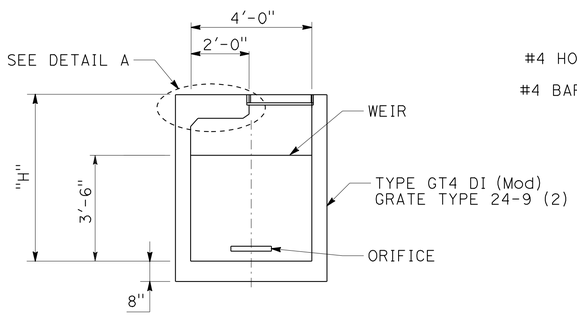

SECTION A-A

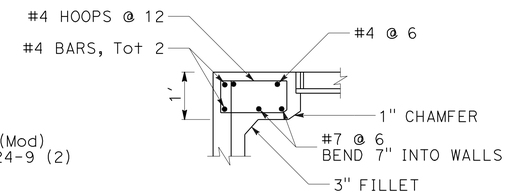

DETAIL A

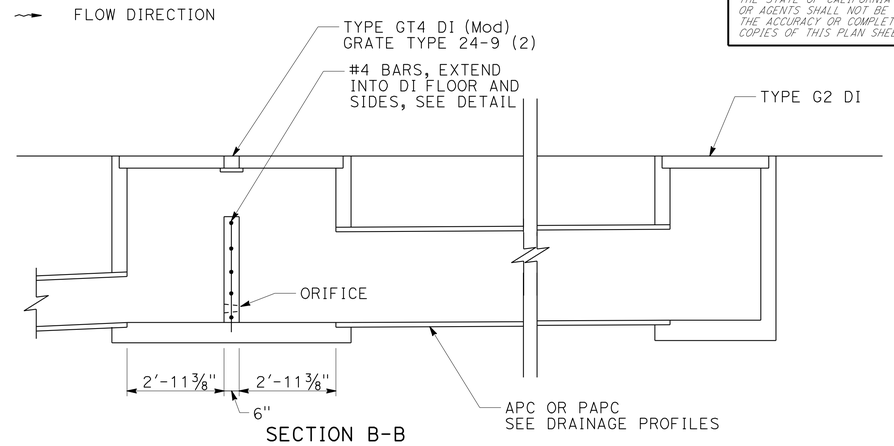

SECTION B-B

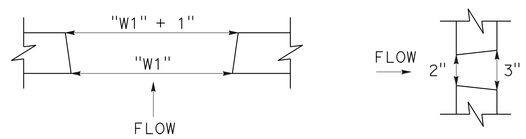

PLAN

SECTION

ORIFICE DETAIL

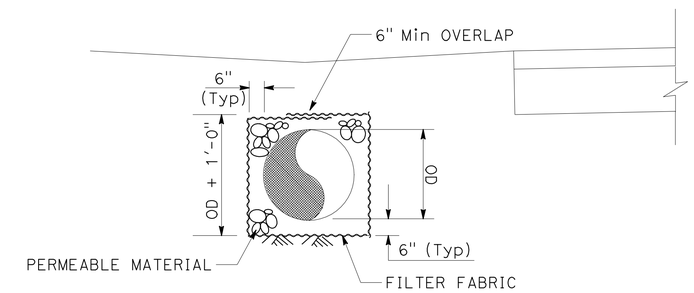

SECTION C-C

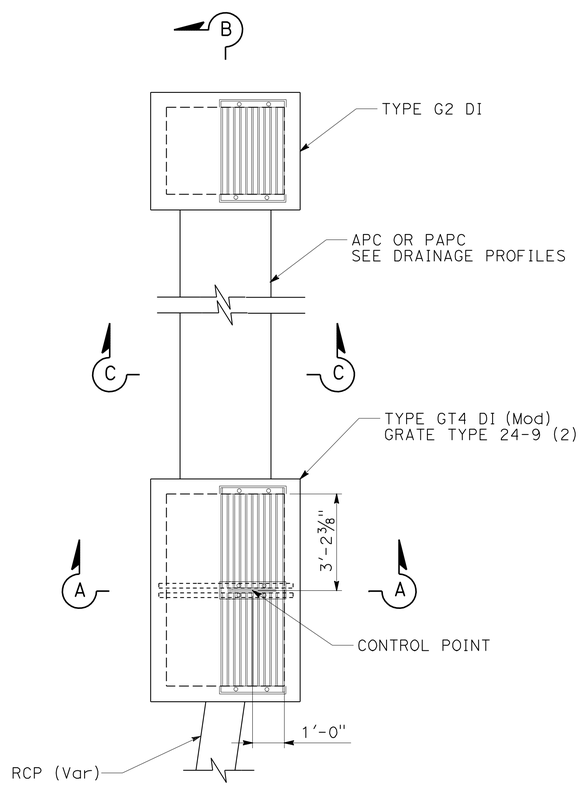

PLAN

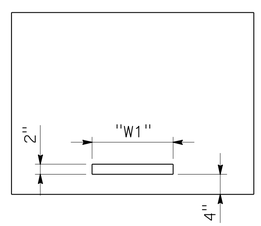

WEIR DETAIL

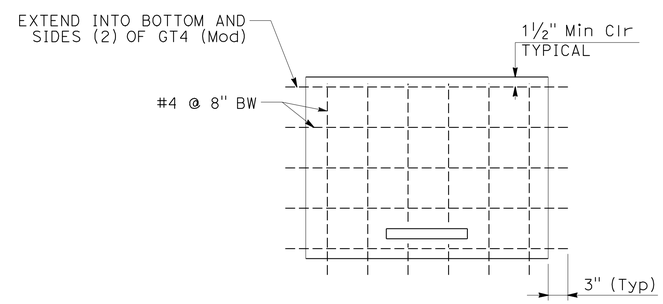

WEIR REINFORCEMENT DETAIL

ORIFICE WIDTHS

DRAINAGE SYSTEM No.-UNIT	"W1" (IN)
16d	14.25
21d	20.00
22d	20.20
23d	20.75
30d	14.25
31d	19.50
33d	17.40
37d	16.40
38d	18.00

UNDERGROUND DETENTION STORAGE FACILITY

16d 21d 22d 23d 30d 31d 33d 37d 38d

DRAINAGE DETAILS

NO SCALE

DD-1

REVISED BY | DATE REVISED
BRETT DITZLER | KRISTEN KINGSLEY
CALCULATED-DESIGNED BY | CHECKED BY
FUNCTIONAL SUPERVISOR: STEVE THORNE
STATE OF CALIFORNIA - DEPARTMENT OF TRANSPORTATION
Caltrans HYDRAULICS

P:\proj2\02\4c401\design\PS&E\24c401ic001.dgn

LAST REVISION 07-07-10 | DATE PLOTTED => 14-DEC-2010 | TIME PLOTTED => 12:34

Dist	COUNTY	ROUTE	POST MILES TOTAL PROJECT	SHEET No.	TOTAL SHEETS
02	SHA	5	R10.5/R17.5	109	311

REGISTERED CIVIL ENGINEER 10-15-10 DATE

12-13-10
PLANS APPROVAL DATE

REGISTERED PROFESSIONAL ENGINEER KRISTEN A. KINGSLEY No. C72250 Exp. 6-30-12 CIVIL STATE OF CALIFORNIA

THE STATE OF CALIFORNIA OR ITS OFFICERS OR AGENTS SHALL NOT BE RESPONSIBLE FOR THE ACCURACY OR COMPLETENESS OF SCANNED COPIES OF THIS PLAN SHEET.

NOTE:

PARTIAL DI REINFORCEMENT REQUIREMENTS SHOWN. FURTHER REINFORCEMENT DETAIL FOR TYPE GT4 (Mod) DI. SEE STANDARD PLAN FOR TYPE GT4 DI.

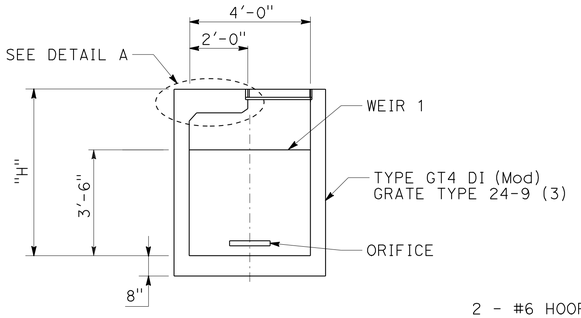

SECTION A-A

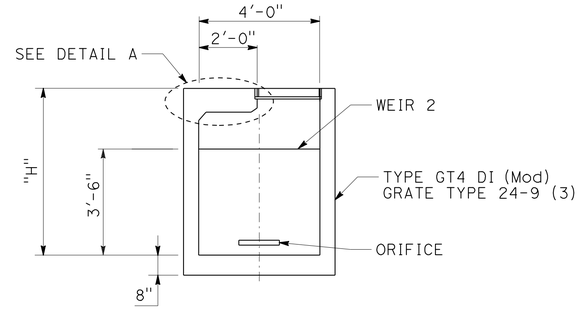

SECTION B-B

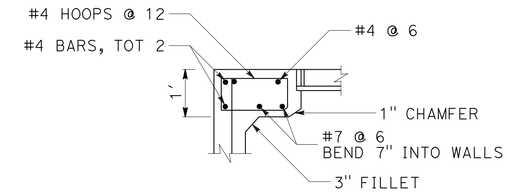

DETAIL A

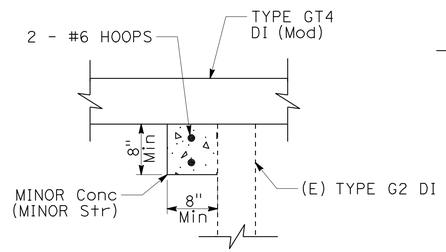

DETAIL B
CONC COLLAR

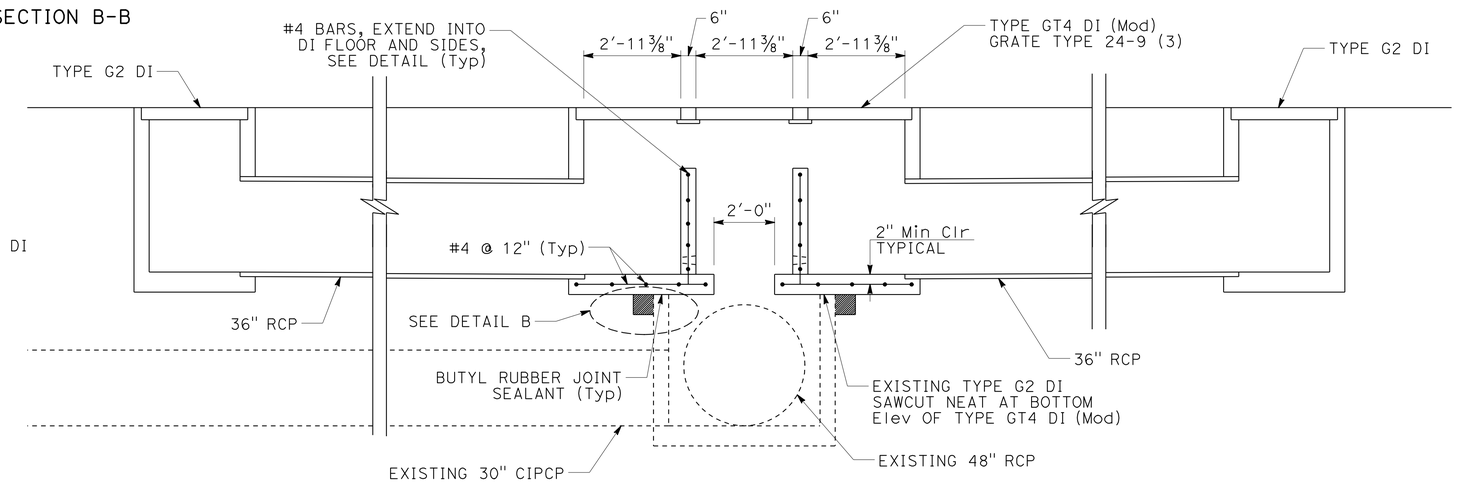

SECTION D-D

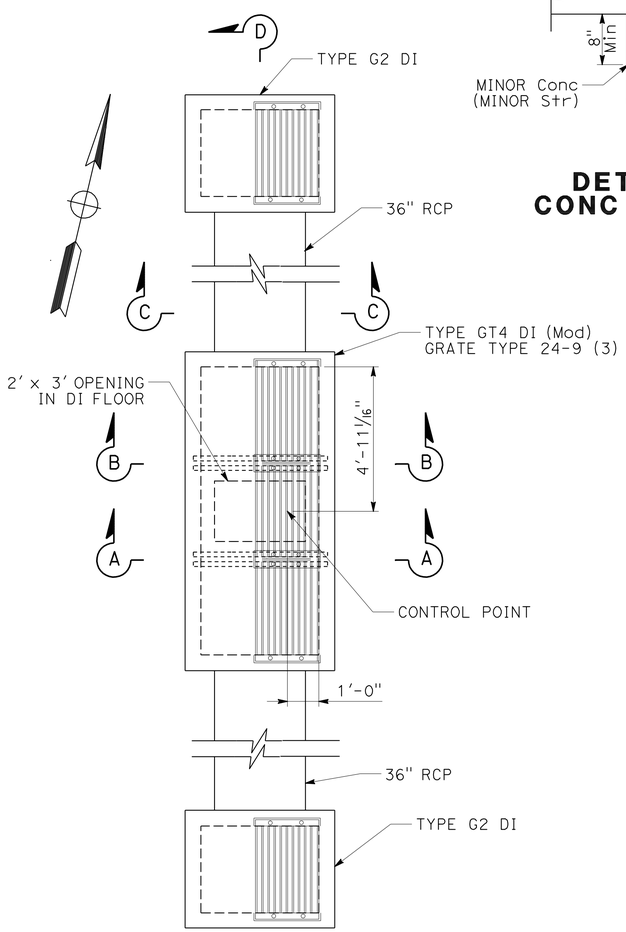

PLAN

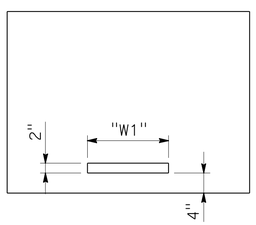

WEIR 1 DETAIL

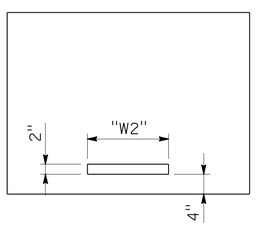

WEIR 2 DETAIL

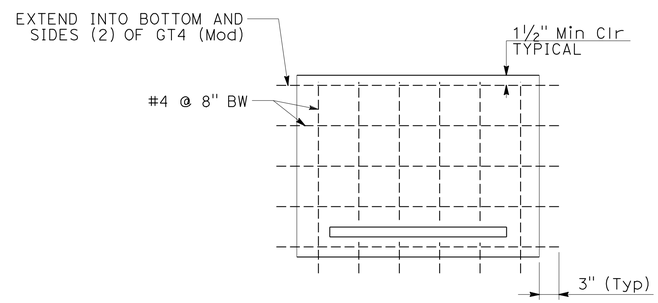

WEIR REINFORCEMENT DETAIL

ORIFICE WIDTHS

DRAINAGE SYSTEM No.-UNIT	"W1" (IN)	"W2" (IN)
26f	35.00	24.00

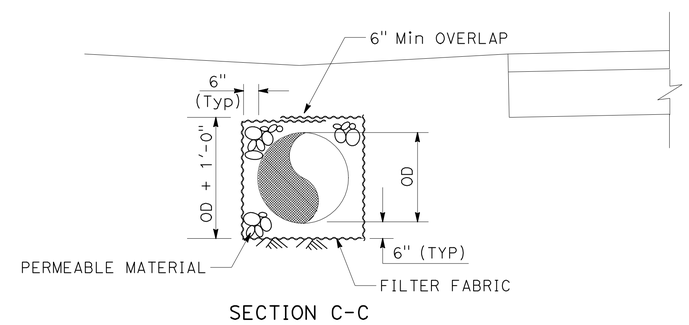

SECTION C-C

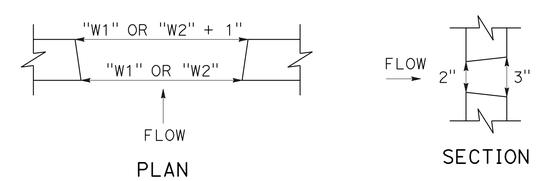

PLAN SECTION

ORIFICE DETAIL

UNDERGROUND DETENTION STORAGE FACILITY

26f

DRAINAGE DETAILS

NO SCALE

DD-2

REVISED BY | DATE REVISED
BRETT DITZLER | KRISTEN KINGSLEY
CALCULATED-DESIGNED BY | CHECKED BY
FUNCTIONAL SUPERVISOR
STEVE THORNE

STATE OF CALIFORNIA - DEPARTMENT OF TRANSPORTATION
Caltrans
HYDRAULICS

P:\proj2\02\4c401\design\PS&E\24c401ic002.dgn

LAST REVISION | DATE PLOTTED => 14-DEC-2010 | TIME PLOTTED => 12:35
07-07-10

Dist	COUNTY	ROUTE	POST MILES TOTAL PROJECT	SHEET No.	TOTAL SHEETS
02	SHA	5	R10.5/R17.5	110	311

REGISTERED CIVIL ENGINEER 10-15-10 DATE

12-13-10
PLANS APPROVAL DATE

REGISTERED PROFESSIONAL ENGINEER KRISTEN A. KINGSLEY No. C72250 Exp. 6-30-12 CIVIL STATE OF CALIFORNIA

THE STATE OF CALIFORNIA OR ITS OFFICERS OR AGENTS SHALL NOT BE RESPONSIBLE FOR THE ACCURACY OR COMPLETENESS OF SCANNED COPIES OF THIS PLAN SHEET.

NOTES:

1. "H" IS MEASURED TO THE CENTER OF THE GRATE.
2. ADD ADDITIONAL STEPS PER STANDARD PLANS IF REQUIRED.

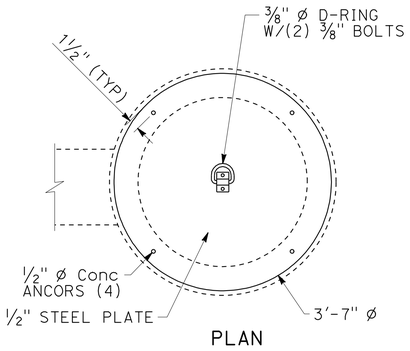

PLAN

DETAIL A

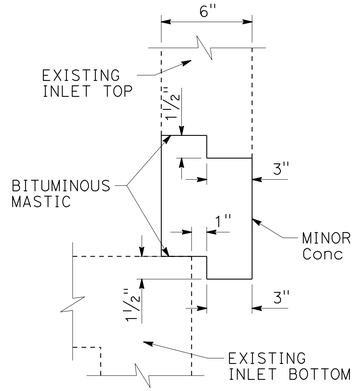

DETAIL D

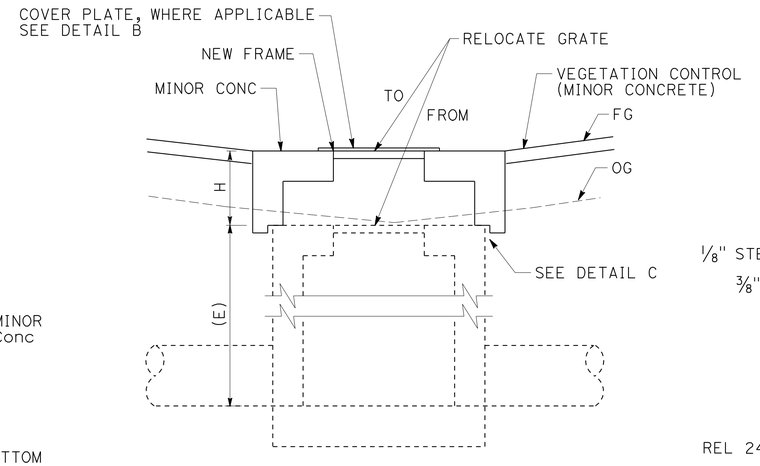

ADJUST INLET (TYPE 2)

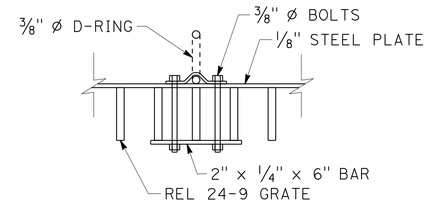

SECTION A-A

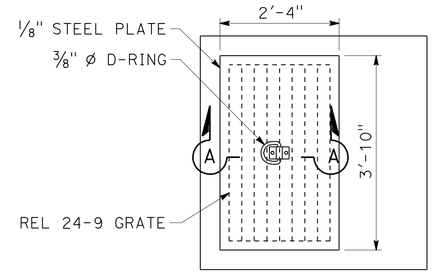

PLAN

DETAIL B

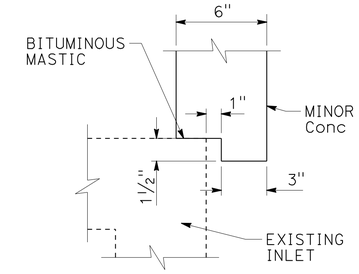

DETAIL C

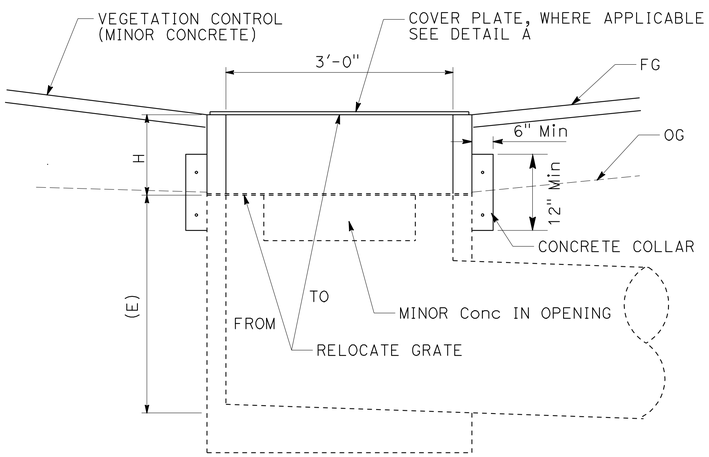

ADJUST INLET (TYPE 1)

DRAINAGE SYSTEM No.-UNIT	STATION	DI TYPE	H	(E)	REL GRATE	COVER PLATE
2a	"CL1" 806+73.14	GCP	2.12′	5.54′	X	
3a	"CL1" 819+69.67	GCP	2.59′	3.68′	X	
4a	"CL1" 823+59.69	GCP	2.74′	5.83′	X	
5a	"CL1" 833+69.72	GCP	2.87′	7.61′	X	
6a	"CL1" 837+61.45	GCP	2.16′	12.00′	X	
15a	"CL1" 863+50.19	GCP	1.44′	4.62′	X	
28a	"CL1" 966+00.47	GCP	2.16′	3.62′	X	
31g	"CL1" 980+49.95	GCP	1.81′	8.45′		X
32c	"CL1" 987+12.87	GCP	0.93′	7.21′		X
38g	"CL1" 1081+73.99	OCP	2.03′	4.28′		X

DRAINAGE SYSTEM No.-UNIT	STATION	DI TYPE	H	(E)	REL GRATE	COVER PLATE
7c	"CL1" 841+00.82	G2	3.23′	6.00′	X	
8c	"CL1" 845+50.41	G2	2.33′	4.70′	X	
9a	"CL1" 847+40.47	G2	2.95′	3.87′	X	
10a	"CL1" 851+06.79	G2	2.03′	5.57′	X	
18d	"CL1" 866+99.33	G2	1.03′	3.56′	X	X
19f	"CL1" 892+69.61	G2	0.76′	3.27′	X	X
32a	"CL1" 987+12.87	G2	2.09′	4.00′	X	

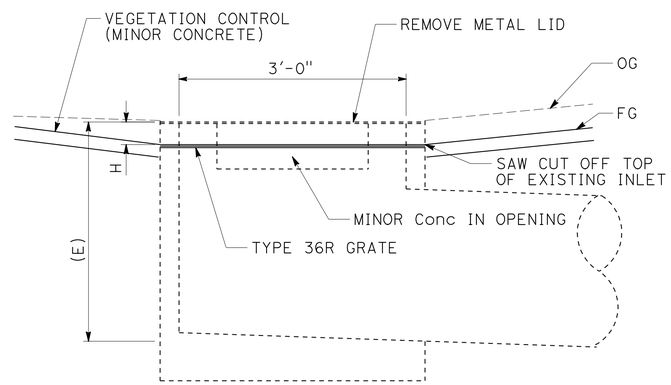

ADJUST INLET (TYPE 3)

DRAINAGE SYSTEM No.-UNIT	STATION	DI TYPE	(E) DI TYPE	H	(E)
7a	"CL1" 841+00.45	GCP	OCP	1.00′	3.87′
8a	"CL1" 845+51.24	GCP	OCP	1.00′	2.99′
12f	"CL1" 855+50.00	GCP	OCP	0.33′	5.06′
26l	"CL1" 950+13.22	GCP	OCP	1.00′	10.82′

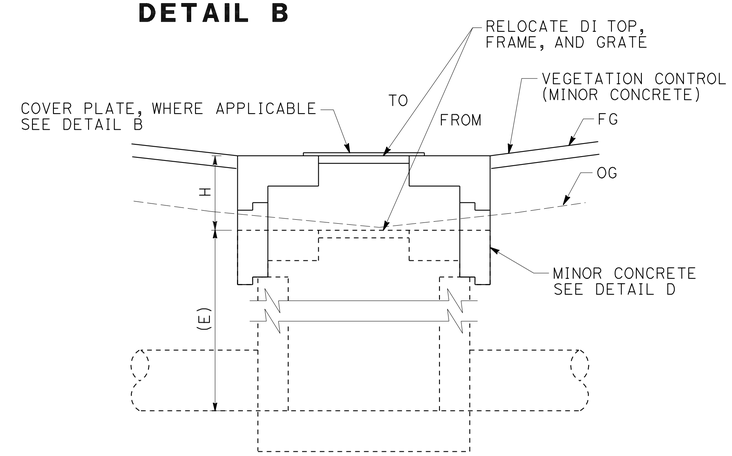

ADJUST INLET (TYPE 4)

DRAINAGE SYSTEM No.-UNIT	STATION	DI TYPE	H	(E)	REL GRATE	COVER PLATE
11a	"CL1" 852+20.73	G2	1.11′	5.90′	X	
12h	"CL1" 855+49.67	G2	1.46′	5.64′	X	
13a	"CL1" 857+50.66	G2	1.10′	5.20′	X	
14a	"CL1" 862+00.34	G2	1.74′	4.73′	X	
20f	"CL1" 897+81.09	G2	1.94′	3.86′	X	X
24f	"CL1" 938+50.45	G2	2.43′	3.81′	X	X
25f	"CL1" 945+28.75	G2	1.90′	3.85′	X	X
33g	"CL1" 991+98.91	G2	1.73′	4.65′	X	X
33Aa	"CL1" 1005+92.60	G2	2.10′	5.74′	X	X

DRAINAGE DETAILS

NO SCALE

DD-3

REVISED BY | DATE REVISED
BRETT DITZLER | KRISTEN KINGSLEY
CALCULATED-DESIGNED BY | CHECKED BY
FUNCTIONAL SUPERVISOR
STEVE THORNE

STATE OF CALIFORNIA - DEPARTMENT OF TRANSPORTATION
Caltrans® HYDRAULICS

P:\proj2\02\4c401\design\PS&E\24c401ic003.dgn

LAST REVISION DATE PLOTTED => 14-DEC-2010
07-07-10 TIME PLOTTED => 12:35

Dist	COUNTY	ROUTE	POST MILES TOTAL PROJECT	SHEET No.	TOTAL SHEETS
02	SHA	5	R10.5/R17.5	111	311

REGISTERED CIVIL ENGINEER 10-15-10 DATE

12-13-10
PLANS APPROVAL DATE

REGISTERED PROFESSIONAL ENGINEER KRISTEN A. KINGSLEY No. C72250 Exp. 6-30-12 CIVIL STATE OF CALIFORNIA

THE STATE OF CALIFORNIA OR ITS OFFICERS OR AGENTS SHALL NOT BE RESPONSIBLE FOR THE ACCURACY OR COMPLETENESS OF SCANNED COPIES OF THIS PLAN SHEET.

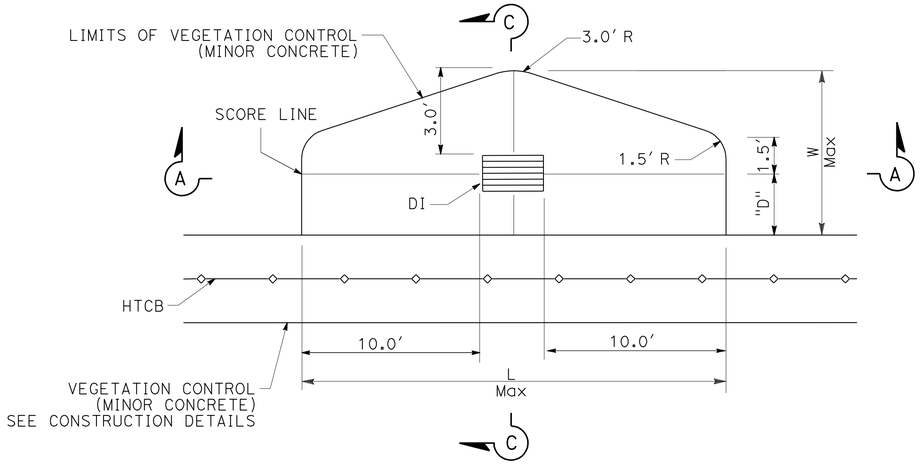

VEGETATION CONTROL DETAIL 2

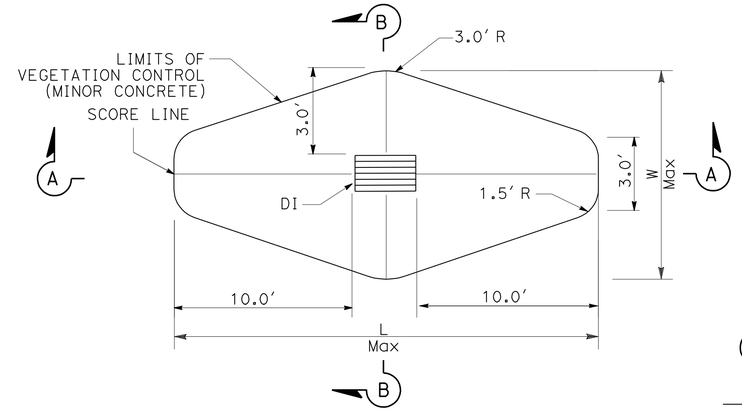

VEGETATION CONTROL DETAIL 1

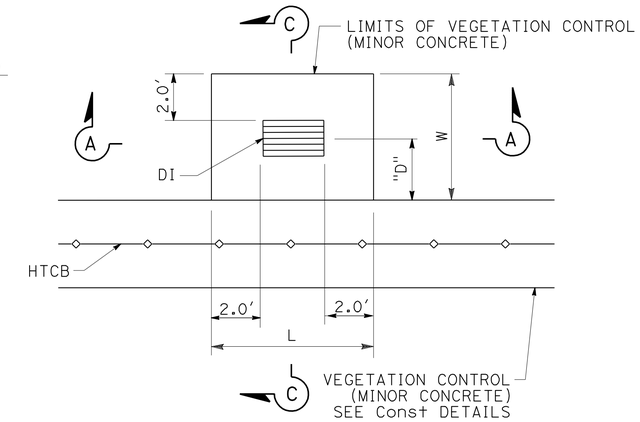

VEGETATION CONTROL DETAIL 3

DRAINAGE SYSTEM No.-UNIT	STATION	DI TYPE	"D"	L Max	W Max
2b	"CL1" 806+73.14	GCP	1.7'	23.5'	6.5'
3b	"CL1" 819+69.67	GCP	2.6'	23.5'	7.4'
4b	"CL1" 823+59.69	GCP	2.6'	23.5'	7.4'
5b	"CL1" 833+69.72	GCP	2.4'	23.5'	7.2'
6b	"CL1" 837+61.45	GCP	2.3'	23.5'	7.1'
7d	"CL1" 841+00.82	G2	2.7'	24.0'	8.2'
8d	"CL1" 845+50.41	G2	1.9'	24.0'	7.4'
9b	"CL1" 847+40.47	G2	5.0'	24.0'	10.5'
10b	"CL1" 851+06.79	G2	5.6'	24.0'	11.1'
11b	"CL1" 852+20.73	G2	5.3'	24.0'	10.8'
12g	"CL1" 855+50.00	GCP	3.4'	23.5'	8.2'
12i	"CL1" 855+49.67	G2	0.0'	24.0'	5.3'
13b	"CL1" 857+50.66	G2	2.0'	24.0'	7.3'
14b	"CL1" 862+00.34	G2	2.4'	24.0'	7.4'
15b	"CL1" 863+50.19	GCP	2.3'	23.5'	7.1'
16b	"CL1" 878+20.30	G2	3.0'	24.0'	8.5'
16e	"CL1" 881+63.00	GT4	3.0'	27.4'	8.5'
17b	"CL1" 882+50.00	GT3	7.0'	27.4'	11.5'
19b	"CL1" 892+69.61	G1	5.1'	24.0'	9.6'
21e	"CL1" 903+01.32	GT4	1.0'	27.4'	6.5'

DRAINAGE SYSTEM No.-UNIT	STATION	DI TYPE	"D"	L Max	W Max
21b	"CL1" 905+64.02	G2	1.0'	24.0'	6.5'
22e	"CL1" 913+51.26	GT4	3.0'	27.4'	8.5'
22b	"CL1" 915+92.96	G2	3.0'	24.0'	8.5'
23b	"CL1" 932+75.82	G2	1.0'	24.0'	6.5'
23e	"CL1" 933+50.02	GT4	1.0'	27.4'	6.5'
30b	"CL1" 975+54.43	G2	3.0'	24.0'	8.5'
31e	"CL1" 980+49.95	GT4	3.0'	27.4'	8.5'
31b	"CL1" 982+68.65	G2	3.0'	24.0'	8.5'
32b	"CL1" 987+12.87	G2	1.1'	24.0'	6.6'
33e	"CL1" 991+98.91	GT4	4.0'	27.4'	9.5'
33b	"CL1" 993+65.61	G2	4.0'	24.0'	9.5'
37e	"CL1" 1065+36.50	GT4	4.0'	27.4'	9.5'
37b	"CL1" 1066+10.20	G2	4.0'	24.0'	9.5'
38b	"CL1" 1079+92.66	G2	4.0'	24.0'	9.5'
38e	"CL1" 1081+67.36	GT4	4.9'	27.4'	10.4'
A1b*	"CL1" 785+01.46	GCP	1.2'	23.5'	6.0'
A2b*	"CL1" 795+50.87	GCP	2.0'	23.5'	6.8'
A3b*	"CL1" 763+50.43	GCP	2.0'	23.5'	6.8'
A4b*	"CL1" 769+00.01	GCP	2.0'	23.5'	6.8'
A5b*	"CL1" 777+00.48	GCP	2.0'	23.5'	6.8'

* THESE DRAINAGE SYSTEMS ARE PART OF ADDITIVES 1 AND 2.

DRAINAGE SYSTEM No.-UNIT	STATION	DI TYPE	L Max	W Max
1b	"CL1" 803+00.64	GCP	23.5'	9.5'
7b	"CL1" 841+00.45	GCP	23.5'	9.5'
8b	"CL1" 845+51.24	GCP	23.5'	9.5'
18b	"CL1" 886+99.33	G1	24.0'	9.0'
20b	"CL1" 897+81.09	G1	24.0'	9.0'
24b	"CL1" 938+50.45	G1	24.0'	9.0'
25b	"CL1" 945+28.75	G1	24.0'	9.0'
26d	"CL1" 948+31.72	G2	24.0'	11.0'
26g	"CL1" 949+95.12	GT4	30.8'	11.0'
26i	"CL1" 950+96.52	G2	24.0'	11.0'
26m	"CL1" 950+13.22	GCP	23.5'	9.5'
27d	"CL1" 958+00.59	GCP	23.5'	9.5'
28b	"CL1" 966+00.47	GCP	23.5'	9.5'
30e	"CL1" 974+13.73	GT4	27.4'	11.0'

DRAINAGE SYSTEM No.-UNIT	STATION	DI TYPE	"D"	L	W
18e	"CL1" 886+99.33	G2	2.4'	8.0'	6.7'
19g	"CL1" 892+69.61	G2	2.2'	8.0'	6.5'
20g	"CL1" 897+81.09	G2	4.2'	8.0'	8.5'
24g	"CL1" 938+50.45	G2	2.1'	8.0'	6.1'
25g	"CL1" 945+28.75	G2	4.3'	8.0'	8.5'
32b	"CL1" 987+13.03	GCP	1.8'	7.5'	5.6'
33h	"CL1" 991+97.18	G2	0.0'	8.0'	2.6'

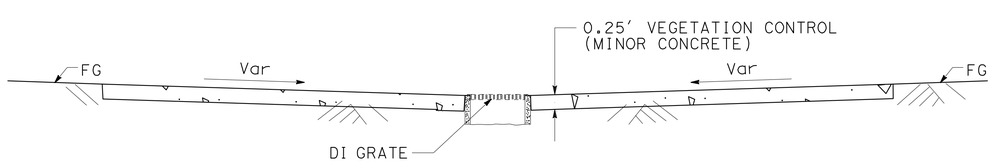

SECTION A-A

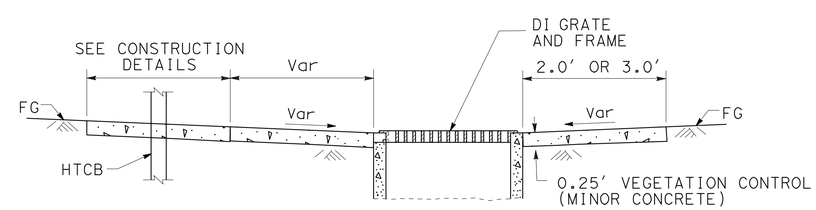

SECTION C-C

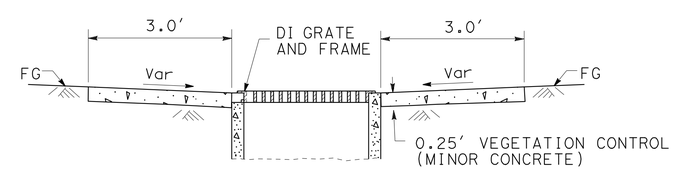

SECTION B-B

DRAINAGE DETAILS

NO SCALE

DD-4

REVISED BY | DATE REVISED
BRETT DITZLER | KRISTEN KINGSLEY
CALCULATED-DESIGNED BY | CHECKED BY
FUNCTIONAL SUPERVISOR | STEVE THORNE

STATE OF CALIFORNIA - DEPARTMENT OF TRANSPORTATION
Caltrans® HYDRAULICS

P:\proj2\02\4c401\design\PS&E\24c401ic004.dgn

LAST REVISION 07-07-10 | DATE PLOTTED => 14-DEC-2010 | TIME PLOTTED => 12:35

Dist	COUNTY	ROUTE	POST MILES TOTAL PROJECT	SHEET No.	TOTAL SHEETS
02	SHA	5	R10.5/R17.5	112	311

REGISTERED CIVIL ENGINEER 10-15-10 DATE

12-13-10
PLANS APPROVAL DATE

REGISTERED PROFESSIONAL ENGINEER KRISTEN A. KINGSLEY No. C72250 Exp. 6-30-12 CIVIL STATE OF CALIFORNIA

THE STATE OF CALIFORNIA OR ITS OFFICERS OR AGENTS SHALL NOT BE RESPONSIBLE FOR THE ACCURACY OR COMPLETENESS OF SCANNED COPIES OF THIS PLAN SHEET.

NOTE:

FIELD VERIFY IRRIGATION CROSSOVER PIPE AND CONDUIT SIZES

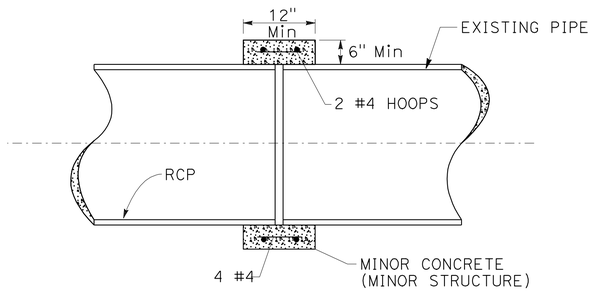

CONCRETE COLLAR DETAIL

1c 12c 16h 19d 19e 20d 20e 21g 21h 21i
22g 22h 23g 23h 23i 24d 24e 25d 25e 26b
27e 37f A1c* A2c* A3c* A4c* A5c*

* THESE DRAINAGE SYSTEMS ARE PART OF ADDITIVES 1 AND 2

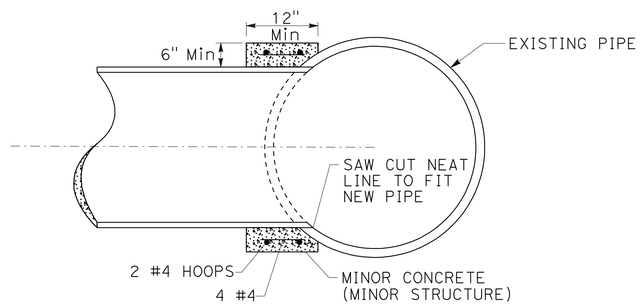

CONCRETE COLLAR DETAIL

16f 17c

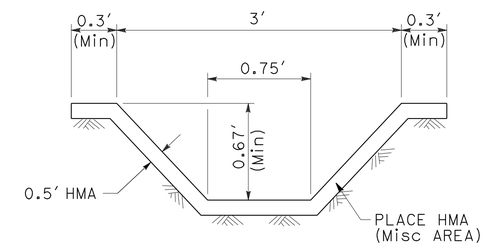

TYPICAL CROSS SECTION

HMA OVERSIDE DRAIN

39a 36a

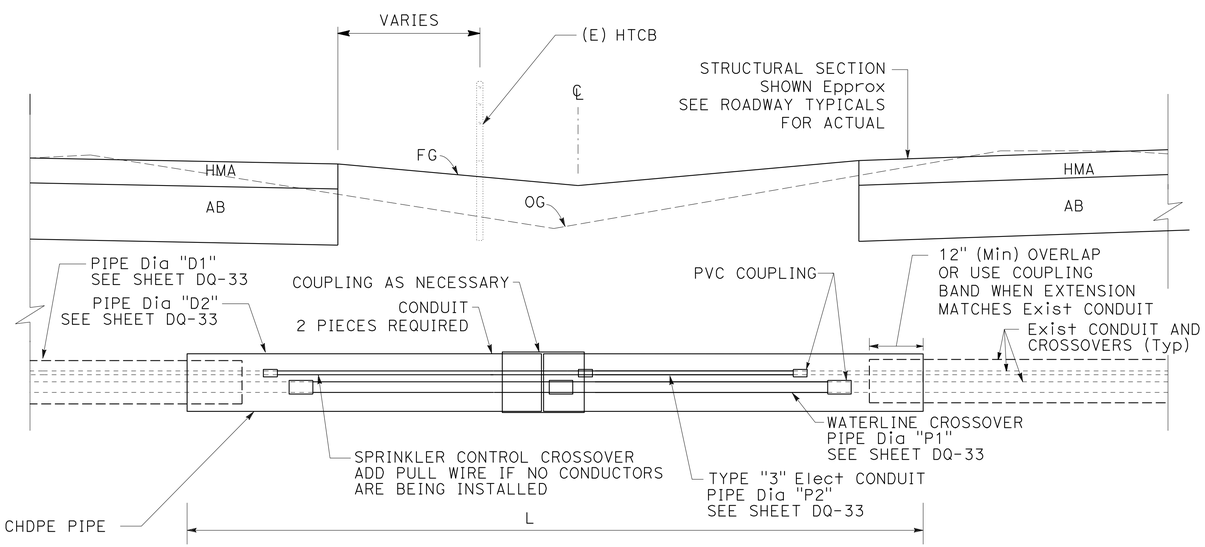

EXTEND IRRIGATION CROSSOVER (MEDIAN)

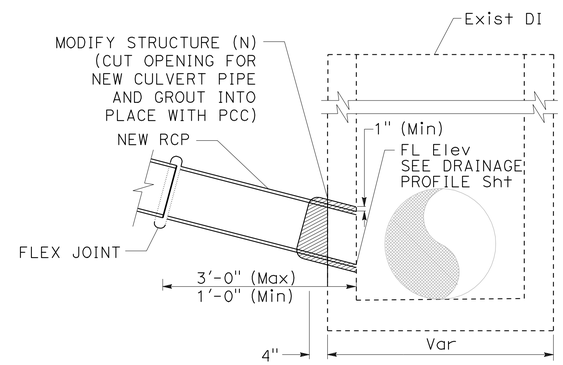

CONNECT TO EXISTING INLET (N)

DRAINAGE SYSTEM No.-UNIT	STATION	STRUCTURE
18c	"CL1" 886+99.33	TYPE G2 DI
31f	"CL1" 980+49.95	TYPE GCP DI
33f	"CL1" 991+98.91	TYPE G2 DI
38f	"CL1" 1081+67.36	TYPE GCP DI

DRAINAGE DETAILS

NO SCALE

DD-5

REVISED BY | DATE REVISED
BRETT DITZLER | KRISTEN KINGSLEY
CALCULATED-DESIGNED BY | CHECKED BY
FUNCTIONAL SUPERVISOR
STEVE THORNE

STATE OF CALIFORNIA - DEPARTMENT OF TRANSPORTATION
Caltrans
HYDRAULICS

P:\proj2\02\4c401\design\PS&E\24c401ic005.dgn

LAST REVISION 07-07-10 | DATE PLOTTED => 14-DEC-2010 | TIME PLOTTED => 12:35

Dist	COUNTY	ROUTE	POST MILES TOTAL PROJECT	SHEET No.	TOTAL SHEETS
02	SHA	5	R10.5/R17.5	113	311

REGISTERED CIVIL ENGINEER 10-15-10 DATE

12-13-10
PLANS APPROVAL DATE

REGISTERED PROFESSIONAL ENGINEER KRISTEN A. KINGSLEY No. C72250 Exp. 6-30-12 CIVIL STATE OF CALIFORNIA

THE STATE OF CALIFORNIA OR ITS OFFICERS OR AGENTS SHALL NOT BE RESPONSIBLE FOR THE ACCURACY OR COMPLETENESS OF SCANNED COPIES OF THIS PLAN SHEET.

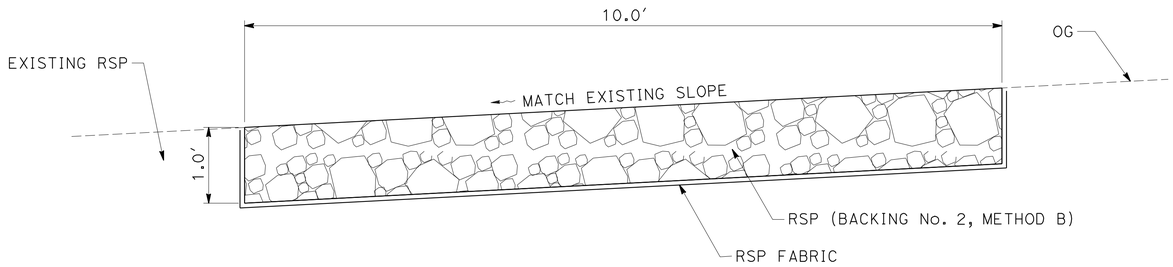

SECTION A-A

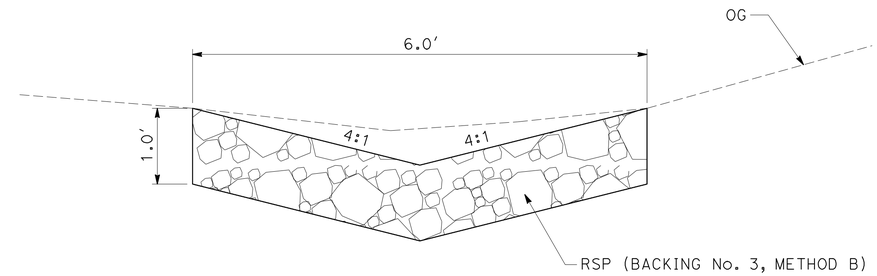

SECTION B-B

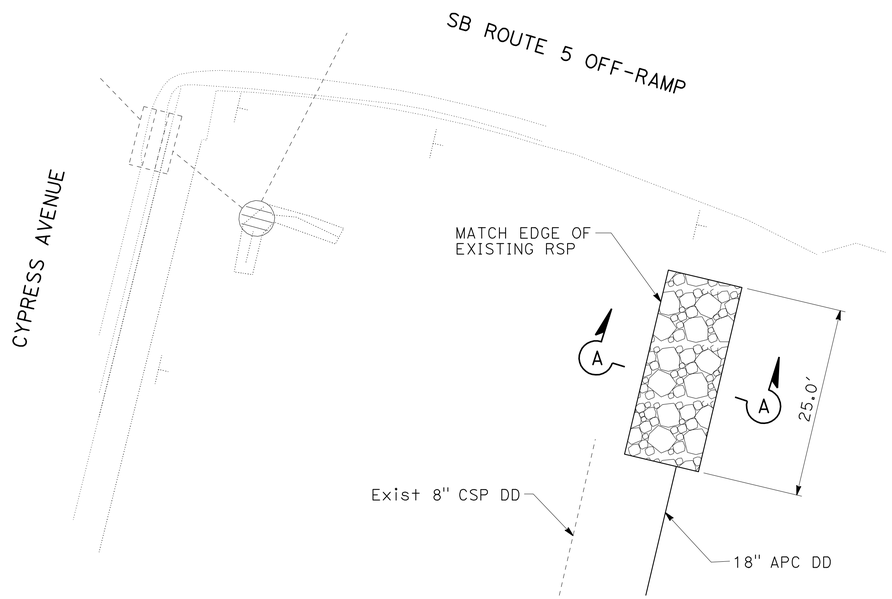

PLAN
ROCK SLOPE PROTECTION
30h

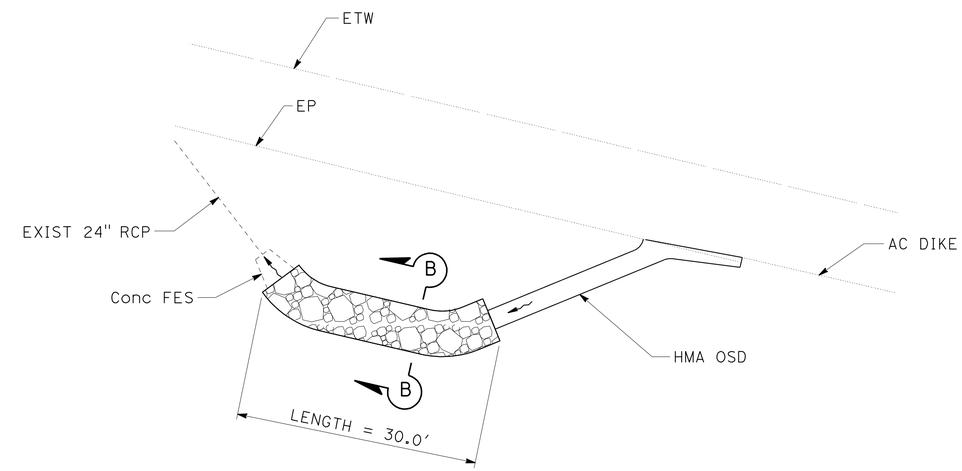

PLAN
ROCK SLOPE PROTECTION
36b

DRAINAGE DETAILS

NO SCALE

DD-6

REVISED BY	DATE REVISED
BRETT DITZLER	KRISTEN KINGSLEY
CALCULATED-DESIGNED BY	CHECKED BY
FUNCTIONAL SUPERVISOR	STEVE THORNE

STATE OF CALIFORNIA - DEPARTMENT OF TRANSPORTATION
Caltrans
HYDRAULICS

P:\proj2\02\4c401\design\PS&E\24c401ic006.dgn

LAST REVISION DATE PLOTTED => 14-DEC-2010
TIME PLOTTED => 12:35

Dist	COUNTY	ROUTE	POST MILES TOTAL PROJECT	SHEET No.	TOTAL SHEETS
02	SHA	5	R10.5/R17.5	114	311

REGISTERED CIVIL ENGINEER 10-15-10 DATE

12-13-10
PLANS APPROVAL DATE

REGISTERED PROFESSIONAL ENGINEER KRISTEN A. KINGSLEY No. C72250 Exp. 6-30-12 CIVIL STATE OF CALIFORNIA

THE STATE OF CALIFORNIA OR ITS OFFICERS OR AGENTS SHALL NOT BE RESPONSIBLE FOR THE ACCURACY OR COMPLETENESS OF SCANNED COPIES OF THIS PLAN SHEET.

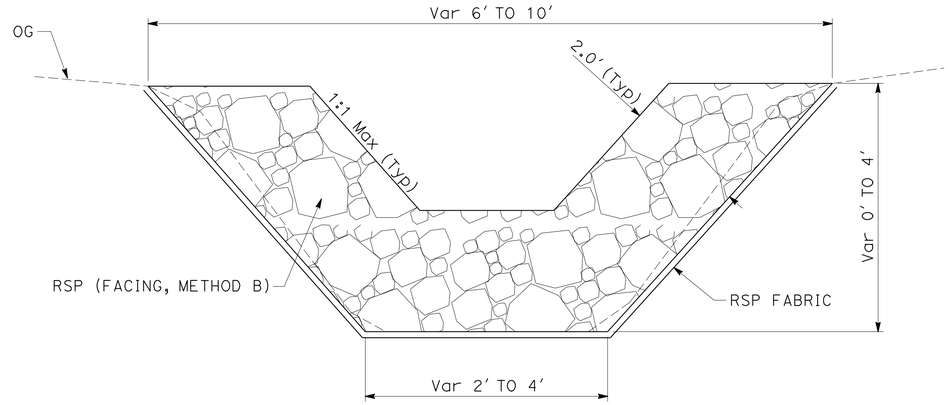

SECTION A-A

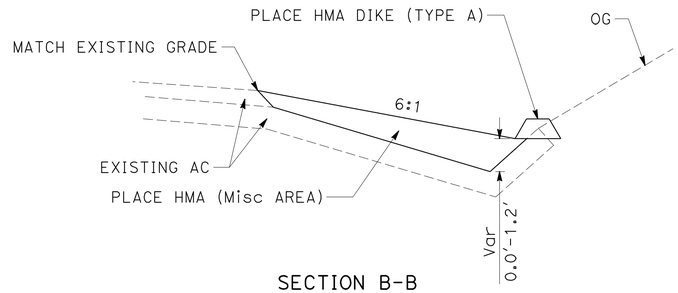

SECTION B-B

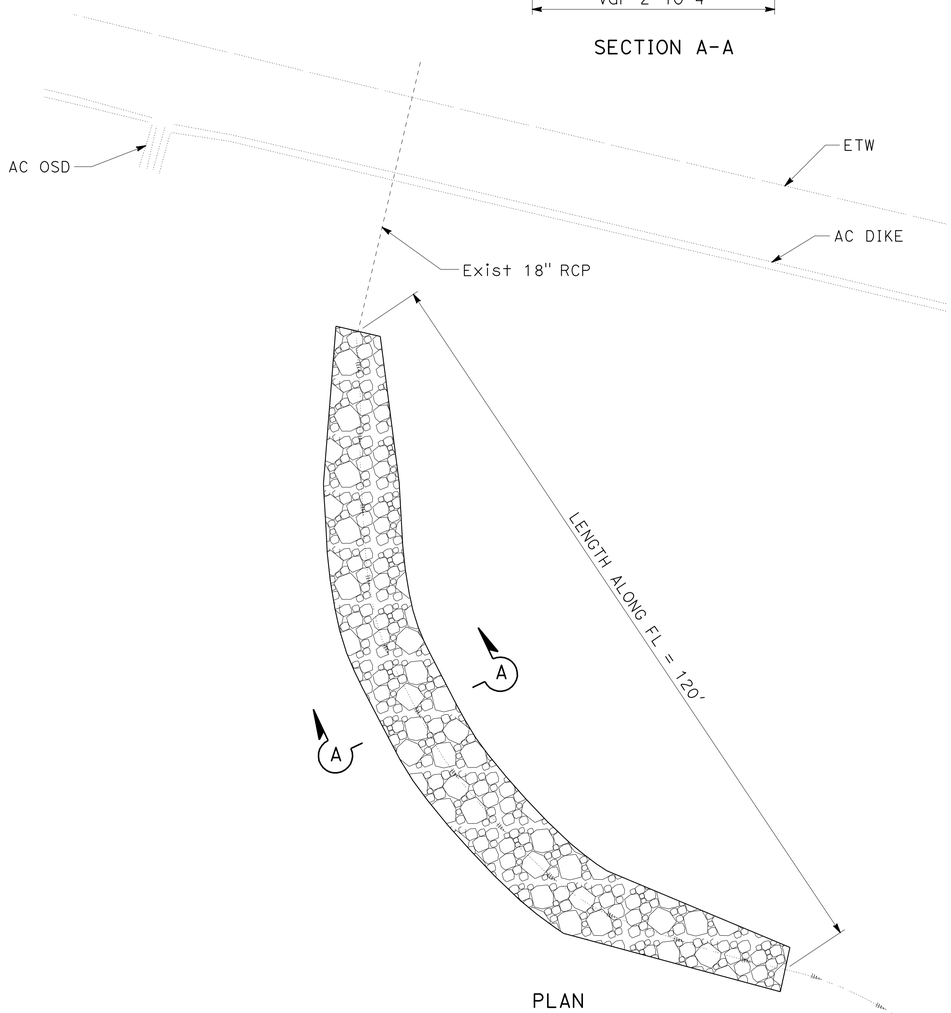

PLAN

ROCK SLOPE PROTECTION

37h

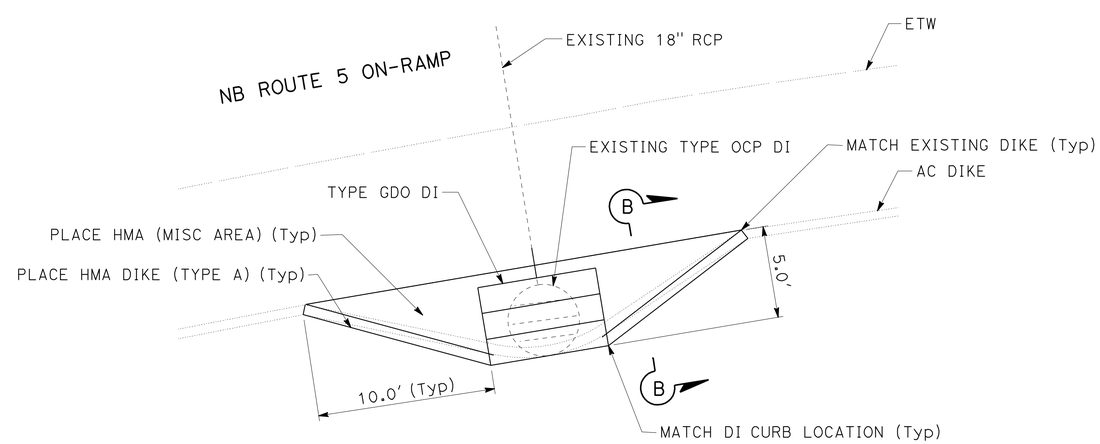

DRAINAGE INLET DETAIL

12b

DRAINAGE DETAILS

NO SCALE

DD-7

REVISED BY	DATE REVISED

CALCULATED-DESIGNED BY	BRETT DITZLER
CHECKED BY	KRISTEN KINGSLEY
FUNCTIONAL SUPERVISOR	STEVE THORNE

STATE OF CALIFORNIA - DEPARTMENT OF TRANSPORTATION
Caltrans HYDRAULICS

P:\proj2\02\4c401\design\PS&E\24c401ic007.dgn

LAST REVISION 07-07-10 DATE PLOTTED => 14-DEC-2010 TIME PLOTTED => 12:35

Dist	COUNTY	ROUTE	POST MILES TOTAL PROJECT	SHEET No.	TOTAL SHEETS
02	SHA	5	R10.5/R17.5	115	311

REGISTERED CIVIL ENGINEER 10-15-10 DATE

12-13-10
PLANS APPROVAL DATE

REGISTERED PROFESSIONAL ENGINEER KRISTEN A. KINGSLEY No. C72250 Exp. 6-30-12 CIVIL STATE OF CALIFORNIA

THE STATE OF CALIFORNIA OR ITS OFFICERS OR AGENTS SHALL NOT BE RESPONSIBLE FOR THE ACCURACY OR COMPLETENESS OF SCANNED COPIES OF THIS PLAN SHEET.

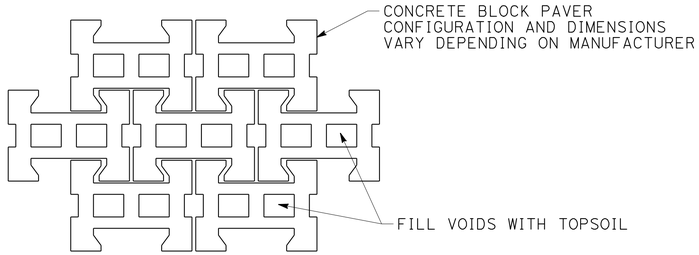

DETAIL A

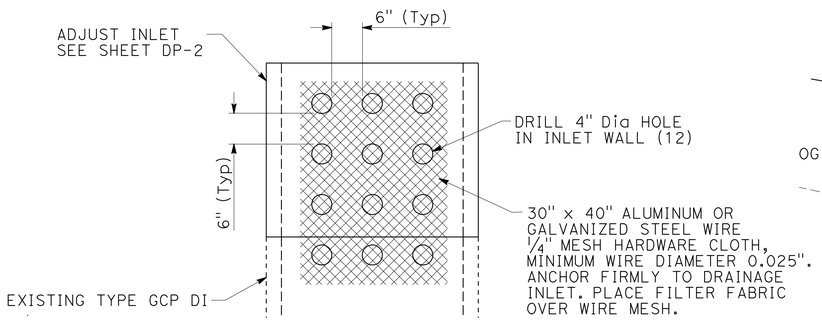

SECTION A-A
MODIFY INLET

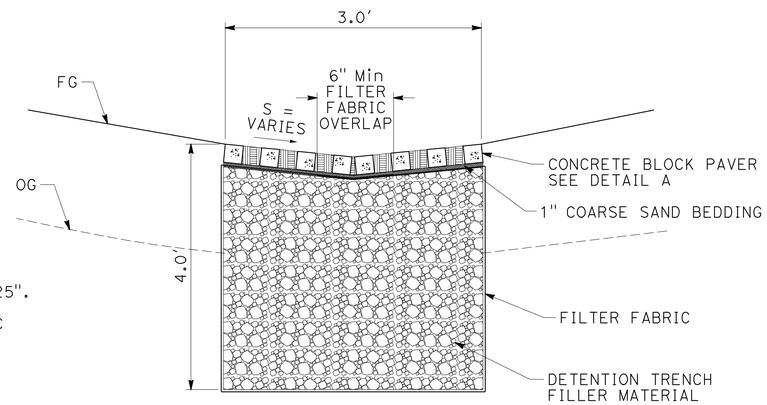

SECTION B-B
DETENTION TRENCH

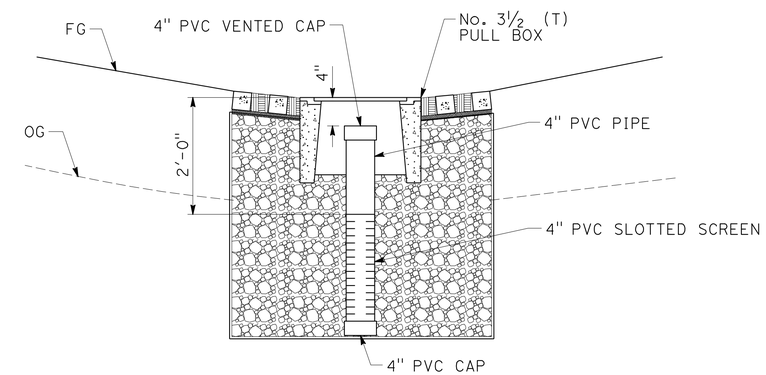

SECTION C-C
OBSERVATION WELL

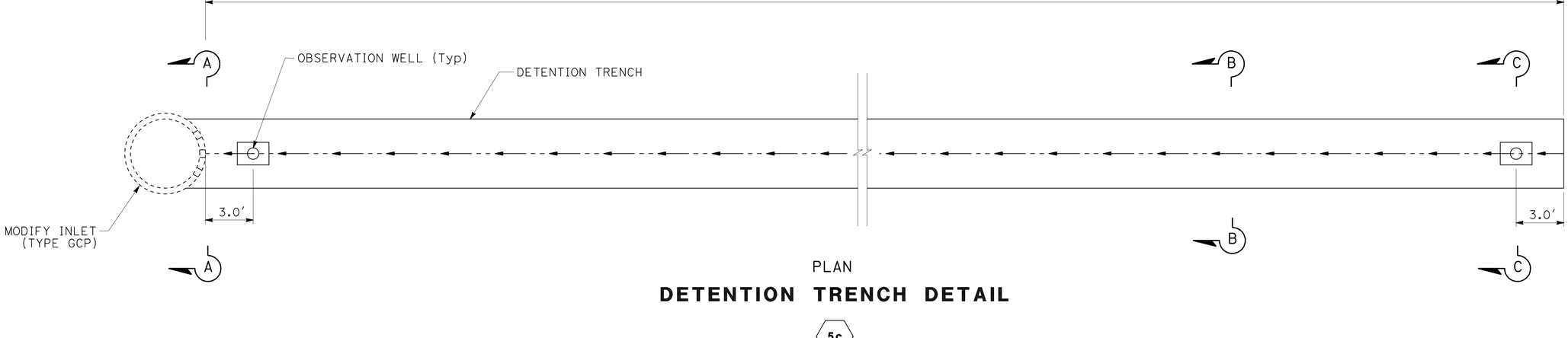

PLAN
DETENTION TRENCH DETAIL

5c

DRAINAGE DETAILS

NO SCALE

DD-8

REVISED BY | DATE REVISED
BRETT DITZLER | KRISTEN KINGSLEY
CALCULATED-DESIGNED BY | CHECKED BY
FUNCTIONAL SUPERVISOR: STEVE THORNE

STATE OF CALIFORNIA - DEPARTMENT OF TRANSPORTATION
Caltrans
HYDRAULICS

P:\proj2\02\4c401\design\PS&E\24c401ic008.dgn

LAST REVISION | DATE PLOTTED => 14-DEC-2010 | TIME PLOTTED => 12:35
07-07-10

Dist	COUNTY	ROUTE	POST MILES TOTAL PROJECT	SHEET No.	TOTAL SHEETS
02	SHA	5	R10.5/R17.5	116	311

REGISTERED CIVIL ENGINEER 10-15-10 DATE

12-13-10
PLANS APPROVAL DATE

REGISTERED PROFESSIONAL ENGINEER KRISTEN A. KINGSLEY No. C72250 Exp. 6-30-12 CIVIL STATE OF CALIFORNIA

THE STATE OF CALIFORNIA OR ITS OFFICERS OR AGENTS SHALL NOT BE RESPONSIBLE FOR THE ACCURACY OR COMPLETENESS OF SCANNED COPIES OF THIS PLAN SHEET.

NOTE:

TYPE GDO DI (Mod) SHALL BE CAST-IN-PLACE. SEE STANDARD PLANS FOR DETAILS NOT SHOWN.

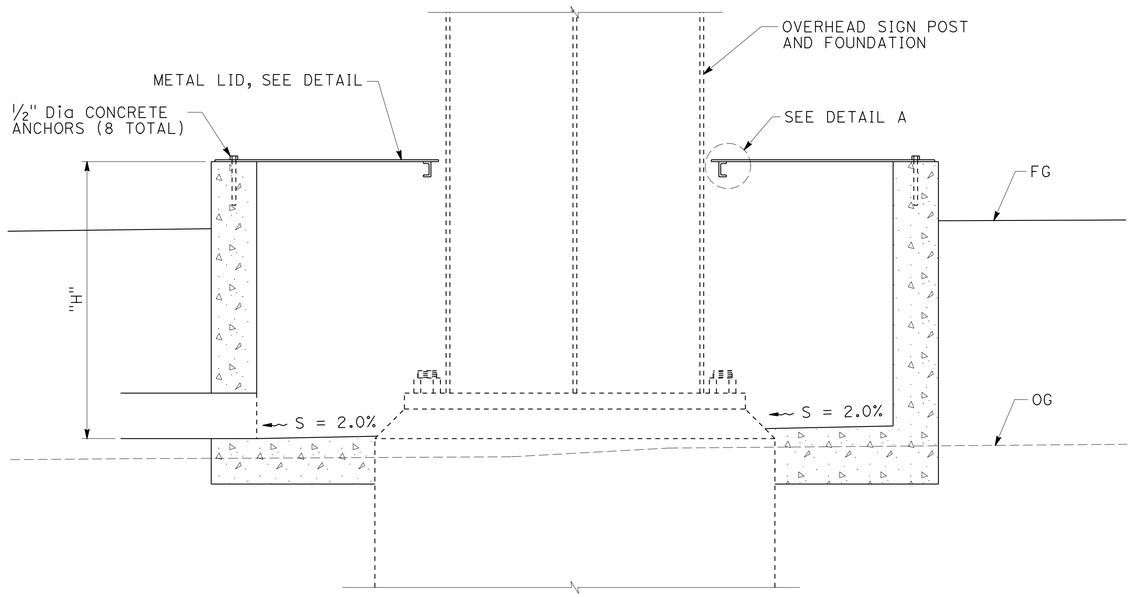

SECTION A-A

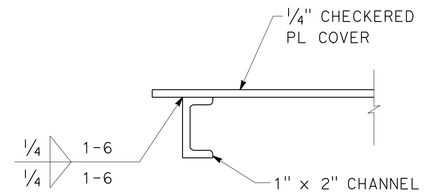

DETAIL A

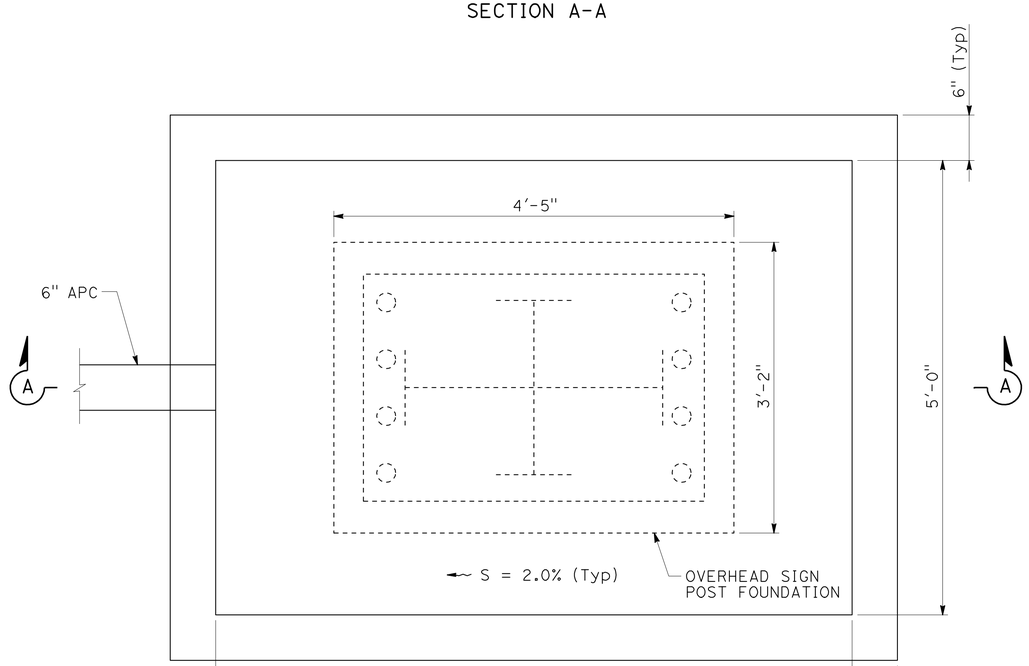

PLAN

TYPE GDO DI (MOD)

27a

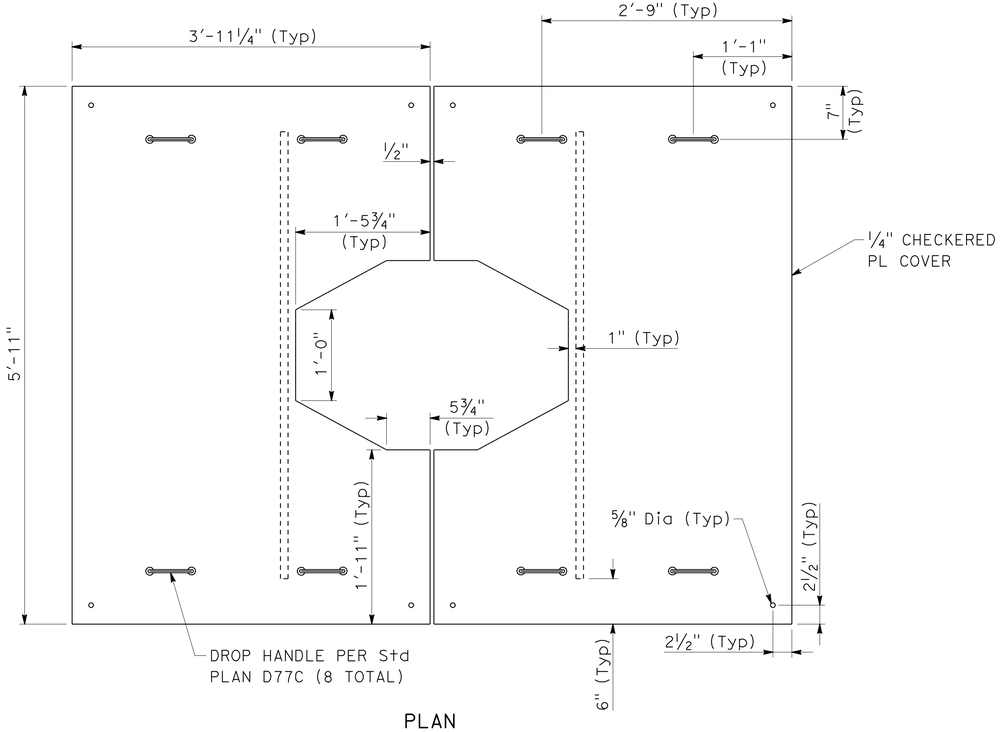

PLAN

METAL LID DETAIL

DRAINAGE DETAILS

NO SCALE

DD-9

REVISED BY	DATE REVISED
BRETT DITZLER	KRISTEN KINGSLEY
CALCULATED-DESIGNED BY	CHECKED BY
FUNCTIONAL SUPERVISOR	STEVE THORNE

STATE OF CALIFORNIA - DEPARTMENT OF TRANSPORTATION
Caltrans HYDRAULICS

P:\proj2\02\4c401\design\PS&E\24c401ic009.dgn

LAST REVISION 07-07-10 | DATE PLOTTED => 14-DEC-2010 TIME PLOTTED => 12:36

Dist	COUNTY	ROUTE	POST MILES TOTAL PROJECT	SHEET No.	TOTAL SHEETS
02	SHA	5	R10.5/R17.5	117	311

REGISTERED CIVIL ENGINEER 10-15-10 DATE

12-13-10
PLANS APPROVAL DATE

REGISTERED PROFESSIONAL ENGINEER KRISTEN A. KINGSLEY No. C72250 Exp. 6-30-12 CIVIL STATE OF CALIFORNIA

THE STATE OF CALIFORNIA OR ITS OFFICERS OR AGENTS SHALL NOT BE RESPONSIBLE FOR THE ACCURACY OR COMPLETENESS OF SCANNED COPIES OF THIS PLAN SHEET.

NOTES:

1. ALL CULVERT PIPES SHALL HAVE POSITIVE WATERTIGHT JOINTS EXCEPT 36" AND 42" PAPC. 36" AND 42" PAPC SHALL HAVE STANDARD PIPE JOINT.
2. SUFFICIENT SPACE WAS NOT AVAILABLE TO LIST ALL DRAINAGE ITEMS WITHIN A SINGLE TABLE ON A SHEET BORDER, THEREFORE THE FIRST GROUPING OF DRAINAGE ITEMS IS REPEATED EVERY THIRD SHEET STARTING ON DQ-1 (DQ-1, DQ-4, ETC.), THE SECOND GROUPING IS REPEATED EVERY THIRD SHEET STARTING ON DQ-2 (DQ-2, DQ-5, ETC.), AND THE THIRD GROUPING IS REPEATED EVERY THIRD SHEET STARTING ON DQ-3 (DQ-3, DQ-6, ETC.).

ABBREVIATIONS

CHDPE	CORRUGATED HIGH DENSITY POLYETHYLENE
OSD	OVERSIDE DRAIN
PA	POLYMERIZED ASPHALT COATING
PS	POLYMERIC SHEET COATING
PAPC	PERFORATED ALTERNATIVE PIPE CULVERT

LEGEND

* CLASS II RCP OR BETTER MEETING THE GENERAL PIPE JOINT REQUIREMENTS FOR THIS PROJECT.

\# APPLY TREATMENT TO INTERIOR AND EXTERIOR OF THE ENTIRE CULVERT PIPE.

\## PIPE WALL PERFORATION REQUIRED FOR ALL ALLOWABLE CULVERT TYPES. SEE SPECS FOR PERFORATION REQUIREMENTS.

(N) NOT A SEPARATE PAY ITEM, FOR INFORMATION ONLY.

ALTERNATIVE PIPE CULVERT ALLOWABLE PIPE MATERIAL AND PROTECTION

DESIGNATION	RCP*	CSP (TYPE 1)		CSP (TYPE 2)		PP
		T (IN)	COATING LINING	T (IN)	COATING LINING #	TYPE
6" APC	YES	0.079	NONE	0.064	PA OR PS	S
18" APC	NO	0.109	NONE	0.064	PA OR PS	S
36" PAPC ##	YES	0.109	NONE	0.064	PA OR PS	S
42" APC	YES	0.109	NONE	0.064	PA OR PS	S
42" PAPC ##	YES	0.109	NONE	0.064	PA OR PS	S
18" AP DD	NO	0.109	NONE	0.064	PA OR PS	S

DRAINAGE QUANTITIES

DRAINAGE PROFILE OR PLAN SHEET No.	DRAINAGE SYSTEM No.	DRAINAGE UNIT No.	ABANDON CULVERT	ABANDON INLET	REMOVE FLARED END SECTION	REMOVE CULVERT	REMOVE INLET	REMOVE DOWNDRAIN	ADJUST INLET	MODIFY INLET	SAND BACKFILL	HOT MIX ASPHALT	PLACE HOT MIX ASPHALT DIKE (TYPE A)	PLACE HOT MIX ASPHALT (MISCELLANEOUS AREA)	MINOR CONCRETE (MINOR STRUCTURE)	6" ALTERNATIVE PIPE CULVERT	DRAINAGE SYSTEM No.	DRAINAGE UNIT No.	ALIGNMENT	STATION	DESCRIPTION
			EA	EA	EA	LF	EA	EA	EA	EA	CY	TON	LF	SQYD	CY	LF					
DP-1	1	a													0.7		1	a	CL1	803+00.64	TYPE GCP DI, W/ (1) GRATE TYPE 36R
DP-1	1	b															1	b	CL1	803+00.64	VEGETATION CONTROL (MINOR CONCRETE)
DP-1	1	c															1	c	CL1	803+00.64	18" X 9.2' RCP, Conc COLLAR
DP-1	1	d			1												1	d	CL1	803+00.64	REMOVE FLARED END SECTION
DP-1	2	a							1								2	a	CL1	806+73.14	ADJUST TYPE GCP DI, W/ (1) GRATE TYPE 36R
DP-1	2	b															2	b	CL1	806+73.14	VEGETATION CONTROL (MINOR CONCRETE)
DP-1	3	a							1								3	a	CL1	819+69.67	ADJUST TYPE GCP DI, W/ (1) GRATE TYPE 36R
DP-1	3	b															3	b	CL1	819+69.67	VEGETATION CONTROL (MINOR CONCRETE)
DP-2	4	a							1								4	a	CL1	823+59.69	ADJUST TYPE GCP DI, W/ (1) GRATE TYPE 36R
DP-2	4	b															4	b	CL1	823+59.69	VEGETATION CONTROL (MINOR CONCRETE)
DP-2	5	a							1								5	a	CL1	833+69.72	ADJUST TYPE GCP DI, W/ (1) GRATE TYPE 36R
DP-2	5	b															5	b	CL1	833+69.72	VEGETATION CONTROL (MINOR CONCRETE)
DP-2	5	c															5	c	CL1	833+69.72	DETENTION TRENCH
DP-2	5	d								1							5	d	CL1	833+69.72	MODIFY INLET
DP-2	6	a							1								6	a	CL1	837+61.45	ADJUST TYPE GCP DI, W/ (1) GRATE TYPE 36R
DP-2	6	b															6	b	CL1	837+61.45	VEGETATION CONTROL (MINOR CONCRETE)
DP-3	7	a							1								7	a	CL1	841+00.45	ADJUST TYPE GCP DI, W/ (1) GRATE TYPE 36R
DP-3	7	b															7	b	CL1	841+00.45	VEGETATION CONTROL (MINOR CONCRETE)
DP-3	7	c							1								7	c	CL1	841+00.82	ADJUST TYPE G2 DI, W/ (1) GRATE TYPE 24-9
DP-3	7	d															7	d	CL1	841+00.82	VEGETATION CONTROL (MINOR CONCRETE)
SHEET TOTAL					1				7	1					0.7						

DRAINAGE QUANTITIES

DQ-1

REVISED BY | DATE REVISED
BRETT DITZLER | KRISTEN KINGSLEY
CALCULATED-DESIGNED BY | CHECKED BY
FUNCTIONAL SUPERVISOR
STEVE THORNE

STATE OF CALIFORNIA - DEPARTMENT OF TRANSPORTATION
Caltrans® HYDRAULICS

P:\proj2\02\4c401\design\PS&E\24c401id001.dgn

LAST REVISION DATE PLOTTED => 14-DEC-2010
07-07-10 TIME PLOTTED => 12:36

Dist	COUNTY	ROUTE	POST MILES TOTAL PROJECT	SHEET No.	TOTAL SHEETS
02	SHA	5	R10.5/R17.5	118	311

REGISTERED CIVIL ENGINEER 10-15-10 DATE

12-13-10
PLANS APPROVAL DATE

REGISTERED PROFESSIONAL ENGINEER KRISTEN A. KINGSLEY No. C72250 Exp. 6-30-12 CIVIL STATE OF CALIFORNIA

THE STATE OF CALIFORNIA OR ITS OFFICERS OR AGENTS SHALL NOT BE RESPONSIBLE FOR THE ACCURACY OR COMPLETENESS OF SCANNED COPIES OF THIS PLAN SHEET.

DRAINAGE QUANTITIES

DRAINAGE PROFILE OR PLAN SHEET No.	DRAINAGE SYSTEM No.	DRAINAGE UNIT No.	18" ALTERNATIVE PIPE CULVERT	36" PERFORATED ALTERNATIVE PIPE CULVERT	42" ALTERNATIVE PIPE CULVERT	42" PERFORATED ALTERNATIVE PIPE CULVERT	18" REINFORCED CONCRETE PIPE (CLASS II, RUBBER GASKET JOINT)	24" REINFORCED CONCRETE PIPE (CLASS II, RUBBER GASKET JOINT)	30" REINFORCED CONCRETE PIPE (CLASS II, RUBBER GASKET JOINT)	36" REINFORCED CONCRETE PIPE (CLASS IV, RUBBER GASKET JOINT)	PERMEABLE MATERIAL	DETENTION TRENCH	8" CORRUGATED STEEL FLUME DOWNDRAIN	18" TAPERED INLET	FLUME ANCHOR ASSEMBLY	18" ALTERNATIVE PIPE DOWNDRAIN	DRAINAGE SYSTEM No.	DRAINAGE UNIT No.	ALIGNMENT	STATION	DESCRIPTION
			LF	LF	LF	LF	LF	LF	LF	LF	CY	LF	LF	EA	EA	LF					
DP-1	1	a															1	a	CL1	803+00.64	TYPE GCP DI, W/ (1) GRATE TYPE 36R
DP-1	1	b															1	b	CL1	803+00.64	VEGETATION CONTROL (MINOR CONCRETE)
DP-1	1	c					9.2										1	c	CL1	803+00.64	18" X 9.2' RCP, Conc COLLAR
DP-1	1	d															1	d	CL1	803+00.64	REMOVE FLARED END SECTION
DP-1	2	a															2	a	CL1	806+73.14	ADJUST TYPE GCP DI, W/ (1) GRATE TYPE 36R
DP-1	2	b															2	b	CL1	806+73.14	VEGETATION CONTROL (MINOR CONCRETE)
DP-1	3	a															3	a	CL1	819+69.67	ADJUST TYPE GCP DI, W/ (1) GRATE TYPE 36R
DP-1	3	b															3	b	CL1	819+69.67	VEGETATION CONTROL (MINOR CONCRETE)
DP-2	4	a															4	a	CL1	823+59.69	ADJUST TYPE GCP DI, W/ (1) GRATE TYPE 36R
DP-2	4	b															4	b	CL1	823+59.69	VEGETATION CONTROL (MINOR CONCRETE)
DP-2	5	a															5	a	CL1	833+69.72	ADJUST TYPE GCP DI, W/ (1) GRATE TYPE 36R
DP-2	5	b															5	b	CL1	833+69.72	VEGETATION CONTROL (MINOR CONCRETE)
DP-2	5	c										100.0					5	c	CL1	833+69.72	DETENTION TRENCH
DP-2	5	d															5	d	CL1	833+69.72	MODIFY INLET
DP-2	6	a															6	a	CL1	837+61.45	ADJUST TYPE GCP DI, W/ (1) GRATE TYPE 36R
DP-2	6	b															6	b	CL1	837+61.45	VEGETATION CONTROL (MINOR CONCRETE)
DP-3	7	a															7	a	CL1	841+00.45	ADJUST TYPE GCP DI, W/ (1) GRATE TYPE 36R
DP-3	7	b															7	b	CL1	841+00.45	VEGETATION CONTROL (MINOR CONCRETE)
DP-3	7	c															7	c	CL1	841+00.82	ADJUST TYPE G2 DI, W/ (1) GRATE TYPE 24-9
DP-3	7	d															7	d	CL1	841+00.82	VEGETATION CONTROL (MINOR CONCRETE)
SHEET TOTAL							9.2					100.0									

DRAINAGE QUANTITIES

DQ-2

CALCULATED-DESIGNED BY: BRETT DITZLER
CHECKED BY: KRISTEN KINGSLEY
REVISED BY
DATE REVISED
FUNCTIONAL SUPERVISOR: STEVE THORNE

STATE OF CALIFORNIA - DEPARTMENT OF TRANSPORTATION
Caltrans
HYDRAULICS

P:\proj2\02\4c401\design\PS&E\24c401id002.dgn

LAST REVISION DATE PLOTTED => 14-DEC-2010
07-07-10 TIME PLOTTED => 12:36

Dist	COUNTY	ROUTE	POST MILES TOTAL PROJECT	SHEET No.	TOTAL SHEETS
02	SHA	5	R10.5/R17.5	119	311

REGISTERED CIVIL ENGINEER 10-15-10 DATE

12-13-10
PLANS APPROVAL DATE

REGISTERED PROFESSIONAL ENGINEER KRISTEN A. KINGSLEY No. C72250 Exp. 6-30-12 CIVIL STATE OF CALIFORNIA

THE STATE OF CALIFORNIA OR ITS OFFICERS OR AGENTS SHALL NOT BE RESPONSIBLE FOR THE ACCURACY OR COMPLETENESS OF SCANNED COPIES OF THIS PLAN SHEET.

DRAINAGE QUANTITIES

DRAINAGE PROFILE OR PLAN SHEET No.	DRAINAGE SYSTEM No. ⬡	DRAINAGE UNIT No. ○	36" PRECAST CONCRETE PIPE INLET	OBSERVATION WELL	ROCK SLOPE PROTECTION (FACING, METHOD B)	ROCK SLOPE PROTECTION (BACKING No. 2, METHOD B)	ROCK SLOPE PROTECTION (BACKING No. 3, METHOD B)	FILTER FABRIC	ROCK SLOPE PROTECTION FABRIC	MISCELLANEOUS IRON AND STEEL	VEGETATION CONTROL (MINOR CONCRETE)	(N) DI HEIGHT	Max COVER	DRAINAGE SYSTEM No. ⬡	DRAINAGE UNIT No. ○	ALIGNMENT	STATION	DESCRIPTION
			LF	EA	CY	CY	CY	SQYD	SQYD	LB	SQYD	FT	FT					
DP-1	1	a	2.9							236		2.36		1	a	CL1	803+00.64	TYPE GCP DI, W/ (1) GRATE TYPE 36R
DP-1	1	b									15.3			1	b	CL1	803+00.64	VEGETATION CONTROL (MINOR CONCRETE)
DP-1	1	c											2.0	1	c	CL1	803+00.64	18" X 9.2′ RCP, Conc COLLAR
DP-1	1	d												1	d	CL1	803+00.64	REMOVE FLARED END SECTION
DP-1	2	a										2.12		2	a	CL1	806+73.14	ADJUST TYPE GCP DI, W/ (1) GRATE TYPE 36R
DP-1	2	b									11.6			2	b	CL1	806+73.14	VEGETATION CONTROL (MINOR CONCRETE)
DP-1	3	a										2.59		3	a	CL1	819+69.67	ADJUST TYPE GCP DI, W/ (1) GRATE TYPE 36R
DP-1	3	b									14.0			3	b	CL1	819+69.67	VEGETATION CONTROL (MINOR CONCRETE)
DP-2	4	a										2.74		4	a	CL1	823+59.69	ADJUST TYPE GCP DI, W/ (1) GRATE TYPE 36R
DP-2	4	b									14.0			4	b	CL1	823+59.69	VEGETATION CONTROL (MINOR CONCRETE)
DP-2	5	a										2.87		5	a	CL1	833+69.72	ADJUST TYPE GCP DI, W/ (1) GRATE TYPE 36R
DP-2	5	b									13.5			5	b	CL1	833+69.72	VEGETATION CONTROL (MINOR CONCRETE)
DP-2	5	c		2										5	c	CL1	833+69.72	DETENTION TRENCH
DP-2	5	d												5	d	CL1	833+69.72	MODIFY INLET
DP-2	6	a										2.16		6	a	CL1	837+61.45	ADJUST TYPE GCP DI, W/ (1) GRATE TYPE 36R
DP-2	6	b									13.2			6	b	CL1	837+61.45	VEGETATION CONTROL (MINOR CONCRETE)
DP-3	7	a								236		1.00		7	a	CL1	841+00.45	ADJUST TYPE GCP DI, W/ (1) GRATE TYPE 36R
DP-3	7	b									15.3			7	b	CL1	841+00.45	VEGETATION CONTROL (MINOR CONCRETE)
DP-3	7	c										3.23		7	c	CL1	841+00.82	ADJUST TYPE G2 DI, W/ (1) GRATE TYPE 24-9
DP-3	7	d									14.1			7	d	CL1	841+00.82	VEGETATION CONTROL (MINOR CONCRETE)
SHEET TOTAL			2.9	2						472	111.0							

DRAINAGE QUANTITIES

DQ-3

REVISED BY | DATE REVISED
BRETT DITZLER | KRISTEN KINGSLEY
CALCULATED-DESIGNED BY | CHECKED BY
FUNCTIONAL SUPERVISOR
STEVE THORNE

STATE OF CALIFORNIA - DEPARTMENT OF TRANSPORTATION
Caltrans
HYDRAULICS

P:\proj2\02\4c401\design\PS&E\24c401id003.dgn

LAST REVISION | DATE PLOTTED => 14-DEC-2010
07-07-10 | TIME PLOTTED => 12:36

Dist	COUNTY	ROUTE	POST MILES TOTAL PROJECT	SHEET No.	TOTAL SHEETS
02	SHA	5	R10.5/R17.5	120	311

REGISTERED CIVIL ENGINEER 10-15-10 DATE

12-13-10
PLANS APPROVAL DATE

REGISTERED PROFESSIONAL ENGINEER KRISTEN A. KINGSLEY No. C72250 Exp. 6-30-12 CIVIL STATE OF CALIFORNIA

THE STATE OF CALIFORNIA OR ITS OFFICERS OR AGENTS SHALL NOT BE RESPONSIBLE FOR THE ACCURACY OR COMPLETENESS OF SCANNED COPIES OF THIS PLAN SHEET.

DRAINAGE QUANTITIES

DRAINAGE PROFILE OR PLAN SHEET No.	DRAINAGE SYSTEM No.	DRAINAGE UNIT No.	ABANDON CULVERT	ABANDON INLET	REMOVE FLARED END SECTION	REMOVE CULVERT	REMOVE INLET	REMOVE DOWNDRAIN	ADJUST INLET	MODIFY INLET	SAND BACKFILL	HOT MIX ASPHALT	PLACE HOT MIX ASPHALT DIKE (TYPE A)	PLACE HOT MIX ASPHALT (MISCELLANEOUS AREA)	MINOR CONCRETE (MINOR STRUCTURE)	6" ALTERNATIVE PIPE CULVERT	DRAINAGE SYSTEM No.	DRAINAGE UNIT No.	ALIGNMENT	STATION	DESCRIPTION
			EA	EA	EA	LF	EA	EA	EA	EA	CY	TON	LF	SQYD	CY	LF					
DP-3	8	a							1								8	a	CL1	845+51.24	ADJUST TYPE GCP DI, W/ (1) GRATE TYPE 36R
DP-3	8	b															8	b	CL1	845+51.24	VEGETATION CONTROL (MINOR CONCRETE)
DP-3	8	c							1								8	c	CL1	845+50.41	ADJUST TYPE G2 DI, W/ (1) GRATE TYPE 24-9
DP-3	8	d															8	d	CL1	845+50.41	VEGETATION CONTROL (MINOR CONCRETE)
DP-3	9	a							1								9	a	CL1	847+40.47	ADJUST TYPE G2 DI, W/ (1) GRATE TYPE 24-9
DP-3	9	b															9	b	CL1	847+40.47	VEGETATION CONTROL (MINOR CONCRETE)
DP-4	10	a							1								10	a	CL1	851+06.79	ADJUST TYPE G2 DI, W/ (1) GRATE TYPE 24-9
DP-4	10	b															10	b	CL1	851+06.79	VEGETATION CONTROL (MINOR CONCRETE)
DP-4	11	a							1								11	a	CL1	852+20.73	ADJUST TYPE G2 DI, W/ (1) GRATE TYPE 24-9
DP-4	11	b															11	b	CL1	852+20.73	VEGETATION CONTROL (MINOR CONCRETE)
DP-4	12	a					1										12	a	CL1	855+50.32	REMOVE INLET (TYPE OCP) (H=3.1')
DP-4	12	b													1.6		12	b	CL1	855+50.32	TYPE GDO DI, W/ (2) GRATE TYPE 24-12
DP-4	12	c															12	c	CL1	855+50.32	18" X 2.0' RCP, Conc COLLAR
DP-4	12	d										1.6		5.6			12	d	CL1	855+50.32	HMA (Misc AREA)
DP-4	12	e										0.7	22.4				12	e	CL1	855+50.00	PLACE HMA DIKE (TYPE A)
DP-4	12	f							1								12	f	CL1	855+50.00	ADJUST TYPE GCP DI, W/ (1) GRATE TYPE 36R
DP-4	12	g															12	g	CL1	855+49.67	VEGETATION CONTROL (MINOR CONCRETE)
DP-4	12	h							1								12	h	CL1	855+49.67	ADJUST TYPE G2 DI, W/ (1) GRATE TYPE 24-9
DP-4	12	i															12	i	CL1	855+49.67	VEGETATION CONTROL (MINOR CONCRETE)
SHEET TOTAL							1		7			2.3	22.4	5.6	1.6						

DRAINAGE QUANTITIES

DQ-4

BRETT DITZLER — REVISED BY
KRISTEN KINGSLEY — DATE REVISED
CALCULATED-DESIGNED BY
CHECKED BY
FUNCTIONAL SUPERVISOR
STEVE THORNE

STATE OF CALIFORNIA - DEPARTMENT OF TRANSPORTATION
Caltrans®
HYDRAULICS

P:\proj2\02\4c401\design\PS&E\24c401id004.dgn

LAST REVISION 07-07-10 | DATE PLOTTED => 14-DEC-2010 | TIME PLOTTED => 12:36

Dist	COUNTY	ROUTE	POST MILES TOTAL PROJECT	SHEET No.	TOTAL SHEETS
02	Sha	5	R10.5/R17.5	121	311

REGISTERED CIVIL ENGINEER 10-15-10 DATE

12-13-10
PLANS APPROVAL DATE

REGISTERED PROFESSIONAL ENGINEER KRISTEN A. KINGSLEY No. C72250 Exp. 6-30-12 CIVIL STATE OF CALIFORNIA

THE STATE OF CALIFORNIA OR ITS OFFICERS OR AGENTS SHALL NOT BE RESPONSIBLE FOR THE ACCURACY OR COMPLETENESS OF SCANNED COPIES OF THIS PLAN SHEET.

DRAINAGE QUANTITIES

DRAINAGE PROFILE OR PLAN SHEET No.	DRAINAGE SYSTEM No.	DRAINAGE UNIT No.	18" ALTERNATIVE PIPE CULVERT	36" PERFORATED ALTERNATIVE PIPE CULVERT	42" ALTERNATIVE PIPE CULVERT	42" PERFORATED ALTERNATIVE PIPE CULVERT	18" REINFORCED CONCRETE PIPE (CLASS II, RUBBER GASKET JOINT)	24" REINFORCED CONCRETE PIPE (CLASS II, RUBBER GASKET JOINT)	30" REINFORCED CONCRETE PIPE (CLASS II, RUBBER GASKET JOINT)	36" REINFORCED CONCRETE PIPE (CLASS IV, RUBBER GASKET JOINT)	PERMEABLE MATERIAL	DETENTION TRENCH	8" CORRUGATED STEEL FLUME DOWNDRAIN	18" TAPERED INLET	FLUME ANCHOR ASSEMBLY	18" ALTERNATIVE PIPE DOWNDRAIN	DRAINAGE SYSTEM No.	DRAINAGE UNIT No.	ALIGNMENT	STATION	DESCRIPTION
			LF	LF	LF	LF	LF	LF	LF	LF	CY	LF	LF	EA	EA	LF					
DP-3	8	a															8	a	CL1	845+51.24	ADJUST TYPE GCP DI, W/ (1) GRATE TYPE 36R
DP-3	8	b															8	b	CL1	845+51.24	VEGETATION CONTROL (MINOR CONCRETE)
DP-3	8	c															8	c	CL1	845+50.41	ADJUST TYPE G2 DI, W/ (1) GRATE TYPE 24-9
DP-3	8	d															8	d	CL1	845+50.41	VEGETATION CONTROL (MINOR CONCRETE)
DP-3	9	a															9	a	CL1	847+40.47	ADJUST TYPE G2 DI, W/ (1) GRATE TYPE 24-9
DP-3	9	b															9	b	CL1	847+40.47	VEGETATION CONTROL (MINOR CONCRETE)
DP-4	10	a															10	a	CL1	851+06.79	ADJUST TYPE G2 DI, W/ (1) GRATE TYPE 24-9
DP-4	10	b															10	b	CL1	851+06.79	VEGETATION CONTROL (MINOR CONCRETE)
DP-4	11	a															11	a	CL1	852+20.73	ADJUST TYPE G2 DI, W/ (1) GRATE TYPE 24-9
DP-4	11	b															11	b	CL1	852+20.73	VEGETATION CONTROL (MINOR CONCRETE)
DP-4	12	a															12	a	CL1	855+50.32	REMOVE INLET (TYPE OCP) (H=3.1')
DP-4	12	b															12	b	CL1	855+50.32	TYPE GDO DI, W/ (2) GRATE TYPE 24-12
DP-4	12	c					2.0										12	c	CL1	855+50.32	18" X 2.0' RCP, CONC COLLAR
DP-4	12	d															12	d	CL1	855+50.32	HMA (Misc AREA)
DP-4	12	e															12	e	CL1	855+50.00	PLACE HMA DIKE (TYPE A)
DP-4	12	f															12	f	CL1	855+50.00	ADJUST TYPE GCP DI, W/ (1) GRATE TYPE 36R
DP-4	12	g															12	g	CL1	855+49.67	VEGETATION CONTROL (MINOR CONCRETE)
DP-4	12	h															12	h	CL1	855+49.67	ADJUST TYPE G2 DI, W/ (1) GRATE TYPE 24-9
DP-4	12	i															12	i	CL1	855+49.67	VEGETATION CONTROL (MINOR CONCRETE)
SHEET TOTAL							2.0														

DRAINAGE QUANTITIES

DQ-5

CALCULATED-DESIGNED BY BRETT DITZLER REVISED BY
CHECKED BY KRISTEN KINGSLEY DATE REVISED
FUNCTIONAL SUPERVISOR STEVE THORNE

STATE OF CALIFORNIA - DEPARTMENT OF TRANSPORTATION
Caltrans HYDRAULICS

P:\proj2\02\4c401\design\PS&E\24c401id005.dgn

LAST REVISION 07-07-10 DATE PLOTTED => 14-DEC-2010 TIME PLOTTED => 14:47

Dist	COUNTY	ROUTE	POST MILES TOTAL PROJECT	SHEET No.	TOTAL SHEETS
02	Sha	5	R10.5/R17.5	122	311

REGISTERED CIVIL ENGINEER 10-15-10 DATE

12-13-10
PLANS APPROVAL DATE

REGISTERED PROFESSIONAL ENGINEER KRISTEN A. KINGSLEY No. C72250 Exp. 6-30-12 CIVIL STATE OF CALIFORNIA

THE STATE OF CALIFORNIA OR ITS OFFICERS OR AGENTS SHALL NOT BE RESPONSIBLE FOR THE ACCURACY OR COMPLETENESS OF SCANNED COPIES OF THIS PLAN SHEET.

DRAINAGE QUANTITIES

DRAINAGE PROFILE OR PLAN SHEET No.	DRAINAGE SYSTEM No. ⬡	DRAINAGE UNIT No. ○	36" PRECAST CONCRETE PIPE INLET	OBSERVATION WELL	ROCK SLOPE PROTECTION (FACING, METHOD B)	ROCK SLOPE PROTECTION (BACKING No. 2, METHOD B)	ROCK SLOPE PROTECTION (BACKING No. 3, METHOD B)	FILTER FABRIC	ROCK SLOPE PROTECTION FABRIC	MISCELLANEOUS IRON AND STEEL	VEGETATION CONTROL (MINOR CONCRETE)	(N) DI HEIGHT	MAX COVER	DRAINAGE SYSTEM No. ⬡	DRAINAGE UNIT No. ○	ALIGNMENT	STATION	DESCRIPTION
			LF	EA	CY	CY	CY	SQYD	SQYD	LB	SQYD	FT	FT					
DP-3	8	a								236		1.00		8	a	CL1	845+51.24	ADJUST TYPE GCP DI, W/ (1) GRATE TYPE 36R
DP-3	8	b									15.3			8	b	CL1	845+51.24	VEGETATION CONTROL (MINOR CONCRETE)
DP-3	8	c										2.33		8	c	CL1	845+50.41	ADJUST TYPE G2 DI, W/ (1) GRATE TYPE 24-9
DP-3	8	d									12.5			8	d	CL1	845+50.41	VEGETATION CONTROL (MINOR CONCRETE)
DP-3	9	a										2.95		9	a	CL1	847+40.47	ADJUST TYPE G2 DI, W/ (1) GRATE TYPE 24-9
DP-3	9	b									20.8			9	b	CL1	847+40.47	VEGETATION CONTROL (MINOR CONCRETE)
DP-4	10	a										2.03		10	a	CL1	851+06.79	ADJUST TYPE G2 DI, W/ (1) GRATE TYPE 24-9
DP-4	10	b									22.4			10	b	CL1	851+06.79	VEGETATION CONTROL (MINOR CONCRETE)
DP-4	11	a										1.11		11	a	CL1	852+20.73	ADJUST TYPE G2 DI, W/ (1) GRATE TYPE 24-9
DP-4	11	b									21.6			11	b	CL1	852+20.73	VEGETATION CONTROL (MINOR CONCRETE)
DP-4	12	a												12	a	CL1	855+50.32	REMOVE INLET (TYPE OCP) (H=3.1′)
DP-4	12	b								634		2.86		12	b	CL1	855+50.32	TYPE GDO DI, W/ (2) GRATE TYPE 24-12
DP-4	12	c											2.4	12	c	CL1	855+50.32	18" X 2.0′ RCP, Conc COLLAR
DP-4	12	d												12	d	CL1	855+50.32	HMA (Misc AREA)
DP-4	12	e												12	e	CL1	855+50.00	PLACE HMA DIKE (TYPE A)
DP-4	12	f								236		0.33		12	f	CL1	855+50.00	ADJUST TYPE GCP DI, W/ (1) GRATE TYPE 36R
DP-4	12	g									16.1			12	g	CL1	855+49.67	VEGETATION CONTROL (MINOR CONCRETE)
DP-4	12	h										1.46		12	h	CL1	855+49.67	ADJUST TYPE G2 DI, W/ (1) GRATE TYPE 24-9
DP-4	12	i									7.3			12	i	CL1	855+49.67	VEGETATION CONTROL (MINOR CONCRETE)
SHEET TOTAL										1106	116.0							

DRAINAGE QUANTITIES

DQ-6

CALCULATED-DESIGNED BY	BRETT DITZLER	REVISED BY
CHECKED BY	KRISTEN KINGSLEY	DATE REVISED
FUNCTIONAL SUPERVISOR	STEVE THORNE	

STATE OF CALIFORNIA - DEPARTMENT OF TRANSPORTATION
Caltrans® HYDRAULICS

P:\proj2\02\4c401\design\PS&E\24c401id006.dgn

LAST REVISION 07-07-10 | DATE PLOTTED => 14-DEC-2010 | TIME PLOTTED => 14:47

Dist	COUNTY	ROUTE	POST MILES TOTAL PROJECT	SHEET No.	TOTAL SHEETS
02	Sha	5	R10.5/R17.5	123	311

REGISTERED CIVIL ENGINEER 10-15-10 DATE

12-13-10
PLANS APPROVAL DATE

REGISTERED PROFESSIONAL ENGINEER KRISTEN A. KINGSLEY No. C72250 Exp. 6-30-12 CIVIL STATE OF CALIFORNIA

THE STATE OF CALIFORNIA OR ITS OFFICERS OR AGENTS SHALL NOT BE RESPONSIBLE FOR THE ACCURACY OR COMPLETENESS OF SCANNED COPIES OF THIS PLAN SHEET.

DRAINAGE QUANTITIES

DRAINAGE PROFILE OR PLAN SHEET No.	DRAINAGE SYSTEM No. ⬡	DRAINAGE UNIT No. ◯	ABANDON CULVERT	ABANDON INLET	REMOVE FLARED END SECTION	REMOVE CULVERT	REMOVE INLET	REMOVE DOWNDRAIN	ADJUST INLET	MODIFY INLET	SAND BACKFILL	HOT MIX ASPHALT	PLACE HOT MIX ASPHALT DIKE (TYPE A)	PLACE HOT MIX ASPHALT (MISCELLANEOUS AREA)	MINOR CONCRETE (MINOR STRUCTURE)	6" ALTERNATIVE PIPE CULVERT	DRAINAGE SYSTEM No. ⬡	DRAINAGE UNIT No. ◯	ALIGNMENT	STATION	DESCRIPTION
			EA	EA	EA	LF	EA	EA	EA	EA	CY	TON	LF	SQYD	CY	LF					
DP-5	13	a							1								13	a	CL1	857+50.66	ADJUST TYPE G2 DI, W/ (1) GRATE TYPE 24-9
DP-5	13	b															13	b	CL1	857+50.66	VEGETATION CONTROL (MINOR CONCRETE)
DP-5	14	a							1								14	a	CL1	862+00.34	ADJUST TYPE G2 DI, W/ (1) GRATE TYPE 24-9
DP-5	14	b															14	b	CL1	862+00.34	VEGETATION CONTROL (MINOR CONCRETE)
DP-5	15	a							1								15	a	CL1	863+50.19	ADJUST TYPE GCP DI, W/ (1) GRATE TYPE 36R
DP-5	15	b															15	b	CL1	863+50.19	VEGETATION CONTROL (MINOR CONCRETE)
DP-6	16	a													2.7		16	a	CL1	881+63.00	TYPE G2 DI, W/ (1) GRATE TYPE 24-9
DP-6	16	b															16	b	CL1	881+63.00	VEGETATION CONTROL (MINOR CONCRETE)
DP-6	16	c															16	c	CL1	881+63.00	42" X 338.0' PAPC
DP-6	16	d													4.0		16	d	CL1	881+63.00	TYPE GT4 (Mod) DI, W/ (2) GRATE TYPE 24-9
DP-6	16	e															16	e	CL1	881+63.00	VEGETATION CONTROL (MINOR CONCRETE)
DP-6	16	f															16	f	CL1	881+63.00	24" X 5.0' RCP, CONC COLLAR
DP-6	16	g					1										16	g	CL1	881+63.00	REMOVE INLET (TYPE G2) (H=4.3')
DP-6	16	h															16	h	CL1	881+63.00	36" X 7.0' RCP, Conc COLLAR (2)
DP-6	17	a													2.4		17	a	CL1	886+30.00	TYPE GT3 DI, W/ (2) GRATE TYPE 24-9
DP-6	17	b															17	b	CL1	886+30.00	VEGETATION CONTROL (MINOR CONCRETE)
DP-6	17	c															17	c	CL1	886+30.00	24" X 3.2' RCP, Conc COLLAR
DP-7	18	a													1.0		18	a	CL1	886+99.33	TYPE G1 DI, W/ (1) GRATE TYPE 24-9
DP-7	18	b															18	b	CL1	886+99.33	VEGETATION CONTROL (MINOR CONCRETE)
DP-7	18	c															18	c	CL1	886+99.33	24" X 13.2' RCP, CONNECT TO Exist
DP-7	18	d							1								18	d	CL1	886+99.33	ADJUST TYPE G2 INLET, W/ COVER PLATE
DP-7	18	e															18	e	CL1	886+99.33	VEGETATION CONTROL (MINOR CONCRETE)
SHEET TOTAL							1		4						10.1						

DRAINAGE QUANTITIES

DQ-7

BRETT DITZLER — REVISED BY
KRISTEN KINGSLEY — DATE REVISED
CALCULATED-DESIGNED BY
CHECKED BY
FUNCTIONAL SUPERVISOR
STEVE THORNE

STATE OF CALIFORNIA - DEPARTMENT OF TRANSPORTATION
Caltrans®
HYDRAULICS

P:\proj2\02\4c401\design\PS&E\24c401id007.dgn

LAST REVISION DATE PLOTTED => 14-DEC-2010
07-07-10 TIME PLOTTED => 14:47

Dist	COUNTY	ROUTE	POST MILES TOTAL PROJECT	SHEET No.	TOTAL SHEETS
02	Sha	5	R10.5/R17.5	124	311

REGISTERED CIVIL ENGINEER 10-15-10 DATE

12-13-10
PLANS APPROVAL DATE

REGISTERED PROFESSIONAL ENGINEER KRISTEN A. KINGSLEY No. C72250 Exp. 6-30-12 CIVIL STATE OF CALIFORNIA

THE STATE OF CALIFORNIA OR ITS OFFICERS OR AGENTS SHALL NOT BE RESPONSIBLE FOR THE ACCURACY OR COMPLETENESS OF SCANNED COPIES OF THIS PLAN SHEET.

DRAINAGE QUANTITIES

DRAINAGE PROFILE OR PLAN SHEET No.	DRAINAGE SYSTEM No.	DRAINAGE UNIT No.	18" ALTERNATIVE PIPE CULVERT	36" PERFORATED ALTERNATIVE PIPE CULVERT	42" ALTERNATIVE PIPE CULVERT	42" PERFORATED ALTERNATIVE PIPE CULVERT	18" REINFORCED CONCRETE PIPE (CLASS II, RUBBER GASKET JOINT)	24" REINFORCED CONCRETE PIPE (CLASS II, RUBBER GASKET JOINT)	30" REINFORCED CONCRETE PIPE (CLASS II, RUBBER GASKET JOINT)	36" REINFORCED CONCRETE PIPE (CLASS IV, RUBBER GASKET JOINT)	PERMEABLE MATERIAL	DETENTION TRENCH	8" CORRUGATED STEEL FLUME DOWNDRAIN	18" TAPERED INLET	FLUME ANCHOR ASSEMBLY	18" ALTERNATIVE PIPE DOWNDRAIN	DRAINAGE SYSTEM No.	DRAINAGE UNIT No.	ALIGNMENT	STATION	DESCRIPTION
			LF	LF	LF	LF	LF	LF	LF	LF	CY	LF	LF	EA	EA	LF					
DP-5	13	a															13	a	CL1	857+50.66	ADJUST TYPE G2 DI, W/ (1) GRATE TYPE 24-9
DP-5	13	b															13	b	CL1	857+50.66	VEGETATION CONTROL (MINOR CONCRETE)
DP-5	14	a															14	a	CL1	862+00.34	ADJUST TYPE G2 DI, W/ (1) GRATE TYPE 24-9
DP-5	14	b															14	b	CL1	862+00.34	VEGETATION CONTROL (MINOR CONCRETE)
DP-5	15	a															15	a	CL1	863+50.19	ADJUST TYPE GCP DI, W/ (1) GRATE TYPE 36R
DP-5	15	b															15	b	CL1	863+50.19	VEGETATION CONTROL (MINOR CONCRETE)
DP-6	16	a															16	a	CL1	881+63.00	TYPE G2 DI, W/ (1) GRATE TYPE 24-9
DP-6	16	b															16	b	CL1	881+63.00	VEGETATION CONTROL (MINOR CONCRETE)
DP-6	16	c				338.0					155.7						16	c	CL1	881+63.00	42" X 338.0' PAPC
DP-6	16	d															16	d	CL1	881+63.00	TYPE GT4 (Mod) DI, W/ (2) GRATE TYPE 24-9
DP-6	16	e															16	e	CL1	881+63.00	VEGETATION CONTROL (MINOR CONCRETE)
DP-6	16	f						5.0									16	f	CL1	881+63.00	24" X 5.0' RCP, CONC COLLAR
DP-6	16	g															16	g	CL1	881+63.00	REMOVE INLET (TYPE G2) (H=4.3')
DP-6	16	h								7.0							16	h	CL1	881+63.00	36" X 7.0' RCP, Conc COLLAR (2)
DP-6	17	a															17	a	CL1	886+30.00	TYPE GT3 DI, W/ (2) GRATE TYPE 24-9
DP-6	17	b															17	b	CL1	886+30.00	VEGETATION CONTROL (MINOR CONCRETE)
DP-6	17	c						3.2									17	c	CL1	886+30.00	24" X 3.2' RCP, Conc COLLAR
DP-7	18	a															18	a	CL1	886+99.33	TYPE G1 DI, W/ (1) GRATE TYPE 24-9
DP-7	18	b															18	b	CL1	886+99.33	VEGETATION CONTROL (MINOR CONCRETE)
DP-7	18	c						13.2									18	c	CL1	886+99.33	24" X 13.2' RCP, CONNECT TO EXIST
DP-7	18	d															18	d	CL1	886+99.33	ADJUST TYPE G2 INLET, W/ COVER PLATE
DP-7	18	e															18	e	CL1	886+99.33	VEGETATION CONTROL (MINOR CONCRETE)
SHEET TOTAL						338.0		21.4		7.0	155.7										

DRAINAGE QUANTITIES

DQ-8

BRETT DITZLER — REVISED BY
KRISTEN KINGSLEY — DATE REVISED
CALCULATED-DESIGNED BY
CHECKED BY
FUNCTIONAL SUPERVISOR
STEVE THORNE

STATE OF CALIFORNIA - DEPARTMENT OF TRANSPORTATION
Caltrans® HYDRAULICS

P:\proj2\02\4c401\design\PS&E\24c401id008.dgn

LAST REVISION DATE PLOTTED => 14-DEC-2010
07-07-10 TIME PLOTTED => 14:47

Dist	COUNTY	ROUTE	POST MILES TOTAL PROJECT	SHEET No.	TOTAL SHEETS
02	Sha	5	R10.5/R17.5	125	311

REGISTERED CIVIL ENGINEER 10-15-10 DATE

12-13-10
PLANS APPROVAL DATE

REGISTERED PROFESSIONAL ENGINEER KRISTEN A. KINGSLEY No. C72250 Exp. 6-30-12 CIVIL STATE OF CALIFORNIA

THE STATE OF CALIFORNIA OR ITS OFFICERS OR AGENTS SHALL NOT BE RESPONSIBLE FOR THE ACCURACY OR COMPLETENESS OF SCANNED COPIES OF THIS PLAN SHEET.

DRAINAGE QUANTITIES

DRAINAGE PROFILE OR PLAN SHEET No.	DRAINAGE SYSTEM No. ⬡	DRAINAGE UNIT No. ○	36" PRECAST CONCRETE PIPE INLET	OBSERVATION WELL	ROCK SLOPE PROTECTION (FACING, METHOD B)	ROCK SLOPE PROTECTION (BACKING No. 2, METHOD B)	ROCK SLOPE PROTECTION (BACKING No. 3, METHOD B)	FILTER FABRIC	ROCK SLOPE PROTECTION FABRIC	MISCELLANEOUS IRON AND STEEL	VEGETATION CONTROL (MINOR CONCRETE)	DI HEIGHT (N)	MAX COVER	DRAINAGE SYSTEM No. ⬡	DRAINAGE UNIT No. ○	ALIGNMENT	STATION	DESCRIPTION
			LF	EA	CY	CY	CY	SQYD	SQYD	LB	SQYD	FT	FT					
DP-5	13	a										1.10		13	a	CL1	857+50.66	ADJUST TYPE G2 DI, W/ (1) GRATE TYPE 24-9
DP-5	13	b									12.7			13	b	CL1	857+50.66	VEGETATION CONTROL (MINOR CONCRETE)
DP-5	14	a										1.74		14	a	CL1	862+00.34	ADJUST TYPE G2 DI, W/ (1) GRATE TYPE 24-9
DP-5	14	b									13.4			14	b	CL1	862+00.34	VEGETATION CONTROL (MINOR CONCRETE)
DP-5	15	a										1.44		15	a	CL1	863+50.19	ADJUST TYPE GCP DI, W/ (1) GRATE TYPE 36R
DP-5	15	b									13.2			15	b	CL1	863+50.19	VEGETATION CONTROL (MINOR CONCRETE)
DP-6	16	a								263		6.67		16	a	CL1	881+63.00	TYPE G2 DI, W/ (1) GRATE TYPE 24-9
DP-6	16	b									15.5			16	b	CL1	881+63.00	VEGETATION CONTROL (MINOR CONCRETE)
DP-6	16	c						769.9					2.8	16	c	CL1	881+63.00	42" X 338.0′ PAPC
DP-6	16	d								526		5.50		16	d	CL1	881+63.00	TYPE GT4 (Mod) DI, W/ (2) GRATE TYPE 24-9
DP-6	16	e									16.1			16	e	CL1	881+63.00	VEGETATION CONTROL (MINOR CONCRETE)
DP-6	16	f											4.2	16	f	CL1	881+63.00	24" X 5.0′ RCP, Conc COLLAR
DP-6	16	g												16	g	CL1	881+63.00	REMOVE INLET (TYPE G2) (H=4.3′)
DP-6	16	h											2.6	16	h	CL1	881+63.00	36" X 7.0′ RCP, CONC COLLAR (2)
DP-6	17	a								526		5.00		17	a	CL1	886+30.00	TYPE GT3 DI, W/ (2) GRATE TYPE 24-9
DP-6	17	b									27.9			17	b	CL1	886+30.00	VEGETATION CONTROL (MINOR CONCRETE)
DP-6	17	c											3.5	17	c	CL1	886+30.00	24" X 3.2′ RCP, Conc COLLAR
DP-7	18	a								263		3.00		18	a	CL1	886+99.33	TYPE G1 DI, W/ (1) GRATE TYPE 24-9
DP-7	18	b									14.5			18	b	CL1	886+99.33	VEGETATION CONTROL (MINOR CONCRETE)
DP-7	18	c											2.5	18	c	CL1	886+99.33	24" X 13.2′ RCP, CONNECT TO EXIST
DP-7	18	d								46				18	d	CL1	886+99.33	ADJUST TYPE G2 INLET, W/ COVER PLATE
DP-7	18	e									4.0			18	e	CL1	886+99.33	VEGETATION CONTROL (MINOR CONCRETE)
SHEET TOTAL								769.9		1624	117.3							

DRAINAGE QUANTITIES

DQ-9

REVISED BY | DATE REVISED
BRETT DITZLER | KRISTEN KINGSLEY
CALCULATED-DESIGNED BY | CHECKED BY
FUNCTIONAL SUPERVISOR
STEVE THORNE

Caltrans® STATE OF CALIFORNIA - DEPARTMENT OF TRANSPORTATION
HYDRAULICS

P:\proj2\02\4c401\design\PS&E\24c401id009.dgn

LAST REVISION | DATE PLOTTED => 14-DEC-2010
07-07-10 | TIME PLOTTED => 14:47

Dist	COUNTY	ROUTE	POST MILES TOTAL PROJECT	SHEET No.	TOTAL SHEETS
02	Sha	5	R10.5/R17.5	126	311

REGISTERED CIVIL ENGINEER 10-15-10 DATE

12-13-10
PLANS APPROVAL DATE

REGISTERED PROFESSIONAL ENGINEER KRISTEN A. KINGSLEY No. C72250 Exp. 6-30-12 CIVIL STATE OF CALIFORNIA

THE STATE OF CALIFORNIA OR ITS OFFICERS OR AGENTS SHALL NOT BE RESPONSIBLE FOR THE ACCURACY OR COMPLETENESS OF SCANNED COPIES OF THIS PLAN SHEET.

DRAINAGE QUANTITIES

DRAINAGE PROFILE OR PLAN SHEET No.	DRAINAGE SYSTEM No.	DRAINAGE UNIT No.	ABANDON CULVERT	ABANDON INLET	REMOVE FLARED END SECTION	REMOVE CULVERT	REMOVE INLET	REMOVE DOWNDRAIN	ADJUST INLET	MODIFY INLET	SAND BACKFILL	HOT MIX ASPHALT	PLACE HOT MIX ASPHALT DIKE (TYPE A)	PLACE HOT MIX ASPHALT (MISCELLANEOUS AREA)	MINOR CONCRETE (MINOR STRUCTURE)	6" ALTERNATIVE PIPE CULVERT	DRAINAGE SYSTEM No.	DRAINAGE UNIT No.	ALIGNMENT	STATION	DESCRIPTION
			EA	EA	EA	LF	EA	EA	EA	EA	CY	TON	LF	SQYD	CY	LF					
DP-7	19	a													1.2		19	a	CL1	892+69.61	TYPE G1 DI, W/ (1) GRATE TYPE 24-9
DP-7	19	b															19	b	CL1	892+69.61	VEGETATION CONTROL (MINOR CONCRETE)
DP-7	19	c				6											19	c	CL1	892+69.61	REMOVE 18" X 6.0' RCP
DP-7	19	d															19	d	CL1	892+69.61	18" X 2.0' RCP, Conc COLLAR
DP-7	19	e															19	e	CL1	892+69.61	18" X 2.0' RCP, Conc COLLAR
DP-7	19	f							1								19	f	CL1	892+69.61	ADJUST TYPE G2 INLET, W/ COVER PLATE
DP-7	19	g															19	g	CL1	892+69.61	VEGETATION CONTROL (MINOR CONCRETE)
DP-7	20	a													1.5		20	a	CL1	897+81.09	TYPE G1 DI, W/ (1) GRATE TYPE 24-9
DP-7	20	b															20	b	CL1	897+81.09	VEGETATION CONTROL (MINOR CONCRETE)
DP-7	20	c				6											20	c	CL1	897+81.09	REMOVE 18" X 6.0' RCP
DP-7	20	d															20	d	CL1	897+81.09	18" X 2.0' RCP, Conc COLLAR
DP-7	20	e															20	e	CL1	897+81.09	18" X 2.0' RCP, Conc COLLAR
DP-7	20	f							1								20	f	CL1	897+81.09	ADJUST TYPE G2 INLET, W/ COVER PLATE
DP-7	20	g															20	g	CL1	897+81.09	VEGETATION CONTROL (MINOR CONCRETE)
DP-8	21	a													3.1		21	a	CL1	905+64.02	TYPE G2 DI, W/ (1) GRATE TYPE 24-9
DP-8	21	b															21	b	CL1	905+64.02	VEGETATION CONTROL (MINOR CONCRETE)
DP-8	21	c															21	c	CL1	905+64.02	36" X 258.0' PAPC
DP-8	21	d													4.1		21	d	CL1	903+01.32	TYPE GT4 (Mod) DI, W/ (2) GRATE TYPE 24-9
DP-8	21	e															21	e	CL1	903+01.32	VEGETATION CONTROL (MINOR CONCRETE)
DP-8	21	f					1										21	f	CL1	903+01.32	REMOVE INLET (TYPE G2) (H=3.2')
DP-8	21	g															21	g	CL1	903+01.32	18" X 2.0' RCP, Conc COLLAR
DP-8	21	h															21	h	CL1	903+01.32	18" X 2.0' RCP, Conc COLLAR
DP-8	21	i															21	i	CL1	903+01.32	24" X 2.0' RCP, Conc COLLAR
SHEET TOTAL						12	1		2						9.9						

DRAINAGE QUANTITIES

DQ-10

REVISED BY | DATE REVISED
BRETT DITZLER | KRISTEN KINGSLEY
CALCULATED-DESIGNED BY | CHECKED BY
FUNCTIONAL SUPERVISOR: STEVE THORNE

STATE OF CALIFORNIA - DEPARTMENT OF TRANSPORTATION
Caltrans HYDRAULICS

P:\proj2\02\4c401\design\PS&E\24c401id010.dgn

LAST REVISION 07-07-10 | DATE PLOTTED => 14-DEC-2010 | TIME PLOTTED => 14:47

Dist	COUNTY	ROUTE	POST MILES TOTAL PROJECT	SHEET No.	TOTAL SHEETS
02	Sha	5	R10.5/R17.5	127	311

REGISTERED CIVIL ENGINEER 10-15-10 DATE

12-13-10
PLANS APPROVAL DATE

REGISTERED PROFESSIONAL ENGINEER KRISTEN A. KINGSLEY No. C72250 Exp. 6-30-12 CIVIL STATE OF CALIFORNIA

THE STATE OF CALIFORNIA OR ITS OFFICERS OR AGENTS SHALL NOT BE RESPONSIBLE FOR THE ACCURACY OR COMPLETENESS OF SCANNED COPIES OF THIS PLAN SHEET.

DRAINAGE QUANTITIES

DRAINAGE PROFILE OR PLAN SHEET No.	DRAINAGE SYSTEM No.	DRAINAGE UNIT No.	18" ALTERNATIVE PIPE CULVERT	36" PERFORATED ALTERNATIVE PIPE CULVERT	42" ALTERNATIVE PIPE CULVERT	42" PERFORATED ALTERNATIVE PIPE CULVERT	18" REINFORCED CONCRETE PIPE (CLASS II, RUBBER GASKET JOINT)	24" REINFORCED CONCRETE PIPE (CLASS II, RUBBER GASKET JOINT)	30" REINFORCED CONCRETE PIPE (CLASS II, RUBBER GASKET JOINT)	36" REINFORCED CONCRETE PIPE (CLASS IV, RUBBER GASKET JOINT)	PERMEABLE MATERIAL	DETENTION TRENCH	8" CORRUGATED STEEL FLUME DOWNDRAIN	18" TAPERED INLET	FLUME ANCHOR ASSEMBLY	18" ALTERNATIVE PIPE DOWNDRAIN	DRAINAGE SYSTEM No.	DRAINAGE UNIT No.	ALIGNMENT	STATION	DESCRIPTION
			LF	LF	LF	LF	LF	LF	LF	LF	CY	LF	LF	EA	EA	LF					
DP-7	19	a															19	a	CL1	892+69.61	TYPE G1 DI, W/ (1) GRATE TYPE 24-9
DP-7	19	b															19	b	CL1	892+69.61	VEGETATION CONTROL (MINOR CONCRETE)
DP-7	19	c															19	c	CL1	892+69.61	REMOVE 18" X 6.0′ RCP
DP-7	19	d					2.0										19	d	CL1	892+69.61	18" X 2.0′ RCP, Conc COLLAR
DP-7	19	e					2.0										19	e	CL1	892+69.61	18" X 2.0′ RCP, Conc COLLAR
DP-7	19	f															19	f	CL1	892+69.61	ADJUST TYPE G2 INLET, W/ COVER PLATE
DP-7	19	g															19	g	CL1	892+69.61	VEGETATION CONTROL (MINOR CONCRETE)
DP-7	20	a															20	a	CL1	897+81.09	TYPE G1 DI, W/ (1) GRATE TYPE 24-9
DP-7	20	b															20	b	CL1	897+81.09	VEGETATION CONTROL (MINOR CONCRETE)
DP-7	20	c															20	c	CL1	897+81.09	REMOVE 18" X 6.0′ RCP
DP-7	20	d					2.0										20	d	CL1	897+81.09	18" X 2.0′ RCP, Conc COLLAR
DP-7	20	e					2.0										20	e	CL1	897+81.09	18" X 2.0′ RCP, Conc COLLAR
DP-7	20	f															20	f	CL1	897+81.09	ADJUST TYPE G2 INLET, W/ COVER PLATE
DP-7	20	g															20	g	CL1	897+81.09	VEGETATION CONTROL (MINOR CONCRETE)
DP-8	21	a															21	a	CL1	905+64.02	TYPE G2 DI, W/ (1) GRATE TYPE 24-9
DP-8	21	b															21	b	CL1	905+64.02	VEGETATION CONTROL (MINOR CONCRETE)
DP-8	21	c		258.0							101.6						21	c	CL1	905+64.02	36" X 258.0′ PAPC
DP-8	21	d															21	d	CL1	903+01.32	TYPE GT4 (Mod) DI, W/ (2) GRATE TYPE 24-9
DP-8	21	e															21	e	CL1	903+01.32	VEGETATION CONTROL (MINOR CONCRETE)
DP-8	21	f															21	f	CL1	903+01.32	REMOVE INLET (TYPE G2) (H=3.2′)
DP-8	21	g					2.0										21	g	CL1	903+01.32	18" X 2.0′ RCP, Conc COLLAR
DP-8	21	h					2.0										21	h	CL1	903+01.32	18" X 2.0′ RCP, Conc COLLAR
DP-8	21	i						2.0									21	i	CL1	903+01.32	24" X 2.0′ RCP, Conc COLLAR
SHEET TOTAL				258.0			12.0	2.0			101.6										

DRAINAGE QUANTITIES

DQ-11

REVISED BY | DATE REVISED
BRETT DITZLER | KRISTEN KINGSLEY
CALCULATED-DESIGNED BY | CHECKED BY
FUNCTIONAL SUPERVISOR
STEVE THORNE

STATE OF CALIFORNIA - DEPARTMENT OF TRANSPORTATION
Caltrans® HYDRAULICS

P:\proj2\02\4c401\design\PS&E\24c401id011.dgn

LAST REVISION | DATE PLOTTED => 14-DEC-2010
07-07-10 | TIME PLOTTED => 14:47

Dist	COUNTY	ROUTE	POST MILES TOTAL PROJECT	SHEET No.	TOTAL SHEETS
02	Sha	5	R10.5/R17.5	128	311

REGISTERED CIVIL ENGINEER 10-15-10 DATE

12-13-10
PLANS APPROVAL DATE

REGISTERED PROFESSIONAL ENGINEER KRISTEN A. KINGSLEY No. C72250 Exp. 6-30-12 CIVIL STATE OF CALIFORNIA

THE STATE OF CALIFORNIA OR ITS OFFICERS OR AGENTS SHALL NOT BE RESPONSIBLE FOR THE ACCURACY OR COMPLETENESS OF SCANNED COPIES OF THIS PLAN SHEET.

DRAINAGE QUANTITIES

DRAINAGE PROFILE OR PLAN SHEET No.	DRAINAGE SYSTEM No. ⬡	DRAINAGE UNIT No. ○	36" PRECAST CONCRETE PIPE INLET	OBSERVATION WELL	ROCK SLOPE PROTECTION (FACING, METHOD B)	ROCK SLOPE PROTECTION (BACKING No. 2, METHOD B)	ROCK SLOPE PROTECTION (BACKING No. 3, METHOD B)	FILTER FABRIC	ROCK SLOPE PROTECTION FABRIC	MISCELLANEOUS IRON AND STEEL	VEGETATION CONTROL (MINOR CONCRETE)	(N) DI HEIGHT	MAX COVER	DRAINAGE SYSTEM No. ⬡	DRAINAGE UNIT No. ○	ALIGNMENT	STATION	DESCRIPTION
			LF	EA	CY	CY	CY	SQYD	SQYD	LB	SQYD	FT	FT					
DP-7	19	a								263		3.93		19	a	CL1	892+69.61	TYPE G1 DI, W/ (1) GRATE TYPE 24-9
DP-7	19	b									20.2			19	b	CL1	892+69.61	VEGETATION CONTROL (MINOR CONCRETE)
DP-7	19	c											2.1	19	c	CL1	892+69.61	REMOVE 18" X 6.0′ RCP
DP-7	19	d											2.5	19	d	CL1	892+69.61	18" X 2.0′ RCP, Conc COLLAR
DP-7	19	e											2.3	19	e	CL1	892+69.61	18" X 2.0′ RCP, Conc COLLAR
DP-7	19	f								46				19	f	CL1	892+69.61	ADJUST TYPE G2 INLET, W/ COVER PLATE
DP-7	19	g									3.8			19	g	CL1	892+69.61	VEGETATION CONTROL (MINOR CONCRETE)
DP-7	20	a								263		5.59		20	a	CL1	897+81.09	TYPE G1 DI, W/ (1) GRATE TYPE 24-9
DP-7	20	b									14.5			20	b	CL1	897+81.09	VEGETATION CONTROL (MINOR CONCRETE)
DP-7	20	c											2.8	20	c	CL1	897+81.09	REMOVE 18" X 6.0′ RCP
DP-7	20	d											4.2	20	d	CL1	897+81.09	18" X 2.0′ RCP, Conc COLLAR
DP-7	20	e											4.0	20	e	CL1	897+81.09	18" X 2.0′ RCP, Conc COLLAR
DP-7	20	f								46		1.94		20	f	CL1	897+81.09	ADJUST TYPE G2 INLET, W/ COVER PLATE
DP-7	20	g									5.6			20	g	CL1	897+81.09	VEGETATION CONTROL (MINOR CONCRETE)
DP-8	21	a								263		8.15		21	a	CL1	905+64.02	TYPE G2 DI, W/ (1) GRATE TYPE 24-9
DP-8	21	b									10.1			21	b	CL1	905+64.02	VEGETATION CONTROL (MINOR CONCRETE)
DP-8	21	c						530.3					5.1	21	c	CL1	905+64.02	36" X 258.0′ PAPC
DP-8	21	d								526		5.61		21	d	CL1	903+01.32	TYPE GT4 (Mod) DI, W/ (2) GRATE TYPE 24-9
DP-8	21	e									10.0			21	e	CL1	903+01.32	VEGETATION CONTROL (MINOR CONCRETE)
DP-8	21	f												21	f	CL1	903+01.32	REMOVE INLET (TYPE G2) (H=3.2′)
DP-8	21	g											3.8	21	g	CL1	903+01.32	18" X 2.0′ RCP, Conc COLLAR
DP-8	21	h											3.6	21	h	CL1	903+01.32	18" X 2.0′ RCP, Conc COLLAR
DP-8	21	i											3.3	21	i	CL1	903+01.32	24" X 2.0′ RCP, Conc COLLAR
SHEET TOTAL								530.3		1407	64.2							

DRAINAGE QUANTITIES

DQ-12

REVISED BY | DATE REVISED
BRETT DITZLER | KRISTEN KINGSLEY
CALCULATED-DESIGNED BY | CHECKED BY
FUNCTIONAL SUPERVISOR
STEVE THORNE

STATE OF CALIFORNIA - DEPARTMENT OF TRANSPORTATION
Caltrans® HYDRAULICS

P:\proj2\02\4c401\design\PS&E\24c401id012.dgn

LAST REVISION | DATE PLOTTED => 14-DEC-2010
07-07-10 | TIME PLOTTED => 14:47

Dist	COUNTY	ROUTE	POST MILES TOTAL PROJECT	SHEET No.	TOTAL SHEETS
02	Sha	5	R10.5/R17.5	129	311

REGISTERED CIVIL ENGINEER 10-15-10 DATE

12-13-10
PLANS APPROVAL DATE

REGISTERED PROFESSIONAL ENGINEER KRISTEN A. KINGSLEY No. C72250 Exp. 6-30-12 CIVIL STATE OF CALIFORNIA

THE STATE OF CALIFORNIA OR ITS OFFICERS OR AGENTS SHALL NOT BE RESPONSIBLE FOR THE ACCURACY OR COMPLETENESS OF SCANNED COPIES OF THIS PLAN SHEET.

DRAINAGE QUANTITIES

DRAINAGE PROFILE OR PLAN SHEET No.	DRAINAGE SYSTEM No. ⬡	DRAINAGE UNIT No. ○	ABANDON CULVERT	ABANDON INLET	REMOVE FLARED END SECTION	REMOVE CULVERT	REMOVE INLET	REMOVE DOWNDRAIN	ADJUST INLET	MODIFY INLET	SAND BACKFILL	HOT MIX ASPHALT	PLACE HOT MIX ASPHALT DIKE (TYPE A)	PLACE HOT MIX ASPHALT (MISCELLANEOUS AREA)	MINOR CONCRETE (MINOR STRUCTURE)	6" ALTERNATIVE PIPE CULVERT	DRAINAGE SYSTEM No. ⬡	DRAINAGE UNIT No. ○	ALIGNMENT	STATION	DESCRIPTION
			EA	EA	EA	LF	EA	EA	EA	EA	CY	TON	LF	SQYD	CY	LF					
DP-8	22	a													3.1		22	a	CL1	915+92.96	TYPE G2 DI, W/ (1) GRATE TYPE 24-9
DP-8	22	b															22	b	CL1	915+92.96	VEGETATION CONTROL (MINOR CONCRETE)
DP-8	22	c															22	c	CL1	915+92.96	36" X 237.0' PAPC
DP-8	22	d													4.0		22	d	CL1	913+51.26	TYPE GT4 (Mod) DI, W/ (2) GRATE TYPE 24-9
DP-8	22	e															22	e	CL1	913+51.26	VEGETATION CONTROL (MINOR CONCRETE)
DP-8	22	f					1										22	f	CL1	913+51.26	REMOVE INLET (TYPE G2) (H=3.6')
DP-8	22	g															22	g	CL1	913+51.26	24" X 2.0' RCP, Conc COLLAR
DP-8	22	h															22	h	CL1	913+51.26	24" X 2.0' RCP, Conc COLLAR
DP-9	23	a													2.5		23	a	CL1	938+50.45	TYPE G2 DI, W/ (1) GRATE TYPE 24-9
DP-9	23	b															23	b	CL1	938+50.45	VEGETATION CONTROL (MINOR CONCRETE)
DP-9	23	c															23	c	CL1	938+50.45	36" X 69.0' PAPC
DP-9	23	d													3.8		23	d	CL1	933+50.02	TYPE GT4 (Mod) DI, W/ (2) GRATE TYPE 24-9
DP-9	23	e															23	e	CL1	933+50.02	VEGETATION CONTROL (MINOR CONCRETE)
DP-9	23	f					1										23	f	CL1	933+50.02	REMOVE INLET (TYPE G2) (H=3.0')
DP-9	23	g															23	g	CL1	933+50.02	18" X 2.0' RCP, Conc COLLAR
DP-9	23	h															23	h	CL1	933+50.02	18" X 2.0' RCP, Conc COLLAR
DP-9	23	i															23	i	CL1	933+50.02	24" X 2.0' RCP, Conc COLLAR
DP-9	23	j															23	j	CL1	933+50.02	36" X 74.4' PAPC
DP-9	24	a													1.7		24	a	CL1	938+50.45	TYPE G1 DI, W/ (1) GRATE TYPE 24-9
DP-9	24	b															24	b	CL1	938+50.45	VEGETATION CONTROL (MINOR CONCRETE)
DP-9	24	c				6											24	c	CL1	938+50.45	REMOVE 18" X 6.0' RCP
SHEET TOTAL						6	2								15.1						

DRAINAGE QUANTITIES

DQ-13

BRETT DITZLER — REVISED BY
KRISTEN KINGSLEY — DATE REVISED
CALCULATED-DESIGNED BY
CHECKED BY
FUNCTIONAL SUPERVISOR
STEVE THORNE

STATE OF CALIFORNIA - DEPARTMENT OF TRANSPORTATION
Caltrans®
HYDRAULICS

P:\proj2\02\4c401\design\PS&E\24c401id013.dgn

LAST REVISION DATE PLOTTED => 14-DEC-2010
07-07-10 TIME PLOTTED => 14:47

Dist	COUNTY	ROUTE	POST MILES TOTAL PROJECT	SHEET No.	TOTAL SHEETS
02	Sha	5	R10.5/R17.5	130	311

REGISTERED CIVIL ENGINEER 10-15-10 DATE

12-13-10
PLANS APPROVAL DATE

REGISTERED PROFESSIONAL ENGINEER KRISTEN A. KINGSLEY No. C72250 Exp. 6-30-12 CIVIL STATE OF CALIFORNIA

THE STATE OF CALIFORNIA OR ITS OFFICERS OR AGENTS SHALL NOT BE RESPONSIBLE FOR THE ACCURACY OR COMPLETENESS OF SCANNED COPIES OF THIS PLAN SHEET.

DRAINAGE QUANTITIES

DRAINAGE PROFILE OR PLAN SHEET No.	DRAINAGE SYSTEM No.	DRAINAGE UNIT No.	18" ALTERNATIVE PIPE CULVERT	36" PERFORATED ALTERNATIVE PIPE CULVERT	42" ALTERNATIVE PIPE CULVERT	42" PERFORATED ALTERNATIVE PIPE CULVERT	18" REINFORCED CONCRETE PIPE (CLASS II, RUBBER GASKET JOINT)	24" REINFORCED CONCRETE PIPE (CLASS II, RUBBER GASKET JOINT)	30" REINFORCED CONCRETE PIPE (CLASS II, RUBBER GASKET JOINT)	36" REINFORCED CONCRETE PIPE (CLASS IV, RUBBER GASKET JOINT)	PERMEABLE MATERIAL	DETENTION TRENCH	8" CORRUGATED STEEL FLUME DOWNDRAIN	18" TAPERED INLET	FLUME ANCHOR ASSEMBLY	18" ALTERNATIVE PIPE DOWNDRAIN	DRAINAGE SYSTEM No.	DRAINAGE UNIT No.	ALIGNMENT	STATION	DESCRIPTION
			LF	LF	LF	LF	LF	LF	LF	LF	CY	LF	LF	EA	EA	LF					
DP-8	22	a															22	a	CL1	915+92.96	TYPE G2 DI, W/ (1) GRATE TYPE 24-9
DP-8	22	b															22	b	CL1	915+92.96	VEGETATION CONTROL (MINOR CONCRETE)
DP-8	22	c		237.0							93.3						22	c	CL1	915+92.96	36" X 237.0' PAPC
DP-8	22	d															22	d	CL1	913+51.26	TYPE GT4 (Mod) DI, W/ (2) GRATE TYPE 24-9
DP-8	22	e															22	e	CL1	913+51.26	VEGETATION CONTROL (MINOR CONCRETE)
DP-8	22	f															22	f	CL1	913+51.26	REMOVE INLET (TYPE G2) (H=3.6')
DP-8	22	g						2.0									22	g	CL1	913+51.26	24" X 2.0' RCP, Conc COLLAR
DP-8	22	h						2.0									22	h	CL1	913+51.26	24" X 2.0' RCP, Conc COLLAR
DP-9	23	a															23	a	CL1	938+50.45	TYPE G2 DI, W/ (1) GRATE TYPE 24-9
DP-9	23	b															23	b	CL1	938+50.45	VEGETATION CONTROL (MINOR CONCRETE)
DP-9	23	c		69.0							27.2						23	c	CL1	938+50.45	36" X 69.0' PAPC
DP-9	23	d															23	d	CL1	933+50.02	TYPE GT4 (Mod) DI, W/ (2) GRATE TYPE 24-9
DP-9	23	e															23	e	CL1	933+50.02	VEGETATION CONTROL (MINOR CONCRETE)
DP-9	23	f															23	f	CL1	933+50.02	REMOVE INLET (TYPE G2) (H=3.0')
DP-9	23	g					2.0										23	g	CL1	933+50.02	18" X 2.0' RCP, Conc COLLAR
DP-9	23	h					2.0										23	h	CL1	933+50.02	18" X 2.0' RCP, Conc COLLAR
DP-9	23	i						2.0									23	i	CL1	933+50.02	24" X 2.0' RCP, Conc COLLAR
DP-9	23	j		74.4							29.3						23	j	CL1	933+50.02	36" X 74.4' PAPC
DP-9	24	a															24	a	CL1	938+50.45	TYPE G1 DI, W/ (1) GRATE TYPE 24-9
DP-9	24	b															24	b	CL1	938+50.45	VEGETATION CONTROL (MINOR CONCRETE)
DP-9	24	c															24	c	CL1	938+50.45	REMOVE 18" X 6.0' RCP
SHEET TOTAL				380.4			4.0	6.0			149.8										

DRAINAGE QUANTITIES

DQ-14

CALCULATED-DESIGNED BY	BRETT DITZLER	REVISED BY
CHECKED BY	KRISTEN KINGSLEY	DATE REVISED

FUNCTIONAL SUPERVISOR: STEVE THORNE

STATE OF CALIFORNIA - DEPARTMENT OF TRANSPORTATION

Caltrans® HYDRAULICS

P:\proj2\02\4c401\design\PS&E\24c401id014.dgn

LAST REVISION 07-07-10 | DATE PLOTTED => 14-DEC-2010 | TIME PLOTTED => 14:47

Dist	COUNTY	ROUTE	POST MILES TOTAL PROJECT	SHEET No.	TOTAL SHEETS
02	Sha	5	R10.5/R17.5	131	311

REGISTERED CIVIL ENGINEER 10-15-10 DATE

12-13-10
PLANS APPROVAL DATE

REGISTERED PROFESSIONAL ENGINEER KRISTEN A. KINGSLEY No. C72250 Exp. 6-30-12 CIVIL STATE OF CALIFORNIA

THE STATE OF CALIFORNIA OR ITS OFFICERS OR AGENTS SHALL NOT BE RESPONSIBLE FOR THE ACCURACY OR COMPLETENESS OF SCANNED COPIES OF THIS PLAN SHEET.

DRAINAGE QUANTITIES

DRAINAGE PROFILE OR PLAN SHEET No.	DRAINAGE SYSTEM No. ⬡	DRAINAGE UNIT No. ○	36" PRECAST CONCRETE PIPE INLET	OBSERVATION WELL	ROCK SLOPE PROTECTION (FACING, METHOD B)	ROCK SLOPE PROTECTION (BACKING No. 2, METHOD B)	ROCK SLOPE PROTECTION (BACKING No. 3, METHOD B)	FILTER FABRIC	ROCK SLOPE PROTECTION FABRIC	MISCELLANEOUS IRON AND STEEL	VEGETATION CONTROL (MINOR CONCRETE)	(N) DI HEIGHT	MAX COVER	DRAINAGE SYSTEM No. ⬡	DRAINAGE UNIT No. ○	ALIGNMENT	STATION	DESCRIPTION
			LF	EA	CY	CY	CY	SQYD	SQYD	LB	SQYD	FT	FT					
DP-8	22	a								263		7.92		22	a	CL1	915+92.96	TYPE G2 DI, W/ (1) GRATE TYPE 24-9
DP-8	22	b									15.5			22	b	CL1	915+92.96	VEGETATION CONTROL (MINOR CONCRETE)
DP-8	22	c						487.2					4.9	22	c	CL1	915+92.96	36" X 237.0′ PAPC
DP-8	22	d								526		5.41		22	d	CL1	913+51.26	TYPE GT4 (Mod) DI, W/ (2) GRATE TYPE 24-9
DP-8	22	e									16.1			22	e	CL1	913+51.26	VEGETATION CONTROL (MINOR CONCRETE)
DP-8	22	f												22	f	CL1	913+51.26	REMOVE INLET (TYPE G2) (H=3.6′)
DP-8	22	g											3.5	22	g	CL1	913+51.26	24" X 2.0′ RCP, Conc COLLAR
DP-8	22	h											3.5	22	h	CL1	913+51.26	24" X 2.0′ RCP, Conc COLLAR
DP-9	23	a								263		5.89		23	a	CL1	938+50.45	TYPE G2 DI, W/ (1) GRATE TYPE 24-9
DP-9	23	b									10.1			23	b	CL1	938+50.45	VEGETATION CONTROL (MINOR CONCRETE)
DP-9	23	c						141.8					2.9	23	c	CL1	938+50.45	36" X 69.0′ PAPC
DP-9	23	d								526		5.06		23	d	CL1	933+50.02	TYPE GT4 (Mod) DI, W/ (2) GRATE TYPE 24-9
DP-9	23	e									10.0			23	e	CL1	933+50.02	VEGETATION CONTROL (MINOR CONCRETE)
DP-9	23	f												23	f	CL1	933+50.02	REMOVE INLET (TYPE G2) (H=3.0′)
DP-9	23	g											3.6	23	g	CL1	933+50.02	18" X 2.0′ RCP, Conc COLLAR
DP-9	23	h											3.7	23	h	CL1	933+50.02	18" X 2.0′ RCP, Conc COLLAR
DP-9	23	i											3.1	23	i	CL1	933+50.02	24" X 2.0′ RCP, Conc COLLAR
DP-9	23	j						152.9					2.9	23	j	CL1	933+50.02	36" X 74.4′ PAPC
DP-9	24	a								263		6.27		24	a	CL1	938+50.45	TYPE G1 DI, W/ (1) GRATE TYPE 24-9
DP-9	24	b									14.5			24	b	CL1	938+50.45	VEGETATION CONTROL (MINOR CONCRETE)
DP-9	24	c											3.0	24	c	CL1	938+50.45	REMOVE 18" X 6.0′ RCP
SHEET TOTAL								781.9		1841	66.2							

DRAINAGE QUANTITIES

DQ-15

CALCULATED-DESIGNED BY	BRETT DITZLER	REVISED BY
CHECKED BY	KRISTEN KINGSLEY	DATE REVISED

FUNCTIONAL SUPERVISOR: STEVE THORNE

STATE OF CALIFORNIA - DEPARTMENT OF TRANSPORTATION

Caltrans® HYDRAULICS

P:\proj2\02\4c401\design\PS&E\24c401id015.dgn

LAST REVISION 07-07-10 | DATE PLOTTED => 14-DEC-2010 | TIME PLOTTED => 14:47

Dist	COUNTY	ROUTE	POST MILES TOTAL PROJECT	SHEET No.	TOTAL SHEETS
02	Sha	5	R10.5/R17.5	132	311

REGISTERED CIVIL ENGINEER 10-15-10 DATE

12-13-10
PLANS APPROVAL DATE

REGISTERED PROFESSIONAL ENGINEER KRISTEN A. KINGSLEY No. C72250 Exp. 6-30-12 CIVIL STATE OF CALIFORNIA

THE STATE OF CALIFORNIA OR ITS OFFICERS OR AGENTS SHALL NOT BE RESPONSIBLE FOR THE ACCURACY OR COMPLETENESS OF SCANNED COPIES OF THIS PLAN SHEET.

DRAINAGE QUANTITIES

DRAINAGE PROFILE OR PLAN SHEET No.	DRAINAGE SYSTEM No. ⬡	DRAINAGE UNIT No. ◯	ABANDON CULVERT	ABANDON INLET	REMOVE FLARED END SECTION	REMOVE CULVERT	REMOVE INLET	REMOVE DOWNDRAIN	ADJUST INLET	MODIFY INLET	SAND BACKFILL	HOT MIX ASPHALT	PLACE HOT MIX ASPHALT DIKE (TYPE A)	PLACE HOT MIX ASPHALT (MISCELLANEOUS AREA)	MINOR CONCRETE (MINOR STRUCTURE)	6" ALTERNATIVE PIPE CULVERT	DRAINAGE SYSTEM No. ⬡	DRAINAGE UNIT No. ◯	ALIGNMENT	STATION	DESCRIPTION
			EA	EA	EA	LF	EA	EA	EA	EA	CY	TON	LF	SQYD	CY	LF					
DP-9	24	d															24	d	CL1	938+50.45	18" X 2.0' RCP, Conc COLLAR
DP-9	24	e															24	e	CL1	938+50.45	18" X 2.0' RCP, Conc COLLAR
DP-9	24	f							1								24	f	CL1	938+50.45	ADJUST TYPE G2 INLET, W/ COVER PLATE
DP-9	24	g															24	g	CL1	938+50.45	VEGETATION CONTROL (MINOR CONCRETE)
DP-10	25	a													1.7		25	a	CL1	945+28.75	TYPE G1 DI, W/ (1) GRATE TYPE 24-9
DP-10	25	b															25	b	CL1	945+28.75	VEGETATION CONTROL (MINOR CONCRETE)
DP-10	25	c				6											25	c	CL1	945+28.75	REMOVE 18" X 6.0' RCP
DP-10	25	d															25	d	CL1	945+28.75	18" X 2.0' RCP, Conc COLLAR
DP-10	25	e															25	e	CL1	945+28.75	18" X 2.0' RCP, Conc COLLAR
DP-10	25	f							1								25	f	CL1	945+28.75	ADJUST TYPE G2 INLET, W/ COVER PLATE
DP-10	25	g															25	g	CL1	945+28.75	VEGETATION CONTROL (MINOR CONCRETE)
DP-10	26	a					1										26	a	CL1	948+31.72	REMOVE INLET (TYPE G2) (H=5.1')
DP-10	26	b															26	b	CL1	948+31.72	30" X 6.0' RCP, Conc COLLAR
DP-10	26	c													1.8		26	c	CL1	948+31.72	TYPE G2 DI, W/ (1) GRATE TYPE 24-9
DP-10	26	d															26	d	CL1	948+31.72	VEGETATION CONTROL (MINOR CONCRETE)
DP-10	26	e															26	e	CL1	948+31.72	36" X 157.0' RCP
DP-10	26	f													5.0		26	f	CL1	949+95.12	TYPE GT4 (Mod) DI, W/ (3) GRATE TYPE 24-9
DP-10	26	g															26	g	CL1	949+95.12	VEGETATION CONTROL (MINOR CONCRETE)
DP-10	26	h													2.3		26	h	CL1	950+96.52	TYPE G2 DI, W/ (1) GRATE TYPE 24-9
DP-10	26	i															26	i	CL1	950+96.52	VEGETATION CONTROL (MINOR CONCRETE)
DP-10	26	j															26	j	CL1	950+96.52	36" X 95.0' RCP
DP-10	26	k								1							26	k	CL1	949+95.12	MODIFY INLET
SHEET TOTAL						6	1		2	1					10.8						

DRAINAGE QUANTITIES

DQ-16

BRETT DITZLER — REVISED BY
KRISTEN KINGSLEY — DATE REVISED
CALCULATED-DESIGNED BY
CHECKED BY
FUNCTIONAL SUPERVISOR
STEVE THORNE

STATE OF CALIFORNIA - DEPARTMENT OF TRANSPORTATION
Caltrans®
HYDRAULICS

P:\proj2\02\4c401\design\PS&E\24c401id016.dgn

LAST REVISION DATE PLOTTED => 14-DEC-2010
07-07-10 TIME PLOTTED => 14:47

Dist	COUNTY	ROUTE	POST MILES TOTAL PROJECT	SHEET No.	TOTAL SHEETS
02	Sha	5	R10.5/R17.5	133	311

REGISTERED CIVIL ENGINEER 10-15-10 DATE

12-13-10
PLANS APPROVAL DATE

REGISTERED PROFESSIONAL ENGINEER KRISTEN A. KINGSLEY No. C72250 Exp. 6-30-12 CIVIL STATE OF CALIFORNIA

THE STATE OF CALIFORNIA OR ITS OFFICERS OR AGENTS SHALL NOT BE RESPONSIBLE FOR THE ACCURACY OR COMPLETENESS OF SCANNED COPIES OF THIS PLAN SHEET.

DRAINAGE QUANTITIES

DRAINAGE PROFILE OR PLAN SHEET No.	DRAINAGE SYSTEM No.	DRAINAGE UNIT No.	18" ALTERNATIVE PIPE CULVERT	36" PERFORATED ALTERNATIVE PIPE CULVERT	42" ALTERNATIVE PIPE CULVERT	42" PERFORATED ALTERNATIVE PIPE CULVERT	18" REINFORCED CONCRETE PIPE (CLASS II, RUBBER GASKET JOINT)	24" REINFORCED CONCRETE PIPE (CLASS II, RUBBER GASKET JOINT)	30" REINFORCED CONCRETE PIPE (CLASS II, RUBBER GASKET JOINT)	36" REINFORCED CONCRETE PIPE (CLASS IV, RUBBER GASKET JOINT)	PERMEABLE MATERIAL	DETENTION TRENCH	8" CORRUGATED STEEL FLUME DOWNDRAIN	18" TAPERED INLET	FLUME ANCHOR ASSEMBLY	18" ALTERNATIVE PIPE DOWNDRAIN	DRAINAGE SYSTEM No.	DRAINAGE UNIT No.	ALIGNMENT	STATION	DESCRIPTION
			LF	LF	LF	LF	LF	LF	LF	LF	CY	LF	LF	EA	EA	LF					
DP-9	24	d					2.0										24	d	CL1	938+50.45	18" X 2.0' RCP, Conc COLLAR
DP-9	24	e					2.0										24	e	CL1	938+50.45	18" X 2.0' RCP, Conc COLLAR
DP-9	24	f															24	f	CL1	938+50.45	ADJUST TYPE G2 INLET, W/ COVER PLATE
DP-9	24	g															24	g	CL1	938+50.45	VEGETATION CONTROL (MINOR CONCRETE)
DP-10	25	a															25	a	CL1	945+28.75	TYPE G1 DI, W/ (1) GRATE TYPE 24-9
DP-10	25	b															25	b	CL1	945+28.75	VEGETATION CONTROL (MINOR CONCRETE)
DP-10	25	c															25	c	CL1	945+28.75	REMOVE 18" X 6.0' RCP
DP-10	25	d					2.0										25	d	CL1	945+28.75	18" X 2.0' RCP, Conc COLLAR
DP-10	25	e					2.0										25	e	CL1	945+28.75	18" X 2.0' RCP, Conc COLLAR
DP-10	25	f															25	f	CL1	945+28.75	ADJUST TYPE G2 INLET, W/ COVER PLATE
DP-10	25	g															25	g	CL1	945+28.75	VEGETATION CONTROL (MINOR CONCRETE)
DP-10	26	a															26	a	CL1	948+31.72	REMOVE INLET (TYPE G2) (H=5.1')
DP-10	26	b							6.0								26	b	CL1	948+31.72	30" X 6.0' RCP, Conc COLLAR
DP-10	26	c															26	c	CL1	948+31.72	TYPE G2 DI, W/ (1) GRATE TYPE 24-9
DP-10	26	d															26	d	CL1	948+31.72	VEGETATION CONTROL (MINOR CONCRETE)
DP-10	26	e								157.0							26	e	CL1	948+31.72	36" X 157.0' RCP
DP-10	26	f															26	f	CL1	949+95.12	TYPE GT4 (Mod) DI, W/ (3) GRATE TYPE 24-9
DP-10	26	g															26	g	CL1	949+95.12	VEGETATION CONTROL (MINOR CONCRETE)
DP-10	26	h															26	h	CL1	950+96.52	TYPE G2 DI, W/ (1) GRATE TYPE 24-9
DP-10	26	i															26	i	CL1	950+96.52	VEGETATION CONTROL (MINOR CONCRETE)
DP-10	26	j								95.0							26	j	CL1	950+96.52	36" X 95.0' RCP
DP-10	26	k															26	k	CL1	949+95.12	MODIFY INLET
SHEET TOTAL							8.0		6.0	252.0											

DRAINAGE QUANTITIES

DQ-17

CALCULATED-DESIGNED BY BRETT DITZLER
CHECKED BY KRISTEN KINGSLEY
REVISED BY
DATE REVISED
FUNCTIONAL SUPERVISOR STEVE THORNE

STATE OF CALIFORNIA - DEPARTMENT OF TRANSPORTATION
Caltrans® HYDRAULICS

P:\proj2\02\4c401\design\PS&E\24c401id017.dgn

LAST REVISION 07-07-10 DATE PLOTTED => 14-DEC-2010 TIME PLOTTED => 14:48

Dist	COUNTY	ROUTE	POST MILES TOTAL PROJECT	SHEET No.	TOTAL SHEETS
02	Sha	5	R10.5/R17.5	134	311

REGISTERED CIVIL ENGINEER 10-15-10 DATE

12-13-10
PLANS APPROVAL DATE

REGISTERED PROFESSIONAL ENGINEER KRISTEN A. KINGSLEY No. C72250 Exp. 6-30-12 CIVIL STATE OF CALIFORNIA

THE STATE OF CALIFORNIA OR ITS OFFICERS OR AGENTS SHALL NOT BE RESPONSIBLE FOR THE ACCURACY OR COMPLETENESS OF SCANNED COPIES OF THIS PLAN SHEET.

DRAINAGE QUANTITIES

DRAINAGE PROFILE OR PLAN SHEET No.	DRAINAGE SYSTEM No.	DRAINAGE UNIT No.	36" PRECAST CONCRETE PIPE INLET	OBSERVATION WELL	ROCK SLOPE PROTECTION (FACING, METHOD B)	ROCK SLOPE PROTECTION (BACKING No. 2, METHOD B)	ROCK SLOPE PROTECTION (BACKING No. 3, METHOD B)	FILTER FABRIC	ROCK SLOPE PROTECTION FABRIC	MISCELLANEOUS IRON AND STEEL	VEGETATION CONTROL (MINOR CONCRETE)	(N) DI HEIGHT	MAX COVER	DRAINAGE SYSTEM No.	DRAINAGE UNIT No.	ALIGNMENT	STATION	DESCRIPTION
			LF	EA	CY	CY	CY	SQYD	SQYD	LB	SQYD	FT	FT					
DP-9	24	d											4.9	24	d	CL1	938+50.45	18" X 2.0' RCP, Conc COLLAR
DP-9	24	e											4.7	24	e	CL1	938+50.45	18" X 2.0' RCP, Conc COLLAR
DP-9	24	f								46		2.43		24	f	CL1	938+50.45	ADJUST TYPE G2 INLET, W/ COVER PLATE
DP-9	24	g									3.6			24	g	CL1	938+50.45	VEGETATION CONTROL (MINOR CONCRETE)
DP-10	25	a								263		6.26		25	a	CL1	945+28.75	TYPE G1 DI, W/ (1) GRATE TYPE 24-9
DP-10	25	b									14.5			25	b	CL1	945+28.75	VEGETATION CONTROL (MINOR CONCRETE)
DP-10	25	c											2.9	25	c	CL1	945+28.75	REMOVE 18" X 6.0' RCP
DP-10	25	d											4.8	25	d	CL1	945+28.75	18" X 2.0' RCP, Conc COLLAR
DP-10	25	e											4.7	25	e	CL1	945+28.75	18" X 2.0' RCP, Conc COLLAR
DP-10	25	f								46		1.90		25	f	CL1	945+28.75	ADJUST TYPE G2 INLET, W/ COVER PLATE
DP-10	25	g									5.6			25	g	CL1	945+28.75	VEGETATION CONTROL (MINOR CONCRETE)
DP-10	26	a												26	a	CL1	948+31.72	REMOVE INLET (TYPE G2) (H=5.1')
DP-10	26	b											4.8	26	b	CL1	948+31.72	30" X 6.0' RCP, Conc COLLAR
DP-10	26	c								263		3.72		26	c	CL1	948+31.72	TYPE G2 DI, W/ (1) GRATE TYPE 24-9
DP-10	26	d									17.1			26	d	CL1	948+31.72	VEGETATION CONTROL (MINOR CONCRETE)
DP-10	26	e											1.4	26	e	CL1	948+31.72	36" X 157.0' RCP
DP-10	26	f								789		4.44		26	f	CL1	949+95.12	TYPE GT4 (Mod) DI, W/ (3) GRATE TYPE 24-9
DP-10	26	g									18.8			26	g	CL1	949+95.12	VEGETATION CONTROL (MINOR CONCRETE)
DP-10	26	h								263		5.22		26	h	CL1	950+96.52	TYPE G2 DI, W/ (1) GRATE TYPE 24-9
DP-10	26	i									17.1			26	i	CL1	950+96.52	VEGETATION CONTROL (MINOR CONCRETE)
DP-10	26	j											2.2	26	j	CL1	950+96.52	36" X 95.0' RCP
DP-10	26	k												26	k	CL1	949+95.12	MODIFY INLET
SHEET TOTAL										1670	76.7							

DRAINAGE QUANTITIES

DQ-18

BRETT DITZLER — REVISED BY
KRISTEN KINGSLEY — DATE REVISED
CALCULATED-DESIGNED BY
CHECKED BY
FUNCTIONAL SUPERVISOR
STEVE THORNE

STATE OF CALIFORNIA - DEPARTMENT OF TRANSPORTATION
Caltrans®
HYDRAULICS

P:\proj2\02\4c401\design\PS&E\24c401id018.dgn

LAST REVISION DATE PLOTTED => 14-DEC-2010
07-07-10 TIME PLOTTED => 14:48

Dist	COUNTY	ROUTE	POST MILES TOTAL PROJECT	SHEET No.	TOTAL SHEETS
02	Sha	5	R10.5/R17.5	135	311

REGISTERED CIVIL ENGINEER 10-15-10 DATE

12-13-10
PLANS APPROVAL DATE

REGISTERED PROFESSIONAL ENGINEER KRISTEN A. KINGSLEY No. C72250 Exp. 6-30-12 CIVIL STATE OF CALIFORNIA

THE STATE OF CALIFORNIA OR ITS OFFICERS OR AGENTS SHALL NOT BE RESPONSIBLE FOR THE ACCURACY OR COMPLETENESS OF SCANNED COPIES OF THIS PLAN SHEET.

DRAINAGE QUANTITIES

DRAINAGE PROFILE OR PLAN SHEET No.	DRAINAGE SYSTEM No. ⬡	DRAINAGE UNIT No. ○	ABANDON CULVERT	ABANDON INLET	REMOVE FLARED END SECTION	REMOVE CULVERT	REMOVE INLET	REMOVE DOWNDRAIN	ADJUST INLET	MODIFY INLET	SAND BACKFILL	HOT MIX ASPHALT	PLACE HOT MIX ASPHALT DIKE (TYPE A)	PLACE HOT MIX ASPHALT (MISCELLANEOUS AREA)	MINOR CONCRETE (MINOR STRUCTURE)	6" ALTERNATIVE PIPE CULVERT	DRAINAGE SYSTEM No. ⬡	DRAINAGE UNIT No. ○	ALIGNMENT	STATION	DESCRIPTION
			EA	EA	EA	LF	EA	EA	EA	EA	CY	TON	LF	SQYD	CY	LF					
DP-10	26	l							1								26	l	CL1	950+13.22	ADJUST TYPE GCP DI, W/ (1) GRATE TYPE 36R
DP-10	26	m															26	m	CL1	950+13.22	VEGETATION CONTROL (MINOR CONCRETE)
DP-11	27	a													2.7		27	a	CL1	960+19.10	TYPE GDO (Mod) DI, W/ METAL LID
DP-11	27	b														214.5	27	b	CL1	960+19.10	6" X 214.5′ APC
DP-11	27	c													0.7		27	c	CL1	958+00.59	TYPE GCP DI, W/ (1) GRATE TYPE 36R
DP-11	27	d															27	d	CL1	958+00.59	VEGETATION CONTROL (MINOR CONCRETE)
DP-11	27	e															27	e	CL1	958+00.59	18" X 10.2′ RCP
DP-11	27	f					1										27	f	CL1	958+00.59	REMOVE INLET (TYPE GT3 Mod) (H=1.6′)
DP-11	28	a							1								28	a	CL1	966+00.47	ADJUST TYPE GCP DI, W/ (1) GRATE TYPE 36R
DP-11	28	b															28	b	CL1	966+00.47	VEGETATION CONTROL (MINOR CONCRETE)
D-13	29	a															29	a	S1	79+79.61	REPLACE GRATE, TYPE 24-12X
D-13	29	b															29	b	S1	79+79.84	REPLACE GRATE, TYPE 24-12X
D-13	29	c															29	c	S1	77+34.44	REPLACE GRATE, TYPE 24-12X
D-13	29	d															29	d	S1	77+08.15	REPLACE GRATE, TYPE 24-12X
D-13	29	e															29	e	S1	76+07.23	REPLACE GRATE, TYPE 24-12X
DP-12	30	a													2.6		30	a	CL1	975+54.43	TYPE G2 DI, W/ (1) GRATE TYPE 24-9
DP-12	30	b															30	b	CL1	975+54.43	VEGETATION CONTROL (MINOR CONCRETE)
DP-12	30	c															30	c	CL1	975+54.43	36" X 136.0′ PAPC
DP-12	30	d													3.8		30	d	CL1	974+13.73	TYPE GT4 (Mod) DI, W/ (2) GRATE TYPE 24-9
DP-12	30	e															30	e	CL1	974+13.73	VEGETATION CONTROL (MINOR CONCRETE)
DP-12	30	f															30	f	CL1	974+13.73	18" X 80.7′ APC
DP-12	30	g															30	g	CL1	974+13.73	18" X 40.6′ AP DD
DP-12	30	h															30	h	CL1	974+13.73	RSP (BACKING No. 2, METHOD B)
SHEET TOTAL							1		2						9.8	214.5					

DRAINAGE QUANTITIES

DQ-19

BRETT DITZLER | REVISED BY
KRISTEN KINGSLEY | DATE REVISED
CALCULATED-DESIGNED BY
CHECKED BY
FUNCTIONAL SUPERVISOR
STEVE THORNE

STATE OF CALIFORNIA - DEPARTMENT OF TRANSPORTATION
Caltrans
HYDRAULICS

P:\proj2\02\4c401\design\PS&E\24c401id019.dgn

LAST REVISION | DATE PLOTTED => 14-DEC-2010
07-07-10 | TIME PLOTTED => 14:48

Dist	COUNTY	ROUTE	POST MILES TOTAL PROJECT	SHEET No.	TOTAL SHEETS
02	Sha	5	R10.5/R17.5	136	311

REGISTERED CIVIL ENGINEER 10-15-10 DATE

12-13-10
PLANS APPROVAL DATE

REGISTERED PROFESSIONAL ENGINEER KRISTEN A. KINGSLEY No. C72250 Exp. 6-30-12 CIVIL STATE OF CALIFORNIA

THE STATE OF CALIFORNIA OR ITS OFFICERS OR AGENTS SHALL NOT BE RESPONSIBLE FOR THE ACCURACY OR COMPLETENESS OF SCANNED COPIES OF THIS PLAN SHEET.

DRAINAGE QUANTITIES

DRAINAGE PROFILE OR PLAN SHEET No.	DRAINAGE SYSTEM No. ⬡	DRAINAGE UNIT No. ○	18" ALTERNATIVE PIPE CULVERT	36" PERFORATED ALTERNATIVE PIPE CULVERT	42" ALTERNATIVE PIPE CULVERT	42" PERFORATED ALTERNATIVE PIPE CULVERT	18" REINFORCED CONCRETE PIPE (CLASS II, RUBBER GASKET JOINT)	24" REINFORCED CONCRETE PIPE (CLASS II, RUBBER GASKET JOINT)	30" REINFORCED CONCRETE PIPE (CLASS II, RUBBER GASKET JOINT)	36" REINFORCED CONCRETE PIPE (CLASS IV, RUBBER GASKET JOINT)	PERMEABLE MATERIAL	DETENTION TRENCH	8" CORRUGATED STEEL FLUME DOWNDRAIN	18" TAPERED INLET	FLUME ANCHOR ASSEMBLY	18" ALTERNATIVE PIPE DOWNDRAIN	DRAINAGE SYSTEM No. ⬡	DRAINAGE UNIT No. ○	ALIGNMENT	STATION	DESCRIPTION
			LF	LF	LF	LF	LF	LF	LF	LF	CY	LF	LF	EA	EA	LF					
DP-10	26	l															26	l	CL1	950+13.22	ADJUST TYPE GCP DI, W/ (1) GRATE TYPE 36R
DP-10	26	m															26	m	CL1	950+13.22	VEGETATION CONTROL (MINOR CONCRETE)
DP-11	27	a															27	a	CL1	960+19.10	TYPE GDO (Mod) DI, W/ METAL LID
DP-11	27	b															27	b	CL1	960+19.10	6" X 214.5′ APC
DP-11	27	c															27	c	CL1	958+00.59	TYPE GCP DI, W/ (1) GRATE TYPE 36R
DP-11	27	d															27	d	CL1	958+00.59	VEGETATION CONTROL (MINOR CONCRETE)
DP-11	27	e					10.2										27	e	CL1	958+00.59	18" X 10.2′ RCP
DP-11	27	f															27	f	CL1	958+00.59	REMOVE INLET (TYPE GT3 Mod) (H=1.6′)
DP-11	28	a															28	a	CL1	966+00.47	ADJUST TYPE GCP DI, W/ (1) GRATE TYPE 36R
DP-11	28	b															28	b	CL1	966+00.47	VEGETATION CONTROL (MINOR CONCRETE)
D-13	29	a															29	a	S1	79+79.61	REPLACE GRATE, TYPE 24-12X
D-13	29	b															29	b	S1	79+79.84	REPLACE GRATE, TYPE 24-12X
D-13	29	c															29	c	S1	77+34.44	REPLACE GRATE, TYPE 24-12X
D-13	29	d															29	d	S1	77+08.15	REPLACE GRATE, TYPE 24-12X
D-13	29	e															29	e	S1	76+07.23	REPLACE GRATE, TYPE 24-12X
DP-12	30	a															30	a	CL1	975+54.43	TYPE G2 DI, W/ (1) GRATE TYPE 24-9
DP-12	30	b															30	b	CL1	975+54.43	VEGETATION CONTROL (MINOR CONCRETE)
DP-12	30	c		136.0							53.6						30	c	CL1	975+54.43	36" X 136.0′ PAPC
DP-12	30	d															30	d	CL1	974+13.73	TYPE GT4 (Mod) DI, W/ (2) GRATE TYPE 24-9
DP-12	30	e															30	e	CL1	974+13.73	VEGETATION CONTROL (MINOR CONCRETE)
DP-12	30	f	80.7														30	f	CL1	974+13.73	18" X 80.7′ APC
DP-12	30	g														40.6	30	g	CL1	974+13.73	18" X 40.6′ AP DD
DP-12	30	h															30	h	CL1	974+13.73	RSP (BACKING No. 2, METHOD B)
SHEET TOTAL			80.7	136.0			10.2				53.6					40.6					

DRAINAGE QUANTITIES

DQ-20

BRETT DITZLER — REVISED BY
KRISTEN KINGSLEY — DATE REVISED
CALCULATED-DESIGNED BY
CHECKED BY
FUNCTIONAL SUPERVISOR
STEVE THORNE

STATE OF CALIFORNIA - DEPARTMENT OF TRANSPORTATION
Caltrans®
HYDRAULICS

P:\proj2\02\4c401\design\PS&E\24c401id020.dgn

LAST REVISION DATE PLOTTED => 14-DEC-2010
07-07-10 TIME PLOTTED => 14:48

Dist	COUNTY	ROUTE	POST MILES TOTAL PROJECT	SHEET No.	TOTAL SHEETS
02	Sha	5	R10.5/R17.5	137	311

REGISTERED CIVIL ENGINEER 10-15-10 DATE

12-13-10
PLANS APPROVAL DATE

REGISTERED PROFESSIONAL ENGINEER KRISTEN A. KINGSLEY No. C72250 Exp. 6-30-12 CIVIL STATE OF CALIFORNIA

THE STATE OF CALIFORNIA OR ITS OFFICERS OR AGENTS SHALL NOT BE RESPONSIBLE FOR THE ACCURACY OR COMPLETENESS OF SCANNED COPIES OF THIS PLAN SHEET.

DRAINAGE QUANTITIES

DRAINAGE PROFILE OR PLAN SHEET No.	DRAINAGE SYSTEM No. ⬡	DRAINAGE UNIT No. ○	36" PRECAST CONCRETE PIPE INLET	OBSERVATION WELL	ROCK SLOPE PROTECTION (FACING, METHOD B)	ROCK SLOPE PROTECTION (BACKING No. 2, METHOD B)	ROCK SLOPE PROTECTION (BACKING No. 3, METHOD B)	FILTER FABRIC	ROCK SLOPE PROTECTION FABRIC	MISCELLANEOUS IRON AND STEEL	VEGETATION CONTROL (MINOR CONCRETE)	(N) DI HEIGHT	MAX COVER	DRAINAGE SYSTEM No. ⬡	DRAINAGE UNIT No. ○	ALIGNMENT	STATION	DESCRIPTION
			LF	EA	CY	CY	CY	SQYD	SQYD	LB	SQYD	FT	FT					
DP-10	26	l												26	l	CL1	950+13.22	ADJUST TYPE GCP DI, W/ (1) GRATE TYPE 36R
DP-10	26	m									15.3			26	m	CL1	950+13.22	VEGETATION CONTROL (MINOR CONCRETE)
DP-11	27	a								453		3.64		27	a	CL1	960+19.10	TYPE GDO (Mod) DI, W/ METAL LID
DP-11	27	b											2.3	27	b	CL1	960+19.10	6" X 214.5' APC
DP-11	27	c	3.1							236		2.64		27	c	CL1	958+00.59	TYPE GCP DI, W/ (1) GRATE TYPE 36R
DP-11	27	d									15.3			27	d	CL1	958+00.59	VEGETATION CONTROL (MINOR CONCRETE)
DP-11	27	e											2.6	27	e	CL1	958+00.59	18" X 10.2' RCP
DP-11	27	f												27	f	CL1	958+00.59	REMOVE INLET (TYPE GT3 Mod) (H=1.6')
DP-11	28	a										2.16		28	a	CL1	966+00.47	ADJUST TYPE GCP DI, W/ (1) GRATE TYPE 36R
DP-11	28	b									15.3			28	b	CL1	966+00.47	VEGETATION CONTROL (MINOR CONCRETE)
D-13	29	a								239				29	a	S1	79+79.61	REPLACE GRATE, TYPE 24-12X
D-13	29	b								239				29	b	S1	79+79.84	REPLACE GRATE, TYPE 24-12X
D-13	29	c								239				29	c	S1	77+34.44	REPLACE GRATE, TYPE 24-12X
D-13	29	d								239				29	d	S1	77+08.15	REPLACE GRATE, TYPE 24-12X
D-13	29	e								239				29	e	S1	76+07.23	REPLACE GRATE, TYPE 24-12X
DP-12	30	a								263		6.30		30	a	CL1	975+54.43	TYPE G2 DI, W/ (1) GRATE TYPE 24-9
DP-12	30	b									15.5			30	b	CL1	975+54.43	VEGETATION CONTROL (MINOR CONCRETE)
DP-12	30	c						279.6					3.3	30	c	CL1	975+54.43	36" X 136.0' PAPC
DP-12	30	d								526		5.00		30	d	CL1	974+13.73	TYPE GT4 (Mod) DI, W/ (2) GRATE TYPE 24-9
DP-12	30	e									18.0			30	e	CL1	974+13.73	VEGETATION CONTROL (MINOR CONCRETE)
DP-12	30	f											5.7	30	f	CL1	974+13.73	18" X 80.7' APC
DP-12	30	g											3.5	30	g	CL1	974+13.73	18" X 40.6' AP DD
DP-12	30	h				9.3			33.3					30	h	CL1	974+13.73	RSP (BACKING No. 2, METHOD B)
SHEET TOTAL			3.1			9.3		279.6	33.3	2673	79.4							

DRAINAGE QUANTITIES

DQ-21

BRETT DITZLER | REVISED BY
KRISTEN KINGSLEY | DATE REVISED
CALCULATED-DESIGNED BY
CHECKED BY
FUNCTIONAL SUPERVISOR
STEVE THORNE

STATE OF CALIFORNIA - DEPARTMENT OF TRANSPORTATION
Caltrans
HYDRAULICS

P:\proj2\02\4c401\design\PS&E\24c401id021.dgn

LAST REVISION DATE PLOTTED => 14-DEC-2010
07-07-10 TIME PLOTTED => 14:48

Dist	COUNTY	ROUTE	POST MILES TOTAL PROJECT	SHEET No.	TOTAL SHEETS
02	Sha	5	R10.5/R17.5	138	311

REGISTERED CIVIL ENGINEER 10-15-10 DATE

12-13-10
PLANS APPROVAL DATE

REGISTERED PROFESSIONAL ENGINEER KRISTEN A. KINGSLEY No. C72250 Exp. 6-30-12 CIVIL STATE OF CALIFORNIA

THE STATE OF CALIFORNIA OR ITS OFFICERS OR AGENTS SHALL NOT BE RESPONSIBLE FOR THE ACCURACY OR COMPLETENESS OF SCANNED COPIES OF THIS PLAN SHEET.

DRAINAGE QUANTITIES

DRAINAGE PROFILE OR PLAN SHEET No.	DRAINAGE SYSTEM No. ⬡	DRAINAGE UNIT No. ○	ABANDON CULVERT	ABANDON INLET	REMOVE FLARED END SECTION	REMOVE CULVERT	REMOVE INLET	REMOVE DOWNDRAIN	ADJUST INLET	MODIFY INLET	SAND BACKFILL	HOT MIX ASPHALT	PLACE HOT MIX ASPHALT DIKE (TYPE A)	PLACE HOT MIX ASPHALT (MISCELLANEOUS AREA)	MINOR CONCRETE (MINOR STRUCTURE)	6" ALTERNATIVE PIPE CULVERT	DRAINAGE SYSTEM No. ⬡	DRAINAGE UNIT No. ○	ALIGNMENT	STATION	DESCRIPTION
			EA	EA	EA	LF	EA	EA	EA	EA	CY	TON	LF	SQYD	CY	LF					
DP-12	30	i		1							4.5						30	i	CL1	975+54.43	ABANDON INLET (TYPE OCP) (H=17.3′)
DP-12	30	j	1								1.8						30	j	CL1	975+54.43	ABANDON 18" X 27′ RCP
DP-12	30	k				17											30	k	CL1	975+54.43	REMOVE 18" X 17.0′ RCP
DP-12	30	l	1								2.8						30	l	CL1	975+54.43	ABANDON 18" X 42′ RCP
DP-13	31	a													2.7		31	a	CL1	982+68.65	TYPE G2 DI, W/ (1) GRATE TYPE 24-9
DP-13	31	b															31	b	CL1	982+68.65	VEGETATION CONTROL (MINOR CONCRETE)
DP-13	31	c															31	c	CL1	980+49.95	42" X 214.0′ APC
DP-13	31	d													4.0		31	d	CL1	980+49.95	TYPE GT4 (Mod) DI, W/ (2) GRATE TYPE 24-9
DP-13	31	e															31	e	CL1	980+49.95	VEGETATION CONTROL (MINOR CONCRETE)
DP-13	31	f															31	f	CL1	980+49.95	24" X 1.4′ RCP, CONNECT TO EXIST
DP-13	31	g							1								31	g	CL1	980+49.95	ADJUST TYPE GCP INLET, W/ COVER PLATE
DP-13	32	a							1								32	a	CL1	987+12.87	ADJUST TYPE G2 DI, W/ (1) GRATE TYPE 24-9
DP-13	32	b															32	b	CL1	987+12.87	VEGETATION CONTROL (MINOR CONCRETE)
DP-13	32	c							1								32	c	CL1	987+12.87	ADJUST TYPE GCP INLET, W/ COVER PLATE
DP-13	32	d															32	d	CL1	987+12.87	VEGETATION CONTROL (MINOR CONCRETE)
DP-14	33	a													2.5		33	a	CL1	993+65.61	TYPE G2 DI, W/ (1) GRATE TYPE 24-9
DP-14	33	b															33	b	CL1	993+65.61	VEGETATION CONTROL (MINOR CONCRETE)
DP-14	33	c															33	c	CL1	993+65.61	36" X 162.0′ PAPC
DP-14	33	d													3.8		33	d	CL1	991+98.91	TYPE GT4 (Mod) DI, W/ (2) GRATE TYPE 24-9
DP-14	33	e															33	e	CL1	991+98.91	VEGETATION CONTROL (MINOR CONCRETE)
DP-14	33	f															33	f	CL1	991+98.91	24" X 2.3′ RCP, CONNECT TO EXIST
DP-14	33	g							1								33	g	CL1	991+98.91	ADJUST TYPE G2 INLET, W/ COVER PLATE
DP-14	33	h															33	h	CL1	991+98.91	VEGETATION CONTROL (MINOR CONCRETE)
SHEET TOTAL			2	1		17			4		9.1				13.0						

DRAINAGE QUANTITIES

DQ-22

REVISED BY | DATE REVISED
BRETT DITZLER | KRISTEN KINGSLEY
CALCULATED-DESIGNED BY | CHECKED BY
FUNCTIONAL SUPERVISOR: STEVE THORNE

STATE OF CALIFORNIA - DEPARTMENT OF TRANSPORTATION
Caltrans HYDRAULICS

P:\proj2\02\4c401\design\PS&E\24c401id022.dgn

LAST REVISION 07-07-10 | DATE PLOTTED => 14-DEC-2010 | TIME PLOTTED => 14:48

Dist	COUNTY	ROUTE	POST MILES TOTAL PROJECT	SHEET No.	TOTAL SHEETS
02	Sha	5	R10.5/R17.5	139	311

REGISTERED CIVIL ENGINEER 10-15-10 DATE

12-13-10
PLANS APPROVAL DATE

REGISTERED PROFESSIONAL ENGINEER KRISTEN A. KINGSLEY No. C72250 Exp. 6-30-12 CIVIL STATE OF CALIFORNIA

THE STATE OF CALIFORNIA OR ITS OFFICERS OR AGENTS SHALL NOT BE RESPONSIBLE FOR THE ACCURACY OR COMPLETENESS OF SCANNED COPIES OF THIS PLAN SHEET.

DRAINAGE QUANTITIES

DRAINAGE PROFILE OR PLAN SHEET No.	DRAINAGE SYSTEM No. ⬡	DRAINAGE UNIT No. ○	18" ALTERNATIVE PIPE CULVERT	36" PERFORATED ALTERNATIVE PIPE CULVERT	42" ALTERNATIVE PIPE CULVERT	42" PERFORATED ALTERNATIVE PIPE CULVERT	18" REINFORCED CONCRETE PIPE (CLASS II, RUBBER GASKET JOINT)	24" REINFORCED CONCRETE PIPE (CLASS II, RUBBER GASKET JOINT)	30" REINFORCED CONCRETE PIPE (CLASS II, RUBBER GASKET JOINT)	36" REINFORCED CONCRETE PIPE (CLASS IV, RUBBER GASKET JOINT)	PERMEABLE MATERIAL	DETENTION TRENCH	8" CORRUGATED STEEL FLUME DOWNDRAIN	18" TAPERED INLET	FLUME ANCHOR ASSEMBLY	18" ALTERNATIVE PIPE DOWNDRAIN	DRAINAGE SYSTEM No. ⬡	DRAINAGE UNIT No. ○	ALIGNMENT	STATION	DESCRIPTION
			LF	LF	LF	LF	LF	LF	LF	LF	CY	LF	LF	EA	EA	LF					
DP-12	30	i															30	i	CL1	975+54.43	ABANDON INLET (TYPE OCP) (H=17.3′)
DP-12	30	j															30	j	CL1	975+54.43	ABANDON 18" X 27′ RCP
DP-12	30	k															30	k	CL1	975+54.43	REMOVE 18" X 17.0′ RCP
DP-12	30	l															30	l	CL1	975+54.43	ABANDON 18" X 42′ RCP
DP-13	31	a															31	a	CL1	982+68.65	TYPE G2 DI, W/ (1) GRATE TYPE 24-9
DP-13	31	b															31	b	CL1	982+68.65	VEGETATION CONTROL (MINOR CONCRETE)
DP-13	31	c			214.0												31	c	CL1	980+49.95	42" X 214.0′ APC
DP-13	31	d															31	d	CL1	980+49.95	TYPE GT4 (Mod) DI, W/ (2) GRATE TYPE 24-9
DP-13	31	e															31	e	CL1	980+49.95	VEGETATION CONTROL (MINOR CONCRETE)
DP-13	31	f						1.4									31	f	CL1	980+49.95	24" X 1.4′ RCP, CONNECT TO EXIST
DP-13	31	g															31	g	CL1	980+49.95	ADJUST TYPE GCP INLET, W/ COVER PLATE
DP-13	32	a															32	a	CL1	987+12.87	ADJUST TYPE G2 DI, W/ (1) GRATE TYPE 24-9
DP-13	32	b															32	b	CL1	987+12.87	VEGETATION CONTROL (MINOR CONCRETE)
DP-13	32	c															32	c	CL1	987+12.87	ADJUST TYPE GCP INLET, W/ COVER PLATE
DP-13	32	d															32	d	CL1	987+12.87	VEGETATION CONTROL (MINOR CONCRETE)
DP-14	33	a															33	a	CL1	993+65.61	TYPE G2 DI, W/ (1) GRATE TYPE 24-9
DP-14	33	b															33	b	CL1	993+65.61	VEGETATION CONTROL (MINOR CONCRETE)
DP-14	33	c		162.0							63.8						33	c	CL1	993+65.61	36" X 162.0′ PAPC
DP-14	33	d															33	d	CL1	991+98.91	TYPE GT4 (Mod) DI, W/ (2) GRATE TYPE 24-9
DP-14	33	e															33	e	CL1	991+98.91	VEGETATION CONTROL (MINOR CONCRETE)
DP-14	33	f															33	f	CL1	991+98.91	24" X 2.3′ RCP, CONNECT TO EXIST
DP-14	33	g						2.3									33	g	CL1	991+98.91	ADJUST TYPE G2 INLET, W/ COVER PLATE
DP-14	33	h															33	h	CL1	991+98.91	VEGETATION CONTROL (MINOR CONCRETE)
SHEET TOTAL				162.0	214.0			3.7			63.8										

DRAINAGE QUANTITIES

DQ-23

REVISED BY | DATE REVISED
BRETT DITZLER | KRISTEN KINGSLEY
CALCULATED-DESIGNED BY | CHECKED BY
FUNCTIONAL SUPERVISOR
STEVE THORNE

STATE OF CALIFORNIA - DEPARTMENT OF TRANSPORTATION
Caltrans® HYDRAULICS

P:\proj2\02\4c401\design\PS&E\24c401id023.dgn

LAST REVISION 07-07-10 | DATE PLOTTED => 14-DEC-2010 | TIME PLOTTED => 14:48

Dist	COUNTY	ROUTE	POST MILES TOTAL PROJECT	SHEET No.	TOTAL SHEETS
02	Sha	5	R10.5/R17.5	140	311

REGISTERED CIVIL ENGINEER 10-15-10 DATE

12-13-10
PLANS APPROVAL DATE

REGISTERED PROFESSIONAL ENGINEER KRISTEN A. KINGSLEY No. C72250 Exp. 6-30-12 CIVIL STATE OF CALIFORNIA

THE STATE OF CALIFORNIA OR ITS OFFICERS OR AGENTS SHALL NOT BE RESPONSIBLE FOR THE ACCURACY OR COMPLETENESS OF SCANNED COPIES OF THIS PLAN SHEET.

DRAINAGE QUANTITIES

DRAINAGE PROFILE OR PLAN SHEET No.	DRAINAGE SYSTEM No. ⬡	DRAINAGE UNIT No. ○	36" PRECAST CONCRETE PIPE INLET	OBSERVATION WELL	ROCK SLOPE PROTECTION (FACING, METHOD B)	ROCK SLOPE PROTECTION (BACKING No. 2, METHOD B)	ROCK SLOPE PROTECTION (BACKING No. 3, METHOD B)	FILTER FABRIC	ROCK SLOPE PROTECTION FABRIC	MISCELLANEOUS IRON AND STEEL	VEGETATION CONTROL (MINOR CONCRETE)	(N) DI HEIGHT	MAX COVER	DRAINAGE SYSTEM No. ⬡	DRAINAGE UNIT No. ○	ALIGNMENT	STATION	DESCRIPTION
			LF	EA	CY	CY	CY	SQYD	SQYD	LB	SQYD	FT	FT					
DP-12	30	i												30	i	CL1	975+54.43	ABANDON INLET (TYPE OCP) (H=17.3′)
DP-12	30	j											16.5	30	j	CL1	975+54.43	ABANDON 18" X 27′ RCP
DP-12	30	k											5.7	30	k	CL1	975+54.43	REMOVE 18" X 17.0′ RCP
DP-12	30	l											3.9	30	l	CL1	975+54.43	ABANDON 18" X 42′ RCP
DP-13	31	a								263		6.75		31	a	CL1	982+68.65	TYPE G2 DI, W/ (1) GRATE TYPE 24-9
DP-13	31	b									15.5			31	b	CL1	982+68.65	VEGETATION CONTROL (MINOR CONCRETE)
DP-13	31	c											3.8	31	c	CL1	980+49.95	42" X 214.0′ APC
DP-13	31	d								526		5.50		31	d	CL1	980+49.95	TYPE GT4 (Mod) DI, W/ (2) GRATE TYPE 24-9
DP-13	31	e									16.1			31	e	CL1	980+49.95	VEGETATION CONTROL (MINOR CONCRETE)
DP-13	31	f											3.5	31	f	CL1	980+49.95	24" X 1.4′ RCP, CONNECT TO EXIST
DP-13	31	g								206		1.81		31	g	CL1	980+49.95	ADJUST TYPE GCP INLET, W/ COVER PLATE
DP-13	32	a										2.09		32	a	CL1	987+12.87	ADJUST TYPE G2 DI, W/ (1) GRATE TYPE 24-9
DP-13	32	b									10.0			32	b	CL1	987+12.87	VEGETATION CONTROL (MINOR CONCRETE)
DP-13	32	c								206		0.93		32	c	CL1	987+12.87	ADJUST TYPE GCP INLET, W/ COVER PLATE
DP-13	32	d									3.9			32	d	CL1	987+12.87	VEGETATION CONTROL (MINOR CONCRETE)
DP-14	33	a								263		6.10		33	a	CL1	993+65.61	TYPE G2 DI, W/ (1) GRATE TYPE 24-9
DP-14	33	b									18.1			33	b	CL1	993+65.61	VEGETATION CONTROL (MINOR CONCRETE)
DP-14	33	c						333.0					3.1	33	c	CL1	993+65.61	36" X 162.0′ PAPC
DP-14	33	d								526		5.00		33	d	CL1	991+98.91	TYPE GT4 (Mod) DI, W/ (2) GRATE TYPE 24-9
DP-14	33	e									19.1			33	e	CL1	991+98.91	VEGETATION CONTROL (MINOR CONCRETE)
DP-14	33	f											3.4	33	f	CL1	991+98.91	24" X 2.3′ RCP, CONNECT TO EXIST
DP-14	33	g								46		1.73		33	g	CL1	991+98.91	ADJUST TYPE G2 INLET, W/ COVER PLATE
DP-14	33	h									2.0			33	h	CL1	991+98.91	VEGETATION CONTROL (MINOR CONCRETE)
SHEET TOTAL								333.0		2036	84.7							

DRAINAGE QUANTITIES

DQ-24

REVISED BY | DATE REVISED
BRETT DITZLER | KRISTEN KINGSLEY
CALCULATED-DESIGNED BY | CHECKED BY
FUNCTIONAL SUPERVISOR: STEVE THORNE

STATE OF CALIFORNIA - DEPARTMENT OF TRANSPORTATION
Caltrans HYDRAULICS

P:\proj2\02\4c401\design\PS&E\24c401id024.dgn

LAST REVISION | DATE PLOTTED => 14-DEC-2010 | TIME PLOTTED => 14:48
07-07-10

Dist	COUNTY	ROUTE	POST MILES TOTAL PROJECT	SHEET No.	TOTAL SHEETS
02	Sha	5	R10.5/R17.5	141	311

REGISTERED CIVIL ENGINEER 10-15-10 DATE

12-13-10
PLANS APPROVAL DATE

REGISTERED PROFESSIONAL ENGINEER KRISTEN A. KINGSLEY No. C72250 Exp. 6-30-12 CIVIL STATE OF CALIFORNIA

THE STATE OF CALIFORNIA OR ITS OFFICERS OR AGENTS SHALL NOT BE RESPONSIBLE FOR THE ACCURACY OR COMPLETENESS OF SCANNED COPIES OF THIS PLAN SHEET.

DRAINAGE QUANTITIES

DRAINAGE PROFILE OR PLAN SHEET No.	DRAINAGE SYSTEM No.	DRAINAGE UNIT No.	ABANDON CULVERT	ABANDON INLET	REMOVE FLARED END SECTION	REMOVE CULVERT	REMOVE INLET	REMOVE DOWNDRAIN	ADJUST INLET	MODIFY INLET	SAND BACKFILL	HOT MIX ASPHALT	PLACE HOT MIX ASPHALT DIKE (TYPE A)	PLACE HOT MIX ASPHALT (MISCELLANEOUS AREA)	MINOR CONCRETE (MINOR STRUCTURE)	6" ALTERNATIVE PIPE CULVERT	DRAINAGE SYSTEM No.	DRAINAGE UNIT No.	ALIGNMENT	STATION	DESCRIPTION
			EA	EA	EA	LF	EA	EA	EA	EA	CY	TON	LF	SQYD	CY	LF					
DP-14	33A	a							1								33A	a	CL1	1005+92.60	ADJUST TYPE G2 INLET, W/ COVER PLATE
DP-14	34	a						1									34	a	CL1	1036+98.12	REMOVE DOWNDRAIN
DP-14	34	b															34	b	CL1	1036+98.12	18" TAPERED INLET, FL Elev 587.41
DP-14	34	c															34	c	CL1	1036+98.12	8" X 20' CORRUGATED STEEL FLUME DOWNDRAIN
DP-14	34	d															34	d	CL1	1036+98.12	FLUME ANCHOR ASSEMBLY (2)
DP-14	34	e															34	e	CL1	1036+98.12	RSP (BACKING No. 3, METHOD B)
DP-15	35	a						1									35	a	CL1	1042+01.52	REMOVE DOWNDRAIN
DP-15	35	b															35	b	CL1	1042+01.52	18" TAPERED INLET, FL Elev 594.81
DP-15	35	c															35	c	CL1	1042+01.52	8" X 17' CORRUGATED STEEL FLUME DOWNDRAIN
DP-15	35	d															35	d	CL1	1042+01.52	FLUME ANCHOR ASSEMBLY (2)
DP-15	35	e															35	e	CL1	1042+01.52	RSP (BACKING No. 3, METHOD B)
DP-15	36	a										4.2		11.5			36	a	CL1	1052+87.00	HMA OSD (27 LF)
DP-15	36	b															36	b	CL1	1052+87.00	RSP (BACKING No. 3, METHOD B)
DP-16	37	a													2.4		37	a	CL1	1066+10.20	TYPE G2 DI, W/ (1) GRATE TYPE 24-9
DP-16	37	b															37	b	CL1	1066+10.20	VEGETATION CONTROL (MINOR CONCRETE)
DP-16	37	c															37	c	CL1	1066+10.20	36" X 69.0' PAPC
DP-16	37	d													3.8		37	d	CL1	1065+36.50	TYPE GT4 (Mod) DI, W/ (2) GRATE TYPE 24-9
DP-16	37	e															37	e	CL1	1065+36.50	VEGETATION CONTROL (MINOR CONCRETE)
DP-16	37	f															37	f	CL1	1065+36.50	18" X 6.9' RCP, Conc COLLAR
DP-16	37	g					1										37	g	CL1	1065+36.50	REMOVE INLET (TYPE OCP) (H=3.1')
DP-16	37	h															37	h	CL1	1065+36.50	RSP (FACING, METHOD B)
SHEET TOTAL							1	2	1			4.2		11.5	6.2						

DRAINAGE QUANTITIES

DQ-25

REVISED BY | DATE REVISED

BRETT DITZLER | KRISTEN KINGSLEY

CALCULATED-DESIGNED BY | CHECKED BY

FUNCTIONAL SUPERVISOR: STEVE THORNE

STATE OF CALIFORNIA - DEPARTMENT OF TRANSPORTATION

Caltrans® HYDRAULICS

P:\proj2\02\4c401\design\PS&E\24c401id025.dgn

LAST REVISION 07-07-10 | DATE PLOTTED => 14-DEC-2010 | TIME PLOTTED => 08:37

Dist	COUNTY	ROUTE	POST MILES TOTAL PROJECT	SHEET No.	TOTAL SHEETS
02	Sha	5	R10.5/R17.5	142	311

REGISTERED CIVIL ENGINEER 10-15-10 DATE

12-13-10
PLANS APPROVAL DATE

REGISTERED PROFESSIONAL ENGINEER KRISTEN A. KINGSLEY No. C72250 Exp. 6-30-12 CIVIL STATE OF CALIFORNIA

THE STATE OF CALIFORNIA OR ITS OFFICERS OR AGENTS SHALL NOT BE RESPONSIBLE FOR THE ACCURACY OR COMPLETENESS OF SCANNED COPIES OF THIS PLAN SHEET.

DRAINAGE QUANTITIES

DRAINAGE PROFILE OR PLAN SHEET No.	DRAINAGE SYSTEM No.	DRAINAGE UNIT No.	18" ALTERNATIVE PIPE CULVERT	36" PERFORATED ALTERNATIVE PIPE CULVERT	42" ALTERNATIVE PIPE CULVERT	42" PERFORATED ALTERNATIVE PIPE CULVERT	18" REINFORCED CONCRETE PIPE (CLASS II, RUBBER GASKET JOINT)	24" REINFORCED CONCRETE PIPE (CLASS II, RUBBER GASKET JOINT)	30" REINFORCED CONCRETE PIPE (CLASS II, RUBBER GASKET JOINT)	36" REINFORCED CONCRETE PIPE (CLASS IV, RUBBER GASKET JOINT)	PERMEABLE MATERIAL	DETENTION TRENCH	8" CORRUGATED STEEL FLUME DOWNDRAIN	18" TAPERED INLET	FLUME ANCHOR ASSEMBLY	18" ALTERNATIVE PIPE DOWNDRAIN	DRAINAGE SYSTEM No.	DRAINAGE UNIT No.	ALIGNMENT	STATION	DESCRIPTION
			LF	LF	LF	LF	LF	LF	LF	LF	CY	LF	LF	EA	EA	LF					
DP-14	33A	a															33A	a	CL1	1005+92.60	ADJUST TYPE G2 INLET, W/ COVER PLATE
DP-14	34	a															34	a	CL1	1036+98.12	REMOVE DOWNDRAIN
DP-14	34	b												1			34	b	CL1	1036+98.12	18" TAPERED INLET, FL Elev 587.41
DP-14	34	c											20.0				34	c	CL1	1036+98.12	8" X 20′ CORRUGATED STEEL FLUME DOWNDRAIN
DP-14	34	d													2		34	d	CL1	1036+98.12	FLUME ANCHOR ASSEMBLY (2)
DP-14	34	e															34	e	CL1	1036+98.12	RSP (BACKING No. 3, METHOD B)
DP-15	35	a															35	a	CL1	1042+01.52	REMOVE DOWNDRAIN
DP-15	35	b												1			35	b	CL1	1042+01.52	18" TAPERED INLET, FL Elev 594.81
DP-15	35	c											17.0				35	c	CL1	1042+01.52	8" X 17′ CORRUGATED STEEL FLUME DOWNDRAIN
DP-15	35	d													2		35	d	CL1	1042+01.52	FLUME ANCHOR ASSEMBLY (2)
DP-15	35	e															35	e	CL1	1042+01.52	RSP (BACKING No. 3, METHOD B)
DP-15	36	a															36	a	CL1	1052+87.00	HMA OSD (27 LF)
DP-15	36	b															36	b	CL1	1052+87.00	RSP (BACKING No. 3, METHOD B)
DP-16	37	a															37	a	CL1	1066+10.20	TYPE G2 DI, W/ (1) GRATE TYPE 24-9
DP-16	37	b															37	b	CL1	1066+10.20	VEGETATION CONTROL (MINOR CONCRETE)
DP-16	37	c		69.0							27.2						37	c	CL1	1066+10.20	36" X 69.0′ PAPC
DP-16	37	d															37	d	CL1	1065+36.50	TYPE GT4 (Mod) DI, W/ (2) GRATE TYPE 24-9
DP-16	37	e															37	e	CL1	1065+36.50	VEGETATION CONTROL (MINOR CONCRETE)
DP-16	37	f					6.9										37	f	CL1	1065+36.50	18" X 6.9′ RCP, Conc COLLAR
DP-16	37	g															37	g	CL1	1065+36.50	REMOVE INLET (TYPE OCP) (H=3.1′)
DP-16	37	h															37	h	CL1	1065+36.50	RSP (FACING, METHOD B)
SHEET TOTAL				69.0			6.9				27.2		37.0	2	4						

DRAINAGE QUANTITIES

DQ-26

REVISED BY | DATE REVISED

CALCULATED-DESIGNED BY: BRETT DITZLER
CHECKED BY: KRISTEN KINGSLEY
FUNCTIONAL SUPERVISOR: STEVE THORNE

STATE OF CALIFORNIA - DEPARTMENT OF TRANSPORTATION
Caltrans® HYDRAULICS

P:\proj2\02\4c401\design\PS&E\24c401id026.dgn

LAST REVISION 07-07-10 | DATE PLOTTED => 14-DEC-2010 | TIME PLOTTED => 08:37

Dist	COUNTY	ROUTE	POST MILES TOTAL PROJECT	SHEET No.	TOTAL SHEETS
02	Sha	5	R10.5/R17.5	143	311

REGISTERED CIVIL ENGINEER 10-15-10 DATE

12-13-10
PLANS APPROVAL DATE

REGISTERED PROFESSIONAL ENGINEER KRISTEN A. KINGSLEY No. C72250 Exp. 6-30-12 CIVIL STATE OF CALIFORNIA

THE STATE OF CALIFORNIA OR ITS OFFICERS OR AGENTS SHALL NOT BE RESPONSIBLE FOR THE ACCURACY OR COMPLETENESS OF SCANNED COPIES OF THIS PLAN SHEET.

DRAINAGE QUANTITIES

DRAINAGE PROFILE OR PLAN SHEET No.	DRAINAGE SYSTEM No.	DRAINAGE UNIT No.	36" PRECAST CONCRETE PIPE INLET	OBSERVATION WELL	ROCK SLOPE PROTECTION (FACING, METHOD B)	ROCK SLOPE PROTECTION (BACKING No. 2, METHOD B)	ROCK SLOPE PROTECTION (BACKING No. 3, METHOD B)	FILTER FABRIC	ROCK SLOPE PROTECTION FABRIC	MISCELLANEOUS IRON AND STEEL	VEGETATION CONTROL (MINOR CONCRETE)	(N) DI HEIGHT	Max COVER	DRAINAGE SYSTEM No.	DRAINAGE UNIT No.	ALIGNMENT	STATION	DESCRIPTION
			LF	EA	CY	CY	CY	SQYD	SQYD	LB	SQYD	FT	FT					
DP-14	33A	a								46		2.10		33A	a	CL1	1005+92.60	ADJUST TYPE G2 INLET, W/ COVER PLATE
DP-14	34	a												34	a	CL1	1036+98.12	REMOVE DOWNDRAIN
DP-14	34	b												34	b	CL1	1036+98.12	18" TAPERED INLET, FL Elev 587.41
DP-14	34	c												34	c	CL1	1036+98.12	8" X 20' CORRUGATED STEEL FLUME DOWNDRAIN
DP-14	34	d												34	d	CL1	1036+98.12	FLUME ANCHOR ASSEMBLY (2)
DP-14	34	e					2.2							34	e	CL1	1036+98.12	RSP (BACKING No. 3, METHOD B)
DP-15	35	a												35	a	CL1	1042+01.52	REMOVE DOWNDRAIN
DP-15	35	b												35	b	CL1	1042+01.52	18" TAPERED INLET, FL Elev 594.81
DP-15	35	c												35	c	CL1	1042+01.52	8" X 17' CORRUGATED STEEL FLUME DOWNDRAIN
DP-15	35	d												35	d	CL1	1042+01.52	FLUME ANCHOR ASSEMBLY (2)
DP-15	35	e					1.6							35	e	CL1	1042+01.52	RSP (BACKING No. 3, METHOD B)
DP-15	36	a												36	a	CL1	1052+87.00	HMA OSD (27 LF)
DP-15	36	b					4.4							36	b	CL1	1052+87.00	RSP (BACKING No. 3, METHOD B)
DP-16	37	a								263		5.48		37	a	CL1	1066+10.20	TYPE G2 DI, W/ (1) GRATE TYPE 24-9
DP-16	37	b									18.1			37	b	CL1	1066+10.20	VEGETATION CONTROL (MINOR CONCRETE)
DP-16	37	c						141.8					2.5	37	c	CL1	1066+10.20	36" X 69.0' PAPC
DP-16	37	d								526		5.00		37	d	CL1	1065+36.50	TYPE GT4 (Mod) DI, W/ (2) GRATE TYPE 24-9
DP-16	37	e									19.1			37	e	CL1	1065+36.50	VEGETATION CONTROL (MINOR CONCRETE)
DP-16	37	f											4.2	37	f	CL1	1065+36.50	18" X 6.9' RCP, Conc COLLAR
DP-16	37	g												37	g	CL1	1065+36.50	REMOVE INLET (TYPE OCP) (H=3.1')
DP-16	37	h			84.9				175.6					37	h	CL1	1065+36.50	RSP (FACING, METHOD B)
SHEET TOTAL					84.9		8.2	141.8	175.6	835	37.2							

DRAINAGE QUANTITIES

DQ-27

REVISED BY	DATE REVISED

CALCULATED-DESIGNED BY: BRETT DITZLER
CHECKED BY: KRISTEN KINGSLEY
FUNCTIONAL SUPERVISOR: STEVE THORNE

STATE OF CALIFORNIA - DEPARTMENT OF TRANSPORTATION
Caltrans
HYDRAULICS

P:\proj2\02\4c401\design\PS&E\24c401id027.dgn

LAST REVISION | DATE PLOTTED => 14-DEC-2010
07-07-10 | TIME PLOTTED => 13:56

Dist	COUNTY	ROUTE	POST MILES TOTAL PROJECT	SHEET No.	TOTAL SHEETS
02	Sha	5	R10.5/R17.5	144	311

REGISTERED CIVIL ENGINEER 10-15-10 DATE

12-13-10
PLANS APPROVAL DATE

REGISTERED PROFESSIONAL ENGINEER KRISTEN A. KINGSLEY No. C72250 Exp. 6-30-12 CIVIL STATE OF CALIFORNIA

THE STATE OF CALIFORNIA OR ITS OFFICERS OR AGENTS SHALL NOT BE RESPONSIBLE FOR THE ACCURACY OR COMPLETENESS OF SCANNED COPIES OF THIS PLAN SHEET.

DRAINAGE QUANTITIES

DRAINAGE PROFILE OR PLAN SHEET No.	DRAINAGE SYSTEM No.	DRAINAGE UNIT No.	ABANDON CULVERT	ABANDON INLET	REMOVE FLARED END SECTION	REMOVE CULVERT	REMOVE INLET	REMOVE DOWNDRAIN	ADJUST INLET	MODIFY INLET	SAND BACKFILL	HOT MIX ASPHALT	PLACE HOT MIX ASPHALT DIKE (TYPE A)	PLACE HOT MIX ASPHALT (MISCELLANEOUS AREA)	MINOR CONCRETE (MINOR STRUCTURE)	6" ALTERNATIVE PIPE CULVERT	DRAINAGE SYSTEM No.	DRAINAGE UNIT No.	ALIGNMENT	STATION	DESCRIPTION
			EA	EA	EA	LF	EA	EA	EA	EA	CY	TON	LF	SQYD	CY	LF					
DP-16	38	a													2.8		38	a	CL1	1079+92.66	TYPE G2 DI, W/ (1) GRATE TYPE 24-9
DP-16	38	b															38	b	CL1	1079+92.66	VEGETATION CONTROL (MINOR CONCRETE)
DP-16	38	c															38	c	CL1	1079+92.66	42" X 170.0' PAPC
DP-16	38	d													4.3		38	d	CL1	1081.67.36	TYPE GT4 (Mod) DI, W/ (2) GRATE TYPE 24-9
DP-16	38	e															38	e	CL1	1081.67.37	VEGETATION CONTROL (MINOR CONCRETE)
DP-16	38	f															38	f	CL1	1081.67.38	24" X 2.0' RCP, CONNECT TO Exist
DP-16	38	g							1								38	g	CL1	1081.67.39	ADJUST TYPE G2 INLET, W/ COVER PLATE
DP-12	39	a										4.2		11.5			39	a	CL1	1058+84.00	HMA OSD (27 LF)
DP-12	39	b															39	b	CL1	1058+84.00	RSP (BACKING No. 3, METHOD B)
SHEET TOTAL									1			4.2		11.5	7.1						

BRETT DITZLER — REVISED BY
KRISTEN KINGSLEY — DATE REVISED
CALCULATED-DESIGNED BY
CHECKED BY
FUNCTIONAL SUPERVISOR
STEVE THORNE

STATE OF CALIFORNIA - DEPARTMENT OF TRANSPORTATION
Caltrans® HYDRAULICS

P:\proj2\02\4c401\design\PS&E\24c401id028.dgn

DRAINAGE QUANTITIES

DQ-28

LAST REVISION DATE PLOTTED => 14-DEC-2010
07-07-10 TIME PLOTTED => 08:37

Dist	COUNTY	ROUTE	POST MILES TOTAL PROJECT	SHEET No.	TOTAL SHEETS
02	Sha	5	R10.5/R17.5	145	311

REGISTERED CIVIL ENGINEER 10-15-10 DATE

12-13-10
PLANS APPROVAL DATE

REGISTERED PROFESSIONAL ENGINEER KRISTEN A. KINGSLEY No. C72250 Exp. 6-30-12 CIVIL STATE OF CALIFORNIA

THE STATE OF CALIFORNIA OR ITS OFFICERS OR AGENTS SHALL NOT BE RESPONSIBLE FOR THE ACCURACY OR COMPLETENESS OF SCANNED COPIES OF THIS PLAN SHEET.

DRAINAGE QUANTITIES

DRAINAGE PROFILE OR PLAN SHEET No.	DRAINAGE SYSTEM No. ⬡	DRAINAGE UNIT No. ○	18" ALTERNATIVE PIPE CULVERT	36" PERFORATED ALTERNATIVE PIPE CULVERT	42" ALTERNATIVE PIPE CULVERT	42" PERFORATED ALTERNATIVE PIPE CULVERT	18" REINFORCED CONCRETE PIPE (CLASS II, RUBBER GASKET JOINT)	24" REINFORCED CONCRETE PIPE (CLASS II, RUBBER GASKET JOINT)	30" REINFORCED CONCRETE PIPE (CLASS II, RUBBER GASKET JOINT)	36" REINFORCED CONCRETE PIPE (CLASS IV, RUBBER GASKET JOINT)	PERMEABLE MATERIAL	DETENTION TRENCH	8" CORRUGATED STEEL FLUME DOWNDRAIN	18" TAPERED INLET	FLUME ANCHOR ASSEMBLY	18" ALTERNATIVE PIPE DOWNDRAIN	DRAINAGE SYSTEM No. ⬡	DRAINAGE UNIT No. ○	ALIGNMENT	STATION	DESCRIPTION
			LF	LF	LF	LF	LF	LF	LF	LF	CY	LF	LF	EA	EA	LF					
DP-16	38	a															38	a	CL1	1079+92.66	TYPE G2 DI, W/ (1) GRATE TYPE 24-9
DP-16	38	b															38	b	CL1	1079+92.66	VEGETATION CONTROL (MINOR CONCRETE)
DP-16	38	c				170.0					78.3						38	c	CL1	1079+92.66	42" X 170.0' PAPC
DP-16	38	d															38	d	CL1	1081.67.36	TYPE GT4 (Mod) DI, W/ (2) GRATE TYPE 24-9
DP-16	38	e															38	e	CL1	1081.67.37	VEGETATION CONTROL (MINOR CONCRETE)
DP-16	38	f						2.0									38	f	CL1	1081.67.38	24" X 2.0' RCP, CONNECT TO Exist
DP-16	38	g															38	g	CL1	1081.67.39	ADJUST TYPE G2 INLET, W/ COVER PLATE
DP-12	39	a															39	a	CL1	1058+84.00	HMA OSD (27 LF)
DP-12	39	b															39	b	CL1	1058+84.00	RSP (BACKING No. 3, METHOD B)
SHEET TOTAL						170.0		2.0			78.3										

DRAINAGE QUANTITIES

DQ-29

CALCULATED-DESIGNED BY BRETT DITZLER REVISED BY
CHECKED BY KRISTEN KINGSLEY DATE REVISED
FUNCTIONAL SUPERVISOR STEVE THORNE

STATE OF CALIFORNIA - DEPARTMENT OF TRANSPORTATION
Caltrans HYDRAULICS

P:\proj2\02\4c401\design\PS&E\24c401id029.dgn

LAST REVISION DATE PLOTTED => 14-DEC-2010
07-07-10 TIME PLOTTED => 08:38

Dist	COUNTY	ROUTE	POST MILES TOTAL PROJECT	SHEET No.	TOTAL SHEETS
02	Sha	5	R10.5/R17.5	146	311

REGISTERED CIVIL ENGINEER 10-15-10 DATE

12-13-10
PLANS APPROVAL DATE

REGISTERED PROFESSIONAL ENGINEER KRISTEN A. KINGSLEY No. C72250 Exp. 6-30-12 CIVIL STATE OF CALIFORNIA

THE STATE OF CALIFORNIA OR ITS OFFICERS OR AGENTS SHALL NOT BE RESPONSIBLE FOR THE ACCURACY OR COMPLETENESS OF SCANNED COPIES OF THIS PLAN SHEET.

DRAINAGE QUANTITIES

DRAINAGE PROFILE OR PLAN SHEET No.	DRAINAGE SYSTEM No.	DRAINAGE UNIT No.	36" PRECAST CONCRETE PIPE INLET	OBSERVATION WELL	ROCK SLOPE PROTECTION (FACING, METHOD B)	ROCK SLOPE PROTECTION (BACKING No. 2, METHOD B)	ROCK SLOPE PROTECTION (BACKING No. 3, METHOD B)	FILTER FABRIC	ROCK SLOPE PROTECTION FABRIC	MISCELLANEOUS IRON AND STEEL	VEGETATION CONTROL (MINOR CONCRETE)	(N) DI HEIGHT	Max COVER	DRAINAGE SYSTEM No.	DRAINAGE UNIT No.	ALIGNMENT	STATION	DESCRIPTION
			LF	EA	CY	CY	CY	SQYD	SQYD	LB	SQYD	FT	FT					
DP-16	38	a								263		7.16		38	a	CL1	1079+92.66	TYPE G2 DI, W/ (1) GRATE TYPE 24-9
DP-16	38	b									18.1			38	b	CL1	1079+92.66	VEGETATION CONTROL (MINOR CONCRETE)
DP-16	38	c						387.2					3.7	38	c	CL1	1079+92.66	42" X 170.0' PAPC
DP-16	38	d								526		6.11		38	d	CL1	1081.67.36	TYPE GT4 (Mod) DI, W/ (2) GRATE TYPE 24-9
DP-16	38	e									23.8			38	e	CL1	1081.67.37	VEGETATION CONTROL (MINOR CONCRETE)
DP-16	38	f											4.1	38	f	CL1	1081.67.38	24" X 2.0' RCP, CONNECT TO Exist
DP-16	38	g								206			2.03	38	g	CL1	1081.67.39	ADJUST TYPE G2 INLET, W/ COVER PLATE
DP-12	39	a												39	a	CL1	1058+84.00	HMA OSD (27 LF)
DP-12	39	b					2.2							39	b	CL1	1058+84.00	RSP (BACKING No. 3, METHOD B)
SHEET TOTAL							2.2	387.2		995	41.9							

REVISED BY | DATE REVISED

CALCULATED-DESIGNED BY: BRETT DITZLER
CHECKED BY: KRISTEN KINGSLEY

FUNCTIONAL SUPERVISOR: STEVE THORNE

STATE OF CALIFORNIA - DEPARTMENT OF TRANSPORTATION
Caltrans® HYDRAULICS

P:\proj2\02\4c401\design\PS&E\24c401id030.dgn

DRAINAGE QUANTITIES

DQ-30

LAST REVISION | DATE PLOTTED => 14-DEC-2010 | TIME PLOTTED => 13:56
07-07-10

Dist	COUNTY	ROUTE	POST MILES TOTAL PROJECT	SHEET No.	TOTAL SHEETS
02	Sha	5	R10.5/R17.5	147	311

REGISTERED CIVIL ENGINEER 10-15-10 DATE

12-13-10
PLANS APPROVAL DATE

REGISTERED PROFESSIONAL ENGINEER KRISTEN A. KINGSLEY No. C72250 Exp. 6-30-12 CIVIL STATE OF CALIFORNIA

THE STATE OF CALIFORNIA OR ITS OFFICERS OR AGENTS SHALL NOT BE RESPONSIBLE FOR THE ACCURACY OR COMPLETENESS OF SCANNED COPIES OF THIS PLAN SHEET.

DRAINAGE SUMMARY

	ABANDON CULVERT	ABANDON INLET	REMOVE FLARED END SECTION	REMOVE CULVERT	REMOVE INLET	REMOVE DOWNDRAIN	ADJUST INLET	MODIFY INLET	SAND BACKFILL	HOT MIX ASPHALT	PLACE HOT MIX ASPHALT DIKE (TYPE A)	PLACE HOT MIX ASPHALT (MISCELLANEOUS AREA)	MINOR CONCRETE (MINOR STRUCTURE)	6" ALTERNATIVE PIPE CULVERT
	EA	EA	EA	LF	EA	EA	EA	EA	CY	TON	LF	SQYD	CY	LF
DRAINAGE Qty SUBTOTAL, Sht DQ-1			1				7	1					0.7	
DRAINAGE Qty SUBTOTAL, Sht DQ-4					1		7			2.3	22.4	5.6	1.6	
DRAINAGE Qty SUBTOTAL, Sht DQ-7					1		4						10.1	
DRAINAGE Qty SUBTOTAL, Sht DQ-10				12	1		2						9.9	
DRAINAGE Qty SUBTOTAL, Sht DQ-13				6	2								15.1	
DRAINAGE Qty SUBTOTAL, Sht DQ-16				6	1		2	1					10.8	
DRAINAGE Qty SUBTOTAL, Sht DQ-19					1		2						9.8	214.5
DRAINAGE Qty SUBTOTAL, Sht DQ-22	2	1		17			4		9.1				13.0	
DRAINAGE Qty SUBTOTAL, Sht DQ-25					1	2	1			4.2		11.5	6.2	
DRAINAGE Qty SUBTOTAL, Sht DQ-28							1			4.2		11.5	7.1	
STRUCTURES PLANS													57.0	
TOTAL	2	1	1	41	8	2	30	2	9.1	10.7**	22.4**	28.6**	141.3	214.5

** ADDITIONAL QUANTITIES SHOWN ELSEWHERE, SEE SHEET Q-1 AND Q-2 FOR TOTAL QUANTITY.

DRAINAGE QUANTITIES

DQ-31

BRETT DITZLER — REVISED BY
KRISTEN KINGSLEY — DATE REVISED
CALCULATED-DESIGNED BY
CHECKED BY
FUNCTIONAL SUPERVISOR
STEVE THORNE

STATE OF CALIFORNIA - DEPARTMENT OF TRANSPORTATION
Caltrans
HYDRAULICS

P:\proj2\02\4c401\design\PS&E\24c401id031.dgn

LAST REVISION 07-07-10
DATE PLOTTED => 14-DEC-2010
TIME PLOTTED => 13:56

Dist	COUNTY	ROUTE	POST MILES TOTAL PROJECT	SHEET No.	TOTAL SHEETS
02	Sha	5	R10.5/R17.5	148	311

REGISTERED CIVIL ENGINEER 10-15-10 DATE

12-13-10
PLANS APPROVAL DATE

REGISTERED PROFESSIONAL ENGINEER KRISTEN A. KINGSLEY No. C72250 Exp. 6-30-12 CIVIL STATE OF CALIFORNIA

THE STATE OF CALIFORNIA OR ITS OFFICERS OR AGENTS SHALL NOT BE RESPONSIBLE FOR THE ACCURACY OR COMPLETENESS OF SCANNED COPIES OF THIS PLAN SHEET.

DRAINAGE SUMMARY

	18" ALTERNATIVE PIPE CULVERT	36" PERFORATED ALTERNATIVE PIPE CULVERT	42" ALTERNATIVE PIPE CULVERT	42" PERFORATED ALTERNATIVE PIPE CULVERT	18" REINFORCED CONCRETE PIPE (CLASS II, RUBBER GASKET JOINT)	24" REINFORCED CONCRETE PIPE (CLASS II, RUBBER GASKET JOINT)	30" REINFORCED CONCRETE PIPE (CLASS II, RUBBER GASKET JOINT)	36" REINFORCED CONCRETE PIPE (CLASS IV, RUBBER GASKET JOINT)	PERMEABLE MATERIAL	DETENTION TRENCH	8" CORRUGATED STEEL FLUME DOWNDRAIN	18" TAPERED INLET	FLUME ANCHOR ASSEMBLY	18" ALTERNATIVE PIPE DOWNDRAIN
	LF	LF	LF	LF	LF	LF	LF	LF	CY	LF	LF	EA	EA	LF
DRAINAGE Qty SUBTOTAL, Sht DQ-2					9.2					100.0				
DRAINAGE Qty SUBTOTAL, Sht DQ-5					2.0									
DRAINAGE Qty SUBTOTAL, Sht DQ-8				338.0		21.4		7.0	155.7					
DRAINAGE Qty SUBTOTAL, Sht DQ-11		258.0			12.0	2.0			101.6					
DRAINAGE Qty SUBTOTAL, Sht DQ-14		380.4			4.0	6.0			149.8					
DRAINAGE Qty SUBTOTAL, Sht DQ-17					8.0		6.0	252.0						
DRAINAGE Qty SUBTOTAL, Sht DQ-20	80.7	136.0			10.2				53.6					40.6
DRAINAGE Qty SUBTOTAL, Sht DQ-23		162.0	214.0			3.7			63.8					
DRAINAGE Qty SUBTOTAL, Sht DQ-26		69.0			6.9				27.2		37.0	2	4	
DRAINAGE Qty SUBTOTAL, Sht DQ-29				170.0		2.0			78.3					
RETAINING WALL PLAN SHEET R-1									19.0					
TOTAL	80.7	1,005.4	214.0	508.0	52.3	35.1	6.0	259.0	649.0	100.0	37.0	2	4	40.6

DRAINAGE QUANTITIES

DQ-32

CALCULATED-DESIGNED BY BRETT DITZLER
CHECKED BY KRISTEN KINGSLEY
REVISED BY
DATE REVISED
FUNCTIONAL SUPERVISOR STEVE THORNE

STATE OF CALIFORNIA - DEPARTMENT OF TRANSPORTATION
Caltrans HYDRAULICS

P:\proj2\02\4c401\design\PS&E\24c401id032.dgn

LAST REVISION DATE PLOTTED => 14-DEC-2010
07-07-10 TIME PLOTTED => 08:38

Dist	COUNTY	ROUTE	POST MILES TOTAL PROJECT	SHEET No.	TOTAL SHEETS
02	Sha	5	R10.5/R17.5	149	311

REGISTERED CIVIL ENGINEER 10-15-10 DATE

12-13-10
PLANS APPROVAL DATE

REGISTERED PROFESSIONAL ENGINEER KRISTEN A. KINGSLEY No. C72250 Exp. 6-30-12 CIVIL STATE OF CALIFORNIA

THE STATE OF CALIFORNIA OR ITS OFFICERS OR AGENTS SHALL NOT BE RESPONSIBLE FOR THE ACCURACY OR COMPLETENESS OF SCANNED COPIES OF THIS PLAN SHEET.

DRAINAGE SUMMARY

	36" PRECAST CONCRETE PIPE INLET	OBSERVATION WELL	ROCK SLOPE PROTECTION (FACING, METHOD B)	ROCK SLOPE PROTECTION (BACKING NO. 2, METHOD B)	ROCK SLOPE PROTECTION (BACKING NO. 3, METHOD B)	FILTER FABRIC	ROCK SLOPE PROTECTION FABRIC	MISCELLANEOUS IRON AND STEEL	VEGETATION CONTROL (MINOR CONCRETE)
	LF	EA	CY	CY	CY	SQYD	SQYD	LB	SQYD
DRAINAGE Qty SUBTOTAL, Sht DQ-3	2.9	2						472	111.0
DRAINAGE Qty SUBTOTAL, Sht DQ-6								1106	116.0
DRAINAGE Qty SUBTOTAL, Sht DQ-9						769.9		1624	117.3
DRAINAGE Qty SUBTOTAL, Sht DQ-12						530.3		1407	64.2
DRAINAGE Qty SUBTOTAL, Sht DQ-15						781.9		1841	66.2
DRAINAGE Qty SUBTOTAL, Sht DQ-18								1670	76.7
DRAINAGE Qty SUBTOTAL, Sht DQ-21	3.1			9.3		279.6	33.3	2673	79.4
DRAINAGE Qty SUBTOTAL, Sht DQ-24						333.0		2036	84.7
DRAINAGE Qty SUBTOTAL, Sht DQ-27			84.9		8.2	141.8	175.6	835	37.2
DRAINAGE Qty SUBTOTAL, Sht DQ-30					2.2	387.2		995	41.9
RETAINING WALL PLAN SHEET R-1						162.0			
TOTAL	6.0	2	84.9	9.3	10.4	3,385.7	208.9	14,659	794.6**

** ADDITIONAL QUANTITIES SHOWN ELSEWHERE, SEE SHEET Q-2 FOR TOTAL QUANTITY.

EXTEND IRRIGATION CROSSOVERS

NO.	ALIGNMENT	STATION	EXISTING IRRIGATION CROSSOVER CONDUIT			"L" EXTEND 10" CONDUIT			(N) PVC (SUPPLY LINE)				(N) TYPE "3" ELECT COND (SPRINKLER CONTROL)	
			DIA - (D1)			DIA - (D2)			DIA - (P1)				DIA - (P2)	
			6"	8"		8"	10"		2.5"	3"	4"		2"	
					TYPE	LF	LF	TYPE	LF	LF	LF	TYPE	LF	TYPE
A	"CL1"	854+85		X	CSP		77.5	CHDPE		75.5		PVC	75.5	PVC
B	"CL1"	893+81		X	CSP		79.5	CHDPE		77.5		PVC	77.5	PVC
C	"CL1"	952+13		X	CSP		80.3	CHDPE		78.3		PVC	78.3	PVC
D	"CL1"	959+02		X	CSP		80.0	CHDPE		78.0		PVC	78.0	PVC
E	"CL1"	970+01		X	CSP		77.0	CHDPE		75.0		PVC	75.0	PVC
F	"CL1"	975+05		X	CSP		77.0	CHDPE		75.0		PVC	75.0	PVC
G	"CL1"	996+46		X	CSP		77.0	CHDPE		75.0		PVC	75.0	PVC
TOTAL							548.3			534.3			534.3	

X DENOTES EXISTING

DRAINAGE QUANTITIES

DQ-33

BRETT DITZLER — REVISED BY
KRISTEN KINGSLEY — DATE REVISED
CALCULATED-DESIGNED BY
CHECKED BY
FUNCTIONAL SUPERVISOR
STEVE THORNE

STATE OF CALIFORNIA - DEPARTMENT OF TRANSPORTATION
Caltrans® HYDRAULICS

P:\proj2\02\4c401\design\PS&E\24c401id033.dgn

LAST REVISION 07-07-10
DATE PLOTTED => 14-DEC-2010
TIME PLOTTED => 13:56

Dist	COUNTY	ROUTE	POST MILES TOTAL PROJECT	SHEET No.	TOTAL SHEETS
02	Sha	5	R10.5/R17.5	150	311

REGISTERED CIVIL ENGINEER DATE 10-15-10

PLANS APPROVAL DATE 12-13-10

REGISTERED PROFESSIONAL ENGINEER CHRIS S. GAIDO No. C62535 Exp 12-31-11 CIVIL STATE OF CALIFORNIA

THE STATE OF CALIFORNIA OR ITS OFFICERS OR AGENTS SHALL NOT BE RESPONSIBLE FOR THE ACCURACY OR COMPLETENESS OF SCANNED COPIES OF THIS PLAN SHEET.

NOTES:

1. EXACT SIGN LOCATIONS TO BE DETERMINED BY THE ENGINEER.
2. CALIFORNIA SIGN CODES ARE DESIGNATED BY (CA), OTHERWISE, FEDERAL MUTCD SIGN CODES ARE SHOWN.
3. CONSTRUCTION AREA SIGNS, EXCEPT THE FUNDING IDENTIFICATION SIGN, SHALL HAVE A BLACK LEGEND WITH AN ORANGE BACKGROUND.
4. ADJUST SIGN LOCATIONS ACCORDINGLY IF ADDITIVE BID COMPONENTS AWARDED.

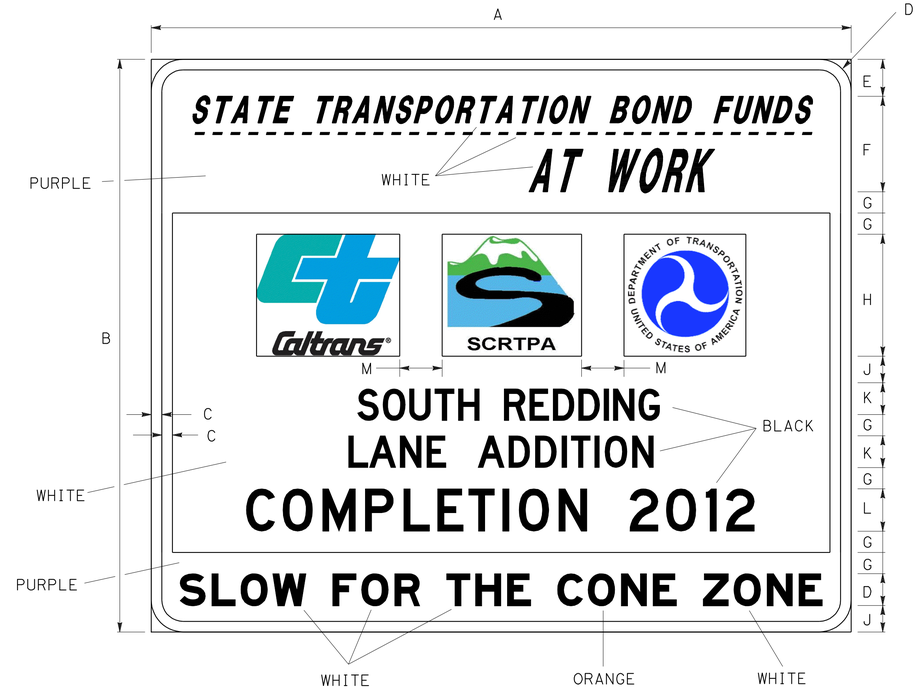

ALL DIMENSIONS IN INCHES

A	B	C	D	E	F	G	H	J	K	L	M
132	108	2	6	7	18	4	23 Max.	5	6D	8D	8

COLORS: BORDER - WHITE
LEGEND - BLACK, WHITE, ORANGE
BACKGROUND - PURPLE (PANTONE #520) AND WHITE
CT LOGO - GREEN (PANTONE #326) AND BLUE (PANTONE #299)
SCRTPA LOGO - BLACK, BLUE, GREEN AND WHITE
FHWA LOGO - BLACK AND BLUE

NOTE: ALL COLORS EXCEPT BLACK ARE TO BE RETROREFLECTIVE (ASTM TYPE II)

STATIONARY MOUNTED CONSTRUCTION AREA SIGNS

SIGN TYPE	CODE	PANEL SIZE	MESSAGE	NUMBER OF POST AND SIZE	NUMBER OF SIGNS
A	SPECIAL	132" X 108"	FUNDING IDENTIFICATION	2 - 6" X 6"	2
B	C40(MOD) (CA)	96" X 60"	"TRAFFIC FINES DOUBLED IN WORK ZONES"	2 - 6" X 6"	2
C	W20-1 C23B (CA)	48" X 48" 48" X 48"	"ROAD WORK AHEAD" "FREEWAY WIDENING"	1 - 4" X 6" 1 - 4" X 6"	2 2
D	W20-2	48" X 48"	"ROAD WORK AHEAD"	1 - 6" X 6"	11
E	G20-2	48" X 24"	"END ROAD WORK"	1 - 6" X 6"	9

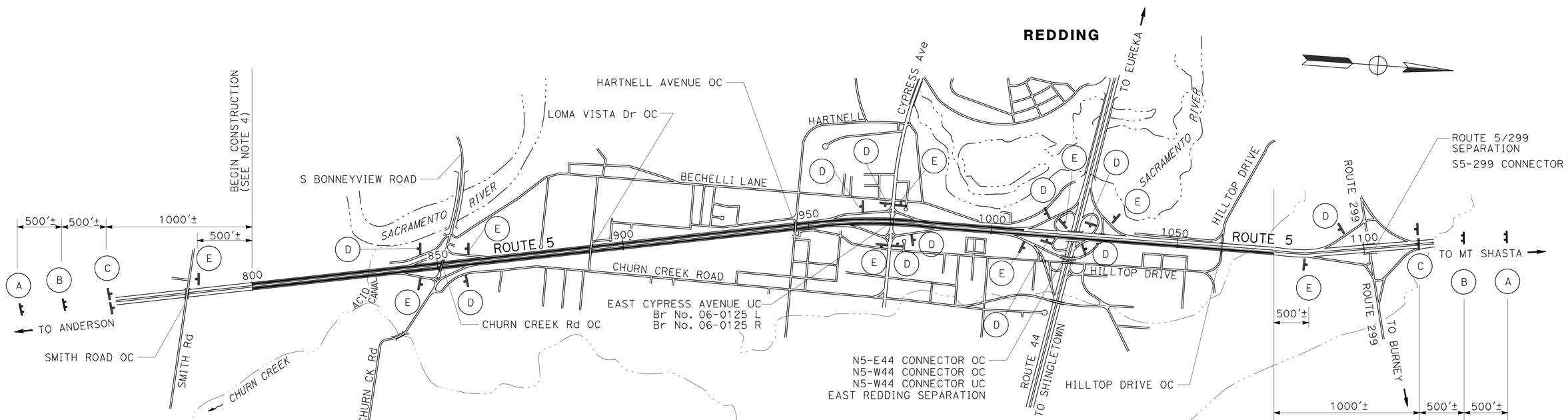

CONSTRUCTION AREA SIGNS

NO SCALE

CS-1

CALCULATED-DESIGNED BY	CHECKED BY	REVISED BY	DATE REVISED	FUNCTIONAL SUPERVISOR
JAVED IQBAL	CHRIS GAIDO	C. GAIDO	11-15-10	JOHN MARTIN

STATE OF CALIFORNIA - DEPARTMENT OF TRANSPORTATION
Caltrans DESIGN

P:\proj2\02\4c401\design\PS&E\24c401a001.dgn

LAST REVISION 09-15-10 | DATE PLOTTED => 14-DEC-2010 | TIME PLOTTED => 08:38

Dist	COUNTY	ROUTE	POST MILES TOTAL PROJECT	SHEET No.	TOTAL SHEETS
02	Sha	5	R10.5/R17.5	151	311

REGISTERED CIVIL ENGINEER 10-15-10 DATE

12-13-10
PLANS APPROVAL DATE

REGISTERED PROFESSIONAL ENGINEER CHRIS S. GAIDO No. C62535 Exp 12-31-11 CIVIL STATE OF CALIFORNIA

THE STATE OF CALIFORNIA OR ITS OFFICERS OR AGENTS SHALL NOT BE RESPONSIBLE FOR THE ACCURACY OR COMPLETENESS OF SCANNED COPIES OF THIS PLAN SHEET.

NOTES:

1. THE DURATION OF THE REDUCTION, IT'S LIMITS AND EXACT SIGN AND PCMS LOCATIONS TO BE DETERMINED BY ENGINEER.
2. SEE STANDARD PLANS FOR LANE CLOSURE REQUIREMENTS.
3. USE THE "CHP ENFORCED" SIGN FRAMES ONLY WHEN COZEEP OFFICERS ARE PRESENT.
4. COVER EXISTING SPEED LIMIT SIGNS WITHIN THE REDUCED SPEED ZONE.

LEGEND

- PORTABLE SIGN
- DIRECTION OF TRAVEL
- PORTABLE CHANGEABLE MESSAGE SIGN (PCMS)
- PORTABLE RADAR TRAILER

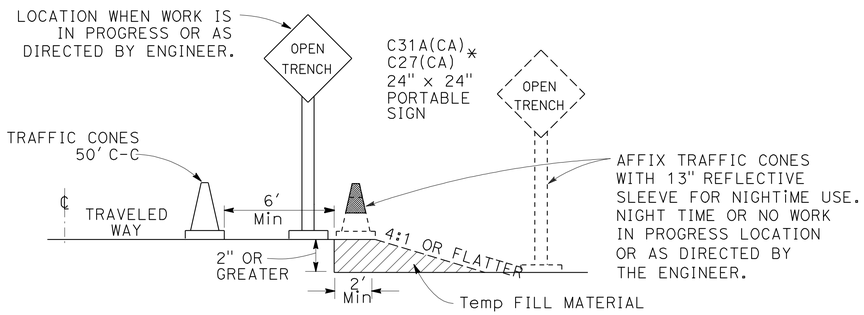

OPEN TRENCH SIGNING AND MARKING

*PLACE AT 250' INTERVALS THROUGH THE OPEN TRENCH AREA ALTERNATE C27(CA) (OPEN TRENCH) AND C31A(CA) (NO SHOULDER) SIGNS

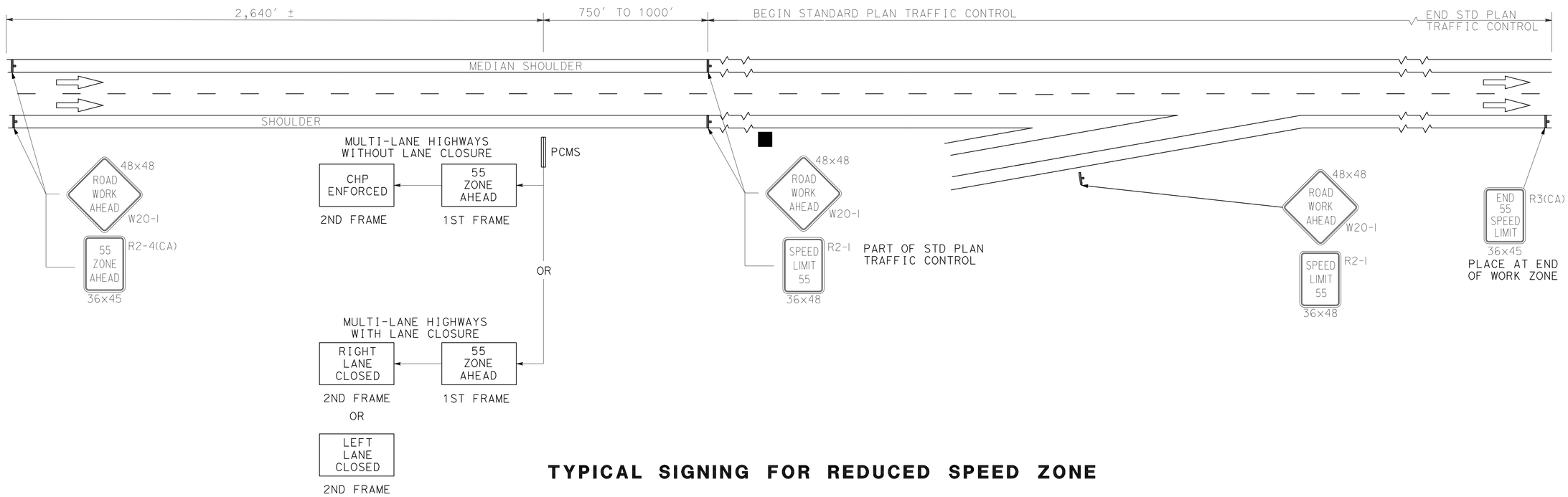

TYPICAL SIGNING FOR REDUCED SPEED ZONE

CONSTRUCTION AREA SIGNS

NO SCALE

CS-2

REVISED BY	DATE REVISED
C GAIDO	10-30-10

CALCULATED-DESIGNED BY: JERRY REYES
CHECKED BY: CHRIS GAIDO
FUNCTIONAL SUPERVISOR: JOHN MARTIN

STATE OF CALIFORNIA - DEPARTMENT OF TRANSPORTATION
Caltrans
DESIGN

P:\proj2\02\4c401\design\PS&E\24c401la002.dgn

LAST REVISION 09-15-10 | DATE PLOTTED => 14-DEC-2010 | TIME PLOTTED => 08:12

Dist	COUNTY	ROUTE	POST MILES TOTAL PROJECT	SHEET No.	TOTAL SHEETS
02	Sha	5	R10.5/R17.5	152	311

REGISTERED CIVIL ENGINEER 10-15-10 DATE

12-13-10
PLANS APPROVAL DATE

REGISTERED PROFESSIONAL ENGINEER CHRIS S. GAIDO No. C62535 Exp 12-31-11 CIVIL STATE OF CALIFORNIA

THE STATE OF CALIFORNIA OR ITS OFFICERS OR AGENTS SHALL NOT BE RESPONSIBLE FOR THE ACCURACY OR COMPLETENESS OF SCANNED COPIES OF THIS PLAN SHEET.

NOTES:

1. FOR ACCURATE RIGHT OF WAY DATA, CONTACT RIGHT OF WAY ENGINEERING AT THE DISTRICT OFFICE.
2. EXACT LOCATION OF ALL SIGNS TO BE DETERMINED BY THE ENGINEER.
3. CALIFORNIA SIGN CODES ARE DESIGNATED BY (CA), OTHERWISE FEDERAL SIGN CODES ARE SHOWN.

CONSTRUCTION SEQUENCE

STAGE 1 ("CL1" LINE Sta 798+60 TO 974+00)

1. REHABILITATE OUTSIDE SHOULDER ROUTE 5
2. PLACE TEMPORARY TRAFFIC STRIPES, TEMPORARY RAILING (TYPE K) AND SHIFT TRAFFIC
3. CONSTRUCT NEW SB AND NB LANES AND SHOULDERS

STAGE 2 ("CL1" LINE Sta 974+00 TO 1088+00)

1. REHABILITATE OUTSIDE SHOULDER ROUTE 5
2. PLACE TEMPORARY TRAFFIC STRIPES, TEMPORARY RAILING (TYPE K) AND SHIFT TRAFFIC
3. CONSTRUCT NEW SB AND NB LANES AND SHOULDERS
4. COLD PLANE EXISTING TRAFFIC LANES AND PLACE OVERLAY

LEGEND:

- WORK AREA
- TEMPORARY RAILING (TYPE K)
- X / TEMP — TEMPORARY PAVEMENT DELINEATION DETAIL NUMBER
- CHANNELIZER (SURFACE MOUNTED)
- REMOVE STRIPE — REMOVE THERMOPLASTIC TRAFFIC STRIPE
- SIGN ON BARRICADE
- DIRECTION OF TRAFFIC
- CONSTRUCTION AREA SIGN
- CHANGE IN TRAFFIC STRIPE
- TEMPORARY CRASH CUSHION ARRAY
- ALTERNATIVE TEMPORARY CRASH CUSHION

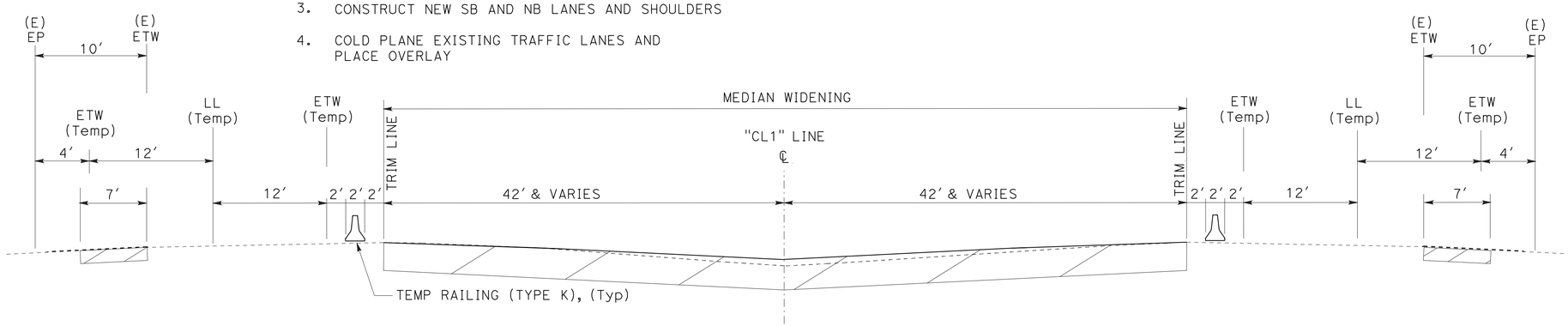

ROUTE 5
"CL1" 800+50 TO 1082+50
STAGE 1 & STAGE 2

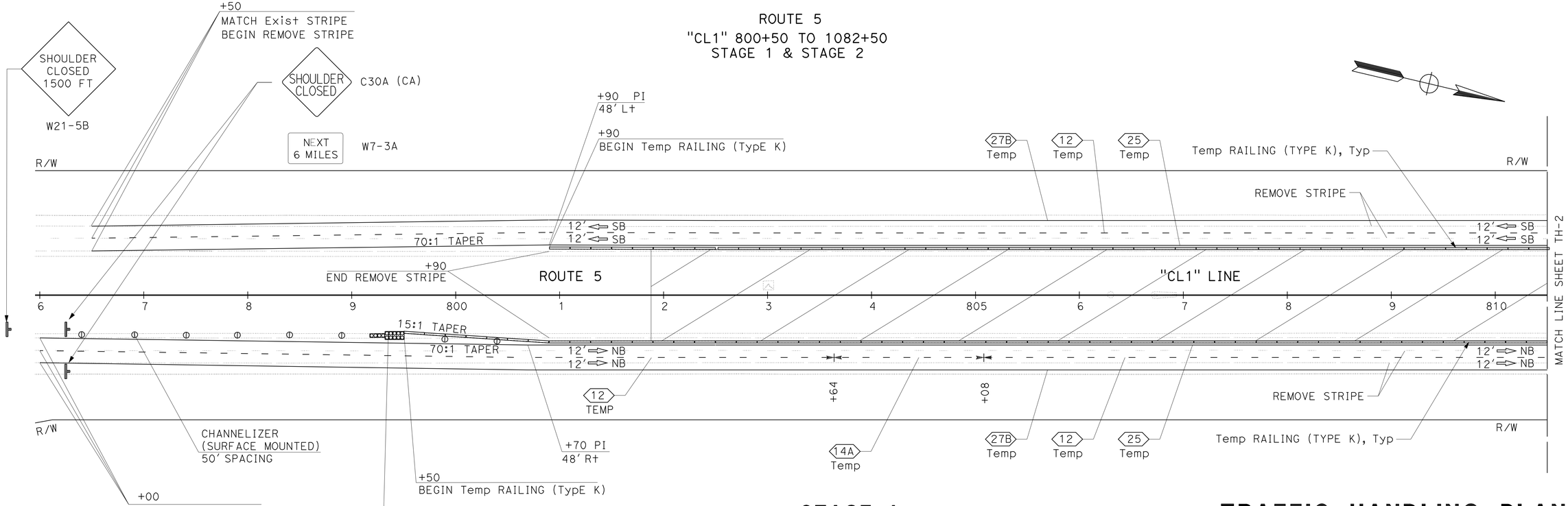

STAGE 1

TRAFFIC HANDLING PLAN

SCALE: 1" = 50'

TH-1

THIS PLAN ACCURATE FOR TRAFFIC HANDLING ONLY

REVISED BY | DATE REVISED
JAVED IQBAL | CHRIS GAIDO
CALCULATED-DESIGNED BY | CHECKED BY
FUNCTIONAL SUPERVISOR: JOHN MARTIN

STATE OF CALIFORNIA - DEPARTMENT OF TRANSPORTATION
Caltrans
DESIGN

P:\proj2\02\4c401\design\PS&E\24c401md001.dgn

LAST REVISION | DATE PLOTTED => 15-DEC-2010 | TIME PLOTTED => 08:13
08-23-10

FOR ACCURATE RIGHT OF WAY DATA, CONTACT
RIGHT OF WAY ENGINEERING AT THE DISTRICT OFFICE.

Dist	COUNTY	ROUTE	POST MILES TOTAL PROJECT	SHEET No.	TOTAL SHEETS
02	Sha	5	R10.5/R17.5	153	311

REGISTERED CIVIL ENGINEER 10-15-10 DATE

12-13-10
PLANS APPROVAL DATE

REGISTERED PROFESSIONAL ENGINEER CHRIS S. GAIDO No. C62535 Exp 12-31-11 CIVIL STATE OF CALIFORNIA

THE STATE OF CALIFORNIA OR ITS OFFICERS OR AGENTS SHALL NOT BE RESPONSIBLE FOR THE ACCURACY OR COMPLETENESS OF SCANNED COPIES OF THIS PLAN SHEET.

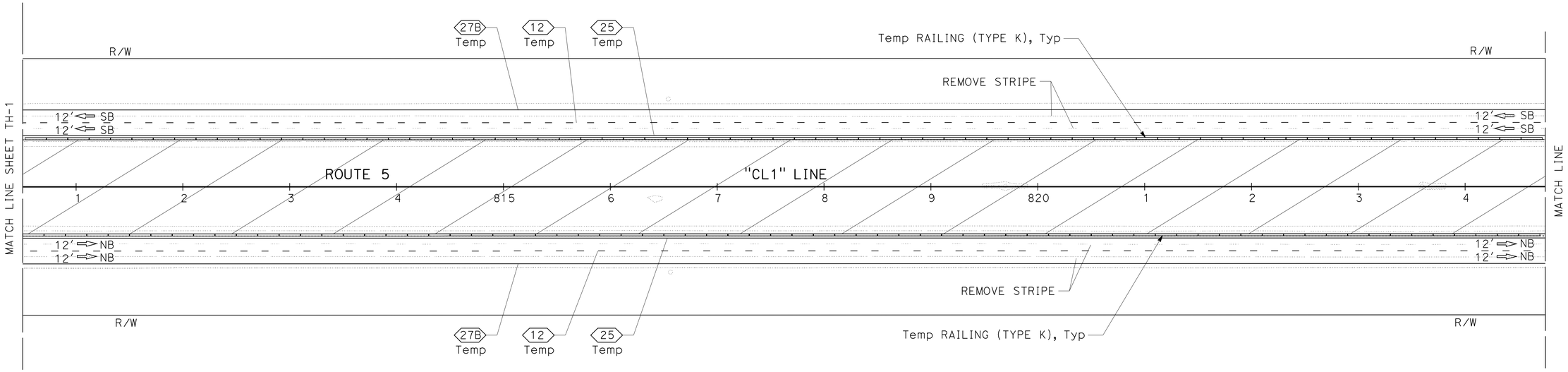

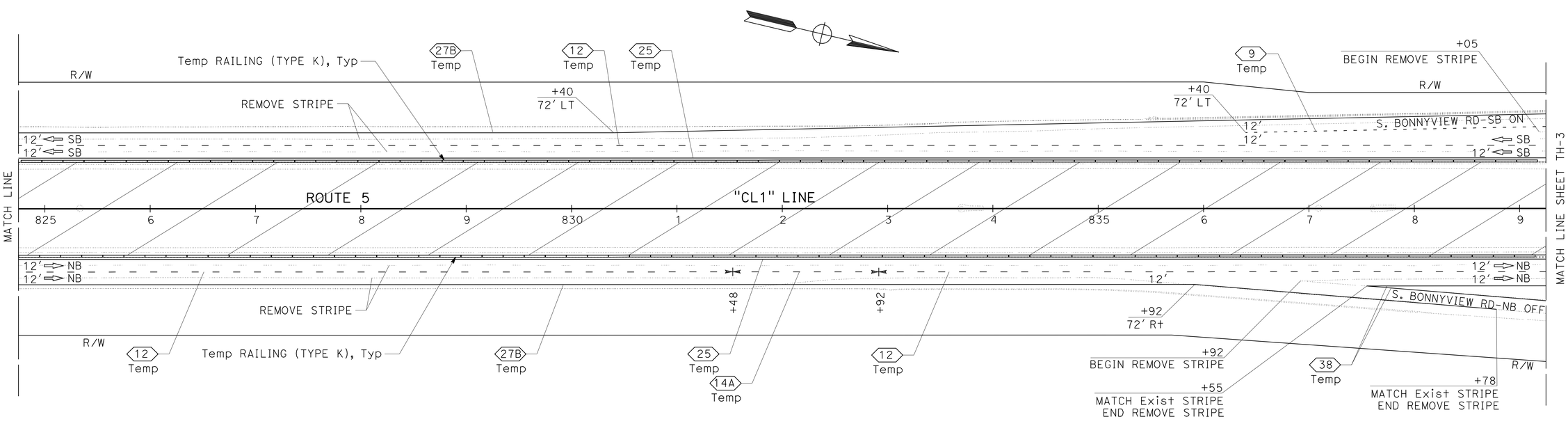

STAGE 1

TRAFFIC HANDLING PLAN

SCALE: 1" = 50'

TH-2

THIS PLAN ACCURATE FOR TRAFFIC HANDLING ONLY

REVISED BY	DATE REVISED
JAVED IQBAL	CHRIS GAIDO
CALCULATED-DESIGNED BY	CHECKED BY
FUNCTIONAL SUPERVISOR	JOHN MARTIN

STATE OF CALIFORNIA - DEPARTMENT OF TRANSPORTATION
Caltrans® DESIGN

P:\proj2\02\4c401\design\PS&E\24c401md002.dgn

LAST REVISION 10-18-10 | DATE PLOTTED => 15-DEC-2010 | TIME PLOTTED => 08:13

Dist	COUNTY	ROUTE	POST MILES TOTAL PROJECT	SHEET No.	TOTAL SHEETS
02	Sha	5	R10.5/R17.5	154	311

REGISTERED CIVIL ENGINEER 10-15-10 DATE

12-13-10
PLANS APPROVAL DATE

REGISTERED PROFESSIONAL ENGINEER CHRIS S. GAIDO No. C62535 Exp 12-31-11 CIVIL STATE OF CALIFORNIA

THE STATE OF CALIFORNIA OR ITS OFFICERS OR AGENTS SHALL NOT BE RESPONSIBLE FOR THE ACCURACY OR COMPLETENESS OF SCANNED COPIES OF THIS PLAN SHEET.

NOTES:

1. FOR ACCURATE RIGHT OF WAY DATA, CONTACT RIGHT OF WAY ENGINEERING AT THE DISTRICT OFFICE.
2. EXACT LOCATION OF ALL SIGNS TO BE DETERMINED BY THE ENGINEER.
3. CALIFORNIA SIGN CODES ARE DESIGNATED BY (CA), OTHERWISE FEDERAL SIGN CODES ARE SHOWN.

TABLE 1
DETAIL 14A AT EXIT RAMPS

ALIGNMENT	STATION
"CL1"	865+18 TO 866+62 Lt
"CL1"	893+02 TO 894+46 Lt
"CL1"	920+86 TO 922+30 Lt
"CL1"	899+12 TO 900+56 Rt
"CL1"	926+96 TO 928+40 Rt

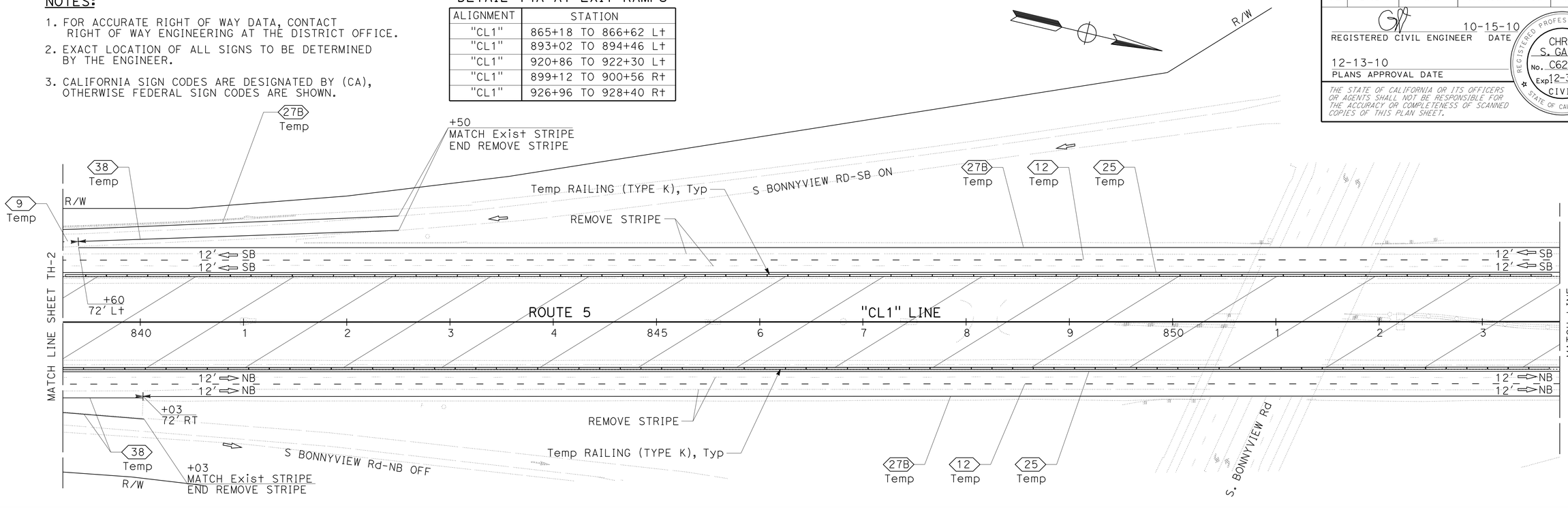

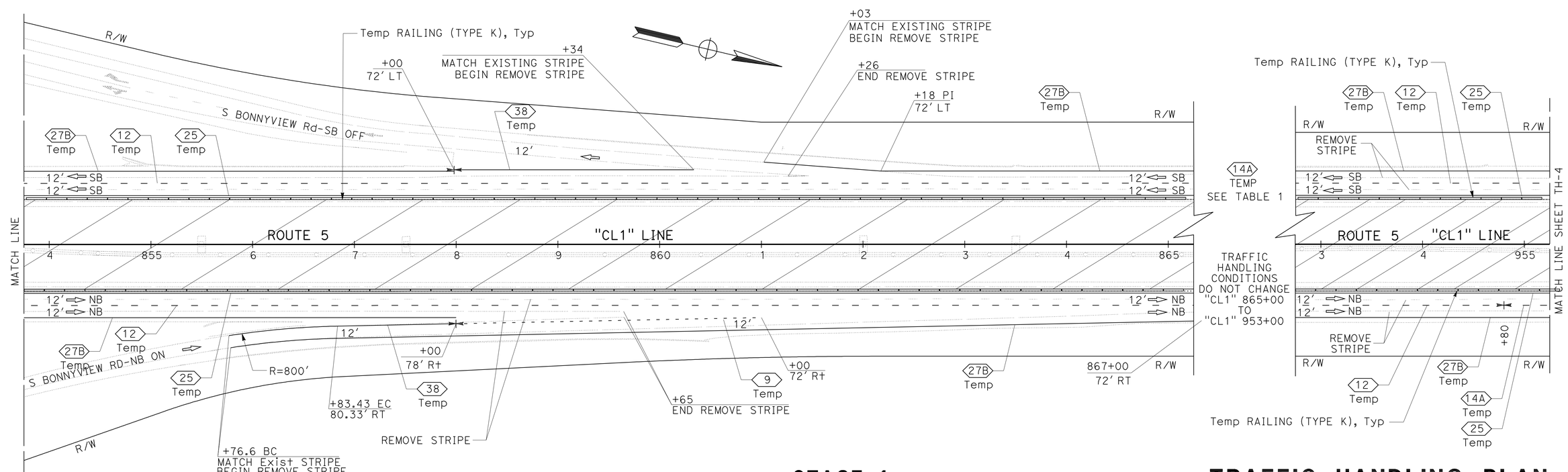

STAGE 1

THIS PLAN ACCURATE FOR TRAFFIC HANDLING ONLY

TRAFFIC HANDLING PLAN

SCALE: 1" = 50'

TH-3

REVISED BY | DATE REVISED
JAVED IQBAL | CHRIS GAIDO
CALCULATED-DESIGNED BY | CHECKED BY
FUNCTIONAL SUPERVISOR | JOHN MARTIN

STATE OF CALIFORNIA - DEPARTMENT OF TRANSPORTATION
Caltrans® DESIGN

P:\proj2\02\4c401\design\PS&E\24c401md003.dgn

LAST REVISION 10-18-10 | DATE PLOTTED => 15-DEC-2010 | TIME PLOTTED => 08:13

Dist	COUNTY	ROUTE	POST MILES TOTAL PROJECT	SHEET No.	TOTAL SHEETS
02	Sha	5	R10.5/R17.5	155	311

REGISTERED CIVIL ENGINEER 10-15-10 DATE

12-13-10
PLANS APPROVAL DATE

REGISTERED PROFESSIONAL ENGINEER CHRIS S. GAIDO No. C62535 Exp 12-31-11 CIVIL STATE OF CALIFORNIA

THE STATE OF CALIFORNIA OR ITS OFFICERS OR AGENTS SHALL NOT BE RESPONSIBLE FOR THE ACCURACY OR COMPLETENESS OF SCANNED COPIES OF THIS PLAN SHEET.

NOTES:

1. FOR ACCURATE RIGHT OF WAY DATA, CONTACT RIGHT OF WAY ENGINEERING AT THE DISTRICT OFFICE.
2. EXACT LOCATION OF ALL SIGNS TO BE DETERMINED BY THE ENGINEER.
3. CALIFORNIA SIGN CODES ARE DESIGNATED BY (CA), OTHERWISE FEDERAL SIGN CODES ARE SHOWN.
4. SIGN (W21-5B) SHALL BE PLACE 1500' PRIOR TO SHOULDER CLOSURE, OR DETERMINED BY THE ENGINEER

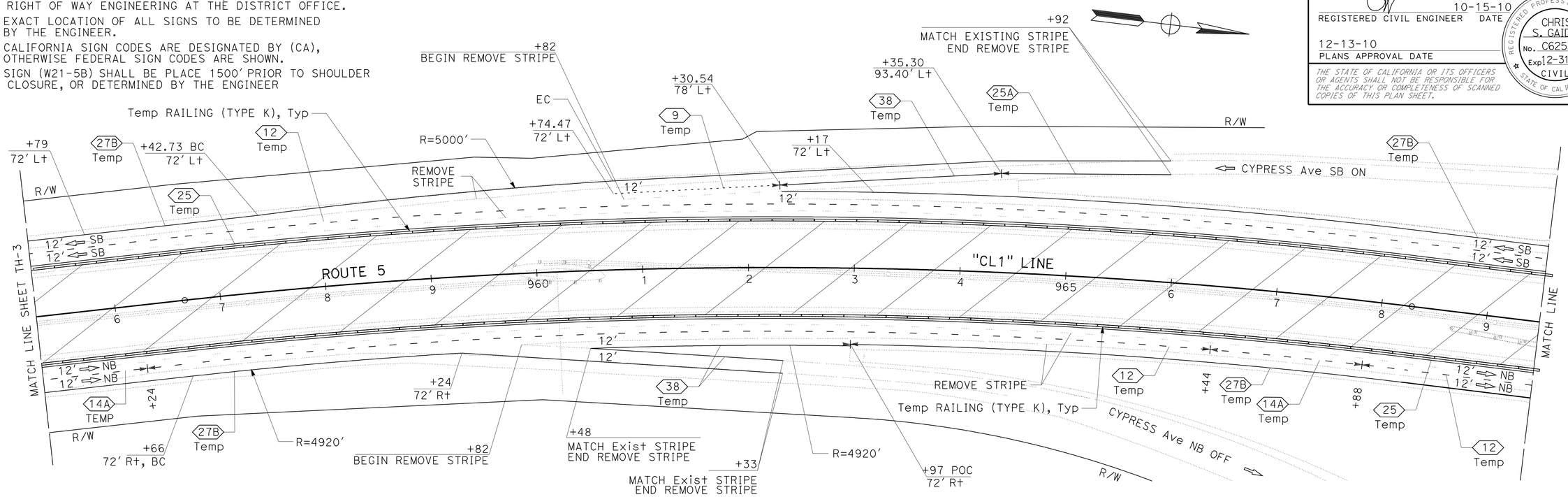

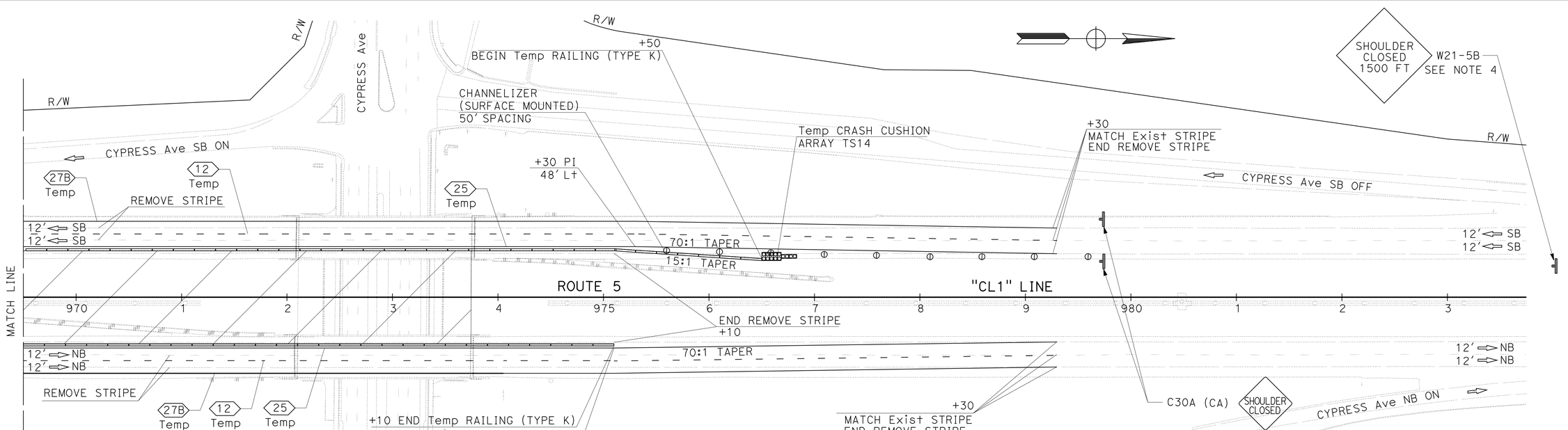

STAGE 1

THIS PLAN ACCURATE FOR TRAFFIC HANDLING ONLY

TRAFFIC HANDLING PLAN

SCALE: 1" = 50'

TH-4

REVISED BY | DATE REVISED
JAVED IQBAL | CHRIS GAIDO
CALCULATED-DESIGNED BY | CHECKED BY
FUNCTIONAL SUPERVISOR: JOHN MARTIN

STATE OF CALIFORNIA - DEPARTMENT OF TRANSPORTATION
Caltrans® DESIGN

P:\proj2\02\4c401\design\PS&E\24c401md004.dgn

LAST REVISION 10-18-10 | DATE PLOTTED => 15-DEC-2010 | TIME PLOTTED => 08:13

Dist	COUNTY	ROUTE	POST MILES TOTAL PROJECT	SHEET No.	TOTAL SHEETS
02	Sha	5	R10.5/R17.5	156	311

REGISTERED CIVIL ENGINEER 10-15-10 DATE

12-13-10
PLANS APPROVAL DATE

REGISTERED PROFESSIONAL ENGINEER CHRIS S. GAIDO No. C62535 Exp 12-31-11 CIVIL STATE OF CALIFORNIA

THE STATE OF CALIFORNIA OR ITS OFFICERS OR AGENTS SHALL NOT BE RESPONSIBLE FOR THE ACCURACY OR COMPLETENESS OF SCANNED COPIES OF THIS PLAN SHEET.

NOTES:

1. FOR ACCURATE RIGHT OF WAY DATA, CONTACT RIGHT OF WAY ENGINEERING AT THE DISTRICT OFFICE.
2. EXACT LOCATION OF ALL SIGNS TO BE DETERMINED BY THE ENGINEER.
3. CALIFORNIA SIGN CODES ARE DESIGNATED BY (CA), OTHERWISE FEDERAL SIGN CODES ARE SHOWN.

LEGEND:

STRUCTURAL SECTION COMPLETED IN STAGE 1

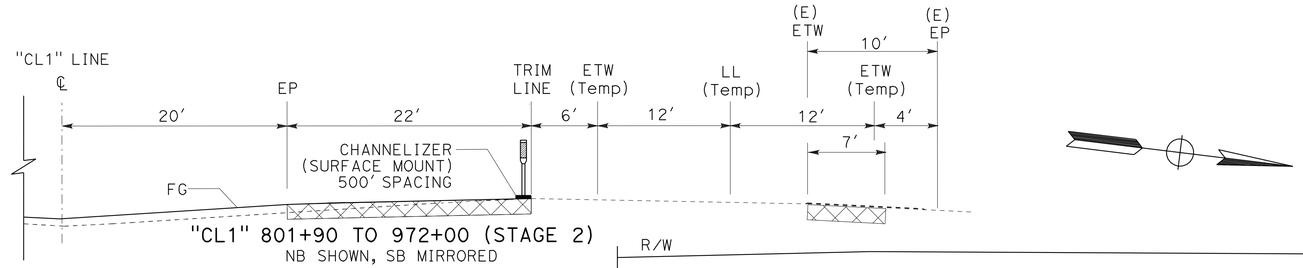

"CL1" 801+90 TO 972+00 (STAGE 2)
NB SHOWN, SB MIRRORED

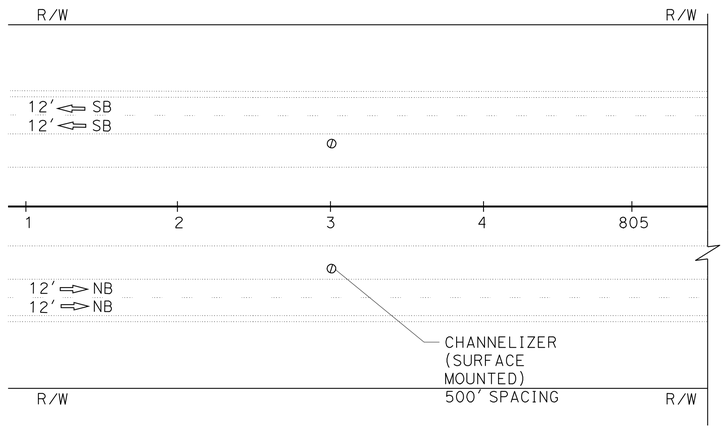

TRAFFIC HANDLING CONDITIONS DO NOT CHANGE "CL1" 801+90 TO "CL1" 972+00

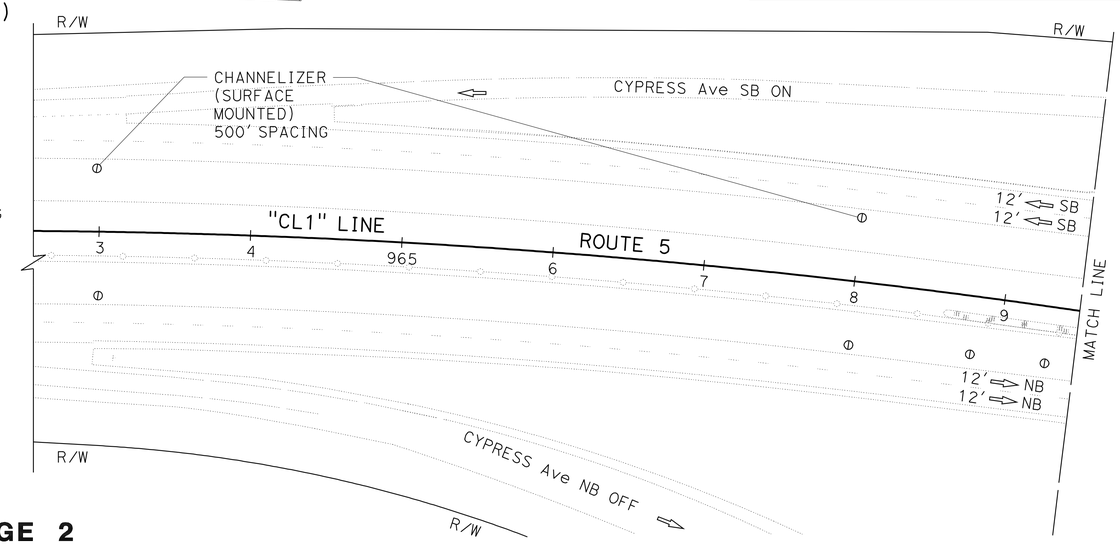

STAGE 2

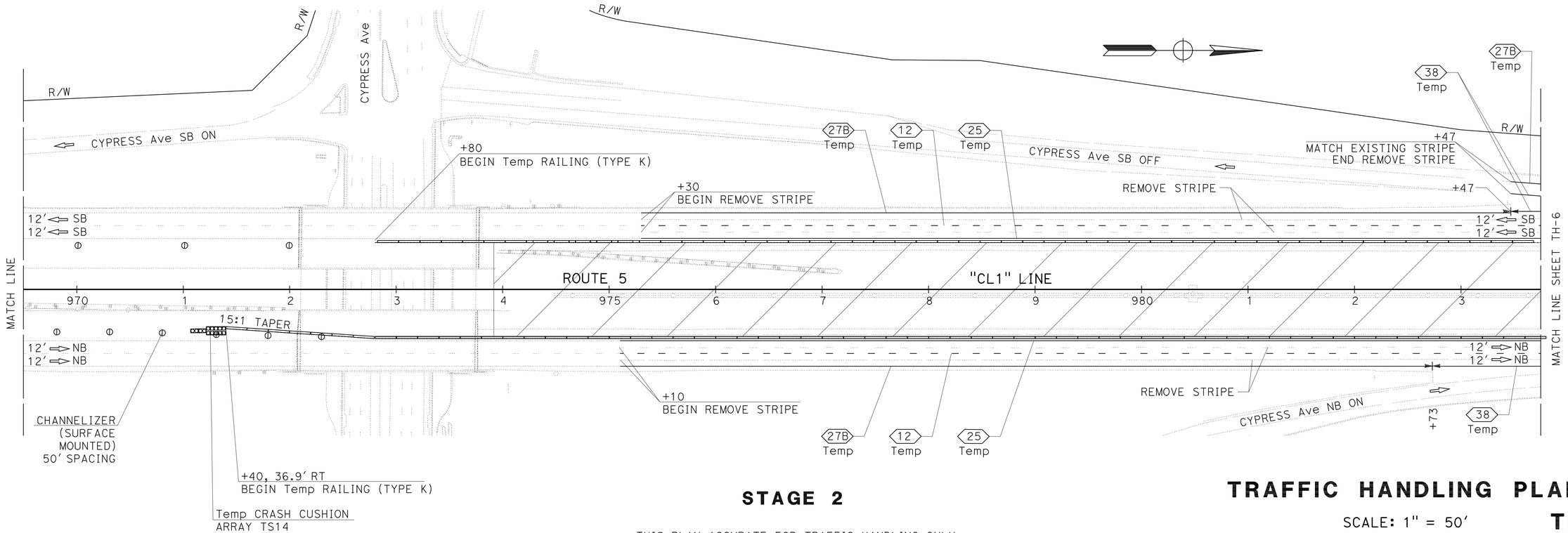

STAGE 2

THIS PLAN ACCURATE FOR TRAFFIC HANDLING ONLY

TRAFFIC HANDLING PLAN

SCALE: 1" = 50′

TH-5

REVISED BY	DATE REVISED
JAVED IQBAL	CHRIS GAIDO
CALCULATED-DESIGNED BY	CHECKED BY
FUNCTIONAL SUPERVISOR	JOHN MARTIN

STATE OF CALIFORNIA - DEPARTMENT OF TRANSPORTATION
Caltrans DESIGN

P:\proj2\02\4c401\design\PS&E\24c401md005.dgn

LAST REVISION 10-18-10
DATE PLOTTED => 15-DEC-2010
TIME PLOTTED => 08:13

Dist	COUNTY	ROUTE	POST MILES TOTAL PROJECT	SHEET No.	TOTAL SHEETS
02	Sha	5	R10.5/R17.5	157	311

REGISTERED CIVIL ENGINEER 10-15-10 DATE

12-13-10
PLANS APPROVAL DATE

REGISTERED PROFESSIONAL ENGINEER CHRIS S. GAIDO No. C62535 Exp 12-31-11 CIVIL STATE OF CALIFORNIA

THE STATE OF CALIFORNIA OR ITS OFFICERS OR AGENTS SHALL NOT BE RESPONSIBLE FOR THE ACCURACY OR COMPLETENESS OF SCANNED COPIES OF THIS PLAN SHEET.

NOTES:

1. FOR ACCURATE RIGHT OF WAY DATA, CONTACT RIGHT OF WAY ENGINEERING AT THE DISTRICT OFFICE.
2. EXACT LOCATION OF ALL SIGNS TO BE DETERMINED BY THE ENGINEER.
3. CALIFORNIA SIGN CODES ARE DESIGNATED BY (CA), OTHERWISE FEDERAL SIGN CODES ARE SHOWN.

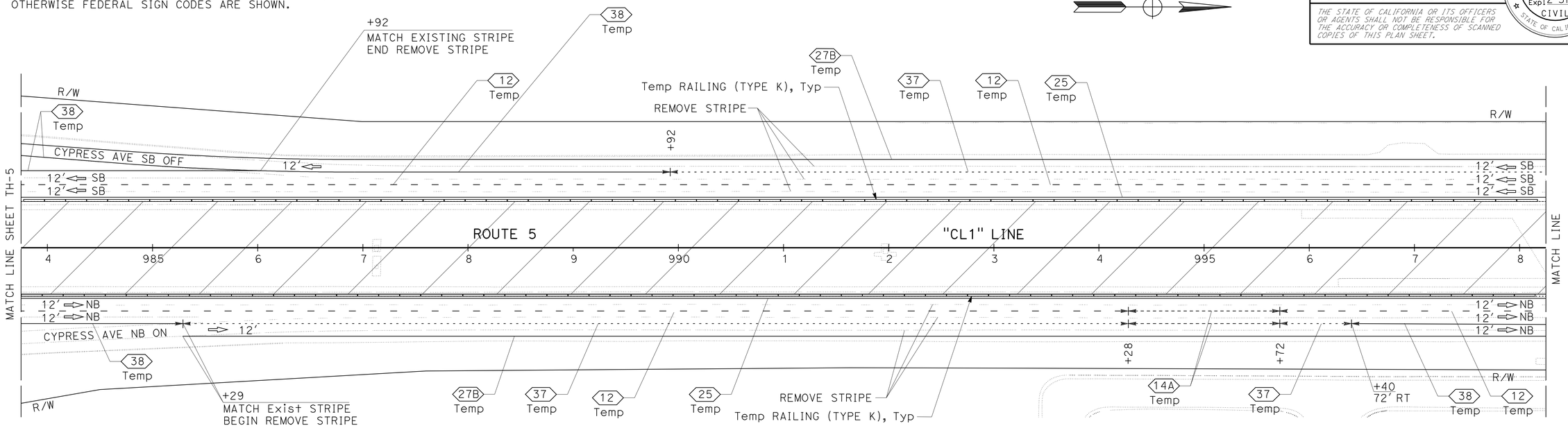

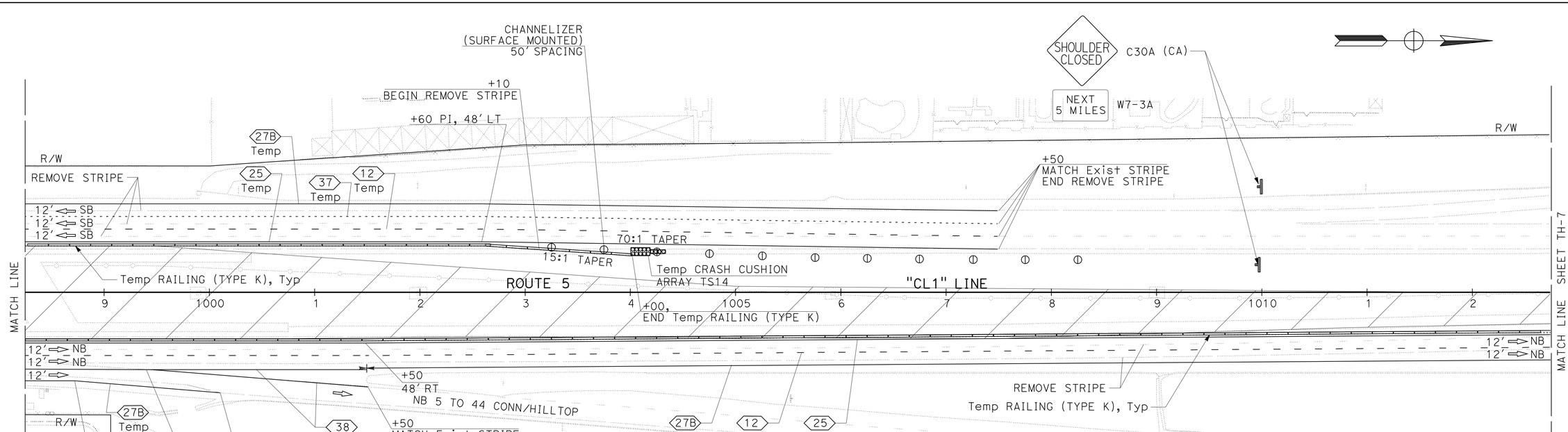

STAGE 2

THIS PLAN ACCURATE FOR TRAFFIC HANDLING ONLY

TRAFFIC HANDLING PLAN

SCALE: 1" = 50'

TH-6

REVISED BY | DATE REVISED
JAVED IQBAL | CHRIS GAIDO
CALCULATED-DESIGNED BY | CHECKED BY
FUNCTIONAL SUPERVISOR | JOHN MARTIN

STATE OF CALIFORNIA - DEPARTMENT OF TRANSPORTATION
Caltrans® DESIGN

P:\proj2\02\4c401\design\PS&E\24c401md006.dgn

LAST REVISION | DATE PLOTTED => 15-DEC-2010
08-24-10 | TIME PLOTTED => 08:13

Dist	COUNTY	ROUTE	POST MILES TOTAL PROJECT	SHEET No.	TOTAL SHEETS
02	Sha	5	R10.5/R17.5	158	311

REGISTERED CIVIL ENGINEER 10-15-10 DATE

12-13-10
PLANS APPROVAL DATE

REGISTERED PROFESSIONAL ENGINEER CHRIS S. GAIDO No. C62535 Exp 12-31-11 CIVIL STATE OF CALIFORNIA

THE STATE OF CALIFORNIA OR ITS OFFICERS OR AGENTS SHALL NOT BE RESPONSIBLE FOR THE ACCURACY OR COMPLETENESS OF SCANNED COPIES OF THIS PLAN SHEET.

NOTES:

1. FOR ACCURATE RIGHT OF WAY DATA, CONTACT RIGHT OF WAY ENGINEERING AT THE DISTRICT OFFICE.
2. EXACT LOCATION OF ALL SIGNS TO BE DETERMINED BY THE ENGINEER.
3. CALIFORNIA SIGN CODES ARE DESIGNATED BY (CA), OTHERWISE FEDERAL SIGN CODES ARE SHOWN.

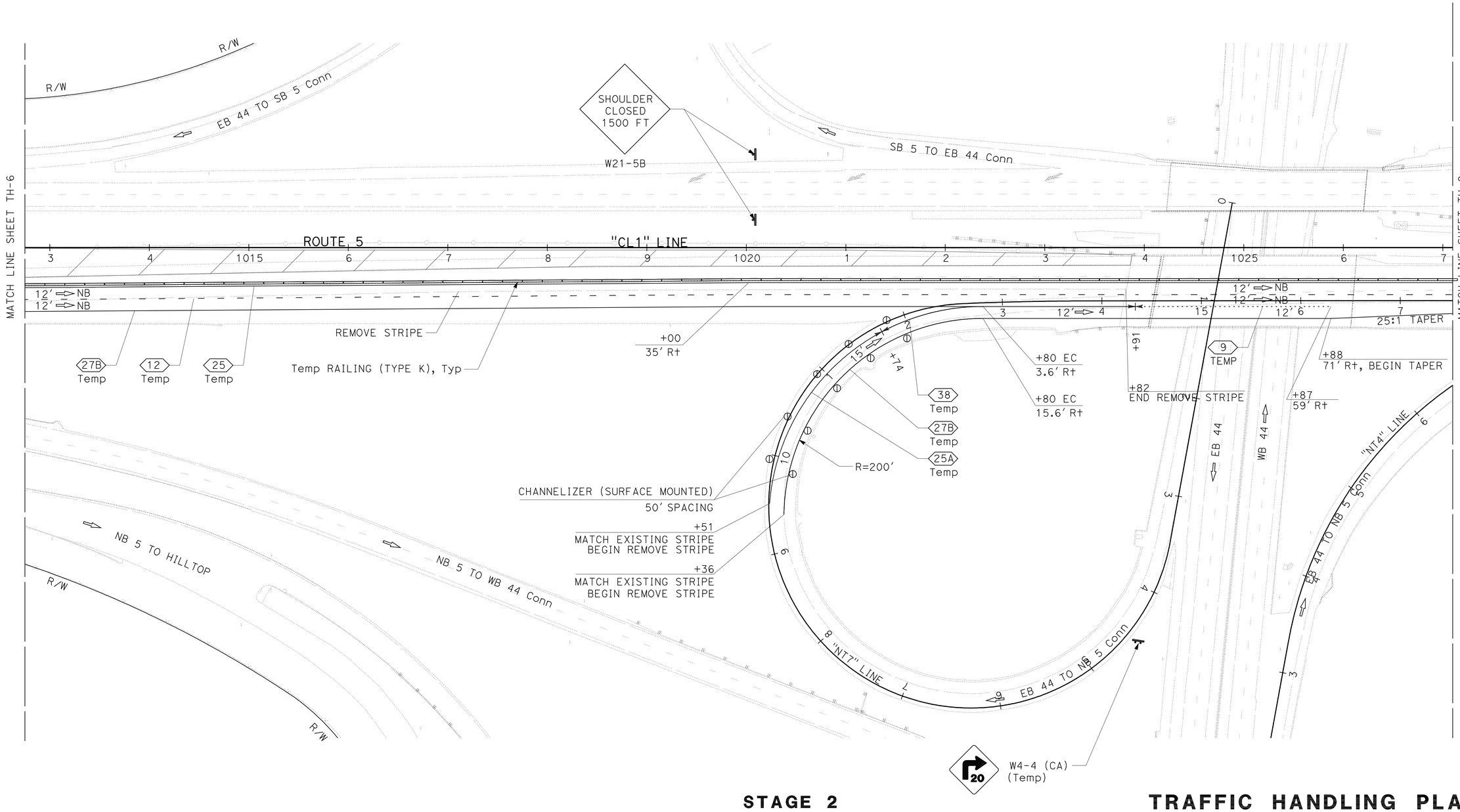

STAGE 2

TRAFFIC HANDLING PLAN

SCALE: 1" = 50'

TH-7

THIS PLAN ACCURATE FOR TRAFFIC HANDLING ONLY

REVISED BY	DATE REVISED
JAVED IQBAL	CHRIS GAIDO
CALCULATED-DESIGNED BY	CHECKED BY
FUNCTIONAL SUPERVISOR	JOHN MARTIN

STATE OF CALIFORNIA - DEPARTMENT OF TRANSPORTATION
Caltrans®
DESIGN

P:\proj2\02\4c401\design\PS&E\24c401md007.dgn

LAST REVISION 08-17-10 | DATE PLOTTED => 15-DEC-2010 | TIME PLOTTED => 08:13

Dist	COUNTY	ROUTE	POST MILES TOTAL PROJECT	SHEET No.	TOTAL SHEETS
02	Sha	5	R10.5/R17.5	159	311

REGISTERED CIVIL ENGINEER 10-15-10 DATE

12-13-10
PLANS APPROVAL DATE

REGISTERED PROFESSIONAL ENGINEER CHRIS S. GAIDO No. C62535 Exp 12-31-11 CIVIL STATE OF CALIFORNIA

THE STATE OF CALIFORNIA OR ITS OFFICERS OR AGENTS SHALL NOT BE RESPONSIBLE FOR THE ACCURACY OR COMPLETENESS OF SCANNED COPIES OF THIS PLAN SHEET.

NOTES:

1. FOR ACCURATE RIGHT OF WAY DATA, CONTACT RIGHT OF WAY ENGINEERING AT THE DISTRICT OFFICE.
2. EXACT LOCATION OF ALL SIGNS TO BE DETERMINED BY THE ENGINEER.
3. CALIFORNIA SIGN CODES ARE DESIGNATED BY (CA), OTHERWISE FEDERAL SIGN CODES ARE SHOWN.

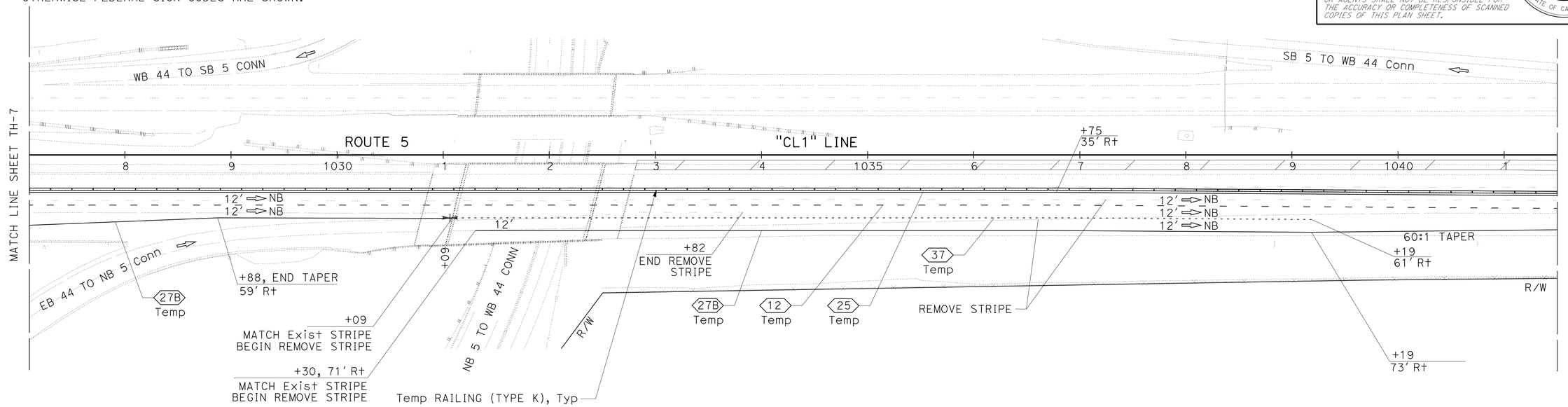

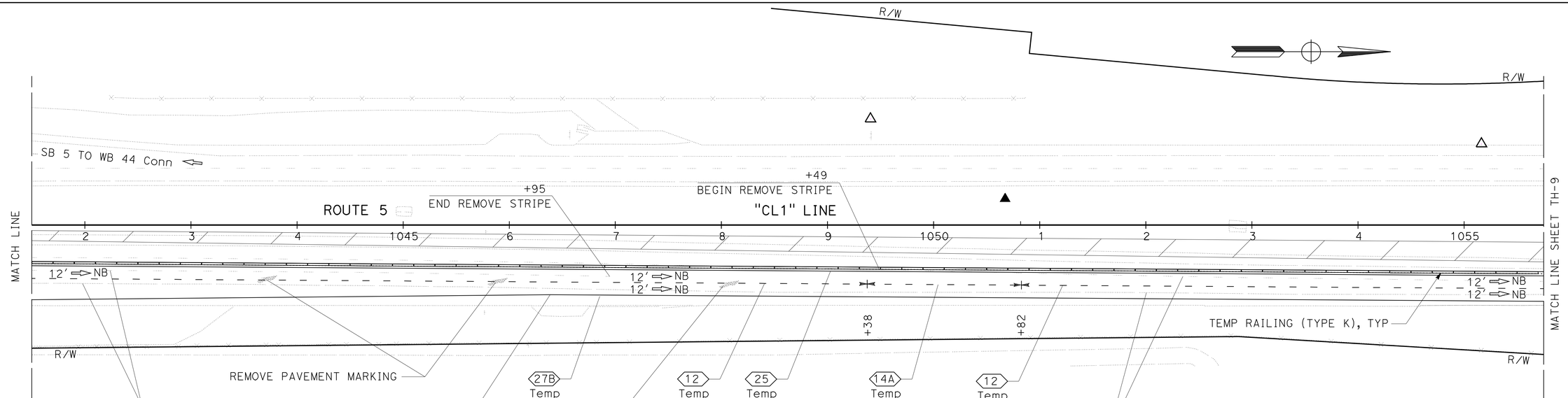

STAGE 2

TRAFFIC HANDLING PLAN

SCALE: 1" = 50'

TH-8

THIS PLAN ACCURATE FOR TRAFFIC HANDLING ONLY

REVISED BY | DATE REVISED
JAVED IQBAL | CHRIS GAIDO
CALCULATED-DESIGNED BY | CHECKED BY
FUNCTIONAL SUPERVISOR: JOHN MARTIN

STATE OF CALIFORNIA - DEPARTMENT OF TRANSPORTATION
Caltrans® DESIGN

P:\proj2\02\4c401\design\PS&E\24c401md008.dgn

LAST REVISION 08-24-10 | DATE PLOTTED => 15-DEC-2010 | TIME PLOTTED => 08:13

Dist	COUNTY	ROUTE	POST MILES TOTAL PROJECT	SHEET No.	TOTAL SHEETS
02	Sha	5	R10.5/R17.5	160	311

REGISTERED CIVIL ENGINEER 10-15-10 DATE

12-13-10
PLANS APPROVAL DATE

REGISTERED PROFESSIONAL ENGINEER CHRIS S. GAIDO No. C62535 Exp 12-31-11 CIVIL STATE OF CALIFORNIA

THE STATE OF CALIFORNIA OR ITS OFFICERS OR AGENTS SHALL NOT BE RESPONSIBLE FOR THE ACCURACY OR COMPLETENESS OF SCANNED COPIES OF THIS PLAN SHEET.

NOTES:

1. FOR ACCURATE RIGHT OF WAY DATA, CONTACT RIGHT OF WAY ENGINEERING AT THE DISTRICT OFFICE.
2. EXACT LOCATION OF ALL SIGNS TO BE DETERMINED BY THE ENGINEER.
3. CALIFORNIA SIGN CODES ARE DESIGNATED BY (CA), OTHERWISE FEDERAL SIGN CODES ARE SHOWN.

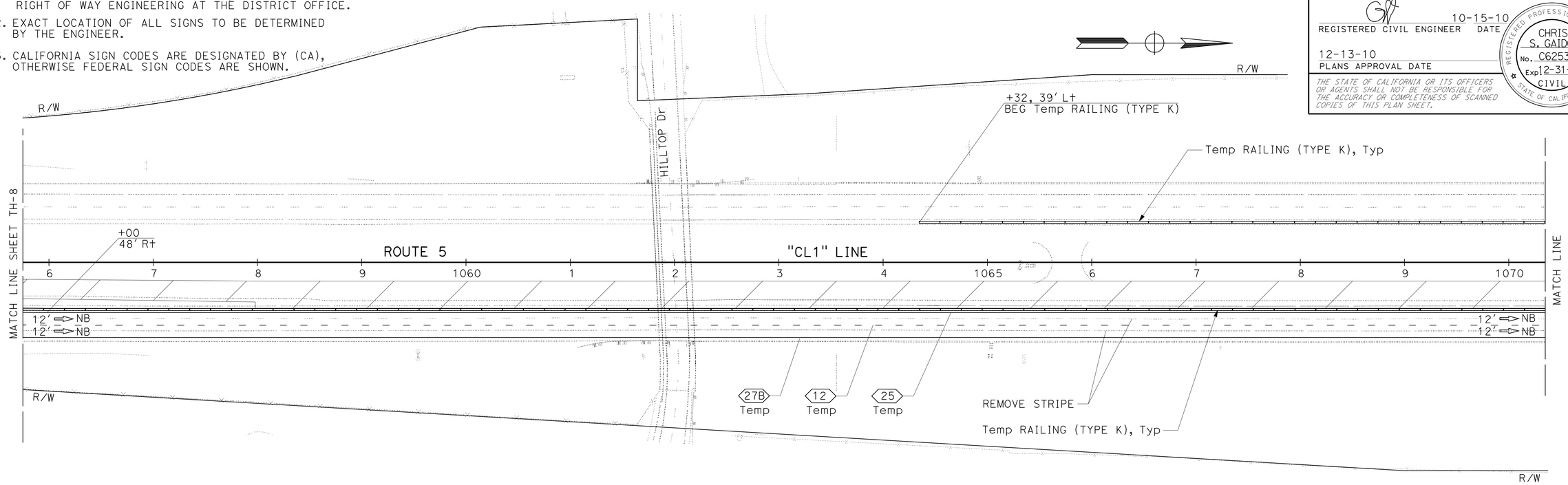

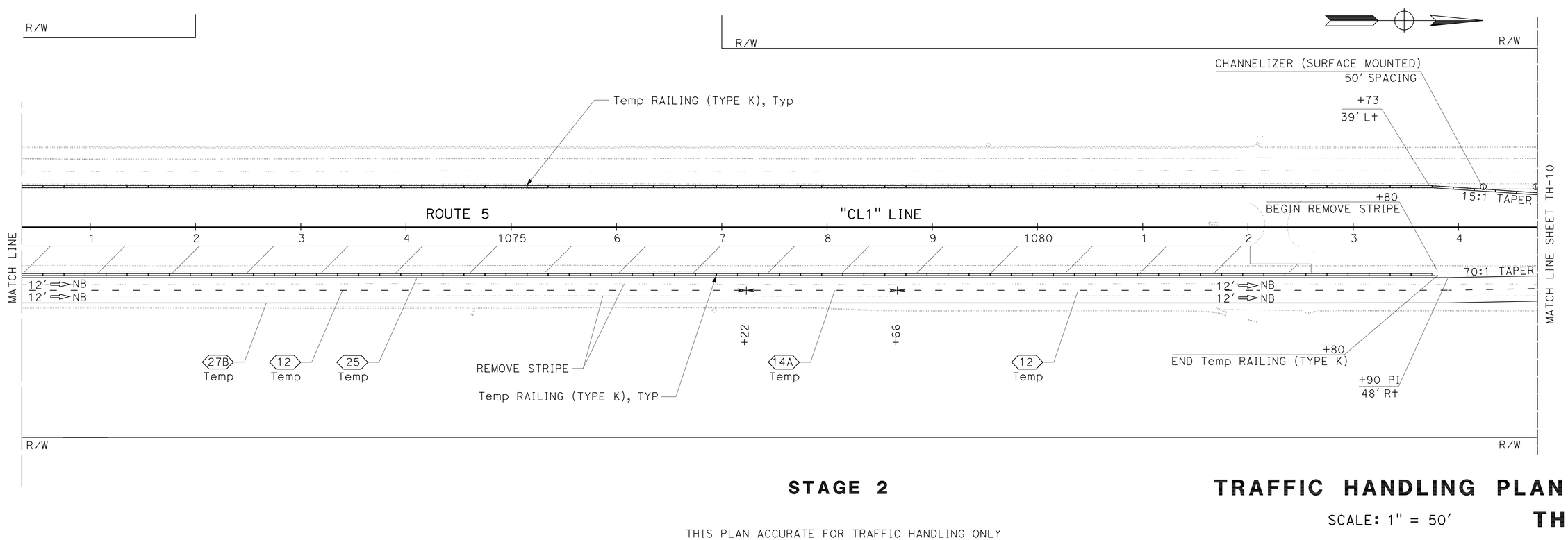

STAGE 2

TRAFFIC HANDLING PLAN

SCALE: 1" = 50'

TH-9

THIS PLAN ACCURATE FOR TRAFFIC HANDLING ONLY

REVISED BY	DATE REVISED
JAVED IQBAL	CHRIS GAIDO
CALCULATED-DESIGNED BY	CHECKED BY
FUNCTIONAL SUPERVISOR	JOHN MARTIN

STATE OF CALIFORNIA - DEPARTMENT OF TRANSPORTATION

Caltrans® DESIGN

P:\proj2\02\4c401\design\PS&E\24c401md009.dgn

LAST REVISION 08-24-10 | DATE PLOTTED => 15-DEC-2010 | TIME PLOTTED => 08:13

Dist	COUNTY	ROUTE	POST MILES TOTAL PROJECT	SHEET No.	TOTAL SHEETS
02	Sha	5	R10.5/R17.5	161	311

REGISTERED CIVIL ENGINEER 10-15-10 DATE

12-13-10
PLANS APPROVAL DATE

REGISTERED PROFESSIONAL ENGINEER CHRIS S. GAIDO No. C62535 Exp 12-31-11 CIVIL STATE OF CALIFORNIA

THE STATE OF CALIFORNIA OR ITS OFFICERS OR AGENTS SHALL NOT BE RESPONSIBLE FOR THE ACCURACY OR COMPLETENESS OF SCANNED COPIES OF THIS PLAN SHEET.

NOTES:

1. FOR ACCURATE RIGHT OF WAY DATA, CONTACT RIGHT OF WAY ENGINEERING AT THE DISTRICT OFFICE.
2. EXACT LOCATION OF ALL SIGNS TO BE DETERMINED BY THE ENGINEER.
3. CALIFORNIA SIGN CODES ARE DESIGNATED BY (CA), OTHERWISE FEDERAL SIGN CODES ARE SHOWN.

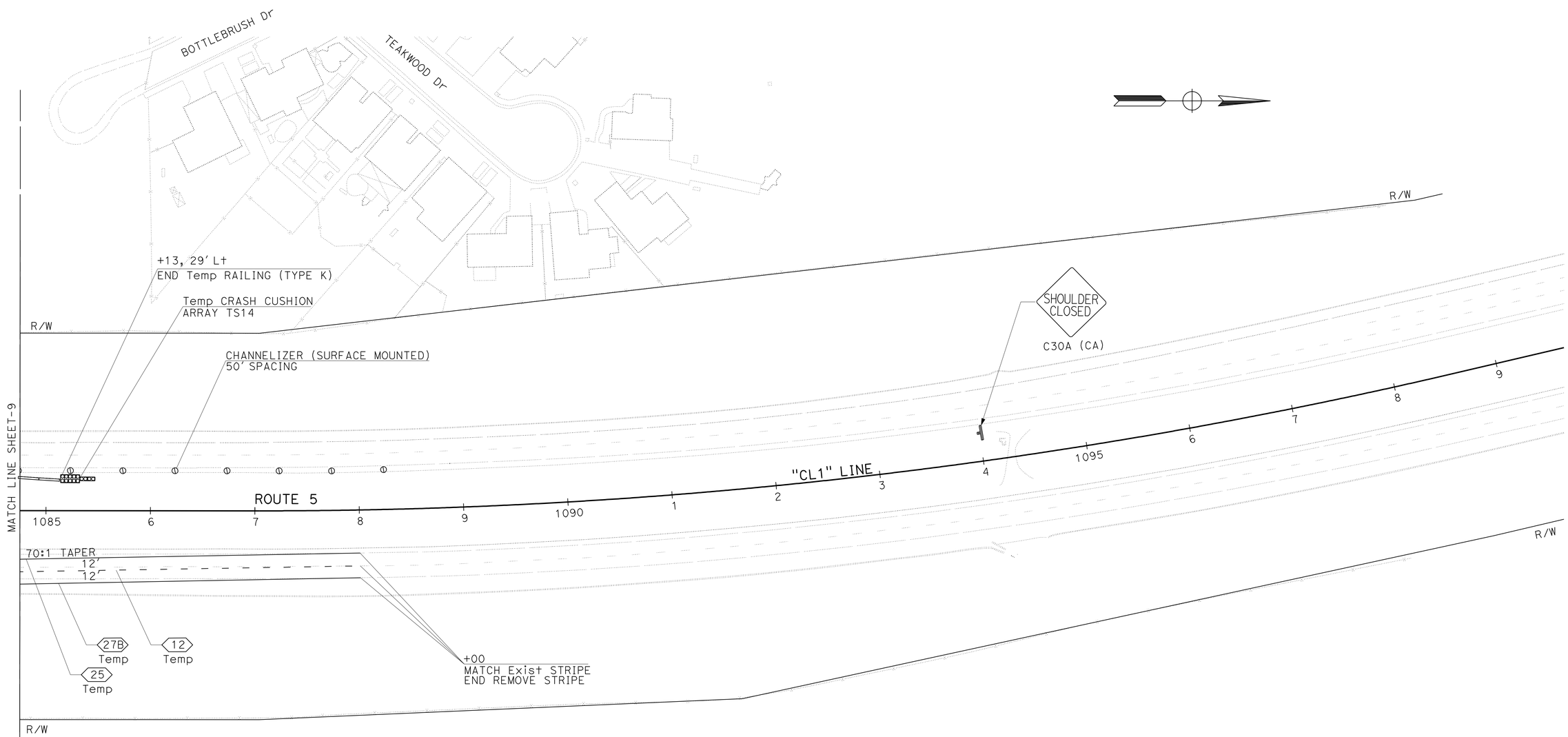

STAGE 2

TRAFFIC HANDLING PLAN

SCALE: 1" = 50'

TH-10

THIS PLAN ACCURATE FOR TRAFFIC HANDLING ONLY

REVISED BY | DATE REVISED
JAVED IQBAL | CHRIS GAIDO
CALCULATED-DESIGNED BY | CHECKED BY
FUNCTIONAL SUPERVISOR: JOHN MARTIN

STATE OF CALIFORNIA - DEPARTMENT OF TRANSPORTATION
Caltrans® DESIGN

P:\proj2\02\4c401\design\PS&E\24c401md010.dgn

LAST REVISION 08-25-10 | DATE PLOTTED => 15-DEC-2010 | TIME PLOTTED => 08:13

Dist	COUNTY	ROUTE	POST MILES TOTAL PROJECT	SHEET No.	TOTAL SHEETS
02	Sha	5	R10.5/R17.5	162	311

REGISTERED CIVIL ENGINEER 10-15-10 DATE

12-13-10
PLANS APPROVAL DATE

REGISTERED PROFESSIONAL ENGINEER CHRIS S. GAIDO No. C62535 Exp 12-31-11 CIVIL STATE OF CALIFORNIA

THE STATE OF CALIFORNIA OR ITS OFFICERS OR AGENTS SHALL NOT BE RESPONSIBLE FOR THE ACCURACY OR COMPLETENESS OF SCANNED COPIES OF THIS PLAN SHEET.

NOTES:

1. FOR PEDESTRIAN ACCESS THRU CONSTRUCTION ZONE. SEE SHEET DE-12
2. FOR ACCURATE RIGHT OF WAY DATA, CONTACT RIGHT OF WAY ENGINEERING AT THE DISTRICT OFFICE.
3. CONSTRUCT CURB AND GUTTER (TYPE A2-8) DURING CYPRESS AVE 55 HOUR LANE CLOSURE, SEE TRAFFIC MANAGEMENT PLAN.

SECTION B-B
NO SCALE

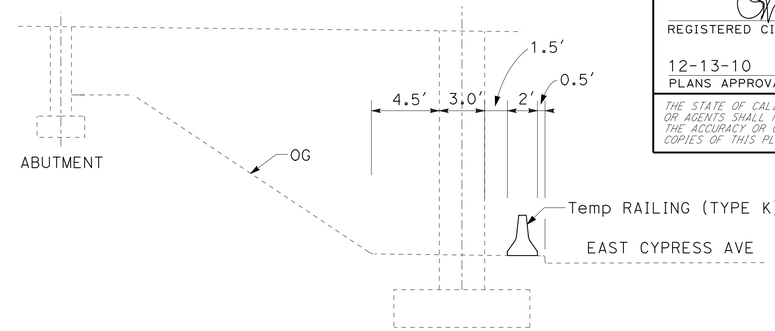

SECTION A-A

EAST CYPRESS AVENUE TRAFFIC HANDLING

NO SCALE

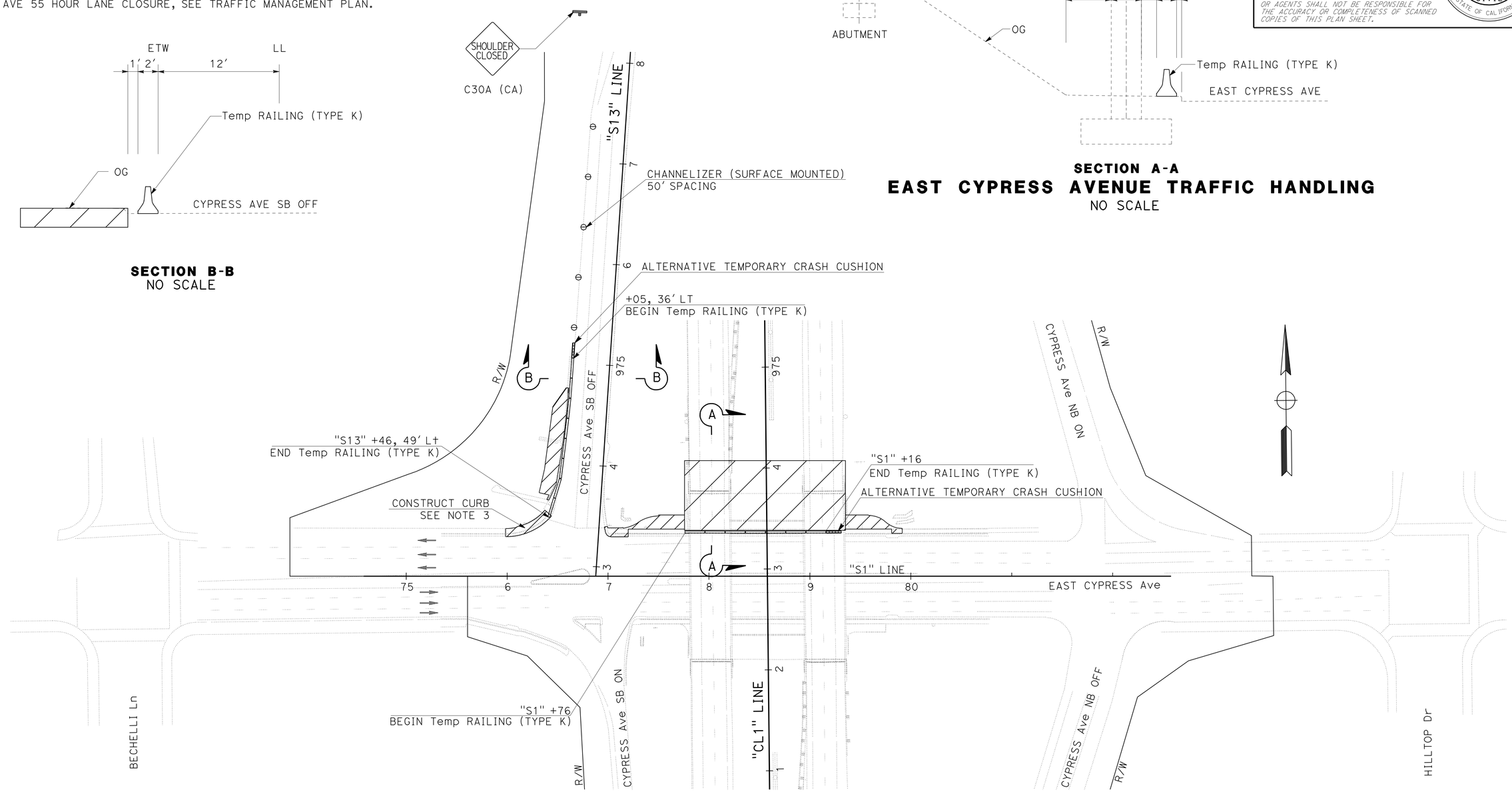

STAGE 1A

TRAFFIC HANDLING PLAN

SCALE: 1" = 50'

TH-11

THIS PLAN ACCURATE FOR TRAFFIC HANDLING PLAN ONLY

REVISED BY	DATE REVISED

CALCULATED-DESIGNED BY	CHECKED BY
JAVED IQBAL	CHRIS GAIDO

FUNCTIONAL SUPERVISOR: JOHN MARTIN

STATE OF CALIFORNIA - DEPARTMENT OF TRANSPORTATION
Caltrans®
DESIGN

P:\proj2\02\4c401\design\PS&E\24c401md011.dgn

LAST REVISION 09-07-10 | DATE PLOTTED => 15-DEC-2010 | TIME PLOTTED => 08:13

Dist	COUNTY	ROUTE	POST MILES TOTAL PROJECT	SHEET No.	TOTAL SHEETS
02	Sha	5	R10.5/R17.5	163	311

REGISTERED CIVIL ENGINEER 10-15-10 DATE

12-13-10
PLANS APPROVAL DATE

REGISTERED PROFESSIONAL ENGINEER CHRIS S. GAIDO No. C62535 Exp 12-31-11 CIVIL STATE OF CALIFORNIA

THE STATE OF CALIFORNIA OR ITS OFFICERS OR AGENTS SHALL NOT BE RESPONSIBLE FOR THE ACCURACY OR COMPLETENESS OF SCANNED COPIES OF THIS PLAN SHEET.

NOTES:

1. FOR PEDESTRIAN ACCESS THRU CONSTRUCTION ZONE. SEE SHEET DE-12
2. FOR ACCURATE RIGHT OF WAY DATA, CONTACT RIGHT OF WAY ENGINEERING AT THE DISTRICT OFFICE.
3. CONSTRUCT CURB AND GUTTER (TYPE A2-8) DURING CYPRESS AVE 55 HOUR LANE CLOSURE, SEE TRAFFIC MANAGEMENT PLAN.

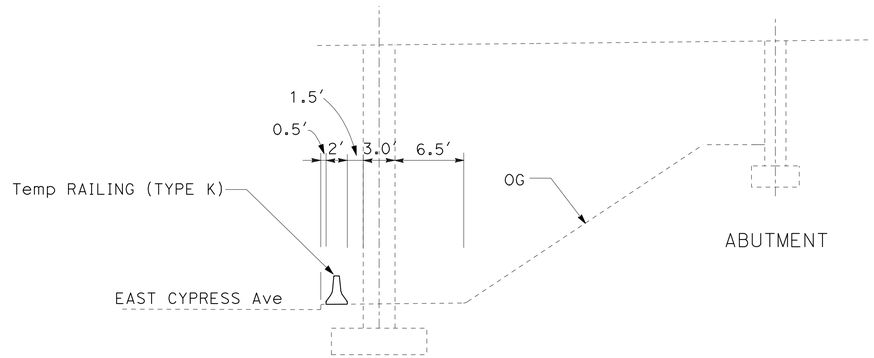

SECTION A-A

EAST CYPRESS AVENUE TRAFFIC HANDLING

NO SCALE

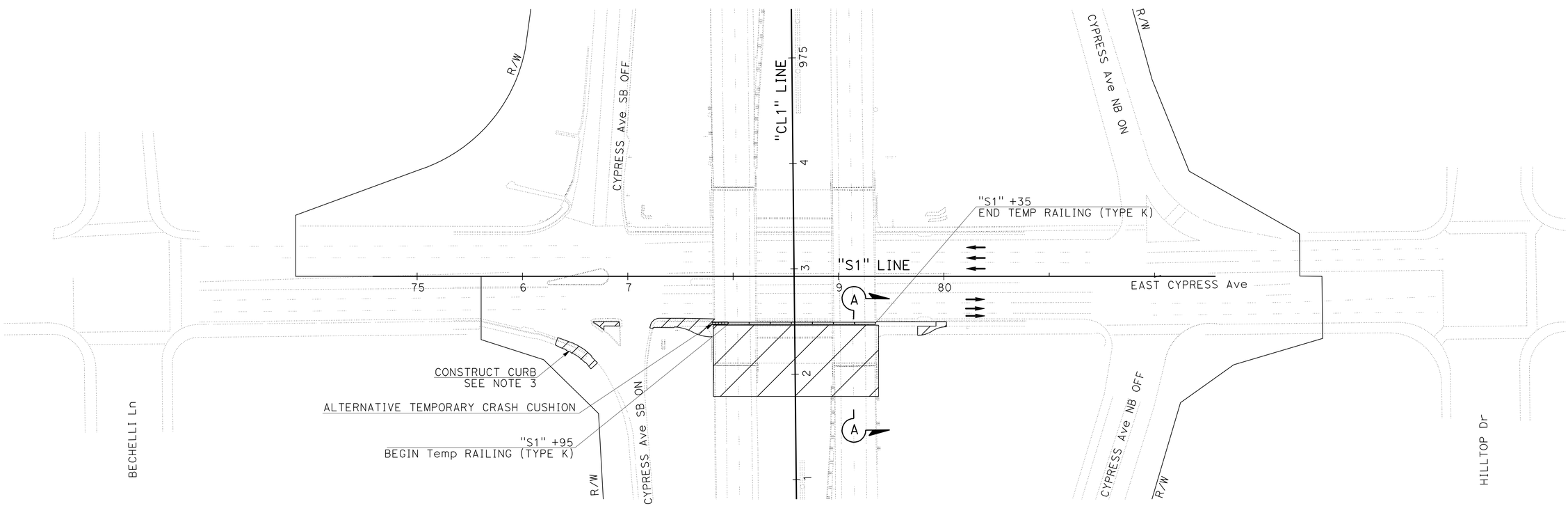

STAGE 1B

TRAFFIC HANDLING PLAN

SCALE: 1" = 50′

TH-12

THIS PLAN ACCURATE FOR TRAFFIC HANDLING ONLY

REVISED BY	DATE REVISED
JAVED IQBAL	CHRIS GAIDO
CALCULATED-DESIGNED BY	CHECKED BY
FUNCTIONAL SUPERVISOR	JOHN MARTIN

STATE OF CALIFORNIA - DEPARTMENT OF TRANSPORTATION
Caltrans
DESIGN

P:\proj2\02\4c401\design\PS&E\24c401md012.dgn

LAST REVISION 08-25-10
DATE PLOTTED => 15-DEC-2010
TIME PLOTTED => 08:13

Dist	COUNTY	ROUTE	POST MILES TOTAL PROJECT	SHEET No.	TOTAL SHEETS
02	Sha	5	R10.5/R17.5	164	311

REGISTERED CIVIL ENGINEER 10-15-10 DATE

12-13-10
PLANS APPROVAL DATE

REGISTERED PROFESSIONAL ENGINEER CHRIS S. GAIDO No. C62535 Exp 12-31-11 CIVIL STATE OF CALIFORNIA

THE STATE OF CALIFORNIA OR ITS OFFICERS OR AGENTS SHALL NOT BE RESPONSIBLE FOR THE ACCURACY OR COMPLETENESS OF SCANNED COPIES OF THIS PLAN SHEET.

NOTES:

1. QUANTITIES FOR TEMPORARY TRAFFIC STRIPE (PAINT) TEMPORARY RAILING (TYPE K), CHANNELIZERS (SURFACE MOUNTED) AND TEMPORARY CRASH CUSHIONS AS PART OF THE CONFORM TAPER ARE PART OF THE MAIN CONTRACT BID.
2. CONSTRUCTION AREA SIGNS ARE PART OF THE MAIN CONTRACT BID, EXACT LOCATION OF ALL SIGNS TO BE DETERMINED BY THE ENGINEER.
3. FOR ACCURATE RIGHT OF WAY DATA, CONTACT RIGHT OF WAY ENGINEERING AT THE DISTRICT OFFICE.

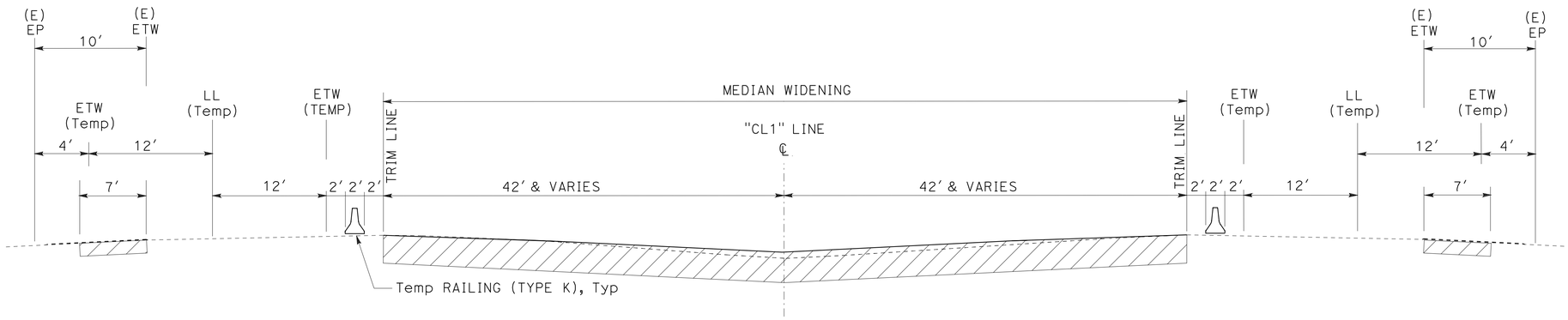

ROUTE 5
"CL1" 782+00 TO 801+90

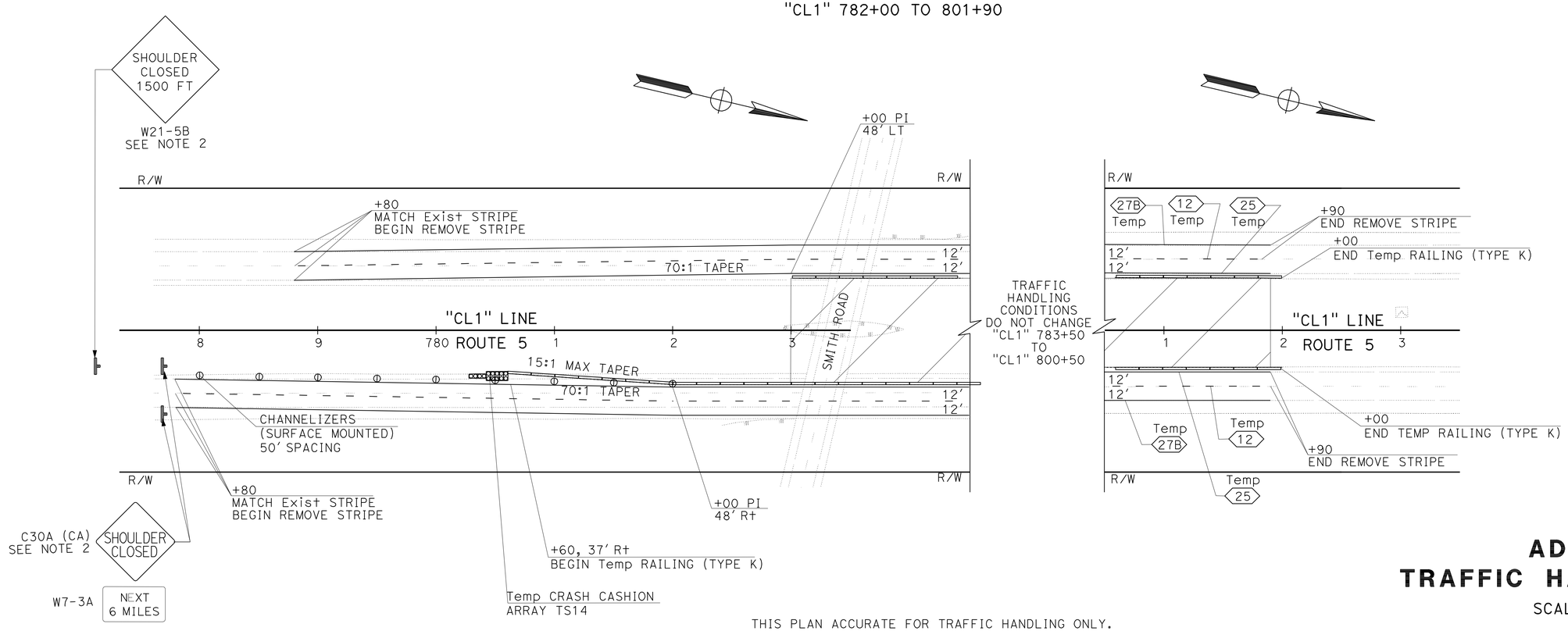

THIS PLAN ACCURATE FOR TRAFFIC HANDLING ONLY.

ADDITIVE 1
TRAFFIC HANDLING PLAN

SCALE: 1" = 50′

TH-13

REVISED BY	DATE REVISED
JOLENA ASTIN	CHRIS GAIDO
CALCULATED-DESIGNED BY	CHECKED BY
FUNCTIONAL SUPERVISOR	JOHN MARTIN

STATE OF CALIFORNIA - DEPARTMENT OF TRANSPORTATION
Caltrans®
DESIGN

P:\proj2\02\4c401\design\PS&E\24c401md013.dgn

LAST REVISION 08-25-10
DATE PLOTTED => 15-DEC-2010
TIME PLOTTED => 08:13

Dist	COUNTY	ROUTE	POST MILES TOTAL PROJECT	SHEET No.	TOTAL SHEETS
02	Sha	5	R10.5/R17.5	165	311

REGISTERED CIVIL ENGINEER 10-15-10 DATE

12-13-10
PLANS APPROVAL DATE

REGISTERED PROFESSIONAL ENGINEER CHRIS S. GAIDO No. C62535 Exp 12-31-11 CIVIL STATE OF CALIFORNIA

THE STATE OF CALIFORNIA OR ITS OFFICERS OR AGENTS SHALL NOT BE RESPONSIBLE FOR THE ACCURACY OR COMPLETENESS OF SCANNED COPIES OF THIS PLAN SHEET.

NOTES:

1. QUANTITIES FOR TEMPORARY TRAFFIC STRIPE (PAINT), TEMPORARY RAILING (TYPE K), CHANNELIZERS (SURFACE MOUNTED) AND TEMPORARY CRASH CUSHIONS AS PART OF THE CONFORM TAPER ARE PART OF THE MAIN CONTRACT BID.
2. CONSTRUCTION AREA SIGNS ARE PART OF THE MAIN CONTRACT BID, EXACT LOCATION OF ALL SIGNS TO BE DETERMINED BY THE ENGINEER.
3. FOR ACCURATE RIGHT OF WAY DATA, CONTACT RIGHT OF WAY ENGINEERING AT THE DISTRICT OFFICE.

TABLE 1
DETAIL 14A AT EXIT RAMPS

ALIGNMENT	STATION
"CL1"	775+80 TO 777+24 RT

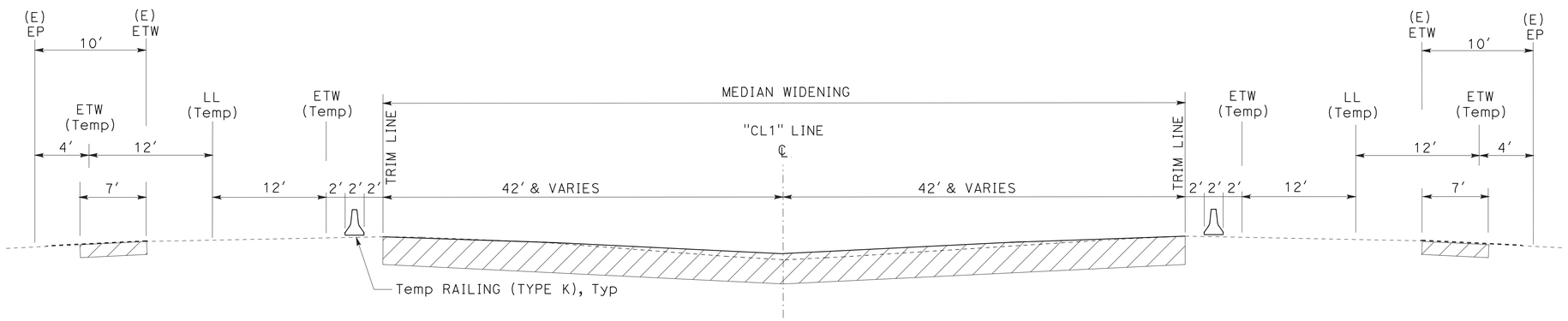

ROUTE 5
"CL1" 764+00 TO 782+00

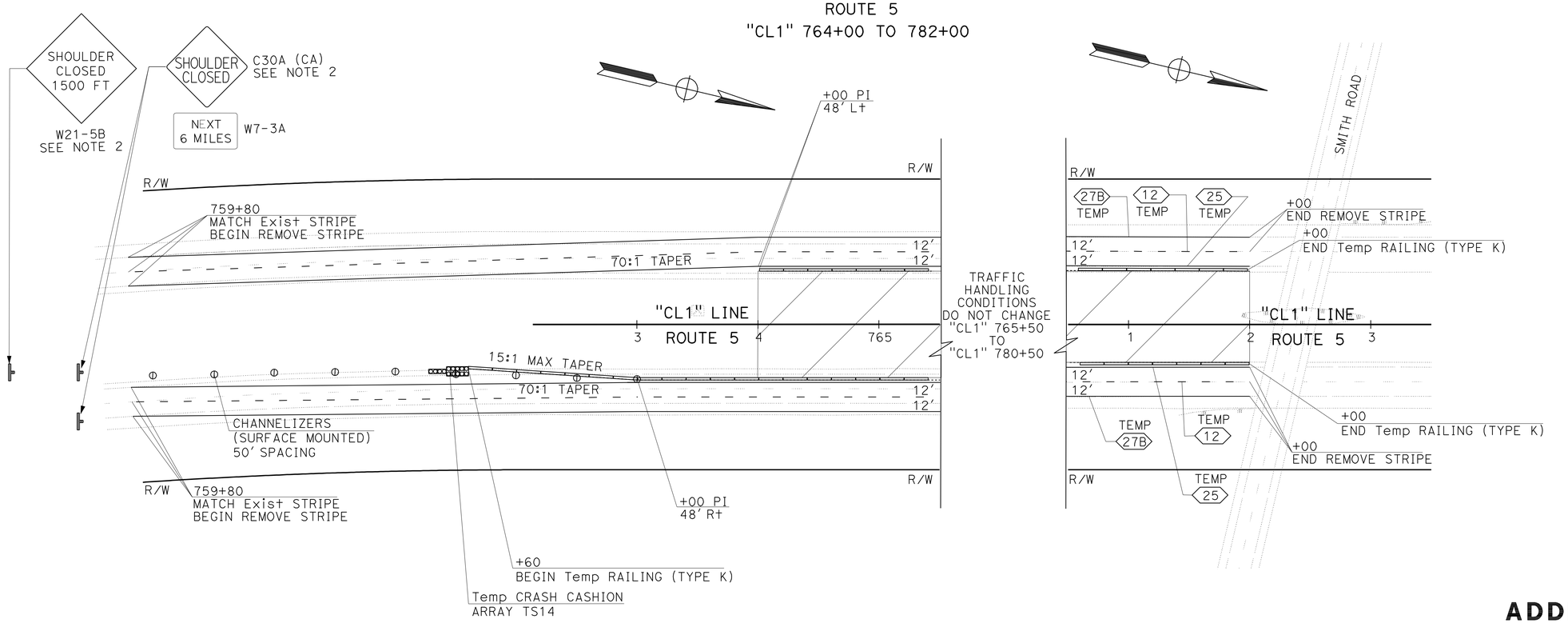

ADDITIVE 2
TRAFFIC HANDLING PLAN

SCALE: 1" = 50'

TH-14

THIS PLAN ACCURATE FOR TRAFFIC HANDLING ONLY.

REVISED BY	DATE REVISED
JOLENA ASTIN	CHRIS GAIDO
CALCULATED-DESIGNED BY	CHECKED BY
FUNCTIONAL SUPERVISOR	JOHN MARTIN

STATE OF CALIFORNIA - DEPARTMENT OF TRANSPORTATION
Caltrans
DESIGN

P:\proj2\02\4c401\design\PS&E\24c401md014.dgn

LAST REVISION 08-25-10 | DATE PLOTTED => 15-DEC-2010 | TIME PLOTTED => 08:01

Dist	COUNTY	ROUTE	POST MILES TOTAL PROJECT	SHEET No.	TOTAL SHEETS
02	Sha	5	R10.5/R17.5	166	311

REGISTERED CIVIL ENGINEER 10-15-10 DATE

12-13-10
PLANS APPROVAL DATE

REGISTERED PROFESSIONAL ENGINEER CHRIS S. GAIDO No. C62535 Exp 12-31-11 CIVIL STATE OF CALIFORNIA

THE STATE OF CALIFORNIA OR ITS OFFICERS OR AGENTS SHALL NOT BE RESPONSIBLE FOR THE ACCURACY OR COMPLETENESS OF SCANNED COPIES OF THIS PLAN SHEET.

REMOVE THERMOPLASTIC TRAFFIC STRIPE

STAGE	SHEET	STATION	REMOVE THERMOPLASTIC TRAFFIC STRIPE					REMOVE PAVEMENT MARKING
			DETAIL 12	DETAIL 25	DETAIL 25A	DETAIL 27B	DETAIL 38	
			LF	LF	LF	LF	LF	SQFT
1	TH-1	"CL1" 796+00 TO 810+50	2850	920		2850		
1	TH-2	"CL1" 810+50 TO 839+25	5770			5703	465	
1	TH-3	"CL1" 839+25 TO 955+25	23,390		99	22,665	420	
1	TH-4	"CL1" 955+25 TO 979+30	4958		160	5116	766	
2	TH-5	"CL1" 975+10 TO 983+75	1710			1608	158	
2	TH-6	"CL1" 983+75 TO 1012+75	5055	440		4683	1604	
2	TH-6	"CL1" 1012+75 TO 1027+10	298			1409		
2	TH-7	"NT7"			216	311	260	
2	TH-8	"CL1" 1027+10 TO 1055+75	2886			2779		126
2	TH-9	"CL1" 1055+75 TO 1084+75	2900	95		2900		
2	TH-10	"CL1" 1084+75 TO 1088+00	325	325		325		
		SUBTOTAL	50,142	1780	475	50,349	3673	126
		TOTAL	106,419					126

TRAFFIC CONTROL DEVICES

ALIGNMENT	STATION	CHANNELIZER (SURFACE MOUNTED)	TEMPORARY RAILING (TYPE K)	TEMPORARY CRASH CUSHION MODULE	ALTERNATIVE TEMPORARY CRASH CUSHION
		EA	LF	EA	EA
"CL1"	796+00 TO 1086+70 RT	50	28,820	28	
"CL1"	796+00 TO 1090+00 LT	63	22,380	42	
"S13"	975+05 TO 975+35	5	160		5
"NT7"	9+36 TO 17+00	10			
"S1"	77+76 TO 79+35		280		10
	TOTAL	128	51,640	70	15

TRAFFIC HANDLING QUANTITIES

STAGE	SHEET	STATION	TEMPORARY TRAFFIC STRIPE (PAINT)								TEMPORARY PAVEMENT MARKER							
											TYPE C		TYPE G				TYPE H	
			DETAIL 9	DETAIL 12	DETAIL 14A	DETAIL 25	DETAIL 25A	DETAIL 27B	DETAIL 37	DETAIL 38	DETAIL 14A	DETAIL 37	DETAIL 9	DETAIL 12	DETAIL 37	DETAIL 38	DETAIL 25	DETAIL 25A
			LF	LF	LF	LF		LF	LF	LF	EA	EA	EA	EA	EA	EA	EA	EA
1	TH-1	"CL1" 796+00 TO 810+50		2706	144	2850		2850			4			58			61	
1	TH-2	"CL1" 810+50 TO 839+25	284	5606	144	5750		5703		340	4		7	118		16	121	
1	TH-3	"CL1" 839+25 TO 955+25	313	22,435	765	23,200		23,547		830	21		8	469		36	484	5
1	TH-4	"CL1" 955+25 TO 979+30	159	4567	243	4810	160	5116		637	7		5	97		28	102	8
2	TH-5	"CL1" 975+10 TO 983+75		1710		1710		1608		158				37		8		
2	TH-6	"CL1" 983+75 TO 1012+75		4831	288	4831		4683	2425	1714	8	16		102	164	73	102	
2	TH-7	"CL1" 1012+75 TO 1027+10	196	1435		1435		1431						31			30	
2	TH-7	"NT7"					216	311		260		8				12		10
2	TH-8	"CL1" 1027+10 TO 1055+75		2721	144	2865		2845	812		4			58	30		60	
2	TH-9	"CL1" 1055+75 TO 1084+75		2756	144	2900		2900			4			59			62	
2	TH-10	"CL1" 1084+75 TO 1088+00		325		325		325						8			8	
		SUBTOTAL	952	49,092	1872	50,676	376	51,319	3237	3939	52	24	20	1037	194	173	1030	23
		TOTAL	161,463								2553							

TRAFFIC HANDLING QUANTITIES
THQ-1

REVISED BY	DATE REVISED
T. GURNEY	11-19-10

JAVED IQBAL — CHRIS GAIDO

CALCULATED-DESIGNED BY — CHECKED BY

FUNCTIONAL SUPERVISOR: JOHN MARTIN

STATE OF CALIFORNIA - DEPARTMENT OF TRANSPORTATION
Caltrans® DESIGN

P:\proj2\02\4c401\design\PS&E\24c401mf001.dgn

LAST REVISION 08-23-10 | DATE PLOTTED => 15-DEC-2010 | TIME PLOTTED => 08:01

Dist	COUNTY	ROUTE	POST MILES TOTAL PROJECT	SHEET No.	TOTAL SHEETS
02	Sha	5	R10.5/R17.5	167	311

REGISTERED CIVIL ENGINEER 10-15-10 DATE

12-13-10
PLANS APPROVAL DATE

REGISTERED PROFESSIONAL ENGINEER CHRIS S. GAIDO No. C62535 Exp 12-31-11 CIVIL STATE OF CALIFORNIA

THE STATE OF CALIFORNIA OR ITS OFFICERS OR AGENTS SHALL NOT BE RESPONSIBLE FOR THE ACCURACY OR COMPLETENESS OF SCANNED COPIES OF THIS PLAN SHEET.

NOTES:

1. PLACE 7 DAYS PRIOR TO CLOSURE, MESSAGE SHOULD READ

FRAME 1	INFO FOR CYPRESS CLOSURE	TUNE TO 1610 AM	FRAME 2

1A. PRE-NOTIFICATION PCMS: PLACE AND ACTIVATE APPROXIMATELY 12 HOURS BEFORE ROAD CLOSURE.

FRAME 1	CYPRESS AVE EAST	CLOSED TONIGHT 0 PM - 0 AM	FRAME 2

1B. PRE-NOTIFICATION PCMS: PLACE AND ACTIVATE APPROXIMATELY 12 HOURS BEFORE RAMP CLOSURE.

FRAME 1	CYPRESS AVE WEST	CLOSED TONIGHT 0 PM - 0 AM	FRAME 2

2. ACTIVATE DURING ROAD CLOSURE.

FRAME 1	USE LOCAL ROADS OR	FOLLOW DETOUR	FRAME 2

2A. ACTIVATE DURING ROAD CLOSURE.

FRAME 1	CYPRESS AVE EAST CLOSED	FOLLOW DETOUR	FRAME 2

2B. ACTIVATE DURING ROAD CLOSURE.

FRAME 1	CYPRESS AVE WEST CLOSED	FOLLOW DETOUR	FRAME 2

3. CALIFORNIA SIGN CODES ARE DESIGNATED BY (CA), OTHERWISE, FEDERAL MUTCD SIGN CODES ARE SHOWN.

4. EXACT SIGN LOCATIONS TO BE DETERMINED BY THE ENGINEER.

ABBREVIATIONS

PCMS PORTABLE CHANGEABLE MESSAGE SIGN

LEGEND:

- BARRICADE TYPE III
- TRAFFIC CONE
- EXISTING TRAFFIC FLOW
- PROPOSED TRAFFIC FLOW
- BATTERY OPERATED FLASHER
- DETOUR ROUTE
- DETOUR ROUTE
- PCMS LOCATION
- PORTABLE SIGN LOCATION
- XXX ROADWAY CLOSURE
- (#) SEE NOTES

CONSTRUCTION AREA SIGNS (PORTABLE SIGNS)

SIGN No.	CODE	PANEL SIZE (INCH)	REMARKS	No. (EA)
A	SC3(CA) SPECIAL SIGN No.1	48" x 18" 36" x 24"	↑ "DETOUR" CYPRESS Ave	3
B	M4-10 L SPECIAL SIGN No.1	48" x 18" 36" x 24"	← "DETOUR" CYPRESS Ave	5
C	M4-10 R SPECIAL SIGN No.1	48" x 18" 36" x 24"	"DETOUR" → CYPRESS Ave	8
D	M4-8A	24" x 18"	"END DETOUR"	2
			TOTAL	18

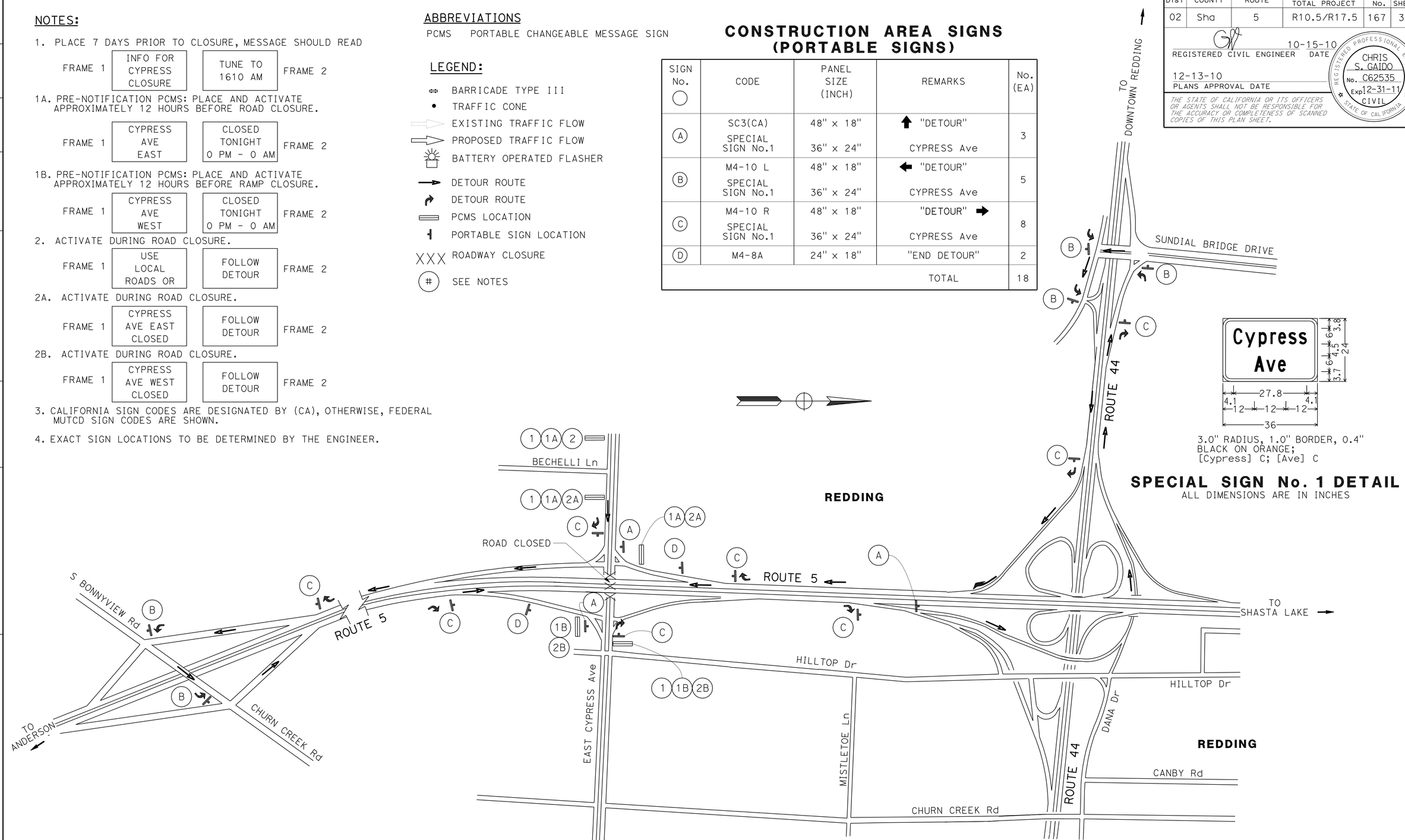

3.0" RADIUS, 1.0" BORDER, 0.4"
BLACK ON ORANGE;
[Cypress] C; [Ave] C

SPECIAL SIGN No. 1 DETAIL

ALL DIMENSIONS ARE IN INCHES

DETOUR PLAN

NO SCALE

DE-1

DETOUR FOR CLOSURE OF EB AND WB EAST CYPRESS Ave AT ROUTE 5

REVISED BY	JOLENA ASTIN
DATE REVISED	CHRIS GAIDO
CALCULATED-DESIGNED BY	
CHECKED BY	
FUNCTIONAL SUPERVISOR	JOHN MARTIN

STATE OF CALIFORNIA - DEPARTMENT OF TRANSPORTATION
Caltrans
DESIGN

P:\proj2\02\4c401\design\PS&E\24c401mg001.dgn

LAST REVISION 08-11-10 DATE PLOTTED => 15-DEC-2010 TIME PLOTTED => 08:02

BORDER LAST REVISED 7/2/2010 | USERNAME => trmikesl DGN FILE => 24c401mg001.dgn | RELATIVE BORDER SCALE IS IN INCHES 0 1 2 3 | UNIT 0315 | PROJECT NUMBER & PHASE 02000004581

Dist	COUNTY	ROUTE	POST MILES TOTAL PROJECT	SHEET No.	TOTAL SHEETS
02	Sha	5	R10.5/R17.5	168	311

REGISTERED CIVIL ENGINEER 10-15-10 DATE

12-13-10
PLANS APPROVAL DATE

REGISTERED PROFESSIONAL ENGINEER CHRIS S. GAIDO No. C62535 Exp 12-31-11 CIVIL STATE OF CALIFORNIA

THE STATE OF CALIFORNIA OR ITS OFFICERS OR AGENTS SHALL NOT BE RESPONSIBLE FOR THE ACCURACY OR COMPLETENESS OF SCANNED COPIES OF THIS PLAN SHEET.

NOTES:

1. LOCATION OF SIGNS AS DIRECTED BY THE ENGINEER
2. MOUNTING METHOD(S) FOR SIGNS TO BE APPROVED BY ENGINEER.
3. FOR COMPLETE DETOUR PLANS, SEE SHEET DE-1

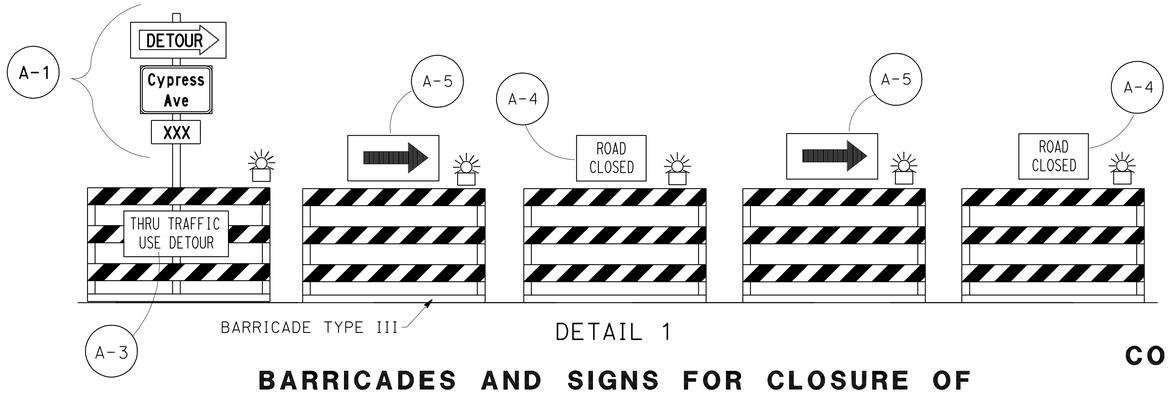

DETAIL 1

BARRICADES AND SIGNS FOR CLOSURE OF EAST CYPRESS Ave

NO SCALE

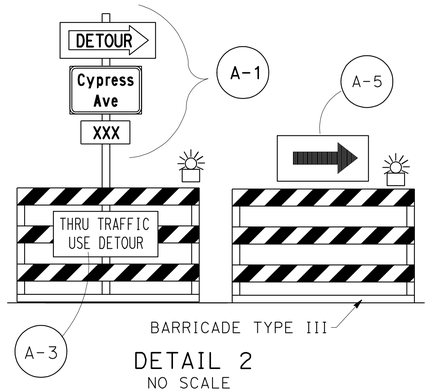

DETAIL 2
NO SCALE

CONSTRUCTION AREA SIGNS (PORTABLE SIGNS)

SIGN No. ◯	CODE	PANEL SIZE (INCH)	REMARKS	No. EA
A-1	M4-10 R SPECIAL SIGN No. 1	48" X 18" 36" X 24"	"DETOUR" ➡ CYPRESS Ave	4
A-3	SPECIAL SIGN No. 2	60" X 24"	"THRU TRAFFIC" "USE DETOUR"	4
A-4	R11-2	36" X 24"	"ROAD CLOSED"	4
A-5	W1-6 (RT)	48" X 24"	➡	6
			TOTAL	18

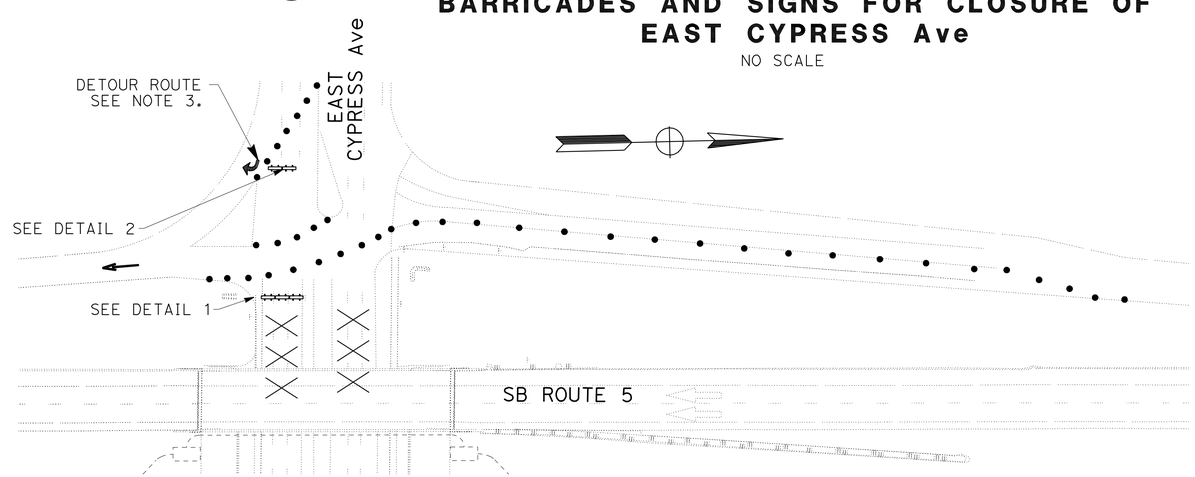

DETAIL FOR CLOSURE OF EAST CYPRESS Ave (EAST)

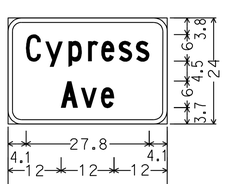

3.0" RADIUS, 1.0" BORDER, 0.4"
BLACK ON ORANGE;
[Cypress] C; [Ave] C

ALL DIMENSIONS ARE IN INCHES

SPECIAL SIGN No. 1 DETAIL

1. 6" UPPER CASE LETTERS BLACK ON ORANGE
2. ALL DIMENSIONS ARE IN INCHES

SPECIAL SIGN No. 2 DETAIL

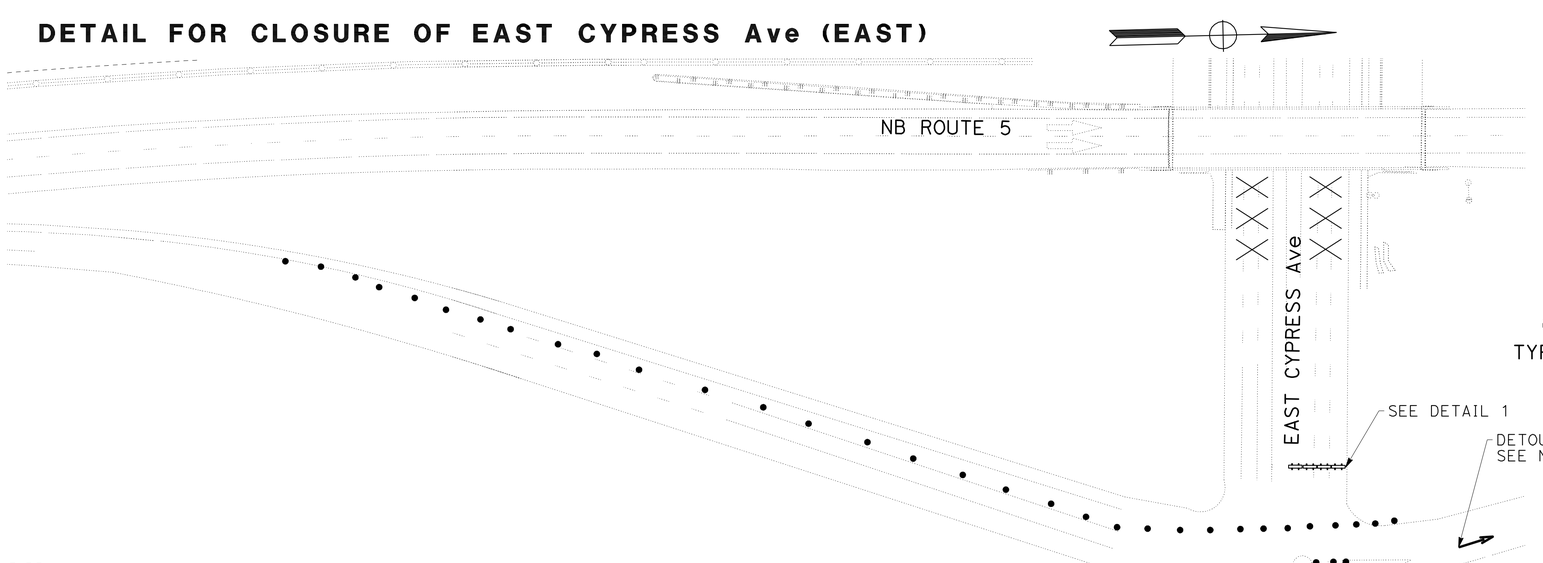

DETAIL FOR CLOSURE OF EAST CYPRESS Ave (WEST)

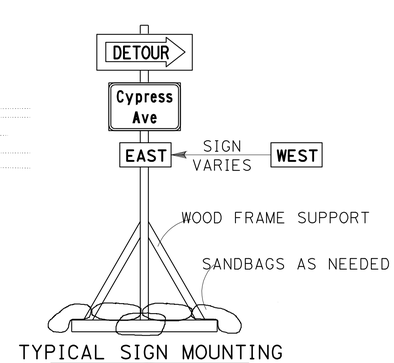

TYPICAL SIGN MOUNTING
A-1

DETOUR PLAN

NO SCALE

DE-2

REVISED BY | DATE REVISED
JOLENA ASTIN | CHRIS GAIDO
CALCULATED-DESIGNED BY | CHECKED BY
FUNCTIONAL SUPERVISOR: JOHN MARTIN

STATE OF CALIFORNIA - DEPARTMENT OF TRANSPORTATION
Caltrans DESIGN

P:\proj2\02\4c401\design\PS&E\24c401mg002.dgn

LAST REVISION | DATE PLOTTED => 15-DEC-2010 | TIME PLOTTED => 08:02
08-11-10

Dist	COUNTY	ROUTE	POST MILES TOTAL PROJECT	SHEET No.	TOTAL SHEETS
02	Sha	5	R10.5/R17.5	169	311

REGISTERED CIVIL ENGINEER 10-15-10 DATE

12-13-10
PLANS APPROVAL DATE

REGISTERED PROFESSIONAL ENGINEER CHRIS S. GAIDO No. C62535 Exp 12-31-11 CIVIL STATE OF CALIFORNIA

THE STATE OF CALIFORNIA OR ITS OFFICERS OR AGENTS SHALL NOT BE RESPONSIBLE FOR THE ACCURACY OR COMPLETENESS OF SCANNED COPIES OF THIS PLAN SHEET.

NOTES:

1. PRE-NOTIFICATION PCMS: PLACE NEAR RAMP AND ACTIVATE APPROXIMATELY 12 HOURS PRIOR TO RAMP CLOSURE.

EXIT WILL BE CLOSED	TODAY (or TONIGHT) 0 PM - 0 AM
FRAME 1	FRAME 2

2. RAMP CLOSED PCMS: MOVE PRE-NOTIFICATION PCMS APPROXIMATELY 1000 FEET BEFORE RAMP AND ACTIVATE DURING RAMP CLOSURE.

EXIT 675 CLOSED	FOLLOW DETOUR
FRAME 1	FRAME 2

3. PLACE 7 DAYS PRIOR TO RAMP CLOSURE.
4. IF AVAILABLE, EXISTING ROUTE SHIELDS AND DIRECTIONS MAY BE USED IN PLACE OF SIGNS SHOWN.
5. EXIT NUMBER SHOWN AS FOLLOWS.

EXIT NAME	EXIT NUMBER
S BONNYVIEW Rd/CHURN CREEK Rd	675

6. EXACT SIGN LOCATION TO BE DETERMINED BY THE ENGINEER.

CONSTRUCTION AREA SIGNS (PORTABLE)

CODE	PANEL SIZE (INCH)	SIGN MESSAGE
G27-2 (5) (CA)	24 x 24	ROUTE SHIELD (5)
M3-1	24 x 12	DIRECTION (NORTH)
M3-3	24 x 12	DIRECTION (SOUTH)
M4-8A	24 x 18	END DETOUR
M4-10L	48 x 18	DETOUR ⬅
M4-10R	48 x 18	DETOUR ➡
SC3 (CA)	48 x 18	DETOUR ⬆
SC6-3 (CA)	48 x 48	RAMP CLOSED - DATE TIME
SP1	24 x 30	EXIT NUMBER (SEE NOTE 5)

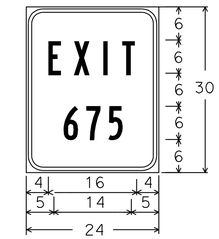

3.0" RADIUS, 0.6" BORDER, 0.4" INDENT, BLACK ON ORANGE; [EXIT 675] B

EXIT NUMBER SIGN (SP1) DETAIL

ALL DIMENSIONS ARE IN INCHES
(SEE NOTE 5)

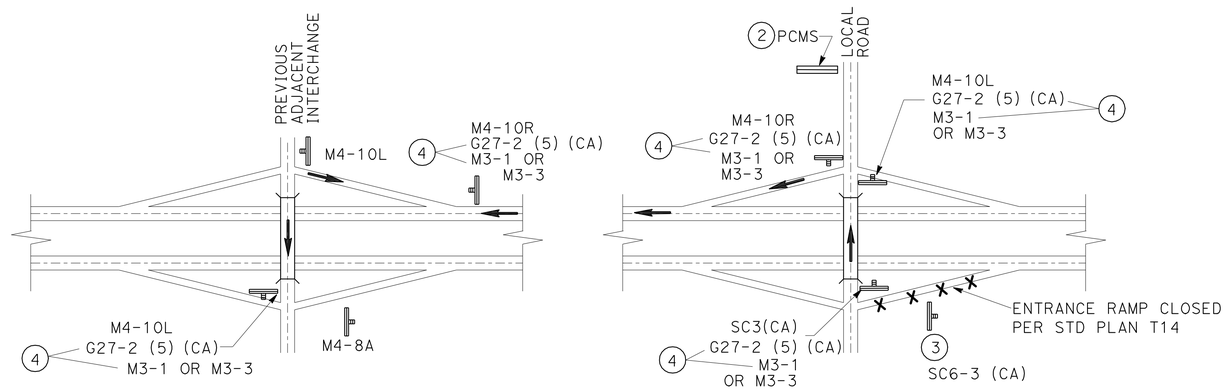

TYPICAL ENTRANCE RAMP DETOUR SIGNING

NB - FROM S BONNYVIEW/CHURN CREEK Rd
SB - FROM S BONNYVIEW/CHURN CREEK Rd

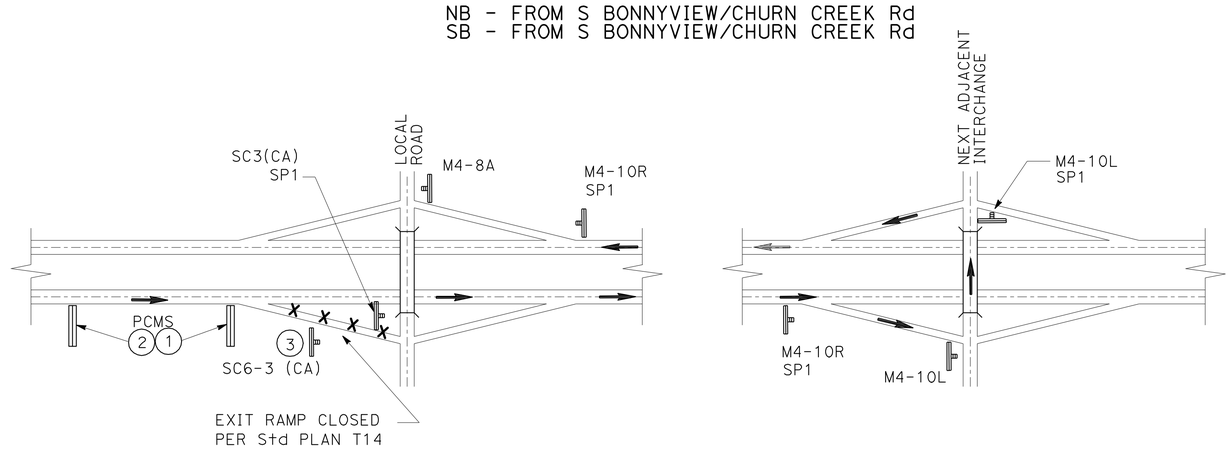

TYPICAL EXIT RAMP DETOUR SIGNING

NB - TO S BONNYVIEW/CHURN CREEK Rd
SB - TO S BONNYVIEW/CHURN CREEK Rd

DETOUR PLAN

NO SCALE

DE-3

STATE OF CALIFORNIA - DEPARTMENT OF TRANSPORTATION
Caltrans® DESIGN

FUNCTIONAL SUPERVISOR: JOHN MARTIN
CALCULATED-DESIGNED BY: JOLENA ASTIN
CHECKED BY: CHRIS GAIDO
REVISED BY / DATE REVISED

P:\proj2\02\4c401\design\PS&E\24c401mg003.dgn

LAST REVISION 08-11-10 | DATE PLOTTED => 15-DEC-2010 | TIME PLOTTED => 08:02

Dist	COUNTY	ROUTE	POST MILES TOTAL PROJECT	SHEET No.	TOTAL SHEETS
02	Sha	5	R10.5/R17.5	170	311

REGISTERED CIVIL ENGINEER 10-15-10 DATE

12-13-10
PLANS APPROVAL DATE

REGISTERED PROFESSIONAL ENGINEER CHRIS S. GAIDO No. C62535 Exp 12-31-11 CIVIL STATE OF CALIFORNIA

THE STATE OF CALIFORNIA OR ITS OFFICERS OR AGENTS SHALL NOT BE RESPONSIBLE FOR THE ACCURACY OR COMPLETENESS OF SCANNED COPIES OF THIS PLAN SHEET.

NOTES:

1. PRE-NOTIFICATION PCMS: PLACE NEAR RAMP AND ACTIVATE APPROXIMATELY 12 HOURS BEFORE RAMP CLOSURE.

EXIT WILL BE CLOSED	TONIGHT 0 PM - 0 AM
FRAME 1	FRAME 2

2. RAMP CLOSED PCMS: MOVE PRE-NOTIFICATION PCMS APPROXIMATELY 1000' BEFORE RAMP AND ACTIVATE DURING RAMP CLOSURE.

CYPRESS AVE EXIT CLOSED	FOLLOW DETOUR
FRAME 1	FRAME 2

3. PLACE 7 DAYS BEFORE RAMP CLOSURE.
4. CALIFORNIA SIGN CODES ARE DESIGNATED BY (CA), OTHERWISE, FEDERAL MUTCD SIGN CODES ARE SHOWN.
5. EXACT SIGN LOCATIONS TO BE DETERMINED BY THE ENGINEER.

CONSTRUCTION AREA SIGNS (PORTABLE SIGNS)

SIGN No. ◯	CODE	PANEL SIZE (INCH)	REMARKS	No. (EA)
A	SC6-3(CA) OR SC6-4(CA)	48" x 48" 48" x 60"	"RAMP CLOSED" "DATE-TIME"	1
B	SC3(CA) SPECIAL SIGN No. 1	48" x 18" 36" x 24"	↑ "DETOUR" CYPRESS AVE	2
C	M4-10 L SPECIAL SIGN No. 1	48" x 18" 36" x 24"	← "DETOUR" CYPRESS AVE	3
D	M4-10 R SPECIAL SIGN No. 1	48" x 18" 36" x 24"	"DETOUR" → CYPRESS AVE	4
E	M4-8A	24" x 18"	"END DETOUR"	1
			TOTAL	11

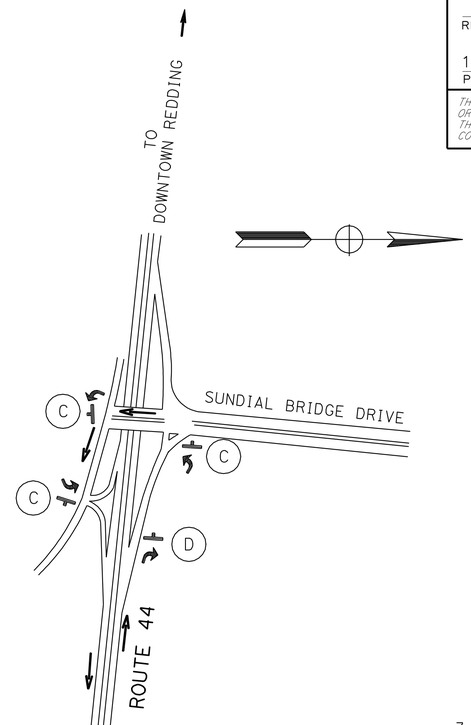

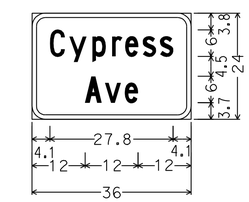

3.0" RADIUS, 1.0" BORDER, 0.4" BLACK ON ORANGE; [Cypress] C; [Ave] C

SPECIAL SIGN No. 1 DETAIL

ALL DIMENSIONS ARE IN INCHES

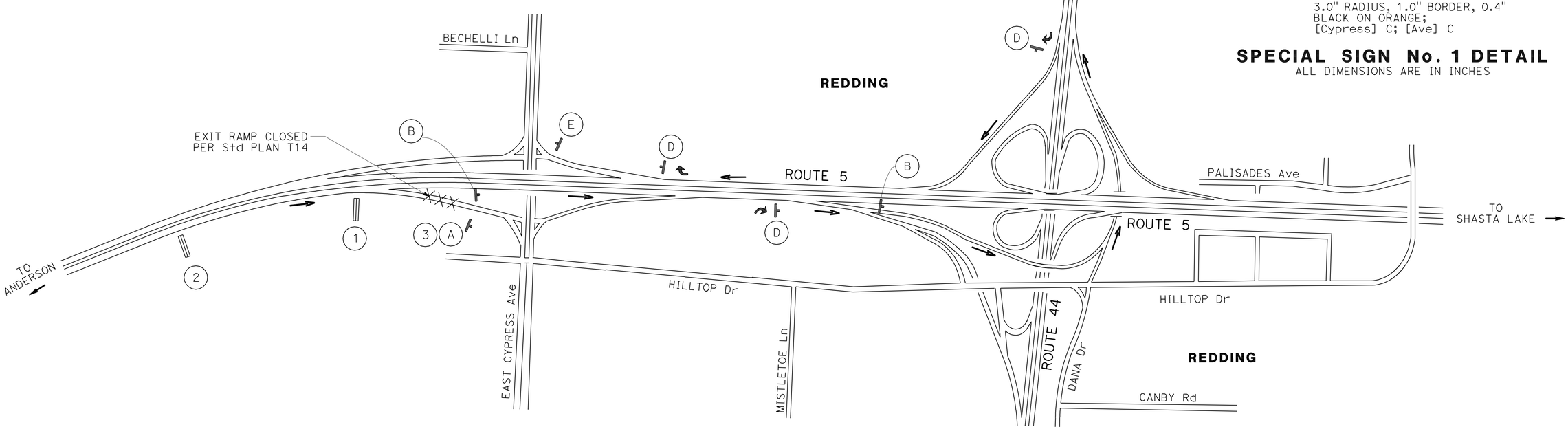

DETOUR PLAN

NO SCALE

DE-4

DETOUR FOR CLOSURE OF NB ROUTE 5 EXIT RAMP TO EAST CYPRESS Ave

REVISED BY	DATE REVISED
JOLENA ASTIN	CHRIS GAIDO
CALCULATED-DESIGNED BY	CHECKED BY
FUNCTIONAL SUPERVISOR	JOHN MARTIN

STATE OF CALIFORNIA - DEPARTMENT OF TRANSPORTATION
Caltrans® DESIGN

P:\proj2\02\4c401\design\PS&E\24c401mg004.dgn

LAST REVISION 08-11-10 | DATE PLOTTED => 15-DEC-2010 | TIME PLOTTED => 08:02

Dist	COUNTY	ROUTE	POST MILES TOTAL PROJECT	SHEET No.	TOTAL SHEETS
02	Sha	5	R10.5/R17.5	171	311

REGISTERED CIVIL ENGINEER 10-15-10 DATE

12-13-10
PLANS APPROVAL DATE

REGISTERED PROFESSIONAL ENGINEER CHRIS S. GAIDO No. C62535 Exp 12-31-11 CIVIL STATE OF CALIFORNIA

THE STATE OF CALIFORNIA OR ITS OFFICERS OR AGENTS SHALL NOT BE RESPONSIBLE FOR THE ACCURACY OR COMPLETENESS OF SCANNED COPIES OF THIS PLAN SHEET.

NOTES:

1. RAMP CLOSED PCMS: PLACE BEFORE OPEN ENTRANCE RAMP AND ACTIVATE DURING RAMP CLOSURE.

NB I-5 ON RAMP CLOSED	FOLLOW DETOUR
FRAME 1	FRAME 2

2. PLACE 7 DAYS BEFORE RAMP CLOSURE.
3. CALIFORNIA SIGN CODES ARE DESIGNATED BY (CA), OTHERWISE, FEDERAL MUTCD SIGN CODES ARE SHOWN.
4. EXACT SIGN LOCATIONS TO BE DETERMINED BY THE ENGINEER.
5. IF AVAILABLE, EXISTING ROUTE SHIELDS AND DIRECTIONS MAY BE USED IN PLACE OF SIGNS SHOWN.

CONSTRUCTION AREA SIGNS (PORTABLE SIGNS)

SIGN No. ◯	CODE	PANEL SIZE (INCH)	REMARKS	No. (EA)
A	SC6-3(CA) OR SC6-4(CA)	48" x 48" 48" x 60"	"RAMP CLOSED" "DATE-TIME"	1
B	SC3(CA) G27-2 (5) (CA) M3-1	48" x 18" 24" x 24" 24" x 12"	↑ "DETOUR" ROUTE SHIELD "5" "NORTH"	1
C	M4-10 L G27-2 (5) (CA) M3-1	48" x 18" 24" x 24" 24" x 12"	← "DETOUR" ROUTE SHIELD "5" "NORTH"	3
D	M4-10 R G27-2 (5) (CA) M3-1	48" x 18" 24" x 24" 24" x 12"	"DETOUR" → ROUTE SHIELD "5" "NORTH"	2
E	M4-8A	24" x 18"	"END DETOUR"	1
			TOTAL	8

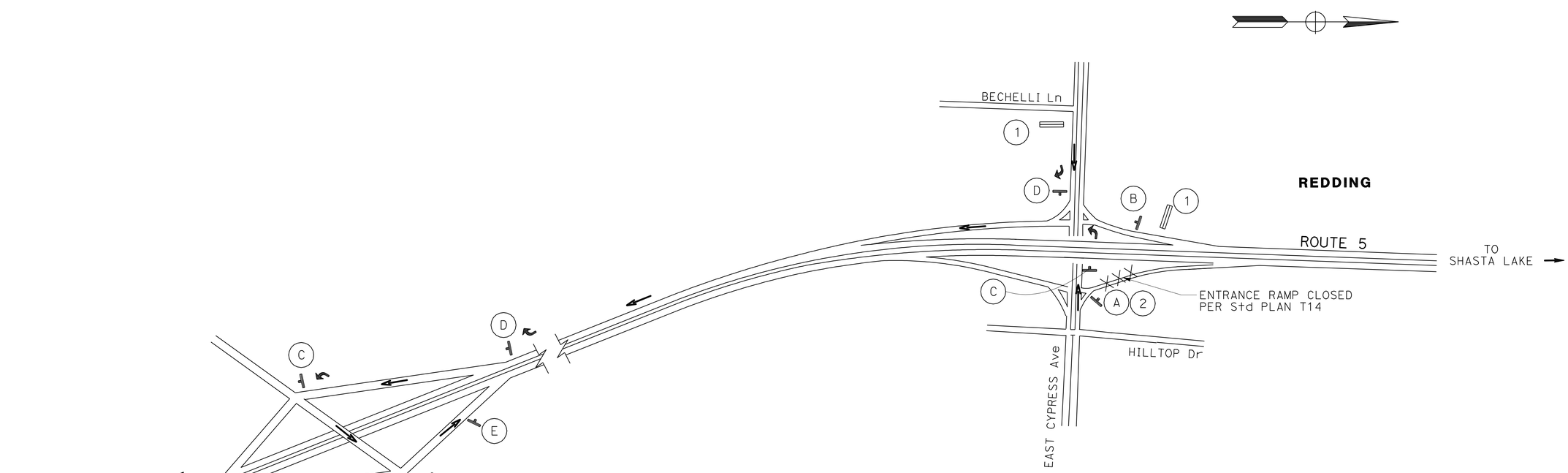

DETOUR PLAN

NO SCALE

DE-5

DETOUR FOR CLOSURE OF NB ROUTE 5 ENTRANCE RAMP FROM EAST CYPRESS Ave

STATE OF CALIFORNIA - DEPARTMENT OF TRANSPORTATION
Caltrans DESIGN

FUNCTIONAL SUPERVISOR: JOHN MARTIN
CALCULATED-DESIGNED BY: JOLENA ASTIN
CHECKED BY: CHRIS GAIDO
REVISED BY
DATE REVISED

P:\proj2\02\4c401\design\PS&E\24c401mg005.dgn

LAST REVISION 08-11-10 | DATE PLOTTED => 15-DEC-2010 | TIME PLOTTED => 08:02

Dist	COUNTY	ROUTE	POST MILES TOTAL PROJECT	SHEET No.	TOTAL SHEETS
02	Sha	5	R10.5/R17.5	172	311

REGISTERED CIVIL ENGINEER 10-15-10 DATE

12-13-10
PLANS APPROVAL DATE

REGISTERED PROFESSIONAL ENGINEER CHRIS S. GAIDO No. C62535 Exp 12-31-11 CIVIL STATE OF CALIFORNIA

THE STATE OF CALIFORNIA OR ITS OFFICERS OR AGENTS SHALL NOT BE RESPONSIBLE FOR THE ACCURACY OR COMPLETENESS OF SCANNED COPIES OF THIS PLAN SHEET.

NOTES:

1. PRE-NOTIFICATION PCMS: PLACE NEAR RAMP AND ACTIVATE APPROXIMATELY 12 HOURS BEFORE RAMP CLOSURE.

EXIT WILL BE CLOSED	TONIGHT 0 PM - 0 AM
FRAME 1	FRAME 2

2. RAMP CLOSED PCMS: MOVE PRE-NOTIFICATION PCMS APPROXIMATELY 1000′ BEFORE RAMP AND ACTIVATE DURING RAMP CLOSURE.

CYPRESS AVE EXIT CLOSED	FOLLOW DETOUR
FRAME 1	FRAME 2

3. PLACE 7 DAYS BEFORE RAMP CLOSURE.
4. CALIFORNIA SIGN CODES ARE DESIGNATED BY (CA), OTHERWISE, FEDERAL MUTCD SIGN CODES ARE SHOWN.
5. EXACT SIGN LOCATIONS TO BE DETERMINED BY THE ENGINEER.

CONSTRUCTION AREA SIGNS (PORTABLE SIGNS)

SIGN No. ◯	CODE	PANEL SIZE (INCH)	REMARKS	No. (EA)
A	SC6-3(CA) OR SC6-4(CA)	48" x 48" 48" x 60"	"RAMP CLOSED" "DATE-TIME"	1
B	SC3(CA) SPECIAL SIGN No. 1	48" x 18" 36" x 24"	↑ "DETOUR" CYPRESS AVE	1
C	M4-10 L SPECIAL SIGN No. 1	48" x 18" 36" x 24"	← "DETOUR" CYPRESS AVE	2
D	M4-10 R SPECIAL SIGN No. 1	48" x 18" 36" x 24"	"DETOUR" → CYPRESS AVE	2
E	M4-8A	24" x 18"	"END DETOUR"	1
			TOTAL	7

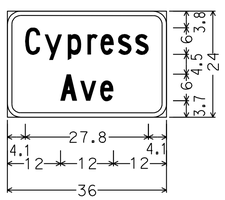

3.0" RADIUS, 1.0" BORDER, 0.4"
BLACK ON ORANGE;
[Cypress] C; [Ave] C

SPECIAL SIGN No. 1 DETAIL

ALL DIMENSIONS ARE IN INCHES

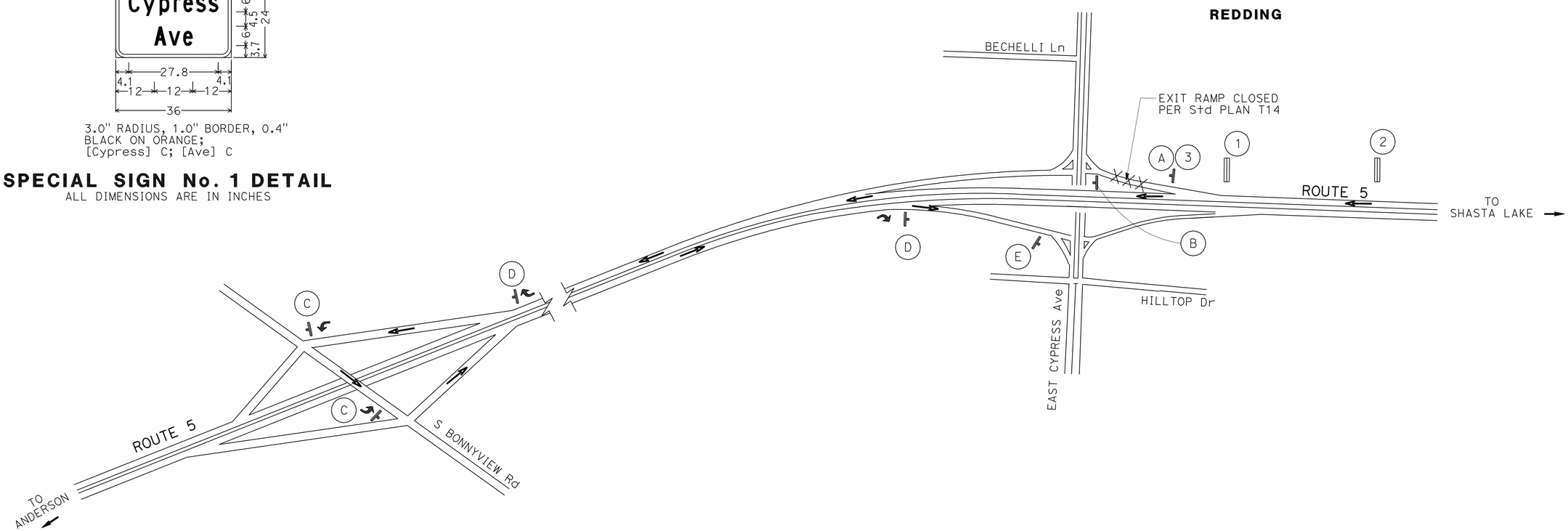

DETOUR PLAN

NO SCALE

DE-6

DETOUR FOR CLOSURE OF SB ROUTE 5 EXIT RAMP TO EAST CYPRESS Ave

REVISED BY | DATE REVISED
JOLENA ASTIN | CHRIS GAIDO
CALCULATED-DESIGNED BY | CHECKED BY
FUNCTIONAL SUPERVISOR: JOHN MARTIN

STATE OF CALIFORNIA - DEPARTMENT OF TRANSPORTATION
DESIGN
Caltrans

P:\proj2\02\4c401\design\PS&E\24c401mg006.dgn

LAST REVISION 08-11-10 | DATE PLOTTED => 15-DEC-2010 | TIME PLOTTED => 08:02

Dist	COUNTY	ROUTE	POST MILES TOTAL PROJECT	SHEET No.	TOTAL SHEETS
02	Sha	5	R10.5/R17.5	173	311

REGISTERED CIVIL ENGINEER 10-15-10 DATE

12-13-10
PLANS APPROVAL DATE

REGISTERED PROFESSIONAL ENGINEER CHRIS S. GAIDO No. C62535 Exp 12-31-11 CIVIL STATE OF CALIFORNIA

THE STATE OF CALIFORNIA OR ITS OFFICERS OR AGENTS SHALL NOT BE RESPONSIBLE FOR THE ACCURACY OR COMPLETENESS OF SCANNED COPIES OF THIS PLAN SHEET.

NOTES:

1. RAMP CLOSED PCMS: PLACE BEFORE OPEN ENTRANCE RAMP AND ACTIVATE DURING RAMP CLOSURE.

SB I-5 ON RAMP CLOSED	FOLLOW DETOUR
FRAME 1	FRAME 2

2. PLACE 7 DAYS BEFORE RAMP CLOSURE.
3. CALIFORNIA SIGN CODES ARE DESIGNATED BY (CA), OTHERWISE, FEDERAL MUTCD SIGN CODES ARE SHOWN.
4. EXACT SIGN LOCATIONS TO BE DETERMINED BY THE ENGINEER.
5. IF AVAILABLE, EXISTING ROUTE SHIELDS AND DIRECTIONS MAY BE USED IN PLACE OF SIGNS SHOWN.

CONSTRUCTION AREA SIGNS (PORTABLE SIGNS)

SIGN No. ◯	CODE	PANEL SIZE (INCH)	REMARKS	No. (EA)
A	SC6-3(CA) OR SC6-4(CA)	48" x 48" 48" x 60"	"RAMP CLOSED" "DATE-TIME"	1
B	SC3(CA) G27-2 (5) (CA) M3-3	48" x 18" 24" x 24" 24" x 12"	↑ "DETOUR" ROUTE SHIELD "5" "SOUTH"	1
C	M4-10 L G27-2 (5) (CA) M3-3	48" x 18" 24" x 24" 24" x 12"	← "DETOUR" ROUTE SHIELD "5" ""SOUTH""	5
D	M4-10 R G27-2 (5) (CA) M3-3	48" x 18" 24" x 24" 24" x 12"	"DETOUR" → ROUTE SHIELD "5" "SOUTH"	4
E	M4-8A	24" x 18"	"END DETOUR"	1
			TOTAL	12

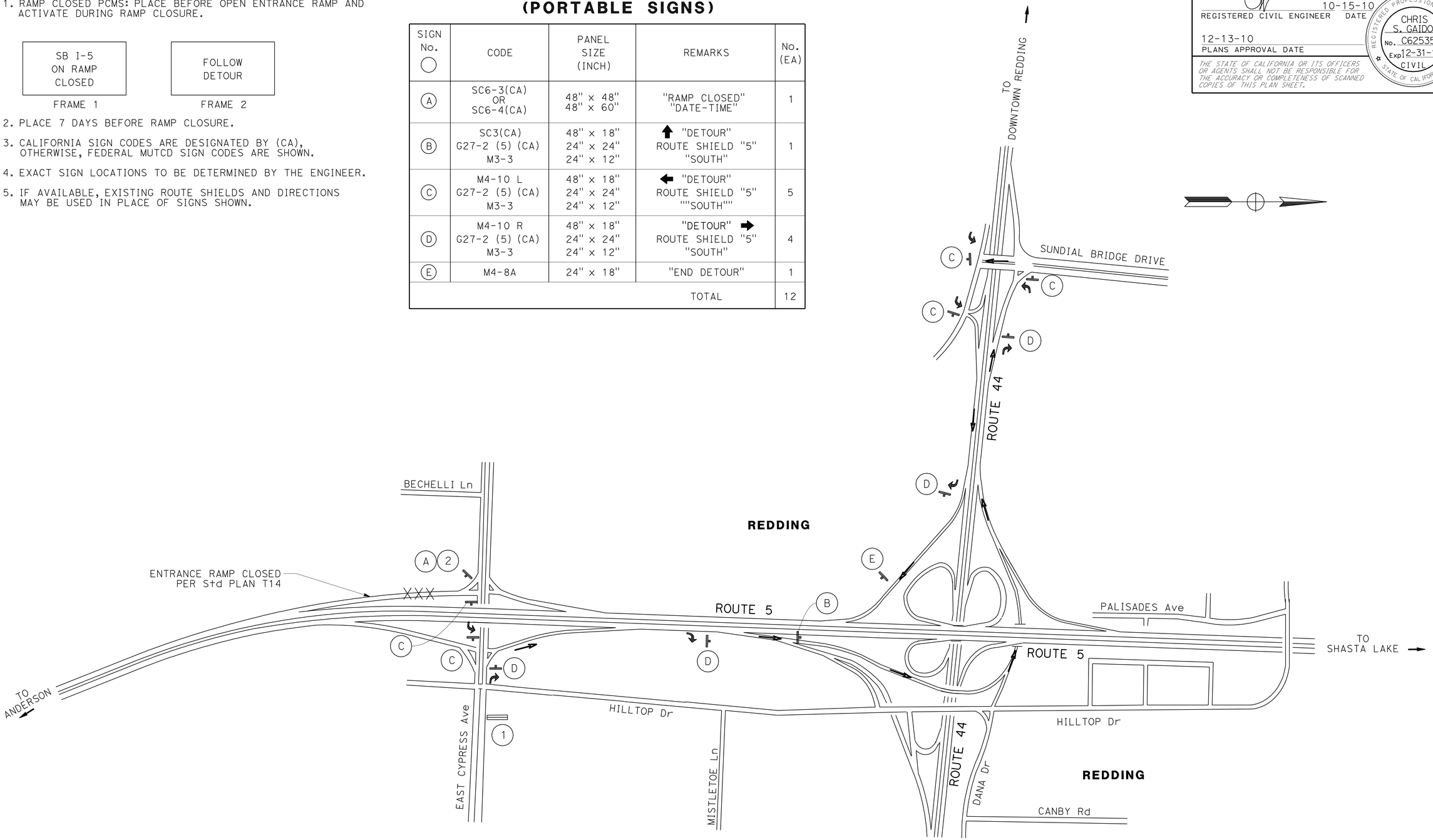

DETOUR FOR CLOSURE OF SB ROUTE 5 ENTRANCE RAMP FROM EAST CYPRESS Ave

DETOUR PLAN
NO SCALE
DE-7

STATE OF CALIFORNIA - DEPARTMENT OF TRANSPORTATION
DESIGN
FUNCTIONAL SUPERVISOR: JOHN MARTIN
CALCULATED-DESIGNED BY: JOLENA ASTIN
CHECKED BY: CHRIS GAIDO
REVISED BY / DATE REVISED

P:\proj2\02\4c401\design\PS&E\24c401mg007.dgn

LAST REVISION 08-11-10 | DATE PLOTTED => 15-DEC-2010 | TIME PLOTTED => 08:02

BORDER LAST REVISED 7/2/2010 | USERNAME => trmikesl | DGN FILE => 24c401mg007.dgn | RELATIVE BORDER SCALE IS IN INCHES 0 1 2 3 | UNIT 0315 | PROJECT NUMBER & PHASE 02000004581

Dist	COUNTY	ROUTE	POST MILES TOTAL PROJECT	SHEET No.	TOTAL SHEETS
02	Sha	5	R10.5/R17.5	174	311

REGISTERED CIVIL ENGINEER 10-15-10 DATE

12-13-10
PLANS APPROVAL DATE

REGISTERED PROFESSIONAL ENGINEER CHRIS S. GAIDO No. C62535 Exp 12-31-11 CIVIL STATE OF CALIFORNIA

THE STATE OF CALIFORNIA OR ITS OFFICERS OR AGENTS SHALL NOT BE RESPONSIBLE FOR THE ACCURACY OR COMPLETENESS OF SCANNED COPIES OF THIS PLAN SHEET.

NOTES:

1. PRE-NOTIFICATION PCMS: PLACE NEAR RAMP AND ACTIVATE APPROXIMATELY 12 HOURS BEFORE RAMP CLOSURE.

EXIT WILL BE CLOSED	TONIGHT 0 PM - 0 AM
FRAME 1	FRAME 2

2. RAMP CLOSED PCMS: MOVE PRE-NOTIFICATION PCMS APPROXIMATELY 1000' BEFORE RAMP AND ACTIVATE DURING RAMP CLOSURE.

EXIT 678A CLOSED	FOLLOW DETOUR
FRAME 1	FRAME 2

3. PLACE 7 DAYS BEFORE RAMP CLOSURE.
4. CALIFORNIA SIGN CODES ARE DESIGNATED BY (CA), OTHERWISE, FEDERAL MUTCD SIGN CODES ARE SHOWN.
5. EXACT SIGN LOCATIONS TO BE DETERMINED BY THE ENGINEER.

CONSTRUCTION AREA SIGNS (PORTABLE SIGNS)

SIGN No. ◯	CODE	PANEL SIZE (INCH)	REMARKS	No. (EA)
Ⓐ	SC6-3(CA) OR SC6-4(CA)	48" x 48" 48" x 60"	"RAMP CLOSED" "DATE-TIME"	1
Ⓑ	SC3(CA) (SP2)	48" x 18" 30" x 30"	↑ "DETOUR" EXIT 678A	1
Ⓒ	M4-10 L (SP2)	48" x 18" 30" x 30"	← "DETOUR" EXIT 678A	2
Ⓓ	M4-10 R (SP2)	48" x 18" 30" x 30"	"DETOUR" → EXIT 678A	1
Ⓔ	M4-8A	24" x 18"	"END DETOUR"	1
			TOTAL	6

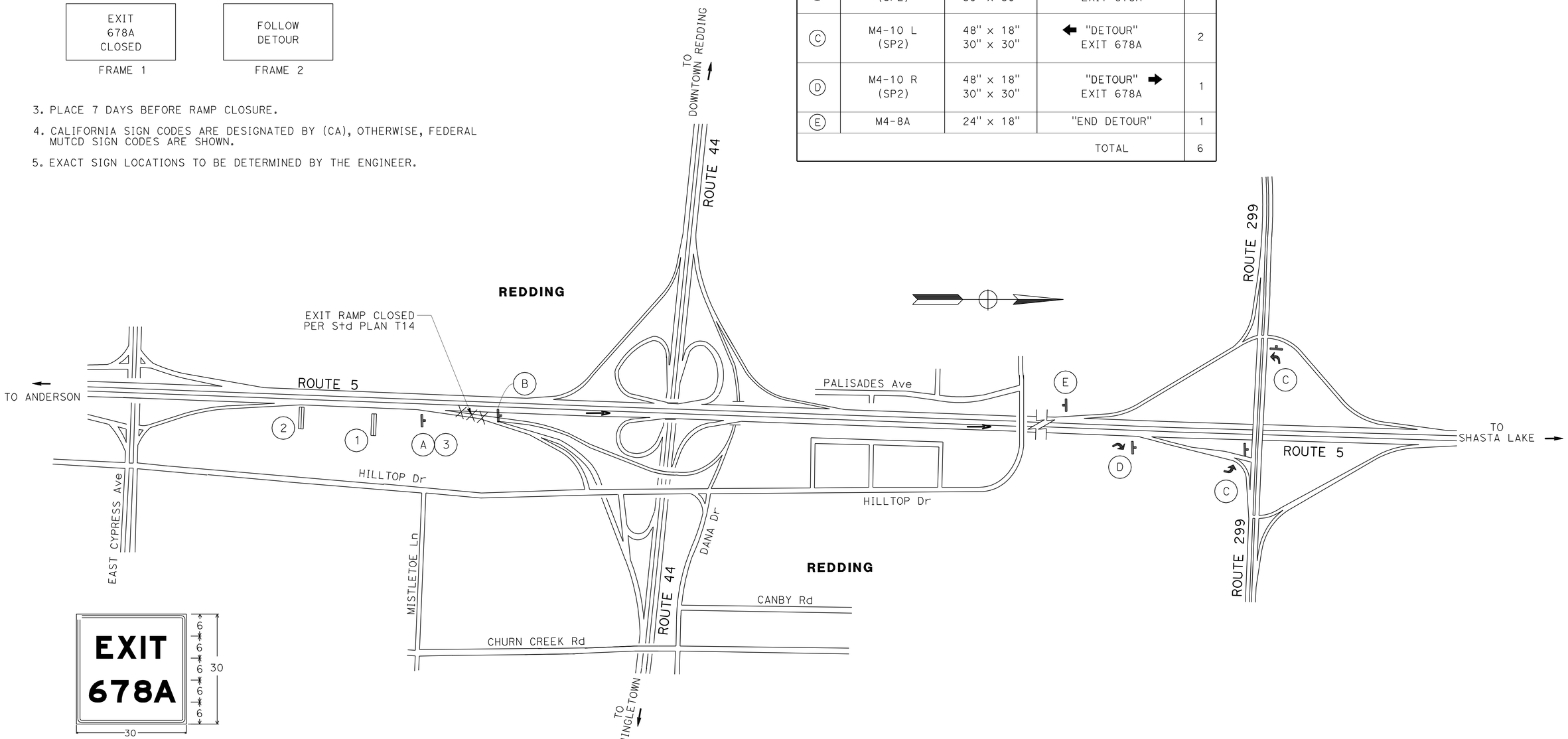

1.5" RADIUS, 0.6" BORDER, 0.4" INDENT, BLACK ON ORANGE; [EXIT] E MOD; [678 A] E MOD;

EXIT NUMBER SIGN (SP2) DETAIL
ALL DIMENSIONS ARE IN INCHES

DETOUR FOR CLOSURE OF NB ROUTE 5 EXIT RAMP 678A TO HILLTOP DRIVE/EB 44 CONNECTOR/WB 44 CONNECTOR

DETOUR PLAN
NO SCALE
DE-8

REVISED BY	DATE REVISED
JOLENA ASTIN	CHRIS GAIDO

CALCULATED-DESIGNED BY / CHECKED BY

FUNCTIONAL SUPERVISOR: JOHN MARTIN

STATE OF CALIFORNIA - DEPARTMENT OF TRANSPORTATION
DESIGN
Caltrans

P:\proj2\02\4c401\design\PS&E\24c401mg008.dgn

LAST REVISION 08-11-10 | DATE PLOTTED => 15-DEC-2010 | TIME PLOTTED => 08:13

Dist	COUNTY	ROUTE	POST MILES TOTAL PROJECT	SHEET No.	TOTAL SHEETS
02	Sha	5	R10.5/R17.5	175	311

REGISTERED CIVIL ENGINEER 10-15-10 DATE

12-13-10
PLANS APPROVAL DATE

REGISTERED PROFESSIONAL ENGINEER CHRIS S. GAIDO No. C62535 Exp 12-31-11 CIVIL STATE OF CALIFORNIA

THE STATE OF CALIFORNIA OR ITS OFFICERS OR AGENTS SHALL NOT BE RESPONSIBLE FOR THE ACCURACY OR COMPLETENESS OF SCANNED COPIES OF THIS PLAN SHEET.

NOTES:

1. PRE-NOTIFICATION PCMS: PLACE NEAR RAMP AND ACTIVATE APPROXIMATELY 12 HOURS BEFORE RAMP CLOSURE.

RAMP TO NB I-5	CLOSED TONIGHT 0 PM - 0 AM
FRAME 1	FRAME 2

2. RAMP CLOSED PCMS: MOVE PRE-NOTIFICATION PCMS APPROXIMATELY 1000' BEFORE RAMP AND ACTIVATE DURING RAMP CLOSURE.

RAMP TO NB I-5 CLOSED	FOLLOW DETOUR
FRAME 1	FRAME 2

3. PLACE 7 DAYS BEFORE RAMP CLOSURE.
4. CALIFORNIA SIGN CODES ARE DESIGNATED BY (CA), OTHERWISE, FEDERAL MUTCD SIGN CODES ARE SHOWN.
5. EXACT SIGN LOCATIONS TO BE DETERMINED BY THE ENGINEER.
6. IF AVAILABLE, EXISTING ROUTE SHIELDS AND DIRECTIONS MAY BE USED IN PLACE OF SIGNS SHOWN.

CONSTRUCTION AREA SIGNS (PORTABLE SIGNS)

SIGN No. ◯	CODE	PANEL SIZE (INCH)	REMARKS	No. (EA)
A	SC6-3(CA) OR SC6-4(CA)	48" x 48" 48" x 60"	"RAMP CLOSED" "DATE-TIME"	1
B	SC3(CA) G27-2 (5) (CA) M3-1	48" x 18" 24" x 24" 24" x 12"	↑ "DETOUR" ROUTE SHIELD "5" "NORTH"	3
C	M4-10 L G27-2 (5) (CA) M3-1	48" x 18" 24" x 24" 24" x 12"	← "DETOUR" ROUTE SHIELD "5" "NORTH"	3
D	M4-10 R G27-2 (5) (CA) M3-1	48" x 18" 24" x 24" 24" x 12"	"DETOUR" → ROUTE SHIELD "5" "NORTH"	2
E	M4-8A	24" x 18"	"END DETOUR"	1
			TOTAL	10

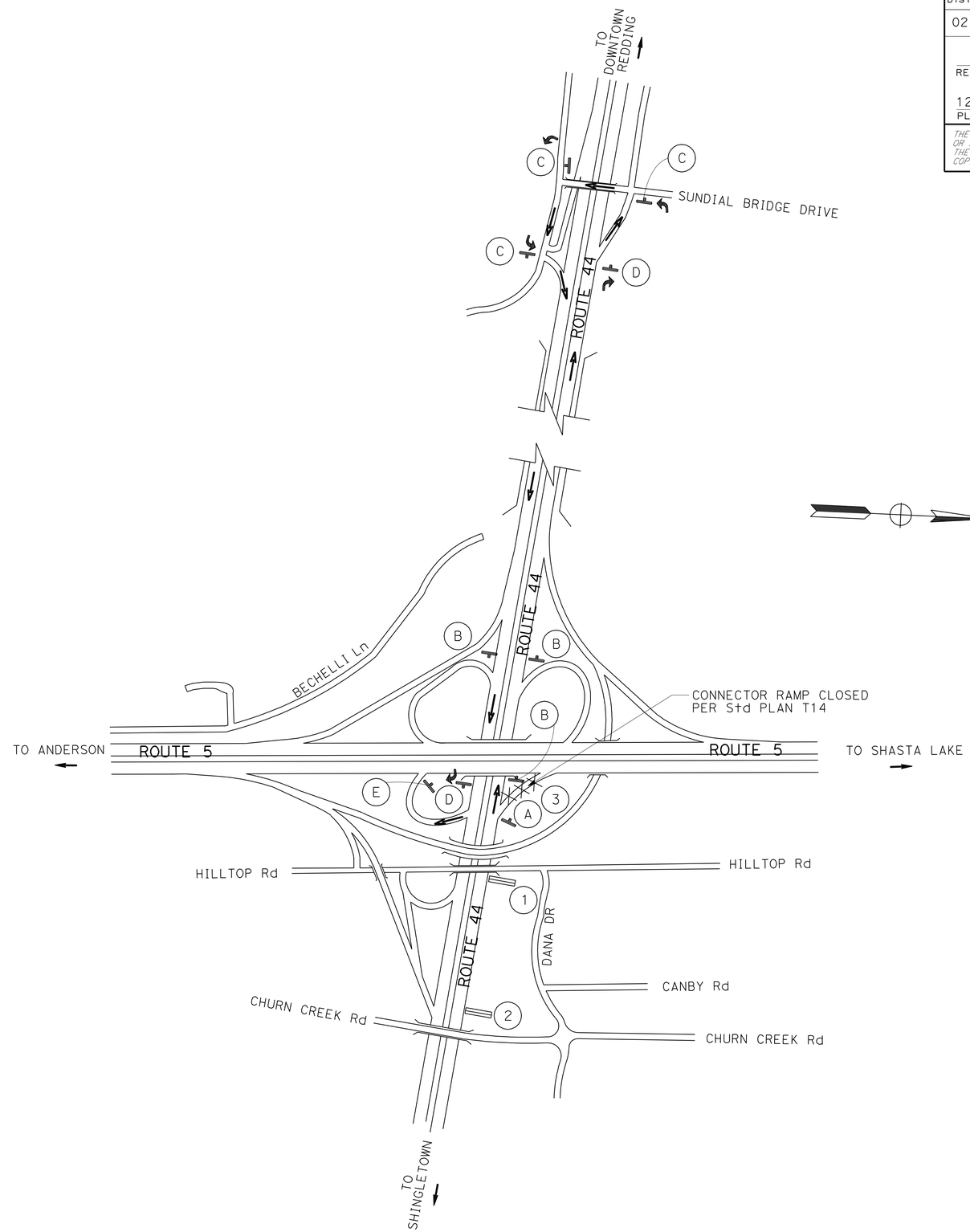

DETOUR FOR CLOSURE OF WB ROUTE 44 CONNECTOR TO NB ROUTE 5

DETOUR PLAN
NO SCALE
DE-9

REVISED BY | DATE REVISED
JOLENA ASTIN | CHRIS GAIDO
CALCULATED-DESIGNED BY | CHECKED BY
FUNCTIONAL SUPERVISOR: JOHN MARTIN

STATE OF CALIFORNIA - DEPARTMENT OF TRANSPORTATION
Caltrans
DESIGN

P:\proj2\02\4c401\design\PS&E\24c401mg009.dgn

LAST REVISION 08-11-10 | DATE PLOTTED => 15-DEC-2010 | TIME PLOTTED => 08:03

Dist	COUNTY	ROUTE	POST MILES TOTAL PROJECT	SHEET No.	TOTAL SHEETS
02	Sha	5	R10.5/R17.5	176	311

REGISTERED CIVIL ENGINEER 10-15-10 DATE

12-13-10
PLANS APPROVAL DATE

REGISTERED PROFESSIONAL ENGINEER CHRIS S. GAIDO No. C62535 Exp 12-31-11 CIVIL STATE OF CALIFORNIA

THE STATE OF CALIFORNIA OR ITS OFFICERS OR AGENTS SHALL NOT BE RESPONSIBLE FOR THE ACCURACY OR COMPLETENESS OF SCANNED COPIES OF THIS PLAN SHEET.

NOTES:

1. PRE-NOTIFICATION PCMS: PLACE NEAR RAMP AND ACTIVATE APPROXIMATELY 12 HOURS BEFORE RAMP CLOSURE.

RAMP TO SB I-5	CLOSED TONIGHT 0 PM - 0 AM
FRAME 1	FRAME 2

2. RAMP CLOSED PCMS: MOVE PRE-NOTIFICATION PCMS APPROXIMATELY 1000' BEFORE RAMP AND ACTIVATE DURING RAMP CLOSURE.

RAMP TO SB I-5 CLOSED	FOLLOW DETOUR
FRAME 1	FRAME 2

3. PLACE 7 DAYS BEFORE RAMP CLOSURE.
4. CALIFORNIA SIGN CODES ARE DESIGNATED BY (CA), OTHERWISE, FEDERAL MUTCD SIGN CODES ARE SHOWN.
5. EXACT SIGN LOCATIONS TO BE DETERMINED BY THE ENGINEER.
6. IF AVAILABLE, EXISTING ROUTE SHIELDS AND DIRECTIONS MAY BE USED IN PLACE OF SIGNS SHOWN.

CONSTRUCTION AREA SIGNS (PORTABLE SIGNS)

SIGN No. ◯	CODE	PANEL SIZE (INCH)	REMARKS	No. (EA)
A	SC6-3(CA) OR SC6-4(CA)	48" x 48" 48" x 60"	"RAMP CLOSED" "DATE-TIME"	1
B	SC3(CA) G27-2 (5) (CA) M3-3	48" x 18" 24" x 24" 24" x 12"	↑ "DETOUR" ROUTE SHIELD "5" "SOUTH"	5
C	M4-10 L G27-2 (5) (CA) M3-3	48" x 18" 24" x 24" 24" x 12"	← "DETOUR" ROUTE SHIELD "5" "SOUTH"	2
D	M4-10 R G27-2 (5) (CA) M3-3	48" x 18" 24" x 24" 24" x 12"	"DETOUR" → ROUTE SHIELD "5" "SOUTH"	2
E	M4-8A	24" x 18"	"END DETOUR"	1
			TOTAL	11

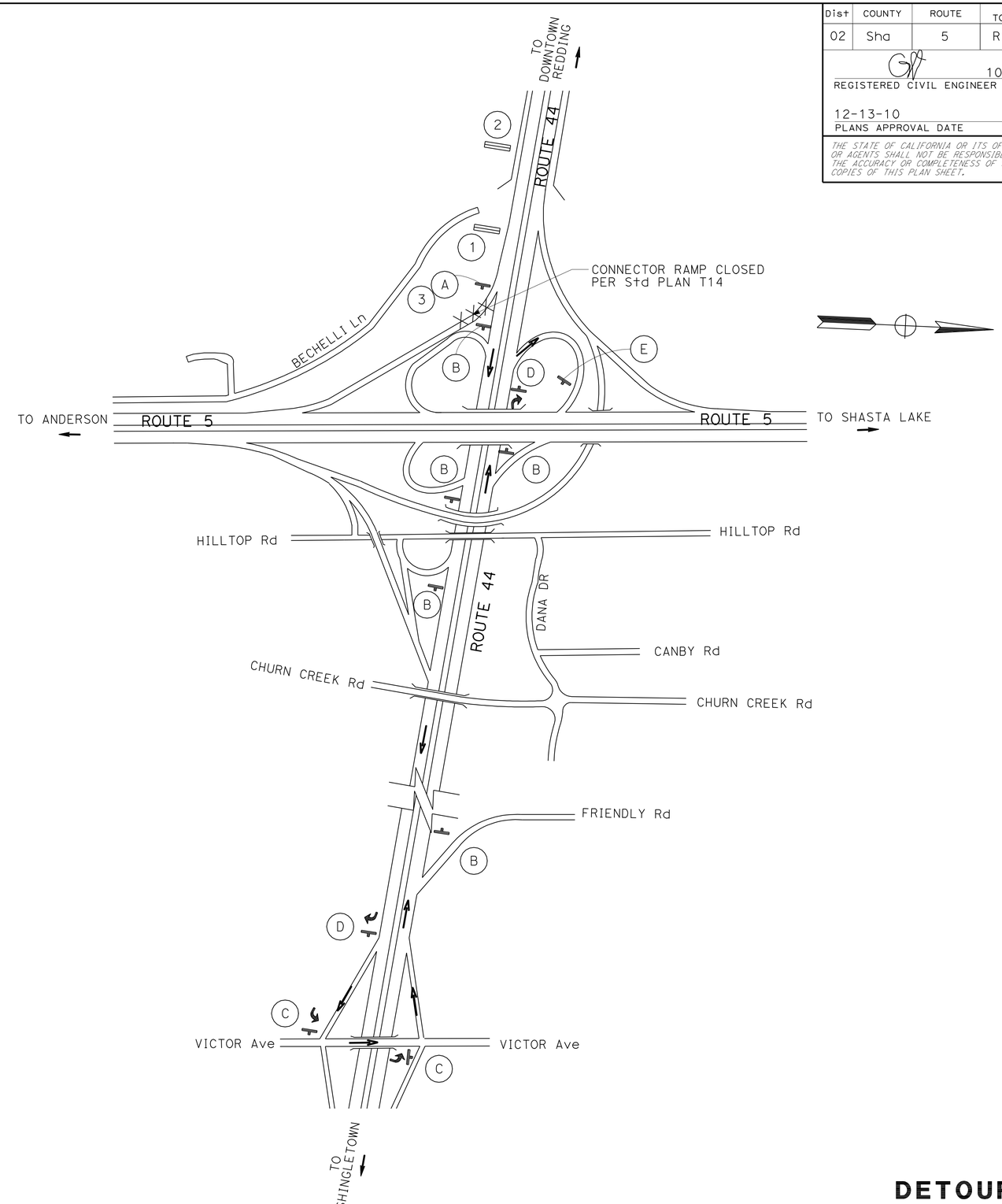

DETOUR PLAN

NO SCALE **DE-10**

DETOUR FOR CLOSURE OF EB ROUTE 44 CONNECTOR TO SB ROUTE 5

REVISED BY	DATE REVISED
JOLENA ASTIN	CHRIS GAIDO
CALCULATED-DESIGNED BY	CHECKED BY
FUNCTIONAL SUPERVISOR	JOHN MARTIN

STATE OF CALIFORNIA - DEPARTMENT OF TRANSPORTATION **DESIGN**

Caltrans

P:\proj2\02\4c401\design\PS&E\24c401mg010.dgn

LAST REVISION 09-15-10 | DATE PLOTTED => 15-DEC-2010 TIME PLOTTED => 08:14

Dist	COUNTY	ROUTE	POST MILES TOTAL PROJECT	SHEET No.	TOTAL SHEETS
02	Sha	5	R10.5/R17.5	177	311

REGISTERED CIVIL ENGINEER 10-15-10 DATE

12-13-10
PLANS APPROVAL DATE

REGISTERED PROFESSIONAL ENGINEER
CHRIS S. GAIDO
No. C62535
Exp 12-31-11
CIVIL
STATE OF CALIFORNIA

THE STATE OF CALIFORNIA OR ITS OFFICERS OR AGENTS SHALL NOT BE RESPONSIBLE FOR THE ACCURACY OR COMPLETENESS OF SCANNED COPIES OF THIS PLAN SHEET.

NOTES:

1. PRE-NOTIFICATION PCMS: PLACE NEAR RAMP AND ACTIVATE APPROXIMATELY 12 HOURS BEFORE RAMP CLOSURE.

RAMP TO NB I-5	CLOSED TONIGHT 0 PM - 0 AM
FRAME 1	FRAME 2

2. RAMP CLOSED PCMS: MOVE PRE-NOTIFICATION PCMS APPROXIMATELY 1000' BEFORE RAMP AND ACTIVATE DURING RAMP CLOSURE.

RAMP TO NB I-5 CLOSED	FOLLOW DETOUR
FRAME 1	FRAME 2

3. PLACE 7 DAYS BEFORE RAMP CLOSURE.
4. CALIFORNIA SIGN CODES ARE DESIGNATED BY (CA), OTHERWISE, FEDERAL MUTCD SIGN CODES ARE SHOWN.
5. EXACT SIGN LOCATIONS TO BE DETERMINED BY THE ENGINEER.
6. IF AVAILABLE, EXISTING ROUTE SHIELDS AND DIRECTIONS MAY BE USED IN PLACE OF SIGNS SHOWN.

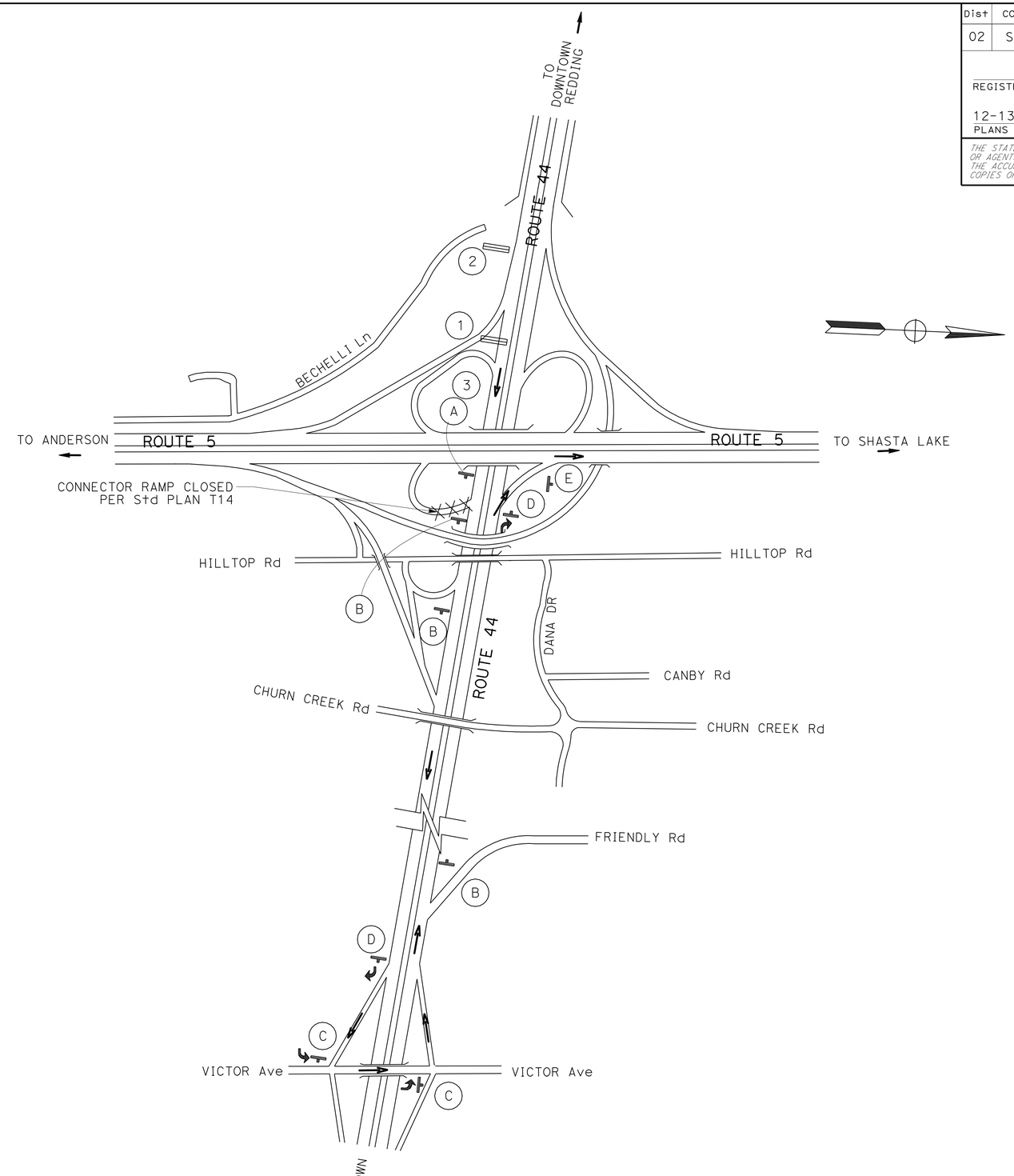

CONSTRUCTION AREA SIGNS (PORTABLE SIGNS)

SIGN NO. ◯	CODE	PANEL SIZE (INCH)	REMARKS	No. (EA)
(A)	SC6-3(CA) OR SC6-4(CA)	48" x 48" 48" x 60"	"RAMP CLOSED" "DATE-TIME"	1
(B)	SC3(CA) G27-2 (5) (CA) M3-1	48" x 18" 24" x 24" 24" x 12"	↑ "DETOUR" ROUTE SHIELD "5" "NORTH"	3
(C)	M4-10 L G27-2 (5) (CA) M3-1	48" x 18" 24" x 24" 24" x 12"	← "DETOUR" ROUTE SHIELD "5" "NORTH"	2
(D)	M4-10 R G27-2 (5) (CA) M3-1	48" x 18" 24" x 24" 24" x 12"	"DETOUR" → ROUTE SHIELD "5" "NORTH"	2
(E)	M4-8A	24" x 18"	"END DETOUR"	1
			TOTAL	9

DETOUR FOR CLOSURE OF EB ROUTE 44 CONNECTOR TO NB ROUTE 5

DETOUR PLAN
NO SCALE **DE-11**

REVISED BY | DATE REVISED
JOLENA ASTIN | CHRIS GAIDO
CALCULATED-DESIGNED BY | CHECKED BY
FUNCTIONAL SUPERVISOR: JOHN MARTIN
STATE OF CALIFORNIA - DEPARTMENT OF TRANSPORTATION
Caltrans DESIGN
P:\proj2\02\4c401\design\PS&E\24c401mg011.dgn

LAST REVISION 09-15-10 | DATE PLOTTED => 15-DEC-2010 | TIME PLOTTED => 08:14

Dist	COUNTY	ROUTE	POST MILES TOTAL PROJECT	SHEET No.	TOTAL SHEETS
02	Sha	5	R10.5/R17.5	178	311

REGISTERED CIVIL ENGINEER 10-15-10 DATE

12-13-10
PLANS APPROVAL DATE

REGISTERED PROFESSIONAL ENGINEER CHRIS S. GAIDO No. C62535 Exp 12-31-11 CIVIL STATE OF CALIFORNIA

THE STATE OF CALIFORNIA OR ITS OFFICERS OR AGENTS SHALL NOT BE RESPONSIBLE FOR THE ACCURACY OR COMPLETENESS OF SCANNED COPIES OF THIS PLAN SHEET.

NOTES:

1. CALIFORNIA SIGN CODES ARE DESIGNATED BY (CA), OTHERWISE, FEDERAL MUTCD SIGN CODES ARE SHOWN.
2. EXACT SIGN LOCATIONS TO BE DETERMINED BY THE ENGINEER.
3. STAGE 2 SIDEWALK CLOSURE CONTINGENT ON COMPLETION OF PEDISTRIAN CROSSWALK IMPROVEMENTS AT RAMP.

LEGEND

→ DETOUR ROUTE

DETOUR SIGN LOCATION

XXX SIDEWALK CLOSURE

SIGN MOUNTED ON TYPE II BARRICADE

SIGN NO. ◯	CODE	PANEL SIZE (INCH)	REMARKS	NO. (EA)
(A)	R9-11	24 x 12	"SIDEWALK CLOSED AHEAD" ← "CROSS HERE"	2
(B)	R9-11	24 x 12	"SIDEWALK CLOSED AHEAD" → "CROSS HERE"	2
(C)	R9-9	30 x 18	"SIDEWALK" "CLOSED"	2

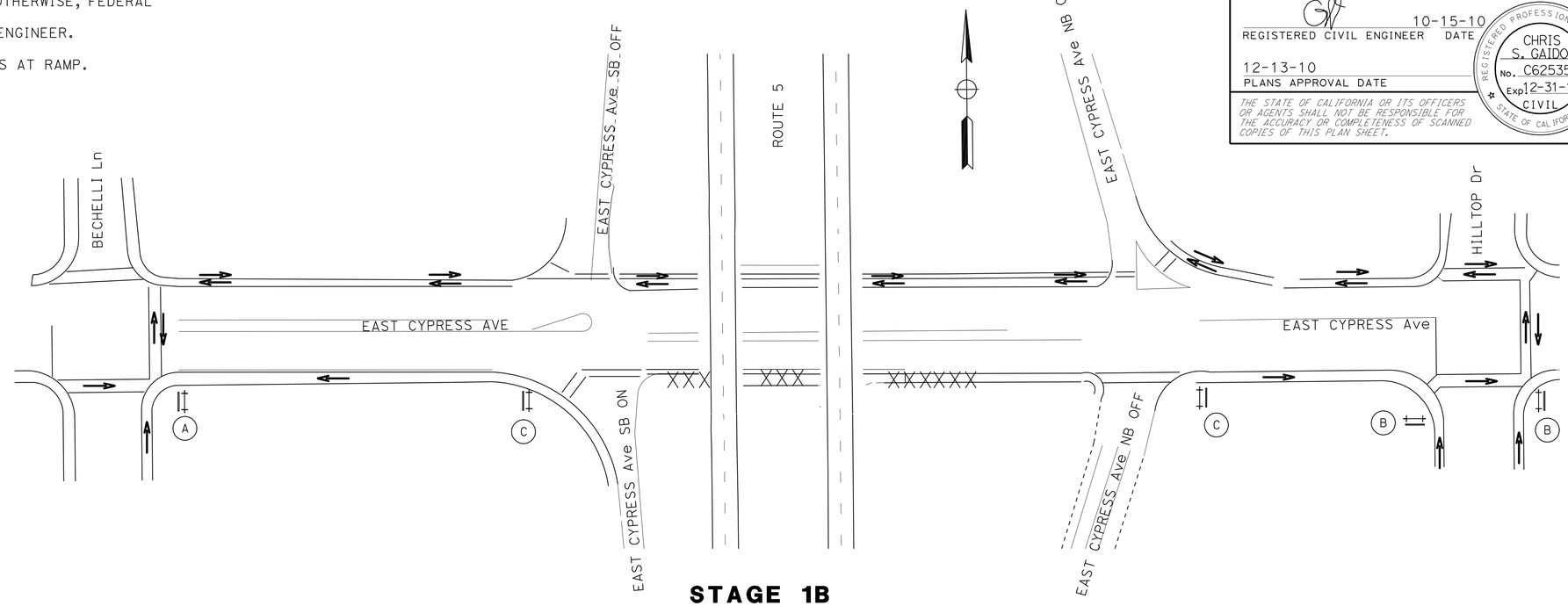

STAGE 1B

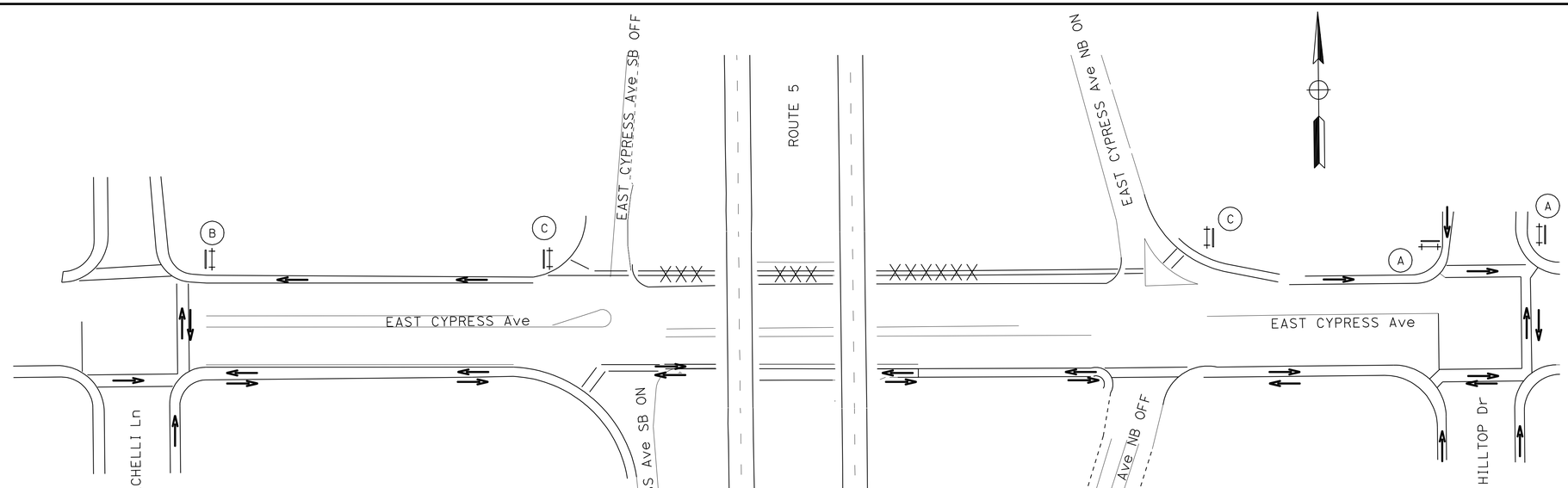

STAGE 1A

DETOUR PLAN

NO SCALE

DE-12

PEDESTRIAN DETOUR EAST CYPRESS AVENUE

STATE OF CALIFORNIA - DEPARTMENT OF TRANSPORTATION

Caltrans® DESIGN

FUNCTIONAL SUPERVISOR: JOHN MARTIN

CALCULATED-DESIGNED BY | CHECKED BY | REVISED BY | DATE REVISED

P:\proj2\02\4c401\design\PS&E\24c401mg012.dgn

LAST REVISION 09-15-10 | DATE PLOTTED => 15-DEC-2010 | TIME PLOTTED => 08:14

Dist	COUNTY	ROUTE	POST MILES TOTAL PROJECT	SHEET No.	TOTAL SHEETS
02	Sha	5	R10.5/R17.5	179	311

REGISTERED CIVIL ENGINEER DATE 10-15-10

12-13-10
PLANS APPROVAL DATE

REGISTERED PROFESSIONAL ENGINEER CHRIS S. GAIDO No. C62535 Exp 12-31-11 CIVIL STATE OF CALIFORNIA

THE STATE OF CALIFORNIA OR ITS OFFICERS OR AGENTS SHALL NOT BE RESPONSIBLE FOR THE ACCURACY OR COMPLETENESS OF SCANNED COPIES OF THIS PLAN SHEET.

NOTES:

1. ALL DELINEATORS (CLASS 1) SHALL BE TYPE F-1 UNLESS OTHERWISE SHOWN.
2. ALL DELINEATORS (CLASS 1) SHALL BE PLACED 200′ ON-CENTER, UNLESS OTHERWISE SHOWN.
3. ALL EXISTING SIGNS NOT SHOWN FOR REMOVAL, RELOCATION OR RESETTING SHALL REMAIN IN PLACE.
4. ALL SIGN CODES SHOWN ARE FEDERAL SIGN CODES UNLESS OTHERWISE DESIGNATED AS CALIFORNIA SIGN CODES. CALIFORNIA SIGN CODES ARE DESIGNATED BY (CA)
5. FOR ACCURATE RIGHT OF WAY DATA, CONTACT RIGHT OF WAY ENGINEERING AT THE DISTRICT OFFICE.

LEGEND

- #-# ROADSIDE SIGN NUMBER
- #-# PAVEMENT DELINEATION STRIPE DETAIL NUMBER
- # OH SIGN DETAIL LETTER
- # SIGN STRUCTURE (BRIDGE MOUNTED WITHOUT WALKWAY)
- CW CROSSWALK
- SINGLE STRIPE MARKER
- STRIPE CHANGE LOCATION
- OBJECT MARKER (TYPE L-1)
- EXISTING SIGN TO REMAIN
- RESET ROADSIDE SIGN
- REMOVE ROADSIDE SIGN
- RELOCATE ROADSIDE SIGN
- TYPE VI ARROW
- DELINEATOR (TYPE F)
- DELINEATOR (TYPE E)
- MILEPOST MARKER
- EXISTING MILEPOST MARKER
- EXISTING ROADSIDE SIGN ONE POST
- EXISTING ROADSIDE SIGN TWO POST
- NEW ROADSIDE SIGN ONE POST
- NEW ROADSIDE SIGN TWO POST
- EXISTING ELECTROLIER
- NEW OVERHEAD SIGN

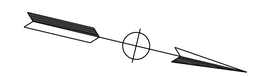

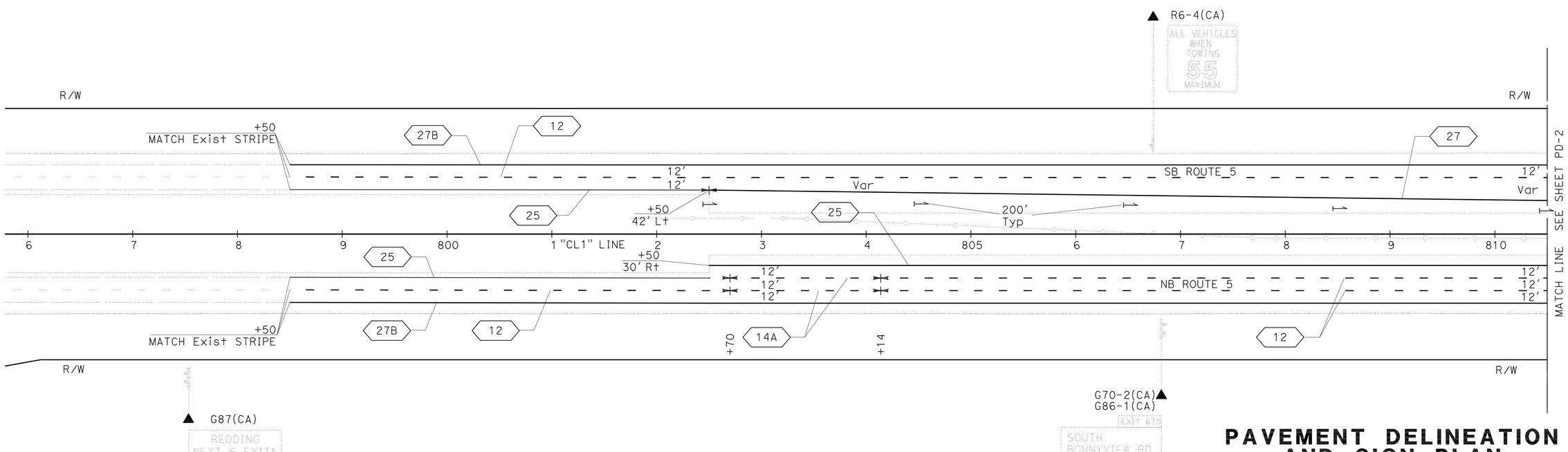

PAVEMENT DELINEATION AND SIGN PLAN

SCALE: 1" = 50′

PD-1

THIS PLAN ACCURATE FOR PAVEMENT DELINEATION ONLY

REVISED BY	DATE REVISED

CALCULATED-DESIGNED BY	CHECKED BY
BILL LEHMAN	CHRIS GAIDO

FUNCTIONAL SUPERVISOR: JOHN MARTIN

STATE OF CALIFORNIA - DEPARTMENT OF TRANSPORTATION

Caltrans® DESIGN

P:\proj2\02\4c401\design\PS&E\24c401na001.dgn

LAST REVISION 09-07-10 | DATE PLOTTED => 15-DEC-2010 | TIME PLOTTED => 07:38

Dist	COUNTY	ROUTE	POST MILES TOTAL PROJECT	SHEET No.	TOTAL SHEETS
02	Sha	5	R10.5/R17.5	180	311

REGISTERED CIVIL ENGINEER 10-15-10 DATE

12-13-10
PLANS APPROVAL DATE

REGISTERED PROFESSIONAL ENGINEER CHRIS S. GAIDO No. C62535 Exp 12-31-11 CIVIL STATE OF CALIFORNIA

THE STATE OF CALIFORNIA OR ITS OFFICERS OR AGENTS SHALL NOT BE RESPONSIBLE FOR THE ACCURACY OR COMPLETENESS OF SCANNED COPIES OF THIS PLAN SHEET.

NOTE:

FOR ACCURATE RIGHT OF WAY DATA, CONTACT RIGHT OF WAY ENGINEERING AT THE DISTRICT OFFICE.

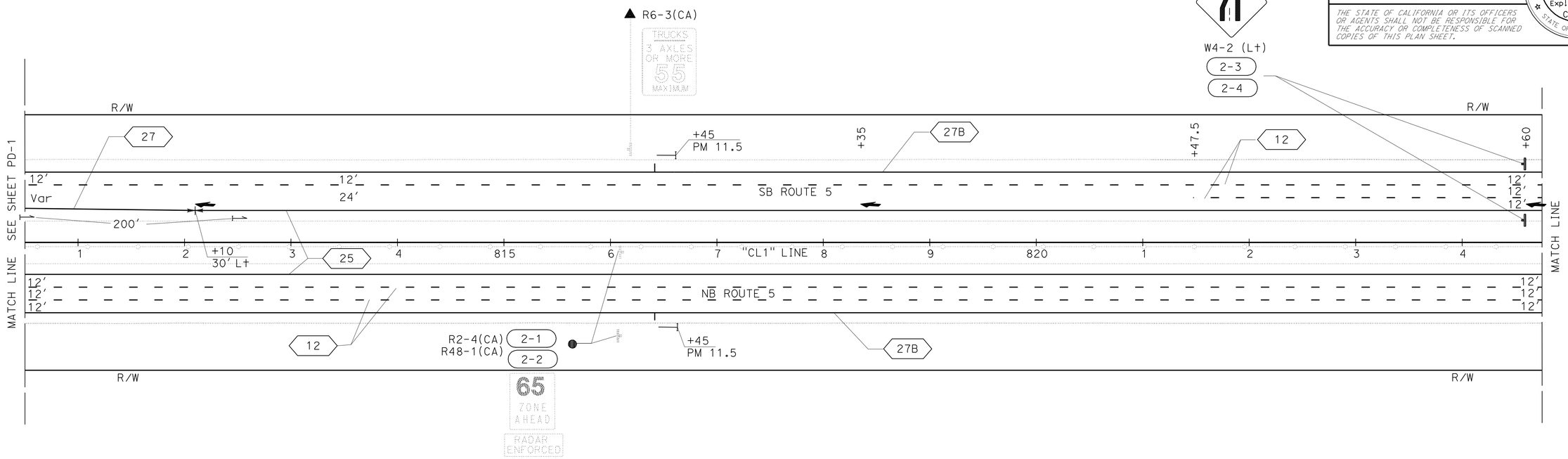

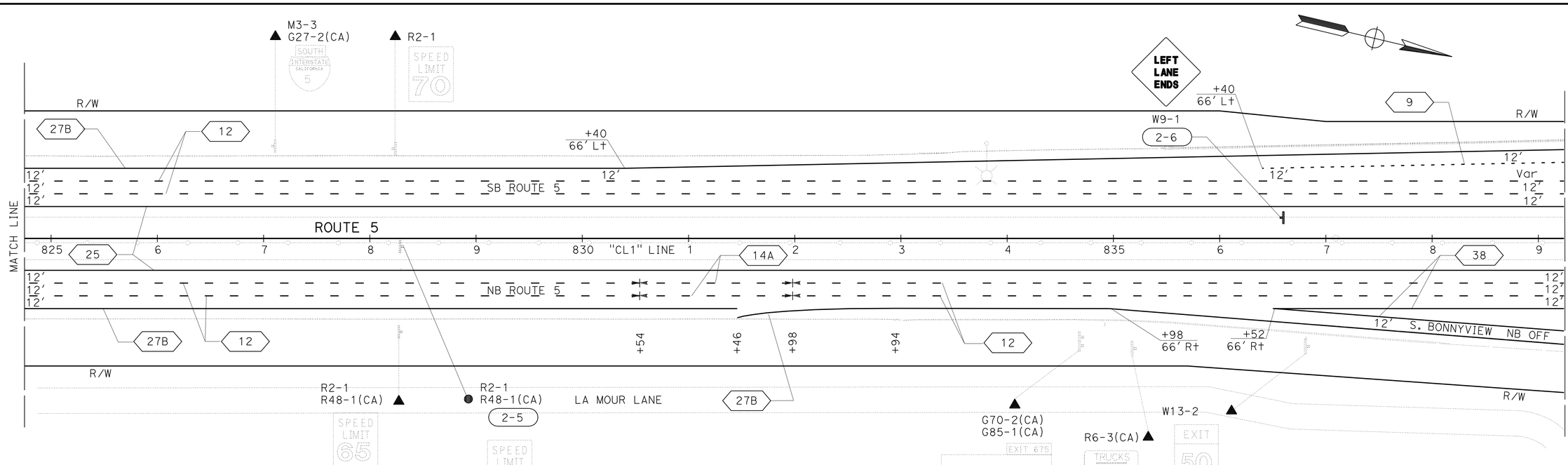

THIS PLAN ACCURATE FOR PAVEMENT DELINEATION ONLY

PAVEMENT DELINEATION AND SIGN PLAN

SCALE: 1" = 50′

PD-2

REVISED BY	DATE REVISED
BILL LEHMAN	CHRIS GAIDO
CALCULATED-DESIGNED BY	CHECKED BY
FUNCTIONAL SUPERVISOR	JOHN MARTIN

STATE OF CALIFORNIA - DEPARTMENT OF TRANSPORTATION

Caltrans® DESIGN

P:\proj2\02\4c401\design\PS&E\24c401nd002.dgn

LAST REVISION 09-07-10 | DATE PLOTTED => 15-DEC-2010 | TIME PLOTTED => 07:38

Dist	COUNTY	ROUTE	POST MILES TOTAL PROJECT	SHEET No.	TOTAL SHEETS
02	Sha	5	R10.5/R17.5	181	311

REGISTERED CIVIL ENGINEER 10-15-10 DATE

12-13-10
PLANS APPROVAL DATE

REGISTERED PROFESSIONAL ENGINEER CHRIS S. GAIDO No. C62535 Exp 12-31-11 CIVIL STATE OF CALIFORNIA

THE STATE OF CALIFORNIA OR ITS OFFICERS OR AGENTS SHALL NOT BE RESPONSIBLE FOR THE ACCURACY OR COMPLETENESS OF SCANNED COPIES OF THIS PLAN SHEET.

NOTE:

FOR ACCURATE RIGHT OF WAY DATA, CONTACT RIGHT OF WAY ENGINEERING AT THE DISTRICT OFFICE.

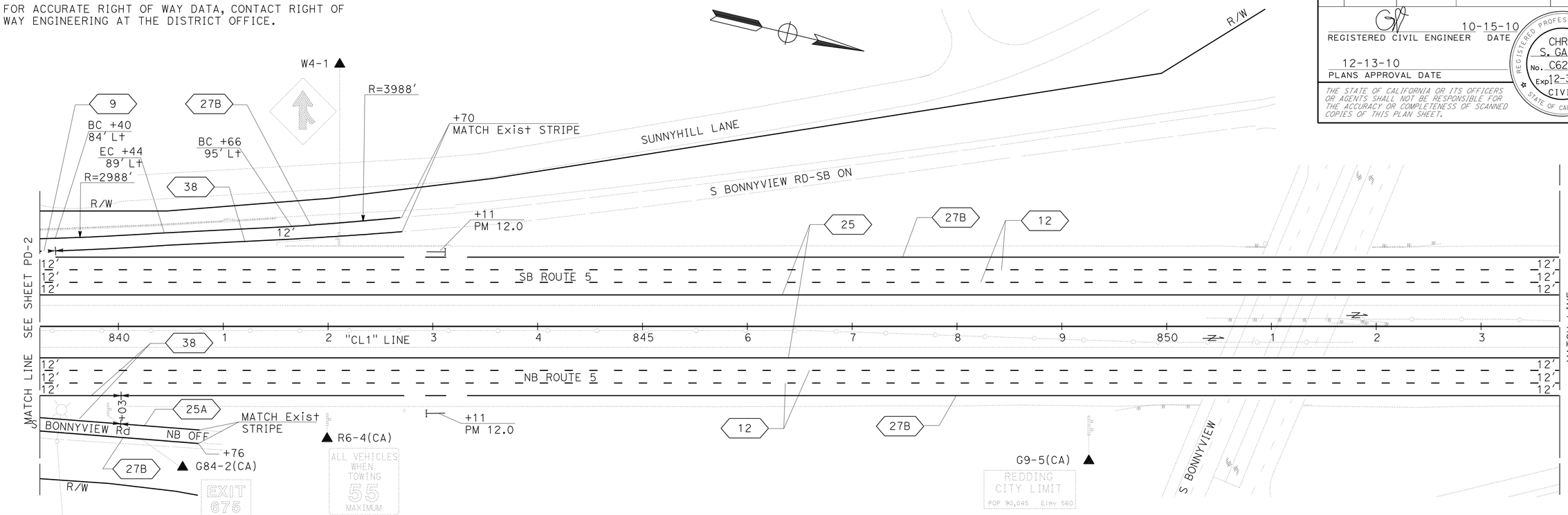

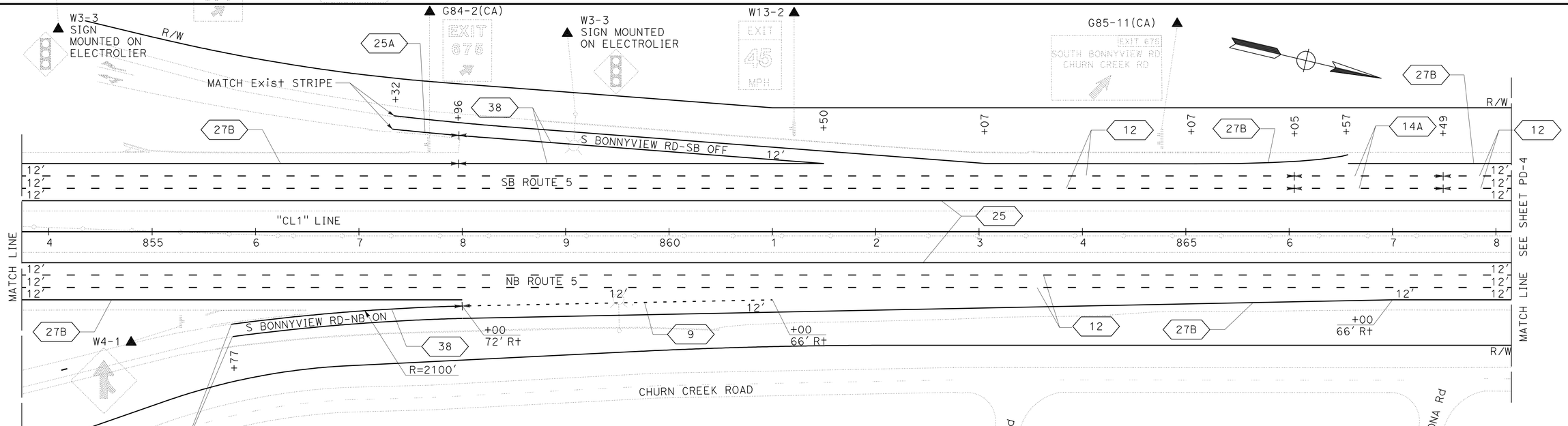

THIS PLAN ACCURATE FOR PAVEMENT DELINEATION ONLY

PAVEMENT DELINEATION AND SIGN PLAN

SCALE: 1" = 50'

PD-3

REVISED BY	DATE REVISED
BILL LEHMAN	CHRIS GAIDO
CALCULATED-DESIGNED BY	CHECKED BY
FUNCTIONAL SUPERVISOR	JOHN MARTIN

STATE OF CALIFORNIA - DEPARTMENT OF TRANSPORTATION

Caltrans® DESIGN

P:\proj2\02\4c401\design\PS&E\24c401na003.dgn

LAST REVISION 10-19-10 | DATE PLOTTED => 15-DEC-2010 | TIME PLOTTED => 07:38

Dist	COUNTY	ROUTE	POST MILES TOTAL PROJECT	SHEET No.	TOTAL SHEETS
02	Sha	5	R10.5/R17.5	182	311

REGISTERED CIVIL ENGINEER 10-15-10 DATE

12-13-10
PLANS APPROVAL DATE

REGISTERED PROFESSIONAL ENGINEER CHRIS S. GAIDO No. C62535 Exp 12-31-11 CIVIL STATE OF CALIFORNIA

THE STATE OF CALIFORNIA OR ITS OFFICERS OR AGENTS SHALL NOT BE RESPONSIBLE FOR THE ACCURACY OR COMPLETENESS OF SCANNED COPIES OF THIS PLAN SHEET.

NOTE:

FOR ACCURATE RIGHT OF WAY DATA, CONTACT RIGHT OF WAY ENGINEERING AT THE DISTRICT OFFICE.

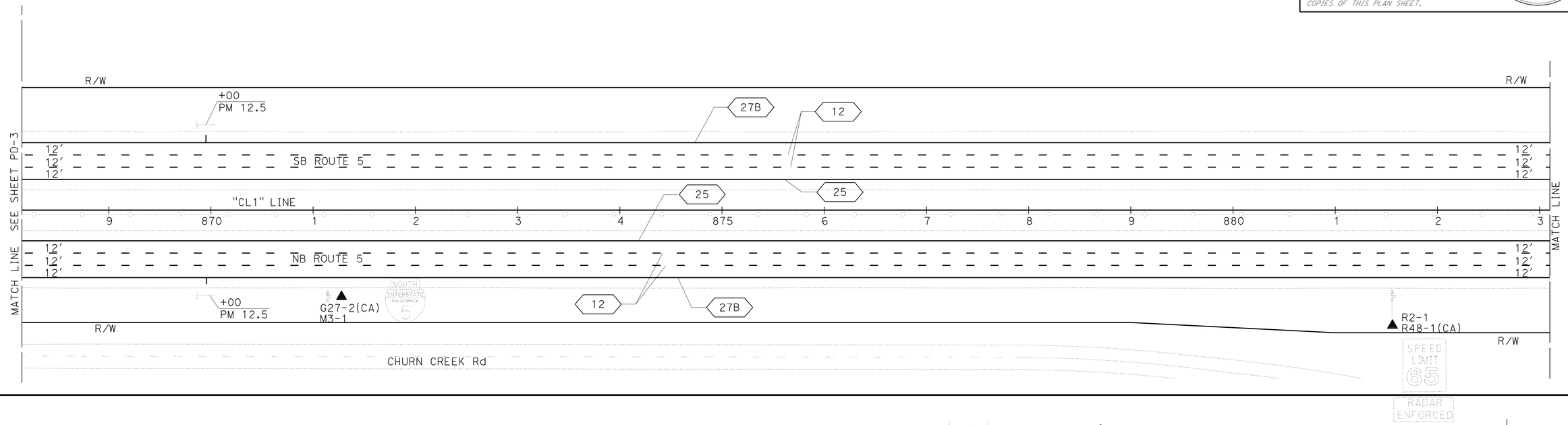

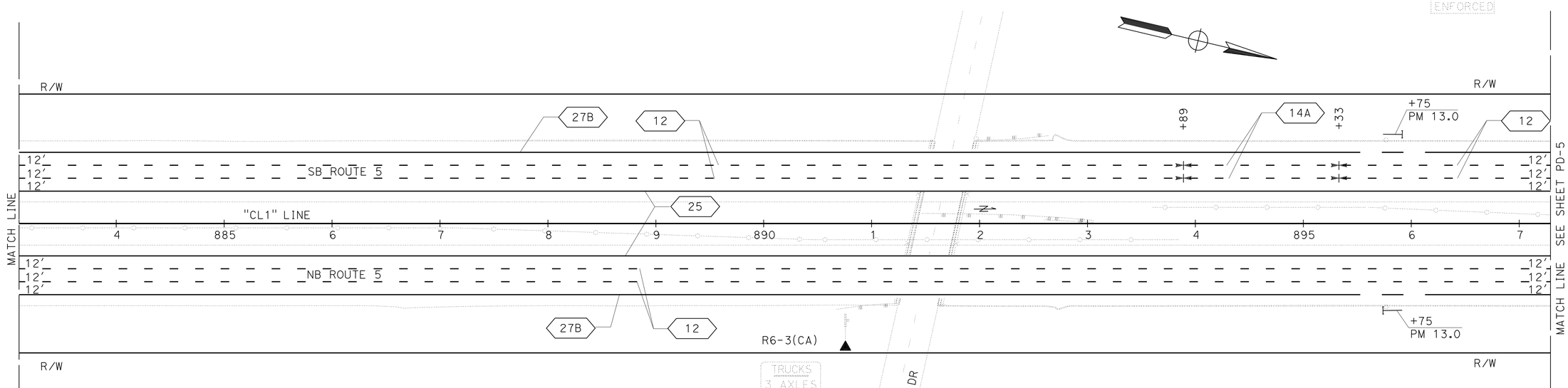

PAVEMENT DELINEATION AND SIGN PLAN

SCALE: 1" = 50′

PD-4

THIS PLAN ACCURATE FOR PAVEMENT DELINEATION ONLY

REVISED BY	DATE REVISED
BILL LEHMAN	CHRIS GAIDO
CALCULATED-DESIGNED BY	CHECKED BY
FUNCTIONAL SUPERVISOR	JOHN MARTIN

STATE OF CALIFORNIA - DEPARTMENT OF TRANSPORTATION

Caltrans® **DESIGN**

P:\proj2\02\4c401\design\PS&E\24c401na004.dgn

LAST REVISION 10-19-10 | DATE PLOTTED => 15-DEC-2010 | TIME PLOTTED => 07:38

Dist	COUNTY	ROUTE	POST MILES TOTAL PROJECT	SHEET No.	TOTAL SHEETS
02	Sha	5	R10.5/R17.5	183	311

REGISTERED CIVIL ENGINEER 10-15-10 DATE

12-13-10
PLANS APPROVAL DATE

REGISTERED PROFESSIONAL ENGINEER CHRIS S. GAIDO No. C62535 Exp 12-31-11 CIVIL STATE OF CALIFORNIA

THE STATE OF CALIFORNIA OR ITS OFFICERS OR AGENTS SHALL NOT BE RESPONSIBLE FOR THE ACCURACY OR COMPLETENESS OF SCANNED COPIES OF THIS PLAN SHEET.

NOTE:

FOR ACCURATE RIGHT OF WAY DATA, CONTACT RIGHT OF WAY ENGINEERING AT THE DISTRICT OFFICE.

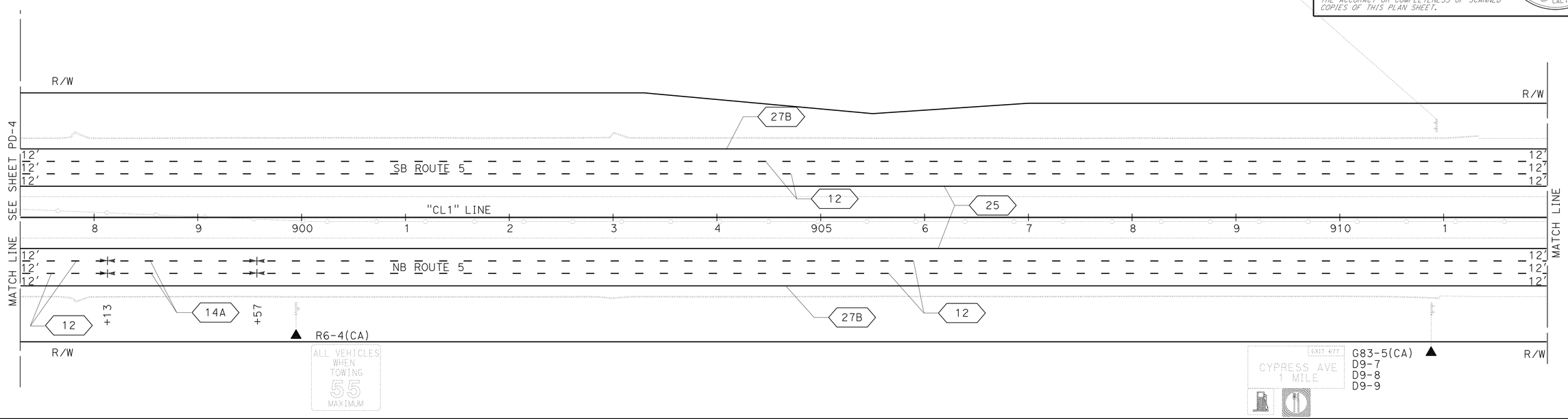

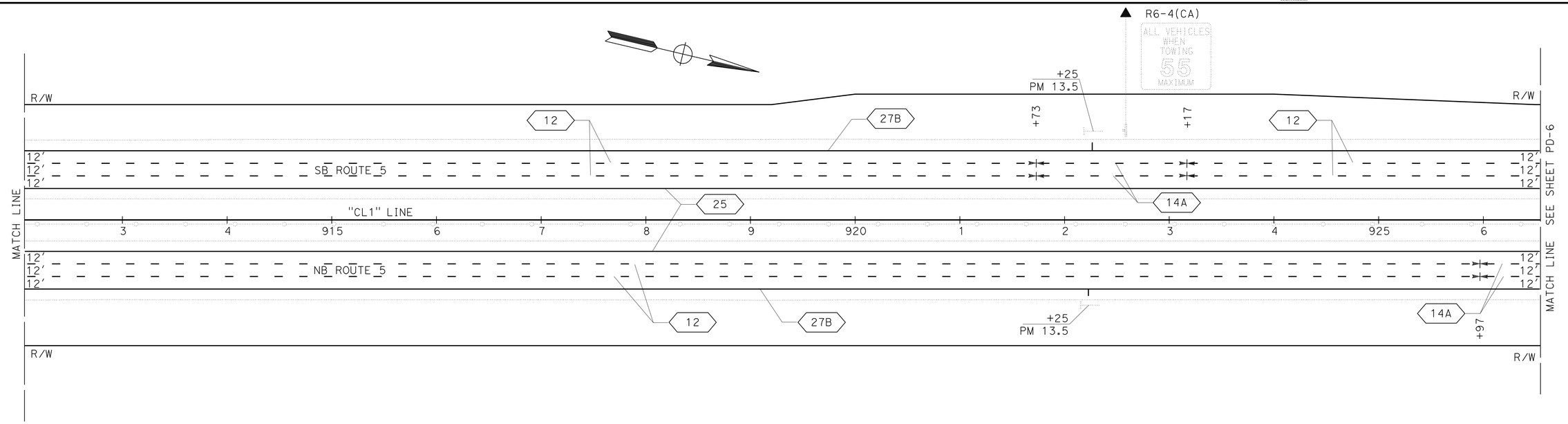

PAVEMENT DELINEATION AND SIGN PLAN

SCALE: 1" = 50'

PD-5

THIS PLAN ACCURATE FOR PAVEMENT DELINEATION ONLY

REVISED BY	DATE REVISED
BILL LEHMAN	CHRIS GAIDO
CALCULATED-DESIGNED BY	CHECKED BY
FUNCTIONAL SUPERVISOR	JOHN MARTIN

STATE OF CALIFORNIA - DEPARTMENT OF TRANSPORTATION
Caltrans
DESIGN

P:\proj2\02\4c401\design\PS&E\24c401na005.dgn

LAST REVISION 09-07-10 | DATE PLOTTED => 15-DEC-2010 | TIME PLOTTED => 07:38

Dist	COUNTY	ROUTE	POST MILES TOTAL PROJECT	SHEET No.	TOTAL SHEETS
02	Sha	5	R10.5/R17.5	184	311

REGISTERED CIVIL ENGINEER 10-15-10 DATE

12-13-10
PLANS APPROVAL DATE

REGISTERED PROFESSIONAL ENGINEER
CHRIS S. GAIDO
No. C62535
Exp 12-31-11
CIVIL
STATE OF CALIFORNIA

THE STATE OF CALIFORNIA OR ITS OFFICERS OR AGENTS SHALL NOT BE RESPONSIBLE FOR THE ACCURACY OR COMPLETENESS OF SCANNED COPIES OF THIS PLAN SHEET.

NOTE:

FOR ACCURATE RIGHT OF WAY DATA, CONTACT RIGHT OF WAY ENGINEERING AT THE DISTRICT OFFICE.

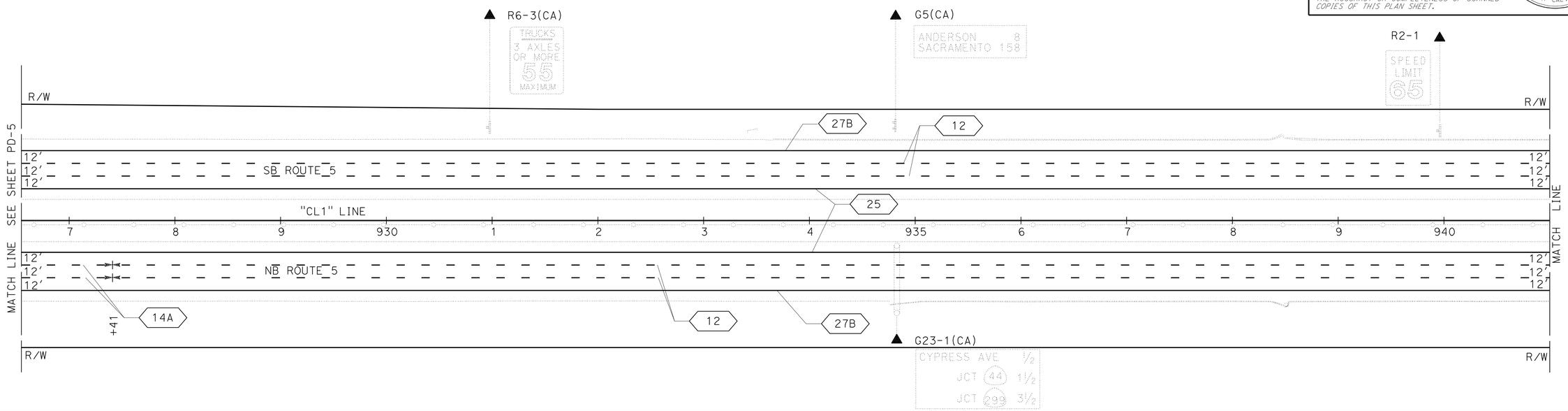

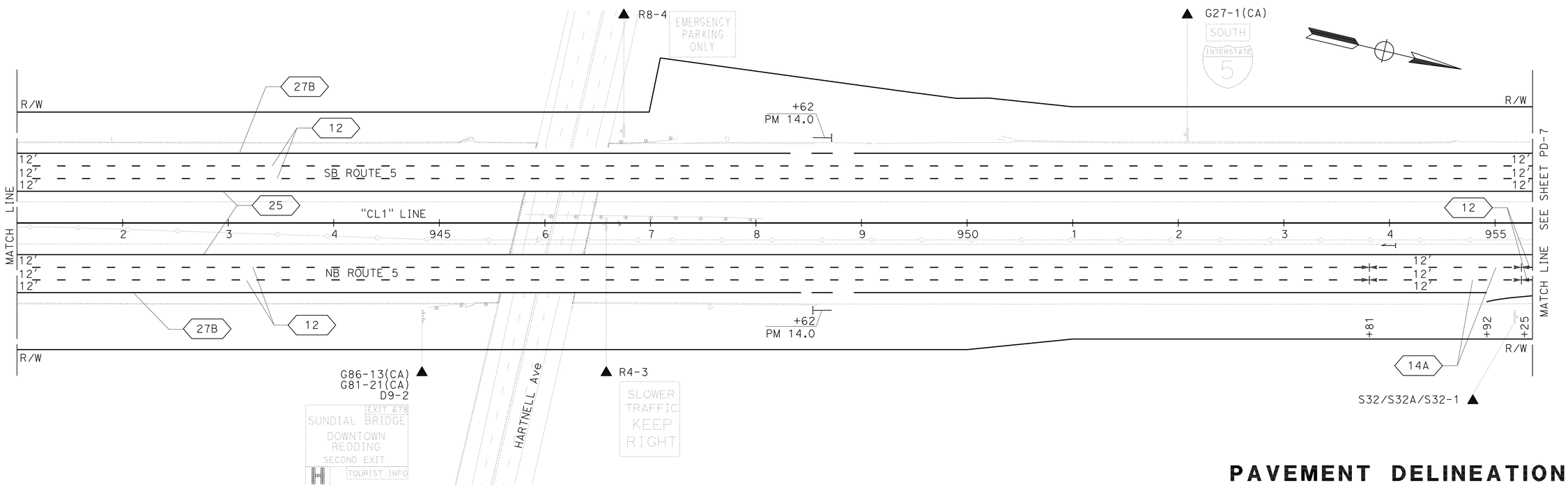

PAVEMENT DELINEATION AND SIGN PLAN

SCALE: 1" = 50'

PD-6

THIS PLAN ACCURATE FOR PAVEMENT DELINEATION ONLY

REVISED BY | DATE REVISED
BILL LEHMAN | CHRIS GAIDO
CALCULATED-DESIGNED BY | CHECKED BY
FUNCTIONAL SUPERVISOR
JOHN MARTIN

STATE OF CALIFORNIA - DEPARTMENT OF TRANSPORTATION
Caltrans
DESIGN

P:\proj2\02\4c401\design\PS&E\24c401na006.dgn

LAST REVISION 09-07-10 | DATE PLOTTED => 15-DEC-2010 | TIME PLOTTED => 07:38

Dist	COUNTY	ROUTE	POST MILES TOTAL PROJECT	SHEET No.	TOTAL SHEETS
02	Sha	5	R10.5/R17.5	185	311

REGISTERED CIVIL ENGINEER 10-15-10 DATE

12-13-10
PLANS APPROVAL DATE

REGISTERED PROFESSIONAL ENGINEER CHRIS S. GAIDO No. C62535 Exp 12-31-11 CIVIL STATE OF CALIFORNIA

THE STATE OF CALIFORNIA OR ITS OFFICERS OR AGENTS SHALL NOT BE RESPONSIBLE FOR THE ACCURACY OR COMPLETENESS OF SCANNED COPIES OF THIS PLAN SHEET.

NOTE:

FOR ACCURATE RIGHT OF WAY DATA, CONTACT RIGHT OF WAY ENGINEERING AT THE DISTRICT OFFICE.

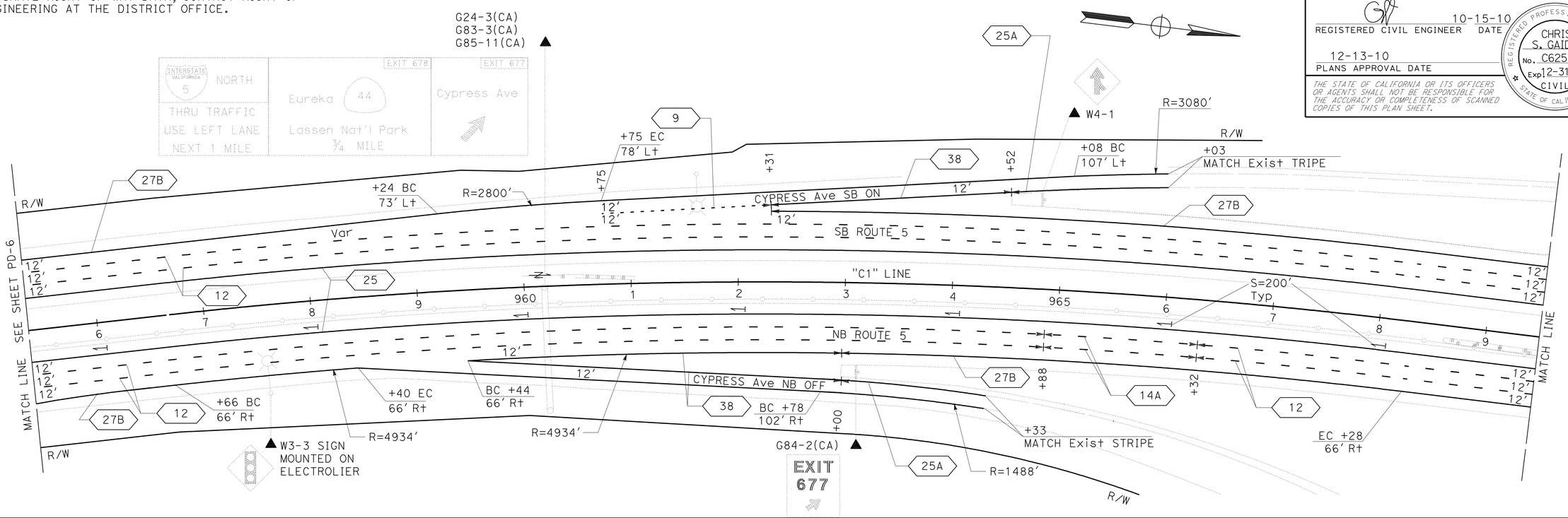

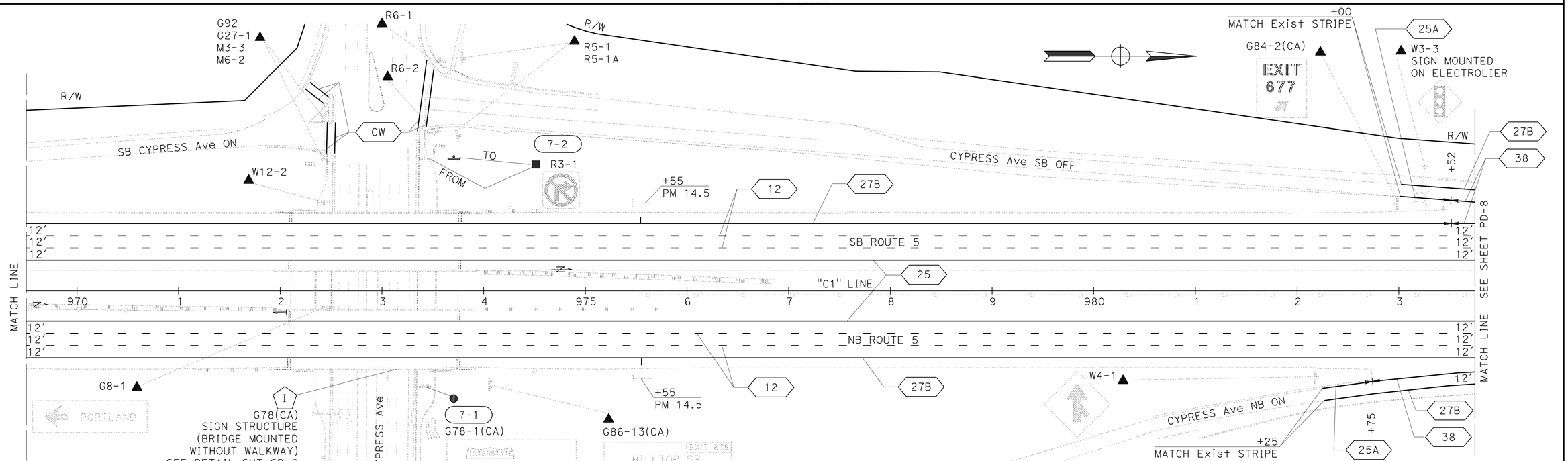

THIS PLAN ACCURATE FOR PAVEMENT DELINEATION ONLY

PAVEMENT DELINEATION AND SIGN PLAN

SCALE: 1" = 50'

PD-7

REVISED BY	DATE REVISED
BILL LEHMAN	CHRIS GAIDO
CALCULATED-DESIGNED BY	CHECKED BY
FUNCTIONAL SUPERVISOR	JOHN MARTIN

STATE OF CALIFORNIA - DEPARTMENT OF TRANSPORTATION

Caltrans DESIGN

P:\proj2\02\4c401\design\PS&E\24c401na007.dgn

LAST REVISION 09-07-10 | DATE PLOTTED => 15-DEC-2010 | TIME PLOTTED => 07:38

Dist	COUNTY	ROUTE	POST MILES TOTAL PROJECT	SHEET No.	TOTAL SHEETS
02	Sha	5	R10.5/R17.5	186	311

REGISTERED CIVIL ENGINEER DATE 10-15-10

PLANS APPROVAL DATE 12-13-10

REGISTERED PROFESSIONAL ENGINEER CHRIS S. GAIDO No. C62535 Exp 12-31-11 CIVIL STATE OF CALIFORNIA

THE STATE OF CALIFORNIA OR ITS OFFICERS OR AGENTS SHALL NOT BE RESPONSIBLE FOR THE ACCURACY OR COMPLETENESS OF SCANNED COPIES OF THIS PLAN SHEET.

NOTE:

FOR ACCURATE RIGHT OF WAY DATA, CONTACT RIGHT OF WAY ENGINEERING AT THE DISTRICT OFFICE.

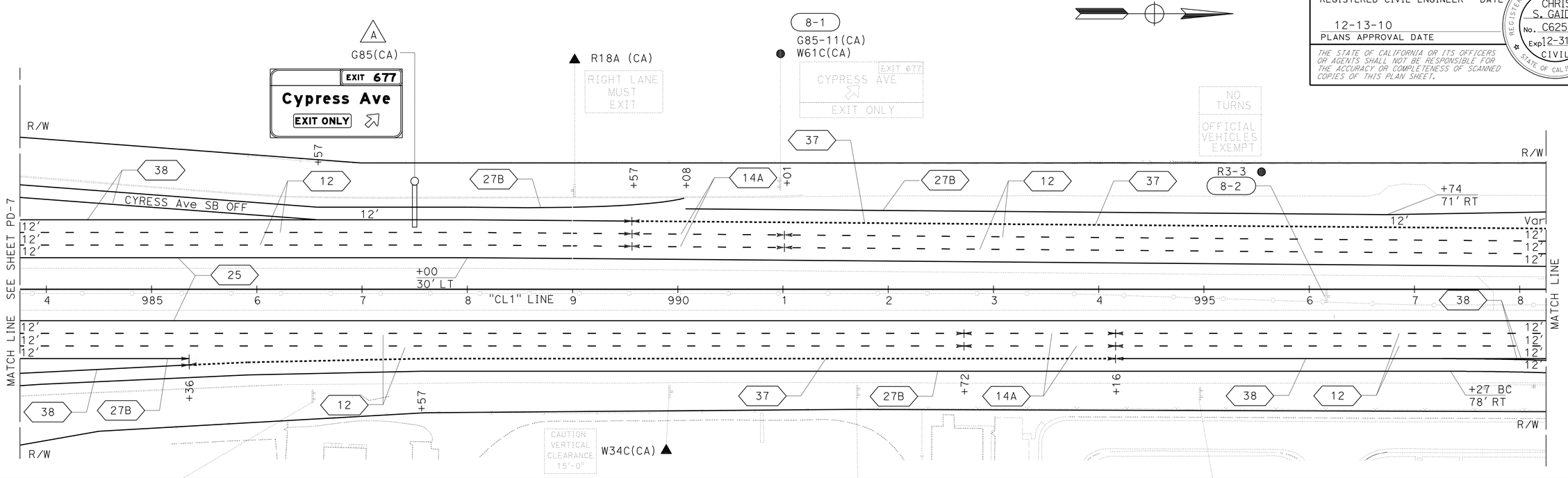

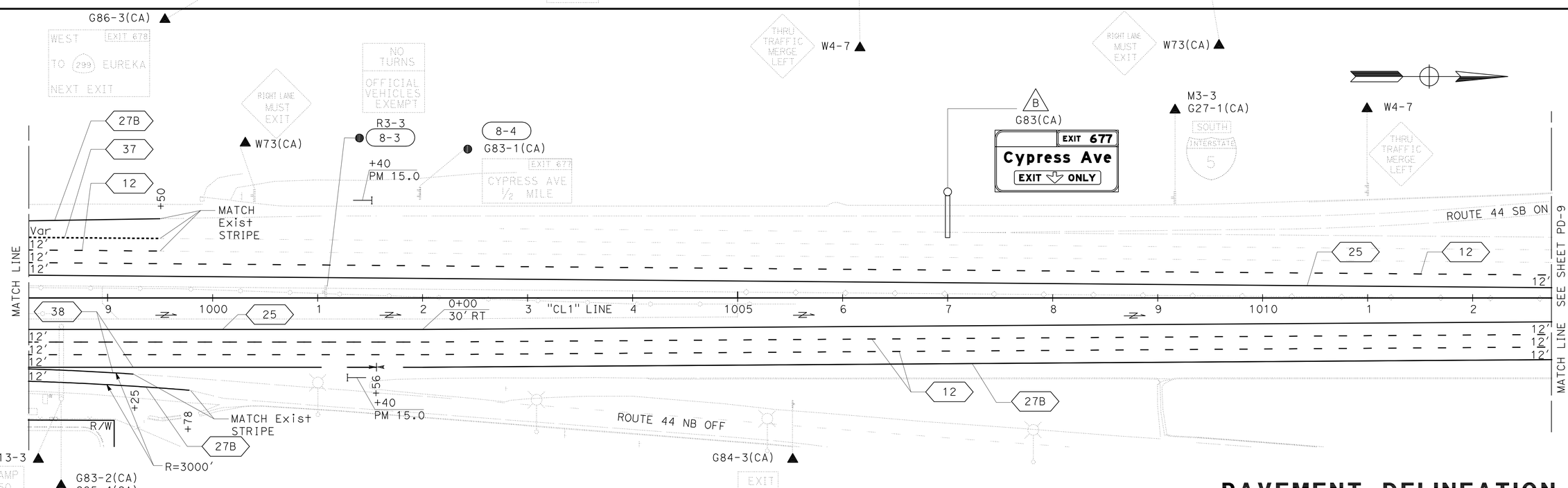

THIS PLAN ACCURATE FOR PAVEMENT DELINEATION ONLY

PAVEMENT DELINEATION AND SIGN PLAN

SCALE: 1" = 50'

PD-8

REVISED BY	DATE REVISED
BILL LEHMAN	CHRIS GAIDO
CALCULATED-DESIGNED BY	CHECKED BY
FUNCTIONAL SUPERVISOR	JOHN MARTIN

STATE OF CALIFORNIA - DEPARTMENT OF TRANSPORTATION

Caltrans DESIGN

P:\proj2\02\4c401\design\PS&E\24c401na008.dgn

LAST REVISION 09-07-10 | DATE PLOTTED => 15-DEC-2010 | TIME PLOTTED => 07:39

Dist	COUNTY	ROUTE	POST MILES TOTAL PROJECT	SHEET No.	TOTAL SHEETS
02	Sha	5	R10.5/R17.5	187	311

REGISTERED CIVIL ENGINEER 10-15-10 DATE

12-13-10
PLANS APPROVAL DATE

REGISTERED PROFESSIONAL ENGINEER CHRIS S. GAIDO No. C62535 Exp 12-31-11 CIVIL STATE OF CALIFORNIA

THE STATE OF CALIFORNIA OR ITS OFFICERS OR AGENTS SHALL NOT BE RESPONSIBLE FOR THE ACCURACY OR COMPLETENESS OF SCANNED COPIES OF THIS PLAN SHEET.

NOTE:

FOR ACCURATE RIGHT OF WAY DATA, CONTACT RIGHT OF WAY ENGINEERING AT THE DISTRICT OFFICE.

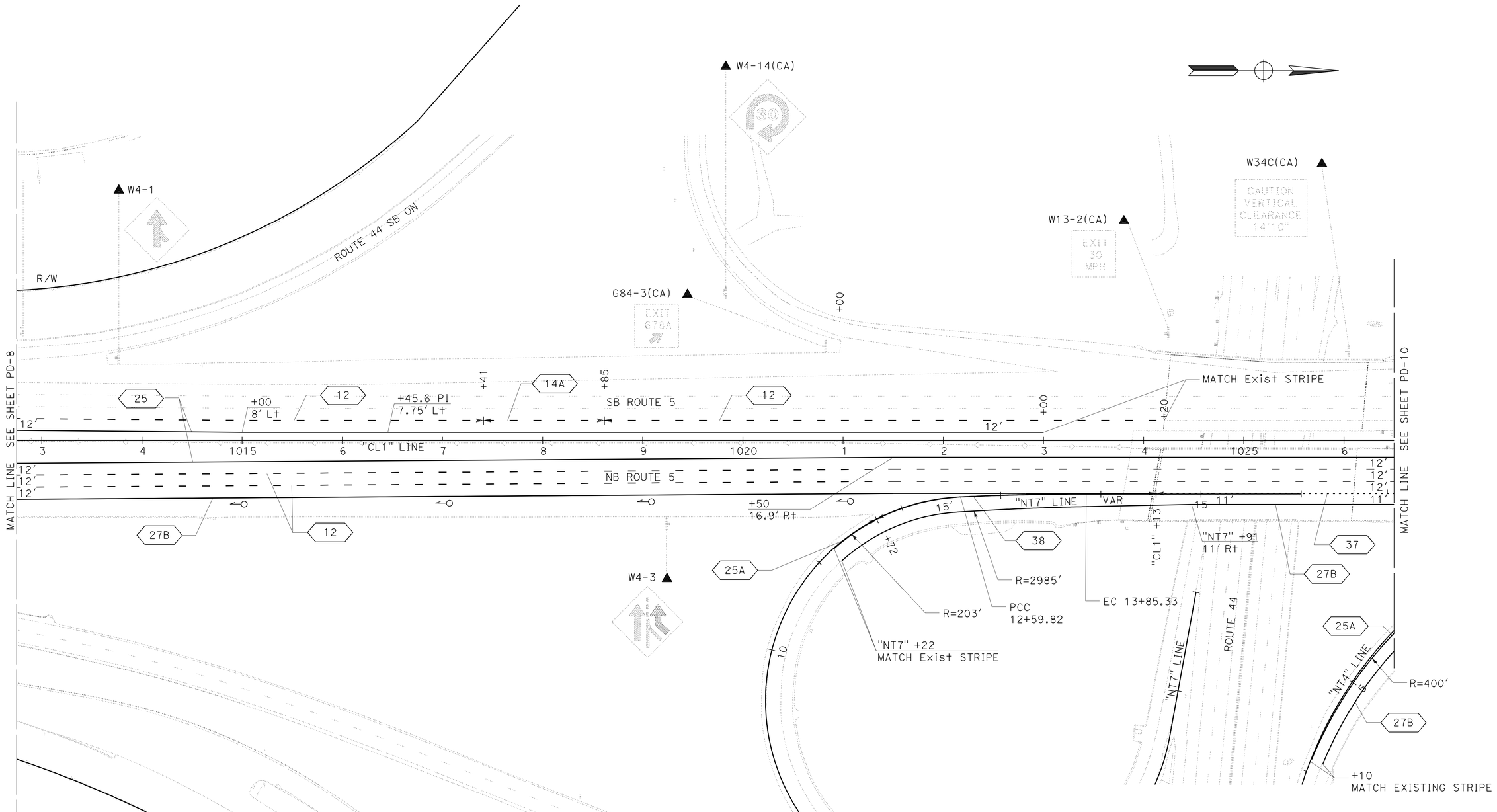

PAVEMENT DELINEATION AND SIGN PLAN

SCALE: 1" = 50'

PD-9

THIS PLAN ACCURATE FOR PAVEMENT DELINEATION ONLY

REVISED BY	DATE REVISED

CALCULATED-DESIGNED BY	CHECKED BY
BILL LEHMAN	CHRIS GAIDO

FUNCTIONAL SUPERVISOR: JOHN MARTIN

STATE OF CALIFORNIA - DEPARTMENT OF TRANSPORTATION

Caltrans DESIGN

P:\proj2\02\4c401\design\PS&E\24c401na009.dgn

LAST REVISION 09-07-10 | DATE PLOTTED => 15-DEC-2010 | TIME PLOTTED => 07:39

Dist	COUNTY	ROUTE	POST MILES TOTAL PROJECT	SHEET No.	TOTAL SHEETS
02	Sha	5	R10.5/R17.5	188	311

REGISTERED CIVIL ENGINEER 10-15-10 DATE

12-13-10
PLANS APPROVAL DATE

REGISTERED PROFESSIONAL ENGINEER
CHRIS S. GAIDO
No. C62535
Exp 12-31-11
CIVIL
STATE OF CALIFORNIA

THE STATE OF CALIFORNIA OR ITS OFFICERS OR AGENTS SHALL NOT BE RESPONSIBLE FOR THE ACCURACY OR COMPLETENESS OF SCANNED COPIES OF THIS PLAN SHEET.

NOTE:

FOR ACCURATE RIGHT OF WAY DATA, CONTACT RIGHT OF WAY ENGINEERING AT THE DISTRICT OFFICE.

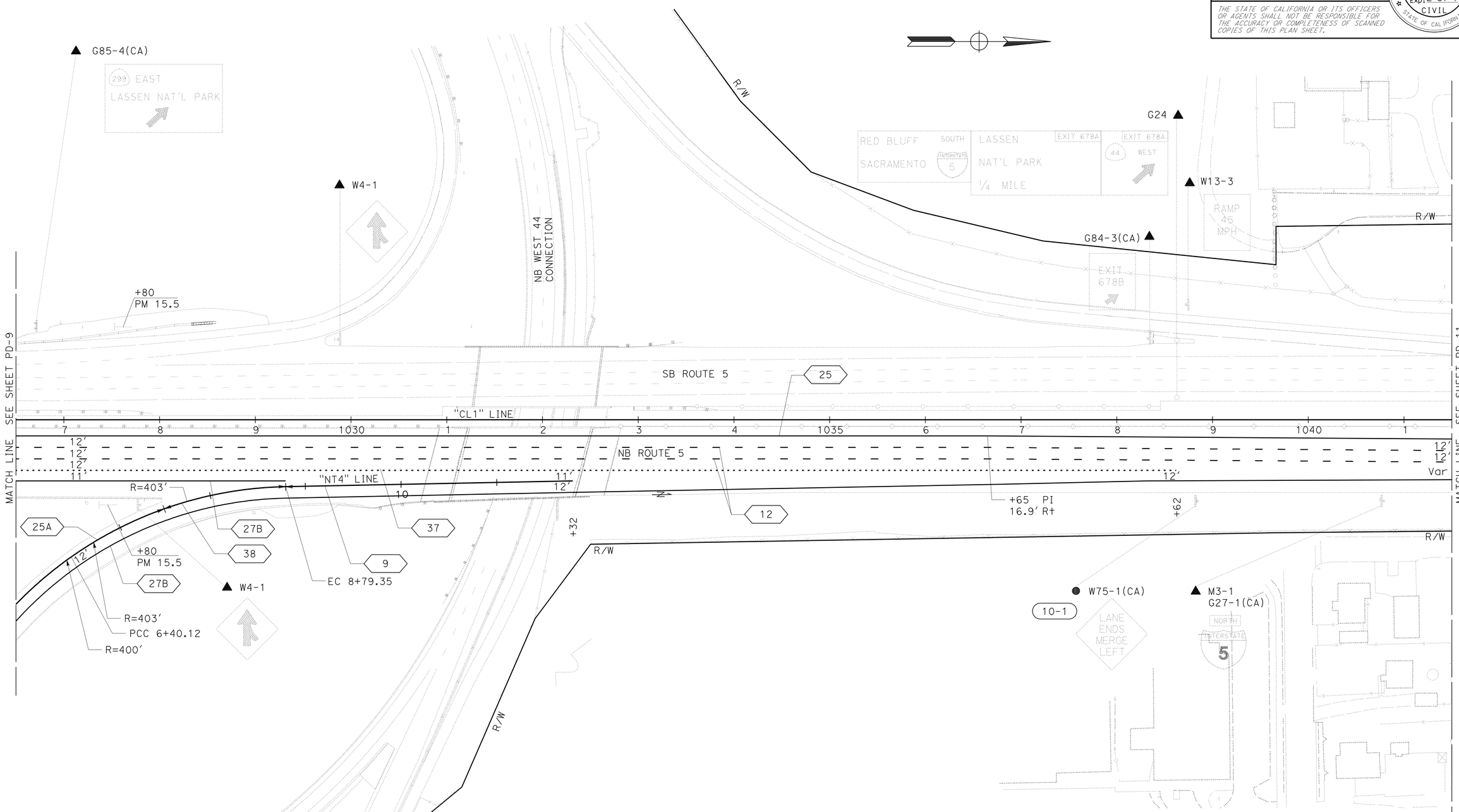

PAVEMENT DELINEATION AND SIGN PLAN

SCALE: 1" = 50'

PD-10

THIS PLAN ACCURATE FOR PAVEMENT DELINEATION ONLY

REVISED BY	DATE REVISED
BILL LEHMAN	CHRIS GAIDO
CALCULATED-DESIGNED BY	CHECKED BY
FUNCTIONAL SUPERVISOR	JOHN MARTIN

STATE OF CALIFORNIA - DEPARTMENT OF TRANSPORTATION
Caltrans
DESIGN

P:\proj2\02\4c401\design\PS&E\24c401na010.dgn

LAST REVISION | DATE PLOTTED => 15-DEC-2010
09-07-10 | TIME PLOTTED => 07:39

Dist	COUNTY	ROUTE	POST MILES TOTAL PROJECT	SHEET No.	TOTAL SHEETS
02	Sha	5	R10.5/R17.5	189	311

REGISTERED CIVIL ENGINEER 10-15-10 DATE

12-13-10
PLANS APPROVAL DATE

REGISTERED PROFESSIONAL ENGINEER
CHRIS S. GAIDO
No. C62535
Exp 12-31-11
CIVIL
STATE OF CALIFORNIA

THE STATE OF CALIFORNIA OR ITS OFFICERS OR AGENTS SHALL NOT BE RESPONSIBLE FOR THE ACCURACY OR COMPLETENESS OF SCANNED COPIES OF THIS PLAN SHEET.

NOTE:

FOR ACCURATE RIGHT OF WAY DATA, CONTACT RIGHT OF WAY ENGINEERING AT THE DISTRICT OFFICE.

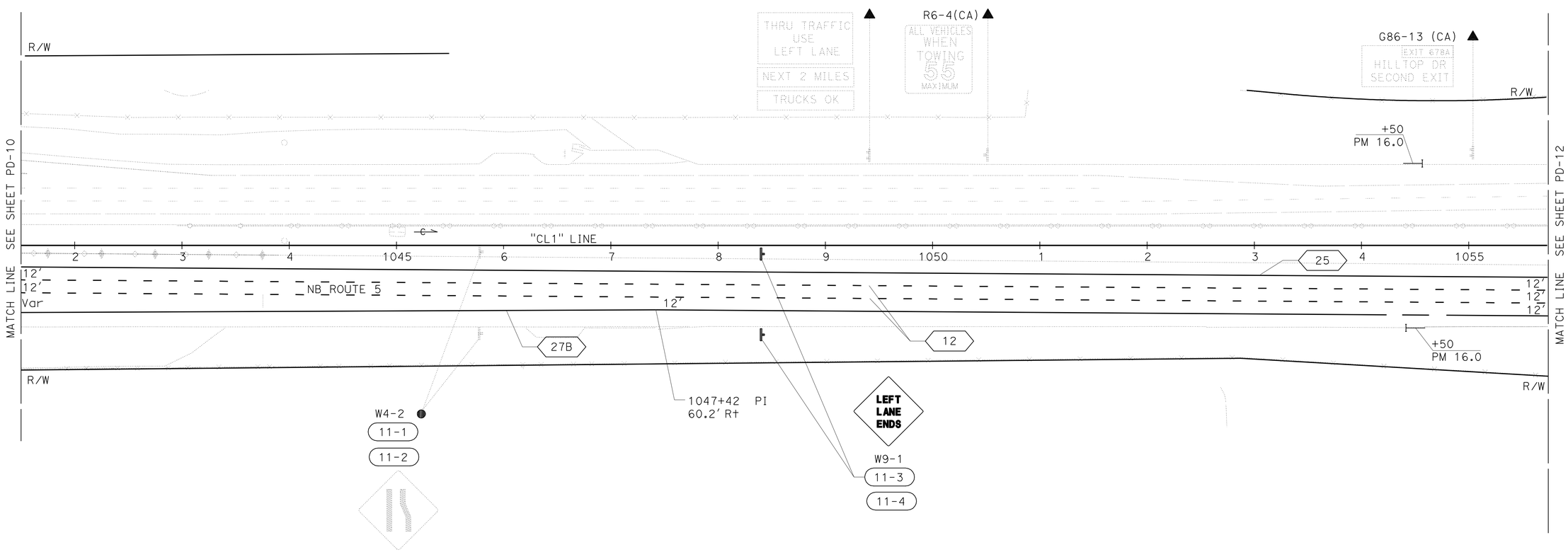

PAVEMENT DELINEATION AND SIGN PLAN

SCALE: 1" = 50'

PD-11

THIS PLAN ACCURATE FOR PAVEMENT DELINEATION ONLY

REVISED BY	DATE REVISED

CALCULATED-DESIGNED BY	CHECKED BY
BILL LEHMAN	CHRIS GAIDO

FUNCTIONAL SUPERVISOR: JOHN MARTIN

STATE OF CALIFORNIA - DEPARTMENT OF TRANSPORTATION

Caltrans DESIGN

P:\proj2\02\4c401\design\PS&E\24c401na011.dgn

LAST REVISION 09-07-10 | DATE PLOTTED => 15-DEC-2010 | TIME PLOTTED => 07:39

Dist	COUNTY	ROUTE	POST MILES TOTAL PROJECT	SHEET No.	TOTAL SHEETS
02	Sha	5	R10.5/R17.5	190	311

REGISTERED CIVIL ENGINEER 10-15-10 DATE

12-13-10
PLANS APPROVAL DATE

REGISTERED PROFESSIONAL ENGINEER CHRIS S. GAIDO No. C62535 Exp 12-31-11 CIVIL STATE OF CALIFORNIA

THE STATE OF CALIFORNIA OR ITS OFFICERS OR AGENTS SHALL NOT BE RESPONSIBLE FOR THE ACCURACY OR COMPLETENESS OF SCANNED COPIES OF THIS PLAN SHEET.

NOTE:

FOR ACCURATE RIGHT OF WAY DATA, CONTACT RIGHT OF WAY ENGINEERING AT THE DISTRICT OFFICE.

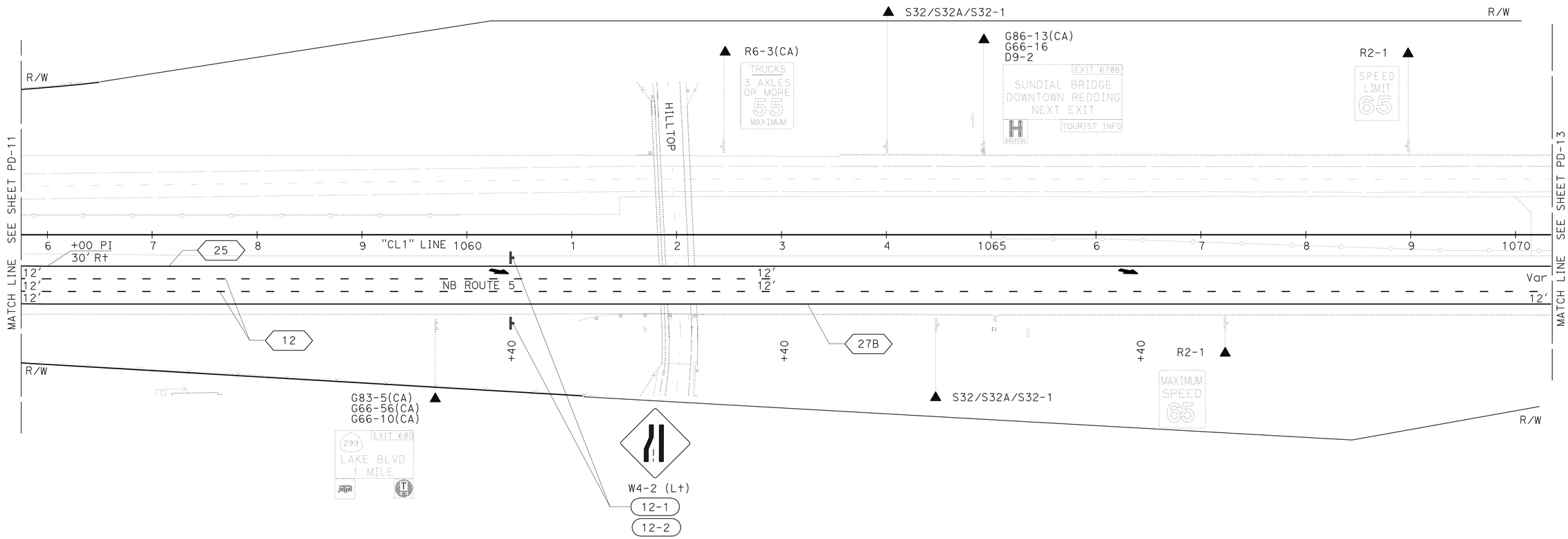

PAVEMENT DELINEATION AND SIGN PLAN

SCALE: 1" = 50'

PD-12

THIS PLAN ACCURATE FOR PAVEMENT DELINEATION ONLY

REVISED BY	DATE REVISED

CALCULATED-DESIGNED BY: BILL LEHMAN
CHECKED BY: CHRIS GAIDO
FUNCTIONAL SUPERVISOR: JOHN MARTIN

STATE OF CALIFORNIA - DEPARTMENT OF TRANSPORTATION
Caltrans
DESIGN

P:\proj2\02\4c401\design\PS&E\24c401na012.dgn

LAST REVISION 09-07-10 | DATE PLOTTED => 15-DEC-2010 | TIME PLOTTED => 07:39

Dist	COUNTY	ROUTE	POST MILES TOTAL PROJECT	SHEET No.	TOTAL SHEETS
02	Sha	5	R10.5/R17.5	191	311

REGISTERED CIVIL ENGINEER 10-15-10 DATE

12-13-10
PLANS APPROVAL DATE

REGISTERED PROFESSIONAL ENGINEER
CHRIS S. GAIDO
No. C62535
Exp 12-31-11
CIVIL
STATE OF CALIFORNIA

THE STATE OF CALIFORNIA OR ITS OFFICERS OR AGENTS SHALL NOT BE RESPONSIBLE FOR THE ACCURACY OR COMPLETENESS OF SCANNED COPIES OF THIS PLAN SHEET.

NOTE:

FOR ACCURATE RIGHT OF WAY DATA, CONTACT RIGHT OF WAY ENGINEERING AT THE DISTRICT OFFICE.

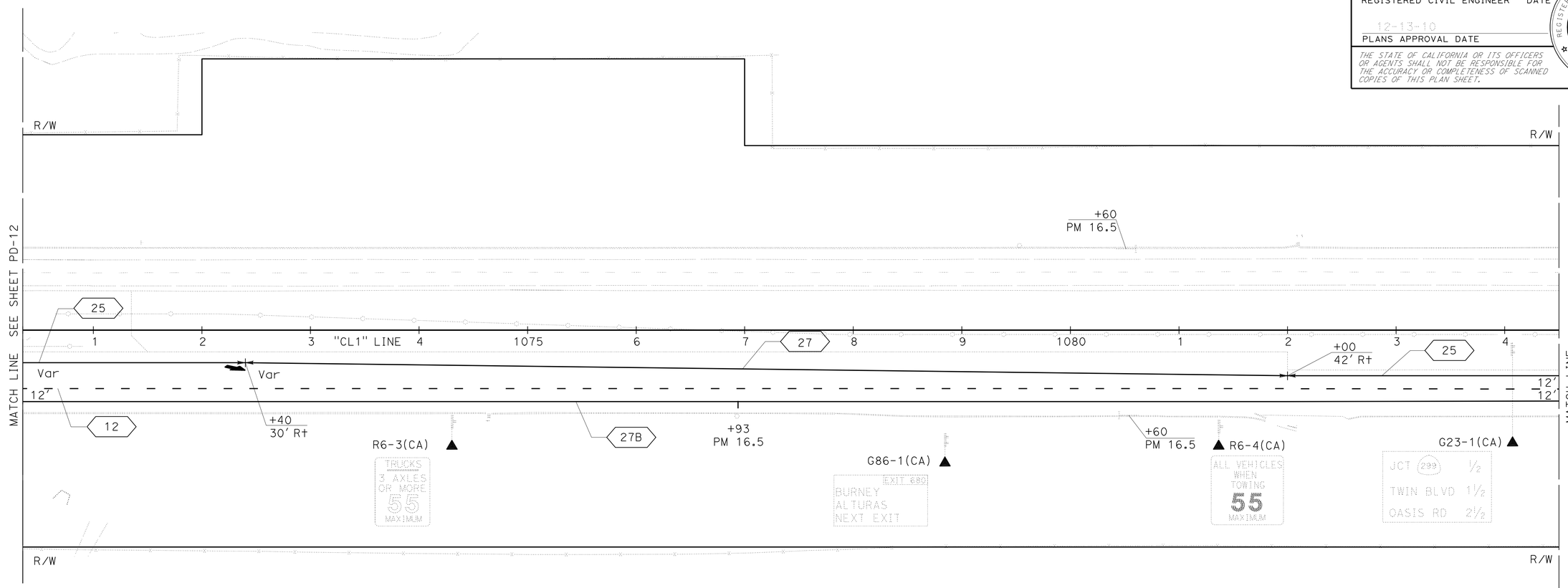

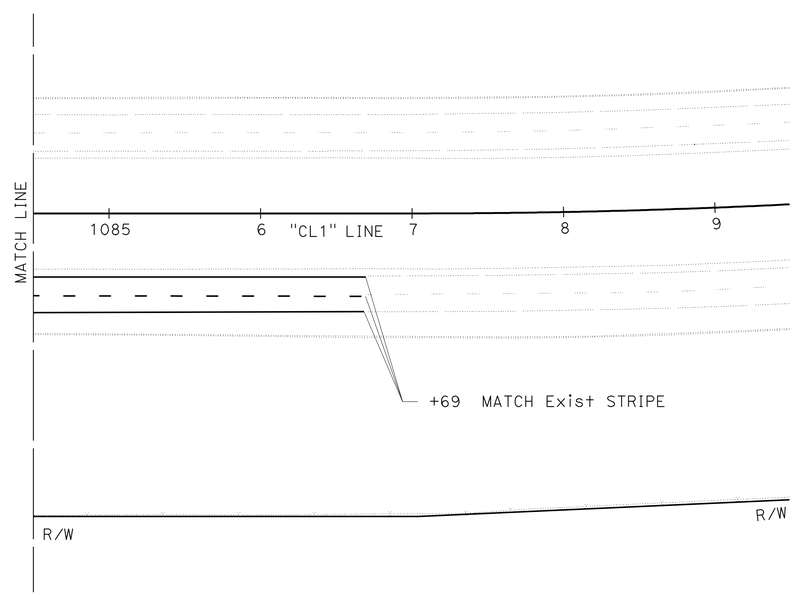

THIS PLAN ACCURATE FOR PAVEMENT DELINEATION ONLY

PAVEMENT DELINEATION AND SIGN PLAN

SCALE: 1" = 50'

PD-13

REVISED BY	DATE REVISED
BILL LEHMAN	CHRIS GAIDO

CALCULATED-DESIGNED BY: BILL LEHMAN
CHECKED BY: CHRIS GAIDO
FUNCTIONAL SUPERVISOR: JOHN MARTIN

STATE OF CALIFORNIA - DEPARTMENT OF TRANSPORTATION
Caltrans
DESIGN

P:\proj2\02\4c401\design\PS&E\24c401na013.dgn

LAST REVISION 09-07-10 | DATE PLOTTED => 15-DEC-2010 | TIME PLOTTED => 07:39

Dist	COUNTY	ROUTE	POST MILES TOTAL PROJECT	SHEET No.	TOTAL SHEETS
02	Sha	5	R10.5/R17.5	192	311

REGISTERED CIVIL ENGINEER 10-15-10 DATE

12-13-10
PLANS APPROVAL DATE

REGISTERED PROFESSIONAL ENGINEER CHRIS S. GAIDO No. C62535 Exp 12-31-11 CIVIL STATE OF CALIFORNIA

THE STATE OF CALIFORNIA OR ITS OFFICERS OR AGENTS SHALL NOT BE RESPONSIBLE FOR THE ACCURACY OR COMPLETENESS OF SCANNED COPIES OF THIS PLAN SHEET.

NOTES:

1. PAVEMENT DELINEATION ITEMS ASSOCIATED WITH THE LANE DROP CONFIGURATION, (MARKINGS, DELINEATORS AND SIGNS) PAID FOR WITHIN MAIN CONTRACT BID.
2. SEE SHT S-1 AND SD-3 FOR ADDITIVE SIGN PEDESTAL LOCATION AT "CL1" LINE 834+50.

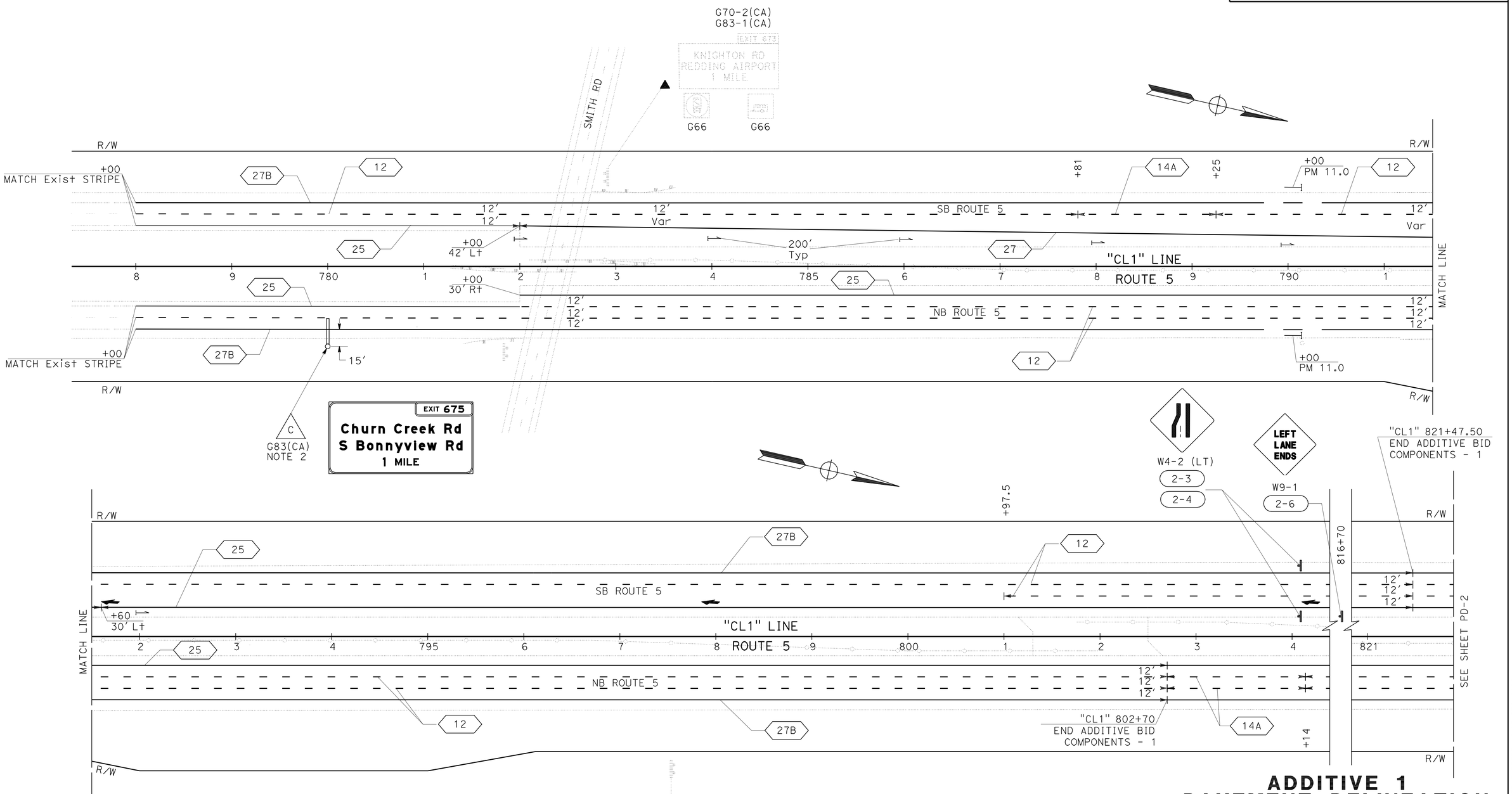

THIS PLAN ACCURATE FOR PAVEMENT DELINEATION ONLY

ADDITIVE 1 PAVEMENT DELINEATION AND SIGN PLAN

SCALE: 1" = 50'

PD-14

REVISED BY	DATE REVISED
TRAVIS GURNEY	CHRIS GAIDO
CALCULATED-DESIGNED BY	CHECKED BY
FUNCTIONAL SUPERVISOR	JOHN MARTIN

STATE OF CALIFORNIA - DEPARTMENT OF TRANSPORTATION

DESIGN

Caltrans

P:\proj2\02\4c401\design\PS&E\24c401na014.dgn

LAST REVISION 09-07-10 DATE PLOTTED => 15-DEC-2010 TIME PLOTTED => 07:39

Dist	COUNTY	ROUTE	POST MILES TOTAL PROJECT	SHEET No.	TOTAL SHEETS
02	Sha	5	R10.5/R17.5	193	311

REGISTERED CIVIL ENGINEER DATE 10-15-10

PLANS APPROVAL DATE 12-13-10

REGISTERED PROFESSIONAL ENGINEER CHRIS S. GAIDO No. C62535 Exp 12-31-11 CIVIL STATE OF CALIFORNIA

THE STATE OF CALIFORNIA OR ITS OFFICERS OR AGENTS SHALL NOT BE RESPONSIBLE FOR THE ACCURACY OR COMPLETENESS OF SCANNED COPIES OF THIS PLAN SHEET.

NOTE:

1. PAVEMENT DELINEATION ITEMS ASSOCIATED WITH THE LANE-DROP CONFIGURATION, (MARKINGS, DELINEATORS AND SIGNS) PAID FOR WITHIN MAIN CONTRACT BID.

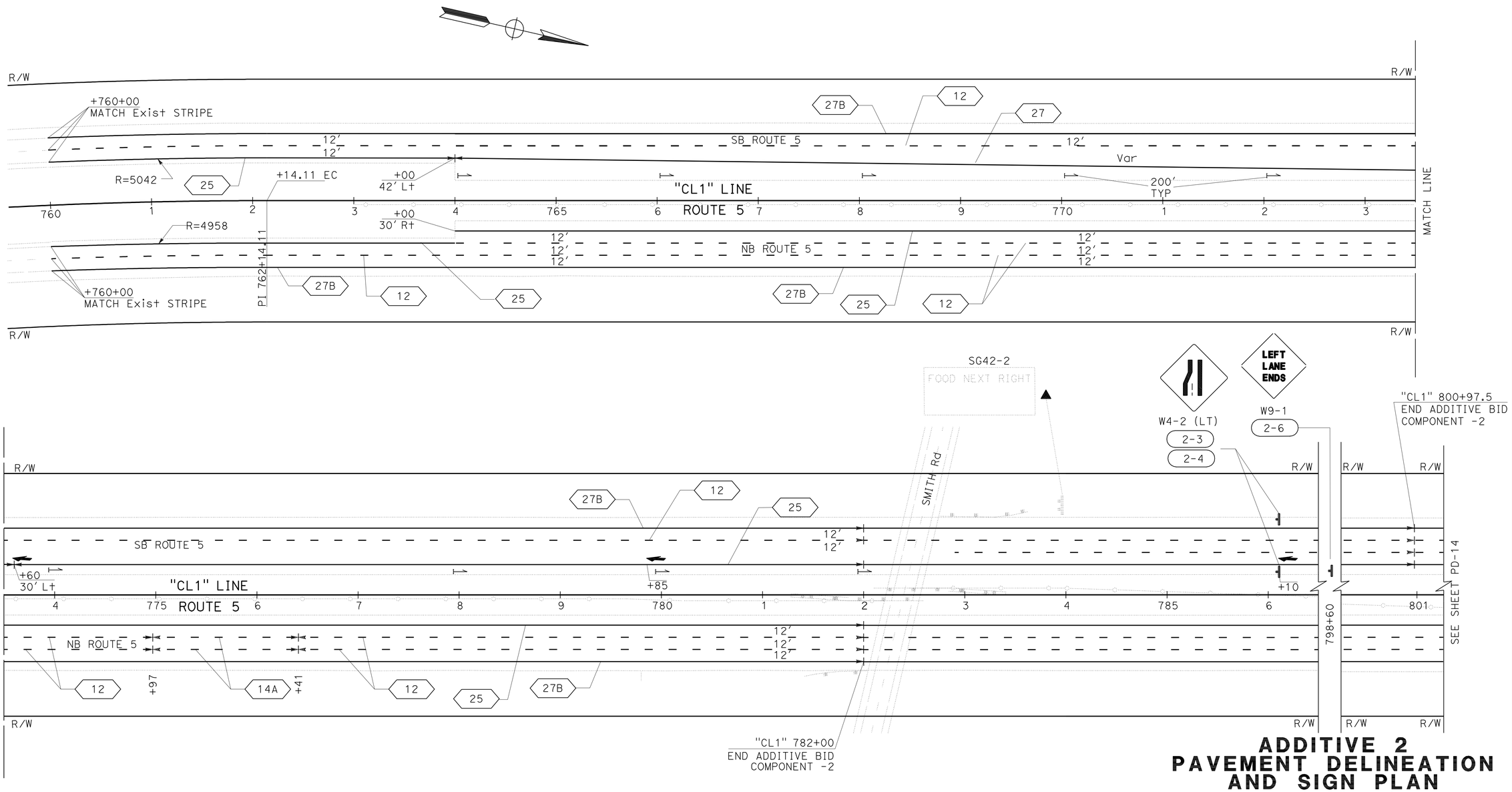

ADDITIVE 2 PAVEMENT DELINEATION AND SIGN PLAN

SCALE: 1" = 50'

PD-15

THIS PLAN ACCURATE FOR PAVEMENT DELINEATION ONLY

REVISED BY	DATE REVISED
JOLENA ASTIN	CHRIS GAIDO
CALCULATED-DESIGNED BY	CHECKED BY
FUNCTIONAL SUPERVISOR	JOHN MARTIN

STATE OF CALIFORNIA - DEPARTMENT OF TRANSPORTATION

Caltrans® DESIGN

P:\proj2\02\4c401\design\PS&E\24c401na015.dgn

LAST REVISION 09-07-10 | DATE PLOTTED => 15-DEC-2010 | TIME PLOTTED => 07:39

Dist	COUNTY	ROUTE	POST MILES TOTAL PROJECT	SHEET No.	TOTAL SHEETS
02	Sha	5	R10.5/R17.5	194	311

REGISTERED CIVIL ENGINEER 10-15-10 DATE

12-13-10
PLANS APPROVAL DATE

REGISTERED PROFESSIONAL ENGINEER CHRIS S. GAIDO No. C62535 Exp 12-31-11 CIVIL STATE OF CALIFORNIA

THE STATE OF CALIFORNIA OR ITS OFFICERS OR AGENTS SHALL NOT BE RESPONSIBLE FOR THE ACCURACY OR COMPLETENESS OF SCANNED COPIES OF THIS PLAN SHEET.

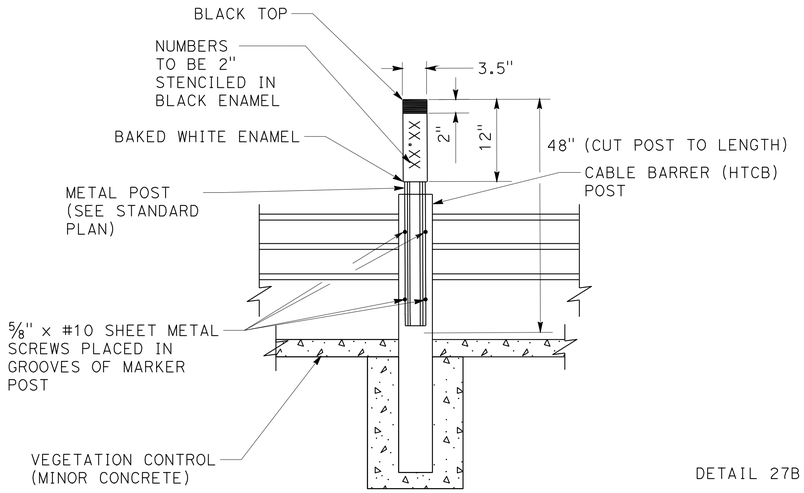

MARKER (CULVERT, CABLE BARRIER MOUNTED)

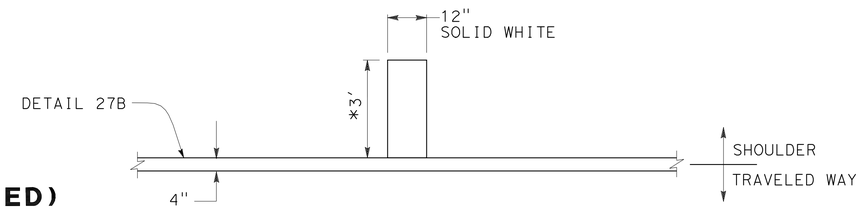

TYPICAL HALF MILE POST STRIPE

ON EDGE LINES AT EACH HALF POST MILE
NOT TO BE USED WITHIN FRACTIONAL MILE SEGMENT
* LENGTH MAY VARY DUE TO PAVEMENT WIDTH

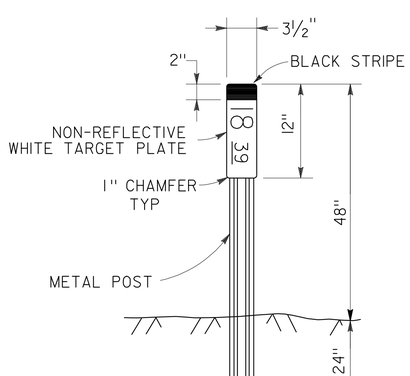

NOTES:

1. SEE STANDARD PLAN A73B FOR METAL POST DETAILS
2. PLACE MARKER (CULVERT) 1 FOOT FROM THE CABLE BARRIER.
3. ALL MARKERS (CULVERT) ARE TO BE PLACED ON OR NEAR THE MEDIAN BARRIER. EXACT MARKER LOCATION TO BE DETERMINED BY THE ENGINEER.

MARKER (CULVERT)

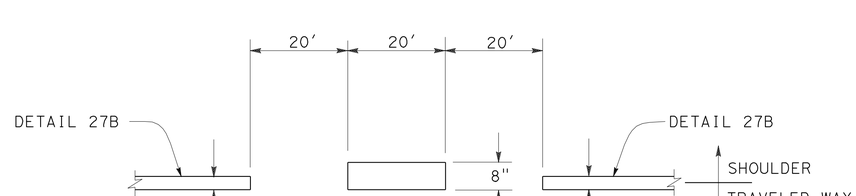

TYPICAL MILE POST STRIPE

ON RIGHT EDGELINES AT EACH WHOLE POST MILE

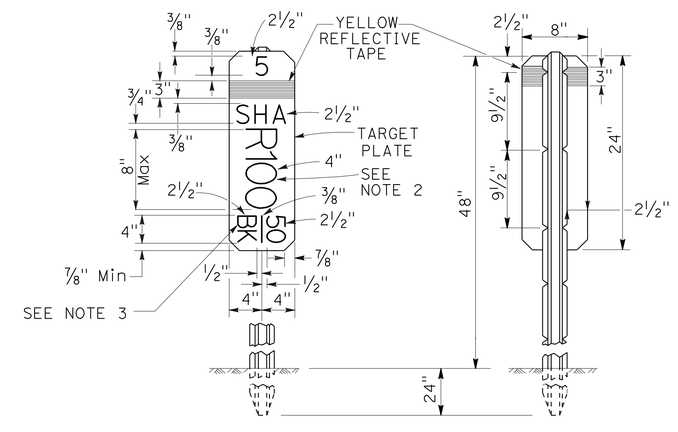

NOTES:

1. THE MARKER SHALL BE WHITE (NON-REFLECTIVE) TARGET PLATE WITH BLACK SERIES D NUMERALS AND LETTERS.
2. A POST MILE PREFIX, SUCH AS "R", SHALL APPLY ONLY WHEN DIRECTED BY THE ENGINEER.
3. "BK" (BACK), "AH" (AHEAD), OR A BLANK SPACE SHALL APPLY AS DIRECTED BY THE ENGINEER.
4. ALL INFORMATION SHALL BE IN ENGLISH UNITS (MILES).

POST MILE MARKER DETAIL

PAVEMENT DELINEATION DETAILS

NO SCALE

PDD-1

REVISED BY	DATE REVISED
BILL LEHMAN	CHRIS GAIDO

CALCULATED-DESIGNED BY / CHECKED BY

FUNCTIONAL SUPERVISOR: JOHN MARTIN

STATE OF CALIFORNIA - DEPARTMENT OF TRANSPORTATION
Caltrans
DESIGN

P:\proj2\02\4c401\design\PS&E\24c401nb001.dgn

LAST REVISION 08-23-10 | DATE PLOTTED => 15-DEC-2010 | TIME PLOTTED => 07:39

Dist	COUNTY	ROUTE	POST MILES TOTAL PROJECT	SHEET No.	TOTAL SHEETS
02	Sha	5	R10.5/R17.5	195	311

REGISTERED CIVIL ENGINEER 10-15-10 DATE

12-13-10
PLANS APPROVAL DATE

REGISTERED PROFESSIONAL ENGINEER
CHRIS S. GAIDO
No. C62535
Exp 12-31-11
CIVIL
STATE OF CALIFORNIA

THE STATE OF CALIFORNIA OR ITS OFFICERS OR AGENTS SHALL NOT BE RESPONSIBLE FOR THE ACCURACY OR COMPLETENESS OF SCANNED COPIES OF THIS PLAN SHEET.

MILEPOST MARKERS, OBJECT MARKERS, AND DELINEATORS

SHEET No.	ALIGNMENT	MILEPOST MARKER	DELINEATOR (CLASS 1)		OBJECT MARKER (TYPE L-1)
			DELINEATOR (TYPE F)	DELINEATOR (TYPE E)	
		EA	EA	EA	EA
PD-1	"CL1"		5		
PD-2	"CL1"	2	1		
PD-3	"CL1"	2			2
PD-4	"CL1"	2			1
PD-5	"CL1"				
PD-6	"CL1"	2	1		
PD-7	"CL1"		8		3
PD-8	"CL1"	2			4
PD-9	"CL1"			4	
PD-10	"CL1"				1
PD-11	"CL1"	2			
PD-12	"CL1"				
PD-13	"CL1"				
SUBTOTAL		12	15	4	11
TOTAL		12	19		11

THERMOPLASTIC PAVEMENT MARKING

SHEET No.	LOCATION	TYPE VI ARROW	CROSSWALK
		SQFT	SQFT
PD-2	"CL1" 812+10 L+	42	
PD-2	"CL1" 814+10 L+	42	
PD-2	"CL1" 816+10 L+	42	
PD-7	"S1" 76+20 TO 77+20		236
PD-12	"CL1" 1069+40 R+	42	
PD-12	"CL1" 1071+40 R+	42	
PD-13	"CL1" 1073+40 R+	42	
SUBTOTAL		252	236
TOTAL		488	

TRAFFIC STRIPE AND PAVEMENT MARKERS

SHEET No.	LOCATION			L+/R+	TWO-COMPONENT PAINT TRAFFIC STRIPE									PAVEMENT MARKER (RETROREFLECTIVE)		
					YELLOW			WHITE								
					4"			4"	8"	4" (BROKEN 30-12)	4" (BROKEN 36-12)		4" (BROKEN 17-7)			
					DETAIL	DETAIL	DETAIL	DETAIL	DETAIL	DETAIL	DETAIL	DETAIL	DETAIL	TYPE C	TYPE G	TYPE H
					25	25A	27	27B	38	37	12	14A	9	EA	EA	EA
					LF	LF	LF	LF	LF	LF	LF	LF	LF			
PD-1	"CL1"	798+50	810+50	L+	400		800	1200			1200				26	28
	"CL1"	798+50	810+50	R+	1200			1200			1712	288		8	37	26
PD-2	"CL1"	810+50	839+25	L+	2715		160	2875			4653		285		105	63
	"CL1"	810+50	839+25	R+	2875			2888	547		5462	288		8	139	61
PD-3	"CL1"	839+25	868+15	L+	2890	65		3288	1039		5492	288	15	8	160	65
	"CL1"	839+25	868+15	R+	2890	75		3191	380		5780		300		145	65
PD-4	"CL1"	868+15	897+29	L+	2914			2914			5540	288		8	116	62
	"CL1"	868+15	897+29	R+	2914			2914			5828				122	62
PD-5	"CL1"	897+29	926+55	L+	2926			2926			5564	288		8	117	62
	"CL1"	897+29	926+55	R+	2926			2926			5448	404		12	115	62
PD-6	"CL1"	926+55	955+36	L+	2881			2881			5762				121	61
	"CL1"	926+55	955+36	R+	2881			2881			5532	230		12	116	61
PD-7	"CL1"	955+36	983+75	L+	2839	197		3276	273		5678		159		135	69
	"CL1"	955+36	983+75	R+	2839	185		2959	800		5390	288		8	147	69
PD-8	"CL1"	983+75	1012+75	L+	2900			1575	864	993	4187	288		76	131	61
	"CL1"	983+75	1012+75	R+	2900			2883	1100	880	5512	288		69	169	61
PD-9	"CL1"	1012+75	1026+50	L+	1025						1001	144		4	22	22
	"CL1"	1012+75	1026+50	R+	1375			1037		237	2750			18	64	30
	"NT7"	11+22	14+91			50		563	281						13	3
	"NT4"	4+10	5+70			151		134								7
PD-10	"CL1"	1026+50	1041+50	R+	1500			1818		1212	3000		300	83	70	32
	"NT4"	6+31	10+31			110			131						6	6
PD-11	"CL1"	1041+50	1055+74	R+	1424			1424			2848				60	31
PD-12	"CL1"	1055+74	1070+35	R+	1461			1461			2188				47	31
PD-13	"CL1"	1070+35	1086+69	R+	675		960	1634			1634				35	36
C-4	"CL1"	791+44	1081+21	R+											48	
SUBTOTAL					49,350	833	1920	50,848	5415	3322	92,161	3082	1059	322	2266	1136
TOTAL					102,951				5415	3322	95,243		1059	3724		

PAVEMENT DELINEATION QUANTITIES

PDQ-1

STATE OF CALIFORNIA - DEPARTMENT OF TRANSPORTATION
DESIGN

FUNCTIONAL SUPERVISOR: JOHN MARTIN
CALCULATED-DESIGNED BY: BILL LEHMAN
CHECKED BY: CHRIS GAIDO
REVISED BY
DATE REVISED

P:\proj2\02\4c401\design\PS&E\24c401nc001.dgn

LAST REVISION 10-18-10
DATE PLOTTED => 15-DEC-2010
TIME PLOTTED => 07:39

Dist	COUNTY	ROUTE	POST MILES TOTAL PROJECT	SHEET No.	TOTAL SHEETS
02	Sha	5	R10.5/R17.5	196	311

REGISTERED CIVIL ENGINEER 10-15-10 DATE

12-13-10
PLANS APPROVAL DATE

REGISTERED PROFESSIONAL ENGINEER CHRIS S. GAIDO No. C62535 Exp 12-31-11 CIVIL STATE OF CALIFORNIA

THE STATE OF CALIFORNIA OR ITS OFFICERS OR AGENTS SHALL NOT BE RESPONSIBLE FOR THE ACCURACY OR COMPLETENESS OF SCANNED COPIES OF THIS PLAN SHEET.

MARKER (CULVERT)

DRAINAGE SYSTEM No. AND UNIT No.	ALIGNMENT	STATION	POST MILE	LEFT	MEDIAN	RIGHT	REMOVE MARKER	MARKER (CULVERT)	MARKER (CULVERT, CABLE BARRIER MOUNTED)
							EA	EA	EA
1	"CL1"	803+00	11.24	X			1	1	
1a	"CL1"	803+01	11.24		X				1
2	"CL1"	806+71	11.31	X				1	
2a	"CL1"	806+73	11.31		X				1
2	"CL1"	806+75	11.31			X		1	
3	"CL1"	819+70	11.56	X				1	
3a	"CL1"	819+70	11.56		X				1
4	"CL1"	823+60	11.63	X				1	
4a	"CL1"	823+60	11.63		X				1
4	"CL1"	823+60	11.63			X		1	
5	"CL1"	833+70	11.82	X				1	
5a	"CL1"	833+70	11.82		X				1
5	"CL1"	833+70	11.82			X		1	
6	"CL1"	837+61	11.90	X				1	
6a	"CL1"	837+61	11.90		X				1
7a	"CL1"	841+01	11.96			X	1	1	
7c	"CL1"	841+02	11.96		X				1
7	"CL1"	841+03	11.96	X				1	
7	"CL1"	841+62	11.97	X				1	
8c	"CL1"	845+50	12.05		X				1
8a	"CL1"	845+50	12.05			X	1	1	
9	"CL1"	847+40	12.08	X			1	1	
9a	"CL1"	847+40	12.08		X				1
10	"CL1"	849+20	12.12			X	1	1	
10a	"CL1"	851+07	12.15		X			1	
10	"CL1"	851+58	12.16			X	1	1	
11a	"CL1"	852+21	12.17		X				1
11	"CL1"	852+54	12.18	X			1	1	
12i	"CL1"	855+50	12.24		X				1
12f	"CL1"	855+50	12.24			X		1	
12b	"CL1"	855+56	12.24			X	1	1	
13a	"CL1"	857+51	12.27		X				1
13	"CL1"	857+53	12.27	X			1	1	
14a	"CL1"	862+00	12.36		X				1
14	"CL1"	862+00	12.36			X	1	1	
15a	"CL1"	863+50	12.39		X				1
15	"CL1"	864+12	12.40	X			1	1	
16a	"CL1"	878+20	12.67		X				1
16	"CL1"	880+58	12.71			X	1	1	
16d	"CL1"	881+63	12.73		X				1
16	"CL1"	882+86	12.75	X			1	1	
17a	"CL1"	882+50	12.75		X				1
18a	"CL1"	886+99	12.83		X				1
19	"CL1"	892+70	12.94	X			1	1	
19a	"CL1"	892+70	12.94		X				1
19	"CL1"	892+70	12.94			X		1	
20	"CL1"	897+81	13.04	X				1	
20a	"CL1"	897+81	13.04		X				1
20	"CL1"	897+81	13.04			X	1	1	
21	"CL1"	903+00	13.14	X				1	
21d	"CL1"	903+00	13.14		X				1
21	"CL1"	903+00	13.14			X	1	1	
21a	"CL1"	905+64	13.19		X				1
22	"CL1"	913+33	13.33			X		1	
22d	"CL1"	913+49	13.33		X				1
22	"CL1"	913+66	13.34	X			1	1	
22a	"CL1"	915+93	13.38		X				1
						SUBTOTAL	17	33	24

MARKER (CULVERT)

DRAINAGE SYSTEM No. AND UNIT No.	ALIGNMENT	STATION	POST MILE	LEFT	MEDIAN	RIGHT	REMOVE MARKER	MARKER (CULVERT)	MARKER (CULVERT, CABLE BARRIER MOUNTED)
							EA	EA	EA
23a	"CL1"	932+76	13.70		X				1
23	"CL1"	933+52	13.71	X				1	
23d	"CL1"	933+52	13.71		X				1
23	"CL1"	933+52	13.71			X	1	1	
24	"CL1"	938+50	13.81	X				1	
24a	"CL1"	938+50	13.81		X				1
24	"CL1"	938+50	13.81			X		1	
25	"CL1"	945+29	13.94	X			1	1	
25a	"CL1"	945+29	13.94		X				1
25	"CL1"	945+29	13.94			X		1	
26c	"CL1"	948+32	13.99		X				1
26	"CL1"	949+73	14.02			X	1	1	
26f	"CL1"	949+95	14.02		X				1
26	"CL1"	950+13	14.03	X			1	1	
26h	"CL1"	950+97	14.04		X				1
27	"CL1"	955+30	14.13			X	1	1	
27	"CL1"	957+97	14.18			X		1	
27c	"CL1"	958+00	14.18		X				1
27	"CL1"	959+30	14.20			X		1	
27a	"CL1"	960+03	14.22		X				1
28a	"CL1"	966+00	14.33		X				1
28	"CL1"	966+00	14.33			X		1	
30d	"CL1"	974+12	14.48		X			1	
30a	"CL1"	975+54	14.51		X				1
31	"CL1"	979+93	14.59			X	1	1	
31d	"CL1"	980+50	14.60		X				1
31a	"CL1"	982+69	14.65		X				1
32a	"CL1"	987+13	14.73		X				1
32	"CL1"	987+13	14.73			X	1	1	
33d	"CL1"	991+99	14.82		X				1
33	"CL1"	992+65	14.83	X			1	1	
33a	"CL1"	993+66	14.85		X				1
	"CL1"	999+50	14.96			X	1	1	
	"CL1"	1002+00	15.01			X		1	
	"CL1"	1009+00	15.14			X		1	
	"CL1"	1053+97	16.00			X	1	1	
37d	"CL1"	1065+35	16.21		X		1		1
37	"CL1"	1065+35	16.21			X		1	
37a	"CL1"	1066+10	16.22		X				1
	"CL1"	1070+76	16.31			X		1	
	"CL1"	1072+47	16.35	X			1	1	
38a	"CL1"	1079+93	16.49		X				1
38d	"CL1"	1081+67	16.52		X		1		1
38	"CL1"	1082+25	16.53			X	1	1	
						SUBTOTAL	14	24	20
						TOTAL	31	57	44

PAVEMENT DELINEATION QUANTITIES

PDQ-2

REVISED BY	DATE REVISED
BRETT DITZLER	CHRIS GAIDO

CALCULATED-DESIGNED BY / CHECKED BY

FUNCTIONAL SUPERVISOR: JOHN MARTIN

STATE OF CALIFORNIA - DEPARTMENT OF TRANSPORTATION

Caltrans® DESIGN

P:\proj2\02\4c401\design\PS&E\24c401nc002.dgn

LAST REVISION 08-23-10 | DATE PLOTTED => 15-DEC-2010 | TIME PLOTTED => 07:40

Dist	COUNTY	ROUTE	POST MILES TOTAL PROJECT	SHEET No.	TOTAL SHEETS
02	Sha	5	R10.5/R17.5	197	311

REGISTERED CIVIL ENGINEER 10-15-10 DATE

12-13-10
PLANS APPROVAL DATE

REGISTERED PROFESSIONAL ENGINEER FRANK RIVAS No. C53592 Exp. 6-30-11 CIVIL STATE OF CALIFORNIA

THE STATE OF CALIFORNIA OR ITS OFFICERS OR AGENTS SHALL NOT BE RESPONSIBLE FOR THE ACCURACY OR COMPLETENESS OF SCANNED COPIES OF THIS PLAN SHEET.

NOTES:

1. FOR ACCURATE RIGHT OF WAY DATA, CONTACT RIGHT OF WAY ENGINEERING AT THE DISTRICT OFFICE.
2. SEE SIGN DETAIL SHEET SD-3 FOR OH SIGN DETAILS.

LEGEND

- #-# ROADSIDE SIGN
- # OVERHEAD SIGN NUMBER
- REMOVE ROADSIDE SIGN
- EXISTING ROADSIDE SIGN TWO POST
- NEW OVERHEAD SIGN

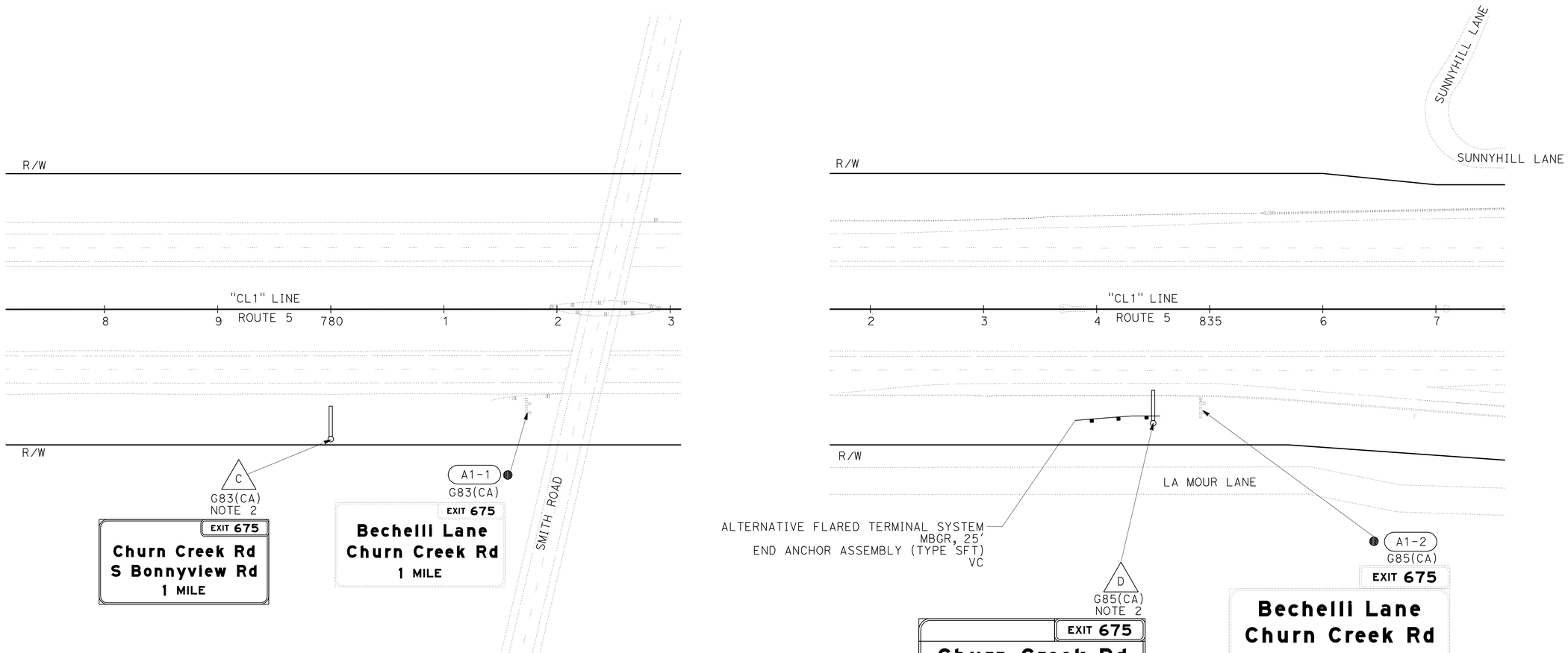

ADDITIVE 1 SIGN PLAN

SCALE: 1" = 50'

S-1

THIS PLAN ACCURATE FOR SIGNS ONLY

REVISED BY	DATE REVISED

CALCULATED-DESIGNED BY	CHECKED BY
FRANK RIVAS	JEFF STEPPAT

FUNCTIONAL SUPERVISOR: ROB STINGER

STATE OF CALIFORNIA - DEPARTMENT OF TRANSPORTATION
Caltrans® TRAFFIC OPS

P:\proj2\02\4c401\design\PS&E\24c401oa001.dgn

LAST REVISION 07-29-10 | DATE PLOTTED => 14-DEC-2010 | TIME PLOTTED => 08:49

Dist	COUNTY	ROUTE	POST MILES TOTAL PROJECT	SHEET No.	TOTAL SHEETS
02	Sha	5	R10.5/R17.5	198	311

REGISTERED CIVIL ENGINEER 10-15-10 DATE

12-13-10
PLANS APPROVAL DATE

REGISTERED PROFESSIONAL ENGINEER FRANK RIVAS No. C53592 Exp. 6-30-11 CIVIL STATE OF CALIFORNIA

THE STATE OF CALIFORNIA OR ITS OFFICERS OR AGENTS SHALL NOT BE RESPONSIBLE FOR THE ACCURACY OR COMPLETENESS OF SCANNED COPIES OF THIS PLAN SHEET.

NOTES:

1. FOR ACCURATE RIGHT OF WAY DATA, CONTACT RIGHT OF WAY ENGINEERING AT THE DISTRICT OFFICE.
2. SEE SIGN DETAIL SHEET SD-4 FOR OH SIGN DETAILS.

LEGEND

OVERHEAD SIGN NUMBER

NEW OVERHEAD SIGN

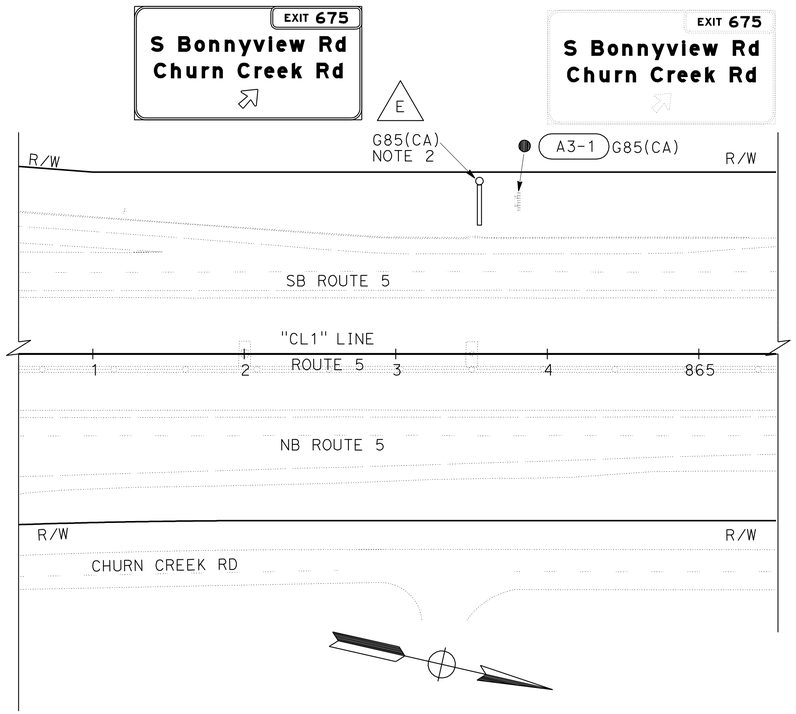

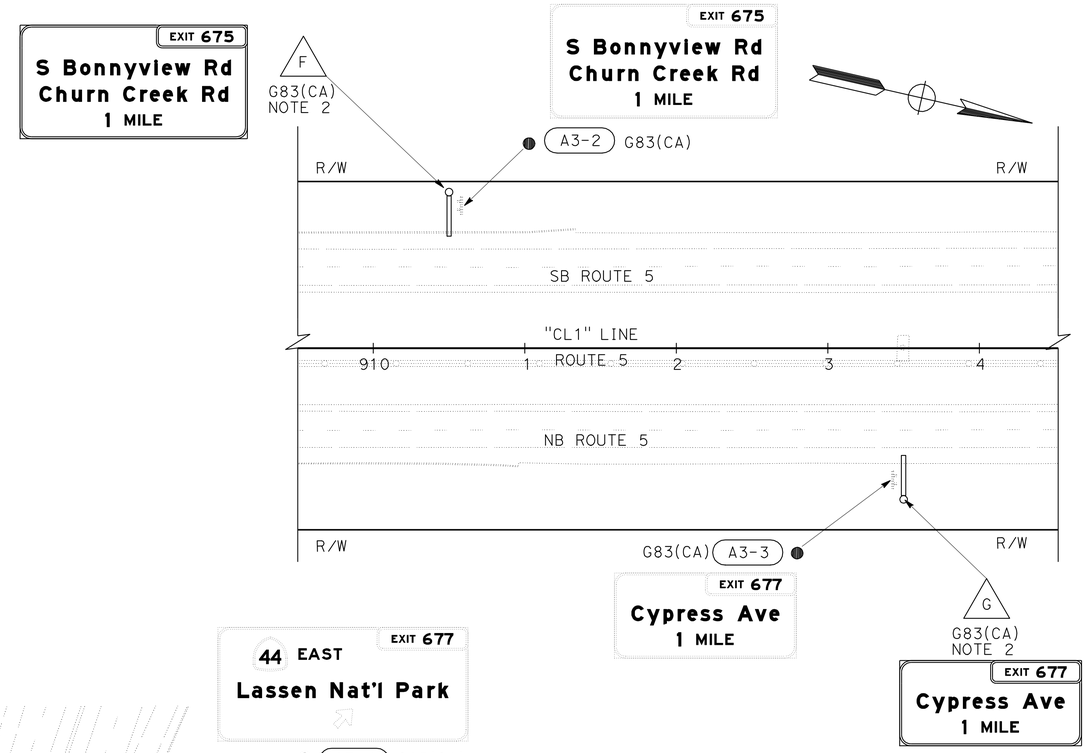

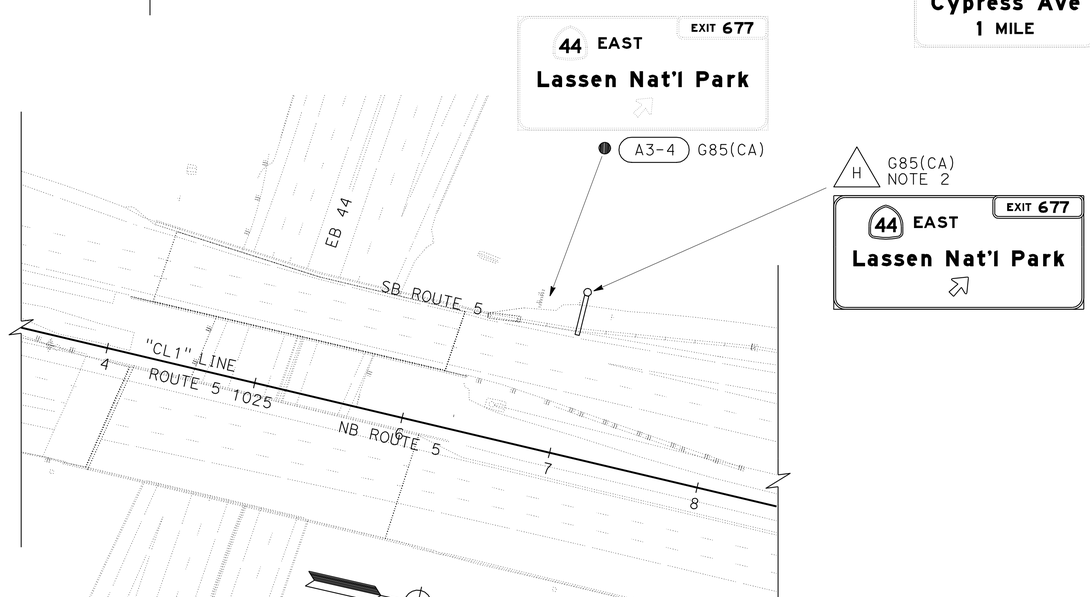

THIS PLAN ACCURATE FOR SIGNS ONLY

ADDITIVE 3
SIGN PLAN

SCALE: 1" = 50'

S-2

REVISED BY	DATE REVISED

CALCULATED-DESIGNED BY	CHECKED BY
FRANK RIVAS	JEFF STEPPAT

FUNCTIONAL SUPERVISOR: ROB STINGER

STATE OF CALIFORNIA - DEPARTMENT OF TRANSPORTATION
Caltrans® TRAFFIC OPS

P:\proj2\02\4c401\design\PS&E\24c401oa002.dgn

LAST REVISION 08-23-10 | DATE PLOTTED => 14-DEC-2010 | TIME PLOTTED => 08:49

Dist	COUNTY	ROUTE	POST MILES TOTAL PROJECT	SHEET No.	TOTAL SHEETS
02	Sha	5	R10.5/R17.5	199	311

REGISTERED CIVIL ENGINEER 10-15-10 DATE

12-13-10
PLANS APPROVAL DATE

REGISTERED PROFESSIONAL ENGINEER FRANK RIVAS No. C53592 Exp. 6-30-11 CIVIL STATE OF CALIFORNIA

THE STATE OF CALIFORNIA OR ITS OFFICERS OR AGENTS SHALL NOT BE RESPONSIBLE FOR THE ACCURACY OR COMPLETENESS OF SCANNED COPIES OF THIS PLAN SHEET.

NOTES:

1. USE A 2¼" Sq TUBE x 30" LONG, 3/16" THICK ANCHOR FOR 2" POSTS.
   USE A 3" Sq TUBE x 3' LONG, 3/16" THICK ANCHOR FOR 2-1/2 " POSTS.
2. USE A 5/16" CORNER BOLT OR TWO DRIVE RIVETS TO FASTEN ASSEMBLED SIGN AND POST INTO ANCHOR. INSTALL CORNER BOLT OR DRIVE RIVETS INTO THE SIDES BACKING #1 TRAFFIC.
3. REMOVE EXISTING AC OR PCC, DRIVE ANCHOR SLEEVE INTO SOIL AND RECAP WITH LIKE MATERIAL, MATCHING EXISTING THICKNESS.
4. 2" POSTS ARE TO BE 1/8" THICK, PERFORATIONS OF 7/16" IN DIAMETER ARE 1" ON CENTER ON ALL SIDES, LENGTHS ARE 10' AND 12'.
5. 2-1/2" POSTS ARE TO BE 1/8" THICK, PERFORATIONS OF 7/16" IN DIAMETER ARE 1" ON CENTER ON ALL SIDES, 2-1/2" POSTS ARE 12' AND 14' IN LENGTH.
6. FOR DETAILS NOT SHOWN, REFER TO THE STANDARD PLANS.
7. 2-1/2" POSTS SHALL BE USED IN SIDEWALK AND HIGH PEDESTRIAN USE PLACEMENTS.
8. ALL ANCHOR SLEEVES SHALL BE EMBEDDED IN PCC, EXCEPT FOR INSTALLATIONS IN PAVEMENTS OR SIDEWALKS, OR IN ROCKY SOIL CONDITIONS WHERE APPROVED BY THE ENGINEER.

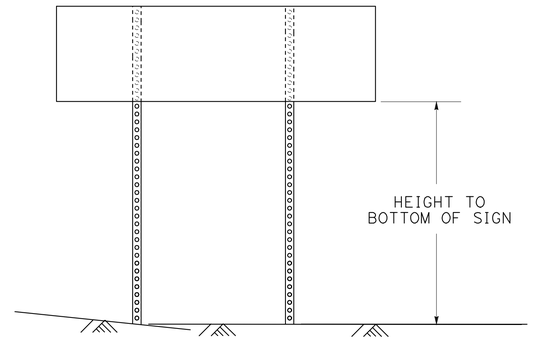

TWO POSTS INSTALLATION
(POST SIZE SEE CHART BELOW)

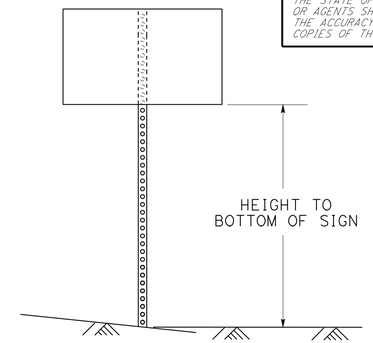

SINGLE POST INSTALLATION
(POST SIZE SEE CHART BELOW)

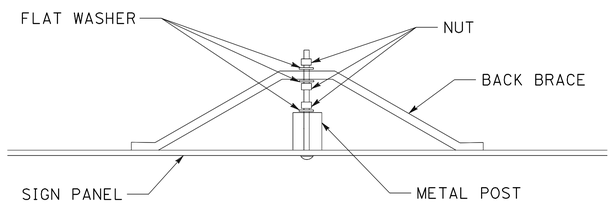

BACK BRACE MOUNTING DETAIL

POST SIZE (in)	MAX SIGN AREA (ft²)		
	5	6	7
2	18	16	14
2.5	36	32	28

HEIGHT TO BOTTOM OF SIGN (ft)
DOUBLE POST GROUND SIGNS
70 M.P.H. WIND SPEED

POST SIZE (in)	MAX SIGN AREA (ft²)		
	5	6	7
2	11	10	9
2.5	16	16	16

HEIGHT TO BOTTOM OF SIGN (ft)
SINGLE POST GROUND SIGNS
70 M.P.H. WIND SPEED

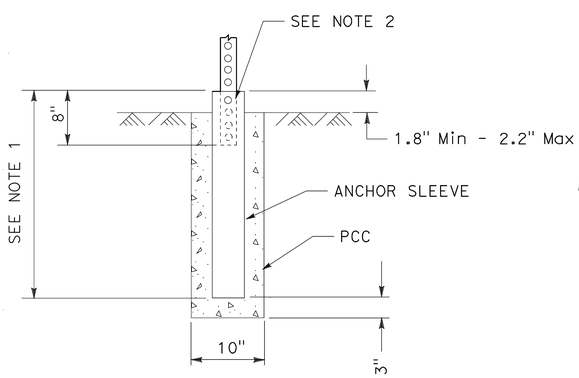

INSTALLATION IN SOIL (PCC)
(SEE NOTE 8)

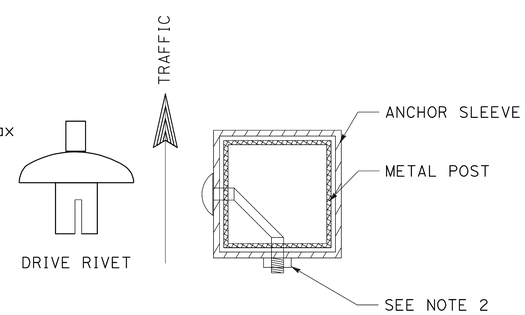

FASTENER DETAILS

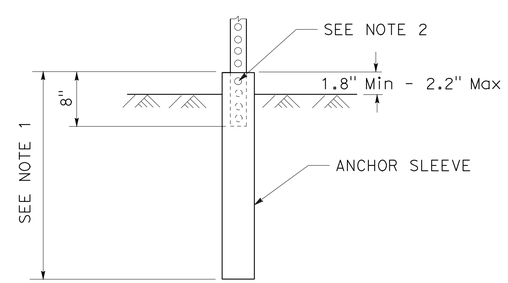

INSTALLATION IN SOIL (DRIVEN)

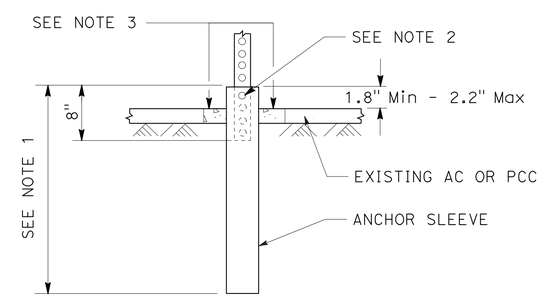

INSTALLATION IN EXISTING AC OR PCC

METAL SIGN POST INSTALLATION DETAILS

SIGN DETAILS
NO SCALE **SD-1**

REVISED BY | DATE REVISED
FRANK RIVAS | JEFF STEPPAT
CALCULATED-DESIGNED BY | CHECKED BY
FUNCTIONAL SUPERVISOR: ROB STINGER

STATE OF CALIFORNIA - DEPARTMENT OF TRANSPORTATION
Caltrans® TRAFFIC OPS

P:\proj2\02\4c401\design\PS&E\24c401ob001.dgn

LAST REVISION 08-23-10 | DATE PLOTTED => 14-DEC-2010 | TIME PLOTTED => 15:49

Dist	COUNTY	ROUTE	POST MILES TOTAL PROJECT	SHEET No.	TOTAL SHEETS
02	Sha	5	R10.5/R17.5	200	311

REGISTERED CIVIL ENGINEER 10-15-10 DATE

12-13-10
PLANS APPROVAL DATE

REGISTERED PROFESSIONAL ENGINEER FRANK RIVAS No. C53592 Exp. 6-30-11 CIVIL STATE OF CALIFORNIA

THE STATE OF CALIFORNIA OR ITS OFFICERS OR AGENTS SHALL NOT BE RESPONSIBLE FOR THE ACCURACY OR COMPLETENESS OF SCANNED COPIES OF THIS PLAN SHEET.

I SIGN STRUCTURE (BRIDGE MOUNTED WITHOUT WALKWAY)

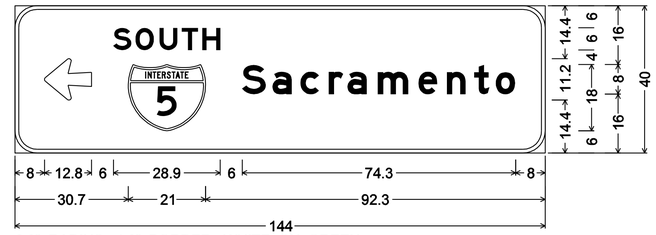

6.0" RADIUS, 1.0" BORDER, WHITE ON GREEN;
ARROW 8UC-1L - 12.8" 180°; [SOUTH] E; [Sacramento] E;

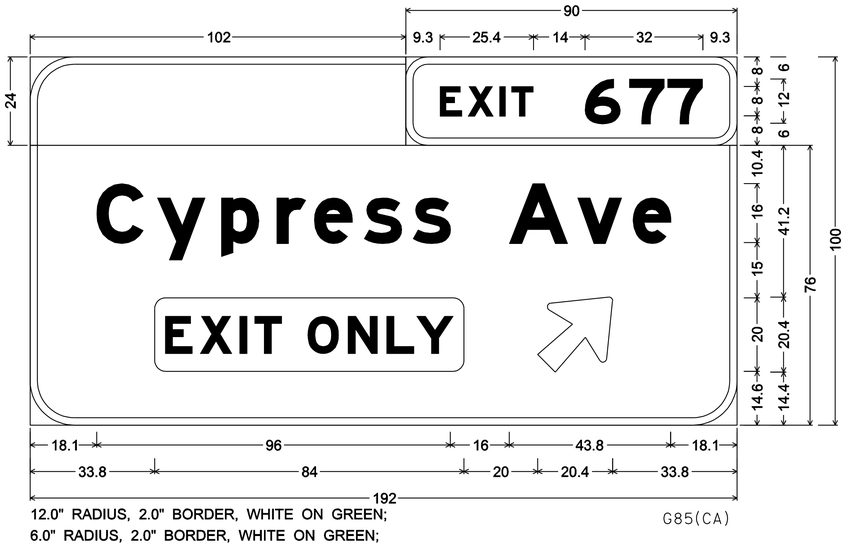

12.0" RADIUS, 2.0" BORDER, WHITE ON GREEN;
6.0" RADIUS, 2.0" BORDER, WHITE ON GREEN;
[EXIT] E Mod; [677] E Mod;
12.0" RADIUS, 2.0" BORDER, WHITE ON GREEN;
[Cypress Ave] E Mod; ROUNDED RECTANGLE 3.0" RADIUS YELLOW;
ARROW 16CAP-1L - 25.0" 45°;

G85(CA)

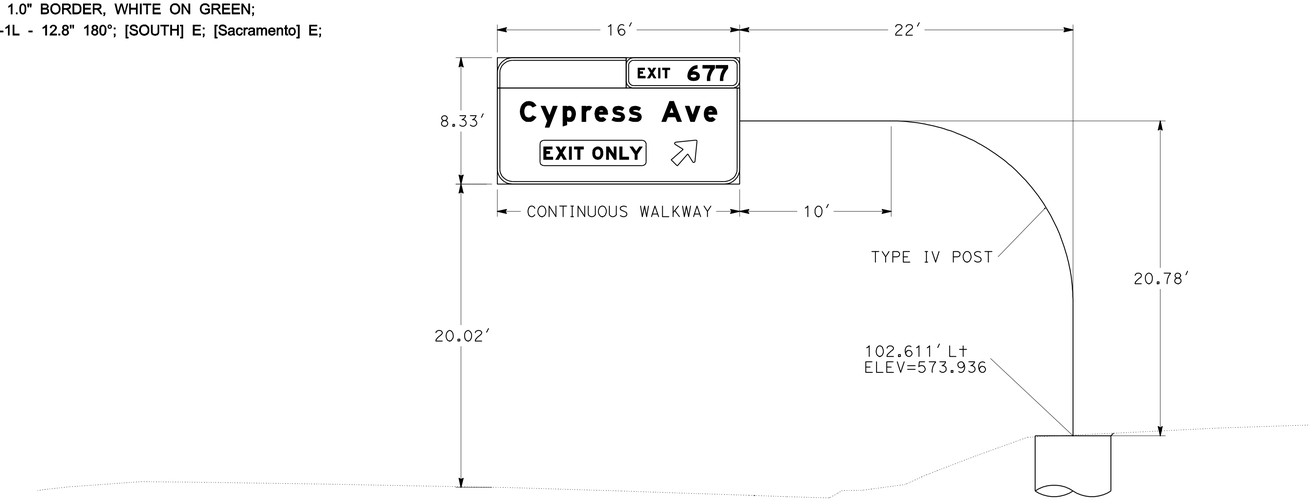

A FSBT "CL1" 987+50
TUBULAR SINGLE POST TYPE
LAMINATED PANEL TYPE A

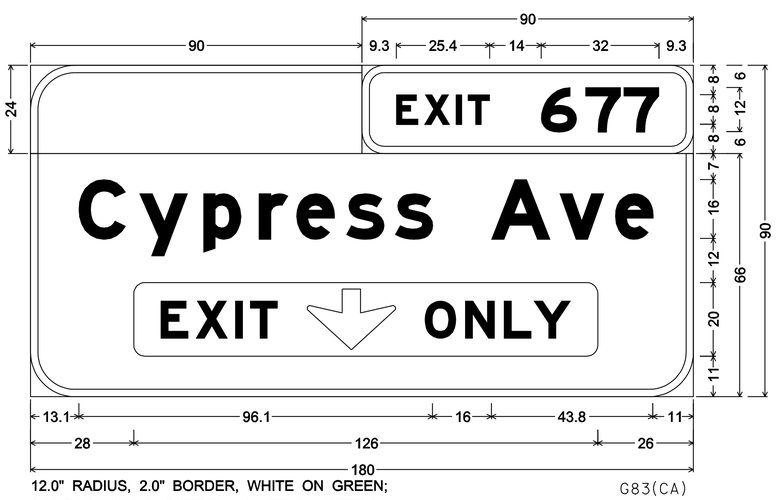

12.0" RADIUS, 2.0" BORDER, WHITE ON GREEN;
6.0" RADIUS, 2.0" BORDER, WHITE ON GREEN;
[EXIT] E Mod; [677] E Mod;
12.0" RADIUS, 2.0" BORDER, WHITE ON GREEN;
[Cypress Ave] E Mod; ROUNDED RECTANGLE 3.0" RADIUS YELLOW;

G83(CA)

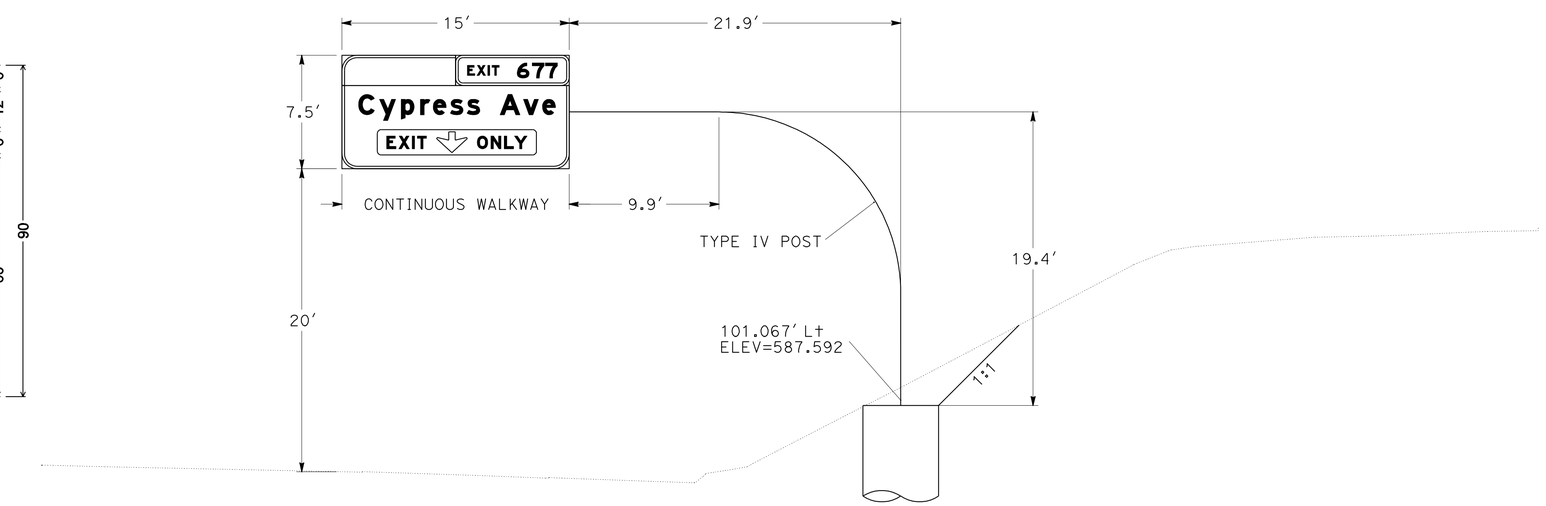

B FSBT "CL1" 1007+00
TUBULAR SINGLE POST TYPE
LAMINATED PANEL TYPE A

SIGN DETAILS

NO SCALE **SD-2**

REVISED BY | DATE REVISED
FRANK RIVAS | JEFF STEPPAT
CALCULATED-DESIGNED BY | CHECKED BY
FUNCTIONAL SUPERVISOR: ROB STINGER

STATE OF CALIFORNIA - DEPARTMENT OF TRANSPORTATION
Caltrans® TRAFFIC OPS

P:\proj\02\4c401\design\PS&E\24c401ob002.dgn

LAST REVISION 08-23-10 | DATE PLOTTED => 14-DEC-2010 | TIME PLOTTED => 15:50