Dist	COUNTY	ROUTE	POST MILES TOTAL PROJECT	SHEET No.	TOTAL SHEETS
02	Sha	5	R28.8/R39.2	1	41

STATE OF CALIFORNIA

DEPARTMENT OF TRANSPORTATION

ACIM-005-8(348)

PROJECT PLANS FOR CONSTRUCTION ON

STATE HIGHWAY

IN SHASTA COUNTY ABOUT 6 MILES NORTH OF SHASTA LAKE CITY FROM PIT RIVER BRIDGE TO 0.2 MILE NORTH OF ANTLERS SUMMIT OVERCROSSING

TO BE SUPPLEMENTED BY STANDARD PLANS DATED MAY 2006

INDEX OF PLANS

SHEET No.	DESCRIPTION
1	TITLE SHEET
2-4	TYPICAL CROSS SECTIONS
5-8	CONSTRUCTION DETAILS
9	CONSTRUCTION AREA SIGNS
10-19	DETOUR PLAN
20-21	PAVEMENT DELINEATION DETAILS
22	PAVEMENT DELINEATION QUANTITIES
23-25	SUMMARY OF QUANTITIES
26-31	TRAFFIC MONITORING STATION
32	MODIFY ROADSIDE WEATHER INFORMATION SYSTEM
33	DETAILS
34-41	NEW AND REVISED STANDARD PLANS

THE STANDARD PLANS LIST APPLICABLE TO THIS CONTRACT IS INCLUDED IN THE NOTICE TO BIDDERS AND SPECIAL PROVISIONS BOOK.

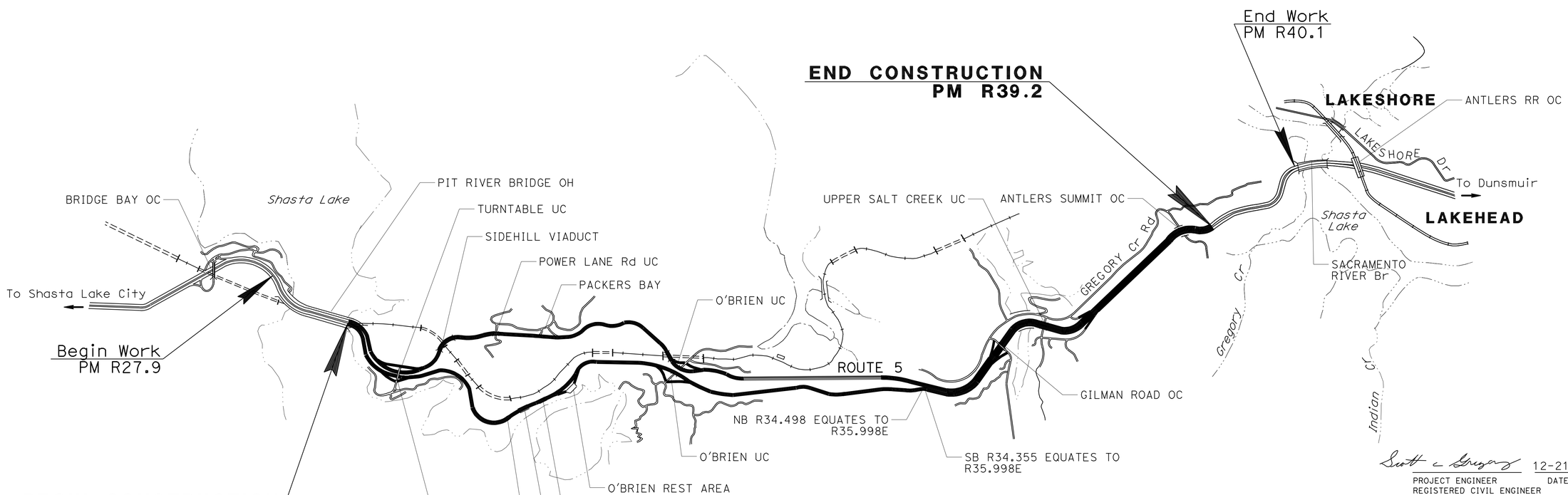

THE CONTRACTOR SHALL POSSESS THE CLASS (OR CLASSES) OF LICENSE AS SPECIFIED IN THE "NOTICE TO BIDDERS."

NO SCALE

Scott C. Gregory 12-21-11
PROJECT ENGINEER DATE
REGISTERED CIVIL ENGINEER

REGISTERED PROFESSIONAL ENGINEER SCOTT C. GREGORY No. C75565 Exp. 06-30-12 CIVIL STATE OF CALIFORNIA

DECEMBER 21, 2011
PLANS APPROVAL DATE

THE STATE OF CALIFORNIA OR ITS OFFICERS OR AGENTS SHALL NOT BE RESPONSIBLE FOR THE ACCURACY OR COMPLETENESS OF SCANNED COPIES OF THIS PLAN SHEET.

CONTRACT No.	02-3E8904
PROJECT ID	0200020206

PROJECT MANAGER LANCE BROWN
DESIGN ENGINEER LANCE BROWN

P:\proj1\02\3E890_plans\pse\23E890ab001.dgn

LAST REVISION 12-21-11 DATE PLOTTED => 18-JAN-2012 TIME PLOTTED => 09:18

Dist	COUNTY	ROUTE	POST MILES TOTAL PROJECT	SHEET No.	TOTAL SHEETS
02	Sha	5	R28.8/R39.2	2	41

REGISTERED CIVIL ENGINEER DATE 12-21-11

PLANS APPROVAL DATE 12-21-11

REGISTERED PROFESSIONAL ENGINEER SCOTT C. GREGORY No. C75565 Exp 06-30-12 CIVIL STATE OF CALIFORNIA

THE STATE OF CALIFORNIA OR ITS OFFICERS OR AGENTS SHALL NOT BE RESPONSIBLE FOR THE ACCURACY OR COMPLETENESS OF SCANNED COPIES OF THIS PLAN SHEET.

NOTES:

1. DIMENSIONS OF THE STRUCTURAL SECTIONS ARE SUBJECT TO TOLERANCES SPECIFIED IN THE STANDARD SPECIFICATIONS.
2. SUPERELEVATIONS AS SHOWN OR AS DIRECTED BY THE ENGINEER.
3. FOR ACCURATE RIGHT OF WAY DATA, CONTACT RIGHT OF WAY ENGINEERING AT THE DISTRICT OFFICE.
4. EXISTING UTILITY FACILITIES ARE NOT SHOWN ON THESE PLANS.
5. NO WORK ON BRIDGE DECKS.

LEGEND:

COLD PLANE AC PAVEMENT (0.00'-0.10')

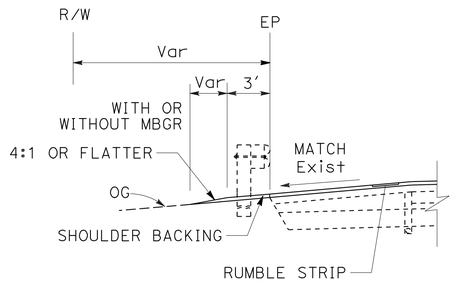

ROUTE 5

TYPICAL SHOULDER

BOTH DIRECTIONS
VARIOUS LOCATIONS

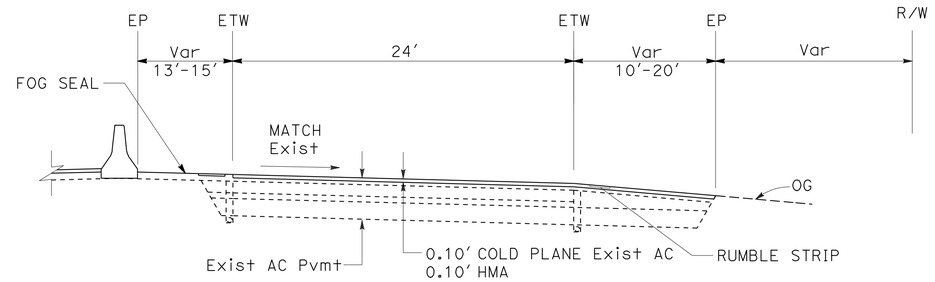

ROUTE 5

NORTHBOUND R36.58 TO R36.66

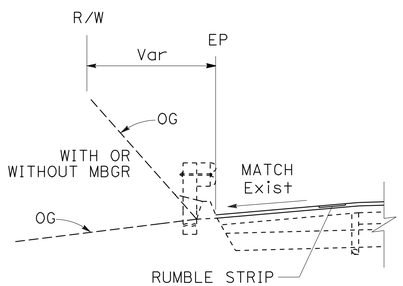

ROUTE 5

TYPICAL SHOULDER

BOTH DIRECTIONS
VARIOUS LOCATIONS

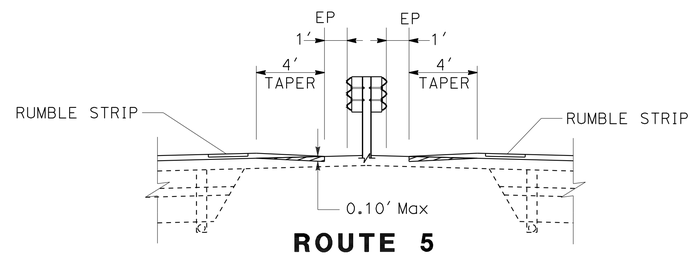

ROUTE 5

PM R37.42 TO R38.12

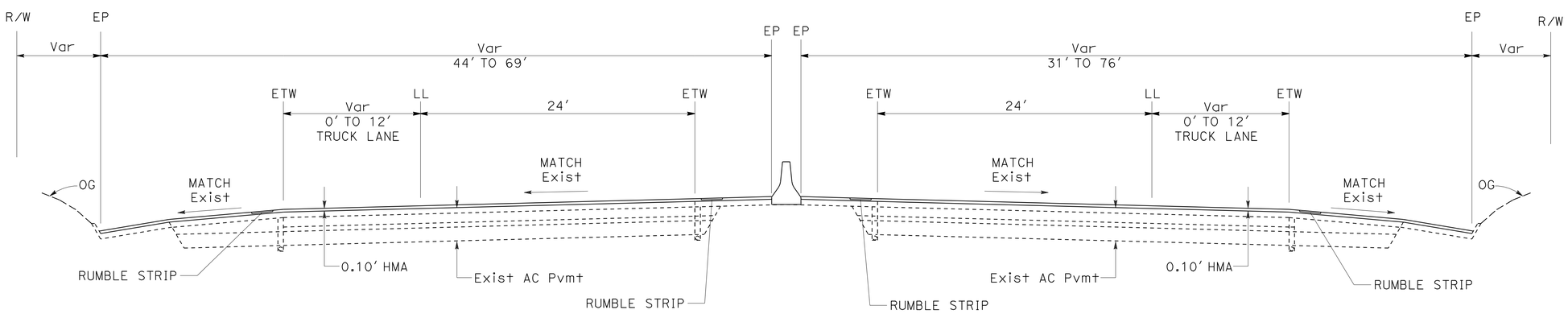

ROUTE 5

NORTHBOUND R28.82 TO R28.98
NORTHBOUND R36.00 TO 36.58
NORTHBOUND R36.66 TO R39.20
SOUTH BOUND R36.00 TO 39.20

TYPICAL CROSS SECTIONS

NO SCALE

X-1

REVISED BY | DATE REVISED

SCOTT GREGORY | DENISE FUZERE

CALCULATED-DESIGNED BY | CHECKED BY

FUNCTIONAL SUPERVISOR | LANCE BROWN

STATE OF CALIFORNIA - DEPARTMENT OF TRANSPORTATION

Caltrans® MAINTENANCE

P:\proj1\02\3E890_plans\pse\23E890ca001.dgn

LAST REVISION 12-20-11 | DATE PLOTTED => 27-DEC-2011 | TIME PLOTTED => 11:22

Dist	COUNTY	ROUTE	POST MILES TOTAL PROJECT	SHEET No.	TOTAL SHEETS
02	Sha	5	R28.8/R39.2	3	41

REGISTERED CIVIL ENGINEER 12-21-11 DATE

12-21-11
PLANS APPROVAL DATE

REGISTERED PROFESSIONAL ENGINEER SCOTT C. GREGORY No. C75565 Exp 06-30-12 CIVIL STATE OF CALIFORNIA

THE STATE OF CALIFORNIA OR ITS OFFICERS OR AGENTS SHALL NOT BE RESPONSIBLE FOR THE ACCURACY OR COMPLETENESS OF SCANNED COPIES OF THIS PLAN SHEET.

NOTES:

1. SUPERELEVATIONS AS SHOWN OR AS DIRECTED BY THE ENGINEER.
2. FOR ACCURATE RIGHT OF WAY DATA, CONTACT RIGHT OF WAY ENGINEERING AT THE DISTRICT OFFICE.
3. EXISTING UTILITY FACILITIES ARE NOT SHOWN ON THESE PLANS.

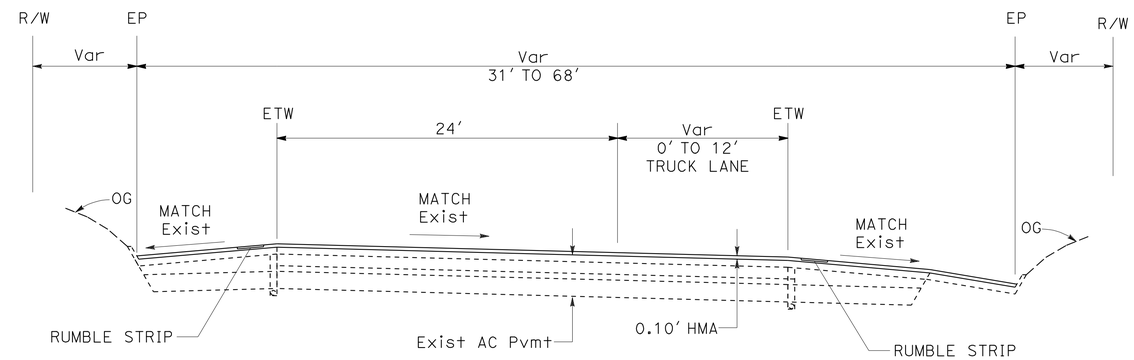

NORTHBOUND ROUTE 5

PM R28.98 TO R34.50

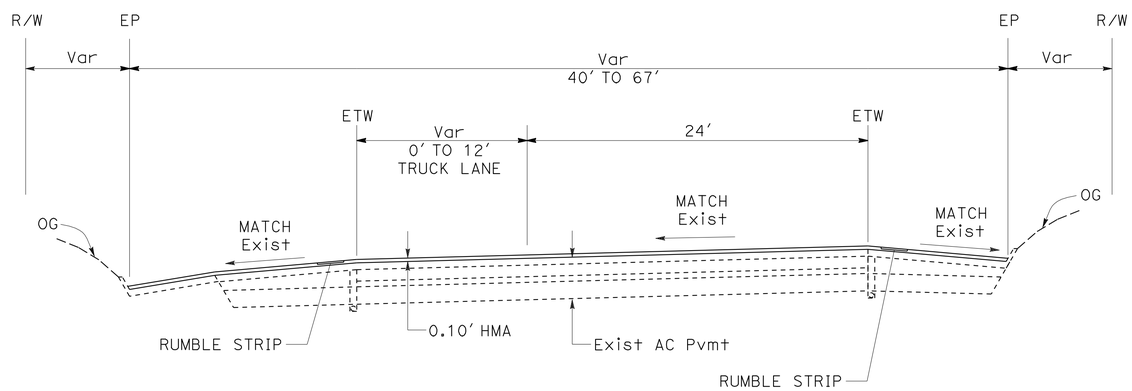

SOUTHBOUND ROUTE 5

PM R29.31 TO R34.36

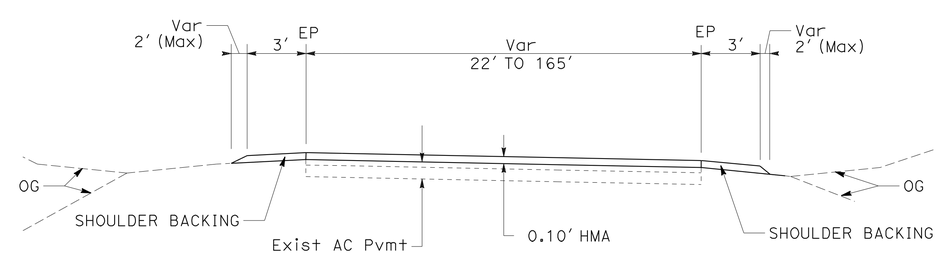

TURNTABLE BAY, PACKERS BAY, O'BRIEN REST AREA, O'BRIEN/SHASTA CAVERNS, GILMAN Rd, UPPER SALT CREEK Rd ENTRANCE AND EXIT RAMPS

TYPICAL CROSS SECTIONS

NO SCALE

X-2

REVISED BY	DATE REVISED

CALCULATED-DESIGNED BY	CHECKED BY
SCOTT GREGORY	DENISE FUZERE

FUNCTIONAL SUPERVISOR: LANCE BROWN

STATE OF CALIFORNIA - DEPARTMENT OF TRANSPORTATION

Caltrans® MAINTENANCE

P:\proj1\02\3E890_plans\pse\23E890ca002.dgn

LAST REVISION 12-20-11 | DATE PLOTTED => 27-DEC-2011 | TIME PLOTTED => 11:22

Dist	COUNTY	ROUTE	POST MILES TOTAL PROJECT	SHEET No.	TOTAL SHEETS
02	Sha	5	R28.8/R39.2	4	41

Scott C. Gregory 12-21-11
REGISTERED CIVIL ENGINEER DATE

12-21-11
PLANS APPROVAL DATE

REGISTERED PROFESSIONAL ENGINEER SCOTT C. GREGORY No. C75565 Exp 06-30-12 CIVIL STATE OF CALIFORNIA

THE STATE OF CALIFORNIA OR ITS OFFICERS OR AGENTS SHALL NOT BE RESPONSIBLE FOR THE ACCURACY OR COMPLETENESS OF SCANNED COPIES OF THIS PLAN SHEET.

NOTES:

1. SUPERELEVATIONS AS SHOWN OR AS DIRECTED BY THE ENGINEER.
2. FOR ACCURATE RIGHT OF WAY DATA, CONTACT RIGHT OF WAY ENGINEERING AT THE DISTRICT OFFICE.
3. EXISTING UTILITY FACILITIES ARE NOT SHOWN ON THESE PLANS.

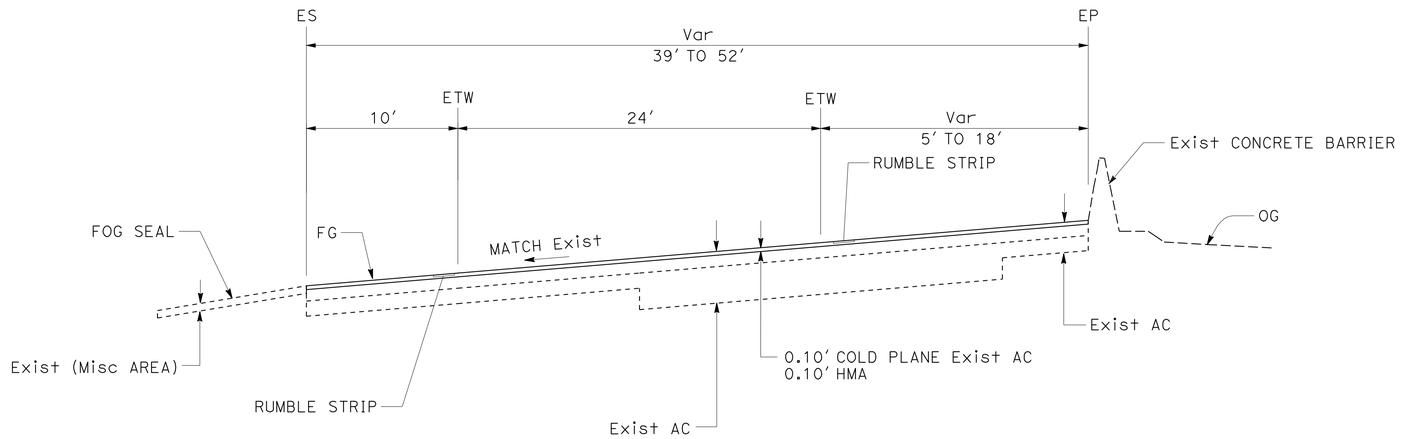

SOUTHBOUND ROUTE 5
R29.15 TO R29.29

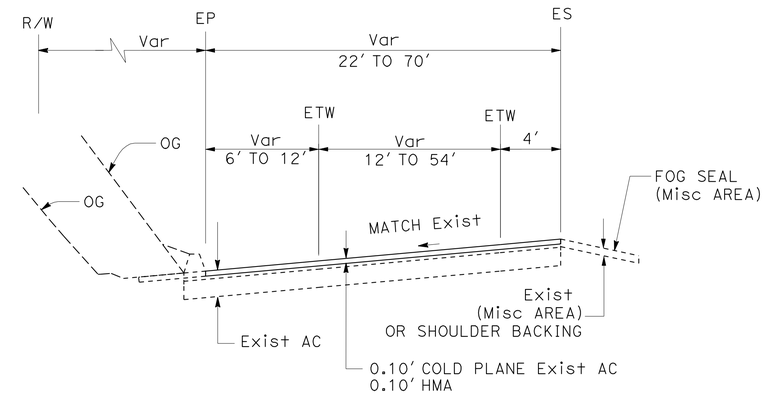

TURNTABLE BAY
SOUTHBOUND ENTRANCE RAMP
R29.18

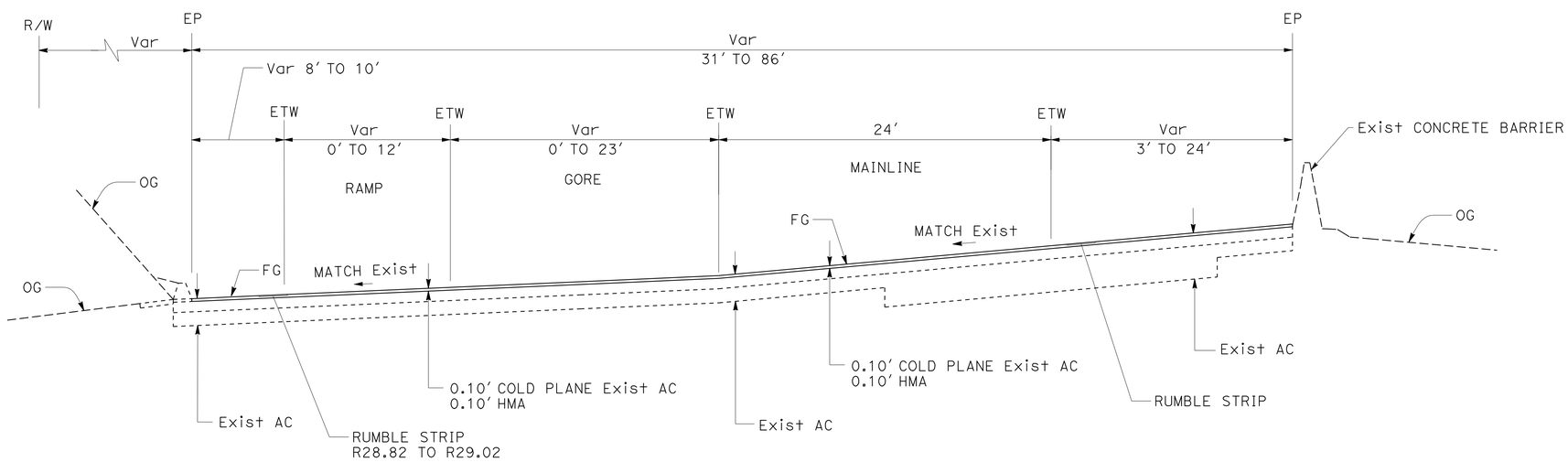

SOUTHBOUND ROUTE 5
R28.82 TO R29.15

TYPICAL CROSS SECTIONS

NO SCALE

X-3

REVISED BY	DATE REVISED

CALCULATED-DESIGNED BY	CHECKED BY
SCOTT GREGORY	DENISE FUZERE

FUNCTIONAL SUPERVISOR: LANCE BROWN

STATE OF CALIFORNIA - DEPARTMENT OF TRANSPORTATION
Caltrans® MAINTENANCE

P:\proj1\02\3E890_plans\pse\23E890ca003.dgn

LAST REVISION 12-20-11
DATE PLOTTED => 27-DEC-2011
TIME PLOTTED => 11:22

Dist	COUNTY	ROUTE	POST MILES TOTAL PROJECT	SHEET No.	TOTAL SHEETS
02	Sha	5	R28.8/R39.2	5	41

Scott C. Gregory 12-21-11
REGISTERED CIVIL ENGINEER DATE

12-21-11
PLANS APPROVAL DATE

REGISTERED PROFESSIONAL ENGINEER SCOTT C. GREGORY No. C75565 Exp. 06-30-12 CIVIL STATE OF CALIFORNIA

THE STATE OF CALIFORNIA OR ITS OFFICERS OR AGENTS SHALL NOT BE RESPONSIBLE FOR THE ACCURACY OR COMPLETENESS OF SCANNED COPIES OF THIS PLAN SHEET.

NOTES:

1. FOR ACCURATE RIGHT OF WAY DATA, CONTACT RIGHT OF WAY ENGINEERING AT THE DISTRICT OFFICE.
2. EXISTING UTILITY FACILITIES ARE NOT SHOWN ON THE PLANS.

LEGEND:

- COLD PLANE AC PAVEMENT (0.00' TO 0.10')
- COLD PLANE AC PAVEMENT (0.10')
- REPLACE AC SURFACING
- DIRECTION OF TRAVEL

RAMPS

OVERCROSSING	DIRECTION OF TRAVEL		ENTRANCE RAMP	EXIT RAMP	POST MILE	DIMENSIONS						
						WIDTH IN FEET				LENGTH IN FEET		
	NB	SB				W-1	W-2	W-3	W-4	L-1	L-2	L-3
TURNTABLE BAY		X	X		R29.18	70	24	24	*	120	660	*
	X			X	R29.20	70	23	24	39	74	459	613
	X		X		R29.40	100	25	27	36	124	328	825
		X		X	R29.47	64	25	23	33	64	900	422
PACKERS BAY		X	X		R30.51	-	32	25	32	-	75	1065
		X		X	R30.73	70	23	22	36	70	574	480
O'BRIEN REST AREA	X			X	R31.03	-	34	26	36	-	231	422
	X		X		R31.22	-	26	22	29	-	78	250
O'BRIEN/SHASTA CAVERNS		X	X		R31.93	136	29	30	35	156	402	534
	X			X	R31.99	90	23	23	33	90	807	400
		X		X	R32.22	95	26	24	34	80	780	630
	X		X		R32.30	165	22	23	28	162	630	890
GILMAN Rd	X			X	R36.68	70	23	22	30	95	525	450
		X	X		R36.70	100	23	26	30	121	550	835
UPPER SALT Cr Rd	X		X		R37.50	-	25	23	31	-	775	900
		X		X	R37.67	70	36	29	37	176	1175	450

* INCLUDED IN ROADWAY QUANTITIES

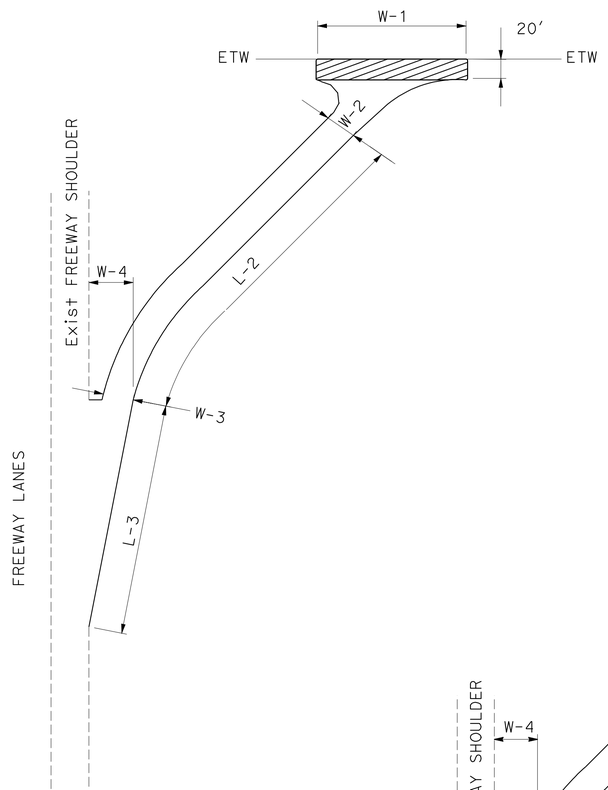

TYPICAL EXIT/ ENTRANCE RAMP

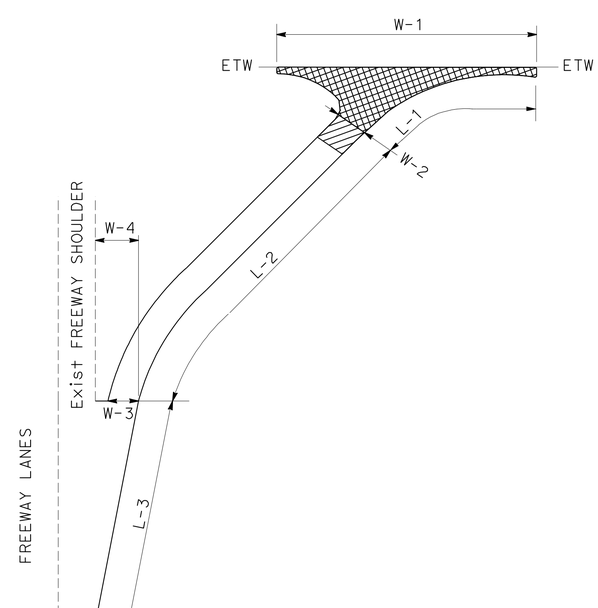

PACKER BAY SB EXIT RAMP
O'BRIEN/SHASTA CAVERNS NB EXIT RAMP
O'BRIEN/SHASTA CAVERNS NB ENTRANCE RAMP

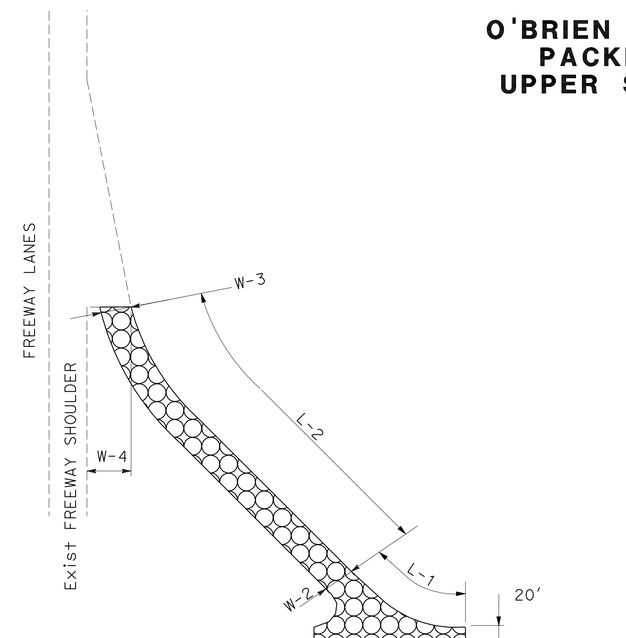

TURNTABLE BAY SB ENTRANCE RAMP

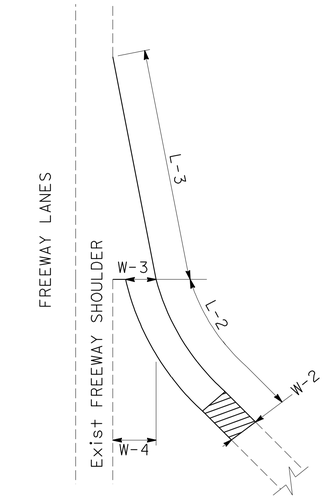

O'BRIEN REST AREA ENTRANCE RAMP
PACKERS BAY ENTRANCE RAMP
UPPER SALT Cr Rd ENTRANCE RAMP

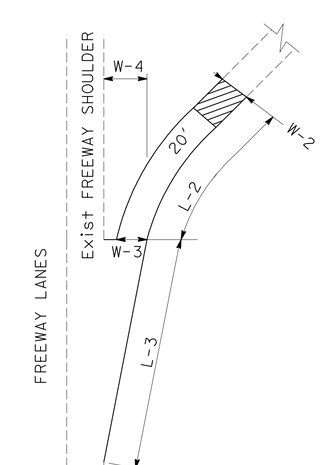

O'BRIEN REST AREA EXIT RAMP

CONSTRUCTION DETAILS

NO SCALE

C-1

REVISED BY	DATE REVISED
SCOTT GREGORY	DENISE FUZERE
CALCULATED-DESIGNED BY	CHECKED BY
FUNCTIONAL SUPERVISOR	LANCE BROWN

STATE OF CALIFORNIA - DEPARTMENT OF TRANSPORTATION
Caltrans MAINTENANCE

P:\proj1\02\3E890_plans\pse\23E890ga001.dgn

LAST REVISION 12-20-11 | DATE PLOTTED => 27-DEC-2011 | TIME PLOTTED => 11:22

Dist	COUNTY	ROUTE	POST MILES TOTAL PROJECT	SHEET No.	TOTAL SHEETS
02	Sha	5	R28.8/R39.2	6	41

Scott C. Gregory 12-21-11
REGISTERED CIVIL ENGINEER DATE

12-21-11
PLANS APPROVAL DATE

REGISTERED PROFESSIONAL ENGINEER SCOTT C. GREGORY No. C75565 Exp 06-30-12 CIVIL STATE OF CALIFORNIA

THE STATE OF CALIFORNIA OR ITS OFFICERS OR AGENTS SHALL NOT BE RESPONSIBLE FOR THE ACCURACY OR COMPLETENESS OF SCANNED COPIES OF THIS PLAN SHEET.

NOTES:

1. THE 0.10′ DEPTH COLD PLANE AC PAVEMENT SHALL BE A MINIMUM OF 66′ IN LENGTH MEASURED ALONG THE ETW ON EITHER SIDE OF STRUCTURE.
2. SEE TYPICAL CROSS SECTIONS FOR EXISTING STRUCTURAL SECTION.
3. EXISTING UTILITY FACILITIES ARE NOT SHOWN ON THESE PLANS.

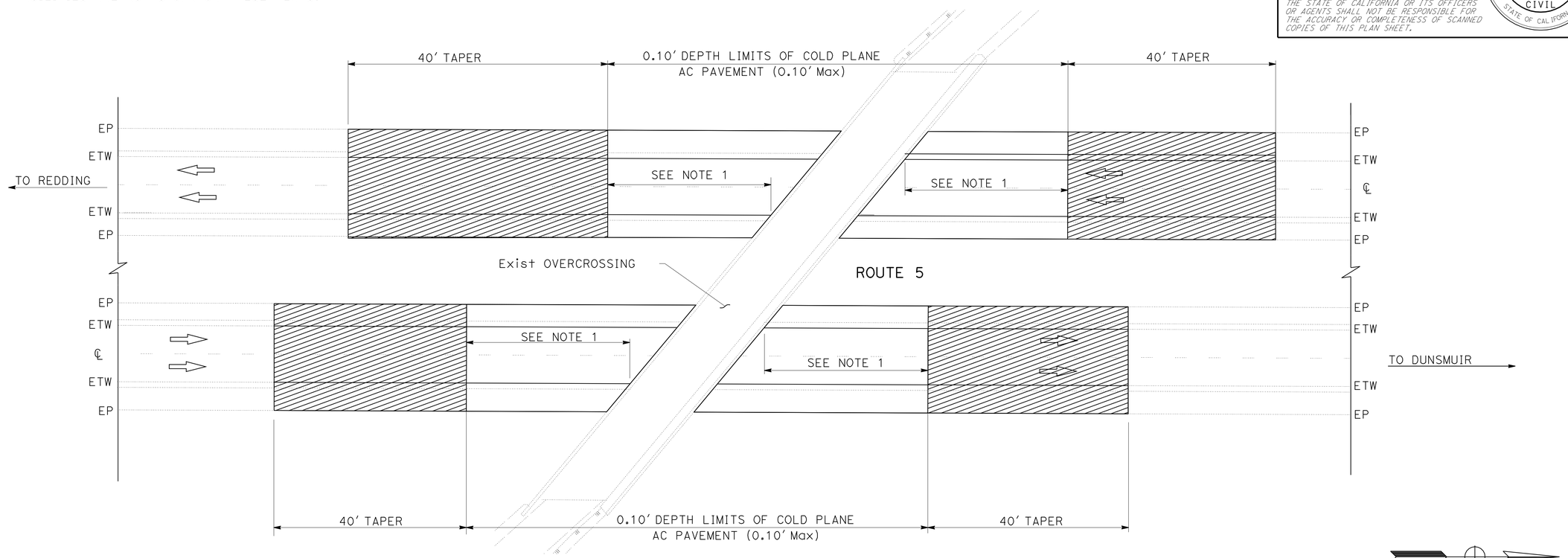

PLAN

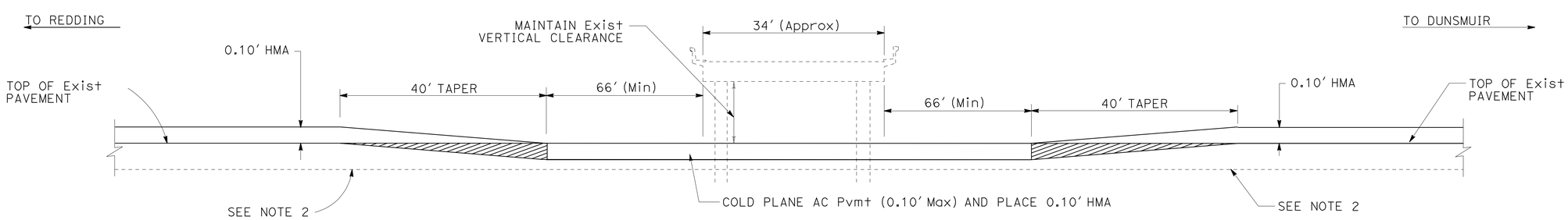

ELEVATION

OVERCROSSING PAVEMENT OVERLAY TAPER

NB PM R29.32 (06-0130R, TURNTABLE BAY Rd OC)
NB & SB PM R36.83 (06-0160R&L, GILMAN Rd OC)
NB & SB PM R39.05 (06-0158R&L, ANTLERS SUMMIT OC)

CONSTRUCTION DETAILS

NO SCALE

C-2

REVISED BY | DATE REVISED
SCOTT GREGORY | DENISE FUZERE
CALCULATED-DESIGNED BY | CHECKED BY
FUNCTIONAL SUPERVISOR | LANCE BROWN
STATE OF CALIFORNIA - DEPARTMENT OF TRANSPORTATION
Caltrans® MAINTENANCE

P:\proj1\02\3E890_plans\pse\23E890ga002.dgn

LAST REVISION 08-26-11 | DATE PLOTTED => 27-DEC-2011 | TIME PLOTTED => 11:22

Dist	COUNTY	ROUTE	POST MILES TOTAL PROJECT	SHEET No.	TOTAL SHEETS
02	Sha	5	R28.8/R39.2	7	41

REGISTERED CIVIL ENGINEER 12-21-11 DATE

12-21-11
PLANS APPROVAL DATE

REGISTERED PROFESSIONAL ENGINEER SCOTT C. GREGORY No. C75565 Exp 06-30-12 CIVIL STATE OF CALIFORNIA

THE STATE OF CALIFORNIA OR ITS OFFICERS OR AGENTS SHALL NOT BE RESPONSIBLE FOR THE ACCURACY OR COMPLETENESS OF SCANNED COPIES OF THIS PLAN SHEET.

NOTE:

1. EXISTING UTILITY FACILITIES ARE NOT SHOWN ON THESE PLANS.

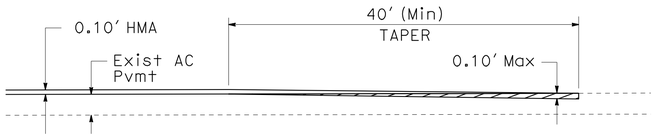

MAINLINE CONFORM TAPER

PM R28.82 NB
R39.20 NB & SB

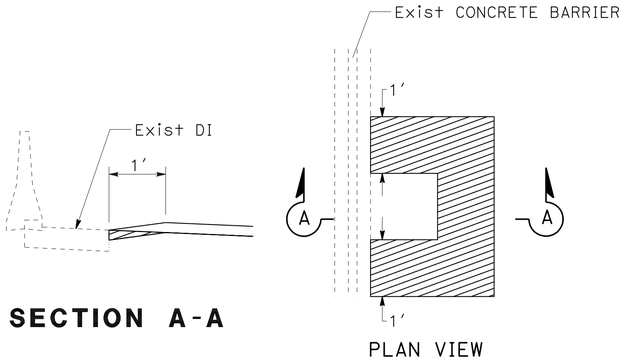

SECTION A-A

PLAN VIEW

TYPICAL MEDIAN INLET COLD PLANING DETAIL

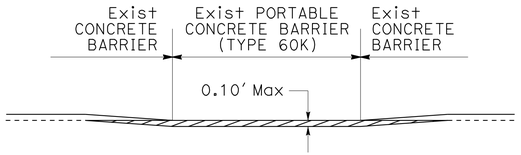

SECTION C-C

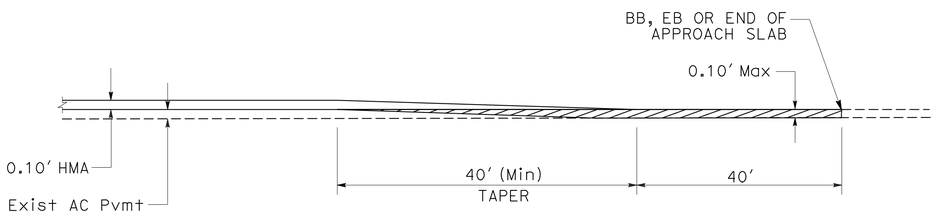

BRIDGE CONFORM TAPER

SB PM R29.29 (06-0130L) EB ONLY
SB PM R29.72 (06-0042L)
SB PM R30.23 (06-0147L)
NB PM R30.55 (06-0131R) BB ONLY
NB PM R30.87 (06-0133R) EB ONLY
NB & SB PM R32.16 (06-0148R&L)
NB & SB PM R37.08 (06-0159R&L)

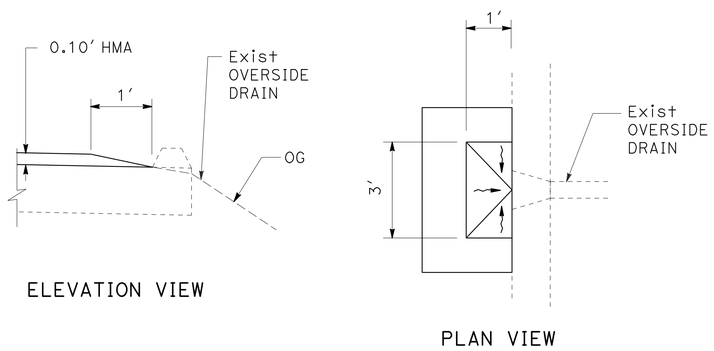

ELEVATION VIEW

PLAN VIEW

TYPICAL OVERSIDE DRAIN CONFORM

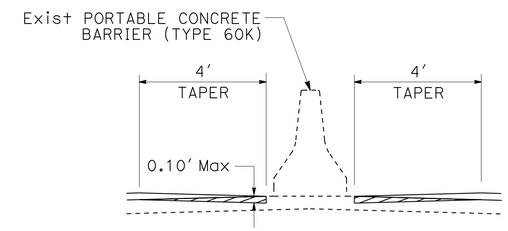

SECTION B-B

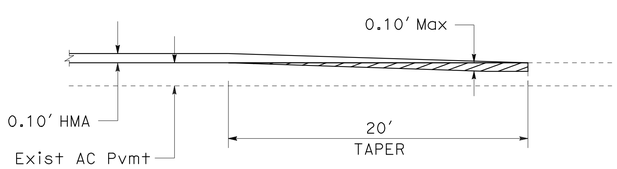

RAMP TAPER

TURNTABLE BAY NB EXIT
TURNTABLE BAY NB ENTRANCE
TURNTABLE BAY SB EXIT
PACKERS BAY ENTRANCE
O'BRIEN REST AREA NB EXIT
O'BRIEN REST AREA NB ENTRANCE
O'BRIEN/SHASTA CAVERNS SB ENTRANCE
O'BRIEN/SHASTA CAVERNS SB EXIT
GILMAN Rd NB EXIT
GILMAN Rd SB ENTRANCE
UPPER SALT Cr Rd ENTRANCE
UPPER SALT Cr Rd EXIT

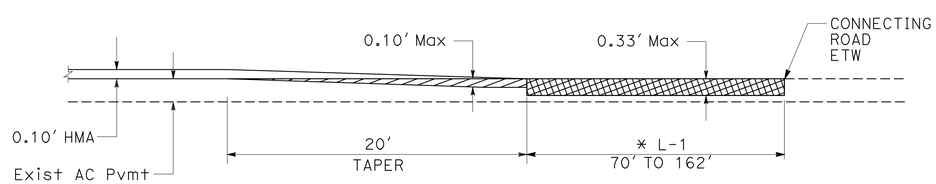

RAMP TAPER

PACKERS BAY SB EXIT
O'BRIEN/SHASTA CAVERNS NB EXIT
O'BRIEN/SHASTA CAVERNS NB ENTRANCE
* SEE SHEET C-1

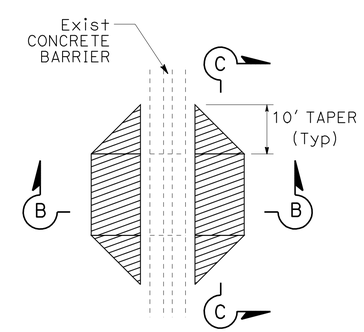

PORTABLE BARRIER TAPER

PM R28.91 TO R28.94 (NB SIDE ONLY)
PM R36.44 TO R36.47
PM R38.98 TO R39.02

CONSTRUCTION DETAILS

NO SCALE

C-3

REVISED BY | DATE REVISED
SCOTT GREGORY | DENISE FUZERE
CALCULATED-DESIGNED BY | CHECKED BY
FUNCTIONAL SUPERVISOR: LANCE BROWN

STATE OF CALIFORNIA - DEPARTMENT OF TRANSPORTATION
Caltrans® MAINTENANCE

P:\proj\02\3E890_plans\pse\23E890ga003.dgn

LAST REVISION | DATE PLOTTED => 27-DEC-2011 | TIME PLOTTED => 11:22
12-20-11

BORDER LAST REVISED 7/2/2010 | USERNAME => s115152 | DGN FILE => 23E890ga003.dgn | RELATIVE BORDER SCALE IS IN INCHES 0 1 2 3 | UNIT 0156 | PROJECT NUMBER & PHASE 02000202061

Dist	COUNTY	ROUTE	POST MILES TOTAL PROJECT	SHEET No.	TOTAL SHEETS
02	Sha	5	R28.8/R39.2	8	41

REGISTERED CIVIL ENGINEER 12-21-11 DATE

12-21-11
PLANS APPROVAL DATE

REGISTERED PROFESSIONAL ENGINEER SCOTT C. GREGORY No. C75565 Exp. 06-30-12 CIVIL STATE OF CALIFORNIA

THE STATE OF CALIFORNIA OR ITS OFFICERS OR AGENTS SHALL NOT BE RESPONSIBLE FOR THE ACCURACY OR COMPLETENESS OF SCANNED COPIES OF THIS PLAN SHEET.

NOTE:

1. EXISTING UTILITY FACILITIES ARE NOT SHOWN ON THESE PLANS.

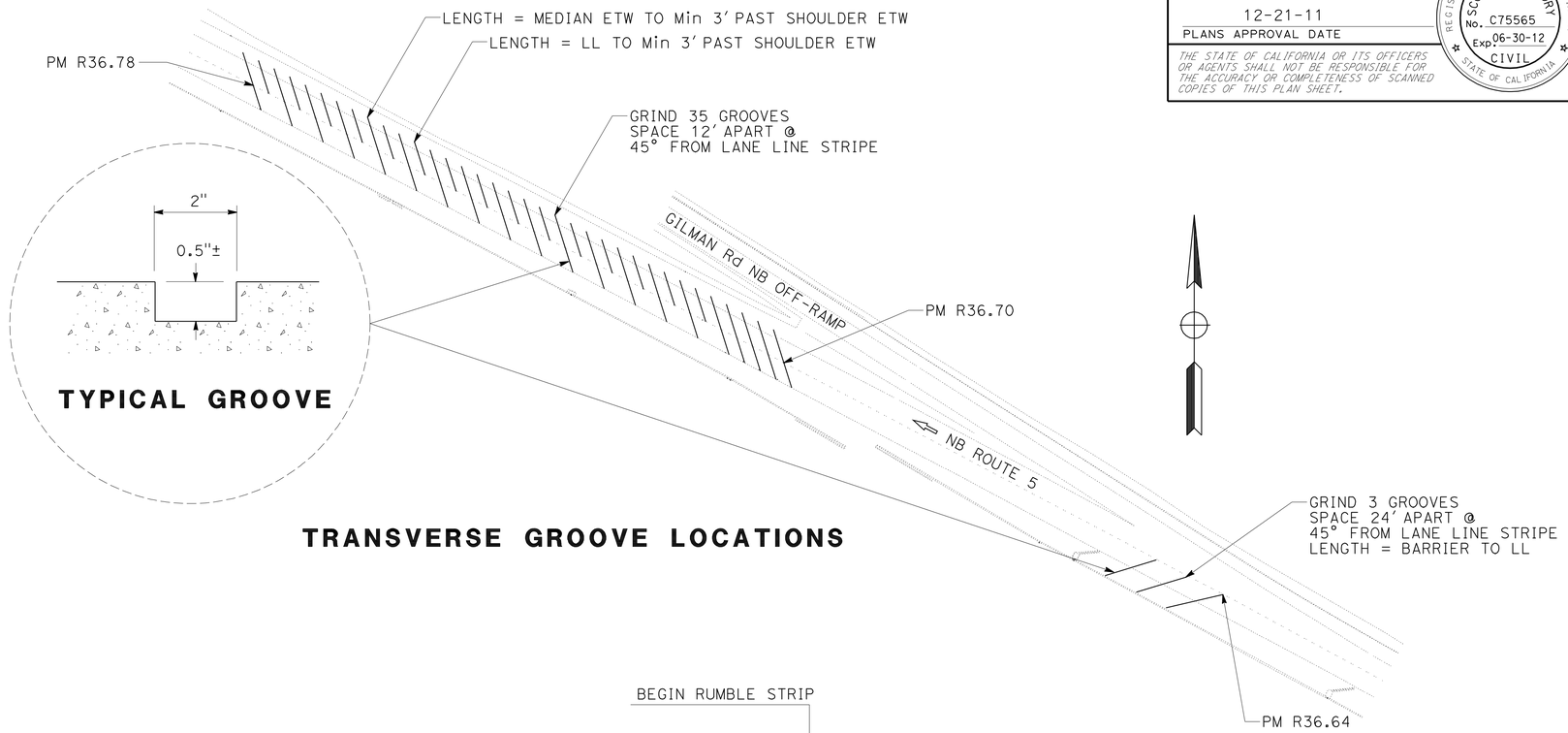

TYPICAL GROOVE

TRANSVERSE GROOVE LOCATIONS

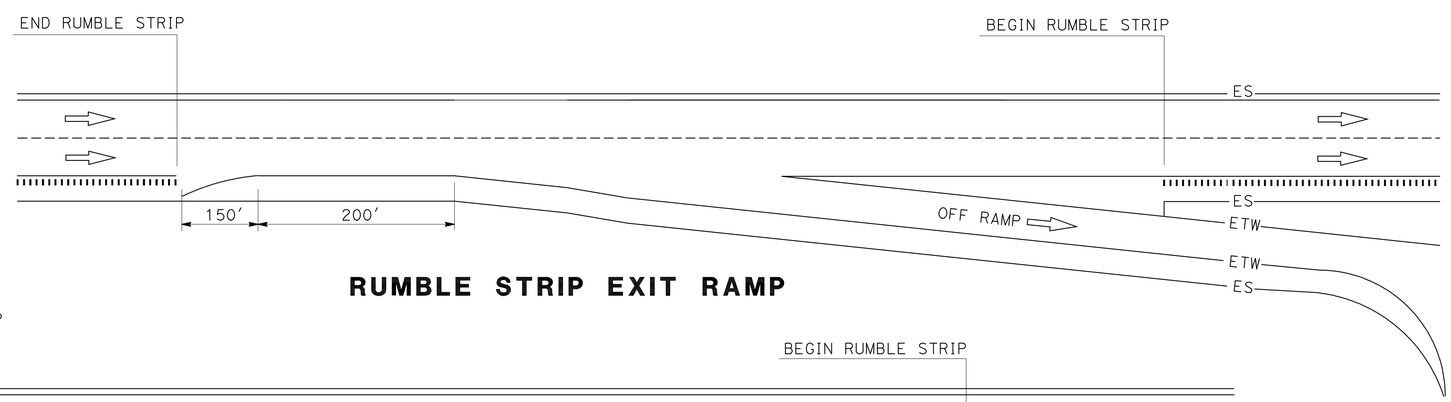

RUMBLE STRIP EXIT RAMP

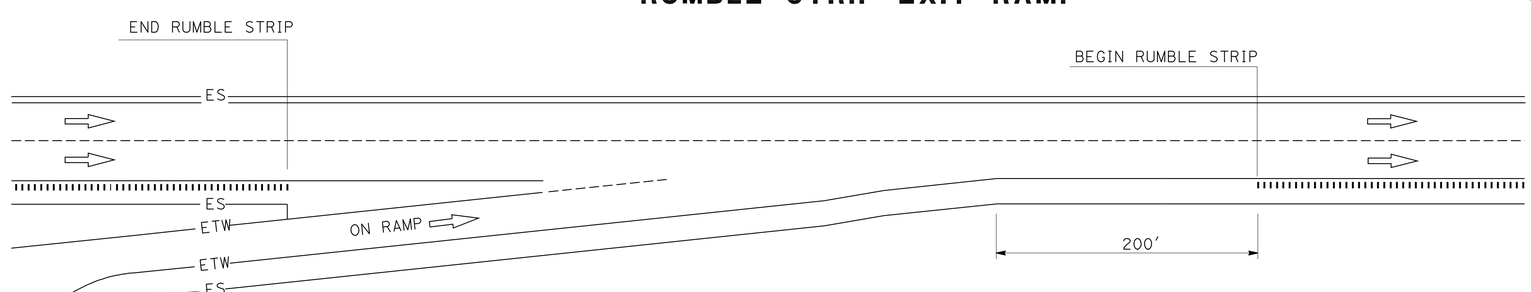

RUMBLE STRIP ENTRANCE RAMP

CONSTRUCTION DETAILS

NO SCALE

C-4

REVISED BY	DATE REVISED

CALCULATED-DESIGNED BY	CHECKED BY
SCOTT GREGORY	DENISE FUZERE

FUNCTIONAL SUPERVISOR: LANCE BROWN

STATE OF CALIFORNIA - DEPARTMENT OF TRANSPORTATION

Caltrans® MAINTENANCE

P:\proj1\02\3E890_plans\pse\23E890ga004.dgn

LAST REVISION 12-20-11 | DATE PLOTTED => 27-DEC-2011 | TIME PLOTTED => 11:22

Dist	COUNTY	ROUTE	POST MILES TOTAL PROJECT	SHEET No.	TOTAL SHEETS
02	Sha	5	R28.8/R39.2	9	41

REGISTERED CIVIL ENGINEER 12-21-11 DATE

12-21-11
PLANS APPROVAL DATE

REGISTERED PROFESSIONAL ENGINEER SCOTT C. GREGORY No. C75565 Exp 06-30-12 CIVIL STATE OF CALIFORNIA

THE STATE OF CALIFORNIA OR ITS OFFICERS OR AGENTS SHALL NOT BE RESPONSIBLE FOR THE ACCURACY OR COMPLETENESS OF SCANNED COPIES OF THIS PLAN SHEET.

NOTES:

1. EXACT LOCATION OF ALL SIGNS TO BE DETERMINED BY THE ENGINEER.
2. INTERMEDIATE C11 SIGNS SHOULD BE PLACED EVERY 3-5 MILES AS NECESSARY.
3. CALIFORNIA CODES ARE DESIGNATED BY (CA), OTHERWISE FEDERAL CODES ARE SHOWN.
4. EXISTING UTILITY FACILITIES ARE NOT SHOWN ON THESE PLANS.

LEGEND:

- ONE POST STATIONARY MOUNTED SIGN
- TWO POST STATIONARY MOUNTED SIGN
- DIRECTION OF TRAVEL
- BARRIER MOUNTED SIGN

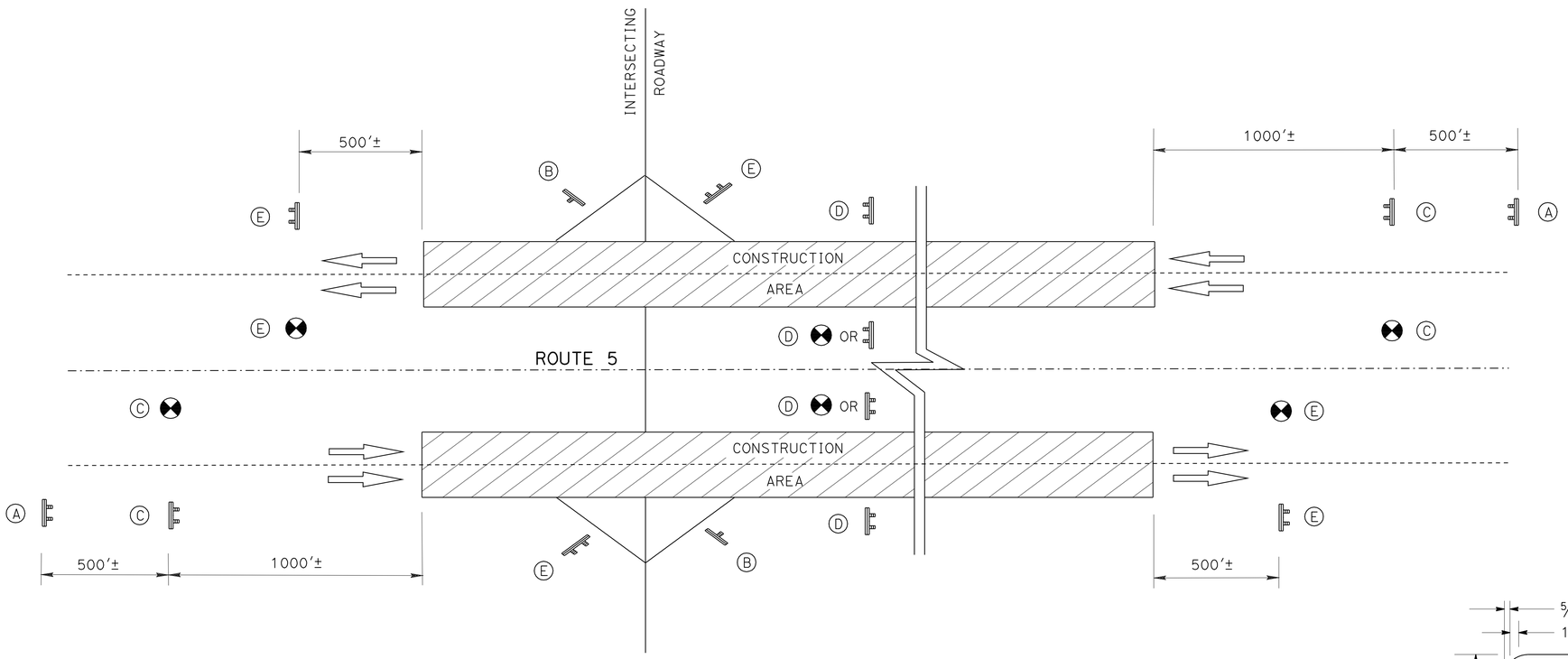

CONSTRUCTION AREA SIGNS (STATIONARY MOUNTED)

◯	TYPE	PANEL SIZE INCHES	SIGN MESSAGE	No. OF POSTS AND SIZE	No. OF SIGNS
A	C40(CA)	108" x 42"	TRAFFIC FINES DOUBLED IN CONSTRUCTION ZONES	2- 4" x 6"	2
B	W20-1 C23B(CA)	48" x 48" 54" x 24"	ROAD WORK AHEAD "PAVEMENT MAINTENANCE"	1- 4" x 6"	7
C	C11(CA) C23B(CA)	60" x 36" 54" x 24"	ROAD CONSTRUCTION NEXT XX MILES "PAVEMENT MAINTENANCE"	2- 4" x 6" OR BARRIER MOUNT	4
D	C11(CA)	60" x 36"	ROAD CONSTRUCTION NEXT XX MILES	2- 4" x 4" OR BARRIER MOUNT	8
E	C14(CA)	48" x 24"	END ROAD WORK	2- 4" x 4" OR BARRIER MOUNT	11

ENTRANCE/EXIT RAMPS

PM	LOCATION
R29.18	TURNTABLE BAY SB ENTRANCE
R29.20	TURNTABLE BAY NB EXIT
R29.40	TURNTABLE BAY NB ENTRANCE
R29.47	TURNTABLE BAY SB EXIT
R30.51	PACKERS BAY SB ENTRANCE
R30.73	PACKERS BAY SB EXIT
R31.93	O'BRIEN/SHASTA CAVERN SB ENTRANCE
R31.99	O'BRIEN/SHASTA CAVERNS NB EXIT
R32.22	O'BRIEN/SHASTA CAVERNS SB EXIT
R32.30	O'BRIEN/SHASTA CAVERNS NB ENTRANCE
R36.68	GILMAN Rd NB EXIT
R36.70	GILMAN Rd SB ENTRANCE
R37.50	UPPER SALT CREEK NB ENTRANCE
R37.67	UPPER SALT CREEK SB EXIT

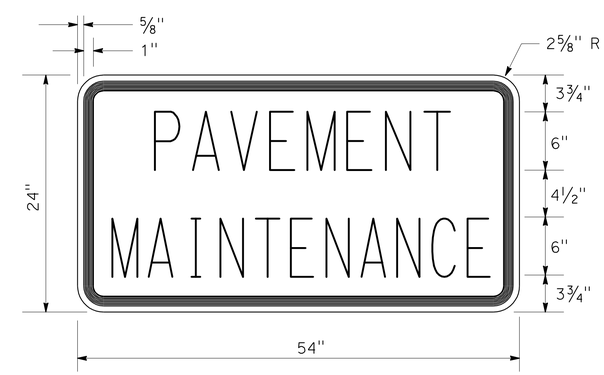

C23B(CA) SIGN PANEL DETAIL

CONSTRUCTION AREA SIGNS

NO SCALE

CS-1

REVISED BY	DATE REVISED

CALCULATED-DESIGNED BY	CHECKED BY
SCOTT GREGORY	DENISE FUZERE

FUNCTIONAL SUPERVISOR: LANCE BROWN

STATE OF CALIFORNIA - DEPARTMENT OF TRANSPORTATION
Caltrans® MAINTENANCE

P:\proj1\02\3E890_plans\pse\23E8901a001.dgn

LAST REVISION 08-26-11 | DATE PLOTTED => 27-DEC-2011 | TIME PLOTTED => 11:22

Dist	COUNTY	ROUTE	POST MILES TOTAL PROJECT	SHEET No.	TOTAL SHEETS
02	Sha	5	R28.8/R39.2	10	41

REGISTERED CIVIL ENGINEER DATE 12-21-11

PLANS APPROVAL DATE 12-21-11

REGISTERED PROFESSIONAL ENGINEER SCOTT C. GREGORY No. C75565 Exp 06-30-12 CIVIL STATE OF CALIFORNIA

THE STATE OF CALIFORNIA OR ITS OFFICERS OR AGENTS SHALL NOT BE RESPONSIBLE FOR THE ACCURACY OR COMPLETENESS OF SCANNED COPIES OF THIS PLAN SHEET.

NOTES:

1. PRE-NOTIFICATION PCMS: PLACE NEAR RAMP AND ACTIVATE APPROXIMATELY 12 HOURS PRIOR TO RAMP CLOSURE.

EXIT WILL BE CLOSED	TODAY (or TONIGHT) XX:XXPM - XX:XXAM
FRAME 1	FRAME 2

2. RAMP CLOSED PCMS: MOVE PRE-NOTIFICATION PCMS APPROXIMATELY 1000 FEET BEFORE RAMP AND ACTIVATE DURING RAMP CLOSURE.

EXIT XXX CLOSED	FOLLOW DETOUR
FRAME 1	FRAME 2

3. PLACE 7 DAYS PRIOR TO RAMP CLOSURE.
4. ADD SIGN(S) SPACED EQUALLY BETWEEN INTERCHANGES.
5. IF AVAILABLE, EXISTING ROUTE SHIELDS AND DIRECTIONS MAY BE USED IN PLACE OF SIGNS SHOWN.
6. RAMP CLOSED PCMS: PLACE BEFORE OPEN ENTRANCE RAMP AND ACTIVATE DURING RAMP CLOSURE.

NB (OR SB) I-5 ONRAMP CLOSED	FOLLOW DETOUR
FRAME 1	FRAME 2

7. EXIT NUMBER SHOWN AS FOLLOWS.

EXIT NAME	EXIT NUMBER
TURNTABLE BAY Rd	692
O'BRIEN/SHASTA CAVERNS Rd	695
GILMAN Rd	698

8. EXACT SIGN LOCATION TO BE DETERMINED BY THE ENGINEER.
9. EXISTING UTILITY FACILITIES ARE NOT SHOWN ON THESE PLANS.

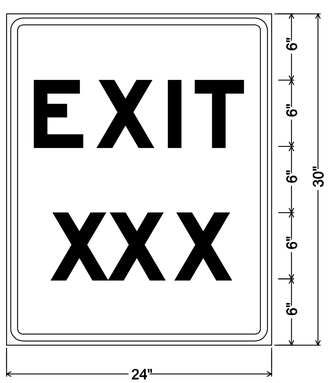

1.5" Radius, 0.6" Border, 0.4" Indent, Black on Orange;
[EXIT] E Mod; [XXX] E Mod;

EXIT NUMBER SIGN (SP1) DETAIL
(SEE NOTE 7)

CONSTRUCTION AREA SIGNS (PORTABLE)

CODE	PANEL SIZE	PANEL MESSAGE
G27-2 (5) (CA)	24" x 24"	I-5
M3-1	24" x 12"	NORTH
M3-3	24" x 12"	SOUTH
M4-8A	24" x 18"	END DETOUR
M4-10L	48" x 18"	DETOUR (Lt ARROW)
M4-10R	48" x 18"	DETOUR (Rt ARROW)
SC3 (CA)	48" x 18"	DETOUR (UP ARROW)
SC6-3 (CA)	48" x 48"	RAMP CLOSED
SP1	24" x 30"	EXIT XXX

ABBREVIATIONS:

PCMS PORTABLE CHANGEABLE MESSAGE SIGN

LEGEND:

PORTABLE CHANGABLE MESSAGE SIGN

CONSTRUCTION AREA SIGN (PORTABLE)

DIRECTION OF TRAVEL

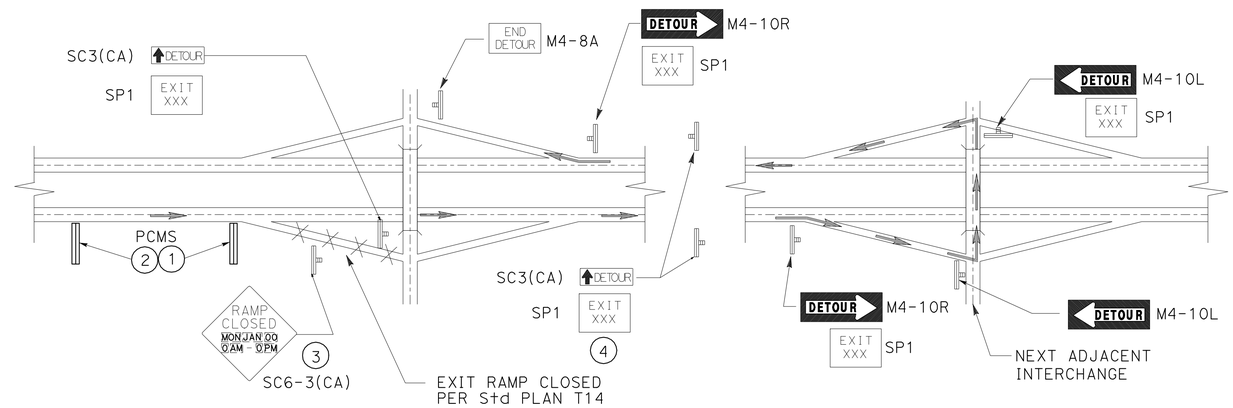

TYPICAL EXIT-RAMP DETOUR SIGNING
O'BRIEN/SHASTA CAVERNS Rd - NB

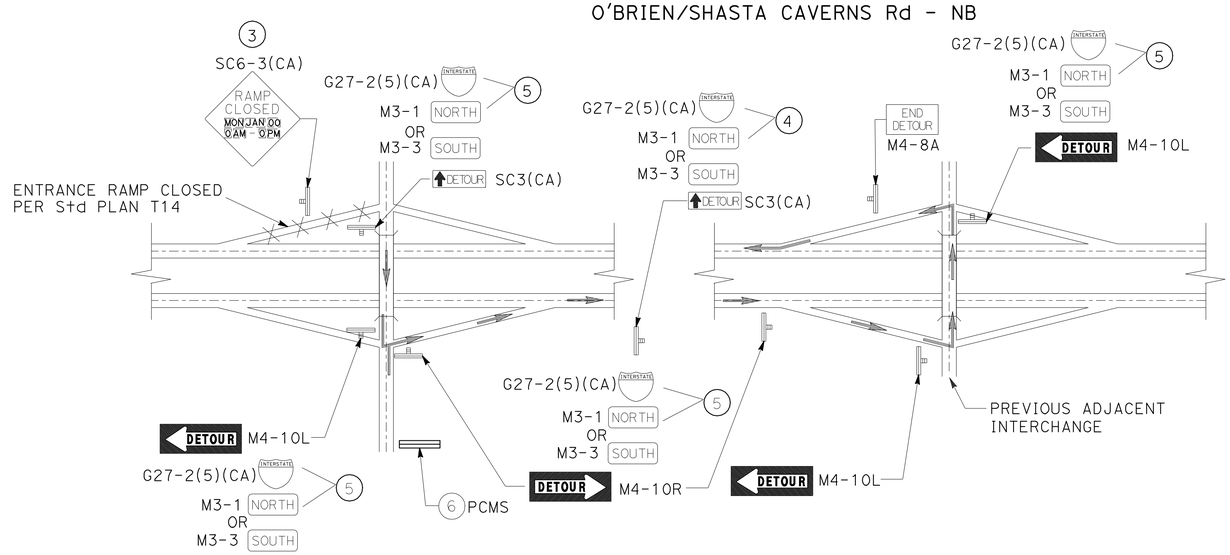

TYPICAL ENTRANCE RAMP DETOUR SIGNING
TURNTABLE BAY Rd - SB
O'BRIEN/SHASTA CAVERNS Rd - SB

DETOUR PLAN
NO SCALE

DE-1

REVISED BY	DATE REVISED

CALCULATED-DESIGNED BY	CHECKED BY
SCOTT GREGORY	DENISE FUZERE

FUNCTIONAL SUPERVISOR: LANCE BROWN

STATE OF CALIFORNIA - DEPARTMENT OF TRANSPORTATION
Caltrans® MAINTENANCE

P:\proj1\02\3E890_plans\pse\23E890mg001.dgn

LAST REVISION 08-26-11 | DATE PLOTTED => 27-DEC-2011 | TIME PLOTTED => 11:22

Dist	COUNTY	ROUTE	POST MILES TOTAL PROJECT	SHEET No.	TOTAL SHEETS
02	Sha	5	R28.8/R39.2	11	41

Scott C. Gregory 12-21-11
REGISTERED CIVIL ENGINEER DATE

12-21-11
PLANS APPROVAL DATE

REGISTERED PROFESSIONAL ENGINEER SCOTT C. GREGORY No. C75565 Exp. 06-30-12 CIVIL STATE OF CALIFORNIA

THE STATE OF CALIFORNIA OR ITS OFFICERS OR AGENTS SHALL NOT BE RESPONSIBLE FOR THE ACCURACY OR COMPLETENESS OF SCANNED COPIES OF THIS PLAN SHEET.

NOTES:

1. PRE-NOTIFICATION PCMS: PLACE NEAR RAMP AND ACTIVATE APPROXIMATELY 12 HOURS PRIOR TO RAMP CLOSURE.

FRAME 1	FRAME 2
EXIT WILL BE CLOSED	TODAY (or TONIGHT) 0 PM - 0 AM

2. RAMP CLOSED PCMS: MOVE PRE-NOTIFICATION PCMS APPROXIMATELY 1000′ BEFORE RAMP AND ACTIVATE DURING RAMP CLOSURE.

FRAME 1	FRAME 2
EXIT 692 CLOSED	FOLLOW DETOUR

3. PLACE 7 DAYS PRIOR TO RAMP CLOSURE.
4. CALIFORNIA SIGN CODES ARE DESIGNATED BY (CA), OTHERWISE, FEDERAL MUTCD SIGN CODES ARE SHOWN.
5. EXACT SIGN LOCATIONS TO BE DETERMINED BY THE ENGINEER.
6. EXISTING UTILITY FACILITIES ARE NOT SHOWN ON THESE PLANS.

CONSTRUCTION AREA SIGNS (PORTABLE)

SIGN No.	CODE	PANEL SIZE (INCH)	REMARKS
A	SC3(CA) SP1	48 x 18 24 x 30	↑ "DETOUR" "EXIT 692"
B	M4-10 R SP1	48 x 18 24 x 30	"DETOUR" "EXIT 692" →
C	M4-10 L SP1	48 x 18 24 x 30	← "DETOUR" "EXIT 692"
D	M4-8A	24 x 18	"END DETOUR"
E	SC6-3(CA)	48 x 48	"RAMP CLOSED" DATE TIME

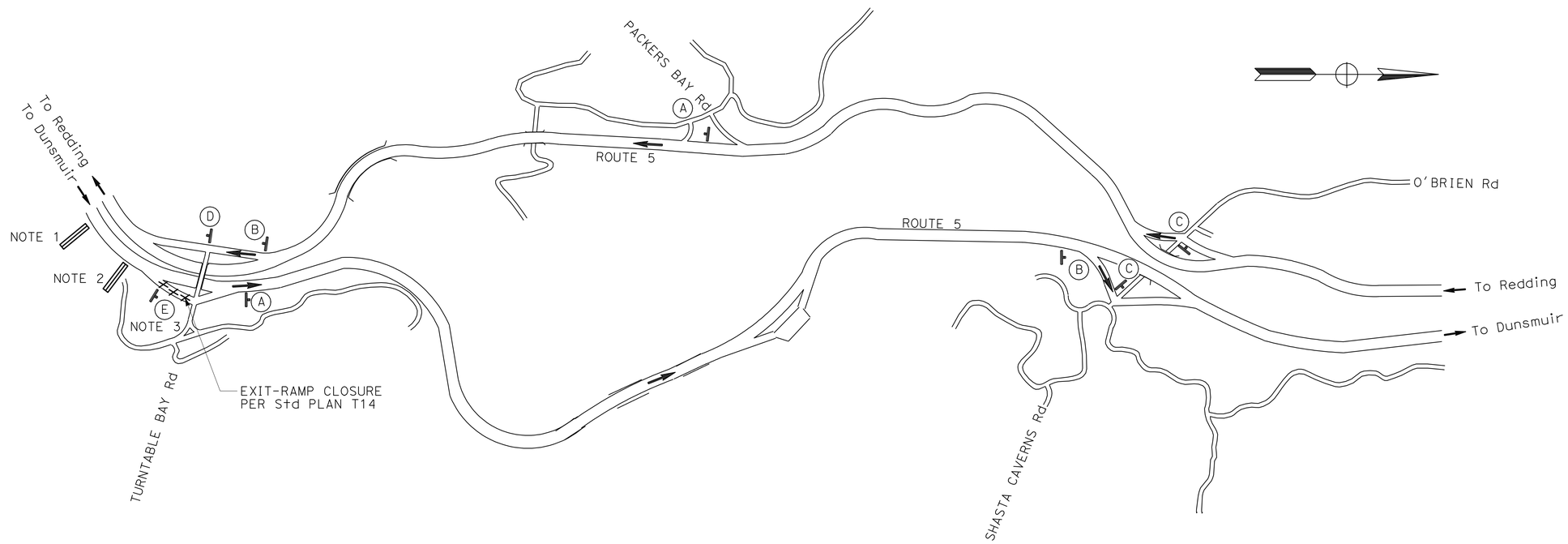

DETOUR FOR CLOSURE OF NB Rte 5 EXIT RAMP TO TURNTABLE BAY Rd

APPROVED FOR DETOUR WORK ONLY

DETOUR PLAN
NO SCALE
DE-2

REVISED BY | DATE REVISED
SCOTT GREGORY | DENISE FUZERE
CALCULATED-DESIGNED BY | CHECKED BY
FUNCTIONAL SUPERVISOR: LANCE BROWN
STATE OF CALIFORNIA - DEPARTMENT OF TRANSPORTATION
Caltrans® MAINTENANCE
P:\proj\02\3E890_plans\pse\23E890mg002.dgn

LAST REVISION 08-26-11 | DATE PLOTTED => 27-DEC-2011 | TIME PLOTTED => 11:22

Dist	COUNTY	ROUTE	POST MILES TOTAL PROJECT	SHEET No.	TOTAL SHEETS
02	Sha	5	R28.8/R39.2	12	41

REGISTERED CIVIL ENGINEER DATE 12-21-11

PLANS APPROVAL DATE 12-21-11

REGISTERED PROFESSIONAL ENGINEER SCOTT C. GREGORY No. C75565 Exp 06-30-12 CIVIL STATE OF CALIFORNIA

THE STATE OF CALIFORNIA OR ITS OFFICERS OR AGENTS SHALL NOT BE RESPONSIBLE FOR THE ACCURACY OR COMPLETENESS OF SCANNED COPIES OF THIS PLAN SHEET.

NOTES:

1. RAMP CLOSED PCMS: PLACE BEFORE OPEN ON-RAMP AND ACTIVATE DURING RAMP CLOSURE.

NB I-5 ON RAMP CLOSED	FOLLOW DETOUR
FRAME 1	FRAME 2

2. PLACE 7 DAYS PRIOR TO RAMP CLOSURE.
3. CALIFORNIA SIGN CODES ARE DESIGNATED BY (CA), OTHERWISE, FEDERAL MUTCD SIGN CODES ARE SHOWN.
4. EXACT SIGN LOCATIONS TO BE DETERMINED BY THE ENGINEER.
5. EXISTING UTILITY FACILITIES ARE NOT SHOWN ON THESE PLAN.

CONSTRUCTION AREA SIGNS (PORTABLE)

SIGN No.	CODE	PANEL SIZE (INCH)	REMARKS
A	SC3(CA) G27-2 (5) (CA) M3-1	48 x 18 24 x 24 24 x 12	↑ "DETOUR" ROUTE SHIELD (5) DIRECTION (NORTH)
B	M4-10 R G27-2 (5) (CA) M3-1	48 x 18 24 x 24 24 x 12	"DETOUR" → ROUTE SHIELD (5) DIRECTION (NORTH)
C	M4-10 L G27-2 (5) (CA) M3-1	48 x 18 24 x 24 24 x 12	← "DETOUR" ROUTE SHIELD (5) DIRECTION (NORTH)
D	M4-8A	24 x 18	"END DETOUR"
E	SC6-3(CA)	48 x 48	"RAMP CLOSED" DATE TIME

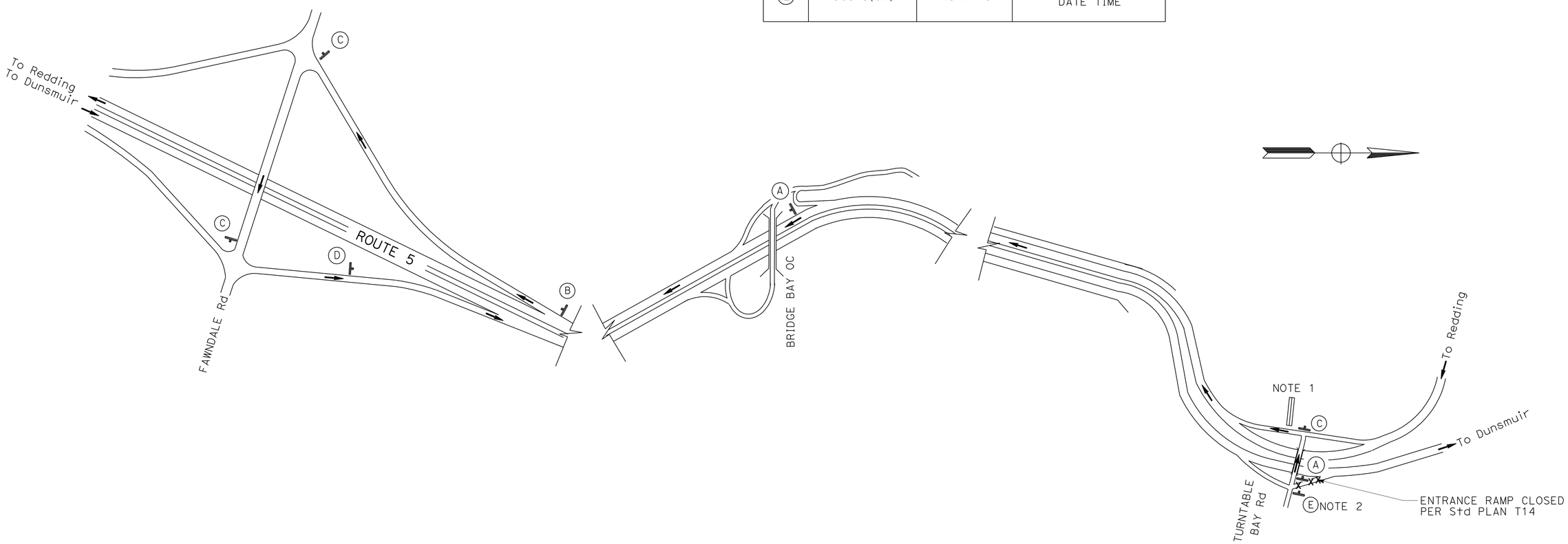

DETOUR FOR CLOSURE OF NB ROUTE 5 ENTRANCE RAMP FROM TURNTABLE BAY

APPROVED FOR DETOUR WORK ONLY

DETOUR PLAN
NO SCALE

DE-3

REVISED BY | DATE REVISED
SCOTT GREGORY | DENISE FUZERE
CALCULATED-DESIGNED BY | CHECKED BY
FUNCTIONAL SUPERVISOR: LANCE BROWN

STATE OF CALIFORNIA - DEPARTMENT OF TRANSPORTATION
Caltrans® MAINTENANCE

P:\proj\02\3E890_plans\pse\23E890mg003.dgn

LAST REVISION 08-26-11 | DATE PLOTTED => 27-DEC-2011 | TIME PLOTTED => 11:22

Dist	COUNTY	ROUTE	POST MILES TOTAL PROJECT	SHEET No.	TOTAL SHEETS
02	Sha	5	R28.8/R39.2	13	41

Scott C. Gregory 12-21-11
REGISTERED CIVIL ENGINEER DATE

12-21-11
PLANS APPROVAL DATE

REGISTERED PROFESSIONAL ENGINEER SCOTT C. GREGORY No. C75565 Exp. 06-30-12 CIVIL STATE OF CALIFORNIA

THE STATE OF CALIFORNIA OR ITS OFFICERS OR AGENTS SHALL NOT BE RESPONSIBLE FOR THE ACCURACY OR COMPLETENESS OF SCANNED COPIES OF THIS PLAN SHEET.

NOTES:

1. PRE-NOTIFICATION PCMS: PLACE NEAR RAMP AND ACTIVATE APPROXIMATELY 12 HOURS PRIOR TO RAMP CLOSURE.

EXIT WILL BE CLOSED	TODAY (or TONIGHT) 0 PM - 0 AM
FRAME 1	FRAME 2

2. RAMP CLOSED PCMS: MOVE PRE-NOTIFICATION PCMS APPROXIMATELY 1000′ BEFORE RAMP AND ACTIVATE DURING RAMP CLOSURE.

EXIT 692 CLOSED	FOLLOW DETOUR
FRAME 1	FRAME 2

3. PLACE 7 DAYS PRIOR TO RAMP CLOSURE.
4. CALIFORNIA SIGN CODES ARE DESIGNATED BY (CA), OTHERWISE, FEDERAL MUTCD SIGN CODES ARE SHOWN.
5. EXACT SIGN LOCATIONS TO BE DETERMINED BY THE ENGINEER.
6. EXISTING UTILITY FACILITIES ARE NOT SHOWN ON THESE PLAN.

CONSTRUCTION AREA SIGNS (PORTABLE)

SIGN No.	CODE	PANEL SIZE (INCH)	REMARKS
A	SC3(CA) SP1	48 x 18 24 x 30	↑ "DETOUR" "EXIT 692"
B	M4-10 R SP1	48 x 18 24 x 30	"DETOUR" → "EXIT 692"
C	M4-10 L SP1	48 x 18 24 x 30	← "DETOUR" "EXIT 692"
D	M4-8A	24 X 18	"END DETOUR"
E	SC6-3(CA)	48 x 48	"RAMP CLOSED" DATE TIME

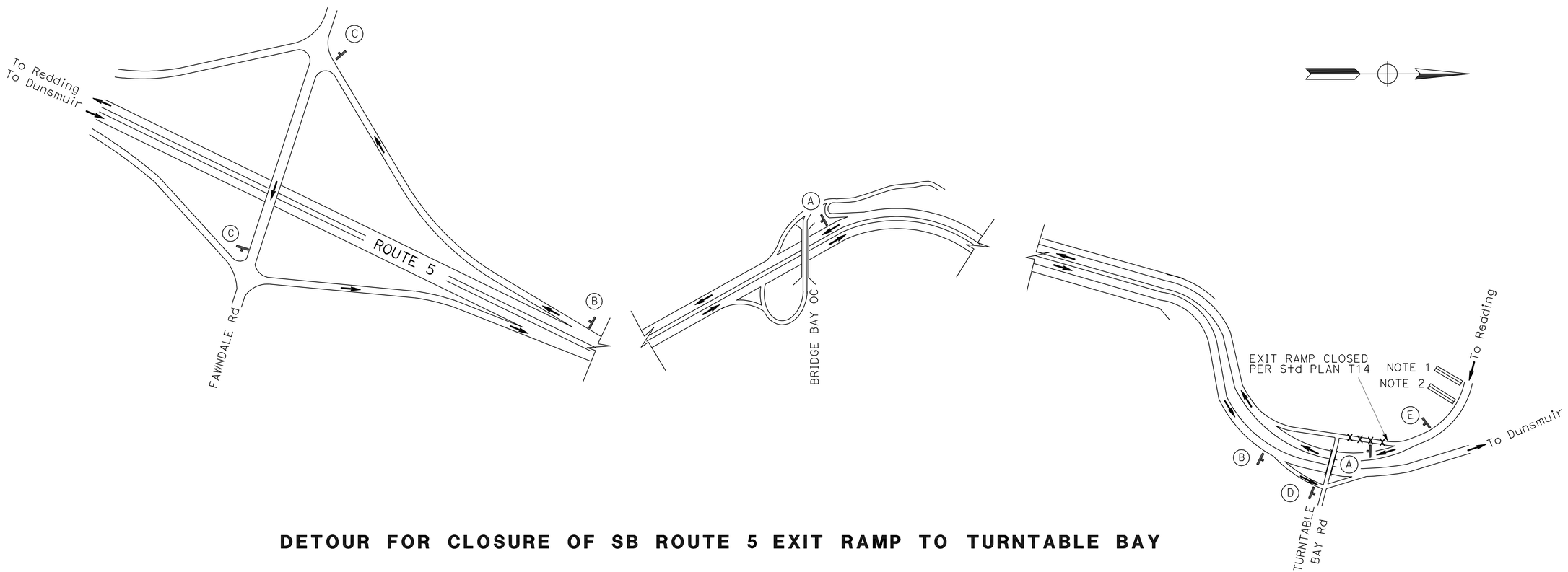

DETOUR FOR CLOSURE OF SB ROUTE 5 EXIT RAMP TO TURNTABLE BAY

DETOUR PLAN

NO SCALE

DE-4

APPROVED FOR DETOUR WORK ONLY

REVISED BY | DATE REVISED
SCOTT GREGORY | DENISE FUZERE
CALCULATED-DESIGNED BY | CHECKED BY
FUNCTIONAL SUPERVISOR | LANCE BROWN
STATE OF CALIFORNIA - DEPARTMENT OF TRANSPORTATION
Caltrans® MAINTENANCE

P:\proj1\02\3E890_plans\pse\23E890mg004.dgn

LAST REVISION 08-26-11 | DATE PLOTTED => 27-DEC-2011 | TIME PLOTTED => 11:22

Dist	COUNTY	ROUTE	POST MILES TOTAL PROJECT	SHEET No.	TOTAL SHEETS
02	Sha	5	R28.8/R39.2	14	41

Scott C. Gregory 12-21-11
REGISTERED CIVIL ENGINEER DATE

12-21-11
PLANS APPROVAL DATE

REGISTERED PROFESSIONAL ENGINEER SCOTT C. GREGORY No. C75565 Exp. 06-30-12 CIVIL STATE OF CALIFORNIA

THE STATE OF CALIFORNIA OR ITS OFFICERS OR AGENTS SHALL NOT BE RESPONSIBLE FOR THE ACCURACY OR COMPLETENESS OF SCANNED COPIES OF THIS PLAN SHEET.

NOTES:

1. PRE-NOTIFICATION PCMS: PLACE NEAR RAMP AND ACTIVATE APPROXIMATELY 12 HOURS PRIOR TO RAMP CLOSURE.

FRAME 1	FRAME 2
EXIT WILL BE CLOSED	TODAY (or TONIGHT) 0 PM - 0 AM

2. RAMP CLOSED PCMS: MOVE PRE-NOTIFICATION PCMS APPROXIMATELY 1000′ BEFORE RAMP AND ACTIVATE DURING RAMP CLOSURE.

FRAME 1	FRAME 2
EXIT 695 CLOSED	FOLLOW DETOUR

3. PLACE 7 DAYS PRIOR TO RAMP CLOSURE.
4. CALIFORNIA SIGN CODES ARE DESIGNATED BY (CA), OTHERWISE, FEDERAL MUTCD SIGN CODES ARE SHOWN.
5. EXACT SIGN LOCATIONS TO BE DETERMINED BY THE ENGINEER.
6. EXISTING UTILITY FACILITIES ARE NOT SHOWN ON THESE PLAN.

CONSTRUCTION AREA SIGNS (PORTABLE)

SIGN No.	CODE	PANEL SIZE (INCH)	REMARKS
A	SC3(CA) SP1	48 x 18 24 x 30	↑ "DETOUR" "EXIT 695"
B	M4-10 R SP1	48 x 18 24 x 30	"DETOUR" → "EXIT 695"
C	M4-10 L SP1	48 x 18 24 x 30	← "DETOUR" "EXIT 695"
D	M4-8A	24 X 18	"END DETOUR"
E	SC6-3(CA)	48 x 48	"RAMP CLOSED" DATE TIME

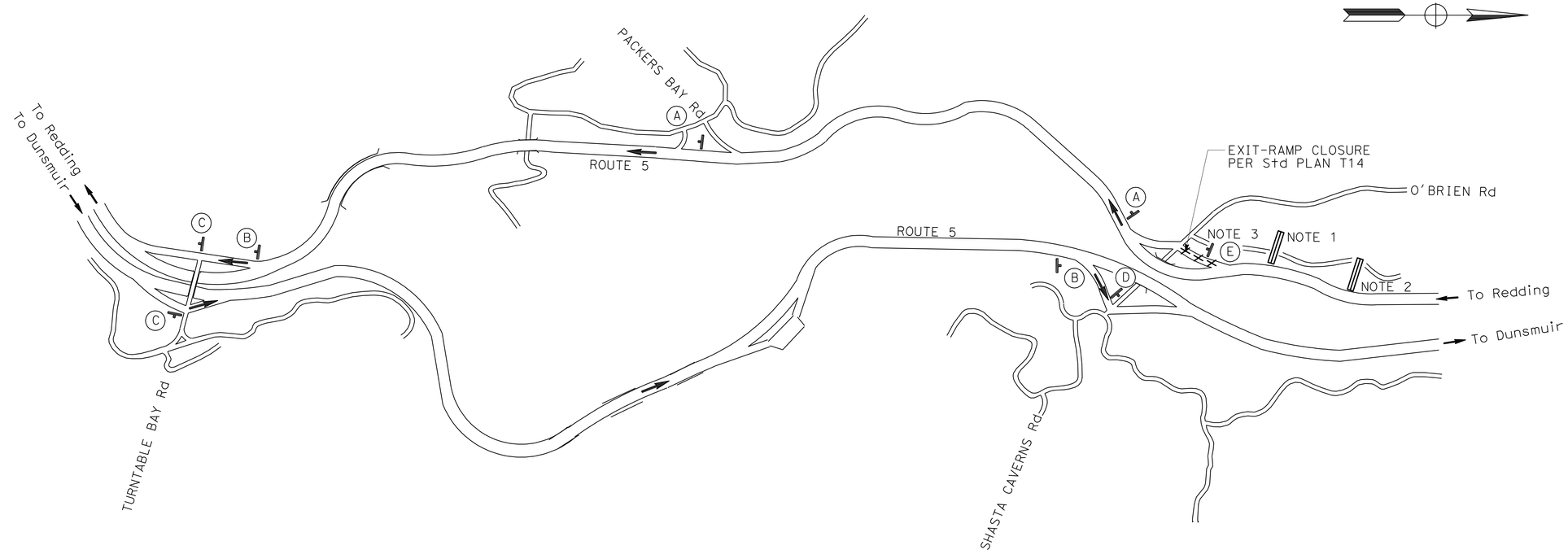

DETOUR FOR CLOSURE OF SB Rte 5 EXIT RAMP TO O'BRIEN/SHASTA CAVERNS Rd

APPROVED FOR DETOUR WORK ONLY

DETOUR PLAN
NO SCALE

DE-5

STATE OF CALIFORNIA - DEPARTMENT OF TRANSPORTATION
Caltrans® **MAINTENANCE**

FUNCTIONAL SUPERVISOR: LANCE BROWN
CALCULATED-DESIGNED BY: SCOTT GREGORY
CHECKED BY: DENISE FUZERE
REVISED BY / DATE REVISED

P:\proj\02\3E890_plans\pse\23E890mg005.dgn

LAST REVISION 08-26-11 | DATE PLOTTED => 27-DEC-2011 | TIME PLOTTED => 11:22

BORDER LAST REVISED 7/2/2010 | USERNAME => s115152 | DGN FILE => 23E890mg005.dgn | RELATIVE BORDER SCALE IS IN INCHES 0 1 2 3 | UNIT 0156 | PROJECT NUMBER & PHASE 02000202061

Dist	COUNTY	ROUTE	POST MILES TOTAL PROJECT	SHEET No.	TOTAL SHEETS
02	Sha	5	R28.8/R39.2	15	41

Scott C. Gregory 12-21-11
REGISTERED CIVIL ENGINEER DATE

12-21-11
PLANS APPROVAL DATE

REGISTERED PROFESSIONAL ENGINEER SCOTT C. GREGORY No. C75565 Exp. 06-30-12 CIVIL STATE OF CALIFORNIA

THE STATE OF CALIFORNIA OR ITS OFFICERS OR AGENTS SHALL NOT BE RESPONSIBLE FOR THE ACCURACY OR COMPLETENESS OF SCANNED COPIES OF THIS PLAN SHEET.

NOTES:

1. RAMP CLOSED PCMS: PLACE BEFORE OPEN ON-RAMP AND ACTIVATE DURING RAMP CLOSURE.

NB I-5 ON RAMP CLOSED	FOLLOW DETOUR
FRAME 1	FRAME 2

2. PLACE 7 DAYS PRIOR TO RAMP CLOSURE.
3. CALIFORNIA SIGN CODES ARE DESIGNATED BY (CA), OTHERWISE, FEDERAL MUTCD SIGN CODES ARE SHOWN.
4. EXACT SIGN LOCATIONS TO BE DETERMINED BY THE ENGINEER.
5. EXISTING UTILITY FACILITIES ARE NOT SHOWN ON THESE PLAN.

CONSTRUCTION AREA SIGNS (PORTABLE)

SIGN No.	CODE	PANEL SIZE (INCH)	REMARKS
A	SC3(CA) G27-2 (5) (CA) M3-1	48 x 18 24 x 24 24 x 12	↑ "DETOUR" ROUTE SHIELD "5" "NORTH"
B	M4-10 R G27-2 (5) (CA) M3-1	48 x 18 24 x 24 24 x 12	"DETOUR" → ROUTE SHIELD "5" "NORTH"
C	M4-10 L G27-2 (5) (CA) M3-1	48 x 18 24 x 24 24 x 12	← "DETOUR" ROUTE SHIELD "5" "NORTH"
D	M4-8A	24 X 18	"END DETOUR"
E	SC6-3(CA)	48 x 48	"RAMP CLOSED" DATE TIME

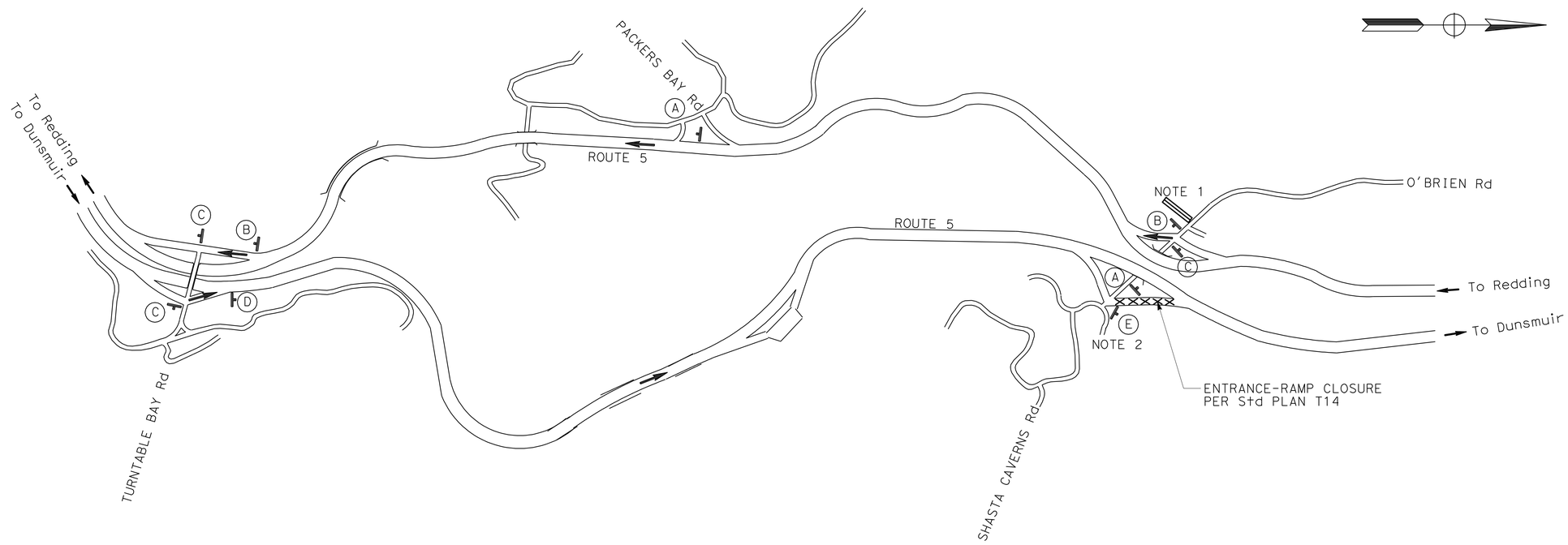

DETOUR FOR CLOSURE OF NB Rte 5 ENTRANCE RAMP FROM O'BRIEN/SHASTA CAVERNS Rd

DETOUR PLAN
NO SCALE

DE-6

APPROVED FOR DETOUR WORK ONLY

STATE OF CALIFORNIA - DEPARTMENT OF TRANSPORTATION
Caltrans® **MAINTENANCE**

FUNCTIONAL SUPERVISOR: LANCE BROWN
CALCULATED-DESIGNED BY: DENISE FUZERE
CHECKED BY: SCOTT GREGORY
REVISED BY / DATE REVISED

P:\proj\02\3E890_plans\pse\23E890mg006.dgn

LAST REVISION 08-26-11 | DATE PLOTTED => 27-DEC-2011 | TIME PLOTTED => 11:22

BORDER LAST REVISED 7/2/2010 | USERNAME => s115152 | DGN FILE => 23E890mg006.dgn | RELATIVE BORDER SCALE IS IN INCHES 0 1 2 3 | UNIT 0156 | PROJECT NUMBER & PHASE 02000202061

Dist	COUNTY	ROUTE	POST MILES TOTAL PROJECT	SHEET No.	TOTAL SHEETS
02	Sha	5	R28.8/R39.2	16	41

REGISTERED CIVIL ENGINEER DATE 12-21-11

PLANS APPROVAL DATE 12-21-11

REGISTERED PROFESSIONAL ENGINEER SCOTT C. GREGORY No. C75565 Exp 06-30-12 CIVIL STATE OF CALIFORNIA

THE STATE OF CALIFORNIA OR ITS OFFICERS OR AGENTS SHALL NOT BE RESPONSIBLE FOR THE ACCURACY OR COMPLETENESS OF SCANNED COPIES OF THIS PLAN SHEET.

NOTES:

1. PRE-NOTIFICATION PCMS: PLACE NEAR RAMP AND ACTIVATE APPROXIMATELY 12 HOURS PRIOR TO RAMP CLOSURE.

EXIT WILL BE CLOSED	TODAY (OR TONIGHT) 0 PM - 0 AM
FRAME 1	FRAME 2

2. RAMP CLOSED PCMS: MOVE PRE-NOTIFICATION PCMS APPROXIMATELY 1000' BEFORE RAMP AND ACTIVATE DURING RAMP CLOSURE.

EXIT 698 CLOSED	FOLLOW DETOUR
FRAME 1	FRAME 2

3. PLACE 7 DAYS PRIOR TO RAMP CLOSURE.
4. CALIFORNIA SIGN CODES ARE DESIGNATED BY (CA), OTHERWISE, FEDERAL MUTCD SIGN CODES ARE SHOWN.
5. EXACT SIGN LOCATIONS TO BE DETERMINED BY THE ENGINEER.
6. EXISTING UTILITY FACILITIES ARE NOT SHOWN ON THESE PLAN.

CONSTRUCTION AREA SIGNS (PORTABLE)

SIGN No.	CODE	PANEL SIZE (INCH)	REMARKS
A	SC3(CA) SP1	48 x 18 24 x 30	↑ "DETOUR" "EXIT 698"
B	M4-10 R SP1	48 x 18 24 x 30	"DETOUR" "EXIT 698" →
C	M4-10 L SP1	48 x 18 24 x 30	← "DETOUR" "EXIT 698"
D	M4-8A	24 x 18	"END DETOUR"
E	SC6-3(CA)	48 x 48	"RAMP CLOSED" DATE TIME

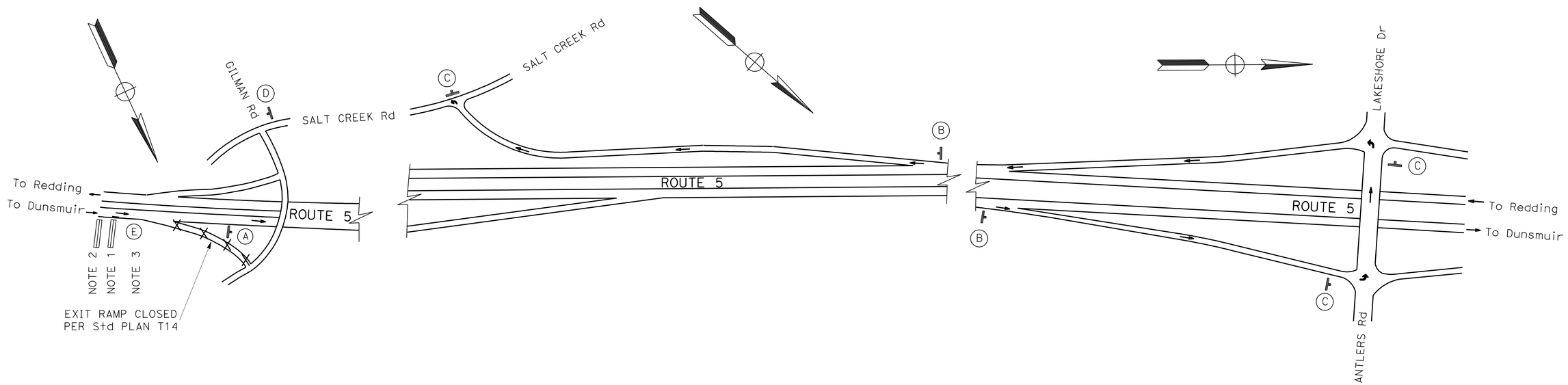

DETOUR FOR CLOSURE OF NB ROUTE 5 EXIT RAMP TO GILMAN ROAD

APPROVED FOR DETOUR WORK ONLY

DETOUR PLAN
NO SCALE

DE-7

STATE OF CALIFORNIA - DEPARTMENT OF TRANSPORTATION
Caltrans MAINTENANCE

FUNCTIONAL SUPERVISOR: LANCE BROWN
CALCULATED-DESIGNED BY: DENISE FUZERE
CHECKED BY: SCOTT GREGORY
REVISED BY / DATE REVISED

P:\proj1\02\3E890_plans\pse\23E890mg007.dgn

LAST REVISION 08-26-11 | DATE PLOTTED => 27-DEC-2011 | TIME PLOTTED => 11:22

BORDER LAST REVISED 7/2/2010 | USERNAME => s115152 | DGN FILE => 23E890mg007.dgn | RELATIVE BORDER SCALE IS IN INCHES 0 1 2 3 | UNIT 0156 | PROJECT NUMBER & PHASE 02000202061

Dist	COUNTY	ROUTE	POST MILES TOTAL PROJECT	SHEET No.	TOTAL SHEETS
02	Sha	5	R28.8/R39.2	17	41

Scott C. Gregory 12-21-11
REGISTERED CIVIL ENGINEER DATE

12-21-11
PLANS APPROVAL DATE

REGISTERED PROFESSIONAL ENGINEER SCOTT C. GREGORY No. C75565 Exp. 06-30-12 CIVIL STATE OF CALIFORNIA

THE STATE OF CALIFORNIA OR ITS OFFICERS OR AGENTS SHALL NOT BE RESPONSIBLE FOR THE ACCURACY OR COMPLETENESS OF SCANNED COPIES OF THIS PLAN SHEET.

NOTES:

1. RAMP CLOSED PCMS: PLACE BEFORE OPEN ON-RAMP AND ACTIVATE DURING RAMP CLOSURE.

SB I-5 ON RAMP CLOSED	FOLLOW DETOUR
FRAME 1	FRAME 2

2. PLACE 7 DAYS PRIOR TO RAMP CLOSURE.
3. CALIFORNIA SIGN CODES ARE DESIGNATED BY (CA), OTHERWISE, FEDERAL MUTCD SIGN CODES ARE SHOWN.
4. EXACT SIGN LOCATIONS TO BE DETERMINED BY THE ENGINEER.
5. EXISTING UTILITY FACILITIES ARE NOT SHOWN ON THESE PLAN.

CONSTRUCTION AREA SIGNS (PORTABLE)

SIGN No.	CODE	PANEL SIZE (INCH)	REMARKS
A	SC3(CA) G27-2 (5) (CA) M3-3	48 x 18 24 x 24 24 x 12	↑ "DETOUR" ROUTE SHIELD "5" "SOUTH"
B	M4-10 R G27-2 (5) (CA) M3-3	48 x 18 24 x 24 24 x 12	"DETOUR" → ROUTE SHIELD "5" "SOUTH"
C	M4-10 L G27-2 (5) (CA) M3-3	48 x 18 24 x 24 24 x 12	← "DETOUR" ROUTE SHIELD "5" "SOUTH"
D	M4-8A	24 X 18	"END DETOUR"
E	SC6-3(CA)	48 x 48	"RAMP CLOSED" DATE TIME

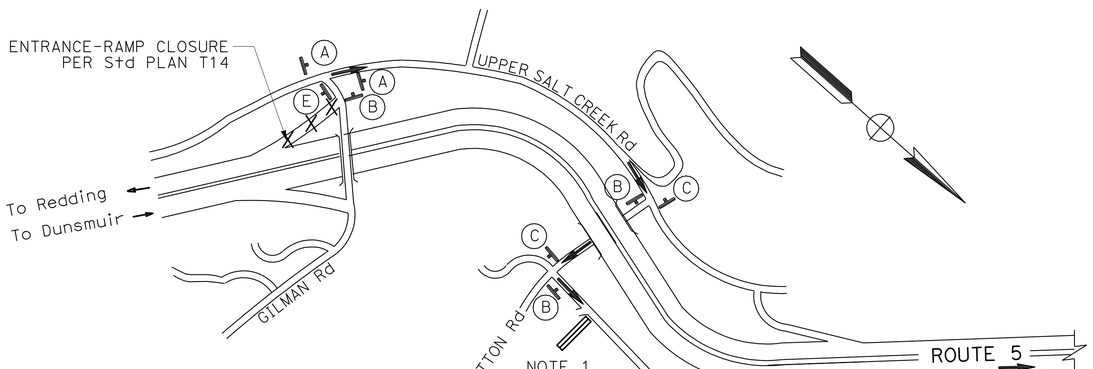

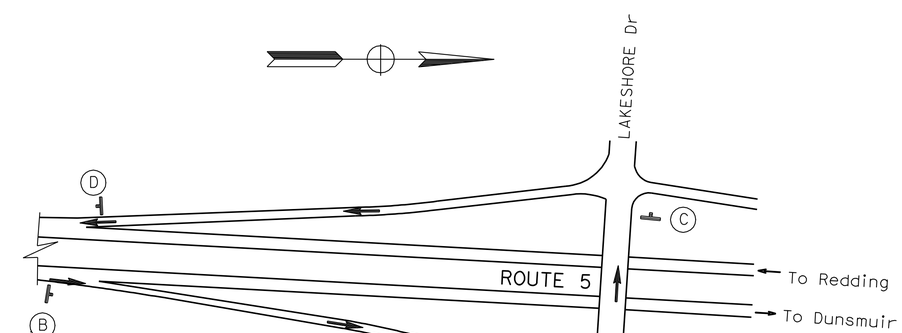

DETOUR FOR CLOSURE OF SB ROUTE 5 ENTRANCE RAMP FROM GILMAN ROAD

APPROVED FOR DETOUR WORK ONLY

DETOUR PLAN
NO SCALE

DE-8

STATE OF CALIFORNIA - DEPARTMENT OF TRANSPORTATION
Caltrans® MAINTENANCE

FUNCTIONAL SUPERVISOR: LANCE BROWN
CALCULATED-DESIGNED BY: SCOTT GREGORY
CHECKED BY: DENISE FUZERE
REVISED BY / DATE REVISED

P:\proj1\02\3E890_plans\pse\23E890mg008.dgn

LAST REVISION 08-26-11 | DATE PLOTTED => 27-DEC-2011 | TIME PLOTTED => 11:22

Dist	COUNTY	ROUTE	POST MILES TOTAL PROJECT	SHEET No.	TOTAL SHEETS
02	Sha	5	R28.8/R39.2	18	41

Scott C. Gregory 12-21-11
REGISTERED CIVIL ENGINEER DATE

12-21-11
PLANS APPROVAL DATE

REGISTERED PROFESSIONAL ENGINEER SCOTT C. GREGORY No. C75565 Exp. 06-30-12 CIVIL STATE OF CALIFORNIA

THE STATE OF CALIFORNIA OR ITS OFFICERS OR AGENTS SHALL NOT BE RESPONSIBLE FOR THE ACCURACY OR COMPLETENESS OF SCANNED COPIES OF THIS PLAN SHEET.

NOTES:

1. RAMP CLOSED PCMS: PLACE BEFORE OPEN ON-RAMP AND ACTIVATE DURING RAMP CLOSURE.

NB I-5 ON RAMP CLOSED	FOLLOW DETOUR
FRAME 1	FRAME 2

2. PLACE 7 DAYS PRIOR TO RAMP CLOSURE.
3. CALIFORNIA SIGN CODES ARE DESIGNATED BY (CA), OTHERWISE, FEDERAL MUTCD SIGN CODES ARE SHOWN.
4. EXACT SIGN LOCATIONS TO BE DETERMINED BY THE ENGINEER.
5. EXISTING UTILITY FACILITIES ARE NOT SHOWN ON THESE PLAN.

CONSTRUCTION AREA SIGNS (PORTABLE)

SIGN No.	CODE	PANEL SIZE (INCH)	REMARKS
A	SC3(CA) G27-2 (5) (CA) M3-1	48 x 18 24 x 24 24 x 12	↑ "DETOUR" ROUTE SHIELD "5" "NORTH"
B	M4-10 R G27-2 (5) (CA) M3-1	48 x 18 24 x 24 24 x 12	"DETOUR" → ROUTE SHIELD "5" "NORTH"
C	M4-10 L G27-2 (5) (CA) M3-1	48 x 18 24 x 24 24 x 12	← "DETOUR" ROUTE SHIELD "5" "NORTH"
D	M4-8A	24 X 18	"END DETOUR"
E	SC6-3(CA)	48 x 48	"RAMP CLOSED" DATE TIME

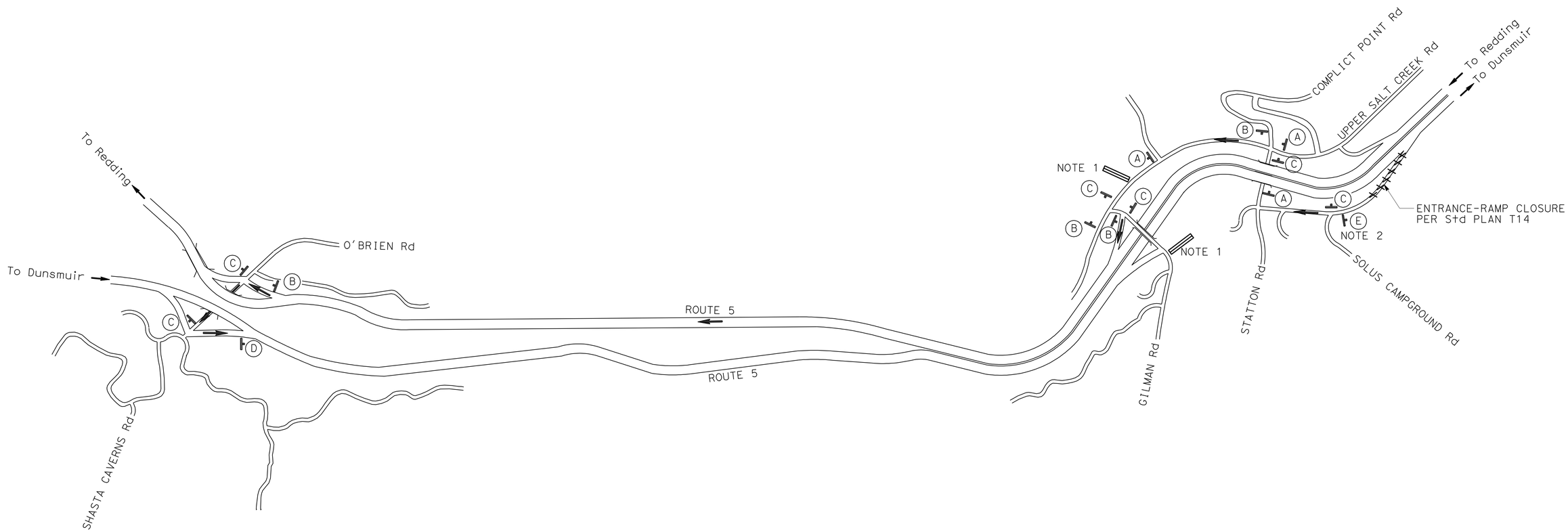

DETOUR FOR CLOSURE OF NB Rte 5 ENTRANCE RAMP FROM UPPER SALT CREEK Rd

APPROVED FOR DETOUR WORK ONLY

DETOUR PLAN

NO SCALE **DE-9**

STATE OF CALIFORNIA - DEPARTMENT OF TRANSPORTATION
Caltrans® MAINTENANCE

FUNCTIONAL SUPERVISOR: LANCE BROWN
CALCULATED-DESIGNED BY: SCOTT GREGORY
CHECKED BY: DENISE FUZERE
REVISED BY / DATE REVISED

P:\proj1\02\3E890_plans\pse\23E890mg009.dgn

LAST REVISION 08-26-11 | DATE PLOTTED => 27-DEC-2011 | TIME PLOTTED => 11:22

Dist	COUNTY	ROUTE	POST MILES TOTAL PROJECT	SHEET No.	TOTAL SHEETS
02	Sha	5	R28.8/R39.2	19	41

REGISTERED CIVIL ENGINEER DATE 12-21-11

PLANS APPROVAL DATE 12-21-11

REGISTERED PROFESSIONAL ENGINEER SCOTT C. GREGORY No. C75565 Exp 06-30-12 CIVIL STATE OF CALIFORNIA

THE STATE OF CALIFORNIA OR ITS OFFICERS OR AGENTS SHALL NOT BE RESPONSIBLE FOR THE ACCURACY OR COMPLETENESS OF SCANNED COPIES OF THIS PLAN SHEET.

NOTES:

1. PRE-NOTIFICATION PCMS: PLACE NEAR RAMP AND ACTIVATE APPROXIMATELY 12 HOURS PRIOR TO RAMP CLOSURE.

EXIT WILL BE CLOSED	TODAY (or TONIGHT) 0 PM - 0 AM
FRAME 1	FRAME 2

2. RAMP CLOSED PCMS: MOVE PRE-NOTIFICATION PCMS APPROXIMATELY 1000′ BEFORE RAMP AND ACTIVATE DURING RAMP CLOSURE.

EXIT 698 CLOSED	FOLLOW DETOUR
FRAME 1	FRAME 2

3. PLACE 7 DAYS PRIOR TO RAMP CLOSURE.
4. CALIFORNIA SIGN CODES ARE DESIGNATED BY (CA), OTHERWISE, FEDERAL MUTCD SIGN CODES ARE SHOWN.
5. EXACT SIGN LOCATIONS TO BE DETERMINED BY THE ENGINEER.
6. EXISTING UTILITY FACILITIES ARE NOT SHOWN ON THESE PLAN.

CONSTRUCTION AREA SIGNS (PORTABLE)

SIGN No.	CODE	PANEL SIZE (INCH)	REMARKS
A	SC3(CA) SP1	48 x 18 24 x 30	↑ "DETOUR" "EXIT 698"
B	M4-10 R SP1	48 x 18 24 x 30	"DETOUR" → "EXIT 698"
C	M4-10 L SP1	48 x 18 24 x 30	← "DETOUR" "EXIT 698"
D	M4-8A	24 X 18	"END DETOUR"
E	SC6-3(CA)	48 x 48	"RAMP CLOSED" DATE TIME

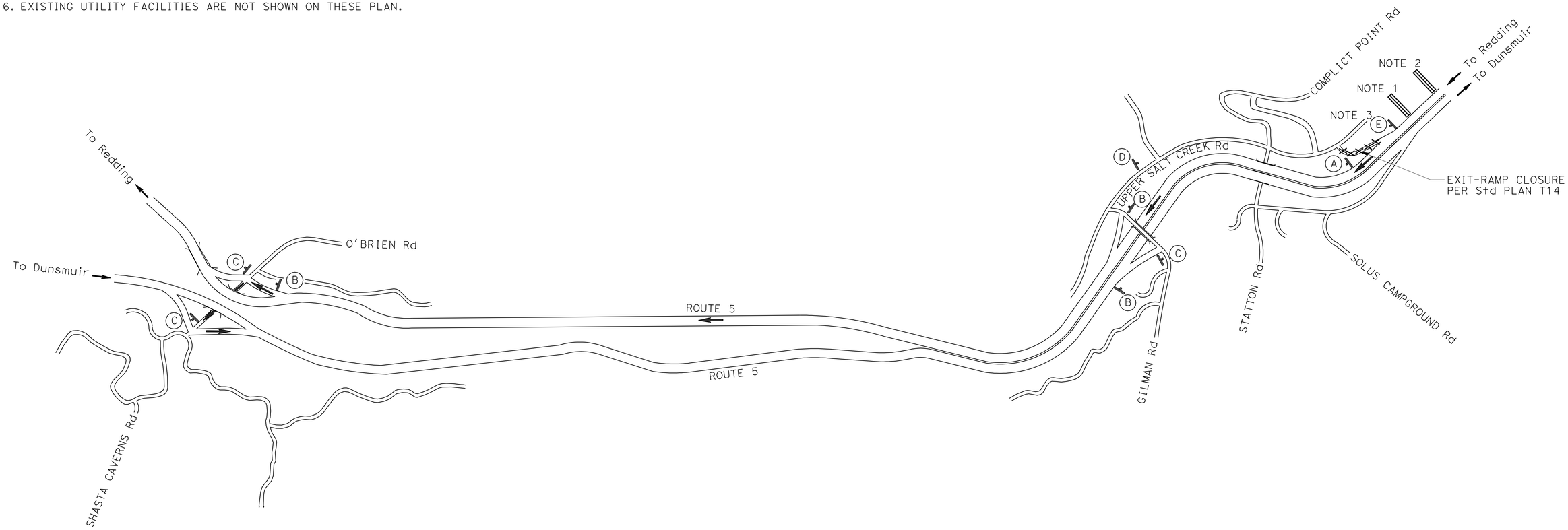

DETOUR FOR CLOSURE OF SB Rte 5 EXIT RAMP TO UPPER SALT CREEK Rd

APPROVED FOR DETOUR WORK ONLY

DETOUR PLAN

NO SCALE

DE-10

REVISED BY | DATE REVISED

SCOTT GREGORY | DENISE FUZERE

CALCULATED-DESIGNED BY | CHECKED BY

FUNCTIONAL SUPERVISOR: LANCE BROWN

STATE OF CALIFORNIA - DEPARTMENT OF TRANSPORTATION

Caltrans® MAINTENANCE

P:\proj1\02\3E890_plans\pse\23E890mg010.dgn

LAST REVISION | DATE PLOTTED => 27-DEC-2011 | TIME PLOTTED => 11:22 | 08-26-11

Dist	COUNTY	ROUTE	POST MILES TOTAL PROJECT	SHEET No.	TOTAL SHEETS
02	Sha	5	R28.8/R39.2	20	41

REGISTERED CIVIL ENGINEER DATE 12-21-11

PLANS APPROVAL DATE 12-21-11

REGISTERED PROFESSIONAL ENGINEER SCOTT C. GREGORY No. C75565 Exp 06-30-12 CIVIL STATE OF CALIFORNIA

THE STATE OF CALIFORNIA OR ITS OFFICERS OR AGENTS SHALL NOT BE RESPONSIBLE FOR THE ACCURACY OR COMPLETENESS OF SCANNED COPIES OF THIS PLAN SHEET.

NOTES:

1. EXISTING UTILITY FACILITIES ARE NOT SHOWN ON THESE PLANS.
2. PLACE "DETAIL A" ON NB AND SB SHOULDER WHEN ALIGNMENTS ARE SEPARATE.

LEGEND:

⇨ DIRECTION OF TRAFFIC

(27B) TRAFFIC STRIPE DETAIL No.

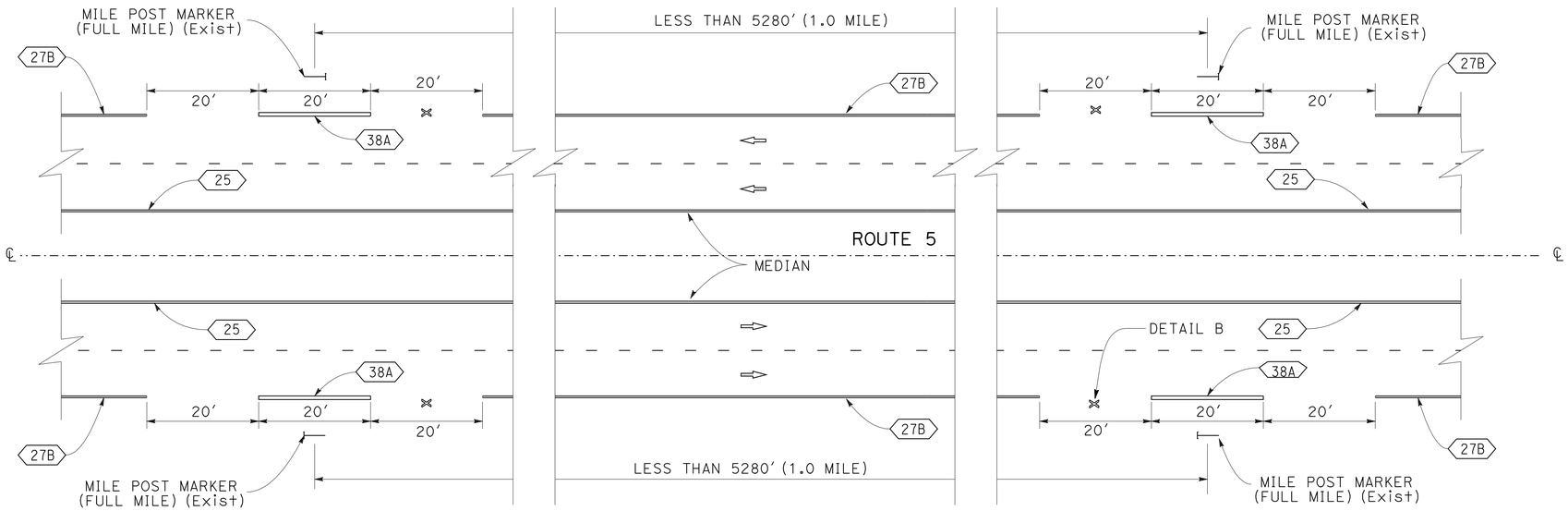

TYPICAL MILE POST STRIPE FOR EQUATIONS (FREEWAYS)

(NO DETAIL A WITHIN AN EQUATION)

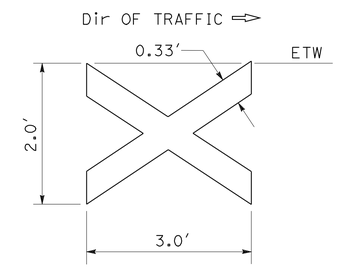

DETAIL B

0.33' SOLID WHITE THERMOPLASTIC

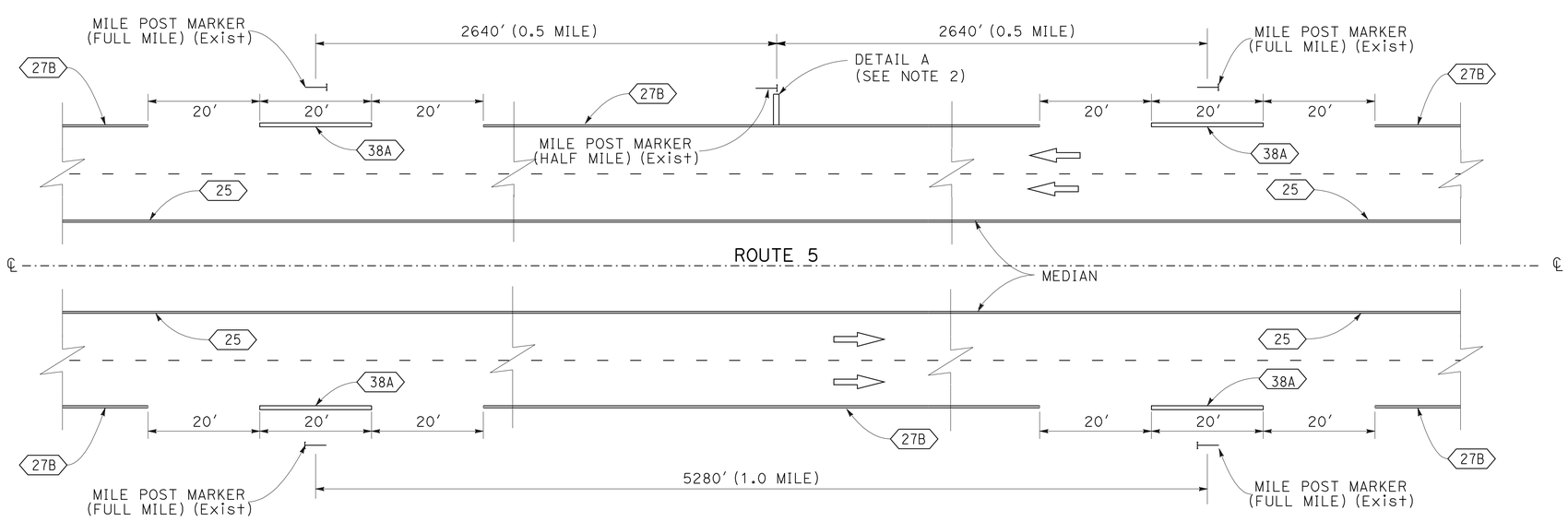

TYPICAL HALF MILE AND MILE POST STRIPE

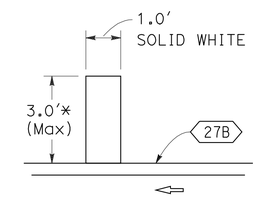

DETAIL A

* ACTUAL LENGTH MAY VARY DUE TO PAVEMENT WIDTH

PAVEMENT DELINEATION DETAILS

NO SCALE

PDD-1

REVISED BY	DATE REVISED

CALCULATED-DESIGNED BY	CHECKED BY
SCOTT GREGORY	DENISE FUZERE

FUNCTIONAL SUPERVISOR: LANCE BROWN

STATE OF CALIFORNIA - DEPARTMENT OF TRANSPORTATION

Caltrans® MAINTENANCE

P:\proj1\02\3E890_plans\pse\23E890nb001.dgn

LAST REVISION 08-26-11 | DATE PLOTTED => 27-DEC-2011 | TIME PLOTTED => 11:22

Dist	COUNTY	ROUTE	POST MILES TOTAL PROJECT	SHEET No.	TOTAL SHEETS
02	Sha	5	R28.8/R39.2	21	41

Scott C. Gregory 12-21-11
REGISTERED CIVIL ENGINEER DATE

12-21-11
PLANS APPROVAL DATE

REGISTERED PROFESSIONAL ENGINEER SCOTT C. GREGORY No. C75565 Exp. 06-30-12 CIVIL STATE OF CALIFORNIA

THE STATE OF CALIFORNIA OR ITS OFFICERS OR AGENTS SHALL NOT BE RESPONSIBLE FOR THE ACCURACY OR COMPLETENESS OF SCANNED COPIES OF THIS PLAN SHEET.

NOTE:

1. EXISTING UTILITY FACILITIES ARE NOT SHOWN ON THESE PLANS.

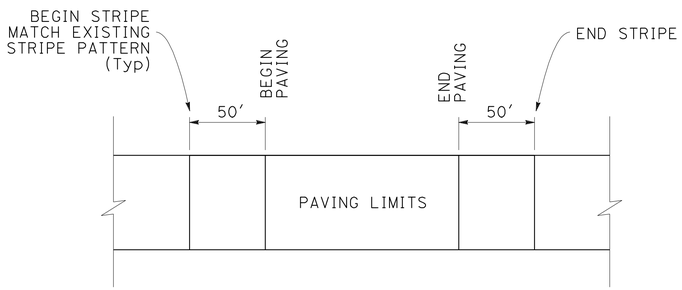

TRAFFIC STRIPE MATCH DETAIL

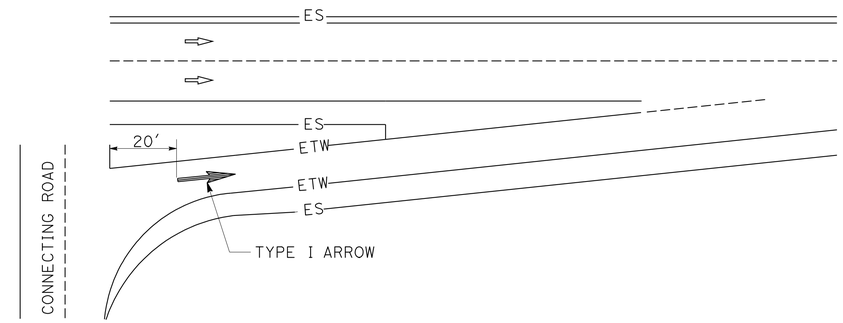

ENTRANCE RAMP ARROW PLACEMENT DETAIL

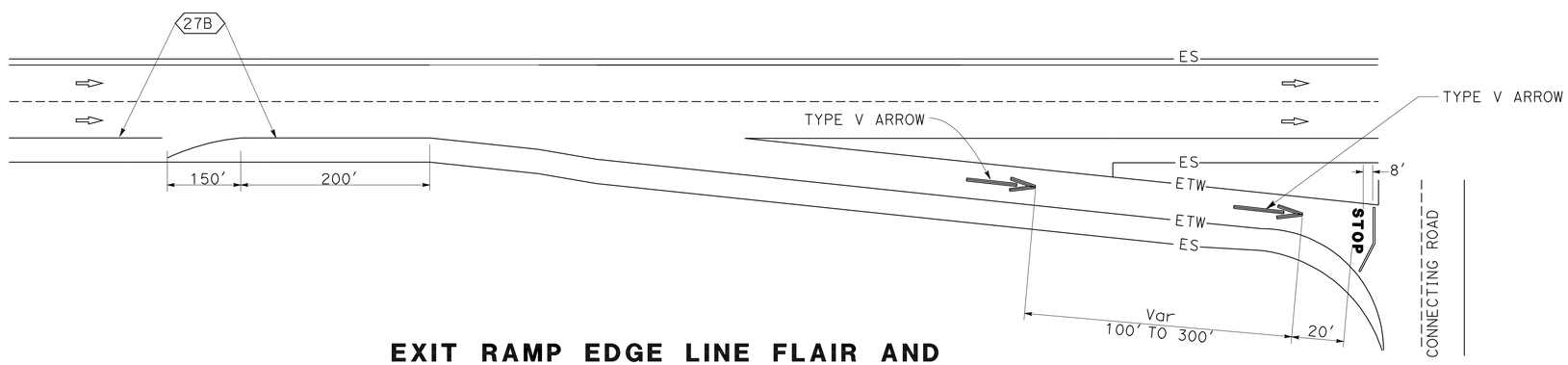

EXIT RAMP EDGE LINE FLAIR AND ARROW PLACEMENT DETAIL

PAVEMENT DELINEATION DETAILS

NO SCALE

PDD-2

REVISED BY	DATE REVISED

CALCULATED-DESIGNED BY	CHECKED BY
SCOTT GREGORY	DENISE FUZERE

FUNCTIONAL SUPERVISOR: LANCE BROWN

STATE OF CALIFORNIA - DEPARTMENT OF TRANSPORTATION
Caltrans® MAINTENANCE

P:\proj1\02\3E890_plans\pse\23E890nb002.dgn

LAST REVISION 12-20-11 | DATE PLOTTED => 27-DEC-2011 | TIME PLOTTED => 11:22

Dist	COUNTY	ROUTE	POST MILES TOTAL PROJECT	SHEET No.	TOTAL SHEETS
02	Sha	5	R28.8/R39.2	22	41

REGISTERED CIVIL ENGINEER DATE 12-21-11

PLANS APPROVAL DATE 12-21-11

REGISTERED PROFESSIONAL ENGINEER SCOTT C. GREGORY No. C75565 Exp 06-30-12 CIVIL STATE OF CALIFORNIA

THE STATE OF CALIFORNIA OR ITS OFFICERS OR AGENTS SHALL NOT BE RESPONSIBLE FOR THE ACCURACY OR COMPLETENESS OF SCANNED COPIES OF THIS PLAN SHEET.

NOTES:

1. NO WORK ON BRIDGE DECKS.
2. EXISTING UTILITY FACILITIES ARE NOT SHOWN ON THESE PLANS.

ABBREVIATION;

Mid MIDDLE

THERMOPLASTIC PAVEMENT MARKING

DESCRIPTION	PM	Mid	Rt	EA	SQFT	REMARKS
TURNTABLE BAY SB ENTRANCE RAMP	R29.18	X		1	25.0	TYPE I ARROW (18')
TURNTABLE BAY NB EXIT RAMP	R29.20	X		2	66.0	TYPE V ARROW
		X		1	22.0	STOP
		X		1	67.0	LIMIT LINE
TURNTABLE BAY NB ENTRANCE RAMP	R29.40	X		1	25.0	TYPE I ARROW (18')
TURNTABLE BAY SB EXIT RAMP	R29.47	X		2	66.0	TYPE V ARROW
		X		1	22.0	STOP
		X		1	40.0	LIMIT LINE
NB AND SB MAINLINE	R29.50		X	2	6.0	DETAIL A
NB AND SB MAINLINE	R30.50		X	2	6.0	DETAIL A
PACKERS BAY SB ENTRANCE RAMP	R30.51	X		1	25.0	TYPE I ARROW (18')
SB MAINLINE	R30.55		X	1	42.0	TYPE VI ARROW
SB MAINLINE	R30.60		X	1	42.0	TYPE VI ARROW
SB MAINLINE	R30.64		X	1	42.0	TYPE VI ARROW
PACKERS BAY SB EXIT RAMP	R30.73	X		2	66.0	TYPE V ARROW
		X		1	22.0	STOP
		X		1	48.0	LIMIT LINE
O'BRIEN REST AREA	R31.03	X	X		127.0	4" PARKING LINES
NB AND SB MAINLINE	R31.50		X	2	6.0	DETAIL A
O'BRIEN/SHASTA CAVERNS SB ENTRANCE RAMP	R31.93	X		1	25.0	TYPE I ARROW (18')
O'BRIEN/SHASTA CAVERNS NB EXIT RAMP	R31.99	X		2	66.0	TYPE V ARROW
		X		1	22.0	STOP
		X		1	60.0	LIMIT LINE
O'BRIEN/SHASTA CAVERNS SB EXIT RAMP	R32.22	X		2	66.0	TYPE V ARROW
		X		1	22.0	STOP
		X		1	60.0	LIMIT LINE
O'BRIEN/SHASTA CAVERNS NB ENTRANCE RAMP	R32.30	X		1	25.0	TYPE I ARROW (18')
NB MAINLINE	R32.34		X	1	42.0	TYPE VI ARROW
NB MAINLINE	R32.38		X	1	42.0	TYPE VI ARROW
NB MAINLINE	R32.41		X	1	42.0	TYPE VI ARROW
NB AND SB MAINLINE	R32.50		X	2	6.0	DETAIL A
NB AND SB MAINLINE	R33.50		X	2	6.0	DETAIL A
NB AND SB MAINLINE	R34.00		X	2	4.8	DETAIL B
SB MAINLINE	R34.18		X	1	42.0	TYPE VI ARROW
SB MAINLINE	R34.24		X	1	42.0	TYPE VI ARROW
SB MAINLINE	R34.30		X	1	42.0	TYPE VI ARROW
NB AND SB MAINLINE	R36.00		X	2	4.8	DETAIL B
SB MAINLINE	R36.50		X	1	3.0	DETAIL A
GILMAN Rd NB EXIT RAMP	R36.68	X		2	66.0	TYPE V ARROW
		X		1	24.0	YIELD
		X		1	70.0	LIMIT LINE
GILMAN Rd SB ENTRANCE RAMP	R36.70	X		1	25.0	TYPE I ARROW (18')
SB MAINLINE	R37.50		X	1	3.0	DETAIL A
UPPER SALT Cr Rd NB ENTRANCE RAMP	R37.50	X		1	25.0	TYPE I ARROW (18')
UPPER SALT Cr Rd SB EXIT RAMP	R37.67	X		2	66.0	TYPE V ARROW
		X		2	44.0	STOP
		X		1	72.0	LIMIT LINE
SB MAINLINE	R38.50		X	1	3.0	DETAIL A
SB MAINLINE	R38.84		X	1	42.0	TYPE VI ARROW
NB MAINLINE	R38.85		X	1	42.0	TYPE VI ARROW
SB MAINLINE	R38.88		X	1	42.0	TYPE VI ARROW
NB MAINLINE	R38.89		X	1	42.0	TYPE VI ARROW
SB MAINLINE	R38.92		X	1	42.0	TYPE VI ARROW
NB MAINLINE	R38.93		X	1	42.0	TYPE VI ARROW
			TOTAL		2037.6	

PAVEMENT MARKER (RETROREFLECTIVE-RECESSED)

DIRECTION	PM/PM	TYPE A *	TYPE G	TYPE H
		EA	EA	EA
NB MAINLINE	R28.8/R39.2	70	1251	993
SB MAINLINE	R28.8/R39.2	65	1290	977
RAMPS	R28.8/R39.2	-	260	443
SUBTOTAL		135	2801	2413
TOTAL		5349		

* UNDERDRAIN MARKERS

THERMOPLASTIC TRAFFIC STRIPE (SPRAYABLE)

DESCRIPTION	POSTMILE LIMITS	DETAIL 8	DETAIL 12	DETAIL 25	DETAIL 25A	DETAIL 27	DETAIL 27B	DETAIL 36	DETAIL 36A	DETAIL 38A
	PM/PM	LF	LF	LF	LF	LF	LF	LF	LF	LF
NB MAINLINE	R28.8/R39.2		59,981	31,786		15,735	46,320			400
SB MAINLINE	R28.8/R39.2		61,829	32,261		14,520	45,581			400
RAMPS	R28.8/R39.2	1003			10,606		10,901	2112	1934	
SUBTOTAL		1003	121,810	64,047	10,606	30,255	102,802	2112	1934	800
TOTAL		335,369								

REMOVE THERMOPLASTIC PAVEMENT MARKING

DESCRIPTION	PM	Mid	Rt	EA	SQFT	REMARKS
TURNTABLE BAY NB EXIT RAMP	R29.20	X		4	132.0	TYPE V ARROW
TURNTABLE BAY NB ENTRANCE RAMP	R29.40	X		1	25.0	TYPE I ARROW (18')
TURNTABLE BAY SB EXIT RAMP	R29.47	X		4	132.0	TYPE V ARROW
PACKERS BAY SB ENTRANCE RAMP	R30.51	X		1	25.0	TYPE I ARROW (18')
SB MAINLINE	R30.55		X	1	42.0	TYPE VI ARROW
SB MAINLINE	R30.60		X	1	42.0	TYPE VI ARROW
SB MAINLINE	R30.64		X	1	42.0	TYPE VI ARROW
PACKERS BAY SB EXIT RAMP	R30.73	X		1	132.0	TYPE V ARROW
O'BRIEN/SHASTA CAVERNS SB ENTRANCE RAMP	R31.93	X		1	25.0	TYPE I ARROW (18')
O'BRIEN/SHASTA CAVERNS NB EXIT RAMP	R31.99	X		4	132.0	TYPE V ARROW
O'BRIEN/SHASTA CAVERNS SB EXIT RAMP	R32.22	X		4	132.0	TYPE V ARROW
O'BRIEN/SHASTA CAVERNS NB ENTRANCE RAMP	R32.30	X		1	25.0	TYPE I ARROW (18')
NB MAINLINE	R32.34		X	1	42.0	TYPE VI ARROW
NB MAINLINE	R32.38		X	1	42.0	TYPE VI ARROW
NB MAINLINE	R32.41		X	1	42.0	TYPE VI ARROW
SB MAINLINE	R34.18		X	1	42.0	TYPE VI ARROW
SB MAINLINE	R34.24		X	1	42.0	TYPE VI ARROW
SB MAINLINE	R34.30		X	1	42.0	TYPE VI ARROW
GILMAN Rd NB EXIT RAMP	R36.68	X		4	132.0	TYPE V ARROW
GILMAN Rd SB ENTRANCE RAMP	R36.70	X		1	25.0	TYPE I ARROW (18')
UPPER SALT Cr Rd NB ENTRANCE RAMP	R37.50	X		1	25.0	TYPE I ARROW (18')
UPPER SALT Cr Rd SB EXIT RAMP	R37.67	X		4	132.0	TYPE V ARROW
SB MAINLINE	R38.84		X	1	42.0	TYPE VI ARROW
NB MAINLINE	R38.85		X	1	42.0	TYPE VI ARROW
SB MAINLINE	R38.88		X	1	42.0	TYPE VI ARROW
NB MAINLINE	R38.89		X	1	42.0	TYPE VI ARROW
SB MAINLINE	R38.92		X	1	42.0	TYPE VI ARROW
NB MAINLINE	R38.93		X	1	42.0	TYPE VI ARROW
			TOTAL		1704.0	

PAVEMENT DELINEATION QUANTITIES

PDQ-1

REVISED BY | DATE REVISED

SCOTT GREGORY | DENISE FUZERE

CALCULATED-DESIGNED BY | CHECKED BY

FUNCTIONAL SUPERVISOR: LANCE BROWN

STATE OF CALIFORNIA - DEPARTMENT OF TRANSPORTATION

Caltrans® MAINTENANCE

P:\proj1\02\3E890_plans\pse\23E890nc001.dgn

LAST REVISION | DATE PLOTTED => 27-DEC-2011 | TIME PLOTTED => 11:22

Dist	COUNTY	ROUTE	POST MILES TOTAL PROJECT	SHEET No.	TOTAL SHEETS
02	Sha	5	R28.8/R39.2	23	41

Scott C. Gregory 12-21-11
REGISTERED CIVIL ENGINEER DATE

12-21-11
PLANS APPROVAL DATE

REGISTERED PROFESSIONAL ENGINEER SCOTT C. GREGORY No. C75565 Exp. 06-30-12 CIVIL STATE OF CALIFORNIA

THE STATE OF CALIFORNIA OR ITS OFFICERS OR AGENTS SHALL NOT BE RESPONSIBLE FOR THE ACCURACY OR COMPLETENESS OF SCANNED COPIES OF THIS PLAN SHEET.

NOTES:

1. (N) - NOT A SEPARATE PAY ITEM, FOR INFORMATION ONLY.
2. EXACT LOCATIONS OF REPLACE ASPHALT CONCRETE SURFACING TO BE DETERMINED BY ENGINEER.
3. EXISTING UTILITY FACILITIES ARE NOT SHOWN ON THESE PLANS.

ROADWAY QUANTITIES

DIRECTION	POST MILE LIMITS	(N) LENGTH	(N) WIDTH	HOT MIX ASPHALT	TACK COAT	SHOULDER BACKING
	PM - PM	LF	LF	TON	TON	TON
NB	R28.82-R28.98	844.8	31-58	3603	15.2	125
	R28.98-R29.00	105.6	58-60			
	R29.00-R29.21	1108.8	60-62			
	R29.21-R29.58	1953.6	62-48			
	R29.58-R29.65	369.6	54-54			
	R29.65-R29.68	158.4	54-40			
	R29.68-R29.80	633.6	40-40			
	R29.80-R29.91	580.8	53-53			
	R29.91-R30.06	792.0	42-42			
	R30.06-R30.18	633.6	54-54			
	R30.18-R30.30	633.6	42-42			
	R30.30-R30.49	1003.2	57-58			
	R30.49-R30.51	105.6	40-40			
	R30.51-R30.55	211.2	49-41			
	TUNNEL GULCH VIADUCT (06-0131R)					
	JOHNS COVE VIADUCT (06-0132R)					
	ISLAND VIEW VIADUCT (06-0133R					
	R30.94-R31.09	792.0	41-58	2704	11.4	64
	R31.09-R31.18	475.2	58-58			
	R31.18-R31.30	633.6	50-54			
	R31.30-R31.50	1056.0	54-54			
	R31.50-R31.59	475.2	68-68			
	R31.59-R31.65	316.8	59-53			
	R31.65-R32.07	2217.6	53-53			
	R32.07-R32.16	475.2	60-53			
	O'BRIEN UC (06-0148R)					
	R32.18-R32.32	739.2	53-53	6480	27.3	792
	R32.32-R32.60	1478.4	53-42			
	R32.60-R34.11	7972.8	42-40			
	R34.11-R34.33	1161.6	40-40			
	R34.33-R34.34	52.8	40-64			
	R34.34-R34.50	844.8	64-48			
	R36.00-R36.02	105.6	57-57			
	R36.02-R36.06	211.2	66-66			
	R36.06-R36.07	52.8	66-58			
	R36.07-R36.29	1161.6	58-58			
	R36.29-R36.50	1108.8	58-55			
	R36.50-R36.58	422.4	55-51			
	R36-58-R36.66	422.4	51-50			
	R36.66-R36.83	897.6	50-46			
	R36.83-R37.08	1320.0	52-52			
	UPPER SALT Cr Rd UC (06-0159R)					
			SUBTOTAL 1	12,787	53.9	981

ROADWAY QUANTITIES (CONTINUED)

DIRECTION	POST MILE LIMITS	(N) LENGTH	(N) WIDTH	HOT MIX ASPHALT	TACK COAT	SHOULDER BACKING
	PM - PM	LF	LF	TON	TON	TON
NB	R37.10-R37.18	422.4	52-52	5232	22.0	223
	R37.18-R37.21	158.4	52-65			
	R37.21-R37.42	1108.8	65-65			
	R37.42-R37.66	1267.2	75-75			
	R37.66-R37.70	211.2	67-58			
	R37.70-R37.73	158.4	76-68			
	R37.73-R38.00	1425.6	68-64			
	R38.00-R38.06	316.8	64-64			
	R38.06-R38.12	316.8	64-65			
	R38.12-R38.26	739.2	65-62			
	R38.26-R38.66	2112.0	62-60			
	R38.66-R38.75	475.2	60-58			
	R38.75-R38.86	580.8	58-56			
	R38.86-R38.95	475.2	56-52			
	R38.95-R39.09	739.2	52-42			
	R39.09-R39.20	580.8	42-42			
	TURNTABLE BAY NB EXIT RAMP			196	0.9	21
	TURNTABLE BAY NB ENTRANCE RAMP			220	1.0	35
	O'BRIEN REST AREA NB EXIT RAMP			109	0.5	
	O'BRIEN REST AREA NB ENTRANCE RAMP			42	0.2	
	O'BRIEN/SHASTA CAVERNS NB EXIT RAMP			189	0.9	84
	O'BRIEN/SHASTA CAVERNS NB ENTRANCE RAMP			212	1.0	95
	GILMAN Rd NB EXIT RAMP			173	0.8	28
	UPPER SALT Cr Rd NB ENTRANCE RAMP			246	1.1	10
			SUBTOTAL 2	6619	28.4	496

REPLACE ASPHALT CONCRETE SURFACING

LOCATION	POST MILE	(N) Approx No OF DIGOUTS	(N) LENGTH (Avg)	(N) WIDTH	(N) DEPTH	REPLACE ASPHALT CONCRETE SURFACING
			LF	LF	LF	CY
NB-MAINLINE	R28.8-R39.2	182	50	4	0.33	445
SB-MAINLINE	R29.31-R39.2	172	50	4	0.33	420
PACKERS BAY SB EXIT RAMP	R30.73	1	SEE C-1	SEE C-1	0.33	40
O'BRIEN REST AREA	R31.03	9	50	12	0.50	100
O'BRIEN/SHASTA CAVERNS SB ENTRANCE RAMP	R31.93	3	50	4	0.33	7
O'BRIEN/SHASTA CAVERNS NB EXIT RAMP	R31.99	1	SEE C-1	SEE C-1	0.33	60
O'BRIEN/SHASTA CAVERNS NB ENTRANCE RAMP	R32.30	1	SEE C-1	SEE C-1	0.33	185
GILMAN Rd NB EXIT RAMP	R36.68	2	50	4	0.33	5
GILMAN Rd SB ENTRANCE RAMP	R36.70	3	50	4	0.33	7
				TOTAL		1269

SUMMARY OF QUANTITIES
Q-1

REVISED BY | DATE REVISED
SCOTT GREGORY | DENISE FUZERE
CALCULATED-DESIGNED BY | CHECKED BY
FUNCTIONAL SUPERVISOR
LANCE BROWN
STATE OF CALIFORNIA - DEPARTMENT OF TRANSPORTATION
Caltrans MAINTENANCE
P:\proj1\02\3E890_plans\pse\23E890pa001.dgn

LAST REVISION 12-20-11 | DATE PLOTTED => 27-DEC-2011 | TIME PLOTTED => 11:22

Dist	COUNTY	ROUTE	POST MILES TOTAL PROJECT	SHEET No.	TOTAL SHEETS
02	Sha	5	R28.8/R39.2	24	41

REGISTERED CIVIL ENGINEER DATE 12-21-11

12-21-11
PLANS APPROVAL DATE

REGISTERED PROFESSIONAL ENGINEER SCOTT C. GREGORY No. C75565 Exp. 06-30-12 CIVIL STATE OF CALIFORNIA

THE STATE OF CALIFORNIA OR ITS OFFICERS OR AGENTS SHALL NOT BE RESPONSIBLE FOR THE ACCURACY OR COMPLETENESS OF SCANNED COPIES OF THIS PLAN SHEET.

NOTES:

1. (N) - NOT A SEPARATE PAY ITEM, FOR INFORMATION ONLY.
2. EXISTING UTILITY FACILITIES ARE NOT SHOWN ON THESE PLANS.

ROADWAY QUANTITIES (CONTINUED)

DIRECTION	POST MILE LIMITS	(N) LENGTH	(N) WIDTH	HOT MIX ASPHALT	TACK COAT	SHOULDER BACKING
	PM - PM	LF	LF	TON	TON	TON
SB	R28.82-R28.90	427.7	31-37	938	3.9	42
	R28.90-R28.91	47.5	37-37			
	R28.91-R28.92	52.8	37-38			
	R28.92-R28.94	100.3	38-40			
	R28.94-R28.96	100.3	40-42			
	R28.96-R28.98	100.3	42-45			
	R28.98-R29.00	100.3	45-47			
	R29.00-R29.02	100.3	47-52			
	R29.02-R29.03	100.3	52-61			
	R29.03-R29.05	100.3	61-68			
	R29.05-R29.07	100.3	68-72			
	R29.07-R29.09	100.3	72-77			
	R29.09-R29.11	100.3	77-81			
	R29.11-R29.13	100.3	81-84			
	R29.13-R29.15	100.3	84-86			
	R29.15-R29.17	100.3	52-46			
	R29.17-R29.19	100.3	46-41			
	R29.19-R29.21	100.3	41-40			
	R29.21-R29.26	295.7	40-40			
	R29.26-R29.28	100.3	40-39			
	R29.28-R29.29	26.4	39-39			
	TURNTABLE BAY Rd UC (06-0130L)					
	R29.31-R29.61	1584.0	41-41	764	3.2	46
	R29.61-R29.72	580.8	59-59			
	SIDEHILL VIADUCT (06-0042L)					
	R29.79-R30.02	1214.4	50-50	809	3.4	101
	R30.02-R30.23	1108.8	40-40			
	POWER LINE Rd UC (06-0147L)					
	R30.25-R30.51	1372.8	40-40	4034	17.0	318
	R30.51-R30.53	105.6	40-58			
	R30.53-R30.55	105.6	58-65			
	R30.55-R30.60	264.0	65-65			
	R30.60-R30.67	369.6	65-61			
	R30.67-R30.86	1003.2	52-55			
	R30.86-R31.06	1056.0	64-64			
	R31.06-R31.12	316.8	55-55			
	R31.12-R31.16	211.2	65-65			
	R31.16-R31.19	158.4	65-62			
	R31.19-R31.27	422.4	53-53			
	R31.27-R31.34	369.6	63-63			
	R31.34-R31.67	1742.4	53-53			
	R31.67-R31.76	475.2	65-65			
	R31.76-R31.86	528.0	65-67			
	R31.86-R31.94	422.4	67-54			
	R31.94-R32.04	528.0	54-41			
	O'BRIEN UC (06-0148L)					
	R32.06-R32.13	369.6	41-40	3822	16.1	895
	R32.13-R34.02	9979.2	40-40			
	R34.02-R34.05	158.4	40-63			
	R34.05-R34.14	475.2	63-63			
	R34.14-R34.16	105.6	56-52			
	R34.16-R34.30	739.2	52-52			
			SUBTOTAL 3	10,367	43.6	1402

ROADWAY QUANTITIES (CONTINUED)

DIRECTION	POST MILE LIMITS	(N) LENGTH	(N) WIDTH	HOT MIX ASPHALT	TACK COAT	SHOULDER BACKING
	PM - PM	LF	LF	TON	TON	TON
SB	R34.30-R34.36	316.8	67-67	2811	11.8	36
	R36.00-R36.54	2851.2	67-67			
	R36.54-R36.78	1267.2	67-62			
	R36.78-R36.81	158.4	62-44			
	R36.81-R37.08	1425.6	44-44			
	UPPER SALT Cr Rd UC (06-0159L)					
	R37.10-R37.21	580.8	44-44	4801	20.2	125
	R37.21-R37.45	1267.2	56-56			
	R37.45-R37.67	1161.6	54-54			
	R37.67-R37.70	158.4	54-64			
	R37.70-R37.80	528.0	46-64			
	R37.80-R37.87	369.6	58-58			
	R37.87-R37.92	264.0	68-68			
	R37.92-R38.00	422.4	69-69			
	R38.00-R38.20	1056.0	58-58			
	R38.20-R38.24	211.2	50-50			
	R38.24-R38.27	158.4	55-55			
	R38.27-R38.56	1531.2	50-50			
	R38.56-R38.62	316.8	58-50			
	R38.62-R38.72	528.0	50-60			
	R38.72-R38.81	475.2	69-69			
	R38.81-R38.93	633.6	54-54			
	R38.93-R39.01	422.4	59-59			
	R39.01-R39.20	1003.2	62-62			
	TURNTABLE BAY SB ENTRANCE RAMP			164	0.8	
	TURNTABLE BAY SB EXIT RAMP			235	1.1	53
	PACKERS BAY SB ENTRANCE RAMP			144	0.7	27
	PACKERS BAY SB EXIT RAMP			162	0.7	38
	O'BRIEN/SHASTA CAVERNS SB ENTRANCE RAMP			256	1.2	28
	O'BRIEN/SHASTA CAVERNS SB EXIT RAMP			263	1.2	90
	GILMAN Rd SB ENTRANCE RAMP			251	1.1	26
	UPPER SALT Cr Rd SB EXIT RAMP			419	1.9	7
			SUBTOTAL 4	9506	40.7	430
			TOTAL	39,279	166.6	3309

ASPHALTIC EMULSION (FOG SEAL COAT)

DIRECTION	POST MILE LIMITS	(N) LENGTH	(N) WIDTH	ASPHALTIC EMULSION (FOG SEAL COAT)
	PM - PM	LF	LF	TON
SB	R29.15-R29.19	211.2	22-9	0.4
	R29.19-R29.22	158.4	14-14	
	R29.22-R29.28	316.8	14-14	
NB	R36.58-R36.62	211.2	15-15	
	R36.62-R36.66	211.2	15-13	
			TOTAL	0.4

SUMMARY OF QUANTITIES

Q-2

REVISED BY | DATE REVISED
SCOTT GREGORY | DENISE FUZERE
CALCULATED-DESIGNED BY | CHECKED BY
FUNCTIONAL SUPERVISOR
LANCE BROWN
STATE OF CALIFORNIA - DEPARTMENT OF TRANSPORTATION
Caltrans® MAINTENANCE
P:\proj\02\3E890_plans\pse\23E890pa002.dgn

LAST REVISION 12-20-11 | DATE PLOTTED => 27-DEC-2011 | TIME PLOTTED => 11:22

Dist	COUNTY	ROUTE	POST MILES TOTAL PROJECT	SHEET No.	TOTAL SHEETS
02	Sha	5	R28.8/R39.2	25	41

Scott C. Gregory 12-21-11
REGISTERED CIVIL ENGINEER DATE

12-21-11
PLANS APPROVAL DATE

REGISTERED PROFESSIONAL ENGINEER SCOTT C. GREGORY No. C75565 Exp. 06-30-12 CIVIL STATE OF CALIFORNIA

THE STATE OF CALIFORNIA OR ITS OFFICERS OR AGENTS SHALL NOT BE RESPONSIBLE FOR THE ACCURACY OR COMPLETENESS OF SCANNED COPIES OF THIS PLAN SHEET.

NOTES:

1. (N) - NOT A SEPARATE PAY ITEM, FOR INFORMATION ONLY.
2. EXISTING UTILITY FACILITIES ARE NOT SHOWN ON THESE PLANS.

TRANSVERSE GROOVES

DIRECTION	POST MILE LIMITS	LF
NB	R36.64-R36.78	1222
	TOTAL	1222

COLD PLANE ASPHALT CONCRETE PAVEMENT

DIRECTION	POST MILE	(N) LENGTH	(N) WIDTH	AREA	REMARKS
		LF	LF	SQYD	
NB	R28.82	40	62	276	MAINLINE CONFORM TAPER
	R28.91-R28.94	158	4	70	PORTABLE BARRIER TAPER
	R29.20	20	70	156	TURNTABLE BAY NB EXIT RAMP TAPER
	R29.32	246	45	1230	OC PAVEMENT OVERLAY TAPER (06-0130R)
	R29.40	20	100	222	TURNTABLE BAY NB ENTRANCE RAMP TAPER
	R30.55	80	41	364	BB CONFORM TAPER (06-0131R)
	R30.93	80	41	364	EB CONFORM TAPER (06-0133R)
	R31.03	20	34	76	O'BRIEN REST AREA NB EXIT RAMP TAPER
	R31.22	20	26	58	O'BRIEN REST AREA NB ENTRANCE RAMP TAPER
	R31.99	20	90	200	O'BRIEN/SHASTA CAVERNS NB EXIT RAMP
	R32.16	80	53	471	BB CONFORM TAPER (06-0148R)
	R32.18	80	53	471	EB CONFORM TAPER (06-0148R)
	R32.30	20	165	367	O'BRIEN/SHASTA CAVERNS NB ENTRANCE RAMP
	R36.44-R36.47	158	8	140	PORTABLE BARRIER TAPER
	R36.58	40	51	227	MAINLINE CONFORM TAPER
	R36.58-R36.62	211	35	821	GRIND AND REPLACE ON MAINLINE
	R36.62-R36.66	211	40	938	GRIND AND REPLACE ON MAINLINE
	R36.66	40	60	267	MAINLINE CONFORM TAPER
	R36.68	20	70	156	GILMAN Rd NB EXIT RAMP TAPER
	R36.83	246	49	1339	OC PAVEMENT OVERLAY TAPER (06-0160R)
	R37.08	80	52	462	BB CONFORM TAPER (06-0159R)
	R37.10	80	52	462	EB CONFORM TAPER (06-0159R)
	R37.42-R38.12	3696	4	1643	MAINLINE THRIE BEAM TAPER
	R37.50	20	70	156	UPPER SALT Cr Rd NB ENTRANCE RAMP TAPER
	R38.98-R39.02	211	8	188	PORTABLE BARRIER TAPER
	R39.05	246	52	1421	OC PAVEMENT OVERLAY TAPER (06-0158R)
	R39.20	40	42	187	MAINLINE CONFORM TAPER
	R28.82-R39.20			15	CONFORM GRIND AT 15 MEDIAN DRAINAGE INLETS
SB	R28.82-R29.29	Var	Var	13,531	* MAINLINE GRIND AND REPLACE
	R29.18	Var	Var	2418	**TURNTABLE BAY SB ENTRANCE RAMP GRIND AND REPLACE
	R29.18	20	70	156	TURNTABLE BAY SB ENTRANCE RAMP TAPER
	R29.31	80	41	364	EB CONFORM TAPER (06-0130L)
	R29.47	20	64	142	TURNTABLE BAY SB EXIT RAMP TAPER
	R29.72	80	59	524	BB CONFORM TAPER (06-0042L)
	R29.79	80	50	444	EB CONFORM TAPER (06-0042L)
	R30.23	80	40	356	BB CONFORM TAPER (06-0147L)
	R30.25	80	40	356	EB CONFORM TAPER (06-0147L)
	R30.51	20	32	71	PACKERS BAY SB ENTRANCE RAMP TAPER
	R30.73	20	23	51	PACKERS BAY SB EXIT RAMP TAPER
	R31.93	20	136	302	O'BRIEN/SHASTA CAVERNS SB ENTRANCE RAMP TAPER
	R32.04	80	41	364	BB CONFORM TAPER (06-0148L)
	R32.06	80	41	364	EB CONFORM TAPER (06-0148L)
	R32.22	20	95	211	O'BRIEN/SHASTA CAVERNS SB EXIT RAMP TAPER
	R36.44-R36.47	158	8	140	PORTABLE BARRIER TAPER
	R36.70	20	100	222	GILMAN RD SB ENTRANCE RAMP TAPER
	R36.83	246	53	1449	OC PAVEMENT OVERLAY TAPER (06-0160L)
	R37.08	80	44	391	BB CONFORM TAPER (06-0159L)
	R37.10	80	44	391	EB CONFORM TAPER (06-0159L)
	R37.42-R38.12	3696	4	1643	MAINLINE THRIE BEAM TAPER
	R37.67	20	70	156	UPPER SALT Cr Rd EXIT RAMP TAPER
	R38.98-R39.02	211	8	188	PORTABLE BARRIER TAPER
	R39.05	246	62	1695	OC PAVEMENT OVERLAY TAPER (06-0158L)
	R39.20	40	62	276	MAINLINE CONFORM TAPER
	R28.82-R39.20			11	CONFORM TAPER AT 11 MEDIAN DRAINAGE INLETS
			TOTAL	38,963	

* SEE SHEET Q-2 ROADWAY QUANTITIES FOR LENGTH AND WIDTH
** SEE SHEET C-1 CONSTRUCTION DETAILS FOR LENGTH AND WIDTH.

RESET ROADSIDE SIGNS

DIRECTION	POST MILE	No. OF POSTS AND SIZE	EA
NB	R29.17	1- 4" x 4"	1
NB	R31.15	1- 4" x 4"	1
NB	R31.17	1- 4" x 4"	1
SB	R29.96	2- 4" x 4"	1
		TOTAL	4

RUMBLE STRIP

DESCRIPTION	POST MILE LIMITS	Sta
NB MAINLINE RIGHT SIDE	R28.82-R29.06	12.7
	R29.17-R29.35	9.5
	R29.53-R30.55	53.9
	R30.94-R31.16	11.6
	R31.28-R31.85	30.1
	R31.96-R32.16	10.6
	R32.18-R32.26	4.2
	R32.38-R36.55	220.2
	R36.69-R37.08	20.6
	R37.10-R37.50	21.1
	R37.67-R39.20	80.8
NB MAINLINE LEFT SIDE	R28.82-R30.55	91.3
	R30.94-R32.16	64.4
	R32.18-R37.08	258.7
	R37.10-R39.20	110.9
SB MAINLINE RIGHT SIDE	R28.82-R29.02	10.6
	R29.15-R29.29	7.4
	R29.31-R29.48	9.0
	R29.60-R29.72	6.3
	R29.79-R30.23	23.2
	R30.25-R30.41	8.4
	R30.52-R30.73	11.1
	R30.85-R31.82	51.2
	R31.95-R32.04	4.8
	R32.06-R32.23	9.0
	R32.36-R36.69	228.6
	R36.76-R37.08	16.9
	R37.10-R37.73	33.3
	R37.88-R39.20	69.7
SB MAINLINE LEFT SIDE	R28.82-R29.29	24.8
	R29.31-R29.72	21.6
	R29.79-R30.23	23.2
	R30.25-R32.04	94.5
	R32.06-R37.08	265.1
	R37.10-R39.20	110.9
	TOTAL	2030.2

SUMMARY OF QUANTITIES
Q-3

REVISED BY | DATE REVISED
SCOTT GREGORY | DENISE FUZERE
CALCULATED-DESIGNED BY | CHECKED BY
FUNCTIONAL SUPERVISOR
LANCE BROWN

STATE OF CALIFORNIA - DEPARTMENT OF TRANSPORTATION
Caltrans® MAINTENANCE

P:\proj1\02\3E890_plans\pse\23E890pa003.dgn

LAST REVISION 08-26-11 | DATE PLOTTED => 27-DEC-2011 | TIME PLOTTED => 11:22

Dist	COUNTY	ROUTE	POST MILES TOTAL PROJECT	SHEET No.	TOTAL SHEETS
02	Sha	5	R28.8/R39.2	26	41

REGISTERED ELECTRICAL ENGINEER DATE 12-21-11

PLANS APPROVAL DATE 12-21-11

REGISTERED PROFESSIONAL ENGINEER J.M. HANNIGAN No. E13665 Exp. 6-30-13 ELECTRICAL STATE OF CALIFORNIA

THE STATE OF CALIFORNIA OR ITS OFFICERS OR AGENTS SHALL NOT BE RESPONSIBLE FOR THE ACCURACY OR COMPLETENESS OF SCANNED COPIES OF THIS PLAN SHEET.

NOTES:

1. FOR ACCURATE RIGHT OF WAY AND ACCESS DATA, CONTACT RIGHT OF WAY ENGINEERING AT THE DISTRICT OFFICE.
2. EXISTING UTILITY FACILITIES ARE NOT SHOWN ON THESE PLANS.

NOTES (THIS SHEET):

1 RC Exist PULL BOX. PROVIDE NEW TRAFFIC RATED PULL BOX. SEE DETAIL SHEET E-8.

2 LOCATE PULL BOX WITHIN 10' OF EXISTING SIGN, AS DIRECTED BY THE ENGINEER. PROVIDE 10' OF EXCESS LOOP CONDUCTORS COILED IN PULL BOX. SEAL ENDS OF CONDUCTORS USING "METHOD B".

LEGEND:

(pb) EXISTING OBJECT MARKER (TYPE PB)

(PB) OBJECT MARKER (TYPE PB) AND PULL BOX PAVING

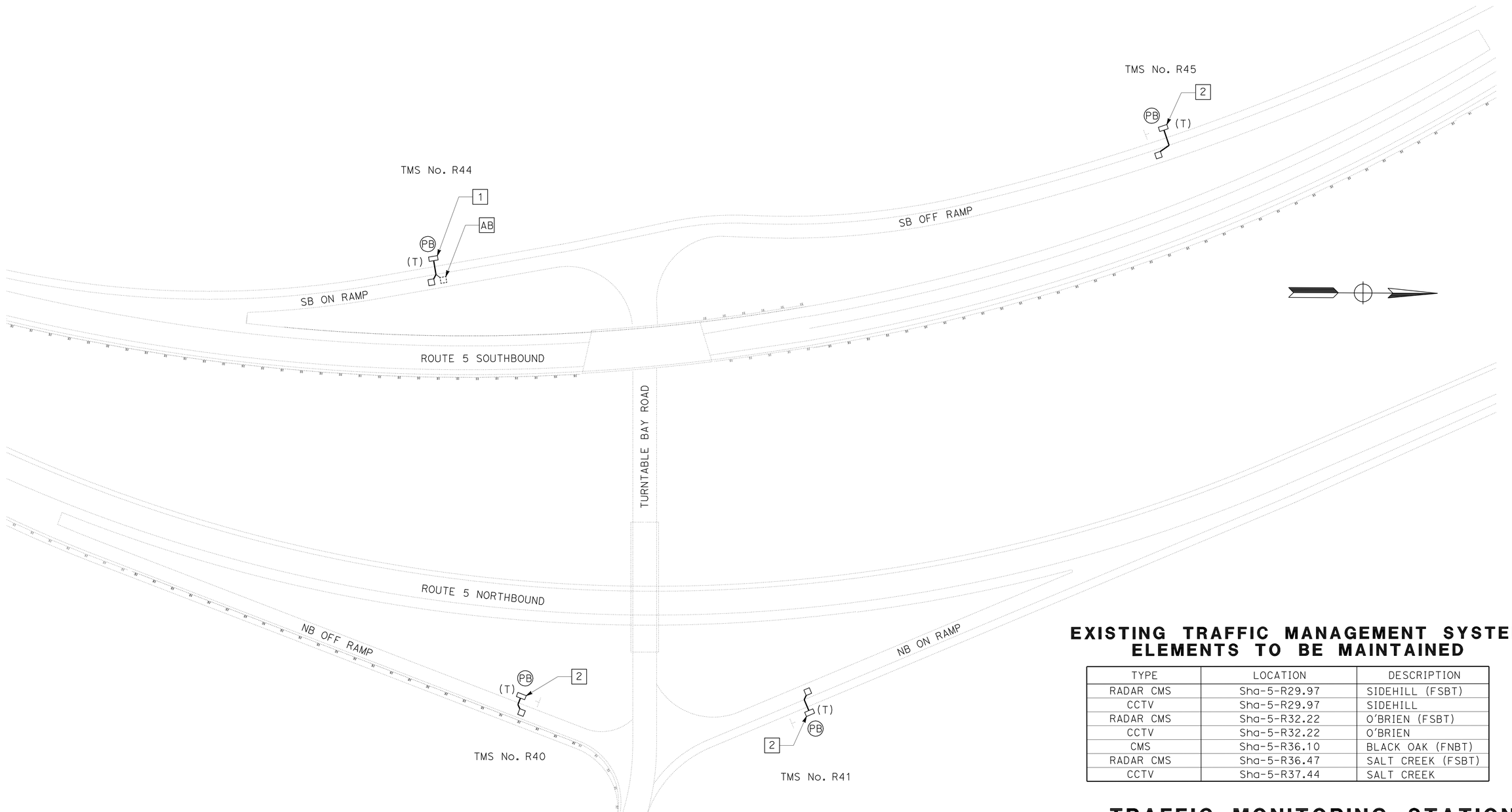

EXISTING TRAFFIC MANAGEMENT SYSTEM ELEMENTS TO BE MAINTAINED

TYPE	LOCATION	DESCRIPTION
RADAR CMS	Sha-5-R29.97	SIDEHILL (FSBT)
CCTV	Sha-5-R29.97	SIDEHILL
RADAR CMS	Sha-5-R32.22	O'BRIEN (FSBT)
CCTV	Sha-5-R32.22	O'BRIEN
CMS	Sha-5-R36.10	BLACK OAK (FNBT)
RADAR CMS	Sha-5-R36.47	SALT CREEK (FSBT)
CCTV	Sha-5-R37.44	SALT CREEK

TRAFFIC MONITORING STATION

SCALE: 1" = 50'

E-1

APPROVED FOR ELECTRICAL WORK ONLY

REVISED BY | DATE REVISED

J. M. HANNIGAN | KAREN CARMO

CALCULATED-DESIGNED BY | CHECKED BY

FUNCTIONAL SUPERVISOR: ROB STINGER

STATE OF CALIFORNIA - DEPARTMENT OF TRANSPORTATION

Caltrans® ELECTRICAL DESIGN

P:\proj1\02\3E890_plans\pse\23E890ua001.dgn

LAST REVISION 12-21-11 | DATE PLOTTED => 27-DEC-2011 | TIME PLOTTED => 11:22

Dist	COUNTY	ROUTE	POST MILES TOTAL PROJECT	SHEET No.	TOTAL SHEETS
02	Sha	5	R28.8/R39.2	27	41

REGISTERED ELECTRICAL ENGINEER 12-21-11 DATE

12-21-11
PLANS APPROVAL DATE

REGISTERED PROFESSIONAL ENGINEER J.M. HANNIGAN No. E13665 Exp. 6-30-13 ELECTRICAL STATE OF CALIFORNIA

THE STATE OF CALIFORNIA OR ITS OFFICERS OR AGENTS SHALL NOT BE RESPONSIBLE FOR THE ACCURACY OR COMPLETENESS OF SCANNED COPIES OF THIS PLAN SHEET.

NOTES:

1. FOR ACCURATE RIGHT OF WAY AND ACCESS DATA, CONTACT RIGHT OF WAY ENGINEERING AT THE DISTRICT OFFICE.
2. EXISTING UTILITY FACILITIES ARE NOT SHOWN ON THESE PLANS.

NOTES (THIS SHEET):

1 LOCATE PULL BOX WITHIN 10′ OF EXISTING SIGN, AS DIRECTED BY THE ENGINEER. PROVIDE 10′ OF EXCESS LOOP CONDUCTORS COILED IN PULL BOX. SEAL ENDS OF CONDUCTORS USING "METHOD B".

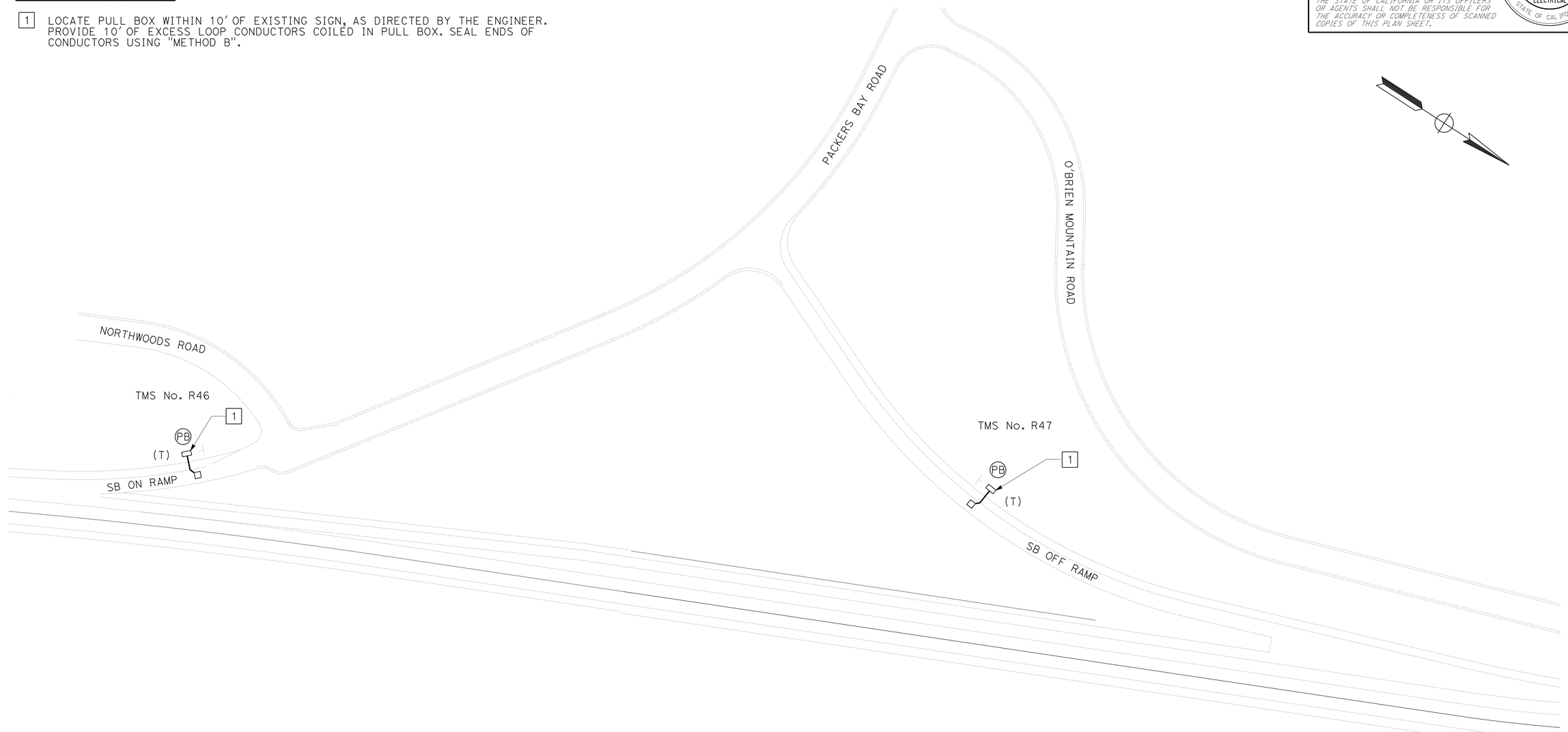

TRAFFIC MONITORING STATION

SCALE: 1" = 50′

E-2

APPROVED FOR ELECTRICAL WORK ONLY

REVISED BY | DATE REVISED

J. M. HANNIGAN

CALCULATED-DESIGNED BY KAREN CARMO
CHECKED BY

FUNCTIONAL SUPERVISOR ROB STINGER

STATE OF CALIFORNIA - DEPARTMENT OF TRANSPORTATION
Caltrans® ELECTRICAL DESIGN

P:\proj1\02\3E890_plans\pse\23E890ua002.dgn

LAST REVISION | DATE PLOTTED => 27-DEC-2011
12-21-11 | TIME PLOTTED => 11:22

Dist	COUNTY	ROUTE	POST MILES TOTAL PROJECT	SHEET No.	TOTAL SHEETS
02	Sha	5	R28.8/R39.2	28	41

REGISTERED ELECTRICAL ENGINEER 12-21-11 DATE

12-21-11
PLANS APPROVAL DATE

REGISTERED PROFESSIONAL ENGINEER J.M. HANNIGAN No. E13665 Exp. 6-30-13 ELECTRICAL STATE OF CALIFORNIA

THE STATE OF CALIFORNIA OR ITS OFFICERS OR AGENTS SHALL NOT BE RESPONSIBLE FOR THE ACCURACY OR COMPLETENESS OF SCANNED COPIES OF THIS PLAN SHEET.

NOTES:

1. FOR ACCURATE RIGHT OF WAY AND ACCESS DATA, CONTACT RIGHT OF WAY ENGINEERING AT THE DISTRICT OFFICE.
2. EXISTING UTILITY FACILITIES ARE NOT SHOWN ON THESE PLANS.

NOTES (THIS SHEET):

1 LOCATE PULL BOX BEHIND EXISTING GUARDRAIL, AS DIRECTED BY THE ENGINEER. PROVIDE 10′ OF EXCESS LOOP CONDUCTORS COILED IN PULL BOX. SEAL ENDS OF CONDUCTORS USING "METHOD B".

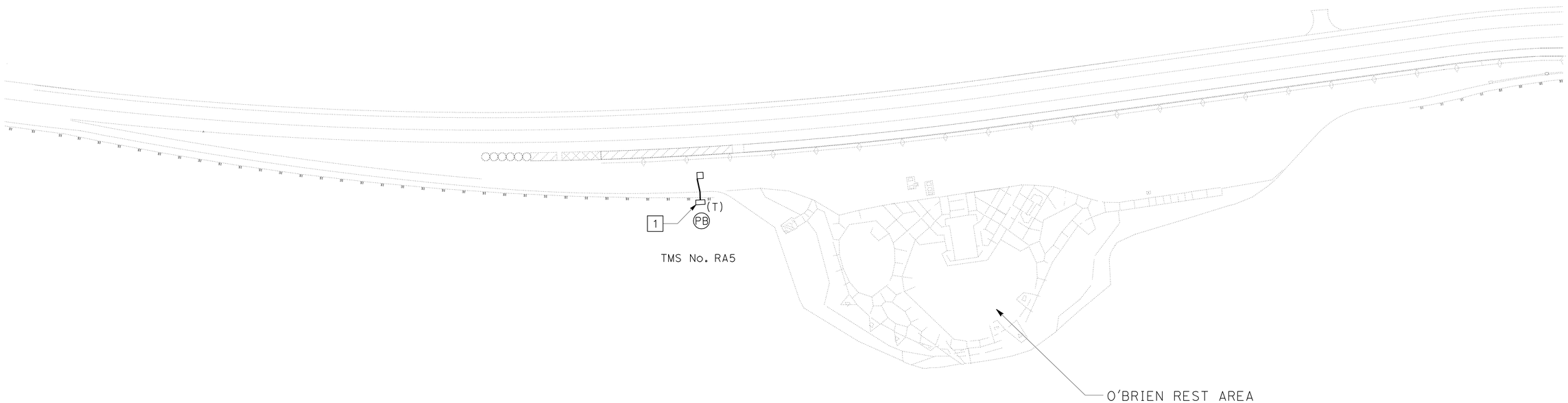

TRAFFIC MONITORING STATION

SCALE: 1" = 50′

E-3

APPROVED FOR ELECTRICAL WORK ONLY

REVISED BY | DATE REVISED

J. M. HANNIGAN

CALCULATED-DESIGNED BY | CHECKED BY

FUNCTIONAL SUPERVISOR

ROB STINGER | KAREN CARMO

STATE OF CALIFORNIA - DEPARTMENT OF TRANSPORTATION

Caltrans® ELECTRICAL DESIGN

P:\proj1\02\3E890_plans\pse\23E890ua003.dgn

LAST REVISION 12-21-11 | DATE PLOTTED => 27-DEC-2011 | TIME PLOTTED => 11:22

Dist	COUNTY	ROUTE	POST MILES TOTAL PROJECT	SHEET No.	TOTAL SHEETS
02	Sha	5	R28.8/R39.2	29	41

J. Hannigan 12-21-11
REGISTERED ELECTRICAL ENGINEER DATE

12-21-11
PLANS APPROVAL DATE

REGISTERED PROFESSIONAL ENGINEER J.M. HANNIGAN No. E13665 Exp. 6-30-13 ELECTRICAL STATE OF CALIFORNIA

THE STATE OF CALIFORNIA OR ITS OFFICERS OR AGENTS SHALL NOT BE RESPONSIBLE FOR THE ACCURACY OR COMPLETENESS OF SCANNED COPIES OF THIS PLAN SHEET.

NOTES:

1. FOR ACCURATE RIGHT OF WAY AND ACCESS DATA, CONTACT RIGHT OF WAY ENGINEERING AT THE DISTRICT OFFICE.
2. EXISTING UTILITY FACILITIES ARE NOT SHOWN ON THESE PLANS.

NOTES (THIS SHEET):

1 LOCATE PULL BOX WITHIN 10′ OF EXISTING SIGN, AS DIRECTED BY THE ENGINEER. PROVIDE 10′ OF EXCESS LOOP CONDUCTORS COILED IN PULL BOX. SEAL ENDS OF CONDUCTORS USING "METHOD B".

2 EXACT LOCATION TO BE DETERMINED BY THE ENGINEER. PROVIDE 10′ OF EXCESS LOOP CONDUCTORS COILED IN PULL BOX. SEAL ENDS OF CONDUCTORS USING "METHOD B".

TRAFFIC MONITORING STATION

SCALE: 1" = 50′

E-4

APPROVED FOR ELECTRICAL WORK ONLY

REVISED BY	DATE REVISED

CALCULATED-DESIGNED BY	J. M. HANNIGAN
CHECKED BY	KAREN CARMO
FUNCTIONAL SUPERVISOR	ROB STINGER

STATE OF CALIFORNIA - DEPARTMENT OF TRANSPORTATION
Caltrans® ELECTRICAL DESIGN

P:\proj1\02\3E890_plans\pse\23E890ua004.dgn

LAST REVISION 12-21-11 | DATE PLOTTED => 27-DEC-2011 | TIME PLOTTED => 11:22

Dist	COUNTY	ROUTE	POST MILES TOTAL PROJECT	SHEET No.	TOTAL SHEETS
02	Sha	5	R28.8/R39.2	30	41

REGISTERED ELECTRICAL ENGINEER 12-21-11 DATE

12-21-11
PLANS APPROVAL DATE

REGISTERED PROFESSIONAL ENGINEER J.M. HANNIGAN No. E13665 Exp. 6-30-13 ELECTRICAL STATE OF CALIFORNIA

THE STATE OF CALIFORNIA OR ITS OFFICERS OR AGENTS SHALL NOT BE RESPONSIBLE FOR THE ACCURACY OR COMPLETENESS OF SCANNED COPIES OF THIS PLAN SHEET.

NOTES:

1. FOR ACCURATE RIGHT OF WAY AND ACCESS DATA, CONTACT RIGHT OF WAY ENGINEERING AT THE DISTRICT OFFICE.
2. EXISTING UTILITY FACILITIES ARE NOT SHOWN ON THESE PLANS.

NOTES (THIS SHEET):

1 LOCATE PULL BOX WITHIN 10′ OF EXISTING SIGN, AS DIRECTED BY THE ENGINEER. PROVIDE 10′ OF EXCESS LOOP CONDUCTORS COILED IN PULL BOX. SEAL ENDS OF CONDUCTORS USING "METHOD B".

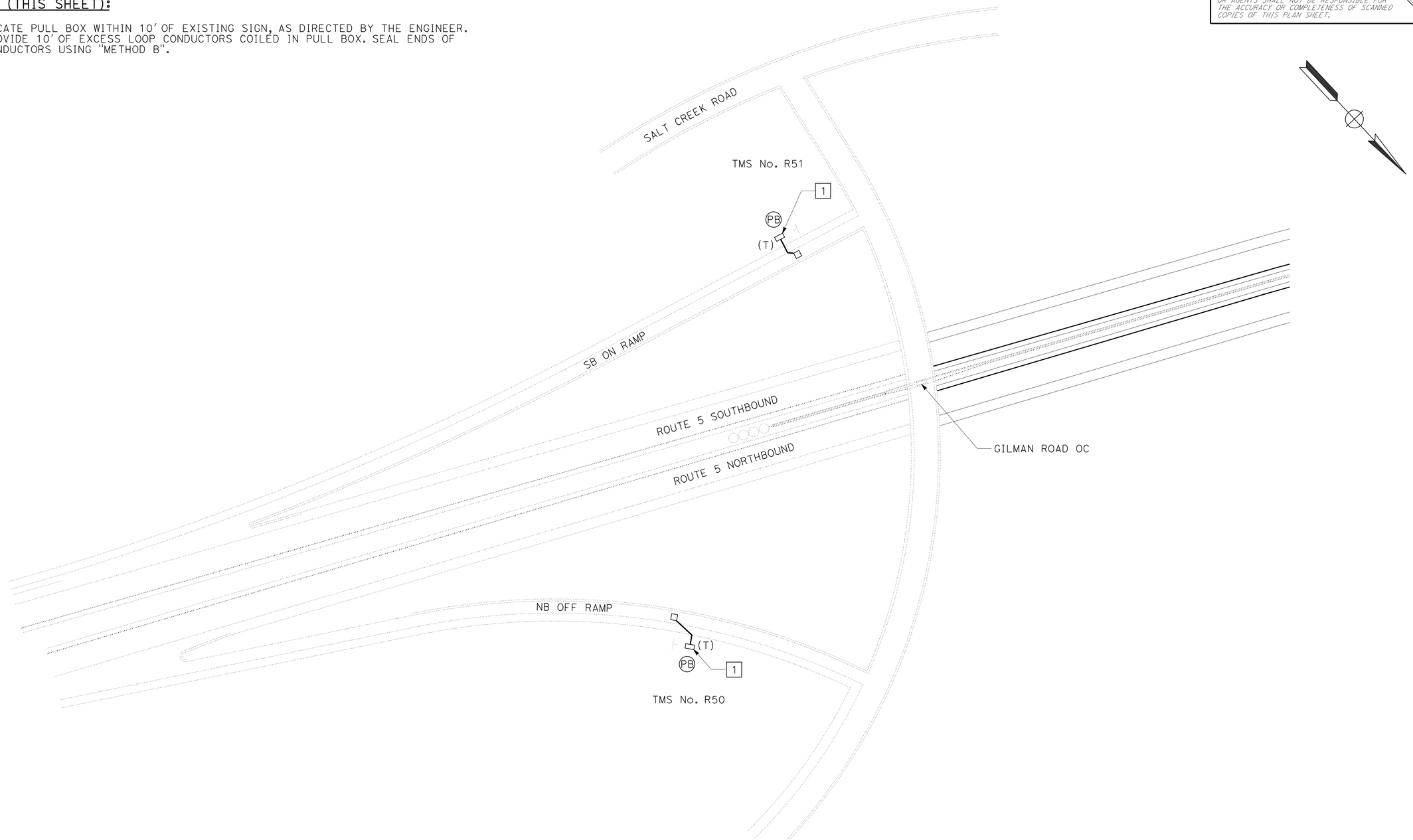

TRAFFIC MONITORING STATION

SCALE: 1" = 50′

E-5

APPROVED FOR ELECTRICAL WORK ONLY

REVISED BY	DATE REVISED

CALCULATED-DESIGNED BY	J. M. HANNIGAN
CHECKED BY	KAREN CARMO
FUNCTIONAL SUPERVISOR	ROB STINGER

STATE OF CALIFORNIA - DEPARTMENT OF TRANSPORTATION
Caltrans® ELECTRICAL DESIGN

P:\proj1\02\3E890_plans\pse\23E890ua005.dgn

LAST REVISION 12-21-11 | DATE PLOTTED => 27-DEC-2011 | TIME PLOTTED => 11:22

Dist	COUNTY	ROUTE	POST MILES TOTAL PROJECT	SHEET No.	TOTAL SHEETS
02	Sha	5	R28.8/R39.2	31	41

REGISTERED ELECTRICAL ENGINEER 12-21-11 DATE

12-21-11
PLANS APPROVAL DATE

REGISTERED PROFESSIONAL ENGINEER J.M. HANNIGAN No. E13665 Exp. 6-30-13 ELECTRICAL STATE OF CALIFORNIA

THE STATE OF CALIFORNIA OR ITS OFFICERS OR AGENTS SHALL NOT BE RESPONSIBLE FOR THE ACCURACY OR COMPLETENESS OF SCANNED COPIES OF THIS PLAN SHEET.

NOTES:

1. FOR ACCURATE RIGHT OF WAY AND ACCESS DATA, CONTACT RIGHT OF WAY ENGINEERING AT THE DISTRICT OFFICE.
2. EXISTING UTILITY FACILITIES ARE NOT SHOWN ON THESE PLANS.

NOTES (THIS SHEET):

1 RC Exist PULL BOX. PROVIDE NEW TRAFFIC RATED PULL BOX. SEE DETAIL SHEET E-8.

TRAFFIC MONITORING STATION

SCALE: 1" = 50'

E-6

APPROVED FOR ELECTRICAL WORK ONLY

STATE OF CALIFORNIA - DEPARTMENT OF TRANSPORTATION
Caltrans ELECTRICAL DESIGN

FUNCTIONAL SUPERVISOR: ROB STINGER
CALCULATED-DESIGNED BY: J. M. HANNIGAN
CHECKED BY: KAREN CARMO
REVISED BY
DATE REVISED

P:\proj1\02\3E890_plans\pse\23E890ua006.dgn

LAST REVISION 12-21-11
DATE PLOTTED => 27-DEC-2011
TIME PLOTTED => 11:22

BORDER LAST REVISED 7/2/2010
USERNAME => s115152
DGN FILE => 23E890ua006.dgn
RELATIVE BORDER SCALE IS IN INCHES 0 1 2 3
UNIT 0147
PROJECT NUMBER & PHASE 02000202061

Dist	COUNTY	ROUTE	POST MILES TOTAL PROJECT	SHEET No.	TOTAL SHEETS
02	Sha	5	R28.8/R39.2	32	41

REGISTERED ELECTRICAL ENGINEER 12-21-11 DATE

12-21-11
PLANS APPROVAL DATE

REGISTERED PROFESSIONAL ENGINEER J.M. HANNIGAN No. E13665 Exp. 6-30-13 ELECTRICAL STATE OF CALIFORNIA

THE STATE OF CALIFORNIA OR ITS OFFICERS OR AGENTS SHALL NOT BE RESPONSIBLE FOR THE ACCURACY OR COMPLETENESS OF SCANNED COPIES OF THIS PLAN SHEET.

NOTES:

1. FOR ACCURATE RIGHT OF WAY AND ACCESS DATA, CONTACT RIGHT OF WAY ENGINEERING AT THE DISTRICT OFFICE.
2. EXISTING UTILITY FACILITIES ARE NOT SHOWN ON THESE PLANS.

ABBREVIATIONS (THIS SHEET):

RWIS	ROADSIDE WEATHER INFORMATION SYSTEM
SLC	SENSOR LEAD-IN CABLE
RPU	REMOTE PROCESSING UNIT

LEGEND (THIS SHEET):

- Exist RWIS TOWER AND RPU
- Exist PAVEMENT SENSOR
- Exist PAVEMENT SENSOR WITH SUBSURFACE TEMPERATURE PROBE
- PROPOSED PAVEMENT SENSOR
- PROPOSED PAVEMENT SENSOR WITH SUBSURFACE TEMPERATURE PROBE

NOTES (THIS SHEET):

1 CENTER SENSORS IN LANE.

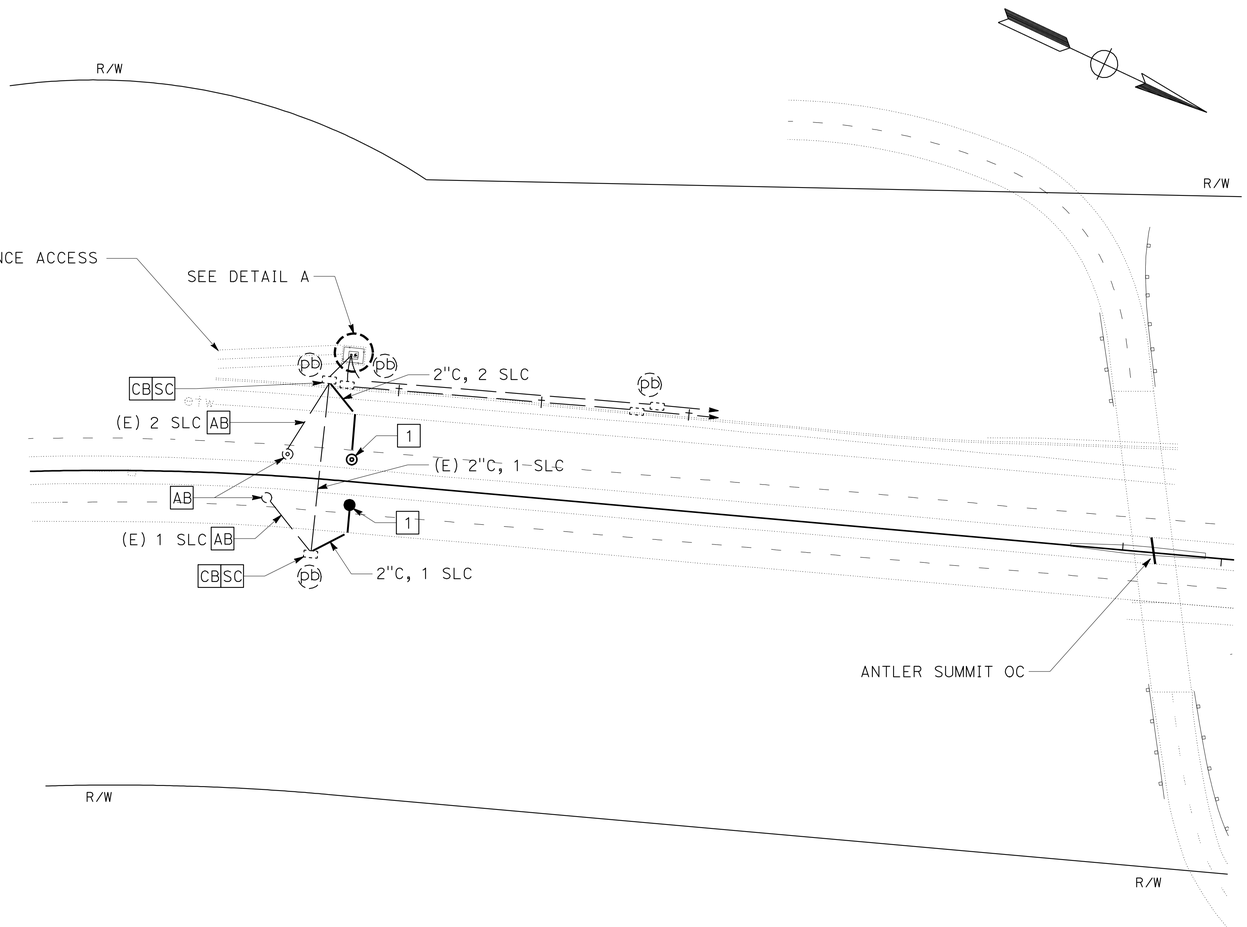

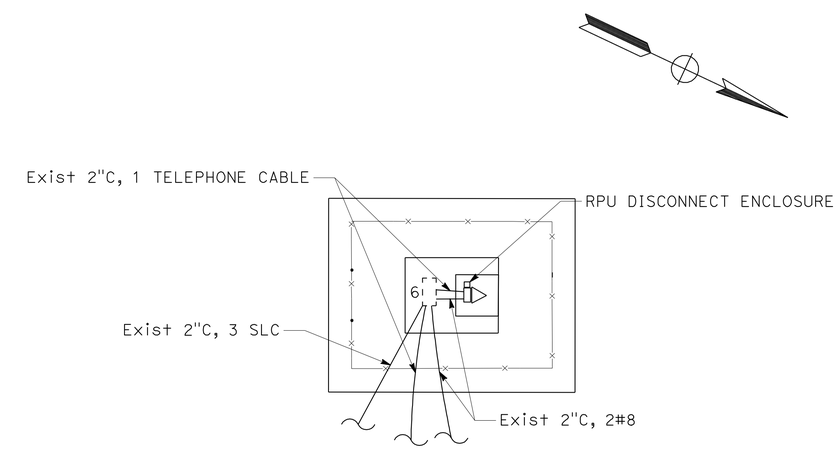

DETAIL A
NO SCALE

MODIFY ROADSIDE WEATHER INFORMATION SYSTEM

SCALE: 1" = 50'

E-7

APPROVED FOR ELECTRICAL WORK ONLY

REVISED BY	DATE REVISED

CALCULATED-DESIGNED BY: J. M. HANNIGAN
CHECKED BY: KEITH KOEPPEN
FUNCTIONAL SUPERVISOR: ROB STINGER

STATE OF CALIFORNIA - DEPARTMENT OF TRANSPORTATION
Caltrans® ELECTRICAL DESIGN

P:\proj1\02\3E890_plans\pse\23E890ua007.dgn

LAST REVISION 12-21-11 | DATE PLOTTED => 27-DEC-2011 | TIME PLOTTED => 11:22

Dist	COUNTY	ROUTE	POST MILES TOTAL PROJECT	SHEET No.	TOTAL SHEETS
02	Sha	5	R28.8/R39.2	33	41

REGISTERED ELECTRICAL ENGINEER 12-21-11 DATE

12-21-11
PLANS APPROVAL DATE

REGISTERED PROFESSIONAL ENGINEER J.M. HANNIGAN No. E13665 Exp. 6-30-13 ELECTRICAL STATE OF CALIFORNIA

THE STATE OF CALIFORNIA OR ITS OFFICERS OR AGENTS SHALL NOT BE RESPONSIBLE FOR THE ACCURACY OR COMPLETENESS OF SCANNED COPIES OF THIS PLAN SHEET.

NOTES (THIS SHEET):

1. Exist 1½" C, REPLACE Exist LOOP CONDUCTORS WITH NEW LOOP CONDUCTORS.
2. PROVIDE 10' OF EXCESS LOOP CONDUCTORS COILED IN PULL BOX. SEAL ENDS OF CONDUCTORS USING "METHOD B".

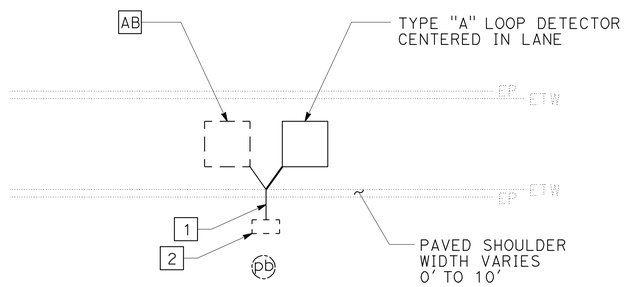

TYPICAL LOOP REPLACEMENT DETAIL SINGLE LOOP

NOTE: EXACT LOCATION OF LOOPS TO BE DETERMINED BY THE ENGINEER

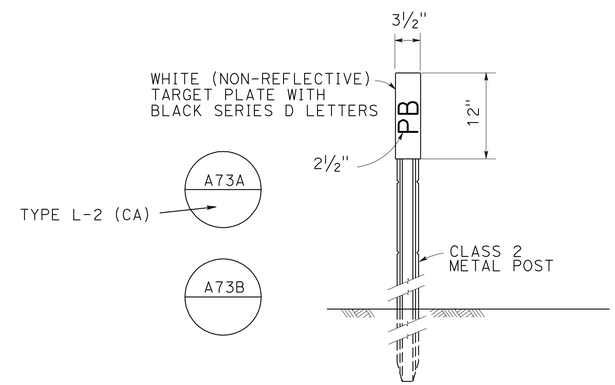

NOTE: MARKERS SHALL COMPLY WITH TYPE L-2 MODIFIED WITH A SNOW POLE BRACKET. PLACE MARKER 2" OUTSIDE PULL BOX PAVING ON SIDE AWAY FROM TRAFFIC. SEE PULL BOX PAVING DETAIL.

OBJECT MARKER (TYPE PB)

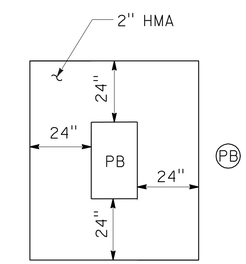

PULL BOX PAVING

APPROVED FOR ELECTRICAL WORK ONLY

DETAILS

NO SCALE

E-8

REVISED BY	DATE REVISED

J. M. HANNIGAN — CALCULATED-DESIGNED BY
KAREN CARMO — CHECKED BY
ROB STINGER — FUNCTIONAL SUPERVISOR

STATE OF CALIFORNIA - DEPARTMENT OF TRANSPORTATION
Caltrans® ELECTRICAL DESIGN

P:\proj1\02\3E890_plans\pse\23E890ua008.dgn

LAST REVISION 12-21-11 | DATE PLOTTED => 27-DEC-2011 | TIME PLOTTED => 11:22

DIST	COUNTY	ROUTE	POST MILES TOTAL PROJECT	SHEET NO.	TOTAL SHEETS
02	Sha	5	R28.8/R39.2	34	41

Randell D. Hiatt
REGISTERED CIVIL ENGINEER

June 6, 2008
PLANS APPROVAL DATE

REGISTERED PROFESSIONAL ENGINEER
Randell D. Hiatt
No. C50200
Exp. 6-30-09
CIVIL
STATE OF CALIFORNIA

The State of California or its officers or agents shall not be responsible for the accuracy or completeness of electronic copies of this plan sheet.

To accompany plans dated 12-21-11

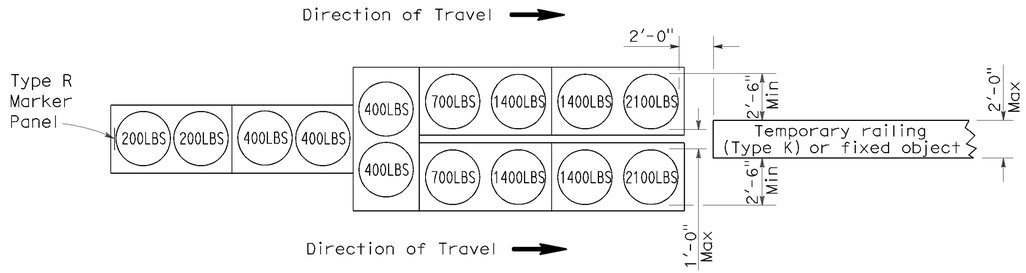

ARRAY 'TU14'

Approach speed 45 mph or more

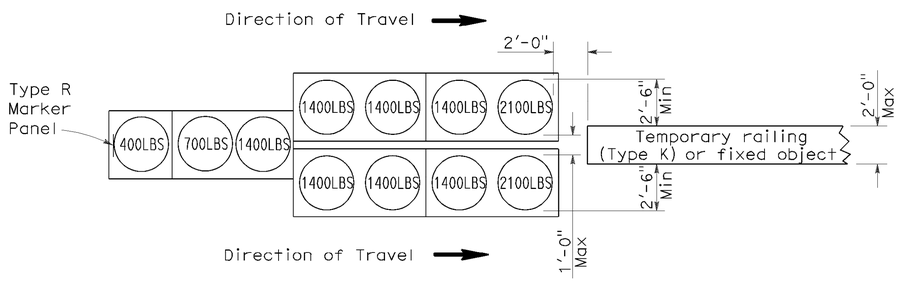

ARRAY 'TU11'

Approach speed less than 45 mph

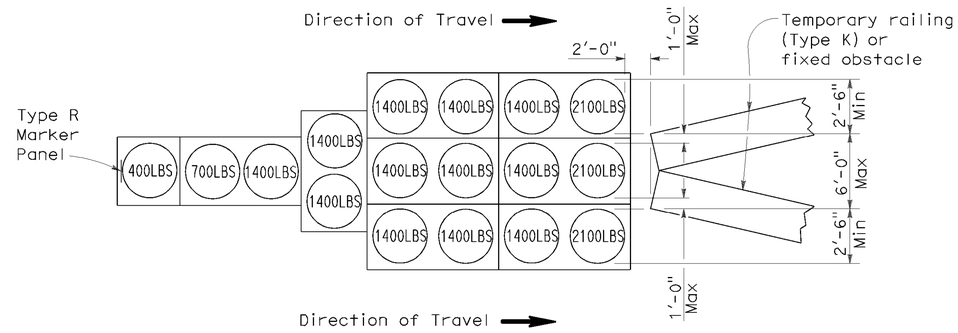

ARRAY 'TU17'

Approach speed less than 45 mph

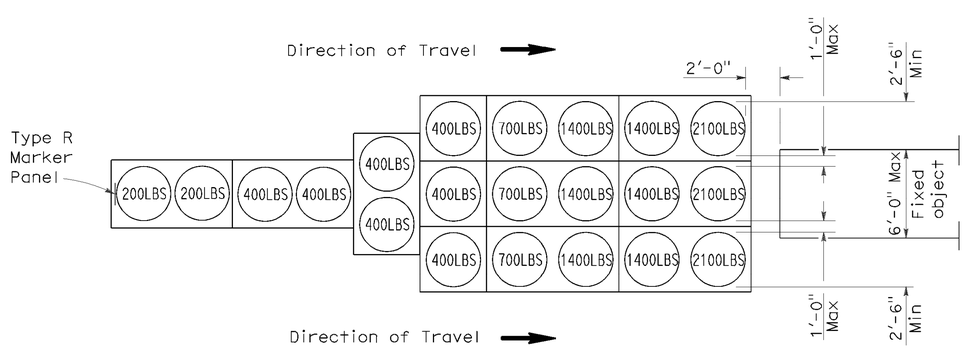

ARRAY 'TU21'

Approach speed 45 mph or more

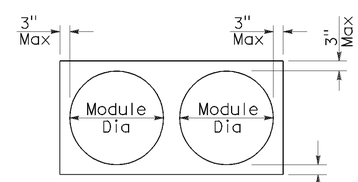

PLAN

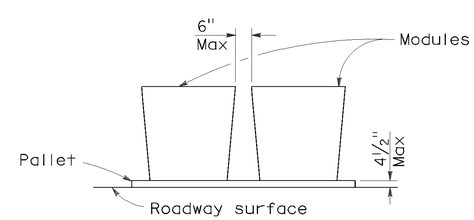

ELEVATION

CRASH CUSHION PALLET DETAIL

See Note 7

NOTES:

1. (XXX) Indicates sand filled module location and weight of sand in pounds for each module. Module spacing is based on the greater diameter of the module.
2. All sand weights are nominal.
3. Temporary crash cushion arrays shall not encroach on the traveled way.
4. Place the top of Type R marker panel 1" below the module lid.
5. Refer to Standard Plan A73B for marker details.
6. Approach speeds indicated conform to NCHRP 350 Report criteria.
7. Use of pallets is optional.

STATE OF CALIFORNIA
DEPARTMENT OF TRANSPORTATION

TEMPORARY CRASH CUSHION, SAND FILLED (UNIDIRECTIONAL)

NO SCALE

RSP T1A DATED JUNE 6, 2008 SUPERSEDES STANDARD PLAN T1A
DATED MAY 1, 2006 - PAGE 211 OF THE STANDARD PLANS BOOK DATED MAY 2006.

REVISED STANDARD PLAN RSP T1A

2006 REVISED STANDARD PLAN RSP T1A

P:\proj1\02\3E890_plans\pse\23e890va001.dgn

5-15-08

DIST	COUNTY	ROUTE	POST MILES TOTAL PROJECT	SHEET NO.	TOTAL SHEETS
02	Sha	5	R28.8/R39.2	35	41

Randell D. Hiatt
REGISTERED CIVIL ENGINEER

June 6, 2008
PLANS APPROVAL DATE

REGISTERED PROFESSIONAL ENGINEER
Randell D. Hiatt
No. C50200
Exp. 6-30-09
CIVIL
STATE OF CALIFORNIA

The State of California or its officers or agents shall not be responsible for the accuracy or completeness of electronic copies of this plan sheet.

To accompany plans dated 12-21-11

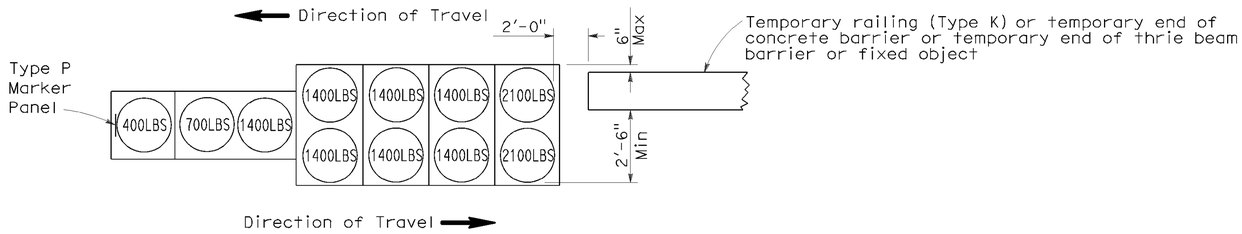

ARRAY 'TB11'

Approach speed less than 45 mph

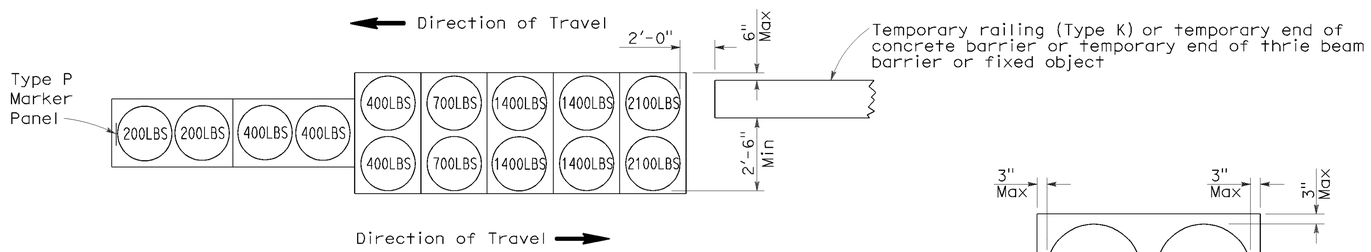

ARRAY 'TB14'

Approach speed 45 mph or more

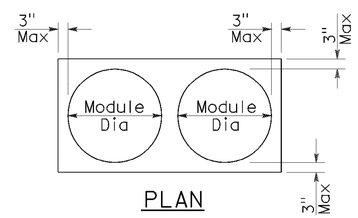

PLAN

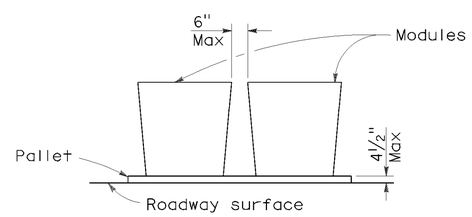

ELEVATION

CRASH CUSHION PALLET DETAIL

See Note 7

NOTES:

1. (XXX) Indicates sand filled module location and weight of sand in pounds for each module. Module spacing is based on the greater diameter of the module.
2. All sand weights are nominal.
3. Temporary crash cushion arrays shall not encroach on the traveled way.
4. Place the Type P marker panel so that the bottom of the panel rests upon the pallet.
5. Refer to Standard Plan A73B for marker details.
6. Approach speeds indicated conform to NCHRP 350 Report criteria.
7. Use of pallets is optional.

STATE OF CALIFORNIA
DEPARTMENT OF TRANSPORTATION

TEMPORARY CRASH CUSHION, SAND FILLED (BIDIRECTIONAL)

NO SCALE

RSP T1B DATED JUNE 6, 2008 SUPERSEDES STANDARD PLAN T1B
DATED MAY 1, 2006 - PAGE 212 OF THE STANDARD PLANS BOOK DATED MAY 2006.

REVISED STANDARD PLAN RSP T1B

2006 REVISED STANDARD PLAN RSP T1B

P:\proj1\02\3E890_plans\pse\23e890va002.dgn

5-15-08

DIST	COUNTY	ROUTE	POST MILES TOTAL PROJECT	SHEET NO.	TOTAL SHEETS
02	Sha	5	R28.8/R39.2	36	41

Randell D. Hiatt
REGISTERED CIVIL ENGINEER

June 6, 2008
PLANS APPROVAL DATE

REGISTERED PROFESSIONAL ENGINEER
Randell D. Hiatt
No. C50200
Exp. 6-30-09
CIVIL
STATE OF CALIFORNIA

The State of California or its officers or agents shall not be responsible for the accuracy or completeness of electronic copies of this plan sheet.

To accompany plans dated 12-21-11

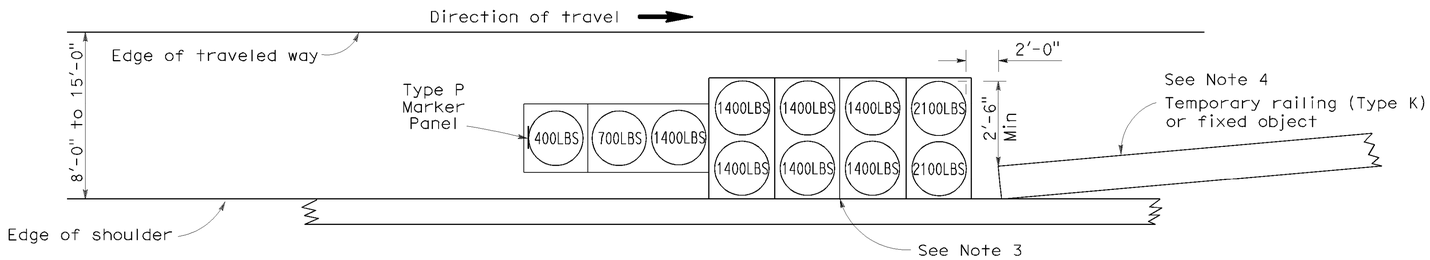

ARRAY 'TS11'

Approach speed less than 45 mph
See Note 9

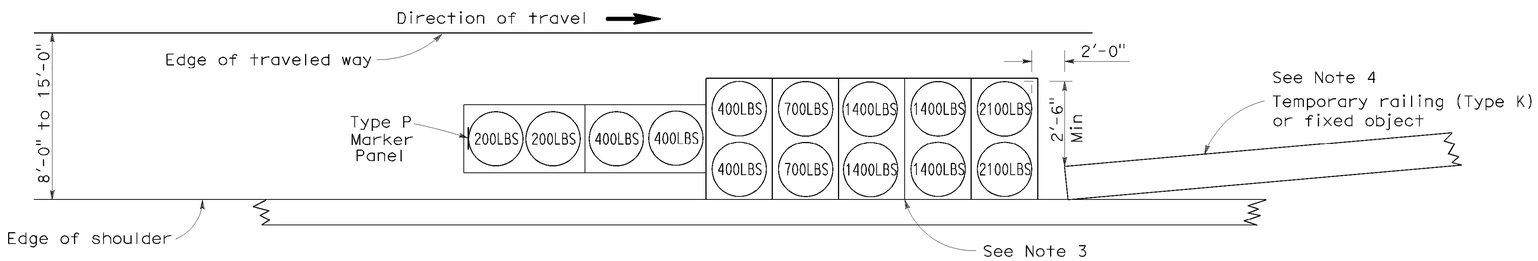

ARRAY 'TS14'

Approach speed 45 mph or more
See Note 9

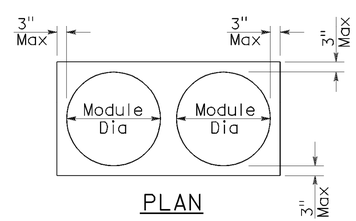

PLAN

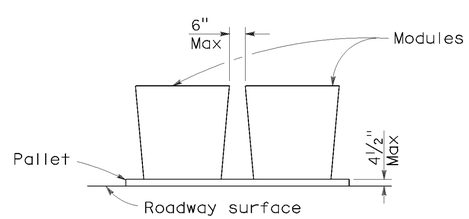

ELEVATION

CRASH CUSHION PALLET DETAIL

See Note 11

NOTES:

1. (XXX) Indicates sand filled module location and weight of sand in pounds for each module. Module spacing is based on the greater diameter of the module.
2. All sand weights are nominal.
3. The temporary crash cushion arrays shown on this plan shall be used only in locations where there will be traffic on one side of the temporary crash cushion array.
4. If the fixed object or approach end of the temporary railing is less than 15'-0" from the edge of traveled way, a temporary crash cushion is required in a construction or work zone.
5. Temporary crash cushion arrays shall not encroach on the traveled way.
6. Arrays for median shoulders shall conform to details shown on this plan for outside shoulders.
7. Place the Type P marker panel so that the bottom of the panel rests upon the pallet and faces traffic.
8. Refer to Standard Plan A73B for marker details.
9. For shoulder widths less than 8'-0", appropriate approved crash cushion protection, other than sand filled modules, shall be provided at fixed objects and at approach ends of temporary railing. The specific type of crash cushion shall be as shown on the project plans or as specified in the Special Provisions, or if not shown on the project plans or specified in the Special Provisions, shall be as approved by the Engineer.
10. Approach speeds indicated conform to NCHRP 350 Report criteria.
11. Use of pallets is optional.

STATE OF CALIFORNIA
DEPARTMENT OF TRANSPORTATION

TEMPORARY CRASH CUSHION, SAND FILLED (SHOULDER INSTALLATIONS)

NO SCALE

RSP T2 DATED JUNE 6, 2008 SUPERSEDES STANDARD PLAN T2
DATED MAY 1, 2006 - PAGE 213 OF THE STANDARD PLANS BOOK DATED MAY 2006.

REVISED STANDARD PLAN RSP T2

2006 REVISED STANDARD PLAN RSP T2

P:\proj1\02\3E890_plans\pse\23e890va003.dgn

5-15-08

Dist	COUNTY	ROUTE	POST MILES TOTAL PROJECT	SHEET No.	TOTAL SHEETS
02	Sha	5	R28.8/R39.2	37	41

Randell D. Hiatt
REGISTERED CIVIL ENGINEER

May 20, 2011
PLANS APPROVAL DATE

REGISTERED PROFESSIONAL ENGINEER
Randell D. Hiatt
No. C50200
Exp. 6-30-11
CIVIL
STATE OF CALIFORNIA

The State of California or its officers or agents shall not be responsible for the accuracy or completeness of electronic copies of this plan sheet.

To accompany plans dated 12-21-11

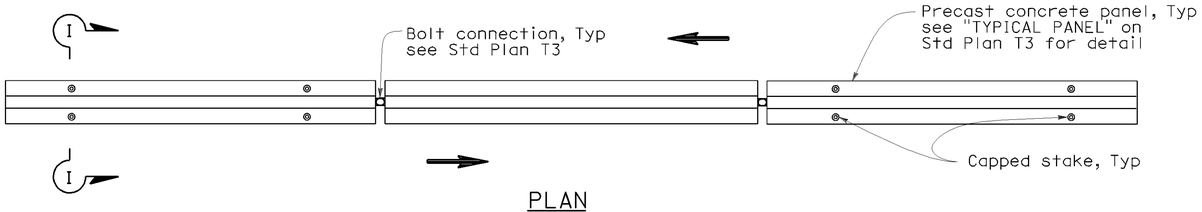

PLAN

RAILING STAKING CONFIGURATION FOR TWO-WAY TRAFFIC

See Note 1

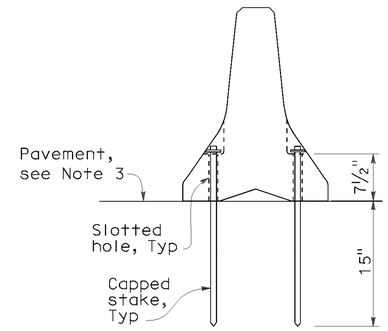

SECTION I-I

NOTES:

1. Where Type K Temporary Railing is placed as a temporary or long term barrier in two-way traffic on highways with less than 24" from the edge of traveled way, use four capped stakes per every other panel with end panels staked.
2. Where Type K Temporary Railing is placed 3" to 24" from the edge of an excavation on highways, use two capped stakes per panel along the traffic side.
3. Staked Type K Temporary Railing must be supported by at least 4" thick concrete, hot mix asphalt or existing asphalt concrete pavement.
4. The minimum yield strength for the washer must be 60,000 psi.
5. Direction of adjacent traffic indicated by ⟶.

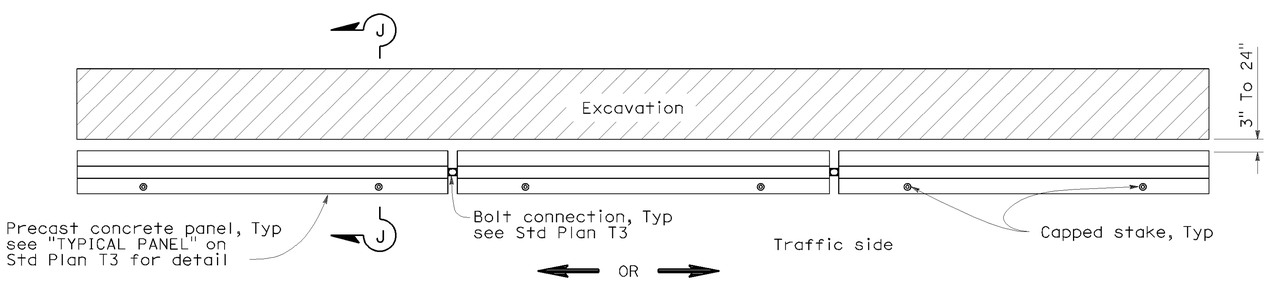

PLAN

RAILING STAKING CONFIGURATION ADJACENT TO AN EXCAVATION

See Note 2

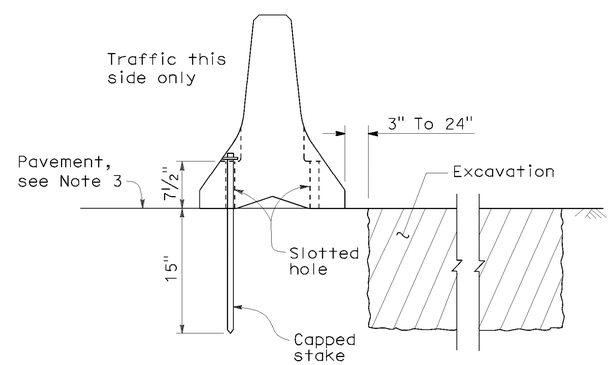

SECTION J-J

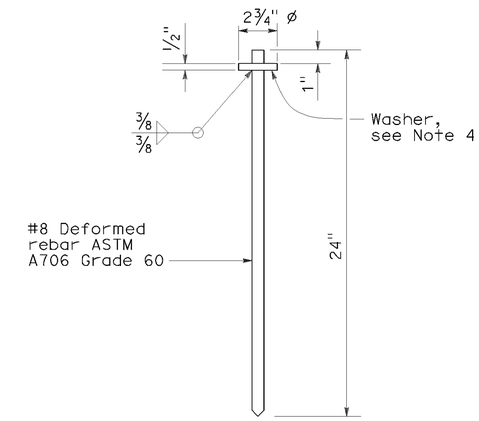

CAPPED STAKE DETAIL

STATE OF CALIFORNIA
DEPARTMENT OF TRANSPORTATION

TEMPORARY RAILING (TYPE K)

NO SCALE

NSP T3A DATED MAY 20, 2011 SUPPLEMENTS
THE STANDARD PLANS BOOK DATED MAY 2006.

NEW STANDARD PLAN NSP T3A

2006 NEW STANDARD PLAN NSP T3A

P:\proj1\02\3E890_plans\pse\23e890va004.dgn

8-31-10

DIST	COUNTY	ROUTE	POST MILES TOTAL PROJECT	SHEET NO.	TOTAL SHEETS
02	Sha	5	R28.8/R39.2	38	41

REGISTERED ELECTRICAL ENGINEER

October 5, 2007
PLANS APPROVAL DATE

REGISTERED PROFESSIONAL ENGINEER Jeffery G. McRae No. E14512 Exp. 6-30-08 ELECTRICAL STATE OF CALIFORNIA

The State of California or its officers or agents shall not be responsible for the accuracy or completeness of electronic copies of this plan sheet.

To accompany plans dated 12-21-11

ELECTROLIERS

STANDARD TYPES
15, 15D
15 STRUCTURE
21, 21D STRUCTURE
30
31
32
35
36-20A

High mast light pole

Double Arm lighting standard

Existing electrolier

Electrolier foundation (Future installation)

NOTES:

1. Luminaires shall be 310 W HPS when installed on Type 21, 21D, 30, 31, 32, 35 and 36-20A Standards, unless otherwise specified. Luminaires shall be 200 W HPS when installed on other type standards or poles, unless otherwise specified.
2. Luminaires shall be the cutoff type, ANSI Type Ⅲ medium cutoff lighting distribution, unless otherwise specified.
3. Variations noted adjacent to symbol on project plans.

Electrolier (see project notes or project plans)

Luminaire on wood pole

STANDARD NOTES:

- AB — Abandon. If applied to conduit, remove conductors.
- BC — Install pull box in existing conduit run.
- BP — Pedestrian barricade, type as indicated on plan.
- CB — Install conduit into existing pull box.
- CC — Connect new and existing conduit. Remove existing conductors and install conductors as indicated.
- CF — Conduit to remain for future use. Remove conductors. Install pull wire or rope.
- DH — Detector handhole.
- FA — Foundation to be abandoned.
- IS — Install sign on signal mast arm.
- NS — No slip base on standard.
- PEC — Photoelectric control.
- PEU — Photoelectric unit.
- RC — Equipment or material to be removed and become the property of the Contractor.
- RE — Remove electrolier, fuses and ballast. Tape ends of conductors.
- RL — Relocate equipment.
- RR — Remove and reuse equipment.
- RS — Remove and salvage equipment.
- SC — Splice new to existing conductors.
- SD — Service disconnect.
- SF — Standard to remain for future use. Remove luminaire, pole conductors, fuses and ballast.
- TSP — Telephone service point.

ABBREVIATIONS AND EQUIPMENT DESIGNATIONS

PROPOSED	EXISTING	
BBS	bbs	Battery backup system
BC	bc	Bolt circle
C	C	Conduit
CCTV	cctv	Closed circuit television
CKT	ckt	Circuit
CMS	cms	Changeable message sign
DLC	dlc	Loop detector lead-in cable
EMS	ems	Extinguishable message sign
EVC	evc	Emergency vehicle cable
EVD	evd	Emergency vehicle detector
FB	fb	Flashing beacon
FBCA	fbca	Flashing beacon control assembly
FBS	fbs	Flashing beacon with slip base
FO	fo	Fiber optic
G	G	Ground (Equipment Grounding Conductor)
GFCI	GFCI	Ground fault circuit interrupt
HAR	har	Highway advisory radio
HEX	hex	Hexagonal
HPS	hps	High pressure sodium
IISNS	iisns	Internally illuminated street name sign
ISL	isl	Induction sign lighting
LED	led	Light emitting diode
LMA	lma	Luminaire mast arm
LPS	lps	Low pressure sodium
LTG	ltg	Lighting
LUM	lum	Luminaire
MAT	mat	Mast arm mounting vehicle signal faces, top attachment
MAS	mas	Mast arm mounting vehicle signal faces, side attachment
MAS-4A	mas-4A	Mast arm mounting vehicle signal faces, side attachment - 4 signal section
MAS-4B	mas-4B	
MAS-4C	mas-4C	
MAS-5A	mas-5A	Mast arm mounting vehicle signal faces, side attachment - 5 signal section
MAS-5B	mas-5B	
MC	mc	Mercury contactor
M/M	m/m	Multiple to multiple transformer
MT	mt	Conduit with pull wire or rope only
MTG	mtg	Mounting
	mv	Mercury vapor lighting fixture
N	N	Neutral (Grounded Conductor)
NC	NC	Normally closed
NO	NO	Normally open
PB	pb	Pull box
PEC	pec	Photoelectric control (Type Ⅰ, Ⅱ, Ⅲ, Ⅳ or Ⅴ as shown)
PED	ped	Pedestrian
PEU	peu	Photoelectric unit
PPB	ppb	Pedestrian push button
RL		Relocated equipment
RM	rm	Ramp metering
SB	sb	Slip base
SIC	sic	Signal interconnect cable
SIG	sig	Signal
SMA	sma	Signal mast arm
SNS	sns	Street name sign
SP	sp	Service point
TDC	tdc	Telephone demarcation cabinet
TMS	tms	Traffic monitoring station
TOS	tos	Traffic Operations System
VEH	veh	Vehicle
XFMR	xfmr	Transformer
COMM	comm	Communication
RWIS	rwis	Roadway weather information system

SOFFIT AND WALL MOUNTED LUMINAIRES

Pendant, 70 W HPS unless otherwise specified.

Flush, 70 W HPS unless otherwise specified.

Wall surface, 70 W HPS unless otherwise specified.

Existing soffit or wall luminaire to remain unmodified.

Existing soffit or wall luminaire to be modified as specified.

NOTE:

Arrow indicates "street side" of luminaire.

STATE OF CALIFORNIA
DEPARTMENT OF TRANSPORTATION

ELECTRICAL SYSTEMS (SYMBOLS AND ABBREVIATIONS)

NO SCALE

RSP ES-1A DATED OCTOBER 5, 2007 SUPERSEDES STANDARD PLAN ES-1A DATED MAY 1, 2006 - PAGE 400 OF THE STANDARD PLANS BOOK DATED MAY 2006.

REVISED STANDARD PLAN RSP ES-1A

2006 REVISED STANDARD PLAN RSP ES-1A

P:\proj1\02\3E890_plans\pse\23e890va005.dgn

7-10-07

DIST	COUNTY	ROUTE	POST MILES TOTAL PROJECT	SHEET NO.	TOTAL SHEETS
02	Sha	5	R28.8/R39.2	39	41

REGISTERED ELECTRICAL ENGINEER

October 5, 2007
PLANS APPROVAL DATE

REGISTERED PROFESSIONAL ENGINEER Jeffery G. McRae No. E14512 Exp. 6-30-08 ELECTRICAL STATE OF CALIFORNIA

The State of California or its officers or agents shall not be responsible for the accuracy or completeness of electronic copies of this plan sheet.

To accompany plans dated 12-21-11

CONDUIT

PROPOSED	EXISTING	
		Lighting Conduit, unless otherwise indicated or noted
		Traffic signal conduit
C	c	Communication conduit
T	t	Telephone conduit
F	f	Fire alarm conduit
FO	fo	Fiber optic conduit
		Conduit termination (RSP ES-9A C)
R	r	Conduit riser in/on structure or service pole

SERVICE EQUIPMENT

PROPOSED	EXISTING	
OH	oh	Overhead lines
U	U	Wood pole "U" indicates utility owned
		Pole guy with anchor
		Utility transformer - ground mounted
III		Service equipment enclosure type
		Service equipment enclosure door indicates front of enclosure
T	t	Telephone demarcation cabinet

POLE-MOUNTED SERVICE DESIGNATION

Type of installation

TYPE H SERVICE - 28'-10" ← Pole height above grade

ILLUMINATED OVERHEAD SIGN

PROPOSED	EXISTING	
		Overhead sign - Single post
		Overhead sign - Two post
		Overhead sign - Mounted on structure
		Overhead sign with electrolier

SIGNAL EQUIPMENT

PROPOSED	EXISTING	
		Pedestrian signal face
		Pedestrian push button post
		Pedestrian barricade
		Vehicle signal face (with backplate, 3-Section: red, yellow and green)
		Vehicle signal face with angle visors
PV	PV	Modifications of basic symbols: "L" indicates all non-arrow sections louvered "LG" indicates louvered green section only "PV" indicates 12" programmed visibility sections "8" indicates all 8" sections (only when specified)
		Type 15TS and Vehicle signal face
		Vehicle signal face with red, yellow and green left arrow sections
		Vehicle signal face with red and yellow sections and up green arrow
		Vehicle signal face (5 Section) with red, yellow and green sections and yellow and green right arrows
		Type 1 Standard and attached vehicle signal faces
		Standard with signal mast arm only and attached vehicle signal faces and internally illuminated street name sign
		Type 33 Standard, Left-turn vehicle signal face and sign
		Standard with luminaire and signal mast arms and attached vehicle signal faces
		Cantilever flashing beacon Type 9 Frame, with a sign unless otherwise specified or indicated
		Type 15-FBS Standard with two vehicle signal face sections with lens, backplate and visor with a sign
R	Y	Flashing beacon. One vehicle signal face section with lens, backplate and visor. "R" indicates red indication, "Y" indicates yellow indication
		Controller assembly. Door indicates front of cabinet

SIGNAL EQUIPMENT Cont

PROPOSED	EXISTING	
		Guard post
		Type 1 Standard with "Meter On" sign
		Emergency Vehicle detector

NOTES:

1. All signal sections shall be 12" unless shown otherwise.
2. Signal heads shall be provided with backplates unless shown otherwise.
3. Signal indication shall be LED.

STATE OF CALIFORNIA
DEPARTMENT OF TRANSPORTATION

ELECTRICAL SYSTEMS (SYMBOLS AND ABBREVIATIONS)

NO SCALE

RSP ES-1B DATED OCTOBER 5, 2007 SUPERCEDES STANDARD PLAN ES-1B DATED MAY 1, 2006 - PAGE 401 OF THE STANDARD PLANS BOOK DATED MAY 2006.

REVISED STANDARD PLAN RSP ES-1B

2006 REVISED STANDARD PLAN RSP ES-1B

P:\proj1\02\3E890_plans\pse\23e890va006.dgn

7-10-07

DIST	COUNTY	ROUTE	POST MILES TOTAL PROJECT	SHEET NO.	TOTAL SHEETS
02	Sha	5	R28.8/R39.2	40	41

REGISTERED ELECTRICAL ENGINEER

October 5, 2007
PLANS APPROVAL DATE

The State of California or its officers or agents shall not be responsible for the accuracy or completeness of electronic copies of this plan sheet.

REGISTERED PROFESSIONAL ENGINEER
Jeffery G. McRae
No. E14512
Exp. 6-30-08
ELECTRICAL
STATE OF CALIFORNIA

To accompany plans dated 12-21-11

EQUIPMENT IDENTIFICATION

ILLUMINATED SIGN IDENTIFICATION NUMBER:

Sign No. 12345

10 ISL SCI 1.0

- Sign number - Place on post or structure
- Transformer rating (kVA)
- Lighting control type
- Number and type of fixtures

Do NOT place on standard or structure

ELECTROLIER OR EQUIPMENT IDENTIFICATION NUMBER:

12345 - 15'-0"

- Mast arm length, if shown. Do not place on standard or structure.
- Equipment number - Place on standard or structure. Existing equipment numbers are shown in parenthesis

CONDUIT AND CONDUCTOR IDENTIFICATION:

1½"C, 2#10, 15#14, 2 DLC

- Number and size of conductors and cables
- Size of conduit in inches

ø1, ø2, ø2P, etc.	Traffic phase identification for signal faces, detectors and phase diagrams
1 2 3	Project note numbers
A B C	Equipment description, installation or item numbers
1 2 3	Conduit run numbers

SIGNAL AND LIGHTING STANDARD (TYPICAL DESIGNATION):

19A - 3 - 100

- Wind velocity = 100 mph
- Case 3 arm loading
- Standard type
- Standard Plan sheet number
- Detail number or letter

MISCELLANEOUS EQUIPMENT

PROPOSED	EXISTING	
CMS	cms	Changeable message sign
		Closed circuit television camera
		Highway advisory radio pole and antenna
EMS	ems	Extinguishable message sign
M V	m v	Detection device M = Microwave sensor V = Video image sensor

WIRING DIAGRAM LEGEND

P	Pole
CB	Circuit breaker
A	Ampere
V	Volt
M	Metered
UM	Unmetered
NB	Neutral bus
GB	Ground bus
G	Equipment grounding conductor
N	Grounded conductor (Neutral)

- External conductor
- Conductor or bus
- Tie point
- Contactor coil
- Contactor, Contact NO
- Terminal blocks
- Contactor, Contact NC
- Enclosure bond
- Grounding electrode
- Circuit breaker
- Receptacle

PULL BOXES

PROPOSED	EXISTING	
		Pull box-No. 5 unless otherwise indicated or noted.
3	9A(21)	Pull box-Additional designations or descriptions

3 = No. 3½ pull box
5 = No. 5 pull box
6 = No. 6 pull box
7 = No. 7 (Ceiling pull box)
8 = No. 8 (Pendant soffit pull box)
9 = No. 9 pull box
9A = No. 9A pull box

(C) = Communications pull box
(E) = Pull box with extension
(S) = Sprinkler control pull box
(21) = Anchor bolts and conduit for future installation of Type 21 Standard
(T) = Traffic pull box

VEHICLE DETECTORS

5 J 9 U

- Vehicle detector designation
- U = Upper
  L = Lower
- Slot number in input file
- Input file (I or J)
- Phase

PROPOSED	EXISTING	
		Type A detector loop. Outline of sawcut shown.
		Type B detector loop. Outline of sawcut shown.
		Type C detector loop. Outline of sawcut shown.
		Type D detector loop. Outline of sawcut shown.
		Type E detector loop. Outline of sawcut shown.
		Type Q detector loop. Outline of sawcut shown.
		Magnetic detector
DH	dh	Detector handhole
		Microwave or video detection zone

STATE OF CALIFORNIA
DEPARTMENT OF TRANSPORTATION

ELECTRICAL SYSTEMS (SYMBOLS AND ABBREVIATIONS)

NO SCALE

RSP ES-1C DATED OCTOBER 5, 2007 SUPERCEDES STANDARD PLAN ES-1C DATED MAY 1, 2006 - PAGE 402 OF THE STANDARD PLANS BOOK DATED MAY 2006.

REVISED STANDARD PLAN RSP ES-1C

2006 REVISED STANDARD PLAN RSP ES-1C

P:\proj\02\3E890_plans\pse\23e890va007.dgn

7-10-07

DIST	COUNTY	ROUTE	POST MILES TOTAL PROJECT	SHEET NO.	TOTAL SHEETS
02	Sha	5	R28.8/R39.2	41	41

REGISTERED ELECTRICAL ENGINEER

October 5, 2007
PLANS APPROVAL DATE

REGISTERED PROFESSIONAL ENGINEER Jeffery G. McRae No. E14512 Exp. 6-30-08 ELECTRICAL STATE OF CALIFORNIA

The State of California or its officers or agents shall not be responsible for the accuracy or completeness of electronic copies of this plan sheet.

To accompany plans dated 12-21-11

2006 REVISED STANDARD PLAN RSP ES-5A

LOOP INSTALLATION PROCEDURE

1. Loops shall be centered in lanes.
2. Saw slots in pavement for loop conductors as shown in details.
3. Distance between side of loop and a lead-in saw cut from adjacent detectors shall be 2'-0" minimum. Distance between lead-in saw cuts shall be 6" minimum.
4. Bottom of saw slot shall be smooth with no sharp edges.
5. Slots shall be washed until clean, blown out and thoroughly dried before installing loop conductors.
6. Adjacent loops on the same sensor unit channel shall be wound in opposite directions.
7. Identify and tag loop circuit pairs in the pull box with loop number, start (S) and finish (F) of conductor. Identify and tag lead-in-cable with sensor number and phase.
8. Install loop conductor in slot using a 3/16" to 1/4" thick wood paddle. Hold loop conductors with wood paddles (at the bottom of the sawed slot) during sealant placement.
9. No more than 2 twisted pairs shall be installed in one sawed slot.
10. Allow additional 5'-0" of slack length of conductor for the lead-in run to pull box.
11. The additional length of each conductor for each loop shall be twisted together into a pair (6 turns per 3'-4" minimum) before being placed in the slot and conduit leading to pull box.
12. Test each loop circuit for continuity, circuit resistance and insulation resistance at the pull box before filling slots.
13. Fill slots as shown in details.
14. Splice loop conductors to lead-in-cable. Splices shall be soldered.
15. End of lead-in-cable and Type 2 loop conductor shall be waterproofed prior to installing in conduit to prevent moisture from entering the cable.
16. Lead-in-cable shall not be spliced between the pull box and the controller cabinet terminals.
17. Test each loop circuit for continuity, circuit resistance and insulation resistance at the controller cabinet location.
18. Where loop conductors are not to be spliced to a lead-in-cable, the ends of the conductors shall be taped and waterproofed with electrical insulating coating.

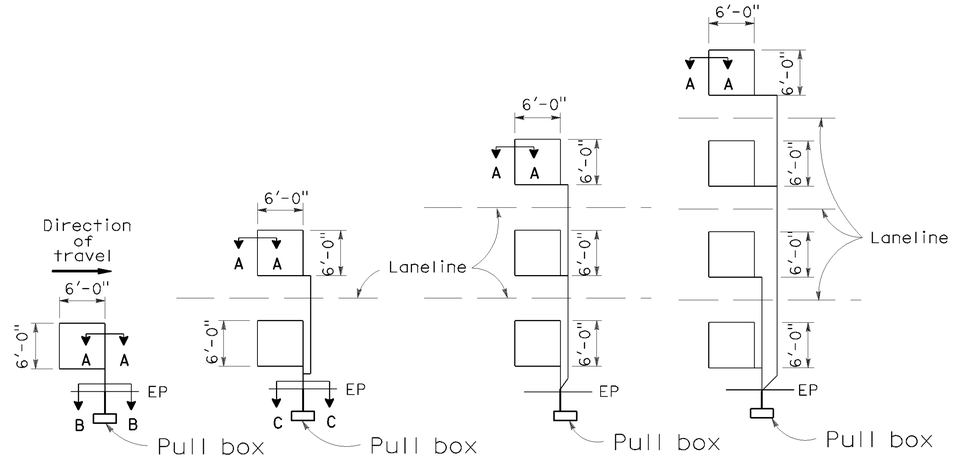

TYPE 1A INSTALLATION | TYPE 2A INSTALLATION | TYPE 3A INSTALLATION | TYPE 4A INSTALLATION

SAWCUT DETAILS

(Type A loop detector configurations illustrated)

1. 1A thru 4A = 1 Type A loop configuration in each lane.
2. 1B thru 4B = 1 Type B loop configuration in each lane.
3. 1C = 1 Type C loop configuration entering lanes as required.
4. 1D thru 4D = 1 Type D loop configuration in each lane.
5. 1E thru 4E = 1 Type E loop configuration in each lane.
6. 1Q thru 4Q = 1 Type Q loop configuration in each lane. (Use Type A, B, C, D, E or Q loop detector configurations only when specified or shown on plans)

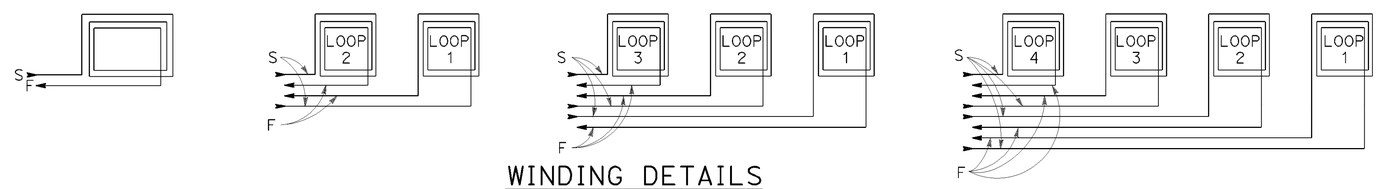

WINDING DETAILS

See Notes 6 and 7

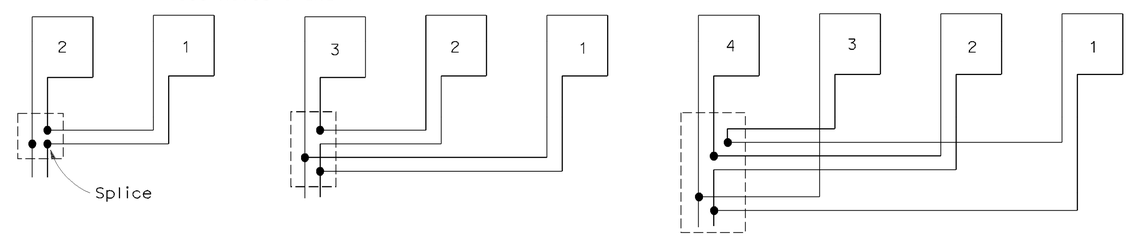

TYPICAL LOOP CONNECTIONS

(Dashed lines represent the pull box)

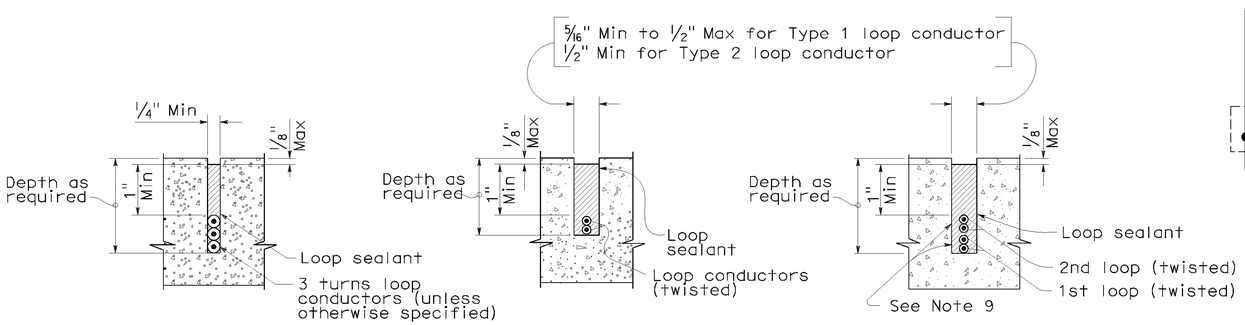

SECTION A-A | SECTION B-B | SECTION C-C

SLOT DETAILS - TYPE 1 AND TYPE 2 LOOP CONDUCTOR

STATE OF CALIFORNIA
DEPARTMENT OF TRANSPORTATION

ELECTRICAL SYSTEMS (DETECTORS)

NO SCALE

RSP ES-5A DATED OCTOBER 5, 2007 SUPERCEDES STANDARD PLAN ES-5A DATED MAY 1, 2006 - PAGE 423 OF THE STANDARD PLANS BOOK DATED MAY 2006.

REVISED STANDARD PLAN RSP ES-5A

P:\proj1\02\3E890_plans\pse\23e890va008.dgn

8-17-07