Dist	COUNTY	ROUTE	POST MILES TOTAL PROJECT	SHEET No.	TOTAL SHEETS
02	Teh,Sha	5	R27.1/42.1 0.0/0.9	108	215

REGISTERED CIVIL ENGINEER DATE 06-17-11

PLANS APPROVAL DATE 06-17-11

FRANK RIVAS No. C53592 Exp. 6-30-11 CIVIL — REGISTERED PROFESSIONAL ENGINEER — STATE OF CALIFORNIA

THE STATE OF CALIFORNIA OR ITS OFFICERS OR AGENTS SHALL NOT BE RESPONSIBLE FOR THE ACCURACY OR COMPLETENESS OF SCANNED COPIES OF THIS PLAN SHEET.

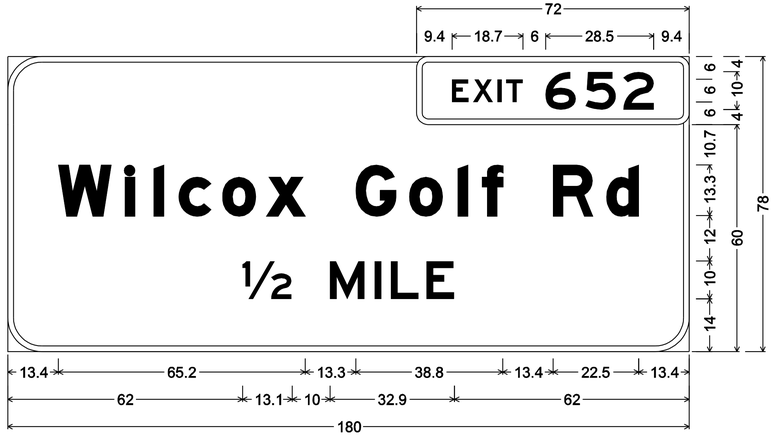

3.0" Radius, 1.5" Border, White on Green;
[EXIT] E; [652] E;
9.0" Radius, 1.5" Border, White on Green;
[Wilcox Golf Rd] E Mod; [½ MILE] E;

G83(CA)
PM 30.41 FNBT

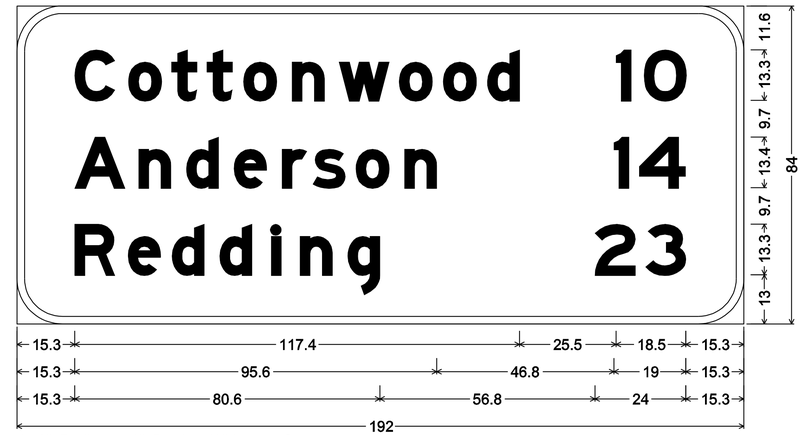

12.0" Radius, 2.0" Border, White on Green;
[Cottonwood] E Mod; [Anderson] E Mod; [Redding] E Mod; [10] E Mod; [14] E Mod;
[23] E Mod;

G5(CA)
PM 32.98 FNBT

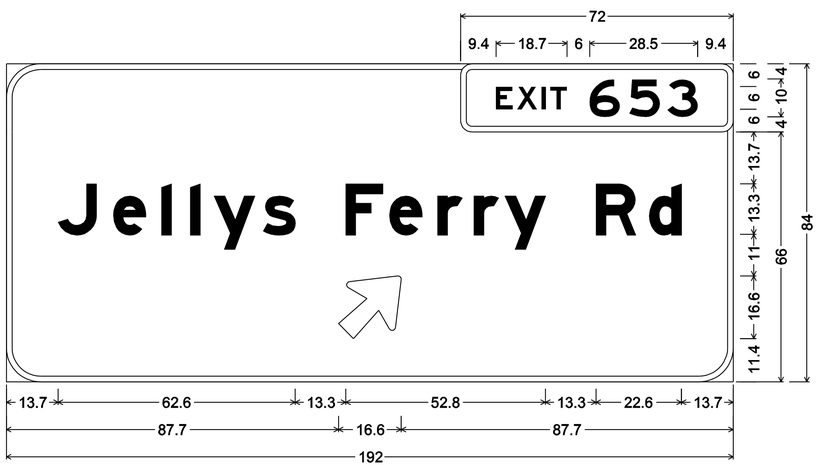

3.0" Radius, 1.5" Border, White on Green;
[EXIT] E; [653] E;
9.0" Radius, 1.5" Border, White on Green;
[Jellys Ferry Rd] E Mod; Arrow 13.33UC-1L - 20.3" 45°;

G85(CA)
PM 31.92 FNBT
PM 32.50 FSBT

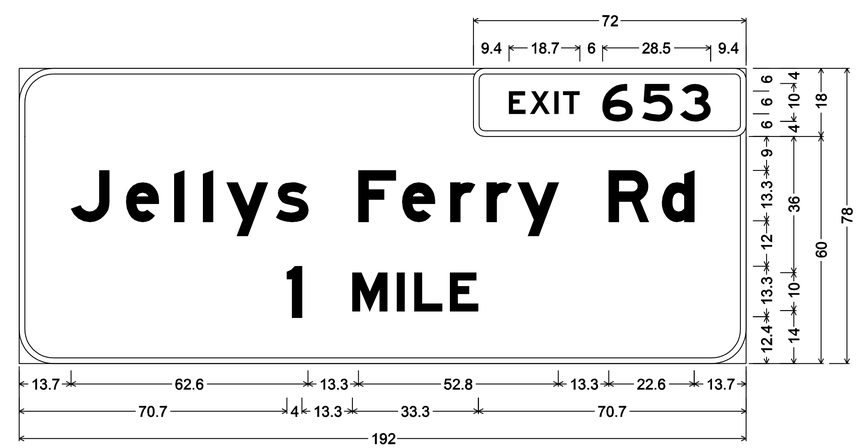

3.0" Radius, 1.5" Border, White on Green;
[EXIT] E; [653] E;
9.0" Radius, 1.5" Border, White on Green;
[Jellys Ferry Rd] E Mod; [1] E Mod; [MILE] E Mod;

G83(CA)
PM 33.50 FSBT

SIGN DETAILS

NO SCALE **SD-1**

REVISED BY | DATE REVISED
FRANK RIVAS | JEFF STEPPAT
CALCULATED-DESIGNED BY | CHECKED BY
FUNCTIONAL SUPERVISOR
ROB STINGER

STATE OF CALIFORNIA - DEPARTMENT OF TRANSPORTATION
Caltrans® TRAFFIC OPS

P:\proj1\02\3E810_plans\pse\02000201181ob001.dgn

LAST REVISION 06-17-11 | DATE PLOTTED => 27-JUN-2011 TIME PLOTTED => 12:20

Dist	COUNTY	ROUTE	POST MILES TOTAL PROJECT	SHEET No.	TOTAL SHEETS
02	Teh,Sha	5	R27.1/42.1 0.0/0.9	109	215

REGISTERED CIVIL ENGINEER 06-17-11 DATE

06-17-11
PLANS APPROVAL DATE

FRANK RIVAS No. C53592 Exp. 6-30-11 CIVIL — REGISTERED PROFESSIONAL ENGINEER — STATE OF CALIFORNIA

THE STATE OF CALIFORNIA OR ITS OFFICERS OR AGENTS SHALL NOT BE RESPONSIBLE FOR THE ACCURACY OR COMPLETENESS OF SCANNED COPIES OF THIS PLAN SHEET.

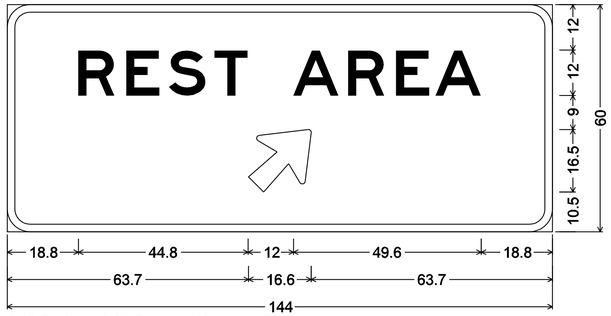

6.0" Radius, 2.0" Border, White on Blue;
[REST AREA] E; Arrow 12CAP-1L - 20.3" 45°;

G80(CA)
PM 35.00 FSBT

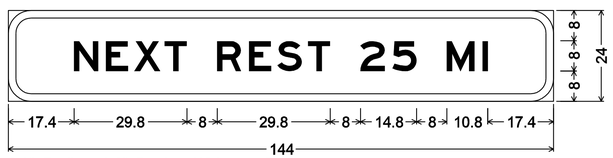

6.0" Radius, 2.0" Border, White on Blue;
[NEXT REST 25 MI] E;

G79A(CA)
PM 35.00 FSBT

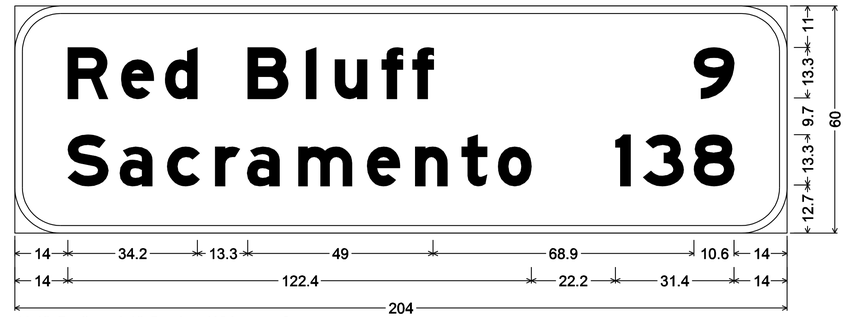

12.0" Radius, 2.0" Border, White on Green;
[Red Bluff] E Mod; [Sacramento] E Mod; [9] E Mod; [138] E Mod;

G5(CA)
PM 35.66 FSBT

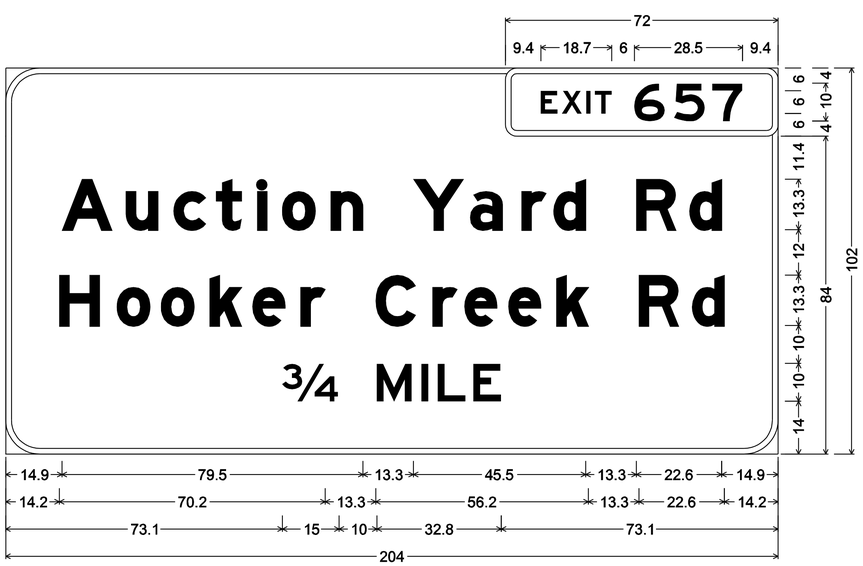

3.0" Radius, 1.5" Border, White on Green;
[EXIT] E; [657] E;
9.0" Radius, 1.5" Border, White on Green;
[Auction Yard Rd] E Mod; [Hooker Creek Rd] E Mod; [¾ MILE] E;

G83(CA)
PM 35.58 FNBT

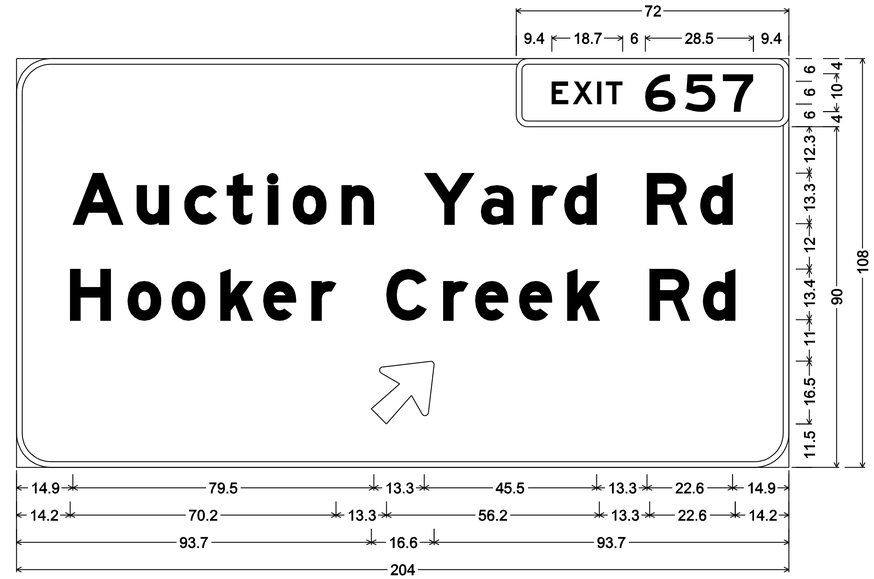

3.0" Radius, 1.5" Border, White on Green;
[EXIT] E; [657] E;
9.0" Radius, 1.5" Border, White on Green;
[Auction Yard Rd] E Mod; [Hooker Creek Rd] E Mod; Arrow 13.33UC-1L - 20.3" 45°;

G85(CA)
PM 36.02 FNBT

SIGN DETAILS

NO SCALE **SD-2**

REVISED BY	DATE REVISED
FRANK RIVAS	JEFF STEPPAT
CALCULATED-DESIGNED BY	CHECKED BY

FUNCTIONAL SUPERVISOR: ROB STINGER

STATE OF CALIFORNIA - DEPARTMENT OF TRANSPORTATION
Caltrans® TRAFFIC OPS

P:\proj1\02\3E810_plans\pse\02000201811ob002.dgn

LAST REVISION 06-17-11 | DATE PLOTTED => 27-JUN-2011 | TIME PLOTTED => 12:20

Dist	COUNTY	ROUTE	POST MILES TOTAL PROJECT	SHEET No.	TOTAL SHEETS
02	Teh,Sha	5	R27.1/42.1 0.0/0.9	110	215

REGISTERED CIVIL ENGINEER 06-17-11 DATE

06-17-11
PLANS APPROVAL DATE

REGISTERED PROFESSIONAL ENGINEER FRANK RIVAS No. C53592 Exp. 6-30-11 CIVIL STATE OF CALIFORNIA

THE STATE OF CALIFORNIA OR ITS OFFICERS OR AGENTS SHALL NOT BE RESPONSIBLE FOR THE ACCURACY OR COMPLETENESS OF SCANNED COPIES OF THIS PLAN SHEET.

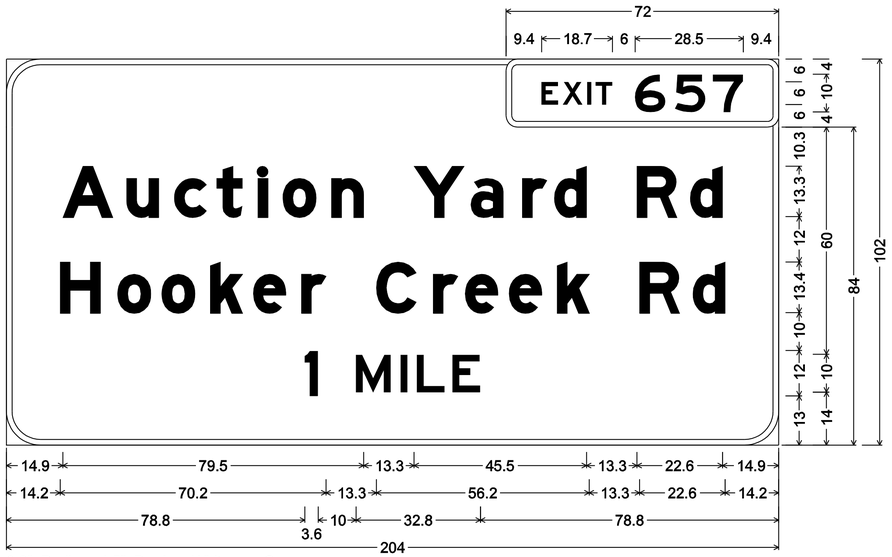

3.0" Radius, 1.5" Border, White on Green;
[EXIT] E; [657] E;
9.0" Radius, 1.5" Border, White on Green;
[Auction Yard Rd] E Mod; [Hooker Creek Rd] E Mod; [1] E; [MILE] E;

G83(CA)
PM 37.38 FSBT

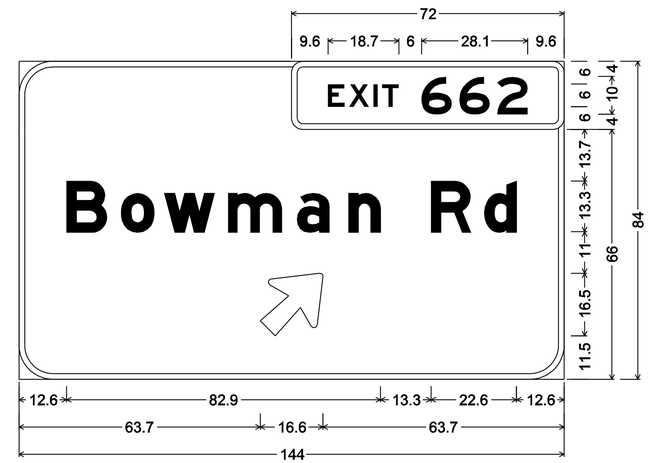

3.0" Radius, 1.5" Border, White on Green;
[EXIT] E; [662] E;
9.0" Radius, 1.5" Border, White on Green;
[Bowman Rd] E Mod; Arrow 13.33UC-1L - 20.3" 45°;

G85(CA)
PM 41.79 FSBT

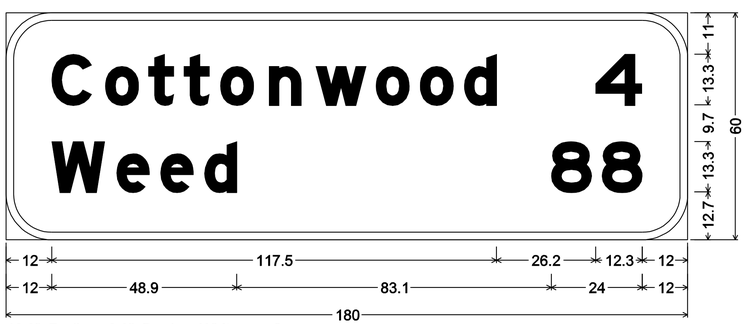

12.0" Radius, 2.0" Border, White on Green;
[Cottonwood] E Mod; [Weed] E Mod; [4] E Mod; [88] E Mod;

G5(CA)
PM 39.30 FNBT

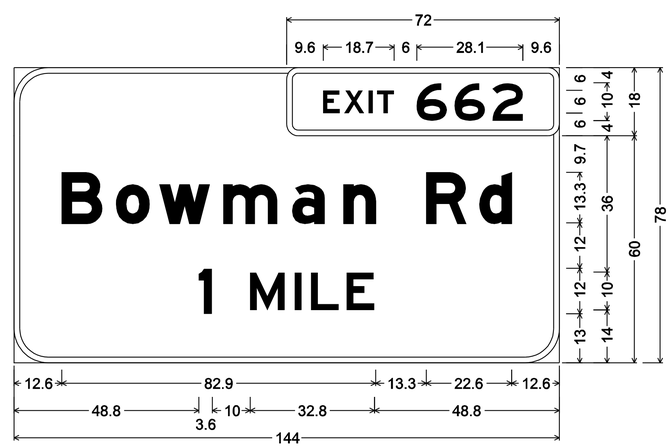

3.0" Radius, 1.5" Border, White on Green;
[EXIT] E; [662] E;
9.0" Radius, 1.5" Border, White on Green;
[Bowman Rd] E Mod; [1] E; [MILE] E;

G83(CA)
PM 0.40 FSBT

SIGN DETAILS

NO SCALE **SD-3**

REVISED BY | DATE REVISED
FRANK RIVAS | JEFF STEPPAT
CALCULATED-DESIGNED BY | CHECKED BY
FUNCTIONAL SUPERVISOR: ROB STINGER

STATE OF CALIFORNIA - DEPARTMENT OF TRANSPORTATION
Caltrans® TRAFFIC OPS

P:\proj\02\3E810_plans\pse\02000201811ob003.dgn

LAST REVISION 06-17-11 | DATE PLOTTED => 27-JUN-2011 | TIME PLOTTED => 12:20

Dist	COUNTY	ROUTE	POST MILES TOTAL PROJECT	SHEET No.	TOTAL SHEETS
02	Teh,Sha	5	R27.1/42.1 0.0/0.9	111	215

REGISTERED CIVIL ENGINEER 06-17-11 DATE

06-17-11
PLANS APPROVAL DATE

REGISTERED PROFESSIONAL ENGINEER FRANK RIVAS No. C53592 Exp. 6-30-11 CIVIL STATE OF CALIFORNIA

THE STATE OF CALIFORNIA OR ITS OFFICERS OR AGENTS SHALL NOT BE RESPONSIBLE FOR THE ACCURACY OR COMPLETENESS OF SCANNED COPIES OF THIS PLAN SHEET.

NOTE:

1. (N) - NOT A SEPARATE PAY ITEM, FOR INFORMATION ONLY

ROADSIDE SIGNS

POST MILE	DIRECTION	SIDE	SIGN CODE	SIGN SIZE WIDTH IN	SIGN SIZE HEIGHT IN	(N) WOOD POST SIZE AND LENGTH 4"x6" FT	(N) WOOD POST SIZE AND LENGTH 6"x8" FT	(N) LAMINATED WOOD BOX POST TYPE L FT	ROADSIDE SIGN (1-POST) EA	ROADSIDE SIGN (2-POST) EA	REMOVE ROADSIDE SIGN EA	RELOCATE ROADSIDE SIGN EA	INSTALL ROADSIDE SIGN (LAMINATED WOOD BOX POST) EA	RESET MILEPOST MARKER EA	RESET SIGN OVERLAY EA	RESET ROADSIDE SIGN EA	INSTALL ROADSIDE SIGN PANEL ON EXISTING POST EA	DESCRIPTION/COMMENT
R28.50	FSBT	RT	G84(CA)	48	60											1		
R28.55	FNBT	RT	W4-1	48	48											1		
30.41	FNBT	RT	G83(CA)	168	72						1							
30.41	FNBT	RT	G83(CA)	180	78			14,13					1					
30.55	FSBT	LT	G20(CA)	162	60						1							
30.89	FSBT	RT	W4-1	48	48											1		
30.91	FNBT	RT	G84(CA)	48	60											1		
31.16	FNBT	RT	W4-1	48	48											1		
31.18	FSBT	RT	G84(CA)	48	60											1		
31.92	FNBT	RT	G85(CA)	252	78						1							
31.92	FNBT	RT	G85(CA)	192	84			18,19					1					
32.07	FNBT	RT	G84(CA)	48	60											1		
32.09	FSBT	RT	W4-1	48	48											1		
32.39	FNBT	RT	W4-1	48	48											1		
32.39	FSBT	RT	G84(CA)	48	60											1		
32.5	FSBT	RT	G85(CA)	252	78						1							
32.5	FSBT	RT	G85(CA)	192	84			18,19					1					
32.98	FNBT	RT	G5(CA)	186	84						1							
32.98	FNBT	RT	G5(CA)	192	84			21,22					1					
33.15	FNBT	RT	G80A(CA)	54	66											1		
33.50	FSBT	RT	G83(CA)	252	78						1							
			D9-3A	30	30													SAVED PANEL TO BE RESET
			RW-080	30	30													SAVED PANEL TO BE RESET
33.50	FSBT	RT	G83(CA)	192	78			18,16					1					
			D9-3A	30	30											1		RESET SAVED PANEL ON NEW SIGN
			RW-080	30	30											1		RESET SAVED PANEL ON NEW SIGN
34.59	FSBT	RT	W4-1	48	48											1		
34.91	FSBT	RT	G80A(CA)	54	66											1		
35.00	FSBT	RT	G80(CA)	144	60						1				1			RESET "CLOSED" SIGN OVERLAY ON NEW SIGN
			G79A(CA)	144	24													
35.00	FSBT	RT	G80(CA)	144	60			20,16					1	1				RESET MILEPOST MARKER ON NEW SIGN POST
			G79A(CA)	144	24													
35.58	FNBT	RT	G83(CA)	264	96						1							
35.58	FNBT	RT	G83(CA)	204	102			25,30					1					
35.66	FSBT	RT	G5(CA)	204	60						1							
35.66	FSBT	RT	G5(CA)	204	60			18,19					1					
36.02	FNBT	RT	G85(CA)	264	108						1							
36.02	FNBT	RT	G85(CA)	204	108			24,24					1					
36.14	FNBT	RT	G84(CA)	48	60											1		
36.27	FSBT	RT	W4-1	48	48											1		
36.50	FSBT	RT	G84(CA)	48	60											1		
36.50	FNBT	RT	W4-1	48	48											1		
36.59	FNBT	LT	W9-1L	48	48	18			1									
36.78	FNBT	RT	W4-2	48	48	18			1									
36.78	FNBT	LT	W4-2	48	48	18			1									
								TOTAL (THIS SHEET)	3		10		9	1	1	19		

SIGN QUANTITIES
SQ-1

REVISED BY | DATE REVISED
FRANK RIVAS | JEFF STEPPAT
CALCULATED-DESIGNED BY | CHECKED BY
FUNCTIONAL SUPERVISOR: ROB STINGER

STATE OF CALIFORNIA - DEPARTMENT OF TRANSPORTATION
Caltrans® TRAFFIC OPS

P:\proj1\02\3E810_plans\pse\02000201811oc001.dgn

LAST REVISION 06-17-11 | DATE PLOTTED => 27-JUN-2011 | TIME PLOTTED => 12:20

Dist	COUNTY	ROUTE	POST MILES TOTAL PROJECT	SHEET No.	TOTAL SHEETS
02	Teh,Sha	5	R27.1/42.1 0.0/0.9	112	215

REGISTERED CIVIL ENGINEER 06-17-11 DATE

06-17-11
PLANS APPROVAL DATE

REGISTERED PROFESSIONAL ENGINEER FRANK RIVAS No. C53592 Exp. 6-30-11 CIVIL STATE OF CALIFORNIA

THE STATE OF CALIFORNIA OR ITS OFFICERS OR AGENTS SHALL NOT BE RESPONSIBLE FOR THE ACCURACY OR COMPLETENESS OF SCANNED COPIES OF THIS PLAN SHEET.

ROADSIDE SIGNS

POST MILE	DIRECTION	SIDE	SIGN CODE	SIGN SIZE WIDTH	SIGN SIZE HEIGHT	(N) WOOD POST SIZE AND LENGTH 4"x6"	(N) WOOD POST SIZE AND LENGTH 6"x8"	(N) LAMINATED WOOD BOX POST TYPE L	ROADSIDE SIGN (1-POST)	ROADSIDE SIGN (2-POST)	REMOVE ROADSIDE SIGN	RELOCATE ROADSIDE SIGN	INSTALL ROADSIDE SIGN (LAMINATED WOOD BOX POST)	RESET MILEPOST MARKER	RESET SIGN OVERLAY	RESET ROADSIDE SIGN	INSTALL ROADSIDE SIGN PANEL ON EXISTING POST	DESCRIPTION/COMMENT
				IN	IN	FT	FT	FT	EA	EA	EA	EA	EA	EA	EA	EA	EA	
36.83	FNBT	LT	W9-1L	48	48						1							
36.96	FNBT	RT	W4-2	48	48						1							
36.96	FNBT	LT	W4-2	48	48						1							
37.38	FSBT	RT	G83(CA)	264	102						1							
37.38	FSBT	RT	G83(CA)	204	102			21,21					1					
38.56	FSBT	RT	W4-1	48	48											1		
38.59	FNBT	RT	G84(CA)	48	60											1		
38.70	FNBT	LT	SG6	144	48						1							
			SR17	144	54													SAVE PANEL FOR REUSE AT PM 38.98
38.70	FNBT	RT	SG6	144	48						1							
			SR17	144	54													SAVE PANEL FOR REUSE AT PM 38.98
38.70	FNBT	LT	D8-1	96	72		20,21			1								
38.70	FNBT	RT	D8-1	96	72		20,21			1								
38.87	FNBT	RT	W4-1	48	48											1		
38.90	FSBT	RT	G84(CA)	48	60											1		
38.98	FNBT	LT	SR17	144	54												1	REUSE SAVED PANEL FROM PM 38.70
38.98	FNBT	RT	SR17	144	54												1	REUSE SAVED PANEL FROM PM 38.70
39.30	FNBT	RT	G5(CA)	180	60						1							
39.30	FNBT	RT	G5(CA)	180	60		16,18			1								
39.45	FSBT	LT	W4-2	48	48						1							
39.45	FSBT	RT	W4-2	48	48						1							
39.63	FSBT	LT	W4-2	48	48						1							
39.63	FSBT	RT	W9-1R	60	60						1							
39.63	FSBT	LT	W4-2	48	48	18			1									
39.63	FSBT	RT	W4-2	48	48	18			1									
39.87	FSBT	RT	W9-1R	48	48	18			1									
39.92	FNBT	RT	D8-3	84	72											1		
			SG8	84	18													
40.77	FNBT	RT	W4-1	48	48											1		
40.95	FSBT	LT	R4-3	36	48							1						
41.23	FSBT	RT	SG-9(CA)	90	72						1							
			SG-8(CA)	108	30													
			D9-1	30	30													
			G66-57(CA)	30	30													
41.23	FSBT	RT	D8-3	84	78		20,20			1								
			SG-8(CA)	108	30													
			D9-1	30	30													
			G66-57(CA)	30	30													
41.34	FNBT	RT	G84(CA)	48	60											1		
41.40	FSBT	RT	W4-1	48	48											1		
41.46	FNBT	RT	W4-1	48	48											1		
41.67	FSBT	RT	G84(CA)	48	60											1		
41.79	FSBT	RT	G85(CA)	144	84						1							
41.79	FSBT	RT	G85(CA)	144	84			20,20					1					
0.40	FSBT	RT	G83(CA)	144	78						1							
0.40	FSBT	RT	G83(CA)	144	78			22,24					1					
0.75	FNBT	RT	G84(CA)	48	60											1		
0.79	FSBT	RT	W4-1	48	48											1		
TOTAL (THIS SHEET)									3	4	14	1	3			12	2	
TOTAL									6	4	24	1	12	1	1	31	2	

SIGN QUANTITIES

SQ-2

REVISED BY | DATE REVISED

FRANK RIVAS | JEFF STEPPAT

CALCULATED-DESIGNED BY | CHECKED BY

FUNCTIONAL SUPERVISOR: ROB STINGER

STATE OF CALIFORNIA - DEPARTMENT OF TRANSPORTATION
Caltrans® TRAFFIC OPS

P:\proj1\02\3E810_plans\pse\02000201811oc002.dgn

LAST REVISION 06-17-11 | DATE PLOTTED => 27-JUN-2011 TIME PLOTTED => 12:20

Dist	COUNTY	ROUTE	POST MILES TOTAL PROJECT	SHEET No.	TOTAL SHEETS
02	Teh,Sha	5	R27.1/42.1 0.0/0.9	113	215

REGISTERED CIVIL ENGINEER 06-17-11 DATE

06-17-11
PLANS APPROVAL DATE

REGISTERED PROFESSIONAL ENGINEER FRANK RIVAS No. C53592 Exp. 6-30-11 CIVIL STATE OF CALIFORNIA

THE STATE OF CALIFORNIA OR ITS OFFICERS OR AGENTS SHALL NOT BE RESPONSIBLE FOR THE ACCURACY OR COMPLETENESS OF SCANNED COPIES OF THIS PLAN SHEET.

CONTRACTOR FURNISHED SIGNS

POST MILE	DIRECTION	SIDE	SIGN CODE	SIGN SIZE WIDTH IN	SIGN SIZE HEIGHT IN	BACKGROUND COLOR	BACKGROUND SHEETING ASTM TYPE	LEGEND COLOR	LEGEND SHEETING ASTM TYPE	SINGLE FACED	FURNISH SINGLE SHEET ALUMINUM SIGN (0.063"-UNFRAMED) SQFT	FURNISH SINGLE SHEET ALUMINUM SIGN (0.080"-UNFRAMED) SQFT	FURNISH SINGLE SHEET ALUMINUM SIGN (0.080"-FRAMED) SQFT	FURNISH LAMINATED PANEL SIGN (1"-TYPE B) SQFT	FURNISH LAMINATED PANEL SIGN (2½"-TYPE B) SQFT	DESCRIPTION/COMMENT
30.41	FNBT	R	G83(CA)	180	78	GREEN	III	WHITE	III	X				97.5		EXIT 652, WILCOX GOLF RD, ½ MILE
31.92	FNBT	R	G85(CA)	192	84	GREEN	III	WHITE	III	X					112	EXIT 653, JELLYS FERRY RD, ⇗
32.5	FSBT	R	G85(CA)	192	84	GREEN	III	WHITE	III	X					112	EXIT 653, JELLYS FERRY RD, ⇗
32.98	FNBT	R	G5(CA)	192	84	GREEN	III	WHITE	III	X					112	COTTONWOOD 10, ANDERSON 14, REDDING 23
33.50	FSBT	R	G83(CA)	192	78	GREEN	III	WHITE	III	X					104	EXIT 653, JELLYS FERRY RD, 1 MILE
35.00	FSBT	R	G80(CA)	144	60	BLUE	III	WHITE	III	X				60		REST AREA, ⇗
35.00	FSBT	R	G79A(CA)	144	24	BLUE	III	WHITE	III	X				24		NEXT REST AREA 25 MI
35.58	FNBT	R	G83(CA)	204	102	GREEN	III	WHITE	III	X					144.5	EXIT 657, AUCTION YARD RD, HOOKER CREEK RD, ¾ MILE
35.66	FSBT	R	G5(CA)	204	60	GREEN	III	WHITE	III	X					85	RED BLUFF 9, SACRAMENTO 138
36.02	FNBT	R	G85(CA)	204	108	GREEN	III	WHITE	III	X					153	EXIT 657, AUCTION YARD RD, HOOKER CREEK RD, ⇗
36.59	FNBT	L	W9-1L	48	48	YELLOW	III	BLACK	II	X		16				LEFT LANE ENDS
36.78	FNBT	R	W4-2	48	48	YELLOW	III	BLACK	II	X		16				MERGE SYMBOL
36.78	FNBT	L	W4-2	48	48	YELLOW	III	BLACK	II	X		16				MERGE SYMBOL
37.38	FSBT	R	G83(CA)	204	102	GREEN	III	WHITE	III	X					144.5	EXIT 657, AUCTION YARD RD, HOOKER CREEK RD, 1 MILE
38.70	FNBT	L	D8-1	96	72	GREEN	III	WHITE	III	X			48			WEIGH, STATION, 1 MILE
38.70	FNBT	R	D8-1	96	72	GREEN	III	WHITE	III	X			48			WEIGH, STATION, 1 MILE
39.30	FNBT	R	G5(CA)	180	60	GREEN	III	WHITE	III	X				75		COTTONWOOD 4, WEED 88
39.63	FSBT	L	W4-2	48	48	YELLOW	III	BLACK	II	X		16				MERGE LEFT SYMBOL
39.63	FSBT	R	W4-2	48	48	YELLOW	III	BLACK	II	X		16				MERGE LEFT SYMBOL
39.87	FSBT	R	W9-1R	48	48	YELLOW	III	BLACK	II	X		16				RIGHT LANE ENDS
41.23	FSBT	R	D8-3	84	78	GREEN	III	WHITE	III	X			45.5			WEIGH, STATION, ⇗
41.23	FSBT	R	SG-8(CA)	108	30	GREEN	III	WHITE	III	X				22.5		NO PICKUPS
41.23	FSBT	R	D9-1	30	30	BLUE	III	WHITE	III	X	6.3					TELEPHONE SYMBOL
41.23	FSBT	R	G66-57(CA)	30	30	BLUE	III	WHITE	III	X	6.3					CHP SYMBOL
41.79	FSBT	R	G85(CA)	144	84	GREEN	III	WHITE	III	X				84		EXIT 662, BOWMAN RD, ⇗
0.40	FSBT	R	G83(CA)	144	78	GREEN	III	WHITE	III	X				78		EXIT 662, BOWMAN RD, 1 MILE
										TOTAL	12.6	96	141.5	441	967	

SIGN QUANTITIES
SQ-3

FRANK RIVAS | REVISED BY | DATE REVISED
JEFF STEPPAT | CALCULATED-DESIGNED BY | CHECKED BY
ROB STINGER | FUNCTIONAL SUPERVISOR

STATE OF CALIFORNIA - DEPARTMENT OF TRANSPORTATION
Caltrans TRAFFIC OPS

P:\proj1\02\3E810_plans\pse\02000201811oc003.dgn

LAST REVISION 06-17-11 | DATE PLOTTED => 27-JUN-2011 | TIME PLOTTED => 12:20

Dist	COUNTY	ROUTE	POST MILES TOTAL PROJECT	SHEET No.	TOTAL SHEETS
02	Teh,Sha	5	R27.1/42.1, 0.0/0.9	114	215

William D. Sutherland 06-17-11
REGISTERED CIVIL ENGINEER DATE

06-17-11
PLANS APPROVAL DATE

REGISTERED PROFESSIONAL ENGINEER W. D. SUTHERLAND No. C61579 Exp. 6-30-13 CIVIL STATE OF CALIFORNIA

THE STATE OF CALIFORNIA OR ITS OFFICERS OR AGENTS SHALL NOT BE RESPONSIBLE FOR THE ACCURACY OR COMPLETENESS OF SCANNED COPIES OF THIS PLAN SHEET.

NOTES:

1. ROADWAY EMBANKMENT DOES NOT INCLUDE AN EXPANSION OR CONTRACTION FACTOR.
2. (N) - NOT A SEPARATE PAY ITEM, FOR INFORMATION ONLY

ABBREVIATIONS

MVP MAINTENANCE VEHICLE PULLOUT
EVT EMERGENCY VEHICLE TURNAROUND

ROADWAY QUANTITIES

STAGE	MAINLINE POSTMILE LIMITS	COLD PLANE ASPHALT CONCRETE PAVEMENT						ROADWAY EXCAVATION	(N) ROADWAY EMBANKMENT	IMPORTED MATERIAL (SHOULDER BACKING)	CLASS 2 AGGREGATE BASE	HOT MIX ASPHALT								RUBBERIZED HOT MIX ASPHALT (OPEN GRADED HIGH BINDER)		RUMBLE STRIP		PLACE HOT MIX ASPHALT (MISC AREA)	TACK COAT		MINOR CONCRETE (MISC CONSTRUCTION)
		SOUTHBOUND			NORTHBOUND							HMA		HMA (15% MAX RAP, LONG LIFE)		HMA (25% RAP, LONG LIFE)		HMA (RICH BOTTOM, LONG LIFE)									
		MEDIAN SHLD	LANES	OUTSIDE SHLD	MEDIAN SHLD	LANES	OUTSIDE SHLD					SB	NB	SB	NB	SB	NB	SB	NB	SB	NB	SB	NB		SB	NB	
	PM-PM	SQYD	SQYD	SQYD	SQYD	SQYD	SQYD	SB/NB CY	SB/NB CY	SB/NB TON	SB/NB CY	TON	TON	TON	TON	TON	TON	TON	TON	TON	TON	STA	STA	SQYD	TON	TON	CY
1	R27.1 / R28.2	1246		960	1237		912					164	159												2	2	
	R28.2 / 31.0	1548		1237								206													1.3		
	31.0 / 31.7	880		740								121													1		
	31.8 / 35.0	3777		3220	3793		3195					518	519												3	3	
	35.0 / 38.0	3521		3266	1269		1269					504	189												3	1	
	38.0 / 41.0	3522		3116	3522		2950					522	522												3	3	
	41.0 / 41.9	1143		645	1142		853					160	157												1	1	
	0.1 / 0.9	882		733	882		786					120	124												1	1	
2	37.1 / 37.5		2933											687		1235		458							7.8		
	37.5 / 38.0		3667											859		1340		573							6.7		
	38.0 / 38.5		3667											859		1221		573							6.7		
	38.5 / 39.0		3667											859		1187		573							6.7		
	39.0 / 39.5		4371											859		1337		573							8.0		
	39.5 / 40.0		5427											859		1301		573							9.9		
	40.0 / 40.5		5427											859		1291		573							9.9		
	40.5 / 41.0		4140											859		1309		573							7.6		
	41.0 / 41.6		4370											1049		1608		699							8.0		
3	37.1 / 37.5		2816											516		592		327							7.6		
	37.5 / 38.0		3520											644		646		409							6.5		
	38.0 / 38.5		3520											644		643		409							6.5		
	38.5 / 39.0		3520											644		742		409							6.5		
	39.0 / 39.5		4224											865		1193		556							7.7		
	39.5 / 40.0		5280											1381		1923		900							9.7		
	40.0 / 40.5		5280											1381		1706		900							9.7		
	40.5 / 41.0		3993											842		884		541							7.3		
	41.0 / 41.6		4191											787		774		499							7.7		
4	37.1 / 37.5					2933									687		1331		458							7.8	
	37.5 / 38.0					3667									859		1562		573							6.7	
	38.0 / 38.5					3667									859		1590		573							6.7	
	38.5 / 39.0					3667									859		1609		573							6.7	
	39.0 / 39.5					3667									859		1571		573							6.7	
	39.5 / 40.0					3667									859		1517		573							6.7	
	40.0 / 40.5					3667									859		1497		573							6.7	
	40.5 / 41.0					3667									859		1355		573							6.7	
	41.0 / 41.6					4473									1049		1416		699							8.2	
5	37.1 / 37.5					2816									516		897		327							7.6	
	37.5 / 38.0					3520									644		1074		409							6.5	
	38.0 / 38.5					3520									644		1081		409							6.5	
	38.5 / 39.0					3520									644		1209		409							6.5	
	39.0 / 39.5					3520									644		1158		409							6.5	
	39.5 / 40.0					3520									644		1128		409							6.5	
	40.0 / 40.5					3520									644		1057		409							6.5	
	40.5 / 41.0					3520									644		963		409							6.5	
	41.0 / 41.6					4294									787		1069		499							7.9	
	SUBTOTAL	16,519	74,013	13,917	11,845	64,825	9965					2315	1670	15,453	13,560	20,932	23,084	10,118	8857						155.8	134.9	

SUMMARY OF QUANTITIES

Q-1

REVISED BY | DATE REVISED
JOLENA ASTIN | BILL SUTHERLAND
CALCULATED-DESIGNED BY | CHECKED BY
FUNCTIONAL SUPERVISOR: JOHN MARTIN

STATE OF CALIFORNIA - DEPARTMENT OF TRANSPORTATION
Caltrans® DESIGN

P:\proj1\02\3E810_plans\pse\02000201181pa001.dgn

LAST REVISION 04-29-11 | DATE PLOTTED => 27-JUN-2011 | TIME PLOTTED => 12:20

Dist	COUNTY	ROUTE	POST MILES TOTAL PROJECT	SHEET No.	TOTAL SHEETS
02	Teh,Sha	5	R27.1/42.1, 0.0/0.9	115	215

William D. Sutherland 06-17-11
REGISTERED CIVIL ENGINEER DATE

06-17-11
PLANS APPROVAL DATE

REGISTERED PROFESSIONAL ENGINEER W. D. SUTHERLAND No. C61579 Exp. 6-30-13 CIVIL STATE OF CALIFORNIA

THE STATE OF CALIFORNIA OR ITS OFFICERS OR AGENTS SHALL NOT BE RESPONSIBLE FOR THE ACCURACY OR COMPLETENESS OF SCANNED COPIES OF THIS PLAN SHEET.

NOTE:
1. ROADWAY EMBANKMENT DOES NOT INCLUDE AN EXPANSION OR CONTRACTION FACTOR.
2. (N) - NOT A SEPARATE PAY ITEM, FOR INFORMATION ONLY

ROADWAY QUANTITIES

STAGE	MAINLINE POSTMILE LIMITS	COLD PLANE ASPHALT CONCRETE PAVEMENT						ROADWAY EXC	ROADWAY EMB (N)	IMPORTED MATERIAL (SHOULDER BACKING)	CLASS 2 AGGREGATE BASE	HOT MIX ASPHALT								RUBBERIZED HOT MIX ASPHALT (OPEN GRADED HIGH BINDER)		RUMBLE STRIP		PLACE HOT MIX ASPHALT (MISC AREA)	TACK COAT		MINOR CONCRETE (MISC CONSTRUCTION)
		SOUTHBOUND			NORTHBOUND							HMA		HMA (15% MAX RAP, LONG LIFE)		HMA (25% RAP, LONG LIFE)		HMA (RICH BOTTOM, LONG LIFE)									
		MEDIAN SHLD	LANES	OUTSIDE SHLD	MEDIAN SHLD	LANES	OUTSIDE SHLD																				
								SB/NB	SB/NB	SB/NB	SB/NB	SB	NB	SB	NB	SB	NB	SB	NB	SB	NB	SB	NB	SB/NB	SB	NB	SB/NB
	PM-PM	SQYD	SQYD	SQYD	SQYD	SQYD	SQYD	CY	CY	TON	CY	TON	TON	TON	TON	TON	TON	TON	TON	TON	TON	STA	STA	SQYD	TON	TON	CY
6 & 7	R27.1 / R27.5		5794			5714				120		1291	1273							635	640	43	43		7.4	6.9	
	R27.5 / R28.2		9152			9135				179		2039	2035							1004	1002	69	69		9.6	9.6	
	R28.2 / R28.5		4355							129		970								477		33			4.6	0.0	
	R28.5 / 30.5		7180							17		1599								836		54			7.8	0.0	
	30.5 / 31.0		7040							20		1568								786		53			7.5	0.0	
	31.0 / 31.5		7040							91		1568								807		53			7.6	0.0	
	31.5 / 31.7		3519							78		784								416		26			4.0	0.0	
	31.8 / 32.0		3065			3253				88		683	725							360	357	23	24		3.4	3.5	
	32.0 / 32.5		7040			7040				232		1568	1568							782	772	53	53		7.4	7.4	
	32.5 / 33.0		7040			7040				134		1568	1568							831	772	53	53		7.8	7.4	
	33.0 / 33.5		7040			7040				153		1568	1568							800	772	53	53		7.6	7.4	
	33.5 / 34.0		7040			7040				90		1568	1568							809	772	53	53		7.6	7.4	
	34.0 / 34.5		7040			7040				179		1568	1568							799	772	53	53		7.5	7.4	
	34.5 / 35.0		7040			7040				213		1568	1568							808	772	53	53		7.6	7.4	
	35.0 / 35.5		7040			2561				120		1568	570							772	281	53	19		7.4	2.8	
	35.5 / 36.0		7040							91		1568								842		53			7.8	0.0	
	36.0 / 36.5		7040							99		1568								807		53			7.6	0.0	
	36.5 / 37.1		8448							90		1882								927		63			8.9	0.0	
	37.1 / 37.5									131										617	657	42	42		3.4	3.6	
	37.5 / 38.0									195										772	793	53	53		4.2	4.3	
	38.0 / 38.5									167										765	811	53	53		4.1	4.4	
	38.5 / 39.0									149										762	809	53	53		4.1	4.4	
	39.0 / 39.5									80										867	866	53	53		4.6	4.8	
	39.5 / 40.0									124										1010	845	53	49		5.2	4.7	
	40.0 / 40.5									134										1010	772	53	53		5.2	4.2	
	40.5 / 41.0									155										968	751	53	43		5.0	4.0	
	41.0 / 41.6									238										972	997	64	64		5.2	5.5	
	41.6 / 41.9		5110			5085				37		1138	1133							620	624	38	38		5.7	5.8	
	0.1 / 0.5		4816			4816				0		1073	1073							730	745	36	36		6.5	6.6	
	0.5 / 0.9		5773			5773				119		1286	1286							742	743	43	43		6.7	6.7	
	SUB TOTAL		134,652			78,577				3652		29,993	17,503							23,333	16,325	1488	1053		189.0	126.2	
	SUB TOTAL Q-1	16,519	74,013	13,917	11,845	64,825	9965					2315	1670	15,453	13,560	20,932	23,084	10,118	8857						155.8	134.9	
	NORTHERN CROSSOVER							3754	1210		3600	3389													26		
	SOUTHERN CROSSOVER							2865	863		1785	2093													28		
	SHOULDER WIDENING							889			583	683															
	SHOULDER MODIFICATION			39,600						441		4410															
	MVP - LOCATION 1							25	11	6	786	21													1		4.1
	MVP - LOCATION 2							7	126	6	786	21													1		4.1
	MVP - LOCATION 3							114	1	6	786	21													1		4.1
	MVP - LOCATION 4							26	14	6	786	21													1		4.1
	WEITH-IN-MOTION (Q-3)							38		2																	
	EVT'S (Q-3)							253	227	46	239	351													5		
	CEMENT TREATED BASE (Q-3)							3500																			
	CONFORMS (Q-5)			19,550																							
	FROM GORES (Q-3)										43																
	FROM HMA DIKE (Q-4)											1108															
	FROM DRAINAGE (DQ-2)							327.8			214.6	708.2												1344.3			
	FROM CURB & GUTTER (Q-4)											102.1								133				1968			
	FROM MBGR (Q-3)											160												860			
	FROM RAMPS (Q-5)			73,175						1214		10,878								10,222					80.6		
	TOTAL			536,638				11,798.8	2452	5379	9608.6	75,447.3		29,013		44,016		18,975		50,013		2541		4172.3	749.5		16.4

SUMMARY OF QUANTITIES
Q-2

FUNCTIONAL SUPERVISOR: JOHN MARTIN
CALCULATED-DESIGNED BY: JOLENA ASTIN
CHECKED BY: BILL SUTHERLAND
REVISED BY / DATE REVISED

STATE OF CALIFORNIA - DEPARTMENT OF TRANSPORTATION
Caltrans® DESIGN

P:\proj1\02\3E810_plans\pse\02000201811pa002.dgn

LAST REVISION 05-02-11
DATE PLOTTED => 27-JUN-2011
TIME PLOTTED => 12:20

Dist	COUNTY	ROUTE	POST MILES TOTAL PROJECT	SHEET No.	TOTAL SHEETS
02	Teh,Sha	5	R27.1/42.1, 0.0/0.9	116	215

REGISTERED CIVIL ENGINEER 06-17-11 DATE

06-17-11
PLANS APPROVAL DATE

REGISTERED PROFESSIONAL ENGINEER W. D. SUTHERLAND No. C61579 Exp. 6-30-13 CIVIL STATE OF CALIFORNIA

THE STATE OF CALIFORNIA OR ITS OFFICERS OR AGENTS SHALL NOT BE RESPONSIBLE FOR THE ACCURACY OR COMPLETENESS OF SCANNED COPIES OF THIS PLAN SHEET.

NOTE:
1. (N) - NOT A SEPARATE PAY ITEM, FOR INFORMATION ONLY
2. ALL NB & SB TRAVELED WAY EXCEPT SB NO 2 LANE, PM 40.3 PM 40.8.

METAL BEAM GUARD RAILING

MAINLINE POSTMILE LIMITS	LOCATION	INSIDE/OUTSIDE	REMOVE METAL BEAM GUARD RAILING	ADJUST METAL BEAM GUARD RAILING	HOT MIX ASPHALT	PLACE HOT MIX ASPHALT (MISC AREA)	METAL BEAM GUARD RAILING	VEGETATION CONTROL (MINOR CONRETE)	END ANCHOR ASSEMBLY (TYPE SFT)	RECONSTRUCT END ANCHOR ASSEMBLY	ALTERNATIVE IN-LINE TERMINAL SYSTEM	RECONSTRUCT TERMINAL SYSTEM	COMMENTS
PM-PM	SB/NB		LF	LF	TON	SQYD	LF	SQYD	EA	EA	EA	EA	
27.09 / 27.13	SB	INSIDE		200								1	
27.09 / 27.32	SB	OUTSIDE		38						1		1	
28.19 / 28.21	SB	OUTSIDE		112				93				1	
28.37 / 28.39	SB	OUTSIDE		25				93				1	
28.38 / 28.39	SB	OUTSIDE					100	61	1		1		MVP1
30.42 / 30.56	SB	OUTSIDE		25								1	
31.03 / 31.07	SB	OUTSIDE		25								1	
31.24 / 31.30	SB	OUTSIDE		38				163		1		1	
31.69 / 31.75	SB	OUTSIDE		38				163		1		1	
31.78 / 31.88	SB	INSIDE		25				263				1	
31.79 / 31.89	SB	OUTSIDE		25				264				1	
32.23 / 32.24	SB	OUTSIDE		25								1	
33.00 / 33.12	SB	INSIDE		25								1	
33.45 / 33.81	SB	INSIDE		38						1		1	
33.48 / 33.51	SB	OUTSIDE		38						1		1	
33.91 / 34.17	SB	INSIDE		38						1		1	
34.22 / 34.34	SB	INSIDE		38						1		1	
34.22 / 34.34	SB	OUTSIDE		38						1		1	
35.73 / 35.80	SB	OUTSIDE		38				184		1		1	
36.10 / 36.13	SB	OUTSIDE		38						1		1	
36.36 / 36.38	SB	OUTSIDE		25				72				1	
38.72 / 38.72	SB	OUTSIDE		25				58				1	
38.97 / 39.32	SB	OUTSIDE		25								1	
39.92 / 40.22	SB	OUTSIDE		25								1	
40.46 / 40.46	SB	INSIDE	7								1		STAGE 1**
40.46 / 40.50	SB	INSIDE						148					
40.48 / 40.50	SB	OUTSIDE		25				84				1	
41.48 / 41.50	SB	OUTSIDE					75	22		1			MVP4
41.52 / 41.55	SB	OUTSIDE		25				116				1	VC TO PCC PAD
41.61 / 41.63	SB	OUTSIDE		93				89	1			1	VC TO PCC PAD
41.93 / 41.98	SB	OUTSIDE		25				148				1	
0.16 / 0.45	SB	OUTSIDE		25				664				1	
0.66 / 0.67	SB	OUTSIDE		38						1		1	
0.91 / 0.91	SB	OUTSIDE		25				68				1	
27.10 / 27.30	NB	OUTSIDE		38						1		1	
28.11 / 28.15	NB	INSIDE		200								1	
28.12 / 28.15	NB	OUTSIDE		124								1	
32.21 / 32.23	NB	OUTSIDE					100	61	1		1		MVP2
34.29 / 34.32	NB	INSIDE		124				93	1			1	
34.30 / 34.32	NB	OUTSIDE		126				94	1			1	
38.69 / 38.70	NB	OUTSIDE		58					1			1	
38.98 / 39.28	NB	OUTSIDE		38	80	431				1		1	
38.99 / 39.28	NB	INSIDE		38	80	429				1		1	
39.28 / 39.28	NB	INSIDE	7								1		STAGE 1**
39.53 / 39.57	NB	OUTSIDE		38				78		1		1	
39.80 / 39.82	NB	OUTSIDE						78					VC TO PCC PAD
40.34 / 40.35	NB	OUTSIDE						93					VC TO PCC PAD
40.51 / 40.53	NB	OUTSIDE					100	61	1		1		MVP3
41.50 / 41.51	NB	OUTSIDE		47				62	1			1	
41.90 / 41.97	NB	OUTSIDE		25				203				1	
0.15 / 0.43	NB	OUTSIDE		25								1	
0.63 / 0.64	NB	OUTSIDE		38				63		1		1	
0.88 / 0.90	NB	INSIDE											
0.88 / 0.89	NB	OUTSIDE		38				61		1		1	
	TOTAL		14	2180	160 *	860 *	375	3700	8	18	5	44	

* ADDITIONAL QUANTITIES SHOWN ELSEWHERE. SEE ROADWAY QUANTITIES TABLE SHEET Q-2
** REMOVE END ANCHOR ASSEMBLY (TYPE SFT). PLACE ALTERNATIVE IN-LINE TERMINAL SYSTEM PRIOR TO SHIFTING TRAFFIC TO THE OPPOSING TRAFFIC DIRECTION

GORE PAVEMENTS

MAINLINE POSTMILE LIMITS	LOCATION	ROCK BLANKET	CLASS II AGGREGATE BASE	MINOR CONCRETE (TEXTURED PAVING)
PM-PM	SB/NB	SQYD	CY	SQYD
R28.5 / R28.6	SB/NB		43	386
30.8 / 31.2	SB/NB	1056		
32.0 / 31.4	SB/NB	1234		
33.1 / 35.0	SB/NB	653		
36.1 / 36.6	SB/NB	1045		
38.5 / 39.0	SB/NB	876		
39.9 / 40.8	NB	364		
41.3 / 41.7	SB/NB	658		
0.7 / 0.8	SB/NB	336		
TOTAL		6222	43*	386

* ADDITIONAL QUANTITIES SHOWN ELSEWHERE.
SEE ROADWAY ITEMS TABLE SHEET Q-2

GROOVE EXISTING CONCRETE PAVEMENT

PM-PM	LOCATION	LF
39.82 - 39.90	NB	1060
40.78 - 40.97	NB	3120
	TOTAL	4180

WEIGH-IN-MOTION ***

PM-PM	LOCATION	ROADWAY EXCAVATION	CLASS 2 AGGREGATE BASE	CONCRETE PAVEMENT (WEIGH-IN-MOTION)	GRIND CONCRETE PAVEMENT (WEIGH-IN-MOTION)	REMOVE CONCRETE PAVEMENT
		CY	CY	CY	CY	SQYD
37.05 - 37.07	NB	19		222	667	297
41.60 - 41.64	SB	19	2	222	667	537
	TOTAL	38 *	2 *	444	1334	834

* ADDITIONAL QUANTITIES SHOWN ELSEWHERE. SEE ROADWAY ITEMS TABLE SHEET Q-2
*** SEE CONSTRUCTION DETAIL SHEET C-10

EMERGENCY VEHICLE TURNAROUND

DESCRIPTION	ROADWAY EXCAVATION	(N) ROADWAY EMBANKMENT	IMPORT MATERIAL (SHOULDER BACKING)	CLASS 2 AGGREGATE BASE	HOT MIX ASPHALT	TACK COAT
	CY	CY	TON	CY	TON	TON
EVT1	42	11	5	29	42	1
EVT2	74	116	24	107	157	2
EVT3	137	100	17	103	152	2
TOTAL	253*	227*	46 *	239 *	351*	5 *

* ADDITIONAL QUANTITIES SHOWN ELSEWHERE. SEE ROADWAY QUANTITY TABLE SHEET Q-2

CEMENT TREATED BASE (PLANT-MIXED, CLASS A)

DESCRIPTION		LENGTH	WIDTH	DEPTH	CEMENT TREATED BASE	ROADWAY EXCAVATION
PM-PM	LOCATION	LF	LF	LF	CY	CY
40.3 TO 40.8	SB NO 2 LANE	2640	12	0.5 #	587	587
37.1 TO 41.6	NOTE 2	100 MIN 1000 MAX	10 MIN 22 MAX	0.5 TO 0.67 #	2913	2913
TOTAL					3500	3500*

* ADDITIONAL QUANTITIES SHOWN ELSEWHERE. SEE ROADWAY ITEMS TABLE SHEET Q-2
\# EXISTING CTB THICKNESS VARIES FROM 0.5' TO 0.67'. MATCH EXISTING THICKNESS.

SUMMARY OF QUANTITIES

Q-3

REVISED BY | DATE REVISED
JOLENA ASTIN | JOHN MARTIN
CALCULATED-DESIGNED BY | CHECKED BY
FUNCTIONAL SUPERVISOR: JOHN MARTIN
STATE OF CALIFORNIA - DEPARTMENT OF TRANSPORTATION
Caltrans DESIGN

LAST REVISION 03-07-11 | DATE PLOTTED => 27-JUN-2011 | TIME PLOTTED => 12:20

P:\proj1\02\3E810_plans\pse\02000201811pa003.dgn

Dist	COUNTY	ROUTE	POST MILES TOTAL PROJECT	SHEET No.	TOTAL SHEETS
02	Teh,Sha	5	R27.1/42.1, 0.0/0.9	117	215

REGISTERED CIVIL ENGINEER 06-17-11 DATE

06-17-11
PLANS APPROVAL DATE

REGISTERED PROFESSIONAL ENGINEER CHRIS S. GAIDO No. C62535 Exp. 12-31-11 CIVIL STATE OF CALIFORNIA

THE STATE OF CALIFORNIA OR ITS OFFICERS OR AGENTS SHALL NOT BE RESPONSIBLE FOR THE ACCURACY OR COMPLETENESS OF SCANNED COPIES OF THIS PLAN SHEET.

HOT MIX ASPHALT DIKE

MAINLINE POSTMILE LIMITS	COUNTY	LOCATION	LOCATION SHOULDER	REMOVE ASPHALT CONCRETE DIKE	HOT MIX ASPHALT	PLACE HOT MIX ASPHALT DIKE (TYPE A)		PLACE HOT MIX ASPHALT DIKE (TYPE D) **	PLACE HOT MIX ASPHALT DIKE (TYPE E)		PLACE HOT MIX ASPHALT DIKE (TYPE F) **	NOTES
						CASE I	CASE II		CASE I	CASE II		
PM-PM	SHA/TEH	SB/NB	LT/RT	LF	TON	LF	LF	LF	LF	LF	LF	
27.49 / 27.60	TEH	NB	RT	581	37.92			581				
28.12 / 28.15	TEH	NB	RT	124	0.07						124	UNDER MBGR
33.60 / 34.00	TEH	NB	RT	2112	137.84			2112				
34.39 / 34.45	TEH	NB	RT		9.18				317			
37.99 / 38.09	TEH	NB	RT		15.32				529			
38.13 / 38.19	TEH	NB	RT		9.18				317			
39.28 / 39.54	TEH	NB	RT	1373	41.29	1373						
39.57 / 39.79	TEH	NB	RT	1162	34.94	1162						
40.07 / 40.12	TEH	NB	LT		7.64					264		
40.51 / 40.53	TEH	NB	RT		2.49			85				MVP3
0.63 / 0.66	SHA	NB	RT	159	4.78	159						CONFORM TO EXST DIKE. DIKE TERMINAL AT GR
0.67 / 0.72	SHA	NB	RT	264	7.94	264						BEG AT GR TERMINAL. TRANSITION TO RAMP
27.47 / 27.58	TEH	SB	RT	581	16.82					581		BEG AT TERMINUS OF GORE CONTRAST PAVEMENT
28.62 / 30.40	TEH	SB	LT	1530	44.30					1530		STATION EQU WITHIN LIMITS
28.59 / 30.17	TEH	SB	RT	425	27.74			425				STATION EQU WITHIN LIMITS
30.17 / 30.39	TEH	SB	RT	1162	34.94	1162						CONFORM TO TYPE D DIKE
30.39 / 30.46	TEH	SB	RT	370	10.71					370		CONFORM TO TYPE A DIKE
30.43 / 30.55	TEH	SB	LT	634	18.36					634		REM TYPE A DIKE
30.90 / 31.04	TEH	SB	LT	740	21.43					740		
31.33 / 31.37	TEH	SB	RT	212	6.14					212		
31.38 / 31.48	TEH	SB	RT	529	15.91		529					
31.51 / 31.67	TEH	SB	LT	845	24.47					845		
31.53 / 31.66	TEH	SB	RT	687	20.66		687					
31.91 / 31.97	TEH	SB	RT	317	20.69			317				TRANSITION TO RAMP DIKE
32.08 / 32.39	TEH	SB	RT	1637	47.40					1637		BEG AT 23' PT GORE
32.49 / 32.70	TEH	SB	RT	1109	32.11					1109		BEG AT GMP DI
32.77 / 32.89	TEH	SB	RT		18.36					634		
32.89 / 33.04	TEH	SB	RT	792	23.82		792					
33.12 / 33.47	TEH	SB	RT	1849	55.60		1849					
33.12 / 33.19	TEH	SB	LT	370	10.71					370		
33.47 / 33.81	TEH	SB	LT	1796	52.01					1796		
33.48 / 33.63	TEH	SB	RT	793	51.76			793				
34.80 / 34.90	TEH	SB	RT	529	15.91		529					
35.43 / 35.64	TEH	SB	RT	1109	33.35		1109					
35.90 / 36.09	TEH	SB	RT	1004	30.19		1004					
36.25 / 36.30	TEH	SB	RT	264	7.64					264		
36.93 / 37.01	TEH	SB	RT		12.25					423		
37.65 / 37.80	TEH	SB	RT	792	22.93					792		
38.12 / 38.28	TEH	SB	RT	845	24.47					845		
39.33 / 39.41	TEH	SB	RT		12.25					423		
39.57 / 39.69	TEH	SB	RT		18.36					634		
39.72 / 39.92	TEH	SB	RT		30.61					1057		
0.58 / 0.64	SHA	SB	RT	317	9.53		317					
0.66 / 0.74	SHA	SB	RT	423	27.61			423				
SUMMARY				27,436	1108	4120	6816	4736	1163	15,160	124	
TOTAL				27,436	1108*	10936		4736	16,323		124	

* ADDITIONAL QUANTITIES SHOWN ELSEWHERE. SEE ROADWAY QUANTITIES TABLE SHEET Q-2
** UNLESS OTHERWISE NOTED, NEW DIKE SHALL BE CONSTRUCTED PER "CASE II" STANDARD. SEE SHT C-10

STORM WATER POLLUTION PREVENTION

ITEM	UNIT	QTY
TEMPORARY FIBER ROLL	LF	6200
TEMPORARY CONSTRUCTION ENTRANCE	EA	6
TEMPORARY CHECK DAM	LF	240
TEMPORARY COVER	SQYD	1400
MOVE-IN/MOVE-OUT (TEMP EROSION CONTROL)	EA	2
TEMPORARY DRAINAGE INLET PROTECTION	EA	38
TEMPORARY HYDRAULIC MULCH (POLYMER STABLIZED FIBER MATRIX)	SQYD	32,500
TEMPORARY SOIL BINDER	SQYD	32,500
RAIN EVENT ACTION PLAN	EA	96
STORM WATER ANNUAL REPORT	EA	3
STORM WATER SAMPLING ANALYSIS DAY	EA	42

CURB AND GUTTER MODIFICATION

LOCATION			HOT MIX ASPHALT	RUBBERIZED HOT MIX ASPHALT (OPEN GRADED HIGH BINDER)	PLACE HOT MIX ASPHALT (MISC AREA)
RAMP	NB/SB	ON/OFF	TON	TON	SQYD
WILCOX GOLF RD OC	SB	ON	9.2	12	178
WILCOX GOLF RD OC	SB	OFF	7.6	10	147
WILCOX GOLF RD OC	NB	ON	8.5	11	164
WILCOX GOLF RD OC	NB	OFF	8.5	11	164
JELLYS FERRY RD OC	SB	ON	9.8	13	189
JELLYS FERRY RD OC	SB	OFF	9.7	13	187
JELLYS FERRY RD OC	NB	ON	9.2	12	178
JELLYS FERRY RD OC	NB	OFF	9.0	12	173
HOOKER CREEK RD OC	SB	ON	6.5	8	124
HOOKER CREEK RD OC	NB	OFF	8.4	11	162
SUNSET HILLS DRIVE OC	SB	ON	5.0	6	96
SUNSET HILLS DRIVE OC	NB	OFF	10.7	14	206
TOTAL			102.1*	133 *	1968 *

* ADDITIONAL QUANTITIES SHOWN ELSEWHERE,
SEE ROADWAY QUANTITIES TABLE, SHEET Q-2.

EROSION CONTROL

ITEM		UNIT	QTY
SEED	(N)	LB	366
FIBER	(N)	LB	7500
FERTILIZER	(N)	LB	300
TACKIFIER	(N)	LB	300
COMPOST	(N)	CY	3.6
EROSION CONTROL (HYDROSEED)(ACRE)		ACRE	3

NOTE:
1. (N) NOT A SEPARATE PAY ITEM
2. PLACE EROSION CONTROL (HYDROSEED)(ACRE) ON ALL DISTURBED AREAS

SUMMARY OF QUANTITIES
Q-4

REVISED BY | DATE REVISED
CHRIS GAIDO | TRAVIS GURNEY
CALCULATED-DESIGNED BY | CHECKED BY
FUNCTIONAL SUPERVISOR
JOHN MARTIN

STATE OF CALIFORNIA - DEPARTMENT OF TRANSPORTATION
Caltrans®
DESIGN

P:\proj1\02\3E810_plans\pse\02000201811pa004.dgn

LAST REVISION 05-02-11 | DATE PLOTTED => 27-JUN-2011 | TIME PLOTTED => 12:22

Dist	COUNTY	ROUTE	POST MILES TOTAL PROJECT	SHEET No.	TOTAL SHEETS
02	Teh,Sha	5	R27.1/42.1, 0.0/0.9	118	215

REGISTERED CIVIL ENGINEER 06-17-11 DATE

06-17-11
PLANS APPROVAL DATE

REGISTERED PROFESSIONAL ENGINEER W. D. SUTHERLAND No. C61579 Exp. 6-30-13 CIVIL STATE OF CALIFORNIA

THE STATE OF CALIFORNIA OR ITS OFFICERS OR AGENTS SHALL NOT BE RESPONSIBLE FOR THE ACCURACY OR COMPLETENESS OF SCANNED COPIES OF THIS PLAN SHEET.

NOTE:
1. (N) - NOT A SEPARATE PAY ITEM, FOR INFORMATION ONLY

PARKING AREA SEAL COAT

DESCRIPTION	POST MILE	(N) AREA	TON
		SQFT	
NB SRRA-PARKING LOT	33.34	71,811	83.1
SB SRRA-PARKING LOT	34.70	108,081	125.0
SB COTTONWOOD TIF	40.81	58,354	67.5
TOTAL			275.6

REPLACE CONCRETE

DESCRIPTION	POST MILE	SLAB SIZE (N) DEPTH	LENGTH	WIDTH	(N) NUMBER OF SLABS	(N) REMOVE CONCRETE PAVEMENT	REPLACE CONCRETE PAVEMENT (RAPID STRENGTH CONCRETE)	SEAL PAVEMENT JOINT	DOWEL BAR (DRILL & BOND)
		FT	FT	FT	EA	SQYD	CY	LF	EA
NB TIF OFF-RAMP	39.94	1.5	15	14	4	93	47	120	26
	39.97	1.5	15	14	5	117	58	150	26
	39.99	1.5	15	14	5	117	58	150	26
	40.01	1.5	15	14	2	47	23	60	26
	40.02	1.5	15	14	2	47	23	60	26
					TOTAL	421	209	540	130

RAMP QUANTITIES

DESCRIPTION		POST MILE	COLD PLANE ASPHALT CONCRETE PAVEMENT	HOT MIX ASPHALT	RUBBERIZED HOT MIX ASPHALT (OPEN GRADED HIGH BINDER)	IMPORTED MATERIAL (SHOULDER BACKING)	TACK COAT
			SQYD	TON	TON	TON	TON
ADOBE ROAD	NB OFF	R27.32			337	29	1.5
	SB ON	R27.33			263	36	1.2
	NB ON	R27.59			306	37	1.4
	SB OFF	R27.63			209	32	0.9
NORTH RED BLUFF	NB ON	R28.42 & R28.59			542	40	2.4
	SB OFF	R28.53			425	32	1.9
WILCOX ROAD	SB ON	30.87	567	85	238	39	1.4
	NB OFF	30.89	3577	532	242	31	2.8
	SB OFF	31.20	3187	474	216	32	2.5
	NB ON	31.21			272	36	1.2
JELLYS FERRY ROAD	NB OFF	32.06	3834	570	259	34	3.0
	SB ON	32.07	3825	569	259	41	3.0
	NB ON	32.36	4556	677	308	44	3.5
	SB OFF	32.43	3691	549	250	35	2.8
NB SRRA	NB OFF	33.14			149	21	0.7
	NB ON	33.43	3431	510	232	16	2.7
SB SRRA	SB ON	34.56	2279	339	154	21	1.8
	SB OFF	34.92			207	26	0.9
HOOKER CREEK	NB OFF	36.13	4011	596	271	45	3.1
	SB ON	36.28	3360	499	227	34	2.6
	SB OFF	36.52	3320	494	225	30	2.6
	NB ON	36.54	4986	741	337	41	3.8
SUNSET HILLS	SB ON	38.55	4399	654	297	42	3.4
	NB OFF	38.58	3258	484	220	26	2.5
	NB ON	38.90	3259	484	220	38	2.5
	SB OFF	38.94	6920	1028	468	40	5.3
SB TIF	SB ON	40.64	1185	176	80	5	1.0
	SB OFF	40.81	4743	705	321	31	3.6
BOWMAN ROAD	NB OFF	41.33			351	44	1.6
	SB ON	41.39			359	36	1.6
	NB ON	41.66	941	140	237	30	1.6
	SB OFF	41.69	665	99	294	38	1.7
GAS POINT ROAD	NB OFF	0.74	1998	297	342	35	2.5
	SB ON	0.78			315	32	1.4
	NB ON	1.10	1183	176	395	45	2.4
	SB OFF	1.10			395	40	1.8
TOTALS			73,175 *	10,878*	10,222 *	1214*	80.6*

* ADDITIONAL QUANTITIES SHOWN ELSEWHERE. SEE ROADWAY QUANTITY TABLE SHEET Q-2

PAVEMENT CONFORMS

DESCRIPTION	COUNTY	POST MILE	COLD PLANE ASPHALT CONCRETE PAVEMENT (SQYD)
BEGIN CONSTRUCTION	TEH	R27.09	350
ADOBE ROAD OC	TEH	R27.47	900
DRIBBLE CREEK BRIDGE	TEH	R28.16	525
N. RED BLUFF OC	TEH	R28.37	625
WILCOX ROAD OC	TEH	31.04	985
S FORK BLUE TENT CR	TEH	31.75	550
JELLYS FERRY RD OC	TEH	32.23	1220
CONFORM NB NO WORK	TEH	35.50	175
HOOKER CREEK ROAD OC	TEH	36.37	1000
CONFORM NB NO WORK	TEH	37.10	175
SUNSET HILLS RD OC	TEH	38.71	935
NB TIF OFF PCC RAMP	TEH	39.84	1850
SB TIF	TEH	40.64	1570
NB TIF ON PCC RAMP	TEH	40.78	4420
BOWMAN ROAD OC	TEH	41.52	1280
SB WIM	TEH	41.60	950
COTTONWOOD CR BRIDGE	TEH	41.98	525
GAS POINT ROAD OC	SHA	0.90	1340
END CONSRUCTION	SHA	0.90	175
TOTAL			19,550*

* ADDITIONAL QUANTITIES SHOWN ELSEWHERE.
SEE ROADWAY QUANTITY TABLE SHEET Q-2

SHOULDER WIDENING

LOCATION	SB/NB	ROADWAY EXCAVATION	HOT MIX ASPHALT	CLASS 2 AGGREGATE BASE
		CY	TON	CY
TEH PM 37.42 TO TEH PM 37.59	SB	95	73	62
TEH PM 37.84 TO TEH PM 38.03	SB	110	84	72
TEH PM 38.55 TO TEH PM 38.86	SB	175	134	114
TEH PM 39.21 TO TEH PM 39.26	SB	30	23	20
TEH PM 41.42 TO TEH PM 41.52	SB	54	42	36
TEH PM 37.44 TO TEH PM 37.64	NB	112	86	74
TEH PM 37.82 TO TEH PM 37.92	NB	58	45	38
TEH PM 38.27 TO TEH PM 38.30	NB	15	12	10
TEH PM 39.91 TO TEH PM 40.07	NB	87	67	57
TEH PM 40.47 TO TEH PM 40.72	NB	142	109	93
TEH PM 41.34 TO TEH PM 41.35	NB	11	8	7
TOTAL		889*	683*	583*

* ADDITIONAL QUANTITIES SHOWN ELSEWHERE. SEE ROADWAY QUANTITY TABLE SHEET Q-2

REPLACE ASPHALT CONCRETE SURFACING

DESCRIPTION	POST MILE	(N) LENGTH	(N) WIDTH	(N) DEPTH	REPLACE AC SURFACING
		LF	LF	LF	CY
WILCOX ROAD SB ON-RAMP	30.87	1000	4	0.33	147
NB SRRA - TRUCK PARKING LOT	33.34	400	6	0.33	88
		40	10	0.33	15
		50	10	0.33	19
		110	10	0.33	41
		70	10	0.33	26
		70	10	0.33	26
SB SRRA - TRUCK PARKING LOT	34.70	170	8	0.33	50
		160	20	0.33	118
		50	20	0.33	37
		50	30	0.33	55
		100	20	0.33	74
		90	8	0.33	27
SB TIF ON-RAMP	40.64	160	50	0.33	294
TEH PM 37.1 TO TEH PM 41.6	37.1 TO 41.6	100 MIN 1000 MAX	4 MIN 10 MAX	0.25	2000
TOTAL					3017

SUMMARY OF QUANTITIES

Q-5

REVISED BY | DATE REVISED
KARLIE SMITH | BILL SUTHERLAND
CALCULATED-DESIGNED BY | CHECKED BY
FUNCTIONAL SUPERVISOR: JOHN MARTIN
STATE OF CALIFORNIA - DEPARTMENT OF TRANSPORTATION
Caltrans® DESIGN
P:\proj1\02\3E810_plans\pse\02000201811pa005.dgn

LAST REVISION 04-13-11 | DATE PLOTTED => 27-JUN-2011 | TIME PLOTTED => 12:21

Dist	COUNTY	ROUTE	POST MILES TOTAL PROJECT	SHEET No.	TOTAL SHEETS
02	Teh,Sha	5	R27.1/42.1, 0.0/0.9	119	215

J. Hannigan 05-31-11
REGISTERED ELECTRICAL ENGINEER DATE

06-17-11
PLANS APPROVAL DATE

REGISTERED PROFESSIONAL ENGINEER J.M. HANNIGAN No. E13665 Exp. 6-30-11 ELECTRICAL STATE OF CALIFORNIA

THE STATE OF CALIFORNIA OR ITS OFFICERS OR AGENTS SHALL NOT BE RESPONSIBLE FOR THE ACCURACY OR COMPLETENESS OF SCANNED COPIES OF THIS PLAN SHEET.

LEGEND

(PB) OBJECT MARKER (TYPE PB) AND PULL BOX PAVING

(pb) EXISTING PULL BOX MARKER

—— AXLE SENSOR

ABBREVIATIONS

TC	TELEPHONE CABLE
ITS	INTELLIGENT TRANSPORTATION SYSTEMS
WIM	WEIGH-IN-MOTION SYSTEM
IC	IRRIGATION CONTROLLER
STC	SCREENED TRANSMISSION CABLE
WSBS	WEIGH STATION BYPASS SYSTEM
SLC	SCALE LEAD-IN CABLE

EXISTING TRAFFIC MANAGEMENT SYSTEM ELEMENTS TO BE MAINTAINED

TYPE	PM	DESCRIPTION
CCTV	Teh-5-30.97	WILCOX Rd ON RIGHT NB SHOULDER
CMS	Teh-5-31.05	WILCOX Rd OC FSBT
CCTV	Teh-5-31.06	WILCOX Rd ON RIGHT SB SHOULDER
CMS	Teh-5-36.78	NINE MILE HILL FNBT
CMS	Teh-5-39.82	TRUCK SCALES FNBT
CMS	Teh-5-41.52	BOWMAN Rd OC FSBT

EXISTING LOOP DETECTORS TO BE MAINTAINED

Sta. No.	PM	TYPE	DESCRIPTION
R225	Teh-5-R27.32	1-Ramp Loop	Adobe RD NB OFF
R222	Teh-5-R27.44	1-Ramp Loop	Adobe RD SB ON
R223	Teh-5-R27.48	1-Ramp Loop	Adobe RD NB ON
R224	Teh-5-R27.55	1-Ramp Loop	Adobe RD SB OFF
R166	Teh-5-R28.53	1-Ramp Loop	Hess RD/Old 99 SB OFF
R168	Teh-5-R30.97	1-Ramp Loop	Wilcox RD SB ON
R171	Teh-5-31.2	1-Ramp Loop	Wilcox RD NB ON
RA4	Teh-5-34.92	1-SRRA	S/B Red Bluff RA
R184	Teh-5-41.33	1-Ramp Loop	Bowman RD NB OFF
R185	Teh-5-41.38	1-Ramp Loop	Bowman RD SB ON
R186	Teh-5-41.66	1-Ramp Loop	Bowman RD NB ON
R187	Teh-5-41.68	1-Ramp Loop	Bowman RD SB OFF
R189	Sha-5-0.78	1-Ramp Loop	4th/Gas Point SB ON

THIS PLAN IS ACCURATE FOR ELECTRICAL WORK ONLY.

ELECTRICAL
NO SCALE

E-1

REVISED BY | DATE REVISED
J. M. HANNIGAN | TERI ANDERSON
CALCULATED-DESIGNED BY | CHECKED BY
FUNCTIONAL SUPERVISOR: ROB STINGER

STATE OF CALIFORNIA - DEPARTMENT OF TRANSPORTATION
Caltrans ELECTRICAL DESIGN

P:\proj1\02\3E810_plans\pse\02000201811ua001.dgn

LAST REVISION 04-26-11 | DATE PLOTTED => 27-JUN-2011 | TIME PLOTTED => 12:21

Dist	COUNTY	ROUTE	POST MILES TOTAL PROJECT	SHEET No.	TOTAL SHEETS
02	Teh,Sha	5	R27.1/42.1, 0.0/0.9	120	215

J. Hannigan 05-31-11
REGISTERED ELECTRICAL ENGINEER DATE

06-17-11
PLANS APPROVAL DATE

REGISTERED PROFESSIONAL ENGINEER J.M. HANNIGAN No. E13665 Exp. 6-30-11 ELECTRICAL STATE OF CALIFORNIA

THE STATE OF CALIFORNIA OR ITS OFFICERS OR AGENTS SHALL NOT BE RESPONSIBLE FOR THE ACCURACY OR COMPLETENESS OF SCANNED COPIES OF THIS PLAN SHEET.

NOTE:

1. FOR ACCURATE RIGHT OF WAY AND ACCESS DATA, CONTACT RIGHT OF WAY ENGINEERING AT THE DISTRICT OFFICE.

NOTES (THIS SHEET):

1. Exist 2"C, 2#8, 2 dlc. REMOVE 2 dlc, ADD 4 STC, 2 DLC.
2. Exist 2"C, 2 dlc. REMOVE 2 dlc, ADD 4 STC, 2 DLC.
3. Exist 2"C, 6 dlc. REMOVE 6 dlc, ADD 10 STC, 6 DLC.
4. 2"C, 6 STC, 4 DLC.
5. SEE TYPICAL AXLE SENSOR INSTALLATION DETAIL E-27
6. EXISTING UTILITIES HAVE NOT BEEN POSITIVELY LOCATED.

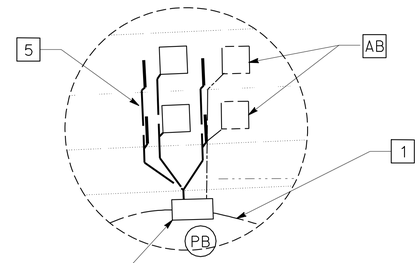

DETAIL B
NO SCALE

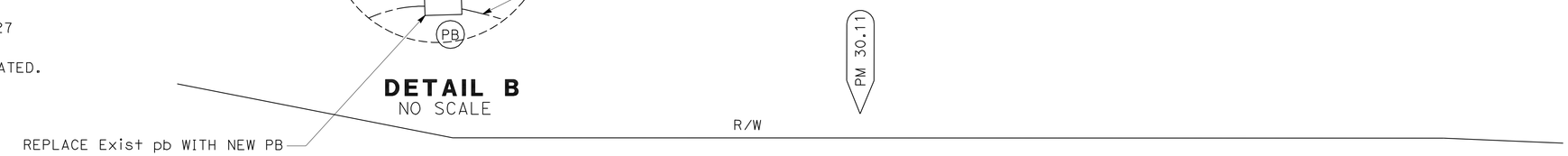

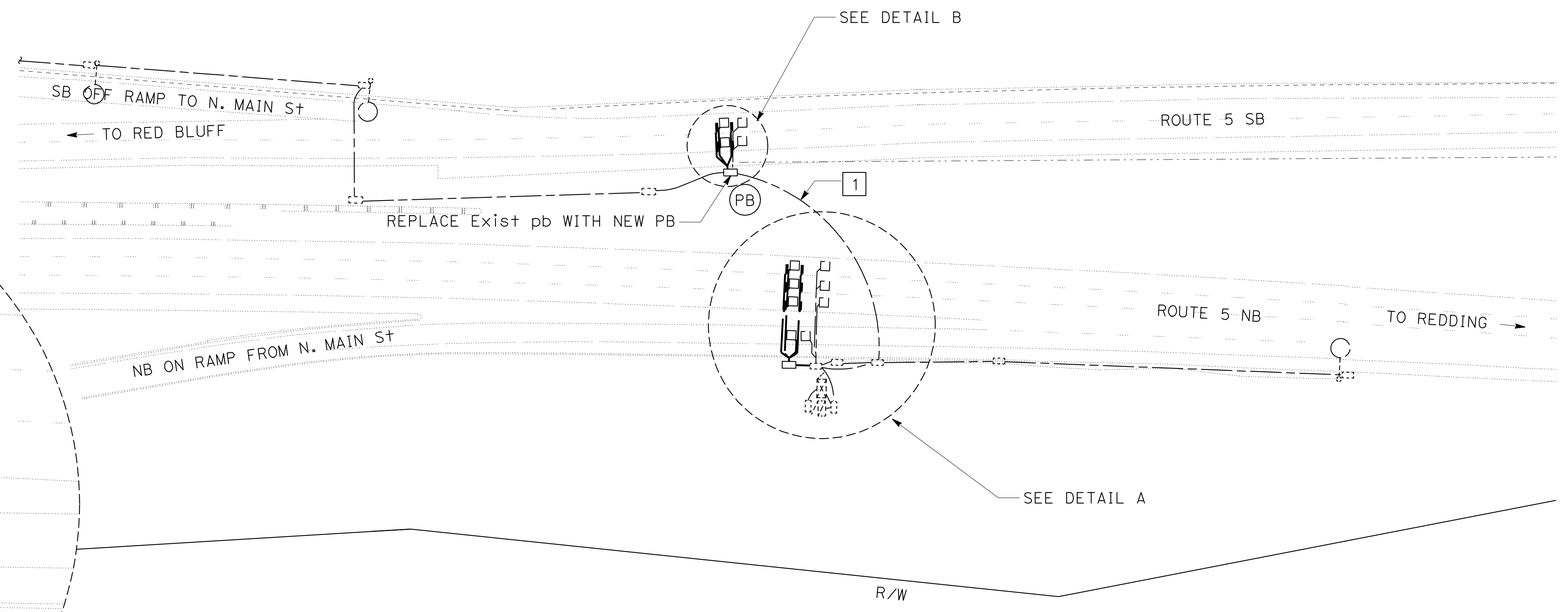

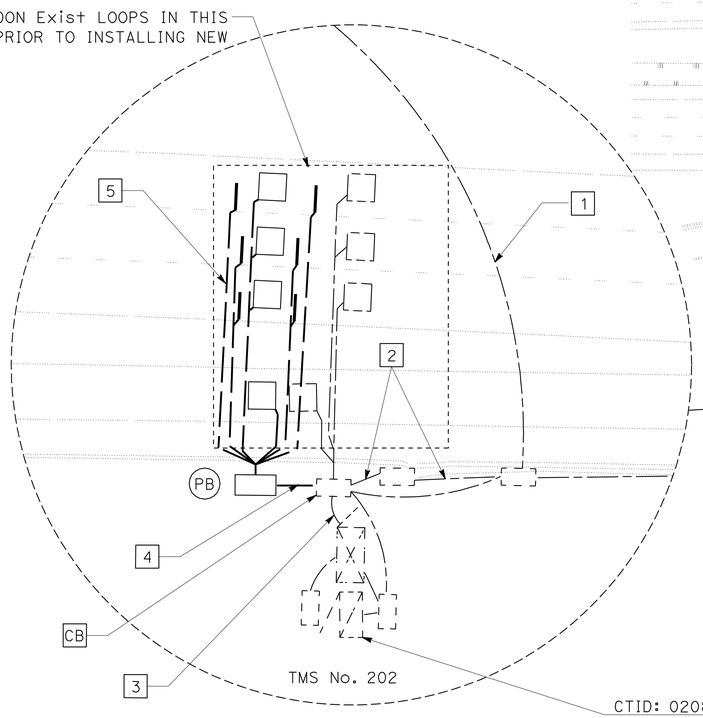

CTID: 0208005R030150
120/240 V METERED SERVICE
PG&E

DETAIL A
NO SCALE

MODIFY TRAFFIC MONITORING STATION

SCALE: 1" = 50'

E-2

THIS PLAN IS ACCURATE FOR ELECTRICAL WORK ONLY.

REVISED BY	DATE REVISED

CALCULATED-DESIGNED BY	CHECKED BY
TERI ANDERSON	J. M. HANNIGAN

FUNCTIONAL SUPERVISOR: ROB STINGER

STATE OF CALIFORNIA - DEPARTMENT OF TRANSPORTATION
Caltrans® ELECTRICAL DESIGN

P:\proj1\02\3E810_plans\pse\02000201811ua002.dgn

LAST REVISION 04-26-11 | DATE PLOTTED => 27-JUN-2011 | TIME PLOTTED => 12:21

Dist	COUNTY	ROUTE	POST MILES TOTAL PROJECT	SHEET No.	TOTAL SHEETS
02	Teh,Sha	5	R27.1/42.1, 0.0/0.9	121	215

REGISTERED ELECTRICAL ENGINEER 05-31-11 DATE

06-17-11
PLANS APPROVAL DATE

REGISTERED PROFESSIONAL ENGINEER J.M. HANNIGAN No. E13665 Exp. 6-30-11 ELECTRICAL STATE OF CALIFORNIA

THE STATE OF CALIFORNIA OR ITS OFFICERS OR AGENTS SHALL NOT BE RESPONSIBLE FOR THE ACCURACY OR COMPLETENESS OF SCANNED COPIES OF THIS PLAN SHEET.

NOTE:

1. FOR ACCURATE RIGHT OF WAY AND ACCESS DATA, CONTACT RIGHT OF WAY ENGINEERING AT THE DISTRICT OFFICE.

NOTES (THIS SHEET):

1. EXISTING UTILITIES HAVE NOT BEEN POSITIVELY LOCATED.

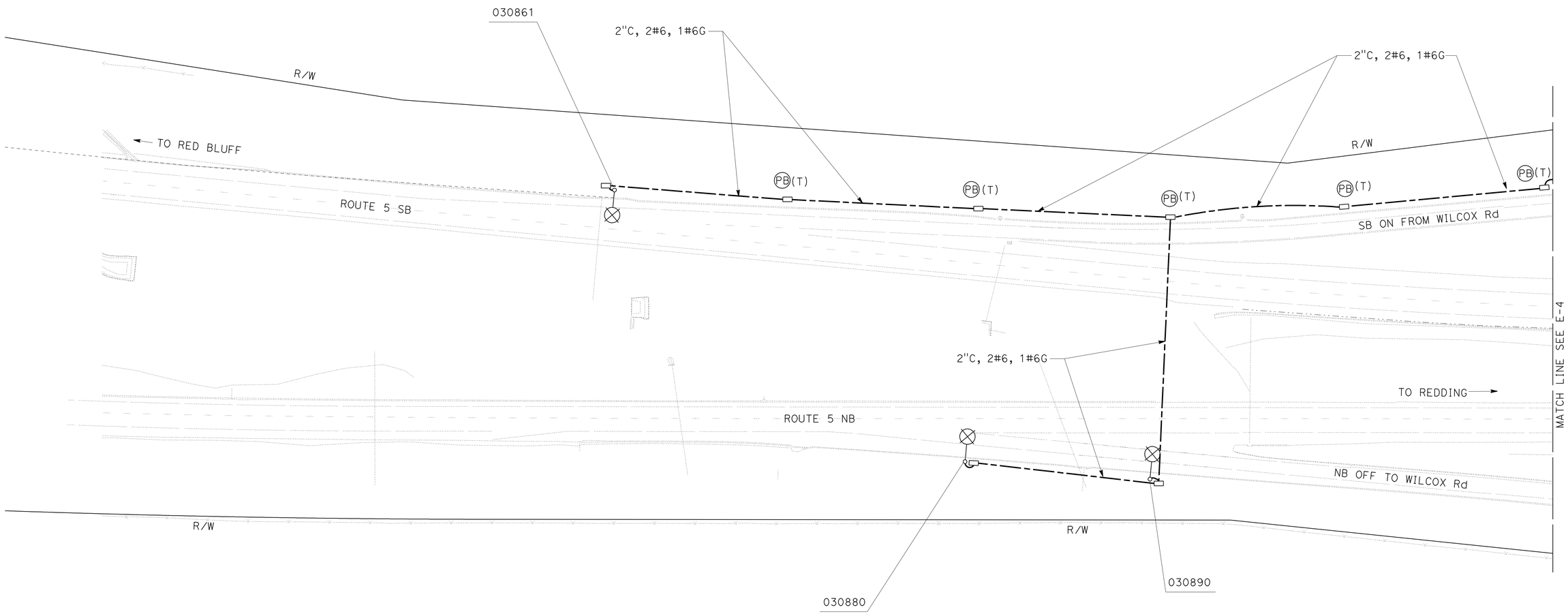

LIGHTING

SCALE: 1" = 50'

E-3

THIS PLAN IS ACCURATE FOR ELECTRICAL WORK ONLY.

REVISED BY | DATE REVISED

TERI ANDERSON | J. M. HANNIGAN

CALCULATED-DESIGNED BY | CHECKED BY

FUNCTIONAL SUPERVISOR: ROB STINGER

STATE OF CALIFORNIA - DEPARTMENT OF TRANSPORTATION

Caltrans® ELECTRICAL DESIGN

P:\proj1\02\3E810_plans\pse\02000201811ua003.dgn

LAST REVISION 04-26-11 | DATE PLOTTED => 27-JUN-2011 | TIME PLOTTED => 12:21

Dist	COUNTY	ROUTE	POST MILES TOTAL PROJECT	SHEET No.	TOTAL SHEETS
02	Teh,Sha	5	R27.1/42.1, 0.0/0.9	122	215

REGISTERED ELECTRICAL ENGINEER 05-31-11 DATE

06-17-11
PLANS APPROVAL DATE

REGISTERED PROFESSIONAL ENGINEER J.M. HANNIGAN No. E13665 Exp. 6-30-11 ELECTRICAL STATE OF CALIFORNIA

THE STATE OF CALIFORNIA OR ITS OFFICERS OR AGENTS SHALL NOT BE RESPONSIBLE FOR THE ACCURACY OR COMPLETENESS OF SCANNED COPIES OF THIS PLAN SHEET.

NOTE:

1. FOR ACCURATE RIGHT OF WAY AND ACCESS DATA, CONTACT RIGHT OF WAY ENGINEERING AT THE DISTRICT OFFICE.

NOTES (THIS SHEET):

1 COIL 10 FEET OF CONDUCTORS IN BOTTOM OF PULL BOX.

2. EXISTING UTILITIES HAVE NOT BEEN POSITIVELY LOCATED.

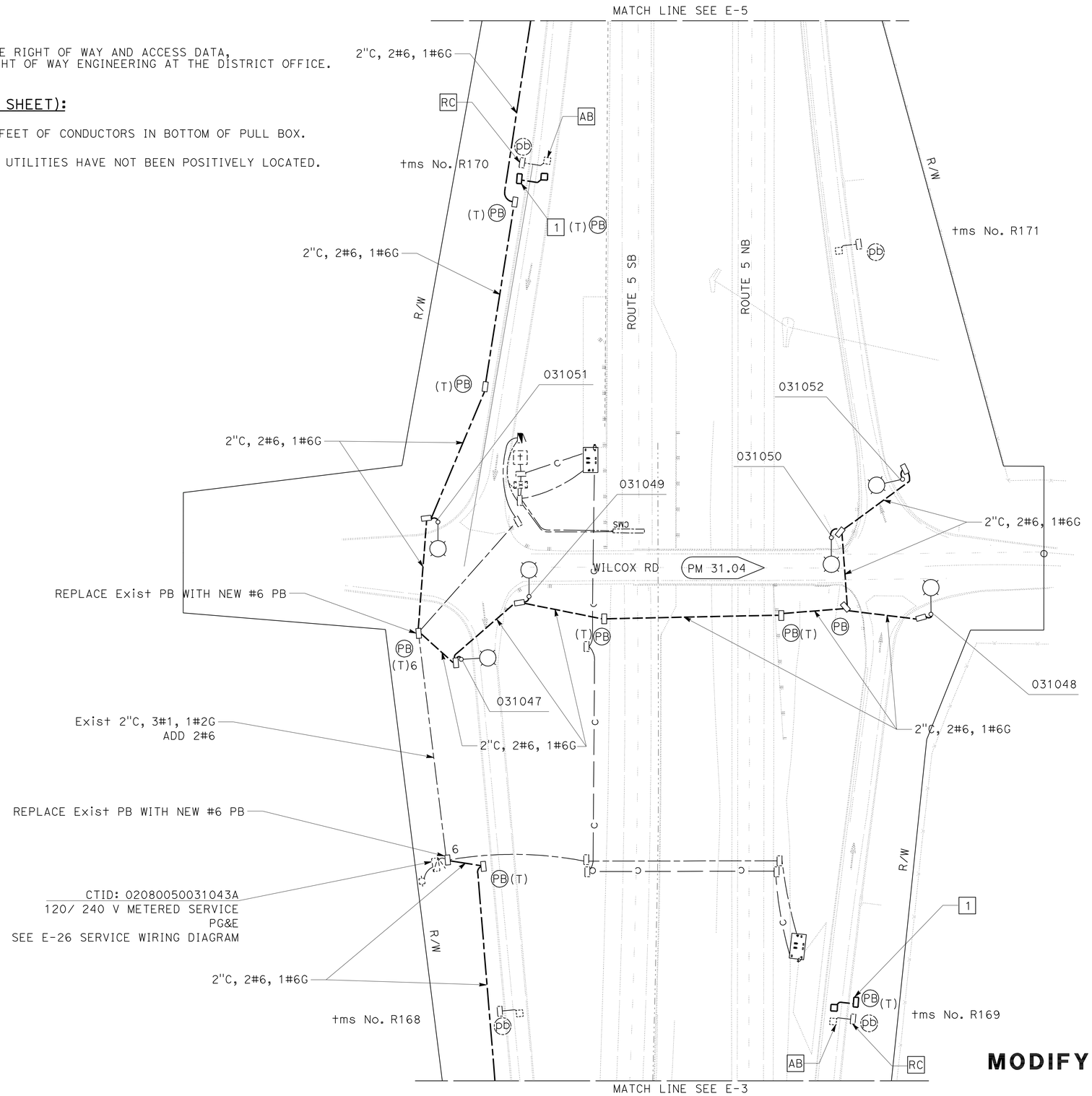

THIS PLAN IS ACCURATE FOR ELECTRICAL WORK ONLY.

LIGHTING
MODIFY TRAFFIC MONITORING STATION

SCALE: 1" = 50'

E-4

STATE OF CALIFORNIA - DEPARTMENT OF TRANSPORTATION
Caltrans® ELECTRICAL DESIGN

FUNCTIONAL SUPERVISOR: ROB STINGER
CALCULATED-DESIGNED BY: TERI ANDERSON
CHECKED BY: J. M. HANNIGAN
REVISED BY / DATE REVISED

P:\proj1\02\3E810_plans\pse\02000201811ua004.dgn

LAST REVISION 04-26-11
DATE PLOTTED => 27-JUN-2011
TIME PLOTTED => 12:21

BORDER LAST REVISED 7/2/2010
USERNAME => s115152
DGN FILE => 0200020181ua004.dgn
RELATIVE BORDER SCALE IS IN INCHES 0 1 2 3
UNIT 0147
PROJECT NUMBER & PHASE 02000201811

Dist	COUNTY	ROUTE	POST MILES TOTAL PROJECT	SHEET No.	TOTAL SHEETS
02	Teh,Sha	5	R27.1/42.1, 0.0/0.9	123	215

REGISTERED ELECTRICAL ENGINEER 05-31-11 DATE

06-17-11
PLANS APPROVAL DATE

REGISTERED PROFESSIONAL ENGINEER J.M. HANNIGAN No. E13665 Exp. 6-30-11 ELECTRICAL STATE OF CALIFORNIA

THE STATE OF CALIFORNIA OR ITS OFFICERS OR AGENTS SHALL NOT BE RESPONSIBLE FOR THE ACCURACY OR COMPLETENESS OF SCANNED COPIES OF THIS PLAN SHEET.

NOTE:

1. FOR ACCURATE RIGHT OF WAY AND ACCESS DATA, CONTACT RIGHT OF WAY ENGINEERING AT THE DISTRICT OFFICE.

NOTES (THIS SHEET):

1. EXISTING UTILITIES HAVE NOT BEEN POSITIVELY LOCATED.

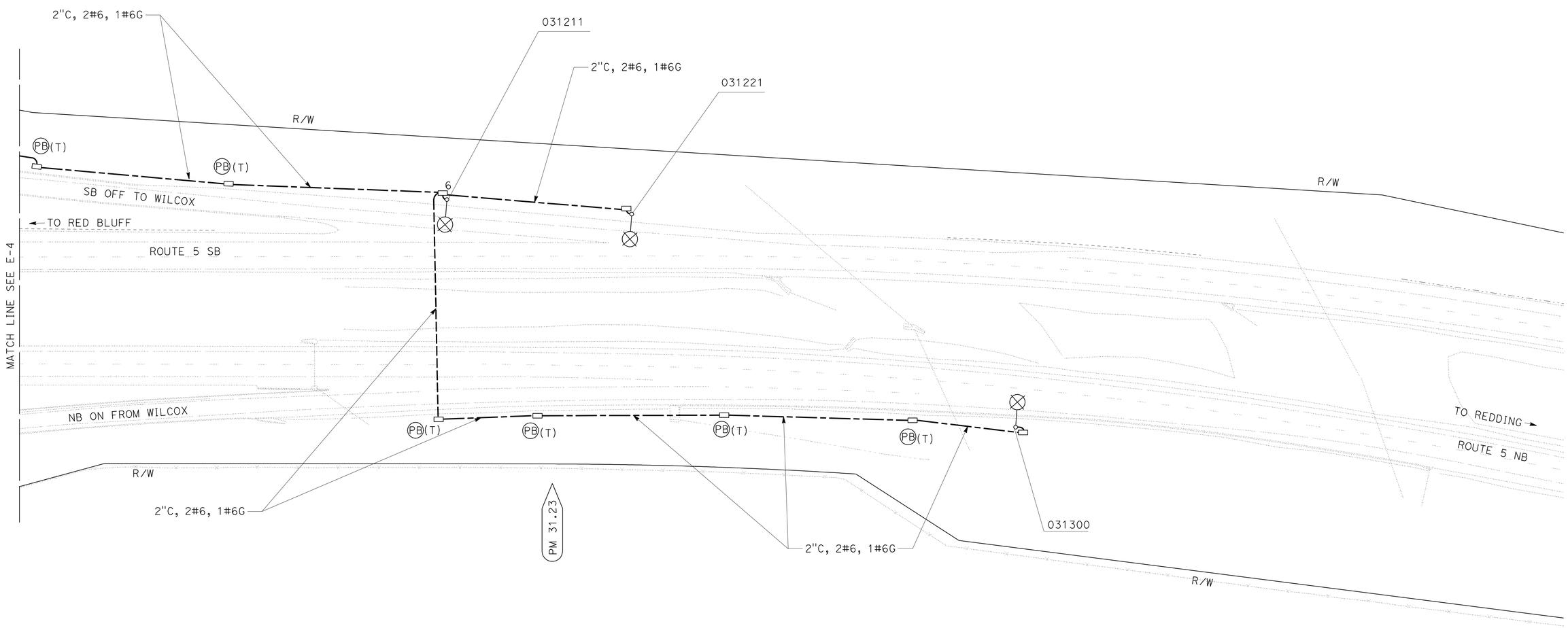

LIGHTING

SCALE: 1" = 50′ **E-5**

THIS PLAN IS ACCURATE FOR ELECTRICAL WORK ONLY.

REVISED BY | DATE REVISED
TERI ANDERSON | J. M. HANNIGAN
CALCULATED-DESIGNED BY | CHECKED BY
FUNCTIONAL SUPERVISOR
ROB STINGER

STATE OF CALIFORNIA - DEPARTMENT OF TRANSPORTATION
Caltrans® ELECTRICAL DESIGN

P:\proj1\02\3E810_plans\pse\02000201811ua005.dgn

LAST REVISION 04-26-11 | DATE PLOTTED => 27-JUN-2011 | TIME PLOTTED => 12:21

Dist	COUNTY	ROUTE	POST MILES TOTAL PROJECT	SHEET No.	TOTAL SHEETS
02	Teh,Sha	5	R27.1/42.1, 0.0/0.9	124	215

REGISTERED ELECTRICAL ENGINEER 05-31-11 DATE

06-17-11
PLANS APPROVAL DATE

REGISTERED PROFESSIONAL ENGINEER J.M. HANNIGAN No. E13665 Exp. 6-30-11 ELECTRICAL STATE OF CALIFORNIA

THE STATE OF CALIFORNIA OR ITS OFFICERS OR AGENTS SHALL NOT BE RESPONSIBLE FOR THE ACCURACY OR COMPLETENESS OF SCANNED COPIES OF THIS PLAN SHEET.

NOTE:

1. FOR ACCURATE RIGHT OF WAY AND ACCESS DATA, CONTACT RIGHT OF WAY ENGINEERING AT THE DISTRICT OFFICE.

NOTES (THIS SHEET):

1 COIL 10 FEET OF CONDUCTORS IN BOTTOM OF PULL BOX.

2. EXISTING UTILITIES HAVE NOT BEEN POSITIVELY LOCATED.

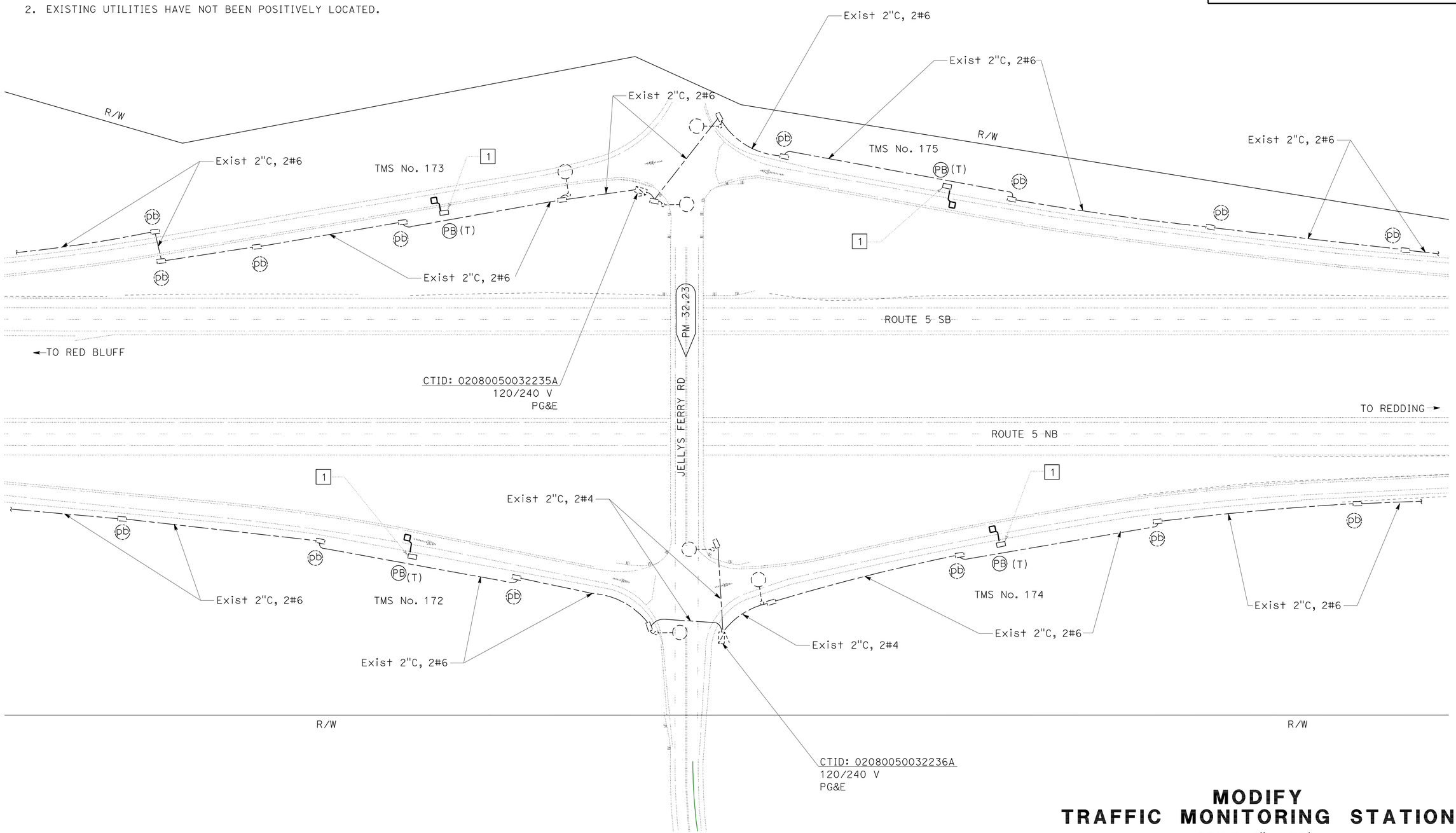

MODIFY TRAFFIC MONITORING STATION

SCALE: 1" = 50'

E-6

THIS PLAN IS ACCURATE FOR ELECTRICAL WORK ONLY.

REVISED BY | DATE REVISED

TERI ANDERSON | J. M. HANNIGAN

CALCULATED-DESIGNED BY | CHECKED BY

FUNCTIONAL SUPERVISOR: ROB STINGER

STATE OF CALIFORNIA - DEPARTMENT OF TRANSPORTATION

Caltrans® ELECTRICAL DESIGN

P:\proj1\02\3E810_plans\pse\02000201811ua006.dgn

LAST REVISION 04-26-11 | DATE PLOTTED => 27-JUN-2011 | TIME PLOTTED => 12:21

Dist	COUNTY	ROUTE	POST MILES TOTAL PROJECT	SHEET No.	TOTAL SHEETS
02	Teh,Sha	5	R27.1/42.1, 0.0/0.9	125	215

REGISTERED ELECTRICAL ENGINEER 05-31-11 DATE

06-17-11
PLANS APPROVAL DATE

REGISTERED PROFESSIONAL ENGINEER J.M. HANNIGAN No. E13665 Exp. 6-30-11 ELECTRICAL STATE OF CALIFORNIA

THE STATE OF CALIFORNIA OR ITS OFFICERS OR AGENTS SHALL NOT BE RESPONSIBLE FOR THE ACCURACY OR COMPLETENESS OF SCANNED COPIES OF THIS PLAN SHEET.

NOTE:

1. FOR ACCURATE RIGHT OF WAY AND ACCESS DATA, CONTACT RIGHT OF WAY ENGINEERING AT THE DISTRICT OFFICE.

NOTES (THIS SHEET):

1 COIL 10 FEET OF CONDUCTORS IN BOTTOM OF PULL BOX.

2. EXISTING UTILITIES HAVE NOT BEEN POSITIVELY LOCATED.

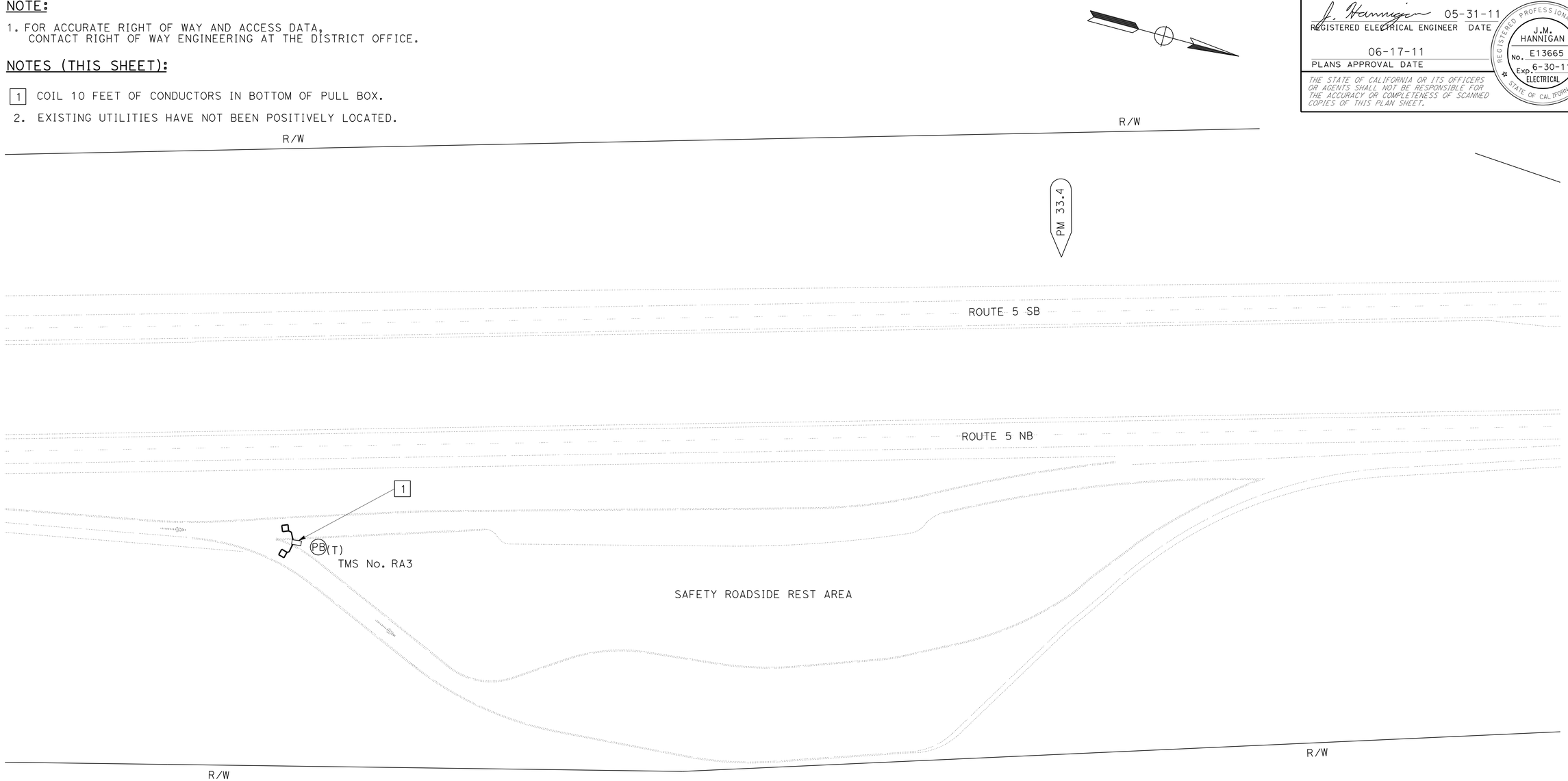

MODIFY TRAFFIC MONITORING STATION

SCALE: 1" = 50'

E-7

THIS PLAN IS ACCURATE FOR ELECTRICAL WORK ONLY.

REVISED BY | DATE REVISED

TERI ANDERSON | J. M. HANNIGAN

CALCULATED-DESIGNED BY | CHECKED BY

FUNCTIONAL SUPERVISOR: ROB STINGER

STATE OF CALIFORNIA - DEPARTMENT OF TRANSPORTATION

Caltrans® ELECTRICAL DESIGN

P:\proj1\02\3E810_plans\pse\02000201811ua007.dgn

LAST REVISION 04-26-11 | DATE PLOTTED => 27-JUN-2011 TIME PLOTTED => 12:21

Dist	COUNTY	ROUTE	POST MILES TOTAL PROJECT	SHEET No.	TOTAL SHEETS
02	Teh,Sha	5	R27.1/42.1, 0.0/0.9	126	215

J. Hannigan 05-31-11
REGISTERED ELECTRICAL ENGINEER DATE

06-17-11
PLANS APPROVAL DATE

REGISTERED PROFESSIONAL ENGINEER
J.M. HANNIGAN
No. E13665
Exp. 6-30-11
ELECTRICAL
STATE OF CALIFORNIA

THE STATE OF CALIFORNIA OR ITS OFFICERS OR AGENTS SHALL NOT BE RESPONSIBLE FOR THE ACCURACY OR COMPLETENESS OF SCANNED COPIES OF THIS PLAN SHEET.

NOTE:

1. FOR ACCURATE RIGHT OF WAY AND ACCESS DATA, CONTACT RIGHT OF WAY ENGINEERING AT THE DISTRICT OFFICE.

NOTES (THIS SHEET):

1. EXISTING UTILITIES HAVE NOT BEEN POSITIVELY LOCATED.

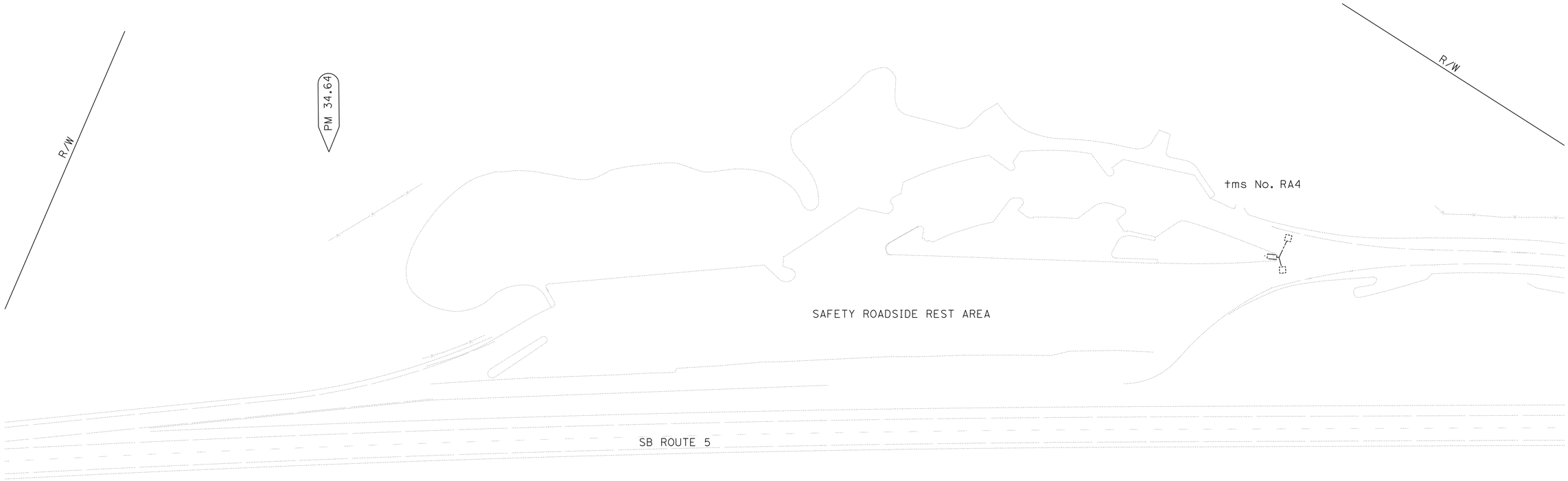

MODIFY TRAFFIC MONITORING STATION

SCALE: 1" = 50'

E-8

THIS PLAN IS ACCURATE FOR ELECTRICAL WORK ONLY.

REVISED BY | DATE REVISED

CALCULATED BY TERI ANDERSON
DESIGNED BY J. M. HANNIGAN
CHECKED BY

FUNCTIONAL SUPERVISOR
ROB STINGER

STATE OF CALIFORNIA - DEPARTMENT OF TRANSPORTATION
Caltrans® ELECTRICAL DESIGN

P:\proj1\02\3E810_plans\pse\02000201811ua008.dgn

LAST REVISION 04-26-11 | DATE PLOTTED => 27-JUN-2011 | TIME PLOTTED => 12:22

Dist	COUNTY	ROUTE	POST MILES TOTAL PROJECT	SHEET No.	TOTAL SHEETS
02	Teh,Sha	5	R27.1/42.1, 0.0/0.9	127	215

J. Hannigan 05-31-11
REGISTERED ELECTRICAL ENGINEER DATE

06-17-11
PLANS APPROVAL DATE

REGISTERED PROFESSIONAL ENGINEER J.M. HANNIGAN No. E13665 Exp. 6-30-11 ELECTRICAL STATE OF CALIFORNIA

THE STATE OF CALIFORNIA OR ITS OFFICERS OR AGENTS SHALL NOT BE RESPONSIBLE FOR THE ACCURACY OR COMPLETENESS OF SCANNED COPIES OF THIS PLAN SHEET.

NOTE:

1. FOR ACCURATE RIGHT OF WAY AND ACCESS DATA, CONTACT RIGHT OF WAY ENGINEERING AT THE DISTRICT OFFICE.

NOTES (THIS SHEET):

1 COIL 10 FEET OF CONDUCTORS IN BOTTOM OF PULL BOX.

2. EXISTING UTILITIES HAVE NOT BEEN POSITIVELY LOCATED.

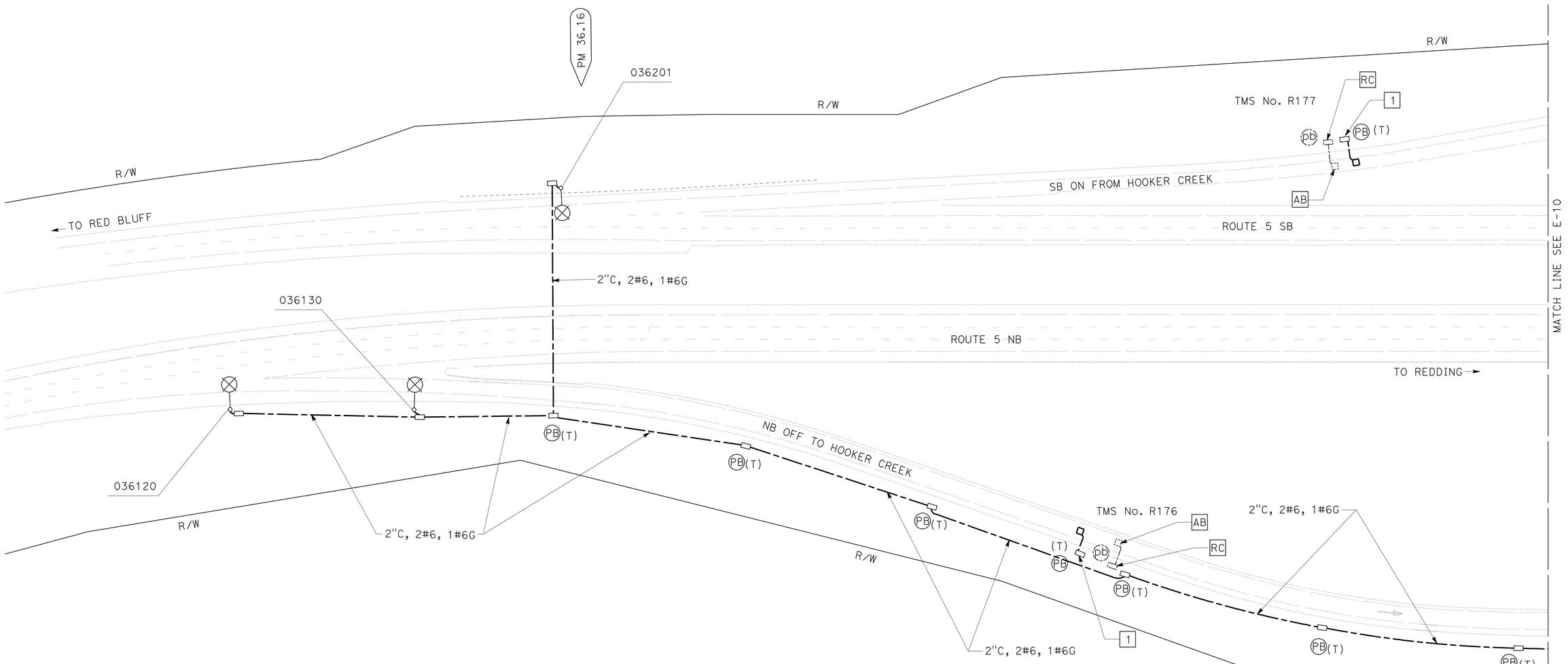

LIGHTING
MODIFY TRAFFIC MONITORING STATION

SCALE: 1" = 50'

E-9

THIS PLAN IS ACCURATE FOR ELECTRICAL WORK ONLY.

REVISED BY | DATE REVISED
TERI ANDERSON | J. M. HANNIGAN
CALCULATED-DESIGNED BY | CHECKED BY
FUNCTIONAL SUPERVISOR: ROB STINGER

STATE OF CALIFORNIA - DEPARTMENT OF TRANSPORTATION
Caltrans® ELECTRICAL DESIGN

P:\proj1\02\3E810_plans\pse\02000201811ua009.dgn

LAST REVISION 04-26-11 | DATE PLOTTED => 27-JUN-2011 TIME PLOTTED => 12:22

BORDER LAST REVISED 7/2/2010 | USERNAME => s115152 DGN FILE => 02000201811ua009.dgn | RELATIVE BORDER SCALE IS IN INCHES 0 1 2 3 | UNIT 0147 | PROJECT NUMBER & PHASE 02000201811

Dist	COUNTY	ROUTE	POST MILES TOTAL PROJECT	SHEET No.	TOTAL SHEETS
02	Teh,Sha	5	R27.1/42.1, 0.0/0.9	128	215

J. Hannigan 05-31-11
REGISTERED ELECTRICAL ENGINEER DATE

06-17-11
PLANS APPROVAL DATE

REGISTERED PROFESSIONAL ENGINEER J.M. HANNIGAN No. E13665 Exp. 6-30-11 ELECTRICAL STATE OF CALIFORNIA

THE STATE OF CALIFORNIA OR ITS OFFICERS OR AGENTS SHALL NOT BE RESPONSIBLE FOR THE ACCURACY OR COMPLETENESS OF SCANNED COPIES OF THIS PLAN SHEET.

NOTE:

1. FOR ACCURATE RIGHT OF WAY AND ACCESS DATA, CONTACT RIGHT OF WAY ENGINEERING AT THE DISTRICT OFFICE.

NOTES (THIS SHEET):

1. COIL 10 FEET OF CONDUCTORS IN BOTTOM OF PULL BOX.
2. EXISTING UTILITIES HAVE NOT BEEN POSITIVELY LOCATED.

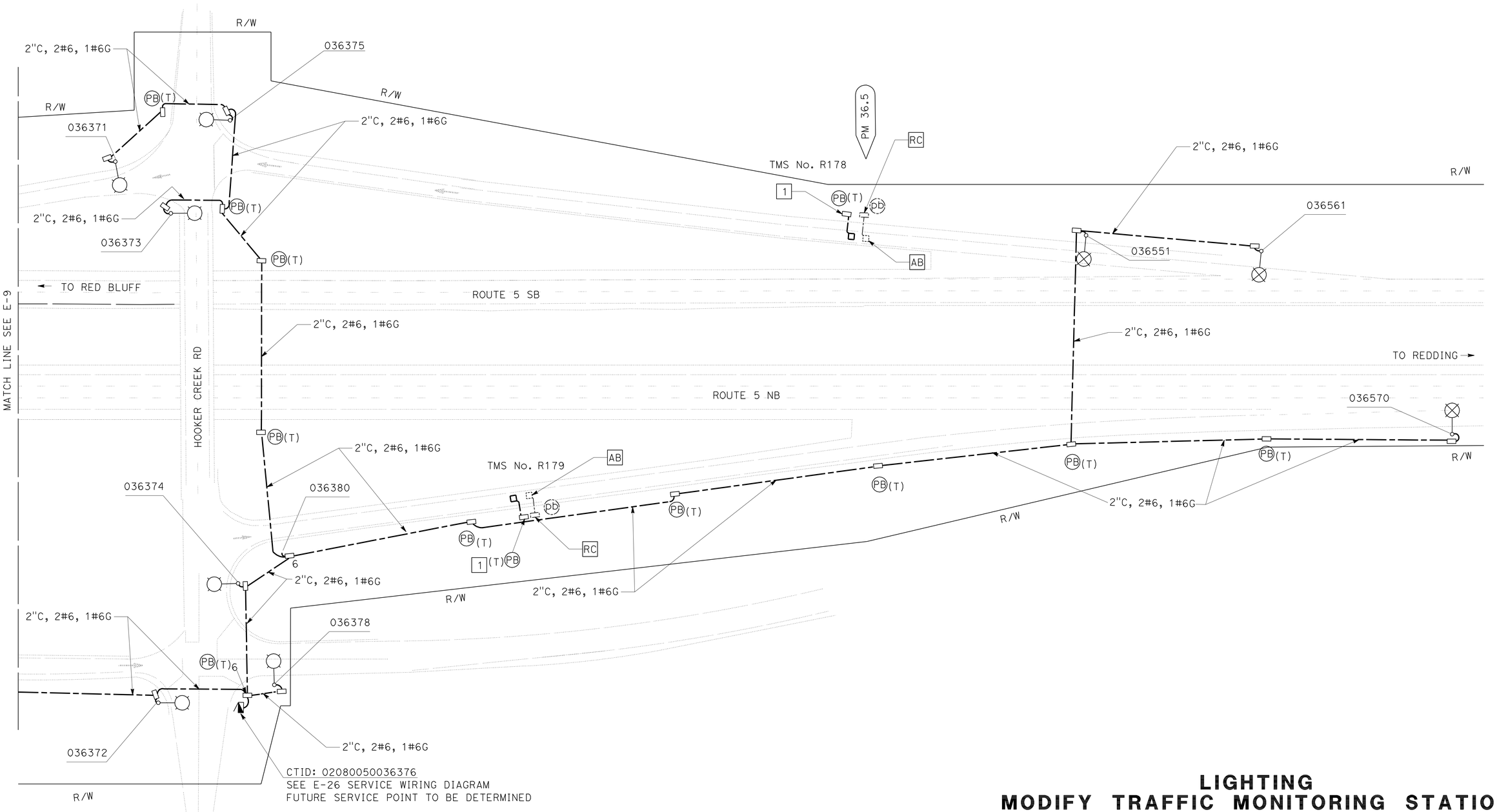

LIGHTING
MODIFY TRAFFIC MONITORING STATION

SCALE: 1" = 50'

E-10

THIS PLAN IS ACCURATE FOR ELECTRICAL WORK ONLY.

REVISED BY	DATE REVISED
TERI ANDERSON	J. M. HANNIGAN
CALCULATED-DESIGNED BY	CHECKED BY
FUNCTIONAL SUPERVISOR	ROB STINGER

STATE OF CALIFORNIA - DEPARTMENT OF TRANSPORTATION
Caltrans® ELECTRICAL DESIGN

P:\proj1\02\3E810_plans\pse\02000201811ua010.dgn

LAST REVISION 04-26-11 DATE PLOTTED => 27-JUN-2011 TIME PLOTTED => 12:22

Dist	COUNTY	ROUTE	POST MILES TOTAL PROJECT	SHEET No.	TOTAL SHEETS
02	Teh,Sha	5	R27.1/42.1, 0.0/0.9	129	215

J. Hannigan 05-31-11
REGISTERED ELECTRICAL ENGINEER DATE

06-17-11
PLANS APPROVAL DATE

REGISTERED PROFESSIONAL ENGINEER J.M. HANNIGAN No. E13665 Exp. 6-30-11 ELECTRICAL STATE OF CALIFORNIA

THE STATE OF CALIFORNIA OR ITS OFFICERS OR AGENTS SHALL NOT BE RESPONSIBLE FOR THE ACCURACY OR COMPLETENESS OF SCANNED COPIES OF THIS PLAN SHEET.

NOTE:

1. FOR ACCURATE RIGHT OF WAY AND ACCESS DATA, CONTACT RIGHT OF WAY ENGINEERING AT THE DISTRICT OFFICE.

NOTES (THIS SHEET):

1 COIL 10 FEET OF CONDUCTORS IN BOTTOM OF PULL BOX.

2. EXISTING UTILITIES HAVE NOT BEEN POSITIVELY LOCATED.

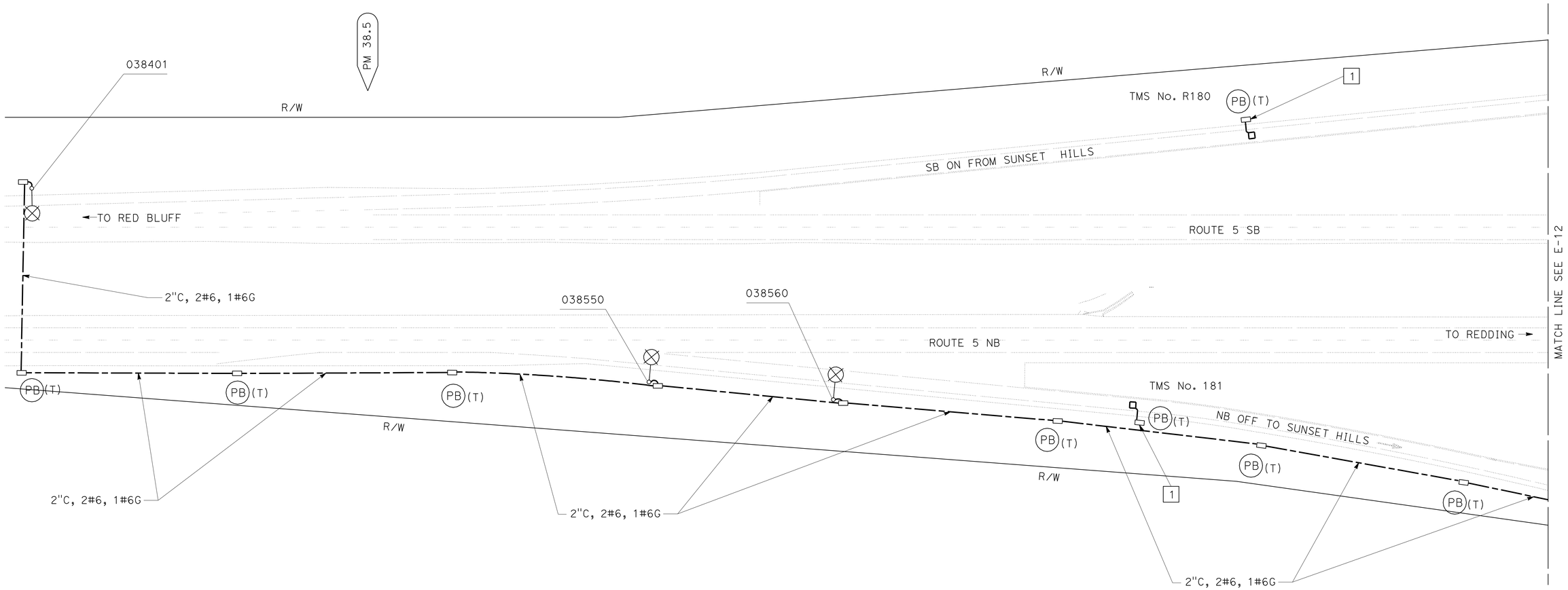

LIGHTING
MODIFY TRAFFIC MONITORING STATION

SCALE: 1" = 50'

E-11

THIS PLAN IS ACCURATE FOR ELECTRICAL WORK ONLY.

REVISED BY	DATE REVISED
TERI ANDERSON	J. M. HANNIGAN
CALCULATED-DESIGNED BY	CHECKED BY
FUNCTIONAL SUPERVISOR	ROB STINGER

STATE OF CALIFORNIA - DEPARTMENT OF TRANSPORTATION
Caltrans® ELECTRICAL DESIGN

P:\proj1\02\3E810_plans\pse\02000201811ua011.dgn

LAST REVISION 04-26-11 | DATE PLOTTED => 27-JUN-2011 | TIME PLOTTED => 12:22

Dist	COUNTY	ROUTE	POST MILES TOTAL PROJECT	SHEET No.	TOTAL SHEETS
02	Teh,Sha	5	R27.1/42.1, 0.0/0.9	130	215

REGISTERED ELECTRICAL ENGINEER 05-31-11 DATE

06-17-11
PLANS APPROVAL DATE

REGISTERED PROFESSIONAL ENGINEER J.M. HANNIGAN No. E13665 Exp. 6-30-11 ELECTRICAL STATE OF CALIFORNIA

THE STATE OF CALIFORNIA OR ITS OFFICERS OR AGENTS SHALL NOT BE RESPONSIBLE FOR THE ACCURACY OR COMPLETENESS OF SCANNED COPIES OF THIS PLAN SHEET.

NOTE:

1. FOR ACCURATE RIGHT OF WAY AND ACCESS DATA, CONTACT RIGHT OF WAY ENGINEERING AT THE DISTRICT OFFICE.

NOTES (THIS SHEET):

1 COIL 10 FEET OF CONDUCTORS IN BOTTOM OF CABINET.

2. EXISTING UTILITIES HAVE NOT BEEN POSITIVELY LOCATED.

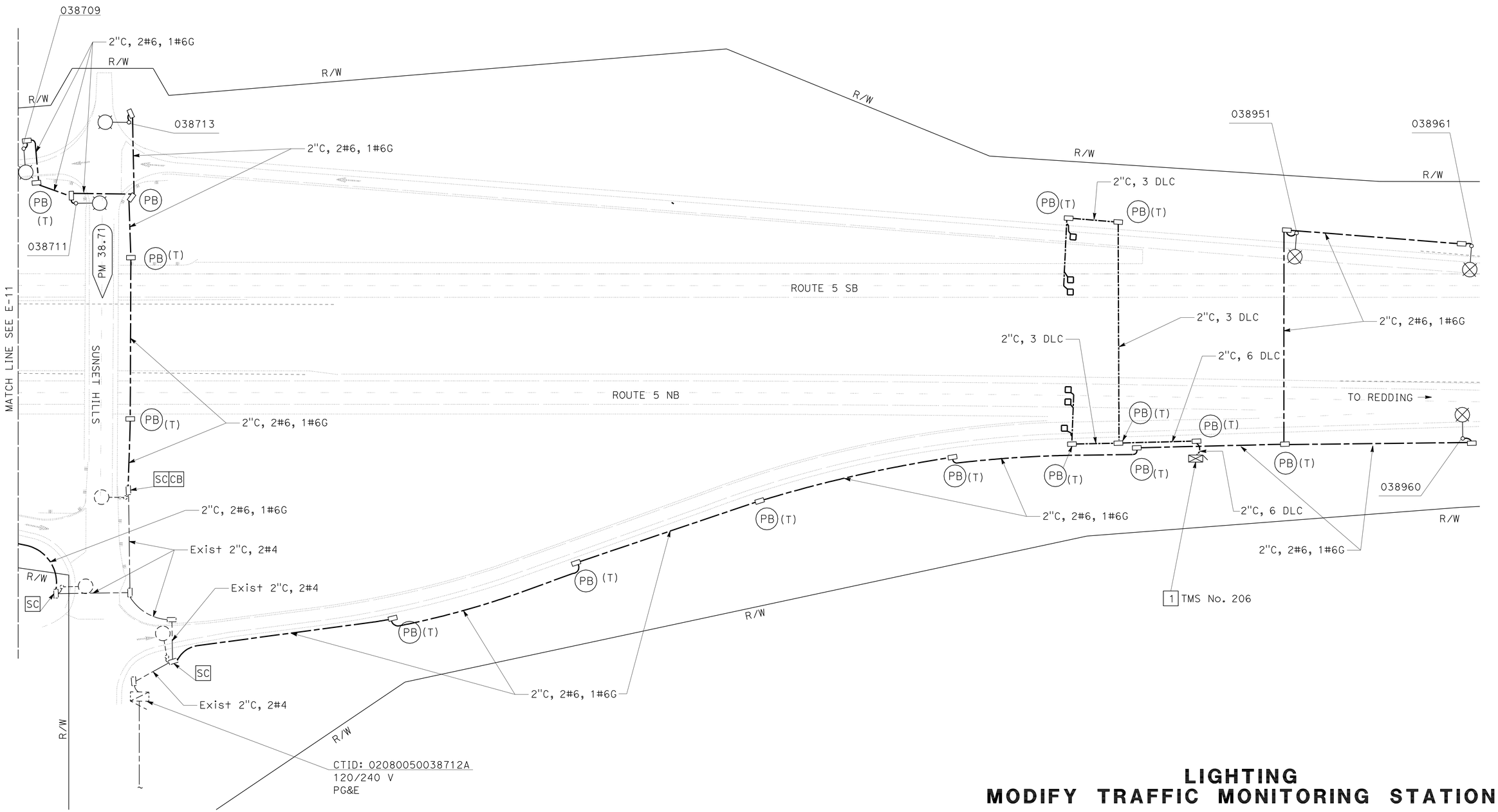

LIGHTING
MODIFY TRAFFIC MONITORING STATION

SCALE: 1" = 50'

E-12

THIS PLAN IS ACCURATE FOR ELECTRICAL WORK ONLY.

REVISED BY	DATE REVISED
TERI ANDERSON	J. M. HANNIGAN
CALCULATED-DESIGNED BY	CHECKED BY
FUNCTIONAL SUPERVISOR	ROB STINGER

STATE OF CALIFORNIA - DEPARTMENT OF TRANSPORTATION
Caltrans® ELECTRICAL DESIGN

P:\proj1\02\3E810_plans\pse\02000201811ua012.dgn

LAST REVISION 04-26-11 | DATE PLOTTED => 27-JUN-2011 | TIME PLOTTED => 12:22

Dist	COUNTY	ROUTE	POST MILES TOTAL PROJECT	SHEET No.	TOTAL SHEETS
02	Teh,Sha	5	R27.1/42.1, 0.0/0.9	131	215

J. Hannigan 05-31-11
REGISTERED ELECTRICAL ENGINEER DATE

06-17-11
PLANS APPROVAL DATE

REGISTERED PROFESSIONAL ENGINEER J.M. HANNIGAN No. E13665 Exp. 6-30-11 ELECTRICAL STATE OF CALIFORNIA

THE STATE OF CALIFORNIA OR ITS OFFICERS OR AGENTS SHALL NOT BE RESPONSIBLE FOR THE ACCURACY OR COMPLETENESS OF SCANNED COPIES OF THIS PLAN SHEET.

NOTE:

1. FOR ACCURATE RIGHT OF WAY AND ACCESS DATA, CONTACT RIGHT OF WAY ENGINEERING AT THE DISTRICT OFFICE.

NOTES (THIS SHEET):

1. EXISTING UTILITIES HAVE NOT BEEN POSITIVELY LOCATED.

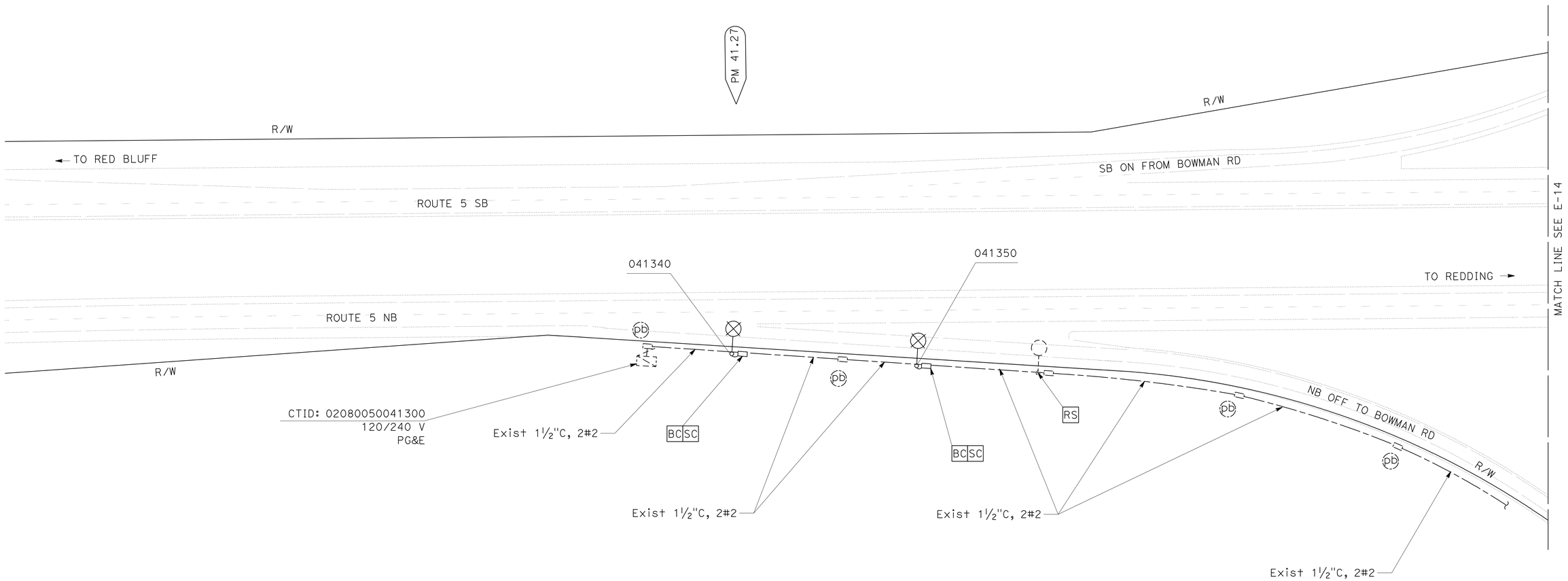

LIGHTING

SCALE: 1" = 50'

E-13

THIS PLAN IS ACCURATE FOR ELECTRICAL WORK ONLY.

REVISED BY	
DATE REVISED	
TERI ANDERSON	J. M. HANNIGAN
CALCULATED-DESIGNED BY	CHECKED BY
FUNCTIONAL SUPERVISOR	ROB STINGER

STATE OF CALIFORNIA - DEPARTMENT OF TRANSPORTATION
Caltrans® ELECTRICAL DESIGN

P:\proj1\02\3E810_plans\pse\02000201811ua013.dgn

LAST REVISION 04-26-11 | DATE PLOTTED => 27-JUN-2011 | TIME PLOTTED => 12:22

Dist	COUNTY	ROUTE	POST MILES TOTAL PROJECT	SHEET No.	TOTAL SHEETS
02	Teh,Sha	5	R27.1/42.1, 0.0/0.9	132	215

J. Hannigan 05-31-11
REGISTERED ELECTRICAL ENGINEER DATE

06-17-11
PLANS APPROVAL DATE

REGISTERED PROFESSIONAL ENGINEER
J.M. HANNIGAN
No. E13665
Exp. 6-30-11
ELECTRICAL
STATE OF CALIFORNIA

THE STATE OF CALIFORNIA OR ITS OFFICERS OR AGENTS SHALL NOT BE RESPONSIBLE FOR THE ACCURACY OR COMPLETENESS OF SCANNED COPIES OF THIS PLAN SHEET.

NOTE:

1. FOR ACCURATE RIGHT OF WAY AND ACCESS DATA, CONTACT RIGHT OF WAY ENGINEERING AT THE DISTRICT OFFICE.

NOTES (THIS SHEET):

1. EXISTING UTILITIES HAVE NOT BEEN POSITIVELY LOCATED.

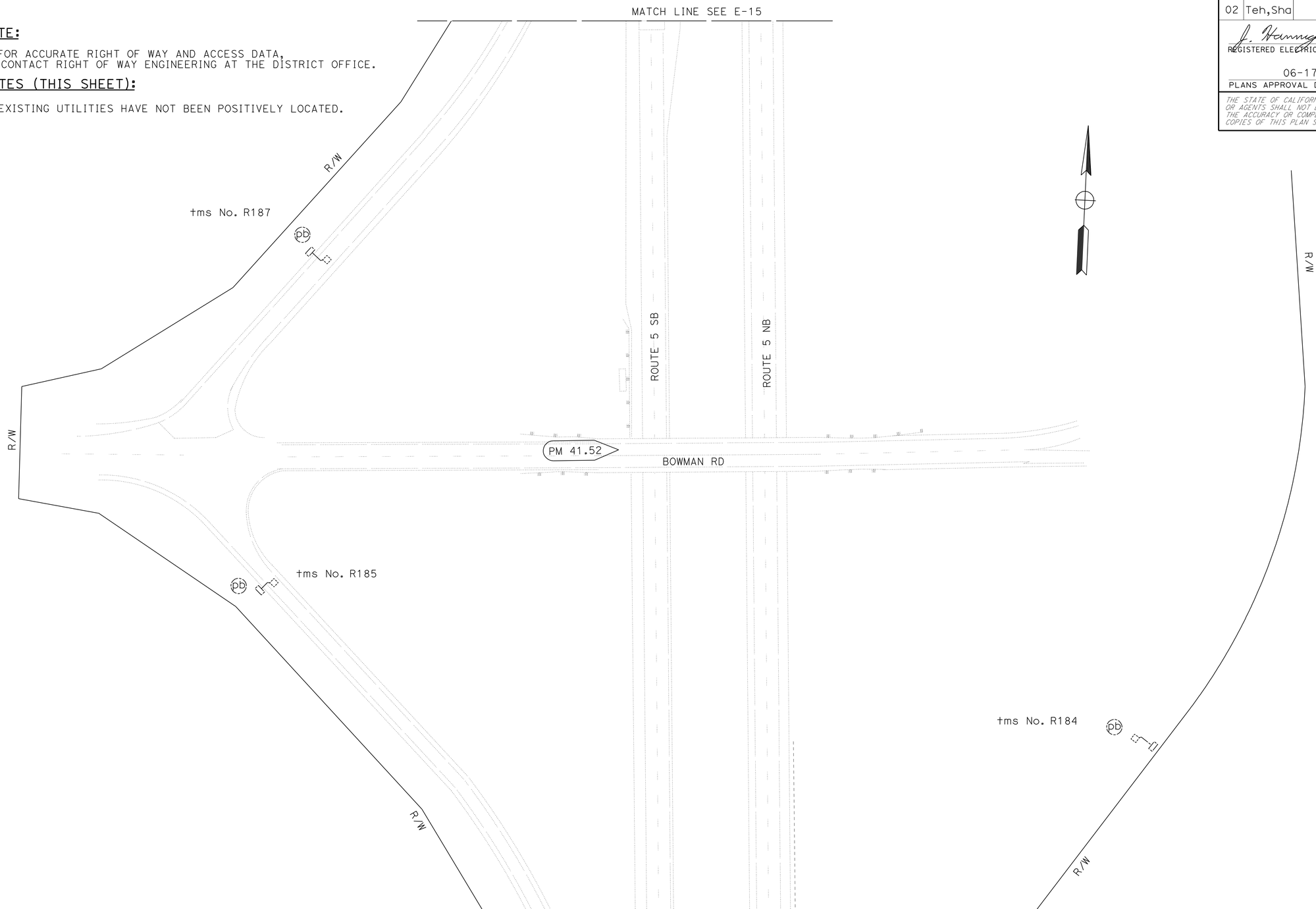

THIS PLAN IS ACCURATE FOR ELECTRICAL WORK ONLY.

MODIFY TRAFFIC MONITORING STATION

SCALE: 1" = 50'

E-14

REVISED BY	DATE REVISED

CALCULATED-DESIGNED BY	CHECKED BY
TERI ANDERSON	J. M. HANNIGAN

FUNCTIONAL SUPERVISOR: ROB STINGER

STATE OF CALIFORNIA - DEPARTMENT OF TRANSPORTATION
Caltrans® ELECTRICAL DESIGN

P:\proj1\02\3E810_plans\pse\02000201811ua014.dgn

LAST REVISION 04-26-11 | DATE PLOTTED => 27-JUN-2011 | TIME PLOTTED => 12:22

Dist	COUNTY	ROUTE	POST MILES TOTAL PROJECT	SHEET No.	TOTAL SHEETS
02	Teh,Sha	5	R27.1/42.1, 0.0/0.9	133	215

J. Hannigan 05-31-11
REGISTERED ELECTRICAL ENGINEER DATE

06-17-11
PLANS APPROVAL DATE

REGISTERED PROFESSIONAL ENGINEER J.M. HANNIGAN No. E13665 Exp. 6-30-11 ELECTRICAL STATE OF CALIFORNIA

THE STATE OF CALIFORNIA OR ITS OFFICERS OR AGENTS SHALL NOT BE RESPONSIBLE FOR THE ACCURACY OR COMPLETENESS OF SCANNED COPIES OF THIS PLAN SHEET.

NOTE:

1. FOR ACCURATE RIGHT OF WAY AND ACCESS DATA, CONTACT RIGHT OF WAY ENGINEERING AT THE DISTRICT OFFICE.

NOTES (THIS SHEET):

1. EXISTING UTILITIES HAVE NOT BEEN POSITIVELY LOCATED.

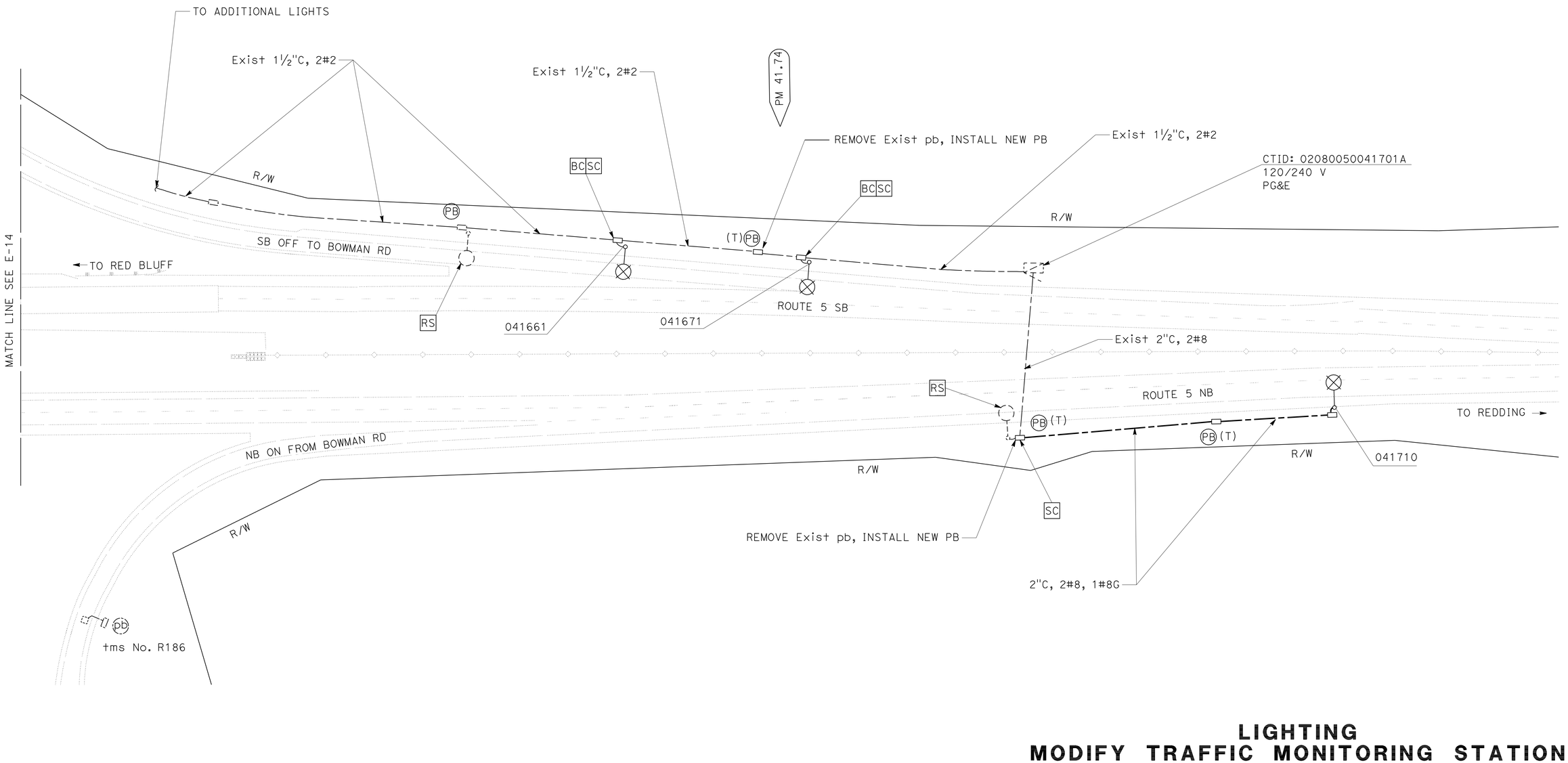

LIGHTING
MODIFY TRAFFIC MONITORING STATION

SCALE: 1" = 50'

E-15

THIS PLAN IS ACCURATE FOR ELECTRICAL WORK ONLY.

REVISED BY | DATE REVISED
TERI ANDERSON | J. M. HANNIGAN
CALCULATED-DESIGNED BY | CHECKED BY
FUNCTIONAL SUPERVISOR: ROB STINGER

STATE OF CALIFORNIA - DEPARTMENT OF TRANSPORTATION
Caltrans® ELECTRICAL DESIGN

P:\proj\02\3E810_plans\pse\02000201811ua015.dgn

LAST REVISION 04-26-11 | DATE PLOTTED => 27-JUN-2011 | TIME PLOTTED => 12:22

Dist	COUNTY	ROUTE	POST MILES TOTAL PROJECT	SHEET No.	TOTAL SHEETS
02	Teh,Sha	5	R27.1/42.1, 0.0/0.9	134	215

REGISTERED ELECTRICAL ENGINEER 05-31-11 DATE

PLANS APPROVAL DATE 06-17-11

REGISTERED PROFESSIONAL ENGINEER A.P. ROBLES No. E15293 Exp. 3-31-13 ELECTRICAL STATE OF CALIFORNIA

THE STATE OF CALIFORNIA OR ITS OFFICERS OR AGENTS SHALL NOT BE RESPONSIBLE FOR THE ACCURACY OR COMPLETENESS OF SCANNED COPIES OF THIS PLAN SHEET.

NOTE:

1. FOR ACCURATE RIGHT OF WAY AND ACCESS DATA, CONTACT RIGHT OF WAY ENGINEERING AT THE DISTRICT OFFICE.

NOTES (THIS SHEET):

1. ADD 30 A, 2P CB (SUBPANEL) AND 20 A, 1P CB (TDC). SEE WIRING DIAGRAM (SHEET E-24).
2. Exist 2"C, 3#1 (PUMP), 2#8 (IC), 2#6 (Itg). ADD 3#8, 1#8G (SUBPANEL).
3. REPLACE Exist PB WITH No. 6 PB.
4. Exist 2"C, 3#1 (PUMP), 2#6 (Itg), 2#8 (IC).
5. Exist 2"C, 2#6 (Itg).
6. 3"C, 3#1/0 (SUBPANEL), 1#1/0G, 2#12 (TDC).
7. 3"C, 3#1/0 (SUBPANEL), 1#1/0G.
8. 1½"C, 2#12, 1#8G.
9. 2"C, TC.
10. SPLICE SUBPANEL CONDUCTORS.
11. EXISTING UTILITIES HAVE NOT BEEN POSITIVELY LOCATED.

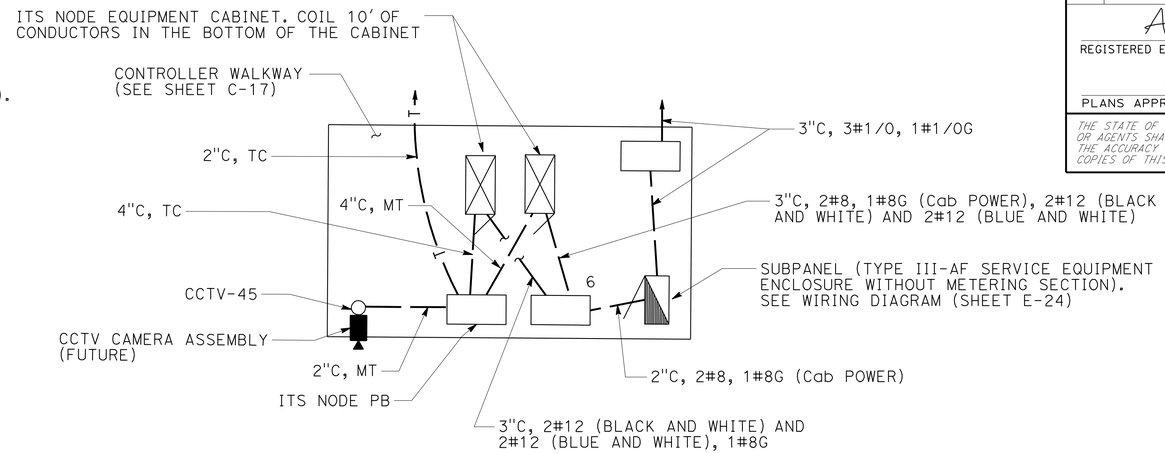

ITS NODE CONTROLLER EQUIPMENT DETAIL

NO SCALE

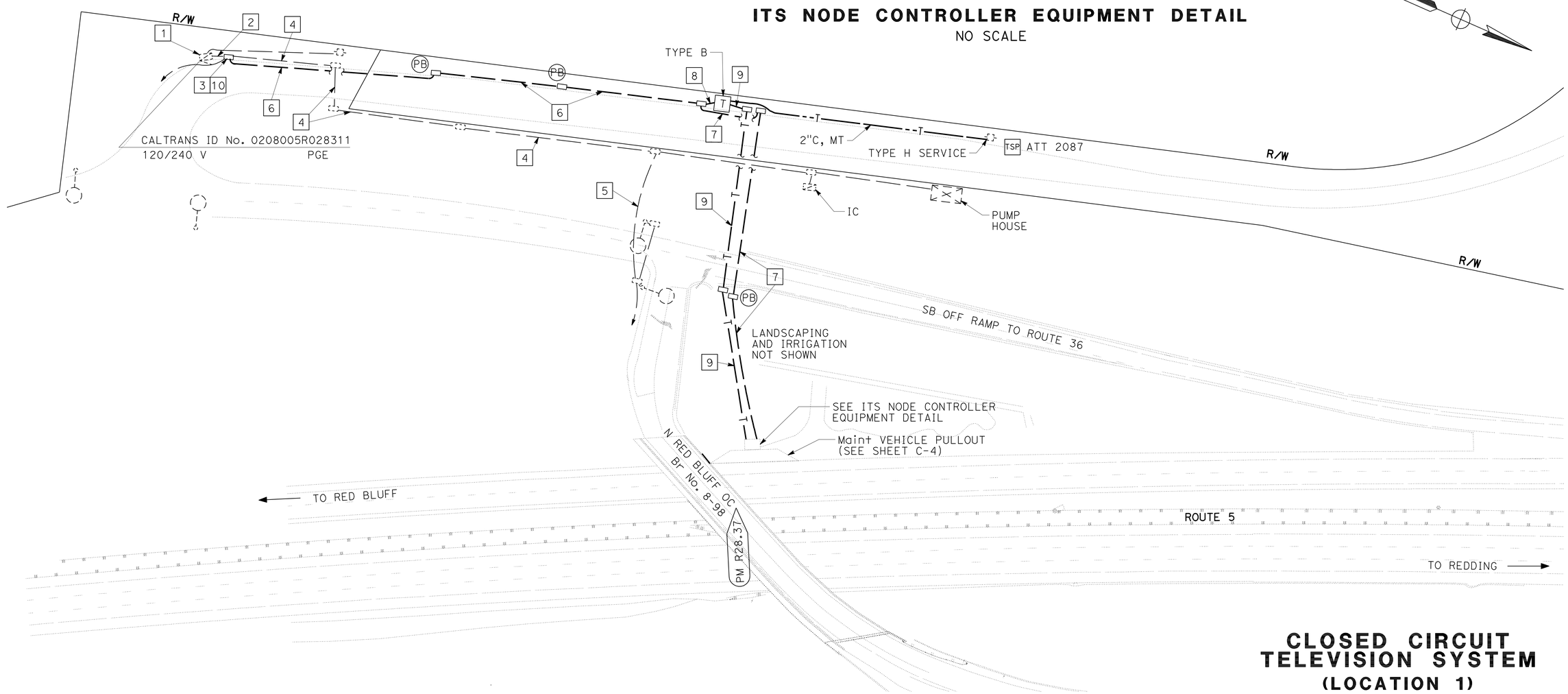

CLOSED CIRCUIT TELEVISION SYSTEM (LOCATION 1)

SCALE: 1" = 50'

E-16

THIS PLAN IS ACCURATE FOR ELECTRICAL WORK ONLY.

STATE OF CALIFORNIA - DEPARTMENT OF TRANSPORTATION
Caltrans® ELECTRICAL DESIGN

FUNCTIONAL SUPERVISOR: ROB STINGER
CALCULATED-DESIGNED BY: ARTURO ROBLES
CHECKED BY: JAMES M. HANNIGAN
REVISED BY / DATE REVISED

P:\proj\02\3E810_plans\pse\02000201811ua016.dgn

LAST REVISION 04-25-11 | DATE PLOTTED => 27-JUN-2011 | TIME PLOTTED => 12:22

BORDER LAST REVISED 7/2/2010 | USERNAME => s115152 | DGN FILE => 02000201811ua016.dgn | RELATIVE BORDER SCALE IS IN INCHES 0 1 2 3 | UNIT 0147 | PROJECT NUMBER & PHASE 02000201811

Dist	COUNTY	ROUTE	POST MILES TOTAL PROJECT	SHEET No.	TOTAL SHEETS
02	Teh,Sha	5	R27.1/42.1, 0.0/0.9	135	215

ART 05-31-11
REGISTERED ELECTRICAL ENGINEER DATE

06-17-11
PLANS APPROVAL DATE

REGISTERED PROFESSIONAL ENGINEER A.P. ROBLES No. E15293 Exp. 3-31-13 ELECTRICAL STATE OF CALIFORNIA

THE STATE OF CALIFORNIA OR ITS OFFICERS OR AGENTS SHALL NOT BE RESPONSIBLE FOR THE ACCURACY OR COMPLETENESS OF SCANNED COPIES OF THIS PLAN SHEET.

NOTE:

1. FOR ACCURATE RIGHT OF WAY AND ACCESS DATA, CONTACT RIGHT OF WAY ENGINEERING AT THE DISTRICT OFFICE.

NOTES (THIS SHEET):

1. Exist 2"C, 2#6 (ltg), ADD 3#2, 1#2G (SUBPANEL) AND 2#12 (TDC). SEE WIRING DIAGRAM (SHEET E-24).
2. 1½"C, 2#12, 1#8G.
3. 2"C, TC
4. 2"C, 3#2, 1#2G (SUBPANEL).
5. EXISTING UTILITIES HAVE NOT BEEN POSITIVELY LOCATED.

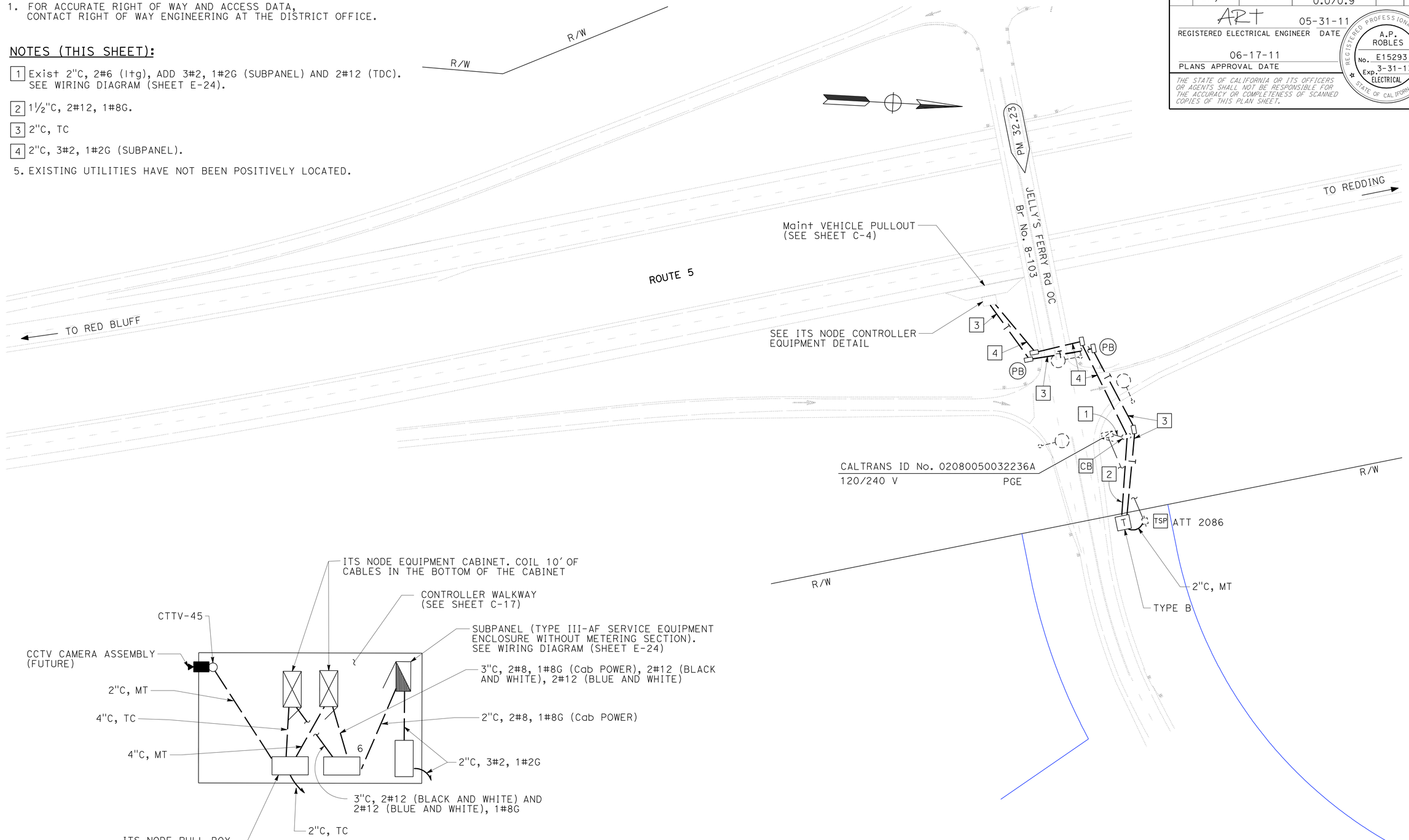

ITS NODE CONTROLLER EQUIPMENT DETAIL

NO SCALE

CLOSED CIRCUIT TELEVISION SYSTEM (LOCATION 2)

SCALE: 1" = 50'

E-17

THIS PLAN IS ACCURATE FOR ELECTRICAL WORK ONLY.

REVISED BY | DATE REVISED
ARTURO ROBLES | JAMES M. HANNIGAN
CALCULATED-DESIGNED BY | CHECKED BY
FUNCTIONAL SUPERVISOR: ROB STINGER

STATE OF CALIFORNIA - DEPARTMENT OF TRANSPORTATION
Caltrans® ELECTRICAL DESIGN

P:\proj1\02\3E810_plans\pse\02000201811ua017.dgn

LAST REVISION 04-25-11 | DATE PLOTTED => 27-JUN-2011 | TIME PLOTTED => 12:22

Dist	COUNTY	ROUTE	POST MILES TOTAL PROJECT	SHEET No.	TOTAL SHEETS
02	Teh,Sha	5	R27.1/42.1, 0.0/0.9	136	215

REGISTERED ELECTRICAL ENGINEER 05-31-11 DATE

PLANS APPROVAL DATE 06-17-11

REGISTERED PROFESSIONAL ENGINEER A.P. ROBLES No. E15293 Exp. 3-31-13 ELECTRICAL STATE OF CALIFORNIA

THE STATE OF CALIFORNIA OR ITS OFFICERS OR AGENTS SHALL NOT BE RESPONSIBLE FOR THE ACCURACY OR COMPLETENESS OF SCANNED COPIES OF THIS PLAN SHEET.

NOTE:

1. FOR ACCURATE RIGHT OF WAY AND ACCESS DATA, CONTACT RIGHT OF WAY ENGINEERING AT THE DISTRICT OFFICE.

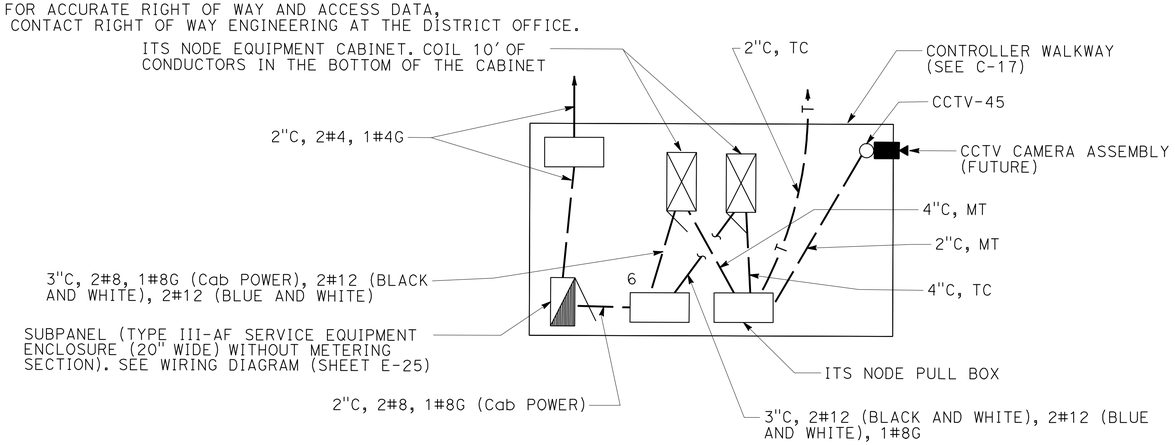

ITS NODE CONTROLLER EQUIPMENT DETAIL

NO SCALE

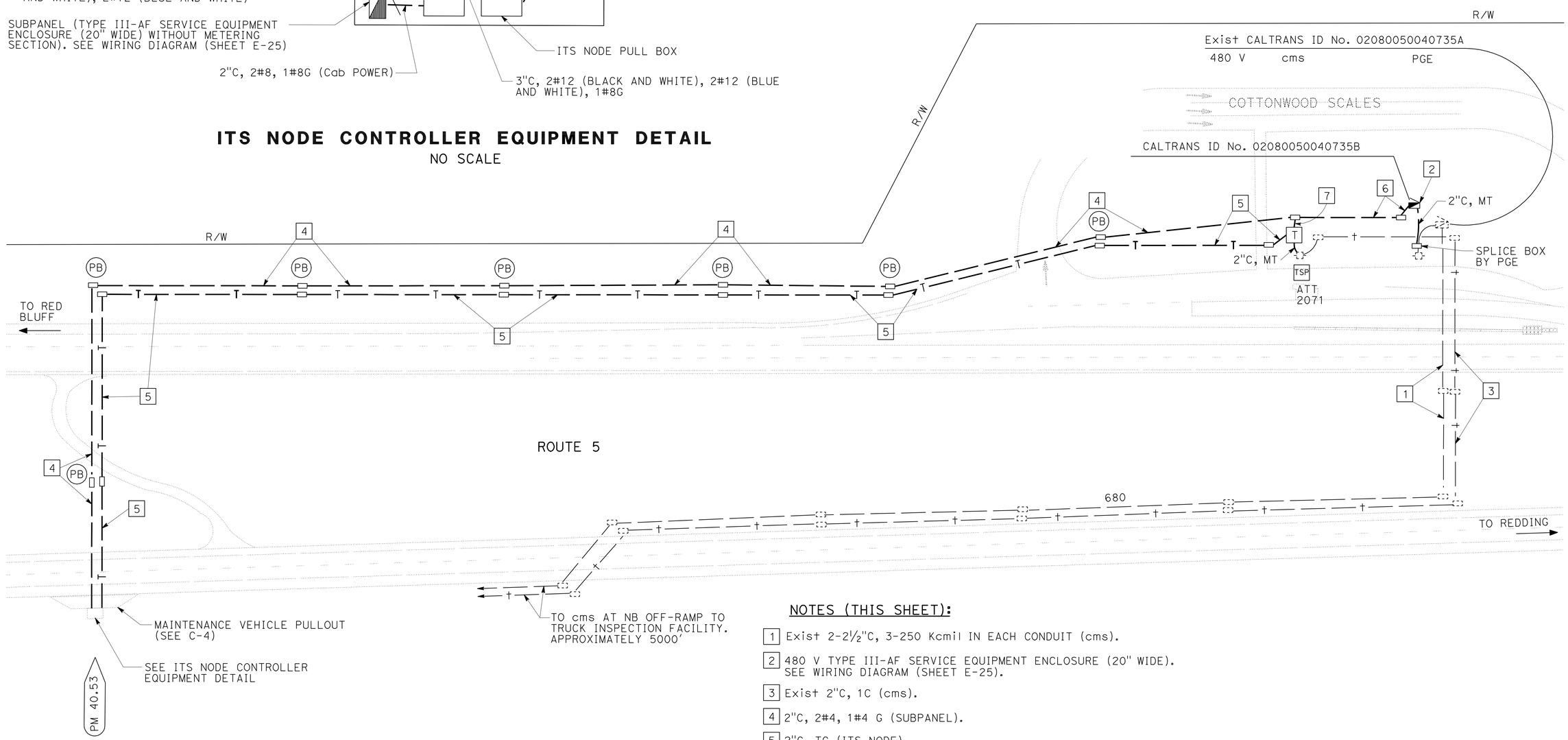

NOTES (THIS SHEET):

1. Exist 2-2½"C, 3-250 Kcmil IN EACH CONDUIT (cms).
2. 480 V TYPE III-AF SERVICE EQUIPMENT ENCLOSURE (20" WIDE). SEE WIRING DIAGRAM (SHEET E-25).
3. Exist 2"C, 1C (cms).
4. 2"C, 2#4, 1#4 G (SUBPANEL).
5. 2"C, TC (ITS NODE).
6. 2"C, 2#4, 1#4G (SUBPANEL), 2#12 (TDC).
7. 1½"C, 2#12, 1#8G.
8. EXISTING UTILITIES HAVE NOT BEEN POSITIVELY LOCATED.

THIS PLAN IS ACCURATE FOR ELECTRICAL WORK ONLY.

CLOSED CIRCUIT TELEVISION SYSTEM (LOCATION 3)

SCALE: 1" = 50'

E-18

REVISED BY	DATE REVISED
ARTURO ROBLES	JAMES M. HANNIGAN
CALCULATED-DESIGNED BY	CHECKED BY
FUNCTIONAL SUPERVISOR	ROB STINGER

STATE OF CALIFORNIA - DEPARTMENT OF TRANSPORTATION

Caltrans® ELECTRICAL DESIGN

P:\proj1\02\3E810_plans\pse\02000201181ua018.dgn

LAST REVISION 04-06-11 DATE PLOTTED => 27-JUN-2011 TIME PLOTTED => 12:22

Dist	COUNTY	ROUTE	POST MILES TOTAL PROJECT	SHEET No.	TOTAL SHEETS
02	Teh,Sha	5	R27.1/42.1, 0.0/0.9	137	215

ART 05-31-11
REGISTERED ELECTRICAL ENGINEER DATE

06-17-11
PLANS APPROVAL DATE

REGISTERED PROFESSIONAL ENGINEER A.P. ROBLES No. E15293 Exp. 3-31-13 ELECTRICAL STATE OF CALIFORNIA

THE STATE OF CALIFORNIA OR ITS OFFICERS OR AGENTS SHALL NOT BE RESPONSIBLE FOR THE ACCURACY OR COMPLETENESS OF SCANNED COPIES OF THIS PLAN SHEET.

NOTE:

1. FOR ACCURATE RIGHT OF WAY AND ACCESS DATA, CONTACT RIGHT OF WAY ENGINEERING AT THE DISTRICT OFFICE.

ITS NODE CONTROLLER EQUIPMENT DETAIL

NO SCALE

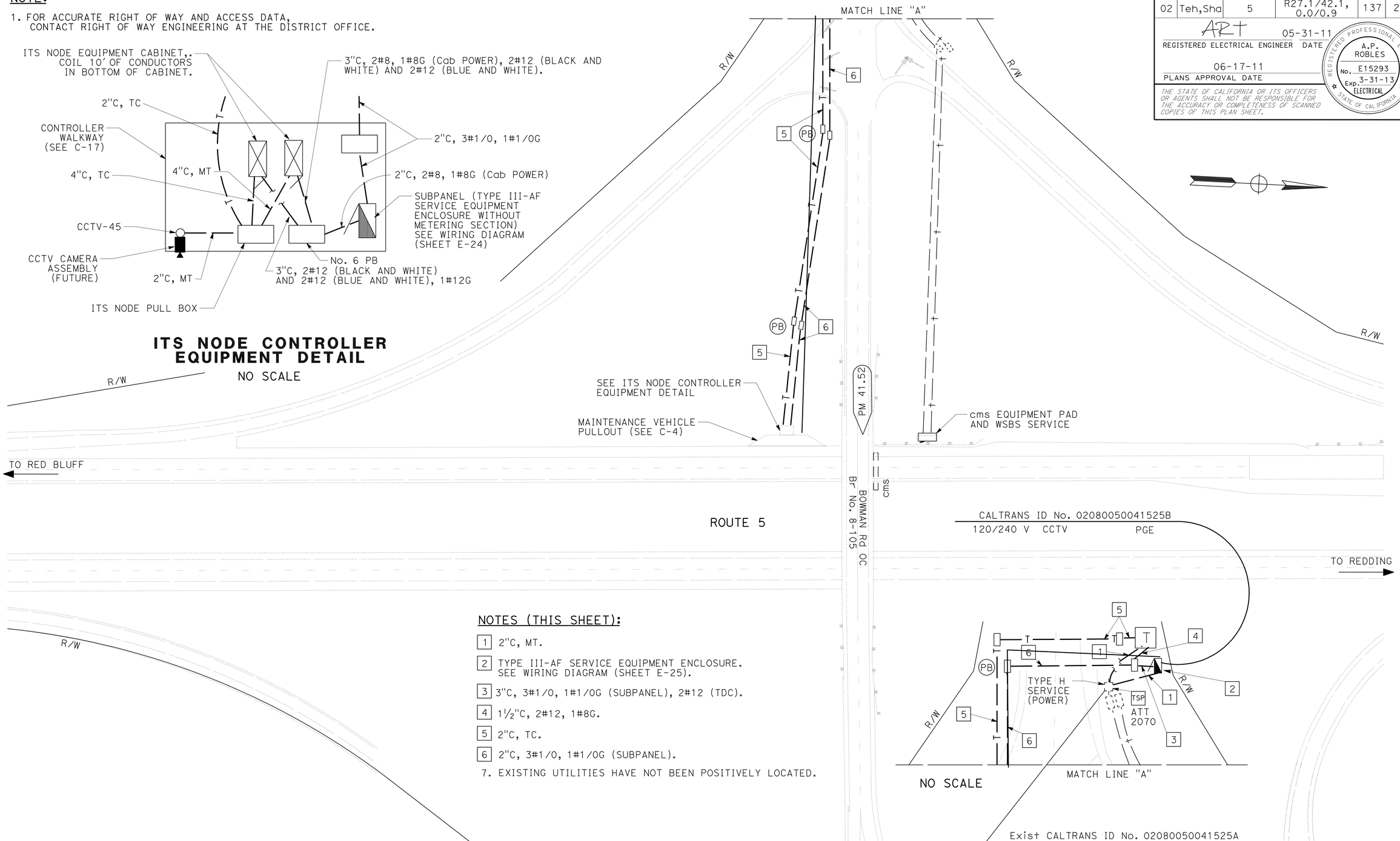

NOTES (THIS SHEET):

1. 2"C, MT.
2. TYPE III-AF SERVICE EQUIPMENT ENCLOSURE. SEE WIRING DIAGRAM (SHEET E-25).
3. 3"C, 3#1/0, 1#1/0G (SUBPANEL), 2#12 (TDC).
4. 1½"C, 2#12, 1#8G.
5. 2"C, TC.
6. 2"C, 3#1/0, 1#1/0G (SUBPANEL).
7. EXISTING UTILITIES HAVE NOT BEEN POSITIVELY LOCATED.

THIS PLAN IS ACCURATE FOR ELECTRICAL WORK ONLY.

CLOSED CIRCUIT TELEVISION SYSTEM (LOCATION 4)

SCALE: 1" = 50'

E-19

REVISED BY | DATE REVISED
ARTURO ROBLES | JAMES M. HANNIGAN
CALCULATED-DESIGNED BY | CHECKED BY
FUNCTIONAL SUPERVISOR: ROB STINGER

STATE OF CALIFORNIA - DEPARTMENT OF TRANSPORTATION
Caltrans ELECTRICAL DESIGN

P:\proj1\02\3E810_plans\pse\02000201811ua019.dgn

LAST REVISION 04-25-11 | DATE PLOTTED => 27-JUN-2011 | TIME PLOTTED => 12:22

Dist	COUNTY	ROUTE	POST MILES TOTAL PROJECT	SHEET No.	TOTAL SHEETS
02	Teh,Sha	5	R27.1/42.1, 0.0/0.9	138	215

J. Hannigan 05-31-11
REGISTERED ELECTRICAL ENGINEER DATE

06-17-11
PLANS APPROVAL DATE

REGISTERED PROFESSIONAL ENGINEER J.M. HANNIGAN No. E13665 Exp. 6-30-11 ELECTRICAL STATE OF CALIFORNIA

THE STATE OF CALIFORNIA OR ITS OFFICERS OR AGENTS SHALL NOT BE RESPONSIBLE FOR THE ACCURACY OR COMPLETENESS OF SCANNED COPIES OF THIS PLAN SHEET.

NOTE:

1. FOR ACCURATE RIGHT OF WAY AND ACCESS DATA, CONTACT RIGHT OF WAY ENGINEERING AT THE DISTRICT OFFICE.

NOTES (THIS SHEET):

1. EXACT LOCATION, CONFIGURATION, AND INSTALLATION PROCEDURES OF WHEEL SCALES AND LOOP DETECTORS SHALL BE DETERMINED BY THE ENGINEER AND SHALL CONFORM TO THE REQUIREMENTS OF THE WIM MANUFACTURER.
2. WIM SCALE PAD TO MATCH EXISTING ROADWAY PROFILE AND CROSS-SLOPE. SEE SHEET C-10.

3 EXISTING WIM EQUIPMENT IN THE wim cabinet WILL BE REMOVED BY STATE PERSONNEL.

4 Exist tms No. 313

5. EXISTING UTILITIES HAVE NOT BEEN POSITIVELY LOCATED.

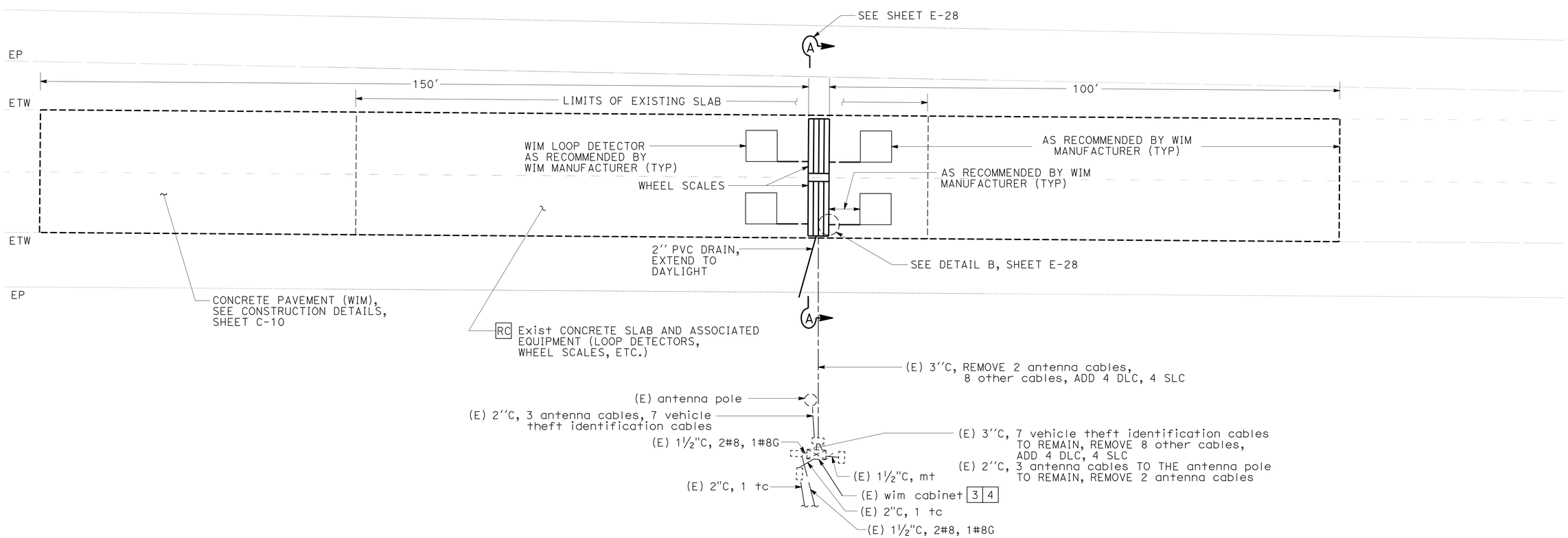

NORTHBOUND ADVANCE WIM SITE

PM 37.07

MODIFY HIGH SPEED WEIGH-IN-MOTION SYSTEM

SCALE: 1" = 10'

E-20

THIS PLAN IS ACCURATE FOR ELECTRICAL WORK ONLY.

REVISED BY | DATE REVISED
J. M. HANNIGAN | ARTURO ROBLES
CALCULATED-DESIGNED BY | CHECKED BY
FUNCTIONAL SUPERVISOR: ROB STINGER

STATE OF CALIFORNIA - DEPARTMENT OF TRANSPORTATION
Caltrans® ELECTRICAL DESIGN

P:\proj\02\3E810_plans\pse\02000201811ua020.dgn

LAST REVISION 06-03-11 | DATE PLOTTED => 27-JUN-2011 | TIME PLOTTED => 12:22

Dist	COUNTY	ROUTE	POST MILES TOTAL PROJECT	SHEET No.	TOTAL SHEETS
02	Teh,Sha	5	R27.1/42.1, 0.0/0.9	139	215

J. Hannigan 05-31-11
REGISTERED ELECTRICAL ENGINEER DATE

06-17-11
PLANS APPROVAL DATE

REGISTERED PROFESSIONAL ENGINEER J.M. HANNIGAN No. E13665 Exp. 6-30-11 ELECTRICAL STATE OF CALIFORNIA

THE STATE OF CALIFORNIA OR ITS OFFICERS OR AGENTS SHALL NOT BE RESPONSIBLE FOR THE ACCURACY OR COMPLETENESS OF SCANNED COPIES OF THIS PLAN SHEET.

NOTE:

1. FOR ACCURATE RIGHT OF WAY AND ACCESS DATA, CONTACT RIGHT OF WAY ENGINEERING AT THE DISTRICT OFFICE.

NOTES (THIS SHEET):

1. EXACT LOCATION, CONFIGURATION, AND INSTALLATION PROCEDURES OF AXLE SENSORS AND LOOP DETECTORS SHALL BE DETERMINED BY THE ENGINEER AND SHALL CONFORM TO THE REQUIREMENTS OF THE WIM MANUFACTURER.

2. EXISTING WIM EQUIPMENT IN THE wim cabinet WILL BE REMOVED BY STATE PERSONNEL.

3. EXISTING UTILITIES HAVE NOT BEEN POSITIVELY LOCATED.

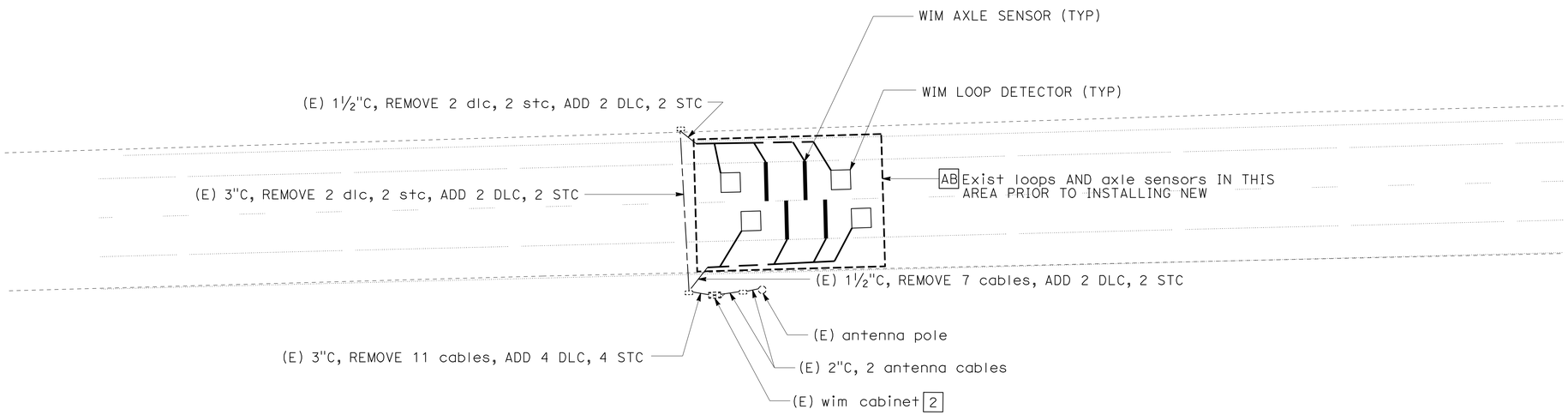

NORTHBOUND COMPLIANCE WIM SITE

PM 40.35

MODIFY HIGH SPEED WEIGH-IN-MOTION SYSTEM

SCALE: 1" = 20'

E-21

THIS PLAN IS ACCURATE FOR ELECTRICAL WORK ONLY.

REVISED BY | DATE REVISED
J. M. HANNIGAN | ARTURO ROBLES
CALCULATED-DESIGNED BY | CHECKED BY
FUNCTIONAL SUPERVISOR: ROB STINGER

STATE OF CALIFORNIA - DEPARTMENT OF TRANSPORTATION
Caltrans® ELECTRICAL DESIGN

P:\proj1\02\3E810_plans\pse\02000201811ua021.dgn

LAST REVISION 04-11-11 | DATE PLOTTED => 27-JUN-2011 TIME PLOTTED => 12:23

Dist	COUNTY	ROUTE	POST MILES TOTAL PROJECT	SHEET No.	TOTAL SHEETS
02	Teh,Sha	5	R27.1/42.1, 0.0/0.9	140	215

J. Hannigan 05-31-11
REGISTERED ELECTRICAL ENGINEER DATE

06-17-11
PLANS APPROVAL DATE

REGISTERED PROFESSIONAL ENGINEER J.M. HANNIGAN No. E13665 Exp. 6-30-11 ELECTRICAL STATE OF CALIFORNIA

THE STATE OF CALIFORNIA OR ITS OFFICERS OR AGENTS SHALL NOT BE RESPONSIBLE FOR THE ACCURACY OR COMPLETENESS OF SCANNED COPIES OF THIS PLAN SHEET.

NOTE:

1. FOR ACCURATE RIGHT OF WAY AND ACCESS DATA, CONTACT RIGHT OF WAY ENGINEERING AT THE DISTRICT OFFICE.

NOTES (THIS SHEET):

1. EXACT LOCATION, CONFIGURATION, AND INSTALLATION PROCEDURES OF AXLE SENSORS AND LOOP DETECTORS SHALL BE DETERMINED BY THE ENGINEER AND SHALL CONFORM TO THE REQUIREMENTS OF THE WIM MANUFACTURER.

2 EXISTING WIM EQUIPMENT IN THE wim cabinet WILL BE REMOVED BY STATE PERSONNEL.

3. EXISTING UTILITIES HAVE NOT BEEN POSITIVELY LOCATED.

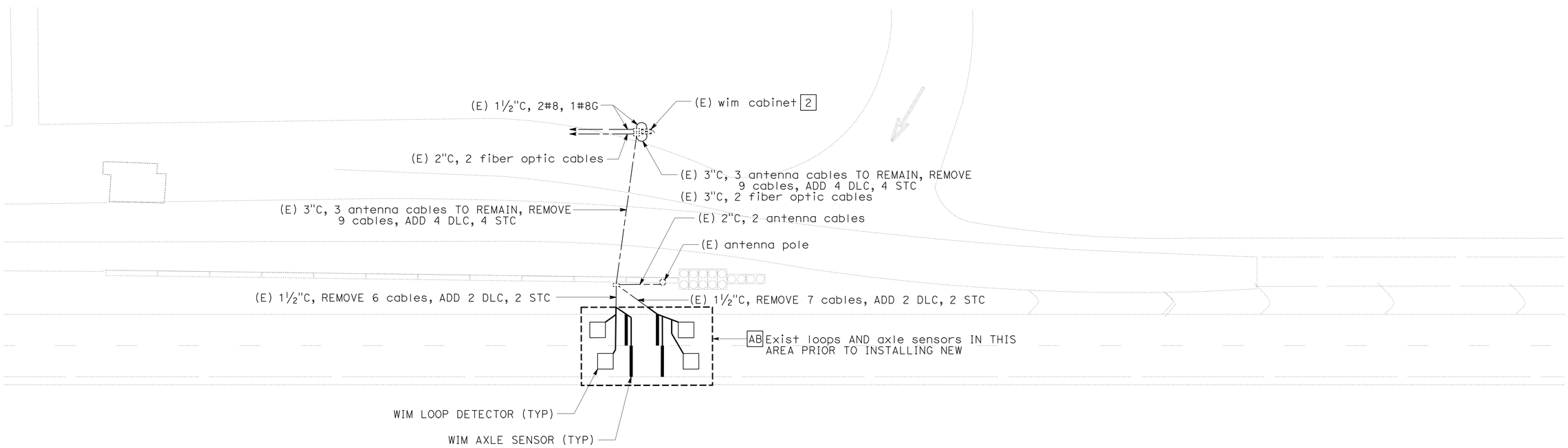

SOUTHBOUND COMPLIANCE WIM SITE

PM 40.78

MODIFY HIGH SPEED WEIGH-IN-MOTION SYSTEM

SCALE: 1" = 20'

E-22

THIS PLAN IS ACCURATE FOR ELECTRICAL WORK ONLY.

REVISED BY	DATE REVISED

CALCULATED-DESIGNED BY: J. M. HANNIGAN
CHECKED BY: ARTURO ROBLES
FUNCTIONAL SUPERVISOR: ROB STINGER

STATE OF CALIFORNIA - DEPARTMENT OF TRANSPORTATION
Caltrans ELECTRICAL DESIGN

P:\proj1\02\3E810_plans\pse\02000201811ua022.dgn

LAST REVISION 04-11-11 DATE PLOTTED => 27-JUN-2011 TIME PLOTTED => 12:23

Dist	COUNTY	ROUTE	POST MILES TOTAL PROJECT	SHEET No.	TOTAL SHEETS
02	Teh,Sha	5	R27.1/42.1, 0.0/0.9	141	215

REGISTERED ELECTRICAL ENGINEER 05-31-11 DATE

06-17-11
PLANS APPROVAL DATE

REGISTERED PROFESSIONAL ENGINEER J.M. HANNIGAN No. E13665 Exp. 6-30-11 ELECTRICAL STATE OF CALIFORNIA

THE STATE OF CALIFORNIA OR ITS OFFICERS OR AGENTS SHALL NOT BE RESPONSIBLE FOR THE ACCURACY OR COMPLETENESS OF SCANNED COPIES OF THIS PLAN SHEET.

NOTE:

1. FOR ACCURATE RIGHT OF WAY AND ACCESS DATA, CONTACT RIGHT OF WAY ENGINEERING AT THE DISTRICT OFFICE.

NOTES (THIS SHEET):

1. EXACT LOCATION, CONFIGURATION, AND INSTALLATION PROCEDURES OF WHEEL SCALES AND LOOP DETECTORS SHALL BE DETERMINED BY THE ENGINEER AND SHALL CONFORM TO THE REQUIREMENTS OF THE WIM MANUFACTURER.
2. WIM SCALE PAD TO MATCH PROPOSED ROADWAY PROFILE AND CROSS-SLOPE. SEE SHEET C-10.

[3] EXISTING WIM EQUIPMENT IN THE wim cabinet WILL BE REMOVED BY STATE PERSONNEL.

[4] Exist tms No. 314.

5. EXISTING UTILITIES HAVE NOT BEEN POSITIVELY LOCATED.

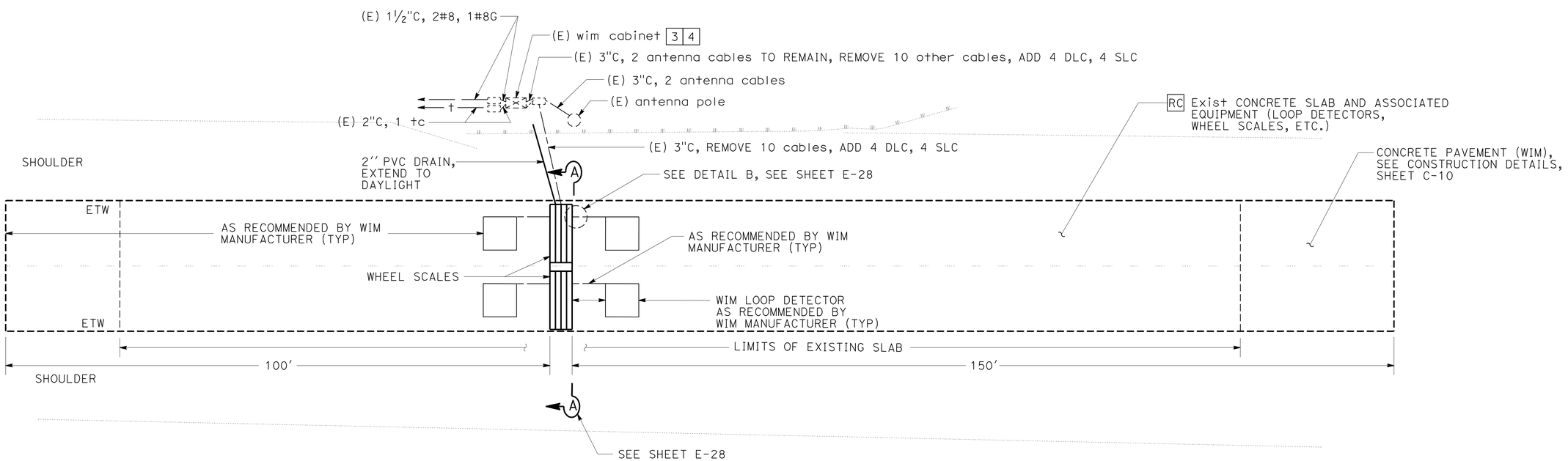

SOUTHBOUND ADVANCE WIM SITE

PM 41.62

MODIFY HIGH SPEED WEIGH-IN-MOTION SYSTEM

SCALE: 1" = 10'

E-23

THIS PLAN IS ACCURATE FOR ELECTRICAL WORK ONLY.

REVISED BY | DATE REVISED
J. M. HANNIGAN | ARTURO ROBLES
CALCULATED-DESIGNED BY | CHECKED BY
FUNCTIONAL SUPERVISOR: ROB STINGER

STATE OF CALIFORNIA - DEPARTMENT OF TRANSPORTATION
Caltrans® ELECTRICAL DESIGN

P:\proj1\02\3E810_plans\pse\02000201811ua023.dgn

LAST REVISION 06-03-11 | DATE PLOTTED => 27-JUN-2011 | TIME PLOTTED => 12:23

Dist	COUNTY	ROUTE	POST MILES TOTAL PROJECT	SHEET No.	TOTAL SHEETS
02	Teh,Sha	5	R27.1/42.1, 0.0/0.9	142	215

ART 05-31-11
REGISTERED ELECTRICAL ENGINEER DATE

06-17-11
PLANS APPROVAL DATE

REGISTERED PROFESSIONAL ENGINEER A.P. ROBLES No. E15293 Exp. 3-31-13 ELECTRICAL STATE OF CALIFORNIA

THE STATE OF CALIFORNIA OR ITS OFFICERS OR AGENTS SHALL NOT BE RESPONSIBLE FOR THE ACCURACY OR COMPLETENESS OF SCANNED COPIES OF THIS PLAN SHEET.

NOTES (THIS SHEET):

1. SEE RSP ES-2D FOR ADDITIONAL INFORMATION.

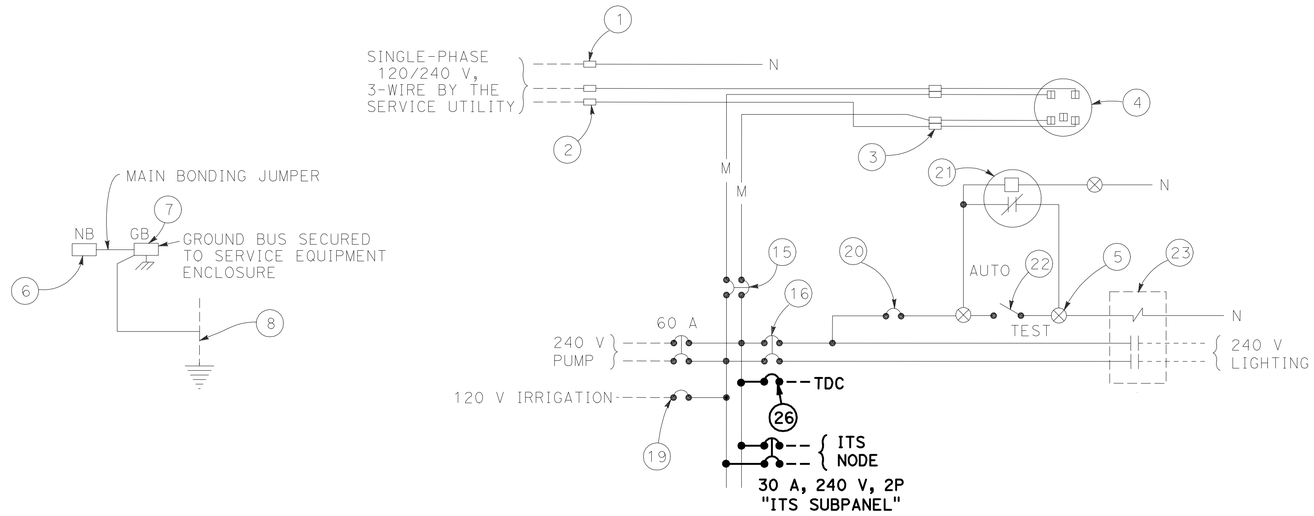

120/240 V SERVICE (LOCATION 1)

CALTRANS ID No. 0208005R028311

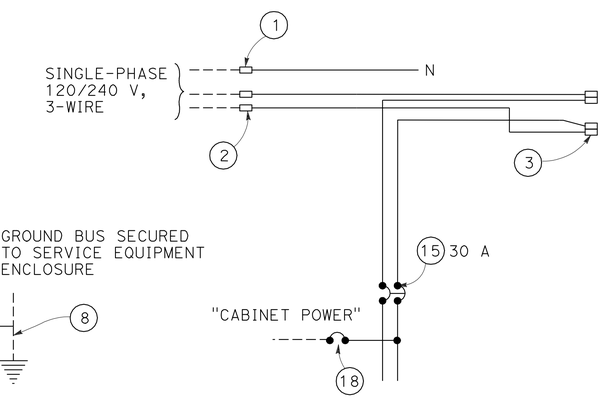

ITS SUBPANEL (LOCATIONS 1, 2 and 4)

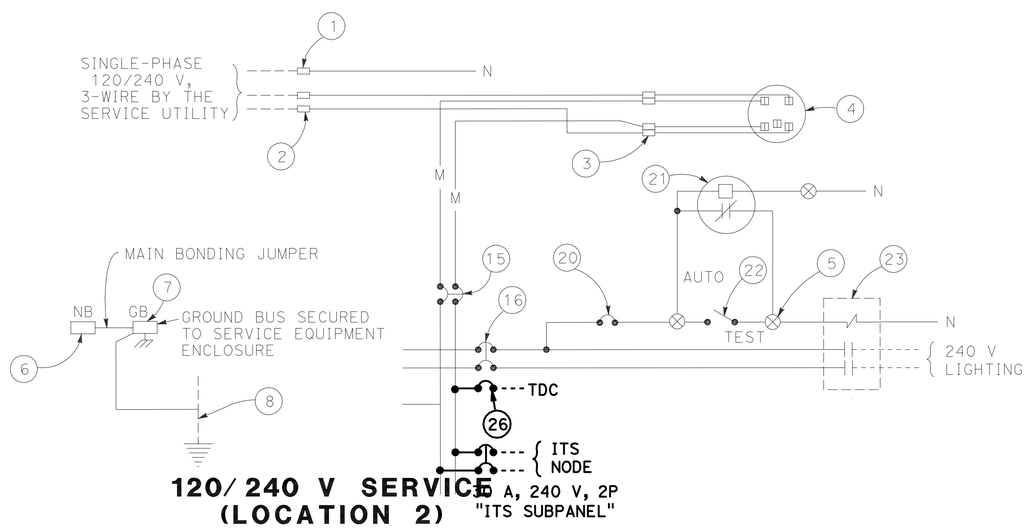

120/240 V SERVICE (LOCATION 2)

CALTRANS ID No. 0208005032236A

ITS SUBPANEL (LOCATIONS 2 AND 4)

CLOSED CIRCUIT TELEVISION SYSTEM (WIRING DIAGRAMS)

NO SCALE

E-24

THIS PLAN IS ACCURATE FOR ELECTRICAL WORK ONLY.

STATE OF CALIFORNIA - DEPARTMENT OF TRANSPORTATION
Caltrans® ELECTRICAL DESIGN

FUNCTIONAL SUPERVISOR: ROB STINGER
CALCULATED-DESIGNED BY / CHECKED BY
ARTURO ROBLES / JAMES M. HANNIGAN
REVISED BY / DATE REVISED

P:\proj1\02\3E810_plans\pse\02000201811ua024.dgn

LAST REVISION 04-06-11 | DATE PLOTTED => 27-JUN-2011 | TIME PLOTTED => 12:23

Dist	COUNTY	ROUTE	POST MILES TOTAL PROJECT	SHEET No.	TOTAL SHEETS
02	Teh,Sha	5	R27.1/42.1, 0.0/0.9	143	215

ART 05-31-11
REGISTERED ELECTRICAL ENGINEER DATE

06-17-11
PLANS APPROVAL DATE

REGISTERED PROFESSIONAL ENGINEER A.P. ROBLES No. E15293 Exp. 3-31-13 ELECTRICAL STATE OF CALIFORNIA

THE STATE OF CALIFORNIA OR ITS OFFICERS OR AGENTS SHALL NOT BE RESPONSIBLE FOR THE ACCURACY OR COMPLETENESS OF SCANNED COPIES OF THIS PLAN SHEET.

NOTES (THIS SHEET):

1. SEE RSP ES-2D FOR ADDITIONAL INFORMATION.

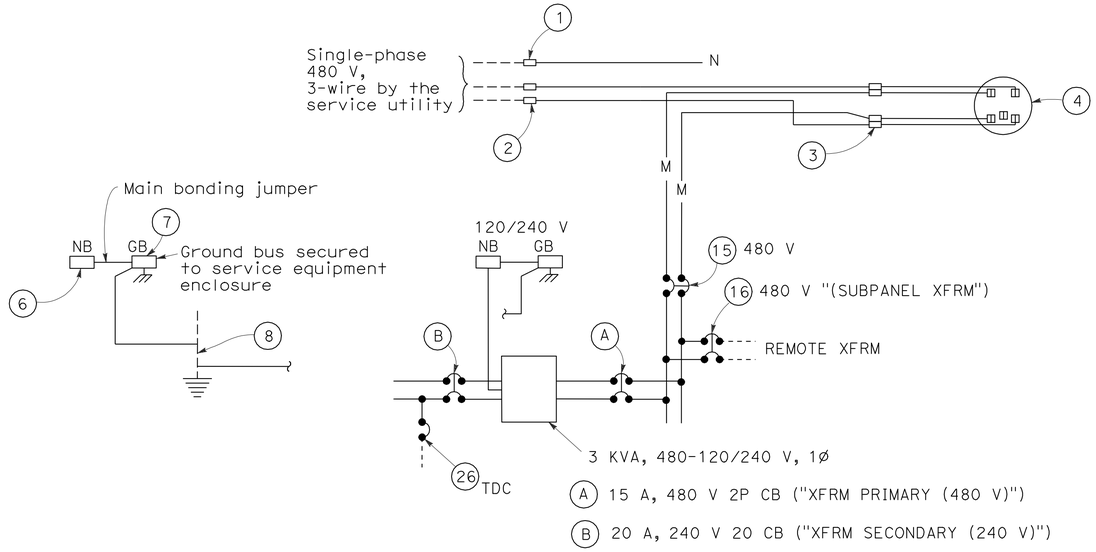

480 V SERVICE (LOCATION 3)

CALTRANS ID No. 02080050040735B

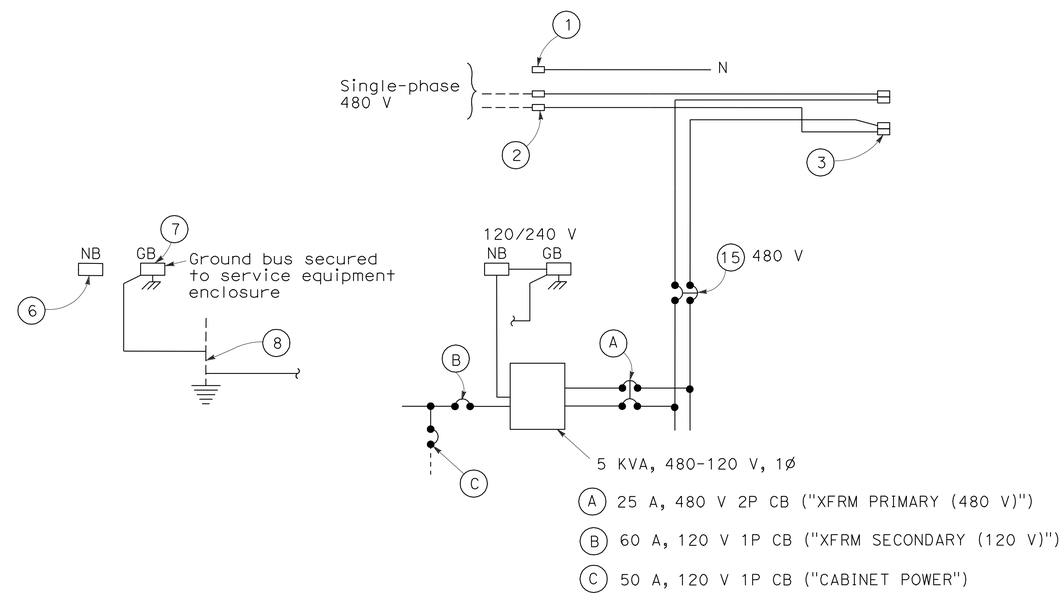

ITS SUBPANEL (LOCATION 3)

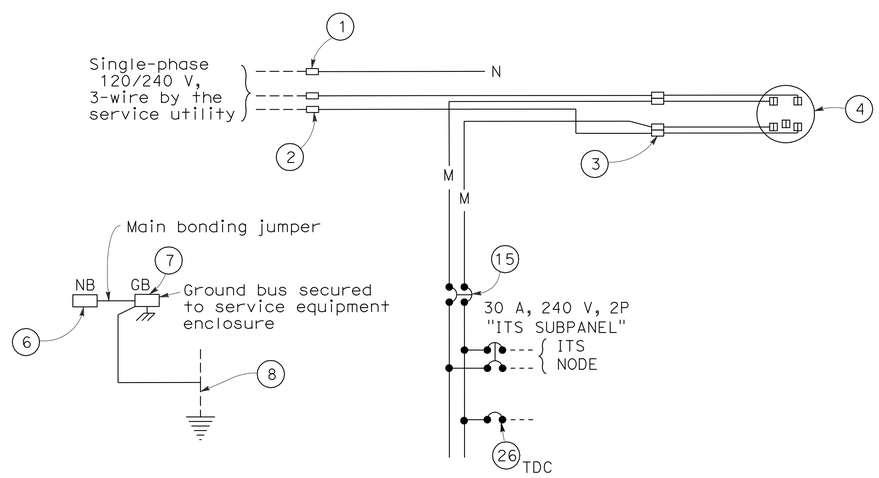

120/240 V SERVICE (LOCATION 4)

CALTRANS ID No. 02080050041525B

THIS PLAN IS ACCURATE FOR ELECTRICAL WORK ONLY.

CLOSED CIRCUIT TELEVISION SYSTEM (WIRING DIAGRAMS)

NO SCALE

E-25

REVISED BY | DATE REVISED
ARTURO ROBLES | JAMES M. HANNIGAN
CALCULATED-DESIGNED BY | CHECKED BY
FUNCTIONAL SUPERVISOR: ROB STINGER

STATE OF CALIFORNIA - DEPARTMENT OF TRANSPORTATION
Caltrans ELECTRICAL DESIGN

P:\proj1\02\3E810_plans\pse\02000201811ua025.dgn

LAST REVISION 04-06-11 | DATE PLOTTED => 27-JUN-2011 | TIME PLOTTED => 12:23

Dist	COUNTY	ROUTE	POST MILES TOTAL PROJECT	SHEET No.	TOTAL SHEETS
02	Teh,Sha	5	R27.1/42.1, 0.0/0.9	144	215

REGISTERED ELECTRICAL ENGINEER 05-31-11 DATE

06-17-11
PLANS APPROVAL DATE

REGISTERED PROFESSIONAL ENGINEER J.M. HANNIGAN No. E13665 Exp. 6-30-11 ELECTRICAL STATE OF CALIFORNIA

THE STATE OF CALIFORNIA OR ITS OFFICERS OR AGENTS SHALL NOT BE RESPONSIBLE FOR THE ACCURACY OR COMPLETENESS OF SCANNED COPIES OF THIS PLAN SHEET.

NOTES (THIS SHEET):

1. SEE RSP ES-2D FOR ADDITIONAL INFORMATION.

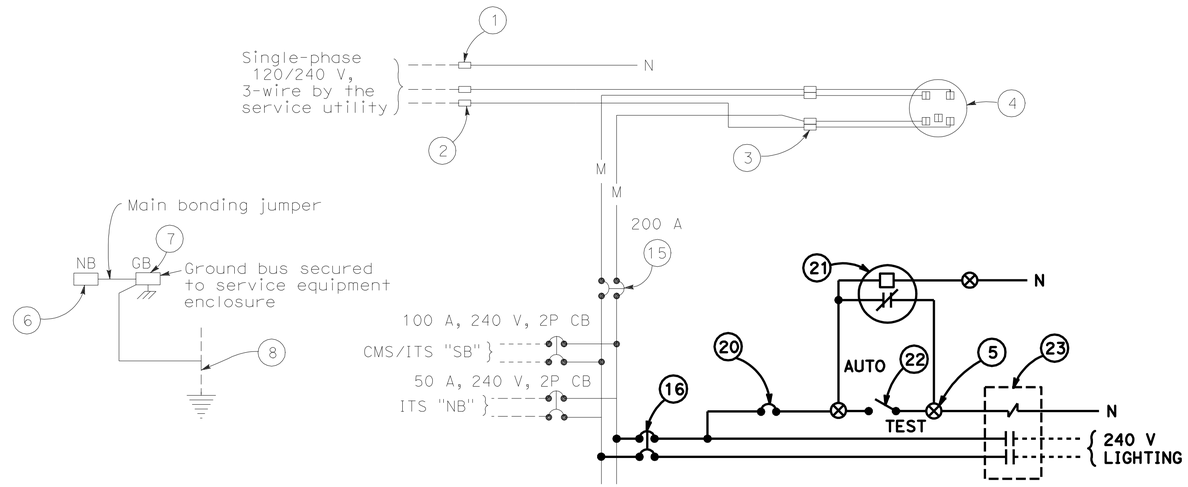

120/240 V SERVICE WIRING DIAGRAM

(WILCOX ROAD)

CALTRANS ID No. 02080050031043A

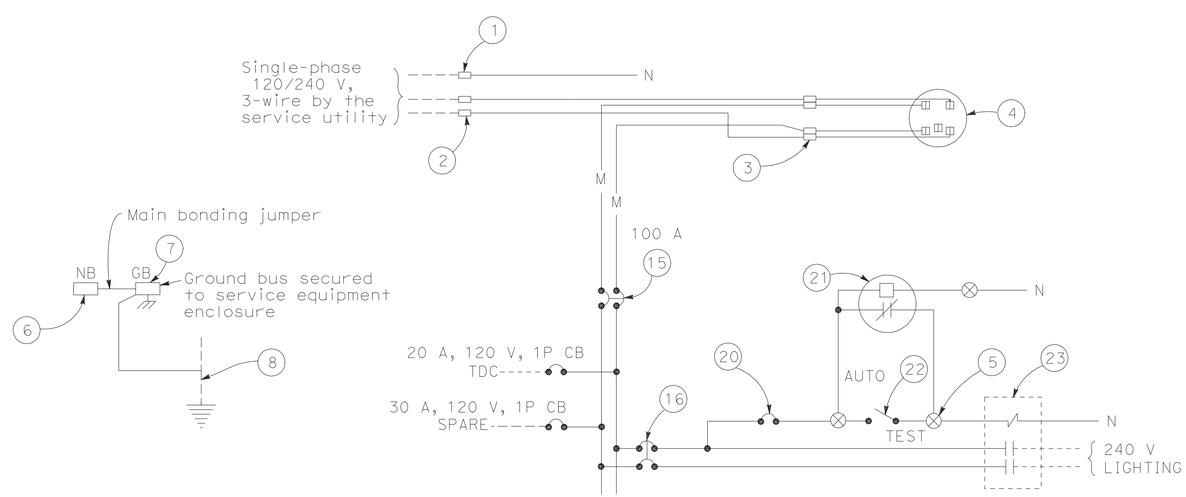

120/240 V SERVICE WIRING DIAGRAM

(HOOKER CREEK)

CALTRANS ID No. 02080050036376

THIS PLAN IS ACCURATE FOR ELECTRICAL WORK ONLY.

DETAILS
NO SCALE

E-26

REVISED BY | DATE REVISED
TERI ANDERSON | J. M. HANNIGAN
CALCULATED-DESIGNED BY | CHECKED BY
FUNCTIONAL SUPERVISOR: ROB STINGER

STATE OF CALIFORNIA - DEPARTMENT OF TRANSPORTATION
Caltrans ELECTRICAL DESIGN

P:\proj\02\3E810_plans\pse\02000201811ua026.dgn

LAST REVISION 04-11-11 | DATE PLOTTED => 27-JUN-2011 | TIME PLOTTED => 12:23

Dist	COUNTY	ROUTE	POST MILES TOTAL PROJECT	SHEET No.	TOTAL SHEETS
02	Teh,Sha	5	R27.1/42.1, 0.0/0.9	145	215

REGISTERED ELECTRICAL ENGINEER 05-31-11 DATE

PLANS APPROVAL DATE 06-17-11

REGISTERED PROFESSIONAL ENGINEER J.M. HANNIGAN No. E13665 Exp. 6-30-11 ELECTRICAL STATE OF CALIFORNIA

THE STATE OF CALIFORNIA OR ITS OFFICERS OR AGENTS SHALL NOT BE RESPONSIBLE FOR THE ACCURACY OR COMPLETENESS OF SCANNED COPIES OF THIS PLAN SHEET.

NOTES (THIS SHEET):

1. Exist 1-½" C, REPLACE Exist LOOP CONDUCTORS WITH NEW LOOP CONDUCTORS.
2. PROVIDE 10 FEET OF EXCESS LOOP CONDUCTORS COILED IN PULL BOX. SEAL ENDS OF CONDUCTORS USING "METHOD B".

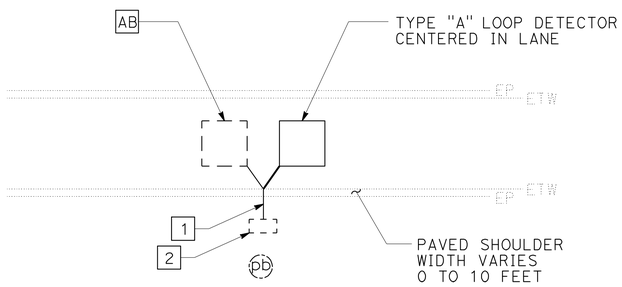

TYPICAL LOOP REPLACEMENT DETAIL SINGLE LOOP

NOTE: EXACT LOCATION OF LOOPS TO BE DETERMINED BY THE ENGINEER

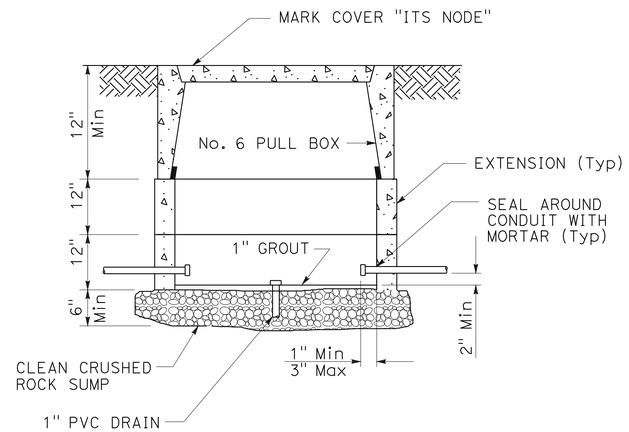

ITS NODE PULL BOX

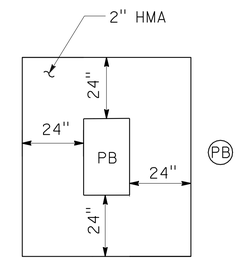

PULL BOX PAVING

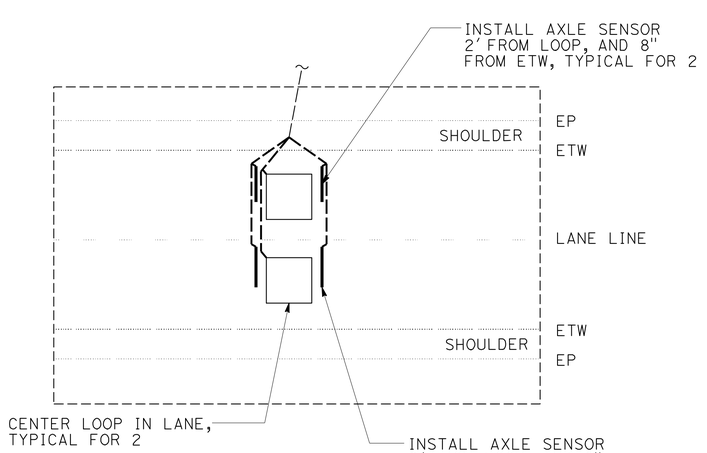

TYPICAL AXLE SENSOR INSTALLATION DETAIL

NO SCALE

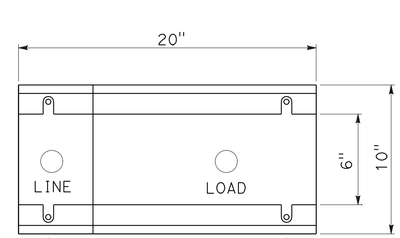

BASE DETAIL FOR TYPE III-AF SERVICE EQUIPMENT ENCLOSURE (20" WIDE)

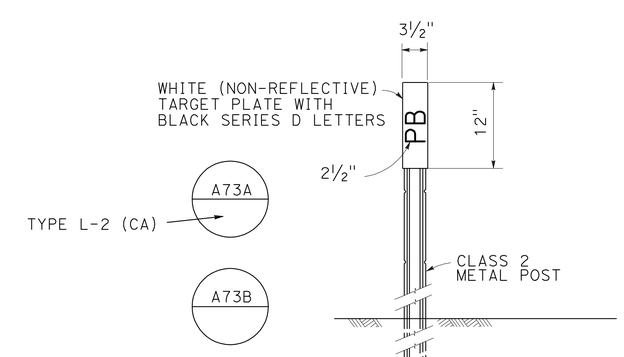

NOTE: MARKERS SHALL COMPLY WITH TYPE L-2 MODIFIED WITH A SNOW POLE BRACKET. PLACE MARKER 2" OUTSIDE PULL BOX PAVING ON SIDE AWAY FROM TRAFFIC. SEE PULL BOX PAVING DETAIL.

OBJECT MARKER (TYPE PB)

DETAILS

NO SCALE

E-27

THIS PLAN IS ACCURATE FOR ELECTRICAL WORK ONLY.

REVISED BY | DATE REVISED

J. M. HANNIGAN | TERI ANDERSON

CALCULATED-DESIGNED BY | CHECKED BY

FUNCTIONAL SUPERVISOR: ROB STINGER

STATE OF CALIFORNIA - DEPARTMENT OF TRANSPORTATION

Caltrans® ELECTRICAL DESIGN

P:\proj1\02\3E810_plans\pse\02000201811ua027.dgn

LAST REVISION 04-11-11 | DATE PLOTTED => 27-JUN-2011 | TIME PLOTTED => 12:23

Dist	COUNTY	ROUTE	POST MILES TOTAL PROJECT	SHEET No.	TOTAL SHEETS
02	Teh,Sha	5	R27.1/42.1, 0.0/0.9	146	215

REGISTERED ELECTRICAL ENGINEER 05-31-11 DATE

06-17-11
PLANS APPROVAL DATE

REGISTERED PROFESSIONAL ENGINEER J.M. HANNIGAN No. E13665 Exp. 6-30-11 ELECTRICAL STATE OF CALIFORNIA

THE STATE OF CALIFORNIA OR ITS OFFICERS OR AGENTS SHALL NOT BE RESPONSIBLE FOR THE ACCURACY OR COMPLETENESS OF SCANNED COPIES OF THIS PLAN SHEET.

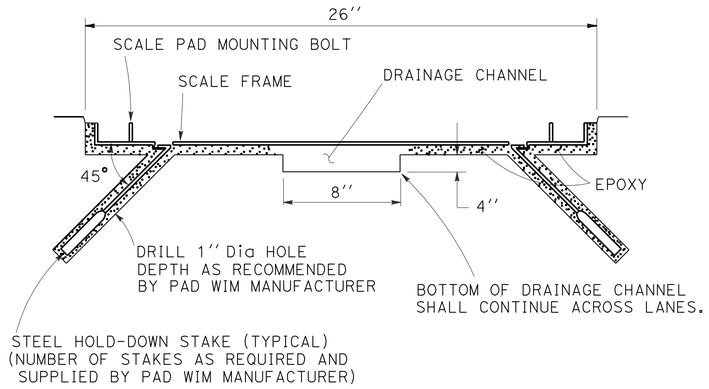

SCALE FRAME INSTALLATION
(TYPICAL)

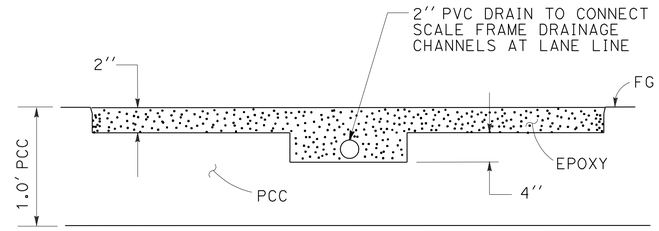

SECTION C-C

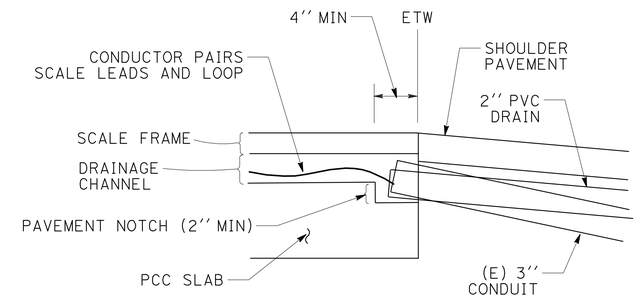

ELEVATION

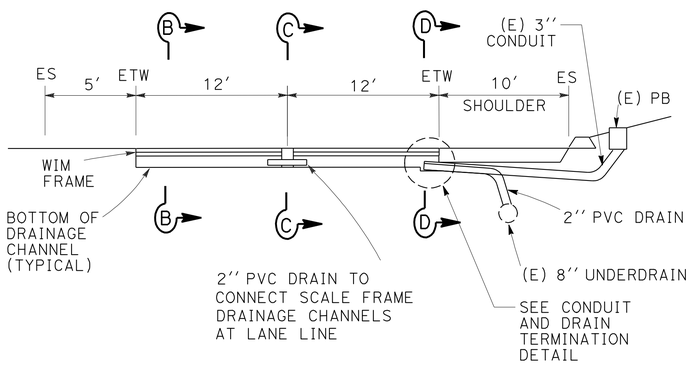

SECTION A-A
(SEE SHEETS E-20 AND E-21)

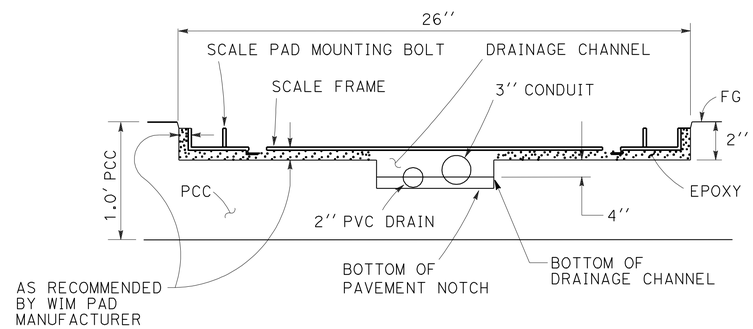

SECTION D-D

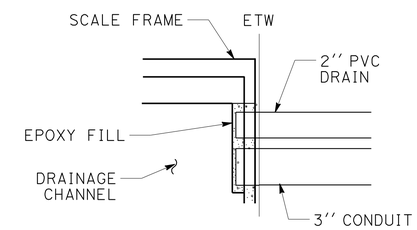

PLAN
CONDUIT AND DRAIN TERMINATION DETAIL

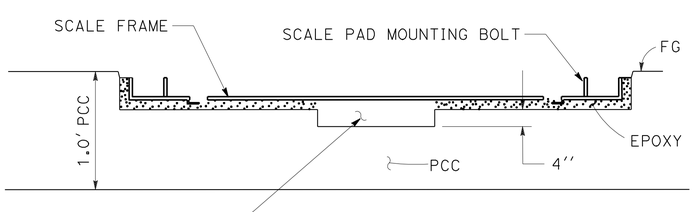

SECTION B-B

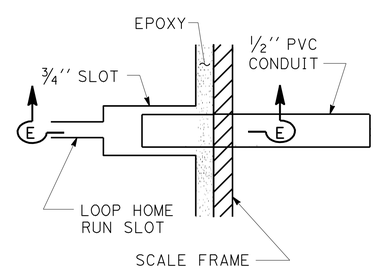

PLAN
DETAIL B

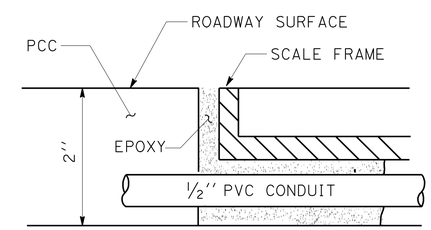

SECTION E-E

DETAILS
NO SCALE

E-28

THIS PLAN IS ACCURATE FOR ELECTRICAL WORK ONLY.

STATE OF CALIFORNIA - DEPARTMENT OF TRANSPORTATION
Caltrans® ELECTRICAL DESIGN
FUNCTIONAL SUPERVISOR: ROB STINGER
CALCULATED-DESIGNED BY: J. M. HANNIGAN
CHECKED BY: ARTURO ROBLES
REVISED BY / DATE REVISED

LAST REVISION 04-25-11
DATE PLOTTED => 27-JUN-2011
TIME PLOTTED => 12:23

P:\proj1\02\3E810_plans\pse\02000201811ua028.dgn

DIST	COUNTY	ROUTE	POST MILES TOTAL PROJECT	SHEET No	TOTAL SHEETS
02	Teh,Sha	5	R27.1/42.1, 0.0/0.9	147	215

Eliseo Lopez 5-23-11
REGISTERED CIVIL ENGINEER DATE

6-17-11
PLANS APPROVAL DATE

REGISTERED PROFESSIONAL ENGINEER ELISEO LOPEZ No. C72910 Exp. 12/31/12 CIVIL STATE OF CALIFORNIA

The State of California or its officers or agents shall not be responsible for the accuracy or completeness of electronic copies of this plan sheet.

To get to the Caltrans web site, go to: http://www.dot.ca.gov

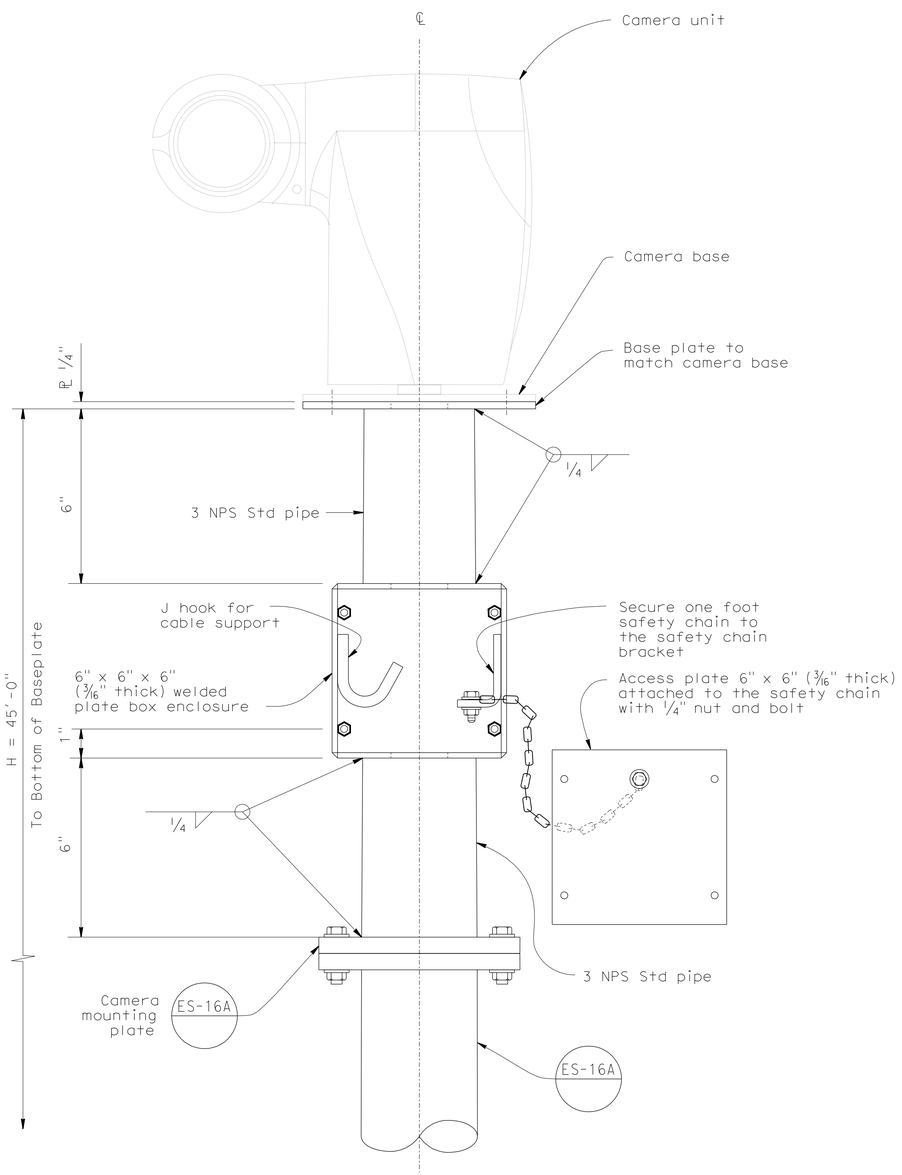

DETAIL A
MODIFIED CCTV 45 POLE

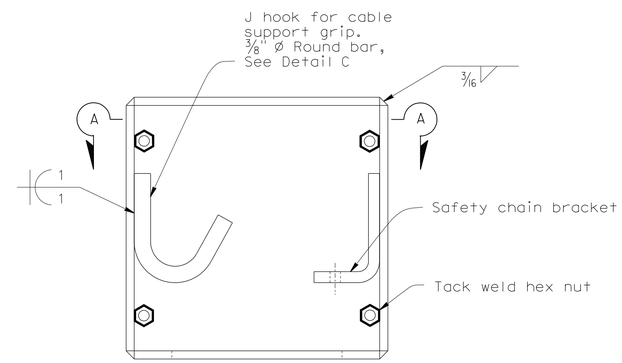

DETAIL B
BOX ENCLOSURE

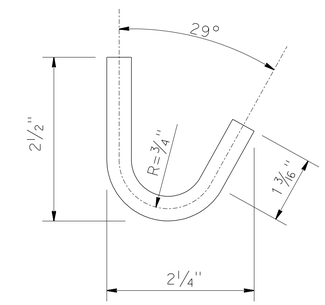

DETAIL C
J HOOK

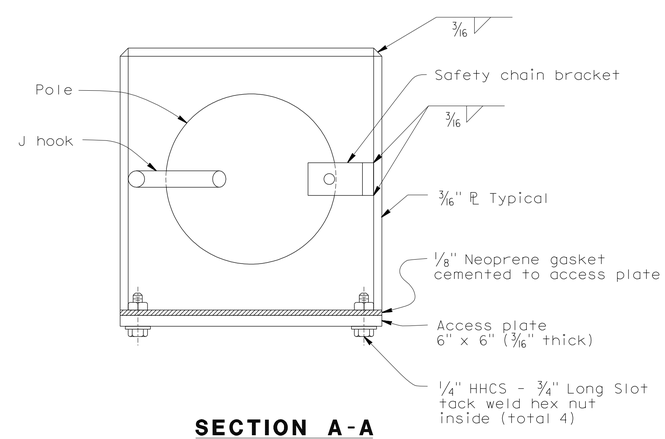

SECTION A-A

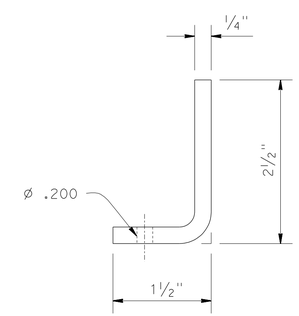

DETAIL D
SAFETY CHAIN BRACKET

Notes:

1. For details not shown, See "2006 Standard Plans ES-16A" and "2006 Revised Standard Plans".

NOTE:
THE CONTRACTOR SHALL VERIFY ALL CONTROLLING FIELD DIMENSIONS BEFORE ORDERING OR FABRICATING ANY MATERIAL.

NO SCALE

BRANCH CHIEF Jeffrey B. Woody

	BY	CHECKED
DESIGN	E LOPEZ	D VORA
DETAILS	D W JUSTICE Jr	E LOPEZ
QUANTITIES		

STATE OF CALIFORNIA
DEPARTMENT OF TRANSPORTATION

DIVISION OF ENGINEERING SERVICES
DESIGN AND TECHNICAL SERVICES
SPECIAL DESIGNS BRANCH A

BRIDGE NO. N/A
POST MILE

CLOSED CIRCUIT TELEVISION SYSTEM
CAMERA MOUNTING DETAILS

SES-1

(ENGLISH) SPECIAL DESIGNS BRANCH BORDER SHEET (REV. 7-1-09)

ORIGINAL SCALE IN INCHES FOR REDUCED PLANS 0 1 2 3

UNIT: 3619
PROJECT NUMBER & PHASE: 0200020181-1 CONTRACT NO.: 02-3E8101

DISREGARD PRINTS BEARING EARLIER REVISION DATES

REVISION DATES 1-21-11 5-23-11 6-17-11

SHEET OF

FILE => spec_des_br_prj/2011sd/02-2C8101/$REQUEST

USERNAME => $USER DATE PLOTTED => $DATE TIME PLOTTED => $TIME

DIST	COUNTY	ROUTE	POST MILES TOTAL PROJECT	SHEET NO.	TOTAL SHEETS
02	Teh,Sha	5	R27.1/42.1 0.0/0.9	148	215

REGISTERED CIVIL ENGINEER

June 6, 2008
PLANS APPROVAL DATE

REGISTERED PROFESSIONAL ENGINEER
Donald E. Howe
No. C46402
Exp. 3-31-09
CIVIL
STATE OF CALIFORNIA

The State of California or its officers or agents shall not be responsible for the accuracy or completeness of electronic copies of this plan sheet.

To accompany plans dated 06-17-11

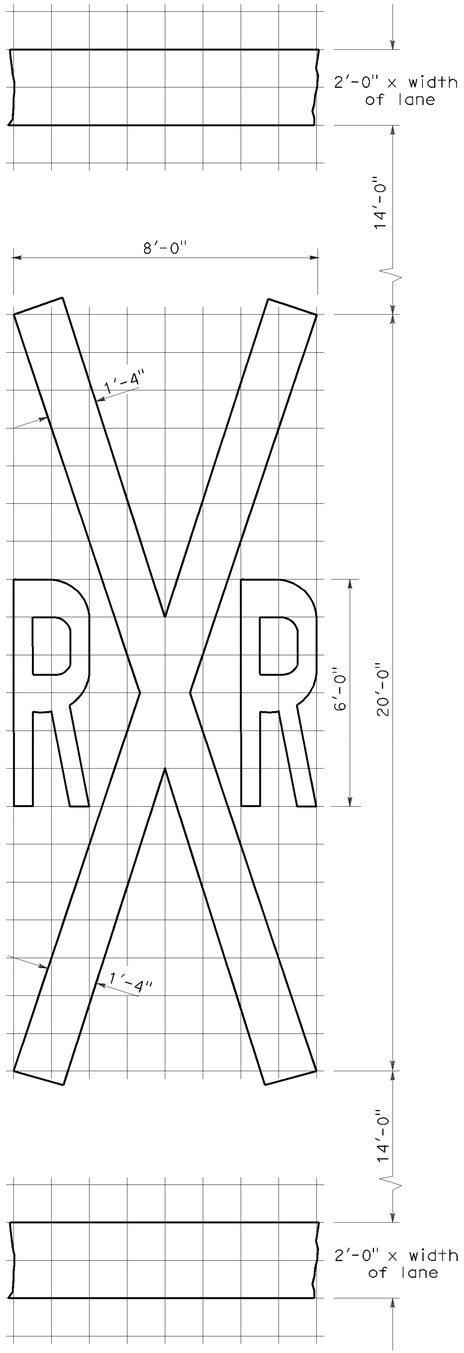

1'-0" GRID
A=70 sq ft ✳

RAILROAD CROSSING SYMBOL

✳70 sq ft DOES NOT INCLUDE THE 2'-0" x VARIABLE WIDTH TRANSVERSE LINES.

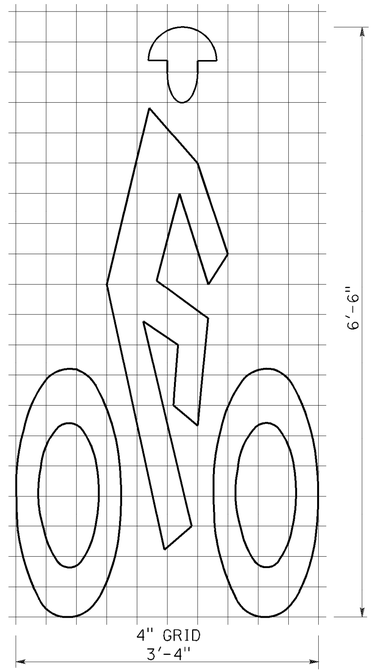

A=7 sq ft

BIKE LANE SYMBOL

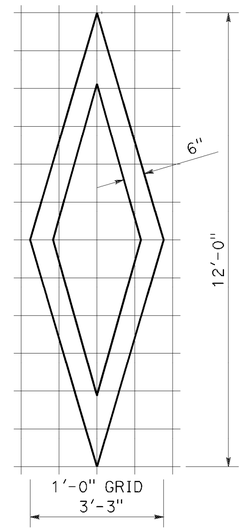

A=11 sq ft

DIAMOND SYMBOL

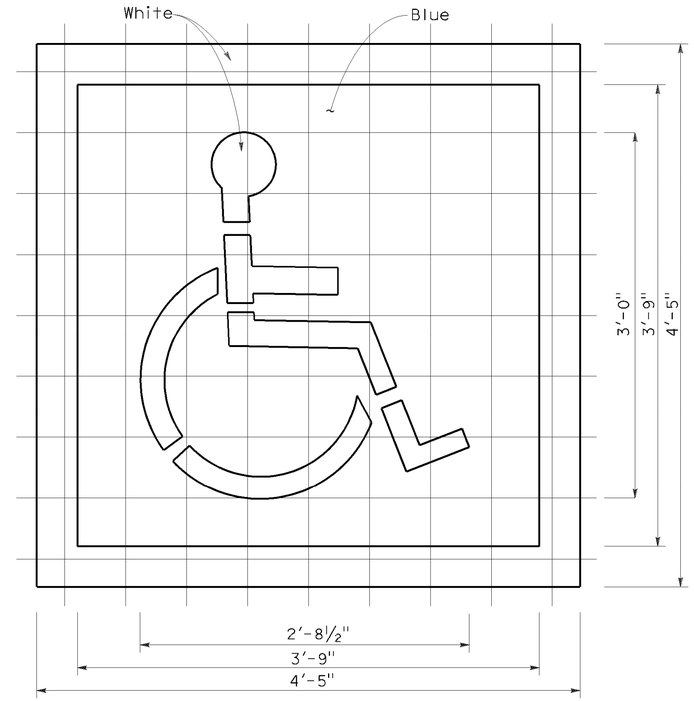

6" GRID
A (White) =9 sq ft
A (Blue) =14 sq ft

INTERNATIONAL SYMBOL OF ACCESSIBILITY MARKING

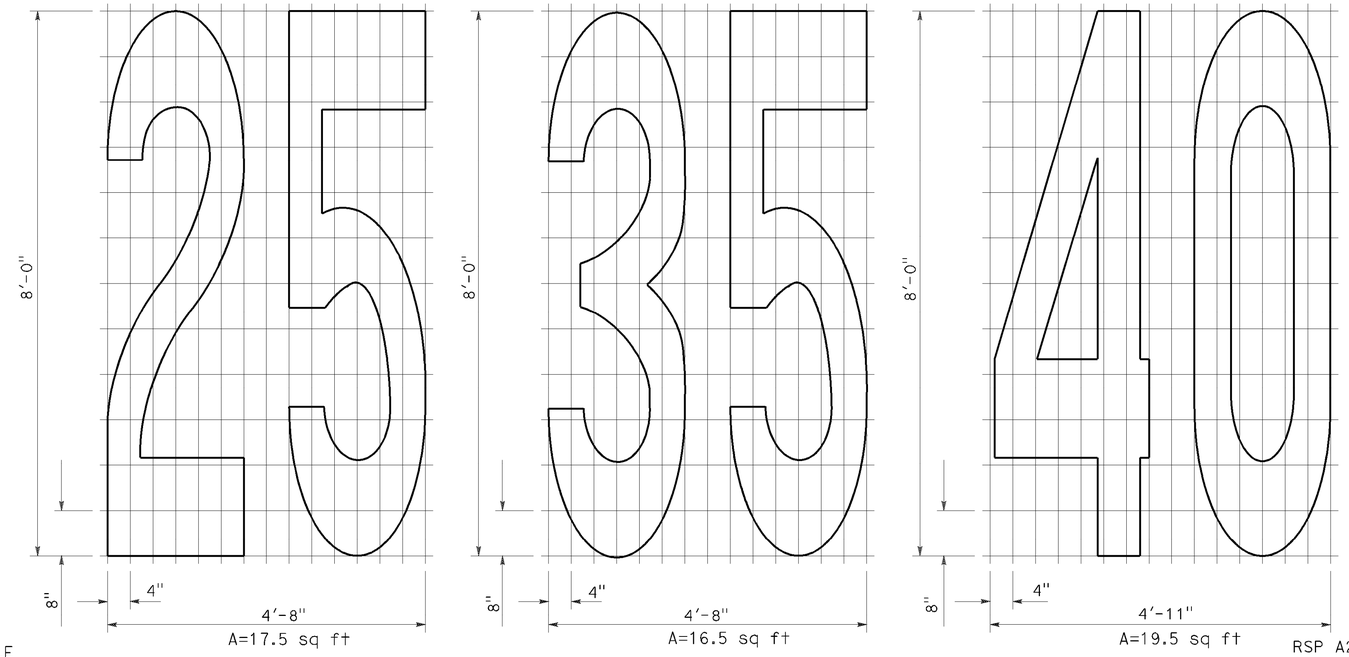

A=17.5 sq ft
A=16.5 sq ft
A=19.5 sq ft

NUMERALS

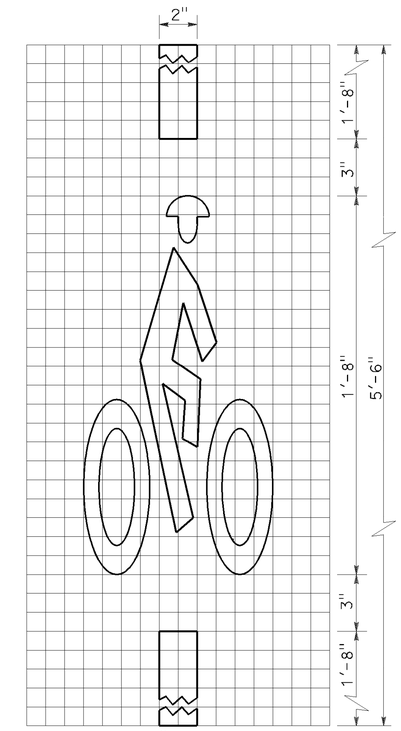

A=2 sq ft

BICYCLE LOOP DETECTOR SYMBOL

NOTE:

1. Minor variations in dimensions may be accepted by the Engineer.

STATE OF CALIFORNIA
DEPARTMENT OF TRANSPORTATION

PAVEMENT MARKINGS SYMBOLS AND NUMERALS

NO SCALE

RSP A24C DATED JUNE 6, 2008 SUPERSEDES STANDARD PLAN A24C DATED MAY 1, 2006 - PAGE 11 OF THE STANDARD PLANS BOOK DATED MAY 2006.

REVISED STANDARD PLAN RSP A24C

2006 REVISED STANDARD PLAN RSP A24C

P:\proj1\02\3E810_plans\pse\23e810va001.dgn

5-27-08

DIST	COUNTY	ROUTE	POST MILES TOTAL PROJECT	SHEET NO.	TOTAL SHEETS
02	Teh,Sha	5	R27.1/42.1 0.0/0.9	149	215

REGISTERED CIVIL ENGINEER

November 17, 2006
PLANS APPROVAL DATE

REGISTERED PROFESSIONAL ENGINEER Dallas Forester No. C37765 Exp. 12-31-06 CIVIL STATE OF CALIFORNIA

The State of California or its officers or agents shall not be responsible for the accuracy or completeness of electronic copies of this plan sheet.

To accompany plans dated 06-17-11

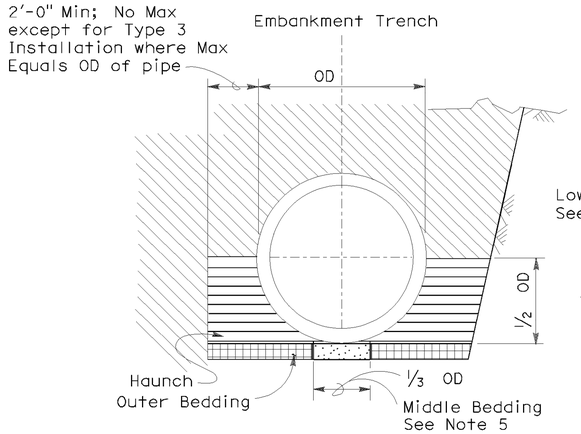

BACKFILL

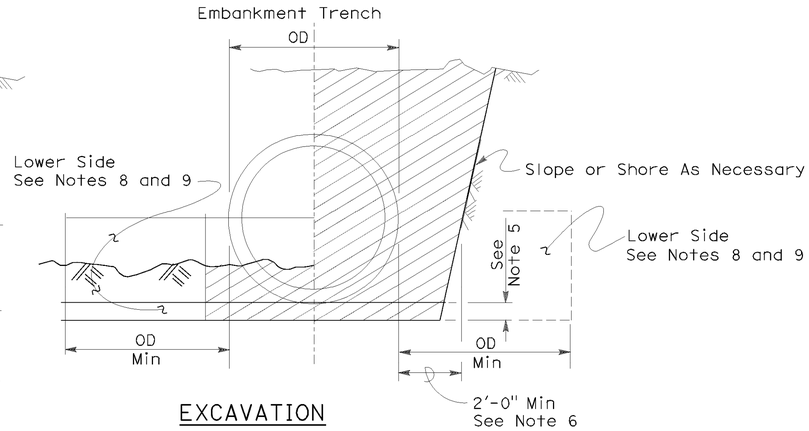

EXCAVATION

Roadway Embankment

Structure Backfill (Culvert) See Note 6

Structure Backfill (Culvert) See Note 6

Loose Backfill

Excavation Structure (Culvert)

TYPE 1 INSTALLATION:

The haunch and outer bedding shall be compacted to a minimum 90 percent relative compaction. In addition, the minimum sand equivalent in these areas shall be 30 and the maximum percentage passing the 75 μm sieve size shall be 12.

TYPE 2 INSTALLATION:

The haunch and outer bedding shall be compacted to a minimum 90 percent relative compaction. In addition, the minimum sand equivalent in these areas shall be 25.

TYPE 3 INSTALLATION:

The haunch and outer bedding shall be compacted to a minimum 85 percent relative compaction. 90 percent relative compaction will be required where the fill over the pipe is less than 4'-0" or 1/2 OD.

NOTES:

1. Unless otherwise shown on the plans or specified in the special provision, the Contractor shall have the option of selecting the class of RCP and the type of installation to be used, provided the height of cover does not exceed the value shown for the RCP selected.
   Example: 24" RCP culvert with maximum cover of 19'-0" the options are:
   a) Class III or stronger with Installation Type 1.
   b) Class III Special or stronger with Installation Type 2.
   c) Class IV Special or stronger with Installation Type 3.
   Cover is defined as the maximum vertical distance from top of the pipe to finished grade within the length of any given culvert.
2. The class of RCP and Installation Type selected shall be the same throughout the length of any given culvert.
3. The "length of any culvert" is defined as the culvert between:
   a) Successive drainage structure (inlets, junction boxes, headwalls, etc.).
   b) A drainage structure and the inlet or outlet end of the culvert.
   c) The inlet and outlet end of the culvert when there are no intervening drainage structures.
4. Oval and arch shaped RCP shall not be used.
5. 1/25 OD Min, not less than 3".
6. Slurry cement backfill may be substituted for backfill in the outer bedding and haunch areas. If slurry is used the outer and middle beddings shall be omitted. Prior to installation the soil under the middle 1/3 of the outside diameter of the pipe shall be softened by scarifying or other means to a minimum depth of 1/25 OD, but not less than 3". Where slurry cement backfill is used clear distance to trench wall may be reduced as set forth in Section 19-3.062 of the Standard Specifications.
7. Backfill shall be placed full width of excavation except where dimensions are shown for backfill width or thickness. Dimensions shown are minimums.
8. Lower side shall be suitable material as determined by the Engineer. Otherwise it shall be considered unsuitable as set forth in Section 19-2.02 of the Standard Specifications. See Note 9.
9. Where the pipe is placed in a trench, if the trench walls are sloped at 5 vertical to 1 horizontal or steeper for at least 90 percent of the trench height or up to not less than 12" from the grading plane, the firmness of the soil in the lower side need not be considered.
10. Non-reinforced precast concrete pipe sizes 3'-0" or smaller may be placed under installation Types 1, 2 or 3.

INSTALLATION TYPE 1

MINIMUM CLASS AND D-LOAD	COVER	
	108" Dia AND SMALLER	OVER 108" Dia
Class II 1000D	14.9'	12.9'
Class III 1350D	15.0' - 20.9'	13.0' - 18.9'
Class III Special 1700D	21.0' - 26.9'	19.0' - 24.9'
Class IV 2000D	27.0' - 31.9'	25.0' - 29.9'
Class IV Special 2500D	32.0' - 40.9'	30.0' - 38.9'
Class V 3000D	41.0' - 49.9'	39.0' - 46.9'
Class V Special 3600D	50.0' - 59.0'	47.0' - 58.0'

INSTALLATION TYPE 2

MINIMUM CLASS AND D-LOAD	COVER
Class II 1000D	9.9'
Class III 1350D	10.0'- 14.9'
Class III Special 1700D	15.0' - 19.9'
Class IV 2000D	20.0' - 24.9'
Class IV Special 2500D	25.0' - 31.9'
Class V 3000D	32.0' - 38.9'
Class V Special 3600D	39.0' - 47.0'

INSTALLATION TYPE 3

MINIMUM CLASS AND D-LOAD	COVER	
	48" Dia AND SMALLER	OVER 48" Dia
Class II 1000D	7.9'	5.9'
Class III 1350D	8.0' - 10.9'	6.0' - 8.9'
Class III Special 1700D	11.0' - 14.9'	9.0' - 12.9'
Class IV 2000D	15.0' - 17.9'	13.0' - 15.9'
Class IV Special 2500D	18.0' - 21.9'	16.0' - 19.9'
Class V 3000D	22.0' - 26.9'	20.0' - 24.9'
Class V Special 3600D	30.0' - 33.0'	25.0' - 31.0'

STATE OF CALIFORNIA
DEPARTMENT OF TRANSPORTATION

EXCAVATION AND BACKFILL CONCRETE PIPE CULVERTS

NO SCALE

RSP A62DA DATED NOVEMBER 17, 2006 SUPERSEDES STANDARD PLAN A62DA DATED MAY 1, 2006 - PAGE 20 OF THE STANDARD PLANS BOOK DATED MAY 2006.

REVISED STANDARD PLAN RSP A62DA

2006 REVISED STANDARD PLAN RSP A62DA

P:\proj1\02\3E810_plans\pse\23e810va002.dgn

10-26-06

Dist	COUNTY	ROUTE	POST MILES TOTAL PROJECT	SHEET No.	TOTAL SHEETS
02	Teh,Sha	5	R27.1/42.1 0.0/0.9	150	215

Randell D. Hiatt
REGISTERED CIVIL ENGINEER

May 20, 2011
PLANS APPROVAL DATE

REGISTERED PROFESSIONAL ENGINEER
Randell D. Hiatt
No. C50200
Exp. 6-30-11
CIVIL
STATE OF CALIFORNIA

The State of California or its officers or agents shall not be responsible for the accuracy or completeness of electronic copies of this plan sheet.

To accompany plans dated 06-17-11

NOTES:

1. When necessary to place dike in front of face of guard railing, only Type C dike may be used. For dike details, see Standard Plan A87B.
2. For standard railing post embedment, see Standard Plans A77C3.
3. Guard railing delineation to be used where shown on the Project Plans.
4. When dike or curb is placed under guard railing, the maximum height of the dike or curb shall be 4". Mountable dike should not be used. For dike and curb details, see Standard Plans A87A and A87B.
5. For details of typical distance between the face of rail and hinge point, see Standard Plan A77C3.
6. For steel line posts, use 1/4 - 20 self-tapping screws in 0.22" diameter holes or 1/4" bolts in 9/32" diameter holes.

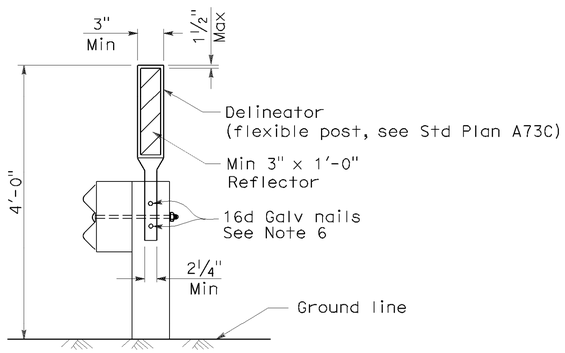

GUARD RAILING DELINEATION

See Note 3

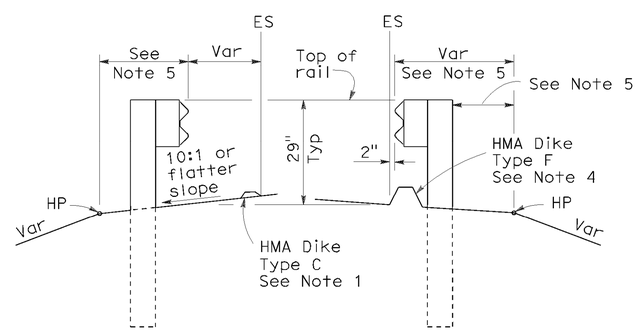

DIKE POSITIONING

See Note 1

STATE OF CALIFORNIA
DEPARTMENT OF TRANSPORTATION

METAL BEAM GUARD RAILING TYPICAL RAILING DELINEATION AND DIKE POSITIONING DETAILS

NO SCALE

RSP A77C4 DATED MAY 20, 2011 SUPERSEDES RSP A77C4 DATED JUNE 6, 2008 AND STANDARD PLAN A77C4 DATED MAY 1, 2006 - PAGE 47 OF THE STANDARD PLANS BOOK DATED MAY 2006.

REVISED STANDARD PLAN RSP A77C4

2006 REVISED STANDARD PLAN RSP A77C4

P:\proj1\02\3E810_plans\pse\23e810va003.dgn

3-10-11

DIST	COUNTY	ROUTE	POST MILES TOTAL PROJECT	SHEET NO.	TOTAL SHEETS
02	Teh,Sha	5	R27.1/42.1 0.0/0.9	151	215

Randell D. Hiatt
REGISTERED CIVIL ENGINEER

October 20, 2006
PLANS APPROVAL DATE

REGISTERED PROFESSIONAL ENGINEER
Randell D. Hiatt
No. C50200
Exp. 6-30-07
CIVIL
STATE OF CALIFORNIA

The State of California or its officers or agents shall not be responsible for the accuracy or completeness of electronic copies of this plan sheet.

To accompany plans dated 06-17-11

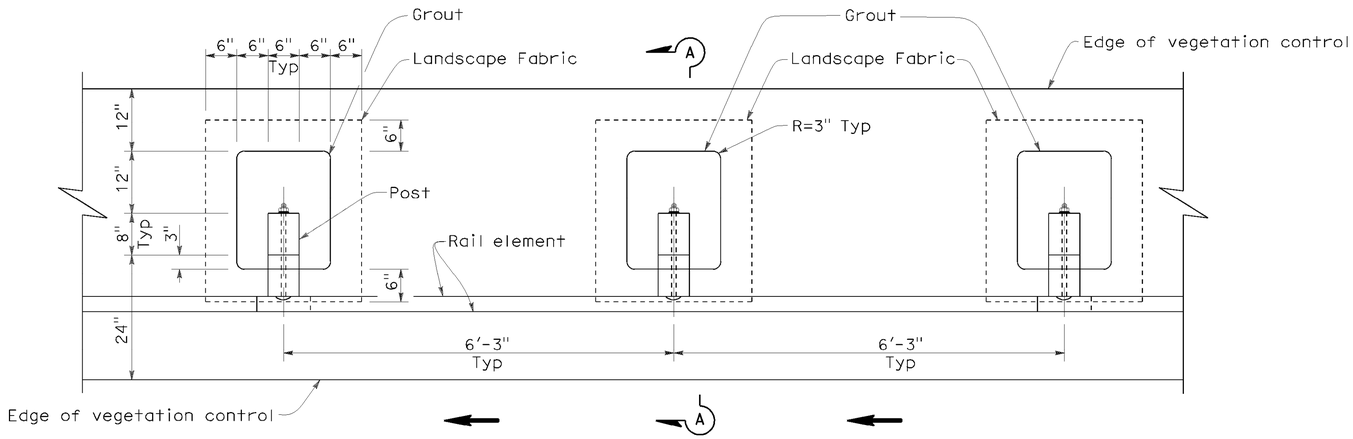

PLAN

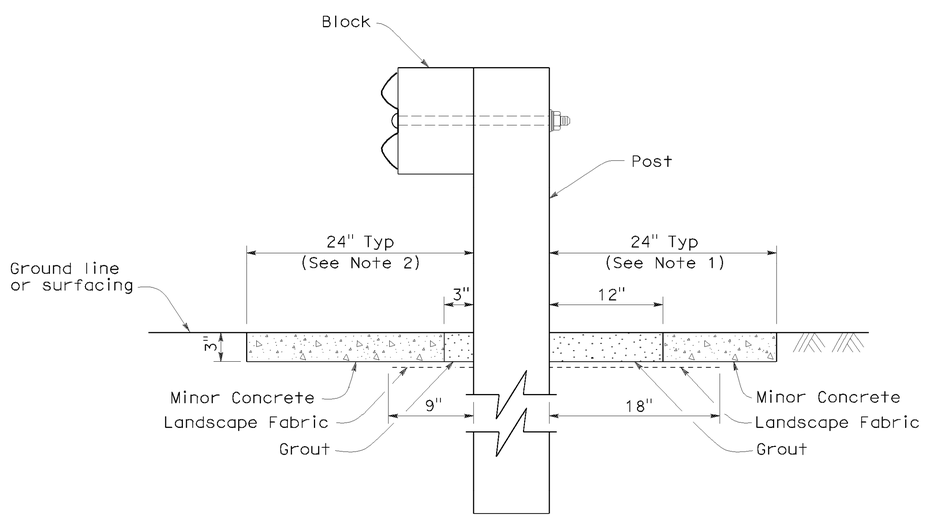

SECTION A-A

NOTES:

1. Where the distance between back of post and hinge point is less than 24", vegetation control to be constructed flush with the back edge of the post.
2. Where dike is constructed under railing, construct vegetation control to back edge of dike. Where paved shoulder is constructed within 24" in front of the post, construct vegetation control to the edge of paved shoulder.
3. Direction of adjacent traffic indicated by ←.

STATE OF CALIFORNIA
DEPARTMENT OF TRANSPORTATION

METAL BEAM GUARD RAILING TYPICAL VEGETATION CONTROL STANDARD RAILING SECTION

NO SCALE

NSP A77C5 DATED OCTOBER 20, 2006 SUPPLEMENTS THE STANDARD PLANS BOOK DATED MAY 2006.

NEW STANDARD PLAN NSP A77C5

2006 NEW STANDARD PLAN NSP A77C5

P:\proj1\02\3E810_plans\pse\23e810va004.dgn

7-17-06

DIST	COUNTY	ROUTE	POST MILES TOTAL PROJECT	SHEET NO.	TOTAL SHEETS
02	Teh,Sha	5	R27.1/42.1 0.0/0.9	152	215

Randell D. Hiatt
REGISTERED CIVIL ENGINEER

October 20, 2006
PLANS APPROVAL DATE

REGISTERED PROFESSIONAL ENGINEER
Randell D. Hiatt
No. C50200
Exp. 6-30-07
CIVIL
STATE OF CALIFORNIA

The State of California or its officers or agents shall not be responsible for the accuracy or completeness of electronic copies of this plan sheet.

To accompany plans dated 06-17-11

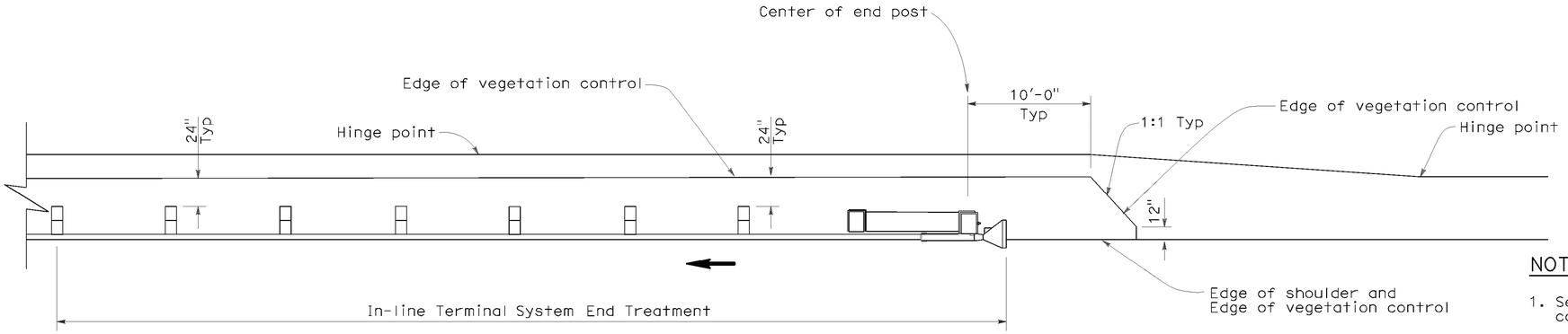

PLAN

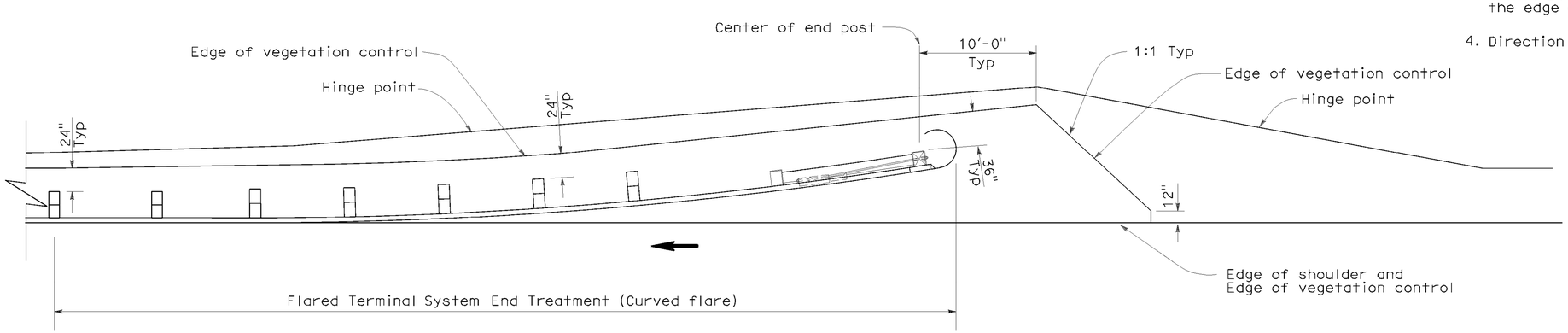

PLAN

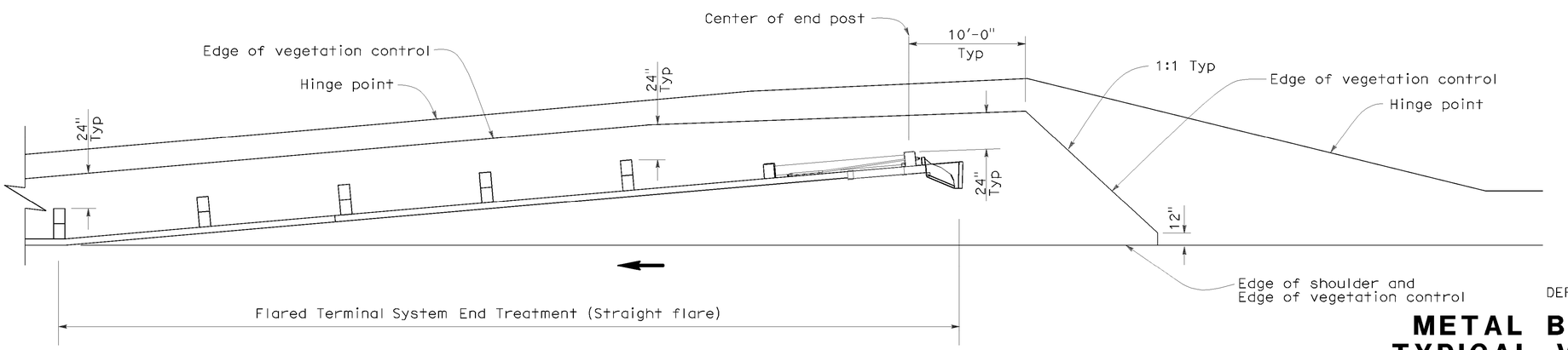

PLAN

NOTES:

1. See New Standard Plan NSP A77C5 for additional vegetation control details.
2. Where the distance between back of post and hinge point is less than 24", vegetation control to be constructed flush with the back edge of the post.
3. Where dike is constructed under railing, construct vegetation control to back edge of dike. Where paved shoulder is constructed within 24" in front of the post, construct vegetation control to the edge of paved shoulder.
4. Direction of adjacent traffic indicated by ←.

STATE OF CALIFORNIA
DEPARTMENT OF TRANSPORTATION

METAL BEAM GUARD RAILING TYPICAL VEGETATION CONTROL FOR TERMINAL SYSTEM END TREATMENTS

NO SCALE

NSP A77C6 DATED OCTOBER 20, 2006 SUPPLEMENTS THE STANDARD PLANS BOOK DATED MAY 2006.

NEW STANDARD PLAN NSP A77C6

2006 NEW STANDARD PLAN NSP A77C6

P:\proj1\02\3E810_plans\pse\23e810va005.dgn

7-17-06

DIST	COUNTY	ROUTE	POST MILES TOTAL PROJECT	SHEET NO.	TOTAL SHEETS
02	Teh,Sha	5	R27.1/42.1 0.0/0.9	153	215

Randell D. Hiatt
REGISTERED CIVIL ENGINEER

October 20, 2006
PLANS APPROVAL DATE

REGISTERED PROFESSIONAL ENGINEER
Randell D. Hiatt
No. C50200
Exp. 6-30-07
CIVIL
STATE OF CALIFORNIA

The State of California or its officers or agents shall not be responsible for the accuracy or completeness of electronic copies of this plan sheet.

To accompany plans dated 06-17-11

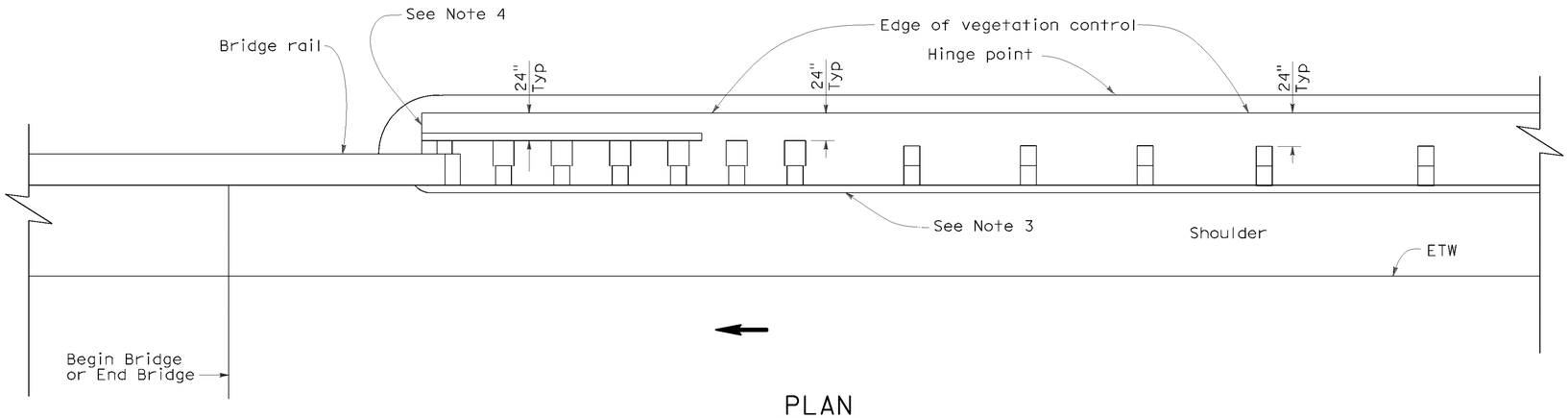

PLAN

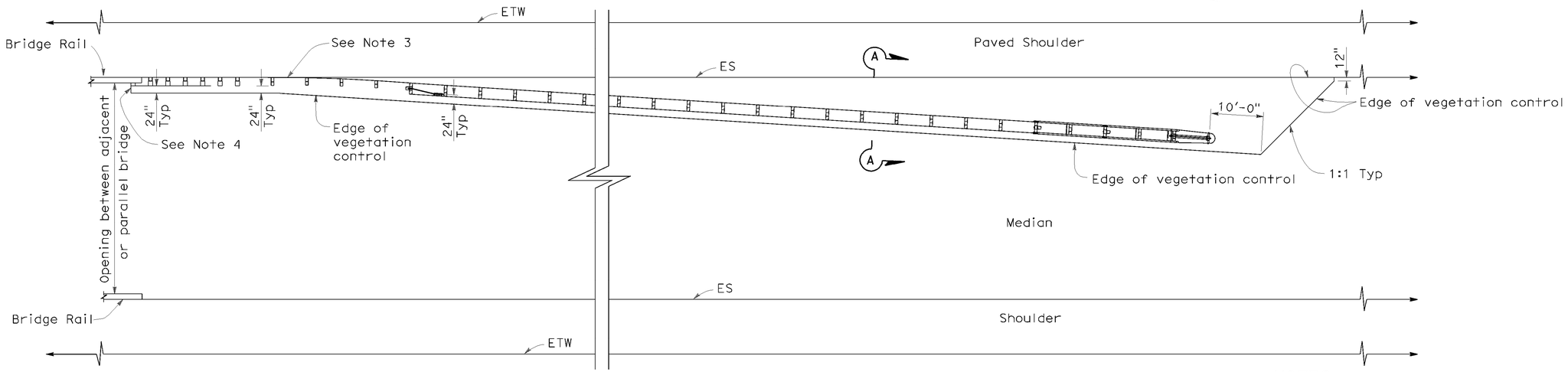

PLAN

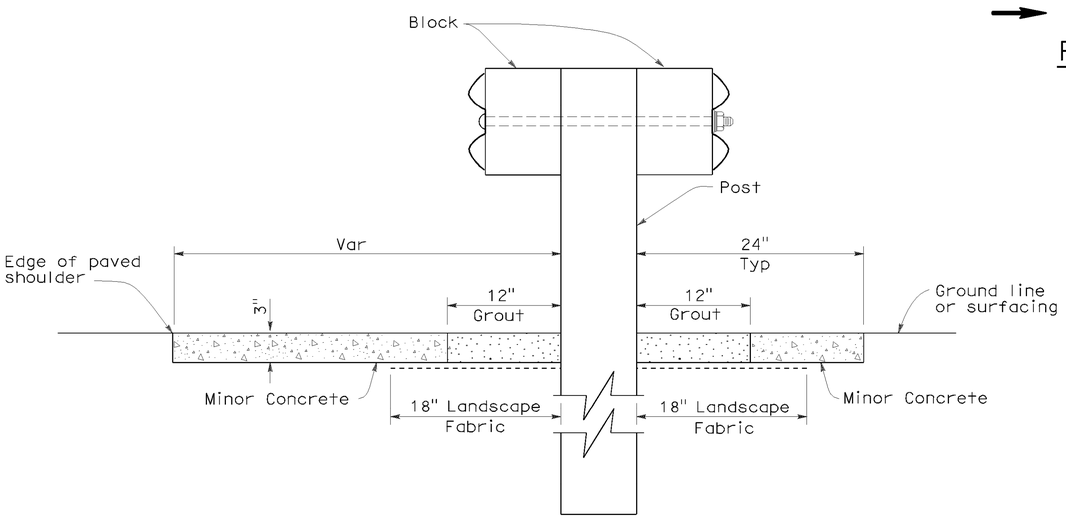

SECTION A-A

NOTES:

1. See New Standard Plan NSP A77C5 for additional vegetation control details.
2. Where the distance between back of post and hinge point is less than 24", vegetation control to be constructed flush with the back edge of the post.
3. Where dike is constructed under railing, construct vegetation control to back edge of dike. Where paved shoulder is constructed within 24" in front of the post, construct vegetation control to the edge of paved shoulder.
4. End vegetation control at end of backside rail element.
5. Direction of adjacent traffic indicated by ←.

STATE OF CALIFORNIA
DEPARTMENT OF TRANSPORTATION

METAL BEAM GUARD RAILING TYPICAL VEGETATION CONTROL AT STRUCTURE APPROACH AND DEPARTURE

NO SCALE

NSP A77C7 DATED OCTOBER 20, 2006 SUPPLEMENTS THE STANDARD PLANS BOOK DATED MAY 2006.

NEW STANDARD PLAN NSP A77C7

2006 NEW STANDARD PLAN NSP A77C7

P:\proj1\02\3E810_plans\pse\23e810va006.dgn

7-17-06

DIST	COUNTY	ROUTE	POST MILES TOTAL PROJECT	SHEET NO.	TOTAL SHEETS
02	Teh,Sha	5	R27.1/42.1 0.0/0.9	154	215

Randell D. Hiatt
REGISTERED CIVIL ENGINEER

October 20, 2006
PLANS APPROVAL DATE

REGISTERED PROFESSIONAL ENGINEER
Randell D. Hiatt
No. C50200
Exp. 6-30-07
CIVIL
STATE OF CALIFORNIA

The State of California or its officers or agents shall not be responsible for the accuracy or completeness of electronic copies of this plan sheet.

To accompany plans dated 06-17-11

NOTES:

1. See New Standard Plan NSP A77C5 for additional vegetation control details.
2. Where the distance between back of post and hinge point is less than 24", vegetation control to be constructed flush with the back edge of the post.
3. Where dike is constructed under railing, construct vegetation control to back edge of dike. Where paved shoulder is constructed within 24" in front of the post, construct vegetation control to the edge of paved shoulder.
4. Direction of adjacent traffic indicated by ←.

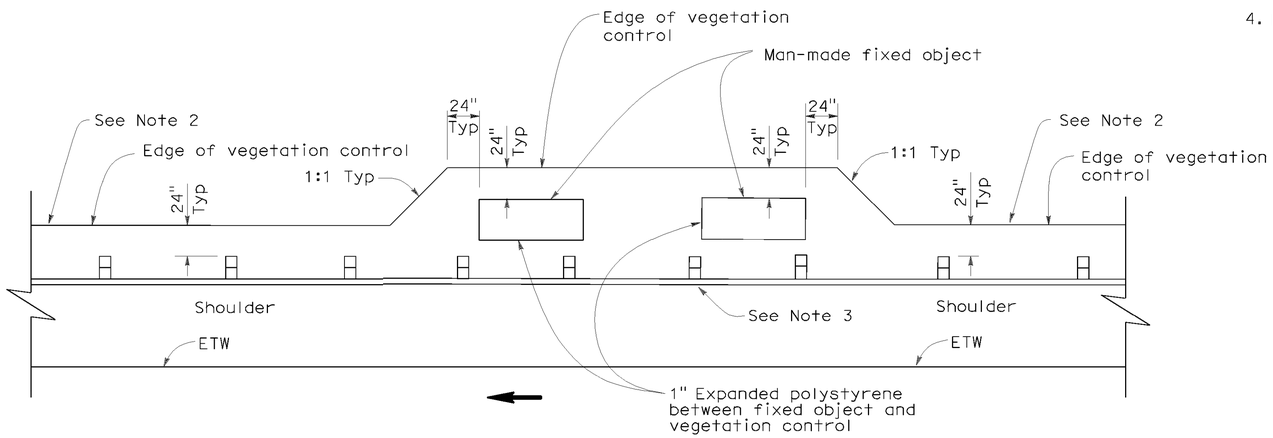

PLAN

FIXED OBJECT(S) ON SHOULDER

STATE OF CALIFORNIA
DEPARTMENT OF TRANSPORTATION

METAL BEAM GUARD RAILING TYPICAL VEGETATION CONTROL AT FIXED OBJECT

NO SCALE

NSP A77C8 DATED OCTOBER 20, 2006 SUPPLEMENTS THE STANDARD PLANS BOOK DATED MAY 2006.

NEW STANDARD PLAN NSP A77C8

2006 NEW STANDARD PLAN NSP A77C8

P:\proj11\02\3E810_plans\pse\23e810va007.dgn

7-17-06

DIST	COUNTY	ROUTE	POST MILES TOTAL PROJECT	SHEET NO.	TOTAL SHEETS
02	Teh,Sha	5	R27.1/42.1 0.0/0.9	155	215

Randell D. Hiatt
REGISTERED CIVIL ENGINEER

October 20, 2006
PLANS APPROVAL DATE

REGISTERED PROFESSIONAL ENGINEER
Randell D. Hiatt
No. C50200
Exp. 6-30-07
CIVIL
STATE OF CALIFORNIA

The State of California or its officers or agents shall not be responsible for the accuracy or completeness of electronic copies of this plan sheet.

To accompany plans dated 06-17-11

NOTES:

1. See New Standard Plan NSP A77C5 for additional vegetation control details.
2. Where dike is constructed under railing, construct vegetation control to back edge of dike. Where paved shoulder is constructed within 24" in front of the post, construct vegetation control to the edge of paved shoulder.
3. Direction of adjacent traffic indicated by ← .

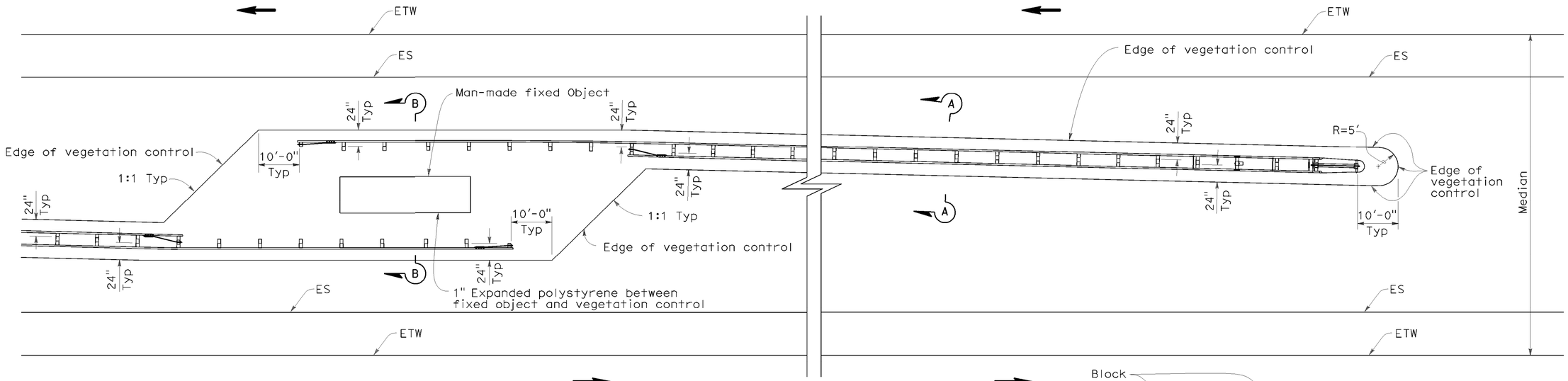

PLAN

FIXED OBJECT(S) IN MEDIAN

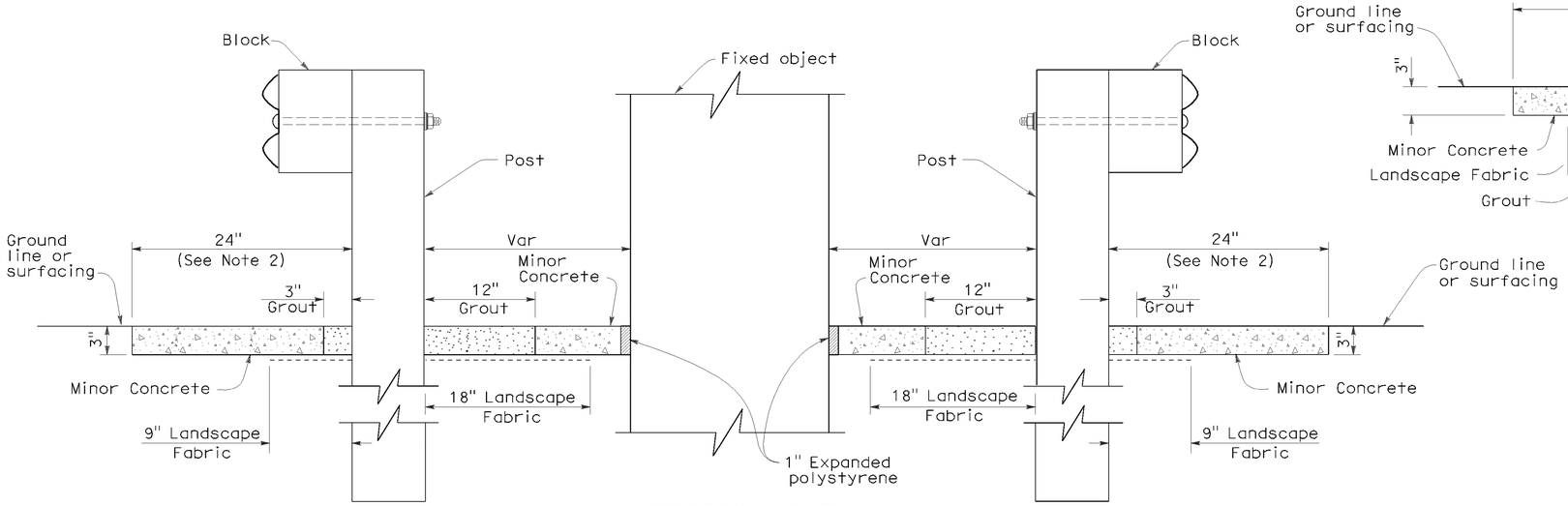

SECTION B-B

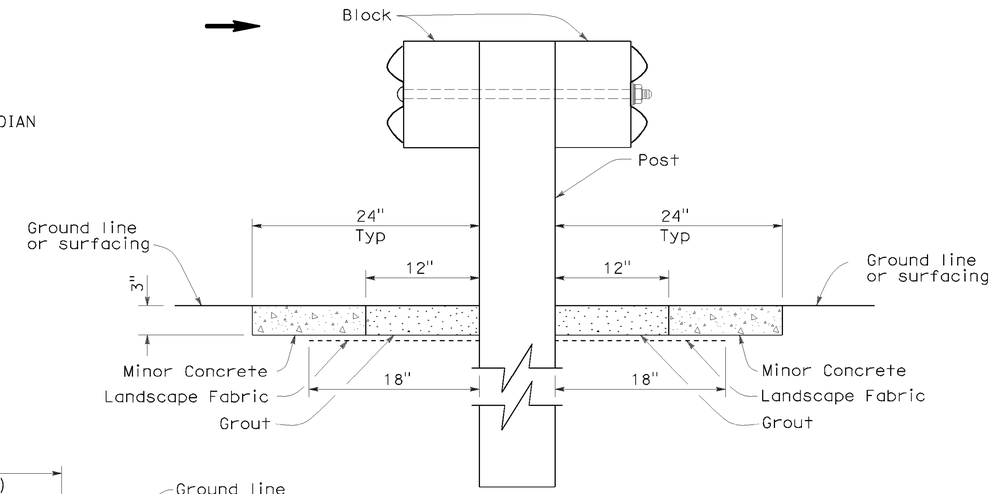

SECTION A-A

STATE OF CALIFORNIA
DEPARTMENT OF TRANSPORTATION

METAL BEAM GUARD RAILING TYPICAL VEGETATION CONTROL AT FIXED OBJECT

NO SCALE

NSP A77C9 DATED OCTOBER 20, 2006 SUPPLEMENTS THE STANDARD PLANS BOOK DATED MAY 2006.

NEW STANDARD PLAN NSP A77C9

2006 NEW STANDARD PLAN NSP A77C9

P:\proj1\02\3E810_plans\pse\23e810va008.dgn

7-17-06

DIST	COUNTY	ROUTE	POST MILES TOTAL PROJECT	SHEET NO.	TOTAL SHEETS
02	Teh,Sha	5	R27.1/42.1 0.0/0.9	156	215

Randell D. Hiatt
REGISTERED CIVIL ENGINEER

October 20, 2006
PLANS APPROVAL DATE

REGISTERED PROFESSIONAL ENGINEER
Randell D. Hiatt
No. C50200
Exp. 6-30-07
CIVIL
STATE OF CALIFORNIA

The State of California or its officers or agents shall not be responsible for the accuracy or completeness of electronic copies of this plan sheet.

To accompany plans dated 06-17-11

NOTES:

1. See New Standard Plan NSP A77C5 for additional vegetation control details.
2. Where dike is constructed under railing, construct vegetation control to back edge of dike. Where paved shoulder is constructed within 24" in front of the post, construct vegetation control to the edge of paved shoulder.
3. Direction of adjacent traffic indicated by ←.

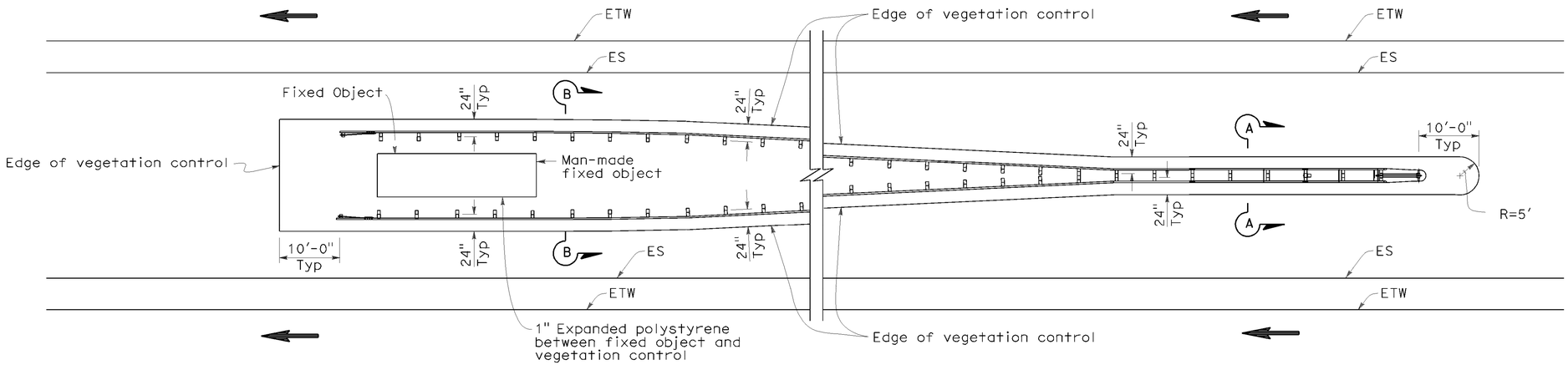

PLAN

FIXED OBJECT(S) BETWEEN SEPARATE ROADBEDS
(ONE-WAY TRAFFIC)

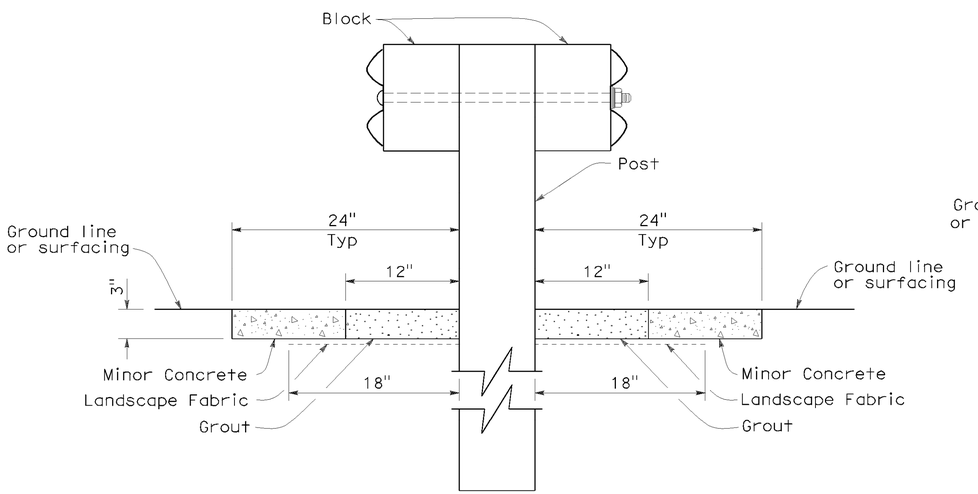

SECTION A-A

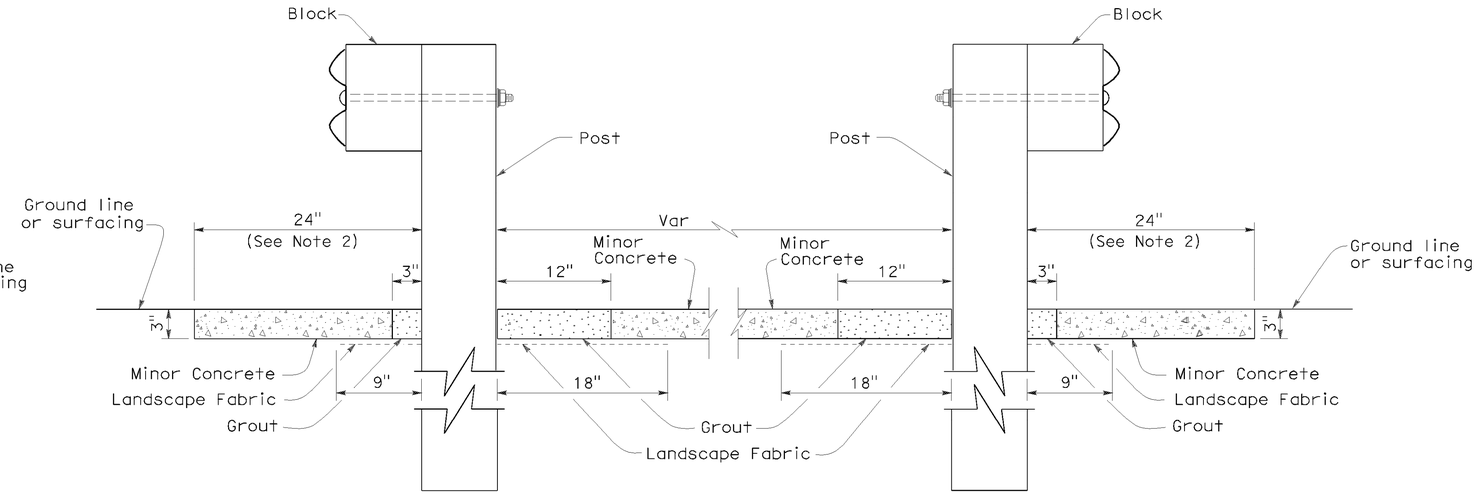

SECTION B-B

STATE OF CALIFORNIA
DEPARTMENT OF TRANSPORTATION

METAL BEAM GUARD RAILING TYPICAL VEGETATION CONTROL AT FIXED OBJECT

NO SCALE

NSP A77C10 DATED OCTOBER 20, 2006 SUPPLEMENTS THE STANDARD PLANS BOOK DATED MAY 2006.

NEW STANDARD PLAN NSP A77C10

2006 NEW STANDARD PLAN NSP A77C10

P:\proj1\02\3E810_plans\pse\23e810va009.dgn

7-17-06

DIST	COUNTY	ROUTE	POST MILES TOTAL PROJECT	SHEET NO.	TOTAL SHEETS
02	Teh,Sha	5	R27.1/42.1 0.0/0.9	157	215

Randell D. Hiatt
REGISTERED CIVIL ENGINEER

June 6, 2008
PLANS APPROVAL DATE

REGISTERED PROFESSIONAL ENGINEER Randell D. Hiatt No. C50200 Exp. 6-30-09 CIVIL STATE OF CALIFORNIA

The State of California or its officers or agents shall not be responsible for the accuracy or completeness of electronic copies of this plan sheet.

To accompany plans dated 06-17-11

2006 REVISED STANDARD PLAN RSP A77E1

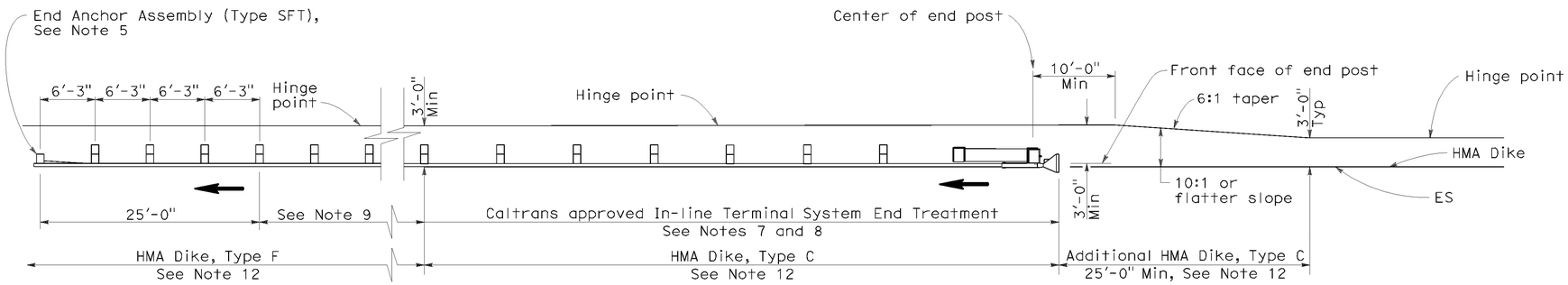

TYPE 11A LAYOUT

(EMBANKMENT GUARD INSTALLATION WITH IN-LINE END TREATMENT AT TRAFFIC APPROACH END OF RAILING)
See Note 6

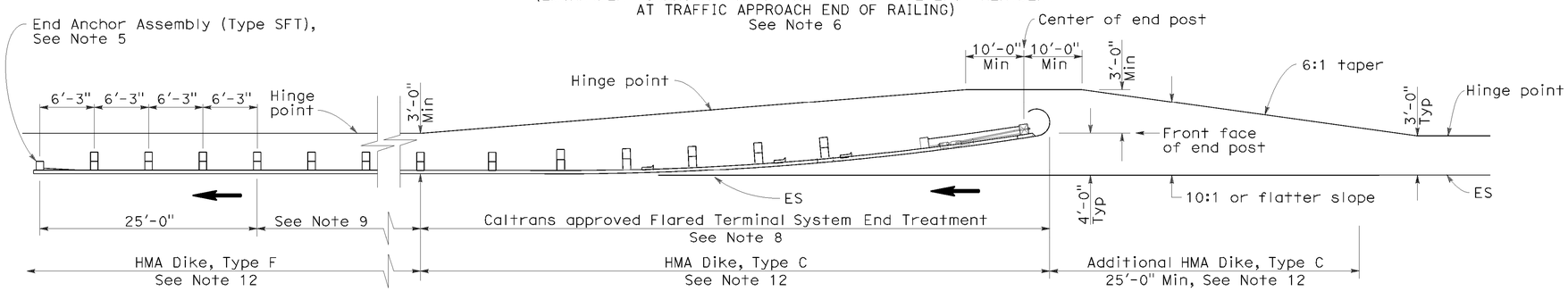

TYPE 11B LAYOUT

(EMBANKMENT GUARD RAILING INSTALLATION WITH FLARED END TREATMENT AT TRAFFIC APPROACH END OF RAILING)
See Note 6

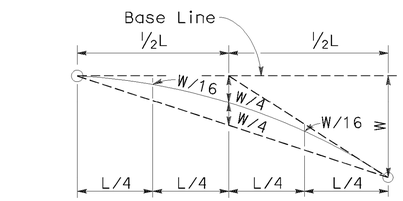

TYPICAL PARABOLIC LAYOUT

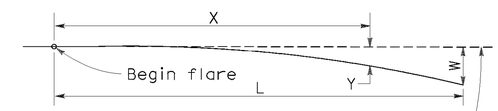

Base Line (Edge of paved shoulder or offset line of edge of traveled way)

$$Y = \frac{WX^2}{L^2}$$

Y = Offset from base line
W = Maximum offset
X = Distance along base line
L = Length of flare

PARABOLIC FLARE OFFSETS

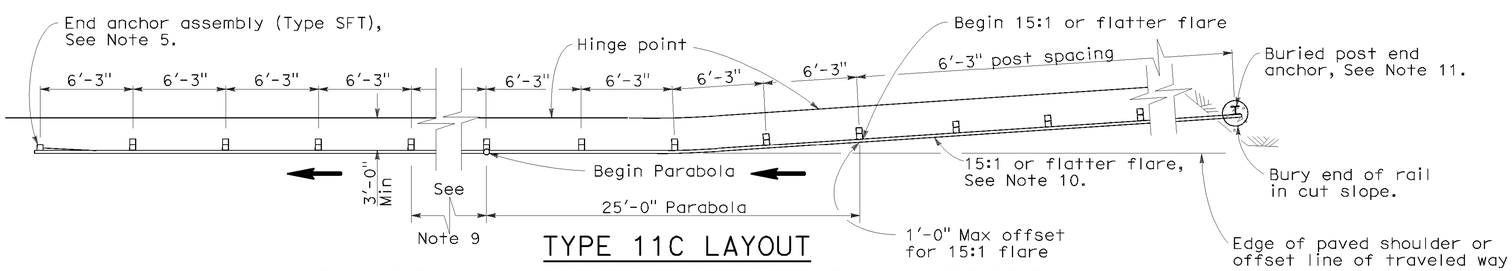

TYPE 11C LAYOUT

(EMBANKMENT GUARD RAILING INSTALLATION WITH BURIED END ANCHOR TREATMENT AT TRAFFIC APPROACH END OF RAILING)
See Notes 6 and 12

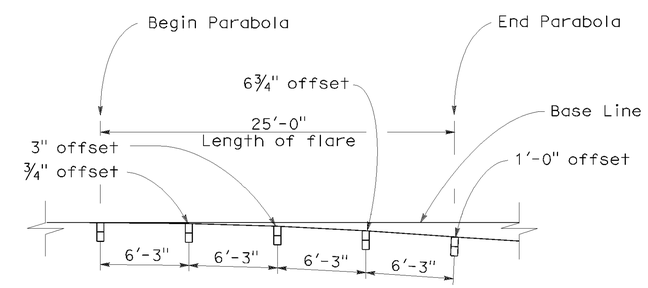

TYPICAL FLARE OFFSETS FOR 1 FOOT MAX END OFFSET

NOTES:

1. Line post, blocks and hardware to be used are shown on Standard Plans A77A1, A77A2, A77B1, A77C1, and A77C2.
2. Guard rail post spacing to be 6'-3" center to center, except as otherwise noted.
3. Except as noted, line posts are 6" x 8" x 6'-0" wood with 6" x 8" x 1'-2" wood blocks. W6 x 9 steel posts, 6'-0" in length, with 6" x 8" x 1'-2" notched wood blocks or recycled plastic blocks may be used for 6" x 8" x 6'-0" wood post with 6" x 8" x 1'-2" wood blocks where applicable and when specified.
4. Direction of adjacent traffic indicated by ⟶.
5. For End Anchor Assembly (Type SFT) details, see Standard Plan A77H1.
6. Layout Types 11A, 11B or 11C are typically used where guard railing is recommended to shield embankment slopes and a crashworthy end treatment is required for only one direction of traffic.
7. In-line Terminal System End Treatments are used where site conditions will not accommodate a flared end treatment.
8. The type of terminal system end treatment to be used will be shown on the Project Plans.
9. Dependent on site conditions (embankment height and side slope), construction of additional guard railing (length equal to multiples of 12'-6" with 6'-3" post spacing) may be advisable.
10. The 15:1 or flatter flare used with buried end anchors is based on the edge of the paved shoulder or offset line of edge of the traveled way. The length of guard railing within the 15:1 or flatter flare is based on site conditions and should be a length equal to multiples of 12'-6".
11. For details of the buried post end anchor used with Type 11C Layout, see Standard Plan A77I2.
12. Where placement of dike is required with guard railing installations, see Revised Standard Plan RSP A77C4 for dike positioning details.

STATE OF CALIFORNIA
DEPARTMENT OF TRANSPORTATION

METAL BEAM GUARD RAILING TYPICAL LAYOUTS FOR EMBANKMENTS

NO SCALE

RSP A77E1 DATED JUNE 6, 2008 SUPERSEDES STANDARD PLAN A77E1 DATED MAY 1, 2006 - PAGE 48 OF THE STANDARD PLANS BOOK DATED MAY 2006.

REVISED STANDARD PLAN RSP A77E1

P:\proj1\02\3E810_plans\pse\23e810va010.dgn

12-10-07

DIST	COUNTY	ROUTE	POST MILES TOTAL PROJECT	SHEET NO.	TOTAL SHEETS
02	Teh,Sha	5	R27.1/42.1 0.0/0.9	158	215

Randell D. Hiatt
REGISTERED CIVIL ENGINEER

June 6, 2008
PLANS APPROVAL DATE

REGISTERED PROFESSIONAL ENGINEER
Randell D. Hiatt
No. C50200
Exp. 6-30-09
CIVIL
STATE OF CALIFORNIA

The State of California or its officers or agents shall not be responsible for the accuracy or completeness of electronic copies of this plan sheet.

To accompany plans dated 06-17-11

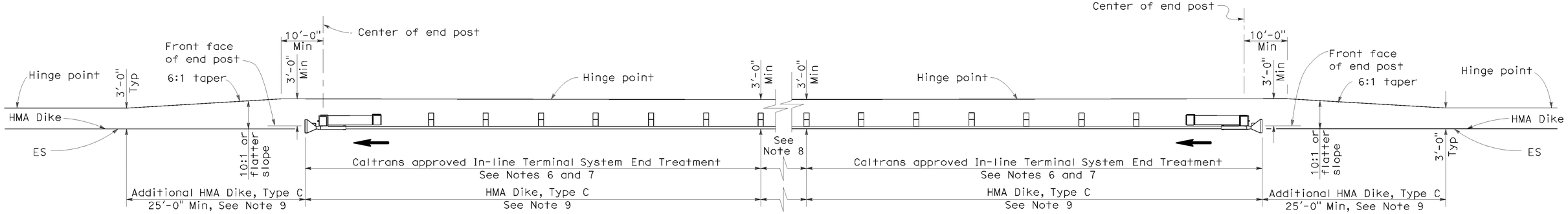

TYPE 11D LAYOUT

(EMBANKMENT GUARD RAILING INSTALLATION WITH IN-LINE END TREATMENT AT EACH END OF RAILING)
See Note 5

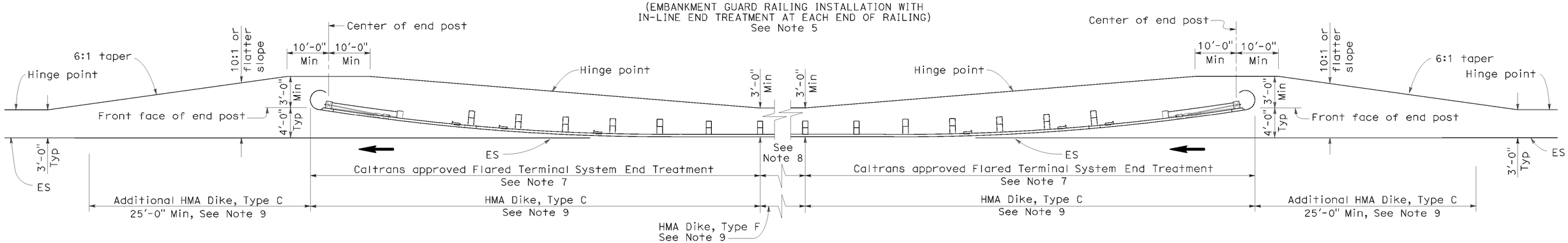

TYPE 11E LAYOUT

(EMBANKMENT GUARD RAILING INSTALLATION WITH FLARED END TREATMENT AT EACH END OF RAILING)
See Note 5

NOTES:

1. Line post, blocks and hardware to be used are shown on Standard Plans A77A1, A77A2, A77B1, A77C1 and A77C2.
2. Guard rail post spacing to be 6'-3" center to center, except as otherwise noted.
3. Except as noted, line posts are 6" x 8" x 6'-0" wood with 6" x 8" x 1'-2" wood blocks. W6 x 9 steel posts, 6'-0" in length, with 6" x 8" x 1'-2" notched wood blocks or plastic blocks may be used for 6" x 8" x 6'-0" wood post with 6" x 8" x 1'-2" wood blocks where applicable and when specified.
4. Direction of adjacent traffic indicated by ⟶.
5. Layout Types 11D through 11L, shown on the A77E Series of Revised Standard Plans, are typically used where guard railing is recommended to shield embankment slopes and a crashworthy end treatment is required for both directions of traffic.
6. In-line Terminal System End Treatments are used where site conditions will not accommodate a flared end treatment.
7. The type of terminal system end treatment to be used will be shown on the Project Plans.
8. Dependent on site conditions (embankment height and side slope), construction of additional guard railing (length equal to multiples of 12'-6" with 6'-3" post spacing) may be advisable.
9. Where placement of dike is required with guard railing installations, see Revised Standard Plan RSP A77C4 for dike positioning details.

STATE OF CALIFORNIA
DEPARTMENT OF TRANSPORTATION

METAL BEAM GUARD RAILING TYPICAL LAYOUTS FOR EMBANKMENTS

NO SCALE

RSP A77E2 DATED JUNE 6, 2008 SUPERSEDES STANDARD PLAN A77E2
DATED MAY 1, 2006 - PAGE 49 OF THE STANDARD PLANS BOOK DATED MAY 2006.

REVISED STANDARD PLAN RSP A77E2

2006 REVISED STANDARD PLAN RSP A77E2

P:\proj\02\3E810_plans\pse\23e810va011.dgn

12-10-07

DIST	COUNTY	ROUTE	POST MILES TOTAL PROJECT	SHEET NO.	TOTAL SHEETS
02	Teh,Sha	5	R27.1/42.1 0.0/0.9	159	215

Randell D. Hiatt
REGISTERED CIVIL ENGINEER

June 6, 2008
PLANS APPROVAL DATE

REGISTERED PROFESSIONAL ENGINEER Randell D. Hiatt No. C50200 Exp. 6-30-09 CIVIL STATE OF CALIFORNIA

The State of California or its officers or agents shall not be responsible for the accuracy or completeness of electronic copies of this plan sheet.

To accompany plans dated 06-17-11

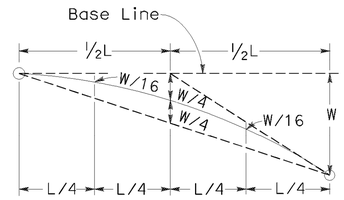

TYPICAL PARABOLIC LAYOUT

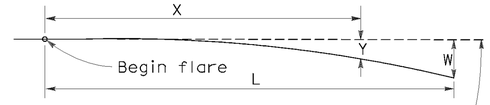

Base Line (Edge of paved shoulder or offset line of edge of traveled way)

$$Y = \frac{WX^2}{L^2}$$

Y = Offset from base line
W = Maximum offset
X = Distance along base line
L = Length of flare

PARABOLIC FLARE OFFSETS

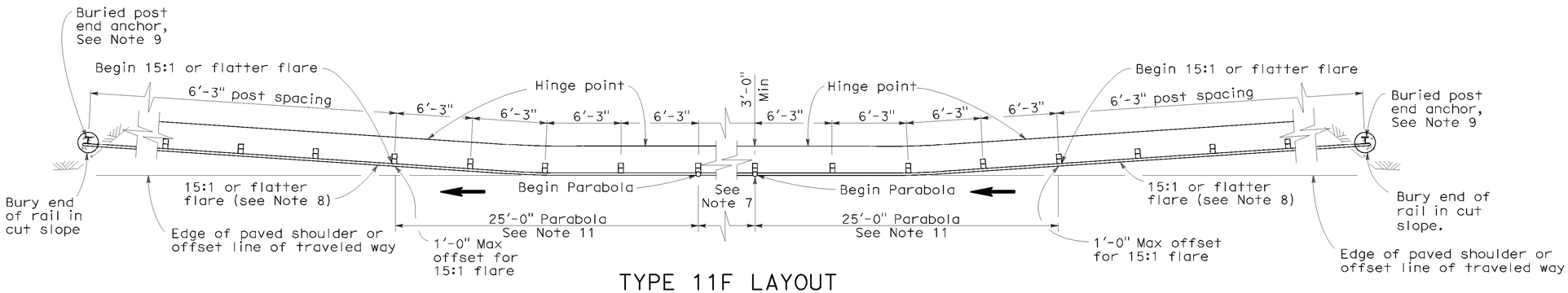

TYPE 11F LAYOUT

(EMBANKMENT GUARD RAILING INSTALLATION WITH A BURIED END ANCHOR TREATMENT AT EACH END OF RAILING)
See Notes 5 and 10

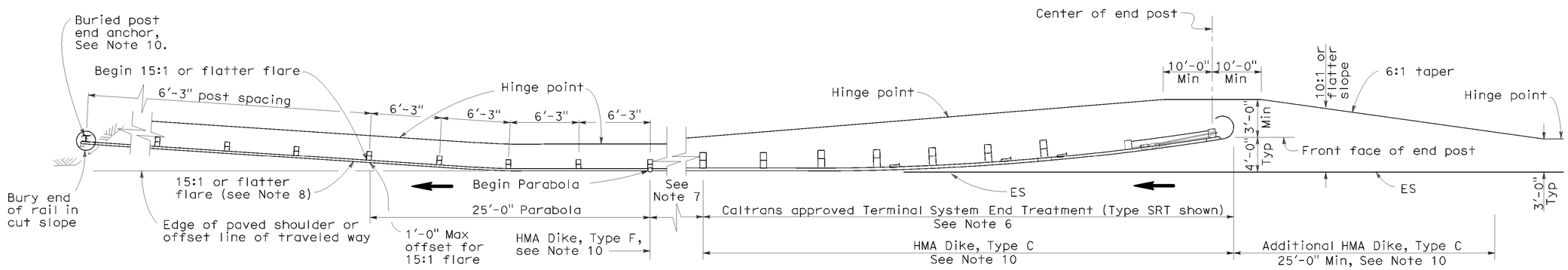

TYPE 11G LAYOUT

(EMBANKMENT GUARD RAILING INSTALLATION WITH FLARED END TREATMENT AND A BURIED END ANCHOR TREATMENT AT THE ENDS OF RAILING)
See Notes 5 and 10

NOTES:

1. Line post, blocks and hardware to be used are shown on Standard Plans A77A1, A77A2, A77B1, A77C1 and A77C2.
2. Guard rail post spacing to be 6'-3" center to center, except as otherwise noted.
3. Except as noted, line posts are 6" x 8" x 6'-0" wood with 6" x 8" x 1'-2" wood blocks. W6 x 9 steel posts, 6'-0" in length, with 6" x 8" x 1'-2" notched wood blocks or plastic blocks may be used for 6" x 8" x 6'-0" wood post with 6" x 8" x 1'-2" wood blocks where applicable and when specified.
4. Direction of adjacent traffic indicated by ⟶.
5. Layout Types 11D through 11L, shown on the A77E Series of Revised Standard Plans, are typically used where guard railing is recommended to shield embankment slopes and a crashworthy end treatment is required for both directions of traffic.
6. The type of terminal system end treatment to be used will be shown on the Project Plans.
7. Dependent on site conditions (embankment height and side slope), construction of additional guard railing (length equal to multiples of 12'-6" with 6'-3" post spacing) may be advisable.
8. The 15:1 or flatter flare used with buried end anchors is based on the edge of the paved shoulder or offset line of edge of the traveled way. The length of guard railing within the 15:1 or flatter flare is based on site conditions and should be a length equal to multiples of 12'-6".
9. For details of the buried post end anchor used with Type 11F and 11G Layouts, see Standard Plan A77I2.
10. Where placement of dike is required with guard railing installations, see Revised Standard Plan RSP A77C4 for dike positioning details.
11. For typical flare offsets for 25'-0" length parabola with maximum offset of 1'-0", see Revised Standard Plan RSP A77E1.

STATE OF CALIFORNIA
DEPARTMENT OF TRANSPORTATION

METAL BEAM GUARD RAILING TYPICAL LAYOUTS FOR EMBANKMENTS

NO SCALE

RSP A77E3 DATED JUNE 6, 2008 SUPERSEDES STANDARD PLAN A77E3 DATED MAY 1, 2006 - PAGE 50 OF THE STANDARD PLANS BOOK DATED MAY 2006.

REVISED STANDARD PLAN RSP A77E3

2006 REVISED STANDARD PLAN RSP A77E3

P:\proj1\02\3E810_plans\pse\23e810va012.dgn

12-10-07

DIST	COUNTY	ROUTE	POST MILES TOTAL PROJECT	SHEET NO.	TOTAL SHEETS
02	Teh,Sha	5	R27.1/42.1 0.0/0.9	160	215

Randell D. Hiatt
REGISTERED CIVIL ENGINEER

June 6, 2008
PLANS APPROVAL DATE

REGISTERED PROFESSIONAL ENGINEER
Randell D. Hiatt
No. C50200
Exp. 6-30-09
CIVIL
STATE OF CALIFORNIA

The State of California or its officers or agents shall not be responsible for the accuracy or completeness of electronic copies of this plan sheet.

To accompany plans dated 06-17-11

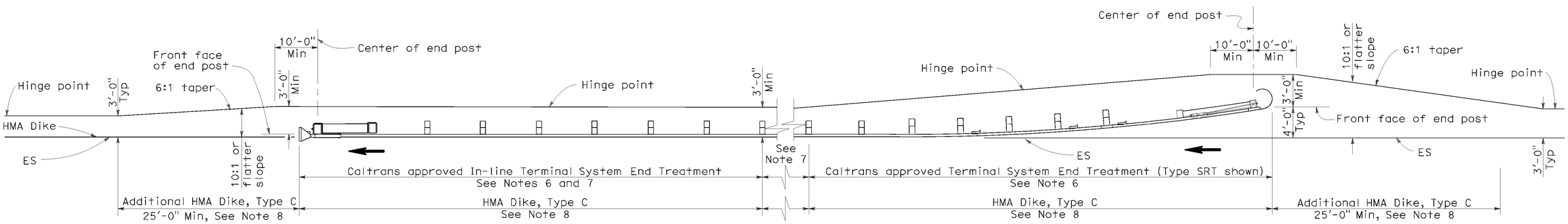

TYPE 11H LAYOUT

(EMBANKMENT GUARD RAILING INSTALLATION WITH FLARED END TREATMENT
AND AN IN-LINE TREATMENT AT THE ENDS OF RAILING)
See Notes 5 and 8

NOTES:

1. Line post, blocks and hardware to be used are shown on Standard Plans A77A1, A77A2, A77B1, A77C1 and A77C2.
2. Guard rail post spacing to be 6'-3" center to center, except as otherwise noted.
3. Except as noted, line posts are 6" x 8" x 6'-0" wood with 6" x 8" x 1'-2" wood blocks. W6 x 9 steel posts, 6'-0" in length, with 6" x 8" x 1'-2" notched wood blocks or plastic blocks may be used for 6" x 8" x 6'-0" wood post with 6" x 8" x 1'-2" wood blocks where applicable and when specified.
4. Direction of adjacent traffic indicated by ➡.
5. Layout Types 11D through 11L, shown on the A77E Series of Revised Standard Plans, are typically used where guard railing is recommended to shield embankment slopes and a crashworthy end treatment is required for both directions of traffic.
6. The type of terminal system end treatment to be used will be shown on the Project Plans.
7. Dependent on site conditions (embankment height and side slope), construction of additional guard railing (length equal to multiples of 12'-6" with 6'-3" post spacing) may be advisable.
8. Where placement of dike is required with guard railing installations, see Revised Standard Plan RSP A77C4 for dike positioning details.

STATE OF CALIFORNIA
DEPARTMENT OF TRANSPORTATION

METAL BEAM GUARD RAILING TYPICAL LAYOUTS FOR EMBANKMENTS

NO SCALE

RSP A77E4 DATED JUNE 6, 2008 SUPERSEDES STANDARD PLAN A77E4
DATED MAY 1, 2006 - PAGE 51 OF THE STANDARD PLANS BOOK DATED MAY 2006.

REVISED STANDARD PLAN RSP A77E4

2006 REVISED STANDARD PLAN RSP A77E4

P:\proj1\02\3E810_plans\pse\23e810va013.dgn

12-10-07

DIST	COUNTY	ROUTE	POST MILES TOTAL PROJECT	SHEET NO.	TOTAL SHEETS
02	Teh,Sha	5	R27.1/42.1 0.0/0.9	161	215

Randell D. Hiatt
REGISTERED CIVIL ENGINEER

June 6, 2008
PLANS APPROVAL DATE

REGISTERED PROFESSIONAL ENGINEER
Randell D. Hiatt
No. C50200
Exp. 6-30-09
CIVIL
STATE OF CALIFORNIA

The State of California or its officers or agents shall not be responsible for the accuracy or completeness of electronic copies of this plan sheet.

To accompany plans dated 06-17-11

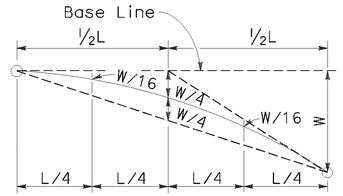

TYPICAL PARABOLIC LAYOUT

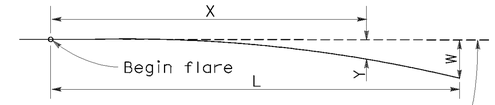

Base Line (Edge of paved shoulder or offset line of edge of traveled way)

$$Y = \frac{WX^2}{L^2}$$

Y = Offset from base line
W = Maximum offset
X = Distance along base line
L = Length of flare

PARABOLIC FLARE OFFSETS

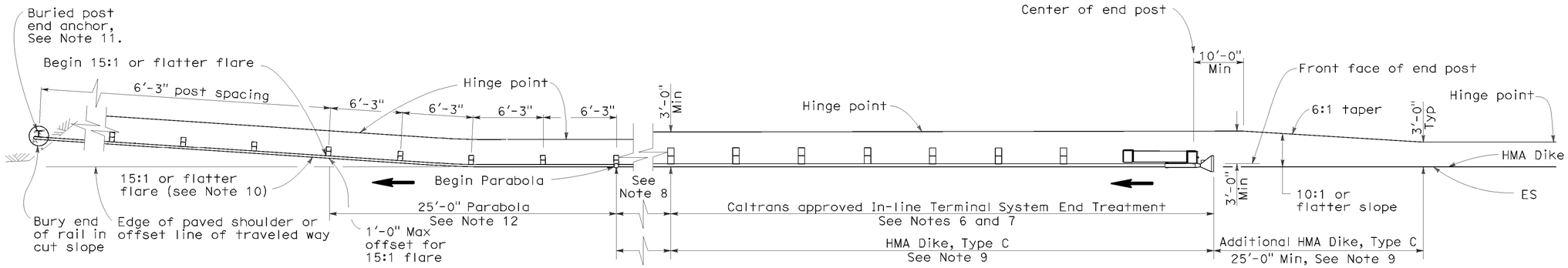

TYPE 11I LAYOUT

(EMBANKMENT GUARD RAILING INSTALLATION WITH IN-LINE END TREATMENT AND A BURIED END ANCHOR TREATMENT AT THE ENDS OF RAILING)
See Note 5

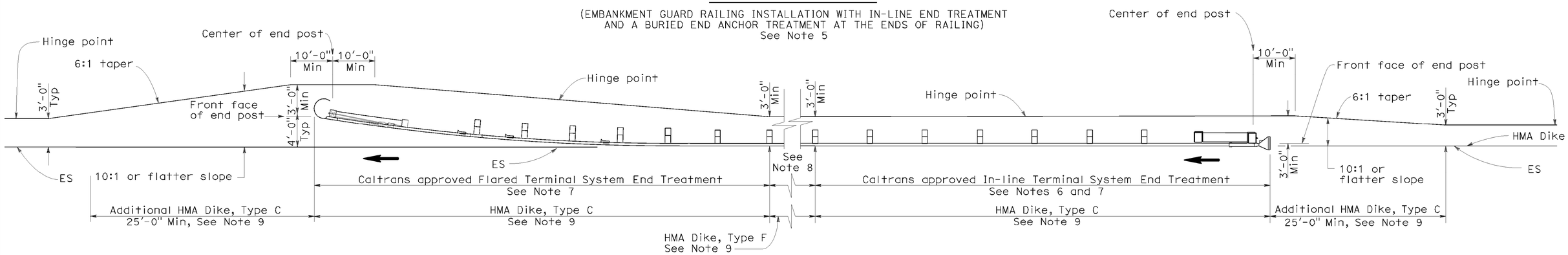

TYPE 11J LAYOUT

(EMBANKMENT GUARD RAILING INSTALLATION WITH IN-LINE END TREATMENT AND FLARED END TREATMENT AT THE ENDS OF RAILING)
See Note 5

NOTES:

1. Line post, blocks and hardware to be used are shown on Standard Plans A77A1, A77A2, A77B1, A77C1 and A77C2.
2. Guard rail post spacing to be 6'-3" center to center, except as otherwise noted.
3. Except as noted, line posts are 6" x 8" x 6'-0" wood with 6" x 8" x 1'-2" wood blocks. W6 x 9 steel posts, 6'-0" in length, with 6" x 8" x 1'-2" notched wood blocks or plastic blocks may be used for 6" x 8" x 6'-0" wood post with 6" x 8" x 1'-2" wood blocks where applicable and when specified.
4. Direction of adjacent traffic indicated by ⟶.
5. Layout Types 11D through 11L, shown on the A77E Series of Revised Standard Plans, are typically used where guard railing is recommended to shield embamkment slopes and a crashworthy end treatment is required for both directions of traffic.
6. In-line Terminal System End Treatments are used where site conditions will not accommodate a flared end treatment.
7. The type of terminal system end treatment to be used will be shown on the Project Plans.
8. Dependent on site conditions (embankment height and side slope), construction of additional guard railing (length equal to multiples of 12'-6" with 6'-3" post spacing) may be advisable.
9. Where placement of dike is required with guard railing installations, see Revised Standard Plan RSP A77C4 for dike positioning details.
10. The 15:1 or flatter flare used with buried end anchors is based on the edge of the paved shoulder or offset line of edge of the traveled way. The length of guard railing within the 15:1 or flatter flare is based on site conditions and should be a length equal to multiples of 12'-6".
11. For details of the buried post end anchor used with Type 11I Layout, see Standard Plan A77I2.
12. For typical flare offsets for 25'-0" length parabola with maximum offset of 1'-0", see Revised Standard Plan RSP A77E1.

STATE OF CALIFORNIA
DEPARTMENT OF TRANSPORTATION

METAL BEAM GUARD RAILING TYPICAL LAYOUTS FOR EMBANKMENTS

NO SCALE

RSP A77E5 DATED JUNE 6, 2008 SUPERSEDES STANDARD PLAN A77E5 DATED MAY 1, 2006 - PAGE 52 OF THE STANDARD PLANS BOOK DATED MAY 2006.

REVISED STANDARD PLAN RSP A77E5

2006 REVISED STANDARD PLAN RSP A77E5

P:\proj1\02\3E810_plans\pse\23e810va014.dgn

12-10-07

DIST	COUNTY	ROUTE	POST MILES TOTAL PROJECT	SHEET NO.	TOTAL SHEETS
02	Teh,Sha	5	R27.1/42.1 0.0/0.9	162	215

Randell D. Hiatt
REGISTERED CIVIL ENGINEER

June 6, 2008
PLANS APPROVAL DATE

REGISTERED PROFESSIONAL ENGINEER
Randell D. Hiatt
No. C50200
Exp. 6-30-09
CIVIL
STATE OF CALIFORNIA

The State of California or its officers or agents shall not be responsible for the accuracy or completeness of electronic copies of this plan sheet.

To accompany plans dated 06-17-11

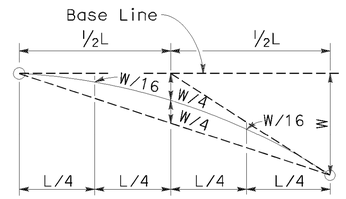

TYPICAL PARABOLIC LAYOUT

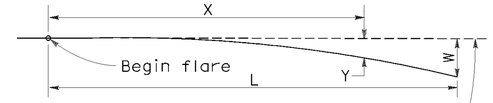

Base Line (Edge of paved shoulder or offset line of edge of traveled way)

$$Y = \frac{WX^2}{L^2}$$

Y = Offset from base line
W = Maximum offset
X = Distance along base line
L = Length of flare

PARABOLIC FLARE OFFSETS

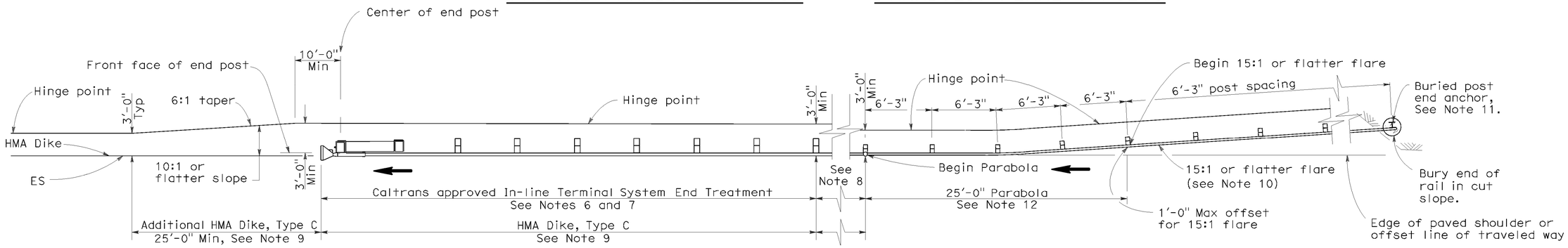

TYPE 11K LAYOUT

(EMBANKMENT GUARD RAILING INSTALLATION WITH A BURIED END ANCHOR TREATMENT AND AN IN-LINE END TREATMENT AT THE ENDS OF RAILING)
See Note 5

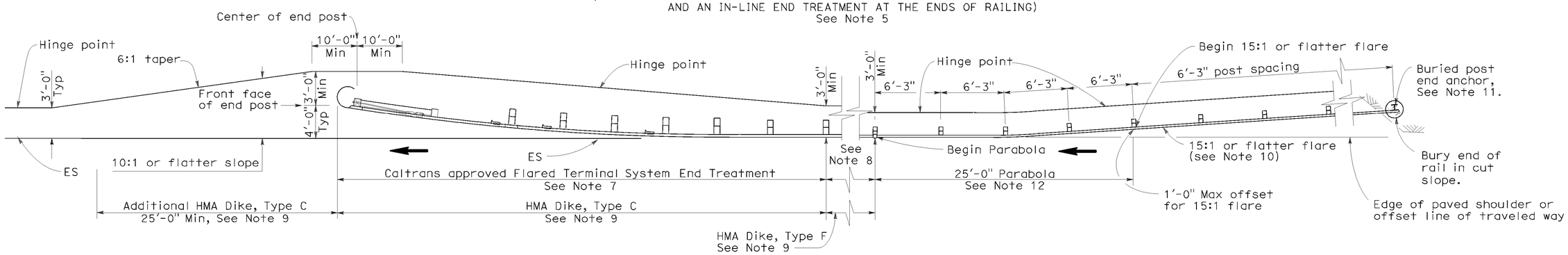

TYPE 11L LAYOUT

(EMBANKMENT GUARD RAILING INSTALLATION WITH A BURIED END ANCHOR TREATMENT AND A FLARED END TREATMENT AT THE ENDS OF RAILING)
See Note 5

NOTES:

1. Line post, blocks and hardware to be used are shown on Standard Plans A77A1, A77A2, A77B1, A77C1 and A77C2.
2. Guard rail post spacing to be 6'-3" center to center, except as otherwise noted.
3. Except as noted, line posts are 6" x 8" x 6'-0" wood with 6" x 8" x 1'-2" wood blocks. W6 x 9 steel posts, 6'-0" in length, with 6" x 8" x 1'-2" notched wood blocks or plastic blocks may be used for 6" x 8" x 6'-0" wood post with 6" x 8" x 1'-2" wood blocks where applicable and when specified.
4. Direction of adjacent traffic indicated by ⟶.
5. Layout Types 11D through 11L, shown on the A77E Series of Revised Standard Plans, are typically used where guard railing is recommended to shield embamkment slopes and a crashworthy end treatment is required for both directions of traffic.
6. In-line Terminal System End Treatments are used where site conditions will not accommodate a flared end treatment.
7. The type of terminal system end treatment to be used will be shown on the Project Plans.
8. Dependent on site conditions (embankment height and side slope), construction of additional guard railing (length equal to multiples of 12'-6" with 6'-3" post spacing) may be advisable.
9. Where placement of dike is required with guard railing installations, see Revised Standard Plan RSP A77C4 for dike positioning details.
10. The 15:1 or flatter flare used with buried end anchors is based on the edge of the paved shoulder or offset line of edge of the traveled way. The length of guard railing within the 15:1 or flatter flare is based on site conditions and should be a length equal to multiples of 12'-6".
11. For details of the buried post end anchor used with Type 11K and 11L Layouts, see Standard Plan A77I2.
12. For typical flare offsets for 25'-0" length parabola with maximum offset of 1'-0", see Revised Standard Plan RSP A77E1.

STATE OF CALIFORNIA
DEPARTMENT OF TRANSPORTATION

METAL BEAM GUARD RAILING TYPICAL LAYOUTS FOR EMBANKMENTS

NO SCALE

RSP A77E6 DATED JUNE 6, 2008 SUPERSEDES STANDARD PLAN A77E6 DATED MAY 1, 2006 - PAGE 53 OF THE STANDARD PLANS BOOK DATED MAY 2006.

REVISED STANDARD PLAN RSP A77E6

2006 REVISED STANDARD PLAN RSP A77E6

P:\proj11\02\3E810_plans\pse\23e810va015.dgn

12-10-07

DIST	COUNTY	ROUTE	POST MILES TOTAL PROJECT	SHEET NO.	TOTAL SHEETS
02	Teh,Sha	5	R27.1/42.1 0.0/0.9	163	215

Randell D. Hiatt
REGISTERED CIVIL ENGINEER

June 6, 2008
PLANS APPROVAL DATE

REGISTERED PROFESSIONAL ENGINEER
Randell D. Hiatt
No. C50200
Exp. 6-30-09
CIVIL
STATE OF CALIFORNIA

The State of California or its officers or agents shall not be responsible for the accuracy or completeness of electronic copies of this plan sheet.

To accompany plans dated 06-17-11

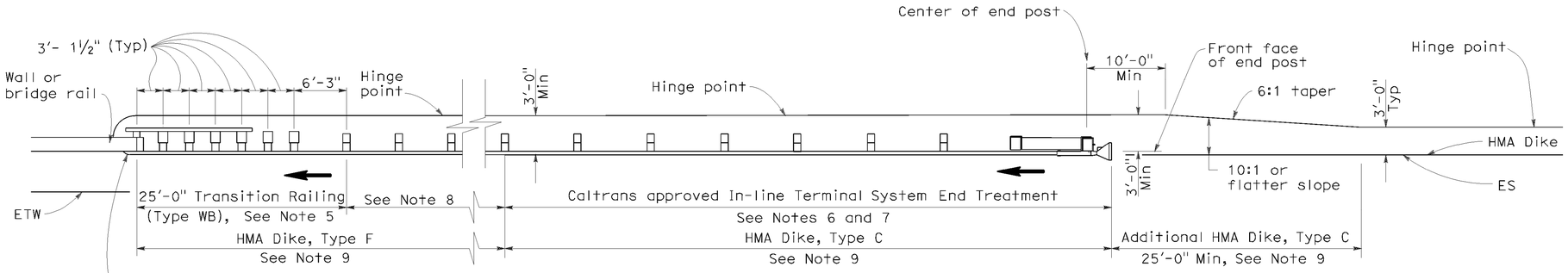

TYPE 12A LAYOUT

(GUARD RAILING INSTALLATION AT STRUCTURE APPROACH WITH AN IN-LINE END TREATMENT AT TRAFFIC APPROACH END OF RAILING)
See Notes 10

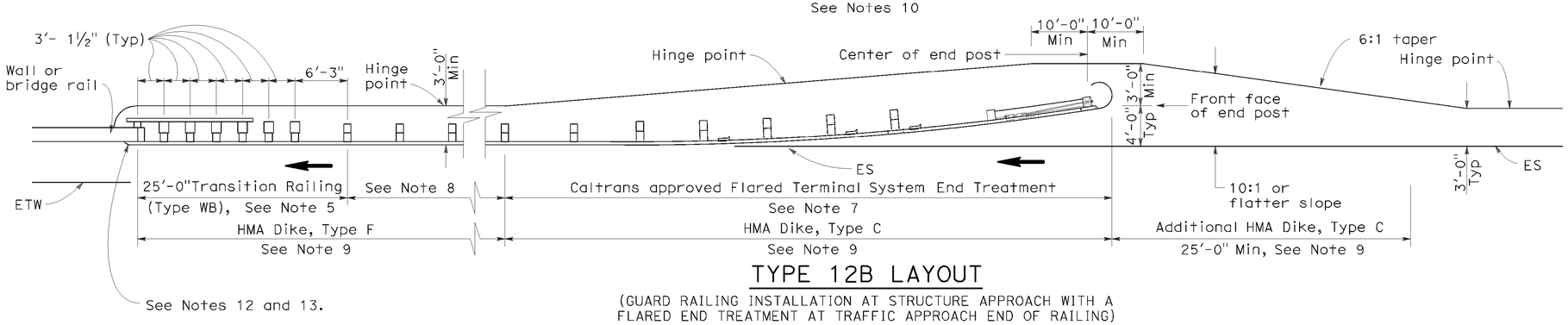

TYPE 12B LAYOUT

(GUARD RAILING INSTALLATION AT STRUCTURE APPROACH WITH A FLARED END TREATMENT AT TRAFFIC APPROACH END OF RAILING)
See Notes 10

NOTES:

1. Line post, blocks and hardware to be used are shown on Standard Plans A77A1, A77A2, A77B1, A77C1 and A77C2.
2. Guard rail post spacing to be 6'-3" center to center, except as otherwise noted.
3. Except as noted, line posts are 6" x 8" x 6'-0" wood with 6" x 8" x 1'-2" wood blocks. W6 x 9 steel posts, 6'-0" in length, with 6" x 8" x 1'-2" notched wood blocks or plastic blocks may be used for 6" x 8" x 6'-0" wood posts with 6" x 8" x 1'-2" wood blocks where applicable and when specified.
4. Direction of adjacent traffic indicated by ➡.
5. For Transition Railing (Type WB) details for Types 12A and 12B Layouts, see Standard Plan A77J4.
6. In-line Terminal System End Treatments are used where site conditions will not accommodate a flared end treatment.
7. The type of terminal system end treatment to be used will be shown on the Project Plans.
8. Dependent on site conditions (embankment height, side slopes, or other fixed objects), it may be advisable to construct additional guard railing (a length equal to multiples of 12'-6" with 6'-3" post spacing) between the transition railing and end treatment.
9. Where placement of dike is required with guard railing installations, see Revised Standard Plan RSP A77C4 for dike positioning details.
10. Type 12A or Type 12B Layouts are typically used:
    a. To the right of approaching traffic, at the end of a structure, on two-lane conventional highway where the roadbed width across the structure is less than 40 feet.
    b. To the left of approaching traffic, at the end of a structure, on two-lane conventional highway where the roadbed width across the structure is less than 40 feet.
    c. To the right of approaching traffic at the end of each structure on multilane freeways or expressways with separate adjacent or parallel bridges.
    d. To the right of approaching traffic at the end of the structure on multilane freeways or expressways with decked median on the bridge.
11. See Revised Standard Plan RSP A77F3 for typical layout used left of approaching traffic at the ends of each structure on multilane freeways or expressways with separate adjacent or parallel bridges.
12. For additional details of typical connections to bridge rail, see Connection Detail AA on Revised Standard Plans RSP A77J1 and RSP A77J2 and Connection Detail FF on Standard Plans A77K1 and A77K2.
13. For additional details of a typical connection to walls or abutments, see Standard Plan A77J3.

STATE OF CALIFORNIA
DEPARTMENT OF TRANSPORTATION

METAL BEAM GUARD RAILING TYPICAL LAYOUTS FOR STRUCTURE APPROACH

NO SCALE

RSP A77F1 DATED JUNE 6, 2008 SUPERSEDES STANDARD PLAN A77F1
DATED MAY 1, 2006 - PAGE 54 OF THE STANDARD PLANS BOOK DATED MAY 2006.

REVISED STANDARD PLAN RSP A77F1

2006 REVISED STANDARD PLAN RSP A77F1

P:\proj1\02\3E810_plans\pse\23e810va016.dgn

12-10-07

Dist	COUNTY	ROUTE	POST MILES TOTAL PROJECT	SHEET No.	TOTAL SHEETS
02	Teh,Sha	5	R27.1/42.1 0.0/0.9	164	215

Randell D. Hiatt
REGISTERED CIVIL ENGINEER

May 20, 2011
PLANS APPROVAL DATE

REGISTERED PROFESSIONAL ENGINEER
Randell D. Hiatt
No. C50200
Exp. 6-30-11
CIVIL
STATE OF CALIFORNIA

The State of California or its officers or agents shall not be responsible for the accuracy or completeness of electronic copies of this plan sheet.

To accompany plans dated 06-17-11

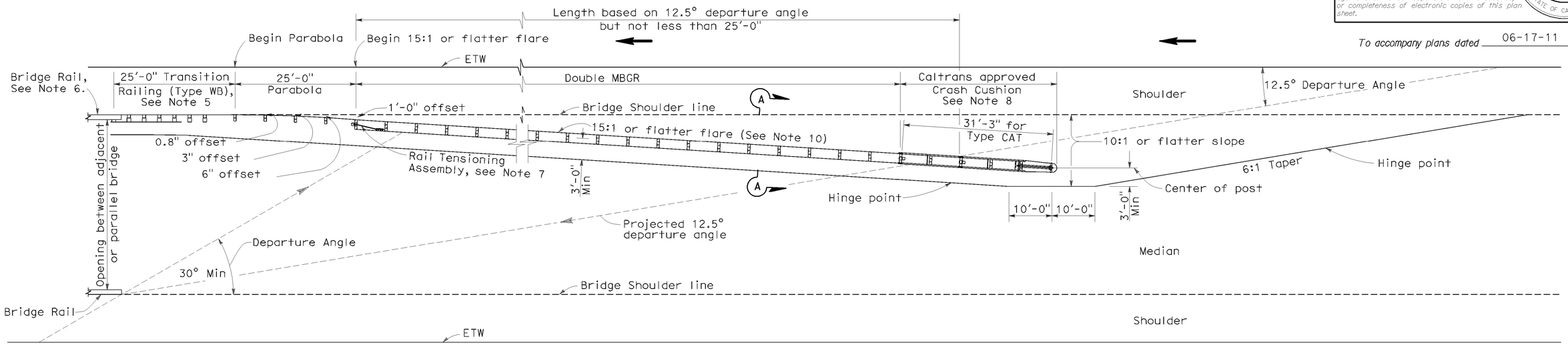

TYPE 12E LAYOUT

See Note 10

5/8" ø Button head bolt with hex nut or 5/8" ø Rod, threaded both ends, with hex nuts. 1/2" Max exposed threads after hex nut(s) tightened. No washer on rail faces for bolted connection to line post.

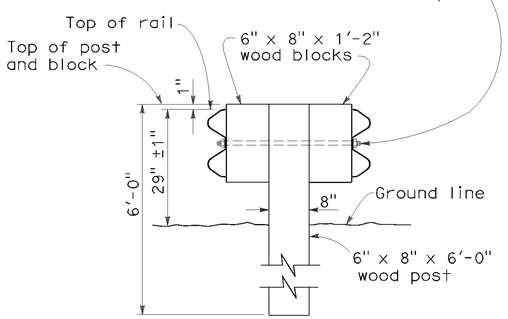

SECTION A-A

TYPICAL DOUBLE METAL BEAM GUARD RAILING

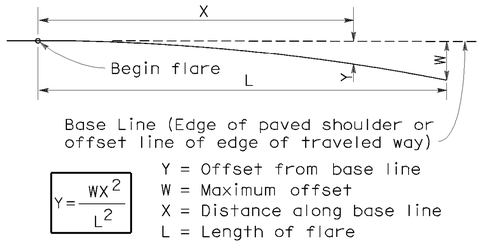

$$Y = \frac{WX^2}{L^2}$$

Y = Offset from base line
W = Maximum offset
X = Distance along base line
L = Length of flare

PARABOLIC FLARE OFFSETS

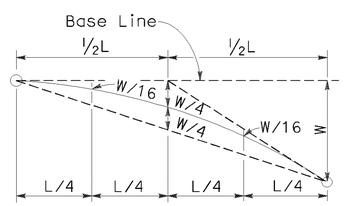

TYPICAL PARABOLIC LAYOUT

NOTES:

1. Line post, blocks and hardware to be used are shown on Standard Plans A77A1, A77A2, A77B1, A77C1 and A77C2.
2. Guard railing post spacing to be 6'-3" center to center, except as otherwise noted.
3. Except as noted, line posts are 6" x 8" x 6'-0" wood with 6" x 8" x 1'-2" wood blocks. W6 x 9 steel posts, 6'-0" in length, with 6" x 8" x 1'-2" notched wood blocks or notched recycled plastic blocks may be used for 6" x 8" x 6'-0" wood line posts with 6" x 8" x 1'-2" wood blocks where applicable and when specified.
4. Direction of adjacent traffic indicated by ➡.
5. For Transition Railing (Type WB) details, see Standard Plan A77J4.
6. For additional details of a typical connection to bridge rail, see Connection Detail AA on Revised Standard Plan RSP A77J1.
7. For Rail Tensioning Assembly details, see Standard Plan A77H2.
8. The type of Crash Cushion to be used will be shown on the Project Plans.
9. Type 12E Layout is typically used left of approaching traffic at the end of each structure on multilane freeways or expressways where a median type barrier is not constructed between separated roadbeds.
10. The 15:1 or flatter flare is measured off of the edge of traveled way.

STATE OF CALIFORNIA
DEPARTMENT OF TRANSPORTATION

METAL BEAM GUARD RAILING TYPICAL LAYOUTS FOR STRUCTURE APPROACH

NO SCALE

RSP A77F3 DATED MAY 20, 2011 SUPERSEDES RSP A77F3 DATED JUNE 6, 2008 AND STANDARD PLAN A77F3 DATED MAY 1, 2006 - PAGE 56 OF THE STANDARD PLANS BOOK DATED MAY 2006.

REVISED STANDARD PLAN RSP A77F3

2006 REVISED STANDARD PLAN RSP A77F3

P:\proj1\02\3E810_plans\pse\23e810va017.dgn

3-10-11

DIST	COUNTY	ROUTE	POST MILES TOTAL PROJECT	SHEET NO.	TOTAL SHEETS
02	Teh,Sha	5	R27.1/42.1 0.0/0.9	165	215

Randell D. Hiatt
REGISTERED CIVIL ENGINEER

June 6, 2008
PLANS APPROVAL DATE

REGISTERED PROFESSIONAL ENGINEER
Randell D. Hiatt
No. C50200
Exp. 6-30-09
CIVIL
STATE OF CALIFORNIA

The State of California or its officers or agents shall not be responsible for the accuracy or completeness of electronic copies of this plan sheet.

To accompany plans dated 06-17-11

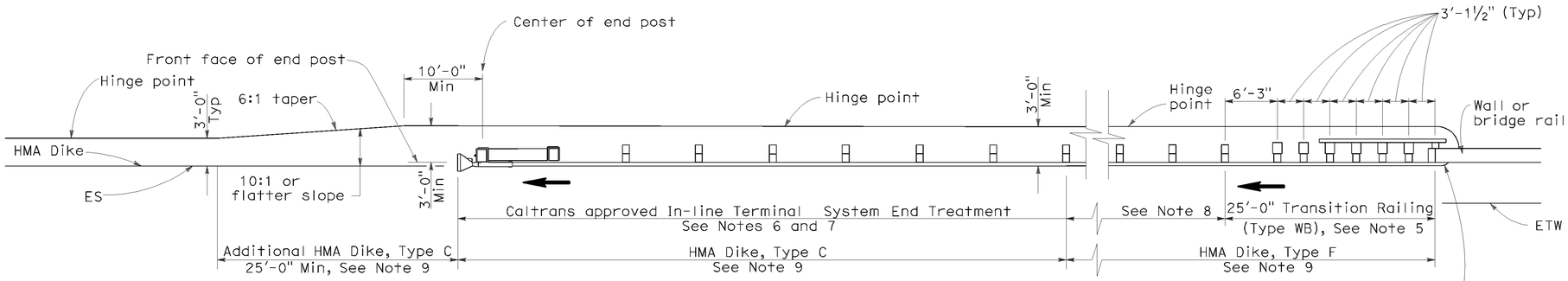

TYPE 12AA LAYOUT

(GUARD RAILING INSTALLATION AT STRUCTURE DEPARTURE WITH AN IN-LINE END TREATMENT AT TRAILING END OF RAILING)
See Notes 9 and 10

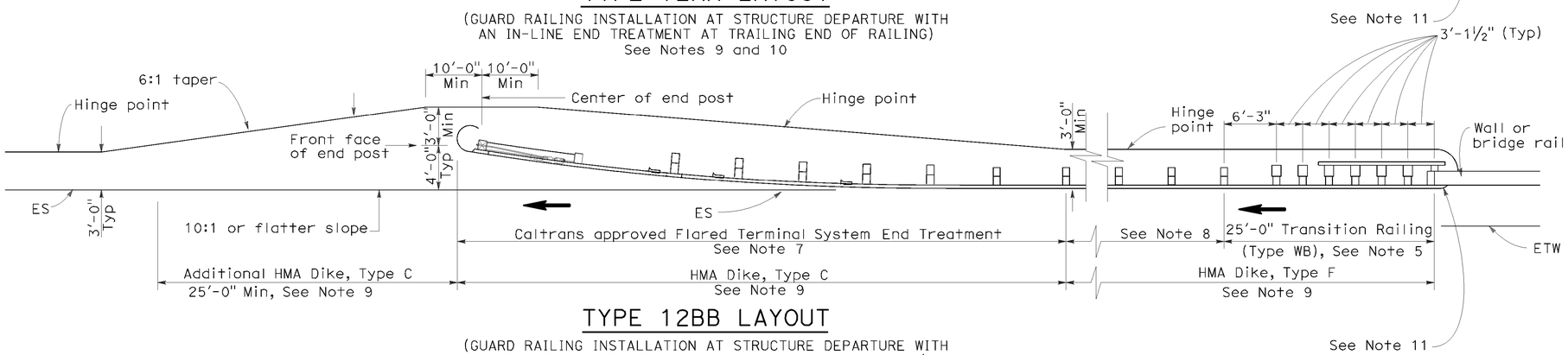

TYPE 12BB LAYOUT

(GUARD RAILING INSTALLATION AT STRUCTURE DEPARTURE WITH A FLARED END TREATMENT AT TRAILING END OF RAILING)
See Notes 9 and 10

NOTES:

1. Line post, blocks and hardware to be used are shown on Standard Plans A77A1, A77A2, A77B1, A77C1 and A77C2.
2. Guard rail post spacing to be 6'-3" center to center, except as otherwise noted.
3. Except as noted, line posts are 6" x 8" x 6'-0" wood with 6" x 8" x 1'-2" wood blocks. W6 x 9 steel posts, 6'-0" in length, with 6" x 8" x 1-2" notched wood blocks or notched recycled plastic blocks may be used for 6" x 8" x 6'-0" wood posts with 6" x 8" x 1'-2" wood blocks where applicable and when specified.
4. Direction of adjacent traffic indicated by ➡.
5. For Transition Railing (Type WB) details for Types 12AA and 12BB Layouts, see Standard Plan A77J4.
6. In-line Terminal System Treatments are used where site conditions will not accommodate a flared end treatment.
7. The type of terminal system to be used will be shown on the Project Plans.
8. Dependent on site conditions (embankment height, side slopes, other fixed objects), it may be advisable to construct additional guard railing (a length equal to multiples of 12'-6" with 6'-3" post spacing) between the transition railing and end treatments.
9. Where placement of dike is required with guard railing installations, see Revised Standard Plan RSP A77C4 for dike positioning details.
10. Type 12AA or Type 12BB Layouts are typically used to the right of traffic departing a structure on two-way conventional highways where the roadbed width across the structure is less than 40 feet.
11. For additional details of typical connections to bridge rail, see Connection Detail CC on Revised Standard Plan RSP A77J2 and Connection Detail HH on Standard Plans A77k2.

STATE OF CALIFORNIA
DEPARTMENT OF TRANSPORTATION

METAL BEAM GUARD RAILING TYPICAL LAYOUTS FOR STRUCTURE DEPARTURE

NO SCALE

RSP A77F4 DATED JUNE 6, 2008 SUPERSEDES STANDARD PLAN A77F4
DATED MAY 1, 2006 - PAGE 57 OF THE STANDARD PLANS BOOK DATED MAY 2006.

REVISED STANDARD PLAN RSP A77F4

2006 REVISED STANDARD PLAN RSP A77F4

P:\proj1\02\3E810_plans\pse\23e810va018.dgn

12-10-07

Dist	COUNTY	ROUTE	POST MILES TOTAL PROJECT	SHEET No.	TOTAL SHEETS
02	Teh,Sha	5	R27.1/42.1 0.0/0.9	166	215

Randell D. Hiatt
REGISTERED CIVIL ENGINEER

May 20, 2011
PLANS APPROVAL DATE

REGISTERED PROFESSIONAL ENGINEER Randell D. Hiatt No. C50200 Exp. 6-30-11 CIVIL STATE OF CALIFORNIA

The State of California or its officers or agents shall not be responsible for the accuracy or completeness of electronic copies of this plan sheet.

To accompany plans dated 06-17-11

NOTES:

1. Line post, blocks and hardware to be used are shown on Standard Plans A77A1, A77A2, A77B1, A77C1 and A77C2.
2. Guard railing post spacing to be 6'-3" center to center, except as otherwise noted.
3. Except as noted, line posts are 6" x 8" x 6'-0" wood with 6" x 8" x 1'-2" wood blocks. W6 x 9 steel posts, 6'-0" in length, with 6" x 8" x 1'-2" notched wood blocks or notched recycled plastic blocks may be used for 6" x 8" x 6'-0" wood line posts with 6" x 8" x 1'-2" wood blocks where applicable and when specified.
4. A 4'-0" minimum clearance is required between the face of the railing and the face of a fixed object located directly behind standard guard railing sections with post spacing of 6'-3". Construct guard railing as shown in the detail "Strengthened Railing Sections for Fixed Objects" on this plan, where the clearance between the face of the railing and the face of a fixed object is less than 4'-0", but not less than 2'-3". Where the clearance is less than 2'-3", a concrete wall or barrier should be constructed to shield the fixed object(s).
5. Direction of adjacent traffic indicated by ➡.
6. For End Anchor Assembly (Type SFT) details, see Standard Plan A77H1.
7. For details of Rail Tensioning Assembly, see Standard Plan A77H2.
8. The type of crash cushion to be used will be shown on the Project Plans.
9. Type 14A layout is typically used on multilane freeways or expressways to shield fixed objects where a median type barrier is not constructed between the separated roadbeds.
10. For typical flare offsets for 25'-0" length parabola with maximum offset of 1'-0", see Revised Standard Plan RSP A77E1.
11. The 15:1 or flatter flare is measured off of the edge of traveled way.
12. W6 x 15 steel post, 8'-0" in length, with 8" x 8" x 1'-2" notched wood block or notched recycled plastic block may be used in place of the 10" x 10" x 8'-0" wood post with 8" x 8" x 1'-2" wood block shown in the "Strengthened Railing Sections Detail".

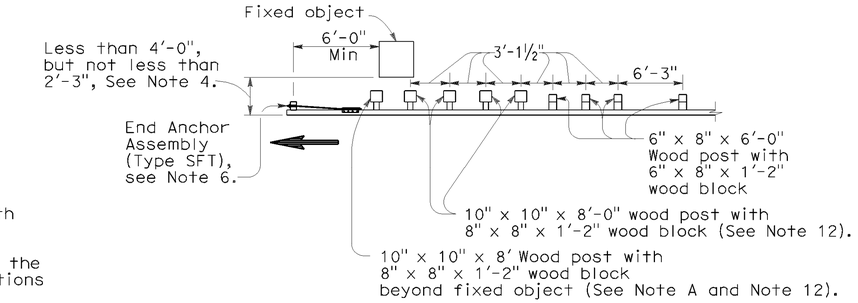

NOTE A: For a series of fixed objects (bridge columns, overhead sign supports, etc.) additional 10" x 10" x 8'-0" wood post with 8" x 8" x 1'-2" wood blocks at 3'-1½" center to center spacing are to be used between fixed objects.

STRENGTHENED RAILING SECTIONS FOR FIXED OBJECT

Use strengthened railing sections with Type 14A layout where minimum clearance between the face of the guard railing and fixed object(s) is less than 4'-0", but not less than 2'-3", See Note 4.

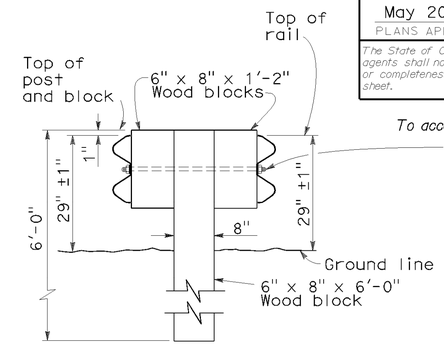

SECTION A-A
TYPICAL DOUBLE METAL BEAM GUARD RAILING

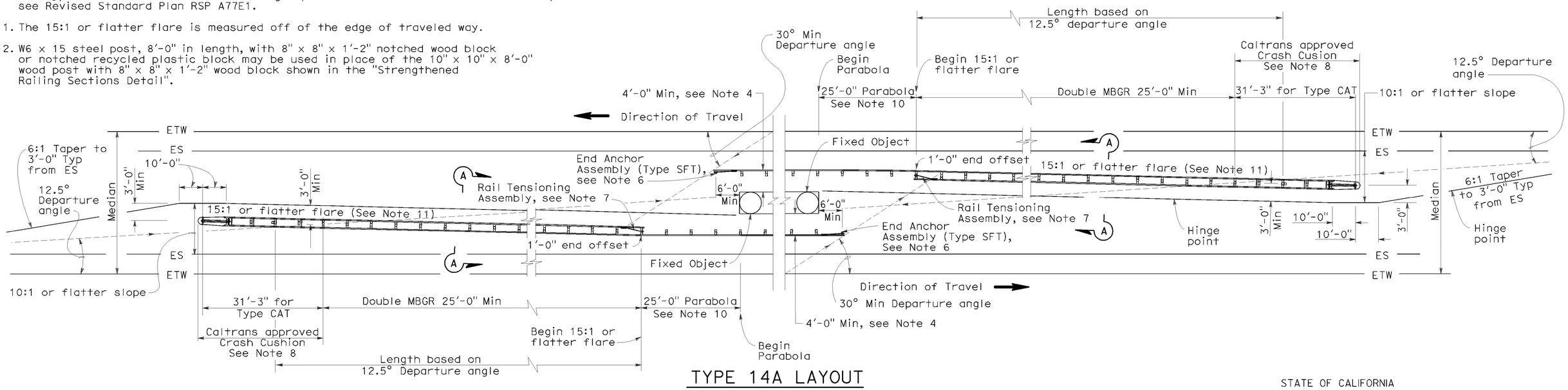

TYPE 14A LAYOUT

See Note 9

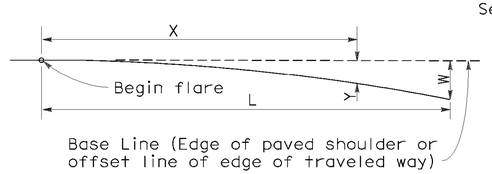

$$Y = \frac{WX^2}{L^2}$$

Y = Offset from base line
W = Maximum offset
X = Distance along base line
L = Length of flare

PARABOLIC FLARE OFFSETS

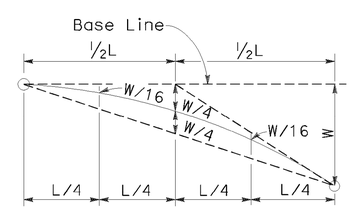

TYPICAL PARABOLIC LAYOUT

STATE OF CALIFORNIA
DEPARTMENT OF TRANSPORTATION

METAL BEAM GUARD RAILING TYPICAL LAYOUTS FOR FIXED OBJECTS BETWEEN SEPARATE ROADBEDS (TWO-WAY TRAFFIC)

NO SCALE

RSP A77G1 DATED MAY 20, 2011 SUPERSEDES RSP A77G1 DATED JUNE 6, 2008 AND STANDARD PLAN A77G1 DATED MAY 1, 2006 - PAGE 59 OF THE STANDARD PLANS BOOK DATED MAY 2006.

REVISED STANDARD PLAN RSP A77G1

2006 REVISED STANDARD PLAN RSP A77G1

59

P:\proj1\02\3E810_plans\pse\23e810va019.dgn

3-10-11

DIST	COUNTY	ROUTE	POST MILES TOTAL PROJECT	SHEET NO.	TOTAL SHEETS
02	Teh,Sha	5	R27.1/42.1 0.0/0.9	167	215

Randell D. Hiatt
REGISTERED CIVIL ENGINEER

June 6, 2008
PLANS APPROVAL DATE

REGISTERED PROFESSIONAL ENGINEER Randell D. Hiatt No. C50200 Exp. 6-30-09 CIVIL STATE OF CALIFORNIA

The State of California or its officers or agents shall not be responsible for the accuracy or completeness of electronic copies of this plan sheet.

To accompany plans dated 06-17-11

NOTES:

1. Line post, blocks and hardware to be used are shown on Standard Plans A77A1, A77A2, A77B1, A77C1 and A77C2.
2. Guard railing post spacing to be 6'-3" center to center, except as otherwise noted.
3. Except as noted, line posts are 6" x 8" x 6'-0" wood with 6" x 8" x 1'-2" wood blocks. W6 x 9 steel posts, 6'-0" in length, with 6" x 8" x 1'-2" notched wood blocks or notched recycled plastic blocks may be used for 6" x 8" x 6'-0" wood line posts with 6" x 8" x 1'-2" wood blocks where applicable and when specified.
4. A 4'-0" minimum clearance is required between the face of the railing and the face of a fixed object located directly behind standard guard railing section with post spacing of 6'-3". Construct guard railing as shown in the detail "Strengthened Railing Sections for Fixed Objects" on this plan, where the clearance between the face of the railing and the face of a fixed object is less than 4'-0", but not less than 2'-3". Where the clearance is less than 2'-3", a concrete wall or barrier should be constructed to shield the fixed object(s).
5. Direction of adjacent traffic indicated by ➡.
6. For End Anchor Assembly (Type SFT) details, see Standard Plan A77H1.
7. Type of crash cushion to be used will be shown on the Project Plans.
8. Type 15A layout is typically used on multilane freeways or expressways to shield fixed objects in the area between separated one-way roadbeds.
9. For typical flare offsets for 25'-0" length parabola with maximum offset of 1'-0", see Revised Standard Plan RSP A77E1.
10. The 15:1 or flatter flare is measured off of the edge of the traveled way.
11. W6 x 15 steel post, 8'-0" in length, with 8" x 8" x 1'-2" notched wood block or notched recycled plastic blocks may be used in place of the 10" x 10" x 8'-0" wood post with 8" x 8" x 1'-2" wood block shown in the "Strengthened Railing Sections Detail".

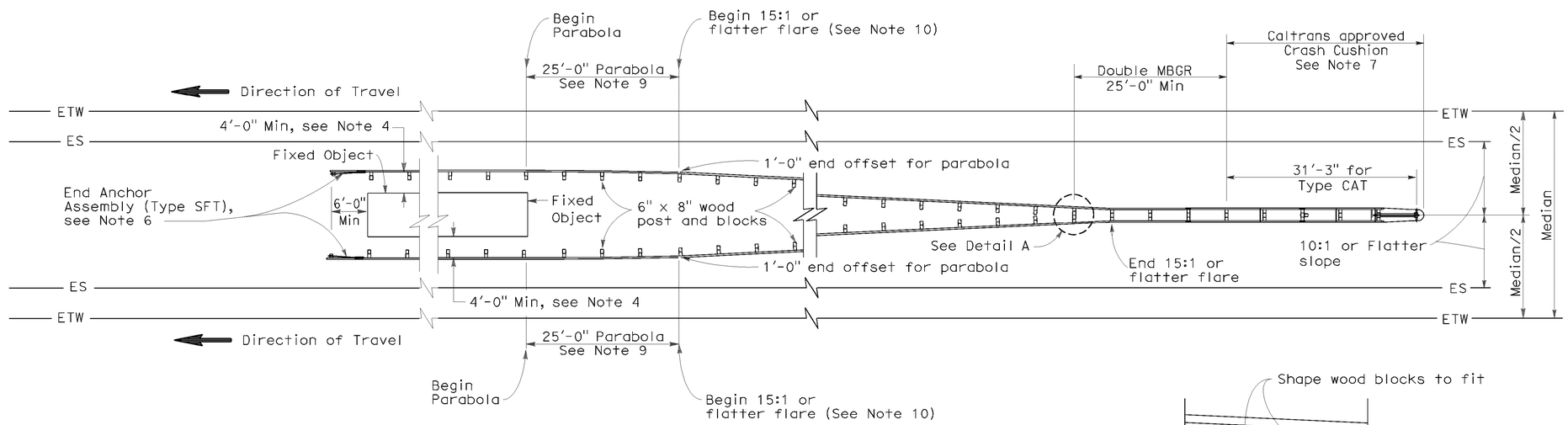

TYPE 15A LAYOUT

See Note 9

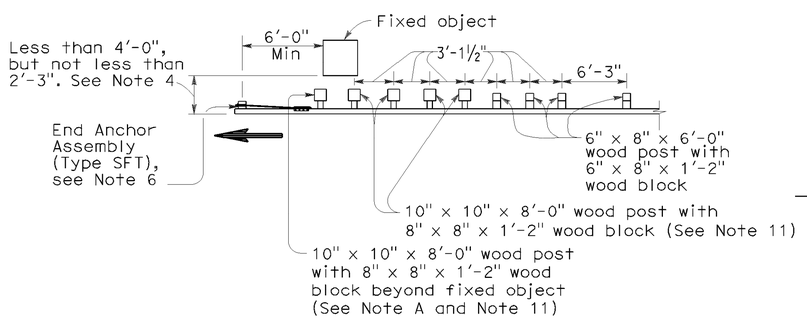

NOTE A: For a series of fixed objects (bridge columns, overhead sign supports, etc.) additional 10" x 10" x 8'-0" wood post with 8" x 8" x 1'-2" wood blocks at 3'-1½" center to center spacing are to be used between fixed objects.

STRENGTHENED RAILING SECTIONS FOR FIXED OBJECT

Use strengthened railing sections with Type 15A layout where minimum clearance between the face of the guard railing and the fixed object(s) is less than 4'-0", but not less than 2'-3". See Note 4.

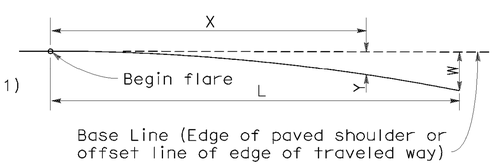

$$Y = \frac{WX^2}{L^2}$$

Y = Offset from base line
W = Maximum offset
X = Distance along base line
L = Length of flare

PARABOLIC FLARE OFFSETS

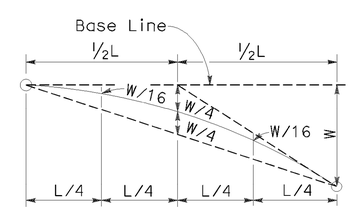

TYPICAL PARABOLIC LAYOUT

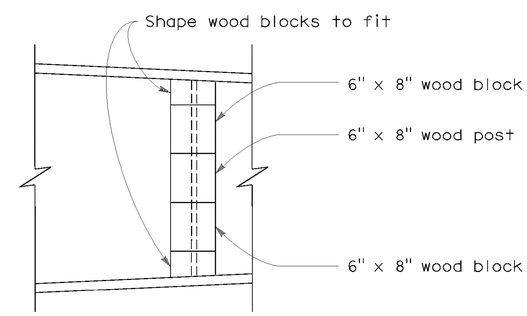

DETAIL A

STATE OF CALIFORNIA
DEPARTMENT OF TRANSPORTATION

METAL BEAM GUARD RAILING TYPICAL LAYOUTS FOR FIXED OBJECTS BETWEEN SEPARATE ROADBEDS (ONE-WAY TRAFFIC)

NO SCALE

RSP A77G2 DATED JUNE 6, 2008 SUPERSEDES STANDARD PLAN A77G2 DATED MAY 1, 2006 - PAGE 60 OF THE STANDARD PLANS BOOK DATED MAY 2006.

REVISED STANDARD PLAN RSP A77G2

2006 REVISED STANDARD PLAN RSP A77G2

P:\proj1\02\3E810_plans\pse\23e810va020.dgn

12-10-07

DIST	COUNTY	ROUTE	POST MILES TOTAL PROJECT	SHEET NO.	TOTAL SHEETS
02	Teh,Sha	5	R27.1/42.1 0.0/0.9	168	215

Randell D. Hiatt
REGISTERED CIVIL ENGINEER

June 6, 2008
PLANS APPROVAL DATE

REGISTERED PROFESSIONAL ENGINEER
Randell D. Hiatt
No. C50200
Exp. 6-30-09
CIVIL
STATE OF CALIFORNIA

The State of California or its officers or agents shall not be responsible for the accuracy or completeness of electronic copies of this plan sheet.

To accompany plans dated 06-17-11

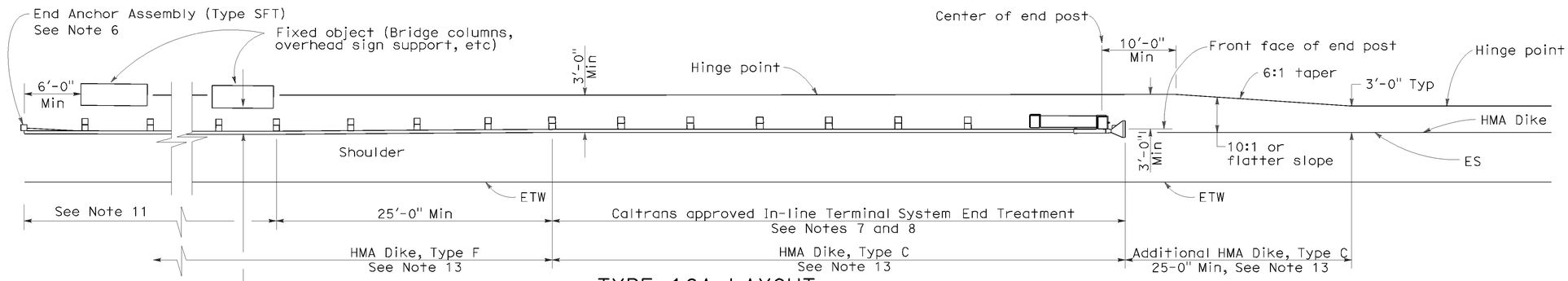

TYPE 16A LAYOUT

(GUARD RAILING INSTALLATION AT ROADSIDE FIXED OBJECT OR OBJECTS WITH AN IN-LINE END TREATMENT AT TRAFFIC APPROACH END OF RAILING)
See Notes 12 and 13

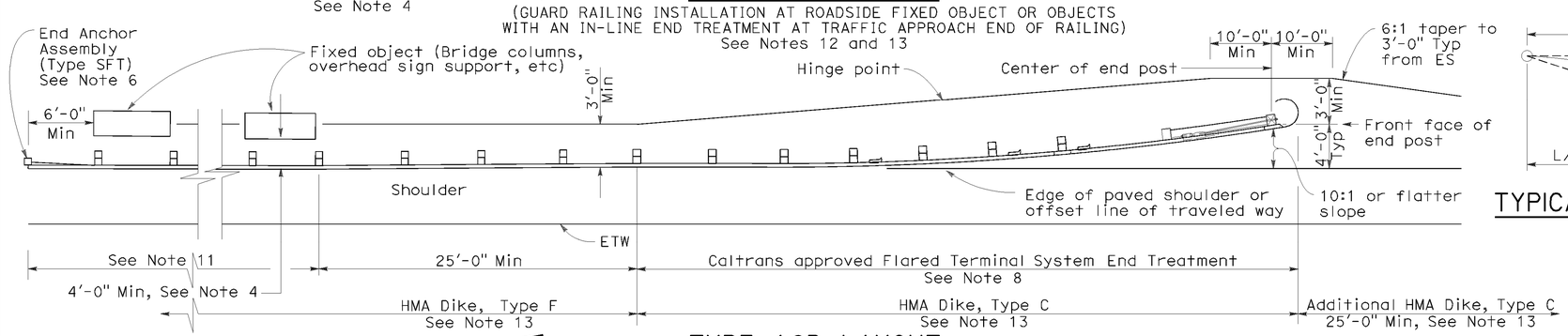

TYPE 16B LAYOUT

(GUARD RAILING INSTALLATION AT ROADSIDE FIXED OBJECT OR OBJECTS WITH A FLARED END TREATMENT AT TRAFFIC APPROACH END OF RAILING)
See Notes 12 and 13

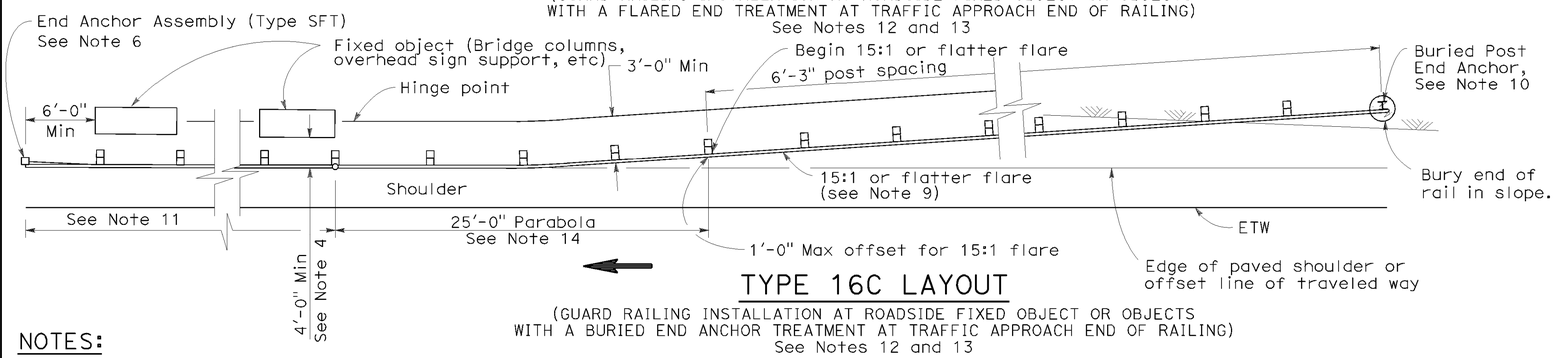

TYPE 16C LAYOUT

(GUARD RAILING INSTALLATION AT ROADSIDE FIXED OBJECT OR OBJECTS WITH A BURIED END ANCHOR TREATMENT AT TRAFFIC APPROACH END OF RAILING)
See Notes 12 and 13

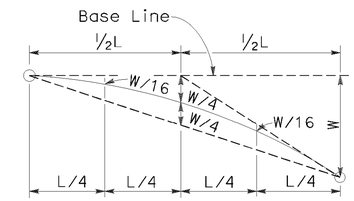

TYPICAL PARABOLIC LAYOUT

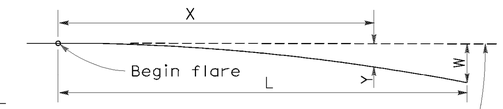

Base Line (Edge of paved shoulder or offset line of edge of traveled way)

$$Y = \frac{WX^2}{L^2}$$

Y = Offset from base line
W = Maximum offset
X = Distance along base line
L = Length of flare

PARABOLIC FLARE OFFSETS

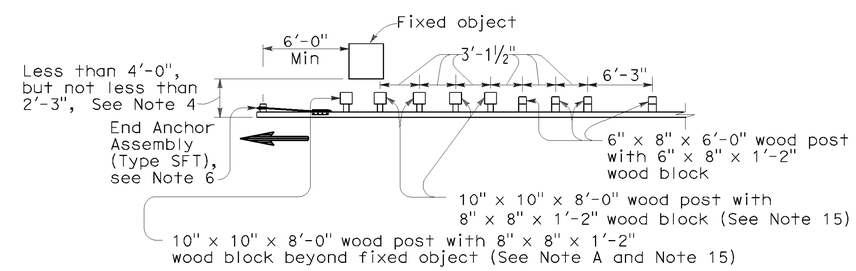

NOTE A: For a series of fixed objects (bridge columns, overhead sign supports, etc.) additional 10" x 10" x 8'-0" wood post with 8" x 8" x 1'-2" wood blocks at 3'-1½" center to center spacing are to be used between fixed objects.

STRENGTHENED RAILING SECTIONS FOR FIXED OBJECT

Use strengthened railing sections with Types 16A, 16B or 16C Layouts where minimum clearance between the face of the guard railing and fixed object(s) is less than 4'-0", but not less than 2'-3". See Note 4

NOTES:

1. Line post, blocks and hardware to be used are shown on Revised Standard Plans A77A1, A77A2, A77B1, A77C1 and A77C2.
2. Guard railing post spacing to be 6'-3" center to center, except as otherwise noted.
3. Except as noted, line posts are 6" x 8" x 6'-0" wood with 6" x 8" x 1'-2" wood blocks. W6 x 9 steel posts, 6'-0" in length, with 6" x 8" x 1'-2" notched wood blocks or notched recycled plastic blocks may be used for 6" x 8" x 6'-0" wood line posts with 6" x 8" x 1'-2" wood blocks where applicable and when specified.
4. A 4'-0" minimum clearance is required between the face of the railing and the face of a fixed object located directly behind standard guard railing sections with post spacing of 6'-3". Construct guard railing as shown in the detail "Strengthened Railing Sections for Fixed Objects" on this plan, where the clearance between the face of the railing and the face of a fixed object is less than 4'-0", but not less than 2'-3". Where the clearance is less than 2'-3", a concrete wall or barrier should be constructed to shield the fixed object(s).
5. Direction of adjacent traffic indicated by ⟶.
6. For End Anchor Assembly (Type SFT) details, see Standard Plan A77H1.
7. In-line Terminal System End Treatments are used where site conditions will not accommodate a flared end treatment.
8. The type of terminal system to be used will be shown on the Project Plans.
9. The 15:1 or flatter flare used with Type 16C Layout is based on the edge of the paved shoulder or offset line of edge of the traveled way. The length of guard railing within the 15:1 or flatter flare is based on site conditions and should be a length equal to multiples of 12'-6".
10. For details of the Buried Post End Anchor used with Type 16C Layout, see Standard Plan A77I2.
11. As site conditions dictate, construct additional guard railing to shield fixed object(s). Additional guard railing length equal to multiples of 12'-6". Post spacing at 6'-3" except as specified in Note 4.
12. Layout Types 16A, 16B or 16C are typically used where guard railing is recommended to shield roadside fixed object(s) and a crashworthy end treatment is required for only one direction of traffic.
13. Where placement of dike is required with guard railing, see Revised Standard Plan RSP A77C4 for dike positioning details.
14. For typical flare offsets for 25'-0" length parabola with maximum offset of 1'-0", see Revised Standard Plan RSP A77E1.
15. W6 x 15 steel post, 8'-0" in length, with 8" x 8" x 1'-2" notched wood block or notched recycled plastic blocks may be used in place of the 10" x 10" x 8'-0" wood post with 8" x 8" x 1'-2" wood block shown in the "Strengthened Railing Sections Detail".

STATE OF CALIFORNIA
DEPARTMENT OF TRANSPORTATION

METAL BEAM GUARD RAILING TYPICAL LAYOUTS FOR ROADSIDE FIXED OBJECTS

NO SCALE

RSP A77G3 DATED JUNE 6, 2008 SUPERSEDES STANDARD PLAN A77G3 DATED MAY 1, 2006 - PAGE 61 OF THE STANDARD PLANS BOOK DATED MAY 2006.

REVISED STANDARD PLAN RSP A77G3

2006 REVISED STANDARD PLAN RSP A77G3

P:\proj1\02\3E810_plans\pse\23e810va021.dgn

12-10-07

DIST	COUNTY	ROUTE	POST MILES TOTAL PROJECT	SHEET NO.	TOTAL SHEETS
02	Teh,Sha	5	R27.1/42.1 0.0/0.9	169	215

Randell D. Hiatt
REGISTERED CIVIL ENGINEER

June 6, 2008
PLANS APPROVAL DATE

REGISTERED PROFESSIONAL ENGINEER
Randell D. Hiatt
No. C50200
Exp. 6-30-09
CIVIL
STATE OF CALIFORNIA

The State of California or its officers or agents shall not be responsible for the accuracy or completeness of electronic copies of this plan sheet.

To accompany plans dated 06-17-11

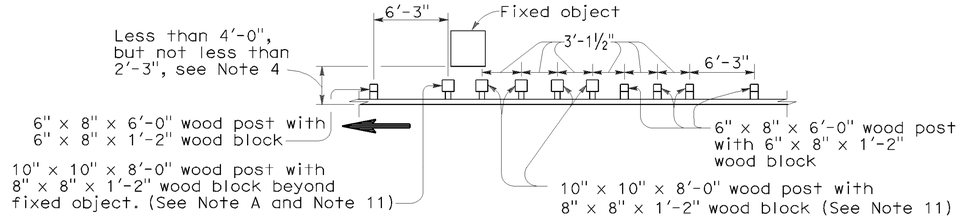

NOTE A: For a series of fixed objects (bridge columns, overhead sign supports, etc.) additional 10" x 10" x 8'-0" wood post with 8" x 8" x 1'-2" wood blocks at 3'-1½" center to center spacing are to be used between fixed object(s).

STRENGTHENED RAILING SECTIONS FOR FIXED OBJECT

Use strengthened railing sections with Layout Types 16D or 16E where minimum clearance between the guard railing and fixed object(s) is less than 4'-0", but not less than 2'-3". See Note 4.

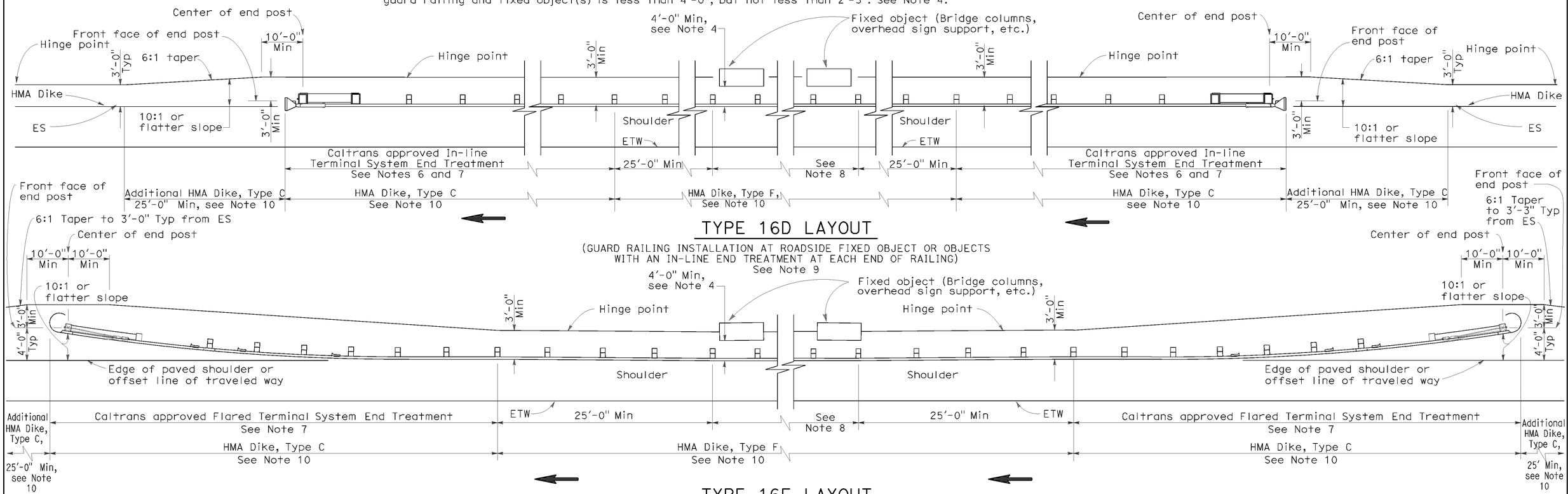

TYPE 16D LAYOUT

(GUARD RAILING INSTALLATION AT ROADSIDE FIXED OBJECT OR OBJECTS WITH AN IN-LINE END TREATMENT AT EACH END OF RAILING)
See Note 9

TYPE 16E LAYOUT

(GUARD RAILING INSTALLATION AT ROADSIDE FIXED OBJECT OR OBJECTS WITH A FLARED END TREATMENT AT EACH END OF RAILING)
See Note 9

NOTES:

1. Line post, blocks and hardware to be used are shown on Standard Plans A77A1, A77A2, A77B1, A77C1 and A77C2.
2. Guard railing post spacing to be 6'-3" center to center, except as otherwise noted.
3. Except as noted, line posts are 6" x 8" x 6'-0" wood with 6" x 8" x 1'-2" wood blocks. W6 x 9 steel posts, 6'-0" in length, with 6" x 8" x 1'-2" notched wood blocks or notched recycled plastic blocks may be used for 6" x 8" x 6'-0" wood line posts with 6" x 8" x 1'-2" wood blocks where applicable and when specified.
4. A 4'-0" minimum clearance is required between the face of the railing and the face of a fixed object located directly behind standard guard railing sections with post spacing at 6'-3". Construct guard railing as shown in the detail "Strengthened Railing Sections for Fixed Objects" on this plan, where the clearance between the face of the railing and the face of a fixed object is less than 4'-0", but not less than 2'-3". Where the clearance is less than 2'-3", a concrete wall or barrier should be constructed to shield the fixed object(s).
5. Direction of adjacent traffic indicated by ⟶ .
6. In-line Terminal System End Treatments are used where site conditions will not accommodate a flared end treatment.
7. The type of terminal system to be used will be shown on the Project Plans.
8. As site conditions dictate, construct additional guard railing to shield fixed object(s). Additional guard railing length equal to multiples of 12'-6". Post spacing at 6'-3", except as specified in Note 4.
9. Layout Types 16D through 16L, shown on the A77G Series of Revised Standard Plans, are typically used where guard railing is recommended to shield roadside fixed object(s) and a crashworthy end treatment is required for both directions of traffic.
10. Where placement of dike is required with guard railing, see Revised Standard Plan RSP A77C4 for dike positioning details.
11. W6 x 15 steel post, 8'-0" in length, with 8" x 8" x 1'-2" notched wood block or notched recycled plastic block may be used in place of the 10" x 10" x 8'-0" wood post with 8" x 8" x 1'-2" wood block shown in the "Strengthened Railing Sections Detail."

STATE OF CALIFORNIA
DEPARTMENT OF TRANSPORTATION

METAL BEAM GUARD RAILING TYPICAL LAYOUTS FOR ROADSIDE FIXED OBJECTS

NO SCALE

RSP A77G4 DATED JUNE 6, 2008 SUPERSEDES STANDARD PLAN A77G4 DATED MAY 1, 2006 - PAGE 62 OF THE STANDARD PLANS BOOK DATED MAY 2006.

REVISED STANDARD PLAN RSP A77G4

2006 REVISED STANDARD PLAN RSP A77G4

P:\proj1\02\3E810_plans\pse\23e810va022.dgn

12-10-07

DIST	COUNTY	ROUTE	POST MILES TOTAL PROJECT	SHEET NO.	TOTAL SHEETS
02	Teh,Sha	5	R27.1/42.1 0.0/0.9	170	215

Randell D. Hiatt
REGISTERED CIVIL ENGINEER

June 6, 2008
PLANS APPROVAL DATE

REGISTERED PROFESSIONAL ENGINEER Randell D. Hiatt No. C50200 Exp. 6-30-09 CIVIL STATE OF CALIFORNIA

The State of California or its officers or agents shall not be responsible for the accuracy or completeness of electronic copies of this plan sheet.

To accompany plans dated 06-17-11

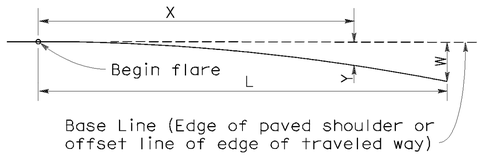

$$Y = \frac{WX^2}{L^2}$$

Y = Offset from base line
W = Maximum offset
X = Distance along base line
L = Length of flare

PARABOLIC FLARE OFFSETS

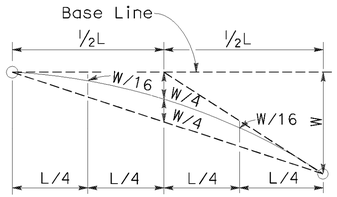

TYPICAL PARABOLIC LAYOUT

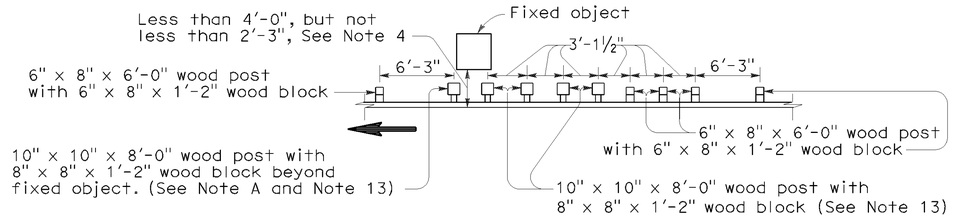

NOTE A: For a series of fixed objects (bridge columns, overhead sign supports, etc.) additional 10" x 10" x 8'-0" wood post with 8" x 8" x 1'-2" wood blocks at 3'-1½" center to center spacing are to be used between fixed object(s).

STRENGTHENED RAILING SECTIONS FOR FIXED OBJECT

Use strengthened railing sections with Layout Types 16F or 16G where minimum clearance between the face of the guard railing and fixed object(s) is less than 4'-0", but not less than 2'-3". See Note 4.

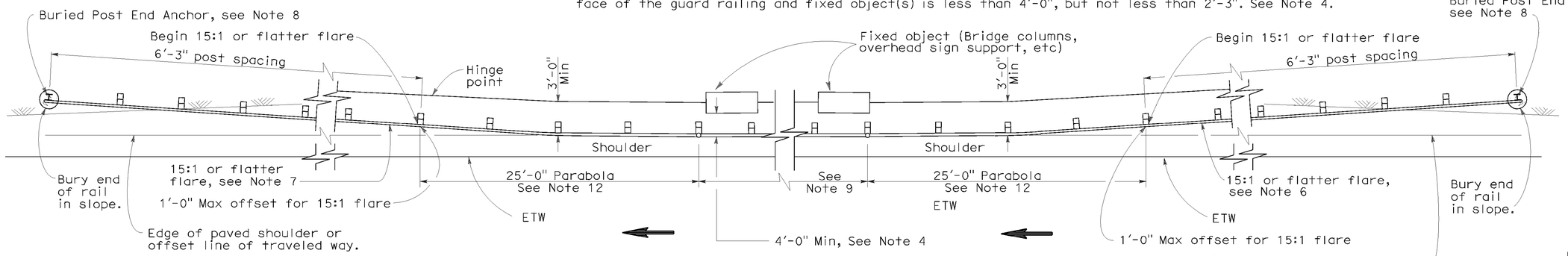

TYPE 16F LAYOUT

(GUARD RAILING INSTALLATION AT ROADSIDE FIXED OBJECT OR OBJECTS WITH A BURIED END ANCHOR TREATMENT AT EACH END OF RAILING)
See Notes 10 and 11

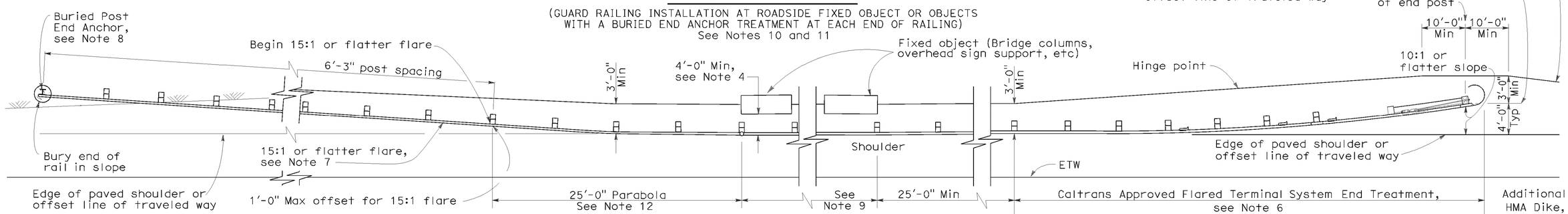

TYPE 16G LAYOUT

(GUARD RAILING INSTALLATION AT ROADSIDE FIXED OBJECT OR OBJECTS WITH A FLARED END TREATMENT AND A BURIED END ANCHOR TREATMENT AT THE ENDS OF RAILING)
See Notes 10 and 11

NOTES:

1. Line post, blocks and hardware to be used are shown on Standard Plans A77A1, A77A2, A77B1, A77C1 and A77C2.
2. Guard railing post spacing to be 6'-3" center to center, except as otherwise noted.
3. Except as noted, line posts are 6" x 8" x 6'-0" wood with 6" x 8" x 1'-2" wood blocks. W6 x 9 steel posts, 6'-0" in length, with 8" x 8" x 1'-2" notched wood blocks or notched recycled plastic blocks may be used for 6" x 8" x 6'-0" wood posts with 6" x 8" x 1'-2" wood blocks where applicable and when specified.
4. A 4'-0" minimum clearance is required between the face of the railing and the face of a fixed object located directly behind standard guard railing sections with post spacing at 6'-3". Construct guard railing as shown in the detail "Strengthened Railing Sections for Fixed Objects" on this plan, where the clearance between the face of the railing and the face of a fixed object is less than 4'-0", but not less than 2'-3". Where the clearance is less than 2'-3", a concrete wall or barrier should be constructed to shield the fixed object(s).
5. Direction of adjacent traffic indicated by ➡.
6. The type of terminal system to be used will be shown on the Project Plans.
7. The 15:1 or flatter flare for the buried post anchor is based on the edge of the paved shoulder or offset line of edge of the traveled way. The length of guard railing within the 15:1 or flatter flare is based on site conditions and should be a length equal to multiples of 12'-6".
8. For details of the Buried Post End Anchor details, see Standard Plan A77I2.
9. As site conditions dictate, construct additional guard railing to shield fixed object(s). Additional guard railing length equal to multiples of 12'-6". Post spacing at 6'-3", except as specified in Note 4.
10. Layout Types 16D through 16L, shown on the A77G Series of Revised Standard Plans, are typically used on highways where guard railing is recommended to shield roadside fixed object(s) and a crashworthy end treatment is required for both directions of traffic.
11. Where placement of dike is required with guard railing, see Revised Standard Plan RSP A77C4 for dike positioning details.
12. For typical flare offsets for 25'-0" length parabola with maximum offset of 1'-0", see Revised Standard Plan RSP A77E1.
13. W6 x 15 steel post, 8'-0" in length, with 8" x 8" x 1'-2" notched wood block or notched recycled plastic blocks may be used in place of the 10" x 10" x 8'-0" wood post with 8" x 8" x 1'-2" wood block shown in the "Strengthened Railing Sections Detail".

STATE OF CALIFORNIA
DEPARTMENT OF TRANSPORTATION

METAL BEAM GUARD RAILING TYPICAL LAYOUTS FOR ROADSIDE FIXED OBJECTS

NO SCALE

RSP A77G5 DATED JUNE 6, 2008 SUPERSEDES STANDARD PLAN A77G5
DATED MAY 1, 2006 - PAGE 63 OF THE STANDARD PLANS BOOK DATED MAY 2006.

REVISED STANDARD PLAN RSP A77G5

2006 REVISED STANDARD PLAN RSP A77G5

P:\proj1\02\3E810_plans\pse\23e810va023.dgn

12-10-07

DIST	COUNTY	ROUTE	POST MILES TOTAL PROJECT	SHEET NO.	TOTAL SHEETS
02	Teh,Sha	5	R27.1/42.1 0.0/0.9	171	215

Randell D. Hiatt
REGISTERED CIVIL ENGINEER

June 6, 2008
PLANS APPROVAL DATE

REGISTERED PROFESSIONAL ENGINEER
Randell D. Hiatt
No. C50200
Exp. 6-30-09
CIVIL
STATE OF CALIFORNIA

The State of California or its officers or agents shall not be responsible for the accuracy or completeness of electronic copies of this plan sheet.

To accompany plans dated 06-17-11

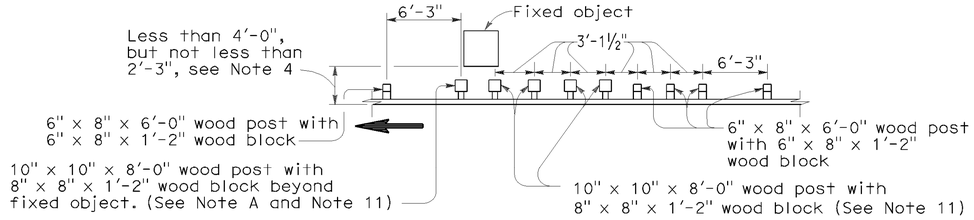

Note A. For a series of fixed objects (bridge columns, overhead sign supports, etc.) additional 10" x 10" x 8'-0" wood post with 8" x 8" x 1'-2" wood blocks at 3'-1½" center to center spacing are to be used between fixed object(s).

STRENGTHENED RAILING SECTIONS FOR FIXED OBJECT

Use strengthened railing sections with Layout Type 16H where minimum clearance between the face of the guard railing and fixed object(s) is less than 4'-0", but not less than 2'-3". See Note 4.

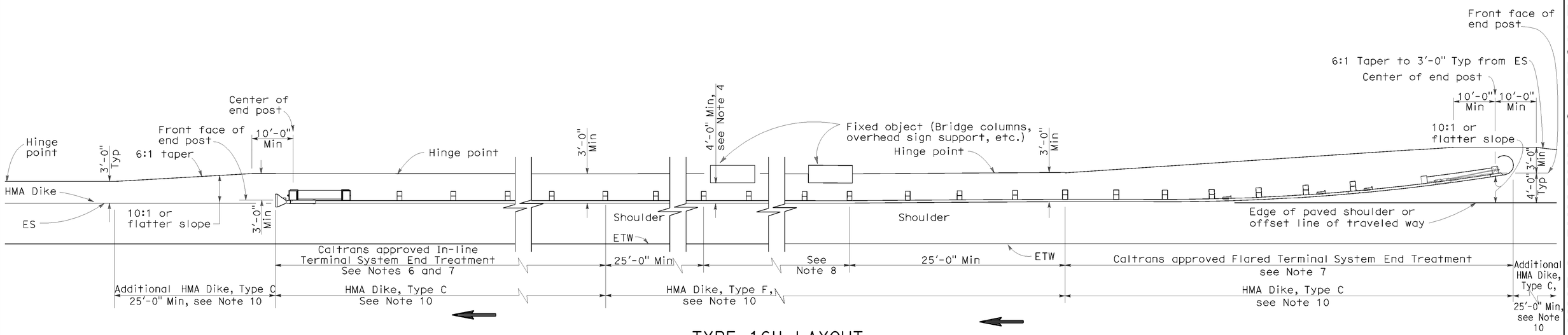

TYPE 16H LAYOUT

(GUARD RAILING INSTALLATION AT ROADSIDE FIXED OBJECT OR OBJECTS WITH A FLARED END TREATMENT AND AN IN-LINE TREATMENT AT THE ENDS OF RAILING)
See Note 9

NOTES:

1. Line post, blocks and hardware to be used are shown on Standard Plans A77A1, A77A2, A77B1, A77C1 and A77C2.
2. Guard railing post spacing to be 6'-3" center to center, except as otherwise noted.
3. Except as noted, line posts are 6" x 8" x 6'-0" wood with 6" x 8" x 1'-2" wood blocks. W6 x 9 steel posts, 6'-0" in length, with 6" x 8" x 1'-2" notched wood blocks or notched recycled plastic blocks may be used for 6" x 8" x 6'-0" wood posts with 6" x 8" x 1'-2" wood blocks where applicable and when specified.
4. A 4'-0" minimum clearance is required between the face of the railing and the face of a fixed object located directly behind standard guard railing sections with post spacing at 6'-3". Construct guard railing as shown in the detail "Strengthened Railing Sections for Fixed Objects" on this plan, where the clearance between the face of the railing and the face of a fixed object is less than 4'-0", but not less than 2'-3". Where the clearance is less than 2'-3", a concrete wall or barrier should be constructed to shield the fixed object(s).
5. Direction of adjacent traffic indicated by ⟶ .
6. In-line Terminal System End Treatments are used where site conditions will not accommodate a flared end treatment.
7. The type of terminal system to be used will be shown on the Project Plans.
8. As site conditions dictate, construct additional guard railing to shield fixed object(s). Additional guard railing length equal to multiples of 12'-6". Post spacing at 6'-3", except as specified in Note 4.
9. Layout Types 16D through 16L, shown on the A77G Series of Revised Standard PLans, typically used where guard railing is recommended to shield roadside fixed object(s) and a crashworthy end treatment is required for both directions of traffic.
10. Where placement of dike is required with guard railing, see Revised Standard Plan RSP A77C4 for dike positioning details.
11. W6 x 15 steel post, 8'-0" in length, with 8" x 8" x 1'-2" notched wood block or notched recycled plastic blocks may be used in place of the 10" x 10" x 8'-0" wood post with 8" x 8" x 1'-2" wood block shown in the "Strengthened Railing Sections Detail".

STATE OF CALIFORNIA
DEPARTMENT OF TRANSPORTATION

METAL BEAM GUARD RAILING TYPICAL LAYOUTS FOR ROADSIDE FIXED OBJECTS

NO SCALE

RSP A77G6 DATED JUNE 6, 2008 SUPERSEDES STANDARD PLAN A77G6 DATED MAY 1, 2006 - PAGE 64 OF THE STANDARD PLANS BOOK DATED MAY 2006.

REVISED STANDARD PLAN RSP A77G6

2006 REVISED STANDARD PLAN RSP A77G6

P:\proj1\02\3E810_plans\pse\23e810va024.dgn

12-10-07

DIST	COUNTY	ROUTE	POST MILES TOTAL PROJECT	SHEET NO.	TOTAL SHEETS
02	Teh,Sha	5	R27.1/42.1 0.0/0.9	172	215

Randell D. Hiatt
REGISTERED CIVIL ENGINEER

June 6, 2008
PLANS APPROVAL DATE

REGISTERED PROFESSIONAL ENGINEER Randell D. Hiatt No. C50200 Exp. 6-30-09 CIVIL STATE OF CALIFORNIA

The State of California or its officers or agents shall not be responsible for the accuracy or completeness of electronic copies of this plan sheet.

To accompany plans dated 06-17-11

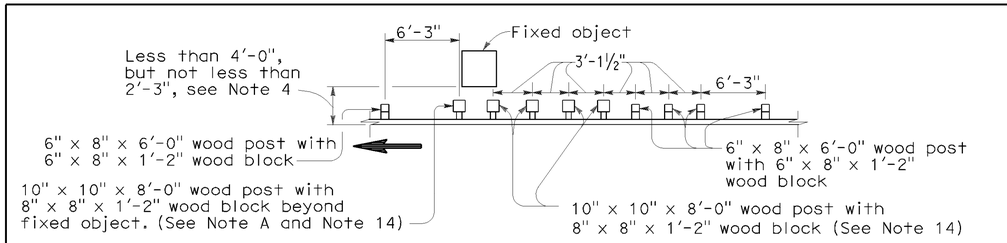

Note A. For a series of fixed objects (bridge columns, overhead sign supports, etc.) additional 10" x 10" x 8'-0" wood post with 8" x 8" x 1'-2" wood blocks at 3'-1½" center to center spacing are to be used between fixed object(s).

STRENGTHENED RAILING SECTIONS FOR FIXED OBJECT

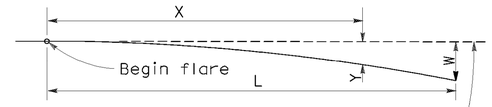

Base Line (Edge of paved shoulder or offset line of edge of traveled way)

$$Y = \frac{WX^2}{L^2}$$

Y = Offset from base line
W = Maximum offset
X = Distance along base line
L = Length of flare

PARABOLIC FLARE OFFSETS

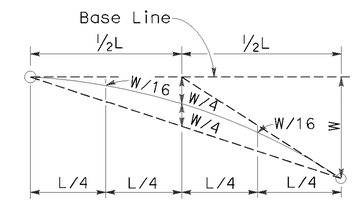

TYPICAL PARABOLIC LAYOUT

Use strengthened railing sections with Layout Types 16I or 16J Layouts where minimum clearance between the face of the guard railing and fixed object(s) is less than 4'-0", but not less than 2'-3". See Note 4.

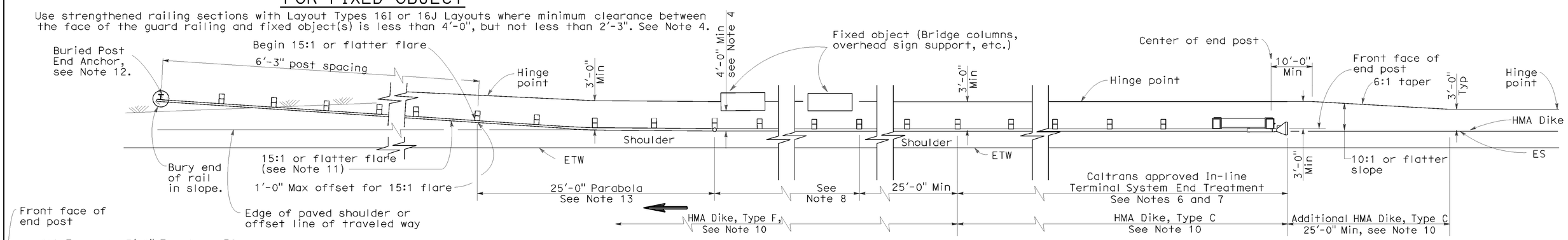

TYPE 16I LAYOUT

(GUARD RAILING INSTALLATION AT ROADSIDE FIXED OBJECT OR OBJECTS WITH AN IN-LINE END TREATMENT AND A BURIED END ANCHOR TREATMENT AT THE ENDS OF RAILING) See Note 9

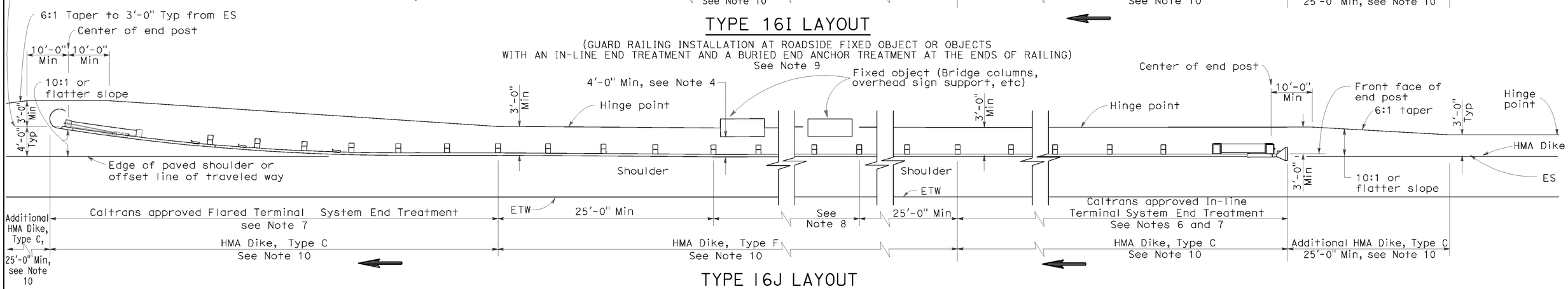

TYPE 16J LAYOUT

(GUARD RAILING INSTALLATION AT ROADSIDE FIXED OBJECT OR OBJECTS WITH AN IN-LINE END TREATMENT AND A FLARED END TREATMENT AT THE ENDS OF RAILING) See Note 9

NOTES:

1. Line post, blocks and hardware to be used are shown on Standard Plans A77A1, A77A2, A77B1, A77C1 and A77C2.
2. Guard railing post spacing to be 6'-3" center to center, except as otherwise noted.
3. Except as noted, line posts are 6" x 8" x 6'-0" wood with 6" x 8" x 1'-2" wood blocks. W6 x 9 steel posts, 6'-0" in length, with 6" x 8" x 1'-2" notched wood blocks or notched recycled plastic blocks may be used for 6" x 8" x 6'-0" wood posts with 6" x 8" x 1'-2" wood blocks where applicable and when specified.
4. A 4'-0" minimum clearance is required between the face of the railing and the face of a fixed object located directly behind standard guard railing sections with post spacing at 6'-3". Construct guard railing as shown in the detail "Strengthened Railing Sections for Fixed Objects" on this plan, where the clearance between the face of the railing and the face of a fixed object is less than 4'-0", but not less than 2'-3". Where the clearance is less than 2'-3", a concrete wall or barrier should be constructed to shield the fixed object(s).
5. Direction of adjacent traffic indicated by ⟶ .
6. In-line Terminal System End Treatments are used where site conditions will not accommodate a flared end treatment.
7. The type of terminal system to be used will be shown on the Project Plans.
8. As site conditions dictate, construct additional guard railing to shield fixed object(s). Additional guard railing length equal to multiples of 12'-6". Post spacing at 6'-3", except as specified in Note 4.
9. Layout Types 16D through 16L, shown on the A77G Series of Revised Standard Plans, are typically used where guard railing is recommended to shield roadside fixed object(s) and a crashworthy end treatment is required for both directions of traffic.
10. Where placement of dike is required with guard railing, see Revised Standard Plan RSP A77C4 for dike positioning details.
11. The 15:1 or flatter flare for the buried post anchor is based on the edge of the paved shoulder or offset line of edge of the traveled way. The length of guard railing within the 15:1 or flatter flare is based on site conditions and should be a length equal to multiples of 12'-6".
12. For details of Buried Post End Anchor details, see Standard Plan A77I2.
13. For typical flare offsets for 25'-0" length parabola with maximum offset of 1'-0", see Revised Standard RSP Plan A77E1.
14. W6 x 15 steel post, 8'-0" in length, with 8" x 8" x 1'-2" notched wood block or notched recycled plastic blocks may be used in place of the 10" x 10" x 8'-0" wood post with 8" x 8" x 1'-2" wood block shown in the "Strengthened Railing Sections Detail".

STATE OF CALIFORNIA
DEPARTMENT OF TRANSPORTATION

METAL BEAM GUARD RAILING TYPICAL LAYOUTS FOR ROADSIDE FIXED OBJECTS

NO SCALE

RSP A77G7 DATED JUNE 6, 2008 SUPERSEDES STANDARD PLAN A77G7 DATED MAY 1, 2006 - PAGE 65 OF THE STANDARD PLANS BOOK DATED MAY 2006.

REVISED STANDARD PLAN RSP A77G7

2006 REVISED STANDARD PLAN RSP A77G7

P:\proj1\02\3E810_plans\pse\23e810va025.dgn

12-10-07

DIST	COUNTY	ROUTE	POST MILES TOTAL PROJECT	SHEET NO.	TOTAL SHEETS
02	Teh,Sha	5	R27.1/42.1 0.0/0.9	173	215

Randell D. Hiatt
REGISTERED CIVIL ENGINEER

June 6, 2008
PLANS APPROVAL DATE

REGISTERED PROFESSIONAL ENGINEER Randell D. Hiatt No. C50200 Exp. 6-30-09 CIVIL STATE OF CALIFORNIA

The State of California or its officers or agents shall not be responsible for the accuracy or completeness of electronic copies of this plan sheet.

To accompany plans dated 06-17-11

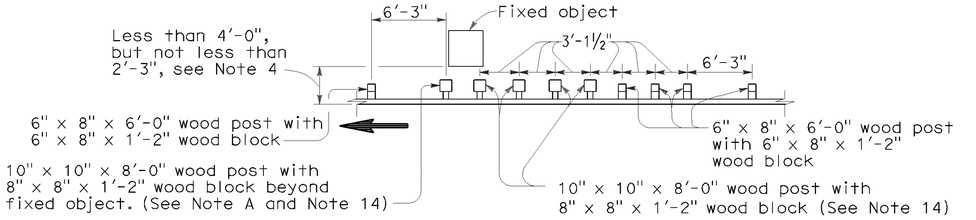

Note A. For a series of fixed objects (bridge columns, overhead sign supports, etc.) additional 10" x 10" x 8'-0" wood post with 8" x 8" x 1'-2" wood blocks at 3'-1½" center to center spacing are to be used between fixed object(s).

STRENGTHENED RAILING SECTIONS FOR FIXED OBJECT

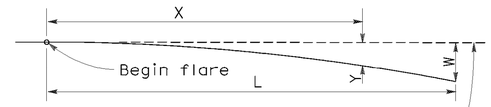

Base Line (Edge of paved shoulder or offset line of edge of traveled way)

$$Y = \frac{WX^2}{L^2}$$

Y = Offset from base line
W = Maximum offset
X = Distance along base line
L = Length of flare

PARABOLIC FLARE OFFSETS

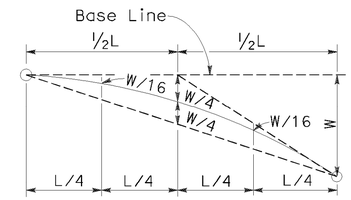

TYPICAL PARABOLIC LAYOUT

Use strengthened railing sections with Layout Types 16K or 16L Layouts where minimum clearance between the face of the guard railing and fixed object(s) is less than 4'-0", but not less than 2'-3". See Note 4.

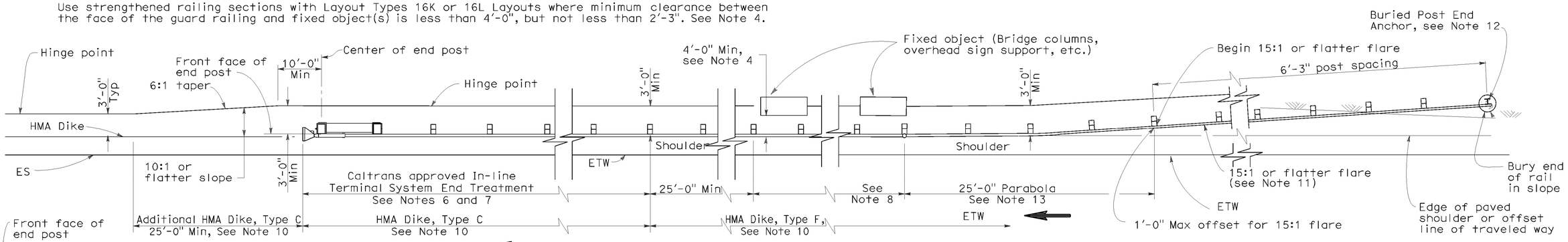

TYPE 16K LAYOUT

(GUARD RAILING INSTALLATION AT ROADSIDE FIXED OBJECT OR OBJECTS WITH A BURIED END ANCHOR TREATMENT AND AN IN-LINE END TREATMENT AT THE ENDS OF RAILING)
See Note 9

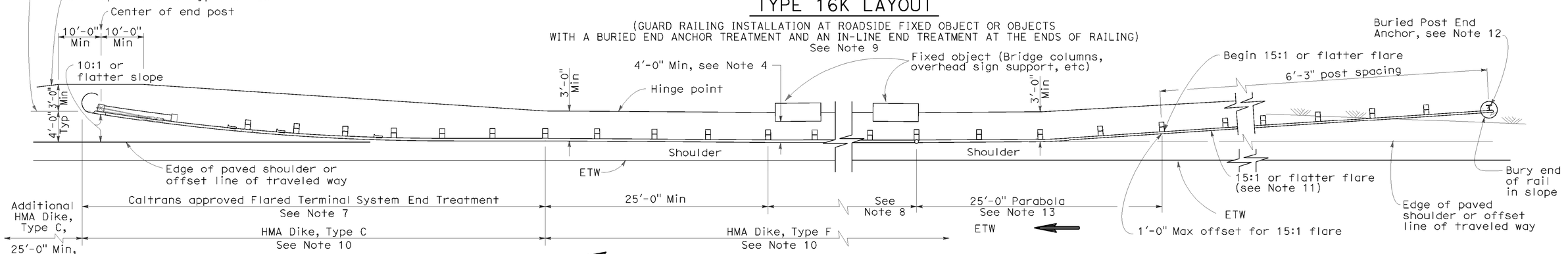

TYPE 16L LAYOUT

(GUARD RAILING INSTALLATION AT ROADSIDE FIXED OBJECT OR OBJECTS WITH A BURIED END ANCHOR TREATMENT AND A FLARED END TREATMENT AT THE ENDS OF RAILING)
See Note 9

NOTES:

1. Line post, blocks and hardware to be used are shown on Standard Plans A77A1, A77A2, A77B1, A77C1 and A77C2.
2. Guard railing post spacing to be 6'-3" center to center, except as otherwise noted.
3. Except as noted, line posts are 6" x 8" x 6'-0" wood with 6" x 8" x 1'-2" wood blocks. W6 x 9 steel posts, 6'-0" in length, with 6" x 8" x 1'-2" notched wood blocks or notched recycled plastic blocks may be used for 6" x 8" x 6'-0" wood posts with 6" x 8" x 1'-2" wood blocks where applicable and when specified.
4. A 4'-0" minimum clearance is required between the face of the railing and the face of a fixed object located directly behind standard guard railing sections with post spacing at 6'-3". Construct guard railing as shown in the detail "Strengthened Railing Sections for Fixed Objects" on this plan, where the clearance between the face of the railing and the face of a fixed object is less than 4'-0", but not less than 2'-3". Where the clearance is less than 2'-3", a concrete wall or barrier should be constructed to shield the fixed object(s).
5. Direction of adjacent traffic indicated by ⟶.
6. In-line Terminal System End Treatments are used where site conditions will not accommodate a flared end treatment.
7. The type of terminal system to be used will be shown on the Project Plans.
8. As site conditions dictate, construct additional guard railing to shield fixed object(s). Additional guard railing length equal to multiples of 12'-6". Post spacing at 6'-3", except as specified in Note 4.
9. Layout Types 16D through 16L, shown on the A77G Series of Revised Standard Plans are typically used where guard railing is recommended to shield roadside fixed object(s) and a crashworthy end treatment is required for both directions of traffic.
10. Where placement of dike is required with guard railing, see Revised Standard Plan RSP A77C4 for dike positioning details.
11. The 15:1 or flatter flare for the buried post anchor is based on the edge of the paved shoulder or offset line of edge of the traveled way. The length of guard railing within the 15:1 or flatter flare is based on site conditions and should be a length equal to multiples of 12'-6".
12. For details of Buried Post End Anchor details, see Standard Plan A77I2.
13. For typical flare offsets for 25'-0" length parabola with maximum offset of 1'-0", see Revised Standard RSP Plan A77E1.
14. W6 x 15 steel post, 8'-0" in length, with 8" x 8" x 1'-2" notched wood block or notched recycled plastic blocks may be used in place of the 10" x 10" x 8'-0" wood post with 8" x 8" x 1'-2" wood block shown in the "Strengthened Railing Sections Detail".

STATE OF CALIFORNIA
DEPARTMENT OF TRANSPORTATION

METAL BEAM GUARD RAILING TYPICAL LAYOUTS FOR ROADSIDE FIXED OBJECTS

NO SCALE

RSP A77G8 DATED JUNE 6, 2008 SUPERSEDES STANDARD PLAN A77G8 DATED MAY 1, 2006 - PAGE 66 OF THE STANDARD PLANS BOOK DATED MAY 2006.

REVISED STANDARD PLAN RSP A77G8

2006 REVISED STANDARD PLAN RSP A77G8

P:\proj1\02\3E810_plans\pse\23e810va026.dgn

12-10-07

Dist	COUNTY	ROUTE	POST MILES TOTAL PROJECT	SHEET No.	TOTAL SHEETS
02	Teh,Sha	5	R27.1/42.1 0.0/0.9	174	215

Randell D. Hiatt
REGISTERED CIVIL ENGINEER

May 20, 2011
PLANS APPROVAL DATE

REGISTERED PROFESSIONAL ENGINEER
Randell D. Hiatt
No. C50200
Exp. 6-30-11
CIVIL
STATE OF CALIFORNIA

The State of California or its officers or agents shall not be responsible for the accuracy or completeness of electronic copies of this plan sheet.

To accompany plans dated 06-17-11

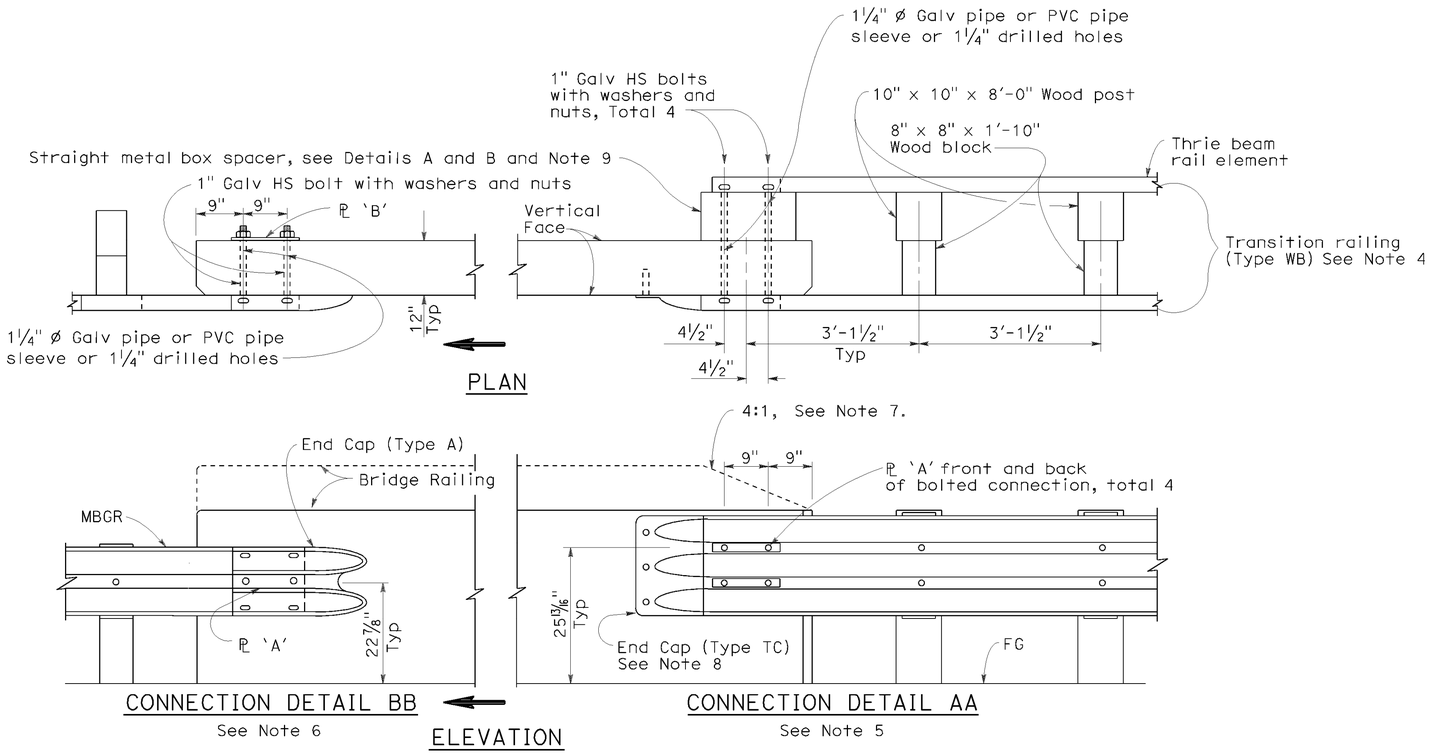

GUARD RAILING CONNECTION TO BRIDGE RAILING WITHOUT SIDEWALK

NOTES:

1. See Revised Standard Plan RSP A77J2 for additional connection details to bridges without sidewalks.
2. Additional details of posts, blocks and hardware are shown on Standard Plan A77B1, A77C1 and A77C2.
3. Direction of adjacent traffic indicated by ➡.
4. For additional details of Transition Railing (Type WB), see Standard Plan A77J4. Transition Railing (Type WB) transitions the 12 gage w-beam standard railing section of guard railing to a heavier gage nested thrie beam railing section which is connected to the concrete bridge railing.
5. For typical use of Connection Detail AA, see Layout Types 12A and 12B on Revised Standard Plan RSP A77F1, Layout Types 12C and 12D on Standard Plan A77F2, and Layout Type 12E on Revised Standard Plan RSP A77F3.
6. For typical use of Connection Detail BB, see Layout Type 12D (structure departure railing connection) on Standard Plan A77F2 and Layout Type 12DD on Standard Plan A77F5.
7. Where the height of the bridge railing exceeds the height of the thrie beam railing by more than 1" at Connection Detail AA, taper the top of the end of the bridge railing at 4:1 to match the top elevation of the thrie beam rail.
8. For details of End Cap (Type TC), see Standard Plan A77J4.
9. See Standard Plan A77J4 for additional details regarding depth dimension for straight metal box spacer.

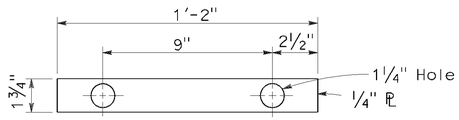

PLATE 'A'

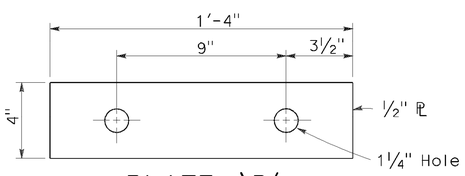

PLATE 'B'
(For backside of connection BB)

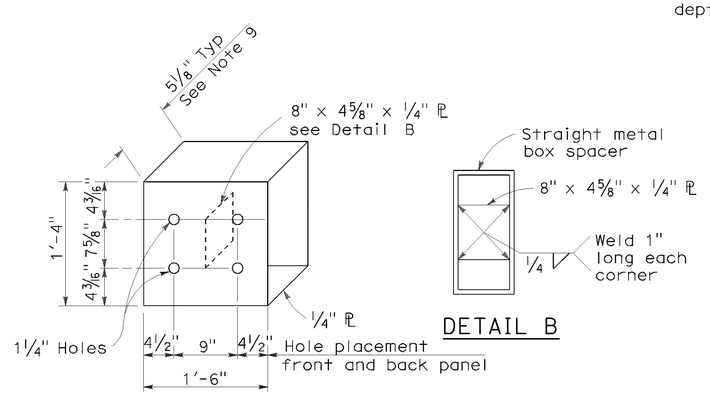

DETAIL A

DETAIL B

STRAIGHT METAL BOX SPACER

STATE OF CALIFORNIA
DEPARTMENT OF TRANSPORTATION

METAL BEAM GUARD RAILING CONNECTIONS TO BRIDGE RAILINGS WITHOUT SIDEWALKS DETAILS No.1

NO SCALE

RSP A77J1 DATED MAY 20, 2011 SUPERSEDES RSP A77J1 DATED JUNE 6, 2008 AND STANDARD PLAN A77J1 DATED MAY 1, 2006 - PAGE 72 OF THE STANDARD PLANS BOOK DATED MAY 2006.

REVISED STANDARD PLAN RSP A77J1

2006 REVISED STANDARD PLAN RSP A77J1

P:\proj1\02\3E810_plans\pse\23e810va027.dgn

3-10-11

DIST	COUNTY	ROUTE	POST MILES TOTAL PROJECT	SHEET NO.	TOTAL SHEETS
02	Teh,Sha	5	R27.1/42.1 0.0/0.9	175	215

Randell D. Hiatt
REGISTERED CIVIL ENGINEER

June 6, 2008
PLANS APPROVAL DATE

REGISTERED PROFESSIONAL ENGINEER
Randell D. Hiatt
No. C50200
Exp. 6-30-09
CIVIL
STATE OF CALIFORNIA

The State of California or its officers or agents shall not be responsible for the accuracy or completeness of electronic copies of this plan sheet.

To accompany plans dated 06-17-11

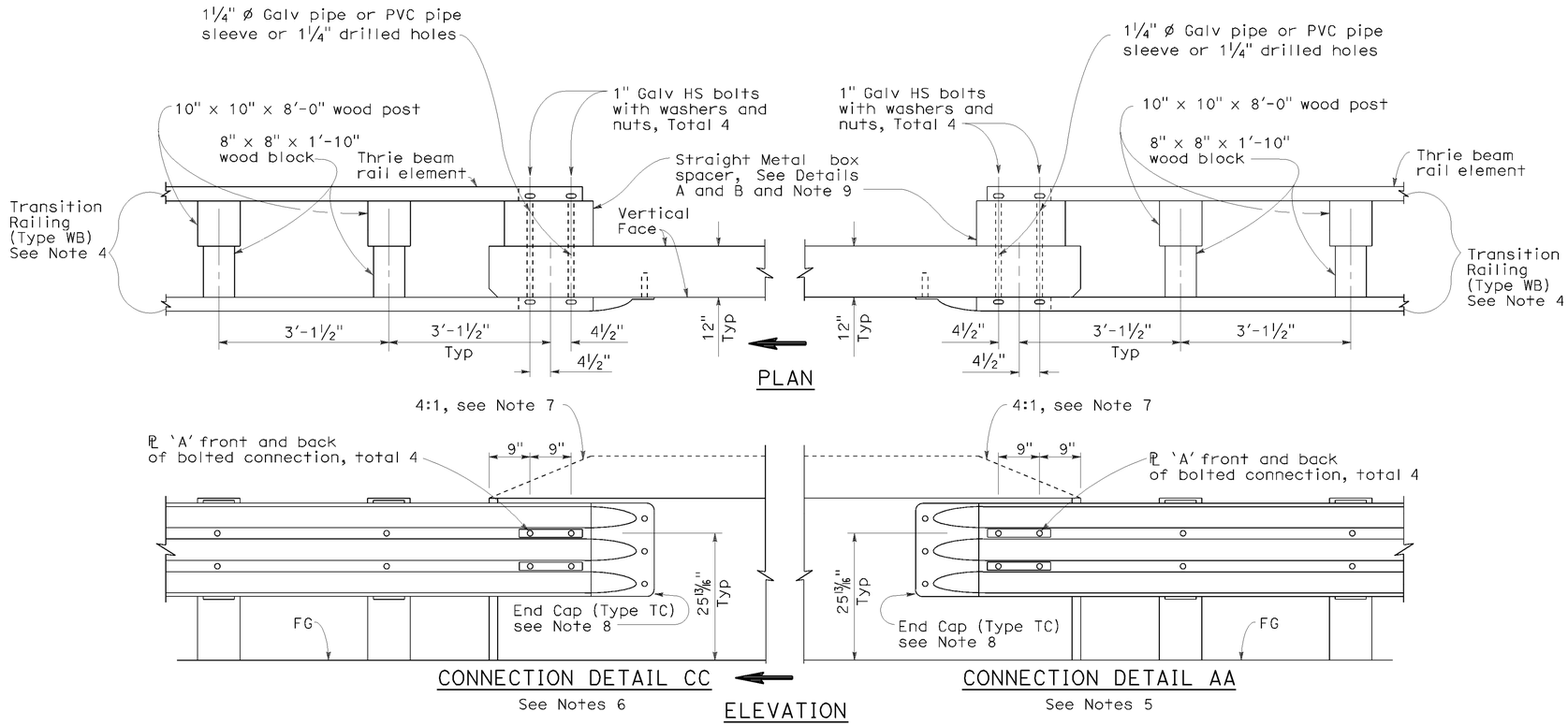

GUARD RAILING CONNECTION TO BRIDGE RAILING WITHOUT SIDEWALK

NOTES:

1. See Revised Standard Plan RSP A77J1 for additional connection details to bridges without sidewalks.
2. Additional details of posts, blocks and hardware are shown on Standard Plan A77B1, A77C1 and A77C2.
3. Direction of adjacent traffic indicated by ⟹.
4. For additional details of Transition Railing (Type WB), see Standard Plan A77J4. Transition Railing (Type WB) transitions the 12 gage w-beam standard railing section of guard railing to a heavier gage nested thrie beam railing section which is connected to the concrete bridge railing.
5. For typical use of Connection Detail AA, see Layout Types 12A and 12B on Revised Standard Plan RSP A77F1, Layout Types 12C and 12D on Standard Plan A77F2, and Layout Type 12E on Revised Standard Plan RSP A77F3.
6. For typical use of Connection Detail CC, see Layout Types 12AA and 12BB on Standard Plan A77F4 and Layout Type 12CC on Standard Plan A77F5.
7. Where the height of the bridge railing exceeds the height of the thrie beam railing by more than 1" at Connection Detail AA and connection Detail CC, taper the top of the end of the bridge railing at 4:1 to match the top elevation of the thrie beam railing.
8. For details of End Cap (Type TC), see Standard Plans A77J4.
9. See Standard Plans A77J4 for additional details regarding depth dimension for straight metal box spacer.

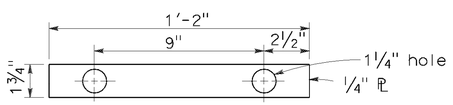

PLATE 'A'

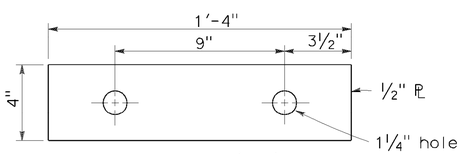

PLATE 'B'
(For backside of connection BB)

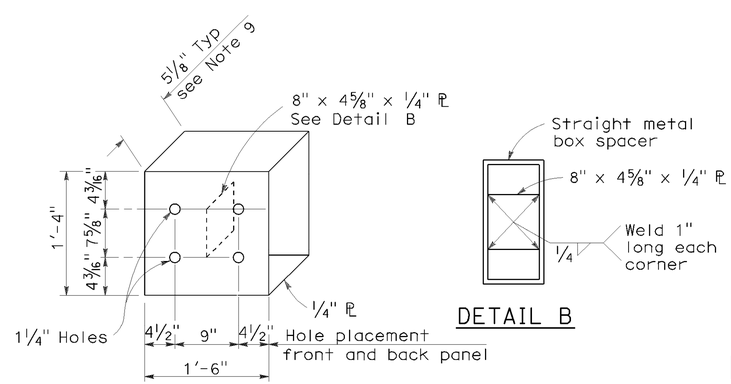

DETAIL A

DETAIL B

STRAIGHT METAL BOX SPACER

STATE OF CALIFORNIA
DEPARTMENT OF TRANSPORTATION

METAL BEAM GUARD RAILING CONNECTIONS TO BRIDGE RAILINGS WITHOUT SIDEWALKS DETAILS No.2

NO SCALE

RSP A77J2 DATED JUNE 6, 2008 SUPERSEDES STANDARD PLAN A77J2
DATED MAY 1, 2006 - PAGE 73 OF THE STANDARD PLANS BOOK DATED MAY 2006.

REVISED STANDARD PLAN RSP A77J2

2006 REVISED STANDARD PLAN RSP A77J2

P:\proj11\02\3E810_plans\pse\23e810va028.dgn

12-10-07

Dist	COUNTY	ROUTE	POST MILES TOTAL PROJECT	SHEET No.	TOTAL SHEETS
02	Teh,Sha	5	R27.1/42.1 0.0/0.9	176	215

Randell D. Hiatt
REGISTERED CIVIL ENGINEER

May 20, 2011
PLANS APPROVAL DATE

REGISTERED PROFESSIONAL ENGINEER Randell D. Hiatt No. C50200 Exp. 6-30-11 CIVIL STATE OF CALIFORNIA

To accompany plans dated 06-17-11

The State of California or its officers or agents shall not be responsible for the accuracy or completeness of electronic copies of this plan sheet.

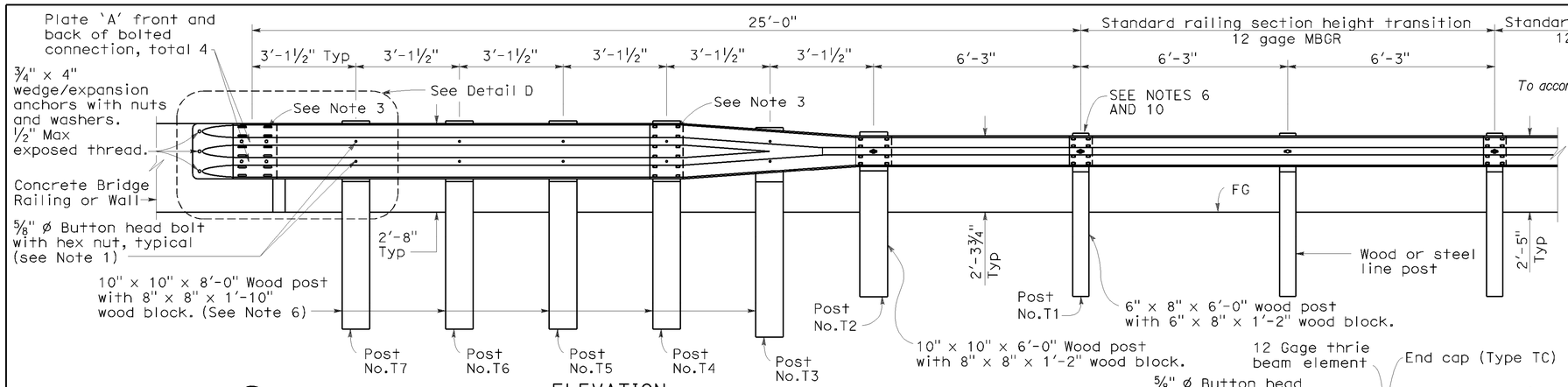

ELEVATION

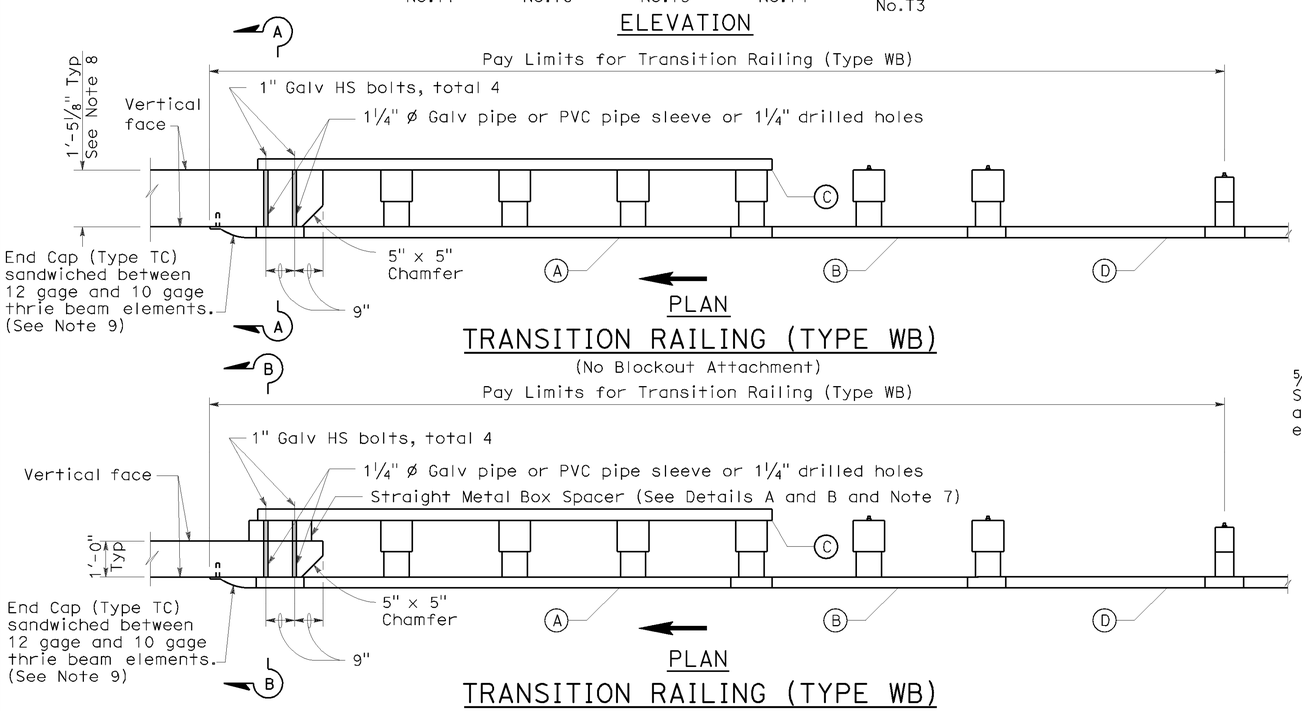

PLAN

TRANSITION RAILING (TYPE WB)

(No Blockout Attachment)

PLAN

TRANSITION RAILING (TYPE WB)

(Blockout Attachment)

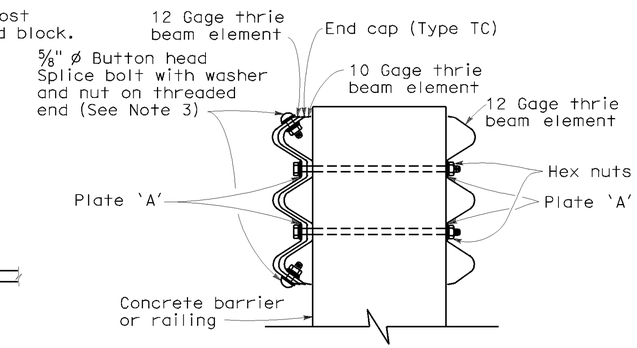

SECTION A-A

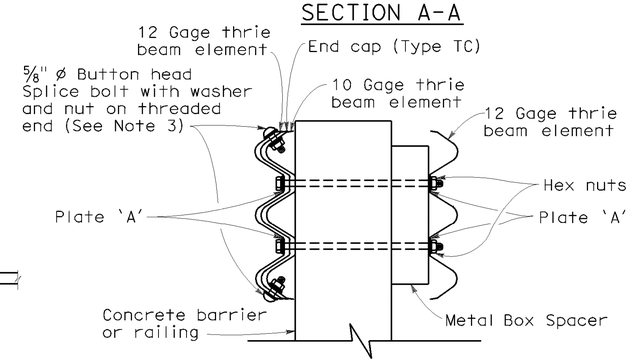

SECTION B-B

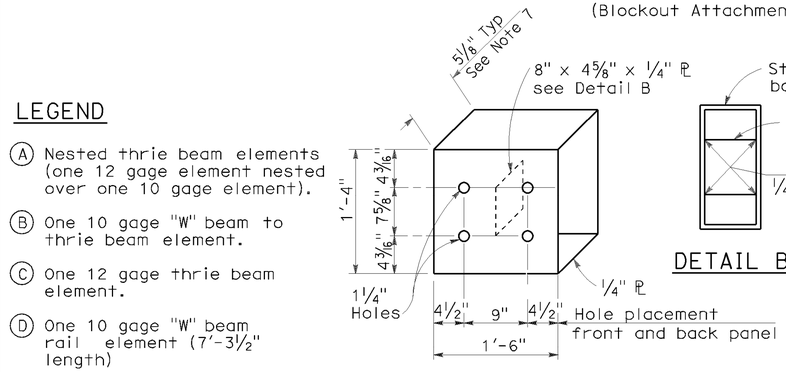

DETAIL A

STRAIGHT METAL BOX SPACER

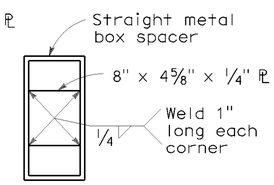

DETAIL B

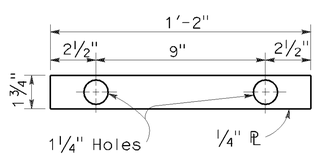

DETAIL C

PLATE 'A'

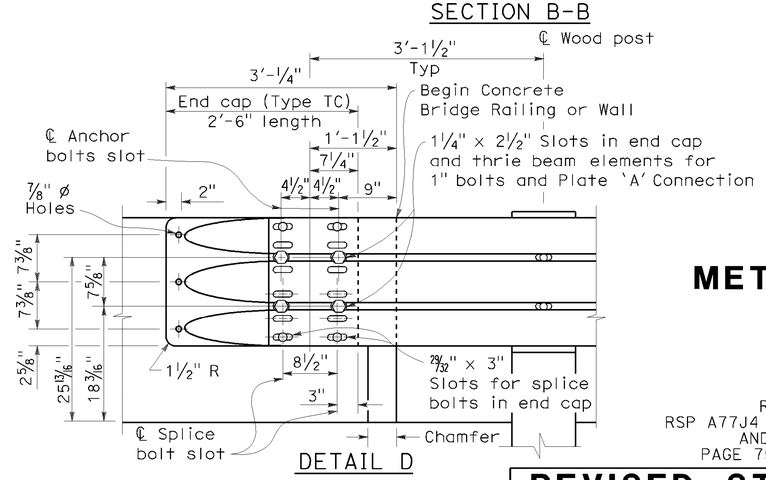

DETAIL D

LEGEND

(A) Nested thrie beam elements (one 12 gage element nested over one 10 gage element).

(B) One 10 gage "W" beam to thrie beam element.

(C) One 12 gage thrie beam element.

(D) One 10 gage "W" beam rail element (7'-3½" length)

10 gage = 0.135" thick

12 gage = 0.108" thick

NOTES:

1. Use ⅝" ø Button head bolts and hex nuts for connections to posts. No washer on rail face for bolted connections to post.
2. The nested rail elements, end cap, and 'W' beam to thrie beam element may be spliced together prior to bolting the elements to the wood post and concrete barrier or railing.
3. Exterior splice bolt holes for rail element splices at Post No. T4 and the connection to the concrete barrier or railing shall be the standard 29/32" x 1⅛" slot size. Interior splice bolt holes at these locations may be increased up to 1¼" ø. Only the top 2 and the bottom 2 splice bolts with washers and nuts are required for rail splices at Post No. T4 and the connection to the concrete barrier or railing.
4. Direction of adjacent traffic indicated by ➡.
5. The top elevation of Posts No. T2 through No. T7 shall not project more than 1" above the top elevation of the rail element.
6. Typically, the railing connected to Transition Railing (Type WB) will be either standard railing section of metal beam guard railing with height transition ratio of 120:1 or an approved Caltrans end treatment attached to Post No. T1.
7. The depth of the metal box spacer varies from the 5⅛" to 1½" and is dependent on the width of the concrete railing or wall. The combined dimension for the depth of the metal box spacer plus the width of railing or wall is typically 17⅛". Where the space between the backside of the concrete railing or wall and the rear thrie beam element is less than 1½", metal plates similar to Plate 'A' are to be used as spacers.
8. Where the width of the concrete railing or wall is greater than 17⅛", wood blocks are to be used to fill the space created between the backside of Posts No. T4 through No. T7 and the rear thrie beam element. These wood blocks shall be 8" in width and 1'-2" in length. The dimension between the front thrie beam element and the rear thrie beam element is to match the width of the concrete railing or wall.
9. End cap may be installed over 12 gage and 10 gage thrie beam elements where transition railing is installed on the departure end of bridge railing.
10. Conform standard railing section height to 2'-3¾" at Post No. T1 using height transition ratio of 120:1.

STATE OF CALIFORNIA
DEPARTMENT OF TRANSPORTATION

METAL BEAM GUARD RAILING TRANSITION RAILING (TYPE WB)

NO SCALE

RSP A77J4 DATED MAY 20, 2011 SUPERSEDES
RSP A77J4 DATED JUNE 5, 2009, RSP A77J4 DATED JUNE 6, 2008
AND STANDARD PLAN A77J4 DATED MAY 1, 2006 -
PAGE 75 OF THE STANDARD PLANS BOOK DATED MAY 2006.

REVISED STANDARD PLAN RSP A77J4

2006 REVISED STANDARD PLAN RSP A77J4

P:\proj11\02\3E810_plans\pse\23e810va029.dgn

5-14-09

DIST	COUNTY	ROUTE	POST MILES TOTAL PROJECT	SHEET No.	TOTAL SHEETS
02	Teh,Sha	5	R27.1/42.1 0.0/0.9	177	215

Randell D. Hiatt
REGISTERED CIVIL ENGINEER

June 6, 2008
PLANS APPROVAL DATE

REGISTERED PROFESSIONAL ENGINEER
Randell D. Hiatt
No. C50200
Exp. 6-30-09
CIVIL
STATE OF CALIFORNIA

The State of California or its officers or agents shall not be responsible for the accuracy or completeness of electronic copies of this plan sheet.

To accompany plans dated 06-17-11

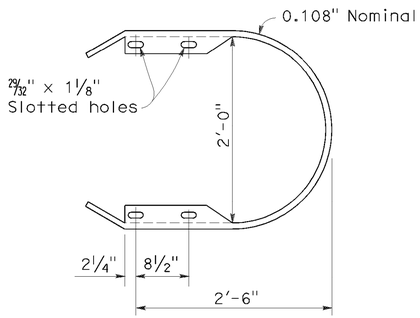

RETURN CAP
(TYPE TA)

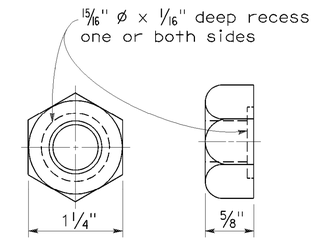

5/8" ø RECESS NUT

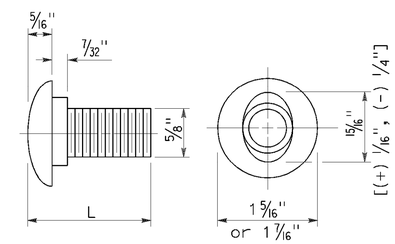

5/8" ø BUTTON HEAD BOLT

L	THREAD LENGTH
1 1/4"	full thread length
2"	full thread length
9 1/2"	4" Min thread length
18"	4" Min thread length

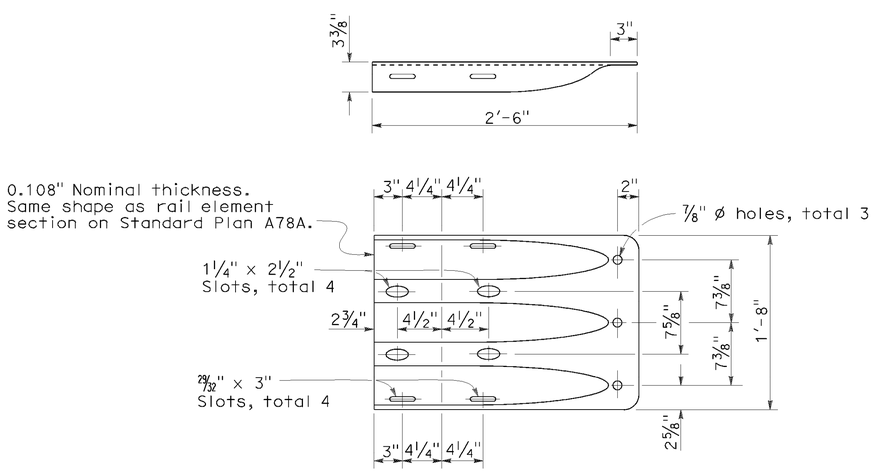

END CAP
(TYPE TC)

STATE OF CALIFORNIA
DEPARTMENT OF TRANSPORTATION

THRIE BEAM BARRIER STANDARD HARDWARE DETAILS

NO SCALE

RSP A78C1 DATED JUNE 6, 2008 SUPERSEDES STANDARD PLAN A78C1
DATED MAY 1, 2006 - PAGE 85 OF THE STANDARD PLANS BOOK DATED MAY 2006.

REVISED STANDARD PLAN RSP A78C1

2006 REVISED STANDARD PLAN RSP A78C1

P:\proj11\02\3E810_plans\pse\23e810va030.dgn

4-21-08

DIST	COUNTY	ROUTE	POST MILES TOTAL PROJECT	SHEET NO.	TOTAL SHEETS
02	Teh,Sha	5	R27.1/42.1 0.0/0.9	178	215

REGISTERED CIVIL ENGINEER

May 15, 2009
PLANS APPROVAL DATE

REGISTERED PROFESSIONAL ENGINEER William K. Farnbach No. C49042 Exp. 9-30-10 CIVIL STATE OF CALIFORNIA

The State of California or its officers or agents shall not be responsible for the accuracy or completeness of electronic copies of this plan sheet.

To accompany plans dated 06-17-11

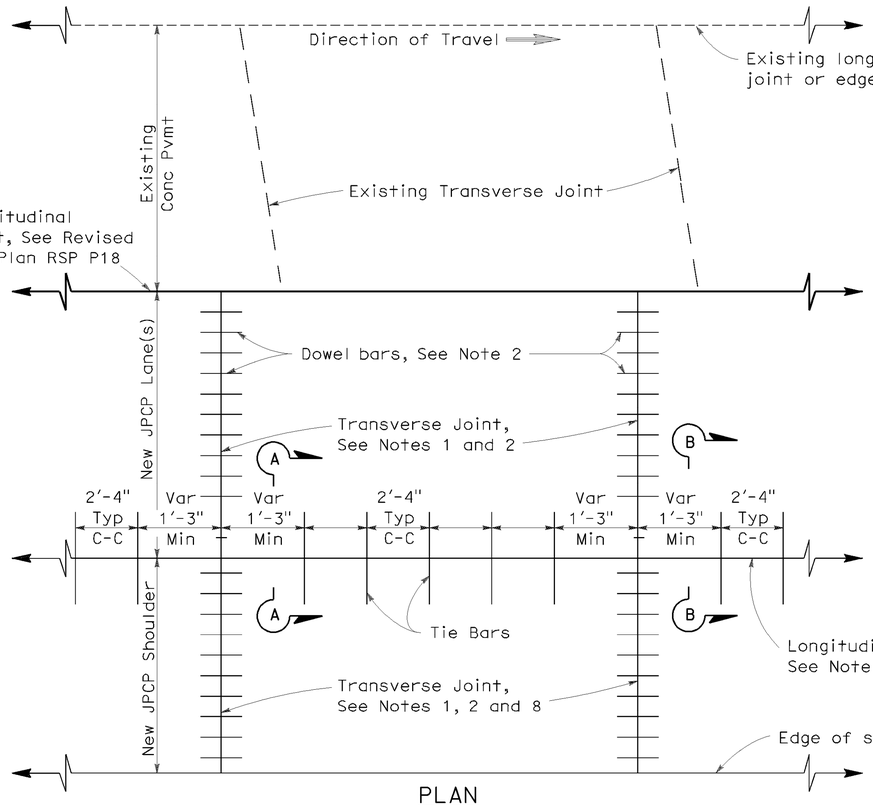

PLAN

LANE/SHOULDER ADDITION OR RECONSTRUCTION

See Notes 6 and 7

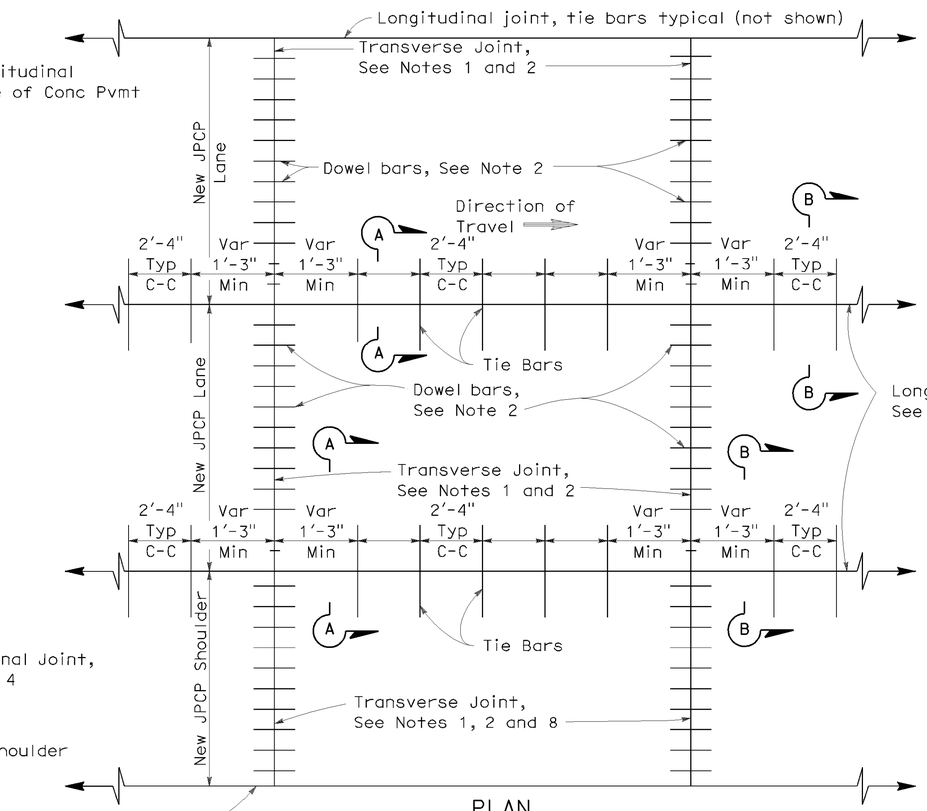

PLAN

NEW CONSTRUCTION

See Notes 6 and 7

NOTES:

1. Transverse joints shall be constructed at right angles to the longitudinal pavement joints in new jointed plain concrete pavement and spaced at successive repeated intervals of 12', 15', 13' and 14'.
2. For transverse joint and dowel bar details not shown, See Revised Standard Plan RSP P10.
3. Construct longitudinal contraction joints as shown in Section A-A when more than one lane or shoulder widths are placed at one time. If constructing one lane at a time, use longitudinal construction joint, as shown in Section B-B.
4. For additional longitudinal joint details, see Revised Standard Plan RSP P18.
5. If fresh concrete is placed adjacent to existing concrete, the top corner of the new hardened concrete does not need to be rounded to the 1/4" radius as shown.
6. Joint spacing patterns do not apply to intersections.
7. Details can also apply to inside widening.
8. Dowel bars may be omitted from shoulders when the shoulder cross slope is not the same as the adjacent traffic lane.

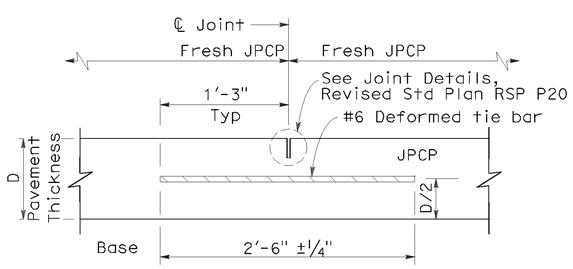

SECTION A-A

LONGITUDINAL CONTRACTION JOINT

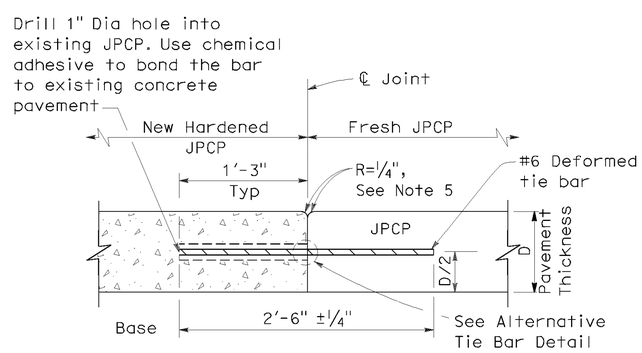

SECTION B-B

LONGITUDINAL CONSTRUCTION JOINT

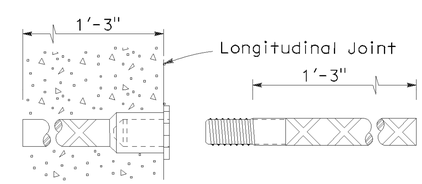

ALTERNATIVE TIE BAR SPLICE DETAIL

(Splice Coupler)

TIE BAR DETAILS

STATE OF CALIFORNIA
DEPARTMENT OF TRANSPORTATION

JOINTED PLAIN CONCRETE PAVEMENT

NO SCALE

RSP P1 DATED MAY 15, 2009 SUPERSEDES STANDARD PLAN P1
DATED MAY 1, 2006 - PAGE 119 OF THE STANDARD PLANS BOOK DATED MAY 2006.

REVISED STANDARD PLAN RSP P1

2006 REVISED STANDARD PLAN RSP P1

P:\proj\02\3E810_plans\pse\23e810va031.dgn

5-8-09

DIST	COUNTY	ROUTE	POST MILES TOTAL PROJECT	SHEET NO.	TOTAL SHEETS
02	Teh,Sha	5	R27.1/42.1 0.0/0.9	179	215

William K. Farnbach
REGISTERED CIVIL ENGINEER

June 5, 2009
PLANS APPROVAL DATE

REGISTERED PROFESSIONAL ENGINEER
William K. Farnbach
No. C49042
Exp. 9-30-10
CIVIL
STATE OF CALIFORNIA

The State of California or its officers or agents shall not be responsible for the accuracy or completeness of electronic copies of this plan sheet.

To accompany plans dated 06-17-11

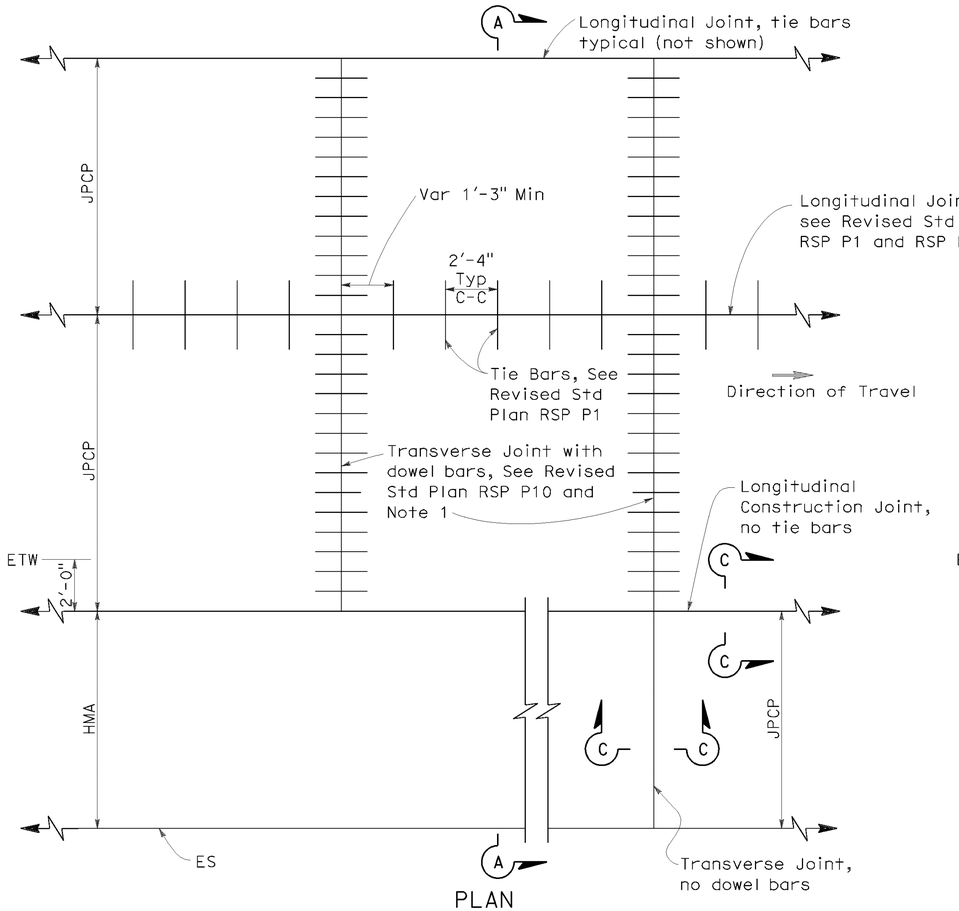

PLAN

NEW CONSTRUCTION

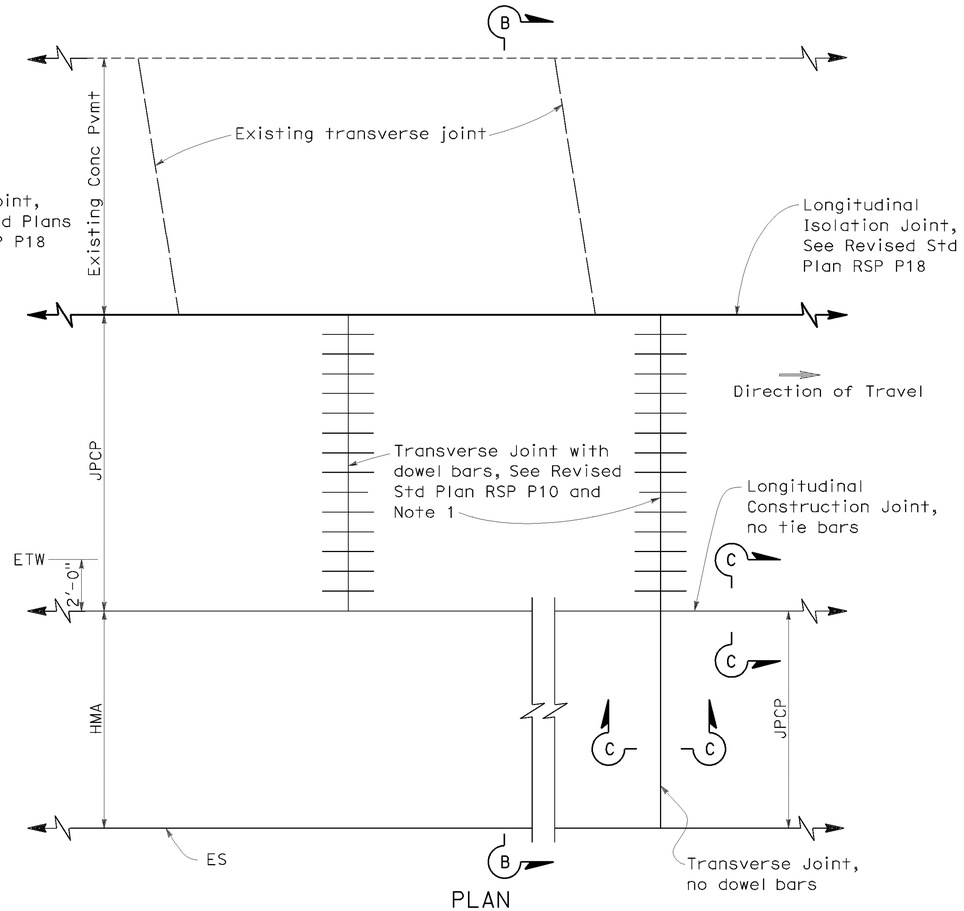

PLAN

LANE/SHOULDER ADDITION OR RECONSTRUCTION

NOTES:

1. Transverse joints shall be constructed at right angles to the longitudinal pavement joints in new Jointed Plain Concrete Pavement and spaced at successive repeated intervals of 12', 15', 13' and 14'.
2. For locations of rumble strips, see project plans. For rumble strip details not shown, see Standard Plans A40A and A40B.
3. Joint spacing patterns do not apply to intersections.

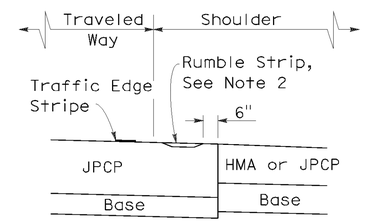

DETAIL "A"

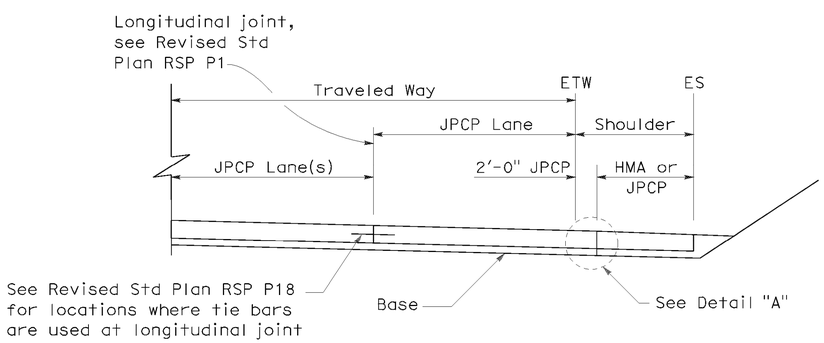

SECTION A-A

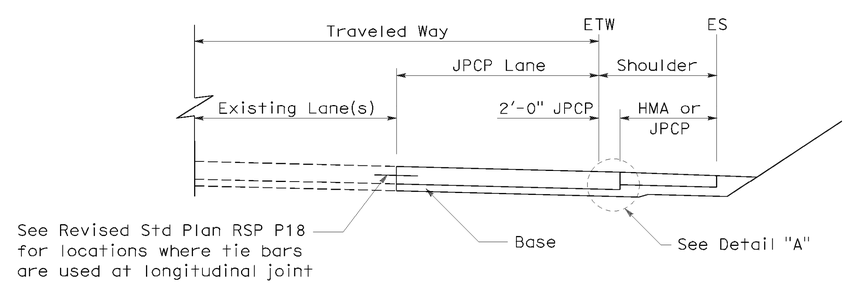

SECTION B-B

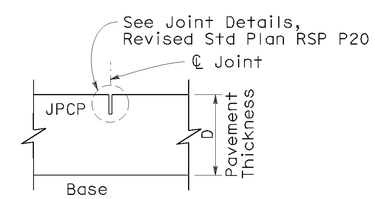

SECTION C-C

TRANSVERSE/LONGITUDINAL JOINT

(no dowel bars/tie bars)

STATE OF CALIFORNIA
DEPARTMENT OF TRANSPORTATION

JOINTED PLAIN CONCRETE PAVEMENT-WIDENED SLAB DETAILS

NO SCALE

RSP P2 DATED JUNE 5, 2009 SUPERCEDES STANDARD PLAN P2
DATED MAY 1, 2006 - PAGE 120 OF THE STANDARD PLANS BOOK DATED MAY 2006.

REVISED STANDARD PLAN RSP P2

2006 REVISED STANDARD PLAN RSP P2

P:\proj1\02\3E810_plans\pse\23e810va032.dgn

5-19-09

DIST	COUNTY	ROUTE	POST MILES TOTAL PROJECT	SHEET NO.	TOTAL SHEETS
02	Teh,Sha	5	R27.1/42.1 0.0/0.9	180	215

William K. Farnbach
REGISTERED CIVIL ENGINEER

May 15, 2009
PLANS APPROVAL DATE

REGISTERED PROFESSIONAL ENGINEER William K. Farnbach No. C49042 Exp. 9-30-10 CIVIL STATE OF CALIFORNIA

The State of California or its officers or agents shall not be responsible for the accuracy or completeness of electronic copies of this plan sheet.

To accompany plans dated 06-17-11

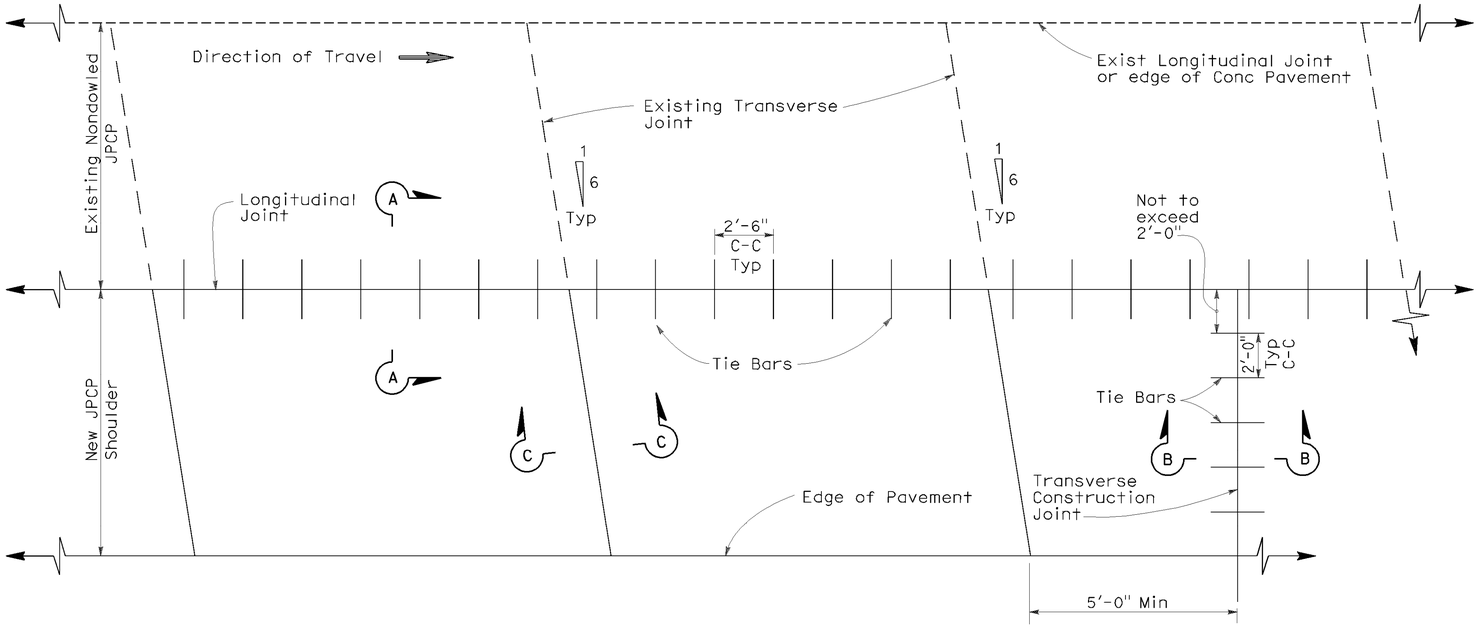

PLAN

NOTES:

1. New transverse contraction joints shall match the skewed offset and spacing of the adjacent existing contraction joints, as shown.
2. Transverse construction joints, with tie bars spaced as shown, shall be installed at the end of paving operations. Transverse construction joints shall be placed at least 5'-0" from any contraction joint.
3. This Standard Plan only applicable for constructing a nondoweled Jointed Plain Concrete Pavement shoulder next to existing nondoweled Jointed Plain Concrete Pavement lane.
4. If fresh concrete is placed adjacent to existing concrete, the top corner of the new hardened concrete does not need to be rounded to the 1/4" radius as shown.

TABLE A

Tie Bar Spacing		
Slab Length	Total Tie Bars per Slab	Clearance Tie Bar to Transverse Joint
9'-0"	3	1'-3"
9'-6"	3	1'-4 1/2"
12'-0"	5	1'-4"
13'-0"	5	1'-10"
14'-0"	5	2'-3 3/4"
15'-0"	6	1'-8"

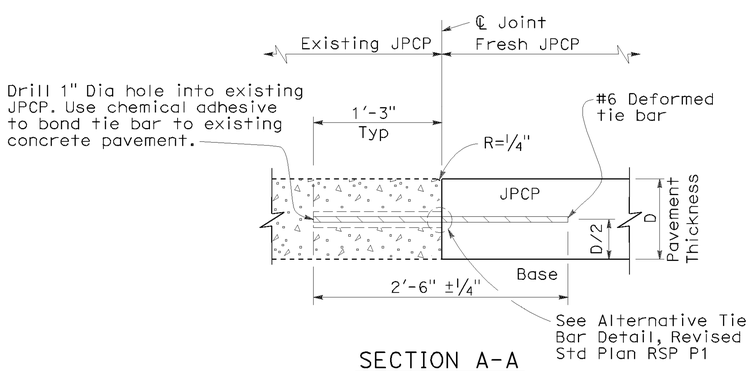

SECTION A-A

LONGITUDINAL JOINT
(Between fresh and hardened concrete)

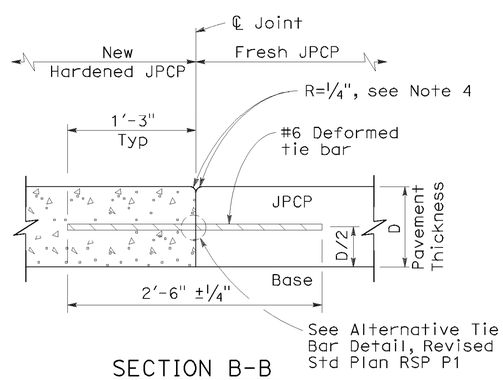

SECTION B-B

TRANSVERSE CONSTRUCTION JOINT

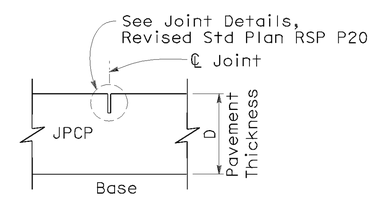

SECTION C-C

TRANSVERSE CONTRACTION JOINT

STATE OF CALIFORNIA
DEPARTMENT OF TRANSPORTATION

JOINTED PLAIN CONCRETE PAVEMENT-NONDOWELED SHOULDER ADDITION/RECONSTRUCTION

NO SCALE

RSP P3 DATED MAY 15, 2009 SUPERSEDES RSP P3 DATED NOVEMBER 17, 2006 AND STANDARD PLAN P3 DATED MAY 1, 2006 - PAGE 121 OF THE STANDARD PLANS BOOK DATED MAY 2006.

REVISED STANDARD PLAN RSP P3

2006 REVISED STANDARD PLAN RSP P3

P:\proj1\02\3E810_plans\pse\23e810va033.dgn

5-8-09

DIST	COUNTY	ROUTE	POST MILES TOTAL PROJECT	SHEET NO.	TOTAL SHEETS
02	Teh,Sha	5	R27.1/42.1 0.0/0.9	181	215

William K. Farnbach
REGISTERED CIVIL ENGINEER

May 15, 2009
PLANS APPROVAL DATE

REGISTERED PROFESSIONAL ENGINEER William K. Farnbach No. C49042 Exp. 9-30-10 CIVIL STATE OF CALIFORNIA

The State of California or its officers or agents shall not be responsible for the accuracy or completeness of electronic copies of this plan sheet.

To accompany plans dated 06-17-11

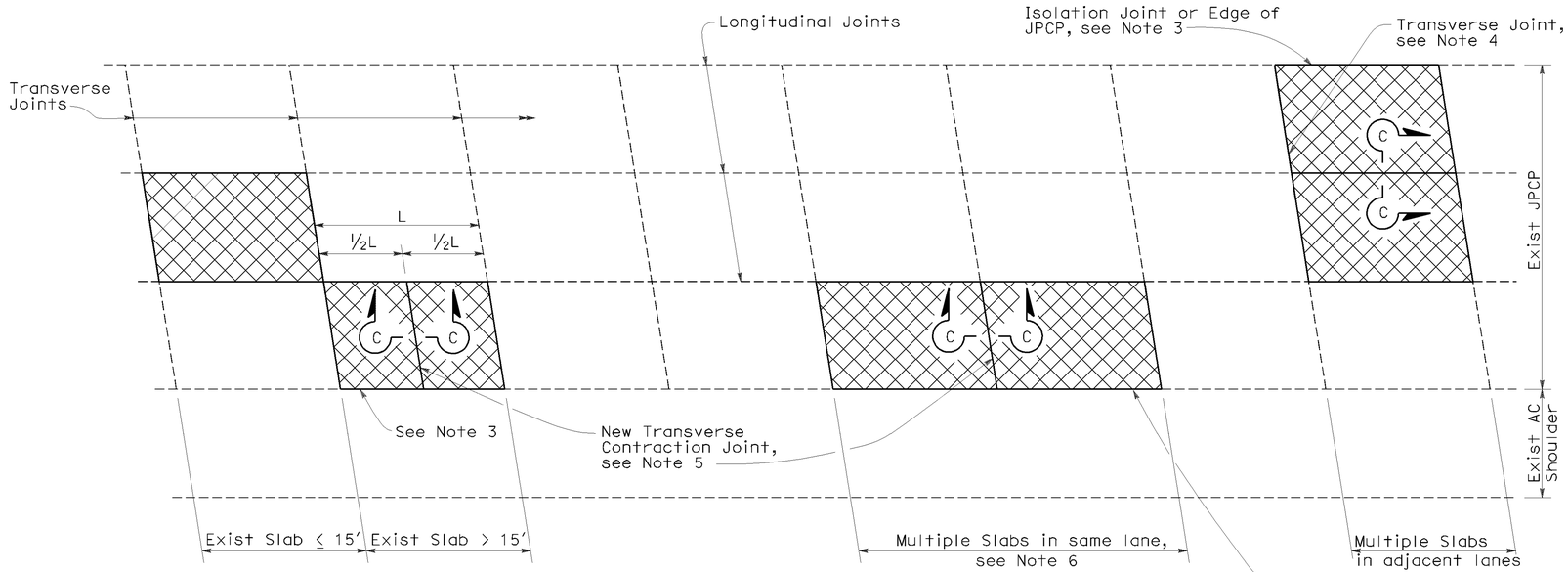

PLAN

NOTES:

1. For details not shown, see Revised Standard Plan RSP P10.
2. Where the existing outer shoulder pavement is asphalt concrete pavement, the "a" dimension shall be 1'-0" and the "b" dimension shall be 2'-0".
3. Side forms shall be used where edge of pavement is adjacent to asphalt concrete.
4. For detail, see Transverse Construction Joint for existing concrete pavement detail on Revised Standard Plan RSP P10.
5. Transverse joint to match skew of existing joint. Omit dowel bars.
6. This Standard Plan only applicable when replacing multiple slabs in the same lane is less than 100'.

LEGEND

Replace Concrete Pavement (See Slab Layout Detail)

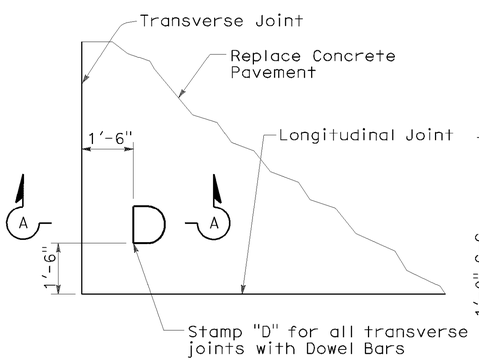

DOWEL STAMP DETAIL

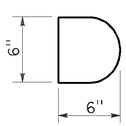

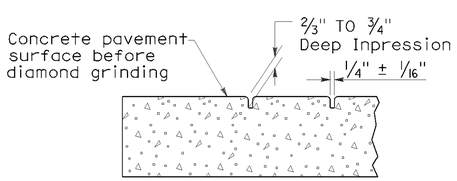

SECTION A-A

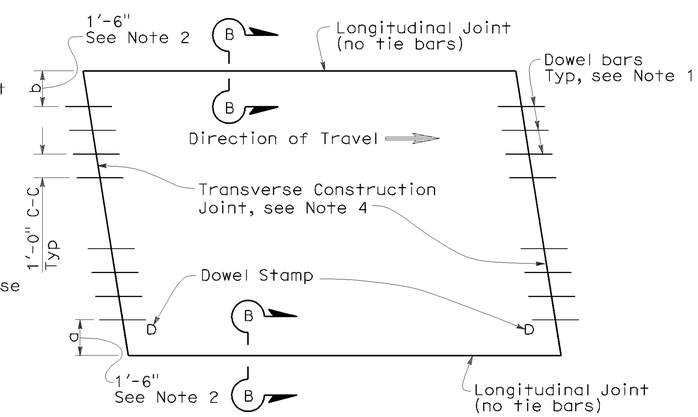

TYPE I
(traffic lane lines match longitudinal joints)

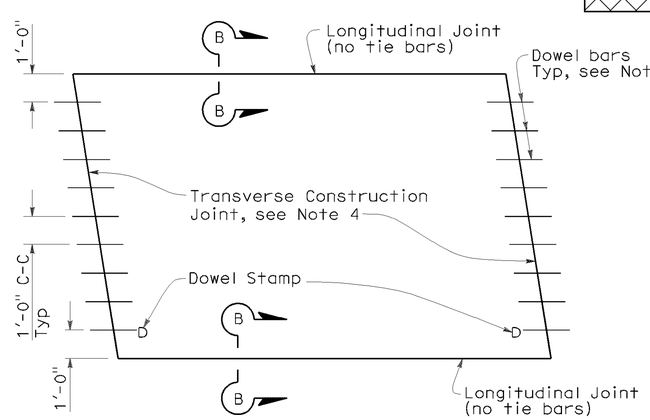

TYPE II
(traffic lane lines do not match longitudinal joints)

SLAB LAYOUT

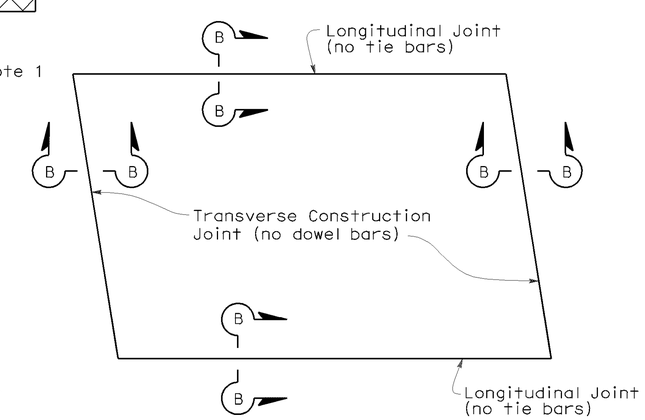

TYPE III
(for short term repairs < 5 yrs design life or for slab replacements with a cracking and seating operation)

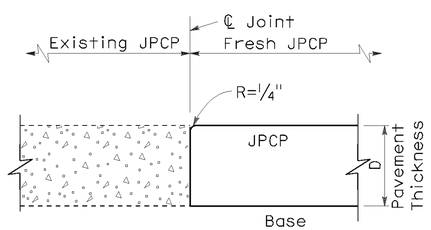

SECTION B-B

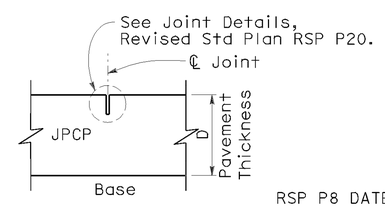

SECTION C-C

STATE OF CALIFORNIA
DEPARTMENT OF TRANSPORTATION

JOINTED PLAIN CONCRETE PAVEMENT-INDIVIDUAL SLAB REPLACEMENT

NO SCALE

RSP P8 DATED MAY 15, 2009 SUPERSEDES RSP P8 DATED SEPTEMBER 1, 2006 AND STANDARD PLAN P8 DATED MAY 1, 2006 - PAGE 123 OF THE STANDARD PLANS BOOK DATED MAY 2006.

REVISED STANDARD PLAN RSP P8

2006 REVISED STANDARD PLAN RSP P8

P:\proj1\02\3E810_plans\pse\23e810va034.dgn

5-8-09

DIST	COUNTY	ROUTE	POST MILES TOTAL PROJECT	SHEET NO.	TOTAL SHEETS
02	Teh,Sha	5	R27.1/42.1 0.0/0.9	182	215

REGISTERED CIVIL ENGINEER

May 15, 2009
PLANS APPROVAL DATE

REGISTERED PROFESSIONAL ENGINEER William K. Farnbach No. C49042 Exp. 9-30-10 CIVIL STATE OF CALIFORNIA

The State of California or its officers or agents shall not be responsible for the accuracy or completeness of electronic copies of this plan sheet.

To accompany plans dated 06-17-11

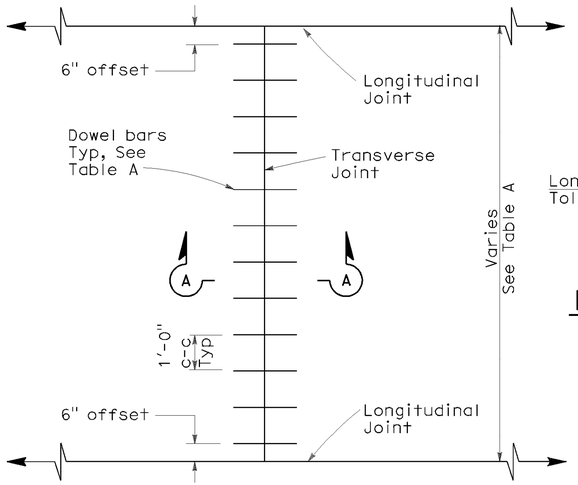

TRANSVERSE JOINT DOWEL BAR LAYOUT

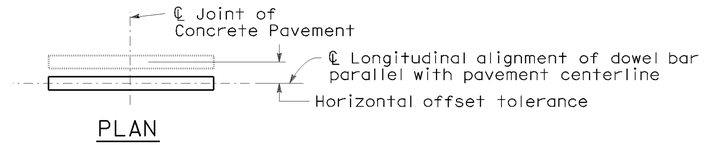

PLAN

HORIZONTAL OFFSET TOLERANCE

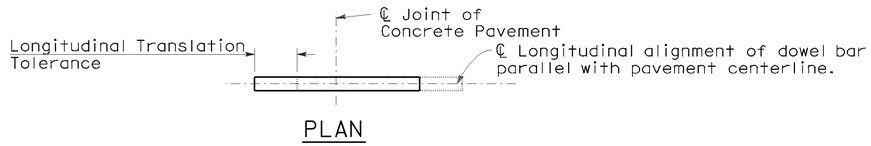

PLAN

LONGITUDINAL TRANSLATION TOLERANCE

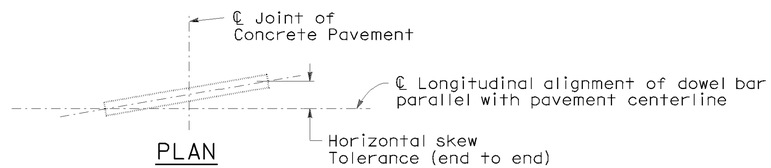

PLAN

HORIZONTAL SKEW TOLERANCE

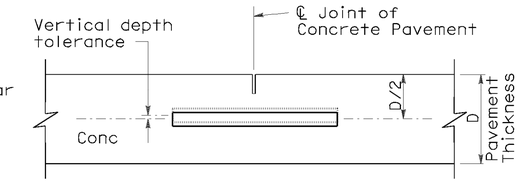

ELEVATION

VERTICAL DEPTH TOLERANCE

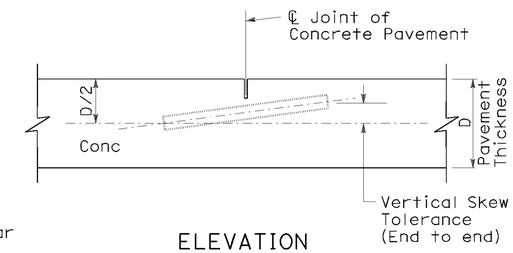

ELEVATION

VERTICAL SKEW TOLERANCE

NOTES:

1. See Revised Standard Plan RSP P1 for typical dowel bar placement and locations.
2. 1½" Dia smooth dowel bars are to be used with a pavement thickness, D, equal to or greater than 0.70 feet. For pavement thickness, D, less than 0.70 feet, use 1¼" Dia smooth dowel bars.
3. For widths not shown, see Project Plans.
4. If fresh concrete pavement is placed adjacent to existing concrete pavement, the top corner of the existing concrete pavement does not need to be rounded to the ¼" radius, as shown.

TABLE A (See Note 3)

Dowel Bar Transverse Spacing Table	
Width between Longitudinal Joints	Number of Dowels between Longitudinal Joints
14'-0"	14
13'-0"	13
12'-0"	12
11'-0"	11
10'-0"	10
8'-0"	8
5'-0"	5
4'-0"	4

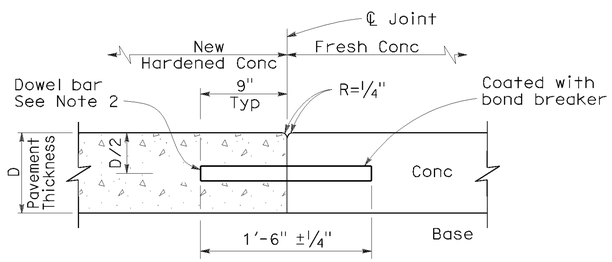

SECTION A-A

TRANSVERSE CONSTRUCTION JOINT DETAIL

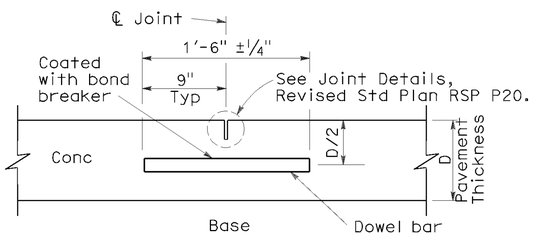

TRANSVERSE CONTRACTION JOINT

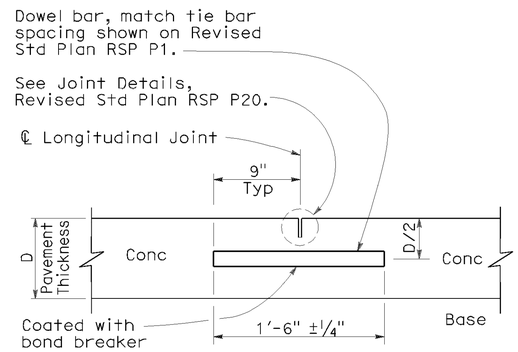

LONGITUDINAL CONTRACTION JOINT WITH DOWEL BARS

(See Revised Std Plan RSP P18)

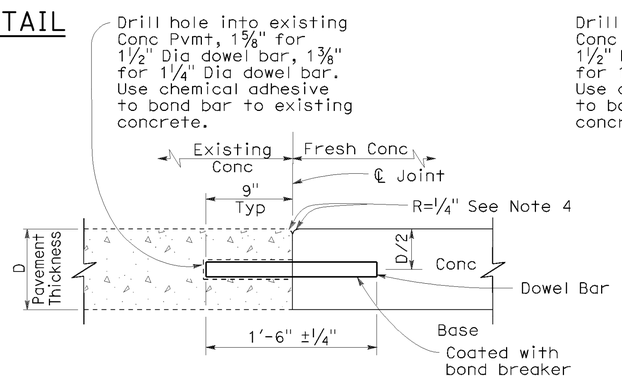

TRANSVERSE CONSTRUCTION JOINT FOR EXISTING CONCRETE PAVEMENT

(Drill and bond locations)

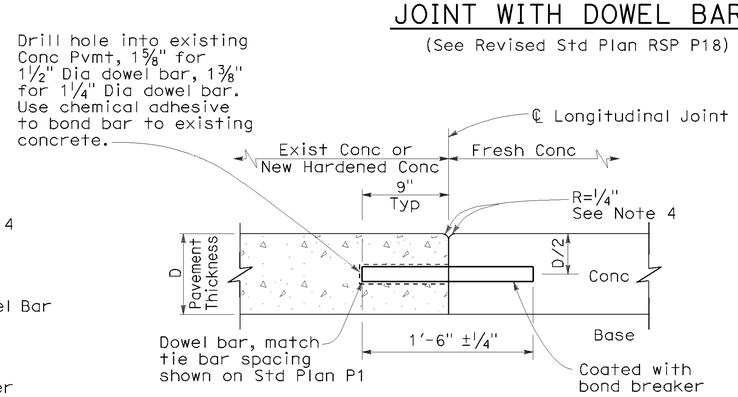

LONGITUDINAL CONSTRUCTION JOINT WITH DOWEL BARS

(See Revised Std Plan RSP P18)

STATE OF CALIFORNIA
DEPARTMENT OF TRANSPORTATION

CONCRETE PAVEMENT-DOWEL BAR DETAILS

NO SCALE

RSP P10 DATED MAY 15, 2009 SUPERSEDES STANDARD PLAN P10 DATED MAY 1, 2006 - PAGE 124 OF THE STANDARD PLANS BOOK DATED MAY 2006.

REVISED STANDARD PLAN RSP P10

2006 REVISED STANDARD PLAN RSP P10

124

P:\proj1\02\3E810_plans\pse\23e810va035.dgn

5-8-09

DIST	COUNTY	ROUTE	POST MILES TOTAL PROJECT	SHEET NO.	TOTAL SHEETS
02	Teh,Sha	5	R27.1/42.1 0.0/0.9	183	215

William K. Farnbach
REGISTERED CIVIL ENGINEER

May 15, 2009
PLANS APPROVAL DATE

REGISTERED PROFESSIONAL ENGINEER William K. Farnbach No. C49042 Exp. 9-30-10 CIVIL STATE OF CALIFORNIA

The State of California or its officers or agents shall not be responsible for the accuracy or completeness of electronic copies of this plan sheet.

To accompany plans dated 06-17-11

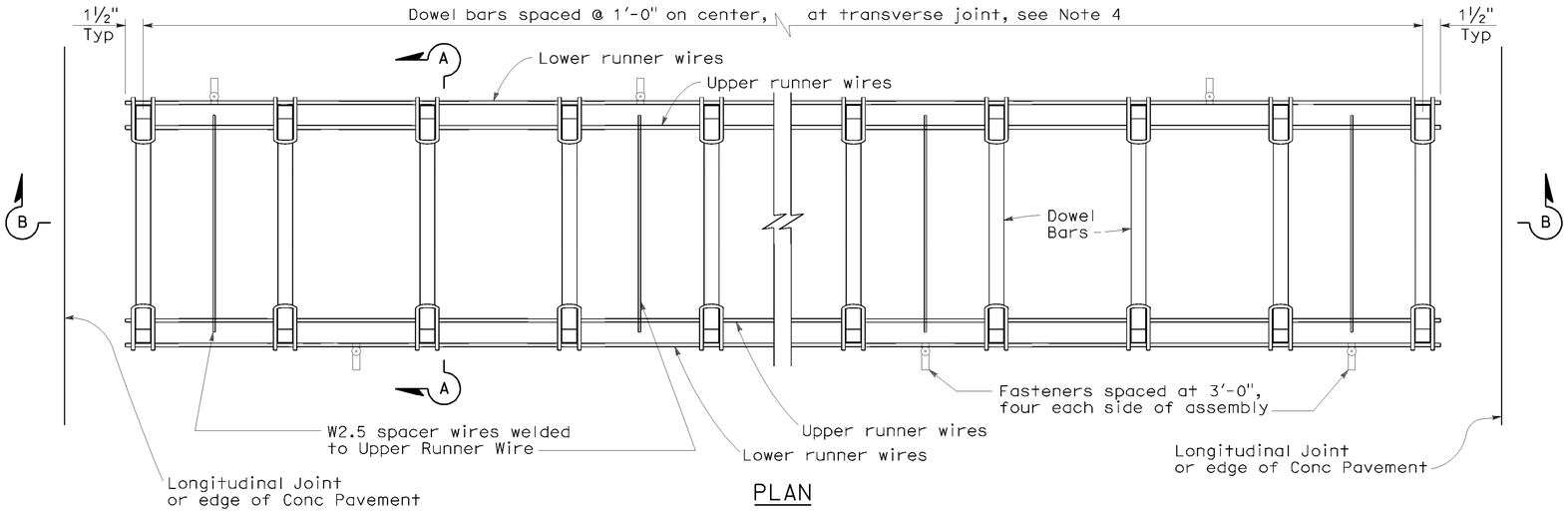

PLAN

DOWEL BAR BASKET (TRANSVERSE JOINT)

See Note 1

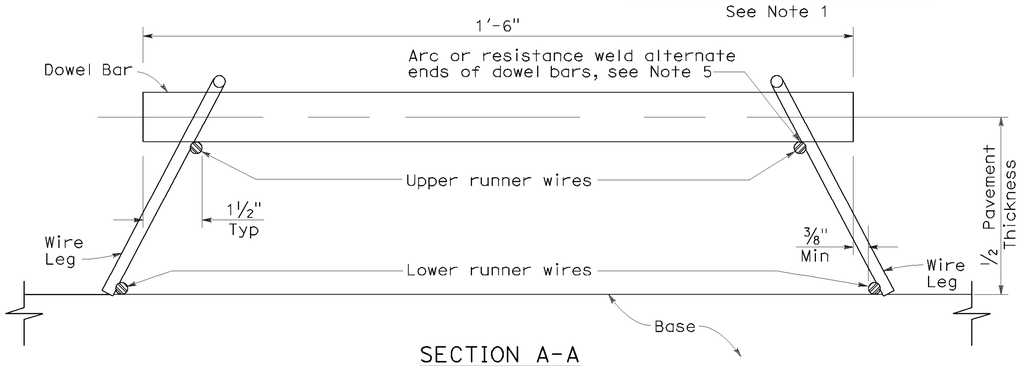

SECTION A-A

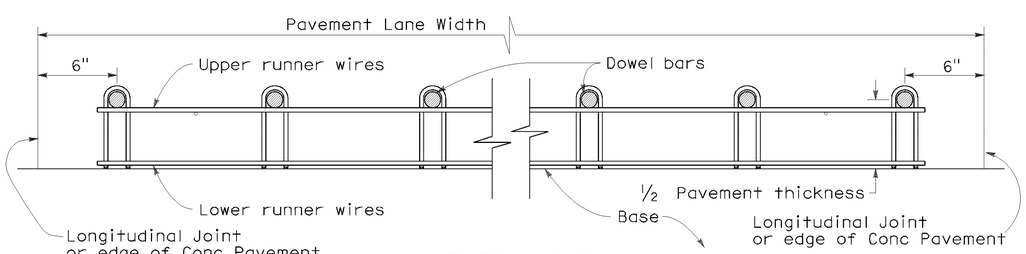

SECTION B-B

See Note 1

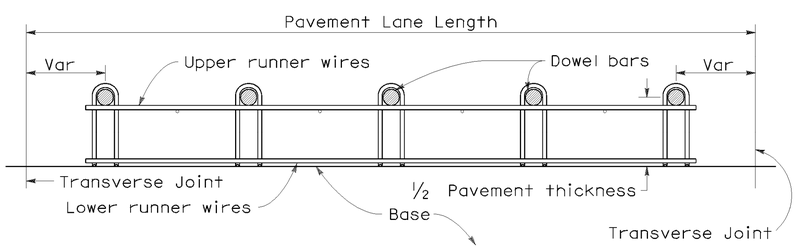

SECTION C-C

See Notes 1 and 4

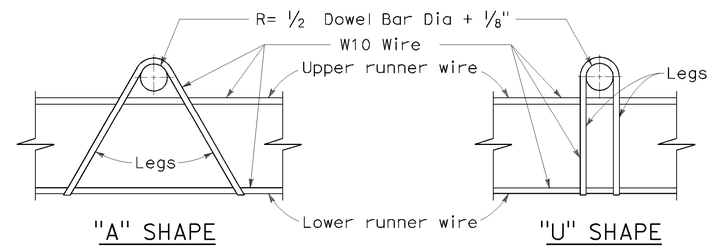

"A" SHAPE "U" SHAPE

ASSEMBLY FRAME DETAILS

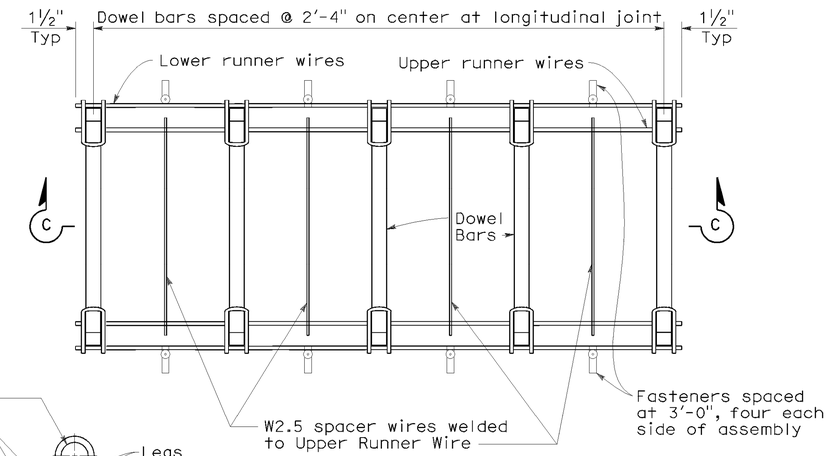

PLAN

DOWEL BAR BASKET (LONGITUDINAL JOINT)

See Note 1

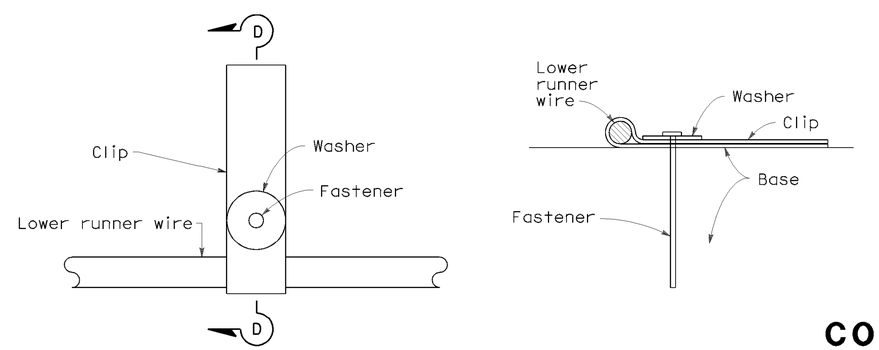

PLAN

SECTION D-D

FASTENER DETAIL

NOTES:

1. "U" frame shape assembly shown. "U" frame shape or "A" frame shape are acceptable.
2. Wire sizes shown are minimum required.
3. All wire intersections are to be resistance welded.
4. Use tie bar spacing for longitudinal dowel bar locations. See Revised Std Plans RSPs P1, P2, and P3 for tie bar requirements.
5. Weld may be at top or bottom of dowel bar.

STATE OF CALIFORNIA
DEPARTMENT OF TRANSPORTATION

CONCRETE PAVEMENT-DOWEL BAR BASKET DETAILS

NO SCALE

RSP P12 DATED MAY 15, 2009 SUPERSEDES RSP P12 DATED NOVEMBER 17, 2006 AND STANDARD PLAN P12 DATED MAY 1, 2006 - PAGE 125 OF THE STANDARD PLANS BOOK DATED MAY 2006.

REVISED STANDARD PLAN RSP P12

2006 REVISED STANDARD PLAN RSP P12

P:\proj11\02\3E810_plans\pse\23e810va036.dgn

5-8-09

DIST	COUNTY	ROUTE	POST MILES TOTAL PROJECT	SHEET NO.	TOTAL SHEETS
02	Teh,Sha	5	R27.1/42.1 0.0/0.9	184	215

William K. Farnbach
REGISTERED CIVIL ENGINEER

May 15, 2009
PLANS APPROVAL DATE

REGISTERED PROFESSIONAL ENGINEER
William K. Farnbach
No. C49042
Exp. 9-30-10
CIVIL
STATE OF CALIFORNIA

The State of California or its officers or agents shall not be responsible for the accuracy or completeness of electronic copies of this plan sheet.

To accompany plans dated 06-17-11

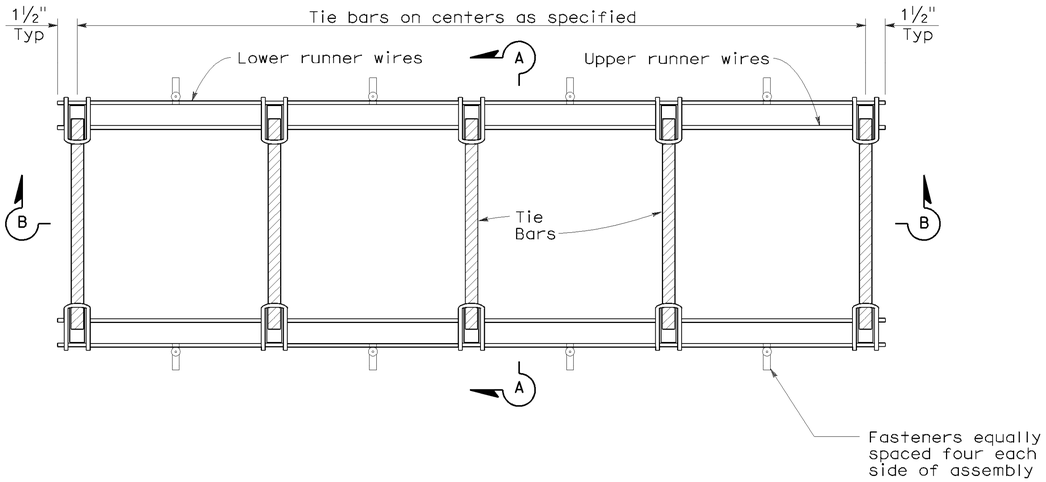

PLAN

TIE BAR BASKET

(TIE BARS AT LONGITUDINAL JOINT)
See Note 1

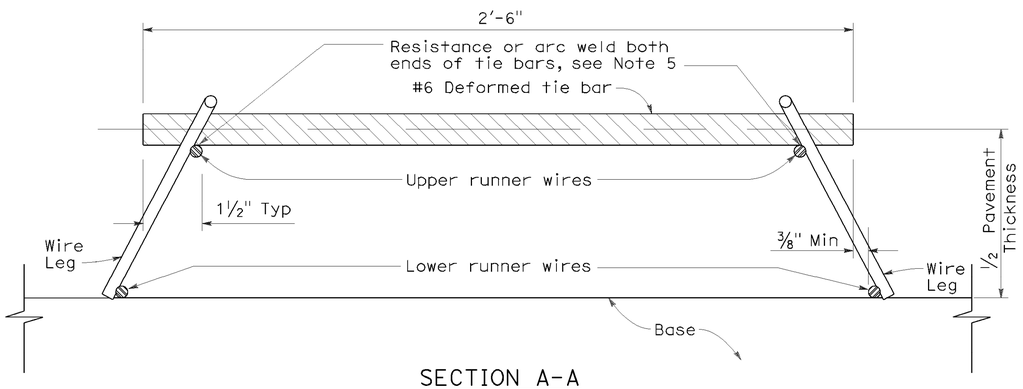

SECTION A-A

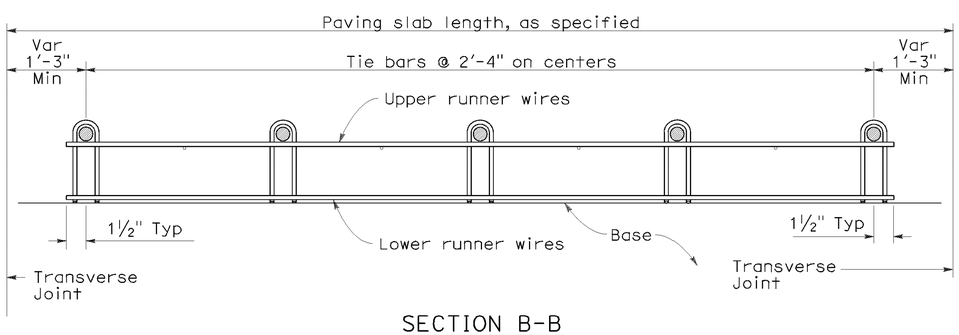

SECTION B-B
See Note 1

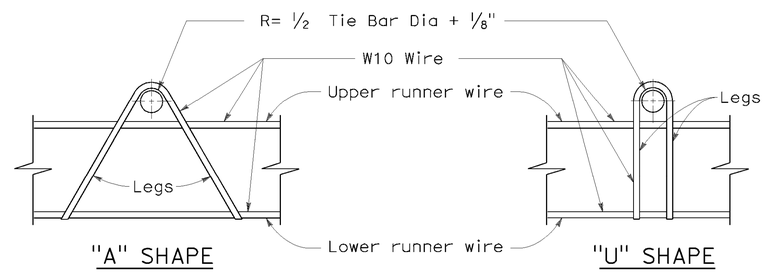

ASSEMBLY FRAME DETAILS

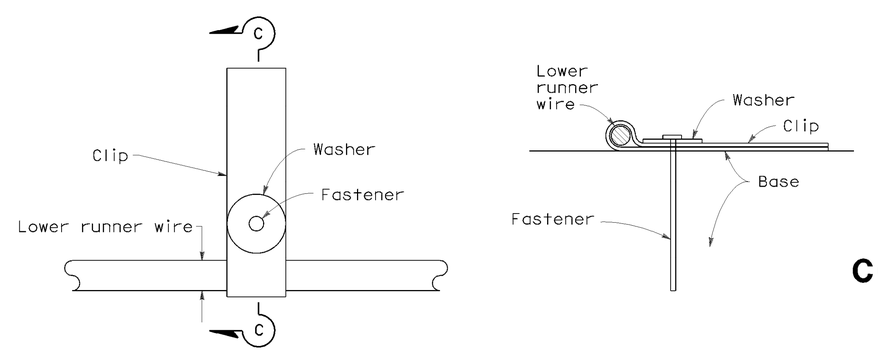

PLAN

SECTION C-C

FASTENER DETAIL

NOTES:

1. "U" frame shape assembly shown. "U" frame shape or "A" frame shape are acceptable.
2. Wire sizes shown are minimum required.
3. All wire intersections are to be resistance welded.
4. Not for use on nondoweled skewed jointed plain concrete pavement.
5. Weld may be at top or bottom of tie bar.

STATE OF CALIFORNIA
DEPARTMENT OF TRANSPORTATION

CONCRETE PAVEMENT-TIE BAR BASKET DETAILS

NO SCALE

RSP P17 DATED MAY 15, 2009 SUPERSEDES RSP P17 DATED NOVEMBER 17, 2006 AND STANDARD PLAN P17 DATED MAY 1, 2006 - PAGE 126 OF THE STANDARD PLANS BOOK DATED MAY 2006.

REVISED STANDARD PLAN RSP P17

2006 REVISED STANDARD PLAN RSP P17

P:\proj1\02\3E810_plans\pse\23e810va037.dgn

5-8-09

DIST	COUNTY	ROUTE	POST MILES TOTAL PROJECT	SHEET NO.	TOTAL SHEETS
02	Teh,Sha	5	R27.1/42.1 0.0/0.9	185	215

William K. Farnbach
REGISTERED CIVIL ENGINEER

June 5, 2009
PLANS APPROVAL DATE

REGISTERED PROFESSIONAL ENGINEER William K. Farnbach No. C49042 Exp. 9-30-10 CIVIL STATE OF CALIFORNIA

The State of California or its officers or agents shall not be responsible for the accuracy or completeness of electronic copies of this plan sheet.

To accompany plans dated 06-17-11

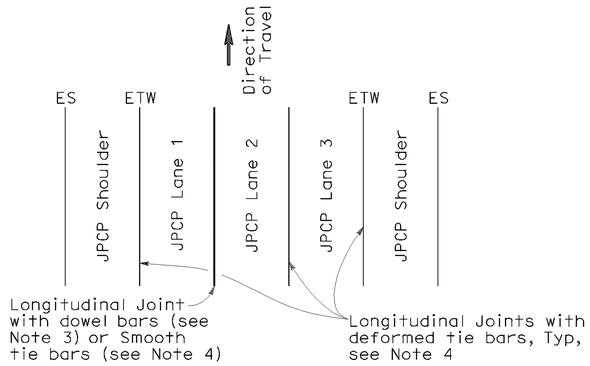

3 LANES WITH TIED CONCRETE SHOULDERS
PLAN

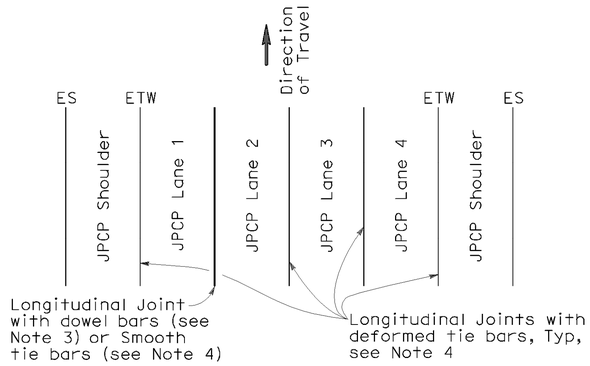

4 LANES WITH TIED CONCRETE SHOULDERS
PLAN

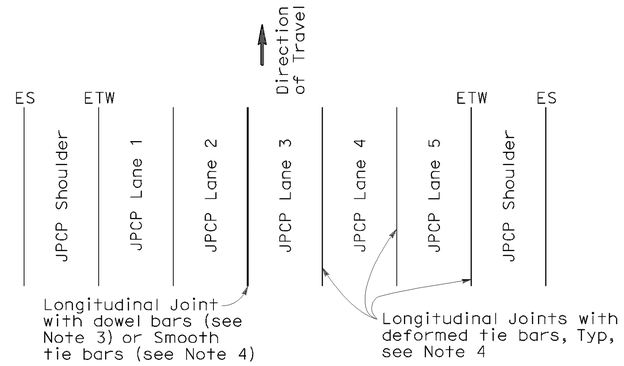

5 LANES WITH TIED CONCRETE SHOULDERS
PLAN

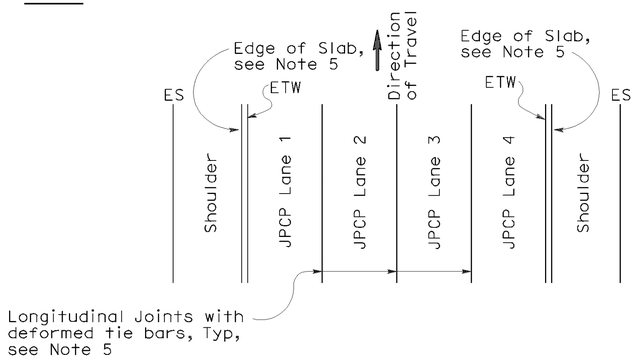

4 LANES OR LESS WITH WIDENED SLAB
PLAN

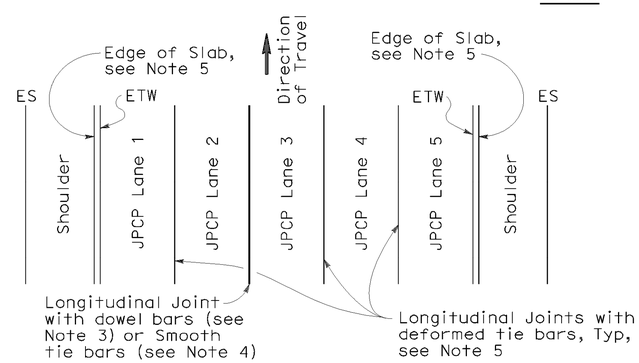

5 LANES WITH WIDENED SLAB
PLAN

NEW CONSTRUCTION

Location of Longitudinal Joints
(For JPCP)

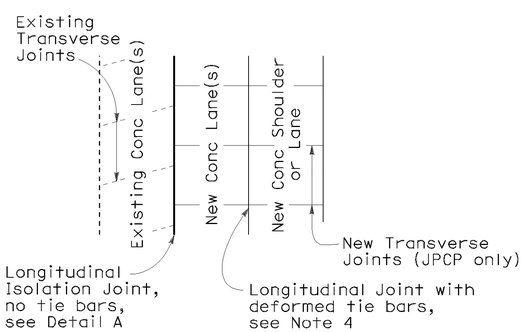

CASE 1
PLAN

Transverse Joints do not align between new and existing

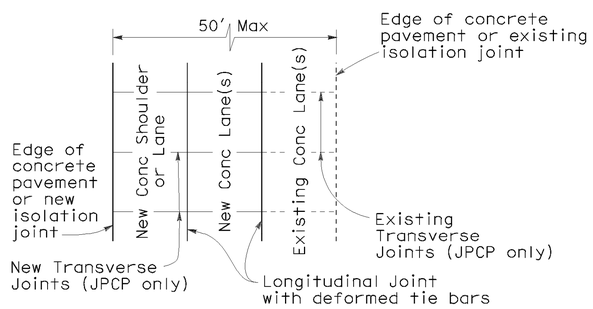

CASE 2
PLAN

Transverse Joints align between new and existing

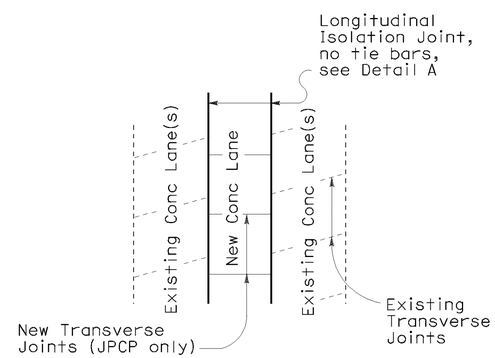

CASE 3 (INTERIOR LANE REPLACEMENT)
PLAN

Transverse Joints do not align between new and existing

LANE/SHOULDER ADDITION OR RECONSTRUCTION

(For JPCP and CRCP)

NOTES:

1. Where Lean Concrete Base is not used as base material, the joint filler material used for the longitudinal isolation joint shall only extend to the bottom of the new concrete slab. See Detail A.
2. Use 5/8" ±1/16" dimension for silicone sealant.
3. See Revised Standard Plan RSP P10 for longitudinal joint with dowel bars.
4. See Revised Standard Plan RSP P1.
5. See Revised Standard Plan RSP P2.

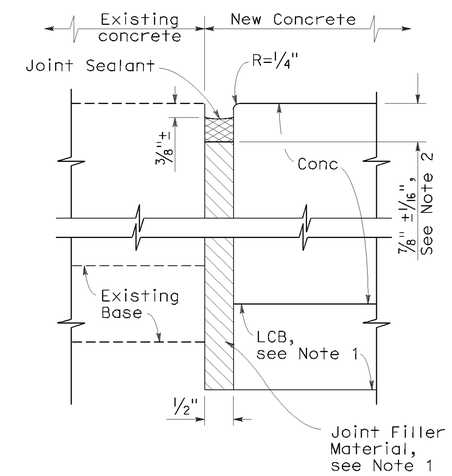

DETAIL A

ISOLATION JOINT

STATE OF CALIFORNIA
DEPARTMENT OF TRANSPORTATION

CONCRETE PAVEMENT-LANE SCHEMATICS AND ISOLATION JOINT DETAIL

NO SCALE

RSP P18 DATED JUNE 5, 2009 SUPERSEDES RSP P18 DATED MAY 15, 2009, RSP P18 DATED NOVEMBER 17, 2006 AND STANDARD PLAN P18 DATED MAY 1, 2006 - PAGE 127 OF THE STANDARD PLANS BOOK DATED MAY 2006.

REVISED STANDARD PLAN RSP P18

2006 REVISED STANDARD PLAN RSP P18

P:\proj1\02\3E810_plans\pse\23e810va038.dgn

5-14-09

NOTE:

1. Tie bars, dowel bars, and reinforcement are not shown in joint seal details, see Revised Standard Plans RSP P1, RSP P3, RSP P10, RSP P35, RSP P45, or RSP P46 as applicable.

DIST	COUNTY	ROUTE	POST MILES TOTAL PROJECT	SHEET NO.	TOTAL SHEETS
02	Teh,Sha	5	R27.1/42.1 0.0/0.9	186	215

William K. Farnbach
REGISTERED CIVIL ENGINEER

May 15, 2009
PLANS APPROVAL DATE

REGISTERED PROFESSIONAL ENGINEER
William K. Farnbach
No. C49042
Exp. 9-30-10
CIVIL
STATE OF CALIFORNIA

The State of California or its officers or agents shall not be responsible for the accuracy or completeness of electronic copies of this plan sheet.

To accompany plans dated 06-17-11

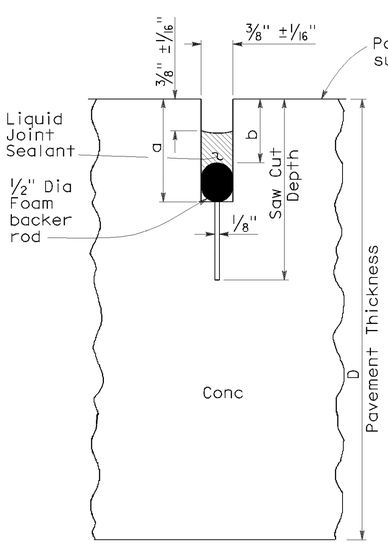

LIQUID SEALANT

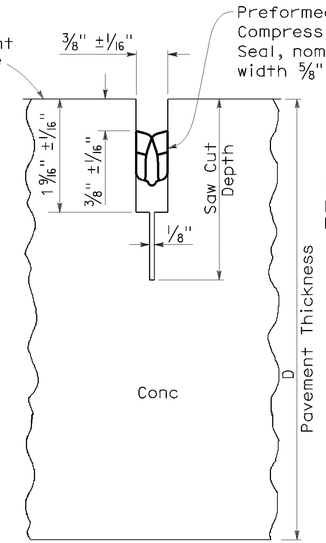

COMPRESSION SEAL

TYPE A1

Transverse Contraction Joints

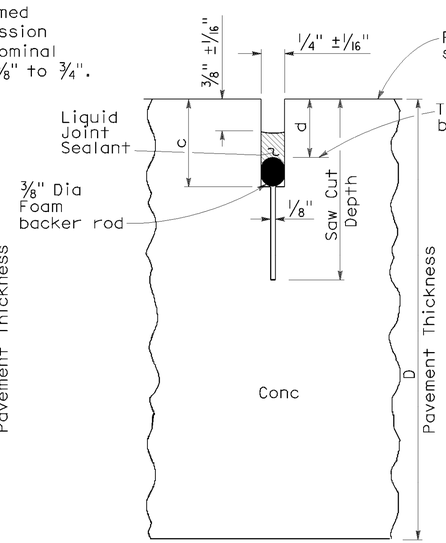

LIQUID SEALANT

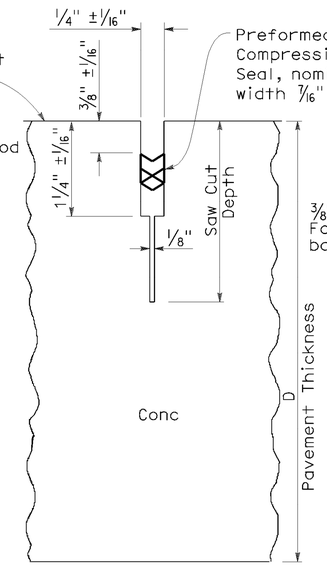

COMPRESSION SEAL

TYPE A2

Longitudinal Contraction Joints

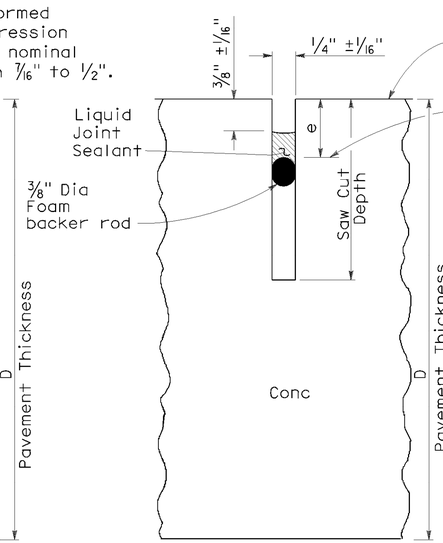

LIQUID SEALANT

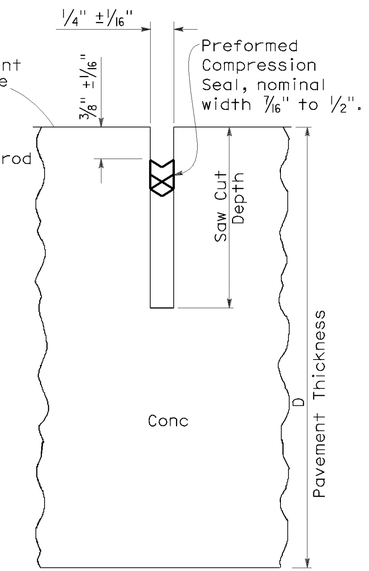

COMPRESSION SEAL

TYPE B

Longitudinal or Transverse Contraction Joint

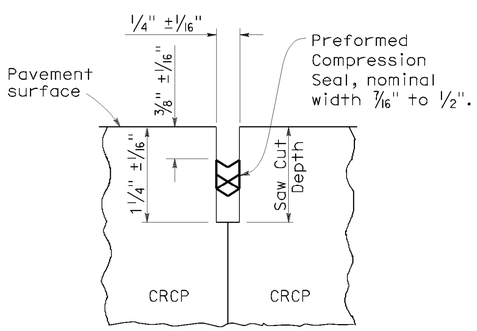

COMPRESSION SEAL

TYPE C

Transverse and Longitudinal Construction Joints (For CRCP)

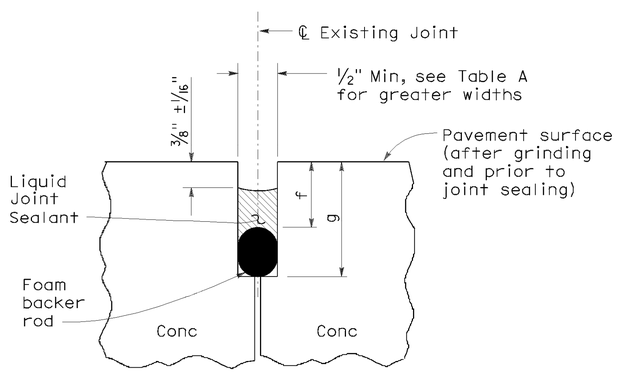

LIQUID SEALANT

TYPE R

Retrofit Transverse and Longitudinal Joints

LIQUID SEALANT RESERVOIR DEPTH

LIQUID SEALANT MATERIAL	3/8" Joint Width Type A1		1/4" Joint Width Type A2		1/4" Joint Width Type B
	DIMENSION		DIMENSION		DIMENSION
	a	b	c	d	e
SILCONE	1" ±1/16"	5/8" ±1/16"	15/16" ±1/16"	9/16" ±1/16"	9/16" ±1/16"
ASPHALT RUBBER	1 3/16" ±1/16"	3/4" ±1/16"	1 1/16" ±1/16"	11/16" ±1/16"	11/16" ±1/16"

TABLE A (TYPE R JOINT)

Sawn Joint Width	Backer Rod Diameter ± 1/16"	DIMENSION "f"	DIMENSION "g"
1"	1 5/16"	7/8"	2 1/4"
7/8"	1 3/16"	13/16"	2"
3/4"	1"	3/4"	1 3/4"
5/8"	7/8"	11/16"	1 1/2"
1/2"	11/16"	5/8"	1 1/4"

STATE OF CALIFORNIA
DEPARTMENT OF TRANSPORTATION

CONCRETE PAVEMENT-JOINT DETAILS

NO SCALE

RSP P20 DATED MAY 15, 2009 SUPERSEDES STANDARD PLAN P20 DATED MAY 1, 2006 - PAGE 128 OF THE STANDARD PLANS BOOK DATED MAY 2006.

REVISED STANDARD PLAN RSP P20

2006 REVISED STANDARD PLAN RSP P20

P:\proj1\02\3E810_plans\pse\23e810va039.dgn

5-8-09

DIST	COUNTY	ROUTE	POST MILES TOTAL PROJECT	SHEET NO.	TOTAL SHEETS
02	Teh,Sha	5	R27.1/42.1 0.0/0.9	187	215

William K. Farnbach
REGISTERED CIVIL ENGINEER

May 15, 2009
PLANS APPROVAL DATE

REGISTERED PROFESSIONAL ENGINEER
William K. Farnbach
No. C49042
Exp. 9-30-10
CIVIL
STATE OF CALIFORNIA

The State of California or its officers or agents shall not be responsible for the accuracy or completeness of electronic copies of this plan sheet.

To accompany plans dated 06-17-11

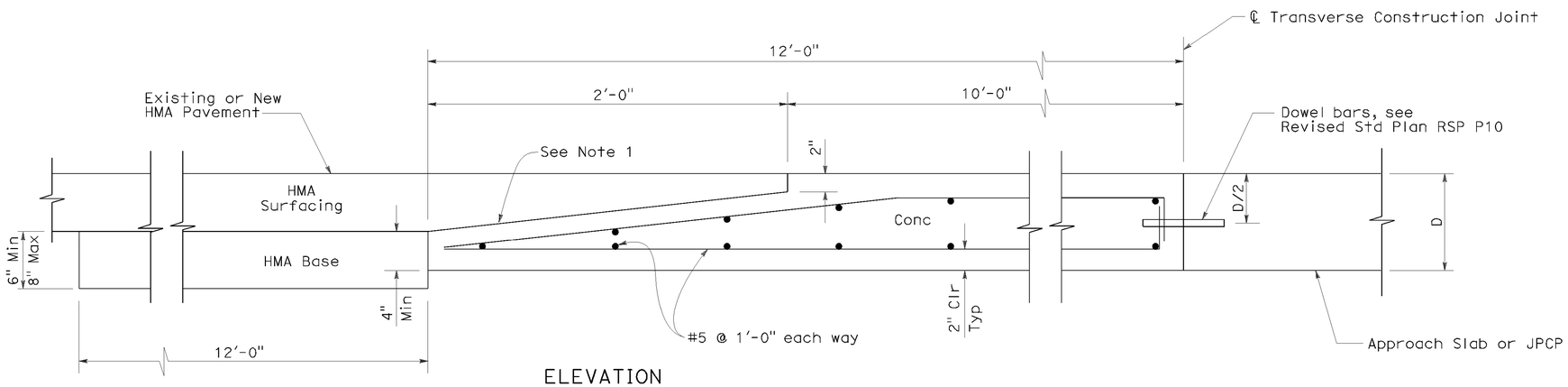

ELEVATION

CONCRETE PAVEMENT TO HOT MIXED ASPHALT PAVEMENT TRANSITION PANEL

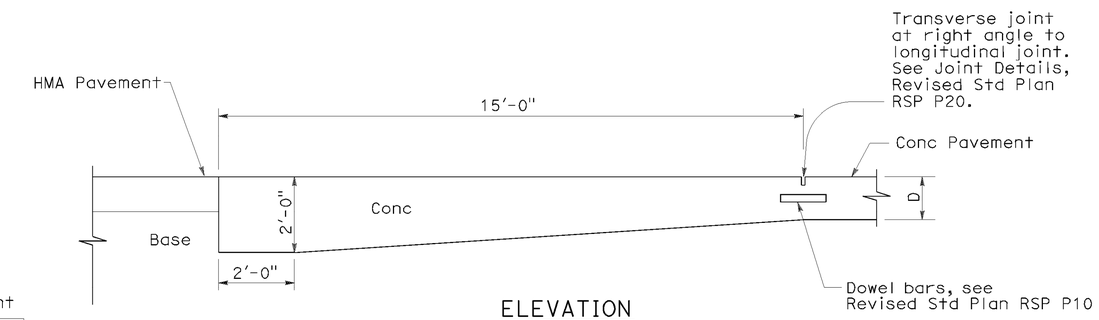

ELEVATION

PAVEMENT END ANCHOR

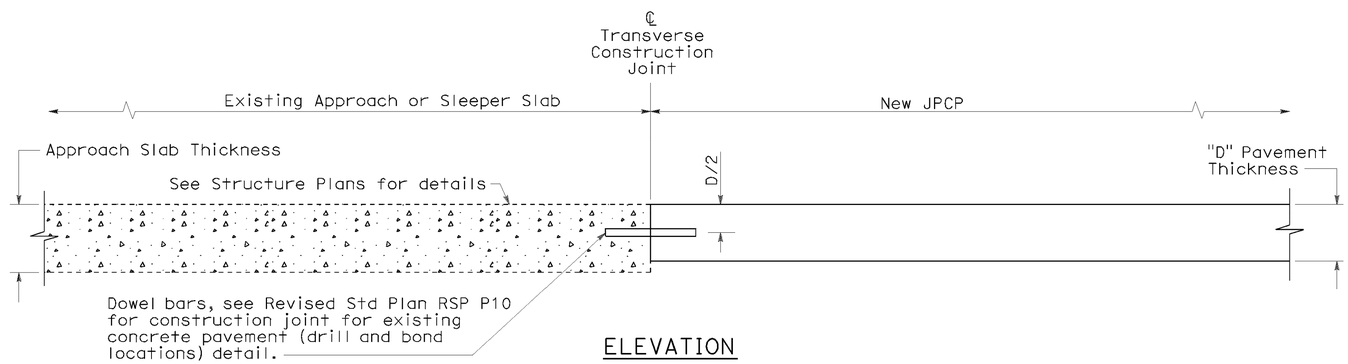

ELEVATION

NOTE:

1. Heavy broom finish.

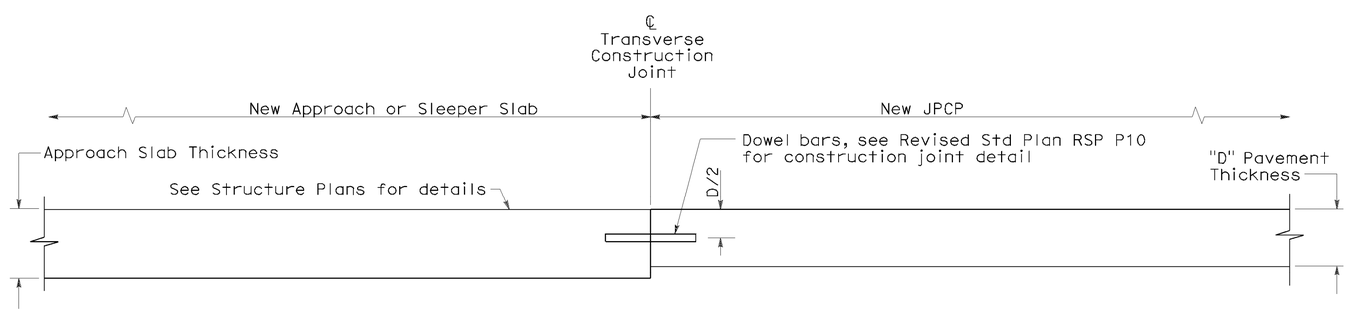

ELEVATION

CONCRETE PAVEMENT TRANSITION TO APPROACH OR SLEEPER SLAB

STATE OF CALIFORNIA
DEPARTMENT OF TRANSPORTATION

JOINTED PLAIN CONCRETE PAVEMENT-END PANEL PAVEMENT TRANSITIONS

NO SCALE

RSP P30 DATED MAY 15, 2009 SUPERSEDES STANDARD PLAN P30
DATED MAY 1, 2006 - PAGE 129 OF THE STANDARD PLANS BOOK DATED MAY 2006.

REVISED STANDARD PLAN RSP P30

2006 REVISED STANDARD PLAN RSP P30

129

P:\proj\02\3E810_plans\pse\23e810va040.dgn

5-8-09

DIST	COUNTY	ROUTE	POST MILES TOTAL PROJECT	SHEET NO.	TOTAL SHEETS
02	Teh,Sha	5	R27.1/42.1 0.0/0.9	188	215

REGISTERED CIVIL ENGINEER

June 5, 2009
PLANS APPROVAL DATE

REGISTERED PROFESSIONAL ENGINEER Glenn DeCou No. C34547 Exp. 9-30-09 CIVIL STATE OF CALIFORNIA

The State of California or its officers or agents shall not be responsible for the accuracy or completeness of electronic copies of this plan sheet.

To accompany plans dated 06-17-11

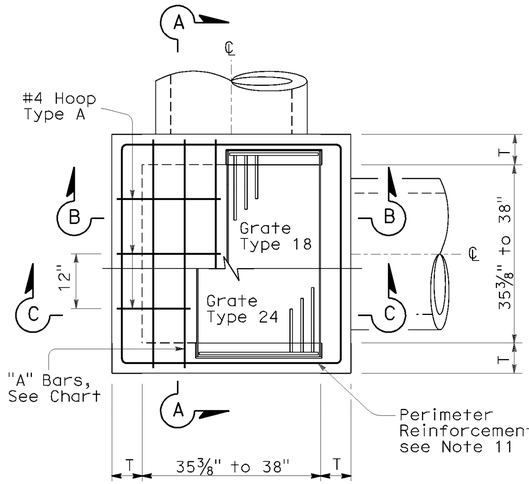

STANDARD TYPE G2 OR G4

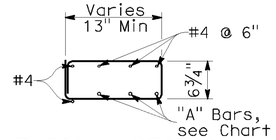

TYPICAL SECTION
(HOOP TYPE A)

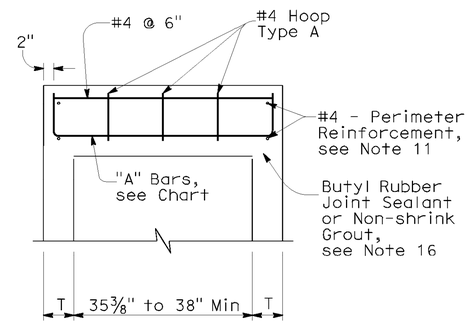

SECTION A-A

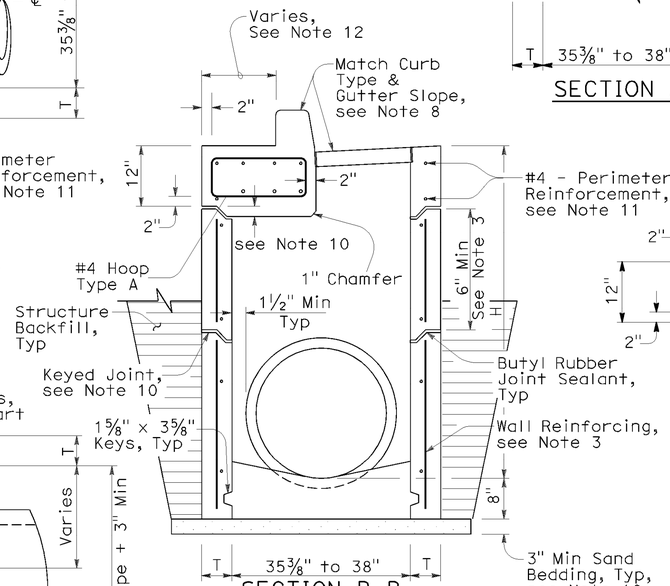

SECTION B-B
(with G4 Top)

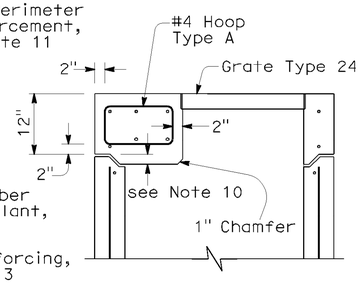

SECTION C-C
(with G2 Top)

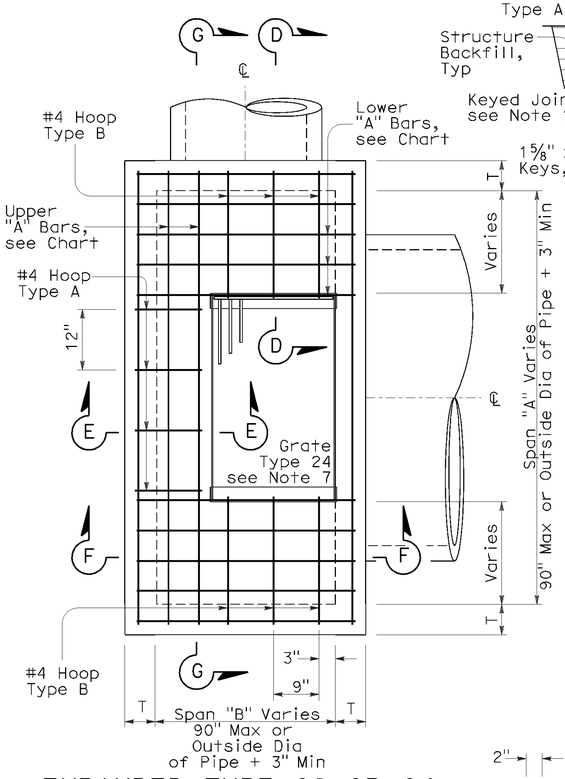

EXPANDED TYPE G2 OR G4
(Top Rebar Not Shown)

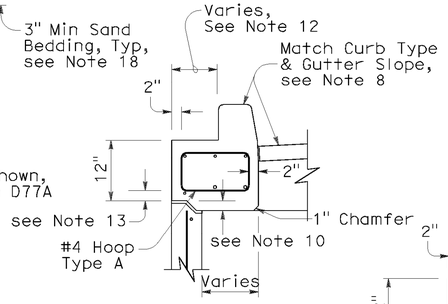

SECTION E-E
(with G4 Top)

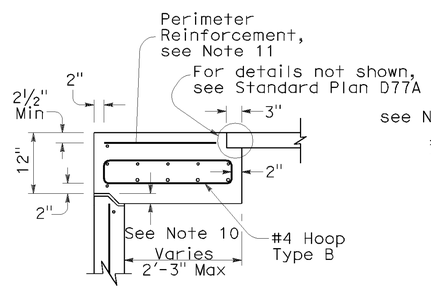

SECTION D-D

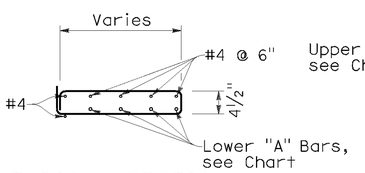

TYPICAL SECTION
(HOOP TYPE B)

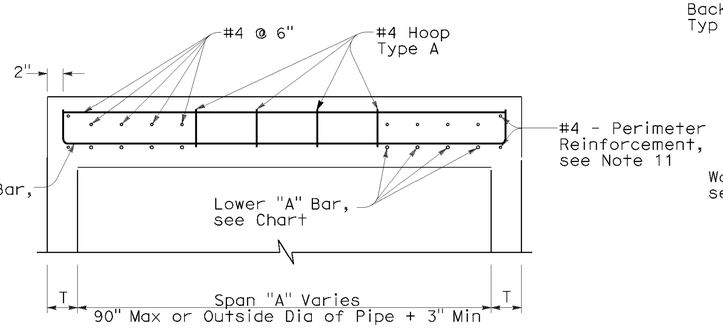

SECTION G-G

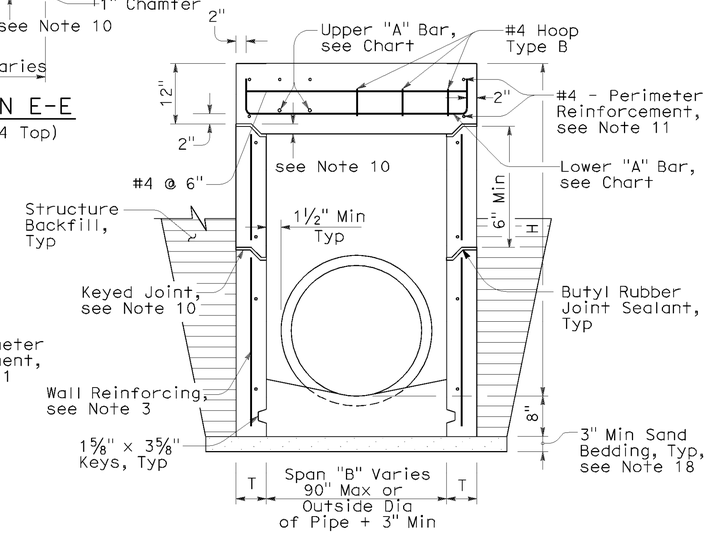

SECTION F-F
(with G2 Top)

NOTES:

1. "H" is the difference in elevation between the outlet pipe flow line and the normal gutter grade line undepressed.
2. For "T" wall thickness: T=6" when "H" is 8' or less. T=8" when "H" is over 8'.
3. Wall reinforcing not required when "H" is 8' or less and the unsupported width or length is 6'-0" or less. Reinforce wall exceeding these limits with #4 bars @ 1'-6" ± centers placed 2" clear to the inside of inlet unless otherwise shown. Short independent wall sections or height adjustment rings 6" to 24" high must have a minimum of two #4 horizontal bars.
4. Seal pre-cast inlets connection openings between wall and pipe with non-shrink grout or resilient connectors as specified in the Special Provisions.
5. Steps - None required where "H" is less than 2'-6". Where "H" is 2'-6" or more, install steps with lowest rung 1'-0" above the floor and highest rung not more than 6" below bottom of lid. The distance between steps must not exceed 1'-0" and be uniform throughout the length of the wall. Place steps in the wall without an opening. Steps inserts may be substituted for the bar steps. Step inserts must comply with State Industrial Safety Requirements. See Standard Plan D74C for step details.
6. Pipe(s) can be placed in any wall.
7. Set inlet so that grate bars are parallel to direction of principal surface flow.
8. Type G4 inlet can use Grate Type 18 or 24. Type G2 inlet uses Grate Type 24. See Revised Standard Plan RSP D77A and Standard Plan D77B for grate and frame details and weights of miscellaneous Iron and Steel.
9. G4 inlet details are the same as the G2 with the addition of a curb and sloped grate that matches the adjacent curb and gutter depression. See Standard Plans D78A & D78B for gutter and inlet depresssion details. See Revised Standard Plan RSP A87A & Standard Plan A87B for Curb and Dike Details.
10. Provide pre-cast inlets with separate top sections for final grade adjustment under Standard Specifcation Section 51-1.02. Provide keyed joints between the top and wall and multiple wall sections. Joint design may vary but must be 1" to 3" in depth.
11. Perimeter reinforcement serves as a rigid frame to position and attach the required structural reinforcement and may be tack welded at outer corners when using ASTM A706 weldable bars.
12. This dimension will vary with different grates, curbs types, box width and wall thickness.
13. 2" unless inlet is expanded in the Span "A" direction, then clearance is 2" plus the diameter of the lower "A" bar.
14. Place "A" Bars at an angle so hooked ends will maintain 2" clear coverage.
15. Refer to Standard Plan D73, Table A for concrete quantities.
16. Non-shrink grout can be used for upper most joint to facilitate final top grade adjustment.
17. Slope inlet floors 4:1 towards the outlet pipe. Pre-cast inlets may have monolithic sloped floors, flat floors, or no floors in which case a sloped floor must be cast in the field. Inlet floors do not require reinforcing.
18. Extend sand bedding under all structure backfill.

TOP REINFORCEMENT CHART

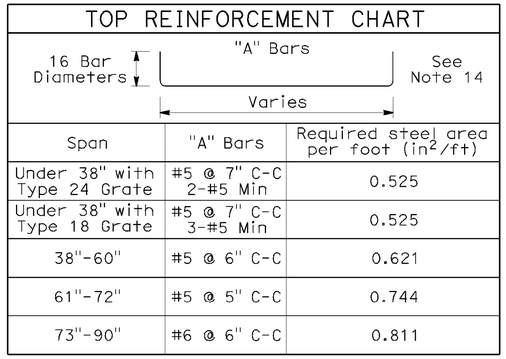

Span	"A" Bars	Required steel area per foot (in^2/ft)
Under 38" with Type 24 Grate	#5 @ 7" C-C 2-#5 Min	0.525
Under 38" with Type 18 Grate	#5 @ 7" C-C 3-#5 Min	0.525
38"-60"	#5 @ 6" C-C	0.621
61"-72"	#5 @ 5" C-C	0.744
73"-90"	#6 @ 6" C-C	0.811

STATE OF CALIFORNIA
DEPARTMENT OF TRANSPORTATION

DRAINAGE INLETS (PRECAST)

NO SCALE

NSP D73A DATED JUNE 5, 2009 SUPPLEMENTS THE STANDARD PLANS BOOK DATED MAY 2006.

NEW STANDARD PLAN NSP D73A

2006 NEW STANDARD PLAN NSP D73A

P:\proj1\02\3E810_plans\pse\23e810va041.dgn

3-16-09

DIST	COUNTY	ROUTE	POST MILES TOTAL PROJECT	SHEET NO.	TOTAL SHEETS
02	Teh,Sha	5	R27.1/42.1 0.0/0.9	189	215

REGISTERED CIVIL ENGINEER

June 6, 2008
PLANS APPROVAL DATE

REGISTERED PROFESSIONAL ENGINEER Raymond Don Tsztoo No. C37332 Exp. 6-30-08 CIVIL STATE OF CALIFORNIA

The State of California or its officers or agents shall not be responsible for the accuracy or completeness of electronic copies of this plan sheet.

To accompany plans dated 06-17-11

ANNULAR AND HELICAL PROFILE

COUPLING TYPE	PIPE CORRUGATION	PIPE SIZE	W OR A	PIPE WALL THICKNESS CSP	PIPE WALL THICKNESS CAP	BAND THICKNESS CSP	BAND THICKNESS CAP	BAR AND STRAP (CSP ONLY) STRAP THICKNESS	BOLTS Dia	BAR Dia	BAR YIELD STRENGTH	ANGLE DIMENSIONS CSP	ANGLE DIMENSIONS CAP	BOLTS (No. - Dia) CSP	BOLTS (No. - Dia) CAP	RIVETS ANGLE TO BAND CSP	RIVETS ANGLE TO BAND CAP	SPOT WELDS ANGLE TO BAND CSP
TWO PIECE INTEGRAL FLANGE	1½" × ¼"	6"-10"	7"	0.064"-0.079"	0.060"	0.064"	0.060"							2-⅜"	2-⅜"			
	2⅔" × ½"	12"-24"	12"		0.060"-0.105"		0.060"								3-½"			
UNIVERSAL	2⅔" × ½"	THROUGH 36"	12"	0.064"-0.138"	0.060"-0.135"	0.064"	0.060"	0.079"	½"	⅞"	32 ksi	2" × 2" × 3/16"	2" × 2" × 3/16"	3-½"	3-½"	3-⅜"	3-⅜"	5-½"
		42"-60"	16¼"	0.064"-0.168"	0.060"-0.164"	0.064"	0.060"	DOUBLE 0.079"	½"	⅞"	32 ksi	2" × 2" × ¼"	2" × 2" × ¼"	4-½"	4-½"	5-⅜"	5-⅜"	
ANNULAR	2⅔" × ½"	THROUGH 36"	12"	0.064"-0.138"	0.060"-0.135"	0.064"	0.060"					2" × 2" × 3/16"	2" × 2" × 3/16"	3-½"	3-½"	3-⅜"	3-⅜"	5-½"
		42"-60"	12"	0.064"-0.079"		0.064"						2" × 2" × 3/16"		3-½"		3-⅜"		5-½"
		42"-60"	12"	0.109"-0.168"	0.135"-0.164"	0.064"	0.075"					2" × 2" × ¼"	2" × 2" × ¼"	3-½"	3-½"	5-⅜"	5-⅜"	
		66"-72"	24"		0.164"		0.105"						2" × 2" × ¼"		5-½"		5-½"	
		66"-84"	24"	0.109"-0.168"		0.064"						2" × 2" × ¼"		5-½"		7-⅜"		
		42"-54"	12"		0.060"-0.105"		0.060"						2" × 2" × 3/16"		3-½"		3-⅜"	
	3" × 1"	48"-60"	14"	0.064"-0.079"		0.064"						2" × 2" × 3/16"		3-½"		3-⅜"		5-½"
		48"-60"	14"	0.109"		0.064"						2" × 2" × 3/16"		3-½"		5-⅜"		
		66"-120"	25"	0.064"-0.109"		0.064"						2" × 2" × 3/16"		5-½"		9-⅜"		
		42"-60"	14"		0.060"-0.105"		0.060"						2" × 2" × 3/16"		3-½"		5-⅜"	
		42"-60"	14"		0.135"		0.075"						2" × 2" × ¼"		3-½"		5-⅜"	
		66"-96"	25"		0.060"-0.135"		0.060"						2" × 2" × ¼"		5-½"		7-⅜"	
		96"-108"	25"		0.135"		0.075"						2" × 2" × ¼"		5-½"		7-⅜"	
HELICAL	2⅔" × ½"	THROUGH 36"	12"	0.064"-0.138"	0.060"-0.135"	0.064"	0.060"					2" × 2" × 3/16"	2" × 2" × 3/16"	3-½"	3-½"	3-⅜"	3-⅜"	5-½"
		42"-54"	12"		0.060"-0.105"		0.060"						2" × 2" × 3/16"		3-½"		3-⅜"	
		42"-60"	12"	0.064"-0.079"		0.064"						2" × 2" × 3/16"		3-½"		3-⅜"		5-½"
		42"-60"	12"	0.109"-0.168"	0.135"-0.164"	0.064"	0.075"					2" × 2" × ¼"	2" × 2" × ¼"	3-½"	3-½"	5-⅜"	5-⅜"	
		66'-84"	24"	0.109"-0.168"		0.064"						2" × 2" × ¼"		5-½"		7-⅜"		
		66"-72"	24"		0.164"		0.105"						2" × 2" × ¼"		5-½"		5-⅜"	
	3" × 1"	48"-60"	14"	0.064"-0.079"		0.064"						2" × 2" × 3/16"		3-½"		3-⅜"		5-½"
		48"-60"	14"	0.109"		0.064"						2" × 2" × 3/16"		3-½"		5-⅜"		
		66"-120"	25"	0.064"-0.109"		0.064"						2" × 2" × 3/16"		5-½"		9-⅜"		
		42"-60"	14"		0.060"-0.105"		0.060"						2" × 2" × 3/16"		3-½"		5-⅜"	
		42"-60"	14"		0.135"		0.075"						2" × 2" × ¼"		3-½"		5-⅜"	
		66"-96"	25"		0.060"-0.135"		0.060"						2" × 2" × ¼"		5-½"		7-⅜"	
		96"-108"	25"		0.135"		0.075"						2" × 2" × ¼"		5-½"		7-⅜"	
HUGGER	2⅔" × ½" REROLLED END	THROUGH 48"	10½"	0.109"		0.064"		0.079"	½"	⅞"	32 ksi							
		54"- 66"	10½"	0.109"		0.064"		DOUBLE 0.079"	½"	⅞"	32 ksi							
		THROUGH 54"	10½"	0.064"-0.079"		0.064"		0.079"	½"	⅞"	32 ksi							
		THROUGH 60"	10½"	0.138"		0.079"		DOUBLE 0.079"	½"	⅞"	32 ksi							
		66"-72"	10½"	0.138"		0.109"		DOUBLE 0.079"	½"	⅞"	32 ksi							
		THROUGH 72"	10½"	0.168"		0.109"		DOUBLE 0.109"	½"	⅞"	45 ksi							
	3" × 1" REROLLED END	48"-84"	10½"	0.109"		0.079"		DOUBLE 0.079"	½"	⅞"	32 ksi							
		48"-90"	10½"	0.064"-0.079"		0.064"		DOUBLE 0.079"	½"	⅞"	32 ksi							
		96"-102"	10½"	0.079"		0.079"		DOUBLE 0.079"	½"	⅞"	32 ksi							
		90"-120"	10½"	0.109"		0.109"		DOUBLE 0.109"	½"	⅞"	45 ksi							

SPIRAL RIB PROFILE

COUPLING TYPE	PIPE CORRUGATION	PIPE SIZE	W	PIPE WALL THICKNESS SSRP	PIPE WALL THICKNESS ASRP	BAND THICKNESS SSRP	BAND THICKNESS ASRP	BAR AND STRAP (SSRP ONLY) STRAP THICKNESS	BOLTS Dia	BAR Dia	BAR YIELD STRENGTH	ANGLE DIMENSIONS SSRP	ANGLE DIMENSIONS ASRP	BOLTS (No.- Dia) SSRP	BOLTS (No.- Dia) ASRP	RIVETS ANGLE TO BAND SSRP	RIVETS ANGLE TO BAND ASRP	SPOT WELDS ANGLE TO BAND SSRP
ANNULAR	2⅔" × ½" * REROLLED END	24"-36"	12"	0.064"-0.109"	0.060"-0.105"	0.064"	0.060"	0.079"	½"	⅞"	32 ksi	2" × 2" × 3/16"	2" × 2" × 3/16"	3-½"	3-½"	3-⅜"	3-⅜"	5-½"
		42"-60"	12"	0.064"-0.079"	0.075"-0.105"	0.064"	0.075"	0.079"	½"	⅞"	32 ksi	2" × 2" × 3/16"	2" × 2" × 3/16"	3-½"	3-½"	3-⅜"	3-⅜"	5-½"
		42"-60"	12"	0.109"		0.064"		0.079"	½"	⅞"	32 ksi	2" × 2" × ¼"		3-½"		5-⅜"		
		66"-84"	24"	0.109"		0.064"		0.079"	½"	⅞"	32 ksi	2" × 2" × ¼"		5-½"		7-⅜"		
HUGGER	2⅔" × ½" * REROLLED END	24"-54"	10½"	0.064"-0.079"		0.064"		0.079"	½"	⅞"	32 ksi							
		24"-48"	10½"	0.109"		0.064"		0.079"	½"	⅞"	32 ksi							
		54"-66"	10½"	0.109"		0.064"		Double 0.079"	½"	⅞"	32 ksi							

* See Note 13.

NOTES:

1. All ferrous metal coupling band connection hardware shall be galvanized or electro-plated in accordance with the Standard Specifications.
2. For helically corrugated coupling bands, the connection angles may be oriented parallel to the pipe axis, provided connecting holes are slotted lengthwise sufficiently to allow adjustment for the helix angle.
3. Tension strap may be connected to band with either spot welds or fillet welds that develop minimum required strength of strap.
4. Use 1¼" gage line dimension on attached angle leg for rivets and spot welds.
5. Band thickness shall not be less than:
   a. 3 standard thicknesses lighter than the thickness of the pipe for Corrugated Steel Pipe.
   b. 2 standard thicknesses lighter than the thickness of the pipe and in no case lighter than 0.060" for Corrugated Aluminum Pipe.
6. Dimensions, thicknesses and strengths shown are minimum.
7. For pipe arches use same width band as for round pipe of equal periphery.
8. Fillet welds of equivalent strength may be substituted for spot welds or rivets.
9. Spot welds shall develop minimum required strength of strap.
10. Pipe with rerolled ends having at least two 2⅔" × ½" annular corrugations at each end with or without an upturned flange may be connected with any of the annular coupling bands shown for pipe of the same diameter and wall thickness and having 2⅔" × ½" corrugations.
11. In the case of H-12 huggerbands, two piece bands are required for diameters through 96" and three piece bands are required for diameters 102" through 120".
12. Two piece bands are required for pipes greater than 42" diameter.
13. All profiles of Spiral Rib Pipe (¾" × ¾" ribs at 7½" pitch and ¾" × 1" ribs at 11½" pitch in both steel and aluminum and ¾" × 1" ribs at 8½" pitch in steel only) shall be manufactured with rerolled ends. Corrugation profile of the rerolled ends shall be 2⅔" × ½" annual corrugations with a minimum of two full corrugations at each end.

STATE OF CALIFORNIA
DEPARTMENT OF TRANSPORTATION

CORRUGATED METAL PIPE COUPLING DETAILS No. 6 POSITIVE JOINT

NO SCALE

RSP D97F DATED JUNE 6, 2008 SUPERSEDES STANDARD PLAN D97F
DATED MAY 1, 2006 - PAGE 188 OF THE STANDARD PLANS BOOK DATED MAY 2006.

REVISED STANDARD PLAN RSP D97F

2006 REVISED STANDARD PLAN RSP D97F

P:\proj1\02\3E810_plans\pse\23e810vd042.dgn

4-2-08

DIST	COUNTY	ROUTE	POST MILES TOTAL PROJECT	SHEET NO.	TOTAL SHEETS
02	Teh,Sha	5	R27.1/42.1 0.0/0.9	190	215

Raymond Don Tsztoo
REGISTERED CIVIL ENGINEER

June 6, 2008
PLANS APPROVAL DATE

REGISTERED PROFESSIONAL ENGINEER
Raymond Don Tsztoo
No. C37332
Exp. 6-30-08
CIVIL
STATE OF CALIFORNIA

The State of California or its officers or agents shall not be responsible for the accuracy or completeness of electronic copies of this plan sheet.

To accompany plans dated 06-17-11

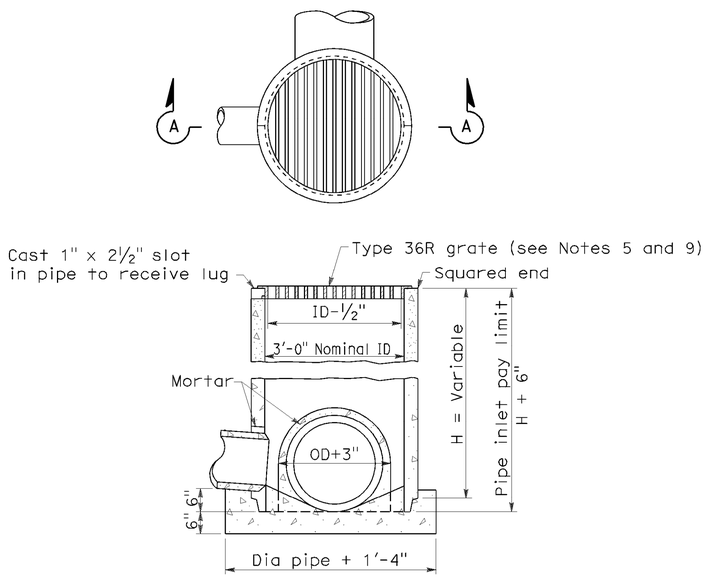

SECTION A-A

TYPE GCP

CONCRETE PIPE INLET WITH GRATE

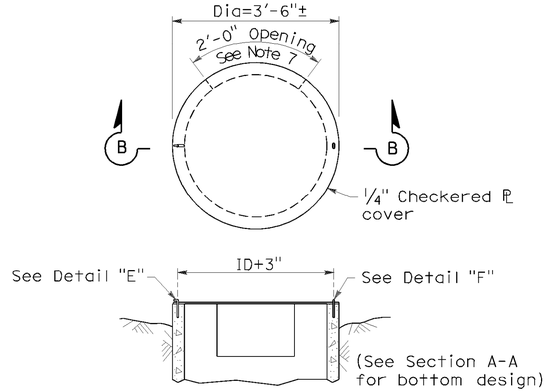

SECTION B-B

TYPE OCP or OCPI

CONCRETE PIPE INLET WITH STEEL COVER
(See Note 6)

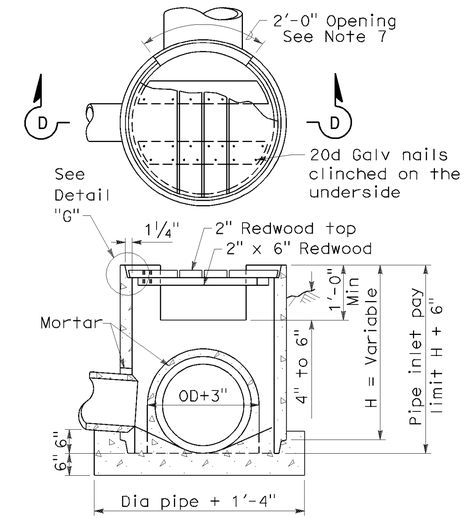

SECTION D-D

TYPE OCP or OCPI

CONCRETE PIPE INLET WITH REDWOOD COVER
(See Notes 6 and 10)

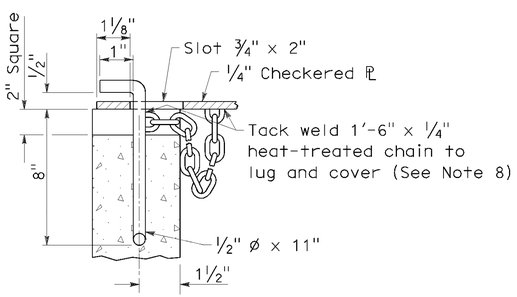

DETAIL "E"

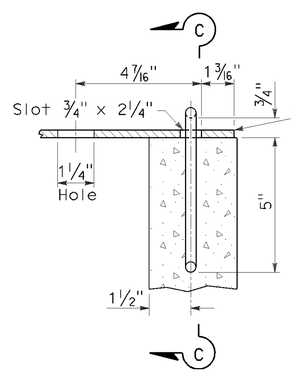

DETAIL "F"

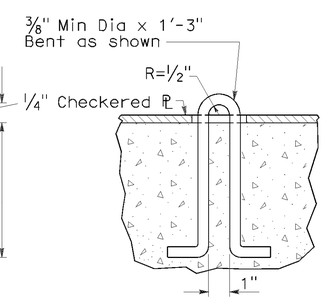

SECTION C-C

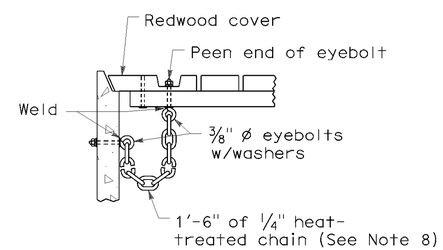

DETAIL "G"

NOTES:

1. For details of steel pipe inlets, see Standard Plan D75A.
2. For details of ladder and steps and when ladder or steps are required, see Standard Plan D75C.
3. Inlet pipes shall not protrude into basin.
4. Except for inlets used for junction boxes, basin floors shall have minimum slope of 4:1 from all directions toward outlet pipe, and a wood trowel finish.
5. See Revised Standard Plan RSP D77A and Standard Plan D77B for Grate and Frame Details and Weights of Miscellaneous Iron and Steel.
6. Designation of Type OCPI pipe inlets on plans indicates trash racks are to be furnished and installed on all side openings. See Standard Plan D75C for Trash Rack details.
7. More than one side opening may be required. Location and number as ordered by the Engineer. Opening may be cast in pipe.
8. Chain to be provided when specified.
9. Place pipe so bars of grate will be parallel with main surface flow.
10. Redwood covers shall only be placed at locations designated on the plans.

STATE OF CALIFORNIA
DEPARTMENT OF TRANSPORTATION

CONCRETE PIPE INLETS

NO SCALE

RSP D75B DATED JUNE 6, 2008 SUPERSEDES STANDARD PLAN D75B
DATED MAY 1, 2006 - PAGE 153 OF THE STANDARD PLANS BOOK DATED MAY 2006.

REVISED STANDARD PLAN RSP D75B

2006 REVISED STANDARD PLAN RSP D75B

P:\proj1\02\3E810_plans\pse\23e810va043.dgn

5-20-08

DIST	COUNTY	ROUTE	POST MILES TOTAL PROJECT	SHEET NO.	TOTAL SHEETS
02	Teh,Sha	5	R27.1/42.1 0.0/0.9	191	215

REGISTERED CIVIL ENGINEER

January 18, 2008
PLANS APPROVAL DATE

Raymond Don Tsztoo No. C37332 Exp. 6-30-08 CIVIL — REGISTERED PROFESSIONAL ENGINEER — STATE OF CALIFORNIA

The State of California or its officers or agents shall not be responsible for the accuracy or completeness of electronic copies of this plan sheet.

To accompany plans dated 06-17-11

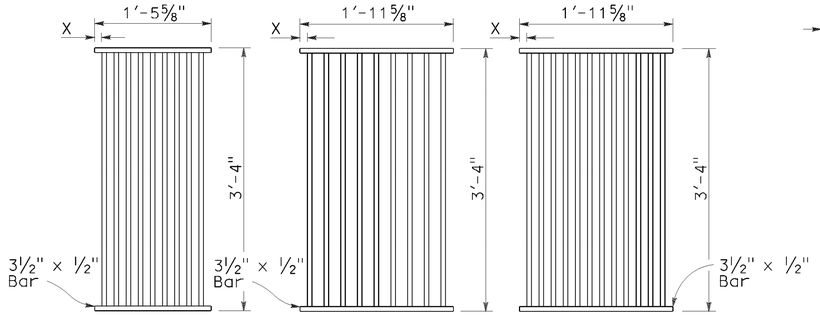

TYPE 18-9

1⅜" Clear spacing. Use within the roadbed on highways where bicycles and pedestrians are excluded.

TYPE 24-9

2" Clear spacing. Use in locations off the roadbed on all types of highways.

TYPE 24-12

1⅜" Clear spacing. Use within the roadbed on highways where bicycles and pedestrians are excluded.

RECTANGULAR GRATE DETAILS

(See table below)

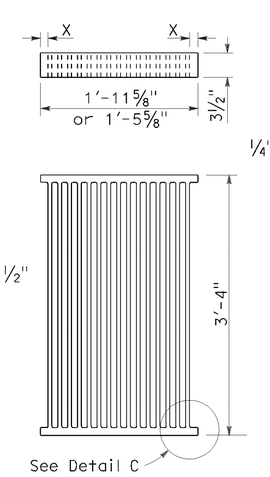

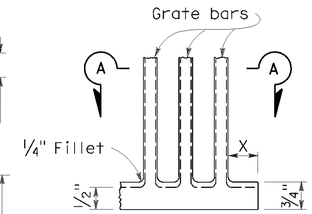

DETAIL C

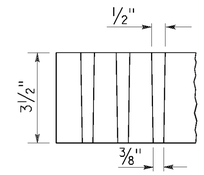

SECTION A-A

ALTERNATIVE CAST NODULAR IRON GRATE OR CAST STEEL GRATE

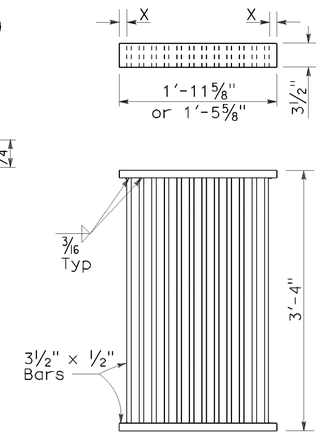

ALTERNATIVE WELDED GRATE

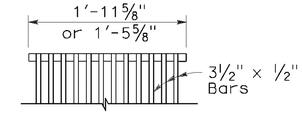

CAST END BLOCK

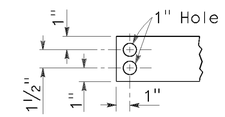

END OF BAR

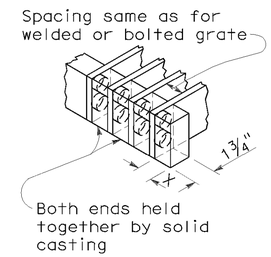

ALTERNATIVE CAST NODULAR IRON OR CAST STEEL END BLOCK GRATE

NOTES:

1. Grate type numbers refer to approximate width of grate in inches and number of bars, respectively.
2. Contractor has the option of using cast nodular iron, cast steel, welded, bolted, or cast end block grate.
3. See Special Provisions for requirements pertaining to galvanizing or asphalt dipping of grates and frames.
4. Rounded top of bars optional on all grates.
5. Pipe inlets with a grate shall be placed so that bars parallel direction of principle surface flow.
6. Full penetration butt welds may be substituted for the fillet welds on all anchors.
7. Standard square, hexagon, round or equivalent headed anchors may be substituted for the right angle hooks on the anchors shown on this plan.
8. Grate and frame weights are based on welded grates (weights of face angles, steps, protection bars, etc. are not included).

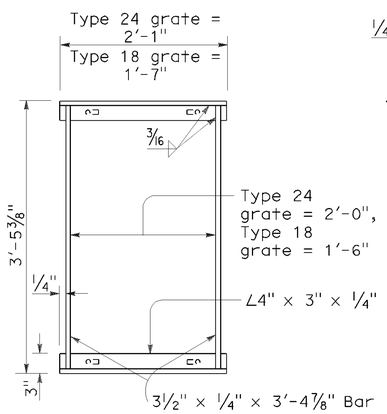

TYPICAL FRAME

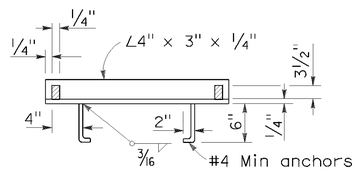

CROSS SECTION

(Thru frame)

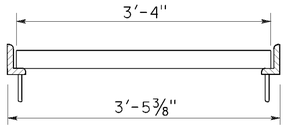

LONGITUDINAL SECTION

(Thru frame and grate)

RECTANGULAR FRAME DETAILS

(For all rectangular grates)

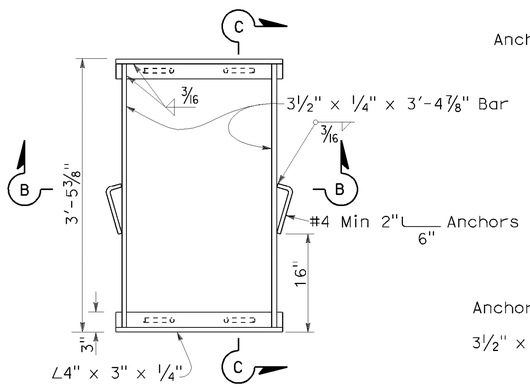

TYPICAL FRAME

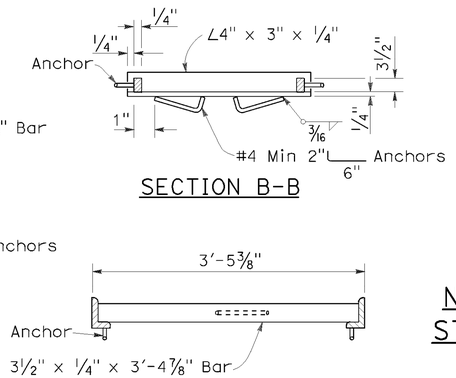

SECTION B-B

SECTION C-C

ALTERNATIVE ANCHOR FOR RECTANGULAR FRAME

(For details not shown, See Rectangular Frame Details)

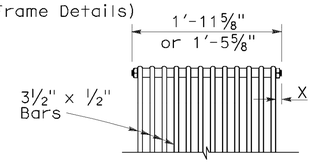

BOLTED END BLOCK

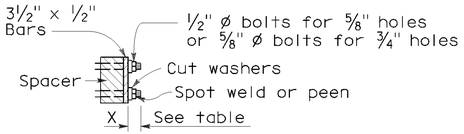

BOLTING DETAIL

ALTERNATIVE BOLTED GRATE

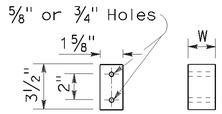

BAR SPACER

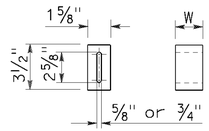

ALTERNATIVE SPACER

W = 1⅜" or 2"

GRATE BAR SPACING TABLE

TYPE	No. OF BARS	CLEAR BAR SPACING	X
18-9	9	1⅜"	1 1/16"
24-9	9	2"	1 9/16"
24-12	12	1⅜"	1¼"

INLET TYPE	COVER TYPE	WEIGHT LB
OS	PLATE	174
OL-7	PLATE	170
OL-10	PLATE	170
OL-14	PLATE	170
OL-21	PLATE	170
OCP	PLATE	112
OCPI	PLATE	112
OCPI	REDWOOD	42
OMP	PLATE	177
OMPI	PLATE	177

INLET TYPE	GRATE TYPE	No. OF GRATES	WEIGHT LB
GDO	24-12	2	634
GOL-7	24-12	1	326
GOL-10	24-12	1	326
GO,G1,G2,G3,G4 (TYPE 24)	24-9	1	263
	24-12	1	326
G4 (TYPE 18),G5,G6	18-9	1	249
GT1	18-9	2	498
GT2	18-9	2	498
GT3	24-12	2	652
GT4	24-12	2	652
TRASH RACK			22

BASIS FOR MISC IRON & STEEL FINAL PAY WEIGHTS FOR DRAINAGE INLETS

(See General Notes, No 8)

STATE OF CALIFORNIA
DEPARTMENT OF TRANSPORTATION

GRATE DETAILS

NO SCALE

RSP D77A DATED JANUARY 18, 2008 SUPERSEDES STANDARD PLAN D77A DATED MAY 1, 2006 - PAGE 155 OF THE STANDARD PLANS BOOK DATED MAY 2006.

REVISED STANDARD PLAN RSP D77A

2006 REVISED STANDARD PLAN RSP D77A

P:\proj1\02\3E810_plans\pse\23e810va044.dgn

12-14-07

DIST	COUNTY	ROUTE	POST MILES TOTAL PROJECT	SHEET NO.	TOTAL SHEETS
02	Teh,Sha	5	R27.1/42.1 0.0/0.9	192	215

Raymond Don Tsztoo
REGISTERED CIVIL ENGINEER

June 6, 2008
PLANS APPROVAL DATE

REGISTERED PROFESSIONAL ENGINEER
Raymond Don Tsztoo
No. C37332
Exp. 6-30-08
CIVIL
STATE OF CALIFORNIA

The State of California or its officers or agents shall not be responsible for the accuracy or completeness of electronic copies of this plan sheet.

To accompany plans dated 06-17-11

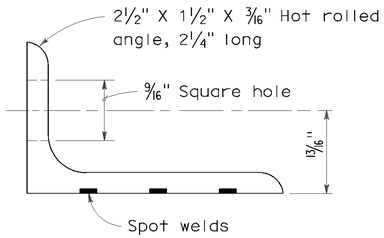

ANGLE

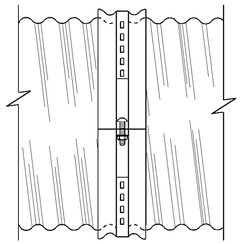

SIDE VIEW
ANGLE

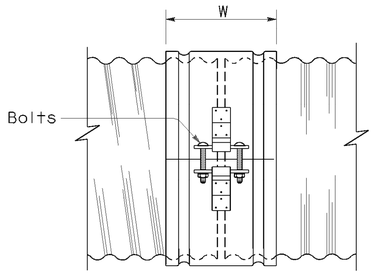

SIDE VIEW
SINGLE BAR AND STRAP

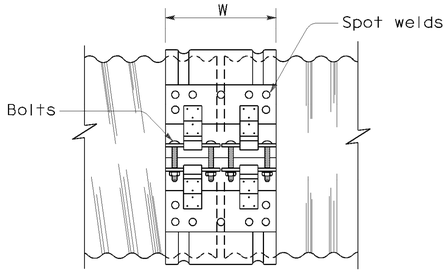

SIDE VIEW
DOUBLE BAR AND STRAP

NOTES:

1. All ferrous metal coupling band connection hardware shall be galvanized or electroplated in accordance with the Standard Specifications.
2. Dimensions and thicknesses shown are minimum.
3. Spot welds shall develop minimum required strength of strap.
4. Fillet welds of equivalent strength may be substituted for spot welds or rivets.
5. Dimension depends upon whether end condition is lips up or lips down.

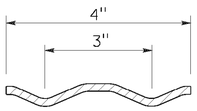

SECTION

H-4 HUGGER BAND

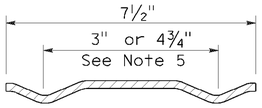

SECTION

H-7 HUGGER BAND

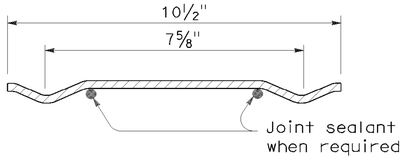

SECTION

H-10 HUGGER BAND

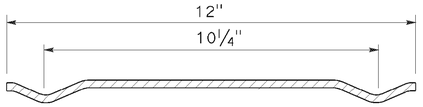

SECTION

H-12 HUGGER BAND

HUGGER COUPLING BANDS

STATE OF CALIFORNIA
DEPARTMENT OF TRANSPORTATION

CORRUGATED METAL PIPE COUPLING DETAILS No. 4 HUGGER COUPLING BANDS

NO SCALE

RSP D97D DATED JUNE 6, 2008 SUPERSEDES STANDARD PLAN D97D
DATED MAY 1, 2006 - PAGE 186 OF THE STANDARD PLANS BOOK DATED MAY 2006.

REVISED STANDARD PLAN RSP D97D

2006 REVISED STANDARD PLAN RSP D97D

P:\proj1\02\3E810_plans\pse\23e810va045.dgn

3-24-08

DIST	COUNTY	ROUTE	POST MILES TOTAL PROJECT	SHEET NO.	TOTAL SHEETS
02	Teh,Sha	5	R27.1/42.1 0.0/0.9	193	215

Raymond Don Tsztoo
REGISTERED CIVIL ENGINEER

June 6, 2008
PLANS APPROVAL DATE

REGISTERED PROFESSIONAL ENGINEER Raymond Don Tsztoo No. C37332 Exp. 6-30-08 CIVIL STATE OF CALIFORNIA

The State of California or its officers or agents shall not be responsible for the accuracy or completeness of electronic copies of this plan sheet.

ANNULAR AND HELICAL PROFILE

COUPLING TYPE	PIPE CORRUGATION	PIPE SIZE	W OR A	PIPE WALL THICKNESS CSP	PIPE WALL THICKNESS CAP	BAND THICKNESS CSP	BAND THICKNESS CAP	BAR AND STRAP (CSP ONLY) STRAP THICKNESS	BOLTS Dia	BAR Dia	BAR YIELD STRENGTH	ANGLE DIMENSIONS CSP	ANGLE DIMENSIONS CAP	BOLTS (No.- Dia) CSP	BOLTS (No.- Dia) CAP	RIVETS ANGLE TO BAND CSP	RIVETS ANGLE TO BAND CAP	SPOT WELDS ANGLE TO BAND CSP
TWO PIECE INTEGRAL FLANGE	1½′ × ¼″	6″-10″	7″	0.052″-0.079″	0.048″-0.060″	0.052″	0.060″							2-⅜″	2-⅜″			
		12″-18″	7″	0.052″-0.079″		0.064″								2-½″				
	2⅔″ × ½″	12″-24″	7″	0.052″-0.079″	0.060″-0.105″	0.064″	0.060″							2-½″	2-½″			
UNIVERSAL	2⅔″ × ½″	THROUGH 36″	12″	0.052″-0.138″	0.060″-0.135″	0.052″	0.060″					2″ × 2″ × 3/16″	2″ × 2″ × 3/16″	3-½″	3-½″	3-⅜″	3-⅜″	3-½″
		42″-60″	12″	0.052″-0.168″	0.075″-0.164″	0.052″	0.060″					2″ × 2″ × 3/16″	2″ × 2″ × 3/16″	3-½″	3-½″	3-⅜″	3-⅜″	5-½″
		THROUGH 72″	12″	0.052″-0.168″	0.164″	0.052″	0.105″	0.079″	½″	⅞″	32 ksi	2″ × 2″ × 3/16″	2″ × 2″ × 3/16″	3-½″	3-½″	3-⅜″	3-⅜″	5-½″
		78″-84″	16¼″	0.168″		0.079″		DOUBLE 0.079″	½″	⅞″	32 ksi							
ANNULAR	2⅔″ × ½″	THROUGH 36″	7″	0.064″-0.138″	0.060″-0.135″	0.052″	0.060″	0.079″	½″	⅞″	32 ksi	2″ × 2″ × 3/16″	2″ × 2″ × 3/16″	2-½″	2-½″	3-⅜″	3-⅜″	3-½″
		42″-72″	12″	0.064″-0.168″	0.075″-0.164″	0.052″	0.105″	0.079″	½″	⅞″	32 ksi	2″ × 2″ × 3/16″	2″ × 2″ × 3/16″	3-½″	3-½″	3-⅜″	3-⅜″	5-½″
		78″-84″	12″	0.168″		0.079″		0.109″	½″	⅞″	45 ksi	2″ × 2″ × 3/16″		3-½″		3-⅜″		5-½″
	3″ × 1″	48″-90″	14″	0.064″-0.109″		0.052″		0.079″	½″	⅞″	32 ksi	2″ × 2″ × 3/16″		3-½″		3-⅜″		5-½″
		96″-120″	14″	0.079″-0.109″		0.052″		0.109″	½″	⅞″	45 ksi	2″ × 2″ × 3/16″		3-½″		4-⅜″		
		42″-108″	14″		0.060″-0.135″		0.060″						2″ × 2″ × 3/16″		3-½″		3-⅜″	
HELICAL	2⅔″ × ½″	THROUGH 36″	12″	0.052″-0.138″	0.060″-0.135″	0.052″	0.060″	0.079″	½″	⅞″	32 ksi	2″ × 2″ × 3/16″	2″ × 2″ × 3/16″	3-½″	3-½″	3-⅜″	3-⅜″	3-½″
		42″-72″	12″	0.052″-0.168″	0.075″-0.164″	0.052″	0.060″	0.079″	½″	⅞″	32 ksi	2″ × 2″ × 3/16″	2″ × 2″ × 3/16″	3-½″	3-½″	3-⅜″	3-⅜″	5-½″
		78″-84″	12″	0.168″		0.079″		0.109″	½″	⅞″	45 ksi	2″ × 2″ × 3/16″		3-½″		3-⅜″		5-½″
	3″ × 1″	48″-90″	14″	0.064″-0.109″		0.052″		0.079″	½″	⅞″	32 ksi	2″ × 2″ × 3/16″		3-½″		3-⅜″		5-½″
		96″-120″	14″	0.079″-0.109″		0.052″		0.109″	½″	⅞″	45 ksi	2″ × 2″ × 3/16″		3-½″		4-⅜″		
		42″-108″	14″		0.060″-0.135″		0.060″						2″ × 2″ × 3/16″		3-½″		3-⅜″	
HUGGER	2⅔″ × ½″ REROLLED END	12″-54″	4″	0.052″-0.109″		0.052″						2½″ × 1½″ × 3/16″	2½″ × 1½″ × 3/16″	1-½″				3-½″
		60″-66″	4″	0.109″		0.064″						2½″ × 1½″ × 3/16″	2½″ × 1½″ × 3/16″	1-½″				3-½″
		36″-48″	4″	0.138″		0.064″						2½″ × 1½″ × 3/16″	2½″ × 1½″ × 3/16″	1-½″				3-½″
		THROUGH 72″	10½″	0.052″-0.168″		0.052″		0.079″	½″	⅞″	32 ksi							
		78″-84″	10½″	0.168″		0.079″		0.109″	½″	⅞″	45 ksi							
	3″ × 1″ REROLLED END	48″-90″	10½″	0.064″-0.109″		0.052″		0.079″	½″	⅞″	32 ksi							
		96″-120″	10½″	0.079″-0.109″		0.052″		0.109″	½″	⅞″	45 ksi							
	5″ × 1″ REROLLED END	48″-66″	7½″	0.064″-0.109″		0.064″		0.079″	½″	⅞″	32 ksi	2½″ × 1½″ × 3/16″	2½″ × 1½″ × 3/16″	1-½″				3-½″
		72″-90″	7½″	0.064″-0.079″		0.064″		0.079″	½″	⅞″	32 ksi	2½″ × 1½″ × 3/16″	2½″ × 1½″ × 3/16″	1-½″				3-½″
		48″-90″	7½″	0.064″-0.138″		0.064″		0.079″	½″	⅞″	32 ksi							
		48″-120″	12″ SEE	0.064″-0.109″		0.064″		0.079″	½″	⅞″	32 ksi							
		48″-84″	12″ NOTE	0.138″		0.064″		0.079″	½″	⅞″	32 ksi							
		90″-120″	12″ 11	0.138″		0.064″		DOUBLE 0.079″	½″	⅞″	32 ksi							

SPIRAL RIB PROFILE

COUPLING TYPE	PIPE CORRUGATION	PIPE SIZE	W	PIPE WALL THICKNESS SSRP	PIPE WALL THICKNESS ASRP	BAND THICKNESS SSRP	BAND THICKNESS ASRP	BAR AND STRAP (SSRP ONLY) STRAP THICKNESS	BOLTS Dia	BAR Dia	BAR YIELD STRENGTH	ANGLE DIMENSIONS SSRP	ANGLE DIMENSIONS ASRP	BOLTS (No.- Dia) SSRP	BOLTS (No.- Dia) ASRP	RIVETS ANGLE TO BAND SSRP	RIVETS ANGLE TO BAND ASRP	SPOT WELDS ANGLE TO BAND SSRP
ANNULAR	2⅔″ × ½″ * REROLLED END	24″-36″	12″	0.064″-0.109″	0.060″-0.105″	0.052″	0.060″	0.079″	½″	⅞″	32 ksi	2″ × 2″ × 3/16″	2″ × 2″ × 3/16″	3-½″	3-½″	3-⅜″	3-⅜″	5-½″
		42″-60″	12″	0.064″-0.109″	0.075″-0.105″	0.052″	0.105″	0.079″	½″	⅞″	32 ksi	2″ × 2″ × 3/16″	2″ × 2″ × 3/16″	3-½″	3-½″	3-⅜″	3-⅜″	5-½″
		66″-72″	12″	0.064″-0.109″		0.052″		0.079″	½″	⅞″	32 ksi	2″ × 2″ × 3/16″	2″ × 2″ × 3/16″	3-½″	3-½″	3-⅜″	3-⅜″	5-½″
		78″-114″	12″	0.079″-0.109″		0.079″		0.109″	½″	⅞″	45 ksi	2″ × 2″ × 3/16″	2″ × 2″ × 3/16″	3-½″	3-½″	3-⅜″	3-⅜″	5-½″
HUGGER	2⅔″ × ½″ * REROLLED END	24″-72″	10½″	0.064″-0.109″		0.052″		0.079″	½″	⅞″	32 ksi							
		78″-84″	10½″	0.109″		0.079″		0.109″	½″	⅞″	45 ksi							

* See Note 14.

14. All profiles of Spiral Rib Pipe (¾″ × ¾″ ribs at 7½″ pitch and ¾″ × 1″ ribs at 11½″ pitch in both steel and aluminum and ¾″ × 1″ ribs at 8½″ pitch in steel only) shall be manufactured with rerolled ends. Corrugation profile of the rerolled ends shall be 2⅔″ × ½″ annual corrugations with a minimum of two full corrugations at each end.

NOTES:

To accompany plans dated 06-17-11

1. All ferrous metal coupling band connection hardware shall be galvanized or electroplated in accordance with the Standard Specifications.
2. For helically corrugated coupling bands, the connection angles may be oriented parallel to the pipe axis, provided connecting holes are slotted lengthwise sufficiently to allow adjustment for the helix angle.
3. Tension strap may be connected to band with either spot welds or fillet welds that develop minimum required strength of strap.
4. Use 1¼″ gage line dimension on attached angle leg for rivets and spot welds.
5. Band thickness shall not be less than:
   a. 3 standard thicknesses lighter than the thickness of the pipe for Corrugated Steel Pipe.
   b. 2 standard thicknesses lighter than the thickness of the pipe and in no case lighter than 0.060″ for Corrugated Aluminum Pipe.
6. Dimensions, thicknesses and strengths shown are minimum.
7. For pipe arches use same width band as for round pipe of equal periphery.
8. Fillet welds of equivalent strenght may be substituted for spot welds or rivets.
9. Spot welds shall develop minimum required strength of strap.
10. Pipe with rerolled ends having at least two 2⅔″ × ½″ annular corrugations at each end with or without an upturned flange may be connected with any of the annular coupling bands shown for pipe of the same diameter and wall thickness and having 2⅔″ × ½″ corrugations.
11. In the case of H-12 huggerbands, two piece bands are required for diameters through 96″ and three piece bands are required for diameters 102″ through 120″.
12. Two piece bands are required for pipes greater than 42″ diameter.
13. The 2¼″ × 2″ × 0.109″ thick galvanized die-formed angle connector may be used in lieu of the 2″ × 2″ × 3/16″ angle connector for standard joints only on pipes through 72″ diameter.

STATE OF CALIFORNIA
DEPARTMENT OF TRANSPORTATION

CORRUGATED METAL PIPE COUPLING DETAILS No. 5 STANDARD JOINT

NO SCALE

RSP D97E DATED JUNE 6, 2008 SUPERSEDES STANDARD PLAN D97E DATED MAY 1, 2006 - PAGE 187 OF THE STANDARD PLANS BOOK DATED MAY 2006.

REVISED STANDARD PLAN RSP D97E

2006 REVISED STANDARD PLAN RSP D97E

P:\proj1\02\3E810_plans\pse\23e810va046.dgn

4-2-08

DIST	COUNTY	ROUTE	POST MILES TOTAL PROJECT	SHEET NO.	TOTAL SHEETS
02	Teh,Sha	5	R27.1/42.1 0.0/0.9	194	215

Randell D. Hiatt
REGISTERED CIVIL ENGINEER

June 6, 2008
PLANS APPROVAL DATE

REGISTERED PROFESSIONAL ENGINEER
Randell D. Hiatt
No. C50200
Exp. 6-30-09
CIVIL
STATE OF CALIFORNIA

The State of California or its officers or agents shall not be responsible for the accuracy or completeness of electronic copies of this plan sheet.

To accompany plans dated 06-17-11

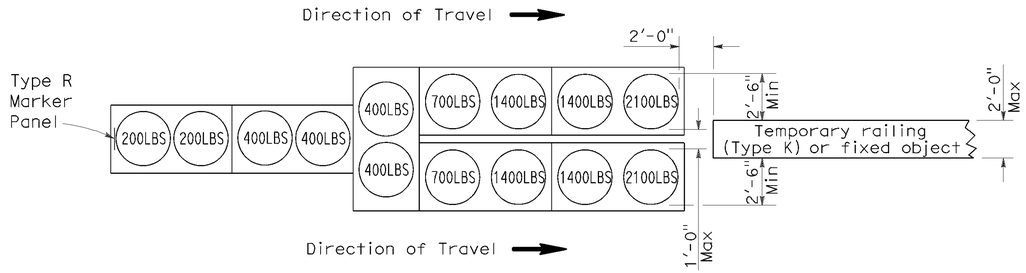

ARRAY 'TU14'

Approach speed 45 mph or more

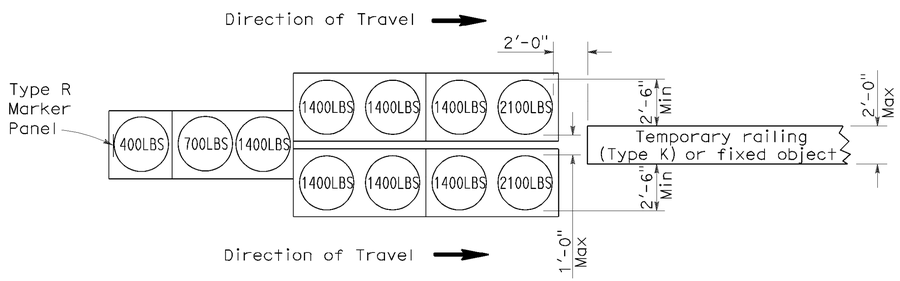

ARRAY 'TU11'

Approach speed less than 45 mph

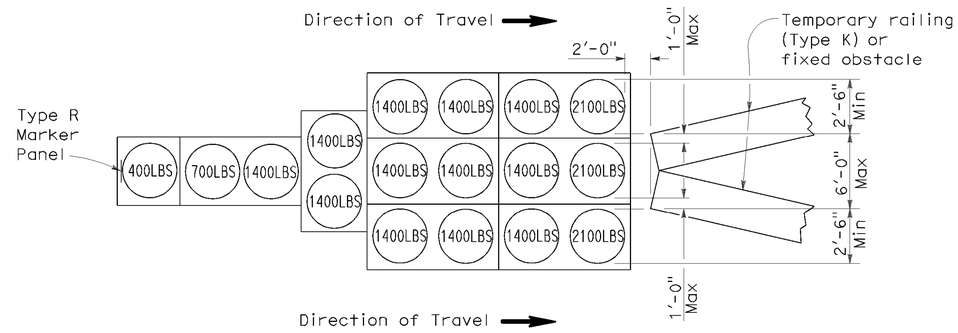

ARRAY 'TU17'

Approach speed less than 45 mph

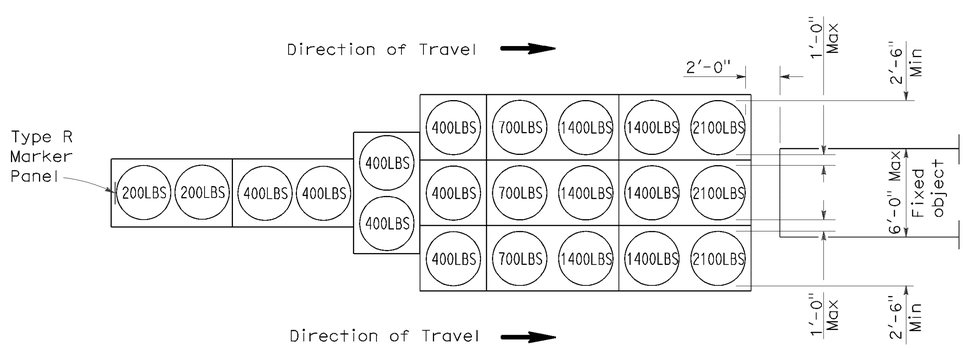

ARRAY 'TU21'

Approach speed 45 mph or more

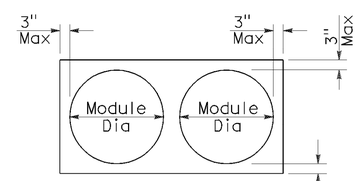

PLAN

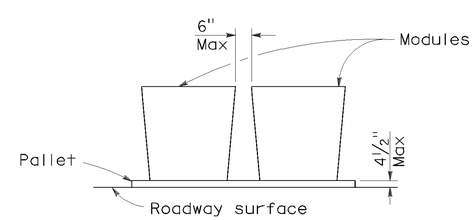

ELEVATION

CRASH CUSHION PALLET DETAIL

See Note 7

NOTES:

1. (XXX) Indicates sand filled module location and weight of sand in pounds for each module. Module spacing is based on the greater diameter of the module.
2. All sand weights are nominal.
3. Temporary crash cushion arrays shall not encroach on the traveled way.
4. Place the top of Type R marker panel 1" below the module lid.
5. Refer to Standard Plan A73B for marker details.
6. Approach speeds indicated conform to NCHRP 350 Report criteria.
7. Use of pallets is optional.

STATE OF CALIFORNIA
DEPARTMENT OF TRANSPORTATION

TEMPORARY CRASH CUSHION, SAND FILLED (UNIDIRECTIONAL)

NO SCALE

RSP T1A DATED JUNE 6, 2008 SUPERSEDES STANDARD PLAN T1A
DATED MAY 1, 2006 - PAGE 211 OF THE STANDARD PLANS BOOK DATED MAY 2006.

REVISED STANDARD PLAN RSP T1A

2006 REVISED STANDARD PLAN RSP T1A

P:\proj1\02\3E810_plans\pse\23e810va047.dgn

5-15-08

DIST	COUNTY	ROUTE	POST MILES TOTAL PROJECT	SHEET NO.	TOTAL SHEETS
02	Teh,Sha	5	R27.1/42.1 0.0/0.9	195	215

Randell D. Hiatt
REGISTERED CIVIL ENGINEER

June 6, 2008
PLANS APPROVAL DATE

REGISTERED PROFESSIONAL ENGINEER
Randell D. Hiatt
No. C50200
Exp. 6-30-09
CIVIL
STATE OF CALIFORNIA

The State of California or its officers or agents shall not be responsible for the accuracy or completeness of electronic copies of this plan sheet.

To accompany plans dated 06-17-11

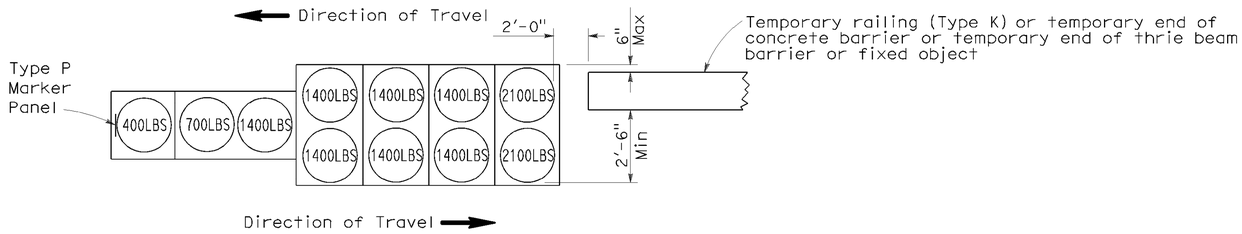

ARRAY 'TB11'

Approach speed less than 45 mph

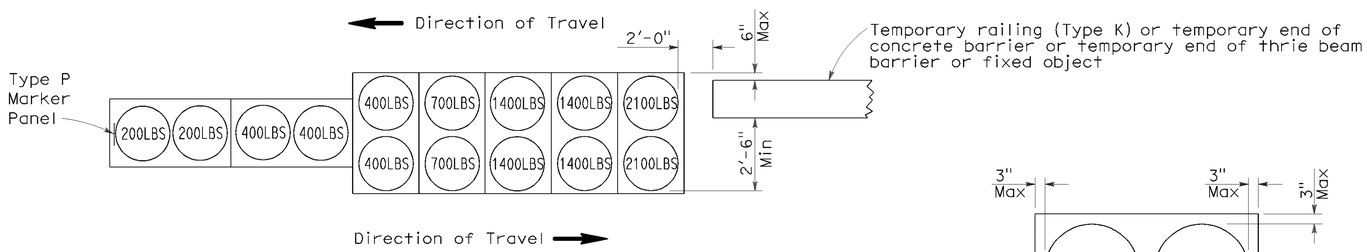

ARRAY 'TB14'

Approach speed 45 mph or more

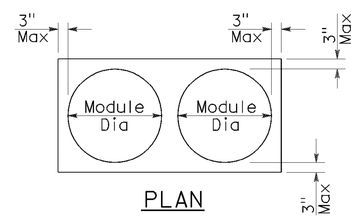

PLAN

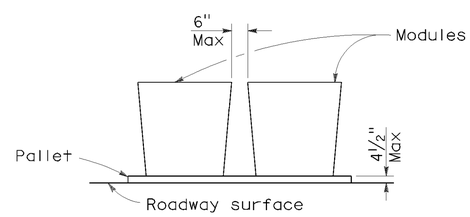

ELEVATION

CRASH CUSHION PALLET DETAIL

See Note 7

NOTES:

1. (XXX) Indicates sand filled module location and weight of sand in pounds for each module. Module spacing is based on the greater diameter of the module.
2. All sand weights are nominal.
3. Temporary crash cushion arrays shall not encroach on the traveled way.
4. Place the Type P marker panel so that the bottom of the panel rests upon the pallet.
5. Refer to Standard Plan A73B for marker details.
6. Approach speeds indicated conform to NCHRP 350 Report criteria.
7. Use of pallets is optional.

STATE OF CALIFORNIA
DEPARTMENT OF TRANSPORTATION

TEMPORARY CRASH CUSHION, SAND FILLED (BIDIRECTIONAL)

NO SCALE

RSP T1B DATED JUNE 6, 2008 SUPERSEDES STANDARD PLAN T1B
DATED MAY 1, 2006 - PAGE 212 OF THE STANDARD PLANS BOOK DATED MAY 2006.

REVISED STANDARD PLAN RSP T1B

2006 REVISED STANDARD PLAN RSP T1B

P:\proj1\02\3E810_plans\pse\23e810va048.dgn

5-15-08

DIST	COUNTY	ROUTE	POST MILES TOTAL PROJECT	SHEET NO.	TOTAL SHEETS
02	Teh,Sha	5	R27.1/42.1 0.0/0.9	196	215

Randell D. Hiatt
REGISTERED CIVIL ENGINEER

June 6, 2008
PLANS APPROVAL DATE

REGISTERED PROFESSIONAL ENGINEER
Randell D. Hiatt
No. C50200
Exp. 6-30-09
CIVIL
STATE OF CALIFORNIA

The State of California or its officers or agents shall not be responsible for the accuracy or completeness of electronic copies of this plan sheet.

To accompany plans dated 06-17-11

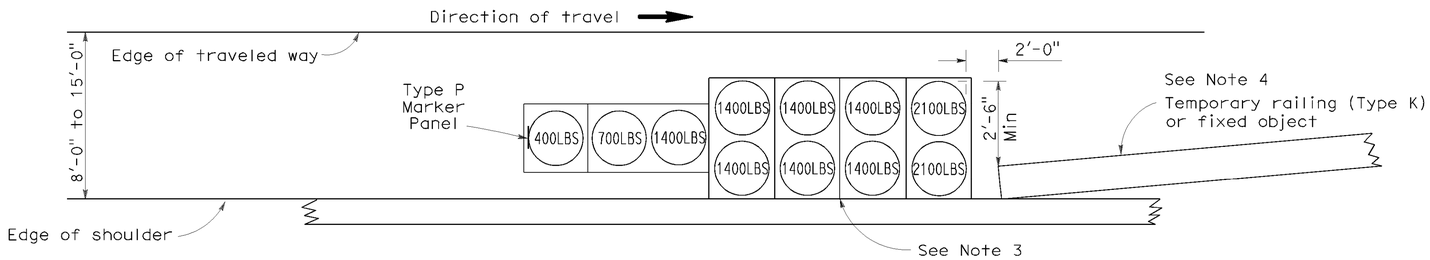

ARRAY 'TS11'

Approach speed less than 45 mph
See Note 9

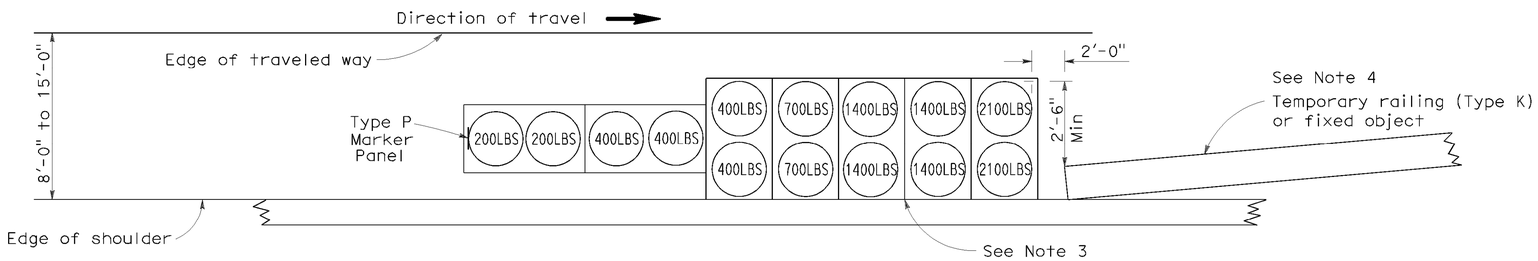

ARRAY 'TS14'

Approach speed 45 mph or more
See Note 9

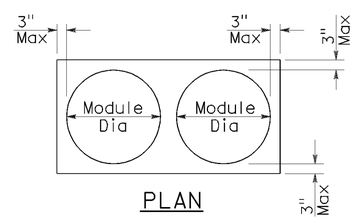

PLAN

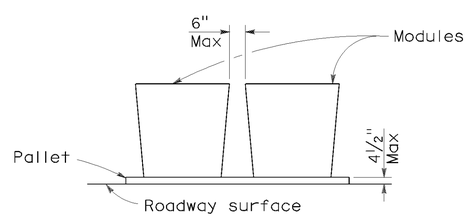

ELEVATION

CRASH CUSHION PALLET DETAIL

See Note 11

NOTES:

1. (XXX) Indicates sand filled module location and weight of sand in pounds for each module. Module spacing is based on the greater diameter of the module.
2. All sand weights are nominal.
3. The temporary crash cushion arrays shown on this plan shall be used only in locations where there will be traffic on one side of the temporary crash cushion array.
4. If the fixed object or approach end of the temporary railing is less than 15'-0" from the edge of traveled way, a temporary crash cushion is required in a construction or work zone.
5. Temporary crash cushion arrays shall not encroach on the traveled way.
6. Arrays for median shoulders shall conform to details shown on this plan for outside shoulders.
7. Place the Type P marker panel so that the bottom of the panel rests upon the pallet and faces traffic.
8. Refer to Standard Plan A73B for marker details.
9. For shoulder widths less than 8'-0", appropriate approved crash cushion protection, other than sand filled modules, shall be provided at fixed objects and at approach ends of temporary railing. The specific type of crash cushion shall be as shown on the project plans or as specified in the Special Provisions, or if not shown on the project plans or specified in the Special Provisions, shall be as approved by the Engineer.
10. Approach speeds indicated conform to NCHRP 350 Report criteria.
11. Use of pallets is optional.

STATE OF CALIFORNIA
DEPARTMENT OF TRANSPORTATION

TEMPORARY CRASH CUSHION, SAND FILLED (SHOULDER INSTALLATIONS)

NO SCALE

RSP T2 DATED JUNE 6, 2008 SUPERSEDES STANDARD PLAN T2
DATED MAY 1, 2006 - PAGE 213 OF THE STANDARD PLANS BOOK DATED MAY 2006.

REVISED STANDARD PLAN RSP T2

2006 REVISED STANDARD PLAN RSP T2

P:\proj1\02\3E810_plans\pse\23e810va049.dgn

5-15-08

DIST	COUNTY	ROUTE	POST MILES TOTAL PROJECT	SHEET NO.	TOTAL SHEETS
02	Teh,Sha	5	R27.1/42.1 0.0/0.9	197	215

REGISTERED CIVIL ENGINEER

November 17, 2006
PLANS APPROVAL DATE

REGISTERED PROFESSIONAL ENGINEER Greg W. Edwards No. C36386 Exp. 6-30-08 CIVIL STATE OF CALIFORNIA

The State of California or its officers or agents shall not be responsible for the accuracy or completeness of electronic copies of this plan sheet.

To accompany plans dated 06-17-11

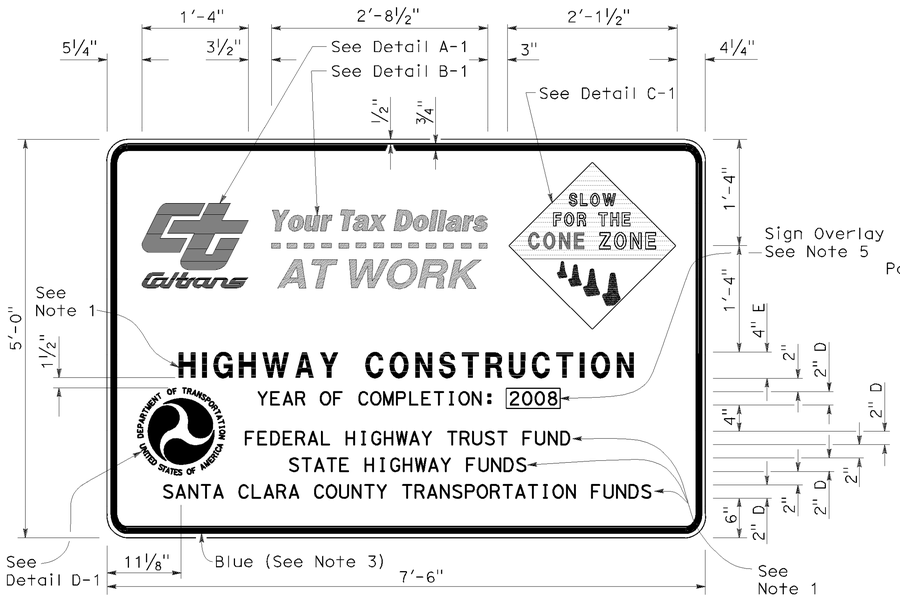

TYPE 1

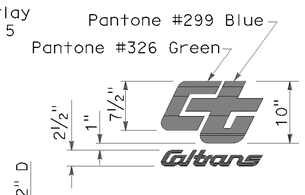

DETAIL A-1

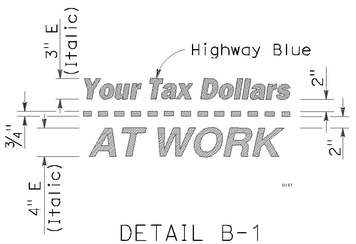

DETAIL B-1
(See Note 3)

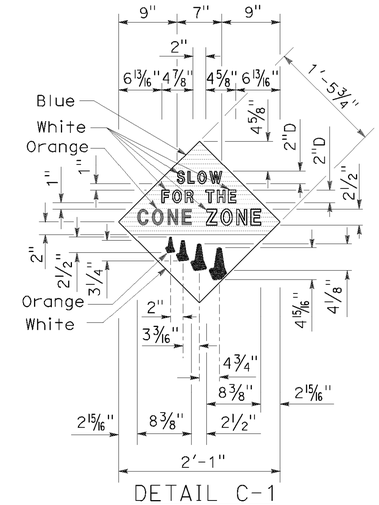

DETAIL C-1
(See Note 4)

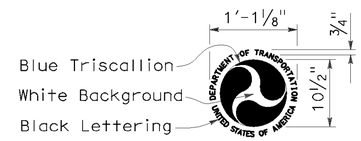

DETAIL D-1
(See Note 6)

NOTES:

1. The sign messages shown for type of project and fund types are examples only. See the Special Provisions for the applicable type of project and fund type messages to be used.
2. Except as otherwise shown, the legend of sign shall be black on a white background (non-reflective).
3. The border of the signs and details "B-1" and "B-2" shall be blue (non-reflective).
4. The diamond in details "C-1" and "C-2" shall be blue for the background of message, " SLOW FOR THE CONE ZONE", and white background for the orange cones. The color and type of font for the "SLOW FOR THE CONE ZONE" message shall be: "SLOW" white D; "FOR THE" white D; "CONE" orange Arial font; "ZONE" white Arial font.
5. Year of completion of project construction shown on the overlay is an example only. See the Special Provisions.
6. Use when the Project involves Federal Highway Trust Fund.

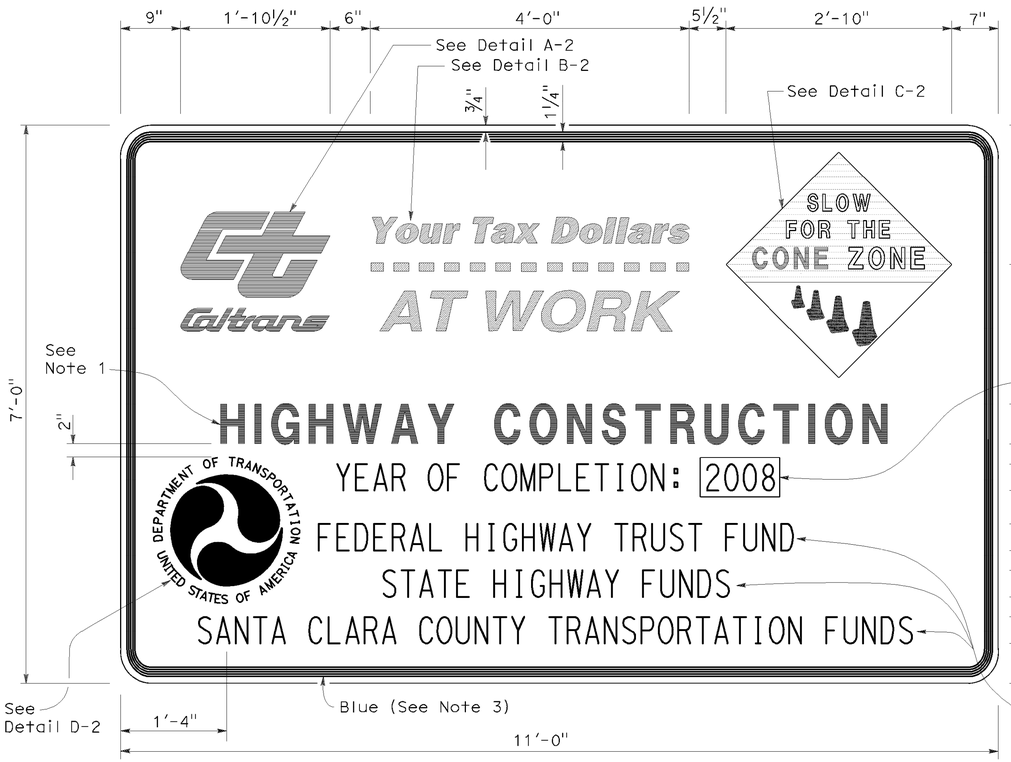

TYPE 2

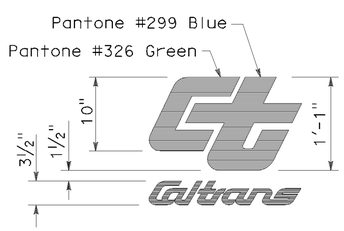

DETAIL A-2

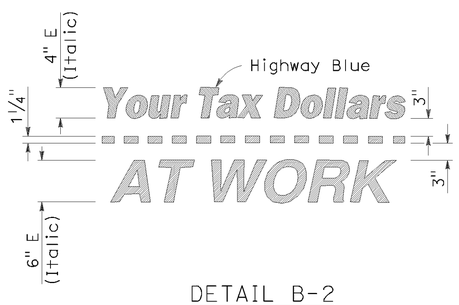

DETAIL B-2
(See Note 3)

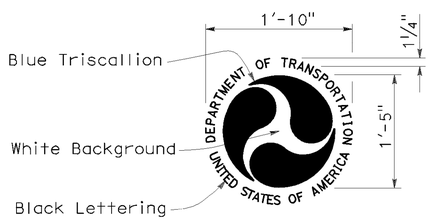

DETAIL D-2
(See Note 6)

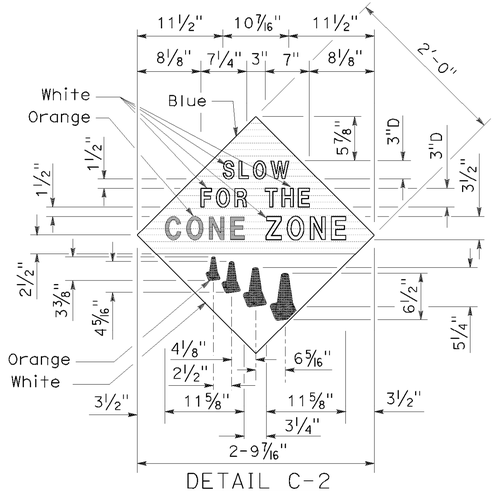

DETAIL C-2
(See Note 4)

STATE OF CALIFORNIA
DEPARTMENT OF TRANSPORTATION

CONSTRUCTION PROJECT FUNDING IDENTIFICATION SIGNS

NO SCALE

RSP T7 DATED NOVEMBER 17, 2006 SUPERSEDES STANDARD PLAN T7
DATED MAY 1, 2006 - PAGE 217 OF THE STANDARD PLANS BOOK DATED MAY 2006.

REVISED STANDARD PLAN RSP T7

2006 REVISED STANDARD PLAN RSP T7

P:\proj1\02\3E810_plans\pse\23e810va050.dgn

9-7-06

DIST	COUNTY	ROUTE	POST MILES TOTAL PROJECT	SHEET NO.	TOTAL SHEETS
02	Teh,Sha	5	R27.1/42.1 0.0/0.9	198	215

Robert B Schott
LICENSED LANDSCAPE ARCHITECT

April 3, 2009
PLANS APPROVAL DATE

The State of California or its officers or agents shall not be responsible for the accuracy or completeness of electronic copies of this plan sheet.

LICENSED LANDSCAPE ARCHITECT — Robert B. Schott 3625 — Expires 11-30-10 Renewal Date — 2-25-09 Date — STATE OF CALIFORNIA

To accompany plans dated 06-17-11

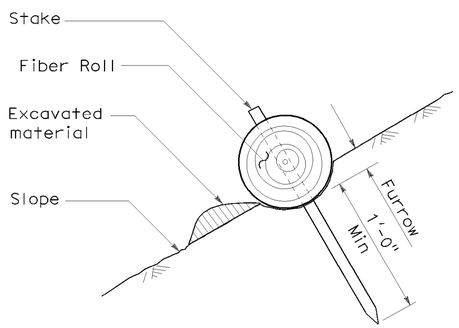

SECTION

TEMPORARY FIBER ROLL (TYPE 1)

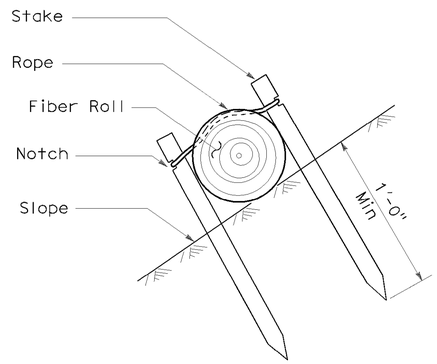

SECTION

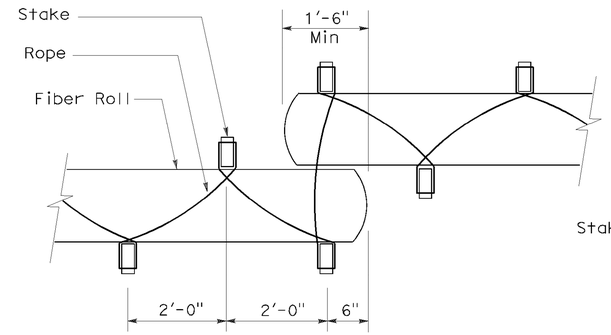

PLAN

TEMPORARY FIBER ROLL (TYPE 2)

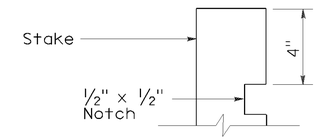

ELEVATION

STAKE NOTCH DETAIL

NOTES:

1. Temporary fiber roll spacing varies depending upon slope inclination.
2. Installations shown in the perspectives are for slope inclination of 10:1 and steeper.

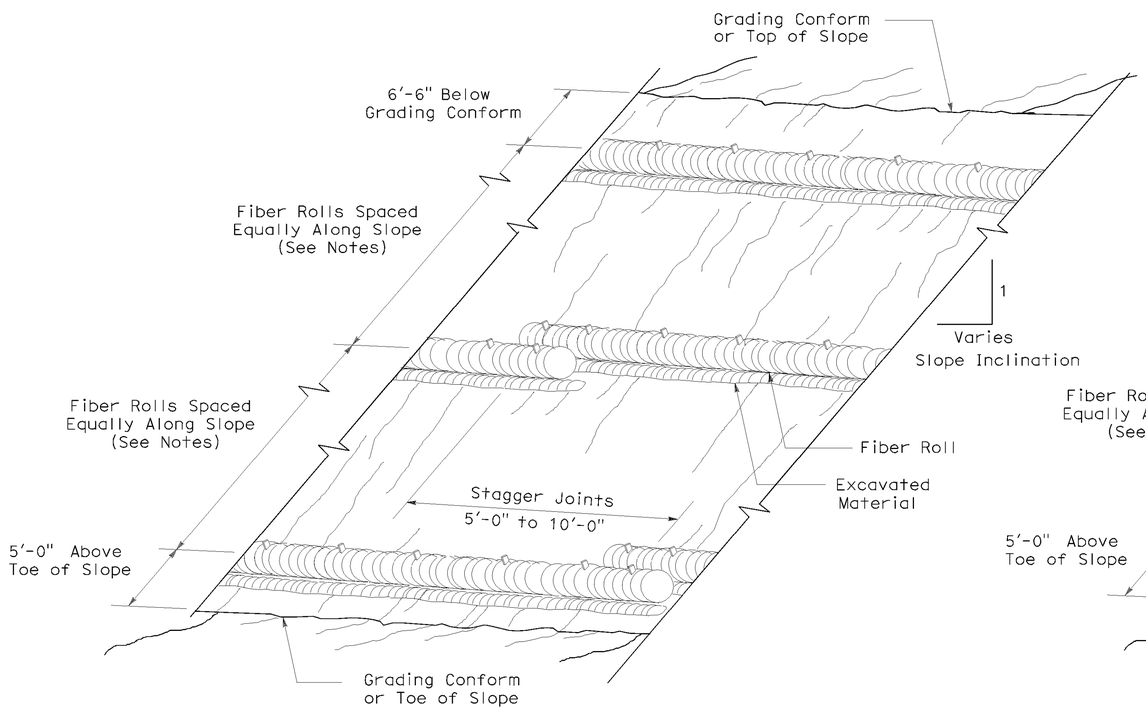

PERSPECTIVE

TEMPORARY FIBER ROLL (TYPE 1)

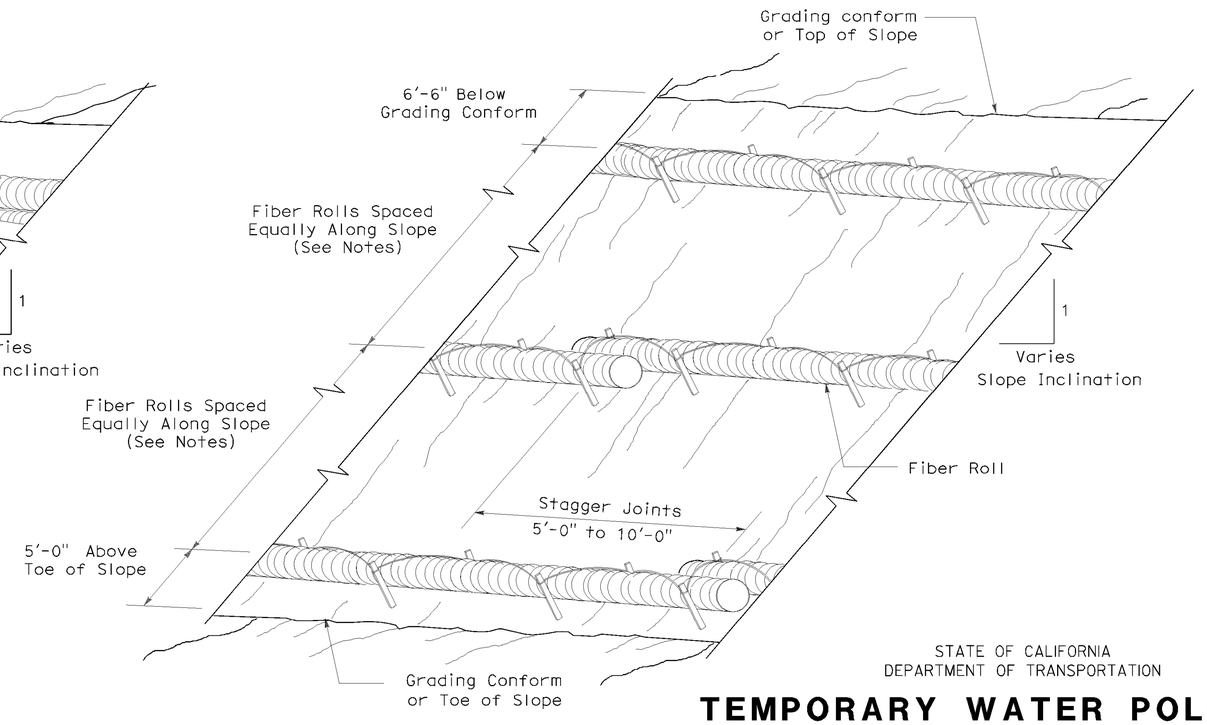

PERSPECTIVE

TEMPORARY FIBER ROLL (TYPE 2)

STATE OF CALIFORNIA
DEPARTMENT OF TRANSPORTATION

TEMPORARY WATER POLLUTION CONTROL DETAILS (TEMPORARY FIBER ROLL)

NO SCALE

RSP T56 DATED APRIL 3, 2009 SUPERSEDES STANDARD PLAN T56
DATED MAY 1, 2006 - PAGE 232 OF THE STANDARD PLANS BOOK DATED MAY 2006.

REVISED STANDARD PLAN RSP T56

2006 REVISED STANDARD PLAN RSP T56

P:\proj1\02\3E810_plans\pse\23e810va051.dgn

2-23-09

DIST	COUNTY	ROUTE	POST MILES TOTAL PROJECT	SHEET NO.	TOTAL SHEETS
02	Teh,Sha	5	R27.1/42.1 0.0/0.9	199	215

LICENSED LANDSCAPE ARCHITECT

August 15, 2008
PLANS Approval DATE

LICENSED LANDSCAPE ARCHITECT Robert B. Schott 3625 Signature 11-04-08 Renewal Date 08-11-08 Date STATE OF CALIFORNIA

The State of California or its officers or agents shall not be responsible for the accuracy or completeness of electronic copies of this plan sheet.

To accompany plans dated 06-17-11

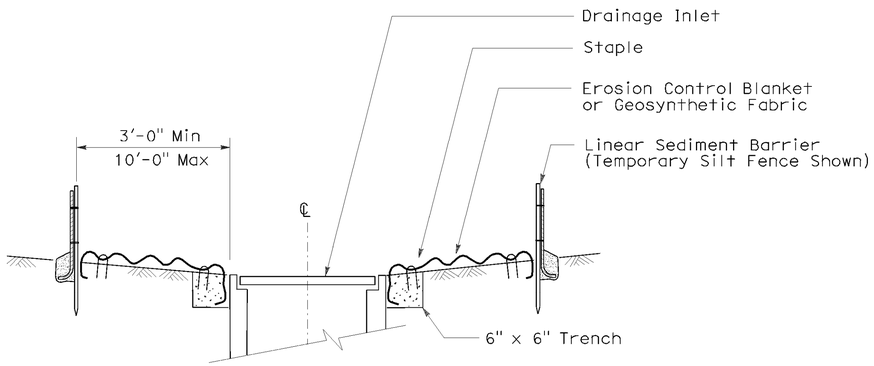

SECTION A-A

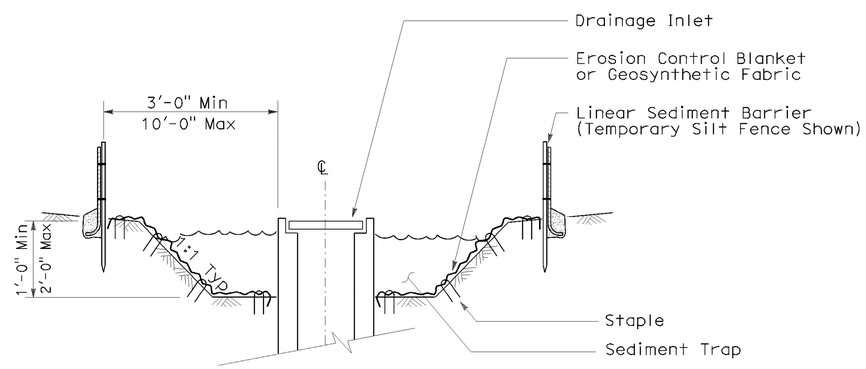

SECTION B-B

NOTES:

1. See Standard Plan T51 for Temporary Silt Fence.
2. Dimensions may vary to fit field conditions.

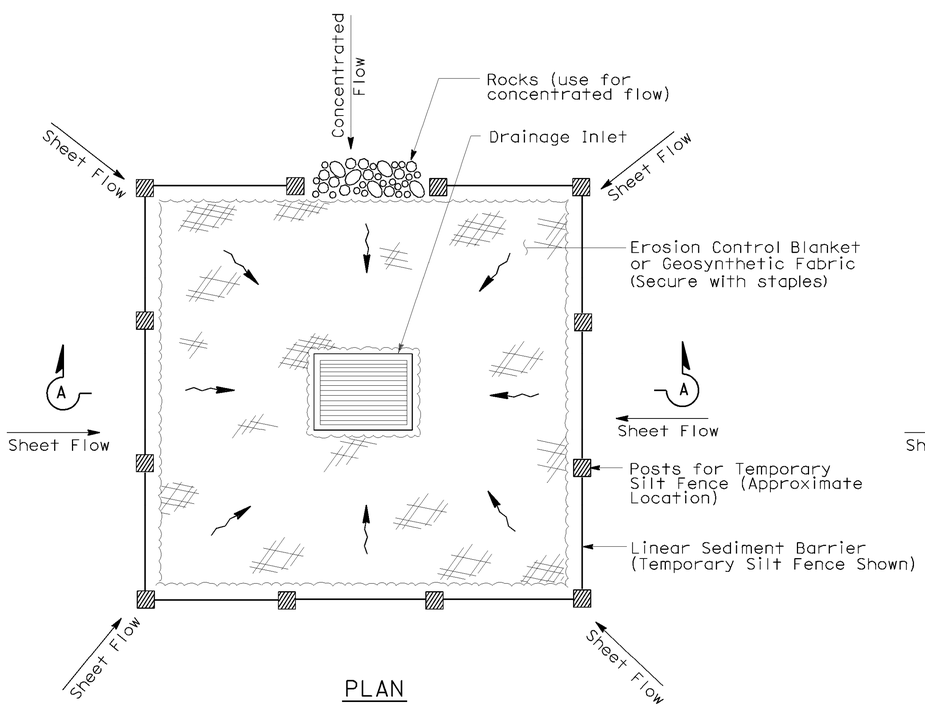

PLAN

TEMPORARY DRAINAGE INLET PROTECTION (TYPE 1)

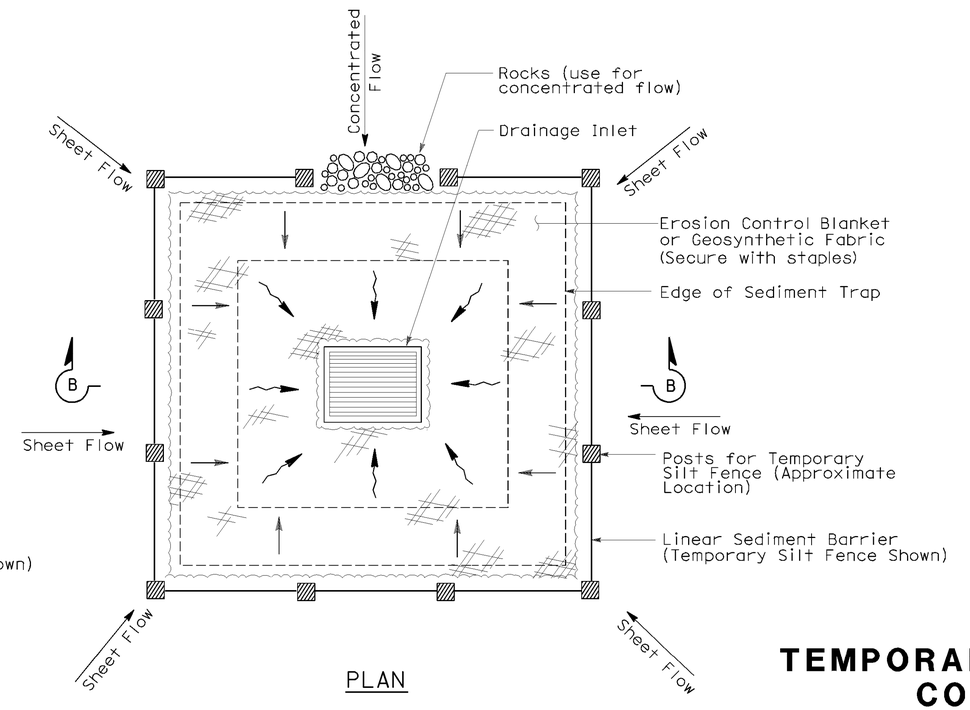

PLAN

TEMPORARY DRAINAGE INLET PROTECTION (TYPE 2) (EXCAVATED SEDIMENT TRAP)

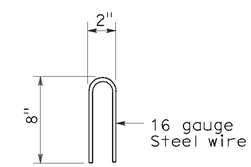

STAPLE DETAIL

STATE OF CALIFORNIA
DEPARTMENT OF TRANSPORTATION

TEMPORARY WATER POLLUTION CONTROL DETAILS (TEMPORARY DRAINAGE INLET PROTECTION)

NO SCALE

Nsp t61 dated august 15, 2008 supplements the standard plans book dated may 2006.

NEW STANDARD PLAN NSP T61

2006 NEW STANDARD PLAN NSP T61

P:\proj\02\3E810_plans\pse\23e810vq052.dgn

7-11-08

DIST	COUNTY	ROUTE	POST MILES TOTAL PROJECT	SHEET NO.	TOTAL SHEETS
02	Teh,Sha	5	R27.1/42.1 0.0/0.9	200	215

LICENSED LANDSCAPE ARCHITECT

August 15, 2008
PLANS APPROVAL DATE

LICENSED LANDSCAPE ARCHITECT Robert B. Schott 3625 Signature Date 11-04-08 Renewal Date 08-11-08 Date STATE OF CALIFORNIA

The State of California or its officers or agents shall not be responsible for the accuracy or completeness of electronic copies of this plan sheet.

To accompany plans dated 06-17-11

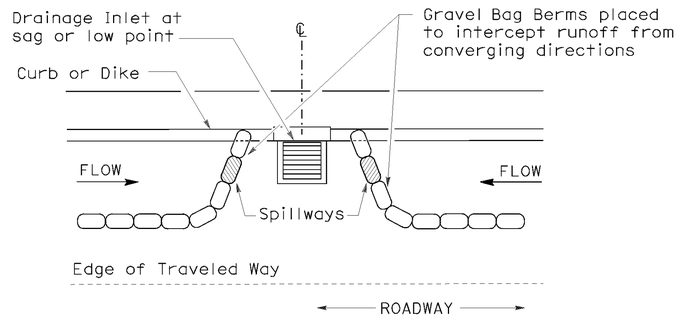

PLAN

CONFIGURATION FOR SAG POINT INLET (GRAVEL BAG BERM)

GRAVEL BAG BERM (TYPE 3A) SPACING TABLE

SLOPE OF ROADWAY (PERCENT)	1 to 3.9	4 to 5.9	6 to 7.9	8 to 10	10+
INTERVAL BETWEEN BERM	100′	75′	50′	25′	12′

For slope of less than 1%, install barriers only if erosion/sediment is prevalent

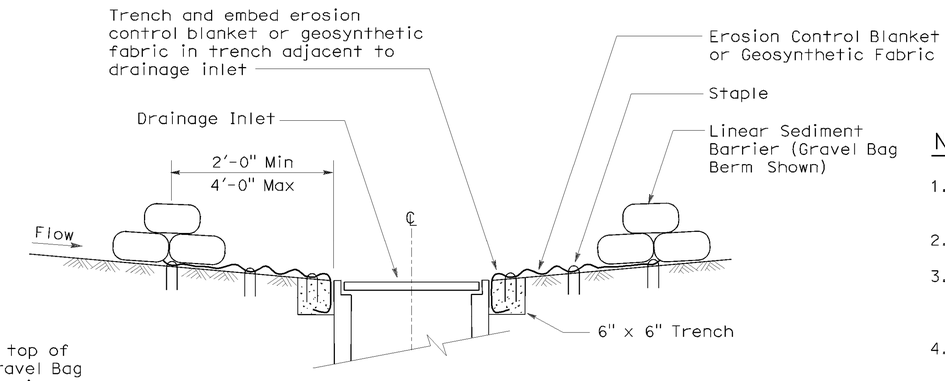

SECTION A-A

NOTES:

1. Place safety cones adjacent to drainage inlet protection.
2. Dimensions may vary to fit field conditions.
3. Install a minimum of 3 gravel bag berms upstream of each drainage inlet to be protected.
4. Position erosion control blanket or geosynthetic fabric at edge of concrete apron and secure in trench.
5. Erosion control blanket or geosynthetic fabric is not required if the area adjacent to the drainage inlet is vegetated or paved.

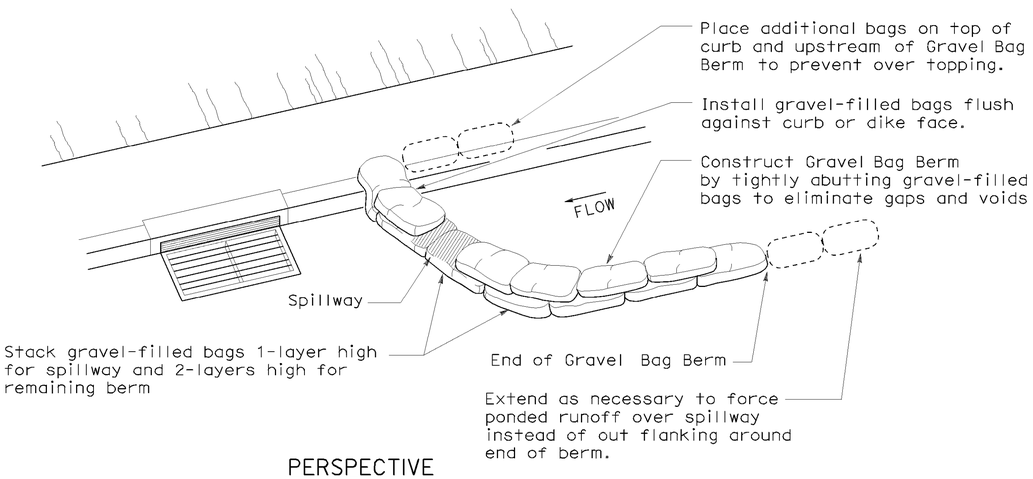

PERSPECTIVE

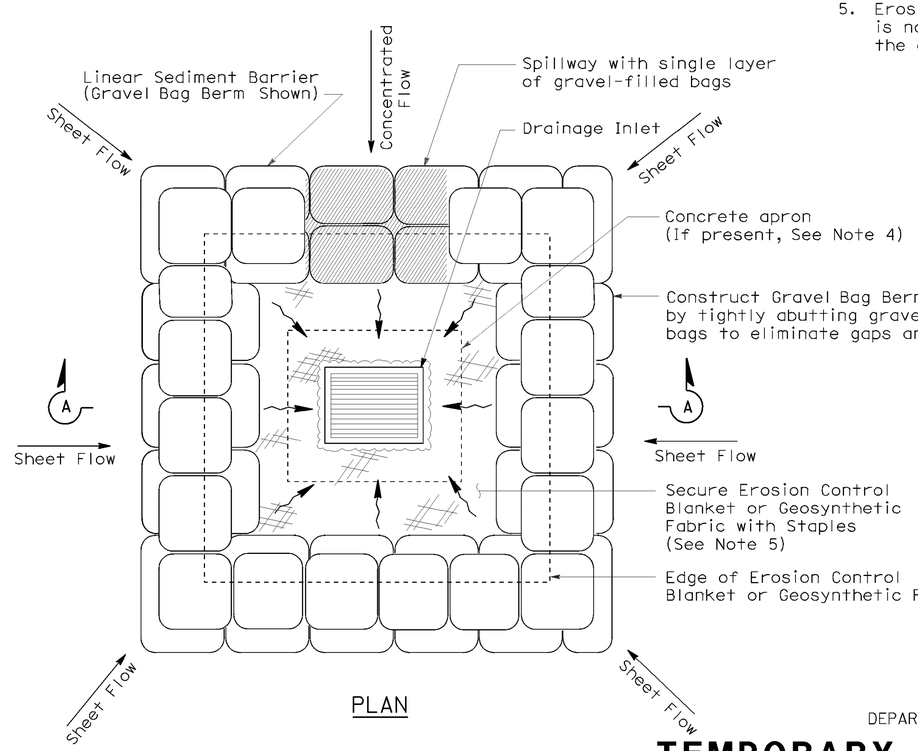

PLAN

TEMPORARY DRAINAGE INLET PROTECTION (TYPE 3B)

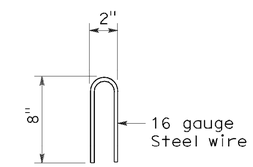

STAPLE DETAIL

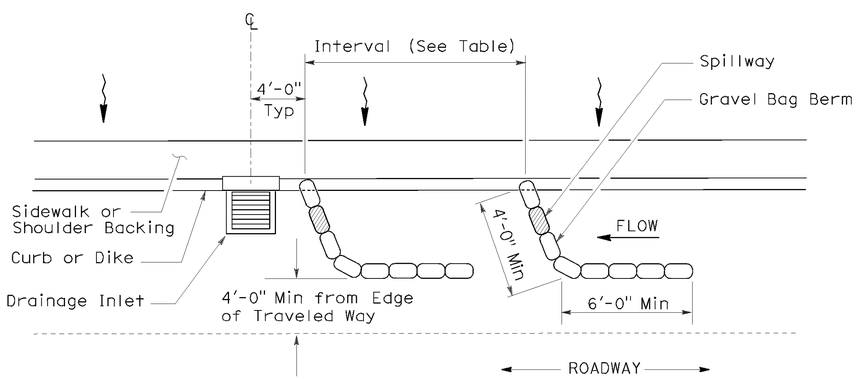

PLAN

TEMPORARY DRAINAGE INLET PROTECTION (TYPE 3A) (GRAVEL BAG BERM)

STATE OF CALIFORNIA
DEPARTMENT OF TRANSPORTATION

TEMPORARY WATER POLLUTION CONTROL DETAILS (TEMPORARY DRAINAGE INLET PROTECTION)

NO SCALE

NSP T62 DATED AUGUST 15, 2008 SUPPLEMENTS THE STANDARD PLANS BOOK DATED MAY 2006.

NEW STANDARD PLAN NSP T62

2006 NEW STANDARD PLAN NSP T62

P:\proj1\02\3E810_plans\pse\23e810va053.dgn

7-11-08

DIST	COUNTY	ROUTE	POST MILES TOTAL PROJECT	SHEET NO.	TOTAL SHEETS
02	Teh,Sha	5	R27.1/42.1 0.0/0.9	201	215

LICENSED LANDSCAPE ARCHITECT

August 15, 2008
PLANS APPROVAL DATE

LICENSED LANDSCAPE ARCHITECT Robert B. Schott 3825 Signature 11-04-08 Renewal Date 08-11-08 Date STATE OF CALIFORNIA

The State of California or its officers or agents shall not be responsible for the accuracy or completeness of electronic copies of this plan sheet.

To accompany plans dated 06-17-11

FLEXIBLE SEDIMENT BARRIER SPACING TABLE

SLOPE OF ROADWAY (PERCENT)	0 to 0.9	1 to 1.9	2 to 2.9	3 to 4	5+
INTERVAL BETWEEN BARRIERS	50′	35′	30′	25′	20′
ANGLE FROM FACE OF CURB	70°	70°	70°	45°	45°
SUGGESTED BARRIER LENGTH	6′	6′	6′	6′	6′

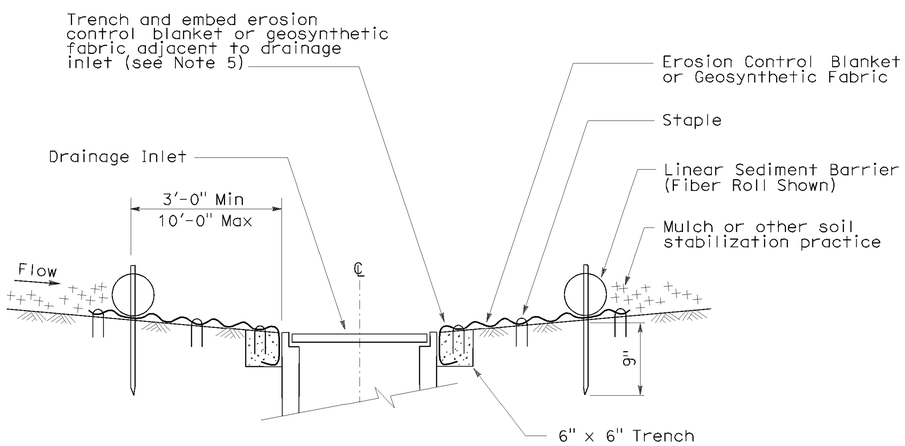

SECTION A-A

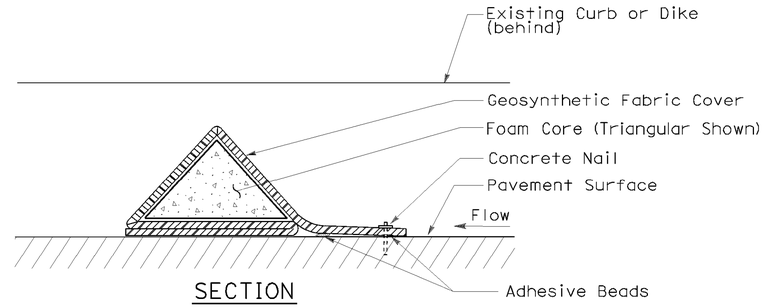

SECTION

FLEXIBLE SEDIMENT BARRIER DETAIL (FOAM BARRIER SHOWN)

NOTES:

1. See Standard Plan T51 for Temporary Silt Fence.
2. Dimensions may vary to fit field conditions.
3. Install a minimum of 3 flexible sediment barriers upstream of each drainage inlet to be protected.
4. Position erosion control blanket or geosynthetic fabric at edge of concrete apron and secure in trench.
5. Erosion control blanket or geosynthetic fabric is not required if the area adjacent to the drainage inlet is vegetated.

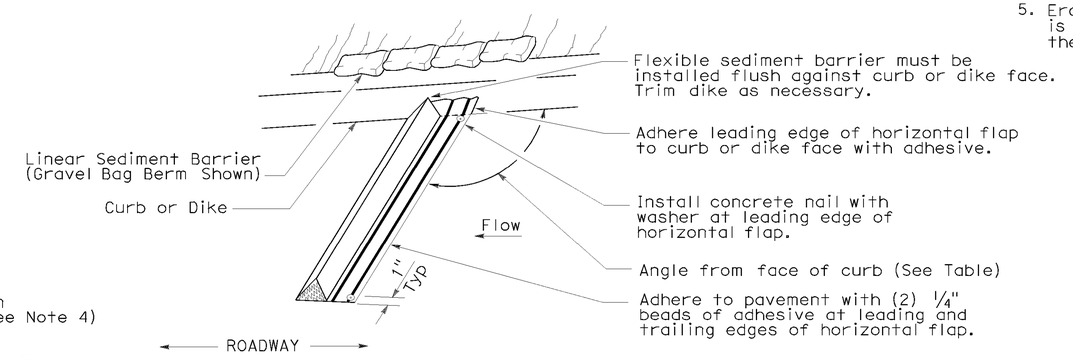

PERSPECTIVE

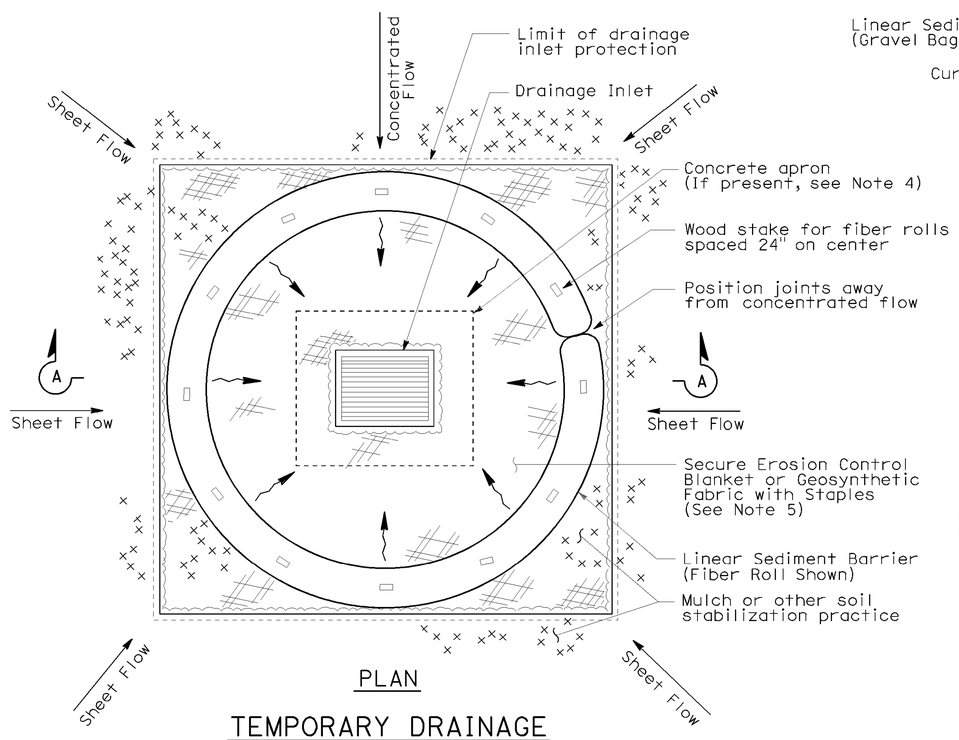

PLAN

TEMPORARY DRAINAGE INLET PROTECTION (TYPE 4A)

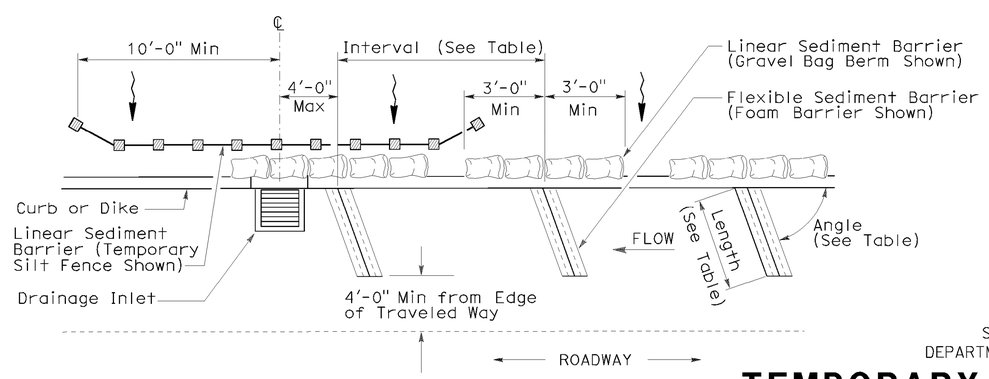

PLAN

TEMPORARY DRAINAGE INLET PROTECTION (TYPE 4B) FLEXIBLE SEDIMENT BARRIER

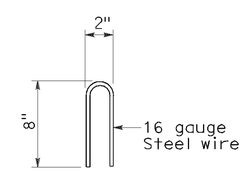

STAPLE DETAIL

STATE OF CALIFORNIA
DEPARTMENT OF TRANSPORTATION

TEMPORARY WATER POLLUTION CONTROL DETAILS (TEMPORARY DRAINAGE INLET PROTECTION)

NO SCALE

NSP T63 DATED AUGUST 15, 2008 SUPPLEMENTS THE STANDARD PLANS BOOK DATED MAY 2006.

NEW STANDARD PLAN NSP T63

2006 NEW STANDARD PLAN NSP T63

P:\proj1\02\3E810_plans\pse\23e810va054.dgn

7-11-08

DIST	COUNTY	ROUTE	POST MILES TOTAL PROJECT	SHEET NO.	TOTAL SHEETS
02	Teh,Sha	5	R27.1/42.1 0.0/0.9	202	215

LICENSED LANDSCAPE ARCHITECT

August 15, 2008
PLANS APPROVAL DATE

LICENSED LANDSCAPE ARCHITECT
Robert B. Schott 3625
Signature
11-04-08
Renewal Date
08-11-08
Date
STATE OF CALIFORNIA

The State of California or its officers or agents shall not be responsible for the accuracy or completeness of electronic copies of this plan sheet.

To accompany plans dated 06-17-11

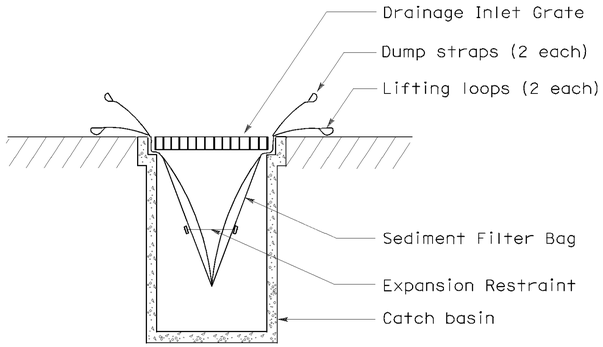

SECTION B-B

SEDIMENT FILTER BAG DETAIL

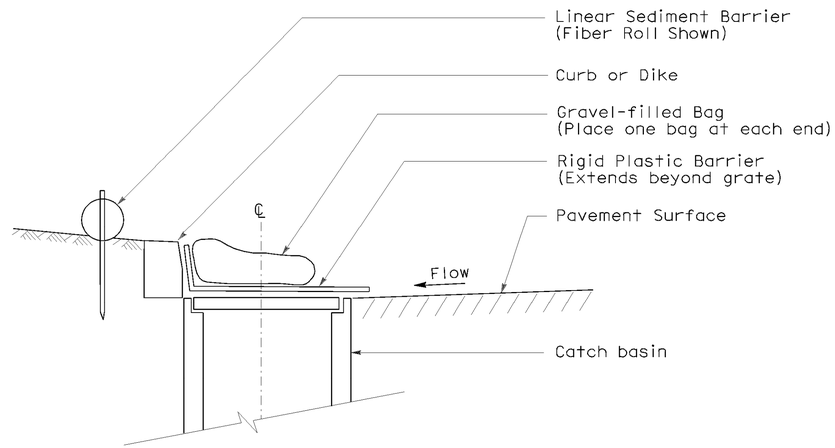

SECTION

TEMPORARY DRAINAGE INLET PROTECTION (TYPE 6A) (CATCH BASIN WITH GRATE)

NOTES:

1. See Standard Plan T51 for Temporary Silt Fence.
2. Dimensions may vary to fit field conditions.

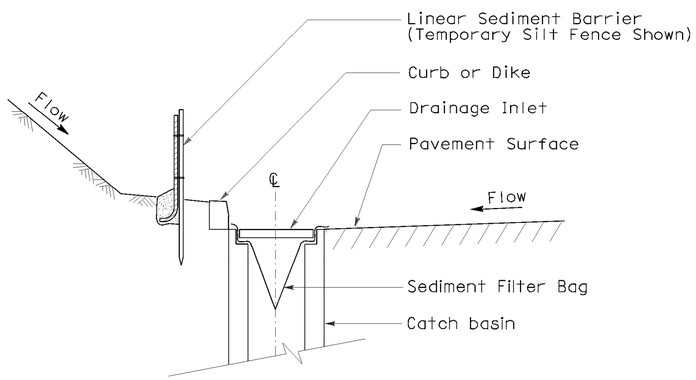

SECTION A-A

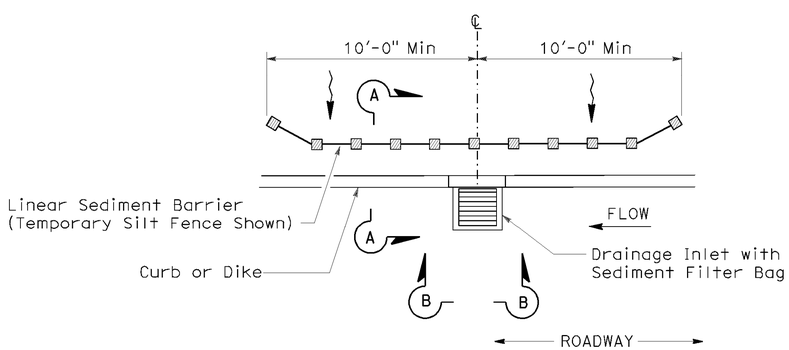

PLAN

TEMPORARY DRAINAGE INLET PROTECTION (TYPE 5) (SEDIMENT FILTER BAG)

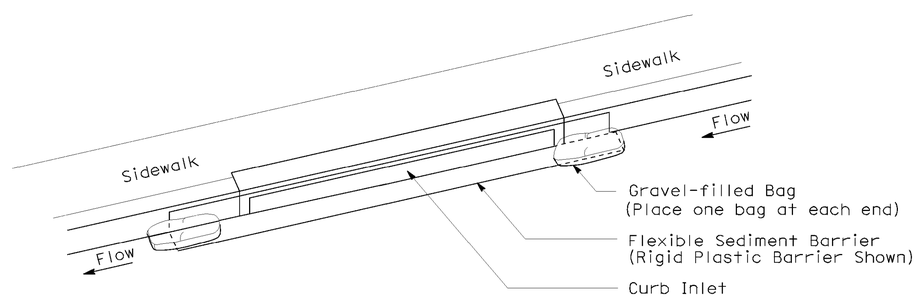

PERSPECTIVE

TEMPORARY DRAINAGE INLET PROTECTION (TYPE 6B) (CURB INLET WITHOUT GRATE)

STATE OF CALIFORNIA
DEPARTMENT OF TRANSPORTATION

TEMPORARY WATER POLLUTION CONTROL DETAILS (TEMPORARY DRAINAGE INLET PROTECTION)

NO SCALE

NSP T64 DATED AUGUST 15, 2008 SUPPLEMENTS
THE STANDARD PLANS BOOK DATED MAY 2006.

NEW STANDARD PLAN NSP T64

2006 NEW STANDARD PLAN NSP T64

P:\proj1\02\3E810_plans\pse\23e810va055.dgn

7-11-08

DIST	COUNTY	ROUTE	POST MILES TOTAL PROJECT	SHEET NO.	TOTAL SHEETS
02	Teh,Sha	5	R27.1/42.1 0.0/0.9	203	215

REGISTERED ELECTRICAL ENGINEER

October 5, 2007
PLANS APPROVAL DATE

Jeffery G. McRae
No. E14512
Exp. 6-30-08
ELECTRICAL
REGISTERED PROFESSIONAL ENGINEER
STATE OF CALIFORNIA

The State of California or its officers or agents shall not be responsible for the accuracy or completeness of electronic copies of this plan sheet.

To accompany plans dated 06-17-11

ELECTROLIERS

STANDARD TYPES
15, 15D
15 STRUCTURE
21, 21D STRUCTURE
30
31
32
35
36-20A

High mast light pole

Double Arm lighting standard

Existing electrolier

Electrolier foundation (Future installation)

NOTES:

1. Luminaires shall be 310 W HPS when installed on Type 21, 21D, 30, 31, 32, 35 and 36-20A Standards, unless otherwise specified. Luminaires shall be 200 W HPS when installed on other type standards or poles, unless otherwise specified.
2. Luminaires shall be the cutoff type, ANSI Type Ⅲ medium cutoff lighting distribution, unless otherwise specified.
3. Variations noted adjacent to symbol on project plans.

Electrolier (see project notes or project plans)

Luminaire on wood pole

STANDARD NOTES:

- AB — Abandon. If applied to conduit, remove conductors.
- BC — Install pull box in existing conduit run.
- BP — Pedestrian barricade, type as indicated on plan.
- CB — Install conduit into existing pull box.
- CC — Connect new and existing conduit. Remove existing conductors and install conductors as indicated.
- CF — Conduit to remain for future use. Remove conductors. Install pull wire or rope.
- DH — Detector handhole.
- FA — Foundation to be abandoned.
- IS — Install sign on signal mast arm.
- NS — No slip base on standard.
- PEC — Photoelectric control.
- PEU — Photoelectric unit.
- RC — Equipment or material to be removed and become the property of the Contractor.
- RE — Remove electrolier, fuses and ballast. Tape ends of conductors.
- RL — Relocate equipment.
- RR — Remove and reuse equipment.
- RS — Remove and salvage equipment.
- SC — Splice new to existing conductors.
- SD — Service disconnect.
- SF — Standard to remain for future use. Remove luminaire, pole conductors, fuses and ballast.
- TSP — Telephone service point.

ABBREVIATIONS AND EQUIPMENT DESIGNATIONS

PROPOSED	EXISTING	
BBS	bbs	Battery backup system
BC	bc	Bolt circle
C	C	Conduit
CCTV	cctv	Closed circuit television
CKT	ckt	Circuit
CMS	cms	Changeable message sign
DLC	dlc	Loop detector lead-in cable
EMS	ems	Extinguishable message sign
EVC	evc	Emergency vehicle cable
EVD	evd	Emergency vehicle detector
FB	fb	Flashing beacon
FBCA	fbca	Flashing beacon control assembly
FBS	fbs	Flashing beacon with slip base
FO	fo	Fiber optic
G	G	Ground (Equipment Grounding Conductor)
GFCI	GFCI	Ground fault circuit interrupt
HAR	har	Highway advisory radio
HEX	hex	Hexagonal
HPS	hps	High pressure sodium
IISNS	iisns	Internally illuminated street name sign
ISL	isl	Induction sign lighting
LED	led	Light emitting diode
LMA	lma	Luminaire mast arm
LPS	lps	Low pressure sodium
LTG	ltg	Lighting
LUM	lum	Luminaire
MAT	mat	Mast arm mounting vehicle signal faces, top attachment
MAS	mas	Mast arm mounting vehicle signal faces, side attachment
MAS-4A	mas-4A	Mast arm mounting vehicle signal faces, side attachment - 4 signal section
MAS-4B	mas-4B	
MAS-4C	mas-4C	
MAS-5A	mas-5A	Mast arm mounting vehicle signal faces, side attachment - 5 signal section
MAS-5B	mas-5B	
MC	mc	Mercury contactor
M/M	m/m	Multiple to multiple transformer
MT	mt	Conduit with pull wire or rope only
MTG	mtg	Mounting
	mv	Mercury vapor lighting fixture
N	N	Neutral (Grounded Conductor)
NC	NC	Normally closed
NO	NO	Normally open
PB	pb	Pull box
PEC	pec	Photoelectric control (Type Ⅰ, Ⅱ, Ⅲ, Ⅳ or Ⅴ as shown)
PED	ped	Pedestrian
PEU	peu	Photoelectric unit
PPB	ppb	Pedestrian push button
RL		Relocated equipment
RM	rm	Ramp metering
SB	sb	Slip base
SIC	sic	Signal interconnect cable
SIG	sig	Signal
SMA	sma	Signal mast arm
SNS	sns	Street name sign
SP	sp	Service point
TDC	tdc	Telephone demarcation cabinet
TMS	tms	Traffic monitoring station
TOS	tos	Traffic Operations System
VEH	veh	Vehicle
XFMR	xfmr	Transformer
COMM	comm	Communication
RWIS	rwis	Roadway weather information system

SOFFIT AND WALL MOUNTED LUMINAIRES

Pendant, 70 W HPS unless otherwise specified.

Flush, 70 W HPS unless otherwise specified.

Wall surface, 70 W HPS unless otherwise specified.

Existing soffit or wall luminaire to remain unmodified.

Existing soffit or wall luminaire to be modified as specified.

NOTE:

Arrow indicates "street side" of luminaire.

STATE OF CALIFORNIA
DEPARTMENT OF TRANSPORTATION

ELECTRICAL SYSTEMS (SYMBOLS AND ABBREVIATIONS)

NO SCALE

RSP ES-1A DATED OCTOBER 5, 2007 SUPERSEDES STANDARD PLAN ES-1A
DATED MAY 1, 2006 - PAGE 400 OF THE STANDARD PLANS BOOK DATED MAY 2006.

REVISED STANDARD PLAN RSP ES-1A

2006 REVISED STANDARD PLAN RSP ES-1A

P:\proj1\02\3E810_plans\pse\23e810va056.dgn

7-10-07

DIST	COUNTY	ROUTE	POST MILES TOTAL PROJECT	SHEET NO.	TOTAL SHEETS
02	Teh,Sha	5	R27.1/42.1 0.0/0.9	204	215

REGISTERED ELECTRICAL ENGINEER

October 5, 2007
PLANS APPROVAL DATE

REGISTERED PROFESSIONAL ENGINEER
Jeffery G. McRae
No. E14512
Exp. 6-30-08
ELECTRICAL
STATE OF CALIFORNIA

The State of California or its officers or agents shall not be responsible for the accuracy or completeness of electronic copies of this plan sheet.

To accompany plans dated 06-17-11

CONDUIT

PROPOSED	EXISTING	
		Lighting Conduit, unless otherwise indicated or noted
		Traffic signal conduit
C	c	Communication conduit
T	t	Telephone conduit
F	f	Fire alarm conduit
FO	fo	Fiber optic conduit
		Conduit termination (RSP ES-9A C)
R	r	Conduit riser in/on structure or service pole

SERVICE EQUIPMENT

PROPOSED	EXISTING	
OH	oh	Overhead lines
U	U	Wood pole "U" indicates utility owned
		Pole guy with anchor
		Utility transformer - ground mounted
III		Service equipment enclosure type
		Service equipment enclosure door indicates front of enclosure
T	t	Telephone demarcation cabinet

POLE-MOUNTED SERVICE DESIGNATION

Type of installation

TYPE H SERVICE - 28'-10" ← Pole height above grade

ILLUMINATED OVERHEAD SIGN

PROPOSED	EXISTING	
		Overhead sign - Single post
		Overhead sign - Two post
		Overhead sign - Mounted on structure
		Overhead sign with electrolier

SIGNAL EQUIPMENT

PROPOSED	EXISTING	
		Pedestrian signal face
		Pedestrian push button post
		Pedestrian barricade
		Vehicle signal face (with backplate, 3-Section: red, yellow and green)
		Vehicle signal face with angle visors
PV	PV	Modifications of basic symbols: "L" indicates all non-arrow sections louvered "LG" indicates louvered green section only "PV" indicates 12" programmed visibility sections "8" indicates all 8" sections (only when specified)
		Type 15TS and Vehicle signal face
		Vehicle signal face with red, yellow and green left arrow sections
		Vehicle signal face with red and yellow sections and up green arrow
		Vehicle signal face (5 Section) with red, yellow and green sections and yellow and green right arrows
		Type 1 Standard and attached vehicle signal faces
		Standard with signal mast arm only and attached vehicle signal faces and internally illuminated street name sign
		Type 33 Standard, Left-turn vehicle signal face and sign
		Standard with luminaire and signal mast arms and attached vehicle signal faces
		Cantilever flashing beacon Type 9 Frame, with a sign unless otherwise specified or indicated
		Type 15-FBS Standard with two vehicle signal face sections with lens, backplate and visor with a sign
R	Y	Flashing beacon. One vehicle signal face section with lens, backplate and visor. "R" indicates red indication, "Y" indicates yellow indication
		Controller assembly. Door indicates front of cabinet

SIGNAL EQUIPMENT Cont

PROPOSED	EXISTING	
		Guard post
		Type 1 Standard with "Meter On" sign
		Emergency Vehicle detector

NOTES:

1. All signal sections shall be 12" unless shown otherwise.
2. Signal heads shall be provided with backplates unless shown otherwise.
3. Signal indication shall be LED.

STATE OF CALIFORNIA
DEPARTMENT OF TRANSPORTATION

ELECTRICAL SYSTEMS (SYMBOLS AND ABBREVIATIONS)

NO SCALE

RSP ES-1B DATED OCTOBER 5, 2007 SUPERCEDES STANDARD PLAN ES-1B DATED MAY 1, 2006 - PAGE 401 OF THE STANDARD PLANS BOOK DATED MAY 2006.

REVISED STANDARD PLAN RSP ES-1B

2006 REVISED STANDARD PLAN RSP ES-1B

P:\proj1\02\3E810_plans\pse\23e810va057.dgn

7-10-07

DIST	COUNTY	ROUTE	POST MILES TOTAL PROJECT	SHEET NO.	TOTAL SHEETS
02	Teh,Sha	5	R27.1/42.1 0.0/0.9	205	215

REGISTERED ELECTRICAL ENGINEER

October 5, 2007
PLANS APPROVAL DATE

REGISTERED PROFESSIONAL ENGINEER Jeffery G. McRae No. E14512 Exp. 6-30-08 ELECTRICAL STATE OF CALIFORNIA

The State of California or its officers or agents shall not be responsible for the accuracy or completeness of electronic copies of this plan sheet.

To accompany plans dated 06-17-11

EQUIPMENT IDENTIFICATION

ILLUMINATED SIGN IDENTIFICATION NUMBER:

Sign No. 12345

10 ISL SCI 1.0

- Sign number - Place on post or structure
- Transformer rating (kVA)
- Lighting control type
- Number and type of fixtures

Do NOT place on standard or structure

ELECTROLIER OR EQUIPMENT IDENTIFICATION NUMBER:

12345 - 15'-0"

- Mast arm length, if shown. Do not place on standard or structure.
- Equipment number - Place on standard or structure. Existing equipment numbers are shown in parenthesis

CONDUIT AND CONDUCTOR IDENTIFICATION:

1½"C, 2#10, 15#14, 2 DLC

- Number and size of conductors and cables
- Size of conduit in inches

ø1, ø2, ø2P, etc.	Traffic phase identification for signal faces, detectors and phase diagrams
1 2 3	Project note numbers
A B C	Equipment description, installation or item numbers
1 2 3	Conduit run numbers

SIGNAL AND LIGHTING STANDARD (TYPICAL DESIGNATION):

19A - 3 - 100

- Wind velocity = 100 mph
- Case 3 arm loading
- Standard type
- Standard Plan sheet number
- Detail number or letter

MISCELLANEOUS EQUIPMENT

PROPOSED	EXISTING	
CMS	cms	Changeable message sign
		Closed circuit television camera
		Highway advisory radio pole and antenna
EMS	ems	Extinguishable message sign
M V	m v	Detection device M = Microwave sensor V = Video image sensor

WIRING DIAGRAM LEGEND

P	Pole
CB	Circuit breaker
A	Ampere
V	Volt
M	Metered
UM	Unmetered
NB	Neutral bus
GB	Ground bus
G	Equipment grounding conductor
N	Grounded conductor (Neutral)

- External conductor
- Conductor or bus
- Tie point
- Contactor coil
- Contactor, Contact NO
- Terminal blocks
- Contactor, Contact NC
- Enclosure bond
- Grounding electrode
- Circuit breaker
- Receptacle

PULL BOXES

PROPOSED EXISTING

Pull box-No. 5 unless otherwise indicated or noted.

3 9A(21)

Pull box-Additional designations or descriptions

3 = No. 3½ pull box
5 = No. 5 pull box
6 = No. 6 pull box
7 = No. 7 (Ceiling pull box)
8 = No. 8 (Pendant soffit pull box)
9 = No. 9 pull box
9A = No. 9A pull box

(C) = Communications pull box
(E) = Pull box with extension
(S) = Sprinkler control pull box
(21) = Anchor bolts and conduit for future installation of Type 21 Standard
(T) = Traffic pull box

VEHICLE DETECTORS

5 J 9 U

- Vehicle detector designation
- U = Upper, L = Lower
- Slot number in input file
- Input file (I or J)
- Phase

PROPOSED	EXISTING	
		Type A detector loop. Outline of sawcut shown.
		Type B detector loop. Outline of sawcut shown.
		Type C detector loop. Outline of sawcut shown.
		Type D detector loop. Outline of sawcut shown.
		Type E detector loop. Outline of sawcut shown.
		Type Q detector loop. Outline of sawcut shown.
		Magnetic detector
DH	dh	Detector handhole
		Microwave or video detection zone

STATE OF CALIFORNIA
DEPARTMENT OF TRANSPORTATION

ELECTRICAL SYSTEMS (SYMBOLS AND ABBREVIATIONS)

NO SCALE

RSP ES-1C DATED OCTOBER 5, 2007 SUPERCEDES STANDARD PLAN ES-1C DATED MAY 1, 2006 - PAGE 402 OF THE STANDARD PLANS BOOK DATED MAY 2006.

REVISED STANDARD PLAN RSP ES-1C

2006 REVISED STANDARD PLAN RSP ES-1C

P:\proj\02\3E810_plans\pse\23e810vd058.dgn

7-10-07

DIST	COUNTY	ROUTE	POST MILES TOTAL PROJECT	SHEET NO.	TOTAL SHEETS
02	Teh,Sha	5	R27.1/42.1 0.0/0.9	206	215

REGISTERED ELECTRICAL ENGINEER

October 5, 2007
PLANS APPROVAL DATE

REGISTERED PROFESSIONAL ENGINEER
Jeffery G. McRae
No. E14512
Exp. 6-30-08
ELECTRICAL
STATE OF CALIFORNIA

The State of California or its officers or agents shall not be responsible for the accuracy or completeness of electronic copies of this plan sheet.

To accompany plans dated 06-17-11

2006 REVISED STANDARD PLAN RSP ES-2C

NOTES-TYPE III SERVICE EQUIPMENT ENCLOSURES:

1. Service equipment enclosure and metering equipment shall meet the requirements of the service utility. The meter area shall have a sealable, lockable, weathertight cover that can be removed without the use of tools.

2. Service equipment enclosures shall be factory wired and conform to NEMA standards.

3. Dimensions of service equipment enclosures shall meet the requirements of the service utility.

4. The dead front panels on Type III service equipment enclosures shall have a continuous stainless steel or aluminum piano hinge. The panel in front of the breakers shall be secured with a latch or captive screws. No live parts shall be mounted on the dead front panel.

5. The exterior door shall have provisions for padlocking. The padlock hole shall be a minimum diameter of 7/16".

6. Enclosures housing transformers of more than one kVA shall have effective screened ventilation louver of not less than 50 square inches. Screen shall be stainless steel No. 304, with a No. 10 size mesh. Framed screen shall be secured with at least four bolts.

7. Fasteners on the exterior of the enclosure shall be vandal-resistant and shall not be removable from the exterior. Exterior screws, nuts, bolts and washers shall be stainless steel.

8. Landing lugs for incoming service conductors shall be compatible with either copper or aluminum conductors sized to suit the conductors shown on the plan. Landing lugs shall be copper or tin-plated aluminum. Neutral bus shall be rated for 125 A and be suitable for copper or aluminum conductors unless otherwise specified. The terminal shall include but not be limited to:

   a) Incoming terminals (landing lugs)
   b) Neutral lugs
   c) Solid neutral terminal strip

9. At least 6 standard single pole circuit breaker spaces, 3/4" nominal, shall be provided for branch circuits. Circuit breaker interiors shall be copper. Interiors of enclosure shall accept plug-in or cable-in/cable-out circuit breakers.

10. Control wiring shall be 600 V, 14 stranded machine tool wire. Where subject to flexing, 19 strand wire shall be used.

11. Main bus shall be rated for 125 A and shall be tin-plated copper.

12. A plastic laminated wiring diagram shall be provided with brass mounting eyelets and attached to the inside of the enclosure and the wiring diagram shall be affixed to the interior with a UL or ETL approved method.

13. An engraved phenolic nameplate on the dead front panel indicating the function of each circuit or device shall be installed with stainless steel rivets or stainless steel screws:

    a) Adjacent to the breaker or device with character size a minimum of 1/8".

    b) At the top of the exterior door panel indicating State system number, voltage level and number of phases with character size a minimum of 3/16".

14. The plan shows the approximate location of devices within the enclosure. Components may be rearranged, however, the "working" clearances within the service equipment enclosure shall be maintained.

15. In unpaved areas a raised portland cement concrete pad 2'-0" x 4" x width of foundation shall be constructed in front of new service equipment enclosure installation. Pad shall be set to elevation of foundation.

16. Foundation shall extend 2" minimum beyond edge of service equipment enclosure.

17. Internal bus, where shown, is typical only. Alternative design of proposed service equipment enclosure shall be submitted to the Engineer for approval.

18. Plug-in circuit breakers may be mounted in the vertical or horizontal position. Cable-in/cable-out circuit breakers shall be mounted in the vertical position.

19. Type III-AF and Type III-BF service equipment enclosures shall have the meter viewing windows located on the front side of the service equipment enclosures.

20. Type III-AR and Type III-BR service equipment enclosures shall be similarly constructed as Type III-AF and Type III-BF respectively, except the meter viewing windows shall be located on the back side of the service equipment enclosures.

21. Minimum clearance shall be required for front and back of service equipment enclosure per National Electrical Code, Article 110.26, "Spaces About Electric Equipment (600 Volts, Nominal, or Less)."

STATE OF CALIFORNIA
DEPARTMENT OF TRANSPORTATION

ELECTRICAL SYSTEMS (SERVICE EQUIPMENT NOTES TYPE III SERIES)

NO SCALE

RSP ES-2C DATED OCTOBER 5, 2007 SUPERCEDES STANDARD PLAN ES-2C
DATED MAY 1, 2006 - PAGE 405 OF THE STANDARD PLANS BOOK DATED MAY 2006.

REVISED STANDARD PLAN RSP ES-2C

P:\proj\02\3E810_plans\pse\23e810va059.dgn

7-10-07

DIST	COUNTY	ROUTE	POST MILES TOTAL PROJECT	SHEET NO.	TOTAL SHEETS
02	Teh,Sha	5	R27.1/42.1 0.0/0.9	207	215

REGISTERED ELECTRICAL ENGINEER

October 5, 2007
PLANS APPROVAL DATE

REGISTERED PROFESSIONAL ENGINEER Jeffery G. McRae No. E14512 Exp. 6-30-08 ELECTRICAL STATE OF CALIFORNIA

The State of California or its officers or agents shall not be responsible for the accuracy or completeness of electronic copies of this plan sheet.

To accompany plans dated 06-17-11

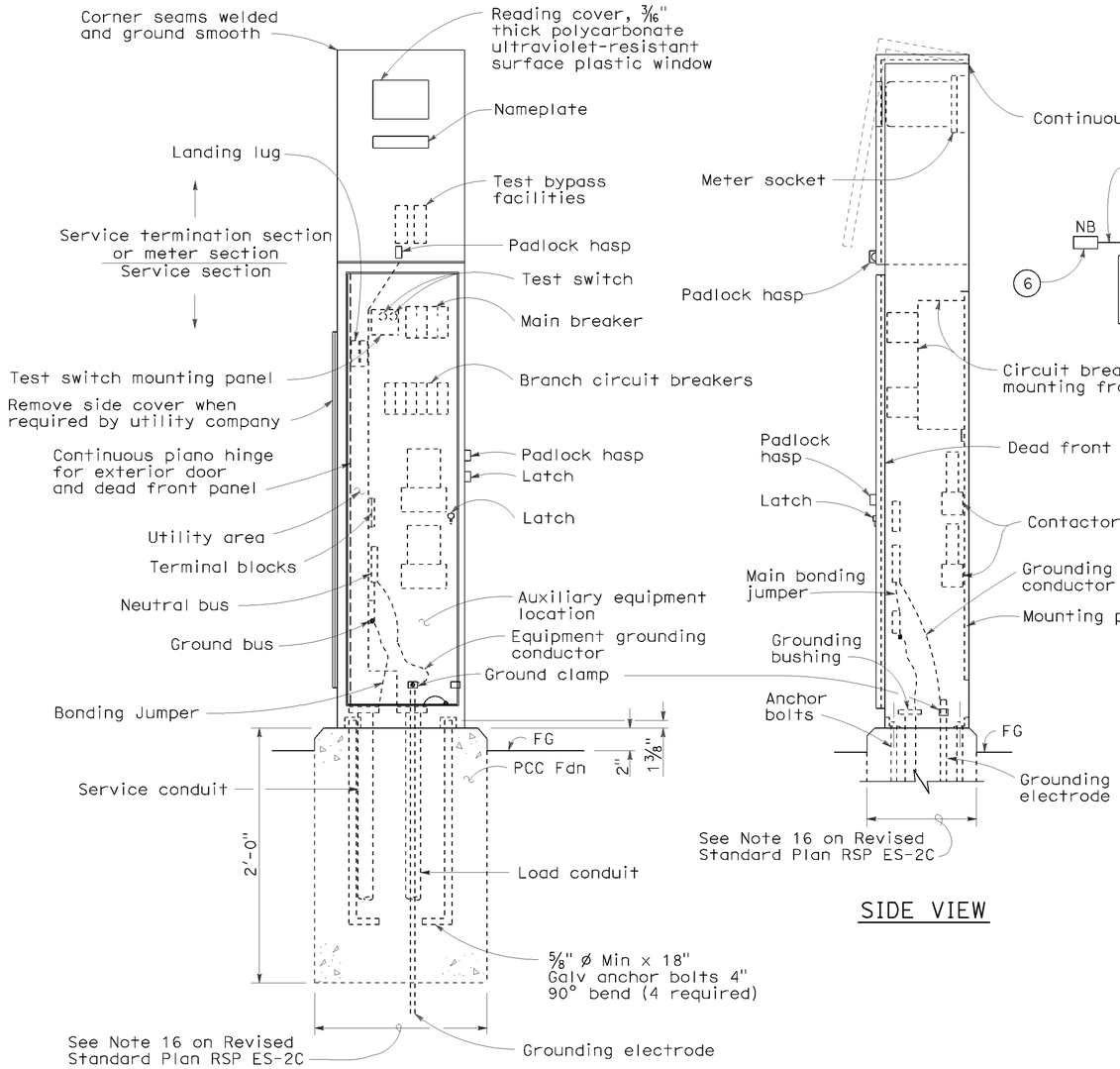

TYPE III-AF SERVICE EQUIPMENT ENCLOSURE (TYPICAL)

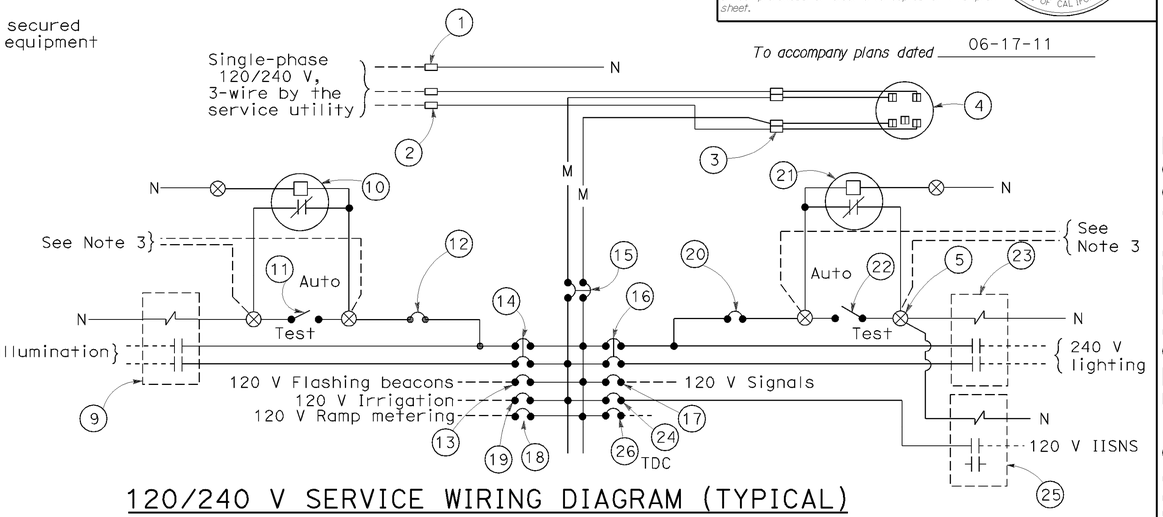

120/240 V SERVICE WIRING DIAGRAM (TYPICAL)

TYPE III-A SERVICE (120/240 V) EQUIPMENT LEGEND

ITEM No.	COMPONENT	NAME PLATE DESCRIPTION	ITEM No.	COMPONENT	NAME PLATE DESCRIPTION
1	Neutral lug		14	30 A, 240 V, 2P, CB	Sign Illumination
2	Landing lug (Note 6)		15	100 A, 240 V, 2P, CB	Main Breaker
3	Test bypass facility		16	30 A, 240 V, 2P, CB	Lighting
4	Meter socket and support		17	50 A, 120 V, 1P, CB	Signals
5	Terminal blocks		18	30 A, 120 V, 1P, CB	Ramp Metering
6	Neutral bus		19	20 A, 120 V, 1P, CB	Irrigation
7	Ground bus		20	15 A, 120 V, 1P, CB	Lighting Control
8	Grounding electrode		21	Photoelectric unit (Note 7)	
9	30 A, 2PNO Contactor	Sign Illumination	22	15 A, 1P, Test switch	Lighting Test Switch
10	Photoelectric unit (Note 7)		23	60 A, 2PNO Contactor	Lighting
11	15 A, 1P, Test switch	Sign Illumination Test Switch	24	15 A, 120 V, 1P, CB	IISNS
12	15 A, 120 V, 1P, CB	Sign Illumination Control	25	30 A, 2PNO Contactor	IISNS
13	15 A, 120 V, 1P, CB	Flashing Beacon	26	20 A, 120 V, 1P, CB	Telephone Demarcation Cabinet

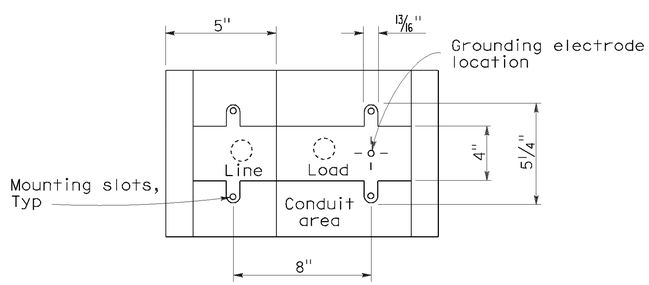

BASE FOR TYPE III-A SERVICE EQUIPMENT ENCLOSURE

NOTES: (FOR SERVICE EQUIPMENT ENCLOSURE)

1. Voltage ratings of service equipment shall conform to the service voltages indicated on the plans.
2. Unless otherwise indicated on the plans, service equipment items shall be provided for each service equipment enclosure as shown.
3. Connect to remote test switch mounted on lighting standards, sign post or structure when required.
4. Items No. 1 and 6 shall be isolated from the service equipment enclosure.
5. Meter sockets shall be 5 clip type.
6. The landing lug shall be suitable for multiple conductors.
7. Type V photoelectric control shall be used unless otherwise indicated on the plans.

STATE OF CALIFORNIA
DEPARTMENT OF TRANSPORTATION

ELECTRICAL SYSTEMS (SERVICE EQUIPMENT AND TYPICAL WIRING DIAGRAM, TYPE III-A SERIES)

NO SCALE

RSP ES-2D DATED OCTOBER 5, 2007 SUPERCEDES STANDARD PLAN ES-2D DATED MAY 1, 2006 - PAGE 406 OF THE STANDARD PLANS BOOK DATED MAY 2006.

REVISED STANDARD PLAN RSP ES-2D

2006 REVISED STANDARD PLAN RSP ES-2D

P:\proj1\02\3E810_plans\pse\23e810va060.dgn

7-10-07

DIST	COUNTY	ROUTE	POST MILES TOTAL PROJECT	SHEET NO.	TOTAL SHEETS
02	Teh,Sha	5	R27.1/42.1 0.0/0.9	208	215

REGISTERED ELECTRICAL ENGINEER

October 5, 2007
PLANS APPROVAL DATE

REGISTERED PROFESSIONAL ENGINEER Jeffery G. McRae No. E14512 Exp. 6-30-08 ELECTRICAL STATE OF CALIFORNIA

The State of California or its officers or agents shall not be responsible for the accuracy or completeness of electronic copies of this plan sheet.

To accompany plans dated 06-17-11

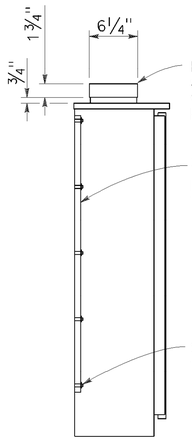

SECTION A-A

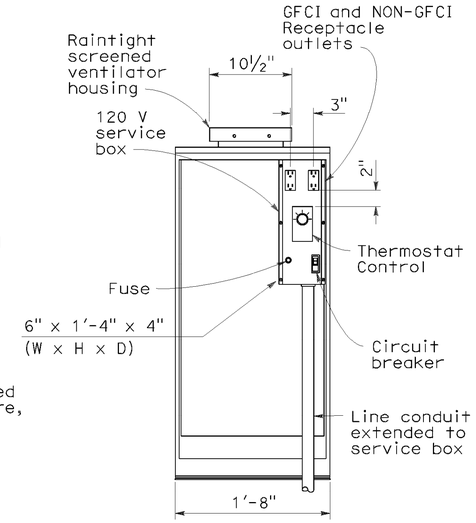

FRONT VIEW

(Exterior door removed for clarity)

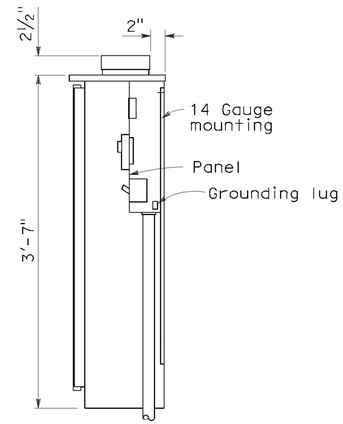

SECTION B-B

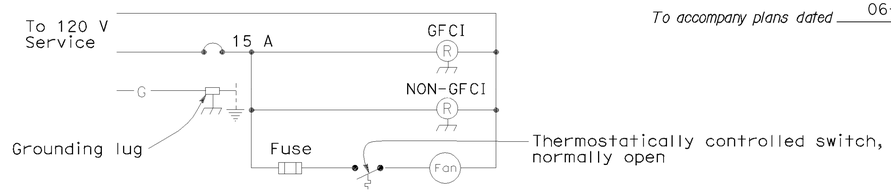

WIRING DIAGRAM

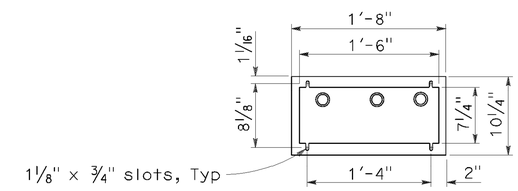

BASE PLAN

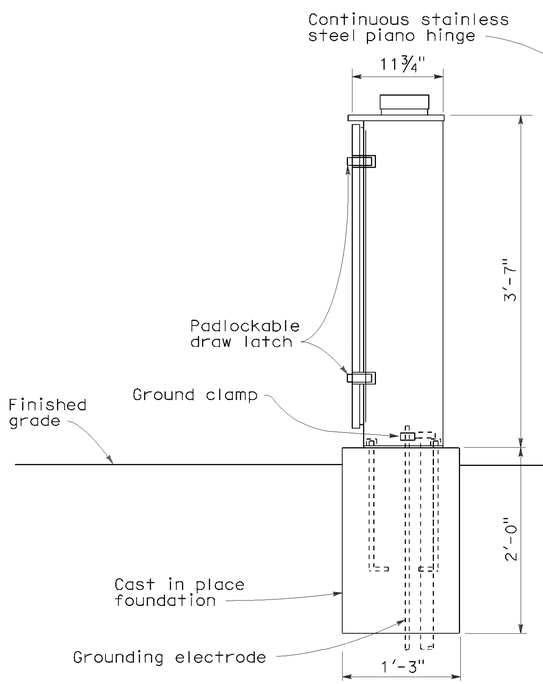

SIDE VIEW

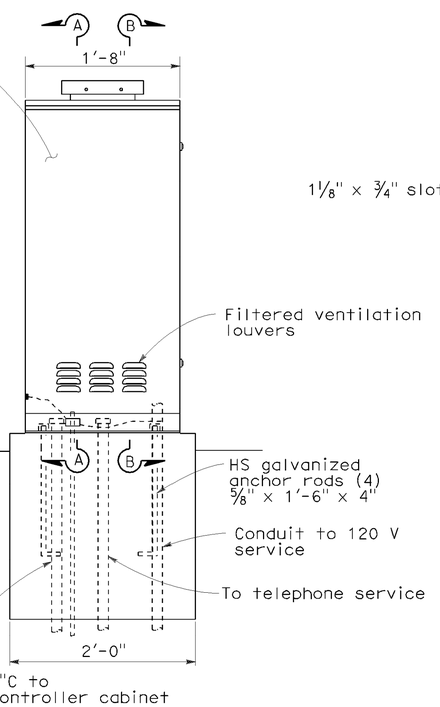

FRONT VIEW

NOTES:

1. Telephone demarcation cabinet shall be furnished with a mounting panel, outlets, circuit breaker and deadfront plates in place. Dimensions are nominal.
2. An approved mastic or caulking compound shall be placed on the foundation prior to placing the cabinet to seal openings between the bottom of the cabinet and the foundation.
3. In unpaved areas, a raised PCC pad shall be placed in front of the telephone demarcation cabinet. Pad shall be 2'-0" x 1'-10" x 4" thick, with 2" above the finished grade.
4. All conduits shall be bonded to the enclosure.
5. Telephone demarcation cabinet:
   a) Material shall be anodized aluminum (⅛" thick).
   b) Fabrication shall conform to the requirements of the Standard Specifications.
   c) The exterior door shall be side hung and secured with a padlockable draw latch, the padlock hole shall be a minimum diameter of 7/16" to receive a padlock.
   d) Ventilation louvers shall be located on the door.
   e) Fan shall be mounted in a ventilator housing.
   f) Fan shall be thermostatically controlled and adjustable to turn on between 80°F and 130°F.
   g) Fan circuit shall be fused at 175 percent of the fan motor capacity.
   h) Fan capacity shall be at least 25 cubic feet per minute.
   i) Fasten fixed mounting panels with nuts, lock and flat washers to 3/16" ø x 1" studs welded to enclosure.

STATE OF CALIFORNIA
DEPARTMENT OF TRANSPORTATION

ELECTRICAL SYSTEMS (TELEPHONE DEMARCATION CABINET, TYPE B)

NO SCALE

RSP ES-3E DATED OCTOBER 5, 2007 SUPERCEDES STANDARD PLAN ES-3E DATED MAY 1, 2006 - PAGE 414 OF THE STANDARD PLANS BOOK DATED MAY 2006.

REVISED STANDARD PLAN RSP ES-3E

2006 REVISED STANDARD PLAN RSP ES-3E

P:\proj1\02\3E810_plans\pse\23e810va061.dgn

8-17-07

DIST	COUNTY	ROUTE	POST MILES TOTAL PROJECT	SHEET NO.	TOTAL SHEETS
02	Teh,Sha	5	R27.1/42.1 0.0/0.9	209	215

REGISTERED ELECTRICAL ENGINEER

October 5, 2007
PLANS APPROVAL DATE

REGISTERED PROFESSIONAL ENGINEER Jeffery G. McRae No. E14512 Exp. 6-30-08 ELECTRICAL STATE OF CALIFORNIA

The State of California or its officers or agents shall not be responsible for the accuracy or completeness of electronic copies of this plan sheet.

To accompany plans dated 06-17-11

LOOP INSTALLATION PROCEDURE

1. Loops shall be centered in lanes.
2. Saw slots in pavement for loop conductors as shown in details.
3. Distance between side of loop and a lead-in saw cut from adjacent detectors shall be 2'-0" minimum. Distance between lead-in saw cuts shall be 6" minimum.
4. Bottom of saw slot shall be smooth with no sharp edges.
5. Slots shall be washed until clean, blown out and thoroughly dried before installing loop conductors.
6. Adjacent loops on the same sensor unit channel shall be wound in opposite directions.
7. Identify and tag loop circuit pairs in the pull box with loop number, start (S) and finish (F) of conductor. Identify and tag lead-in-cable with sensor number and phase.
8. Install loop conductor in slot using a 3/16" to 1/4" thick wood paddle. Hold loop conductors with wood paddles (at the bottom of the sawed slot) during sealant placement.
9. No more than 2 twisted pairs shall be installed in one sawed slot.
10. Allow additional 5'-0" of slack length of conductor for the lead-in run to pull box.
11. The additional length of each conductor for each loop shall be twisted together into a pair (6 turns per 3'-4" minimum) before being placed in the slot and conduit leading to pull box.
12. Test each loop circuit for continuity, circuit resistance and insulation resistance at the pull box before filling slots.
13. Fill slots as shown in details.
14. Splice loop conductors to lead-in-cable. Splices shall be soldered.
15. End of lead-in-cable and Type 2 loop conductor shall be waterproofed prior to installing in conduit to prevent moisture from entering the cable.
16. Lead-in-cable shall not be spliced between the pull box and the controller cabinet terminals.
17. Test each loop circuit for continuity, circuit resistance and insulation resistance at the controller cabinet location.
18. Where loop conductors are not to be spliced to a lead-in-cable, the ends of the conductors shall be taped and waterproofed with electrical insulating coating.

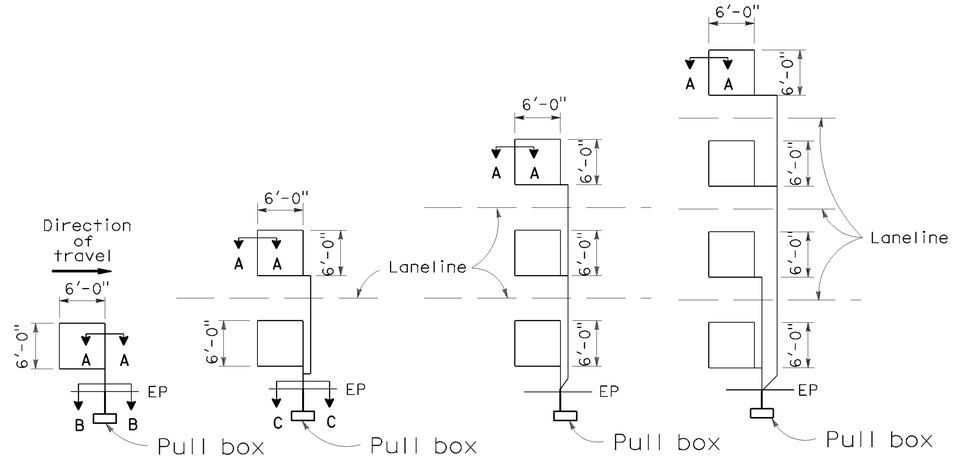

TYPE 1A INSTALLATION | TYPE 2A INSTALLATION | TYPE 3A INSTALLATION | TYPE 4A INSTALLATION

SAWCUT DETAILS

(Type A loop detector configurations illustrated)

1. 1A thru 4A = 1 Type A loop configuration in each lane.
2. 1B thru 4B = 1 Type B loop configuration in each lane.
3. 1C = 1 Type C loop configuration entering lanes as required.
4. 1D thru 4D = 1 Type D loop configuration in each lane.
5. 1E thru 4E = 1 Type E loop configuration in each lane.
6. 1Q thru 4Q = 1 Type Q loop configuration in each lane. (Use Type A, B, C, D, E or Q loop detector configurations only when specified or shown on plans)

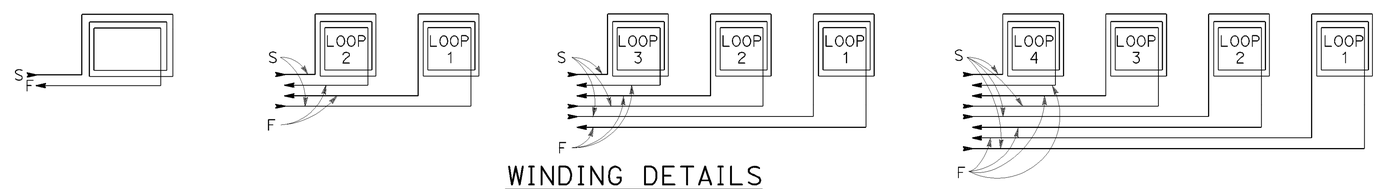

WINDING DETAILS

See Notes 6 and 7

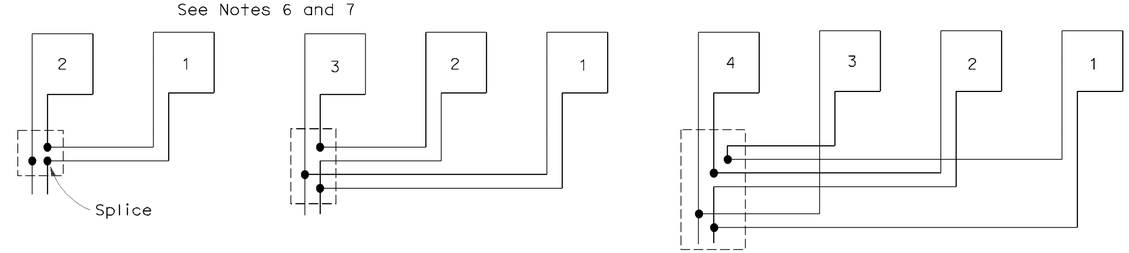

TYPICAL LOOP CONNECTIONS

(Dashed lines represent the pull box)

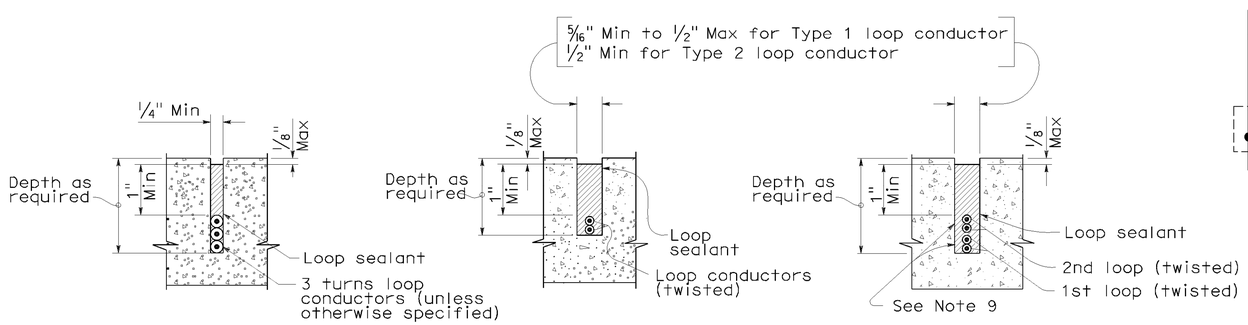

SECTION A-A | SECTION B-B | SECTION C-C

SLOT DETAILS - TYPE 1 AND TYPE 2 LOOP CONDUCTOR

STATE OF CALIFORNIA
DEPARTMENT OF TRANSPORTATION

ELECTRICAL SYSTEMS (DETECTORS)

NO SCALE

RSP ES-5A DATED OCTOBER 5, 2007 SUPERCEDES STANDARD PLAN ES-5A DATED MAY 1, 2006 - PAGE 423 OF THE STANDARD PLANS BOOK DATED MAY 2006.

REVISED STANDARD PLAN RSP ES-5A

2006 REVISED STANDARD PLAN RSP ES-5A

P:\proj1\02\3E810_plans\pse\23e810va062.dgn

8-17-07

DIST	COUNTY	ROUTE	POST MILES TOTAL PROJECT	SHEET NO.	TOTAL SHEETS
02	Teh,Sha	5	R27.1/42.1 0.0/0.9	210	215

REGISTERED CIVIL ENGINEER

October 5, 2007
PLANS APPROVAL DATE

REGISTERED PROFESSIONAL ENGINEER
Stanley P. Johnson
No. C57793
Exp. 3-31-08
CIVIL
STATE OF CALIFORNIA

The State of California or its officers or agents shall not be responsible for the accuracy or completeness of electronic copies of this plan sheet.

To accompany plans dated 06-17-11

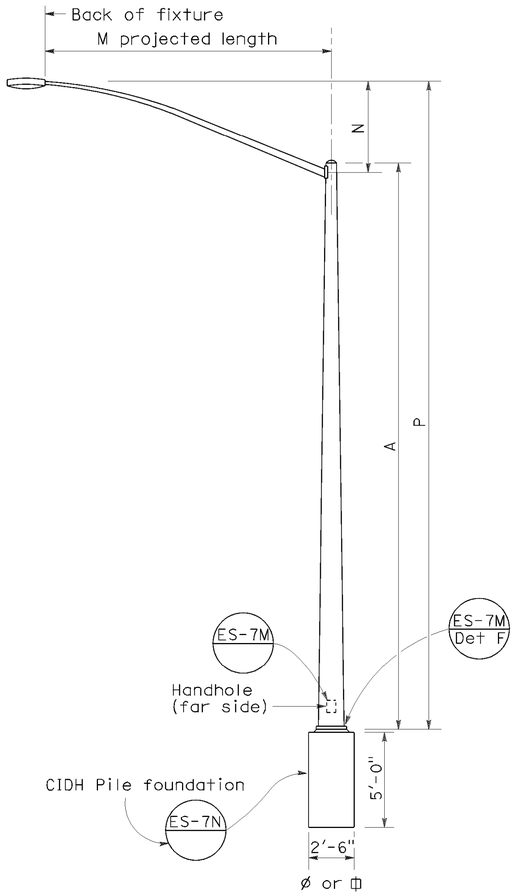

ELEVATION
TYPE 15 AND TYPE 21

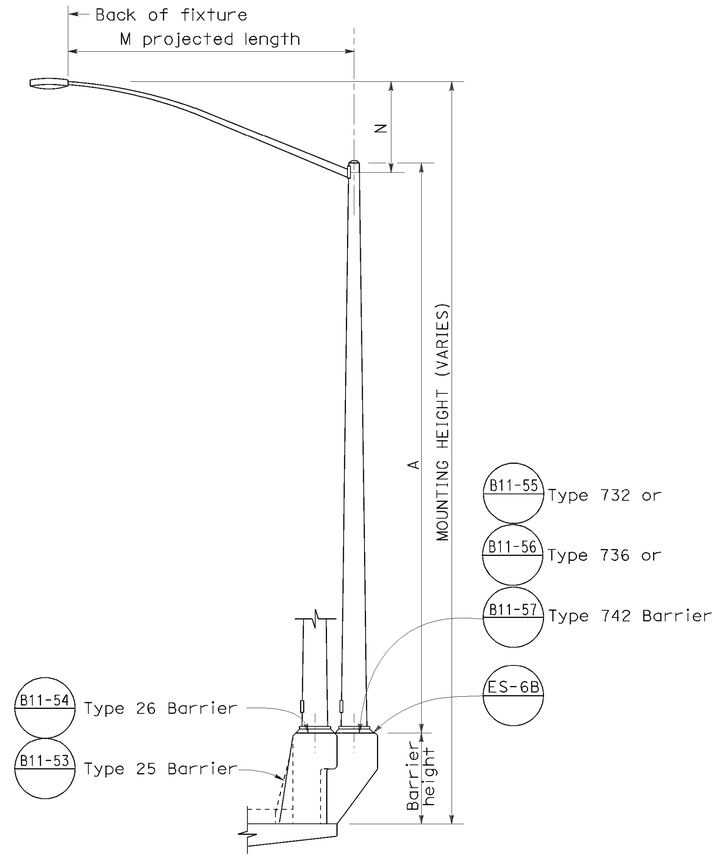

ELEVATION
TYPE 15 AND TYPE 21 BARRIER RAIL MOUNTED

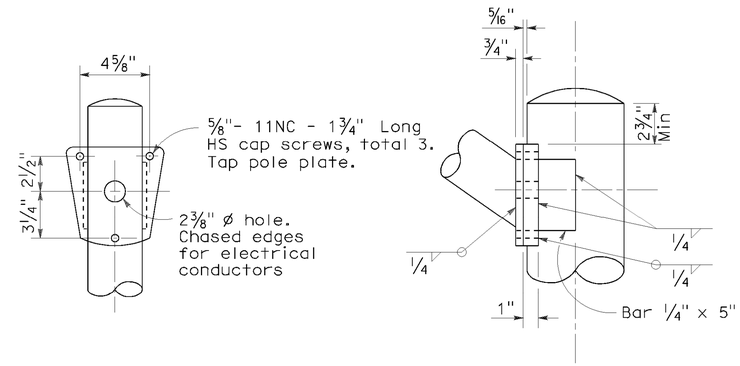

DETAIL R
LUMINAIRE ARM CONNECTION

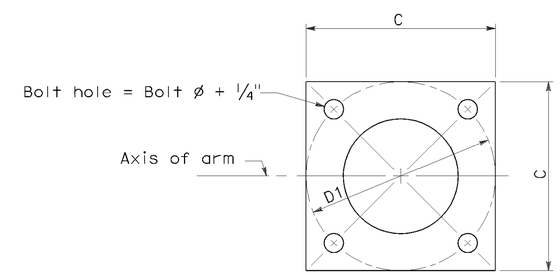

BASE PLATE

POLE TYPE	POLE DATA				BASE PLATE DATA				LUMINAIRE ARM
	A Height	Min OD Base	Min OD Top	Wall Thickness	C	D1 Bolt Circle	Thickness	Anchor Bolts Size	
15	30'	8"	3 7/8"	0.1196"	1'-0"	1'-0"	1"	1" ø x 3'-0" x 4"*	6' - 15' [12']
21	35'	8 5/8"	3 7/8"	0.1196"	1'-0"	1'-0"	1"	1 1/4"ø x 3'-0" x 4"*	6' - 15' [12']

* For barrier rail bolts, see Standard Plan ES-6B.

LUMINAIRE ARM DATA					
M Projected Length	N Rise	Min OD At Pole	Nominal Thickness	P Type 15	P Type 21
6'-0"	2'-0"±	3 1/4"	0.1196"	31'-6"±	36'-6"±
8'-0"	2'-6"±	3 1/2"	0.1196"	32'-0"±	37'-0"±
10'-0"	3'-3"±	3 7/8"	0.1196"	32'-9"±	37'-9"±
12'-0"	4'-3"±	3 7/8"	0.1196"	33'-9"±	38'-9"±
15'-0"	4'-9"±	4 1/4"	0.1196"	34'-3"±	39'-3"±

NOTES:

1. ☐ Indicates arm length to be used unless otherwise noted on the plans.
2. For Type 15-SB, use Type 15 standard with Type 30 slip base plate details, see Standard Plan ES-6F.
3. For additional notes, see Standard Plan ES-7M and ES-7N.

STATE OF CALIFORNIA
DEPARTMENT OF TRANSPORTATION

ELECTRICAL SYSTEMS (LIGHTING STANDARD TYPES 15 AND 21)

NO SCALE

RSP ES-6A DATED OCTOBER 5, 2007 SUPERCEDES STANDARD PLAN ES-6A DATED MAY 1, 2006 - PAGE 427 OF THE STANDARD PLANS BOOK DATED MAY 2006.

REVISED STANDARD PLAN RSP ES-6A

2006 REVISED STANDARD PLAN RSP ES-6A

P:\proj1\02\3E810_plans\pse\23e810va063.dgn

7-10-07

DIST	COUNTY	ROUTE	POST MILES TOTAL PROJECT	SHEET NO.	TOTAL SHEETS
02	Teh,Sha	5	R27.1/42.1 0.0/0.9	211	215

REGISTERED CIVIL ENGINEER

January 18, 2008
PLANS APPROVAL DATE

REGISTERED PROFESSIONAL ENGINEER
Stanley P. Johnson
No. C57793
Exp. 03-31-08
CIVIL
STATE OF CALIFORNIA

The State of California or its officers or agents shall not be responsible for the accuracy or completeness of electronic copies of this plan sheet.

To accompany plans dated 06-17-11

LUMINAIRE ARM DATA

PROJECTED LENGTH	THICKNESS	MINIMUM OD @ POLE	MOUNTING HEIGHT
* 6'-0"	0.1196"	3¼"	36'-9"±
8'-0"		3½"	37'-3"±
10'-0"		3¾"	38'-0"±
12'-0"		3¾"	39'-0"±
15'-0"		4¼"	39'-6"±
** 20'-0"	0.1793"	5"	37'-0"±

* Type 30 - arm length 6'-0" - 15'-0" maximum
** Type 31 - arm lengths 20'-0"

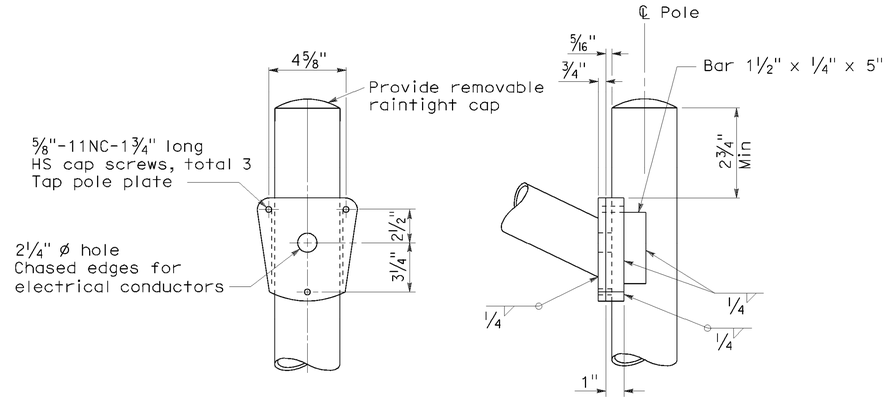

DETAIL A - TYPE 30

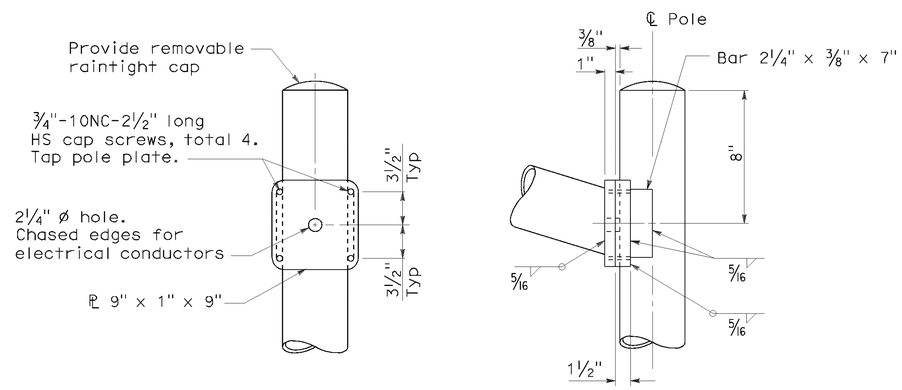

DETAIL A - TYPE 31

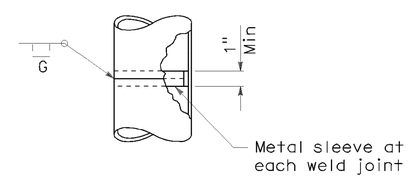

POLE SPLICE

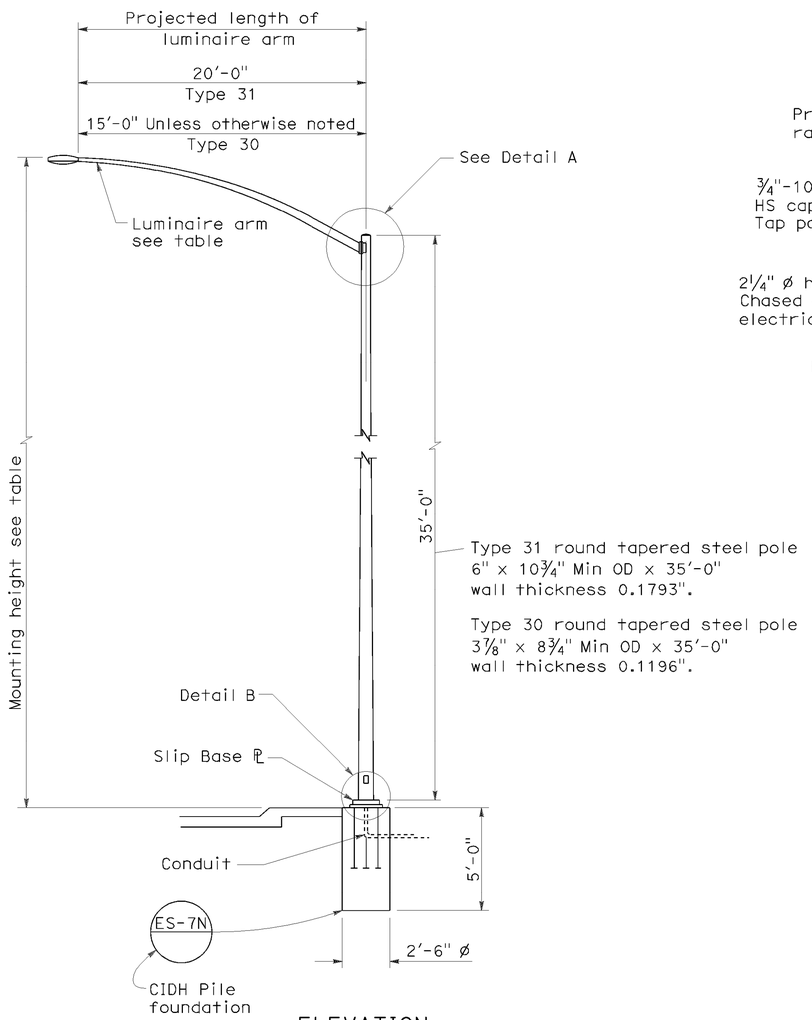

ELEVATION

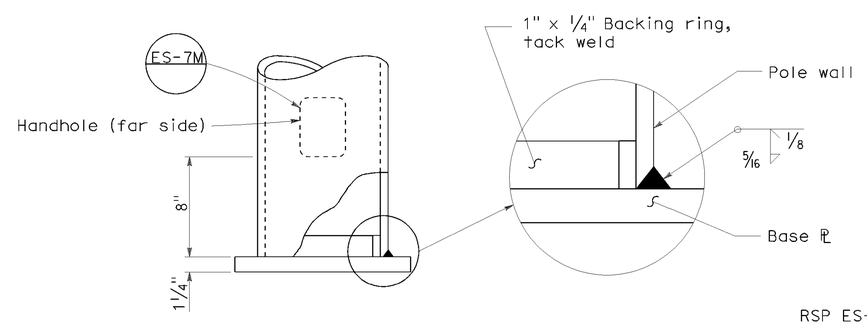

DETAIL B

NOTES:

1. Sheet steel shall have a minimum yield of 48,000 psi.
2. For slip base details see Standard Plan ES-6F.
3. For Type 30 fixed base use Type 15 base plate, and foundation shown on Revised Standard Plan RSP ES-6A. Use 1¼" Dia x 3'-6" x 4" anchor bolts.
4. For Type 31 fixed base use Type 32 base plate, anchor bolts and foundation on Standard Plan ES-6G.
5. Handhole shall be located on downstream side of traffic unless noted otherwise on plans.
6. For additional general notes refer to Standard Plan ES-7M.

STATE OF CALIFORNIA
DEPARTMENT OF TRANSPORTATION

ELECTRICAL SYSTEMS (LIGHTING STANDARD TYPES 30 AND 31)

NO SCALE

RSP ES-6E DATED JANUARY 18, 2008 SUPERCEDES STANDARD PLAN ES-6E DATED MAY 1, 2006 - PAGE 430 OF THE STANDARD PLANS BOOK DATED MAY 2006.

REVISED STANDARD PLAN RSP ES-6E

2006 REVISED STANDARD PLAN RSP ES-6E

P:\proj1\02\3E810_plans\pse\23e810va064.dgn

11-19-07

DIST	COUNTY	ROUTE	POST MILES TOTAL PROJECT	SHEET NO.	TOTAL SHEETS
02	Teh,Sha	5	R27.1/42.1 0.0/0.9	212	215

Raymond Don Tsztoo
REGISTERED CIVIL ENGINEER

June 6, 2008
PLANS APPROVAL DATE

REGISTERED PROFESSIONAL ENGINEER
Raymond Don Tsztoo
No. C37332
Exp. 6-30-08
CIVIL
STATE OF CALIFORNIA

The State of California or its officers or agents shall not be responsible for the accuracy or completeness of electronic copies of this plan sheet.

To accompany plans dated 06-17-11

ANNULAR AND HELICAL PROFILE

COUPLING TYPE	PIPE CORRUGATION	PIPE SIZE	W OR A	PIPE WALL THICKNESS		BAND THICKNESS		BAR AND STRAP (CSP ONLY)			ANGLE						
											DIMENSIONS		BOLTS (No.- Dia)		RIVETS ANGLE TO BAND		SPOT WELDS ANGLE TO BAND
				CSP	CAP	CSP	CAP	STRAP THICKNESS	BOLTS Dia	BAR Dia	CSP	CAP	CSP	CAP	CSP	CAP	CSP
TWO PIECE INTEGRAL FLANGE	1½′ × ¼″	6″	7″	0.064″-0.168″		0.052″							3-⅜″				
	1½′ × ¼″	8″-10″	7″	0.064″-0.168″	0.060″-0.164″	0.064″	0.060″						3-⅜″	3-⅜″			
ANNULAR	2⅔″ × ½″	THROUGH 24″	12″	0.064″-0.168″	0.060″-0.164″	0.064″	0.060″				2″ × 2″ × 3/16″	2″ × 2″ × 3/16″	3-½″	3-½″	3-⅜″	3-⅜″	3-½″
HUGGER	2⅔″ × ½″ REROLLED END	THROUGH 24″	10½″	0.064″-0.168″		0.064″		0.079″	½″	⅞″							

SPIRAL RIB PROFILE

COUPLING TYPE	PIPE CORRUGATION	PIPE SIZE	W	PIPE WALL THICKNESS		BAND THICKNESS		BAR AND STRAP (SSRP ONLY)			ANGLE						
											DIMENSIONS		BOLTS (No.- Dia)		RIVETS ANGLE TO BAND		SPOT WELDS ANGLE TO BAND
				SSRP	ASRP	SSRP	ASRP	STRAP THICKNESS	BOLTS Dia	BAR Dia	SSRP	ASRP	SSRP	ASRP	SSRP	ASRP	SSRP
ANNULAR	2⅔″ × ½″ * REROLLED END	24″	12″	0.064″-0.168″	0.060″-0.164″	0.064″	0.060″				2″ × 2″ × 3/16″	2″ × 2″ × 3/16″	3-½″	3-½″	3-⅜″	3-⅜″	3-½″
HUGGER	2⅔″ × ½″ * REROLLED END	24″	10½″	0.064″-0.168″		0.064″		0.079″	½″	⅞″							

* See Note 12.

NOTES:

1. All ferrous metal coupling band connection hardware shall be galvanized or electro-plated in accordance with the Standard Specifications.
2. For helically corrugated coupling bands, the connection angles may be oriented parallel to the pipe axis, provided connecting holes are slotted lengthwise sufficiently to allow adjustment for the helix angle.
3. Tension strap may be connected to band with either spot welds or fillet welds that develop minimum required strength of strap.
4. Use 1¼″ gage line dimension on attached angle leg for rivets and spot welds.
5. Band thickness shall not be less than:
   a. 3 standard thicknesses lighter than the thickness of the pipe for Corrugated Steel Pipe.
   b. 2 standard thicknesses lighter than the thickness of the pipe and in no case lighter than 0.060″ for Corrugated Aluminum Pipe.
6. Dimensions, thicknesses and strengths shown are minimum.
7. For pipe arches use same width band as for round pipe of equal periphery.
8. Fillet welds of equivalent strenght may be substituted for spot welds or rivets.
9. Spot welds shall develop minimum required strength of strap.
10. Pipe with rerolled ends having at least two 2⅔″ × ½″ annular corrugations at each end with or without an upturned flange may be connected with any of the annular coupling bands shown for pipe of the same diameter and wall thickness and having 2⅔″ × ½″ corrugations.
11. For downdrain applications, two piece integral flange couplers shall have factory applied sleeve type rubber gaskets with a minimum length of 7″ measured along the length of the pipe.
12. All profiles of Spiral Rib Pipe (¾″ × ¾″ ribs at 7½″ pitch and ¾″ × 1″ ribs at 11½″ pitch in both steel and aluminum and ¾″ × 1″ ribs at 8½″ pitch in steel only) shall be manufactured with rerolled ends. Corrugation profile of the rerolled ends shall be 2⅔″ × ½″ annual corrugations with a minimum of two full corrugations at each end.

STATE OF CALIFORNIA
DEPARTMENT OF TRANSPORTATION

CORRUGATED METAL PIPE COUPLING DETAILS No. 7 DOWNDRAIN

NO SCALE

RSP D97G DATED JUNE 6, 2008 SUPERSEDES STANDARD PLAN D97G
DATED MAY 1, 2006 - PAGE 189 OF THE STANDARD PLANS BOOK DATED MAY 2006.

REVISED STANDARD PLAN RSP D97G

2006 REVISED STANDARD PLAN RSP D97G

P:\proj1\02\3E810_plans\pse\23e810va065.dgn

4-4-08

DIST	COUNTY	ROUTE	POST MILES TOTAL PROJECT	SHEET No.	TOTAL SHEETS
02	Sha, Teh	5	0.0/0.9 R27.1/42.1	213	215

Heidi Kuntz 5-03-11
REGISTERED CIVIL ENGINEER DATE

June 17, 2011
PLANS APPROVAL DATE

REGISTERED PROFESSIONAL ENGINEER Heidi Kuntz No. C62489 Exp. 9-30-11 CIVIL STATE OF CALIFORNIA

The State of California or its officers or agents shall not be responsible for the accuracy or completeness of electronic copies of this plan sheet.

DECK REPAIR TABLE
REMOVE UNSOUND CONCRETE AND RAPID SETTING CONCRETE (PATCH)

BRIDGE NAME	BRIDGE NUMBER	APPROXIMATE AREA DAMAGED (PERCENT)	APPROXIMATE DEPTH (INCHES)
COTTONWOOD CREEK	06-0204	1	3

Locations to be determined by the Engineer. For details see "DECK REPAIR DETAIL - OVERLAY".

QUANTITIES

1 - COTTONWOOD CREEK BOH — BRIDGE NO. 06-0204

REMOVE CONCRETE DECK SURFACE	7,800	SQFT
REMOVE UNSOUND CONCRETE	297	CF
PREPARE CONCRETE BRIDGE DECK SURFACE	118,600	SQFT
RAPID SETTING CONCRETE (PATCH)	297	CF
FURNISH POLYESTER CONCRETE OVERLAY	11,600	CF
PLACE POLYESTER CONCRETE OVERLAY	118,600	SQFT

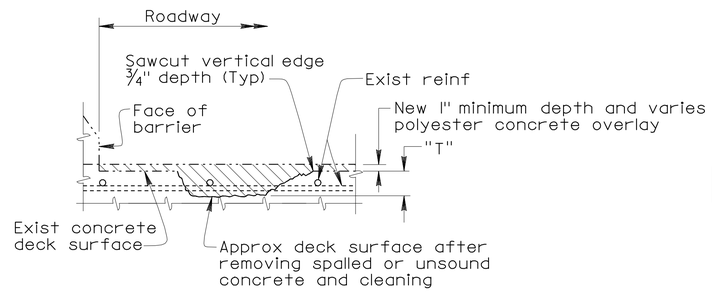

DECK REPAIR DETAIL - OVERLAY

Notes:
-Reinforcement may be encountered during deck concrete removal.
-For "T" > 3" use rapid setting concrete patch.

NOTES: (APPLY TO ALL SHEETS)

-·-·-·- Indicates existing.

THE CONTRACTOR SHALL VERIFY ALL CONTROLLING FIELD DIMENSIONS BEFORE ORDERING OR FABRICATING ANY MATERIAL.

STANDARD PLANS DATED MAY 2006

SHEET NO.	TITLE
A10A	ACRONYMS AND ABBREVIATIONS (SHEET 1 OF 2)
A10B	ACRONYMS AND ABBREVIATIONS (SHEET 2 OF 2)

NOTES: (APPLY TO THIS SHEET ONLY)

Indicates limits of prepare concrete bridge deck surface, furnish and place new 1" minimum depth and varies polyester concrete overlay. Prior to placing new polyester concrete overlay remove unsound concrete and patch with rapid setting concrete as shown on "DECK REPAIR DETAIL - OVERLAY".

Indicates limits of remove concrete deck surface see "POLYESTER CONCRETE TAPER DETAILS" on "MISCELLANEOUS DETAILS" sheet.

INDEX TO PLANS

SHEET NO.	TITLE
1	GENERAL PLAN NO. 1
2	GENERAL PLAN NO. 2
3	MISCELLANEOUS DETAILS

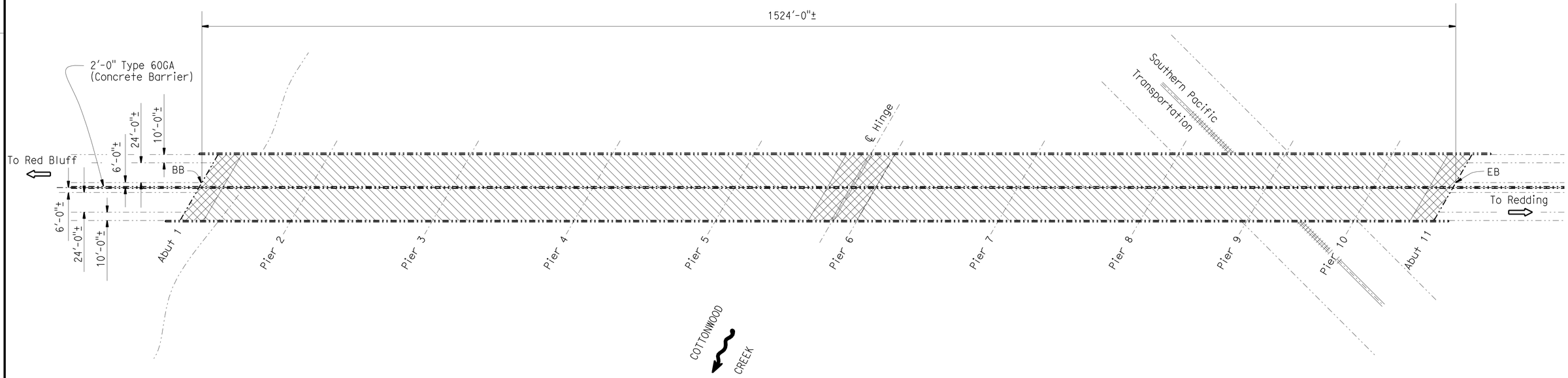

COTTONWOOD CREEK BOH

Br No. 06-0204, PM 0.01
1" = 60'

Matthew W. Lee 5-03-11
DESIGN ENGINEER

	BY	CHECKED			
DESIGN	Heidi Kuntz	Matt Lee	LOAD FACTOR DESIGN	LIVE LOADING: HS20-44 AND ALTERNATIVE AND PERMIT DESIGN LOAD	
DETAILS	David Kish	Matt Lee	LAYOUT	David Kish	X
QUANTITIES	Heidi Kuntz	Matt Lee	SPECIFICATIONS	X	PLANS AND SPECS COMPARED X

STATE OF CALIFORNIA
DEPARTMENT OF TRANSPORTATION

DIVISION OF MAINTENANCE
STRUCTURE MAINTENANCE DESIGN

BRIDGE NO. VARIOUS
POST MILE VARIES

ROUTE 5 BRIDGES
GENERAL PLAN NO. 1

STRUCTURES MAINTENANCE GENERAL PLAN SHEET (ENGLISH) (REV. 09-01-10)

ORIGINAL SCALE IN INCHES FOR REDUCED PLANS 0 1 2 3

UNIT: 3488
PROJECT NUMBER & PHASE: 0200020181-1
CONTRACT NO.: 02-3e8101

DISREGARD PRINTS BEARING EARLIER REVISION DATES

REVISION DATES: 2-02-11 2-08-11 3-30-11

SHEET 1 OF 3

FILE => 02-3e8101_01gp.dgn

USERNAME => GKish DATE PLOTTED => 16-JUN-2011 TIME PLOTTED => 06:30

DIST	COUNTY	ROUTE	POST MILES TOTAL PROJECT	SHEET No.	TOTAL SHEETS
02	Sha,Teh	5	0.0/0.9 R27.1/42.1	214	215

Heidi Kuntz 5-03-11
REGISTERED CIVIL ENGINEER DATE

June 17, 2011
PLANS APPROVAL DATE

REGISTERED PROFESSIONAL ENGINEER Heidi Kuntz No. C62489 Exp. 9-30-11 CIVIL STATE OF CALIFORNIA

The State of California or its officers or agents shall not be responsible for the accuracy or completeness of electronic copies of this plan sheet.

DECK REPAIR TABLE
REMOVE UNSOUND CONCRETE AND RAPID SETTING CONCRETE (PATCH)

BRIDGE NAME	BRIDGE NUMBER	APPROXIMATE AREA DAMAGED (PERCENT)	APPROXIMATE DEPTH (INCHES)
SOUTH FORK BLUE TENT CREEK	08-0026L	1	3

Locations to be determined by the Engineer. For details see "DECK REPAIR DETAIL - OVERLAY".

NOTES: (APPLY TO THIS SHEET ONLY)

Indicates limits of prepare concrete bridge deck surface, furnish and place new 1" minimum depth and varies polyester concrete overlay. Prior to placing new polyester concrete overlay remove unsound concrete and patch with rapid setting concrete as shown on "DECK REPAIR DETAIL - OVERLAY".

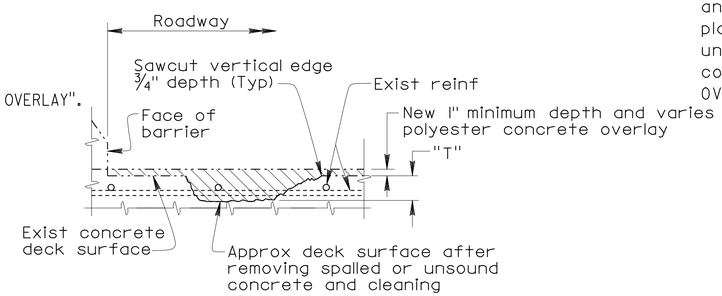

DECK REPAIR DETAIL - OVERLAY

Notes:
- Reinforcement may be encountered during deck concrete removal.
- For "T" > 3" use rapid setting concrete patch.

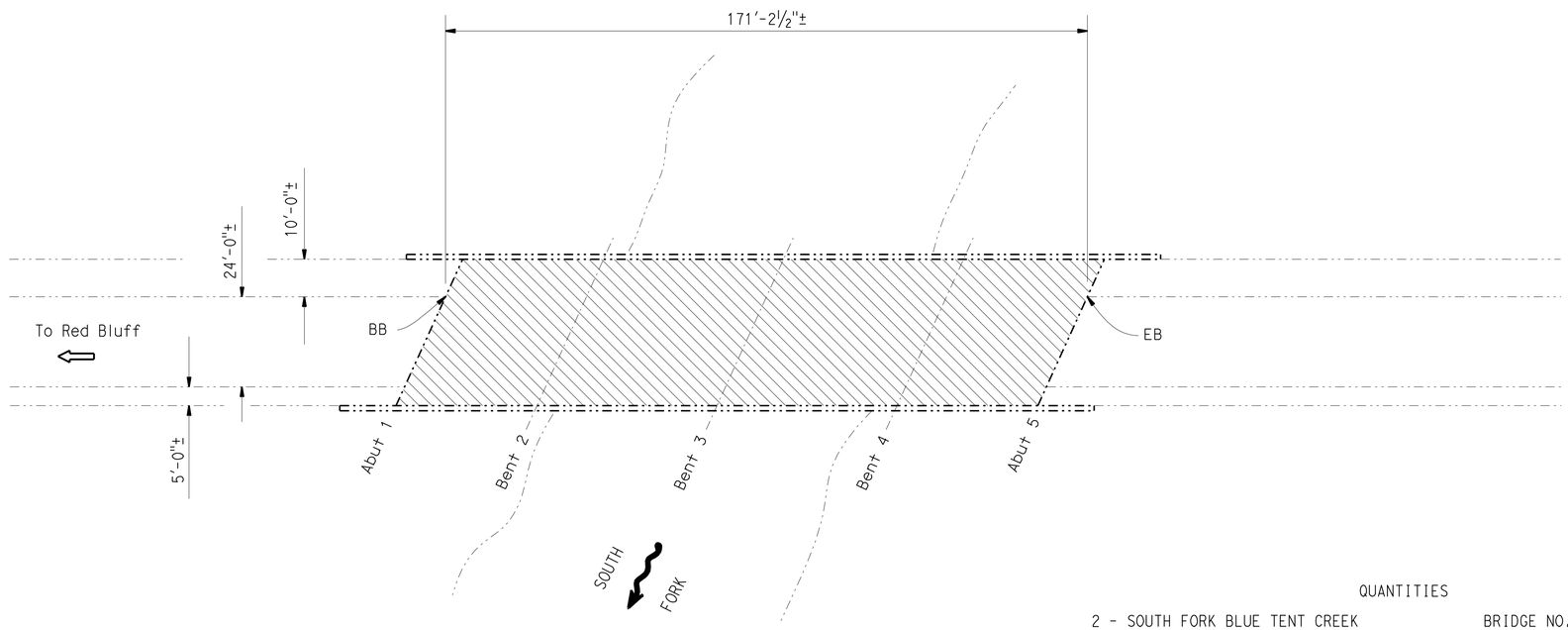

QUANTITIES

2 - SOUTH FORK BLUE TENT CREEK	BRIDGE NO. 08-0026L	
REMOVE UNSOUND CONCRETE	17	CF
PREPARE CONCRETE BRIDGE DECK SURFACE	6,670	SQFT
RAPID SETTING CONCRETE (PATCH)	17	CF
FURNISH POLYESTER CONCRETE OVERLAY	668	CF
PLACE POLYESTER CONCRETE OVERLAY	6,670	SQFT

SOUTH FORK BLUE TENT CREEK

Br No. 08-0026L, PM 31.75
1" = 20'

Matthew W. Lee 5-03-11
DESIGN ENGINEER

	BY	CHECKED
DESIGN	Heidi Kuntz	Matt Lee
DETAILS	David Kish	Matt Lee
QUANTITIES	Heidi Kuntz	Matt Lee

LOAD FACTOR DESIGN — LIVE LOADING: HS20-44 AND ALTERNATIVE AND PERMIT DESIGN LOAD
LAYOUT — BY David Kish — CHECKED X
SPECIFICATIONS — BY X — PLANS AND SPECS COMPARED X

STATE OF CALIFORNIA
DEPARTMENT OF TRANSPORTATION

DIVISION OF MAINTENANCE
STRUCTURE MAINTENANCE DESIGN

BRIDGE NO. VARIOUS
POST MILE VARIES

ROUTE 5 BRIDGES
GENERAL PLAN NO. 2

STRUCTURES MAINTENANCE GENERAL PLAN SHEET (ENGLISH) (REV. 09-01-10)

ORIGINAL SCALE IN INCHES FOR REDUCED PLANS 0 1 2 3

UNIT: 3488
PROJECT NUMBER & PHASE: 0200020181-1
CONTRACT NO.: 02-3e8101

DISREGARD PRINTS BEARING EARLIER REVISION DATES
REVISION DATES 2-02-11 2-22-11 3-31-11

SHEET 2 OF 3

FILE => 02-3e8101_02gp.dgn

USERNAME => dkish DATE PLOTTED => 16-JUN-2011 TIME PLOTTED => 06:30

DIST	COUNTY	ROUTE	POST MILES TOTAL PROJECT	SHEET No.	TOTAL SHEETS
02	Sha,Teh	5	0.0/0.9 R27.1/42.1	215	215

Heidi Kuntz 5-03-11
REGISTERED CIVIL ENGINEER DATE

June 17, 2011
PLANS APPROVAL DATE

REGISTERED PROFESSIONAL ENGINEER
Heidi Kuntz
No. C62489
Exp. 9-30-11
CIVIL
STATE OF CALIFORNIA

The State of California or its officers or agents shall not be responsible for the accuracy or completeness of electronic copies of this plan sheet.

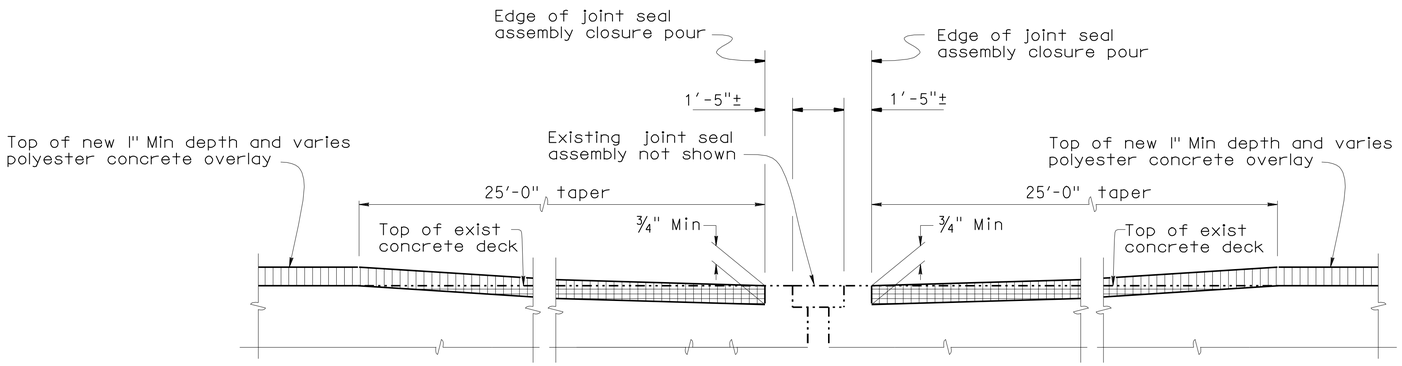

AT HINGE

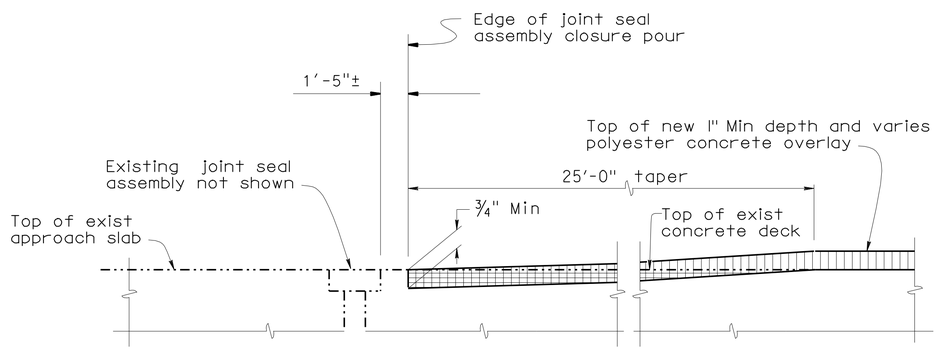

AT ABUTMENTS

POLYESTER CONCRETE TAPER DETAIL

NO SCALE

Indicates limits of remove concrete deck surface.

Indicates limits of new polyester concrete overlay.

DESIGN	BY Heidi Kuntz	CHECKED Matt Lee	
DETAILS	BY David Kish	CHECKED Matt Lee	
QUANTITIES	BY Heidi Kuntz	CHECKED Matt Lee	

STATE OF CALIFORNIA
DEPARTMENT OF TRANSPORTATION

DIVISION OF MAINTENANCE
STRUCTURE MAINTENANCE DESIGN

BRIDGE NO. VARIOUS
POST MILE VARIES

ROUTE 5 BRIDGES
MISCELLANEOUS DETAILS

STRUCTURES MAINTENANCE GENERAL PLAN SHEET (ENGLISH) (REV. 09-01-10)

ORIGINAL SCALE IN INCHES FOR REDUCED PLANS 0 1 2 3

UNIT: 3488
PROJECT NUMBER & PHASE: 0200020181-1 CONTRACT NO.: 02-3e8101

DISREGARD PRINTS BEARING EARLIER REVISION DATES

REVISION DATES 2-03-11

SHEET 3 OF 3

FILE => 02-3e8101_03det.dgn

USERNAME => dkish DATE PLOTTED => 16-JUN-2011 TIME PLOTTED => 06:30