Dist	COUNTY	ROUTE	POST MILES TOTAL PROJECT	SHEET No.	TOTAL SHEETS
02	Teh,Sha	5	R27.1/42.1, 0.0/0.9	4	215

William D. Sutherland 06-17-11
REGISTERED CIVIL ENGINEER DATE

06-17-11
PLANS APPROVAL DATE

REGISTERED PROFESSIONAL ENGINEER W. D. SUTHERLAND No. C61579 Exp. 6-30-13 CIVIL STATE OF CALIFORNIA

THE STATE OF CALIFORNIA OR ITS OFFICERS OR AGENTS SHALL NOT BE RESPONSIBLE FOR THE ACCURACY OR COMPLETENESS OF SCANNED COPIES OF THIS PLAN SHEET.

LEGEND

TAPER 0.10' TO 0.05'

** SAWCUT

*** 0.50' IMPORTED MATERIAL (SHOULDER BACKING)

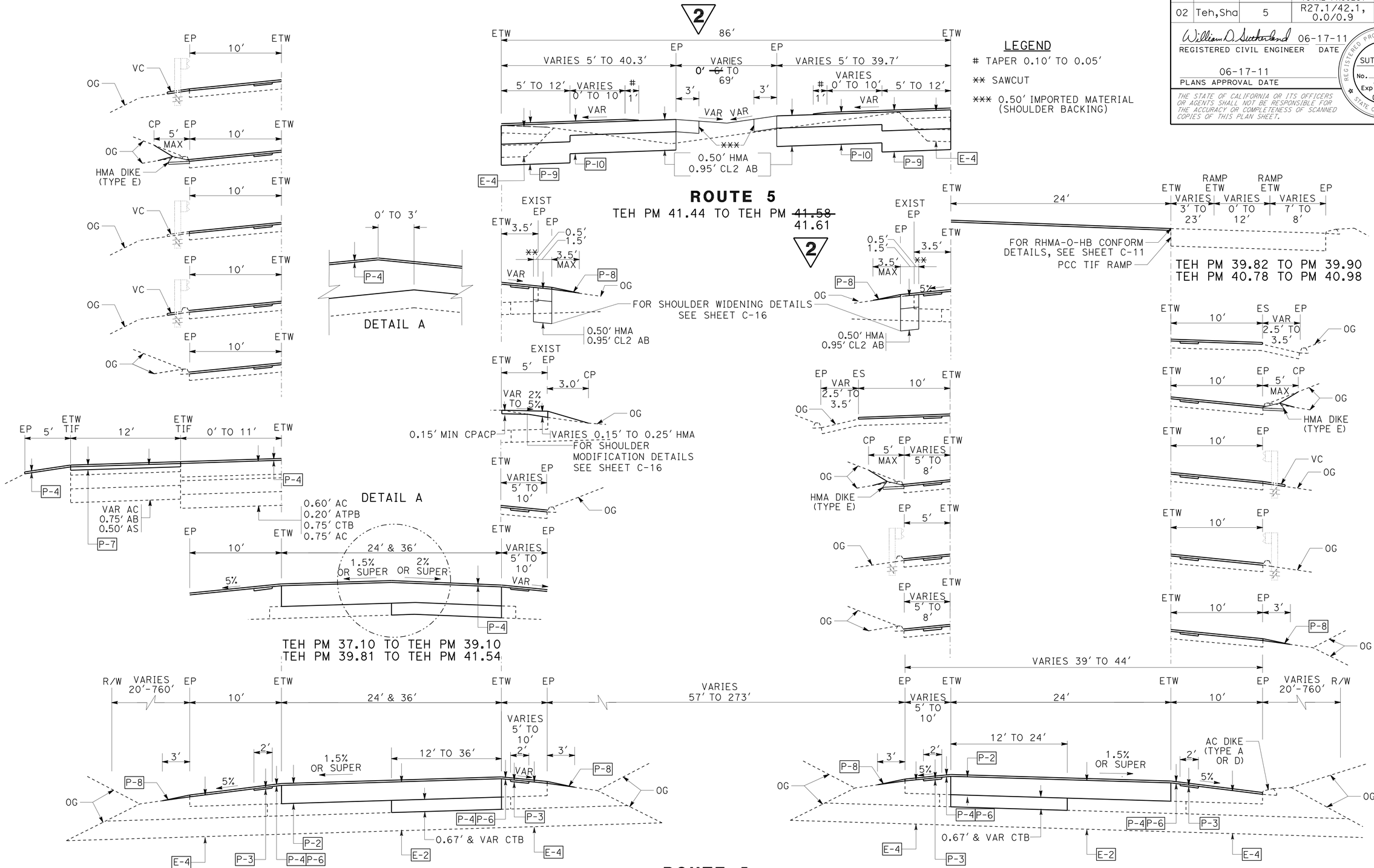

ROUTE 5

TEH PM 37.10 TO TEH PM 41.61

TYPICAL CROSS SECTIONS

NO SCALE

X-3

2 REVISED PER ADDENDUM No. 2 DATED OCTOBER 20, 2011

STATE OF CALIFORNIA - DEPARTMENT OF TRANSPORTATION
Caltrans DESIGN

FUNCTIONAL SUPERVISOR: JOHN MARTIN
CALCULATED-DESIGNED BY: BILL SUTHERLAND
CHECKED BY: JOHN MARTIN
REVISED BY
DATE REVISED

P:\proj1\02\3E810_plans\contract_plans\ADDENDUM_2 10-17-11\0200020181ca003.dgn

LAST REVISION 10-12-11
DATE PLOTTED => 20-OCT-2011
TIME PLOTTED => 09:21

Dist	COUNTY	ROUTE	POST MILES TOTAL PROJECT	SHEET No.	TOTAL SHEETS
02	Teh,Sha	5	R27.1/42.1, 0.0/0.9	5	215

William D. Sutherland 06-17-11
REGISTERED CIVIL ENGINEER DATE

06-17-11
PLANS APPROVAL DATE

REGISTERED PROFESSIONAL ENGINEER W. D. SUTHERLAND No. C61579 Exp. 6-30-13 CIVIL STATE OF CALIFORNIA

THE STATE OF CALIFORNIA OR ITS OFFICERS OR AGENTS SHALL NOT BE RESPONSIBLE FOR THE ACCURACY OR COMPLETENESS OF SCANNED COPIES OF THIS PLAN SHEET.

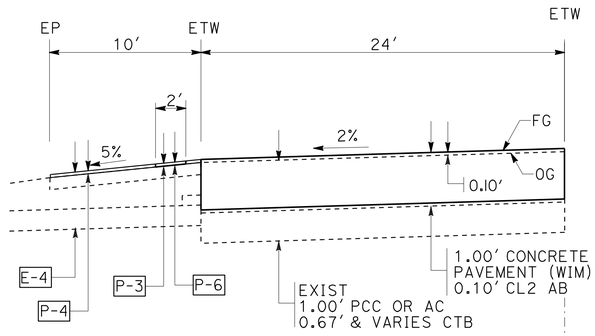

SB (WIM)
TEH PM 41.60 TO TEH PM 41.64

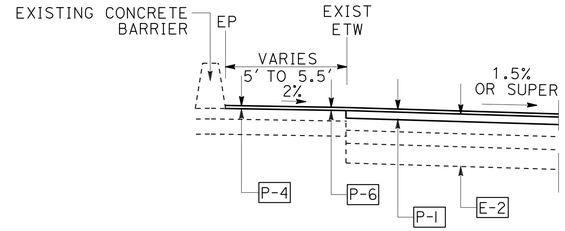

TEH PM 41.93 TO TEH PM 41.98 BBA

LEGEND

TAPER 0.10′ TO 0.05′

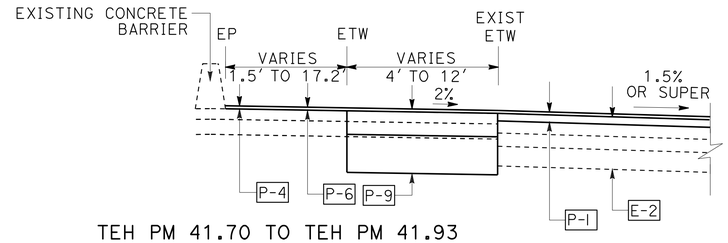

TEH PM 41.70 TO TEH PM 41.93

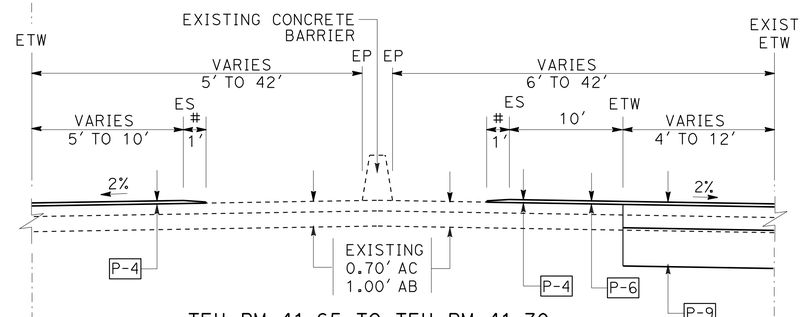

TEH PM 41.65 TO TEH PM 41.70

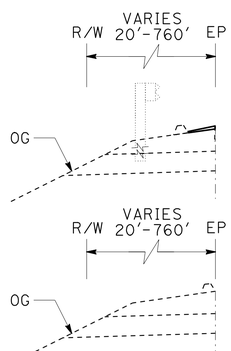

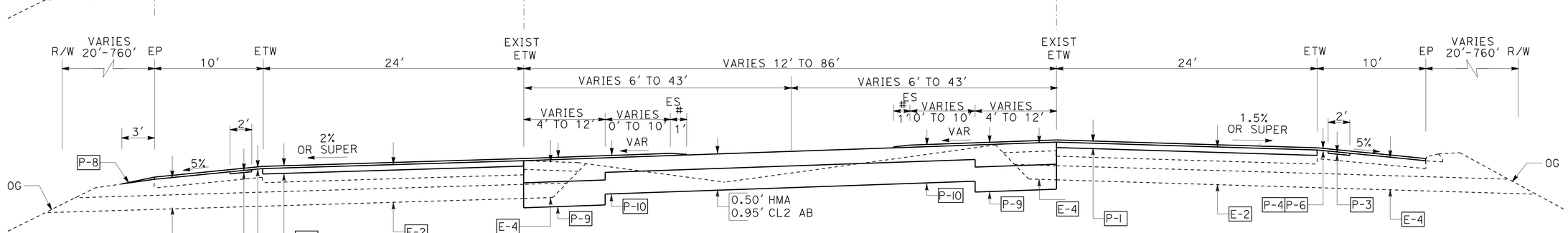

ROUTE 5
TEH PM ~~41.58~~ 41.61 TO TEH PM 41.98 BBA

2

2 **REVISED PER ADDENDUM No. 2 DATED OCTOBER 20, 2011**

TYPICAL CROSS SECTIONS
NO SCALE

X-4

REVISED BY	DATE REVISED
BILL SUTHERLAND	JOHN MARTIN
CALCULATED-DESIGNED BY	CHECKED BY
FUNCTIONAL SUPERVISOR	JOHN MARTIN

STATE OF CALIFORNIA - DEPARTMENT OF TRANSPORTATION
Caltrans
DESIGN

P:\proj\02\3E810_plans\contract_plans\ADDENDUM_2 10-17-11\02000201811ca004.dgn

LAST REVISION 10-12-11 | DATE PLOTTED => 20-OCT-2011 | TIME PLOTTED => 09:21

Dist	COUNTY	ROUTE	POST MILES TOTAL PROJECT	SHEET No.	TOTAL SHEETS
02	Teh,Sha	5	R27.1/42.1, 0.0/0.9	34	215

REGISTERED CIVIL ENGINEER 06-17-11 DATE

06-17-11
PLANS APPROVAL DATE

REGISTERED PROFESSIONAL ENGINEER CHRIS S. GAIDO No. C62535 Exp. 12-31-11 CIVIL STATE OF CALIFORNIA

THE STATE OF CALIFORNIA OR ITS OFFICERS OR AGENTS SHALL NOT BE RESPONSIBLE FOR THE ACCURACY OR COMPLETENESS OF SCANNED COPIES OF THIS PLAN SHEET.

NOTE:
1. 12" CSP PAID FOR AS PART OF 12" SLOTTED CSP PAY ITEM.

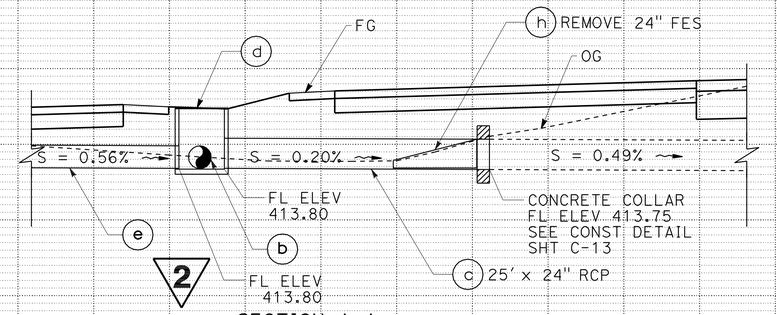

SECTION A-A

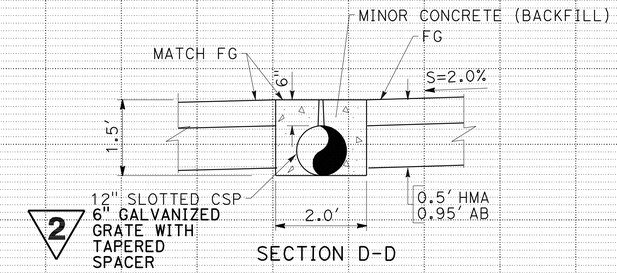

SECTION D-D

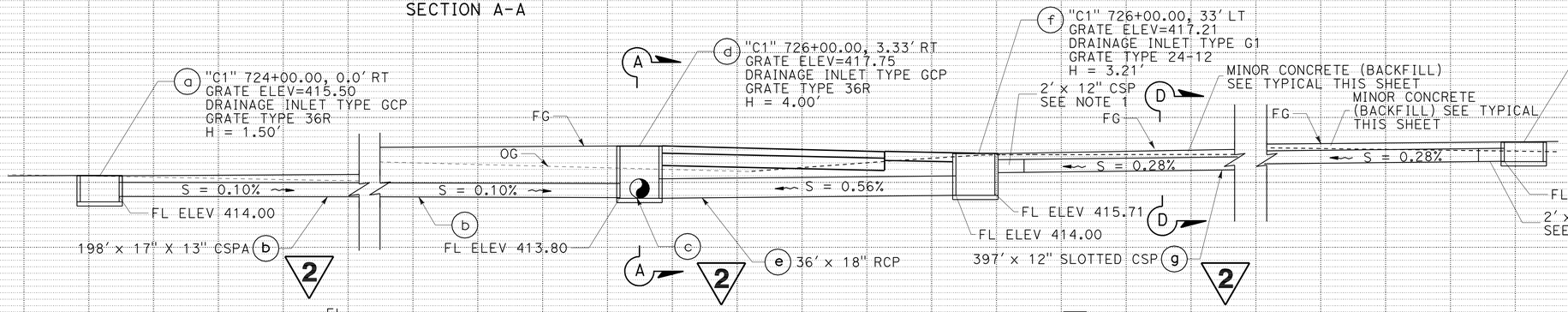

DRAINAGE SYSTEM NO. 2
"C1" 724+00.00 TO 729+98.00
TEH PM 41.54 TO TEH PM 41.65

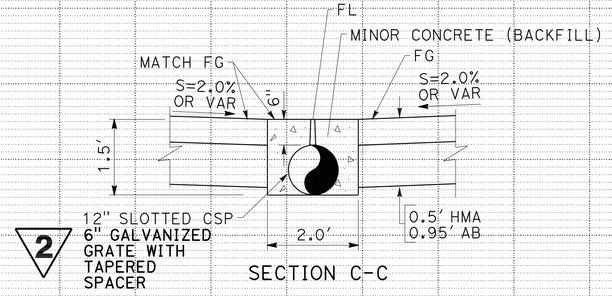

SECTION C-C

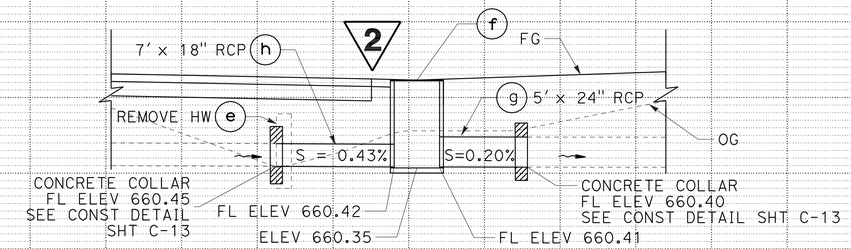

SECTION B-B

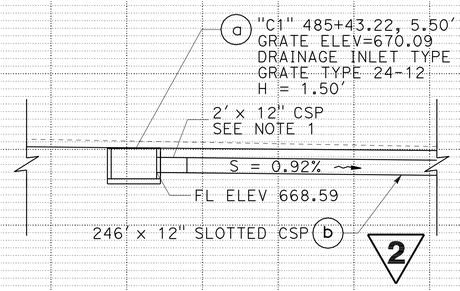

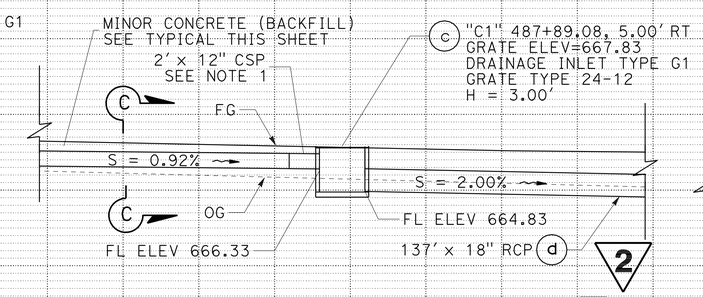

DRAINAGE SYSTEM NO. 1
"C1" 485+43.22 TO 489+20.00
TEH PM 37.02 TO TEH PM 37.09

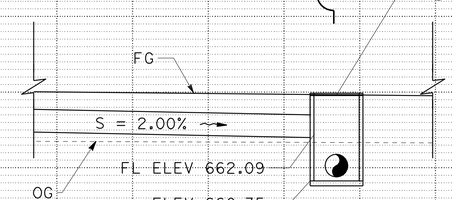

DRAINAGE PROFILES
SCALE: HORIZ 1" = 5'
VERT 1" = 5'

2 **REVISED PER ADDENDUM No. 2 DATED OCTOBER 20, 2011**

DP-1

REVISED BY | DATE REVISED
TRAVIS GURNEY | CHRIS GAIDO
CALCULATED-DESIGNED BY | CHECKED BY
FUNCTIONAL SUPERVISOR: JOHN MARTIN

STATE OF CALIFORNIA - DEPARTMENT OF TRANSPORTATION
Caltrans
DESIGN

P:\proj1\02\3E810_plans\contract_plans\ADDENDUM_2 10-17-11\02000201811b001.dgn

LAST REVISION 10-14-11 | DATE PLOTTED => 20-OCT-2011 | TIME PLOTTED => 09:21

Dist	COUNTY	ROUTE	POST MILES TOTAL PROJECT	SHEET No.	TOTAL SHEETS
02	Teh,Sha	5	R27.1/42.1, 0.0/0.9	35	215

REGISTERED CIVIL ENGINEER 06-17-11 DATE

06-17-11
PLANS APPROVAL DATE

REGISTERED PROFESSIONAL ENGINEER CHRIS S. GAIDO No. C62535 Exp. 12-31-11 CIVIL STATE OF CALIFORNIA

THE STATE OF CALIFORNIA OR ITS OFFICERS OR AGENTS SHALL NOT BE RESPONSIBLE FOR THE ACCURACY OR COMPLETENESS OF SCANNED COPIES OF THIS PLAN SHEET.

NOTE:

1. NO SURVEY DATA, ALL GRADES AND LIMITS SHOWN APPROX. RESIDENT ENGINEER TO FIELD VERIFY.

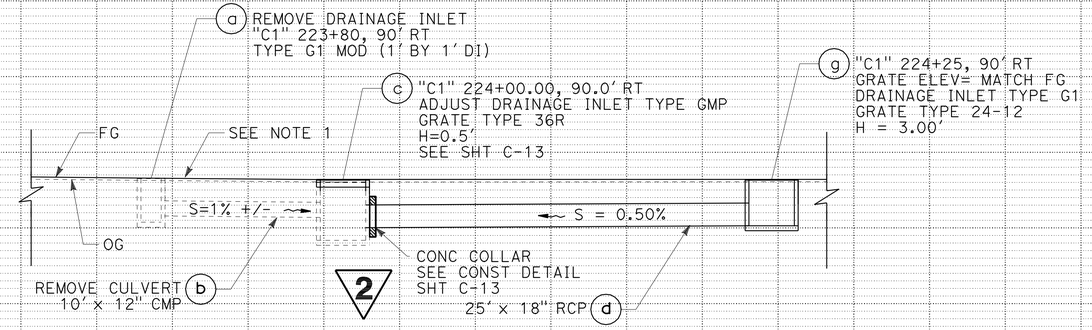

DRAINAGE SYSTEM NO. 8
"C1"223+50.00.00 TO 225+00.00
TEH PM 32.06 TO TEH PM 32.08

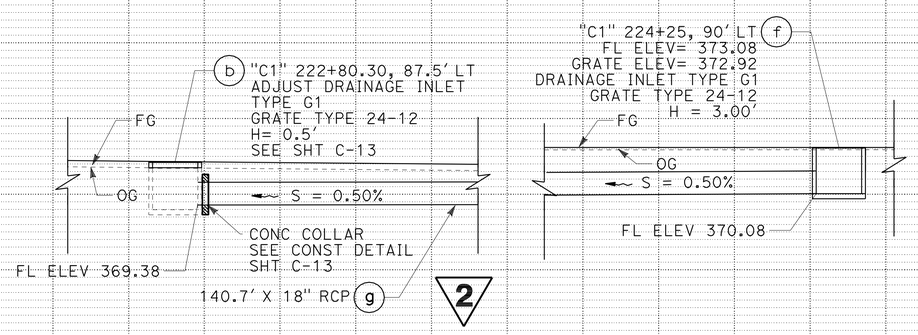

DRAINAGE SYSTEM NO. 5
"C1"222+65.00 TO 224+25.00
TEH PM 32.04 TO TEH PM 32.07

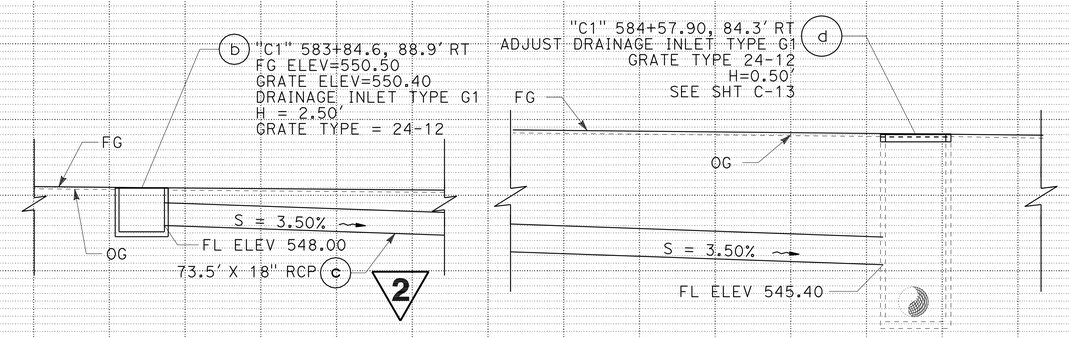

DRAINAGE SYSTEM NO. 7
"C1"583+83.00 TO 584+71.00
TEH PM 38.88 TO TEH PM 38.90

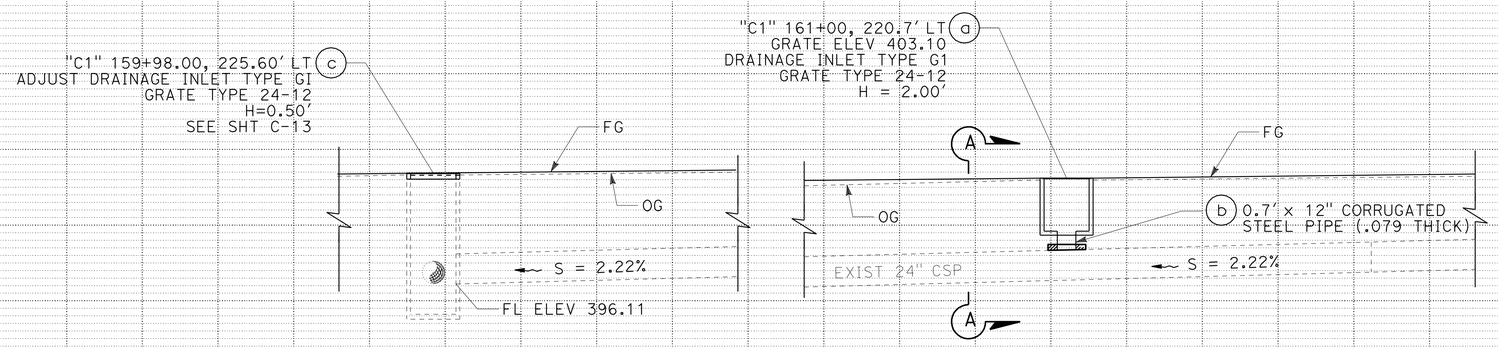

DRAINAGE SYSTEM NO. 3
"C1"159+97.00 TO 161+07.00
TEH PM 30.85 TO TEH PM 30.87

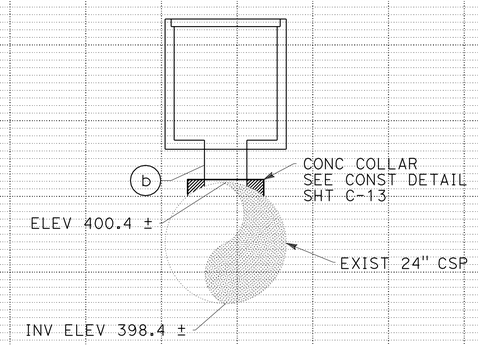

SECTION A-A
NO SCALE

DRAINAGE PROFILES
SCALE: HORIZ 1" = 5'
VERT 1" = 5'

DP-2

2 **REVISED PER ADDENDUM No. 2 DATED OCTOBER 20, 2011**

STATE OF CALIFORNIA - DEPARTMENT OF TRANSPORTATION
Caltrans
DESIGN
FUNCTIONAL SUPERVISOR JOHN MARTIN
CALCULATED-DESIGNED BY BETH A. ELMORE
CHECKED BY TRAVIS A. GURNEY
REVISED BY
DATE REVISED
P:\proj\02\3E810_plans\contract_plans\ADDENDUM_2 10-17-11\02000201811b002.dgn
LAST REVISION DATE PLOTTED => 20-OCT-2011 TIME PLOTTED => 09:21
10-17-11

Dist	COUNTY	ROUTE	POST MILES TOTAL PROJECT	SHEET No.	TOTAL SHEETS
02	Teh,Sha	5	R27.1/42.1, 0.0/0.9	36	215

REGISTERED CIVIL ENGINEER 06-17-11 DATE

06-17-11
PLANS APPROVAL DATE

REGISTERED PROFESSIONAL ENGINEER CHRIS S. GAIDO No. C62535 Exp. 12-31-11 CIVIL STATE OF CALIFORNIA

THE STATE OF CALIFORNIA OR ITS OFFICERS OR AGENTS SHALL NOT BE RESPONSIBLE FOR THE ACCURACY OR COMPLETENESS OF SCANNED COPIES OF THIS PLAN SHEET.

NOTE:

1. (N) - NOT A SEPARATE PAY ITEM, FOR INFORMATION ONLY
2. ALL CULVERT PIPES SHALL HAVE POSITIVE WATERTIGHT JOINTS.
3. 6" GALVANIZED GRATE WITH TAPERED SPACER. 2

DRAINAGE QUANTITIES

PLAN SHEET OR DRAINAGE PROFILE	DRAINAGE SYSTEM NO.	DRAINAGE UNIT NO	REMOVE FLARED END SECTION	ADJUST INLET	REMOVE CONCRETE (CURB AND GUTTER)	REMOVE CULVERT	REMOVE INLET	REMOVE HEADWALL	ROADWAY EXCAVATION	CLASS 2 AGGREGATE BASE	HOT MIX ASPHALT	PLACE HOT MIX ASPHALT (MISCELLANEOUS AREA)	MINOR CONCRETE (MINOR STRUCTURE)	MINOR CONCRETE (BACKFILL)	12" CORRUGATED STEEL PIPE (.079" THICK)	12" SLOTTED CORRUGATED STEEL PIPE (.109" THICK)	17" X 13" CORRUGATED STEEL PIPE ARCH (.079" THICK)	18" REINFORCED CONCRETE PIPE (CLASS II)	24" REINFORCED CONCRETE PIPE (CLASS II RUBBER GASKET JOINT)	36" PRECAST CONCRETE PIPE INLET	MISCELLANEOUS IRON AND STEEL	DI HEIGHT (N)	MAX COVER (N)	ALIGNMENT	STATION	DESCRIPTION
			EA	EA	LF	EA	EA	EA	CY	CY	TON	SQYD	CY	CY	LF	LF	LF	LF	LF	LF	LB	FT	FT			
C-1	1	a											0.95								326	2.0		C1	487+00	DRAINAGE INLET TYPE G1, GRATE (1) 24-12
C-1	1	b												18.96	4	246							0.7		487+00	243' X 12" SLOTTED PIPE, **SEE NOTE 3.**
C-1	1	c											0.95								326	2.0		C1	487+00	DRAINAGE INLET TYPE G1, GRATE (1) 24-12
C-1	1	d																128.0					1.0		487+00	128' X 18" RCP
C-1	1	e						1																	487+00	REMOVE HEADWALL
C-1	1	f											0.70							6.2	236	5.7		C1	487+00	DRAINAGE INLET TYPE GCP, GRATE (1) 36R
C-1	1	g											0.10						5.0				4.5	C1	487+00	5'X24" RCP,CONCRETE COLLAR
C-1	1	h																7.0					4.2		487+00	7'X18" RCP
C-2	2	a											0.70							2.5	236	2.0		C1	724+00	DRAINAGE INLET, TYPE GCP, GRATE (1) 36R
C-2	2	b															198						2.5	C1	724+00	198'X17"X13" CSPA
C-2	2	c											0.10						25.0				4.0	C1	724+00	25'X24" RCP, CONCRETE COLLAR
C-2	2	d											0.70							4.5	236	4.0		C1	724+00	DRAINAGE INLET, TYPE GCP, GRATE (1) 36R
C-2	2	e																36.0					2.5	C1	724+00	36'X18" RCP
C-2	2	f											1.00								326	3.2		C1	724+00	DRAINAGE INLET TYPE G1, GRATE (1) 24-12
C-2	2	g												30.98	4	397							0.7	C1	724+00	397'X12" SLOTTED PIPE, **SEE NOTE 3.**
C-2	2	h	1																					C1	726+00	REMOVE FES 24" RCP
C-2	2	j											0.95								326	1.5		C1	726+00	DRAINAGE INLET TYPE G1, GRATE (1) 24-12
C-21	3	a											0.95								326	2.0		C1	159+00	WILCOX GOLF ROAD SB ON-RAMP
C-21	3	b											0.10		0.7									C1	159+00	WILCOX GOLF ROAD SB ON-RAMP
C-21	3	c		1																	326			C1	159+00	WILCOX GOLF ROAD SB ON-RAMP
C-21	3	d			218																			C1	159+00	WILCOX GOLF ROAD SB ON-RAMP
C-21	3	e									32.6	87.8												C1	159+00	WILCOX GOLF ROAD SB ON-RAMP
C-21	3	f								27.8														C1	159+00	WILCOX GOLF ROAD SB ON-RAMP
C-21	3	g							42.4															C1	159+00	WILCOX GOLF ROAD SB ON-RAMP
C-21	4	a			109.0																			C1	179+00	WILCOX GOLF ROAD SB OFF-RAMP
C-21	4	b		1																	326			C1	179+00	WILCOX GOLF ROAD SB OFF-RAMP
C-21	4	c									33.3	89.6												C1	179+00	WILCOX GOLF ROAD SB OFF-RAMP
C-21	4	d								28.4														C1	179+00	WILCOX GOLF ROAD SB OFF-RAMP
C-21	4	e							43.9															C1	179+00	WILCOX GOLF ROAD SB OFF-RAMP
C-22	5	a			399.4																			C1	223+00	JELLYS FERRY SB OFF-RAMP
C-22	5	b		1																	326			C1	223+00	JELLYS FERRY SB OFF-RAMP
C-22	5	c									67.3	181.3												C1	223+00	JELLYS FERRY SB OFF-RAMP
C-22	5	d								57.4														C1	223+00	JELLYS FERRY SB OFF-RAMP
C-22	5	e							87.6															C1	223+00	JELLYS FERRY SB OFF-RAMP
C-22	5	f											0.95								326	3.0		C1	223+00	JELLYS FERRY SB OFF-RAMP
C-22	5	g																140.7					1.5	C1	223+00	JELLYS FERRY SB OFF-RAMP
C-22	6	a			205.0																			C1	444+00	HOOKER CREEK SB ON-RAMP
C-22	6	b									48.2	138.3												C1	444+00	HOOKER CREEK SB ON-RAMP
C-22	6	c								43.8														C1	444+00	HOOKER CREEK SB ON-RAMP
C-22	6	d							66.9															C1	444+00	HOOKER CREEK SB ON-RAMP
SUBTOTAL			1	3	931.4			1	240.8	157.4	181.4	497.0	8.15	49.95	8.7	643	198	311.7	30.0	13.2	3642					

EDGE DRAIN OUTLET/VENT

LOCATION			6" PLASTIC PIPE (EDGE DRAIN OUTLET)	
POSTMILE	SB/NB	LT/RT	VENT LENGTH (LF)	OUTLET LENGTH (LF)
SHA 0.47	SB	LT	10	
SHA 0.51	SB	LT	10	10
SHA 0.82	SB	LT	40	40
SHA 0.89	SB	LT		40
SUBTOTAL			60	90
TOTAL			150	

2

2 2

EDGE DRAIN

POSTMILE	LOCATION		6" PLASTIC PIPE (EDGE ~~DRTAIN~~ DRAIN)	3" PLASTIC PIPE (EDGE DRAIN)	PLACE HMA (MISC AREA)	HMA	FILTER FABRIC (N)	CEMENT TREATED PERMEABLE BASE (N)
PM	NB/SB	LT/RT	LF	LF	SQYD	TON	SQYD	CY
0.47 TO 0.89	SB	LT	2220	720	667*	460*	2235	237

* ADDITIONAL QUANTITIES SHOWN ELSEWHERE. SEE SHEET DQ-2

2 **REVISED PER ADDENDUM No. 2 DATED OCTOBER 20, 2011**

DRAINAGE QUANTITIES DQ-1

STATE OF CALIFORNIA - DEPARTMENT OF TRANSPORTATION
Caltrans DESIGN

FUNCTIONAL SUPERVISOR: JOHN MARTIN
CALCULATED-DESIGNED BY: BETH ELMORE
CHECKED BY: CHRIS GAIDO
REVISED BY / DATE REVISED

P:\proj1\02\3E810_plans\contract_plans\ADDENDUM_2 10-17-11\02000201811d001.dgn

LAST REVISION 10-14-11
DATE PLOTTED => 20-OCT-2011
TIME PLOTTED => 09:21

Dist	COUNTY	ROUTE	POST MILES TOTAL PROJECT	SHEET No.	TOTAL SHEETS
02	Teh,Sha	5	R27.1/42.1, 0.0/0.9	41	215

REGISTERED CIVIL ENGINEER 06-17-11 DATE

06-17-11
PLANS APPROVAL DATE

REGISTERED PROFESSIONAL ENGINEER J.L. MARTIN No. C47576 Exp. 12-31-11 CIVIL STATE OF CALIFORNIA

THE STATE OF CALIFORNIA OR ITS OFFICERS OR AGENTS SHALL NOT BE RESPONSIBLE FOR THE ACCURACY OR COMPLETENESS OF SCANNED COPIES OF THIS PLAN SHEET.

NOTES:

1. EXACT LOCATION OF ALL SIGNS TO BE DETERMINED BY THE ENGINEER.
2. CALIFORNIA SIGN CODES ARE DESIGNATED BY (CA), OTHERWISE FEDERAL SIGN CODES ARE SHOWN.
3. THE ENTIRE WORK AREA FOR EACH STAGE IS SHOWN ON THE STAGE CONSTRUCTION AND TRAFFIC HANDLING PLANS. FOR ACTIVE WORK AREA PROGRESSION, SEE SHEETS SCD-1 TO SCD-4
4. FOR WORK ZONE ACCESS DETAILS SEE SHEETS SCD-1 TO SCD-4
5. ALL CONSTRUCTION AREA SIGNS SHALL BE BLACK ON ORANGE UNLESS OTHERWISE NOTED
6. EXISTING EDGE OF PAVEMENT AND EDGE OF TRAVELED WAY SHOWN ARE BASED ON AS-BUILT DATA AND HAVE NOT BEEN FIELD VERIFIED. ADJUST LOCATIONS SHOWN FOR STRIPE CHANGE AS NEEDED
7. FOR PORTABLE CHANGEABLE MESSAGE SIGN (PCMS) MESSAGE DETAILS SEE SHEET SCD-5
8. NOT ALL LOCATIONS FOR TEMPORARY MARKERS (TYPE P)(CA) ARE SHOWN ON THE PLANS. FOR TEMPORARY MARKER LOCATIONS SEE DETAIL SHEET SCD-5.
9. FOR MBGR DETAILS, SEE SHEET SCD-5
10. LOCATIONS FOR STRIPE DETAIL 14A ARE NOT SHOWN. LOCATE PER STANDARD PLAN A20A

LEGEND

- WORK AREA
- TEMPORARY RAILING (TYPE K)
- TEMPORARY PAVEMENT DELINEATION DETAIL NUMBER
- CHANGE IN TRAFFIC STRIPE
- TEMPORARY CRASH CUSHION ARRAY
- CHANNELIZER (SURFACE MOUNTED)
- CONSTRUCTION AREA SIGN (STATIONARY MOUNTED)
- CONSTRUCTION AREA SIGN (PORTABLE)
- TEMPORARY MARKER (TYPE P CA)
- PORTABLE LIGHTING SYSTEM
- DIRECTION OF TRAFFIC
- TEMPORARY RAILING TO REMAIN FROM PREVIOUS STAGE
- TEMPORARY CRASH CUSHION TO REMAIN FROM PREVIOUS STAGE
- CHANNELIZER TO REMAIN FROM PREVIOUS STAGE
- CONSTRUCTION AREA SIGN (STATIONARY MOUNTED) TO REMAIN FROM PREVIOUS STAGE

STAGE 1 TRAFFIC HANDLING

RELOCATE NB LANE DROP STA "C1" 457+00 TO 474+80
(TEH PM 36.48 TO 36.82))
SHIFT TRAFFIC TO OUTSIDE
"C1" 474+80 TO 500+20 (TEH PM 36.82 TO TEH PM 37.30)
"C1" 713+80 TO 750+00 (TEH PM 41.34 TO TEH PM 42.03)

2 STAGE 1 CONSTRUCTION

REMOVE RUMBLE STRIP TEH PM R27.1 TO TEH PM 41.98, SHA PM 0.14 TO SHA PM 0.91
REPLACE AC SURFACING NB & SB SHOULDERS "C1" 480+00 TO "C1" 730+00 (TEH PM 36.92 TO TEH PM 41.65)
WIDEN NB & SB INSIDE SHOULDERS "C1" 480+00 TO "C1" 730+00 (TEH PM 36.92 TO TEH PM 41.65)
CONSTRUCT CROSSOVERS

ABBREVIATIONS

REM THERMO STRIPE	REMOVE THERMOPLASTIC TRAFFIC STRIPE
REM STRIPE	REMOVE TRAFFIC STRIPE
RHMA-O-HB	RUBBERIZED HOT MIX ASPHALT (OPEN GRADED HIGH BINDER)
SRRA	SAFETY ROADSIDE REST AREA
TIF	TRUCK INSPECTION FACILITY

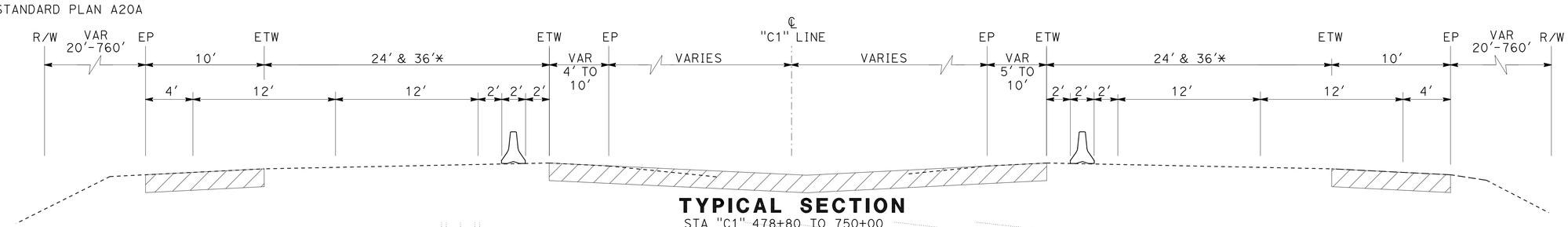

TYPICAL SECTION
STA "C1" 478+80 TO 750+00
(TEH PM 36.89 TO TEH PM 42.03)

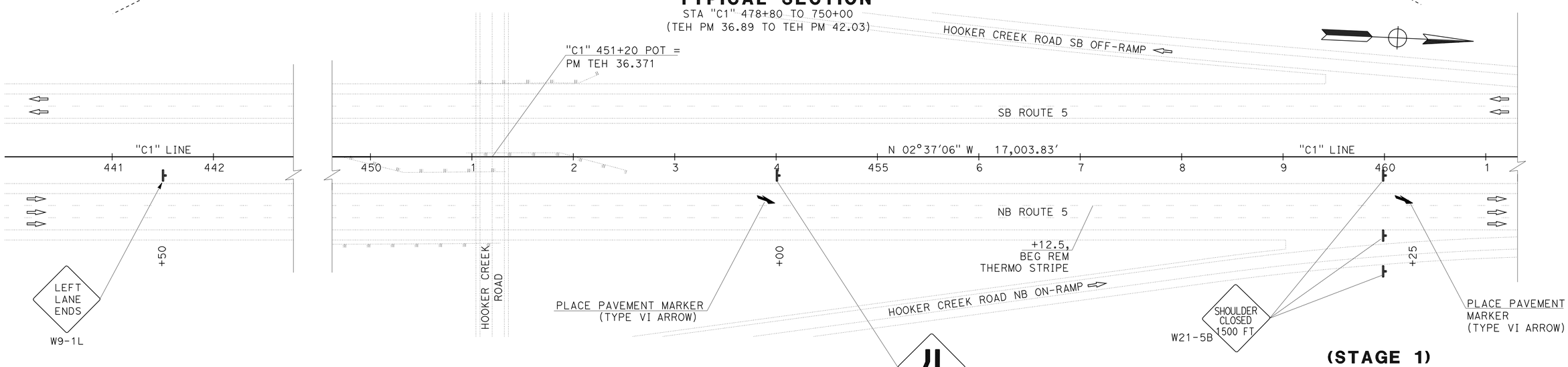

(STAGE 1)

STAGE CONSTRUCTION AND TRAFFIC HANDLING PLAN

SCALE: 1" = 50'

SC-1

2 **REVISED PER ADDENDUM No. 2 DATED OCTOBER 20, 2011**

THIS PLAN ACCURATE FOR STAGE CONSTRUCTION AND TRAFFIC HANDLING WORK ONLY

REVISED BY | DATE REVISED
JOLENA ASTIN | JOHN MARTIN
CALCULATED-DESIGNED BY | CHECKED BY
FUNCTIONAL SUPERVISOR: JOHN MARTIN

STATE OF CALIFORNIA - DEPARTMENT OF TRANSPORTATION
DESIGN
Caltrans

P:\proj1\02\3E810_plans\contract_plans\ADDENDUM_2 10-17-11\02000201811ma001.dgn

LAST REVISION | DATE PLOTTED => 20-OCT-2011 | TIME PLOTTED => 09:21
10-20-11