Dist	COUNTY	ROUTE	POST MILES TOTAL PROJECT	SHEET No.	TOTAL SHEETS
02	Sha	273	15.0/15.8	1	51

STATE OF CALIFORNIA

DEPARTMENT OF TRANSPORTATION

ACNHP-P273(012)E

PROJECT PLANS FOR CONSTRUCTION ON

STATE HIGHWAY

IN SHASTA COUNTY
IN REDDING
FROM WYNDHAM LANE
TO PARKVIEW AVENUE

TO BE SUPPLEMENTED BY STANDARD PLANS DATED 2010

INDEX OF PLANS

SHEET	DESCRIPTION
1	TITLE SHEET AND LOCATION MAP
2	KEY MAP
3-20	CONSTRUCTION DETAILS
21	UTILITY DETAILS AND QUANTITIES
22	CONSTRUCTION AREA SIGNS
23-25	TRAFFIC HANDLING PLANS
26-27	PAVEMENT DELINEATION PLANS
28	SUMMARY OF QUANTITIES
29-31	ELECTRICAL
32-51	REVISED STANDARD PLANS

THE STANDARD PLANS LIST APPLICABLE TO THIS CONTRACT IS INCLUDED IN THE NOTICE TO BIDDERS AND SPECIAL PROVISIONS BOOK.

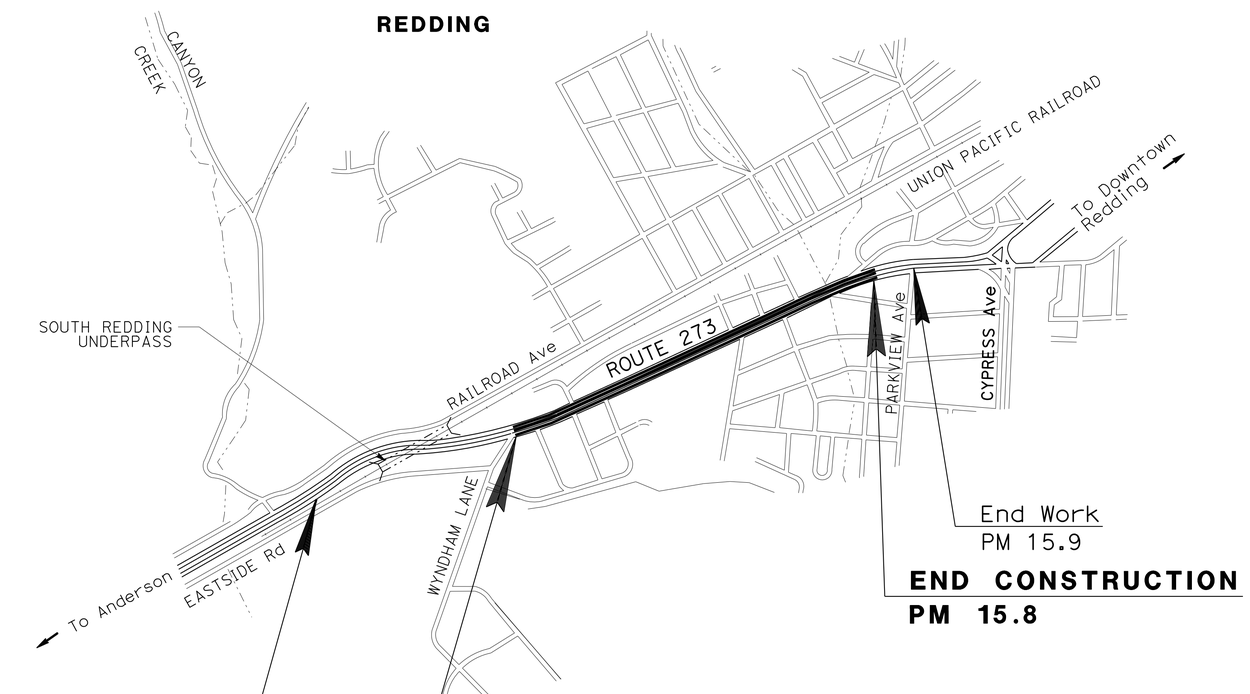

THE CONTRACTOR SHALL POSSESS THE CLASS (OR CLASSES) OF LICENSE AS SPECIFIED IN THE "NOTICE TO BIDDERS."

NO SCALE

Thomas Penick 04-02-15
PROJECT ENGINEER DATE
REGISTERED CIVIL ENGINEER

April 2, 2015
PLANS APPROVAL DATE

REGISTERED PROFESSIONAL ENGINEER TOM PENICK No. C61068 Exp. 12-31-16 CIVIL STATE OF CALIFORNIA

THE STATE OF CALIFORNIA OR ITS OFFICERS OR AGENTS SHALL NOT BE RESPONSIBLE FOR THE ACCURACY OR COMPLETENESS OF SCANNED COPIES OF THIS PLAN SHEET.

CONTRACT No.	02-3E8004
PROJECT ID	0200020165

LAST REVISION 04-02-15 | DATE PLOTTED => 02-APR-2015 TIME PLOTTED => 11:43

PROJECT MANAGER PHIL BAKER
DESIGN ENGINEER MICHAEL FEAKES

P:\proj1\02\3E800_plans\pse\23e800ab001.dgn

Dist	COUNTY	ROUTE	POST MILES TOTAL PROJECT	SHEET No.	TOTAL SHEETS
02	Sha	273	15.0/15.8	2	51

Thomas Penick 04-02-15
REGISTERED CIVIL ENGINEER DATE

04-02-15
PLANS APPROVAL DATE

REGISTERED PROFESSIONAL ENGINEER
TOM PENICK
No. C61068
Exp. 12-31-16
CIVIL
STATE OF CALIFORNIA

THE STATE OF CALIFORNIA OR ITS OFFICERS OR AGENTS SHALL NOT BE RESPONSIBLE FOR THE ACCURACY OR COMPLETENESS OF SCANNED COPIES OF THIS PLAN SHEET.

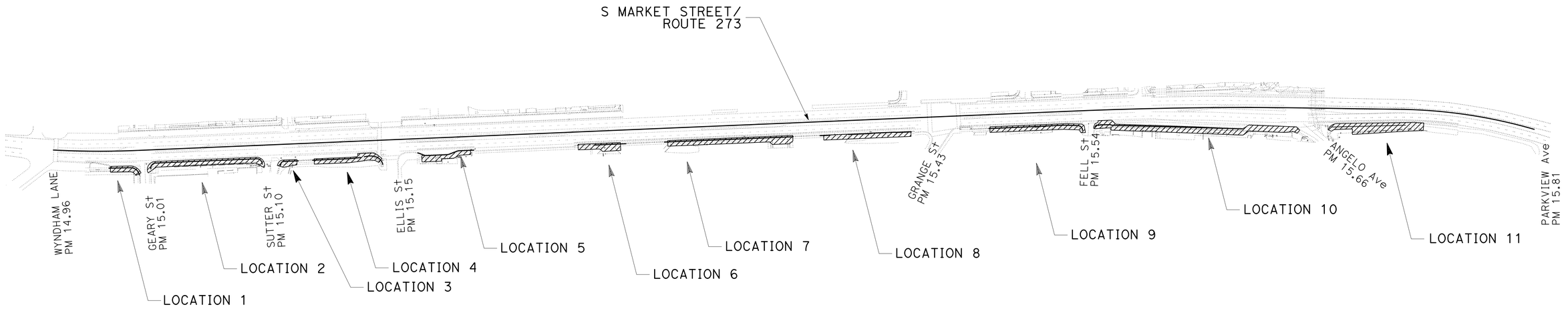

KEY MAP
NO SCALE

K-1

REVISED BY	DATE REVISED

CALCULATED-DESIGNED BY	TOM PENICK
CHECKED BY	JAVED IQBAL

FUNCTIONAL SUPERVISOR: MICHAEL FEAKES

STATE OF CALIFORNIA - DEPARTMENT OF TRANSPORTATION
Caltrans® **DESIGN**

P:\proj\02\3E800_plans\pse\23e800da001.dgn

LAST REVISION 04-02-15 | DATE PLOTTED => 02-APR-2015 | TIME PLOTTED => 11:43

Dist	COUNTY	ROUTE	POST MILES TOTAL PROJECT	SHEET No.	TOTAL SHEETS
02	Sha	273	15.0/15.8	3	51

Thomas Penick 04-02-15
REGISTERED CIVIL ENGINEER DATE

04-02-15
PLANS APPROVAL DATE

REGISTERED PROFESSIONAL ENGINEER TOM PENICK No. C61068 Exp. 12-31-16 CIVIL STATE OF CALIFORNIA

THE STATE OF CALIFORNIA OR ITS OFFICERS OR AGENTS SHALL NOT BE RESPONSIBLE FOR THE ACCURACY OR COMPLETENESS OF SCANNED COPIES OF THIS PLAN SHEET.

NOTES:

1. FOR ACCURATE RIGHT OF WAY DATA, CONTACT RIGHT OF WAY ENGINEERING AT THE DISTRICT OFFICE.
2. EXISTING UTILITY FACILITIES HAVE NOT BEEN PLOTTED ON THESE PLANS.

ABBREVIATIONS:

TBC	TOP BACK OF CURB
TRC	TOP OF RETAINING CURB
BSW	BACK OF SIDEWALK
A-UC	ADJUST UTILITY COVER TO GRADE
(E)	EXISTING
COR	CITY OF REDDING
COREP	CITY OF REDDING/ENCROACHMENT PERMIT

LEGEND:

- UNPAVED
- ROCK BLANKET
- DETECTABLE WARNING SURFACE
- SAWCUT LINE
- TCE
- Exist FIRE HYDRANT

SHEET NOTES:

XX	
A	1+93.00, 494.74 TBC
B	2+01.23, 493.95, TBC
C	2+05.27, 493.89, TBC
D	2+08.00, 494.10, TBC
E	1+95.04, 8.57 RT, 494.70, RAMP
F	2+09.68, 9.15 RT, 494.64, RAMP

CURVE DATA

No. ⊕	R	Δ	T	L
1A	8.0′	63°39′14"	4.97′	8.89′
1B	25.0′	60°44′46"	14.65′	26.51′

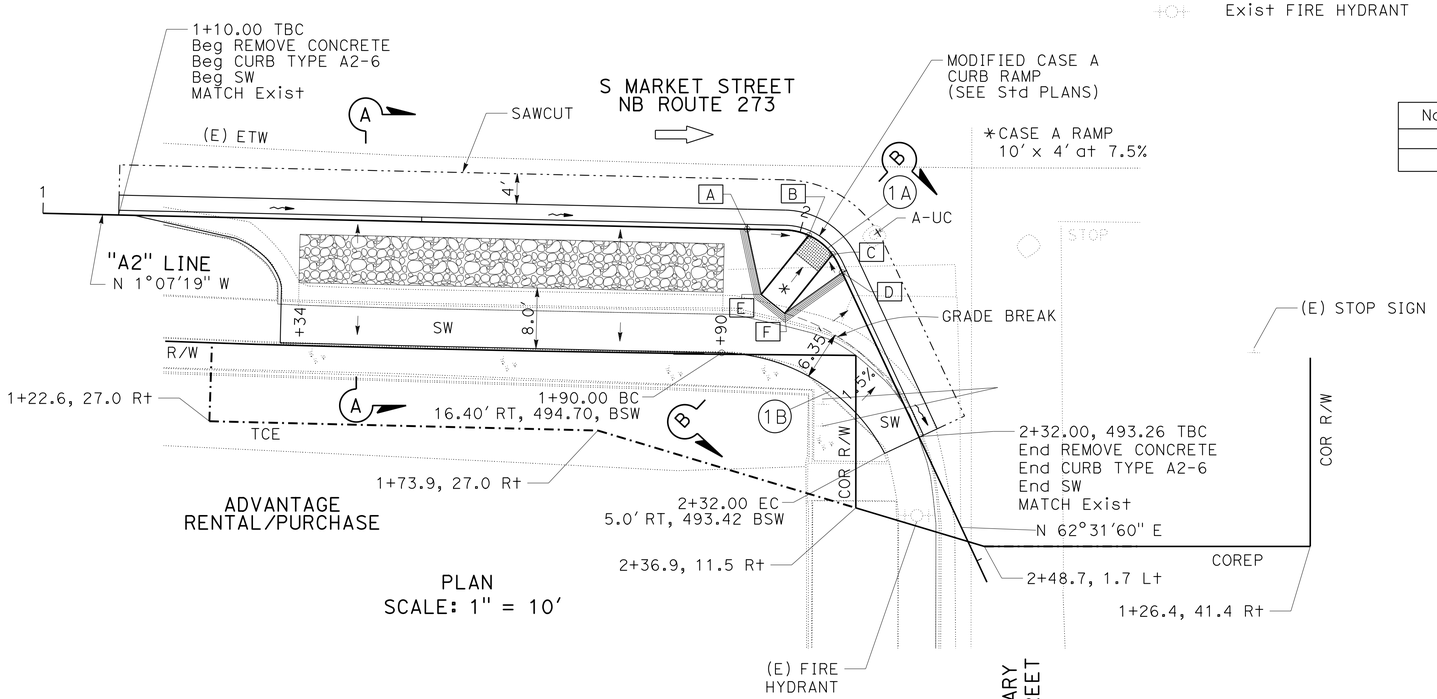

PLAN
SCALE: 1" = 10′

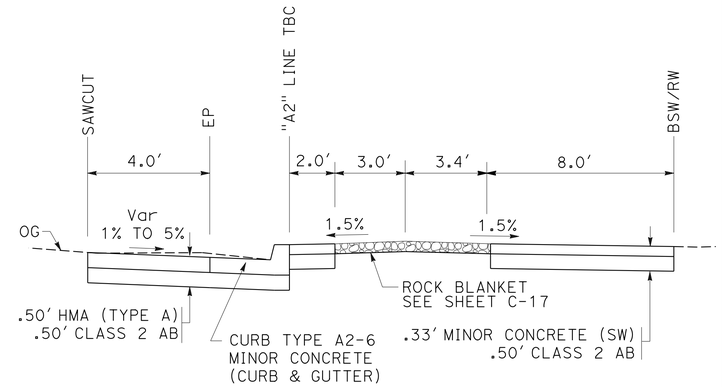

SECTION A-A (Typ)
NO SCALE

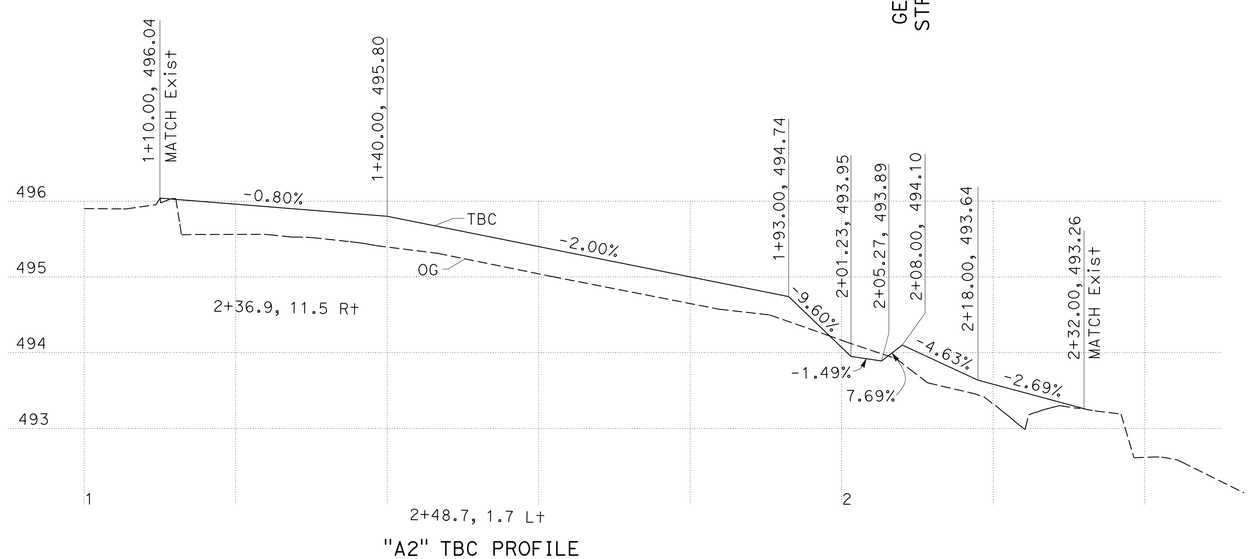

"A2" TBC PROFILE
SCALE: 1" = 10′ Horiz
1" = 1′ Vert

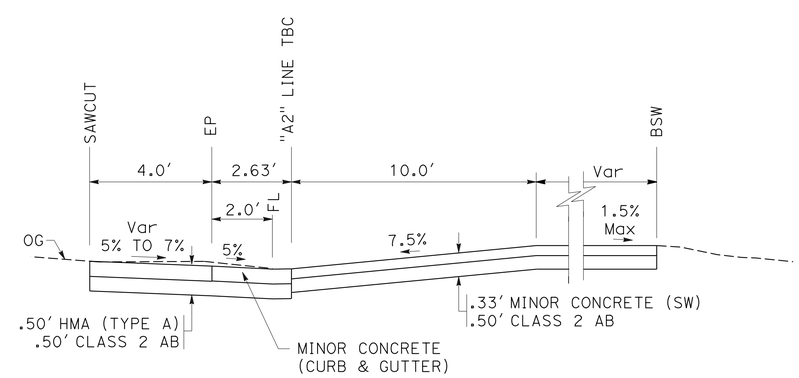

SECTION B-B (Typ)
NO SCALE

LOCATION 1
CONSTRUCTION DETAILS

SCALE: AS SHOWN

C-1

REVISED BY | DATE REVISED
TOM PENICK | JAVED IQBAL
CALCULATED-DESIGNED BY | CHECKED BY
FUNCTIONAL SUPERVISOR: MICHAEL FEAKES

STATE OF CALIFORNIA - DEPARTMENT OF TRANSPORTATION
Caltrans
DESIGN

P:\proj1\02\3E800_plans\pse\23e800ga001.dgn

LAST REVISION 04-02-15 | DATE PLOTTED => 02-APR-2015 | TIME PLOTTED => 11:43

Dist	COUNTY	ROUTE	POST MILES TOTAL PROJECT	SHEET No.	TOTAL SHEETS
02	Sha	273	15.0/15.8	4	51

Thomas Penick 04-02-15
REGISTERED CIVIL ENGINEER DATE

04-02-15
PLANS APPROVAL DATE

REGISTERED PROFESSIONAL ENGINEER TOM PENICK No. C61068 Exp. 12-31-16 CIVIL STATE OF CALIFORNIA

THE STATE OF CALIFORNIA OR ITS OFFICERS OR AGENTS SHALL NOT BE RESPONSIBLE FOR THE ACCURACY OR COMPLETENESS OF SCANNED COPIES OF THIS PLAN SHEET.

NOTES:

1. FOR ACCURATE RIGHT OF WAY DATA, CONTACT RIGHT OF WAY ENGINEERING AT THE DISTRICT OFFICE.
2. DRIVEWAY #1, #2, AND #3 SHALL BE CLOSED/CONSTRUCTED CONCURRENTLY, WHILE ACCESS TO DRIVEWAY #4 WILL BE OPEN TO TRAFFIC. DRIVEWAY #4 WILL BE CLOSED/CONSTRUCTED, WHILE ACCESS TO DRIVEWAY #1, #2, AND #3 WILL BE OPEN TO TRAFFIC.
3. EXISTING UTILITY FACILITIES HAVE NOT BEEN PLOTTED ON THESE PLANS.

CURVE DATA

No. ⊕	R	Δ	T	L
2	4.0′	90°00′00″	4.00′	6.28′

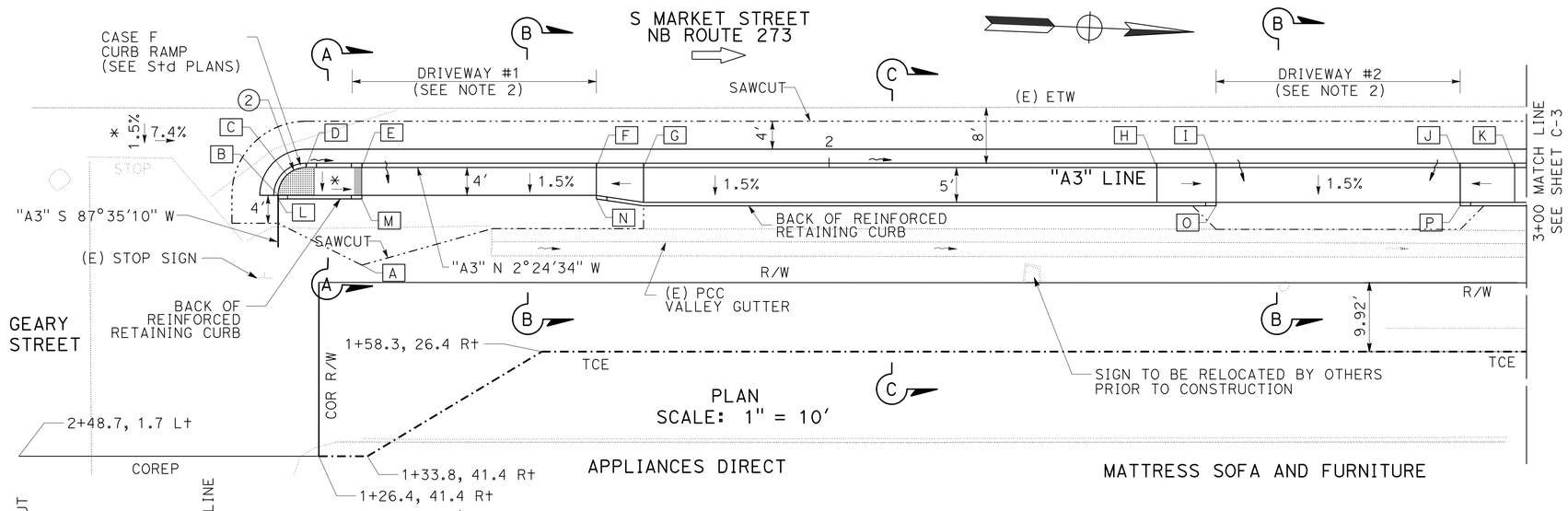

PLAN
SCALE: 1″ = 10′

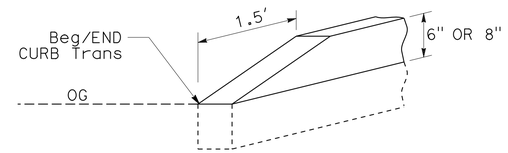

CURB END DETAIL
NO SCALE

SHEET NOTES:

XX		XX	
A	1+33.00, 14.0 RT, SAWCUT LINE	M	1+33.00, 4.67′ RT END Ret CURB END RETAINING CURB Trans, SEE CURB END DETAIL
B	Beg DEPRESSED CURB TYPE A2-6 Beg SW 1+18.72, 492.28 TBC		
C	1+22.00, 492.31, TBC	N	1+66.63, 4.67′ RT Beg Ret CURB Beg RETAINING CURB Trans, SEE CURB END DETAIL
D	CURB Trans, SEE CURB END DETAIL 1+25.00, 492.28 TBC		
E	CURB Trans, SEE CURB END DETAIL 1+33.00, 491.62, TBC	O	2+55.50, 5.67′ RT END Ret CURB END RETAINING CURB Trans, SEE CURB END DETAIL
F	1+66.63, 490.60, TBC		
G	1+73.40, 491.08, TBC		
H	2+47.00, 490.50, TBC		
I	2+55.50, 489.87, TBC	P	2+90.50, 5.67′ RT Beg Ret CURB Beg RETAINING CURB Trans, SEE CURB END DETAIL
J	2+90.50, 489.82, TBC		
K	2+98.30, 490.41, TBC		
L	1+18.05 Beg Ret CURB Beg RETAINING CURB Trans, SEE CURB END DETAIL		

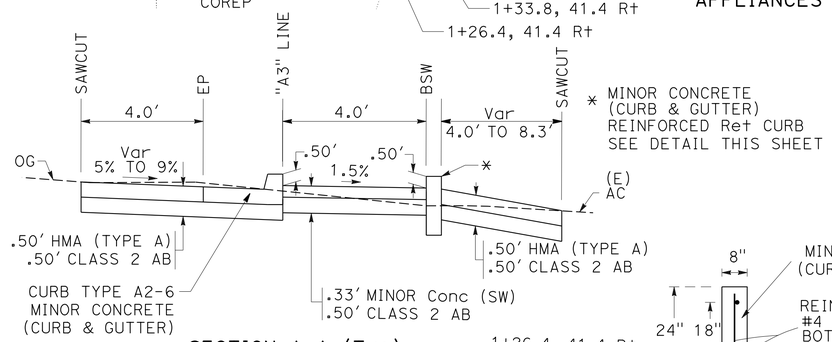

SECTION A-A (Typ)
NO SCALE

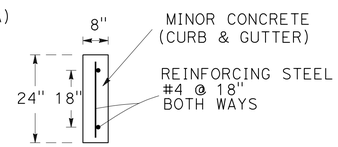

1+26.4, 41.4 R+

REINFORCED RETAINING CURB DETAIL
SECTION
NO SCALE

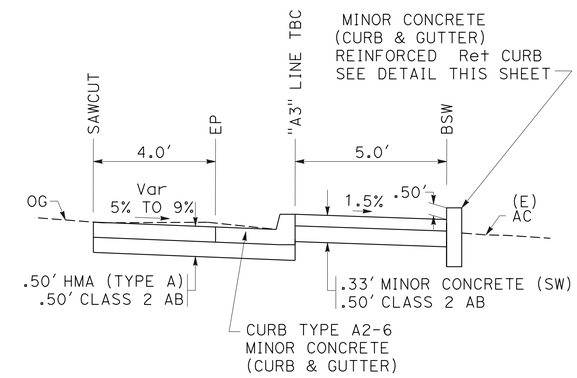

SECTION C-C (Typ)
NO SCALE

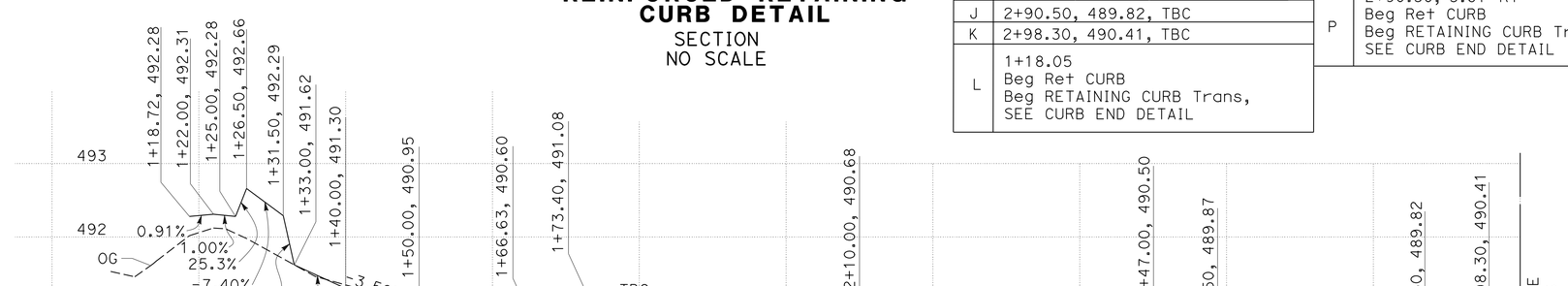

"A3" TBC PROFILE
SCALE: 1″ = 10′ Horiz
1″ = 1′ Vert

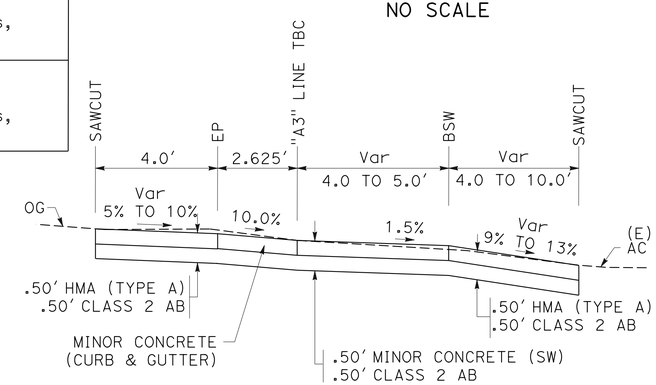

SECTION B-B (Typ)
NO SCALE

LOCATION 2
CONSTRUCTION DETAILS

SCALE: AS SHOWN

C-2

REVISED BY | DATE REVISED
TOM PENICK | JAVED IQBAL
CALCULATED-DESIGNED BY | CHECKED BY
FUNCTIONAL SUPERVISOR: MICHAEL FEAKES

STATE OF CALIFORNIA - DEPARTMENT OF TRANSPORTATION
Caltrans
DESIGN

P:\proj1\02\3E800_plans\pse\23e800ga002.dgn

LAST REVISION 04-02-15 | DATE PLOTTED => 02-APR-2015 | TIME PLOTTED => 11:43

Dist	COUNTY	ROUTE	POST MILES TOTAL PROJECT	SHEET No.	TOTAL SHEETS
02	Sha	273	15.0/15.8	5	51

Thomas Penick 04-02-15
REGISTERED CIVIL ENGINEER DATE

04-02-15
PLANS APPROVAL DATE

REGISTERED PROFESSIONAL ENGINEER TOM PENICK No. C61068 Exp. 12-31-16 CIVIL STATE OF CALIFORNIA

THE STATE OF CALIFORNIA OR ITS OFFICERS OR AGENTS SHALL NOT BE RESPONSIBLE FOR THE ACCURACY OR COMPLETENESS OF SCANNED COPIES OF THIS PLAN SHEET.

NOTES:

1. FOR ACCURATE RIGHT OF WAY DATA, CONTACT RIGHT OF WAY ENGINEERING AT THE DISTRICT OFFICE.
2. DRIVEWAY #1, #2, AND #3 SHALL BE CLOSED/CONSTRUCTED CONCURRENTLY, WHILE ACCESS TO DRIVEWAY #4 WILL BE OPEN TO TRAFFIC. DRIVEWAY #4 WILL BE CLOSED/CONSTRUCTED, WHILE ACCESS TO DRIVEWAY #1, #2, AND #3 WILL BE OPEN TO TRAFFIC.
3. EXISTING UTILITY FACILITIES HAVE NOT BEEN PLOTTED ON THESE PLANS.

CURVE DATA

No. ⊕	R	Δ	T	L
3	12.0′	90°00′00″	12.00′	18.85′

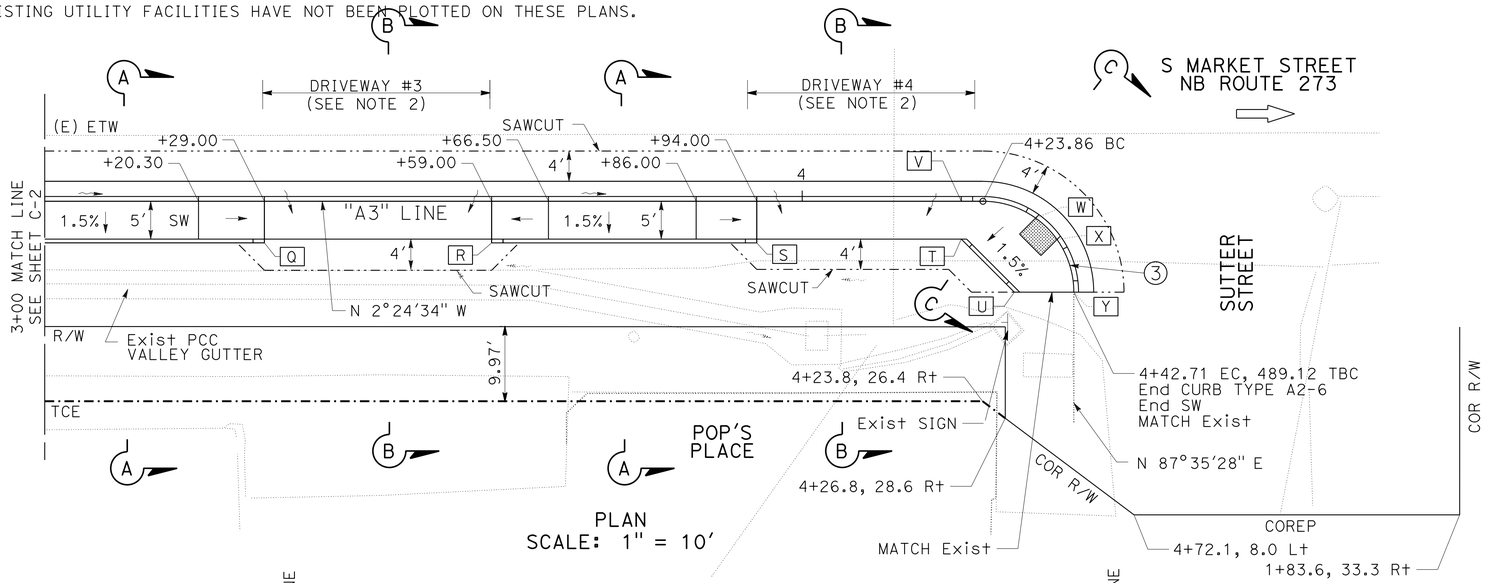

PLAN
SCALE: 1" = 10′

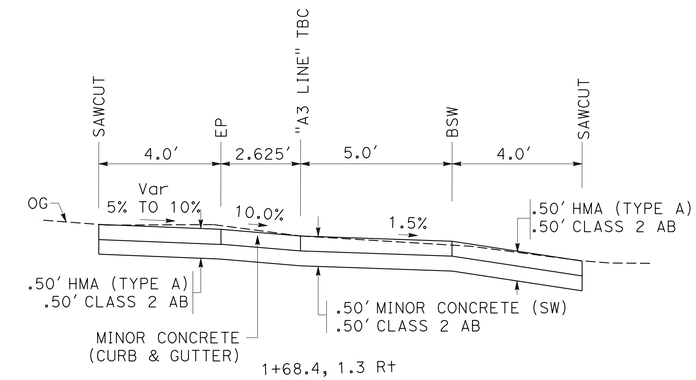

SECTION B-B (Typ)
NO SCALE

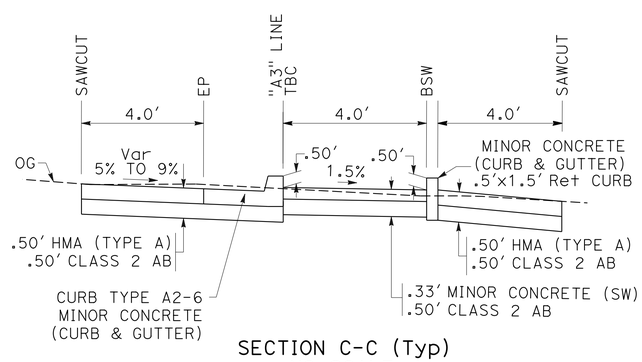

SECTION C-C (Typ)
NO SCALE

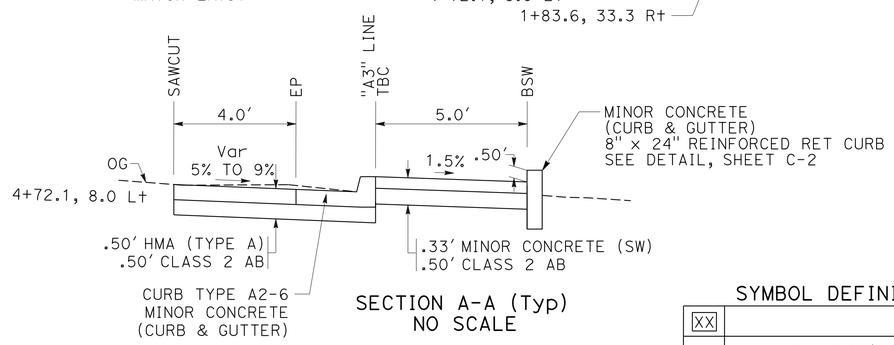

SECTION A-A (Typ)
NO SCALE

SYMBOL DEFINITION TABLE

XX		XX	
Q	3+29.00, 5.67′ RT END Ret CURB END RETAINING CURB Trans, SEE CURB END DETAIL	U	END Ret CURB, END CURB Trans, SEE SHEET C-2 CURB END DETAIL 4+42.71, 7.86 RT, 489.02 TBC
R	3+59.00, 5.67′ RT Beg Ret CURB Beg RETAINING CURB Trans, SEE CURB END DETAIL	V	Beg CURB Trans, SEE SHEET C-2 CURB END DETAIL 4+21.00, 489.52 TBC
S	3+94.00, 5.67′ RT END Ret CURB END RETAINING CURB Trans, SEE CURB END DETAIL	W	END CURB Trans, SEE SHEET C-2 CURB END DETAIL 4+31.27, 489.48 TBC
T	Beg Ret CURB, Beg CURB Trans, SEE SHEET C-2 CURB END DETAIL 4+21.00, 5.0′ RT, 489.44 TBC	X	Beg CURB Trans, SEE SHEET C-2 CURB END DETAIL 4+35.29, 489.42 TBC
		Y	END CURB Trans, SEE SHEET C-2 CURB END DETAIL 4+42.71, 489.12 TBC, MATCH Exist

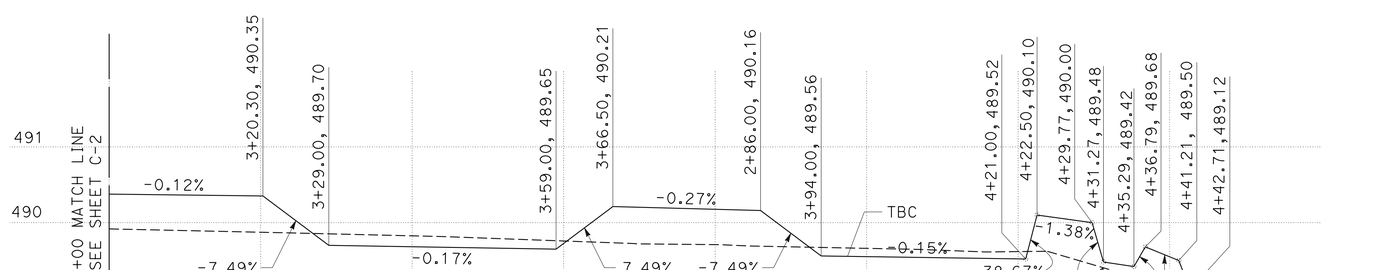

"A3" TBC PROFILE
SCALE: 1" = 10′ Horiz
1" = 1′ Vert

LOCATION 2
CONSTRUCTION DETAILS
SCALE: AS SHOWN

C-3

STATE OF CALIFORNIA - DEPARTMENT OF TRANSPORTATION
Caltrans DESIGN

FUNCTIONAL SUPERVISOR: MICHAEL FEAKES
CALCULATED-DESIGNED BY: JAVED IQBAL
CHECKED BY: TOM PENICK
REVISED BY / DATE REVISED

LAST REVISION DATE PLOTTED => 02-APR-2015
TIME PLOTTED => 11:43
04-02-15

P:\proj1\02\3E800_plans\pse\23e800ga003.dgn

Dist	COUNTY	ROUTE	POST MILES TOTAL PROJECT	SHEET No.	TOTAL SHEETS
02	Sha	273	15.0/15.8	6	51

Thomas Penick 04-02-15
REGISTERED CIVIL ENGINEER DATE

04-02-15
PLANS APPROVAL DATE

REGISTERED PROFESSIONAL ENGINEER TOM PENICK No. C61068 Exp. 12-31-16 CIVIL STATE OF CALIFORNIA

THE STATE OF CALIFORNIA OR ITS OFFICERS OR AGENTS SHALL NOT BE RESPONSIBLE FOR THE ACCURACY OR COMPLETENESS OF SCANNED COPIES OF THIS PLAN SHEET.

NOTES:

1. FOR ACCURATE RIGHT OF WAY DATA, CONTACT RIGHT OF WAY ENGINEERING AT THE DISTRICT OFFICE.
2. EXISTING UTILITY FACILITIES HAVE NOT BEEN PLOTTED ON THESE PLANS.

CURVE DATA

No. ⊕	R	Δ	T	L
4A	12.0′	72°03′03"	8.73′	15.09′
4B	6.0′	90°00′00"	6.00′	9.42′

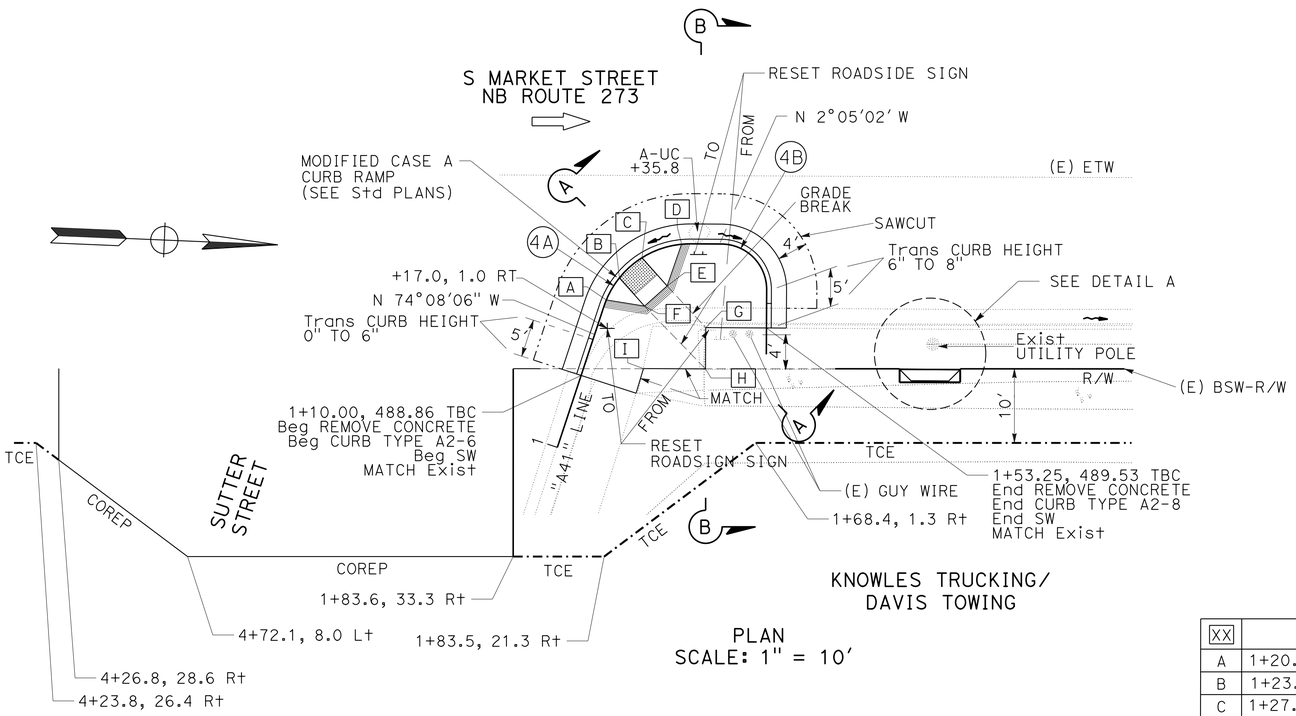

PLAN
SCALE: 1" = 10′

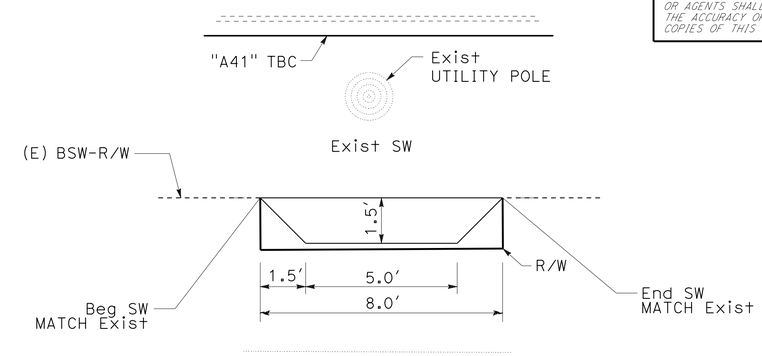

DETAIL A
NO SCALE

SHEET NOTES:

XX	
A	1+20.50, 489.58, TBC
B	1+23.90, 489.28, TBC
C	1+27.92, 489.31, TBC
D	1+33.50, 489.83, TBC
E	1+29.40, 489.69, 5.0 RT, RAMP
F	1+22.46, 489.66, 5.0 RT, RAMP
G	1+53.24, 8.01 RT, 489.56, BSW
H	1+56.73, 8.25 RT, 489.64, BSW
I	1+13.45, 7.53 RT, 489.01, BSW

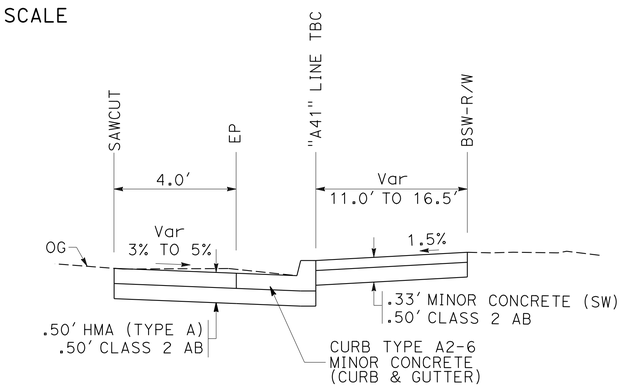

SECTION B-B (Typ)
"A41" 1+17.85 TO "A41" 1+26.00
NO SCALE

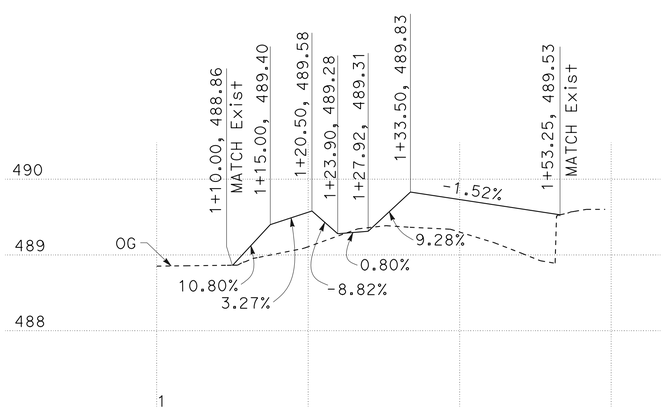

"A41" TBC PROFILE
SCALE: 1" = 10′ Horiz
1" = 1′ Vert

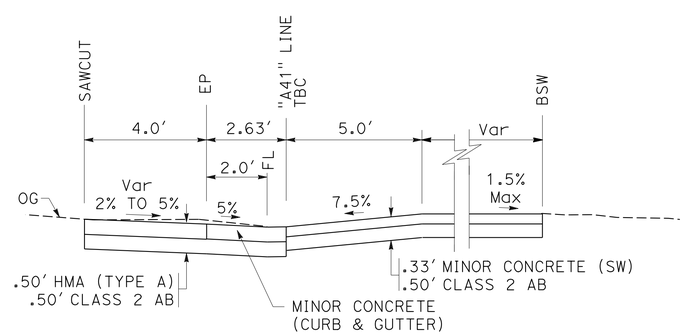

SECTION A-A (Typ)
"A41" 1+06.24 TO "A41" 1+17.85
NO SCALE

LOCATION 3
CONSTRUCTION DETAILS
SCALE: AS SHOWN

C-4

STATE OF CALIFORNIA - DEPARTMENT OF TRANSPORTATION
Caltrans® **DESIGN**
FUNCTIONAL SUPERVISOR: MICHAEL FEAKES
CALCULATED-DESIGNED BY: JAVED IQBAL
CHECKED BY: TOM PENICK
REVISED BY / DATE REVISED

P:\proj1\02\3E800_plans\pse\23e800ga004.dgn

LAST REVISION 04-02-15 | DATE PLOTTED => 02-APR-2015 | TIME PLOTTED => 11:43

Dist	COUNTY	ROUTE	POST MILES TOTAL PROJECT	SHEET No.	TOTAL SHEETS
02	Sha	273	15.0/15.8	7	51

Thomas Peik 04-02-15
REGISTERED CIVIL ENGINEER DATE

04-02-15
PLANS APPROVAL DATE

REGISTERED PROFESSIONAL ENGINEER TOM PENICK No. C61068 Exp. 12-31-16 CIVIL STATE OF CALIFORNIA

THE STATE OF CALIFORNIA OR ITS OFFICERS OR AGENTS SHALL NOT BE RESPONSIBLE FOR THE ACCURACY OR COMPLETENESS OF SCANNED COPIES OF THIS PLAN SHEET.

NOTES:

1. FOR ACCURATE RIGHT OF WAY DATA, CONTACT RIGHT OF WAY ENGINEERING AT THE DISTRICT OFFICE.
2. EXISTING UTILITY FACILITIES HAVE NOT BEEN PLOTTED ON THESE PLANS.

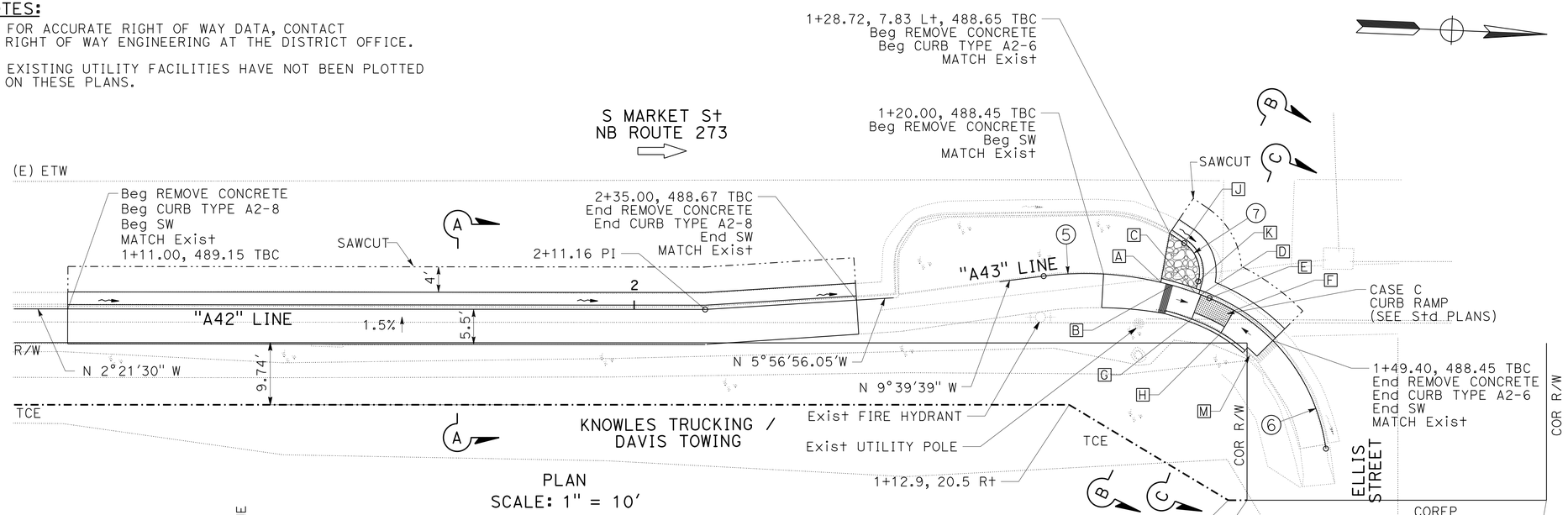

PLAN
SCALE: 1" = 10'

SHEET NOTES:

XX	
A	Beg RETAINING CURB 1+29.10, 488.29 TBC
B	+31.00, 488.26 TBC
C	End RETAINING CURB +34.73, 488.41 TBC, 488.00 SW
D	+35.70, 487.93 TBC
E	+37.14 PCC
F	+41.50, 487.87, TBC
G	+35.70, 4.1 Rt, 488.49 TRC, 487.99 BSW
H	+41.50, 4.1 Rt, 488.43 TRC, 487.93 BSW
J	+30.99, 6.89 Lt, BC
K	+34.60, 1.82 Lt, EC
L	RETAINING CURB, 0.5' X 1.5'
M	TRAFFIC SIGNAL PROTECT IN PLACE

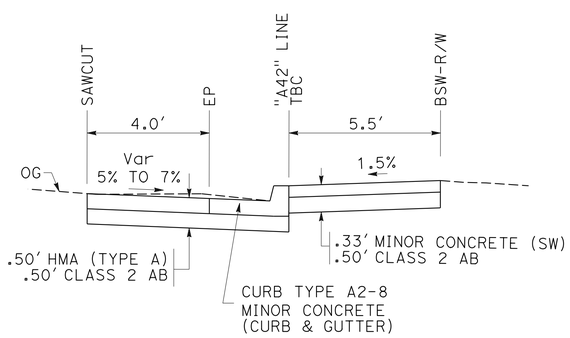

SECTION A-A
SIDEWALK DETAIL (Typ)
NO SCALE

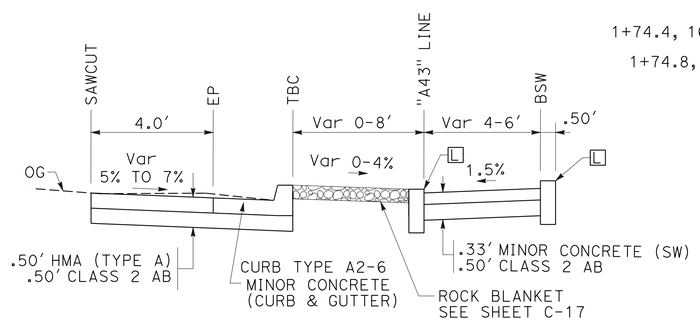

SECTION B-B
RAISED ISLAND DETAIL (Typ)
NO SCALE

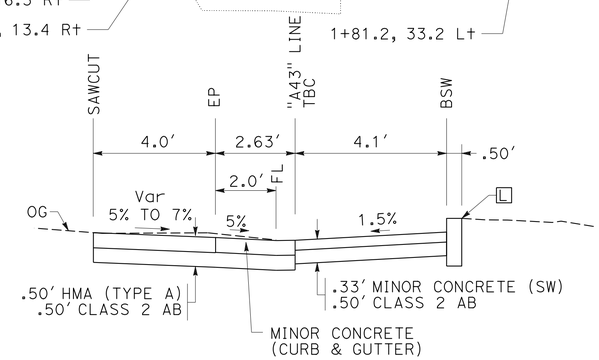

SECTION C-C (Typ)
NO SCALE

CURVE DATA

No. ⊕	R	Δ	T	L
5	51.4'	29°36'41"	13.59'	26.56'
6	30'	59°47'50"	17.25'	31.31'
7	6'	71°10'18"	3.94'	6.83'

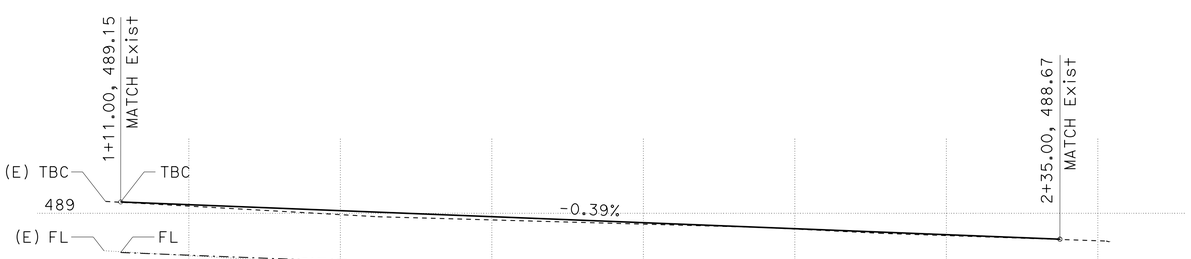

"A42" TBC PROFILE
SCALE: 1" = 10' Horiz
1" = 1' Vert

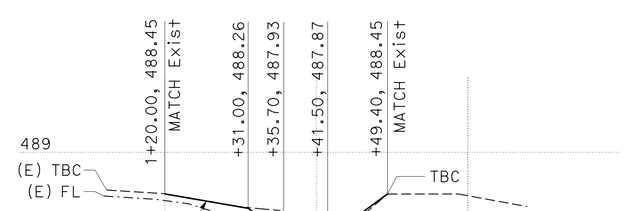

"A43" TBC PROFILE
SCALE: 1" = 10' Horiz
1" = 1' Vert

LOCATION 4
CONSTRUCTION DETAILS
SCALE: AS SHOWN

C-5

REVISED BY	DATE REVISED
TOM PENICK	JAVED IQBAL
CALCULATED-DESIGNED BY	CHECKED BY
FUNCTIONAL SUPERVISOR	MICHAEL FEAKES

STATE OF CALIFORNIA - DEPARTMENT OF TRANSPORTATION
Caltrans
DESIGN

P:\proj1\02\3E800_plans\pse\23e800ga005.dgn

LAST REVISION DATE PLOTTED => 02-APR-2015
04-02-15 TIME PLOTTED => 11:43

Dist	COUNTY	ROUTE	POST MILES TOTAL PROJECT	SHEET No.	TOTAL SHEETS
02	Sha	273	15.0/15.8	8	51

Thomas Penick 04-02-15
REGISTERED CIVIL ENGINEER DATE

04-02-15
PLANS APPROVAL DATE

REGISTERED PROFESSIONAL ENGINEER TOM PENICK No. C61068 Exp. 12-31-16 CIVIL STATE OF CALIFORNIA

THE STATE OF CALIFORNIA OR ITS OFFICERS OR AGENTS SHALL NOT BE RESPONSIBLE FOR THE ACCURACY OR COMPLETENESS OF SCANNED COPIES OF THIS PLAN SHEET.

NOTES:

1. FOR ACCURATE RIGHT OF WAY DATA, CONTACT RIGHT OF WAY ENGINEERING AT THE DISTRICT OFFICE.
2. EXISTING UTILITY FACILITIES HAVE NOT BEEN PLOTTED ON THESE PLANS.

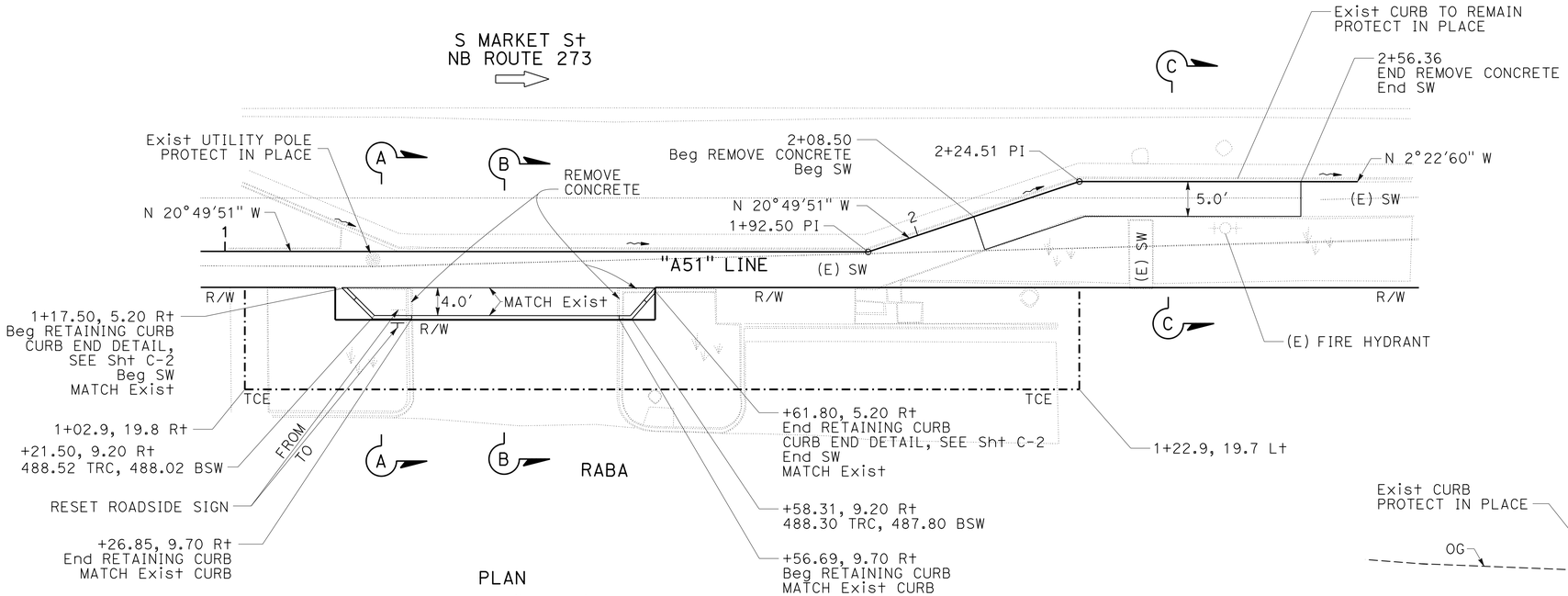

PLAN
SCALE: 1" = 10'

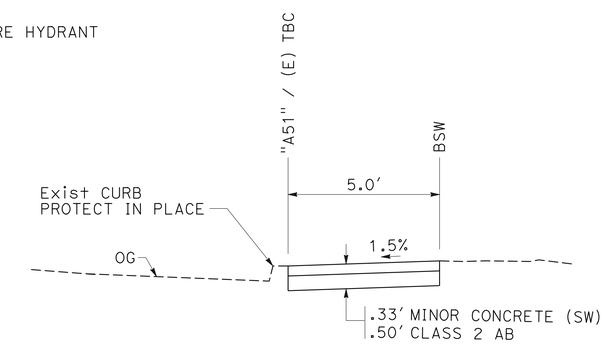

SECTION C-C (Typ)
"A51" 2+08.50 TO 2+56.36
NO SCALE

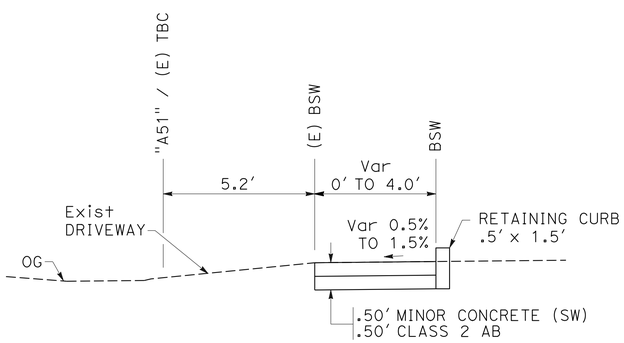

SECTION A-A (Typ)
"A51" 1+17.50 TO 1+26.85
"A51" 1+56.69 TO 1+61.80
NO SCALE

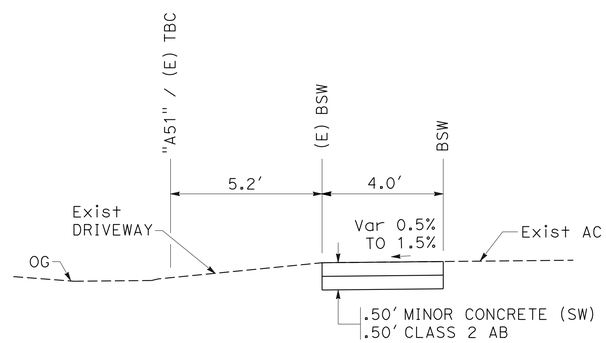

SECTION B-B (Typ)
"A51" 1+26.85 TO 1+56.69
NO SCALE

LOCATION 5
CONSTRUCTION DETAILS
SCALE: AS SHOWN

C-6

REVISED BY | DATE REVISED
TOM PENICK | JAVED IQBAL
CALCULATED-DESIGNED BY | CHECKED BY
FUNCTIONAL SUPERVISOR
MICHAEL FEAKES

STATE OF CALIFORNIA - DEPARTMENT OF TRANSPORTATION
Caltrans
DESIGN

P:\proj1\02\3E800_plans\pse\23e800ga006.dgn

LAST REVISION 04-02-15 | DATE PLOTTED => 02-APR-2015 | TIME PLOTTED => 11:43

Dist	COUNTY	ROUTE	POST MILES TOTAL PROJECT	SHEET No.	TOTAL SHEETS
02	Sha	273	15.0/15.8	9	51

Thomas Penick 04-02-15
REGISTERED CIVIL ENGINEER DATE

04-02-15
PLANS APPROVAL DATE

REGISTERED PROFESSIONAL ENGINEER TOM PENICK No. C61068 Exp. 12-31-16 CIVIL STATE OF CALIFORNIA

THE STATE OF CALIFORNIA OR ITS OFFICERS OR AGENTS SHALL NOT BE RESPONSIBLE FOR THE ACCURACY OR COMPLETENESS OF SCANNED COPIES OF THIS PLAN SHEET.

NOTES:

1. FOR ACCURATE RIGHT OF WAY DATA, CONTACT RIGHT OF WAY ENGINEERING AT THE DISTRICT OFFICE.
2. EXISTING UTILITY FACILITIES HAVE NOT BEEN PLOTTED ON THESE PLANS.

SHEET NOTES:

XX	
A	REMOVE CONCRETE CONSTRUCT RETAINING CURB MATCH Exist CURB
B	GRADE BREAK

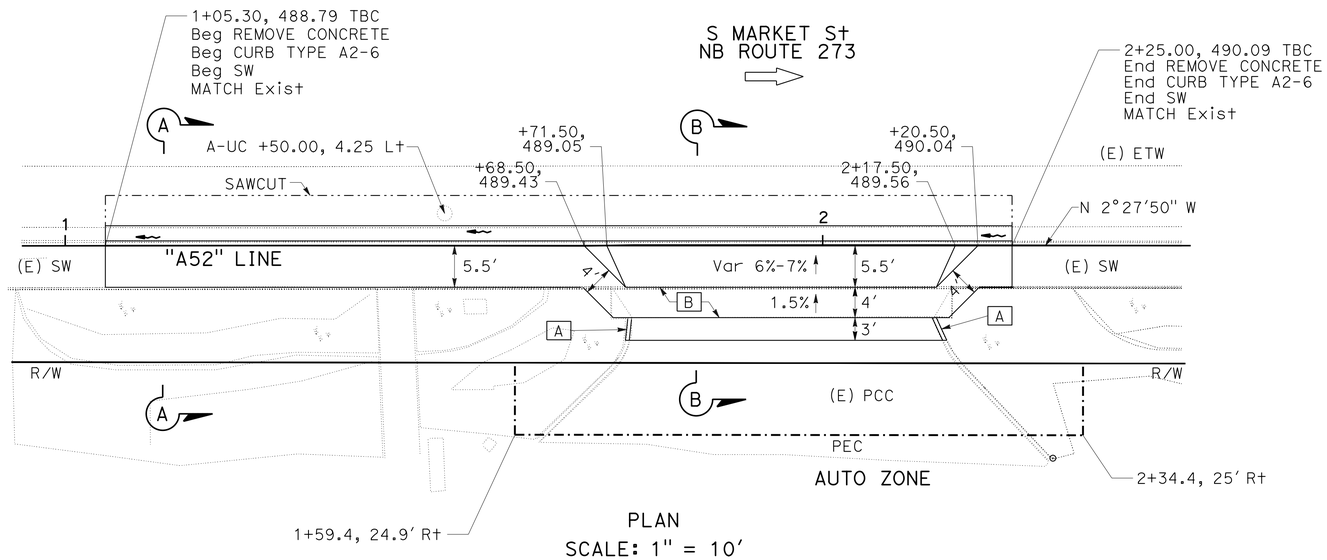

PLAN
SCALE: 1" = 10'

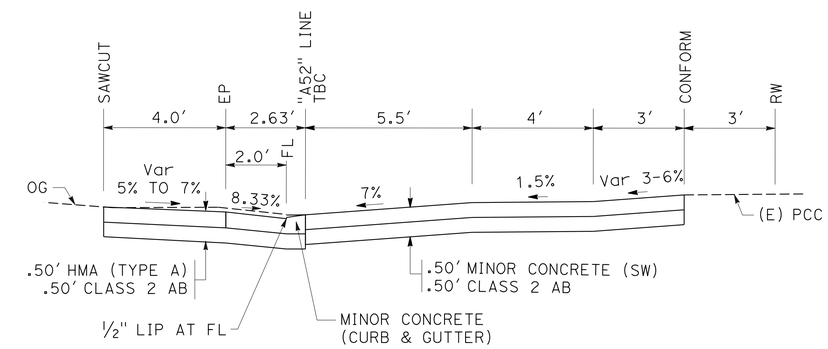

SECTION B-B (Typ)
NO SCALE

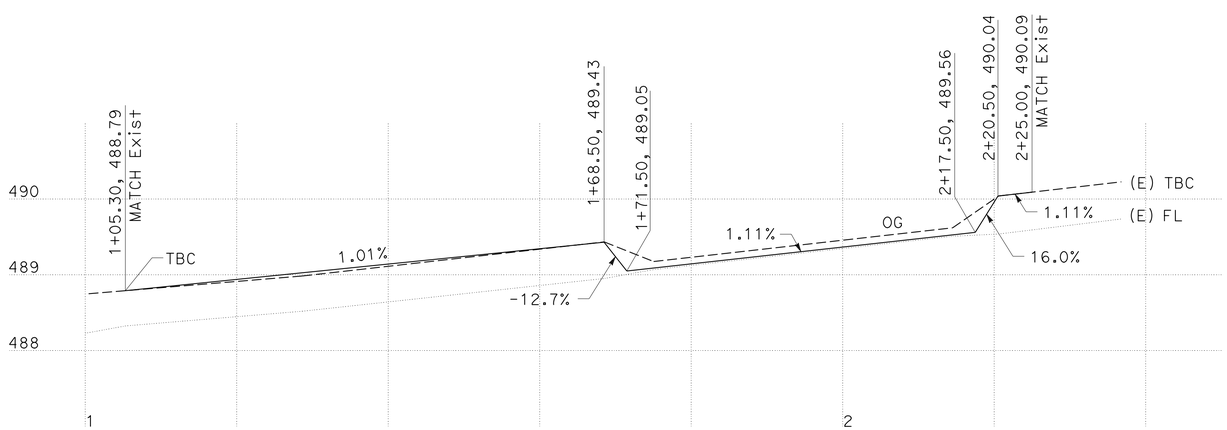

"A52" TBC PROFILE
SCALE: 1" = 10' Horiz
1" = 1' Vert

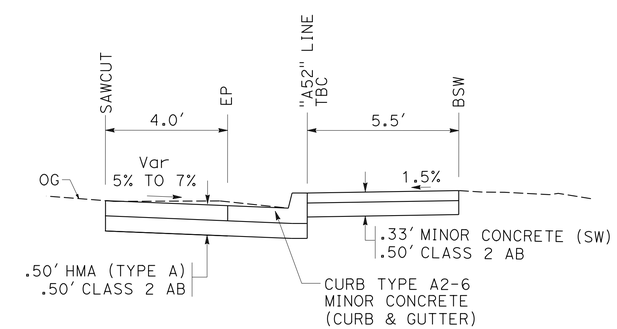

SECTION A-A (Typ)
NO SCALE

LOCATION 6
CONSTRUCTION DETAILS

SCALE: AS SHOWN

C-7

REVISED BY | DATE REVISED
TOM PENICK | JAVED IQBAL
CALCULATED-DESIGNED BY | CHECKED BY
FUNCTIONAL SUPERVISOR
MICHAEL FEAKES

STATE OF CALIFORNIA - DEPARTMENT OF TRANSPORTATION
Caltrans
DESIGN

P:\proj1\02\3E800_plans\pse\23e800ga007.dgn

LAST REVISION 04-02-15 | DATE PLOTTED => 02-APR-2015 | TIME PLOTTED => 11:43

Dist	COUNTY	ROUTE	POST MILES TOTAL PROJECT	SHEET No.	TOTAL SHEETS
02	Sha	273	15.0/15.8	10	51

Thomas Penick 04-02-15
REGISTERED CIVIL ENGINEER DATE

04-02-15
PLANS APPROVAL DATE

REGISTERED PROFESSIONAL ENGINEER TOM PENICK No. C61068 Exp. 12-31-16 CIVIL STATE OF CALIFORNIA

THE STATE OF CALIFORNIA OR ITS OFFICERS OR AGENTS SHALL NOT BE RESPONSIBLE FOR THE ACCURACY OR COMPLETENESS OF SCANNED COPIES OF THIS PLAN SHEET.

NOTES:

1. FOR ACCURATE RIGHT OF WAY DATA, CONTACT RIGHT OF WAY ENGINEERING AT THE DISTRICT OFFICE.
2. EXISTING UTILITY FACILITIES HAVE NOT BEEN PLOTTED ON THESE PLANS.

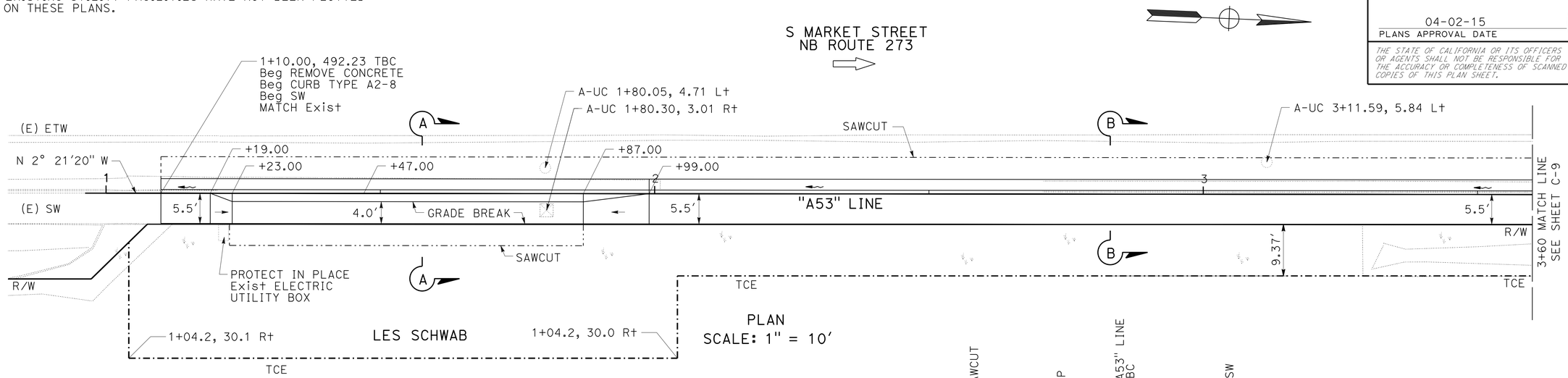

PLAN
SCALE: 1" = 10'

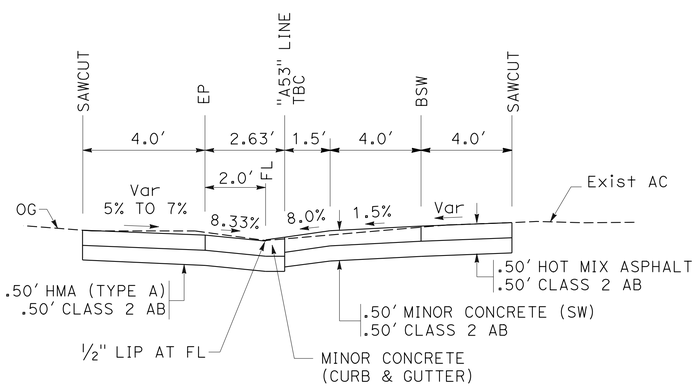

SECTION A-A (Typ)
NO SCALE

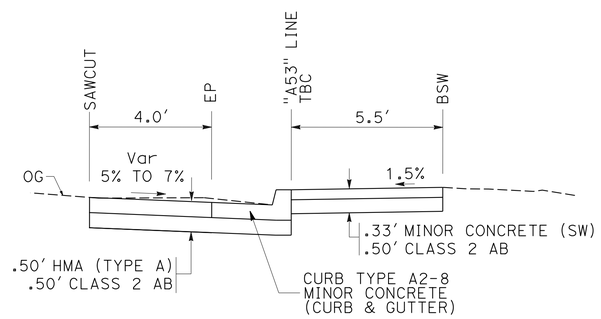

SECTION B-B (Typ)
NO SCALE

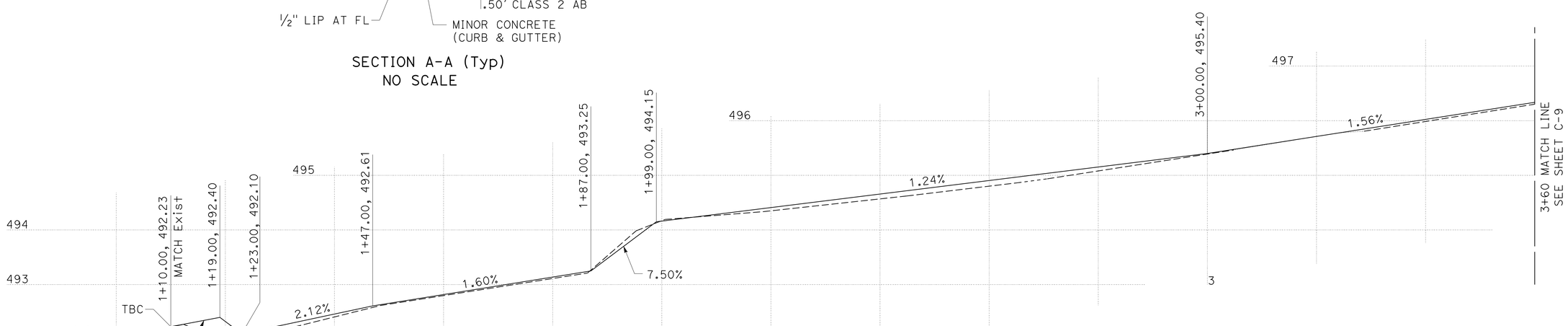

"A53" TBC PROFILE
SCALE: 1" = 10' Horiz
1" = 1' Vert

LOCATION 7
CONSTRUCTION DETAILS

SCALE: AS SHOWN

C-8

REVISED BY | DATE REVISED
TOM PENICK | JAVED IQBAL
CALCULATED-DESIGNED BY | CHECKED BY
FUNCTIONAL SUPERVISOR
MICHAEL FEAKES

STATE OF CALIFORNIA - DEPARTMENT OF TRANSPORTATION
Caltrans DESIGN

P:\proj\02\3E800_plans\pse\23e800ga008.dgn

LAST REVISION 04-02-15 | DATE PLOTTED => 02-APR-2015 | TIME PLOTTED => 11:43

Dist	COUNTY	ROUTE	POST MILES TOTAL PROJECT	SHEET No.	TOTAL SHEETS
02	Sha	273	15.0/15.8	11	51

Thomas Penick 04-02-15
REGISTERED CIVIL ENGINEER DATE

04-02-15
PLANS APPROVAL DATE

REGISTERED PROFESSIONAL ENGINEER TOM PENICK No. C61068 Exp. 12-31-16 CIVIL STATE OF CALIFORNIA

THE STATE OF CALIFORNIA OR ITS OFFICERS OR AGENTS SHALL NOT BE RESPONSIBLE FOR THE ACCURACY OR COMPLETENESS OF SCANNED COPIES OF THIS PLAN SHEET.

NOTES:

1. FOR ACCURATE RIGHT OF WAY DATA, CONTACT RIGHT OF WAY ENGINEERING AT THE DISTRICT OFFICE.
2. EXISTING UTILITY FACILITIES HAVE NOT BEEN PLOTTED ON THESE PLANS.

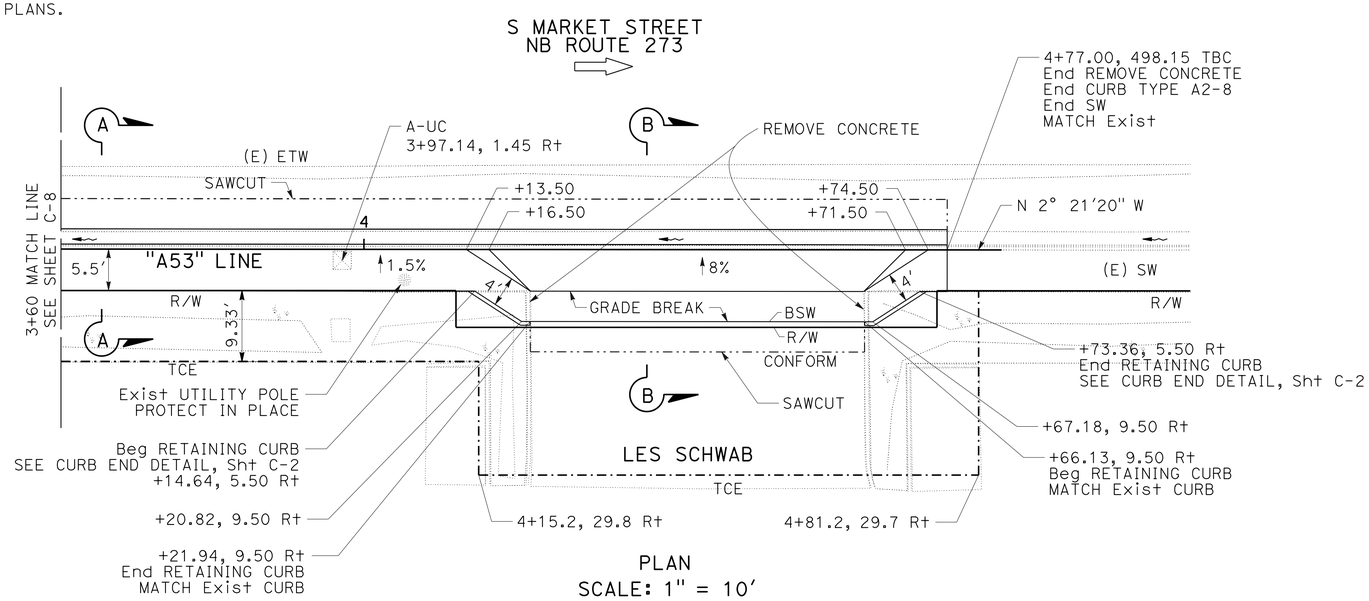

PLAN
SCALE: 1" = 10'

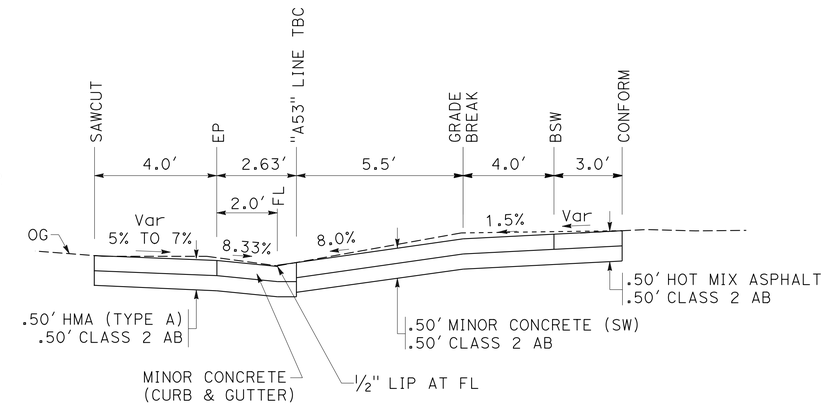

SECTION B-B (Typ)
NO SCALE

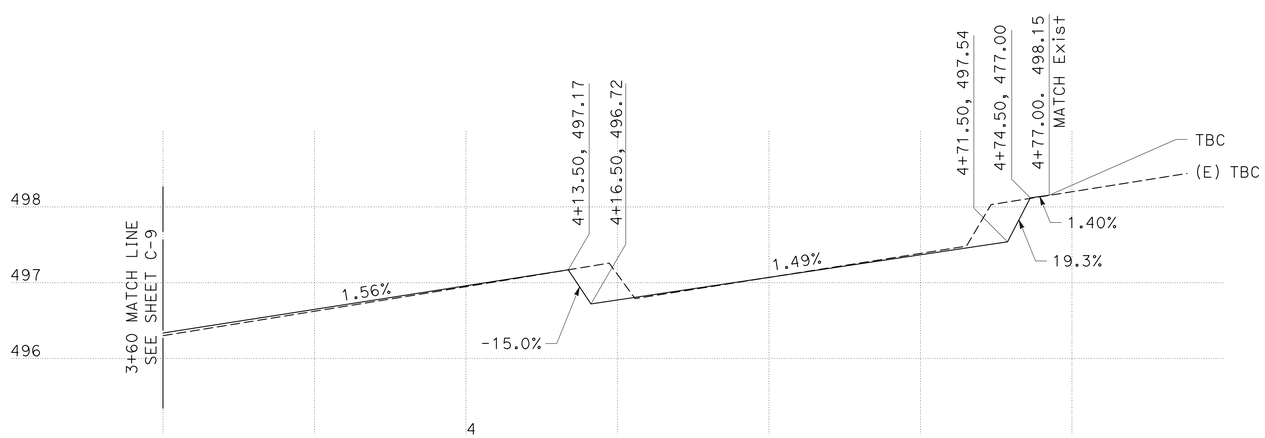

"A53" TBC PROFILE
SCALE: 1" = 10' Horiz
1" = 1' Vert

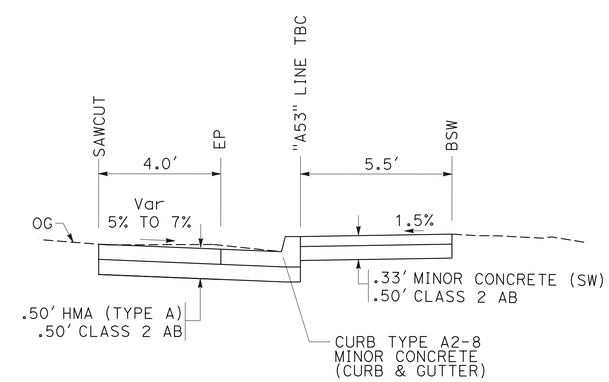

SECTION A-A (Typ)
NO SCALE

LOCATION 7
CONSTRUCTION DETAILS

SCALE: AS SHOWN

C-9

REVISED BY	DATE REVISED	TOM PENICK	JAVED IQBAL	CALCULATED-DESIGNED BY	CHECKED BY	FUNCTIONAL SUPERVISOR	MICHAEL FEAKES

STATE OF CALIFORNIA - DEPARTMENT OF TRANSPORTATION
Caltrans
DESIGN

P:\proj1\02\3E800_plans\pse\23e800ga009.dgn

LAST REVISION 04-02-15 | DATE PLOTTED => 02-APR-2015 | TIME PLOTTED => 11:43

Dist	COUNTY	ROUTE	POST MILES TOTAL PROJECT	SHEET No.	TOTAL SHEETS
02	Sha	273	15.0/15.8	12	51

Thomas Penick 04-02-15
REGISTERED CIVIL ENGINEER DATE

04-02-15
PLANS APPROVAL DATE

REGISTERED PROFESSIONAL ENGINEER TOM PENICK No. C61068 Exp. 12-31-16 CIVIL STATE OF CALIFORNIA

THE STATE OF CALIFORNIA OR ITS OFFICERS OR AGENTS SHALL NOT BE RESPONSIBLE FOR THE ACCURACY OR COMPLETENESS OF SCANNED COPIES OF THIS PLAN SHEET.

NOTES:

1. FOR ACCURATE RIGHT OF WAY DATA, CONTACT RIGHT OF WAY ENGINEERING AT THE DISTRICT OFFICE.
2. EXISTING UTILITY FACILITIES HAVE NOT BEEN PLOTTED ON THESE PLANS.

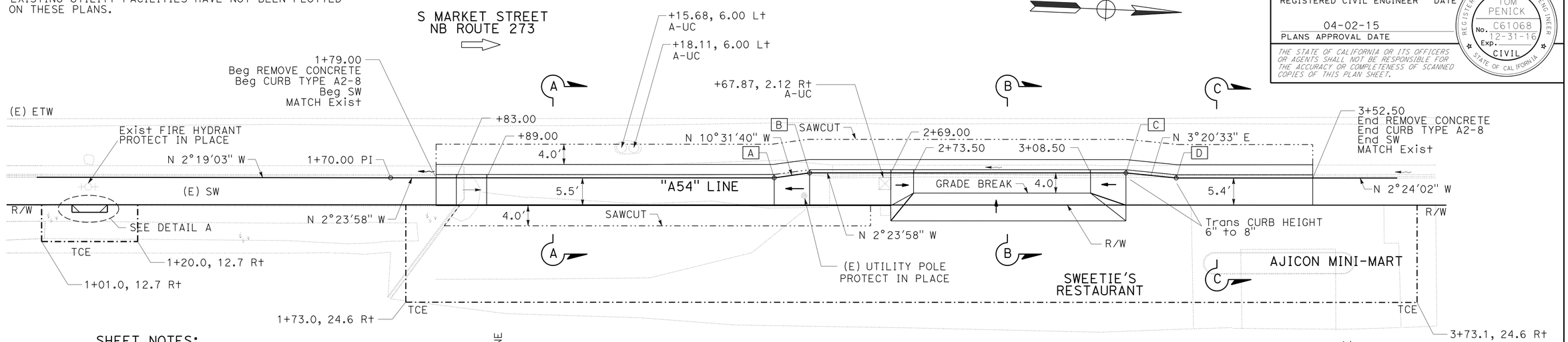

PLAN
SCALE: 1" = 10'

SHEET NOTES:

XX	
A	End CURB TYPE A2-8 Beg TRANSITION TO CURB TYPE A2-6 2+45.87 PI
B	End TRANSITION FROM CURB TYPE A2-8 Beg CURB TYPE A2-6 2+52.94 PI
C	End CURB TYPE A2-6 Beg TRANSITION TO CURB TYPE A2-8 3+15.50 PI
D	End TRANSITION FROM CURB TYPE A2-6 Beg CURB TYPE A2-8 3+25.50 PI

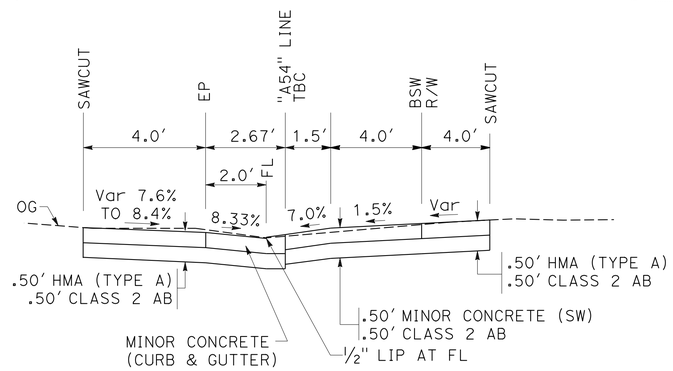

SECTION A-A (Typ)
NO SCALE

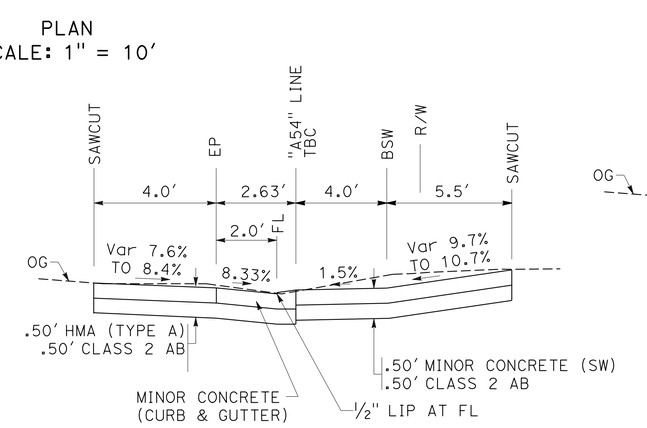

SECTION B-B (Typ)
NO SCALE

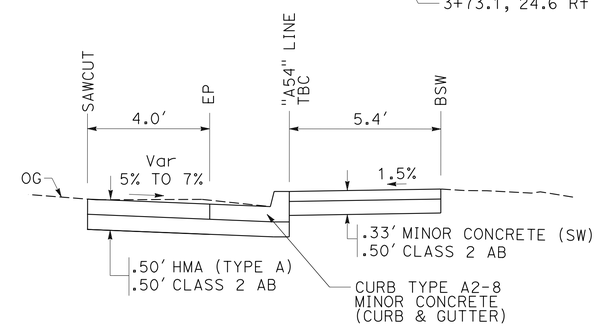

SECTION C-C (Typ)
NO SCALE

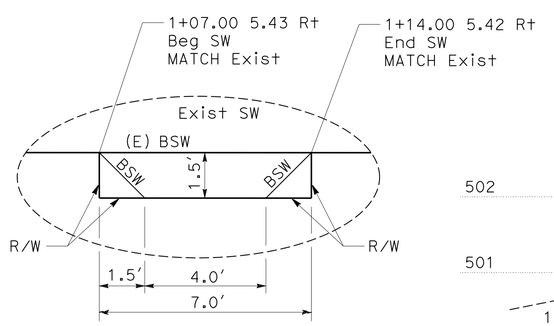

DETAIL A

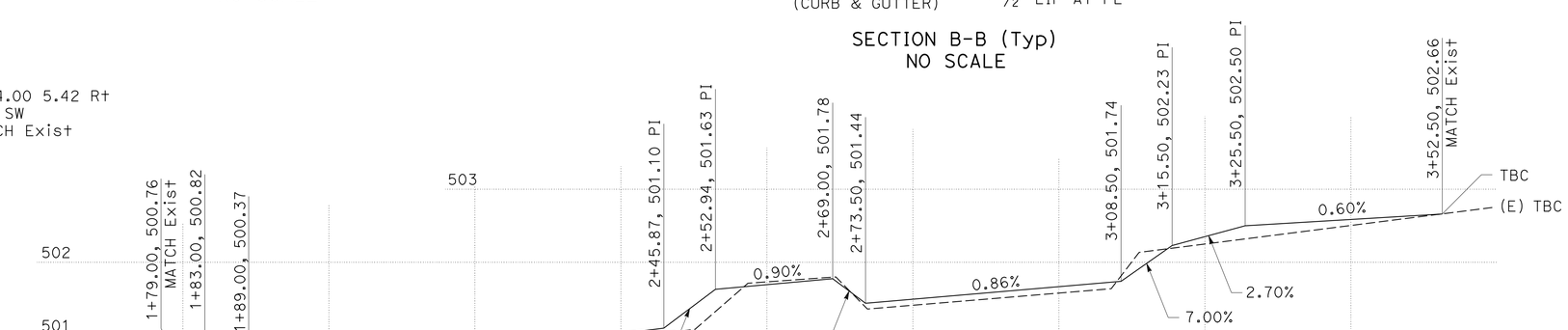

"A54" TBC PROFILE
SCALE: 1" = 10' Horiz
1" = 1' Vert

LOCATION 8
CONSTRUCTION DETAILS

SCALE: AS SHOWN

C-10

REVISED BY | DATE REVISED
TOM PENICK | JAVED IQBAL
CALCULATED-DESIGNED BY | CHECKED BY
FUNCTIONAL SUPERVISOR | MICHAEL FEAKES

STATE OF CALIFORNIA - DEPARTMENT OF TRANSPORTATION
Caltrans
DESIGN

P:\proj1\02\3E800_plans\pse\23e800ga010.dgn

LAST REVISION 04-02-15 | DATE PLOTTED => 02-APR-2015 | TIME PLOTTED => 11:43

Dist	COUNTY	ROUTE	POST MILES TOTAL PROJECT	SHEET No.	TOTAL SHEETS
02	Sha	273	15.0/15.8	13	51

Thomas Penick 04-02-15
REGISTERED CIVIL ENGINEER DATE

04-02-15
PLANS APPROVAL DATE

REGISTERED PROFESSIONAL ENGINEER TOM PENICK No. C61068 Exp. 12-31-16 CIVIL STATE OF CALIFORNIA

THE STATE OF CALIFORNIA OR ITS OFFICERS OR AGENTS SHALL NOT BE RESPONSIBLE FOR THE ACCURACY OR COMPLETENESS OF SCANNED COPIES OF THIS PLAN SHEET.

NOTES:

1. FOR ACCURATE RIGHT OF WAY DATA, CONTACT RIGHT OF WAY ENGINEERING AT THE DISTRICT OFFICE.
2. EXISTING UTILITY FACILITIES HAVE NOT BEEN PLOTTED ON THESE PLANS.

CURVE DATA

No. ⊕	R	Δ	T	L
8	7′	71°26′40″	5.03′	8.73′

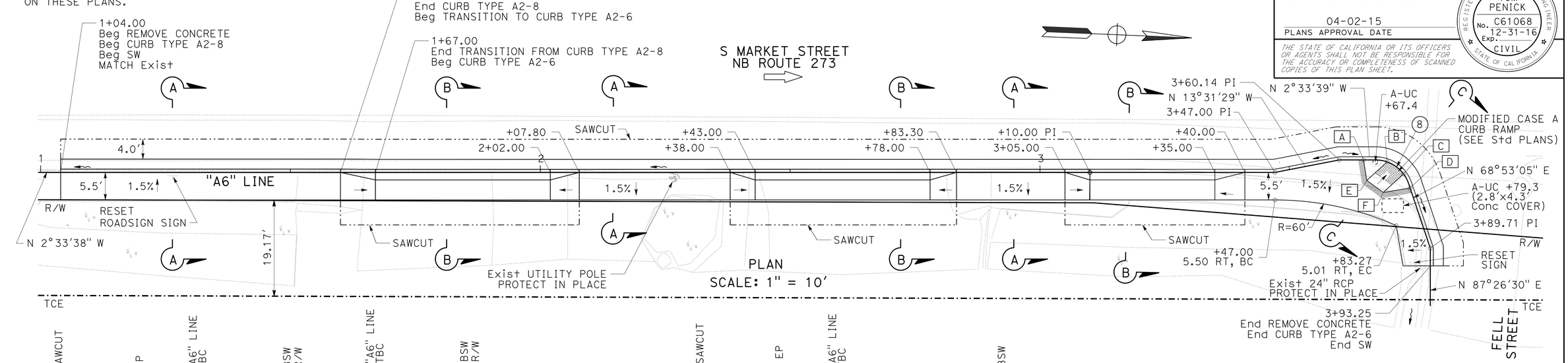

PLAN
SCALE: 1" = 10′

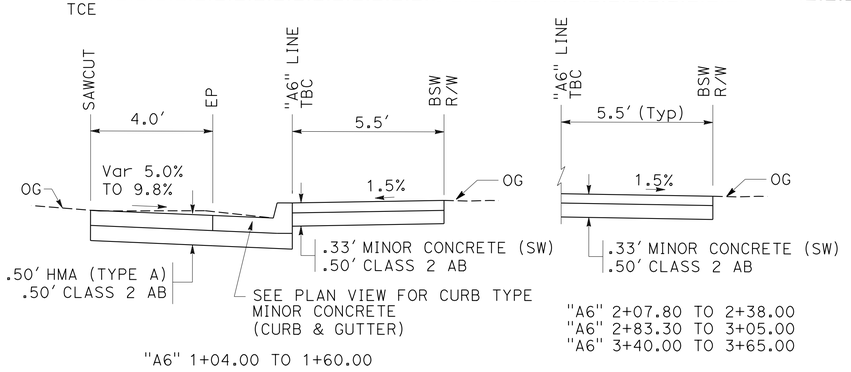

SECTION A-A (Typ)
NO SCALE

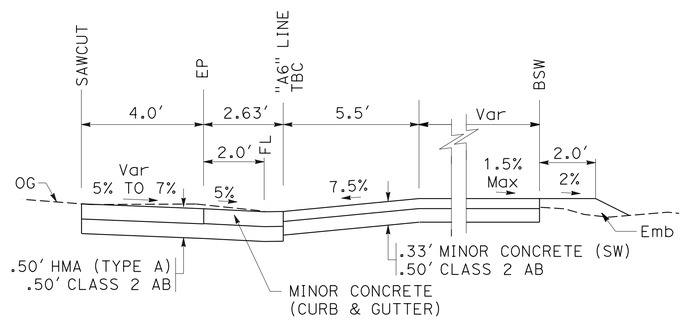

SECTION C-C (Typ)
NO SCALE

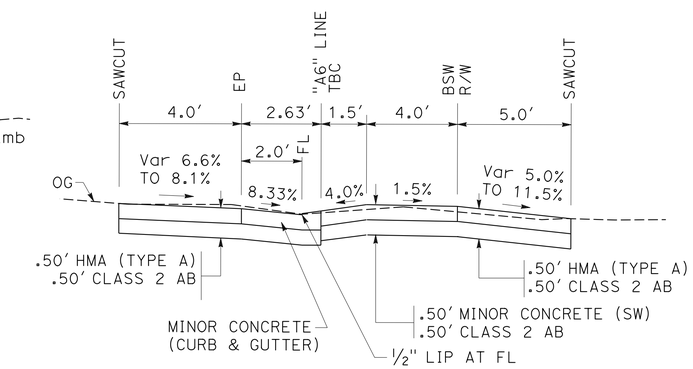

SECTION B-B (Typ)
NO SCALE

SHEET NOTES:

XX	
A	3+65.00, 505.67 TBC
B	3+69.76, 505.20 TBC
C	3+73.90, 505.14 TBC
D	3+77.00, 505.44 TBC
E	3+65.64, 4.09 RT, 505.61, RAMP
F	3+76.15, 5.39 RT, 505.55, RAMP

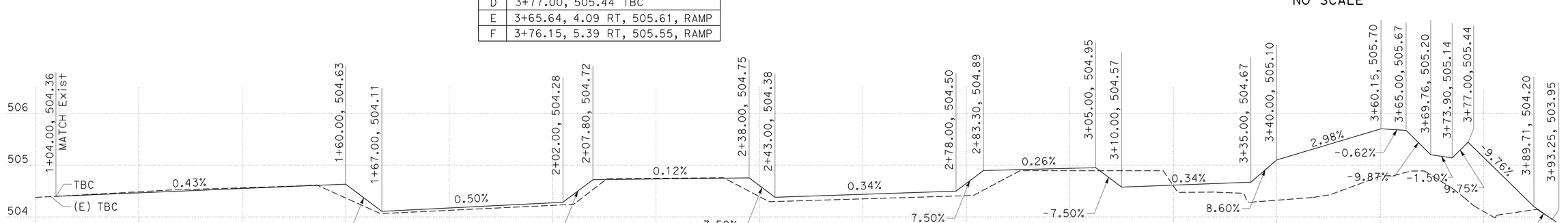

"A6" TBC PROFILE
SCALE: 1" = 10′ Horiz
1" = 1′ Vert

LOCATION 9
CONSTRUCTION DETAILS
SCALE: AS SHOWN

C-11

REVISED BY | DATE REVISED
TOM PENICK | JAVED IQBAL
CALCULATED-DESIGNED BY | CHECKED BY
FUNCTIONAL SUPERVISOR: MICHAEL FEAKES

STATE OF CALIFORNIA - DEPARTMENT OF TRANSPORTATION
Caltrans DESIGN

P:\proj1\02\3E800_plans\pse\23e800ga011.dgn

LAST REVISION 04-02-15 | DATE PLOTTED => 02-APR-2015 | TIME PLOTTED => 11:43

Dist	COUNTY	ROUTE	POST MILES TOTAL PROJECT	SHEET No.	TOTAL SHEETS
02	Sha	273	15.0/15.8	14	51

Thomas Penick 04-02-15
REGISTERED CIVIL ENGINEER DATE

04-02-15
PLANS APPROVAL DATE

REGISTERED PROFESSIONAL ENGINEER TOM PENICK No. C61068 Exp. 12-31-16 CIVIL STATE OF CALIFORNIA

THE STATE OF CALIFORNIA OR ITS OFFICERS OR AGENTS SHALL NOT BE RESPONSIBLE FOR THE ACCURACY OR COMPLETENESS OF SCANNED COPIES OF THIS PLAN SHEET.

NOTES:

1. FOR ACCURATE RIGHT OF WAY DATA, CONTACT RIGHT OF WAY ENGINEERING AT THE DISTRICT OFFICE.
2. EXISTING UTILITY FACILITIES HAVE NOT BEEN PLOTTED ON THESE PLANS.

CURVE DATA

No. ⊕	R	Δ	T	L
9	5′	94°13′01″	5.38	8.22
10	5′	47°23′34″	2.19	4.14

SHEET NOTES:

XX	
A	Beg DEPRESSED CURB TYPE A2-6 Beg SW "A7" 10+05.52, 505.51, TBC 505.01, FL
B	"A7" 10+07.64, 505.30, TBC
C	"A7" 10+11.84, 505.36, TBC
D	"A7" 10+14.25, 2.25 RT, 505.60, TBC
E	"A7" 10+17.25, 4.90 RT, 505.66, TBC
F	"A7" 10+29.60, 505.60, TBC GRATED LINE DRAIN INLET 505.10, FL
G	"A7" 10+29.35, 7.51 RT GRATED LINE DRAIN OUTLET 504.98, FL
H	"A7" 10+02.16, 6.57 RT, 505.60, TBC
I	"A7" 10+04.84, 3.61 RT, 505.60, TBC

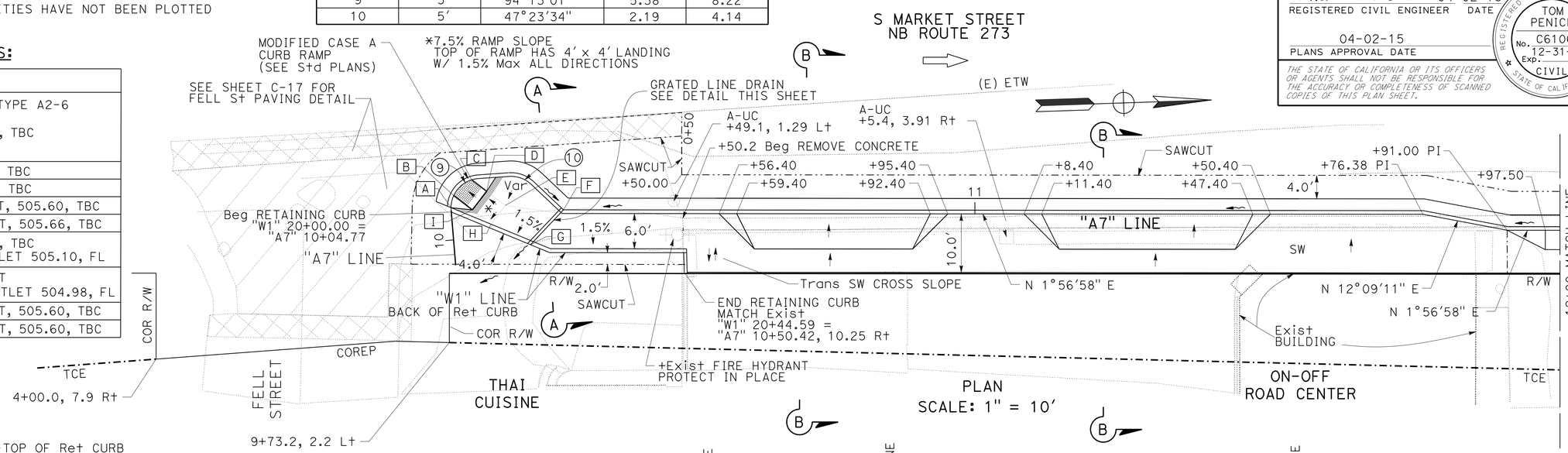

PLAN
SCALE: 1" = 10′

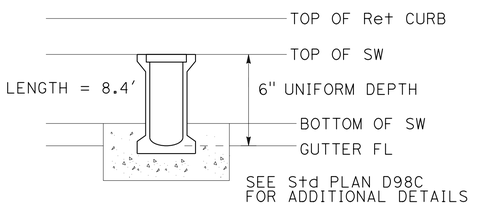

GRATED LINE DRAIN DETAIL
ELEVATION

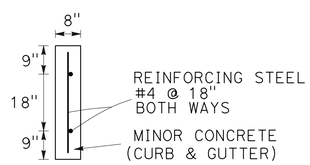

SECTION
REINFORCED RETAINING CURB DETAIL
NO SCALE

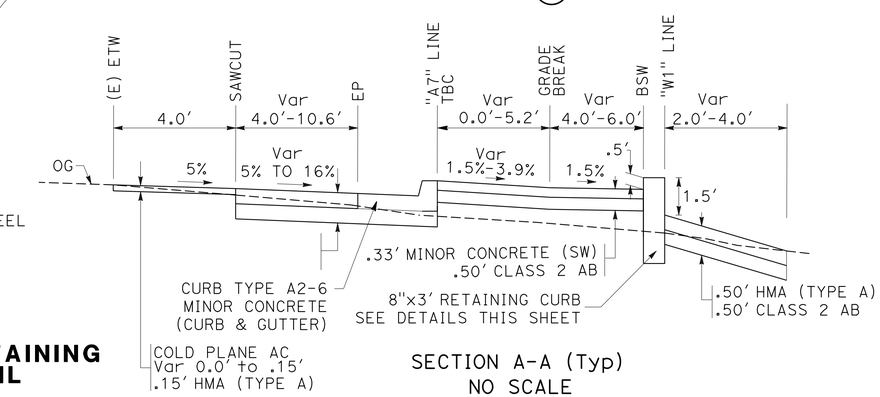

SECTION A-A (Typ)
NO SCALE

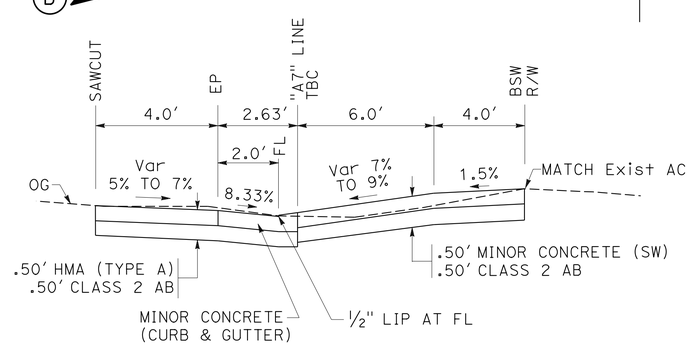

SECTION B-B (Typ)
NO SCALE

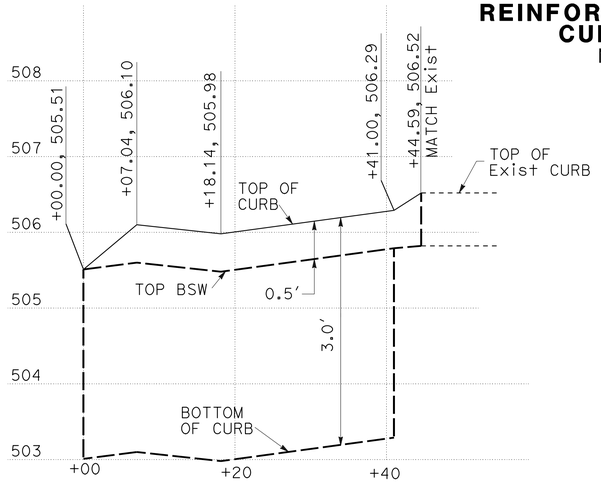

"W1" TOP BACK OF CURB PROFILE
SCALE: 1" = 10′ Horiz
1" = 1′ Vert

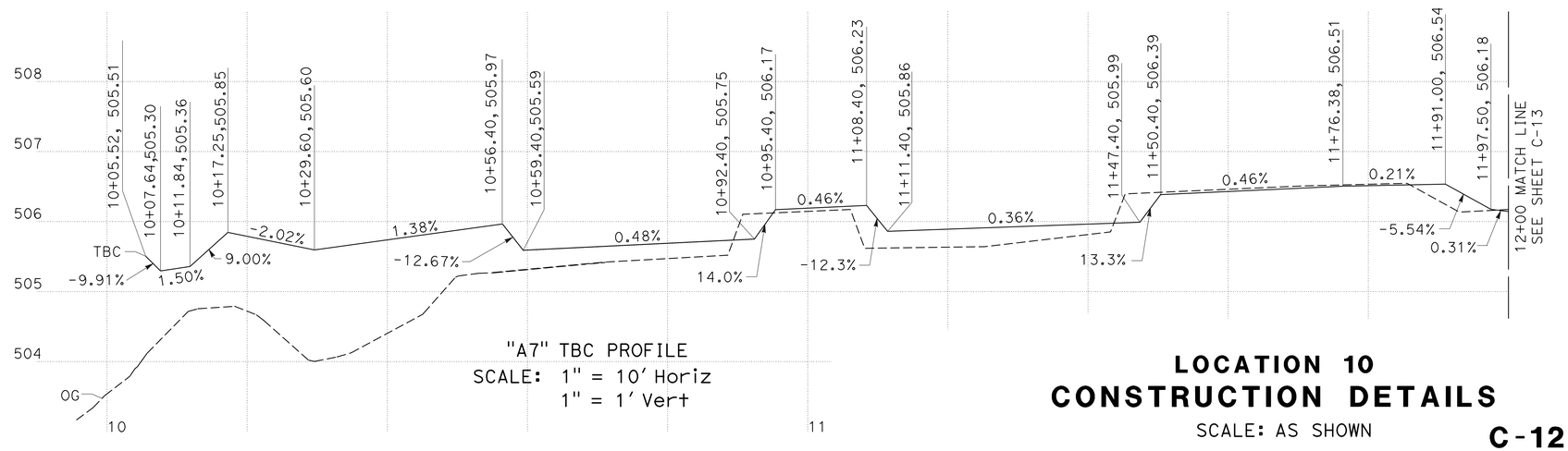

"A7" TBC PROFILE
SCALE: 1" = 10′ Horiz
1" = 1′ Vert

LOCATION 10
CONSTRUCTION DETAILS

SCALE: AS SHOWN

C-12

REVISED BY	DATE REVISED

CALCULATED-DESIGNED BY: TOM PENICK
CHECKED BY: JAVED IQBAL
FUNCTIONAL SUPERVISOR: MICHAEL FEAKES

STATE OF CALIFORNIA - DEPARTMENT OF TRANSPORTATION
Caltrans
DESIGN

P:\proj1\02\3E800_plans\pse\23e800ga012.dgn

LAST REVISION 04-02-15 | DATE PLOTTED => 02-APR-2015 | TIME PLOTTED => 11:43

Dist	COUNTY	ROUTE	POST MILES TOTAL PROJECT	SHEET No.	TOTAL SHEETS
02	Sha	273	15.0/15.8	15	51

Thomas Penick 04-02-15
REGISTERED CIVIL ENGINEER DATE

04-02-15
PLANS APPROVAL DATE

REGISTERED PROFESSIONAL ENGINEER TOM PENICK No. C61068 Exp. 12-31-16 CIVIL STATE OF CALIFORNIA

THE STATE OF CALIFORNIA OR ITS OFFICERS OR AGENTS SHALL NOT BE RESPONSIBLE FOR THE ACCURACY OR COMPLETENESS OF SCANNED COPIES OF THIS PLAN SHEET.

NOTES:

1. FOR ACCURATE RIGHT OF WAY DATA, CONTACT RIGHT OF WAY ENGINEERING AT THE DISTRICT OFFICE.
2. EXISTING UTILITY FACILITIES HAVE NOT BEEN PLOTTED ON THESE PLANS.

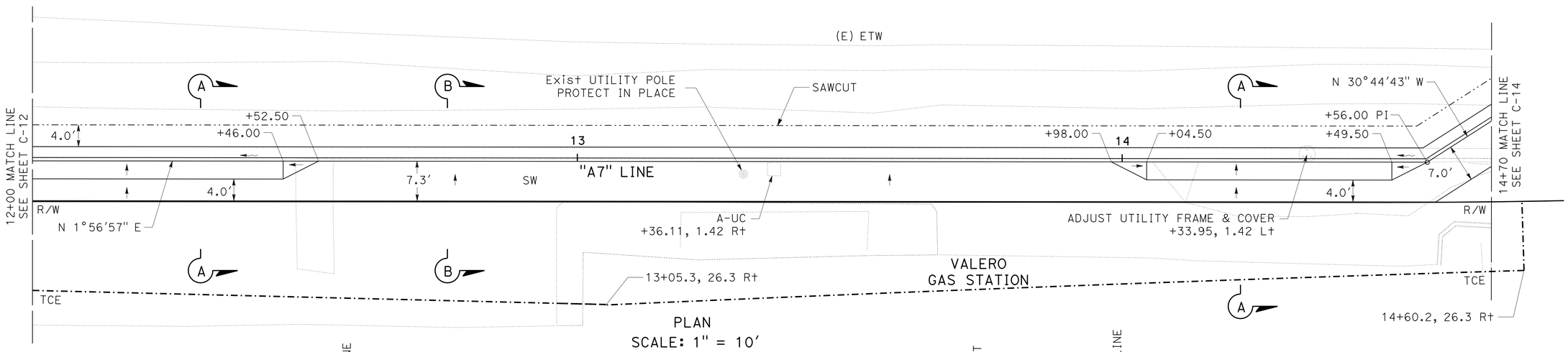

PLAN
SCALE: 1" = 10'

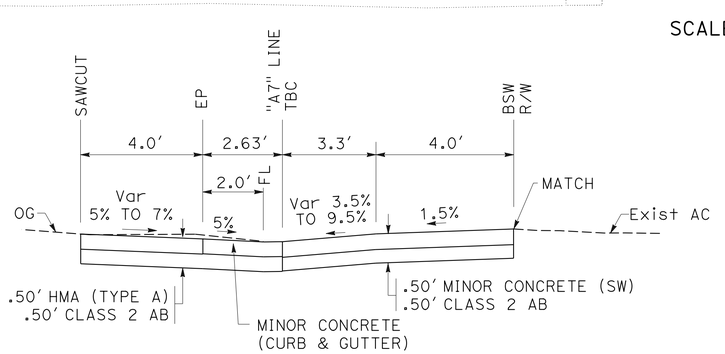

SECTION A-A (Typ)
NO SCALE

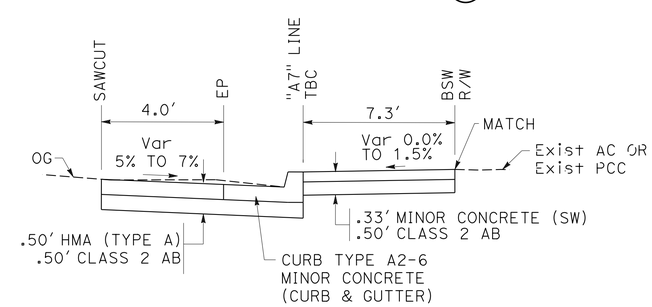

SECTION B-B (Typ)
NO SCALE

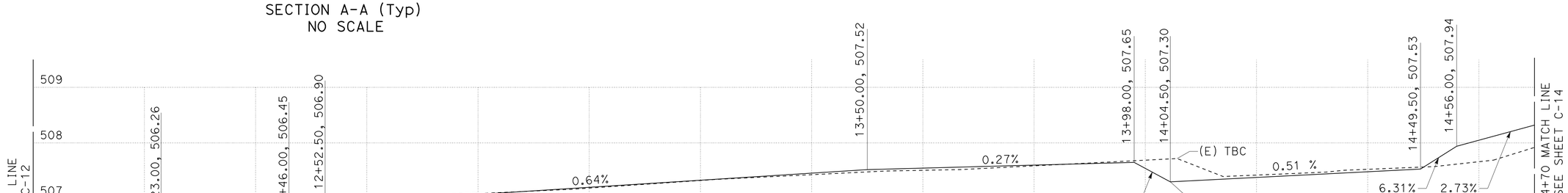

"A7" TBC PROFILE
SCALE: 1" = 10' Horiz
1" = 1' Vert

LOCATION 10
CONSTRUCTION DETAILS

SCALE: AS SHOWN

C-13

REVISED BY | DATE REVISED
TOM PENICK | JAVED IQBAL
CALCULATED-DESIGNED BY | CHECKED BY
FUNCTIONAL SUPERVISOR
MICHAEL FEAKES

STATE OF CALIFORNIA - DEPARTMENT OF TRANSPORTATION
Caltrans
DESIGN

P:\proj1\02\3E800_plans\pse\23e800ga013.dgn

LAST REVISION 04-02-15 | DATE PLOTTED => 02-APR-2015 | TIME PLOTTED => 11:43

Dist	COUNTY	ROUTE	POST MILES TOTAL PROJECT	SHEET No.	TOTAL SHEETS
02	Sha	273	15.0/15.8	16	51

Thomas Penick 04-02-15
REGISTERED CIVIL ENGINEER DATE

04-02-15
PLANS APPROVAL DATE

REGISTERED PROFESSIONAL ENGINEER TOM PENICK No. C61068 Exp. 12-31-16 CIVIL STATE OF CALIFORNIA

THE STATE OF CALIFORNIA OR ITS OFFICERS OR AGENTS SHALL NOT BE RESPONSIBLE FOR THE ACCURACY OR COMPLETENESS OF SCANNED COPIES OF THIS PLAN SHEET.

NOTES:

1. FOR ACCURATE RIGHT OF WAY DATA, CONTACT RIGHT OF WAY ENGINEERING AT THE DISTRICT OFFICE.
2. EXISTING UTILITY FACILITIES HAVE NOT BEEN PLOTTED ON THESE PLANS.

CURVE DATA

No. ⊕	R	Δ	T	L
10	20′	37°31′03″	6.79′	13.10′
11	4′	131°04′41″	8.79′	9.15′
12	4′	90°00′00″	4.00′	6.28′
13	4′	138°55′19″	10.68′	9.70′

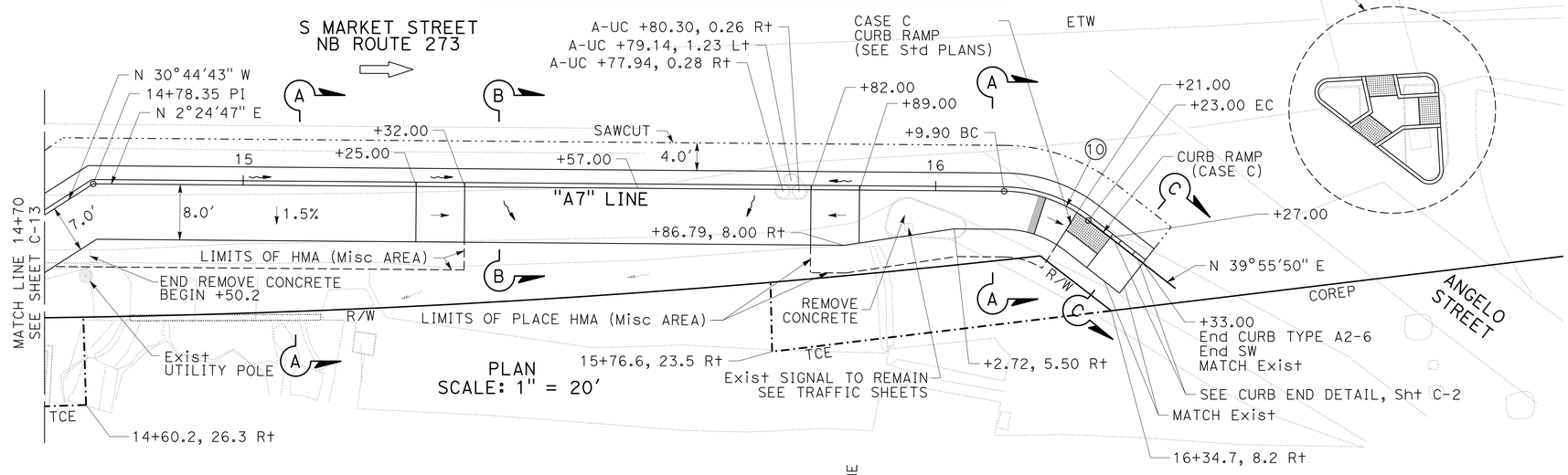

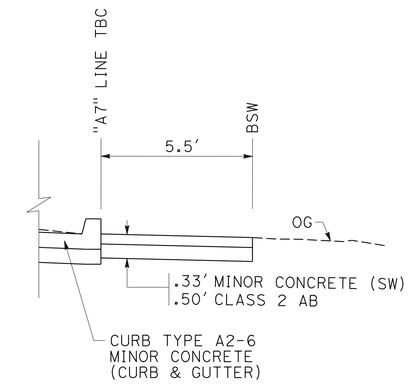

SECTION C-C (Typ)
NO SCALE

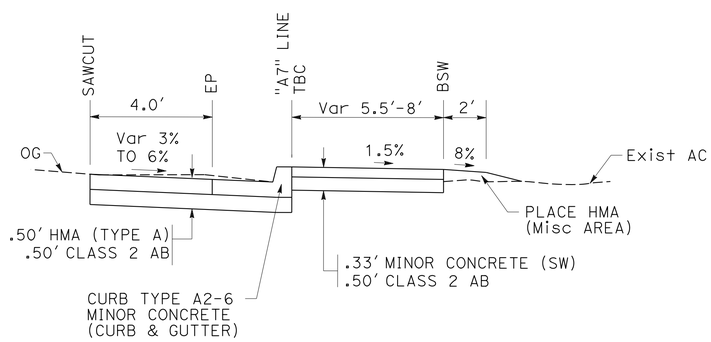

SECTION A-A (Typ)
NO SCALE

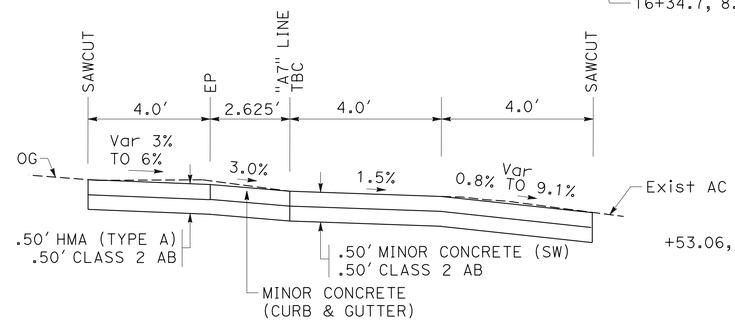

SECTION B-B
DRIVEWAY DETAIL (Typ)
NO SCALE

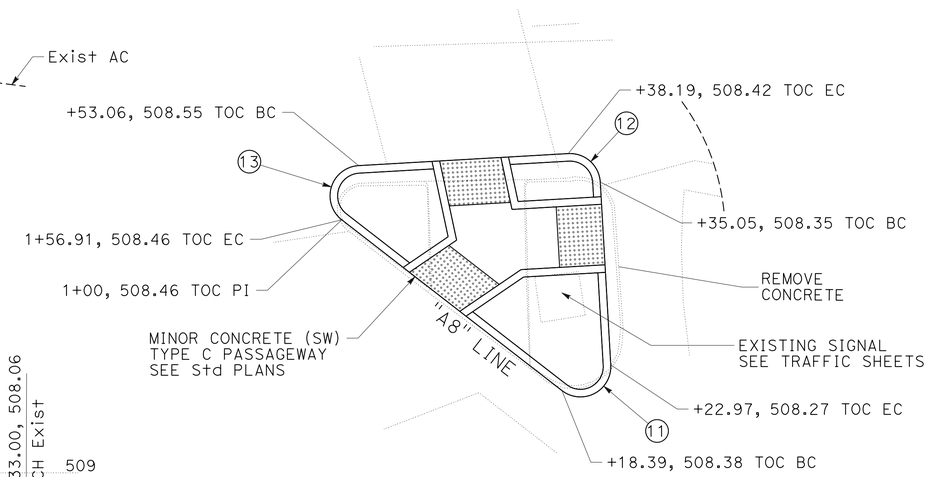

DETAIL A
NO SCALE

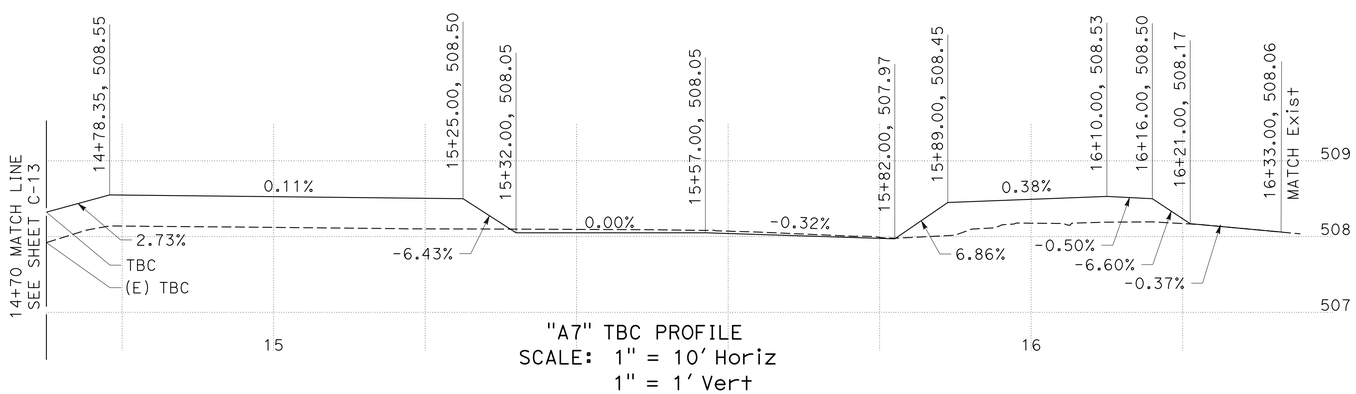

"A7" TBC PROFILE
SCALE: 1" = 10′ Horiz
1" = 1′ Vert

LOCATIONS 10
CONSTRUCTION DETAILS

SCALE: AS SHOWN

C-14

STATE OF CALIFORNIA - DEPARTMENT OF TRANSPORTATION
Caltrans
DESIGN

REVISED BY	DATE REVISED
TOM PENICK	JAVED IQBAL
CALCULATED-DESIGNED BY	CHECKED BY
FUNCTIONAL SUPERVISOR	MICHAEL FEAKES

P:\proj1\02\3E800_plans\pse\23e800ga014.dgn

LAST REVISION 04-02-15 | DATE PLOTTED => 02-APR-2015 | TIME PLOTTED => 11:43

Dist	COUNTY	ROUTE	POST MILES TOTAL PROJECT	SHEET No.	TOTAL SHEETS
02	Sha	273	15.0/15.8	17	51

Thomas Penick 04-02-15
REGISTERED CIVIL ENGINEER DATE

04-02-15
PLANS APPROVAL DATE

REGISTERED PROFESSIONAL ENGINEER TOM PENICK No. C61068 Exp. 12-31-16 CIVIL STATE OF CALIFORNIA

THE STATE OF CALIFORNIA OR ITS OFFICERS OR AGENTS SHALL NOT BE RESPONSIBLE FOR THE ACCURACY OR COMPLETENESS OF SCANNED COPIES OF THIS PLAN SHEET.

NOTES:

1. FOR ACCURATE RIGHT OF WAY DATA, CONTACT RIGHT OF WAY ENGINEERING AT THE DISTRICT OFFICE.
2. EXISTING UTILITY FACILITIES HAVE NOT BEEN PLOTTED ON THESE PLANS.

CURVE DATA

No. #	R	Δ	T	L
14	20.0′	77°32′05"	16.06′	27.06′
15	10.0′	44°31′40"	4.09′	7.77′
16	2.0′	105°03′59"	2.61′	3.67′

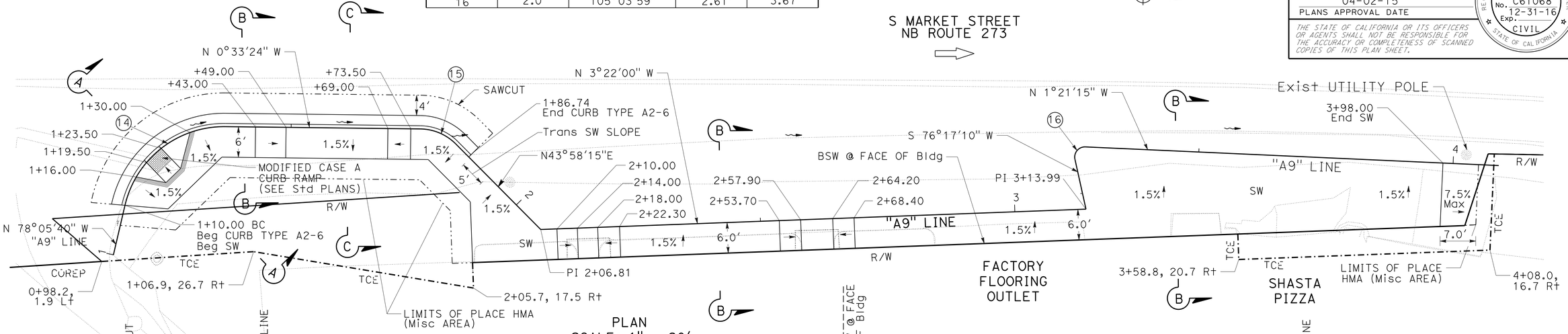

PLAN
SCALE: 1" = 20′

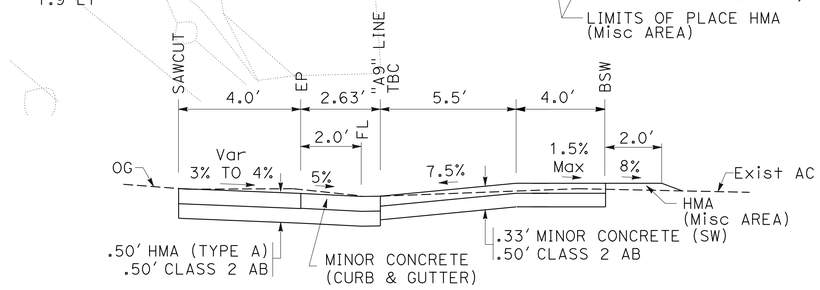

SECTION A-A (Typ)
NO SCALE

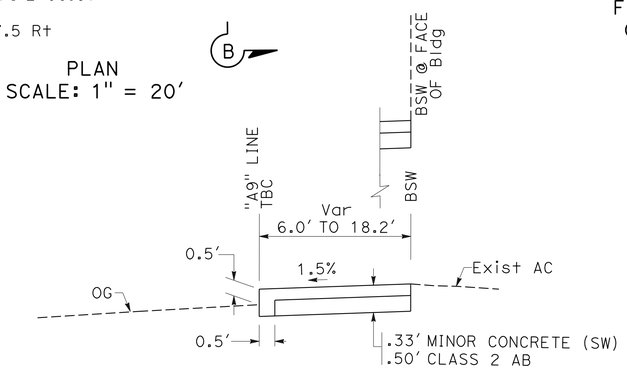

SECTION B-B (Typ)
NO SCALE

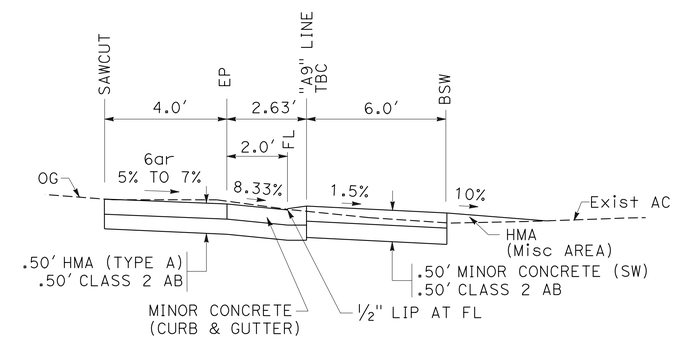

SECTION C-C (Typ)
NO SCALE

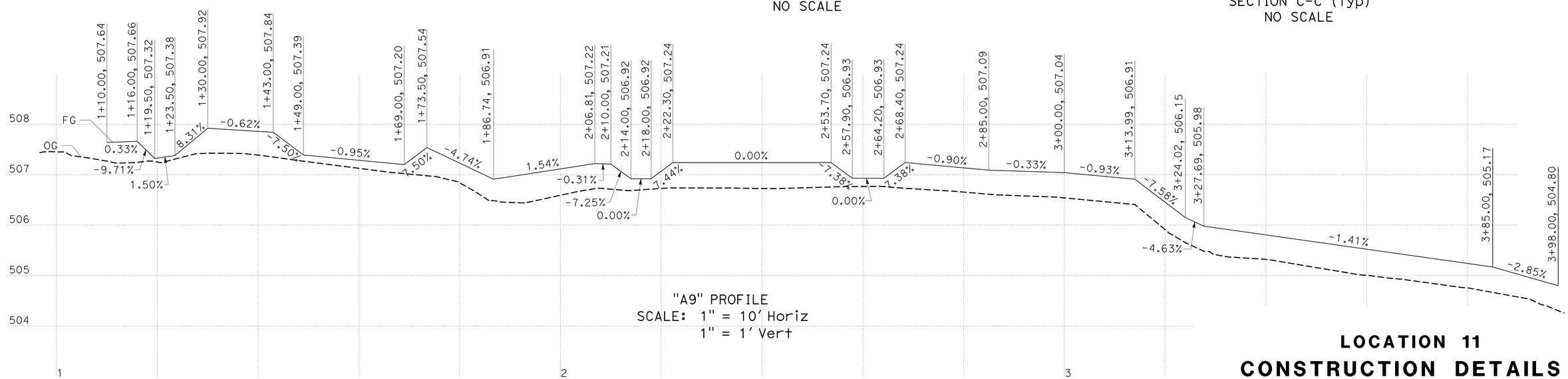

"A9" PROFILE
SCALE: 1" = 10′ Horiz
1" = 1′ Vert

LOCATION 11
CONSTRUCTION DETAILS
SCALE: AS SHOWN

C-15

REVISED BY | DATE REVISED
TOM PENICK | JAVED IQBAL
CALCULATED-DESIGNED BY | CHECKED BY
FUNCTIONAL SUPERVISOR: MICHAEL FEAKES

STATE OF CALIFORNIA - DEPARTMENT OF TRANSPORTATION
Caltrans® DESIGN

P:\proj1\02\3E800_plans\pse\23e800ga015.dgn

LAST REVISION 04-02-15 | DATE PLOTTED => 02-APR-2015 | TIME PLOTTED => 11:43

Dist	COUNTY	ROUTE	POST MILES TOTAL PROJECT	SHEET No.	TOTAL SHEETS
02	Sha	273	15.0/15.8	18	51

Thomas Penick 04-02-15
REGISTERED CIVIL ENGINEER DATE

04-02-15
PLANS APPROVAL DATE

REGISTERED PROFESSIONAL ENGINEER
TOM PENICK
No. C61068
Exp. 12-31-16
CIVIL
STATE OF CALIFORNIA

THE STATE OF CALIFORNIA OR ITS OFFICERS OR AGENTS SHALL NOT BE RESPONSIBLE FOR THE ACCURACY OR COMPLETENESS OF SCANNED COPIES OF THIS PLAN SHEET.

NOTES:

1. EXISTING UTILITY FACILITIES HAVE NOT BEEN PLOTTED ON THESE PLANS.

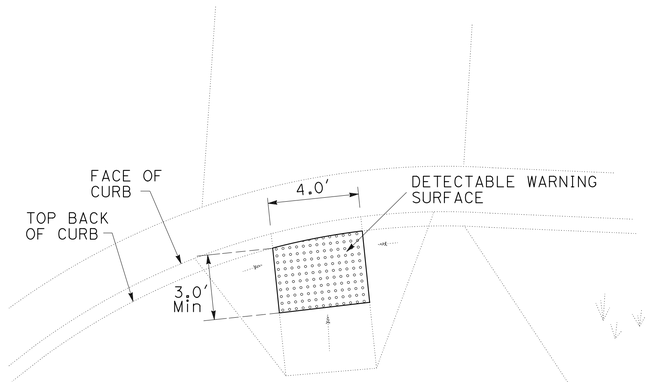

DETAIL A

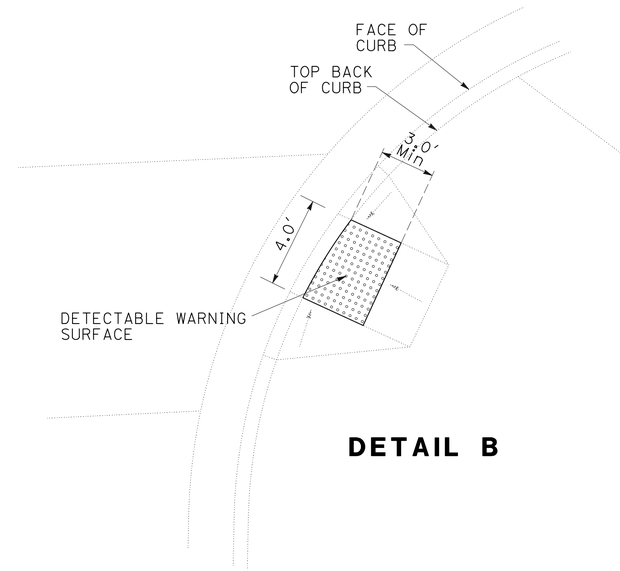

DETAIL B

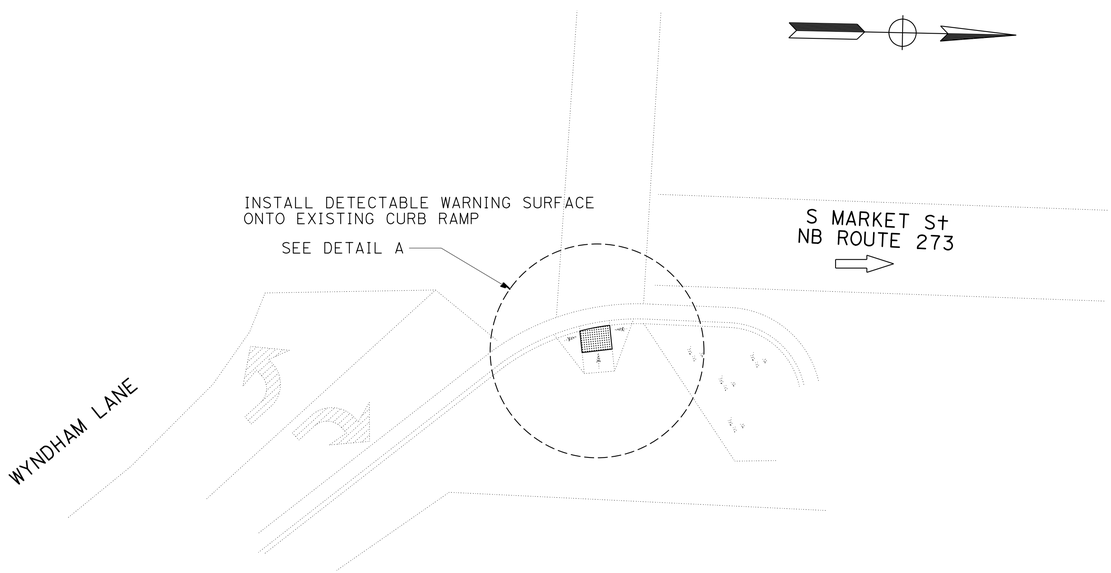

DETECTABLE WARNING SURFACE
WYNDHAM LANE / 273 INTERSECTION

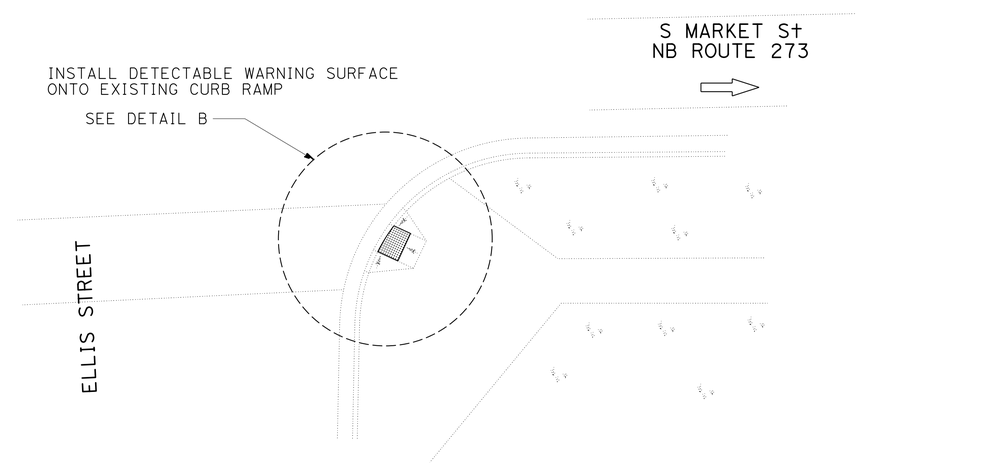

DETECTABLE WARNING SURFACE
ELLIS STREET / 273 INTERSECTION

CONSTRUCTION DETAILS

NO SCALE

C-16

REVISED BY | DATE REVISED
TOM PENICK | JAVED IQBAL
CALCULATED-DESIGNED BY | CHECKED BY
FUNCTIONAL SUPERVISOR
MICHAEL FEAKES

STATE OF CALIFORNIA - DEPARTMENT OF TRANSPORTATION
Caltrans
DESIGN

P:\proj1\02\3E800_plans\pse\23e800ga016.dgn

LAST REVISION 04-02-15 | DATE PLOTTED => 02-APR-2015 | TIME PLOTTED => 11:43

Dist	COUNTY	ROUTE	POST MILES TOTAL PROJECT	SHEET No.	TOTAL SHEETS
02	Sha	273	15.0/15.8	19	51

Thomas Penick 04-02-15
REGISTERED CIVIL ENGINEER DATE

04-02-15
PLANS APPROVAL DATE

REGISTERED PROFESSIONAL ENGINEER TOM PENICK No. C61068 Exp. 12-31-16 CIVIL STATE OF CALIFORNIA

THE STATE OF CALIFORNIA OR ITS OFFICERS OR AGENTS SHALL NOT BE RESPONSIBLE FOR THE ACCURACY OR COMPLETENESS OF SCANNED COPIES OF THIS PLAN SHEET.

NOTES:

1. EXISTING UTILITY FACILITIES HAVE NOT BEEN PLOTTED ON THESE PLANS.

LEGEND

VARIABLE DEPTH OVERLAY HMA (TYPE A)

COLD PLANE AC Pvt VARIABLE DEPTH OVERLAY HMA (TYPE A)

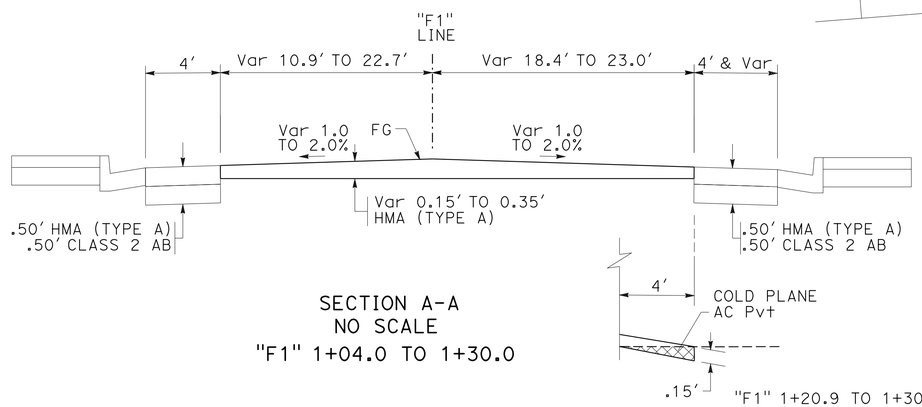

SECTION A-A
NO SCALE
"F1" 1+04.0 TO 1+30.0

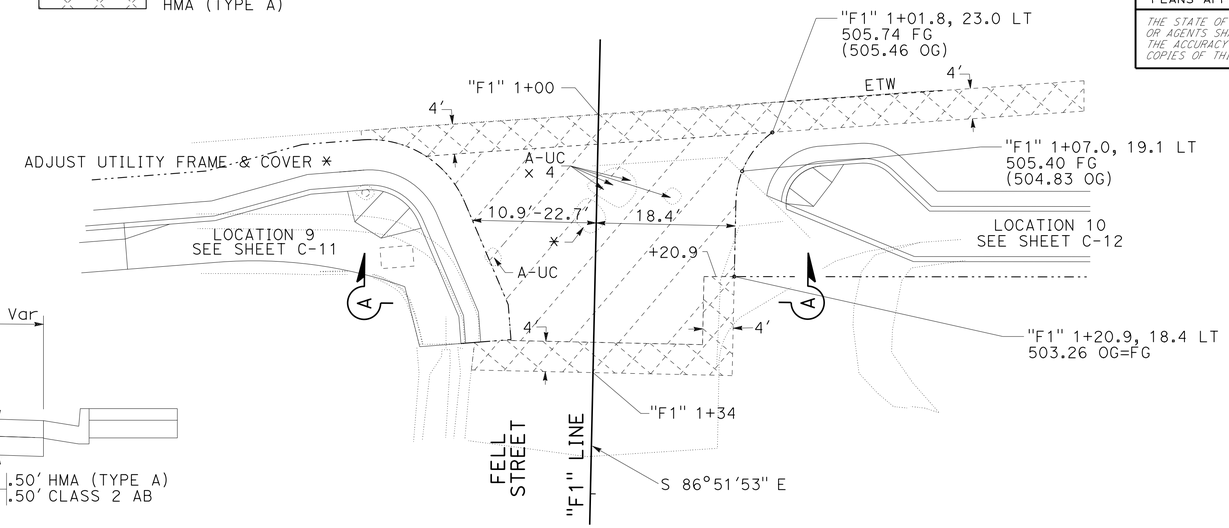

PLAN
ROAD CONNECTION DETAIL
FELL STREET
SCALE: 1" = 10'

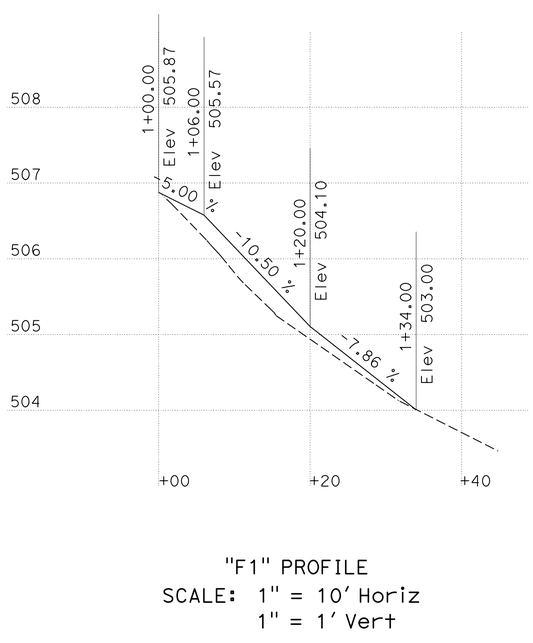

"F1" PROFILE
SCALE: 1" = 10' Horiz
1" = 1' Vert

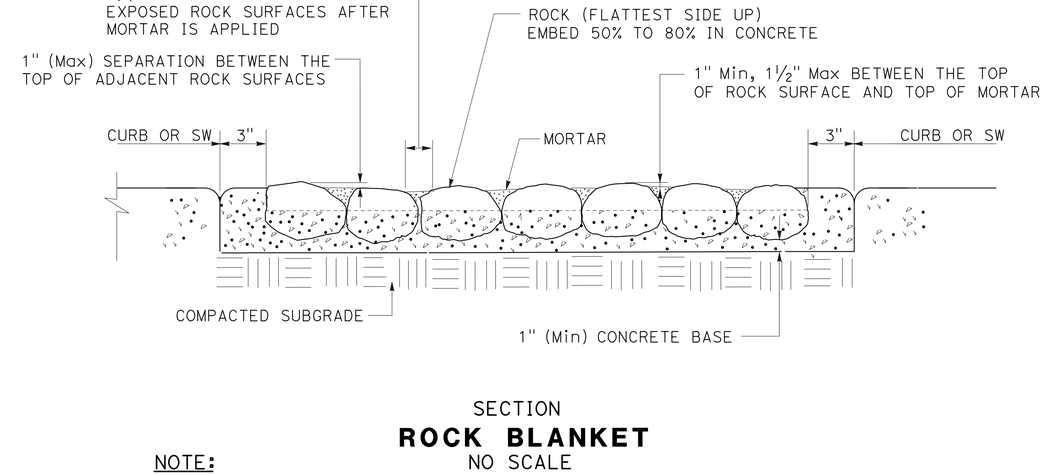

SECTION
ROCK BLANKET
NO SCALE

NOTE:
1. ROCK MUST BE:
   a. MADE UP OF MULTIPLE COLORS OF ROCK: GREENS, GREYS, BROWNS, REDS, TANS.
   b. FREE OF DEBRIS OR SOIL STAINING PRIOR TO PLACEMENT.

CONSTRUCTION DETAILS

SCALE: AS SHOWN

C-17

REVISED BY | DATE REVISED
TOM PENICK | JAVED IQBAL
CALCULATED-DESIGNED BY | CHECKED BY
FUNCTIONAL SUPERVISOR
MICHAEL FEAKES

STATE OF CALIFORNIA - DEPARTMENT OF TRANSPORTATION
Caltrans
DESIGN

P:\proj1\02\3E800_plans\pse\23e800ga017.dgn

LAST REVISION 04-02-15 | DATE PLOTTED => 02-APR-2015 | TIME PLOTTED => 11:43

Dist	COUNTY	ROUTE	POST MILES TOTAL PROJECT	SHEET No.	TOTAL SHEETS
02	Sha	273	15.0/15.8	20	51

Thomas Penick 04-02-15
REGISTERED CIVIL ENGINEER DATE

04-02-15
PLANS APPROVAL DATE

REGISTERED PROFESSIONAL ENGINEER TOM PENICK No. C61068 Exp. 12-31-16 CIVIL STATE OF CALIFORNIA

THE STATE OF CALIFORNIA OR ITS OFFICERS OR AGENTS SHALL NOT BE RESPONSIBLE FOR THE ACCURACY OR COMPLETENESS OF SCANNED COPIES OF THIS PLAN SHEET.

NOTES:

1. GRIND EXISTING SURFACES TO ACCOMMODATE A MINIMUM TAPER THICKNESS OF 0.10′ WHEN EITHER:
   A. HMA MATERIAL SUCH AS RUBBERIZED, POLYMER MODIFIED OR OPEN GRADED IS UNSUITABLE FOR RAKING TO A MAXIMUM 0.02′ THICKNESS AT THE CONFORM.
   B. TEMPORARY TAPER WILL BE IN PLACE FOR MORE THAN 14 DAYS.
2. PERMANENT SURFACE MAY BE EXISTING OR NEW PAVEMENT.
3. ROADWAY SURFACE IS THE TOP OF EXISTING SURFACE OR THE TOP OF THE PLANED SURFACE.
4. FOR TEMPORARY TAPERS ON BRIDGE DECKS AND APPROACH SLABS, CONSTRUCT TEMPORARY TAPERS WITH POLYESTER CONCRETE.
5. IF AUTHORIZED, YOU MAY USE ALTERNATIVE MATERIALS OR METHODS TO PRODUCE THE REQUIRED TAPER.
6. EXISTING UTILITY FACILITIES HAVE NOT BEEN PLOTTED ON THESE PLANS.

LEGEND:

HMA MATERIAL (TEMPORARY TAPER) (SEE NOTE 4)

IF NECESSARY, COLD PLANE ASPHALT CONCRETE PAVEMENT AND PLACE HMA MATERIAL (SEE NOTE 1)

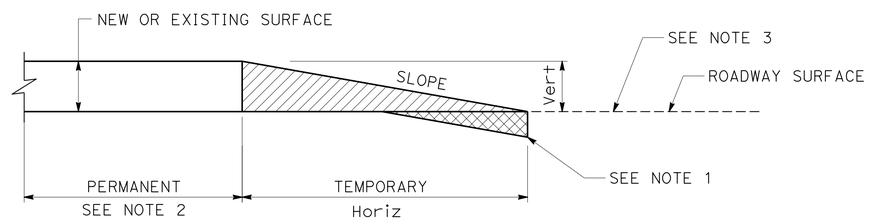

Vert	SLOPE RATIO Horiz/Vert
0-0.10′	70:1
GREATER THAN 0.10′	160:1

TYPICAL PAVING CONFORM FOR TEMPORARY CONSTRUCTION TAPERS

CONSTRUCTION DETAILS

NO SCALE

C-18

REVISED BY | DATE REVISED
TOM PENICK | JAVED IQBAL
CALCULATED-DESIGNED BY | CHECKED BY
FUNCTIONAL SUPERVISOR
MICHAEL FEAKES

STATE OF CALIFORNIA - DEPARTMENT OF TRANSPORTATION
Caltrans DESIGN

P:\proj1\02\3E800_plans\pse\23e800ga018.dgn

LAST REVISION 04-02-15 | DATE PLOTTED => 02-APR-2015 TIME PLOTTED => 11:43

Dist	COUNTY	ROUTE	POST MILES TOTAL PROJECT	SHEET No.	TOTAL SHEETS
02	Sha	273	15.0/15.8	21	51

Thomas Penick 04-02-15
REGISTERED CIVIL ENGINEER DATE

04-02-15
PLANS APPROVAL DATE

REGISTERED PROFESSIONAL ENGINEER TOM PENICK No. C61068 Exp. 12-31-16 CIVIL STATE OF CALIFORNIA

THE STATE OF CALIFORNIA OR ITS OFFICERS OR AGENTS SHALL NOT BE RESPONSIBLE FOR THE ACCURACY OR COMPLETENESS OF SCANNED COPIES OF THIS PLAN SHEET.

ABBREVIATIONS;

MJ MECHANICAL JOINT

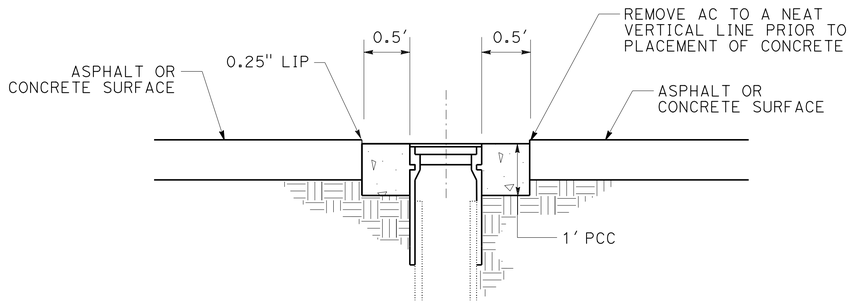

ADJUST UTILITY COVER TO GRADE

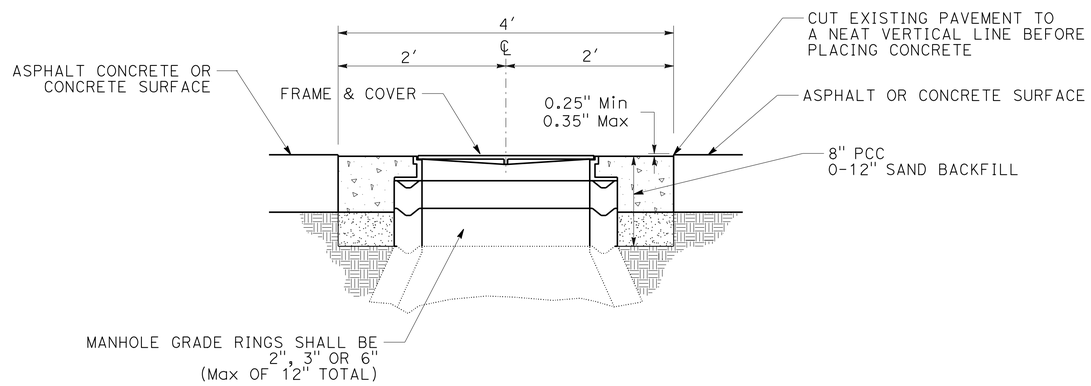

ADJUST UTILITY FRAME AND COVER TO GRADE

UTILITY QUANTITIES

LOCATION	ADJUST UTILITY COVER TO GRADE	ADJUST UTILITY FRAME AND COVER
	EA	EA
No. 1	1	
No. 3	1	
No. 6	1	
No. 7	3	
No. 8	3	
No. 9	2	
No. 10	6	1
FELL St	4	1
TOTAL	21	2

UTILITY DETAILS AND QUANTITIES

NO SCALE

UD-1

REVISED BY	DATE REVISED
TOM PENICK	JAVED IQBAL
CALCULATED-DESIGNED BY	CHECKED BY
FUNCTIONAL SUPERVISOR	MICHAEL FEAKES

STATE OF CALIFORNIA - DEPARTMENT OF TRANSPORTATION
Caltrans
DESIGN

P:\proj1\02\3E800_plans\pse\23e800kb001.dgn

LAST REVISION 04-02-15 | DATE PLOTTED => 02-APR-2015 | TIME PLOTTED => 11:43

Dist	COUNTY	ROUTE	POST MILES TOTAL PROJECT	SHEET No.	TOTAL SHEETS
02	Sha	273	15.0/15.8	22	51

Thomas Penick 04-02-15
REGISTERED CIVIL ENGINEER DATE

04-02-15
PLANS APPROVAL DATE

REGISTERED PROFESSIONAL ENGINEER TOM PENICK No. C61068 Exp. 12-31-16 CIVIL STATE OF CALIFORNIA

THE STATE OF CALIFORNIA OR ITS OFFICERS OR AGENTS SHALL NOT BE RESPONSIBLE FOR THE ACCURACY OR COMPLETENESS OF SCANNED COPIES OF THIS PLAN SHEET.

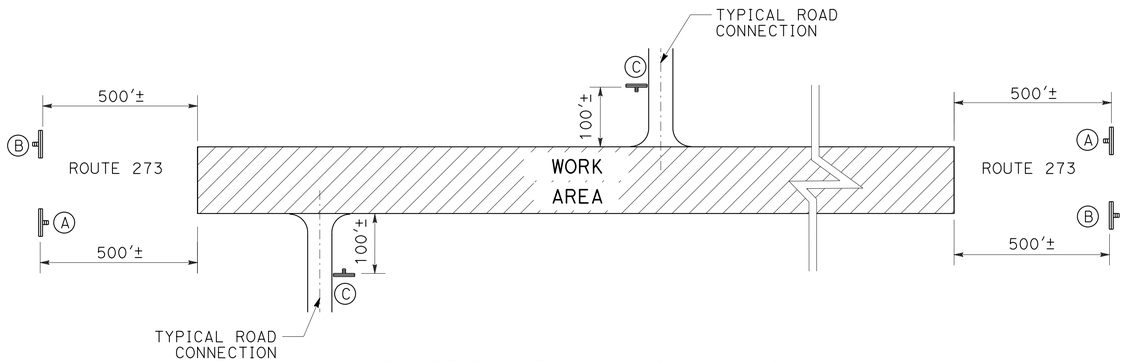

CONSTRUCTION AREA SIGN PLAN

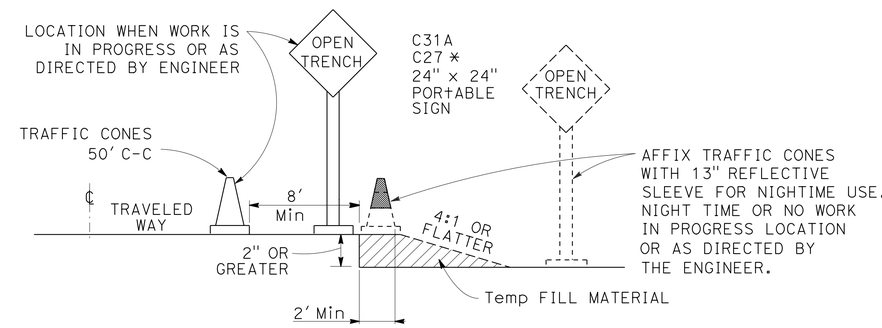

OPEN TRENCH SIGNING AND MARKING

* PLACE AT 250' INTERVALS THROUGH THE OPEN TRENCH AREA, ALTERNATE C27 (OPEN TRENCH) AND C31A (NO SHOULDER) SIGNS

CONSTRUCTION AREA SIGNS (STATIONARY MOUNTED)

TYPE	CODE	PANEL SIZE	SIGN MESSAGE	No. AND SIZE OF POSTS	No. OF SIGNS
A	W20-1 C23B	36" x 18" 36" x 24"	ROAD WORK AHEAD SIDEWALK UPGRADES	1 - 4" x 6"	2
	SPECIAL	36" x 24"	WATCH FOR BICYCLES	1- 4" x 6"	2
B	G20-2	36" x 18"	END ROAD WORK	1 - 4" x 4"	2
C	W20-1	48" x 48"	ROAD WORK AHEAD	1 - 4" x 6"	6

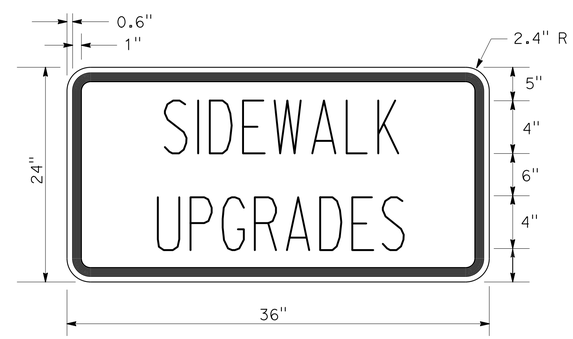

C23B SIGN PANEL DETAIL

1.5" RADIUS, 0.6" BORDER, 0.4" INDENT, BLACK ON ORANGE

SPECIAL SIGN PANEL DETAIL

CONSTRUCTION AREA SIGNS

NO SCALE

CS-1

REVISED BY | DATE REVISED
TOM PENICK | JAVED IQBAL
CALCULATED-DESIGNED BY | CHECKED BY
FUNCTIONAL SUPERVISOR: MICHAEL FEAKES
STATE OF CALIFORNIA - DEPARTMENT OF TRANSPORTATION
Caltrans DESIGN
P:\proj1\02\3E800_plans\pse\23e8001a001.dgn

LAST REVISION 04-02-15 | DATE PLOTTED => 02-APR-2015 | TIME PLOTTED => 11:43

Dist	COUNTY	ROUTE	POST MILES TOTAL PROJECT	SHEET No.	TOTAL SHEETS
02	Sha	273	15.0/15.8	23	51

Thomas Penick 04-02-15
REGISTERED CIVIL ENGINEER DATE

04-02-15
PLANS APPROVAL DATE

REGISTERED PROFESSIONAL ENGINEER
TOM PENICK
No. C61068
Exp. 12-31-16
CIVIL
STATE OF CALIFORNIA

THE STATE OF CALIFORNIA OR ITS OFFICERS OR AGENTS SHALL NOT BE RESPONSIBLE FOR THE ACCURACY OR COMPLETENESS OF SCANNED COPIES OF THIS PLAN SHEET.

NOTES:

1. EXACT SIGN LOCATIONS TO BE DETERMINED BY THE ENGINEER.
2. PORTABLE SIGNS SHALL BE USED ON TYPE III BARRICADES SUPPORTING THE SIGNS.
3. FOR NIGHT TIME CLOSURE, TYPE A FLASHING WARNING LIGHTS MAY BE USED ON THE BARRICADES.
4. CLOSURES IN STAGE B ARE NOT PERMITTED TO RUN AT THE SAME TIME AS CLOSURES IN STAGES A OR C.
5. (N) - NOT A SEPARATE PAY ITEM, FOR INFORMATION ONLY

CONSTRUCTION AREA SIGNS (PORTABLE) (N)

SIGN NUMBER	SIGN CODE	SIGN MESSAGE	PANEL SIZE (In)	No. OF SIGNS (N)
A	R9-9	SIDEWALK CLOSED	24 x 12	18
B	R9-11a	SIDEWALK CLOSED CROSS HERE	24 x 12	20

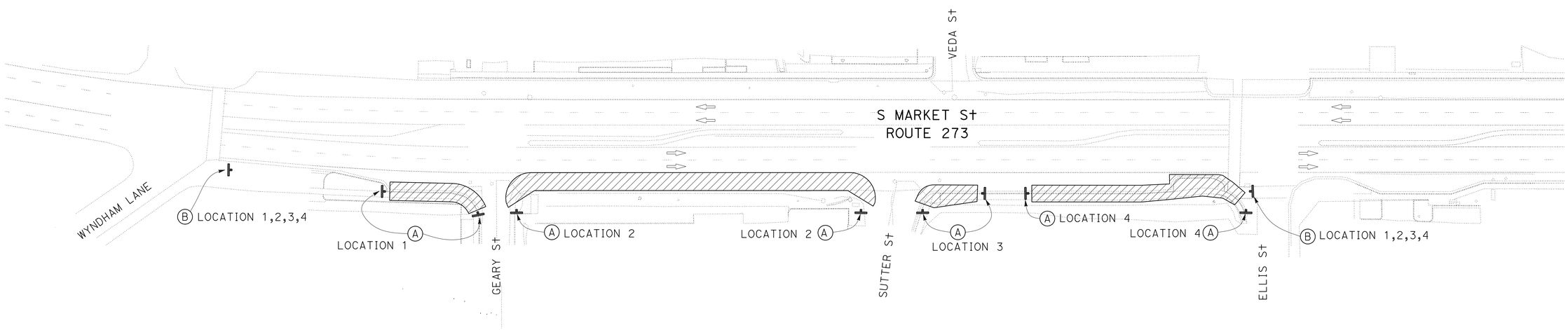

STAGE A: LOCATION 1,2,3,4
STAGE B: LOCATION 5,6,7,8
STAGE C: LOCATION 9,10
STAGE D: LOCATION 11

STAGE A
TRAFFIC HANDLING PLAN (PEDESTRIANS)

NO SCALE

TH-1

APPROVED FOR TRAFFIC HANDLING WORK ONLY

REVISED BY	DATE REVISED

TOM PENICK — JAVED IQBAL — CALCULATED-DESIGNED BY — CHECKED BY

FUNCTIONAL SUPERVISOR: MICHAEL FEAKES

STATE OF CALIFORNIA - DEPARTMENT OF TRANSPORTATION
Caltrans
DESIGN

P:\proj1\02\3E800_plans\pse\23e800md001.dgn

LAST REVISION 04-02-15 | DATE PLOTTED => 02-APR-2015 | TIME PLOTTED => 11:43

Dist	COUNTY	ROUTE	POST MILES TOTAL PROJECT	SHEET No.	TOTAL SHEETS
02	Sha	273	15.0/15.8	24	51

Thomas Penick 04-02-15
REGISTERED CIVIL ENGINEER DATE

04-02-15
PLANS APPROVAL DATE

REGISTERED PROFESSIONAL ENGINEER
TOM PENICK
No. C61068
Exp. 12-31-16
CIVIL
STATE OF CALIFORNIA

THE STATE OF CALIFORNIA OR ITS OFFICERS OR AGENTS SHALL NOT BE RESPONSIBLE FOR THE ACCURACY OR COMPLETENESS OF SCANNED COPIES OF THIS PLAN SHEET.

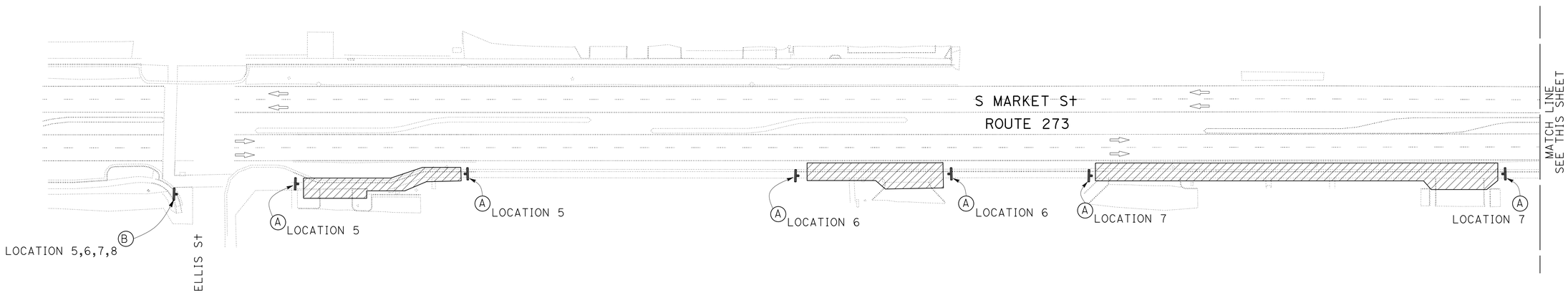

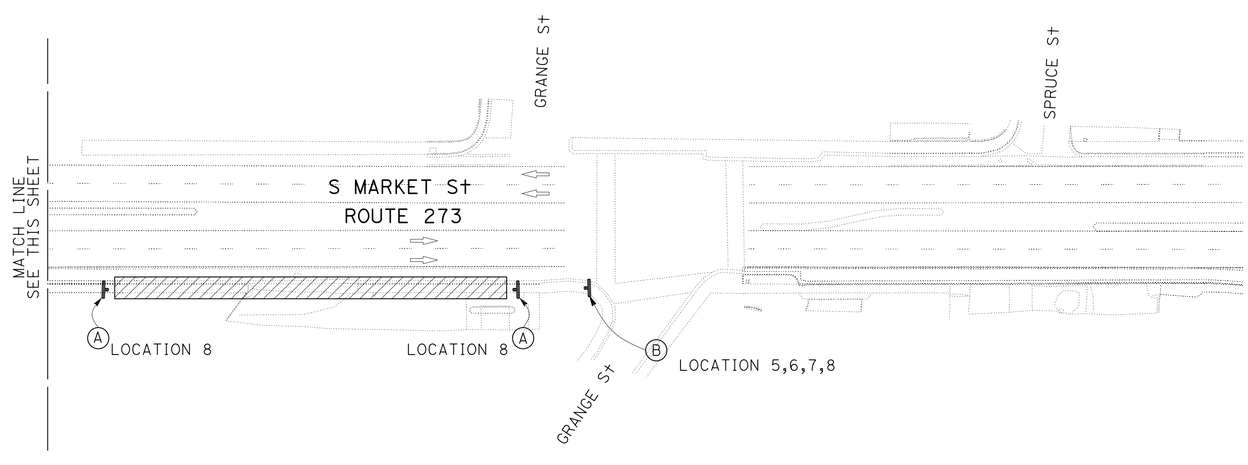

APPROVED FOR TRAFFIC HANDLING WORK ONLY

STAGE B
TRAFFIC HANDLING PLAN (PEDESTRIANS)

NO SCALE

TH-2

REVISED BY	DATE REVISED

CALCULATED-DESIGNED BY	TOM PENICK
CHECKED BY	JAVED IQBAL
FUNCTIONAL SUPERVISOR	MICHAEL FEAKES

STATE OF CALIFORNIA - DEPARTMENT OF TRANSPORTATION
Caltrans® **DESIGN**

P:\proj1\02\3E800_plans\pse\23e800md002.dgn

LAST REVISION 04-02-15 | DATE PLOTTED => 02-APR-2015 | TIME PLOTTED => 11:43

Dist	COUNTY	ROUTE	POST MILES TOTAL PROJECT	SHEET No.	TOTAL SHEETS
02	Sha	273	15.0/15.8	25	51

Thomas Penick 04-02-15
REGISTERED CIVIL ENGINEER DATE

04-02-15
PLANS APPROVAL DATE

REGISTERED PROFESSIONAL ENGINEER
TOM PENICK
No. C61068
Exp. 12-31-16
CIVIL
STATE OF CALIFORNIA

THE STATE OF CALIFORNIA OR ITS OFFICERS OR AGENTS SHALL NOT BE RESPONSIBLE FOR THE ACCURACY OR COMPLETENESS OF SCANNED COPIES OF THIS PLAN SHEET.

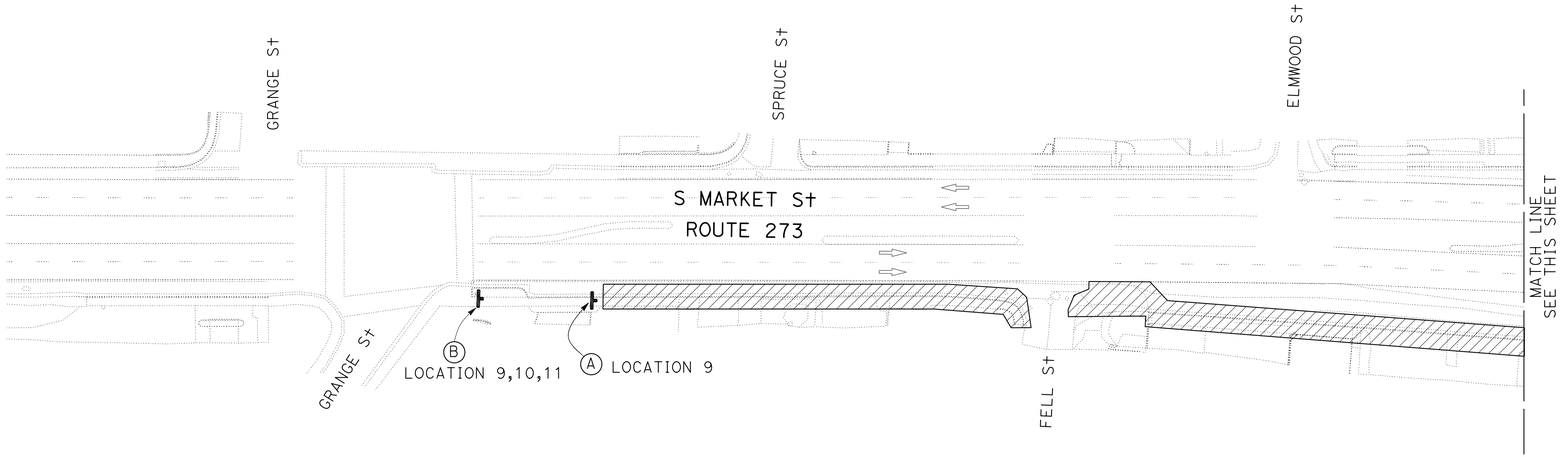

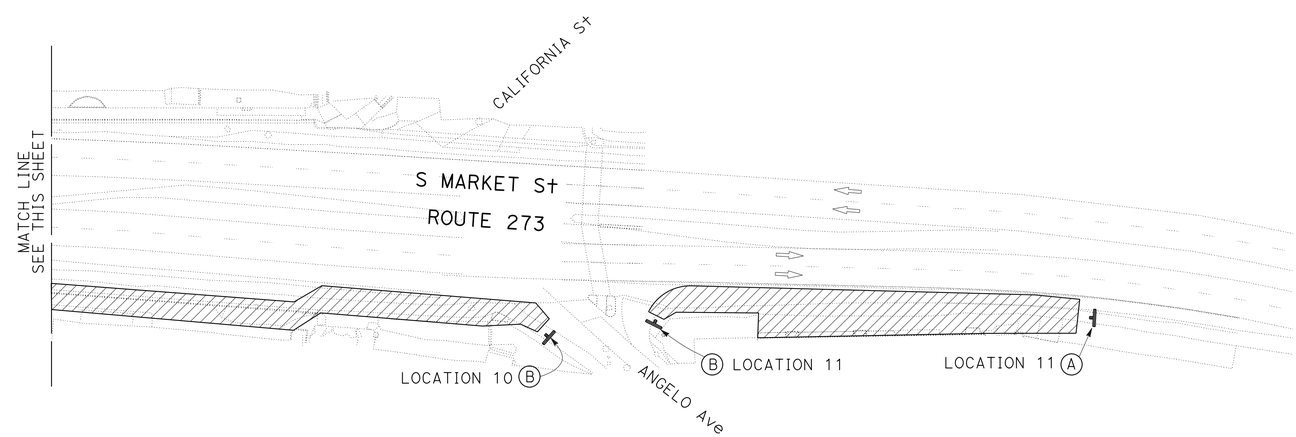

STAGE C & D
TRAFFIC HANDLING PLAN (PEDESTRIANS)

NO SCALE

TH-3

APPROVED FOR TRAFFIC HANDLING WORK ONLY

REVISED BY | DATE REVISED
TOM PENICK | JAVED IQBAL
CALCULATED-DESIGNED BY | CHECKED BY
FUNCTIONAL SUPERVISOR
MICHAEL FEAKES

STATE OF CALIFORNIA - DEPARTMENT OF TRANSPORTATION
Caltrans®
DESIGN

P:\proj1\02\3E800_plans\pse\23e800md003.dgn

LAST REVISION 04-02-15 | DATE PLOTTED => 02-APR-2015 | TIME PLOTTED => 11:44

Dist	COUNTY	ROUTE	POST MILES TOTAL PROJECT	SHEET No.	TOTAL SHEETS
02	Sha	273	15.0/15.8	26	51

Thomas Penick 04-02-15
REGISTERED CIVIL ENGINEER DATE

04-02-15
PLANS APPROVAL DATE

REGISTERED PROFESSIONAL ENGINEER TOM PENICK No. C61068 Exp. 12-31-16 CIVIL STATE OF CALIFORNIA

THE STATE OF CALIFORNIA OR ITS OFFICERS OR AGENTS SHALL NOT BE RESPONSIBLE FOR THE ACCURACY OR COMPLETENESS OF SCANNED COPIES OF THIS PLAN SHEET.

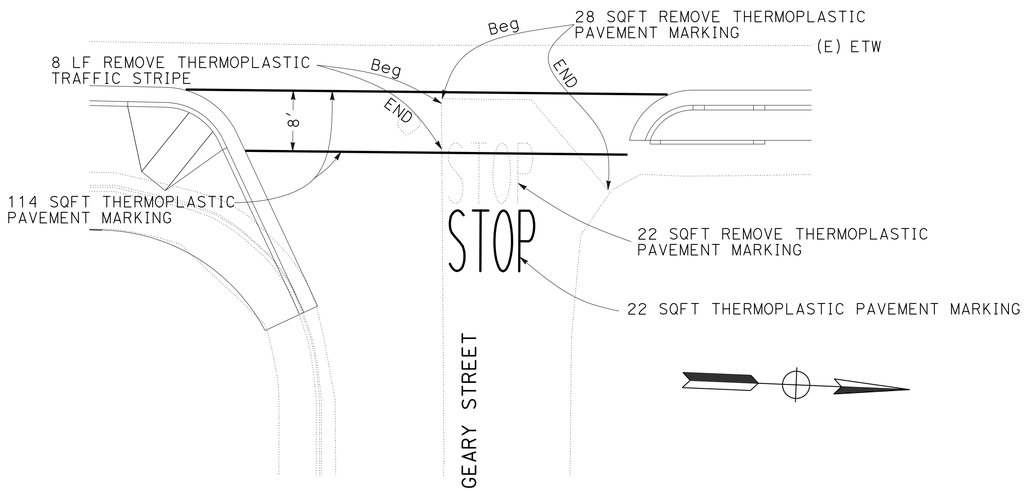

PLAN
LOCATION 1 & 2

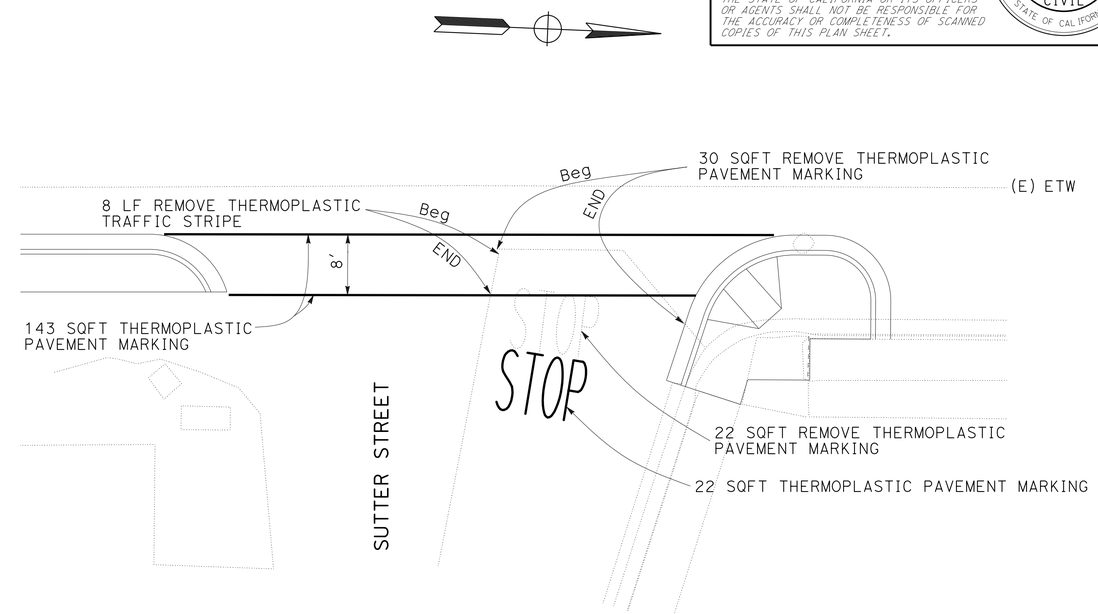

PLAN
LOCATION 2 & 3

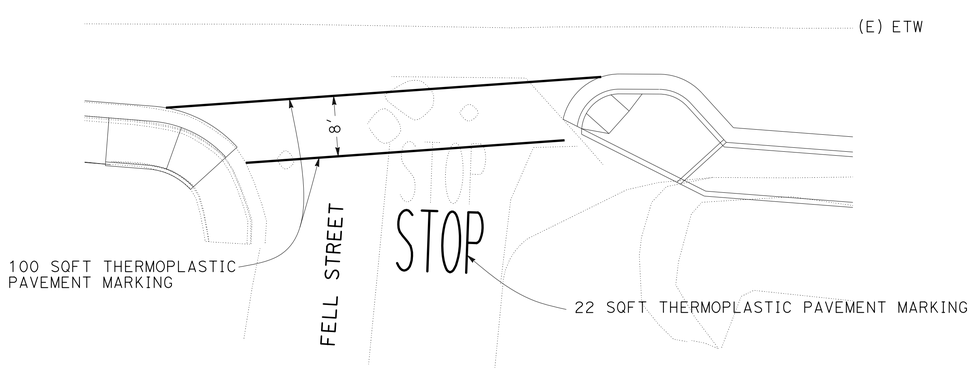

PLAN
LOCATION 9 & 10

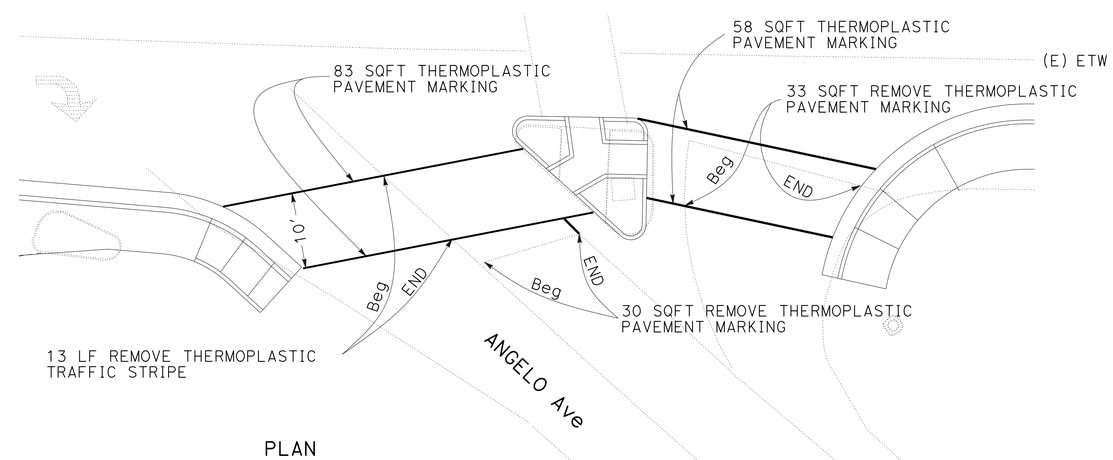

PLAN
LOCATION 10 & 11

PAVEMENT DELINEATION PLAN

SCALE: 1" = 10'

PD-1

APPROVED FOR PAVEMENT DELINEATION WORK ONLY

REVISED BY	DATE REVISED
TOM PENICK	JAVED IQBAL
CALCULATED-DESIGNED BY	CHECKED BY
FUNCTIONAL SUPERVISOR	MICHAEL FEAKES

STATE OF CALIFORNIA - DEPARTMENT OF TRANSPORTATION
Caltrans
DESIGN

P:\proj1\02\3E800_plans\pse\23e800na001.dgn

LAST REVISION 04-02-15 | DATE PLOTTED => 02-APR-2015 | TIME PLOTTED => 11:44

Dist	COUNTY	ROUTE	POST MILES TOTAL PROJECT	SHEET No.	TOTAL SHEETS
02	Sha	273	15.0/15.8	27	51

Thomas Penick 04-02-15
REGISTERED CIVIL ENGINEER DATE

04-02-15
PLANS APPROVAL DATE

REGISTERED PROFESSIONAL ENGINEER TOM PENICK No. C61068 Exp. 12-31-16 CIVIL STATE OF CALIFORNIA

THE STATE OF CALIFORNIA OR ITS OFFICERS OR AGENTS SHALL NOT BE RESPONSIBLE FOR THE ACCURACY OR COMPLETENESS OF SCANNED COPIES OF THIS PLAN SHEET.

NOTE:

1. FOR ACCURATE RIGHT OF WAY DATA, CONTACT RIGHT OF WAY ENGINEERING AT THE DISTRICT OFFICE.

REMOVE THERMOPLASTIC PAVEMENT MARKING

LOCATION	DESCRIPTION / MESSAGE	SQFT
GEARY STREET	STOP BAR	28
	STOP	22
SUTTER STREET	STOP BAR	30
	STOP	22
ANGELO Ave	STOP BAR	66
	TOTAL	168

REMOVE THERMOPLASTIC TRAFFIC STRIPE

LOCATION	DESCRIPTION / MESSAGE	LF
GEARY STREET	CENTER LINE	8
SUTTER STREET	CENTER LINE	8
ANGELO Ave	CENTER LINE	13
Sha 273 PM 15.7	Lt YELLOW EDGELINE	270
Sha 273 PM 15.7	CENTER WHITE SKIP LINE	269
Sha 273 PM 15.7	RIGHT WHITE EDGELINE	178
Sha 273 PM 15.7	Rt WHITE EDGELINE Ext	90
	TOTAL	836

THERMOPLASTIC PAVEMENT MARKING

LOCATION	DESCRIPTION / MESSAGE	SQFT
GEARY STREET	CROSSWALK	114
	STOP	22
SUTTER STREET	CROSSWALK	143
	STOP	22
FELL STREET	CROSSWALK	100
	STOP	22
ANGELO Ave	CROSSWALK	141
	TOTAL	564

PAVEMENT DELINEATION QUANTITIES

LOCATION	THERMOPLASTIC TRAFFIC STRIPE (SPRAYABLE)	LF
Sha 273 PM 15.7	DETAIL 9	272
Sha 273 PM 15.7	DETAIL 25A	276
Sha 273 PM 15.7	DETAIL 27B	179
Sha 273 PM 15.7	DETAIL 27C	91
	TOTAL	818

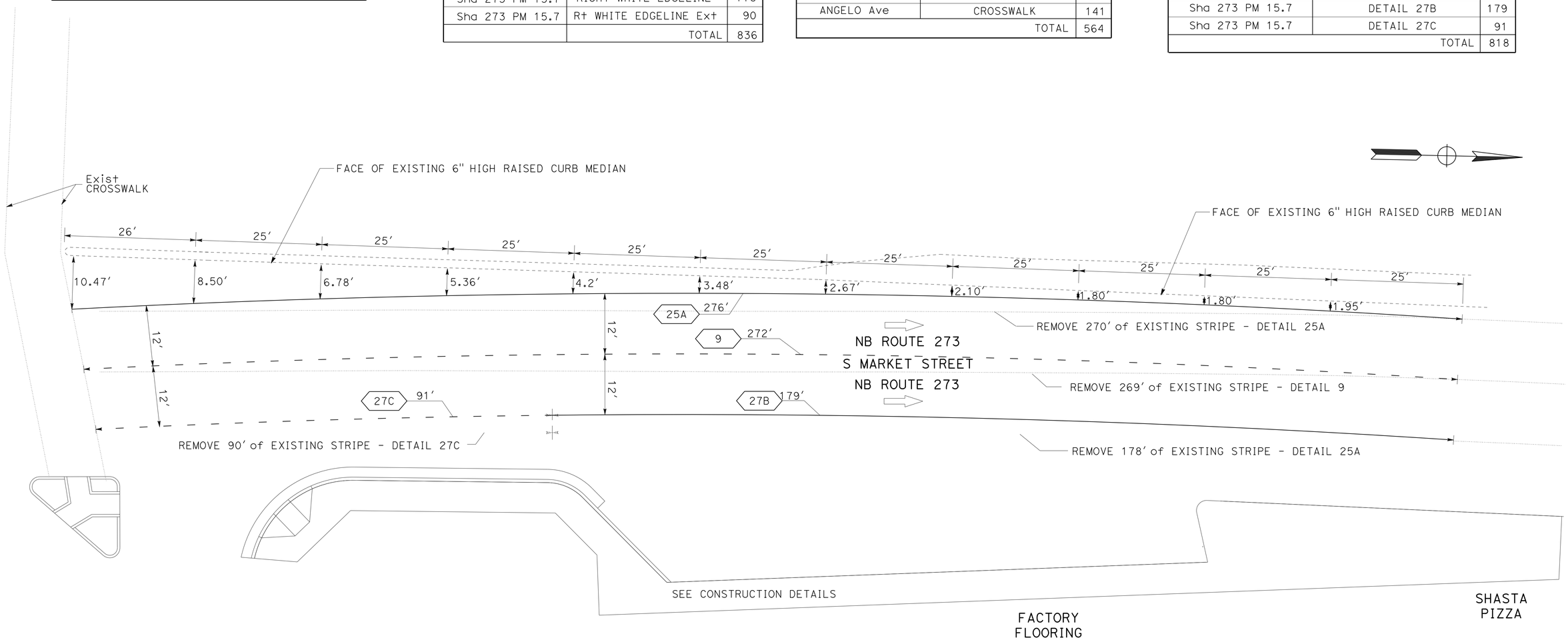

PLAN

APPROVED FOR PAVEMENT DELINEATION WORK ONLY

PAVEMENT DELINEATION PLAN

NO SCALE

PD-2

REVISED BY | DATE REVISED
TOM PENICK | JAVED IQBAL
CALCULATED-DESIGNED BY | CHECKED BY
FUNCTIONAL SUPERVISOR
MICHAEL FEAKES

STATE OF CALIFORNIA - DEPARTMENT OF TRANSPORTATION
Caltrans® DESIGN

P:\proj1\02\3E800_plans\pse\23e800na002.dgn

LAST REVISION 04-02-15 | DATE PLOTTED => 02-APR-2015 | TIME PLOTTED => 11:44

Dist	COUNTY	ROUTE	POST MILES TOTAL PROJECT	SHEET No.	TOTAL SHEETS
02	Sha	273	15.0/15.8	28	51

Thomas Penick 04-02-15
REGISTERED CIVIL ENGINEER DATE

04-02-15
PLANS APPROVAL DATE

REGISTERED PROFESSIONAL ENGINEER TOM PENICK No. C61068 Exp. 12-31-16 CIVIL STATE OF CALIFORNIA

THE STATE OF CALIFORNIA OR ITS OFFICERS OR AGENTS SHALL NOT BE RESPONSIBLE FOR THE ACCURACY OR COMPLETENESS OF SCANNED COPIES OF THIS PLAN SHEET.

GRATED LINE DRAIN

LOCATION No.	GRATED LINE DRAIN
	LF
10	8.4
TOTAL	8.4

ROCK BLANKET

LOCATION No.	ROCK BLANKET
	SQFT
1	359
4	37
TOTAL	396

RESET ROADSIDE SIGN

LOCATION No.	RESET ROADSID SIGN
	EA
3	2
5	1
11	2
TOTAL	5

WATER POLLUTION CONTROL

LOCATION No.	Temp DRAINAGE INLET PROTECTION
	EA
PM 15.0 TO PM 15.8	10
TOTAL	10

ROADWAY, SIDEWALK, CURB & GUTTER QUANTITIES

LOCATION		REMOVE CONCRETE	MINOR CONCRETE (CURB & GUTTER)				MINOR CONCRETE (SIDEWALK)	DETECTABLE WARNING SURFACE	ROADWAY EXCAVATION	HOT MIX ASPHALT (TYPE A)	PLACE HMA (Misc AREA)	CLASS 2 AGGREGATE BASE	COLD PLANE AC PAVEMENT
			TYPE A2-6	TYPE A2-8	Rev CURB	REINFORCED Rev CURB							
No.	STA	SQYD	LF	LF	LF	LF	CY	SQFT	CY	TON	SQYD	CY	SQYD
1	"A2" 1+10.0 TO 2+32.0	80.2	122.0				17.16	17	51	18.07		40.72	
2	"A3" 1+18.72 TO 4+42.7		324		9.9	174.5	23.11	30	126.6	78.60		84.06	
3	"A41" 1+10.0 TO 1+53.3	3.1	43.3				3.79	13	16.3	6.41		9.10	
3	-						0.12		0.30			0.18	
4	"A42" 1+11.0 TO 2+35.0	113.0		124			8.42		37.1	18.37		28.0	
4	"A43" 1+28.7 TO 1+49.4	23.3	20.7		14.1		1.49	18	6.74	3.89		4.80	
5	"A51" 1+17.5 TO 1+61.8	0.50			19.8		3.00		6.0			3.00	
5	"A51" 2+08.5 TO 2+56.4	26.6					2.96		4.4			4.44	
6	"A52" 1+05.3 TO 2+25.0	144.1	119.7				15.55		17.7	17.73		32.73	
7	"A53" 1+10.0 TO 4+77.0	334.4		367			31.23		125.2	69.52		90.29	
8	"A54" 1+07.0 TO 1+14.0						0.10		0.25			0.15	
8	"A54" 1+79.0 TO 3+52.5	158.1	72.6	100.9			19.19		68.0	38.30		48.84	
9	"A6" 1+04.0 TO 3+93.3	268.8	226.3	63.0			24.57	13	106.3	61.79		75.42	
10	"A7" 10+05.5 TO 11+91.0	149.2	185.5			44.6	26.2	14	68.9	39.74		59.48	
10	"A7" 11+91.0 TO 14+56.0	77.4	265.0				29.30		176.2	39.26		68.36	
10	"A7" 14+56.0 TO 16+33.0	5.8	177.0				19.09	18	80.8	35.99	44	45.62	
10	"A8" 1+00.0 TO 1+56.9	18.1			70.0		1.75	36					
11	"A9" 1+10.0 TO 3+75.0	26.2	76.7				29.63	13	83.7	50.00	40	71.46	
9/10	"F1" 1+10.0 TO 1+34.0		1632.8	654.9	113.8	219.1				25.78			59.4
	TOTAL	1428.8	2620.6				256.66	172	975.49	503.45	84	666.65	59.4

NOTE: QUANTITIES FOR MINOR CONCRETE (CURB & GUTTER) ARE MEASURED ALONG TOP BACK OF CURB.

SUMMARY OF QUANTITIES

Q-1

REVISED BY | DATE REVISED
TOM PENICK | JAVED IQBAL
CALCULATED-DESIGNED BY | CHECKED BY
FUNCTIONAL SUPERVISOR
MICHAEL FEAKES

STATE OF CALIFORNIA - DEPARTMENT OF TRANSPORTATION
Caltrans® DESIGN

P:\proj\02\3E800_plans\pse\23e800pa001.dgn

LAST REVISION 04-02-15 | DATE PLOTTED => 02-APR-2015 | TIME PLOTTED => 11:44

Dist	COUNTY	ROUTE	POST MILES TOTAL PROJECT	SHEET No.	TOTAL SHEETS
02	Sha	273	15.0/15.8	29	51

ART 04-02-15
REGISTERED ELECTRICAL ENGINEER DATE

04-02-15
PLANS APPROVAL DATE

REGISTERED PROFESSIONAL ENGINEER A.P. ROBLES No. E15293 Exp. 3-31-17 ELECTRICAL STATE OF CALIFORNIA

THE STATE OF CALIFORNIA OR ITS OFFICERS OR AGENTS SHALL NOT BE RESPONSIBLE FOR THE ACCURACY OR COMPLETENESS OF SCANNED COPIES OF THIS PLAN SHEET.

EQUIPMENT REPLACEMENT SCHEDULE

LOCATION	EQUIPMENT No.	QUADRANT	PHASE	REPLACE Exist PSF WITH COUNTDOWN MODULE	REPLACE Exist PPB WITH APS PPB	NOTES
WYNDHAM	14968	NE	3P	1	1	
	14971	NW	3P	1	1	
ELLIS	15156	NE	2P	1	1	
		SE	2P, 8P	2	2	ON EXISTING TYPE 1-B STANDARD
			8P	1	1	WEST SIDE OF T-INTERSECTION
GRANGE	15405	NW	8P	1	1	
	15406	NE	2P, 8P	2	1	
		NE	2P		1	REPLACE PPB POST WITH TYPE 1-B STANDARD INSTALL 2½"C BETWEEN STANDARD AND PULL BOX
	15404	SE	4P	1		
		SE	2P, 4P		2	REPLACE PPB POST WITH TYPE 1-B STANDARD INSTALL 2½"C BETWEEN STANDARD AND PULL BOX
		SE	2P	1		
	15403	SW	4P	1	1	
ANGELO/CALIFORNIA	15631	SW	6P	1	1	
	15645	NW	6P, 8P	2	2	
	15640	SE	2P	1	1	SEE SHEET E-2
	15660	NE	2P, 8P	2	2	INSTALL APS ON NEW 1-B STANDARD. SEE SHEET E-2

NOTE: Exist PSF MODULES, PPB'S AND POSTS BEING REPLACED BECOME THE PROPERTY OF THE CONTRACTOR

REVISED BY | DATE REVISED
ARTURO P. ROBLES | JIM ELGIN
CALCULATED-DESIGNED BY | CHECKED BY
FUNCTIONAL SUPERVISOR
ROB STINGER

STATE OF CALIFORNIA - DEPARTMENT OF TRANSPORTATION
Caltrans® ELECTRICAL DESIGN

P:\proj\02\3E800_plans\pse\23e800ua001.dgn

MODIFY SIGNAL

E-1

LAST REVISION 04-02-15 | DATE PLOTTED => 02-APR-2015 | TIME PLOTTED => 11:44

Dist	COUNTY	ROUTE	POST MILES TOTAL PROJECT	SHEET No.	TOTAL SHEETS
02	Sha	273	15.0/15.8	30	51

REGISTERED ELECTRICAL ENGINEER 04-02-15 DATE

PLANS APPROVAL DATE 04-02-15

REGISTERED PROFESSIONAL ENGINEER A.P. ROBLES No. E15293 Exp. 3-31-17 ELECTRICAL STATE OF CALIFORNIA

THE STATE OF CALIFORNIA OR ITS OFFICERS OR AGENTS SHALL NOT BE RESPONSIBLE FOR THE ACCURACY OR COMPLETENESS OF SCANNED COPIES OF THIS PLAN SHEET.

NOTE:

1. FOR ACCURATE RIGHT OF WAY DATA, CONTACT RIGHT OF WAY ENGINEERING AT THE DISTRICT OFFICE.

LEGEND (THIS SHEET):

1. Std TO REMAIN. SMA SIGNAL EQUIPMENT NOT SHOWN. REMOVE PPBs AND SEAL HOLES.
2. TYPE 1-B STANDARD, LENGTH AS REQUIRED. INSTALL PHASE 2 AND PHASE 8 APS BUTTONS.
3. INSTALL COUNTDOWN MODULES.
4. REPLACE PB WITH No. 6 PB.
5. ADD 2#8, 1#8 G.
6. LED LUMINAIRE-TYPE 2.
7. ALUMINUM CONDUCTORS. 2#1/0, 1#1/0 G
8. 2½"C, 2#12CSC, 1#8 G.
9. 2½"C, 2#9CSC.

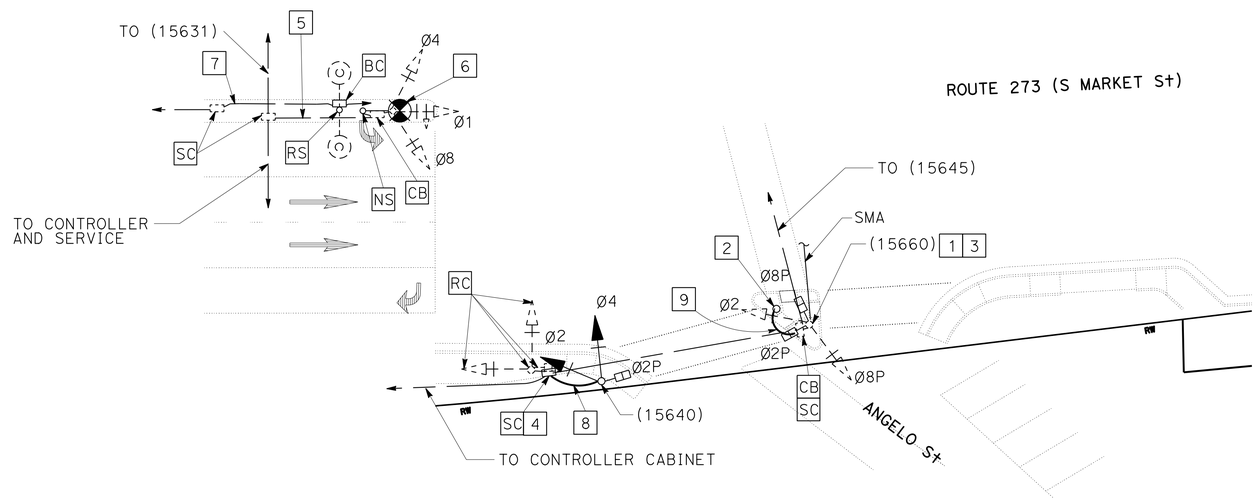

MODIFY SIGNAL

SCALE: 1" = 20'

APPROVED FOR ELECTRICAL WORK ONLY

E-2

STATE OF CALIFORNIA - DEPARTMENT OF TRANSPORTATION

Caltrans® ELECTRICAL DESIGN

FUNCTIONAL SUPERVISOR: ROB STINGER

CALCULATED-DESIGNED BY: ARTURO P. ROBLES

CHECKED BY: JIM ELGIN

REVISED BY / DATE REVISED

P:\proj1\02\3E800_plans\pse\23e800ua002.dgn

LAST REVISION 04-02-15 | DATE PLOTTED => 02-APR-2015 | TIME PLOTTED => 11:44

Dist	COUNTY	ROUTE	POST MILES TOTAL PROJECT	SHEET No.	TOTAL SHEETS
02	Sha	273	15.0/15.8	31	51

ART 04-02-15
REGISTERED ELECTRICAL ENGINEER DATE

04-02-15
PLANS APPROVAL DATE

REGISTERED PROFESSIONAL ENGINEER A.P. ROBLES No. E15293 Exp. 3-31-17 ELECTRICAL STATE OF CALIFORNIA

THE STATE OF CALIFORNIA OR ITS OFFICERS OR AGENTS SHALL NOT BE RESPONSIBLE FOR THE ACCURACY OR COMPLETENESS OF SCANNED COPIES OF THIS PLAN SHEET.

MODIFY SIGNAL

SHEET No.	COUNTDOWN MODULE	APS	TYPE 31 ELECTROLIER	9 CONDUCTOR APS CABLE	12CSC	2½"C	TYPE 1-B STANDARD	LED LUMINAIRE-ROADWAY 2	No. 5 PULL BOX	No. 6 PULL BOX
E-1	18	18				20	2			
E-2			1	80	30	15	1	1	1	1

NOTE: ITEMS ON THIS TABLE ARE NOT SEPARATE PAY ITEMS.
FOR INFORMATION ONLY.

LOOPS TO REMAIN IN PLACE AND OPERATIONAL

ID No.	LOCATION	DESCRIPTION	TYPE	LOOPS
300	Sha-273-15.97	CABINET SB 58' S OF LINCOLN St. NB AT PINE	TREND	6

NOTE: ITEMS ON THIS TABLE ARE NOT SEPARATE PAY ITEMS.
FOR INFORMATION ONLY.

ELECTRICAL QUANTITIES

E-3

REVISED BY | DATE REVISED
ARTURO P. ROBLES | JIM ELGIN
CALCULATED-DESIGNED BY | CHECKED BY
FUNCTIONAL SUPERVISOR: ROB STINGER

STATE OF CALIFORNIA - DEPARTMENT OF TRANSPORTATION
Caltrans® ELECTRICAL DESIGN

P:\proj1\02\3E800_plans\pse\23e800ua003.dgn

LAST REVISION 04-02-15 | DATE PLOTTED => 02-APR-2015 | TIME PLOTTED => 11:44

Dist	COUNTY	ROUTE	POST MITTS TOTAL PROJECT	SHEET No.	TOTAL SHEETS
02	Sha	273	15.0/15.8	32	51

Grace M. Tsushima
REGISTERED CIVIL ENGINEER

July 19, 2013
PLANS APPROVAL DATE

REGISTERED PROFESSIONAL ENGINEER Grace M. Tsushima No. C49814 Exp. 9-30-14 CIVIL STATE OF CALIFORNIA

THE STATE OF CALIFORNIA OR ITS OFFICERS OR AGENTS SHALL NOT BE RESPONSIBLE FOR THE ACCURACY OR COMPLETENESS OF SCANNED COPIES OF THIS PLAN SHEET.

TO ACCOMPANY PLANS DATED 04-02-15

M

Maint	MAINTENANCE
Max	MAXIMUM
MB	METAL BEAM
MBB	METAL BEAM BARRIER
MBGR	METAL BEAM GUARD RAILING
Med	MEDIAN
MGS	MIDWEST GUARDRAIL SYSTEM
MH	MANHOLE
Min	MINIMUM
Misc	MISCELLANEOUS
Misc I & S	MISCELLANEOUS IRON AND STEEL
Mkr	MARKER
Mod	MODIFIED, MODIFY
Mon	MONUMENT
MP	METAL PLATE
MPGR	METAL PLATE GUARD RAILING
MR	MOVEMENT RATING
MSE	MECHANICALLY STABILIZED EMBANKMENT
Mt	MOUNTAIN, MOUNT
Mtl	MATERIAL
MVP	MAINTENANCE VEHICLE PULLOUT

N

N	NORTH
NB	NORTHBOUND
No.	NUMBER (MUST HAVE PERIOD)
Nos.	NUMBERS (MUST HAVE PERIOD)
NPS	NOMINAL PIPE SIZE
NS	NEAR SIDE
NSP	NEW STANDARD PLAN
NTS	NOT TO SCALE

O

Oblr	OBLITERATE
OC	OVERCROSSING
OD	OUTSIDE DIAMETER
OF	OUTSIDE FACE
OG	ORIGINAL GROUND
OGAC	OPEN GRADED ASPHALT CONCRETE
OGFC	OPEN GRADED FRICTION COURSE
OH	OVERHEAD
OHWM	ORDINARY HIGH WATER MARK
O-O	OUT TO OUT
Opp	OPPOSITE
OSD	OVERSIDE DRAIN

P

p	PAGE
PAP	PERFORATED ALUMINUM PIPE
PB	PULL BOX
PC	POINT OF CURVATURE, PRECAST
PCC	POINT OF COMPOUND CURVE, PORTLAND CEMENT CONCRETE
PCMS	PORTABLE CHANGEABLE MESSAGE SIGN
PCP	PERFORATED CONCRETE PIPE, PRESTRESSED CONCRETE PIPE
PCVC	POINT OF COMPOUND VERTICAL CURVE
PEC	PERMIT TO ENTER AND CONSTRUCT
Ped	PEDESTRIAN
Ped OC	PEDESTRIAN OVERCROSSING
Ped UC	PEDESTRIAN UNDERCROSSING
Perm Mtl	PERMEABLE MATERIAL

P continued

PG	PROFILE GRADE
PI	POINT OF INTERSECTION
PJP	PARTIAL JOINT PENETRATION
Pkwy	PARKWAY
ℙ,PL	PLATE
P/L	PROPERTY LINE
PM	POST MILE, TIME FROM NOON TO MIDNIGHT
PN	PAVING NOTCH
POC	POINT OF HORIZONTAL CURVE
POT	POINT OF TANGENT
POVC	POINT OF VERTICAL CURVE
PP	PIPE PILE, PLASTIC PIPE, POWER POLE
PPL	PREFORMED PERMEABLE LINER
PPP	PERFORATED PLASTIC PIPE
PRC	POINT OF REVERSE CURVE
PRF	PAVEMENT REINFORCING FABRIC
PRVC	POINT OF REVERSE VERTICAL CURVE
PS&E	PLANS, SPECIFICATIONS AND ESTIMATES
PS, P/S	PRESTRESSED
PSP	PERFORATED STEEL PIPE
PT	POINT OF TANGENCY
PVC	POLYVINYL CHLORIDE
Pvmt	PAVEMENT

Q

Qty	QUANTITY

R

R	RADIUS
R & D	REMOVE AND DISPOSE
R & S	REMOVE AND SALVAGE
R/C	RATE OF CHANGE
RCA	REINFORCED CONCRETE ARCH
RCB	REINFORCED CONCRETE BOX
RCP	REINFORCED CONCRETE PIPE
RCPA	REINFORCED CONCRETE PIPE ARCH
Rd	ROAD
Reinf	REINFORCED, REINFORCEMENT, REINFORCING
Rel	RELOCATE
Repl	REPLACEMENT
Ret	RETAINING
Rev	REVISED, REVISION
Rdwy	ROADWAY
RHMA	RUBBERIZED HOT MIX ASPHALT
Riv	RIVER
RM	ROAD-MIXED
RP	RADIUS POINT, REFERENCE POINT
RR	RAILROAD
RSP	ROCK SLOPE PROTECTION, REVISED STANDARD PLAN
Rt	RIGHT
Rte	ROUTE
RW	REDWOOD, RETAINING WALL
R/W	RIGHT OF WAY
Rwy	RAILWAY

S

S	SOUTH, SUPPLEMENT
SAE	STRUCTURE APPROACH EMBANKMENT
Salv	SALVAGE
SAPP	STRUCTURAL ALUMINUM PLATE PIPE
SB	SOUTHBOUND
SC	SAND CUSHION
SCSP	SLOTTED CORRUGATED STEEL PIPE
SD	STORM DRAIN
Sec	SECOND, SECTION
Sep	SEPARATION
SG	SUBGRADE
Shld	SHOULDER
Sht	SHEET
Sim	SIMILAR
℄	STATION LINE
SM	SELECTED MATERIAL
Spec	SPECIAL, SPECIFICATIONS
SPP	SLOTTED PLASTIC PIPE
SS	SLOPE STAKE
SSBM	STRAP AND SADDLE BRACKET METHOD
SSD	STRUCTURAL SECTION DRAIN
SSPA	STRUCTURAL STEEL PLATE ARCH
SSPP	STRUCTURAL STEEL PLATE PIPE
SSPPA	STRUCTURAL STEEL PLATE PIPE ARCH
SSRP	STEEL SPIRAL RIB PIPE
St	STREET
Sta	STATION
STBB	SINGLE THRIE BEAM BARRIER
Std	STANDARD
Str	STRUCTURE
Surf	SURFACING
SW	SIDEWALK, SOUND WALL
Swr	SEWER
Sym	SYMMETRICAL
S4S	SURFACE 4 SIDES

T

T	SEMI-TANGENT
Tan	TANGENT
TBB	THRIE BEAM BARRIER
Tbr	TIMBER
TC	TOP OF CURB
TCB	TRAFFIC CONTROL BOX
TCE	TEMPORARY CONSTRUCTION EASEMENT
Tel	TELEPHONE
Temp	TEMPORARY
TG	TOP OF GRADE
Tot	TOTAL
TP	TELEPHONE POLE
TPB	TREATED PERMEABLE BASE
TPM	TREATED PERMEABLE MATERIAL
Trans	TRANSITION

T continued

TS	TRANSVERSE, TRAFFIC SIGNAL, TUBULAR STEEL
Typ	TYPICAL

U

UC	UNDERCROSSING
UD	UNDERDRAIN
UG	UNDERGROUND
UON	UNLESS OTHERWISE NOTED
UP	UNDERPASS

V

V	VALVE, DESIGN SPEED
Var	VARIABLE, VARIES
VC	VERTICAL CURVE
VCP	VITRIFIED CLAY PIPE
Vert	VERTICAL
Via	VIADUCT
Vol	VOLUME

W

W	WEST, WIDTH
WB	WESTBOUND
WH	WEEP HOLE
WM	WIRE MESH
WS	WATER SURFACE
WSP	WELDED STEEL PIPE
Wt	WEIGHT
WV	WATER VALVE
WW	WINGWALL
WWLOL	WINGWALL LAYOUT LINE

X

X Sec	CROSS SECTION
Xing	CROSSING

Y

Yr	YEAR
Yrs	YEARS

UNIT OF MEASUREMENT SYMBOLS:

Some of the symbols used in the project plan quantity tables and in the Bid Item List are:

TABLE A

SYMBOL USED	DEFINITIONS
ACRE	ACRE
CF	CUBIC FOOT
CY	CUBIC YARD
EA	EACH
GAL	GALLON
LB	POUND
LF	LINEAR FOOT
SQFT	SQUARE FOOT
SQYD	SQUARE YARD
STA	100 FEET
TAB	TABLET
TON	2,000 POUNDS

Some of the symbols used in the plans other than in the project plan quantity tables are:

TABLE B

SYMBOL USED	DEFINITIONS
ksi	KIPS PER SQUARE INCH
ksf	KIPS PER SQUARE FOOT
psi	POUNDS PER SQUARE INCH
psf	POUNDS PER SQUARE FOOT
lb/ft^3, pcf	POUNDS PER CUBIC FOOT
tsf	TONS PER SQUARE FOOT
mph, MPH *	MILES PER HOUR
ø	NOMINAL DIAMETER
oz	OUNCE
lb	POUND
kip	1,000 POUNDS
cal	CALORIE
ft	FOOT OR FEET
gal	GALLON

* For use on a sign panel only

STATE OF CALIFORNIA
DEPARTMENT OF TRANSPORTATION

ABBREVIATIONS (SHEET 2 OF 2)

NO SCALE

RSP A10B DATED JULY 19, 2013 SUPERSEDES STANDARD PLAN A10B DATED MAY 20, 2011 - PAGE 2 OF THE STANDARD PLANS BOOK DATED 2010.

REVISED STANDARD PLAN RSP A10B

2010 REVISED STANDARD PLAN RSP A10B

DATE PLOTTED => 02-APR-2015
TIME PLOTTED => 11:44

Dist	COUNTY	ROUTE	POST MITTS TOTAL PROJECT	SHEET No.	TOTAL SHEETS
02	Sha	273	15.0/15.8	33	51

REGISTERED CIVIL ENGINEER

July 20, 2012
PLANS APPROVAL DATE

REGISTERED PROFESSIONAL ENGINEER Roberta L. McLaughlin No. C40375 Exp. 3-31-13 CIVIL STATE OF CALIFORNIA

THE STATE OF CALIFORNIA OR ITS OFFICIALS OR AGENTS SHALL NOT BE RESPONSIBLE FOR THE ACCURACY OR COMPLETENESS OF SCANNED COPIES OF THIS PLAN SHEET.

TO ACCOMPANY PLANS DATED 04-02-15

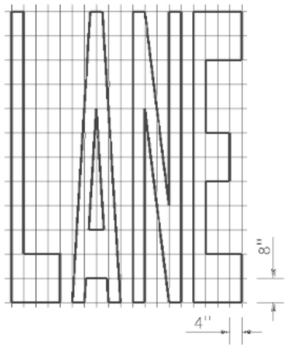

A=24 ft^2

A=27 ft^2

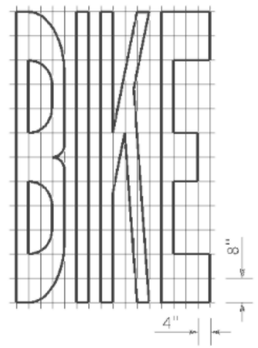

A=21 ft^2

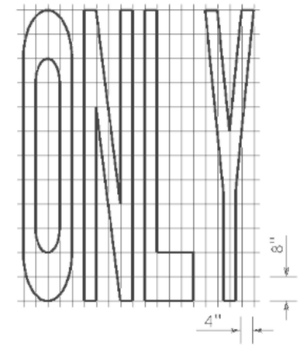

A=22 ft^2

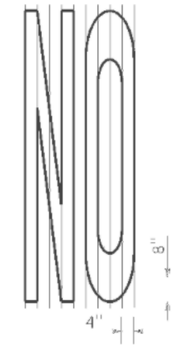

A=14 ft^2

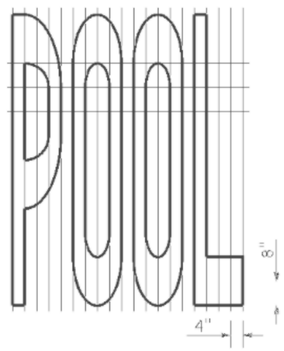

A=23 ft^2

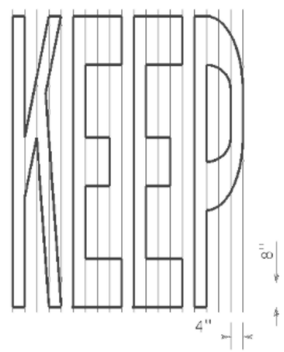

A=24 ft^2

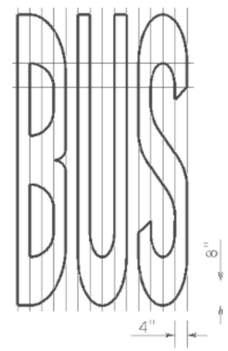

A=20 ft^2

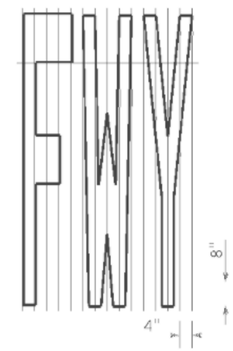

A=16 ft^2

A=17 ft^2

WORD MARKINGS			
ITEM	ft^2	ITEM	ft^2
LANE	24	NO	14
POOL	23	BIKE	21
CAR	17	BUS	20
CLEAR	27	ONLY	22
KEEP	24	FWY	16

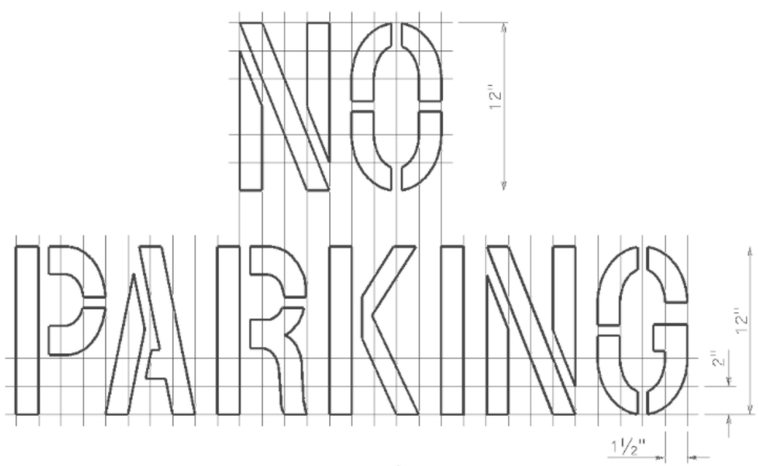

A=2 ft^2

See Notes 6 and 7

LIMIT LINE (STOP LINE)

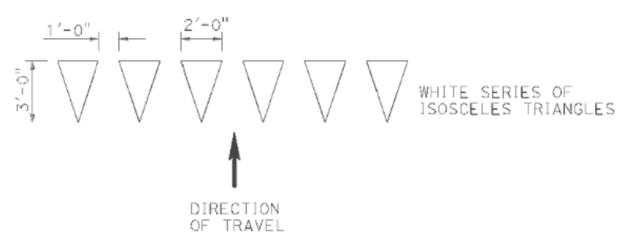

YIELD LINE

NOTES:

1. If a message consists of more than one word, it should read "UP", i.e., the first word should be nearest the driver.
2. The space between words should be at least four times the height of the characters for low speed roads, but not more than ten times the height of the characters. The space may be reduced appropriately where there is limited space because of local conditions.
3. Minor variations in dimensions may be accepted by the Engineer.
4. Portions of a letter, number or symbol may be separated by connecting segments not to exceed 2" in width.
5. The words "NO PARKING" pavement marking is to be used for parking facilities. For typical locations of markings, see Standard Plans A90A and A90B.
6. The words "NO PARKING", shall be painted in white letters no less than 1'-0" high on a contrasting background and located so that it is visible to traffic enforcement officials.

STATE OF CALIFORNIA
DEPARTMENT OF TRANSPORTATION

PAVEMENT MARKINGS WORDS, LIMIT AND YIELD LINES

NO SCALE

RSP A24E DATED JULY 20, 2012 SUPERSEDES STANDARD PLAN A24E DATED MAY 20, 2011 - PAGE 17 OF THE STANDARD PLANS BOOK DATED 2010.

REVISED STANDARD PLAN RSP A24E

2010 REVISED STANDARD PLAN RSP A24E

DATE PLOTTED => 02-APR-2015
TIME PLOTTED => 11:44

Dist	COUNTY	ROUTE	POST MITTS TOTAL PROJECT	SHEET No.	TOTAL SHEETS
02	Sha	273	15.0/15.8	34	51

REGISTERED CIVIL ENGINEER

July 20, 2012
PLANS APPROVAL DATE

REGISTERED PROFESSIONAL ENGINEER
Roberta L. McLaughlin
No. C40375
Exp. 3-31-13
CIVIL
STATE OF CALIFORNIA

THE STATE OF CALIFORNIA OR ITS OFFICIALS OR AGENTS SHALL NOT BE RESPONSIBLE FOR THE ACCURACY OR COMPLETENESS OF SCANNED COPIES OF THIS PLAN SHEET.

TO ACCOMPANY PLANS DATED 04-02-15

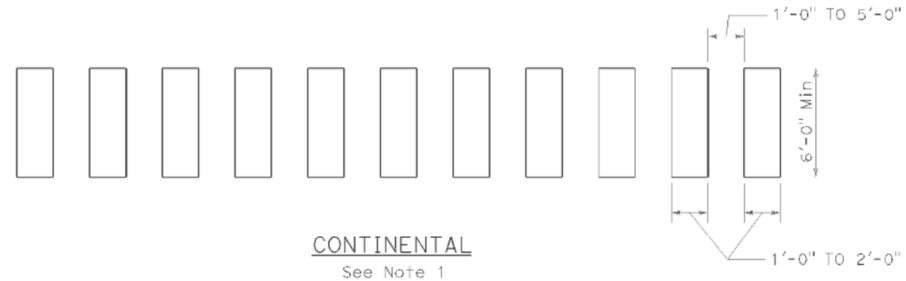

CONTINENTAL
See Note 1

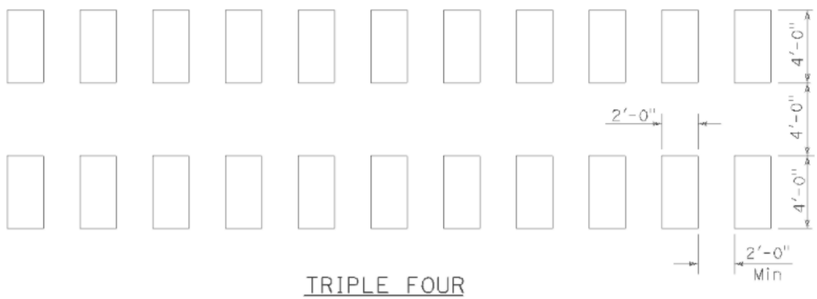

TRIPLE FOUR
See Note 1

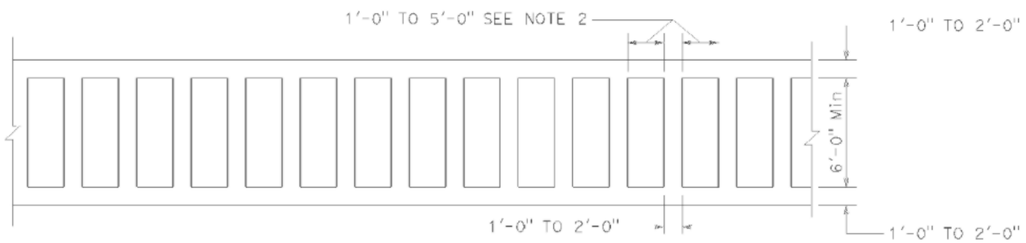

LADDER

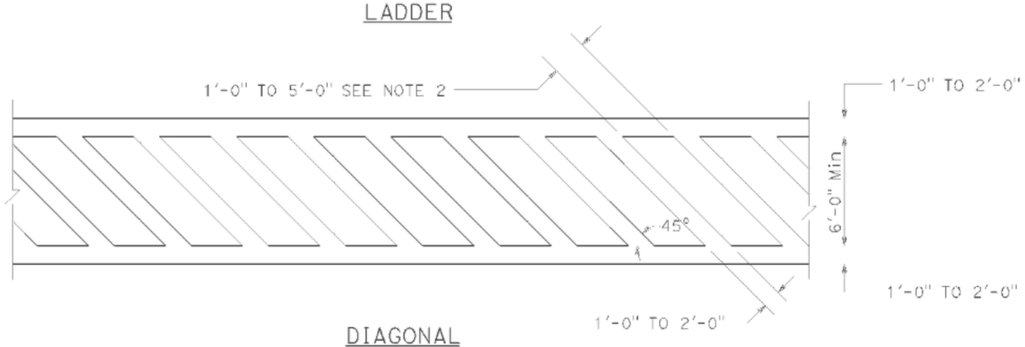

DIAGONAL

HIGHER VISIBILITY CROSSWALKS

NOTES:

1. Spaces between markings should be placed in wheel tracks of each lane.
2. Spacings not to exceed 2.5 times width of longitudinal line.
3. All crosswalk markings must be white except for those near schools must be yellow.

BASIC

STATE OF CALIFORNIA
DEPARTMENT OF TRANSPORTATION

PAVEMENT MARKINGS CROSSWALKS

NO SCALE

RSP A24F DATED JULY 20, 2012 SUPPLEMENTS THE STANDARD PLANS BOOK DATED 2010.

REVISED STANDARD PLAN RSP A24F

2010 REVISED STANDARD PLAN RSP A24F

DATE PLOTTED => 02-APR-2015
TIME PLOTTED => 11:44

DIST	COUNTY	ROUTE	POST MILLS TOTAL PROJECT	SHEET No.	TOTAL SHEETS
02	Sha	273	15.0/15.8	35	51

REGISTERED CIVIL ENGINEER

July 19, 2013
PLANS APPROVAL DATE

REGISTERED PROFESSIONAL ENGINEER — Michael Janzen No. 44788 Exp. 03-31-14 CIVIL — STATE OF CALIFORNIA

THE STATE OF CALIFORNIA OR ITS OFFICERS OR AGENTS SHALL NOT BE RESPONSIBLE FOR THE ACCURACY OR COMPLETENESS OF SCANNED COPIES OF THIS PLAN SHEET.

TO ACCOMPANY PLANS DATED 04-02-15

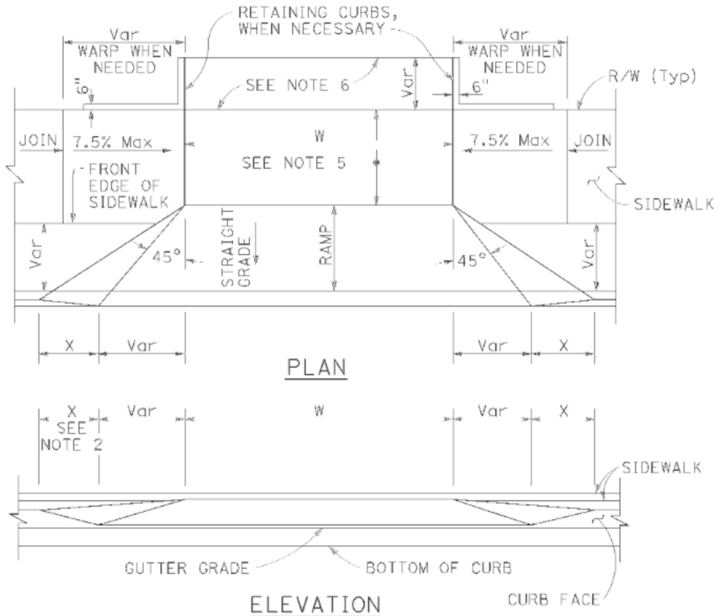

PLAN

ELEVATION

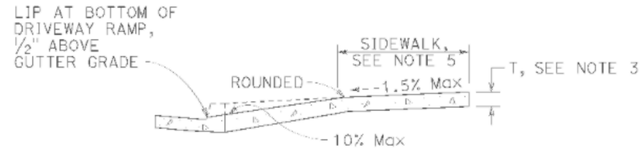

CASE A

Typical driveway, sidewalk not depressed

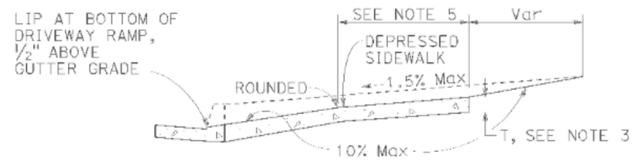

CASE B

Driveway with depressed sidewalk

SECTIONS

DRIVEWAYS

TABLE A

CURB TYPE	DIMENSIONS			
	"H1"	"H2"	"W1"	"W2"
A1-6	1'-2"	6"	7½"	1½"
A1-8	1'-4"	8"	8"	2"
A2-6	1'-0"	6"	2'-7½"	1½"
A2-8	1'-2"	8"	2'-8"	2"
A3-6	6"	5"	7¼"	1¼"
A3-8	8"	7"	7¾"	1¾"
B1-4	1'-0"	4"	7½"	2½"
B1-6	1'-2"	6"	9"	4"
B2-4	10"	4"	2'-7½"	2½"
B2-6	1'-0"	6"	2'-9"	4"
B3-4	4"	3"	7"	2"
B3-6	6"	5"	8½"	3½"
D-4	10"	4"	1'-6"	1'-1"
D-6	1'-0"	6"	2'-2"	1'-9"

CURB QUANTITIES

TYPE	CUBIC YARDS PER LINEAR FOOT
A1-6	0.02585
A1-8	0.03084
A2-6	0.05903
A2-8	0.06379
A3-6	0.01036
A3-8	0.01435
B1-4	0.02185
B1-6	0.02930
B2-4	0.05515
B2-6	0.06171
B3-4	0.00641
B3-6	0.01074
B4	0.05709
D-4	0.04083
D-6	0.06804
E	0.06661

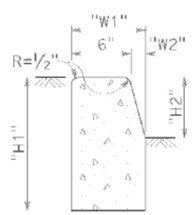

TYPE A1 CURBS

See Table A

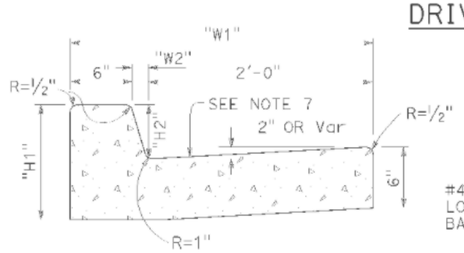

TYPE A2 CURBS

See Table A

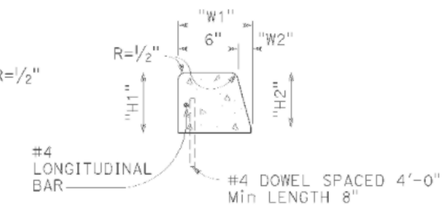

TYPE A3 CURBS

Superimposed on existing pavement
See Table A

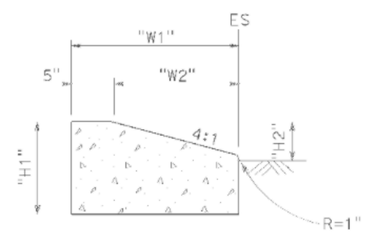

TYPE D CURBS

See Table A

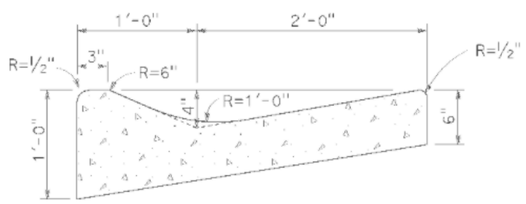

TYPE E CURB

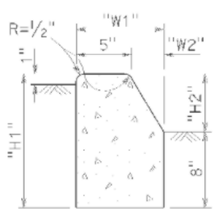

TYPE B1 CURBS

See Table A

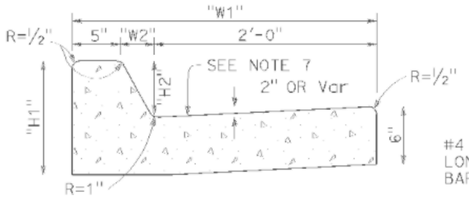

TYPE B2 CURBS

See Table A

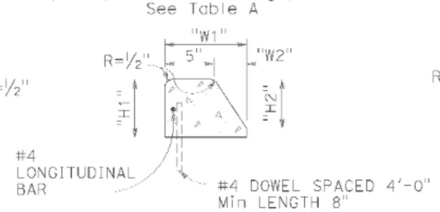

TYPE B3 CURBS

Superimposed on existing pavement
See Table A

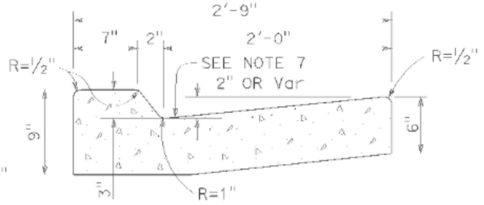

TYPE B4 CURBS

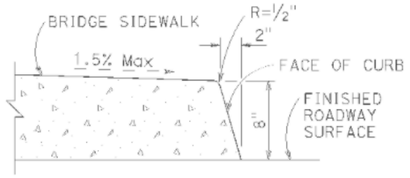

TYPE H CURB

On Bridges

CURBS

NOTES:

1. Case A driveway section typically applies.
2. X=3'-0" except for curb heights over 10" where 4:1 slopes shall be used on curb slope.
3. Sidewalk and ramp thickness "T" at driveway shall be 4" for residental and 6" for commercial.
4. Difference in slope of the driveway ramp and the slope of a line between the gutter and a point on the roadway 5'-0" from gutter line shall not exceed 15%. Reduce driveway ramp slope, not gutter slope, where required.
5. Minimum width of clear passageway for sidewalk shall be 4'-2".
6. Retaining curbs and acquisition of construction easement may be necessary for narrow sidewalks or curb heights in excess of 6".
7. Across the pedestrian route at curb ramp locations, the gutter pan slope shall not exceed 1" of depth for each 2'-0" of width.

STATE OF CALIFORNIA
DEPARTMENT OF TRANSPORTATION

CURBS AND DRIVEWAYS

NO SCALE

RSP A87A DATED JULY 19, 2013 SUPERSEDES STANDARD PLAN A87A
DATED MAY 20, 2011 - PAGE 119 OF THE STANDARD PLANS BOOK DATED 2010.

REVISED STANDARD PLAN RSP A87A

2010 REVISED STANDARD PLAN RSP A87A

DATE PLOTTED => 02-APR-2015
TIME PLOTTED => 11:44

DIST	COUNTY	ROUTE	POST MILES TOTAL PROJECT	SHEET No.	TOTAL SHEETS
02	Sha	273	15.0/15.8	36	51

REGISTERED CIVIL ENGINEER

March 21, 2014
PLANS APPROVAL DATE

Hector David Cordova No. C41957 Exp. 3-31-14 CIVIL — REGISTERED PROFESSIONAL ENGINEER — STATE OF CALIFORNIA

THE STATE OF CALIFORNIA OR ITS OFFICERS OR AGENTS SHALL NOT BE RESPONSIBLE FOR THE ACCURACY OR COMPLETENESS OF SCANNED COPIES OF THIS PLAN SHEET.

TO ACCOMPANY PLANS DATED 04-02-15

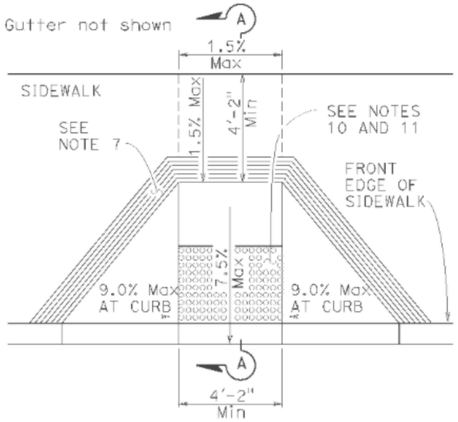

CASE A

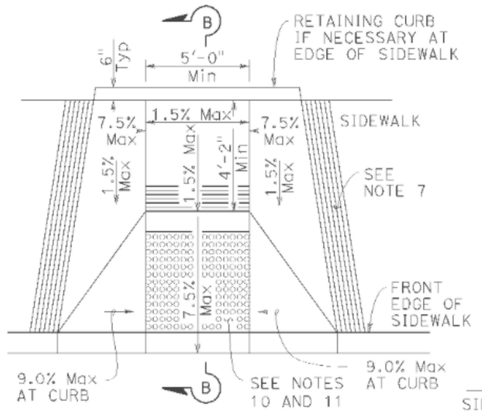

CASE B

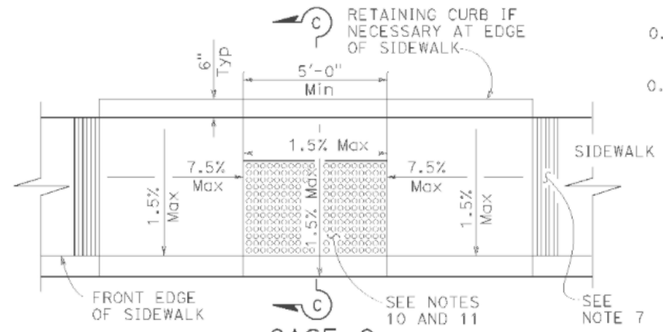

CASE C

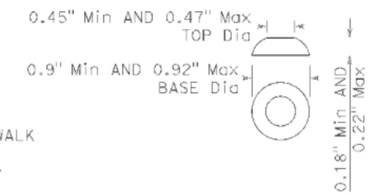

RAISED TRUNCATED DOME

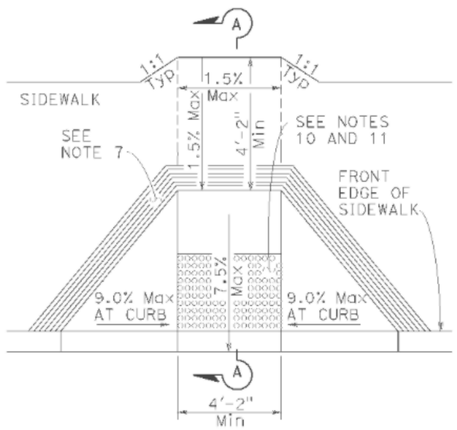

CASE D

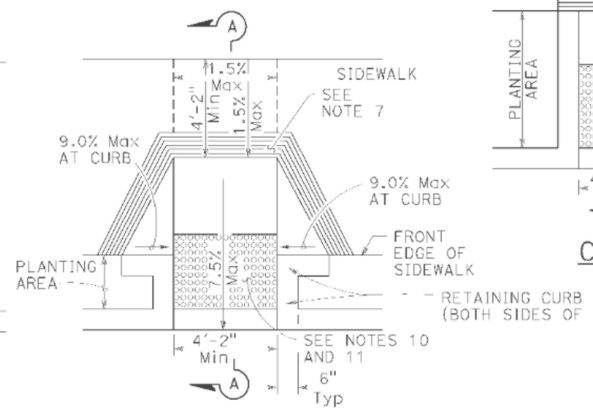

CASE E

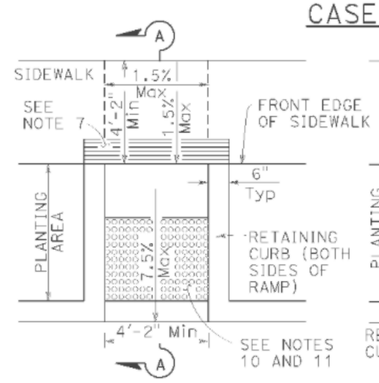

CASE F

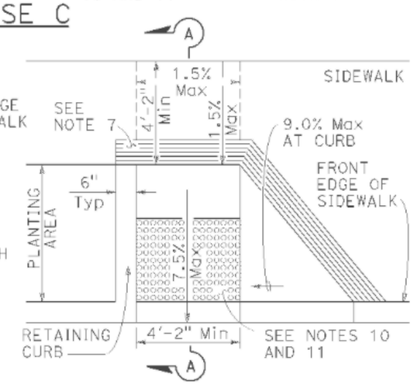

CASE G

See Note 4

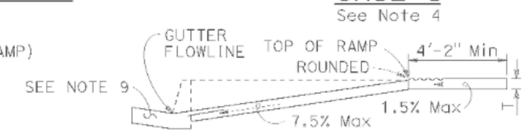

SECTION A-A

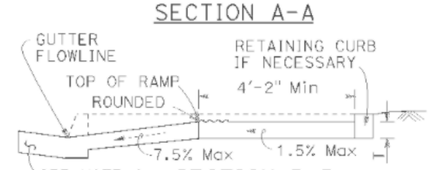

SECTION B-B

Depress entire sidewalk as required

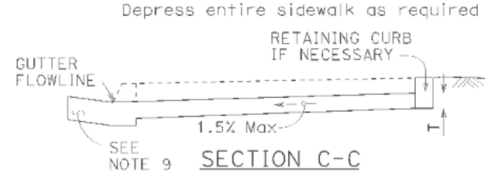

SECTION C-C

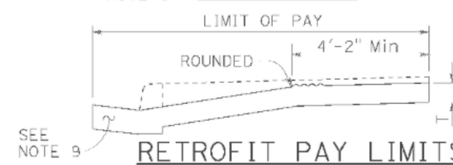

RETROFIT PAY LIMITS

Existing curb and sidewalk

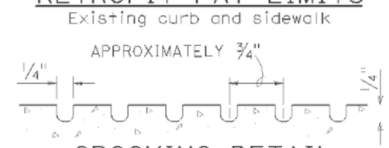

GROOVING DETAIL

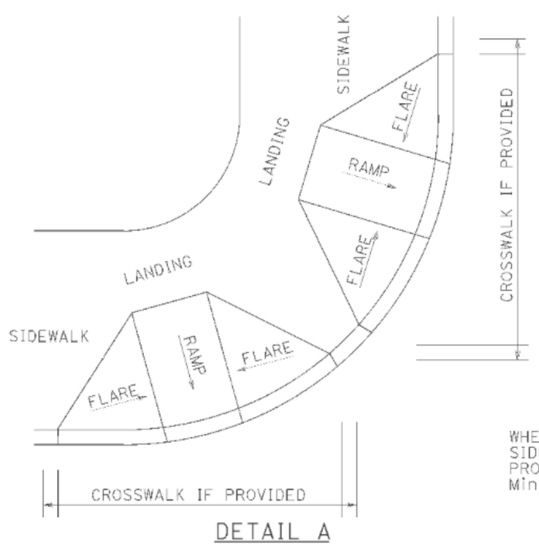

DETAIL A

TYPICAL TWO-RAMP CORNER INSTALLATION

See Note 1

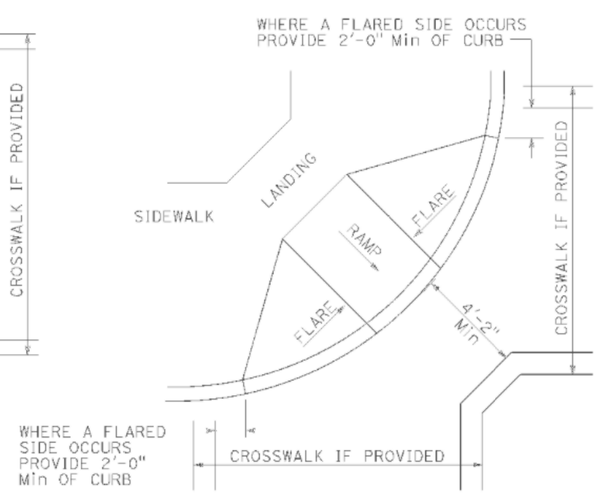

DETAIL B

TYPICAL ONE-RAMP CORNER INSTALLATION

See Notes 1 and 3

NOTES:

1. As site conditions dictate, Case A through Case G curb ramps may be used for corner installations similar to those shown in Detail A and Detail B. The case of curb ramps used in Detail A do not have to be the same. Case A through Case G curb ramps also may be used at mid block locations, as site conditions dictate.
2. If distance from curb to back of sidewalk is too short to accommodate ramp and 4'-2" platform (landing) as shown in Case A, the sidewalk may be depressed longitudinally as in Case B, or C or may be widened as in Case D.
3. When ramp is located in center of curb return, crosswalk configuration must be similar to that shown for Detail B.
4. As site conditions dictate, the retaining curb side and the flared side of the Case G ramp shall be constructed in reversed position.
5. If located on a curve, the sides of the ramp need not be parallel, but the minimum width of the ramp shall be 4'-2".
6. Side slope of ramp flares vary uniformly from a maximum of 9.0% at curb to conform with longitudinal sidewalk slope adjacent to top of the ramp, except in Case C and Case F.
7. The curb ramp shall be outlined, as shown, with a 1'-0" wide border with 1/4" grooves approximately 3/4" on center. See grooving detail.
8. Transitions from ramps and landing to walks, gutters or streets shall be flush (no lip) and free of abrupt changes.
9. Counter slopes of adjoining gutters and road surfaces immediately adjacent to and within 24 inches of the curb ramp shall not be steeper than 1:20 (5.0%). Gutter pan slope shall not exceed 1" of depth for each 2'-0" of width.
10. Curb ramps shall have a detectable warning surface that extends the full width and 3'-0" depth of the ramp. A 4'-0" wide detectable warning surface may be used on a 4'-2" wide curb ramp. Detectable Warning Surfaces shall conform to the requirements in the Standard Specifications.
11. The edge of the detectable warning surface nearest the street shall be between 6" and 8" from the gutter flowline.
12. Sidewalk and ramp thickness, "T", shall be 3½" minimum.
13. Utility pull boxes, manholes, vaults and all other utility facilities within the boundaries of the curb ramp will be relocated or adjusted to grade by the owner prior to, or in conjunction with, curb ramp construction.
14. Detectable warning surface may have to be cut to allow removal of utility covers while maintaining full detectable warning width and depth.

RAISED TRUNCATED DOME PATTERN (IN-LINE)

DETECTABLE WARNING SURFACE

See Note 10

STATE OF CALIFORNIA
DEPARTMENT OF TRANSPORTATION

CURB RAMP DETAILS

NO SCALE

RSP A88A DATED MARCH 21, 2014 SUPERSEDES RSP A88A DATED JULY 19, 2013 AND STANDARD PLAN A88A DATED MAY 20, 2011 - PAGE 121 OF THE STANDARD PLANS BOOK DATED 2010.

REVISED STANDARD PLAN RSP A88A

2010 REVISED STANDARD PLAN RSP A88A

DATE PLOTTED => 02-APR-2015
TIME PLOTTED => 11:44

DIST	COUNTY	ROUTE	POST MILES TOTAL PROJECT	SHEET No.	TOTAL SHEETS
02	Sha	273	15.0/15.8	37	51

REGISTERED CIVIL ENGINEER

March 21, 2014
PLANS APPROVAL DATE

Hector David Cordova No. C41957 Exp. 3-31-14 CIVIL — REGISTERED PROFESSIONAL ENGINEER — STATE OF CALIFORNIA

THE STATE OF CALIFORNIA OR ITS OFFICERS OR AGENTS SHALL NOT BE RESPONSIBLE FOR THE ACCURACY OR COMPLETENESS OF SCANNED COPIES OF THIS PLAN SHEET.

TO ACCOMPANY PLANS DATED 04-02-15

Gutter not shown

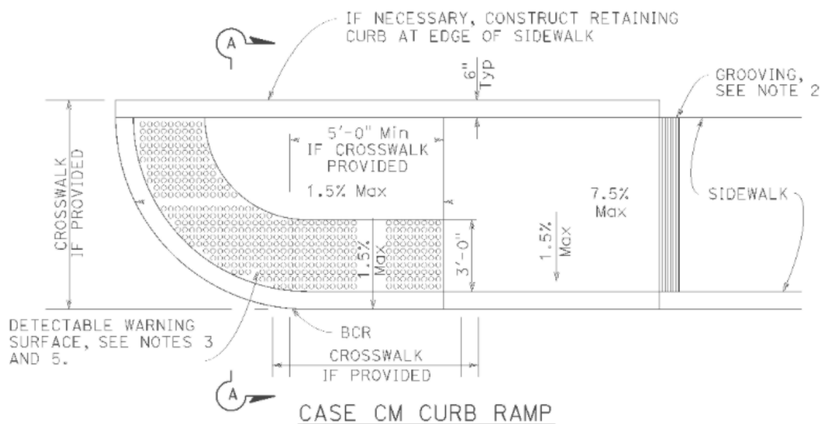

CASE CM CURB RAMP

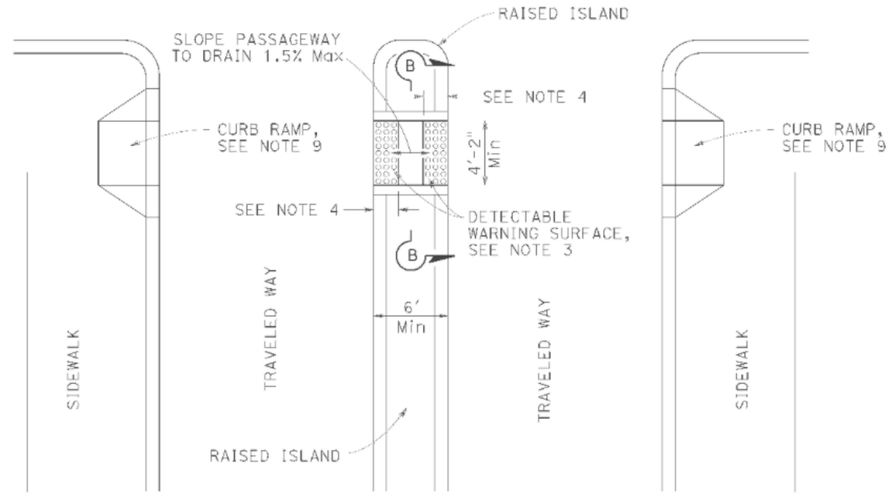

TYPE A PASSAGEWAY

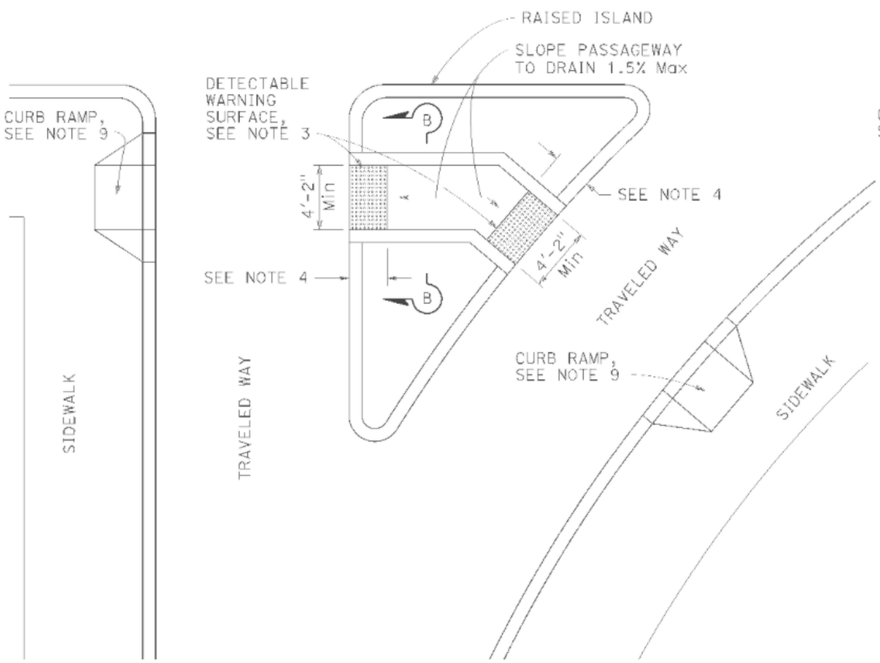

TYPE B PASSAGEWAY

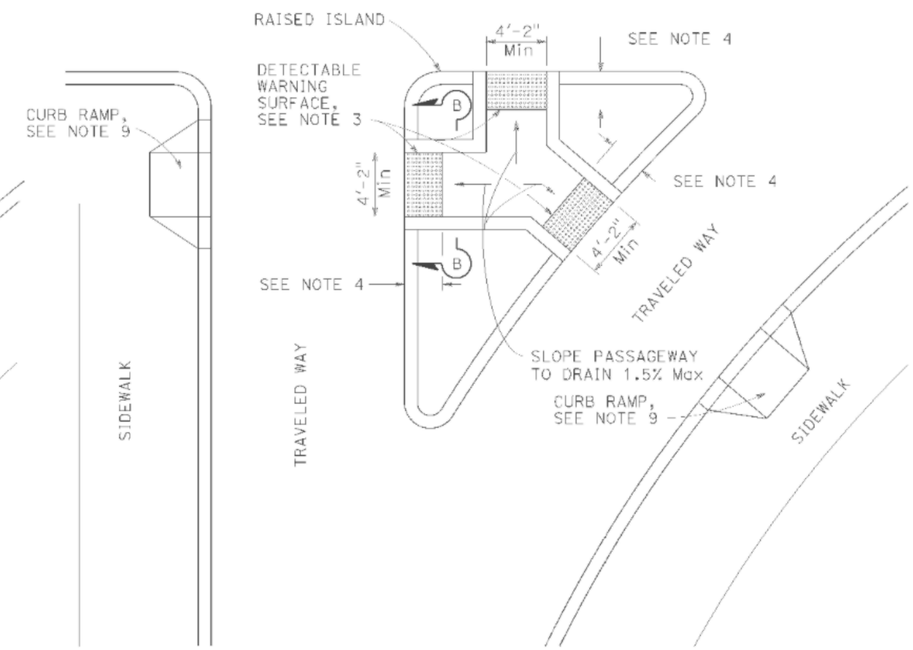

TYPE C PASSAGEWAY

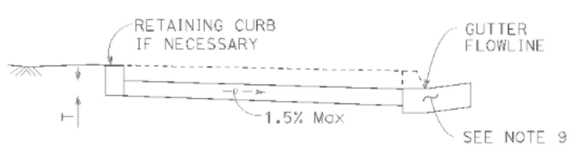

SECTION A-A

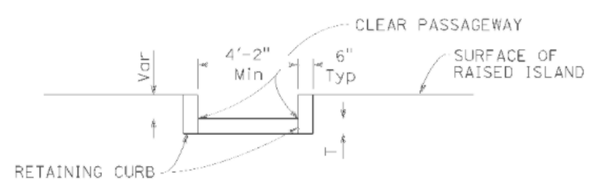

SECTION B-B

NOTES:

1. Sidewalk, ramp and passageway thickness, "T", shall be 3½" minimum.
2. For details of grooving used with Case CM curb ramp, see Revised Standard Plan RSP A88A.
3. For details of detectable warning surfaces, see Revised Standard Plan RSP A88A.
4. Where an island passageway length is greater than or equal to 6'-0", but less than 8'-0", each detectable warning surface shall extend the full width and 2'-0" depth of the passageway length. Where an island passageway length is greater than or equal to 8'-0", each detectable warning surface shall extend the full width and 3'-0" depth of the passageway length. A 4'-0" wide detectable warning surface may be used on a 4'-2" wide island passageway.
5. For Case CM curb ramp, the edge of the detectable warning surface nearest the street shall be between 6" and 8" from the gutter flowline.
6. Transitions from ramps to walks, gutters or streets shall be flush (no lip) and free of abrupt changes.
7. Utility pull boxes, manholes, vaults and all other utility facilities within the boundaries of the curb ramp will be relocated or adjusted to grade by the owner prior to, or in conjunction with, curb ramp construction.
8. Detectable warning surface may have to be cut to allow removal of utility covers while maintaining full detectable warning width and depth.
9. For additional curb ramp details, see Revised Standard Plan RSP A88A.

STATE OF CALIFORNIA
DEPARTMENT OF TRANSPORTATION

CURB RAMP AND ISLAND PASSAGEWAY DETAILS

NO SCALE

RSP A88B DATED MARCH 21, 2014 SUPERSEDES RSP A88B DATED JULY 19, 2013 AND STANDARD PLAN A88B DATED MAY 20, 2011 - PAGE 122 OF THE STANDARD PLANS BOOK DATED 2010.

REVISED STANDARD PLAN RSP A88B

2010 REVISED STANDARD PLAN RSP A88B

DATE PLOTTED => 02-APR-2015
TIME PLOTTED => 11:44

Dist	COUNTY	ROUTE	POST MILES TOTAL PROJECT	SHEET No.	TOTAL SHEETS
02	Sha	273	15.0/15.8	38	51

REGISTERED CIVIL ENGINEER

July 19, 2013
PLANS APPROVAL DATE

REGISTERED PROFESSIONAL ENGINEER Gurinderpal Bhullar No. C48815 Exp. 9-30-14 CIVIL STATE OF CALIFORNIA

THE STATE OF CALIFORNIA OR ITS OFFICERS OR AGENTS SHALL NOT BE RESPONSIBLE FOR THE ACCURACY OR COMPLETENESS OF SCANNED COPIES OF THIS PLAN SHEET.

TO ACCOMPANY PLANS DATED 04-02-15

TABLE 1

TAPER LENGTH CRITERIA AND CHANNELIZING DEVICE SPACING							
SPEED (S)	MINIMUM TAPER LENGTH * FOR WIDTH OF OFFSET 12 FEET (W)				MAXIMUM CHANNELIZING DEVICE SPACING		
					X	Y	Z **
	TANGENT 2L	MERGING L	SHIFTING L/2	SHOULDER L/3	TAPER	TANGENT	CONFLICT
mph	ft	ft	ft	ft	ft	ft	ft
20	160	80	40	27	20	40	10
25	250	125	63	42	25	50	12
30	360	180	90	60	30	60	15
35	490	245	123	82	35	70	17
40	640	320	160	107	40	80	20
45	1080	540	270	180	45	90	22
50	1200	600	300	200	50	100	25
55	1320	660	330	220	55	110	27
60	1440	720	360	240	60	120	30
65	1560	780	390	260	65	130	32
70	1680	840	420	280	70	140	35

* - For other offsets, use the following merging taper length formula for L:
For speed of 40 mph or less, $L = WS^2/60$
For speed of 45 mph or more, $L = WS$

Where: L = Taper length in feet
W = Width of offset in feet
S = Posted speed limit, off-peak 85th-percentile speed prior to work starting, or the anticipated operating speed in mph

** - Use for taper and tangent sections where there are no pavement markings or where there is a conflict between existing pavement markings and channelizers (CA).

TABLE 2

LONGITUDINAL BUFFER SPACE AND FLAGGER STATION SPACING				
SPEED *	Min D **	DOWNGRADE Min D ***		
		-3%	-6%	-9%
mph	ft	ft	ft	ft
20	115	116	120	126
25	155	158	165	173
30	200	205	215	227
35	250	257	271	287
40	305	315	333	354
45	360	378	400	427
50	425	446	474	507
55	495	520	553	593
60	570	598	638	686
65	645	682	728	785
70	730	771	825	891

* - Speed is posted speed limit, off-peak 85th-percentile speed prior to work starting, or the anticipated operating speed in mph

** - Longitudinal buffer space or flagger station spacing

*** - Use on sustained downgrade steeper than -3 percent and longer than 1 mile.

TABLE 3

ADVANCE WARNING SIGN SPACING			
ROAD TYPE	DISTANCE BETWEEN SIGNS *		
	A	B	C
	ft	ft	ft
URBAN - 25 mph OR LESS	100	100	100
URBAN - MORE THAN 25 mph TO 40 mph	250	250	250
URBAN - MORE THAN 40 mph	350	350	350
RURAL	500	500	500
EXPRESSWAY / FREEWAY	1000	1500	2640

* - The distances are approximate, are intended for guidance purposes only, and should be applied with engineering judgment. These distances should be adjusted by the Engineer for field conditions, if necessary, by increasing or decreasing the recommmended distances.

STATE OF CALIFORNIA
DEPARTMENT OF TRANSPORTATION

TRAFFIC CONTROL SYSTEM TABLES FOR LANE AND RAMP CLOSURES

NO SCALE

RSP T9 DATED JULY 19, 2013 SUPERSEDES RSP T9 DATED APRIL 19, 2013 THAT SUPPLEMENTS THE STANDARD PLANS BOOK DATED 2010.

REVISED STANDARD PLAN RSP T9

2010 REVISED STANDARD PLAN RSP T9

DATE PLOTTED => 02-APR-2015
TIME PLOTTED => 11:44

TO ACCOMPANY PLANS DATED 04-02-15

DIST	COUNTY	ROUTE	POST MITTS TOTAL PROJECT	SHEET No.	TOTAL SHEETS
02	Sha	273	15.0/15.8	39	51

REGISTERED CIVIL ENGINEER

April 19, 2013
PLANS APPROVAL DATE

Gurinderpal Bhullar No. C48815 Exp. 9-30-14 CIVIL — REGISTERED PROFESSIONAL ENGINEER — STATE OF CALIFORNIA

THE STATE OF CALIFORNIA OR ITS OFFICERS OR AGENTS SHALL NOT BE RESPONSIBLE FOR THE ACCURACY OR COMPLETENESS OF SCANNED COPIES OF THIS PLAN SHEET.

NOTES:

See Revised Standard Plan RSP T9 for tables.

Use cone spacing X for taper segment, Y for tangent segment or Z for conflict situations, as appropriate, per Table 1, unless X, Y, or Z cone spacing is shown on this sheet.

Unless otherwise specified in the special provisions, all temporary warning signs shall have black legend on fluorescent orange background.

California codes are designated by (CA). Otherwise, Federal (MUTCD) codes are shown.

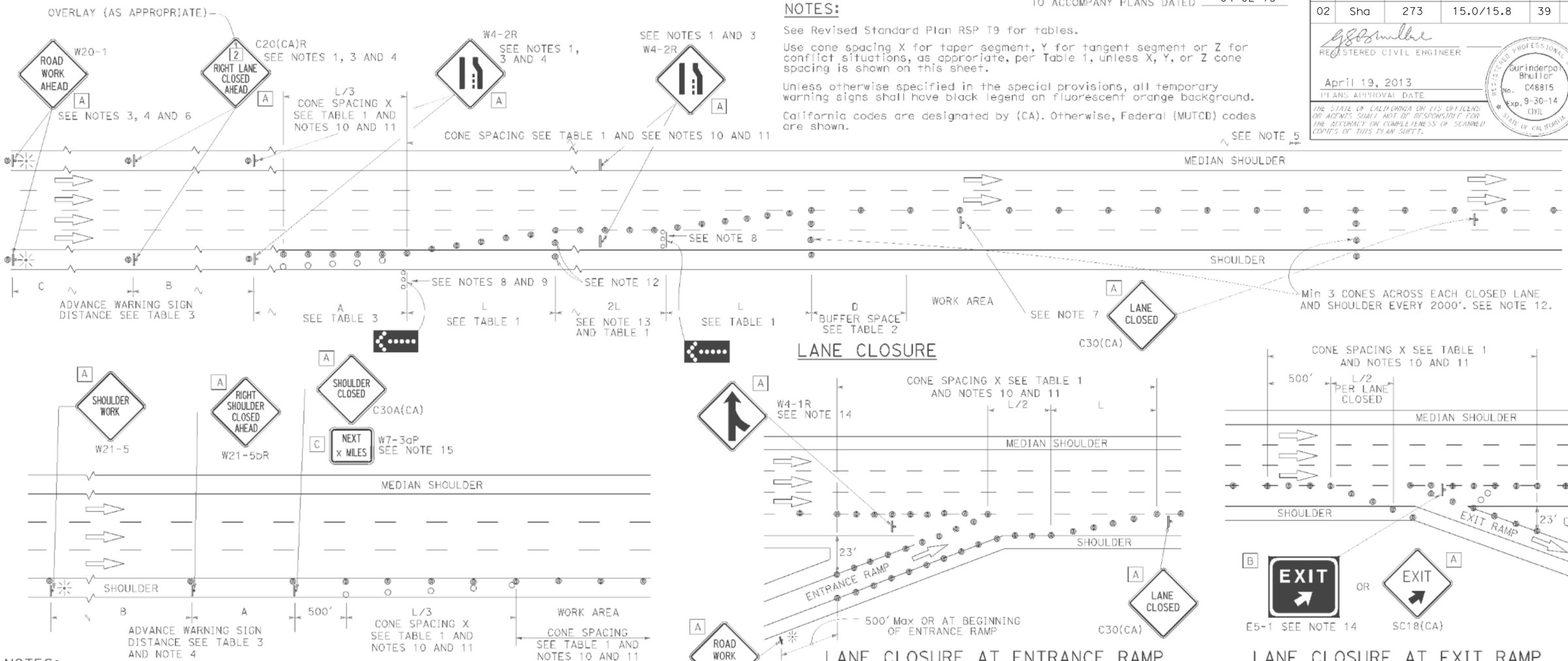

LANE CLOSURE

SHOULDER CLOSURE

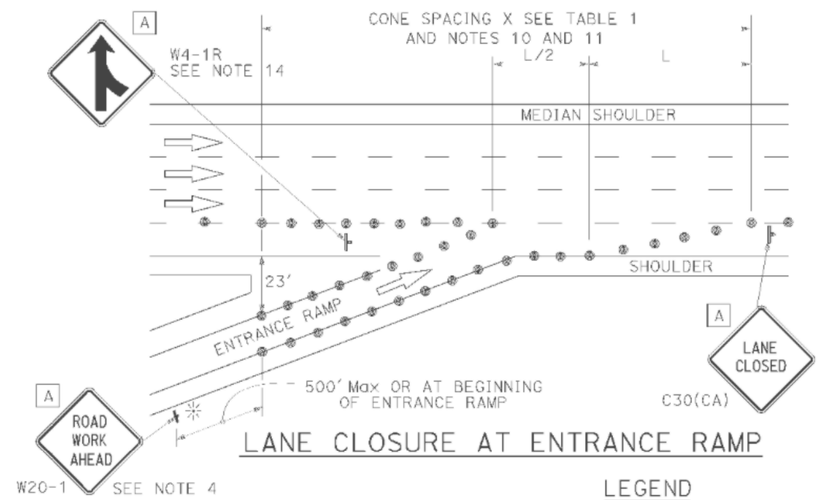

LANE CLOSURE AT ENTRANCE RAMP

LANE CLOSURE AT EXIT RAMP

NOTES:

1. Median lane closures shall conform to the details as shown except that C20(CA)L and W4-2L signs shall be used.
2. At least one person shall be assigned to provide full time maintenance of traffic control devices for lane closures.
3. Duplicate sign installations are not required:
   a) On opposite shoulder if at least one-half of the available lanes remain open to traffic.
   b) In the median if the width of the median shoulder is less than 8' and the outside lanes are to be closed.
4. Each advance warning sign on each side of the roadway shall be equipped with at least two flags for daytime closure. Each flag shall be at least 16" x 16" in size and shall be orange or fluorescent red-orange in color. Flashing beacons shall be placed at the locations indicated for lane closure during hours of darkness.
5. A G20-2 "END ROAD WORK" sign, with minimum size of 48" x 24" as appropriate, shall be placed at the end of the lane closure unless the end of work area is obvious or ends within a larger project's limits.
6. If the W20-1 sign would follow within 2000' of a stationary W20-1 or G20-1 "ROAD WORK NEXT _____ MILES", use a C20(CA) sign for the first advance warning sign.
7. Place a C30(CA) sign every 2000' throughout length of lane closure.
8. One flashing arrow sign for each lane closed. The flashing arrow signs shall be Type I.
9. A minimum 1500' of sight distance shall be provided where possible for vehicles approaching the first flashing arrow sign. Lane closures shall not begin at top of crest vertical curve or on a horizontal curve.
10. All cones used for lane closures during the hours of darkness shall be fitted with retroreflective bands (or sleeves) as specified in the specifications.
11. Portable delineators, placed at one-half the spacing indicated for traffic cones may be used instead of cones for daytime closures only.
12. Unless otherwise specified in the special provisions, a minimum of 3 cones shall be placed transversely across each closed lane and shoulder at each location where a taper across a traffic lane ends and every 2000' as shown on the "Lane Closure" detail. Two Type II barricades may be used instead of the 3 cones. The transverse alignment of the cones or barricades on the closed shoulder may be shifted from the transverse alignment to provide access to the work.
13. Unless otherwise specified in the special provisions, the 2L tangent shown along lane lines shall be used between the L tapers required for each closed traffic lane.
14. Unless otherwise specified in the special provisions, the E5-1 or SC18(CA) and W4-1 signs shall be used as shown.
15. A W7-3aP "NEXT____ MILES" plaque must be used if theshoulder closure extends beyond the distance that can be perceived by road users.

LEGEND

- TRAFFIC CONE
- TRAFFIC CONE (OPTIONAL TAPER)
- TEMPORARY TRAFFIC CONTROL SIGN
- FLASHING ARROW SIGN (FAS)
- FAS SUPPORT OR TRAILER
- PORTABLE FLASHING BEACON

SIGN PANEL SIZE (Min)

A	48" x 48"
B	72" x 60"
C	36" x 30"

STATE OF CALIFORNIA
DEPARTMENT OF TRANSPORTATION

TRAFFIC CONTROL SYSTEM FOR LANE CLOSURE ON FREEWAYS AND EXPRESSWAYS

NO SCALE

RSP T10 DATED APRIL 19, 2013 SUPERSEDES STANDARD PLAN T10 DATED MAY 20, 2011 - PAGE 237 OF THE STANDARD PLANS BOOK DATED 2010.

REVISED STANDARD PLAN RSP T10

2010 REVISED STANDARD PLAN RSP T10

DATE PLOTTED => 02-APR-2015
TIME PLOTTED => 11:44

Dist	COUNTY	ROUTE	POST MITTS TOTAL PROJECT	SHEET No.	TOTAL SHEETS
02	Sha	273	15.0/15.8	40	51

REGISTERED CIVIL ENGINEER

April 19, 2013
PLANS APPROVAL DATE

REGISTERED PROFESSIONAL ENGINEER Gurinderpal Bhullar No. C48815 Exp. 9-30-14 CIVIL STATE OF CALIFORNIA

THE STATE OF CALIFORNIA OR ITS OFFICERS OR AGENTS SHALL NOT BE RESPONSIBLE FOR THE ACCURACY OR COMPLETENESS OF SCANNED COPIES OF THIS PLAN SHEET.

TO ACCOMPANY PLANS DATED 04-02-15

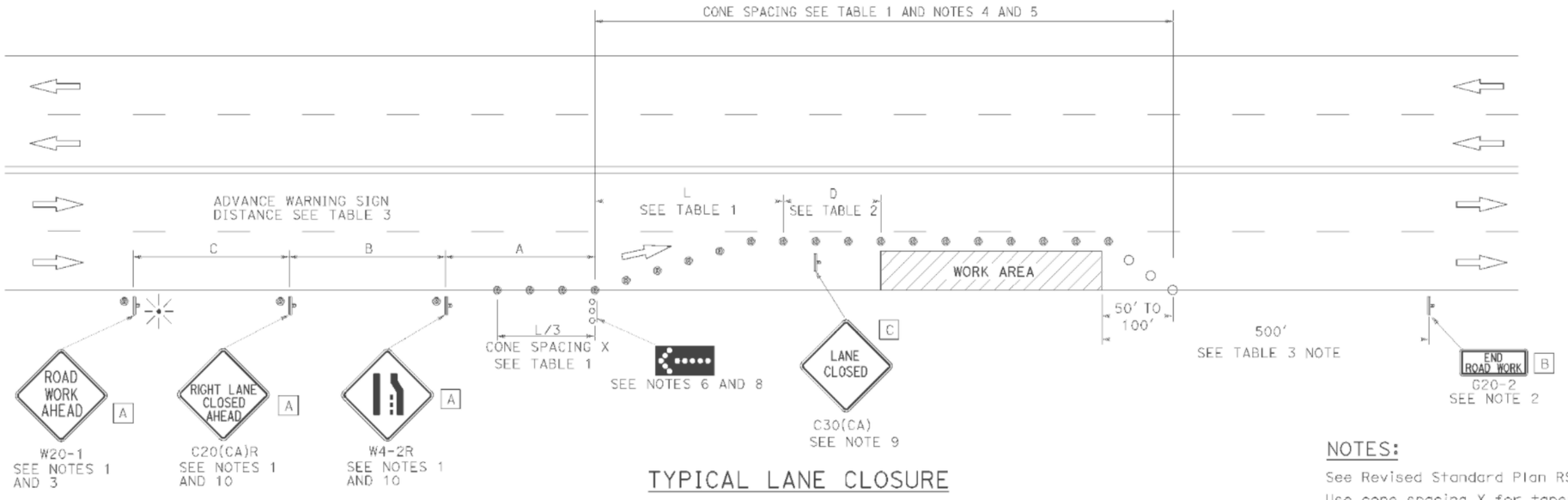

TYPICAL LANE CLOSURE

NOTES:

See Revised Standard Plan RSP T9 for tables.

Use cone spacing X for taper segment, Y for tangent segment or Z for conflict situations, as approriate, per Table 1, unless X, Y, or Z cone spacing is shown on this sheet.

Unless otherwise specified in the special provisions, all temporary warning signs shall have black legend on fluorescent orange background.

California codes are designated by (CA). Otherwise, Federal (MUTCD) codes are shown.

LEGEND

- TRAFFIC CONE
- TRAFFIC CONE (OPTIONAL TAPER)
- TEMPORARY TRAFFIC CONTROL SIGN
- FLASHING ARROW SIGN (FAS)
- FAS SUPPORT OR TRAILER
- PORTABLE FLASHING BEACON

SIGN PANEL SIZE (Min)

A	48" x 48"
B	36" x 18"
C	30" x 30"

NOTES:

1. Each advance warning sign shall be equipped with at least two flags for daytime closure. Each flag shall be at least 16" x 16" in size and shall be orange or fluorescent red-orange in color. Flashing beacons shall be placed at the locations indicated for lane closure during hours of darkness.
2. A G20-2 "END ROAD WORK" sign, as appropriate, shall be placed at the end of the lane closure unless the end of work area is obvious, or ends within a larger project's limits.
3. If the W20-1 sign would follow within 2000' of a stationary W20-1 or G20-1 "ROAD WORK NEXT _____ MILES", use a C20(CA) sign for the first advance warning sign.
4. All cones used for lane closures during the hours of darkness shall be fitted with retroreflective bands (or sleeves) as specified in the specifications.
5. Portable delineators, placed at one-half the spacing indicated for traffic cones, may be used instead of cones for daytime closures only.
6. Flashing arrow sign shall be either Type I or Type II.
7. For approach speeds over 50 mph, use the "Traffic Control System for Lane Closure On Freeways And Expressways" plan for lane closure details and requirements.
8. A minimum 1500' of sight distance shall be provided where possible for vehicles approaching the first flashing arrow sign. Lane closures shall not begin at the top of crest vertical curve or on a horizontal curve.
9. Place a C30(CA) sign every 2000' throughout length of lane closure.
10. Median lane closures shall conform to the details as shown except that C20(CA)L and W4-2L signs shall be used.
11. At least one person shall be assigned to provide full time maintenance of traffic control devices for lane closure unless, otherwise directed by the Engineer.

STATE OF CALIFORNIA
DEPARTMENT OF TRANSPORTATION

TRAFFIC CONTROL SYSTEM FOR LANE CLOSURE ON MULTILANE CONVENTIONAL HIGHWAYS

NO SCALE

RSP T11 DATED APRIL 19, 2013 SUPERSEDES STANDARD PLAN T11 DATED MAY 20, 2011 - PAGE 239 OF THE STANDARD PLANS BOOK DATED 2010.

REVISED STANDARD PLAN RSP T11

2010 REVISED STANDARD PLAN RSP T11

DATE PLOTTED => 02-APR-2015
TIME PLOTTED => 11:44

Dist	COUNTY	ROUTE	POST MITTS TOTAL PROJECT	SHEET No.	TOTAL SHEETS
02	Sha	273	15.0/15.8	41	51

Theresa Gabriel
REGISTERED ELECTRICAL ENGINEER

July 19, 2013
PLANS APPROVAL DATE

THE STATE OF CALIFORNIA OR ITS OFFICERS OR AGENTS SHALL NOT BE RESPONSIBLE FOR THE ACCURACY OR COMPLETENESS OF SCANNED COPIES OF THIS PLAN SHEET.

REGISTERED PROFESSIONAL ENGINEER
Theresa Aziz Gabriel
No. E15129
Exp. 6-30-14
ELECTRICAL
STATE OF CALIFORNIA

TO ACCOMPANY PLANS DATED 04-02-15

LEGEND:

AB	ABANDON. IF APPLIED TO CONDUIT, REMOVE CONDUCTORS
BC	INSTALL PULL BOX IN EXISTING CONDUIT RUN
BP	PEDESTRIAN BARRICADE, TYPE AS INDICATED ON PLAN
CB	INSTALL CONDUIT INTO EXISTING PULL BOX
CC	CONNECT NEW AND EXISTING CONDUIT. REMOVE EXISTING CONDUCTORS AND INSTALL CONDUCTORS AS INDICATED
CF	CONDUIT TO REMAIN FOR FUTURE USE. REMOVE CONDUCTORS. INSTALL PULL TAPE
DH	DETECTOR HANDHOLE
FA	FOUNDATION TO BE ABANDONED
IS	INSTALL SIGN ON SIGNAL MAST ARM
NS	NO SLIP BASE ON STANDARD
PEC	PHOTOELECTRIC CONTROL
PEU	PHOTOELECTRIC UNIT
RC	EQUIPMENT OR MATERIAL TO BE REMOVED AND BECOME THE PROPERTY OF THE CONTRACTOR
RE	REMOVE ELECTROLIER, FUSES AND BALLAST. TAPE ENDS OF CONDUCTORS
RL	RELOCATE EQUIPMENT
RR	REMOVE AND REUSE EQUIPMENT
RS	REMOVE AND SALVAGE EQUIPMENT
SC	SPLICE NEW TO EXISTING CONDUCTORS
SD	SERVICE DISCONNECT
TSP	TELEPHONE SERVICE POINT

ABBREVIATIONS

APS	ACCESSIBLE PEDESTRIAN SIGNAL
BBS	BATTERY BACKUP SYSTEM
BC	BOLT CIRCLE
BPB	BICYCLE PUSH BUTTON
C	CONDUIT
CB	CIRCUIT BREAKER
CCTV	CLOSED CIRCUIT TELEVISION
Ckt	CIRCUIT
CMS	CHANGEABLE MESSAGE SIGN
Ctid	CALTRANS IDENTIFICATION
Comm	COMMUNICATION
DLC	LOOP DETECTOR LEAD-IN CABLE
EMS	EXTINGUISHABLE MESSAGE SIGN
EVUC	EMERGENCY VEHICLE UNIT CABLE
EVUD	EMERGENCY VEHICLE UNIT DETECTOR
FB	FLASHING BEACON
FBCA	FLASHING BEACON CONTROL ASSEMBLY
FBS	FLASHING BEACON WITH SLIP BASE
FO	FIBER OPTIC
G	EQUIPMENT GROUNDING CONDUCTOR
GB	GROUND BUS
GFCI	GROUND FAULT CIRCUIT INTERRUPTER
HAR	HIGHWAY ADVISORY RADIO
Hex	HEXAGONAL
HPS	HIGH PRESSURE SODIUM
IISNS	INTERNALLY ILLUMINATED STREET NAME SIGN
ISL	INDUCTION SIGN LIGHTING
LED	LIGHT EMITTING DIODE
LMA	LUMINAIRE MAST ARM
LPS	LOW PRESSURE SODIUM
Ltg	LIGHTING
Lum	LUMINAIRE
M	METERED
MAT	MAST ARM MOUNTING TOP ATTACHMENT
MAS	MAST ARM MOUNTING SIDE ATTACHMENT
M/M	MULTIPLE TO MULTIPLE TRANSFORMER
Mtg	MOUNTING
MV	MERCURY VAPOR LIGHTING FIXTURE
MVDS	MICROWAVE VEHICLE DETECTION SYSTEM
N	NEUTRAL (GROUNDED CONDUCTOR)
NB	NEUTRAL BUS
NC	NORMALLY CLOSE
NO	NORMALLY OPEN
P	CIRCUIT BREAKER'S POLE
PB	PULL BOX
PBA	PUSH BUTTON ASSEMBLY
PEC	PHOTOELECTRIC CONTROL
Ped	PEDESTRIAN
PEU	PHOTOELECTRIC UNIT
PT	CONDUIT WITH PULL TAPE
RE	RELOCATED EQUIPMENT
RM	RAMP METERING
RWIS	ROADSIDE WEATHER INFORMATION SYSTEM
SB	SLIP BASE
SIC	SIGNAL INTERCONNECT CABLE
Sig	SIGNAL
SMA	SIGNAL MAST ARM
SNS	STREET NAME SIGN
SP	SERVICE POINT
TDC	TELEPHONE DEMARCATION CABINET
TMS	TRAFFIC MONITORING STATION
TOS	TRAFFIC OPERATIONS SYSTEM
Veh	VEHICLE
VIVDS	VIDEO IMAGE VEHICLE DETECTION SYSTEM
WIM	WEIGH-IN-MOTION
Xfmr	TRANSFORMER

SOFFIT AND WALL MOUNTED LUMINAIRES

PENDANT, 70 W HPS UNLESS OTHERWISE SPECIFIED

FLUSH, 70 W HPS UNLESS OTHERWISE SPECIFIED

WALL SURFACE, 70 W HPS UNLESS OTHERWISE SPECIFIED

EXISTING SOFFIT OR WALL LUMINAIRE TO REMAIN UNMODIFIED

EXISTING SOFFIT OR WALL LUMINAIRE TO BE MODIFIED AS SPECIFIED

NOTE:
Arrow indicates "street side" of luminaire.

COMMONLY USED SYMBOLS FOR UNITED STATES CUSTOMARY UNITS OF MEASUREMENT:

SYMBOL USED	DEFINITIONS
Ω	OHMS
min	MINUTE
s	SECOND
bps	BITS PER SECOND
Bps	BYTES PER SECOND
A	AMPERE
V	VOLT
V(dc)	VOLT (DIRECT CURRENT)
V(ac)	VOLT (ALTERNATING CURRENT)
FC	FOOT - CANDLE
W	WATTS
VA	VOLT-AMPERE
M	MEGA
k	KILO
m	MILLI
μ	MICRO
P	PICO
Hz	HERTZ

MISCELLANEOUS ELECTROLIERS

NEW	EXISTING	
		LUMINAIRE ON WOOD POLE
		NON-STANDARD ELECTROLIER (SEE PROJECT NOTES OR PROJECT PLANS)
		CITY ELECTROLIER
		ELECTROLIER FOUNDATION (FUTURE INSTALLATION)

NOTES:

1. HPS luminaires shall be 310 W HPS when installed on Type 21, 21D, 30, 31 and 32 Standards, unless otherwise specified. HPS luminaires shall be 200 W when installed on other type standards or poles, unless otherwise specified.
2. LED luminaires shall be 235 W when installed on Type 21, 21D, 30, 31 and 32 Standards, unless otherwise specified. LED luminaires shall be 165 W when installed on other type standards or poles, unless otherwise specified.
3. Luminaires shall be the cutoff type, ANSI Type III medium cutoff lighting distribution, unless otherwise specified.

STANDARD ELECTROLIER

NEW	EXISTING	STANDARD TYPE
		15
		15D
		15 STRUCTURE
		15D STRUCTURE
		21
		21D
		21 STRUCTURE
		21D STRUCTURE
		30
		31
		32

STATE OF CALIFORNIA
DEPARTMENT OF TRANSPORTATION

ELECTRICAL SYSTEMS (LEGEND AND ABBREVIATIONS)

NO SCALE

RSP ES-1A DATED JULY 19, 2013 SUPERSEDES STANDARD PLAN ES-1A DATED MAY 20, 2011 - PAGE 425 OF THE STANDARD PLANS BOOK DATED 2010.

REVISED STANDARD PLAN RSP ES-1A

2010 REVISED STANDARD PLAN RSP ES-1A

DATE PLOTTED => 02-APR-2015
TIME PLOTTED => 11:44

Dist	COUNTY	ROUTE	POST MILES TOTAL PROJECT	SHEET No.	TOTAL SHEETS
02	Sha	273	15.0/15.8	42	51

Theresa Gabriel
REGISTERED ELECTRICAL ENGINEER

July 19, 2013
PLANS APPROVAL DATE

Theresa Aziz Gabriel No. E15129 Exp. 6-30-14 ELECTRICAL STATE OF CALIFORNIA REGISTERED PROFESSIONAL ENGINEER

THE STATE OF CALIFORNIA OR ITS OFFICERS OR AGENTS SHALL NOT BE RESPONSIBLE FOR THE ACCURACY OR COMPLETENESS OF SCANNED COPIES OF THIS PLAN SHEET.

TO ACCOMPANY PLANS DATED 04-02-15

CONDUIT

NEW	EXISTING	
		LIGHTING CONDUIT, UNLESS OTHERWISE INDICATED OR NOTED
		TRAFFIC SIGNAL CONDUIT
C	c	COMMUNICATION CONDUIT
T	t	TELEPHONE CONDUIT
F	f	FIRE ALARM CONDUIT
FO	fo	FIBER OPTIC CONDUIT
		CONDUIT TERMINATION
R	r	CONDUIT RISER ATTACHED TO THE STRUCTURE OR SERVICE POLE

SERVICE EQUIPMENT

NEW	EXISTING	
OH	oh	OVERHEAD LINES
U	U	WOOD POLE, "U" INDICATES UTILITY OWNED
		POLE GUY WITH ANCHOR
		UTILITY TRANSFORMER - GROUND MOUNTED
III	III	SERVICE EQUIPMENT ENCLOSURE TYPE. DOOR INDICATES FRONT OF ENCLOSURE
T	t	TELEPHONE DEMARCATION CABINET

POLE-MOUNTED SERVICE DESIGNATION

TYPE H SERVICE, 28'-10" — TYPE OF INSTALLATION AND POLE HEIGHT ABOVE GRADE

FLASHING BEACON

NEW	EXISTING	
R	R	FLASHING BEACON (ONE VEHICLE SIGNAL HEAD WITH BACKPLATE AND VISOR) "R" INDICATES RED INDICATION, "Y" INDICATES YELLOW INDICATION
Y Y	Y Y	FLASHING BEACON WITH TYPE 15-FBS STANDARD AND A SIGN.
R R	R R	FLASHING BEACON WITH TYPES 9, 9A OR 9B SIGN UNLESS OTHERWISE SPECIFIED OR INDICATED

SIGNAL EQUIPMENT

NEW	EXISTING	
C	C	PEDESTRIAN SIGNAL HEAD "C" INDICATES COUNTDOWN PEDESTRIAN HEAD
		PUSH BUTTON ASSEMBLY POST
		PEDESTRIAN BARRICADE
		VEHICLE SIGNAL HEAD (WITH BACKPLATE AND 3-SECTIONS: RED, YELLOW AND GREEN)
		VEHICLE SIGNAL HEAD WITH ANGLE VISOR
PV	PV	MODIFICATIONS OF BASIC SYMBOL: "L" INDICATES ALL NON-ARROW SECTIONS LOUVERED "LG" INDICATES LOUVERED GREEN SECTION ONLY "PV" INDICATES ALL 12" SECTIONS PROGRAMMED VISIBILITY "8" INDICATES ALL 8" SECTIONS (ONLY WHEN SPECIFIED)
		VEHICLE SIGNAL HEAD CONSISTING OF RED, YELLOW AND GREEN LEFT ARROW SECTIONS
		VEHICLE SIGNAL HEAD CONSISTING OF RED AND YELLOW SECTIONS WITH AN UP GREEN ARROW SECTION
		VEHICLE SIGNAL HEAD (5 SECTION) CONSISTING OF RED, YELLOW AND GREEN SECTIONS WITH YELLOW AND GREEN RIGHT ARROW SECTIONS
		TYPE 15TS STANDARD WITH VEHICLE SIGNAL HEAD AND LUMINAIRE
		TYPE 21TS STANDARD WITH VEHICLE SIGNAL HEAD AND LUMINAIRE
		STANDARD WITH LUMINAIRE AND SIGNAL MAST ARMS AND ATTACHED VEHICLE SIGNAL HEADS
		TYPE 1 STANDARD WITH ATTACHED VEHICLE SIGNAL HEADS
		STANDARD WITH A SIGNAL MAST ARM, ATTACHED VEHICLE SIGNAL HEADS AND INTERNALLY ILLUMINATED STREET NAME SIGN
		CONTROLLER ASSEMBLY. DOOR INDICATES FRONT OF CABINET

SIGNAL EQUIPMENT Cont

NEW	EXISTING	
		GUARD POST
		TYPE 1 STANDARD WITH RAMP METERING SIGN
		OPTICAL DETECTOR FOR THE EMERGENCY VEHICLE DETECTION SYSTEM

NOTES:

1. All signal sections shall be 12" unless shown otherwise.
2. Signal heads shall be provided with backplates unless shown otherwise.

ILLUMINATED OVERHEAD SIGN

NEW	EXISTING	
		SINGLE POST, SINGLE ILLUMINATED SIGN, BALANCED BUTTERFLY
		SINGLE POST, DOUBLE ILLUMINATED SIGN, BALANCED BUTTERFLY
		SINGLE POST, SINGLE ILLUMINATED SIGN, FULL CANTILEVER
		DOUBLE POST, SINGLE ILLUMINATED SIGN
		SINGLE ILLUMINATED SIGN MOUNTED ON STRUCTURE
		DOUBLE POST, SINGLE ILLUMINATED SIGN WITH ELECTROLIER

STATE OF CALIFORNIA
DEPARTMENT OF TRANSPORTATION

ELECTRICAL SYSTEMS (LEGEND AND ABBREVIATIONS)

NO SCALE

RSP ES-1B DATED JULY 19, 2013 SUPERSEDES STANDARD PLAN ES-1B DATED MAY 20, 2011 - PAGE 426 OF THE STANDARD PLANS BOOK DATED 2010.

REVISED STANDARD PLAN RSP ES-1B

2010 REVISED STANDARD PLAN RSP ES-1B

DATE PLOTTED => 02-APR-2015
TIME PLOTTED => 11:44

Dist	COUNTY	ROUTE	POST MILES TOTAL PROJECT	SHEET No.	TOTAL SHEETS
02	Sha	273	15.0/15.8	43	51

Theresa Gabriel
REGISTERED ELECTRICAL ENGINEER

July 19, 2013
PLANS APPROVAL DATE

THE STATE OF CALIFORNIA OR ITS OFFICERS OR AGENTS SHALL NOT BE RESPONSIBLE FOR THE ACCURACY OR COMPLETENESS OF SCANNED COPIES OF THIS PLAN SHEET.

REGISTERED PROFESSIONAL ENGINEER
Theresa Aziz Gabriel
No. E15129
Exp. 6-30-14
ELECTRICAL
STATE OF CALIFORNIA

TO ACCOMPANY PLANS DATED 04-02-15

2010 REVISED STANDARD PLAN RSP ES-1C

EQUIPMENT IDENTIFICATION

ILLUMINATED SIGN IDENTIFICATION NUMBER:

SIGN No. 12345
10 ISL SCI 1.0

- SIGN NUMBER - PLACE ON POST OR STRUCTURE
- TRANSFORMER RATING (kVA)
- LIGHTING CONTROL TYPE
- NUMBER AND TYPE OF FIXTURES

} DO NOT PLACE ON STANDARD OR STRUCTURE

ELECTROLIER OR EQUIPMENT IDENTIFICATION NUMBER:

12345 - 15'-0"

- MAST ARM LENGTH, IF SHOWN. DO NOT PLACE ON STANDARD OR STRUCTURE
- EQUIPMENT NUMBER - PLACE ON STANDARD OR STRUCTURE. EXISTING EQUIPMENT NUMBERS ARE SHOWN IN PARENTHESIS

CONDUIT AND CONDUCTOR IDENTIFICATION:

1½"C, 2#10, 15#14, 2 DLC, 12P#18

PAIR

- NUMBER AND SIZE OF CONDUCTORS AND CABLES
- SIZE OF CONDUIT IN INCHES
- ø1, ø2, ø2P, etc. — TRAFFIC PHASE IDENTIFICATION FOR SIGNAL FACES, DETECTORS AND PHASE DIAGRAMS
- |1| |2| |3| — LEGEND NUMBERS
- (A) (B) (C) — EQUIPMENT, SIGNAL POLES, INSTALLATION OR ITEMS
- 1 2 3 — CONDUIT RUN NUMBERS

SIGNAL AND LIGHTING STANDARD (TYPICAL DESIGNATION):

19A - 3 - 100

- WIND VELOCITY = 100 mph
- CASE 3 ARM LOADING
- STANDARD TYPE
- STANDARD PLAN SHEET NUMBER
- DETAIL, NUMBER, SECTION, TYPE OR ELEVATION

MISCELLANEOUS EQUIPMENT

NEW	EXISTING	
CMS	cms	CHANGEABLE MESSAGE SIGN
		CLOSED CIRCUIT TELEVISION CAMERA
		HIGHWAY ADVISORY RADIO POLE AND ANTENNA
EMS	ems	EXTINGUISHABLE MESSAGE SIGN
M V	m v	DETECTION DEVICE M = MICROWAVE SENSOR V = VIDEO IMAGE SENSOR

WIRING DIAGRAM LEGEND

- EXTERNAL CONDUCTOR
- CONDUCTOR OR BUS
- TIE POINT
- CONTACTOR COIL
- CONTACTOR, NO CONTACT
- TERMINAL BLOCKS
- CONTACTOR, NC CONTACT
- ENCLOSURE BOND
- GROUNDING ELECTRODE
- CIRCUIT BREAKER
- RECEPTACLE

PULL BOXES

NEW	EXISTING	
		PULL BOX, No. 5 UNLESS OTHERWISE INDICATED OR NOTED
3	9A(21)	PULL BOX, ADDITIONAL DESIGNATIONS OR DESCRIPTIONS

3 No. 3½ PULL BOX
5 No. 5 PULL BOX
6 No. 6 PULL BOX
7 No. 7 (CEILING PULL BOX)
8 No. 8 (PENDANT SOFFIT PULL BOX)
9 No. 9 PULL BOX
9A No. 9A PULL BOX

(C) COMMUNICATIONS PULL BOX
(E) PULL BOX WITH EXTENSION
(S) SPRINKLER CONTROL PULL BOX
(21) ANCHOR BOLTS AND CONDUIT FOR FUTURE INSTALLATION OF TYPE 21 STANDARD
(T) TRAFFIC PULL BOX

VEHICLE DETECTORS

5 J 9 U

- VEHICLE DETECTOR DESIGNATION
- U = UPPER
  L = LOWER
- SLOT NUMBER IN INPUT FILE
- INPUT FILE (I OR J)
- PHASE

NEW	EXISTING	
		TYPE A DETECTOR LOOP. OUTLINE OF SAWCUT SHOWN
		TYPE B DETECTOR LOOP. OUTLINE OF SAWCUT SHOWN
		TYPE C DETECTOR LOOP. OUTLINE OF SAWCUT SHOWN
		TYPE D DETECTOR LOOP. OUTLINE OF SAWCUT SHOWN
		TYPE E DETECTOR LOOP. OUTLINE OF SAWCUT SHOWN
		TYPE Q DETECTOR LOOP. OUTLINE OF SAWCUT SHOWN
		MAGNETIC DETECTOR
DH	dh	DETECTOR HANDHOLE
		MICROWAVE OR VIDEO DETECTION ZONE

STATE OF CALIFORNIA
DEPARTMENT OF TRANSPORTATION

ELECTRICAL SYSTEMS (LEGEND AND ABBREVIATIONS)

NO SCALE

RSP ES-1C DATED JULY 19, 2013 SUPERSEDES STANDARD PLAN ES-1C DATED MAY 20, 2011 - PAGE 427 OF THE STANDARD PLANS BOOK DATED 2010.

REVISED STANDARD PLAN RSP ES-1C

DATE PLOTTED => 02-APR-2015
TIME PLOTTED => 11:44

Dist	COUNTY	ROUTE	POST MITTS TOTAL PROJECT	SHEET No.	TOTAL SHEETS
02	Sha	273	15.0/15.8	44	51

Theresa Gabriel
REGISTERED ELECTRICAL ENGINEER

July 19, 2013
PLANS APPROVAL DATE

REGISTERED PROFESSIONAL ENGINEER
Theresa Aziz Gabriel
No. E15129
Exp. 6-30-14
ELECTRICAL
STATE OF CALIFORNIA

THE STATE OF CALIFORNIA OR ITS OFFICERS OR AGENTS SHALL NOT BE RESPONSIBLE FOR THE ACCURACY OR COMPLETENESS OF SCANNED COPIES OF THIS PLAN SHEET.

TO ACCOMPANY PLANS DATED 04-02-15

2010 REVISED STANDARD PLAN RSP ES-4A

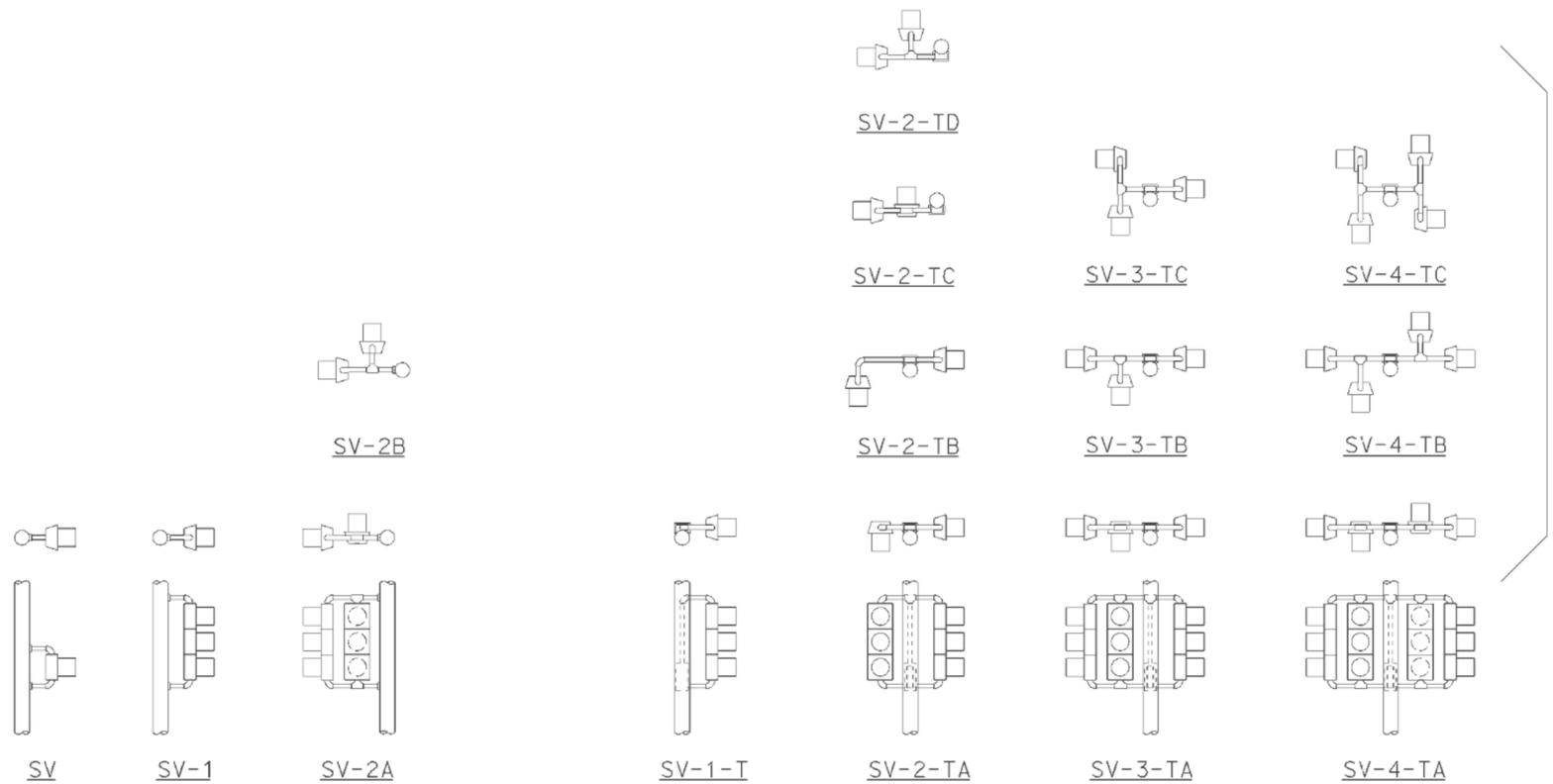

SIDE MOUNTINGS

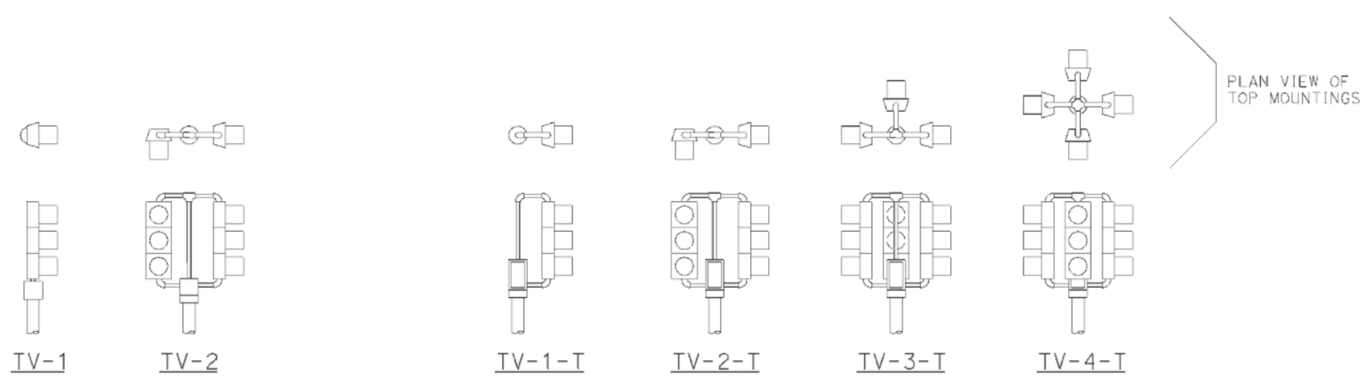

TOP MOUNTINGS

ABBREVIATIONS:

SV	SIDE MOUNTED VEHICLE SIGNALS
T	TERMINAL COMPARTMENT
TV	TOP MOUNTED VEHICLE SIGNALS
1, 2, 3, 4	NUMBER OF SIGNAL FACES (3 - SECTION, UNLESS OTHERWISE INDICATED)
A, B, C, D	CONFIGURATION OF SIGNALS

NOTES:

1. Mountings shall be oriented to provide maximum horizontal clearance to adjacent roadway.
2. Bracket arms shall be long enough to permit proper alignment of signals and backplate installation.
3. See Standard Plans ES-4D and ES-4E for attachment fitting details.

STATE OF CALIFORNIA
DEPARTMENT OF TRANSPORTATION

ELECTRICAL SYSTEMS (VEHICULAR SIGNAL HEADS AND MOUNTINGS)

NO SCALE

RSP ES-4A DATED JULY 19, 2013 SUPERSEDES STANDARD PLAN ES-4A DATED MAY 20, 2011 - PAGE 443 OF THE STANDARD PLANS BOOK DATED 2010.

REVISED STANDARD PLAN RSP ES-4A

DATE PLOTTED => 02-APR-2015
TIME PLOTTED => 11:44

Dist	COUNTY	ROUTE	POST MILES TOTAL PROJECT	SHEET No.	TOTAL SHEETS
02	Sha	273	15.0/15.8	45	51

Theresa Gabriel
REGISTERED ELECTRICAL ENGINEER

October 17, 2014
PLANS APPROVAL DATE

REGISTERED PROFESSIONAL ENGINEER
Theresa Aziz Gabriel
No. E15129
Exp. 6-30-16
ELECTRICAL
STATE OF CALIFORNIA

THE STATE OF CALIFORNIA OR ITS OFFICERS OR AGENTS SHALL NOT BE RESPONSIBLE FOR THE ACCURACY OR COMPLETENESS OF SCANNED COPIES OF THIS PLAN SHEET.

TO ACCOMPANY PLANS DATED 04-02-15

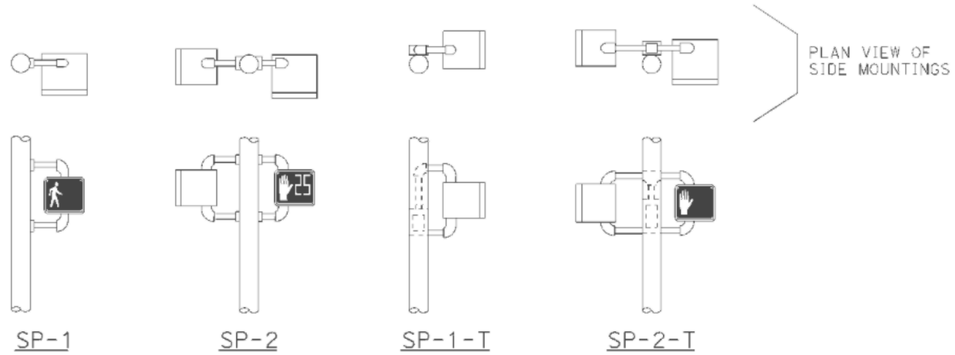

SIDE MOUNTINGS

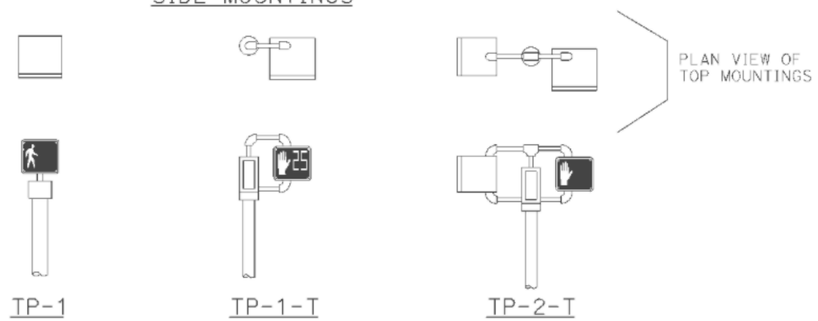

TOP MOUNTINGS

PEDESTRIAN SIGNALS AND MOUNTINGS

DETAIL A

PERSON WALKING INTERVAL FLASHING UPRAISED HAND INTERVAL STEADY UPRAISED HAND INTERVAL

PEDESTRIAN SIGNAL MODULE WITH COUNTDOWN

DETAIL B

PERSON WALKING INTERVAL STEADY UPRAISED HAND INTERVAL

PEDESTRIAN SIGNAL MODULE WITHOUT COUNTDOWN

DETAIL C

NOTES:

1. Mounting shall be oriented to provide maximum horizontal clearance to adjacent roadway.
2. Bracket arms shall be long enough to permit proper alignment of signals.
3. See Standard Plan ES-4D for attachment fittings details.

ABBREVIATIONS:

1, 2	NUMBER OF SIGNAL FACES
SP	SIDE MOUNTED PEDESTRIAN SIGNAL
T	TERMINAL COMPARTMENT
TP	TOP MOUNTED PEDESTRIAN SIGNAL

STATE OF CALIFORNIA
DEPARTMENT OF TRANSPORTATION

ELECTRICAL SYSTEMS (PEDESTRIAN SIGNAL)

NO SCALE

RSP ES-4B DATED OCTOBER 17, 2014 SUPERSEDES RSP ES-4B DATED JULY 19, 2013 AND STANDARD PLAN ES-4B DATED MAY 20, 2011 - PAGE 444 OF THE STANDARD PLANS BOOK DATED 2010.

REVISED STANDARD PLAN RSP ES-4B

2010 REVISED STANDARD PLAN RSP ES-4B

DATE PLOTTED => 02-APR-2015
TIME PLOTTED => 11:44

Dist	COUNTY	ROUTE	POST MILES TOTAL PROJECT	SHEET No.	TOTAL SHEETS
02	Sha	273	15.0/15.8	46	51

Theresa Gabriel
REGISTERED ELECTRICAL ENGINEER

July 19, 2013
PLANS APPROVAL DATE

REGISTERED PROFESSIONAL ENGINEER
Theresa Aziz Gabriel
No. E15129
Exp. 6-30-14
ELECTRICAL
STATE OF CALIFORNIA

THE STATE OF CALIFORNIA OR ITS OFFICERS OR AGENTS SHALL NOT BE RESPONSIBLE FOR THE ACCURACY OR COMPLETENESS OF SCANNED COPIES OF THIS PLAN SHEET.

TO ACCOMPANY PLANS DATED 04-02-15

VISORS

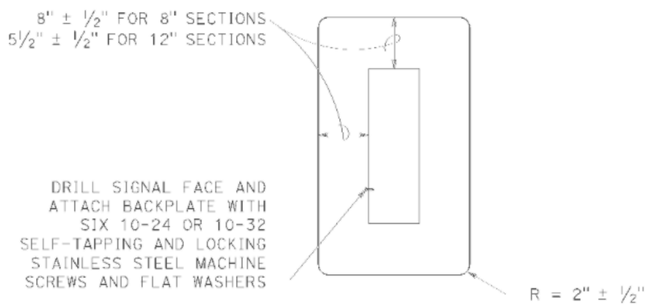

8" AND 12" SECTIONS

BACKPLATE

1/16" minimum thickness
3001-14 aluminum or plastic
when specified

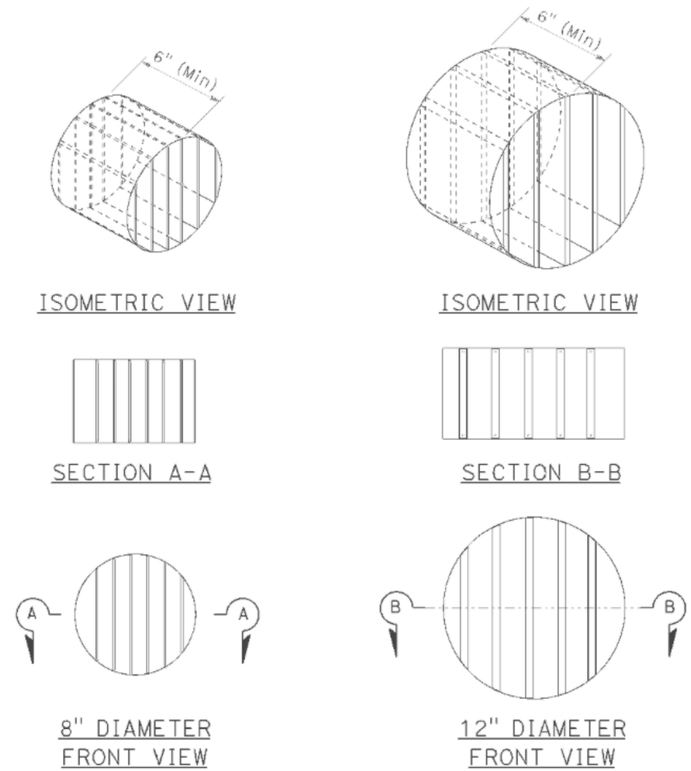

DIRECTIONAL LOUVER

Directional louvers shall be oriented as directed by the Engineer and secured in place with one plated brass machine screw and nut.

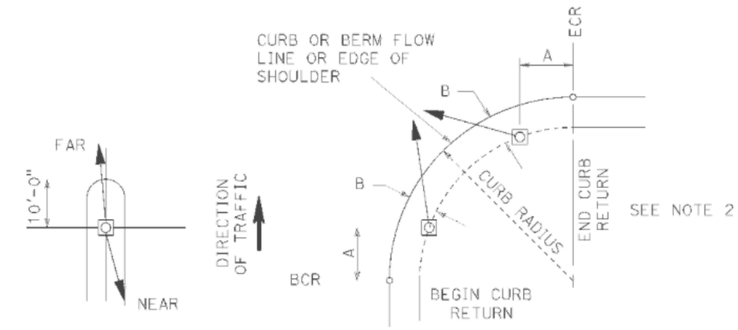

NOTES:

1. Typical signal pole placement unless dimensioned on plans.
2. For A and B dimensions, see Pole Schedule, or as directed by the Engineer.

SIGNAL STANDARD PLACEMENT DIMENSIONS AND EQUIPMENT LOCATIONS

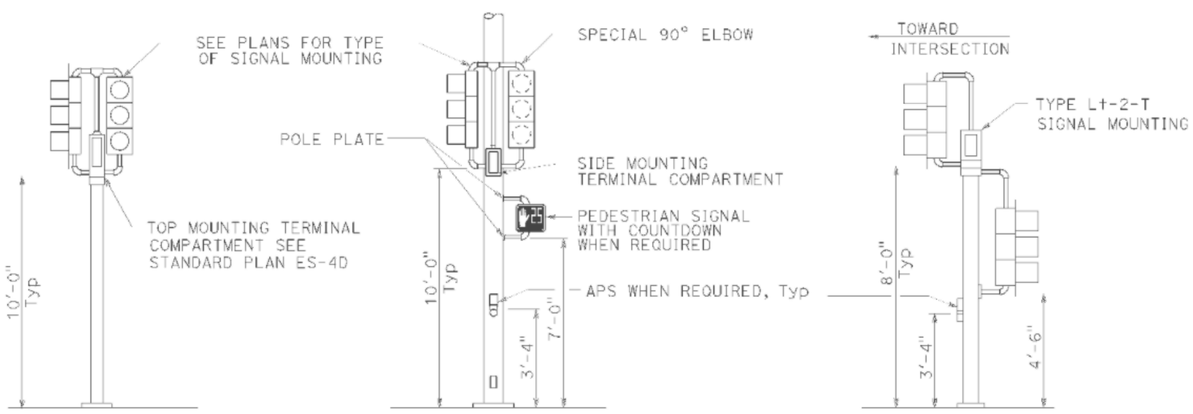

TOP MOUNTED SIGNALS (TV)

Type 1-A, 1-B, 1-C and 1-D standard as indicated on the plans

SIDE MOUNTED SIGNALS (SV AND SP)

Normally used on standards with luminaire or signal mast arm

LEFT TURN LANE SIGNAL

Type 1-A, 1-B, 1-C and 1-D standard as indicated on plans

TYPICAL SIGNAL INSTALLATIONS

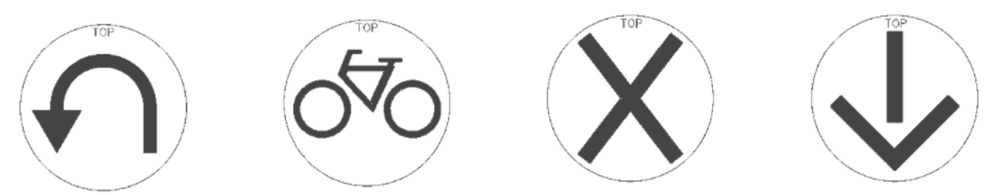

U-TURN

BICYCLE

LANE CONTROL

LANE CONTROL

SIGNAL FACES

STATE OF CALIFORNIA
DEPARTMENT OF TRANSPORTATION

ELECTRICAL SYSTEMS (VEHICULAR SIGNAL HEADS AND MOUNTINGS)

NO SCALE

RSP ES-4C DATED JULY 19, 2013 SUPERSEDES STANDARD PLAN ES-04C DATED MAY 20, 2011 - PAGE 445 OF THE STANDARD PLANS BOOK DATED 2010.

REVISED STANDARD PLAN RSP ES-4C

2010 REVISED STANDARD PLAN RSP ES-4C

DATE PLOTTED => 02-APR-2015
TIME PLOTTED => 11:44

Dist	COUNTY	ROUTE	POST MILES TOTAL PROJECT	SHEET No.	TOTAL SHEETS
02	Sha	273	15.0/15.8	47	51

Theresa Gabriel
REGISTERED ELECTRICAL ENGINEER

July 19, 2013
PLANS APPROVAL DATE

REGISTERED PROFESSIONAL ENGINEER
Theresa Aziz Gabriel
No. E15129
Exp. 6-30-14
ELECTRICAL
STATE OF CALIFORNIA

THE STATE OF CALIFORNIA OR ITS OFFICERS OR AGENTS SHALL NOT BE RESPONSIBLE FOR THE ACCURACY OR COMPLETENESS OF SCANNED COPIES OF THIS PLAN SHEET.

TO ACCOMPANY PLANS DATED 04-02-15

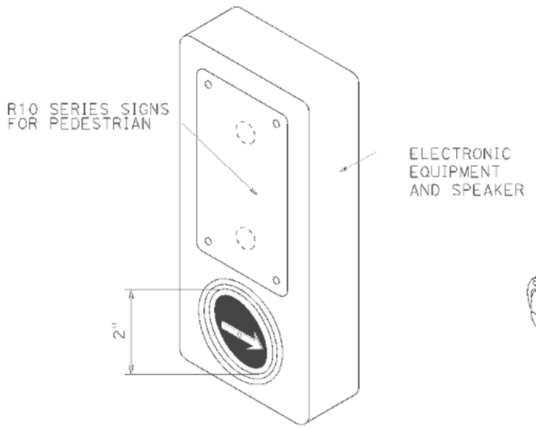

ACCESSIBLE PEDESTRIAN SIGNAL

DETAIL A
(See note 1 to 4)

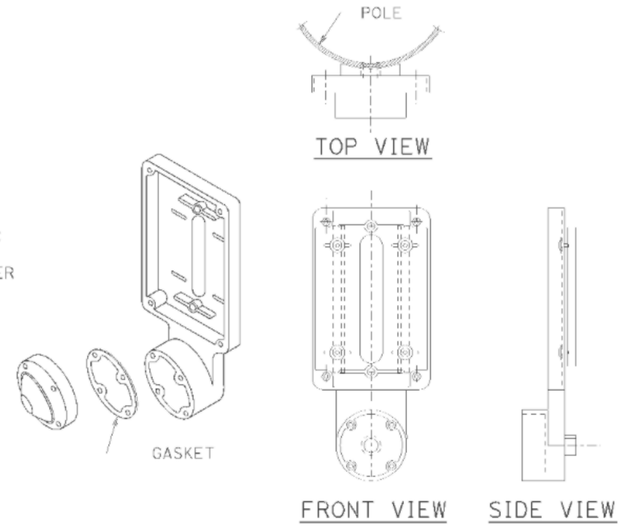

TYPE B PUSH BUTTON ASSEMBLY

DETAIL B
(See note 1 to 4)

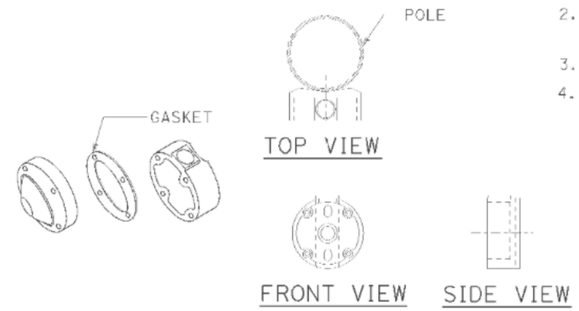

TYPE C PUSH BUTTON ASSEMBLY

DETAIL C
(See note 1 to 4)

NOTES:

1. Back casting shape to fit curvature of pole.
2. Provide cover fitting for top of post, when PBA is mounted on push button assembly post.
3. Install push button on crosswalk side of standard.
4. Use R10 series regulatory signs and plaques for pedestrian and bicycle facilities.

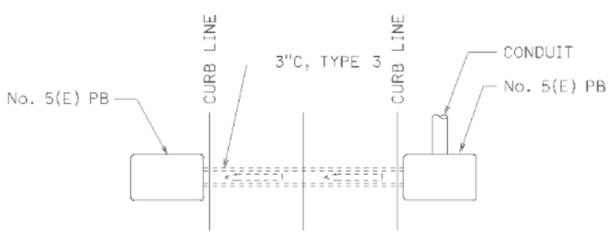

PLAN

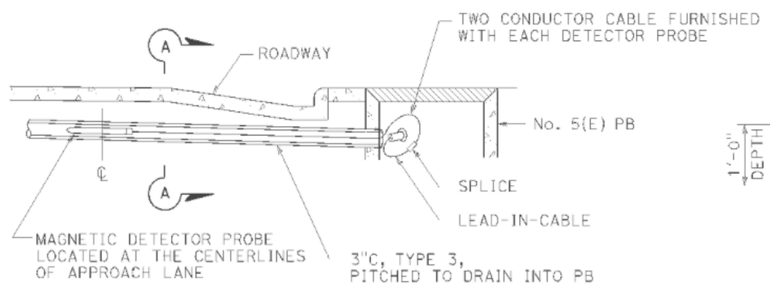

ELEVATION

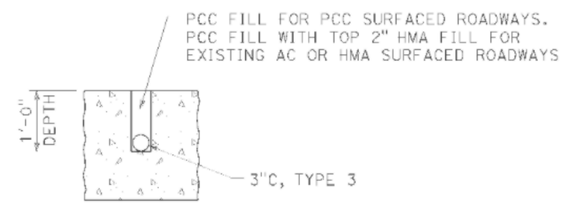

SECTION A-A

MAGNETIC VEHICLE DETECTOR

INSTALLATION DETAILS

DETAIL D

STATE OF CALIFORNIA
DEPARTMENT OF TRANSPORTATION

ELECTRICAL SYSTEMS (ACCESSIBLE PEDESTRIAN SIGNAL, PUSH BUTTON ASSEMBLIES AND MAGNETIC VEHICLE DETECTOR)

NO SCALE

RSP ES-5C DATED JULY 19, 2013 SUPERSEDES STANDARD PLAN ES-5C DATED MAY 20, 2011 - PAGE 450 OF THE STANDARD PLANS BOOK DATED 2010.

REVISED STANDARD PLAN RSP ES-5C

2010 REVISED STANDARD PLAN RSP ES-5C

DATE PLOTTED => 02-APR-2015
TIME PLOTTED => 11:44

District	County	Route	Post Mills Total Project	Sheet No.	Total Sheets
02	Sha	273	15.0/15.8	48	51

REGISTERED CIVIL ENGINEER

July 19, 2013
PLANS APPROVAL DATE

REGISTERED PROFESSIONAL ENGINEER
Stanley P. Johnson
No. C57793
Exp. 3-31-14
CIVIL
STATE OF CALIFORNIA

THE STATE OF CALIFORNIA OR ITS OFFICERS OR AGENTS SHALL NOT BE RESPONSIBLE FOR THE ACCURACY OR COMPLETENESS OF SCANNED COPIES OF THIS PLAN SHEET.

TO ACCOMPANY PLANS DATED 04-02-15

2010 REVISED STANDARD PLAN RSP ES-7A

NOTES:

1. For additional notes, details and data for Type 15TS and Type 21TS Standards, see Standard Plan ES-6A.
2. Handhole shall be located on the downstream side of traffic.

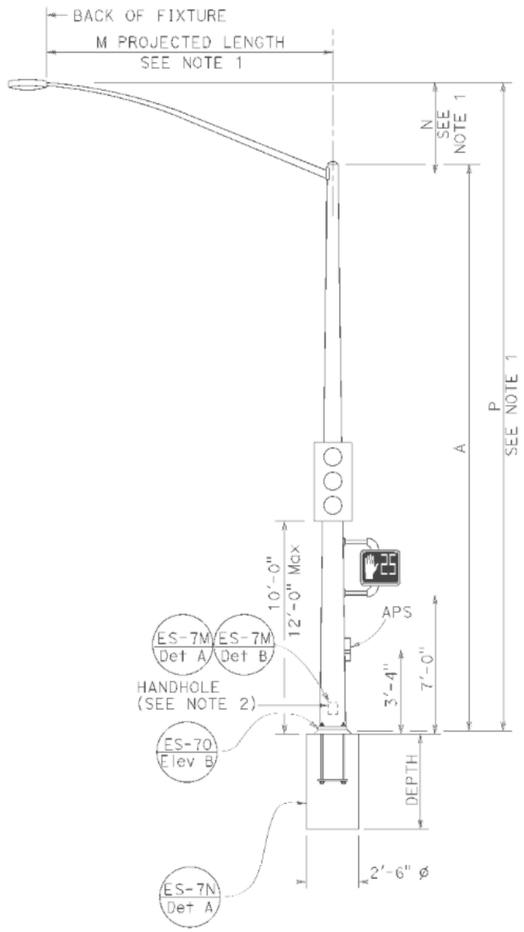

TYPE 15TS AND 21TS STANDARD

ELEVATION A

(See Note 1)

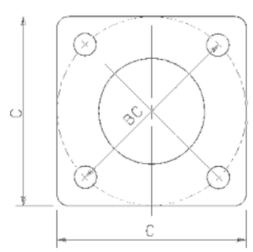

BASE PLATE

TYPE 15TS AND 21TS

DETAIL A

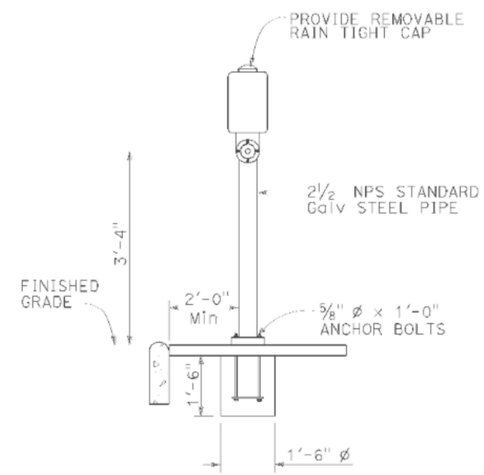

ELEVATION

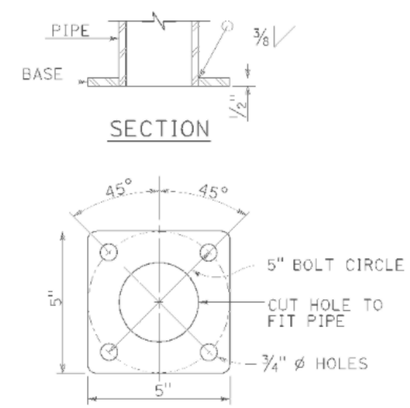

BASE PLATE

PBA POST

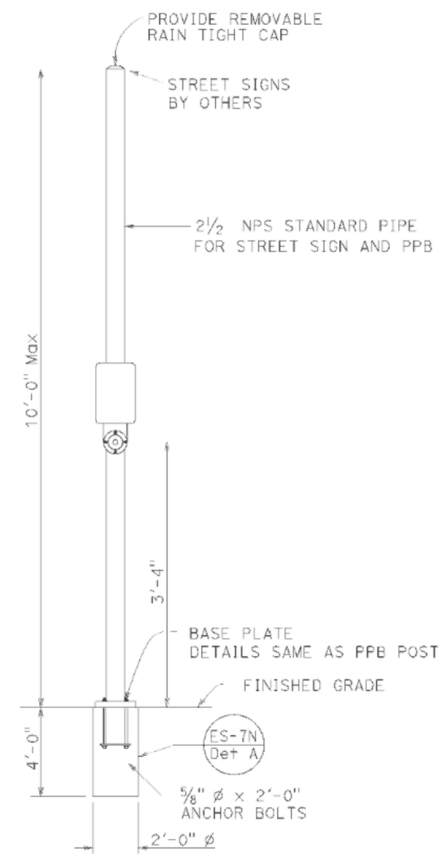

COMBINED STREET SIGN
PUSH BUTTON ASSEMBLY POST

DETAIL C

PUSH BUTTON ASSEMBLY POST

DETAIL B

POLE TYPE	POLE DATA				BASE PLATE DATA				CIDH
	A HEIGHT	Min OD BASE	Min OD TOP	WALL THICKNESS	C	BC = BOLT CIRCLE	THICKNESS	ANCHOR BOLT SIZE	DEPTH
15TS	30'-0"	8"	3 11/16"	0.1793"	1'-1½"	1'-0"	2"	1½" ø x 42"	7'-6"
21TS	35'-0"	9⅜"	3 9/16"		1'-3"	1'-2"			8'-6"

STATE OF CALIFORNIA
DEPARTMENT OF TRANSPORTATION

ELECTRICAL SYSTEMS (SIGNAL AND LIGHTING STANDARD, TYPE TS, AND PUSH BUTTON ASSEMBLY POST)

NO SCALE

RSP ES-7A DATED JULY 19, 2013 SUPERSEDES STANDARD PLAN ES-7A DATED MAY 20, 2011 - PAGE 462 OF THE STANDARD PLANS BOOK DATED 2010.

REVISED STANDARD PLAN RSP ES-7A

DATE PLOTTED => 02-APR-2015
TIME PLOTTED => 11:44

DIST	COUNTY	ROUTE	POST MITTS TOTAL PROJECT	SHEET NO.	TOTAL SHEETS
02	Sha	273	15.0/15.8	49	51

Theresa Gabriel
REGISTERED ELECTRICAL ENGINEER

July 19, 2013
PLANS APPROVAL DATE

REGISTERED PROFESSIONAL ENGINEER Theresa Aziz Gabriel No. E15129 Exp. 6-30-14 ELECTRICAL STATE OF CALIFORNIA

THE STATE OF CALIFORNIA OR ITS OFFICERS OR AGENTS SHALL NOT BE RESPONSIBLE FOR THE ACCURACY OR COMPLETENESS OF SCANNED COPIES OF THIS PLAN SHEET.

TO ACCOMPANY PLANS DATED 04-02-15

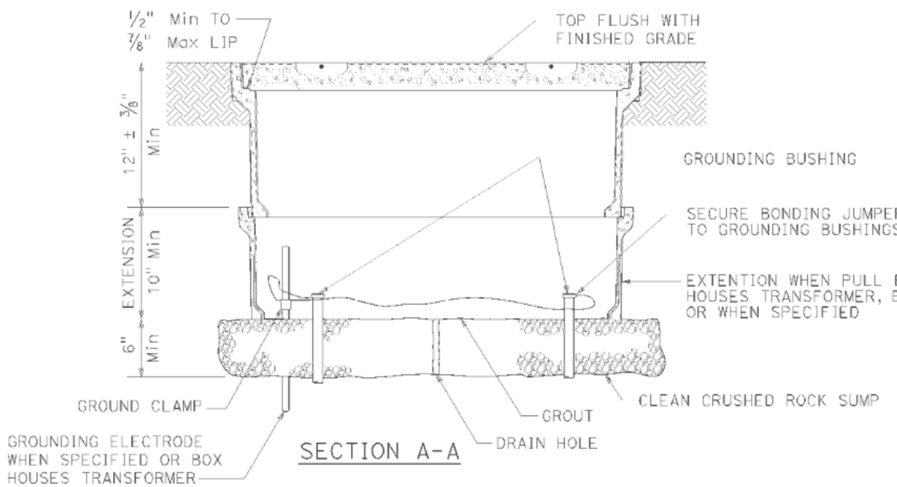

SECTION A-A

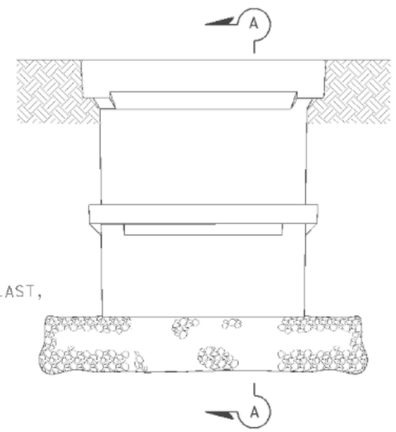

SIDE VIEW

INSTALLATION DETAILS

DETAIL A

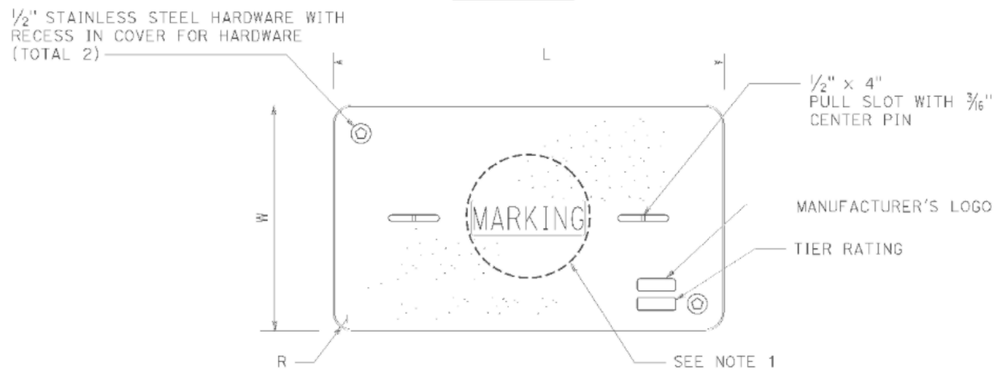

COVER TOP VIEW

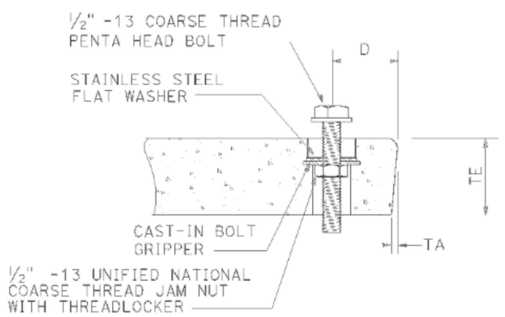

TYPICAL COVER CAPTIVE BOLT

OR SIMILAR

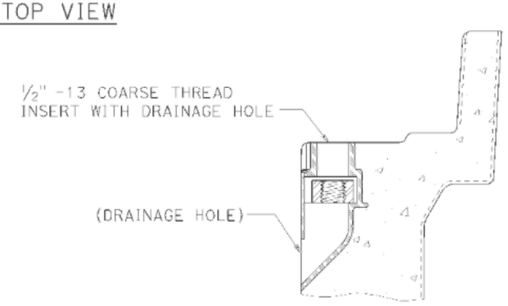

TYPICAL THREADED INSERT

OR SIMILAR

DIMENSION TABLE

PULL BOX	PULL BOX			COVER						
	MINIMUM DEPTH BOX	MINIMUM DEPTH EXTENSION	MAXIMUM WEIGHT	L	W	R	TE	TA	D	MAXIMUM WEIGHT
No. 3½	12"	N/A	40 lb	1' - 3⅜"	10⅛"	1⅜"	2"	⅛"	1¾"	30 lb
No. 5	12"	10"	55 lb	1' - 11¼"	1' - 1¾"	1⅜"	2"	⅛"	1¾"	60 lb
No. 6	12"	10"	70 lb	2' - 6½"	1' - 5½"	1⅜"	2"	⅛"	2"	85 lb

NOTES:

1. Pull box covers shall be marked as follows: "SERVICE" Service circuits between service point and service disconnect; "SPRINKLER-CONTROL" sprinkler control circuits, 50 V or less; "CALTRANS" on all pull boxes, except pull boxes marked "SPRINKLER-CONTROL"; and "TELEPHONE" Telephone service;
   - A) No. 3½ pull box.
     - 1) "SIGNAL" - Traffic signal circuits with or without lighting or sign lighting circuits.
     - 2) "LIGHTING" - Lighting or sign lighting circuits where voltage is under 600 V.
   - B) No. 5, 6, 9 or 9A pull box.
     - 1) "TRAFFIC SIGNAL" - Traffic signal circuits with or without lighting or sign lighting circuits.
     - 2) "LIGHTING" - Lighting or sign lighting circuits where voltage is under 600 V.
     - 3) "LIGHTING-HIGH VOLTAGE" - Lighting or sign lighting circuits where voltage is above 600 V.
     - 4) "IRRIGATION" - Circuits to irrigation controller 120 V or more.
     - 5) "RAMP METER" - Ramp meter circuits.
     - 6) "COUNT STATION" - Count or speed monitor circuits.
     - 7) "COMMUNICATIONS" - Communication circuits.
     - 8) "TOS COMMUNICATIONS" - TOS communication line.
     - 9) "TOS POWER" - TOS power.
     - 10) "TDC POWER" - Telephone demarcation cabinet power.
     - 11) "CCTV" - Closed circuit television circuits.
     - 12) "TMS" - Traffic monitoring station circuits.
     - 13) "CMS" - Changeable message sign circuits.
     - 14) "HAR" - Highway advisory radio circuits.
     - 15) "BOOSTER PUMP" - Booster pump circuit.
2. The nominal dimensions of the opening in which the cover sets shall be the same as the cover dimensions except the length and width dimensions shall be ⅛" greater.
3. Covers and boxes shall be interchangeable with California standard male and female gages. When interchanged with a standard male or female gage, the top surfaces shall be flush within ⅛". Top outside radius of covers and pull boxes shall have a ⅛" radius.
4. Pull box extension may be another pull box as long as the bottom edge of the pull box can fit into the cover opening.
5. All dimensions for the cover for non-traffic pull box are nominal values.

STATE OF CALIFORNIA
DEPARTMENT OF TRANSPORTATION

ELECTRICAL SYSTEMS (NON-TRAFFIC PULL BOX)

NO SCALE

RSP ES-8A DATED JULY 19, 2013 SUPERSEDES RSP ES-8A DATED JANUARY 20, 2012 THAT SUPPLEMENTS THE STANDARD PLANS BOOK DATED 2010.

REVISED STANDARD PLAN RSP ES-8A

2010 REVISED STANDARD PLAN RSP ES-8A

DATE PLOTTED => 02-APR-2015
TIME PLOTTED => 11:44

Dist	COUNTY	ROUTE	POST MITTS TOTAL PROJECT	SHEET No.	TOTAL SHEETS
02	Sha	273	15.0/15.8	50	51

Theresa Gabriel
REGISTERED ELECTRICAL ENGINEER

July 19, 2013
PLANS APPROVAL DATE

Theresa Aziz Gabriel No. E15129 Exp. 6-30-14 ELECTRICAL — REGISTERED PROFESSIONAL ENGINEER — STATE OF CALIFORNIA

THE STATE OF CALIFORNIA OR ITS OFFICERS OR AGENTS SHALL NOT BE RESPONSIBLE FOR THE ACCURACY OR COMPLETENESS OF SCANNED COPIES OF THIS PLAN SHEET.

TO ACCOMPANY PLANS DATED 04-02-15

ISOFOOTCANDLE CURVE - MINIMUM

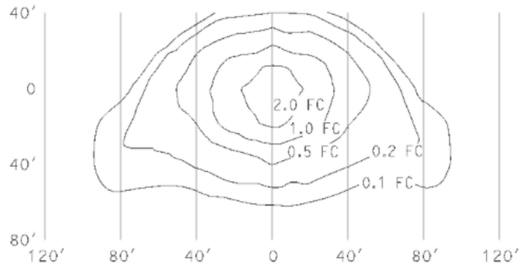

TYPE III MEDIUM CUTOFF

Cutoff Luminaire
34′ Mounting Height
Lamp operated at 22,000 lm
200-W high pressure sodium lamp
ANSI Designation S66

ISOFOOTCANDLE CURVE - MINIMUM

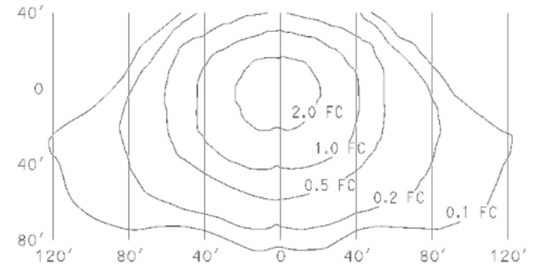

TYPE III MEDIUM CUTOFF

Cutoff Luminaire
40′ Mounting Height
Lamp operated at 37,000 lm
310-W high pressure sodium lamp
ANSI Designation S67

ISOFOOTCANDLE CURVE - MINIMUM

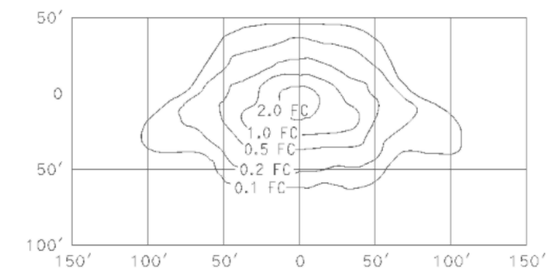

TYPE III MEDIUM CUTOFF

Cutoff Luminaire
30′ Mounting Height
Lamp operated at 16,000 lm
150-W high pressure sodium lamp
ANSI Designation S55

ISOFOOTCANDLE CURVE - MINIMUM

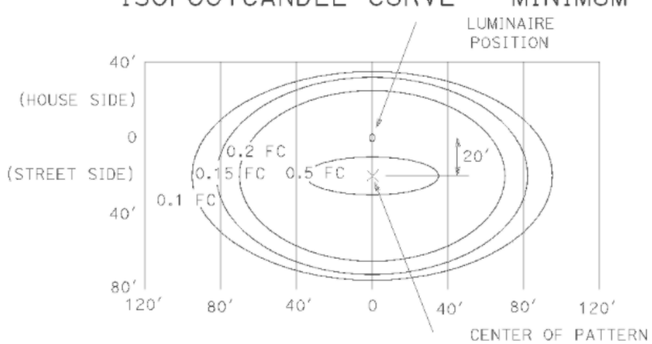

LED LUMINAIRE ROADWAY 1

165-W at 34′ Mounting Height

ISOFOOTCANDLE CURVE - MINIMUM

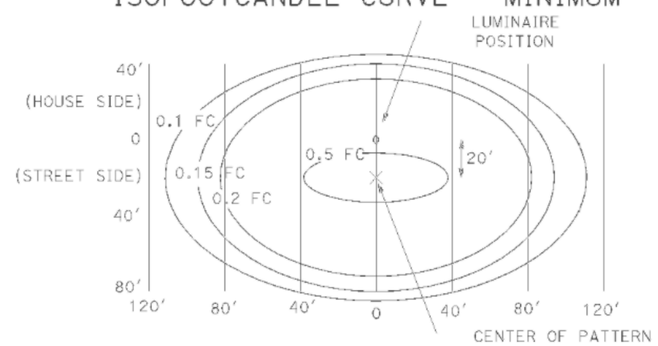

LED LUMINAIRE ROADWAY 2

235-W at 40′ Mounting Height

ISOFOOTCANDLE CURVE - MINIMUM

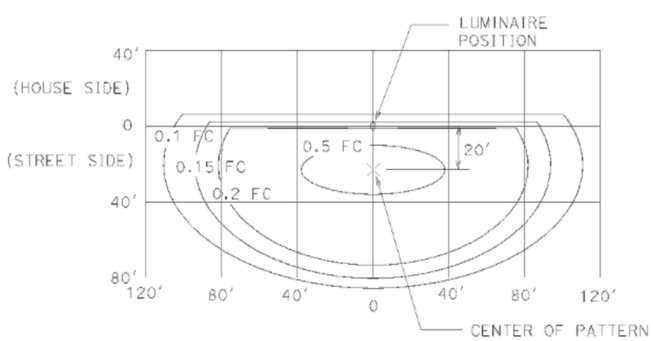

LED LUMINAIRE ROADWAY 3

235-W at 40′ Mounting Height
with back side control

ISOFOOTCANDLE CURVE - MINIMUM

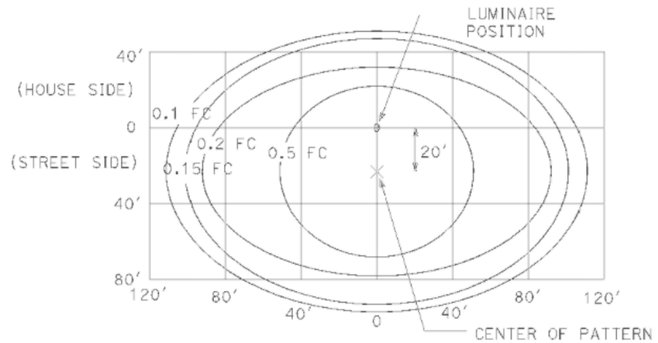

LED LUMINAIRE ROADWAY 4

300-W at 40′ Mounting Height

ISOFOOTCANDLE CURVE - MINIMUM

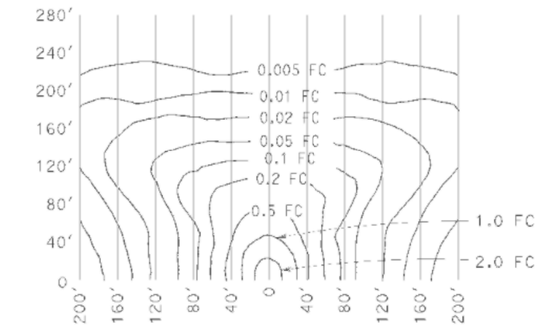

LOW PRESSURE SODIUM LUMINAIRE

40′ Mounting Height
Lamp operated at 33,000 lm
180-W low pressure sodium lamp

STATE OF CALIFORNIA
DEPARTMENT OF TRANSPORTATION

ELECTRICAL SYSTEMS (ISOFOOTCANDLE DIAGRAMS)

NO SCALE

RSP ES-10A DATED JULY 19, 2013 SUPERSEDES RSP ES-10A DATED JULY 20, 2012 THAT SUPPLEMENTS THE STANDARD PLANS BOOK DATED 2010.

REVISED STANDARD PLAN RSP ES-10A

2010 REVISED STANDARD PLAN RSP ES-10A

DATE PLOTTED => 02-APR-2015
TIME PLOTTED => 11:45

Dist	COUNTY	ROUTE	POST MILES TOTAL PROJECT	SHEET No.	TOTAL SHEETS
02	Sha	273	15.0/15.8	51	51

REGISTERED CIVIL ENGINEER

July 19, 2013
PLANS APPROVAL DATE

REGISTERED PROFESSIONAL ENGINEER Stanley P. Johnson No. C57793 Exp. 3-31-14 CIVIL STATE OF CALIFORNIA

THE STATE OF CALIFORNIA OR ITS OFFICERS OR AGENTS SHALL NOT BE RESPONSIBLE FOR THE ACCURACY OR COMPLETENESS OF SCANNED COPIES OF THIS PLAN SHEET.

TO ACCOMPANY PLANS DATED 04-02-15

STANDARD TYPE	SETBACK (DIMENSION A)
32	30'-0" (Min)
31	20'-0" (Min)
15, 15D, 15-SB, 21, 21D, 30	ARM LENGTH (Min)

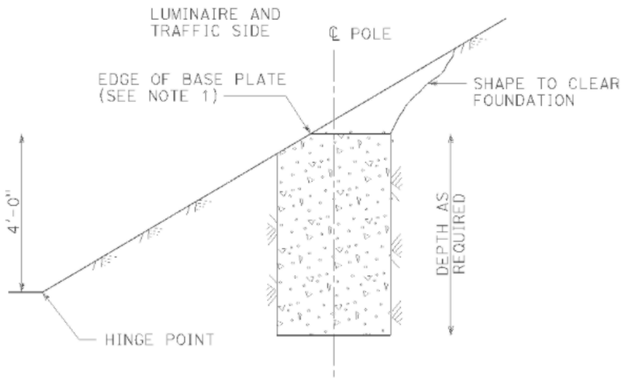

CUT SLOPES
STEEPER THAN 4:1,
LESS THAN 2:1
DETAIL A-1
See Note 2 and 3

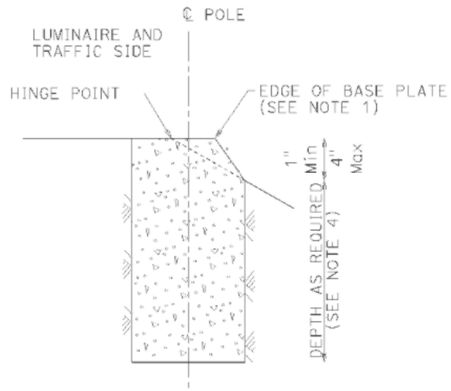

FILL SLOPES
STEEPER THAN 4:1,
LESS THAN 2:1
DETAIL A-2
See Note 2 and 3

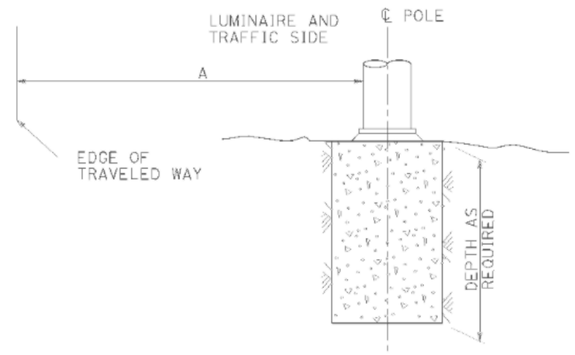

FLAT SECTIONS, CUT OR FILL SLOPES
4:1 OR FLATTER
DETAIL A-3
See Note 2

FOUNDATIONS ADJACENT TO ALL ROADWAYS EXCEPT
IN SIDEWALK, MEDIAN AND ISLAND AREAS
DETAIL A

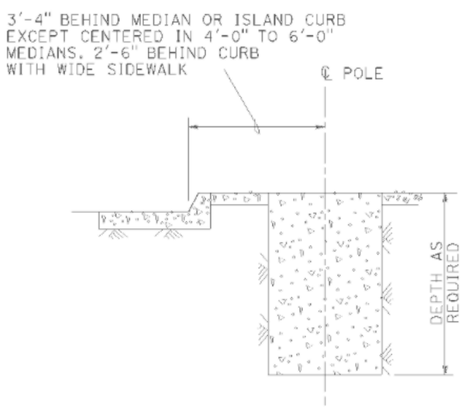

MEDIAN, ISLAND
OR WIDE SIDEWALK
DETAIL B-1
7' Wide and wider

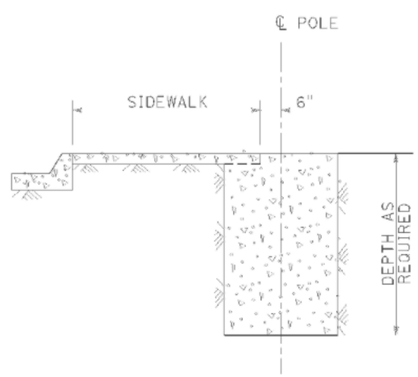

NARROW SIDEWALK
DETAIL B-2
Less than 7' wide

FOUNDATIONS IN SIDEWALK, MEDIAN AND ISLAND AREAS
DETAIL B

NOTES:

1. Where a portion of the foundation is above grade, the top edges shall have a 1" chamfer.
2. Slopes shall be horizontal to vertical ratio (Horizontal : Vertical).
3. Horizontal setbacks on cut and fill slopes steeper than 4:1 shall not exceed the distance shown for flat sections.
4. CIDH embedment depth shall be increased beyond standard depths by the diameter of the CIDH.

STATE OF CALIFORNIA
DEPARTMENT OF TRANSPORTATION

ELECTRICAL SYSTEMS (FOUNDATION INSTALLATIONS)

NO SCALE

RSP ES-11 DATED JULY 19, 2013 SUPERSEDES STANDARD PLAN ES-11
DATED MAY 20, 2011 - PAGE 488 OF THE STANDARD PLANS BOOK DATED 2010.

REVISED STANDARD PLAN RSP ES-11

2010 REVISED STANDARD PLAN RSP ES-11

DATE PLOTTED => 02-APR-2015
TIME PLOTTED => 11:45