| Dist | COUNTY | ROUTE | POST MILES TOTAL PROJECT | SHEET No. | TOTAL SHEETS |
|---|---|---|---|---|---|
| 02 | Tri | 299 | 12.3/12.9 | 2 | 149 |

REGISTERED CIVIL ENGINEER 03-26-14 DATE

03-26-14
PLANS APPROVAL DATE

REGISTERED PROFESSIONAL ENGINEER KEN HALLIS No. C38203 Exp. 3-31-15 CIVIL STATE OF CALIFORNIA

*THE STATE OF CALIFORNIA OR ITS OFFICERS OR AGENTS SHALL NOT BE RESPONSIBLE FOR THE ACCURACY OR COMPLETENESS OF SCANNED COPIES OF THIS PLAN SHEET.*

## NOTES:

1. DIMENSIONS OF THE PAVEMENT STRUCTURES (STRUCTURAL SECTIONS) ARE SUBJECT TO TOLERANCES SPECIFIED IN THE STANDARD SPECIFICATIONS.
2. SUPERELEVATIONS AS SHOWN OR AS DETERMINED BY THE ENGINEER.

## LEGEND:

EBS EDGE BARRIER SLAB
EV EDGE VIADUCT BRIDGE
VC(MC) VEGETATION CONTROL (MINOR CONCRTETE)

## DESIGN DESIGNATION:

2009 DIR. SPLIT 55% TRUCKS 15%
2013 ADT 2750
2023 ADT 3100 DHV 400
2033 ADT 3500 DHV 450
CLIMATE REGION- LOW MOUNTAIN

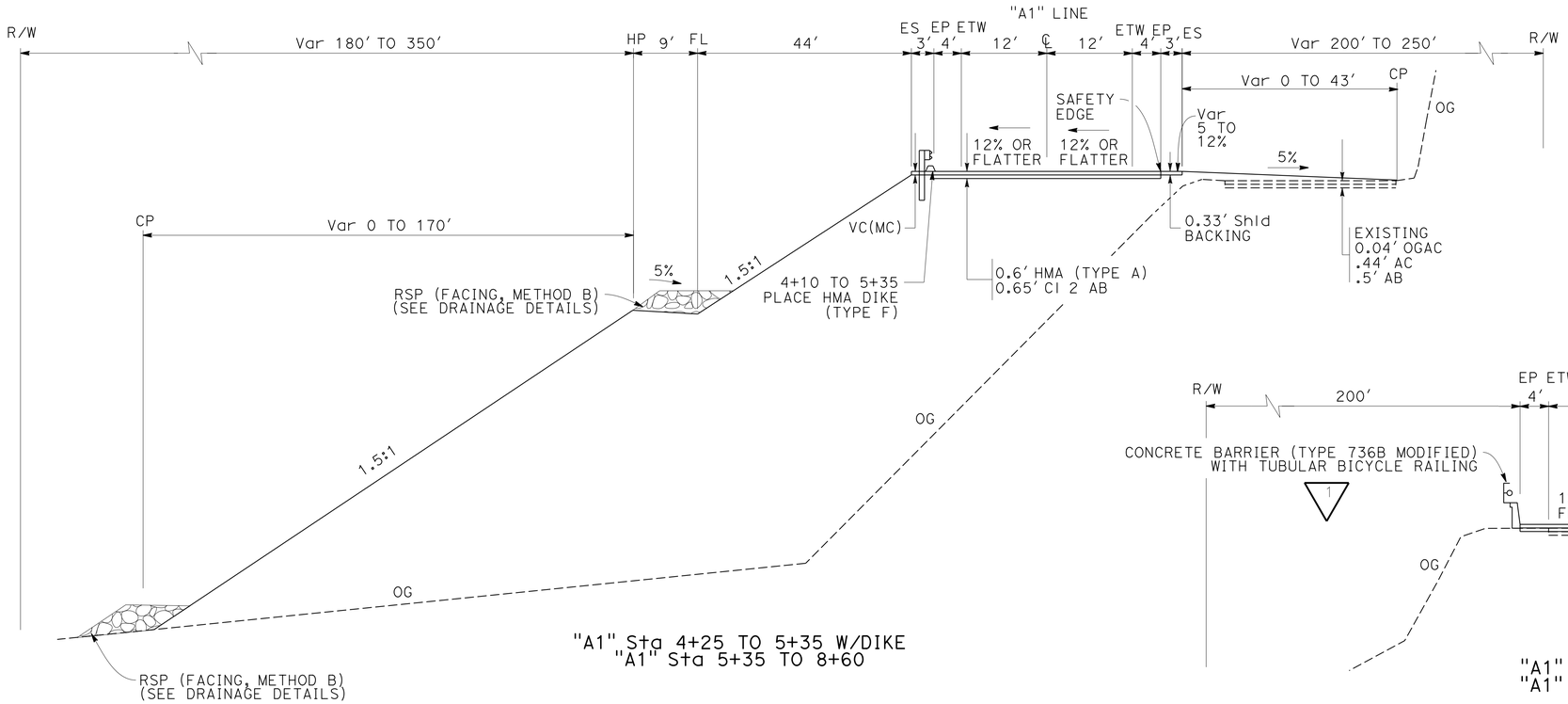


"A1" Sta 4+25 TO 5+35 W/DIKE
"A1" Sta 5+35 TO 8+60

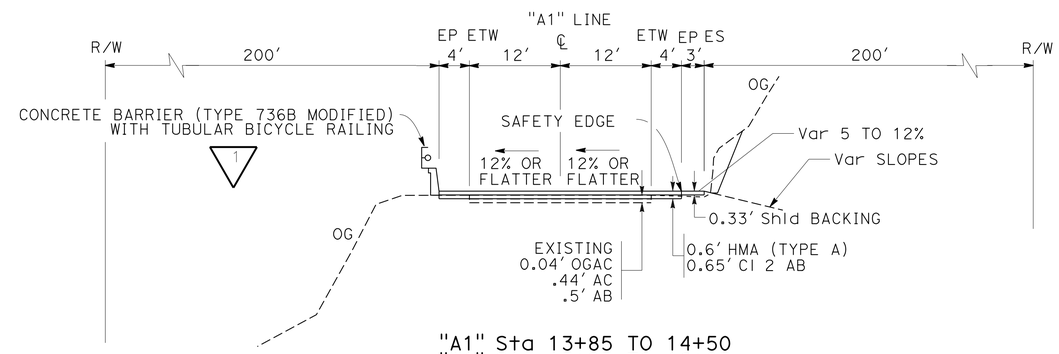


"A1" Sta 13+85 TO 14+50
"A1" Sta 15+25 TO 16+05

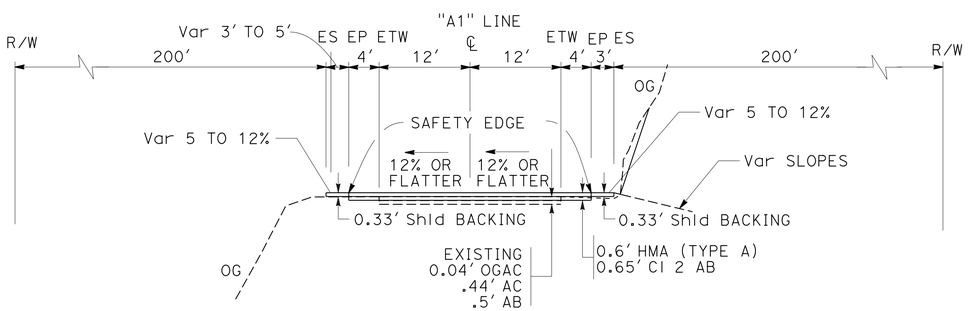


"A1" Sta 2+00 TO 4+25
"A1" Sta 17+83 TO 19+53.9

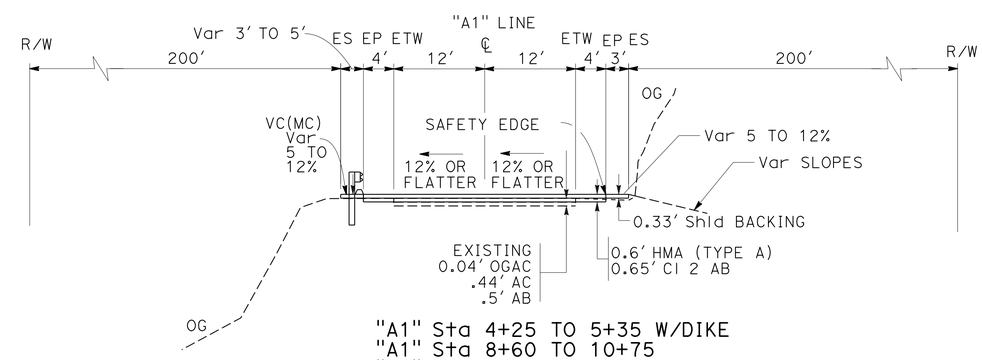


"A1" Sta 4+25 TO 5+35 W/DIKE
"A1" Sta 8+60 TO 10+75
"A1" Sta 17+00 TO 17+83.2
"A1" Sta 19+53.9 TO 20+70
"A1" Sta 21+95 TO 25+00
"A1" Sta 25+00 TO 29+27 W/DIKE
"A1" Sta 29+27 TO 31+00

**1 REVISED PER ADDENDUM No. 1 DATED JULY 18, 2014**

**ROUTE 299**

# TYPICAL CROSS SECTIONS

NO SCALE

**X-1**

STATE OF CALIFORNIA - DEPARTMENT OF TRANSPORTATION
Caltrans® **DESIGN**

FUNCTIONAL SUPERVISOR: AL TRUJILLO
CALCULATED-DESIGNED BY: RYAN PRINS
CHECKED BY: KEN HALLIS
REVISED BY / DATE REVISED

P:\proj1\02\3E790_plans\contract_plans\addenda 07-11-14\23e790ca001.dgn

LAST REVISION 03-26-14
DATE PLOTTED => 15-JUL-2014
TIME PLOTTED => 13:18

BORDER LAST REVISED 7/2/2010
USERNAME => s115152
DGN FILE => 23e790ca001.dgn
RELATIVE BORDER SCALE IS IN INCHES 0 1 2 3
UNIT 0316
PROJECT NUMBER & PHASE 02-0002-0151-1
EA: 02-3E7901

| Dist | COUNTY | ROUTE | POST MILES TOTAL PROJECT | SHEET No. | TOTAL SHEETS |
|---|---|---|---|---|---|
| 02 | Tri | 299 | 12.3/12.9 | 4 | 149 |

REGISTERED CIVIL ENGINEER 03-26-14 DATE

03-26-14
PLANS APPROVAL DATE

REGISTERED PROFESSIONAL ENGINEER KEN HALLIS No. C38203 Exp. 3-31-15 CIVIL STATE OF CALIFORNIA

*THE STATE OF CALIFORNIA OR ITS OFFICERS OR AGENTS SHALL NOT BE RESPONSIBLE FOR THE ACCURACY OR COMPLETENESS OF SCANNED COPIES OF THIS PLAN SHEET.*

## NOTES:

1. FOR ACCURATE RIGHT OF WAY DATA, CONTACT RIGHT OF WAY ENGINEERING AT THE DISTRICT OFFICE.
2. STAIN ALL GALVANIZED SURFACES.

## ABBREVIATIONS;

| | |
|---|---|
| CPACP | COLD PLANE ASPHALT CONCRETE PAVMENT |
| AITS | ALTERNATIVE IN-LINE TERMINAL SYSTEM |
| ERS(RC) | EARTH RETAINING SYSTEM (RAILING COMPONENTS) |
| EAA | END ANCHOR ASSEMBLY |
| IAA | INTERMEDIATE ANCHOR ASSEMBLY |
| VC(MC) | VEGETATION CONTROL (MINOR CONCRETE) |

## LEGEND:

SIDEHILL VIADUCT BRIDGE

BARRIER SLAB

CPACP

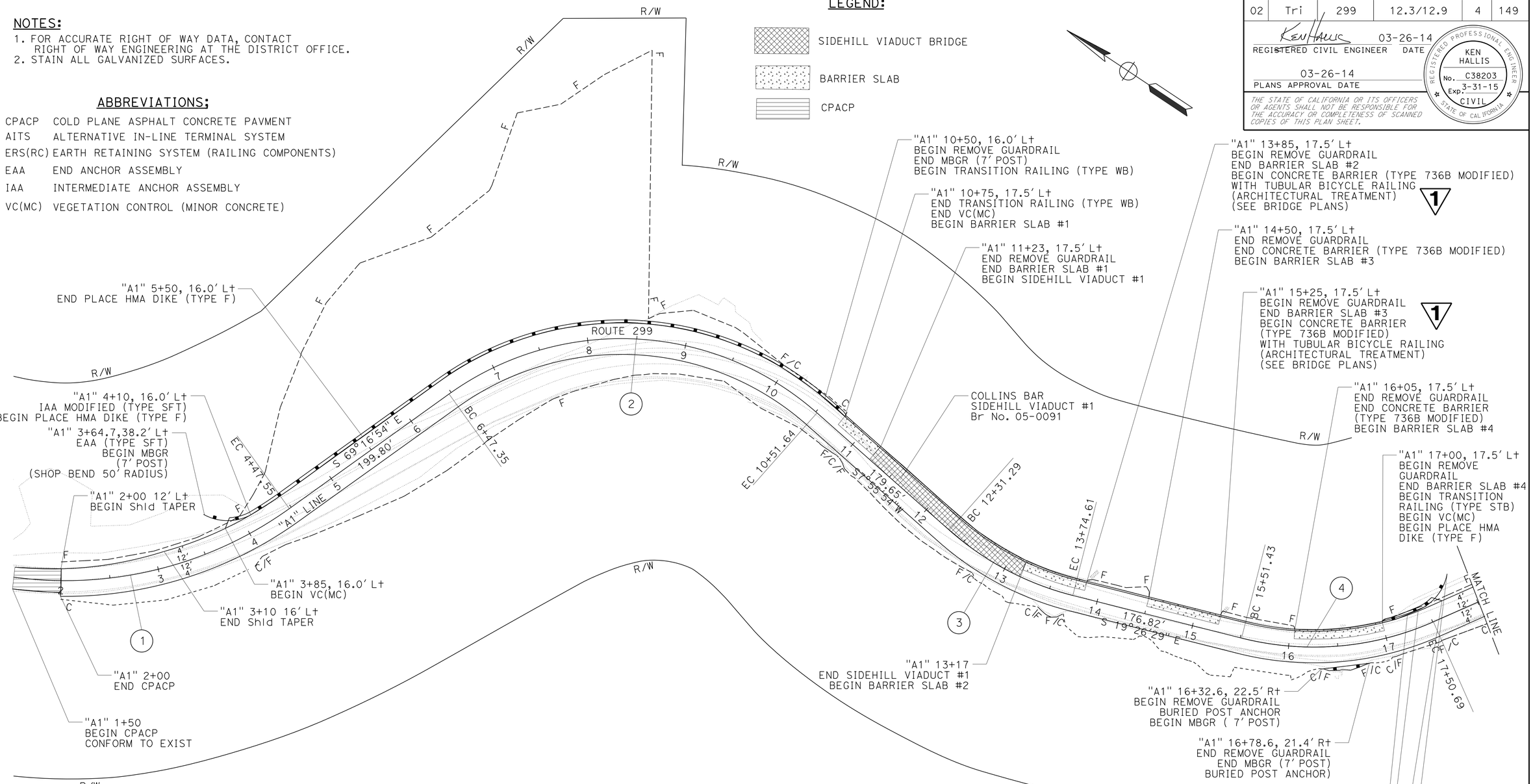


### CURVE DATA

| No. ⊕ | R | Δ | T | L |
|---|---|---|---|---|
| 1 | 390' | 59°55'27" | 224.82' | 407.89' |
| 2 | 300' | 77°12'48" | 239.54' | 404.29' |
| 3 | 300' | 27°22'23" | 73.06' | 143.32' |
| 4 | 300' | 38°3'18" | 103.46' | 199.26' |

**1 REVISED PER ADDENDUM No. 1 DATED JULY 18, 2014**

# LAYOUT

SCALE: 1" = 50'

**L-1**

REVISED BY | DATE REVISED
RYAN PRINS | KEN HALLIS
CALCULATED-DESIGNED BY | CHECKED BY
FUNCTIONAL SUPERVISOR
AL TRUJILLO

STATE OF CALIFORNIA - DEPARTMENT OF TRANSPORTATION
Caltrans
DESIGN

P:\proj1\02\3E790_plans\contract_plans\addenda 07-11-14\23e790ea001.dgn

LAST REVISION 03-26-14 | DATE PLOTTED => 15-JUL-2014 | TIME PLOTTED => 13:18

BORDER LAST REVISED 7/2/2010 | USERNAME => s115152 | DGN FILE => 23e790ea001.dgn | RELATIVE BORDER SCALE IS IN INCHES 0 1 2 3 | UNIT 0316 | PROJECT NUMBER & PHASE 02-0002-0151-1 | EA: 02-3E7901