Dist	COUNTY	ROUTE	POST MILES TOTAL PROJECT	SHEET No.	TOTAL SHEETS
02	Mod	299	35.7/36.2	1	28

STATE OF CALIFORNIA

DEPARTMENT OF TRANSPORTATION

ACHSNH-P299(174)E

PROJECT PLANS FOR CONSTRUCTION ON

STATE HIGHWAY

IN MODOC COUNTY NEAR ALTURAS FROM 1.4 MILES TO 0.9 MILE WEST OF CROWDER FLAT ROAD

TO BE SUPPLEMENTED BY STANDARD PLANS DATED MAY 2010

INDEX OF PLANS

SHEET No.	DESCRIPTION
1	TITLE AND LOCATION MAP
2	TYPICAL CROSS SECTIONS
3-4	LAYOUTS
5-6	PROFILES AND SUPERELEVATION DIAGRAMS
7	CONSTRUCTION DETAILS
8-10	EROSION CONTROL PLANS AND QUANTITIES
11-20	DRAINAGE PLANS, PROFILES, DETAILS AND QUANTITIES
21	CONSTRUCTION AREA SIGNS
22-25	PAVEMENT DELINEATION PLANS, DETAILS AND QUANTITIES
26	SUMMARY OF QUANTITIES
27-28	REVISED STANDARD PLANS

THE STANDARD PLANS LIST APPLICABLE TO THIS CONTRACT IS INCLUDED IN THE NOTICE TO BIDDERS AND SPECIAL PROVISIONS BOOK.

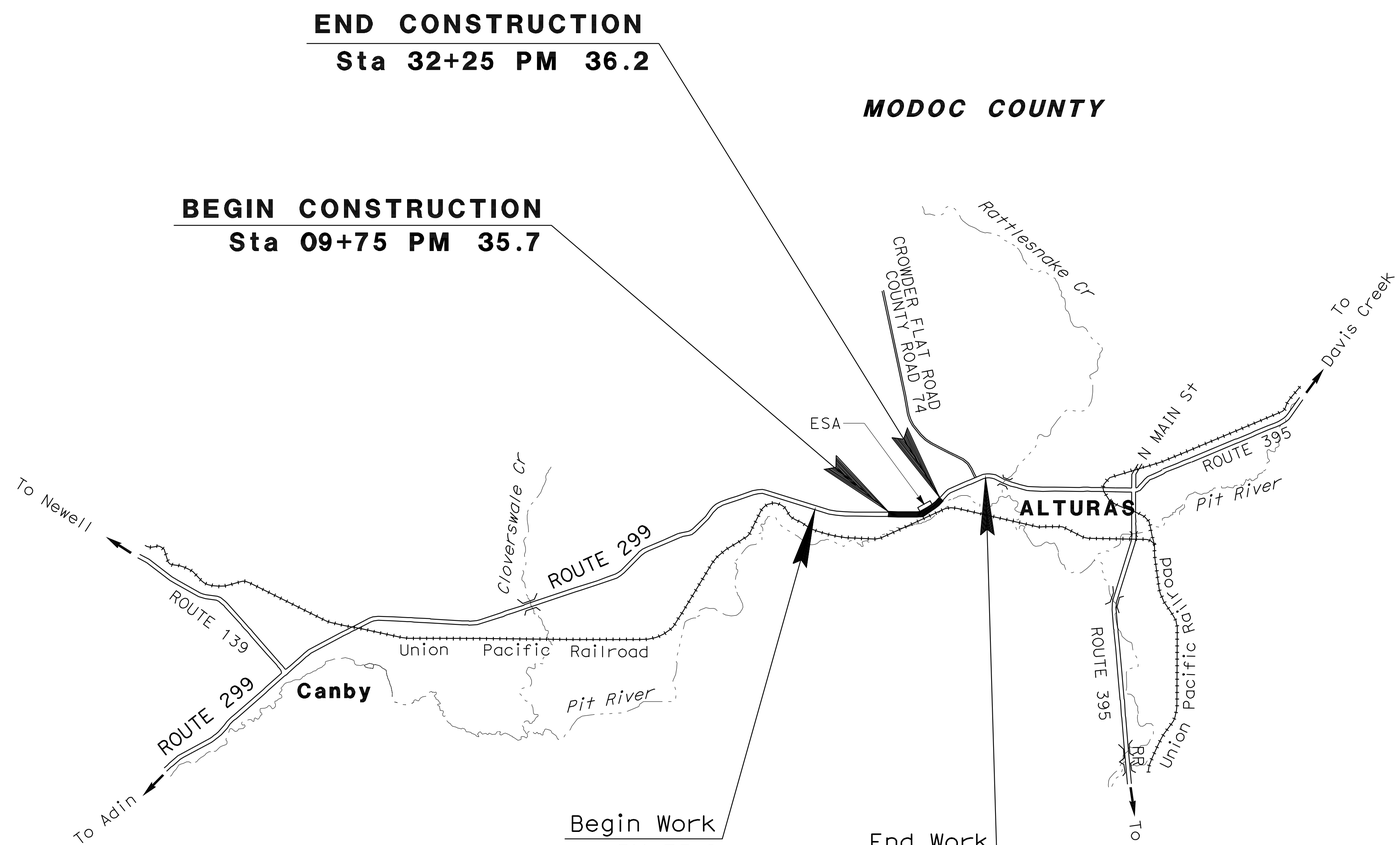

NO SCALE

THE CONTRACTOR SHALL POSSESS THE CLASS (OR CLASSES) OF LICENSE AS SPECIFIED IN THE "NOTICE TO BIDDERS."

Ken Hallis 09-12-12
PROJECT ENGINEER DATE
REGISTERED CIVIL ENGINEER

October 15, 2012
PLANS APPROVAL DATE

REGISTERED PROFESSIONAL ENGINEER KEN HALLIS No. C38203 Exp. 3-31-13 CIVIL STATE OF CALIFORNIA

THE STATE OF CALIFORNIA OR ITS OFFICERS OR AGENTS SHALL NOT BE RESPONSIBLE FOR THE ACCURACY OR COMPLETENESS OF SCANNED COPIES OF THIS PLAN SHEET.

CONTRACT No.	02-3E6904
PROJECT ID	0200020134

PROJECT MANAGER: CHRIS HARVEY
DESIGN ENGINEER: AL TRUJILLO

P:\proj1\02\3E690_plans\pse\23e690ab001.dgn

LAST REVISION 09-12-12
DATE PLOTTED => 07-NOV-2012
TIME PLOTTED => 06:32

Dist	COUNTY	ROUTE	POST MILES TOTAL PROJECT	SHEET No.	TOTAL SHEETS
02	Mod	299	35.7/36.2	2	28

REGISTERED CIVIL ENGINEER — DATE: 09-12-12

PLANS APPROVAL DATE: 10-15-12

REGISTERED PROFESSIONAL ENGINEER — KEN HALLIS — No. C38203 — Exp. 3-31-13 — CIVIL — STATE OF CALIFORNIA

THE STATE OF CALIFORNIA OR ITS OFFICERS OR AGENTS SHALL NOT BE RESPONSIBLE FOR THE ACCURACY OR COMPLETENESS OF SCANNED COPIES OF THIS PLAN SHEET.

NOTES:

1. DIMENSIONS OF THE PAVEMENT STRUCTURES (STRUCTURAL SECTIONS) ARE SUBJECT TO TOLERANCES SPECIFIED IN THE STANDARD SPECIFICATIONS.
2. SUPERELEVATIONS ARE SHOWN ON THE SUPERELEVATION DIAGRAM SHEETS.

DESIGN DESIGNATION

2009 ADT 2700 D=59%
2031 ADT 2788 T=13%
V=65 mph

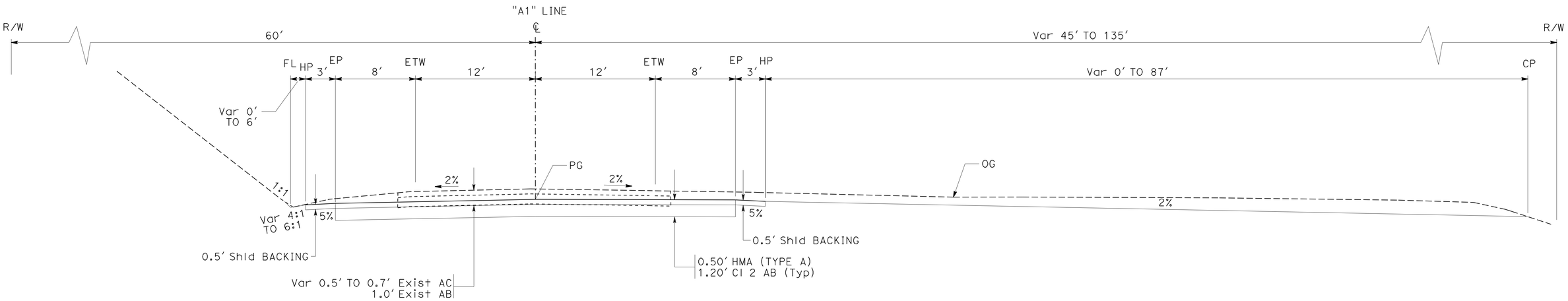

"A1" 15+91 TO 17+50

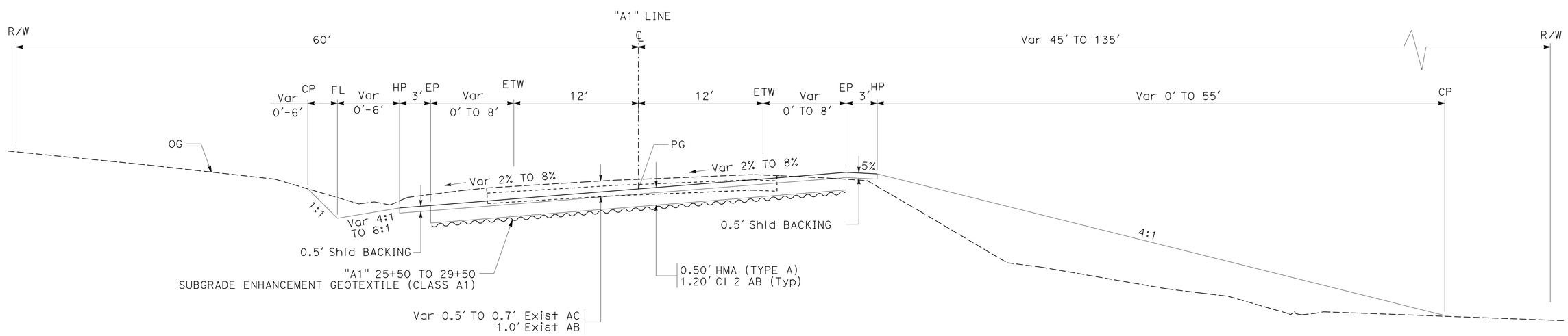

"A1" 10+00 TO 15+91
"A1" 17+50 TO 32+00

TYPICAL CROSS SECTIONS

NO SCALE

ROUTE 299

X-1

REVISED BY | DATE REVISED
ALEX PETERSON | RYAN PRINS
CALCULATED-DESIGNED BY | CHECKED BY
FUNCTIONAL SUPERVISOR: AL TRUJILLO

STATE OF CALIFORNIA - DEPARTMENT OF TRANSPORTATION
Caltrans
DESIGN

P:\proj1\02\3E690_plans\pse\23e690ca001.dgn

LAST REVISION 09-12-12 | DATE PLOTTED => 17-OCT-2012 | TIME PLOTTED => 10:04

BORDER LAST REVISED 7/2/2010 | USERNAME => s109858 | DGN FILE => 23e690ca001.dgn | RELATIVE BORDER SCALE IS IN INCHES 0 1 2 3 | UNIT 0316 | PROJECT NUMBER & PHASE 02000201341

Dist	COUNTY	ROUTE	POST MILES TOTAL PROJECT	SHEET No.	TOTAL SHEETS
02	Mod	299	35.7/36.2	3	28

REGISTERED CIVIL ENGINEER 09-12-12 DATE

10-15-12
PLANS APPROVAL DATE

REGISTERED PROFESSIONAL ENGINEER KEN HALLIS No. C38203 Exp. 3-31-13 CIVIL STATE OF CALIFORNIA

THE STATE OF CALIFORNIA OR ITS OFFICERS OR AGENTS SHALL NOT BE RESPONSIBLE FOR THE ACCURACY OR COMPLETENESS OF SCANNED COPIES OF THIS PLAN SHEET.

NOTES:

1. FOR COMPLETE RIGHT OF WAY DATA, CONTACT RIGHT OF WAY ENGINERING AT DISTRICT OFFICE.
2. PLACE Temp FENCE AND RELOCATE GATE BEFORE REMOVING EXISTING FENCE TO PROTECT LIVESTOCK.

LEGEND:

COLD PLANE ASPHALT CONCRETE PAVEMENT

ESA LIMITS

ABBREVIATIONS:

CPACP COLD PLANE ASPHALT CONCRETE PAVEMENT

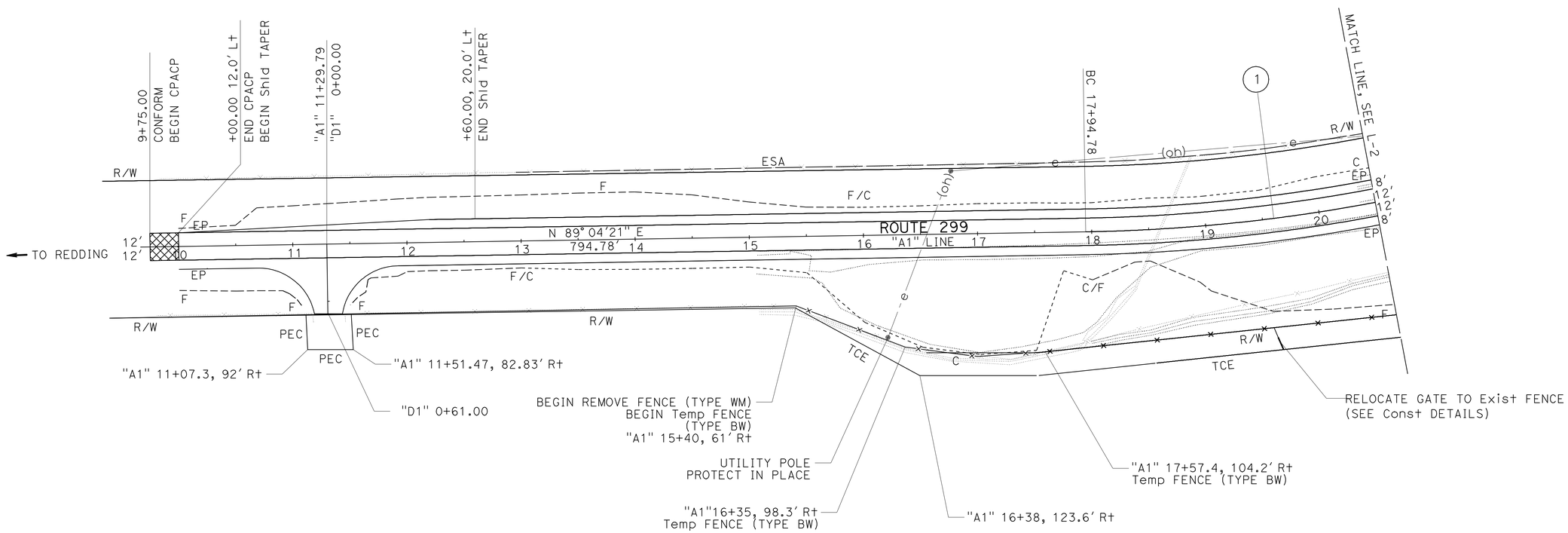

CURVE DATA

No. ⊕	R	Δ	T	L
①	1500'	36°36'42"	496.25'	958.49'

LAYOUT

SCALE: 1" = 50'

L-1

REVISED BY	DATE REVISED

CALCULATED-DESIGNED BY: ALEX PETERSON
CHECKED BY: RYAN PRINS
FUNCTIONAL SUPERVISOR: AL TRUJILLO

STATE OF CALIFORNIA - DEPARTMENT OF TRANSPORTATION
Caltrans DESIGN

P:\proj1\02\3E690_plans\pse\23e690ea001.dgn

LAST REVISION 09-12-12 | DATE PLOTTED => 17-OCT-2012 | TIME PLOTTED => 10:13

Dist	COUNTY	ROUTE	POST MILES TOTAL PROJECT	SHEET No.	TOTAL SHEETS
02	Mod	299	35.7/36.2	4	28

REGISTERED CIVIL ENGINEER DATE 09-12-12

10-15-12
PLANS APPROVAL DATE

REGISTERED PROFESSIONAL ENGINEER KEN HALLIS No. C38203 Exp. 3-31-13 CIVIL STATE OF CALIFORNIA

THE STATE OF CALIFORNIA OR ITS OFFICERS OR AGENTS SHALL NOT BE RESPONSIBLE FOR THE ACCURACY OR COMPLETENESS OF SCANNED COPIES OF THIS PLAN SHEET.

NOTE:

FOR ACCURATE RIGHT OF WAY DATA, CONTACT RIGHT OF WAY ENGINEERING AT THE DISTRICT OFFICE.

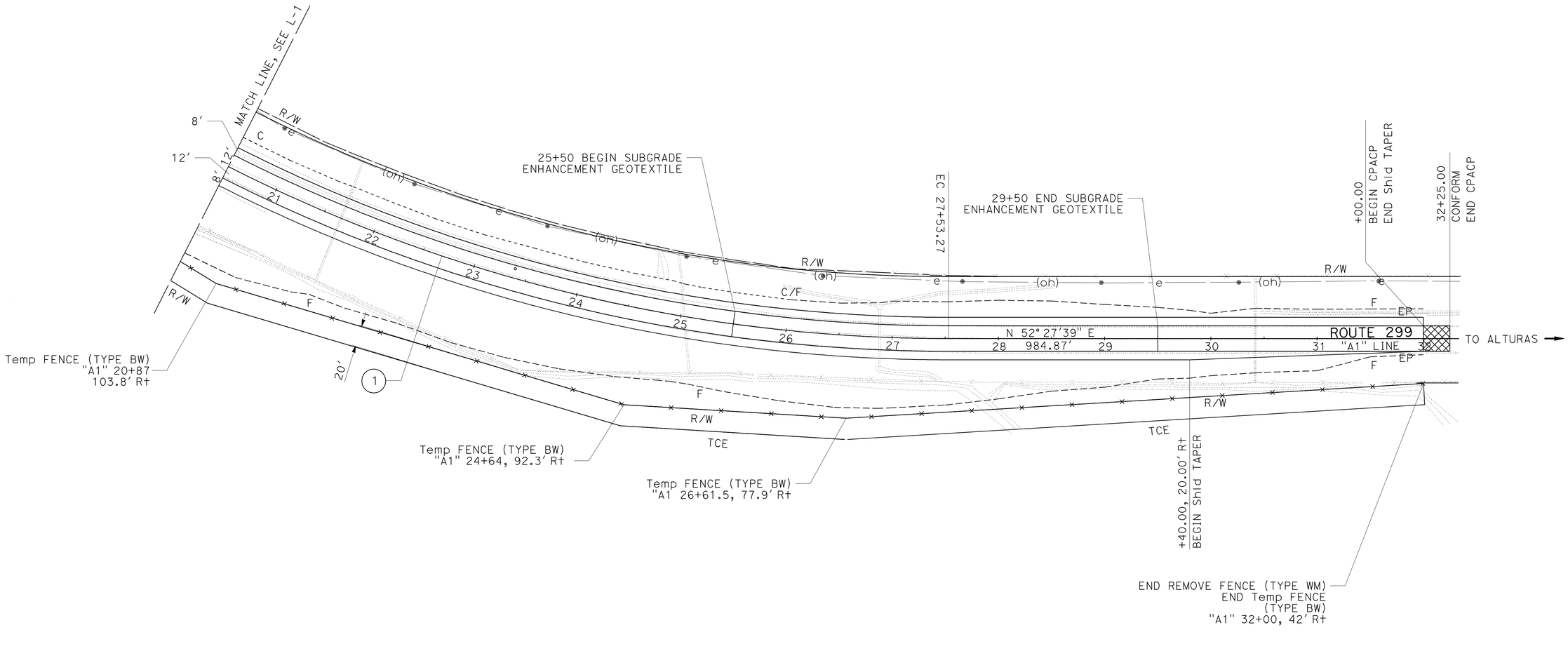

CURVE DATA

No. ⊕	R	Δ	T	L
1	1500'	36°36'42"	496.25'	958.49'

LAYOUT

SCALE: 1" = 50'

L-2

REVISED BY | DATE REVISED

ALEX PETERSON | RYAN PRINS

CALCULATED-DESIGNED BY | CHECKED BY

FUNCTIONAL SUPERVISOR: AL TRUJILLO

STATE OF CALIFORNIA - DEPARTMENT OF TRANSPORTATION

Caltrans® DESIGN

P:\proj\02\3E690_plans\pse\23e690ea002.dgn

LAST REVISION 09-12-12 | DATE PLOTTED => 17-OCT-2012 | TIME PLOTTED => 10:13

BORDER LAST REVISED 7/2/2010 | USERNAME => s114926 | DGN FILE => 23e690ea002.dgn | RELATIVE BORDER SCALE IS IN INCHES 0 1 2 3 | UNIT 0316 | PROJECT NUMBER & PHASE 02000201341

Dist	COUNTY	ROUTE	POST MILES TOTAL PROJECT	SHEET No.	TOTAL SHEETS
02	Mod	299	35.7/36.2	5	28

REGISTERED CIVIL ENGINEER 09-12-12 DATE

10-15-12
PLANS APPROVAL DATE

REGISTERED PROFESSIONAL ENGINEER KEN HALLIS No. C38203 Exp. 3-31-13 CIVIL STATE OF CALIFORNIA

THE STATE OF CALIFORNIA OR ITS OFFICERS OR AGENTS SHALL NOT BE RESPONSIBLE FOR THE ACCURACY OR COMPLETENESS OF SCANNED COPIES OF THIS PLAN SHEET.

ABBREVIATIONS:

CPACP COLD PLANE ASPHALT CONCRETE PAVEMENT

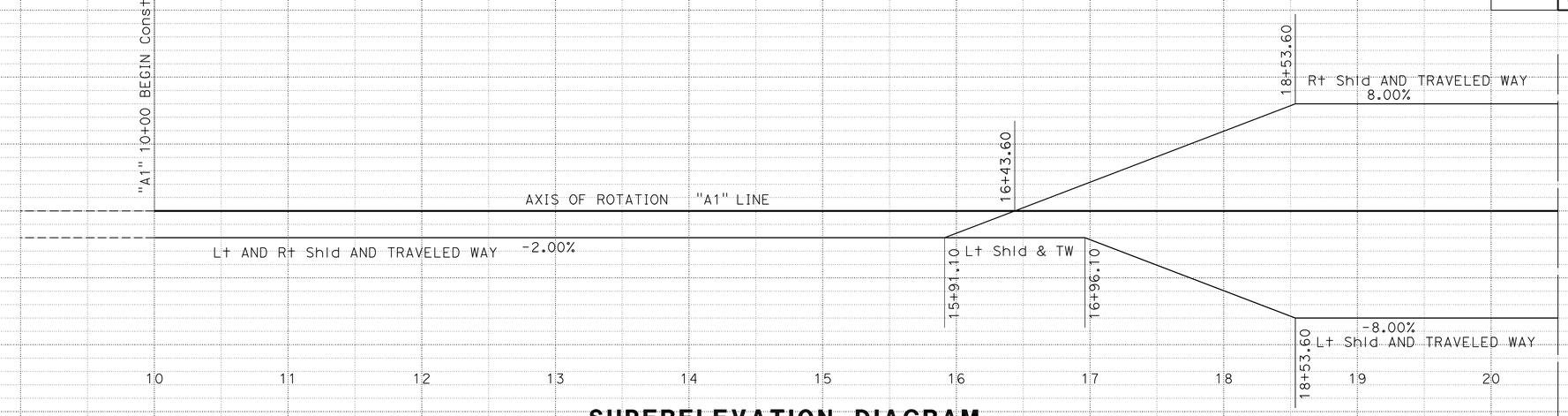

SUPERELEVATION DIAGRAM

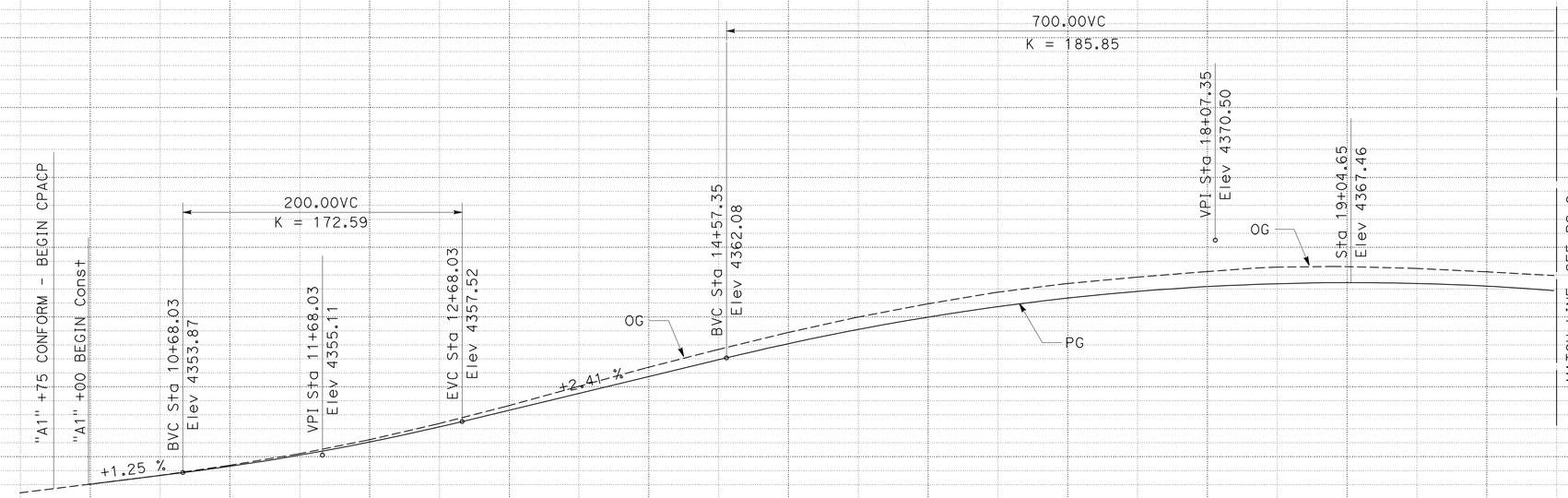

PROFILE

ROUTE 299 - "A1" LINE

PROFILE AND SUPERELEVATION DIAGRAM

SCALE: 1" = 50' Horiz
1" = 5' Vert

PS-1

STATION		10	11	12	13	14	15	16	17	18	19	20	TOTAL
CY	Exc	4255											4255
	Emb	1806											1806

REVISED BY	DATE REVISED
ALEX PETERSON	RYAN PRINS

CALCULATED-DESIGNED BY
CHECKED BY

FUNCTIONAL SUPERVISOR: AL TRUJILLO

STATE OF CALIFORNIA - DEPARTMENT OF TRANSPORTATION
Caltrans
DESIGN

P:\proj1\02\3E690_plans\pse\23e690fb001.dgn

LAST REVISION 09-12-12
DATE PLOTTED => 17-OCT-2012
TIME PLOTTED => 10:13

Dist	COUNTY	ROUTE	POST MILES TOTAL PROJECT	SHEET No.	TOTAL SHEETS
02	Mod	299	35.7/36.2	6	28

REGISTERED CIVIL ENGINEER 09-12-12 DATE

10-15-12
PLANS APPROVAL DATE

REGISTERED PROFESSIONAL ENGINEER KEN HALLIS No. C38203 Exp. 3-31-13 CIVIL STATE OF CALIFORNIA

THE STATE OF CALIFORNIA OR ITS OFFICERS OR AGENTS SHALL NOT BE RESPONSIBLE FOR THE ACCURACY OR COMPLETENESS OF SCANNED COPIES OF THIS PLAN SHEET.

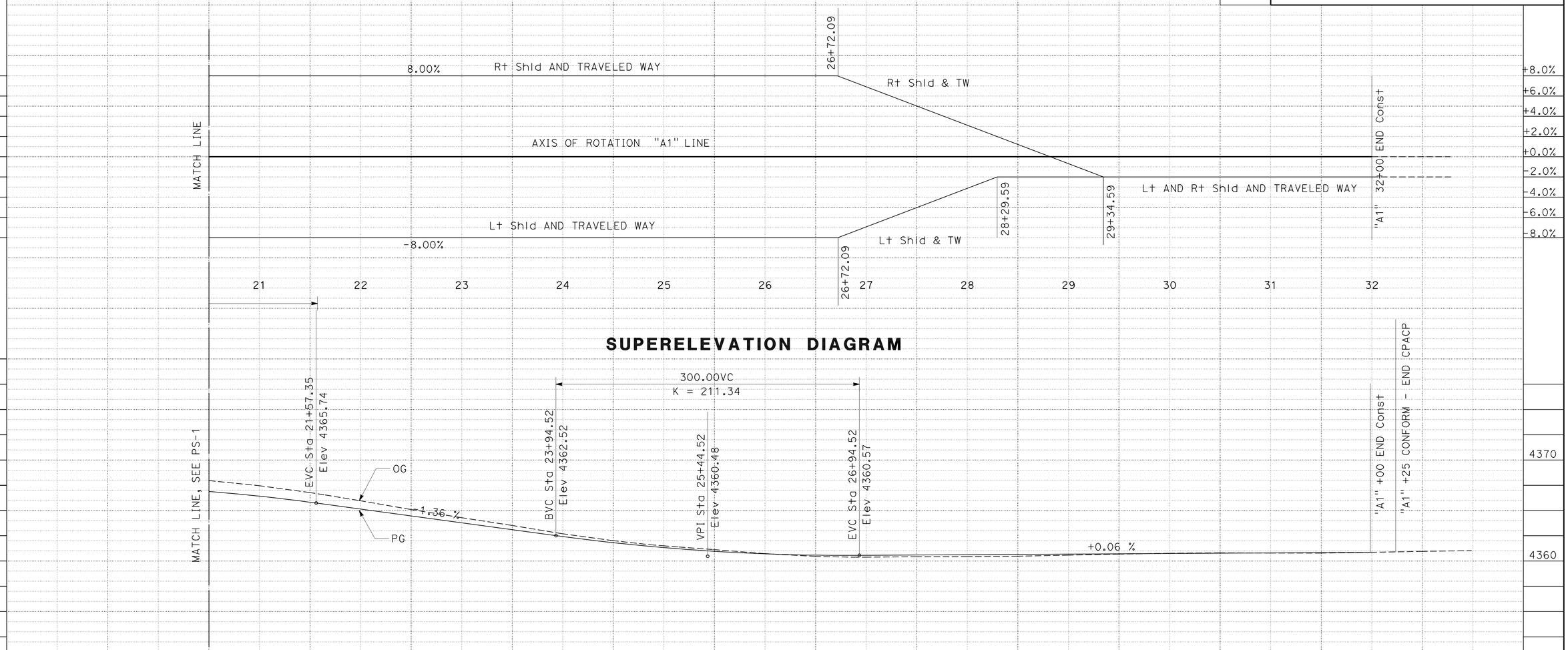

PROFILE AND SUPERELEVATION DIAGRAM

SCALE: 1" = 50' Horiz
1" = 5' Vert

PS-2

STATION		21	22	23	24	25	26	27	28	29	30	31	32	TOTAL
CY	Exc						3122							7377
	Emb						5309							7115

REVISED BY | DATE REVISED

ALEX PETERSON | RYAN PRINS

CALCULATED-DESIGNED BY | CHECKED BY

FUNCTIONAL SUPERVISOR: AL TRUJILLO

STATE OF CALIFORNIA - DEPARTMENT OF TRANSPORTATION
Caltrans
DESIGN

P:\proj1\02\3E690_plans\pse\23e690fb002.dgn

LAST REVISION 09-12-12 | DATE PLOTTED => 17-OCT-2012 | TIME PLOTTED => 10:13

Dist	COUNTY	ROUTE	POST MILES TOTAL PROJECT	SHEET No.	TOTAL SHEETS
02	Mod	299	35.7/36.2	7	28

REGISTERED CIVIL ENGINEER — DATE 09-12-12

PLANS APPROVAL DATE 10-15-12

REGISTERED PROFESSIONAL ENGINEER — KEN HALLIS — No. C38203 — Exp. 3-31-13 — CIVIL — STATE OF CALIFORNIA

THE STATE OF CALIFORNIA OR ITS OFFICERS OR AGENTS SHALL NOT BE RESPONSIBLE FOR THE ACCURACY OR COMPLETENESS OF SCANNED COPIES OF THIS PLAN SHEET.

NOTE:

SEE STANDARD PLAN A86 FOR FENCE DETAILS NOT SHOWN.

LEGEND:

COLD PLANE ASPHALT CONCRETE PAVEMENT

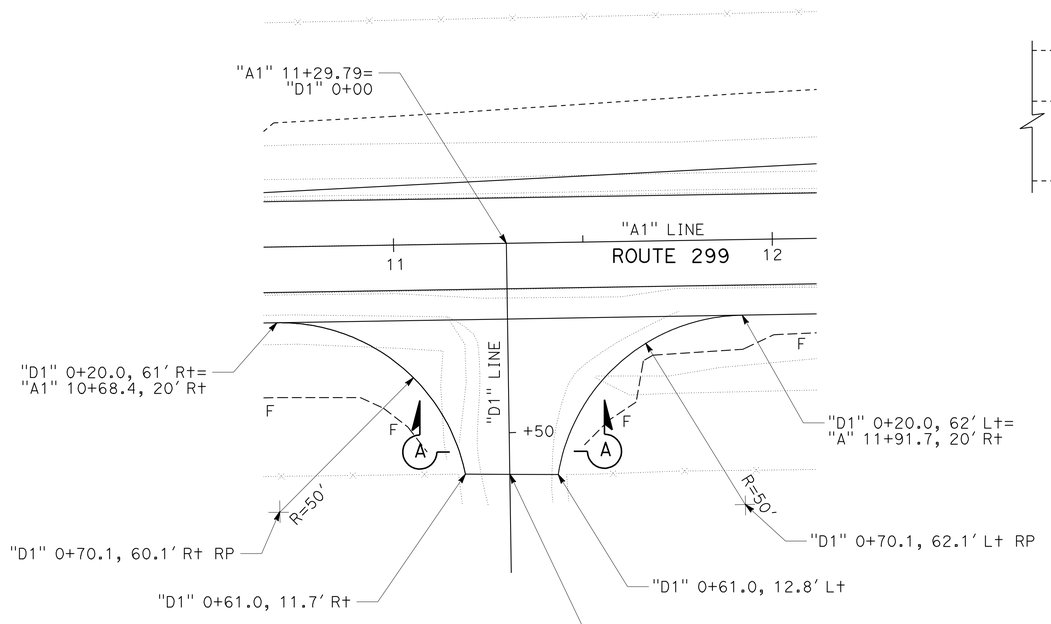

DRIVEWAY DETAIL

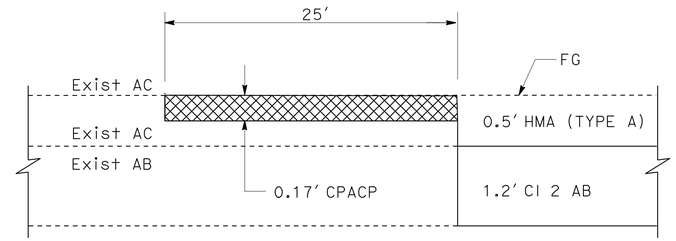

PAVEMENT CONFORM

"A1" 9+75 TO 10+00
"A1" 32+00 TO 32+25

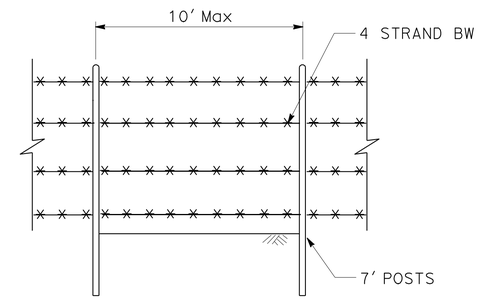

Temp FENCE (TYPE BW) DETAIL

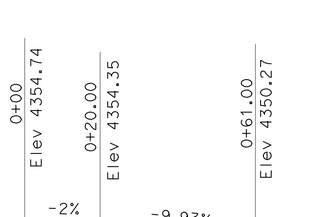

"D1" PROFILE

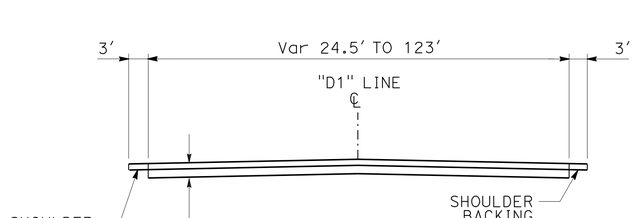

SECTION A-A
"D1" 0+20 TO 0+61

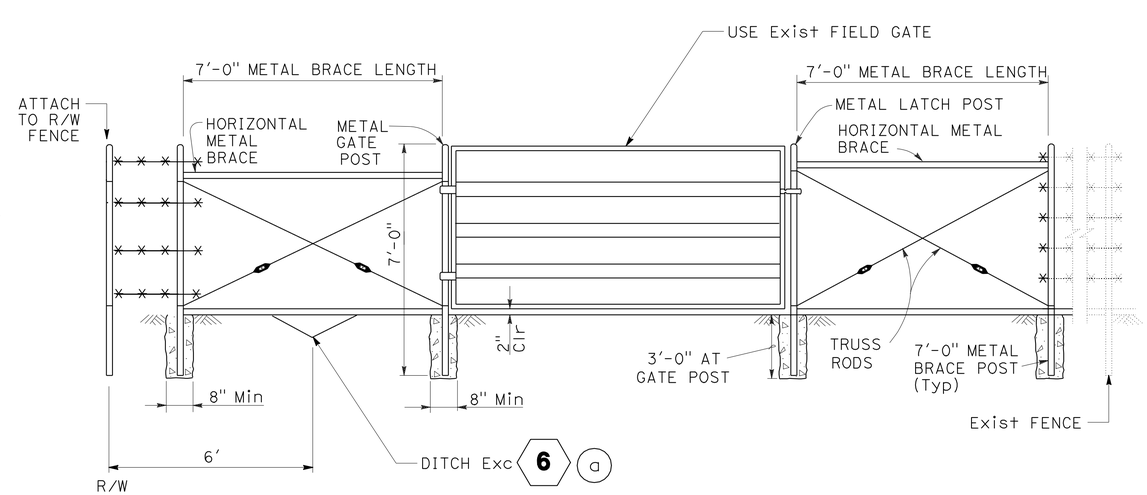

RELOCATE GATE DETAIL

CONSTRUCTION DETAILS

NO SCALE

C-1

REVISED BY	DATE REVISED

ALEX PETERSON — RYAN PRINS — CALCULATED-DESIGNED BY — CHECKED BY

FUNCTIONAL SUPERVISOR: AL TRUJILLO

STATE OF CALIFORNIA - DEPARTMENT OF TRANSPORTATION — DESIGN — Caltrans

P:\proj\02\3E690_plans\pse\23e690ga001.dgn

LAST REVISION 09-12-12 — DATE PLOTTED => 17-OCT-2012 — TIME PLOTTED => 10:22

BORDER LAST REVISED 7/2/2010 — USERNAME => s114926 — DGN FILE => 23e690ga001.dgn — RELATIVE BORDER SCALE IS IN INCHES 0 1 2 3 — UNIT 0316 — PROJECT NUMBER & PHASE 02000201341

Dist	COUNTY	ROUTE	POST MILES TOTAL PROJECT	SHEET No.	TOTAL SHEETS
02	Mod	299	35.7/36.2	8	28

REGISTERED CIVIL ENGINEER — DATE: 09-12-12

PLANS APPROVAL DATE: 10-15-12

REGISTERED PROFESSIONAL ENGINEER — KEN HALLIS — No. C38203 — Exp. 3-31-13 — CIVIL — STATE OF CALIFORNIA

THE STATE OF CALIFORNIA OR ITS OFFICERS OR AGENTS SHALL NOT BE RESPONSIBLE FOR THE ACCURACY OR COMPLETENESS OF SCANNED COPIES OF THIS PLAN SHEET.

NOTE:

FOR ACCURATE RIGHT OF WAY DATA, CONTACT RIGHT OF WAY ENGINEERING AT THE DISTRICT OFFICE.

LEGEND:

HYDROSEED

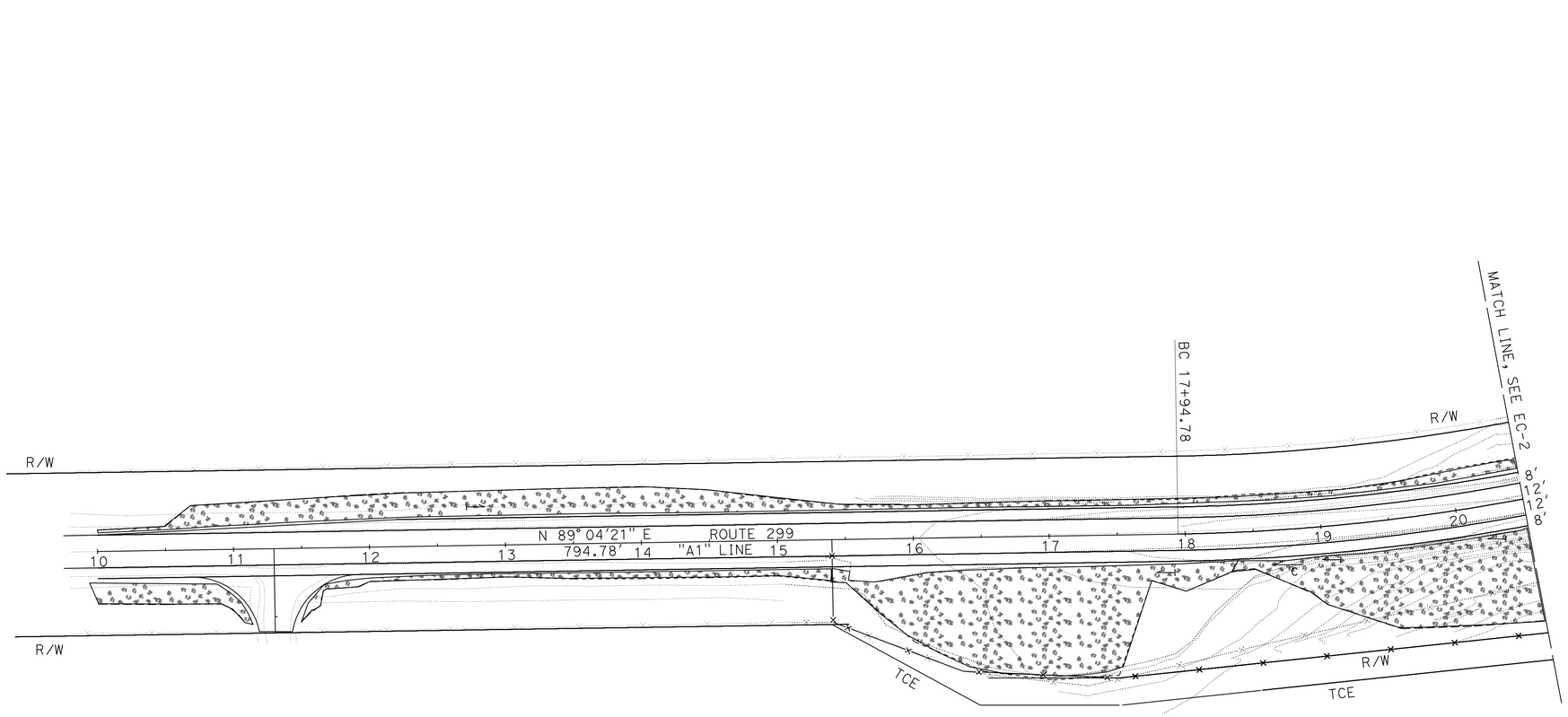

APPROVED FOR EROSION CONTROL WORK ONLY

EROSION CONTROL PLAN

SCALE: 1" = 50'

EC-1

REVISED BY	DATE REVISED

CALCULATED-DESIGNED BY: ALEX PETERSON

CHECKED BY: RYAN PRINS

FUNCTIONAL SUPERVISOR: AL TRUJILLO

STATE OF CALIFORNIA - DEPARTMENT OF TRANSPORTATION

Caltrans® DESIGN

P:\proj1\02\3E690_plans\pse\23e690ge001.dgn

LAST REVISION 09-12-12 | DATE PLOTTED => 17-OCT-2012 | TIME PLOTTED => 10:22

Dist	COUNTY	ROUTE	POST MILES TOTAL PROJECT	SHEET No.	TOTAL SHEETS
02	Mod	299	35.7/36.2	9	28

REGISTERED CIVIL ENGINEER — DATE: 09-12-12

PLANS APPROVAL DATE: 10-15-12

REGISTERED PROFESSIONAL ENGINEER — KEN HALLIS — No. C38203 — Exp. 3-31-13 — CIVIL — STATE OF CALIFORNIA

THE STATE OF CALIFORNIA OR ITS OFFICERS OR AGENTS SHALL NOT BE RESPONSIBLE FOR THE ACCURACY OR COMPLETENESS OF SCANNED COPIES OF THIS PLAN SHEET.

NOTE:

FOR ACCURATE RIGHT OF WAY DATA, CONTACT RIGHT OF WAY ENGINEERING AT THE DISTRICT OFFICE.

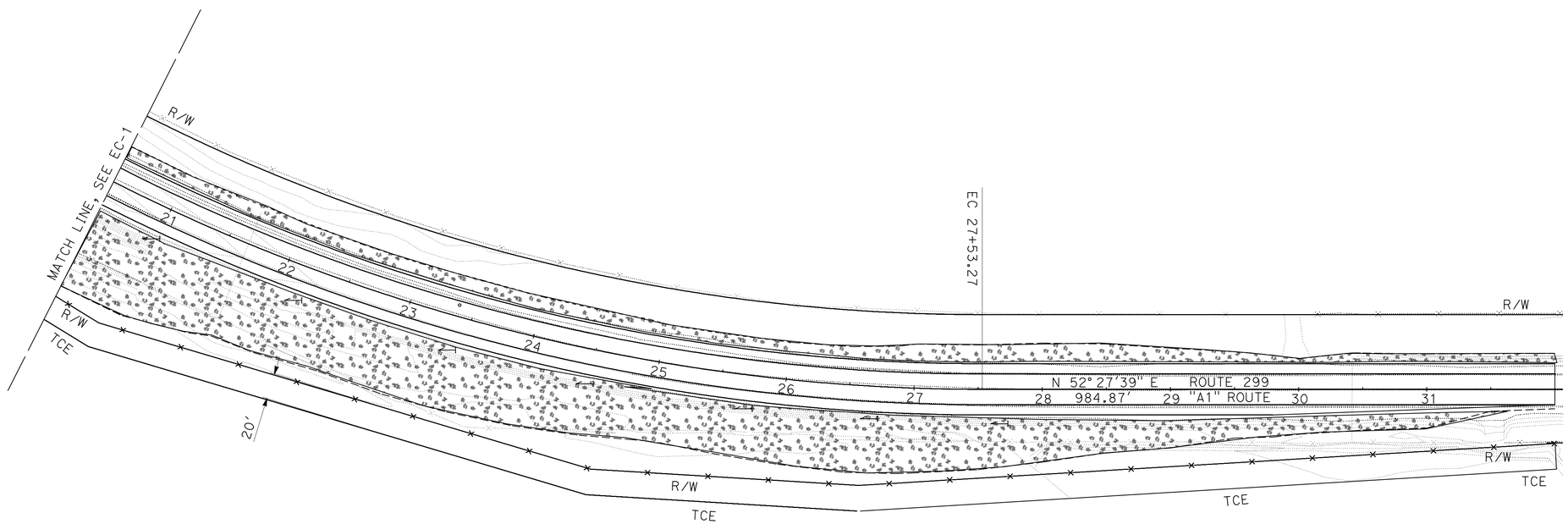

EROSION CONTROL PLAN

SCALE: 1" = 50'

EC-2

APPROVED FOR EROSION CONTROL WORK ONLY

REVISED BY	DATE REVISED

CALCULATED-DESIGNED BY	ALEX PETERSON
CHECKED BY	RYAN PRINS

FUNCTIONAL SUPERVISOR: AL TRUJILLO

STATE OF CALIFORNIA - DEPARTMENT OF TRANSPORTATION

Caltrans®

DESIGN

P:\proj\02\3E690_plans\pse\23e690ge002.dgn

LAST REVISION 09-12-12 | DATE PLOTTED => 17-OCT-2012 | TIME PLOTTED => 10:12

BORDER LAST REVISED 7/2/2010 | USERNAME => s123631 | DGN FILE => 23e690ge002.dgn | RELATIVE BORDER SCALE IS IN INCHES 0 1 2 3 | UNIT 0316 | PROJECT NUMBER & PHASE 02000201341

Dist	COUNTY	ROUTE	POST MILES TOTAL PROJECT	SHEET No.	TOTAL SHEETS
02	Mod	299	35.7/36.2	10	28

LICENSED LANDSCAPE ARCHITECT

10-15-12
PLANS APPROVAL DATE

LICENSED LANDSCAPE ARCHITECT J. PATRICK SULLIVAN #3125 Signature 07/31/14 Renewal Date 09/12/12 Date STATE OF CALIFORNIA

THE STATE OF CALIFORNIA OR ITS OFFICERS OR AGENTS SHALL NOT BE RESPONSIBLE FOR THE ACCURACY OR COMPLETENESS OF SCANNED COPIES OF THIS PLAN SHEET.

HYDROSEED SEQUENCE/ APPLICATION RATES (N)

SEQUENCE	ITEM	MATERIAL DESCRIPTION	MATERIAL TYPE	APPLICATION RATE (N)
STEP 1	HYDROSEED APPLICATION	PURE LIVE SEED	MIX	97.5 LB/ACRE
		FIBER	ALTERNATE	2000 LB/ACRE
		SLO-RELEASE FERTLIZER	GRANULAR 15-15-15	100 LB/ACRE
STEP 2	HYDROSEED APPLICATION	COMPOST	3 CF BAGS	1.2 CY/ACRE
		FIBER	ALTERNATE	1500 LB/ACRE
		TACKIFIER	PSYLLIUM	200 LB/ACRE

(N) - NOT A SEPARATE PAY ITEM, FOR INFORMATION ONLY

SEED MIX (N)

BOTANICAL NAME (COMMON NAME)	PERCENT GERMINATION (MINIMUM)	POUNDS PURE LIVE SEED PER ACRE (N) (SLOPE MEASUREMENT)
ACHILLEA MILLEFOLIUM (COMMON YARROW)	50	2.5
BROMUS CARINATUS (CALIFORNIA BROME)	60	25
FESTUCA IDAHOENSIS (WESTERN FESCUE)	80	25
HORDEUM VULGARE UC 937 (WESTERN BARLEY)	90	35
PURSHIA TRIDENTDATA (ANTELOPE BITTERBRUSH)	50	10
	TOTAL	97.5

(N) - NOT A SEPARATE PAY ITEM, FOR INFORMATION ONLY

HYDROSEED TOTALS

MATERIAL DESCRIPTION	MATERIAL TYPE	TOTALS	
PURE LIVE SEED	MIX	146.25 LB (N)	HYDROSEED
FIBER	ALTERNATE	5250 LB (N)	
SLO-RELEASE FERTLIZER	GRANULAR 15-15-15	150 LB (N)	
COMPOST	3 CF BAGS	1.8 CY (N)	
TACKIFIER	PSYLLIUM	300 LB (N)	
FROM Sta 10+00 TO 32+00		TOTAL	65,340 SQFT

EROSION CONTROL QUANTITIES

ECQ-1

REVISED BY | DATE REVISED
J. PATRICK SULLIVAN | RON FLORY
CALCULATED-DESIGNED BY | CHECKED BY
SENIOR LANDSCAPE ARCHITECT | RON FLORY
STATE OF CALIFORNIA - DEPARTMENT OF TRANSPORTATION
Caltrans® LANDSCAPE ARCHITECTURE

P:\proj1\02\3E690_plans\pse\23e690gh001.dgn

LAST REVISION 07-10-12 | DATE PLOTTED => 17-OCT-2012 | TIME PLOTTED => 10:12

Dist	COUNTY	ROUTE	POST MILES TOTAL PROJECT	SHEET No.	TOTAL SHEETS
02	Mod	299	35.7/36.2	11	28

REGISTERED CIVIL ENGINEER 09-12-12 DATE

10-15-12
PLANS APPROVAL DATE

REGISTERED PROFESSIONAL ENGINEER KEN HALLIS No. C38203 Exp. 3-31-13 CIVIL STATE OF CALIFORNIA

THE STATE OF CALIFORNIA OR ITS OFFICERS OR AGENTS SHALL NOT BE RESPONSIBLE FOR THE ACCURACY OR COMPLETENESS OF SCANNED COPIES OF THIS PLAN SHEET.

NOTE:

FOR ACCURATE RIGHT OF WAY DATA, CONTACT RIGHT OF WAY ENGINEERING AT THE DISTRICT OFFICE.

LEGEND:

- DRAINAGE SYSTEM No.
- DRAINAGE UNIT
- FLOW DIRECTION

ABBREVIATIONS:

DD DRAINAGE DETAIL (SHEET)
Stl STEEL

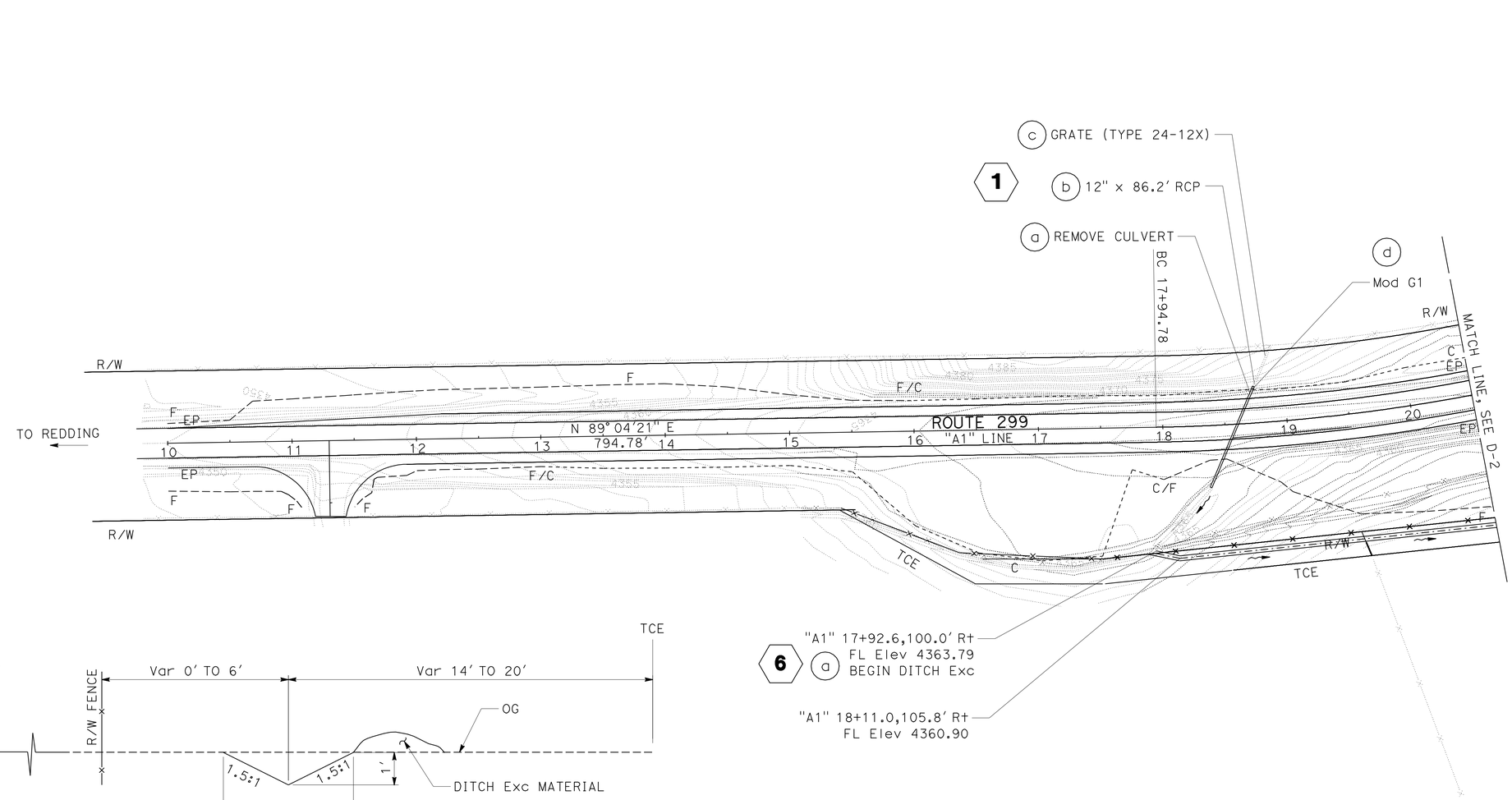

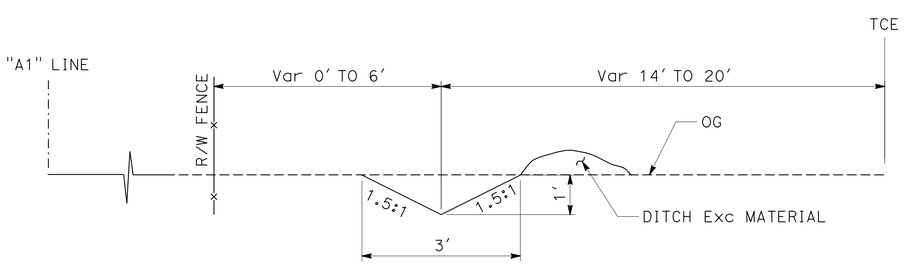

DITCH EXCAVATION DETAIL 6 a

NO SCALE

DRAINAGE PLAN

SCALE: 1" = 50'

D-1

APPROVED FOR DRAINAGE WORK ONLY

REVISED BY	DATE REVISED

CALCULATED-DESIGNED BY: ALEX PETERSON
CHECKED BY: RYAN PRINS
FUNCTIONAL SUPERVISOR: AL TRUJILLO

STATE OF CALIFORNIA - DEPARTMENT OF TRANSPORTATION
Caltrans
DESIGN

P:\proj\02\3E690_plans\pse\23e690ia001.dgn

LAST REVISION 09-12-12 | DATE PLOTTED => 17-OCT-2012 | TIME PLOTTED => 10:12

Dist	COUNTY	ROUTE	POST MILES TOTAL PROJECT	SHEET No.	TOTAL SHEETS
02	Mod	299	35.7/36.2	12	28

REGISTERED CIVIL ENGINEER — DATE: 09-12-12

PLANS APPROVAL DATE: 10-15-12

REGISTERED PROFESSIONAL ENGINEER — KEN HALLIS — No. C38203 — Exp. 3-31-13 — CIVIL — STATE OF CALIFORNIA

THE STATE OF CALIFORNIA OR ITS OFFICERS OR AGENTS SHALL NOT BE RESPONSIBLE FOR THE ACCURACY OR COMPLETENESS OF SCANNED COPIES OF THIS PLAN SHEET.

NOTE:

FOR ACCURATE RIGHT OF WAY DATA, CONTACT RIGHT OF WAY ENGINEERING AT THE DISTRICT OFFICE.

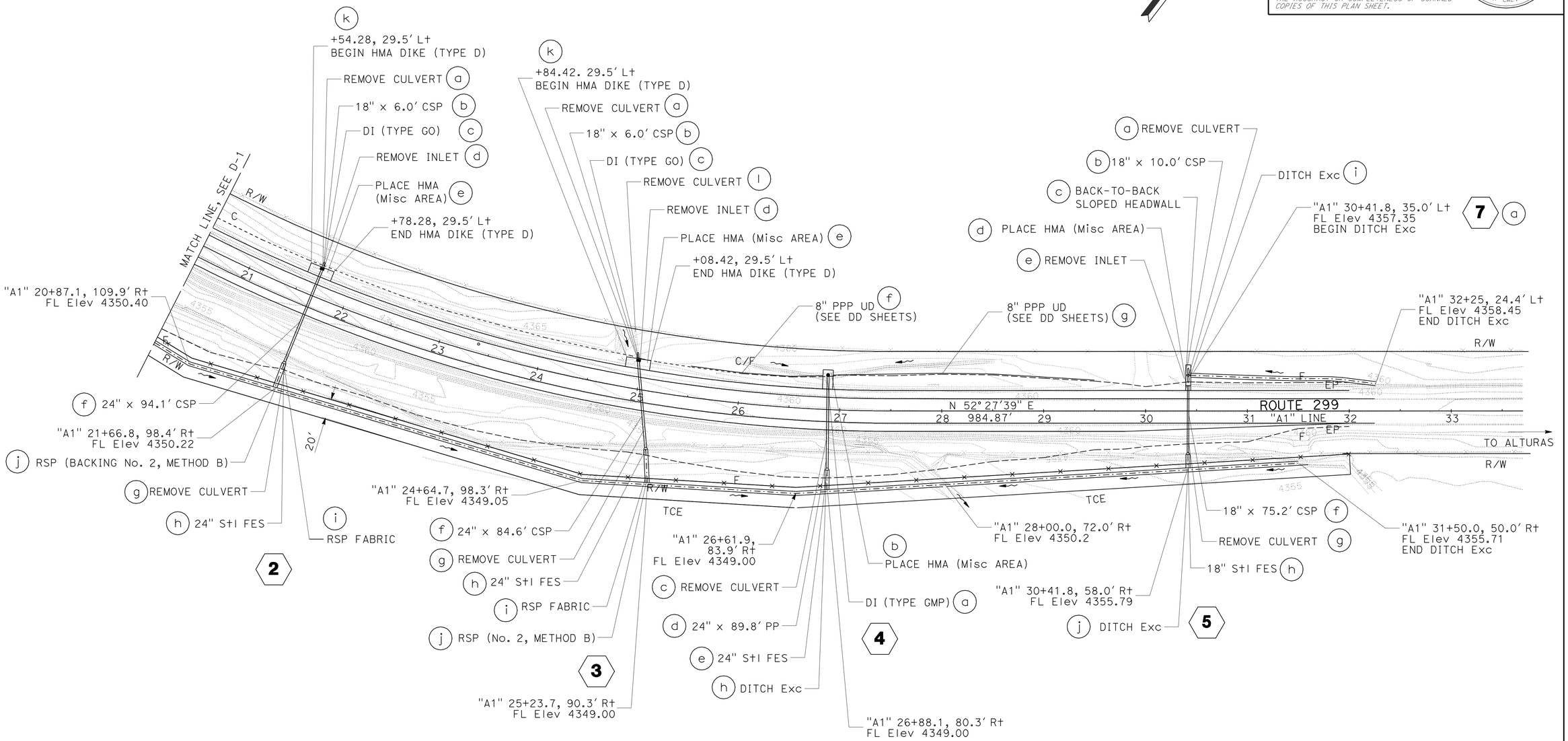

DITCH EXCAVATION DETAIL 7 a

NO SCALE

APPROVED FOR DRAINAGE WORK ONLY

DRAINAGE PLAN

SCALE: 1" = 50′

D-2

REVISED BY	DATE REVISED
ALEX PETERSON	
RYAN PRINS	

CALCULATED-DESIGNED BY / CHECKED BY

FUNCTIONAL SUPERVISOR: AL TRUJILLO

STATE OF CALIFORNIA - DEPARTMENT OF TRANSPORTATION

Caltrans® DESIGN

P:\proj\02\36690_plans\pse\23e690ia002.dgn

LAST REVISION 09-12-12 | DATE PLOTTED => 17-OCT-2012 | TIME PLOTTED => 10:12

BORDER LAST REVISED 7/2/2010 | USERNAME => s123631 | DGN FILE => 23e690ia002.dgn | RELATIVE BORDER SCALE IS IN INCHES 0 1 2 3 | UNIT 0316 | PROJECT NUMBER & PHASE 02000201341

Dist	COUNTY	ROUTE	POST MILES TOTAL PROJECT	SHEET No.	TOTAL SHEETS
02	Mod	299	35.7/36.2	13	28

REGISTERED CIVIL ENGINEER 09-12-12 DATE

10-15-12
PLANS APPROVAL DATE

REGISTERED PROFESSIONAL ENGINEER KEN HALLIS No. C38203 Exp. 3-31-13 CIVIL STATE OF CALIFORNIA

THE STATE OF CALIFORNIA OR ITS OFFICERS OR AGENTS SHALL NOT BE RESPONSIBLE FOR THE ACCURACY OR COMPLETENESS OF SCANNED COPIES OF THIS PLAN SHEET.

NOTES:

1. ALL CULVERT JOINTS SHALL BE WATERTIGHT.
2. ALL PP CULVERTS SHALL HAVE SMOOTH INTERIOR WALL.
3. RCP SHALL HAVE TONGUE AND GROOVE JOINTS.

LEGEND:

CONCRETE COLLAR

MINOR CONCRETE (BACKFILL)

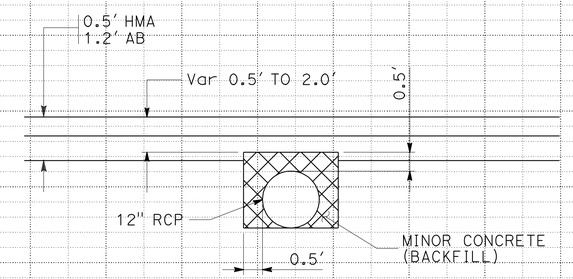

SECTION A-A

CONCRETE BACKFILL

NO SCALE

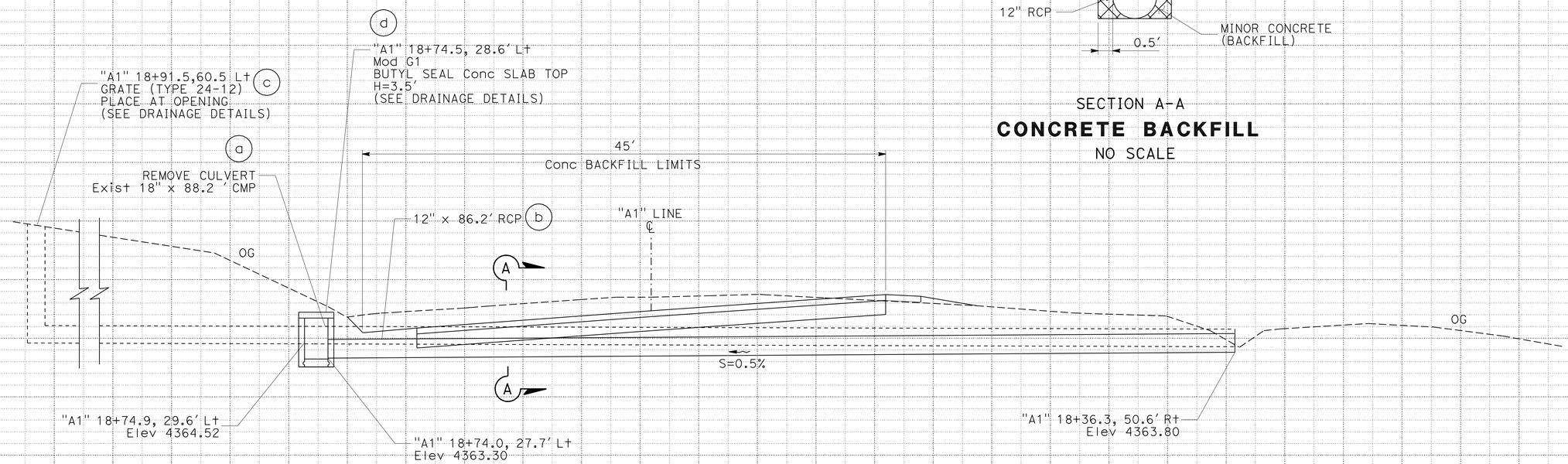

DRAINAGE SYSTEM No. 1

"A1" 18+36.3 TO 18+75.91 PM 35.91

DRAINAGE PROFILES

SCALE: 1" = 5' Horiz
1" = 5' Vert

DP-1

STATION		TOTAL
CY	Exc	
	Emb	

REVISED BY | DATE REVISED

ALEX PETERSON | RYAN PRINS

CALCULATED-DESIGNED BY | CHECKED BY

FUNCTIONAL SUPERVISOR: AL TRUJILLO

STATE OF CALIFORNIA - DEPARTMENT OF TRANSPORTATION

Caltrans® DESIGN

P:\proj\02\3E690_plans\pse\23e690ib001.dgn

LAST REVISION 09-12-12 | DATE PLOTTED => 17-OCT-2012 | TIME PLOTTED => 10:12

Dist	COUNTY	ROUTE	POST MILES TOTAL PROJECT	SHEET No.	TOTAL SHEETS
02	Mod	299	35.7/36.2	14	28

REGISTERED CIVIL ENGINEER — DATE 09-12-12

PLANS APPROVAL DATE 10-15-12

REGISTERED PROFESSIONAL ENGINEER — KEN HALLIS — No. C38203 — Exp. 3-31-13 — CIVIL — STATE OF CALIFORNIA

THE STATE OF CALIFORNIA OR ITS OFFICERS OR AGENTS SHALL NOT BE RESPONSIBLE FOR THE ACCURACY OR COMPLETENESS OF SCANNED COPIES OF THIS PLAN SHEET.

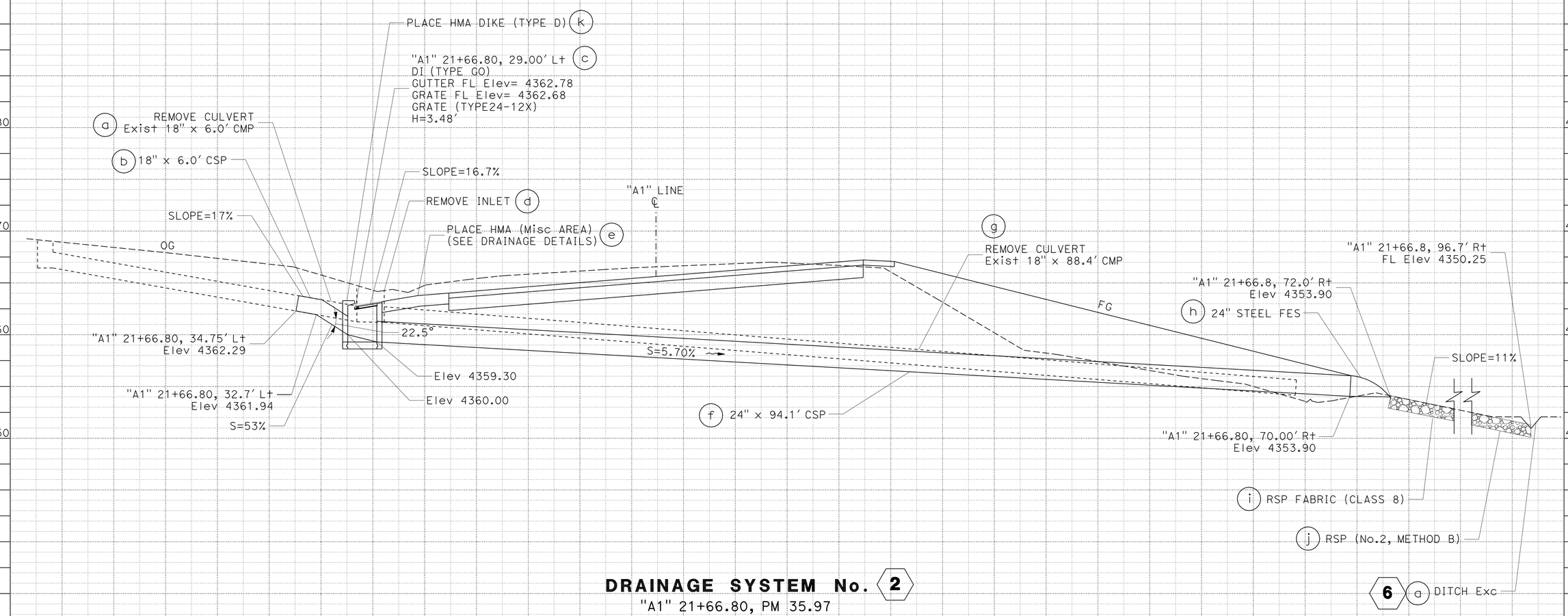

DRAINAGE SYSTEM No. 2

"A1" 21+66.80, PM 35.97

DRAINAGE PROFILES

SCALE: 1" = 5' Horiz
1" = 5' Vert

DP-2

STATION		TOTAL
CY	Exc	
	Emb	

REVISED BY | DATE REVISED

ALEX PETERSON | RYAN PRINS

CALCULATED-DESIGNED BY | CHECKED BY

FUNCTIONAL SUPERVISOR: AL TRUJILLO

STATE OF CALIFORNIA - DEPARTMENT OF TRANSPORTATION

DESIGN

Caltrans

P:\proj1\02\3E690_plans\pse\23e690ib002.dgn

LAST REVISION 09-12-12 | DATE PLOTTED => 17-OCT-2012 | TIME PLOTTED => 10:12

Dist	COUNTY	ROUTE	POST MILES TOTAL PROJECT	SHEET No.	TOTAL SHEETS
02	Mod	299	35.7/36.2	15	28

REGISTERED CIVIL ENGINEER 09-12-12 DATE

10-15-12
PLANS APPROVAL DATE

REGISTERED PROFESSIONAL ENGINEER KEN HALLIS No. C38203 Exp. 3-31-13 CIVIL STATE OF CALIFORNIA

THE STATE OF CALIFORNIA OR ITS OFFICERS OR AGENTS SHALL NOT BE RESPONSIBLE FOR THE ACCURACY OR COMPLETENESS OF SCANNED COPIES OF THIS PLAN SHEET.

LEGEND:

CONCRETE COLLAR

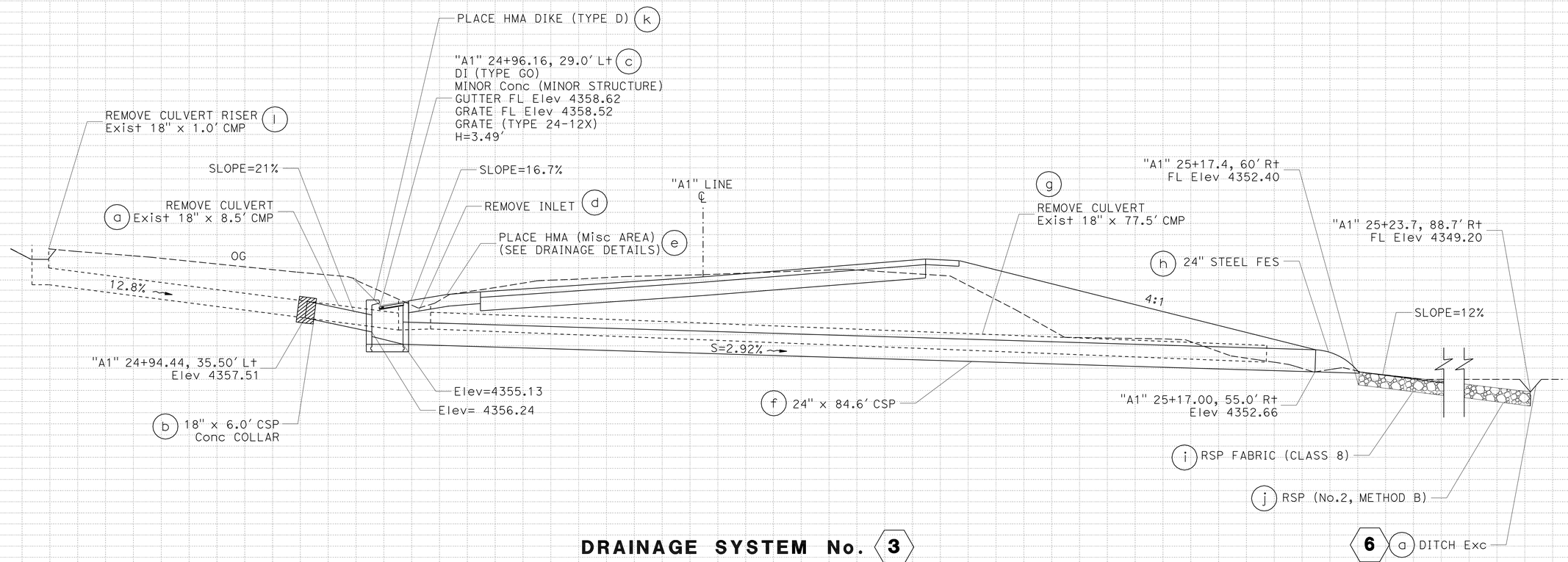

DRAINAGE SYSTEM No. 3
"A1" 24+87.3 TO 25+24.8, PM 36.04

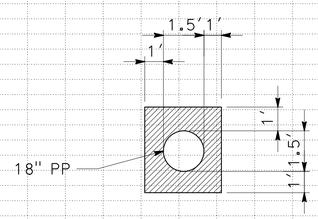

CONCRETE COLLAR DETAIL

DRAINAGE PROFILES
SCALE: 1" = 5' Horiz
1" = 5' Vert

DP-3

STATION		TOTAL
CY	Exc	
	Emb	

REVISED BY | DATE REVISED
ALEX PETERSON | RYAN PRINS
CALCULATED-DESIGNED BY | CHECKED BY
FUNCTIONAL SUPERVISOR: AL TRUJILLO

STATE OF CALIFORNIA - DEPARTMENT OF TRANSPORTATION
Caltrans
DESIGN

P:\proj\02\3E690_plans\pse\23e690ib003.dgn

LAST REVISION 09-12-12 | DATE PLOTTED => 17-OCT-2012 | TIME PLOTTED => 10:12

Dist	COUNTY	ROUTE	POST MILES TOTAL PROJECT	SHEET No.	TOTAL SHEETS
02	Mod	299	35.7/36.2	16	28

REGISTERED CIVIL ENGINEER 09-12-12 DATE

10-15-12
PLANS APPROVAL DATE

REGISTERED PROFESSIONAL ENGINEER KEN HALLIS No. C38203 Exp. 3-31-13 CIVIL STATE OF CALIFORNIA

THE STATE OF CALIFORNIA OR ITS OFFICERS OR AGENTS SHALL NOT BE RESPONSIBLE FOR THE ACCURACY OR COMPLETENESS OF SCANNED COPIES OF THIS PLAN SHEET.

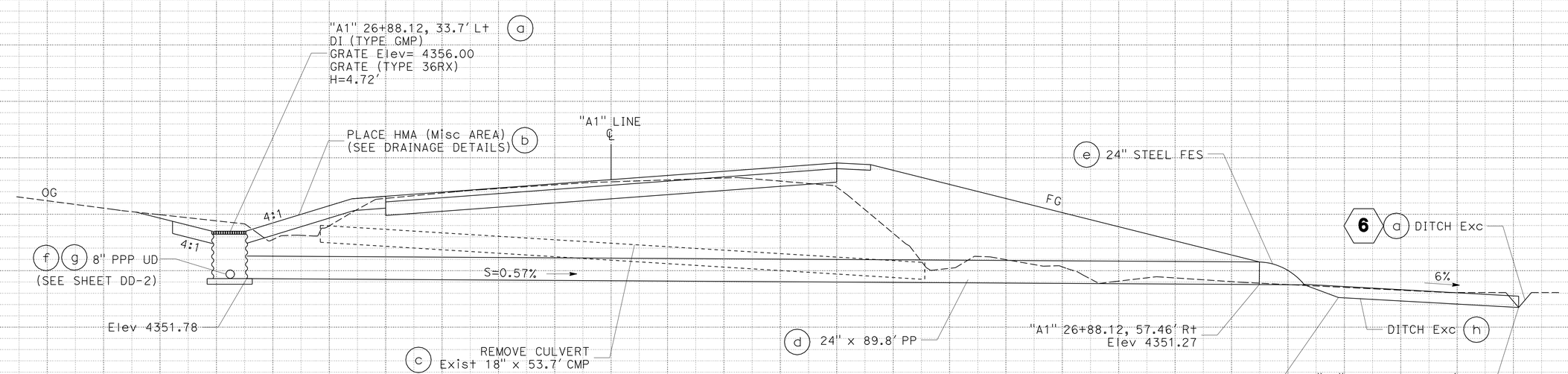

DRAINAGE SYSTEM No. 4

"A1" 26+88.12, PM 36.09

DRAINAGE PROFILES

SCALE: 1" = 5' Horiz
1" = 5' Vert

DP-4

STATION		TOTAL
CY	Exc	
	Emb	

REVISED BY | DATE REVISED

CALCULATED-DESIGNED BY: ALEX PETERSON
CHECKED BY: RYAN PRINS

FUNCTIONAL SUPERVISOR: AL TRUJILLO

STATE OF CALIFORNIA - DEPARTMENT OF TRANSPORTATION
Caltrans®
DESIGN

P:\proj1\02\3E690_plans\pse\23e690ib004.dgn

LAST REVISION | DATE PLOTTED => 17-OCT-2012 | TIME PLOTTED => 10:12
09-12-12

Dist	COUNTY	ROUTE	POST MILES TOTAL PROJECT	SHEET No.	TOTAL SHEETS
02	Mod	299	35.7/36.2	17	28

REGISTERED CIVIL ENGINEER 09-12-12 DATE

10-15-12
PLANS APPROVAL DATE

REGISTERED PROFESSIONAL ENGINEER KEN HALLIS No. C38203 Exp. 3-31-13 CIVIL STATE OF CALIFORNIA

THE STATE OF CALIFORNIA OR ITS OFFICERS OR AGENTS SHALL NOT BE RESPONSIBLE FOR THE ACCURACY OR COMPLETENESS OF SCANNED COPIES OF THIS PLAN SHEET.

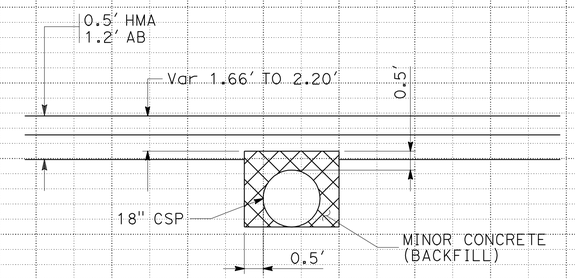

SECTION A-A
CONCRETE BACKFILL
NO SCALE

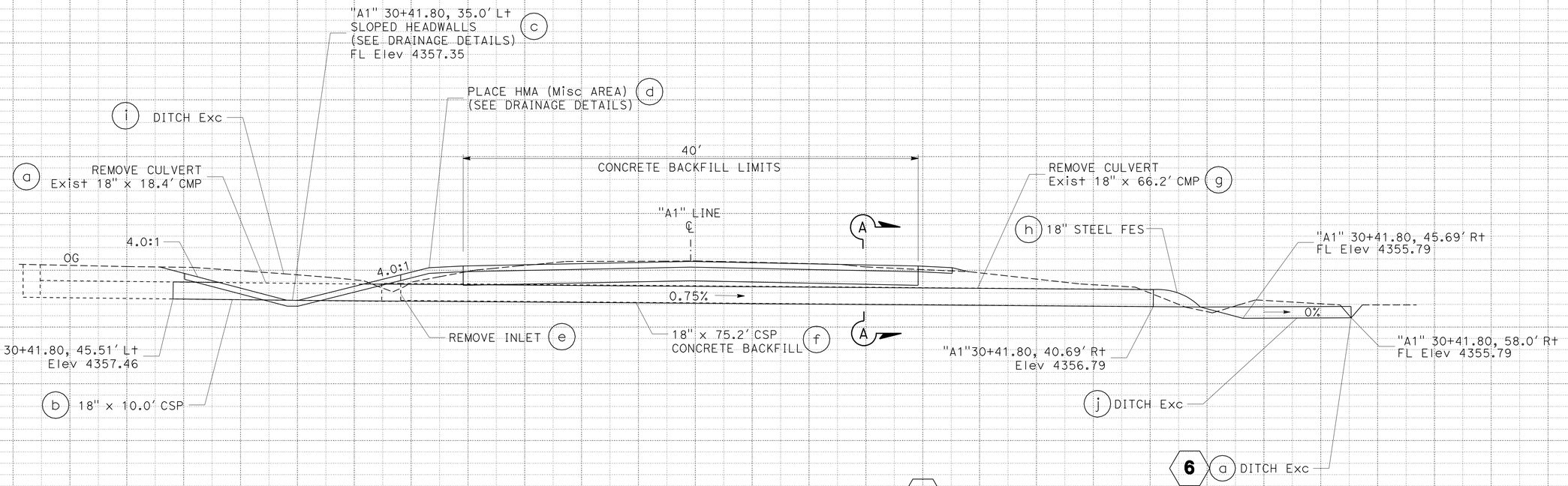

DRAINAGE SYSTEM No. 5
"A1" 30+41.80, PM 36.14

DRAINAGE PROFILES
SCALE: 1" = 5' Horiz
1" = 5' Vert

DP-5

STATION		TOTAL
CY	Exc	
	Emb	

STATE OF CALIFORNIA - DEPARTMENT OF TRANSPORTATION
Caltrans DESIGN

FUNCTIONAL SUPERVISOR: AL TRUJILLO
CALCULATED-DESIGNED BY: ALEX PETERSON
CHECKED BY: RYAN PRINS
REVISED BY / DATE REVISED

P:\proj\02\3E690_plans\pse\23e690ib005.dgn

DATE PLOTTED => 17-OCT-2012
TIME PLOTTED => 10:46
LAST REVISION 09-12-12

BORDER LAST REVISED 7/2/2010
USERNAME => s123631
DGN FILE => 23e690ib005.dgn
RELATIVE BORDER SCALE IS IN INCHES 0 1 2 3
UNIT 0316
PROJECT NUMBER & PHASE 02000201341

Dist	COUNTY	ROUTE	POST MILES TOTAL PROJECT	SHEET No.	TOTAL SHEETS
02	Mod	299	35.7/36.2	18	28

REGISTERED CIVIL ENGINEER — DATE: 09-12-12

PLANS APPROVAL DATE: 10-15-12

REGISTERED PROFESSIONAL ENGINEER — KEN HALLIS — No. C38203 — Exp. 3-31-13 — CIVIL — STATE OF CALIFORNIA

THE STATE OF CALIFORNIA OR ITS OFFICERS OR AGENTS SHALL NOT BE RESPONSIBLE FOR THE ACCURACY OR COMPLETENESS OF SCANNED COPIES OF THIS PLAN SHEET.

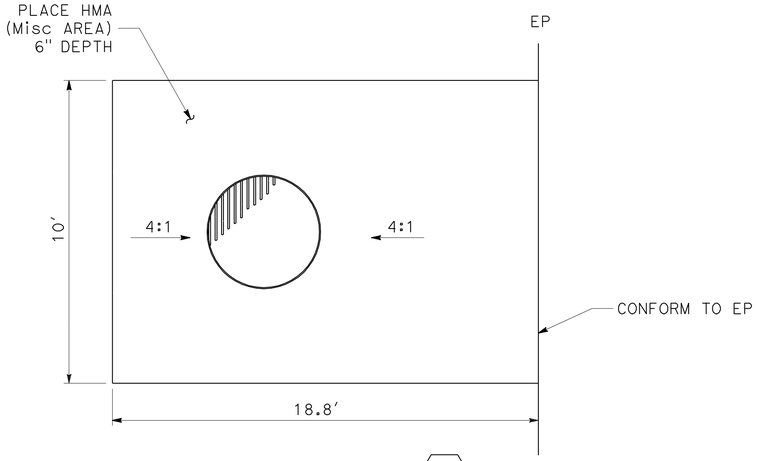

HMA APRON 4

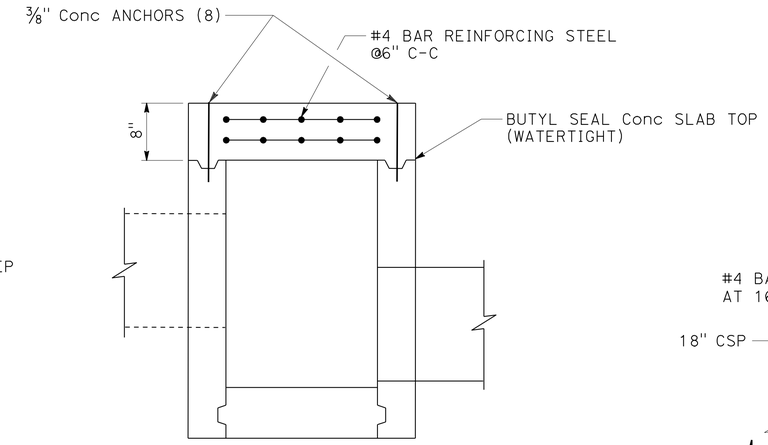

Mod G1 DETAIL 1 d

H = 3.0'

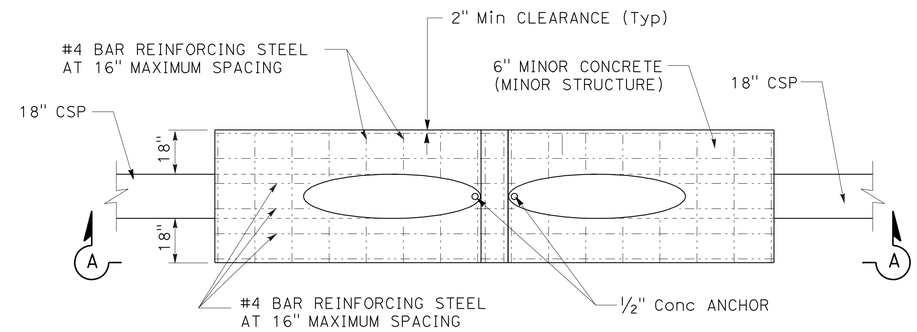

PLAN

SLOPED HEADWALL 5

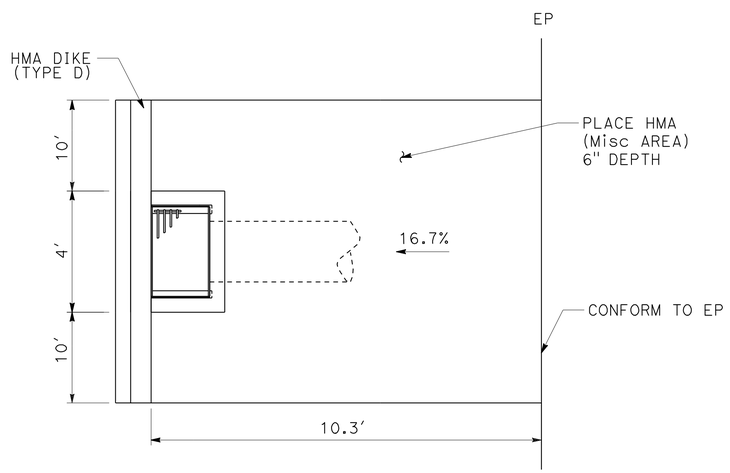

HMA APRON 2 3

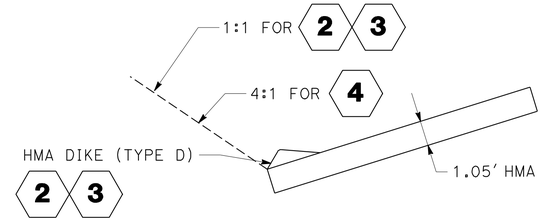

SLAB DETAIL 2 3 4

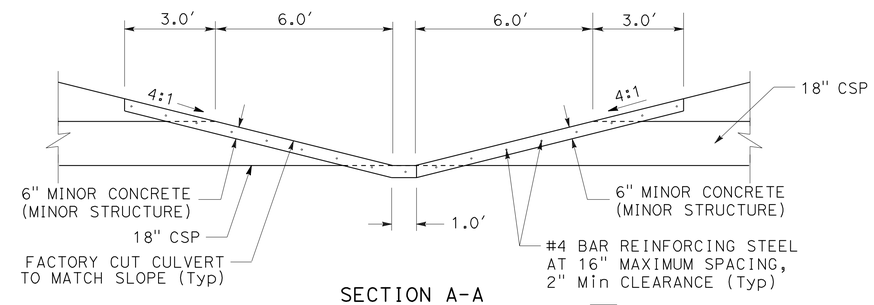

SECTION A-A

SLOPED HEADWALL 5

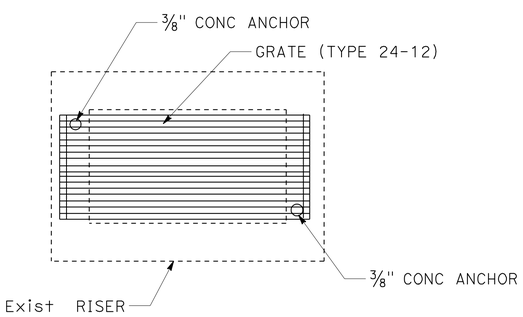

GRATE DETAIL 1 c

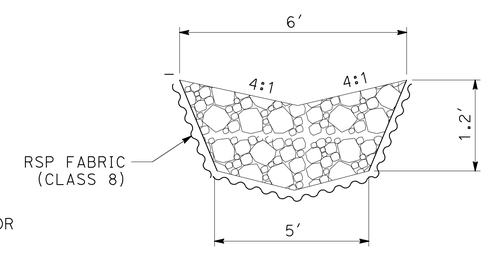

RSP (No 2, METHOD B)

2 3

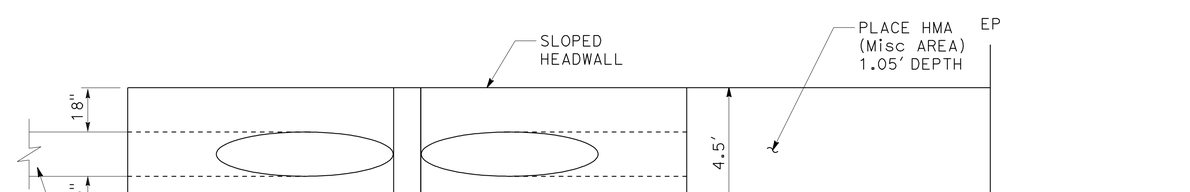

HMA APRON 5

DRAINAGE DETAILS DD-1

NO SCALE

REVISED BY	DATE REVISED

CALCULATED-DESIGNED BY	CHECKED BY
ALEX PETERSON	RYAN PRINS

FUNCTIONAL SUPERVISOR: AL TRUJILLO

STATE OF CALIFORNIA - DEPARTMENT OF TRANSPORTATION

Caltrans® DESIGN

P:\proj1\02\3E690_plans\pse\23e690ic001.dgn

LAST REVISION 09-12-12 — DATE PLOTTED => 17-OCT-2012 — TIME PLOTTED => 10:14

Dist	COUNTY	ROUTE	POST MILES TOTAL PROJECT	SHEET No.	TOTAL SHEETS
02	Mod	299	35.7/36.2	19	28

REGISTERED CIVIL ENGINEER 09-12-12 DATE

10-15-12
PLANS APPROVAL DATE

REGISTERED PROFESSIONAL ENGINEER KEN HALLIS No. C38203 Exp. 3-31-13 CIVIL STATE OF CALIFORNIA

THE STATE OF CALIFORNIA OR ITS OFFICERS OR AGENTS SHALL NOT BE RESPONSIBLE FOR THE ACCURACY OR COMPLETENESS OF SCANNED COPIES OF THIS PLAN SHEET.

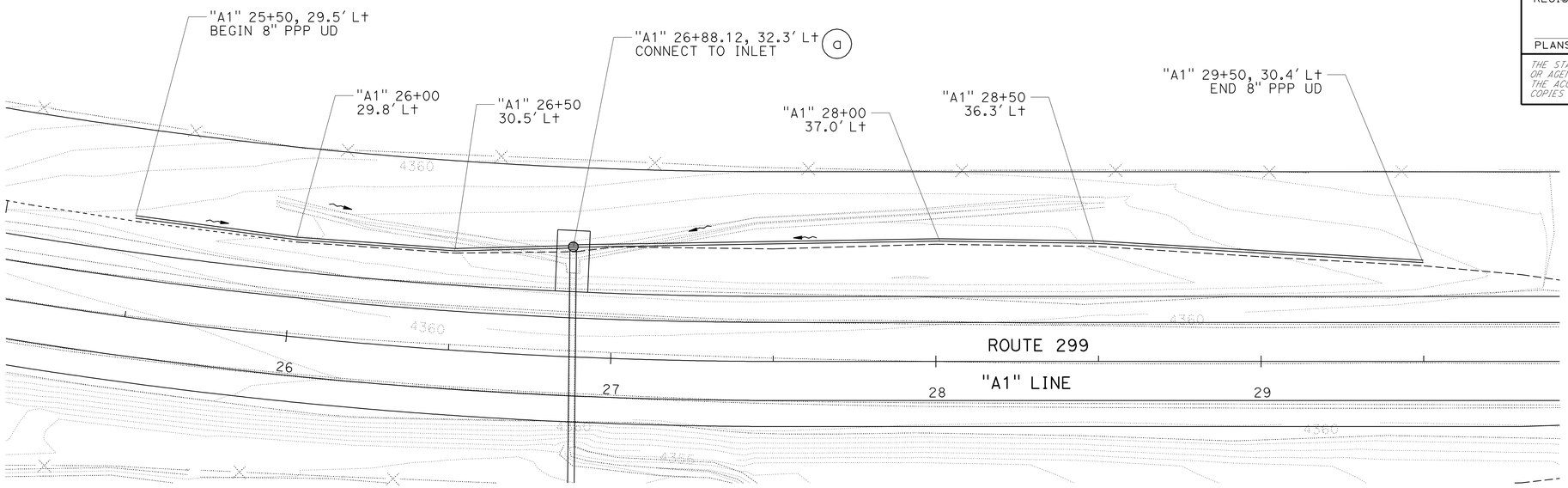

DRAINAGE SYSTEM 4 f g

SCALE: 1" = 20'

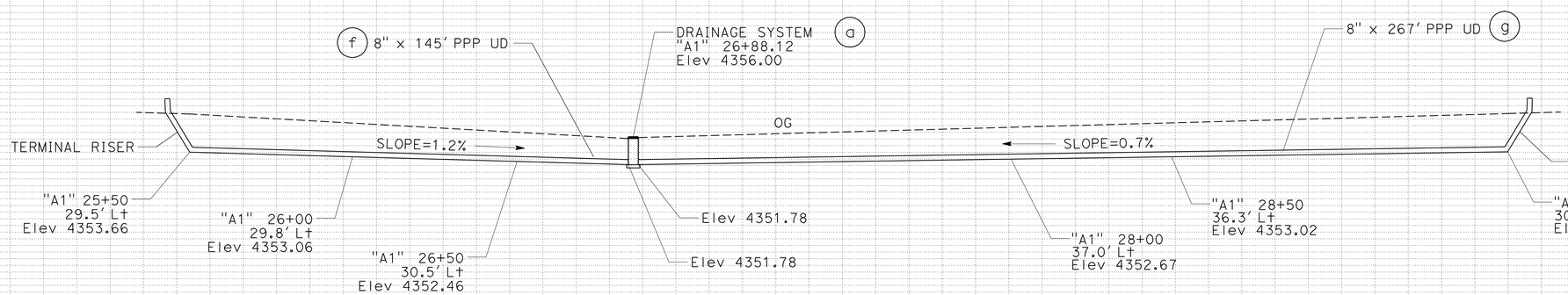

DRAINAGE SYSTEM No. 4 f g

APPROVED FOR DRAINAGE WORK ONLY

DRAINAGE DETAILS

SCALE: Horiz 1" = 20'
Vert 1" = 10'

DD-2

REVISED BY | DATE REVISED

ALEX PETERSON | RYAN PRINS

CALCULATED-DESIGNED BY | CHECKED BY

FUNCTIONAL SUPERVISOR: AL TRUJILLO

STATE OF CALIFORNIA - DEPARTMENT OF TRANSPORTATION

Caltrans® DESIGN

P:\proj1\02\3E690_plans\pse\23e690ic002.dgn

LAST REVISION 09-12-12 | DATE PLOTTED => 17-OCT-2012 | TIME PLOTTED => 10:15

Dist	COUNTY	ROUTE	POST MILES TOTAL PROJECT	SHEET No.	TOTAL SHEETS
02	Mod	299	35.7/36.2	20	28

REGISTERED CIVIL ENGINEER 09-12-12 DATE

10-15-12
PLANS APPROVAL DATE

REGISTERED PROFESSIONAL ENGINEER KEN HALLIS No. C38203 Exp. 3-31-13 CIVIL STATE OF CALIFORNIA

THE STATE OF CALIFORNIA OR ITS OFFICERS OR AGENTS SHALL NOT BE RESPONSIBLE FOR THE ACCURACY OR COMPLETENESS OF SCANNED COPIES OF THIS PLAN SHEET.

NOTE:

1. ALL CULVERT JOINTS ARE WATERTIGHT (POSITIVE).

DRAINAGE QUANTITIES

DRAINAGE PLAN SHEET No.	SYSTEM No. ⬡	UNIT No. ◯	REMOVE CULVERT LF	REMOVE INLET EA	(N) Conc COLLAR CY	MISCELLANEOUS IRON AND STEEL LB	MINOR CONCRETE (MINOR Str) CY	MINOR CONCRETE (BACKFILL) CY	24" STEEL FLARED END SECTION EA	36" CSP INLET (.138" THICK) LF	18" STEEL FLARED END SECTION EA	24" CSP (.138" THICK) LF	18" CSP (.138" THICK) LF	24" PLASTIC PIPE LF	12" RCP LF	PLACE HMA (Misc AREA) SQYD	PLACE HMA DIKE (TYPE D) LF	HMA (TYPE A) TON	DITCH Exc CY	(N) H (FT)	8" PPP UNDERDRAIN LF	(N) FILTER FABRIC SQYD	(N) PERMEABLE MATERIAL CY	RSP (No. 2, METHOD B) CY	RSP FABRIC (CLASS 8) SQYD	DESCRIPTION	"A1" STATION
D-1	1	a	90.2																							18" CMP	18+36 TO 18+75
		b						2.1							86											WATERTIGHT JOINTS/Conc BACKFILL	
		c				239																				PLACE GRATE OVER OPENING (TYPE 24-12)	
		d					1.4													3.50						MOD G1 CONCRETE SLAB TOP (WATERTIGHT)	
D-2	2	a	6.0																							18" CMP	21+66.80
		b											6.0														
		c				239	1.4													3.48						DI (TYPE GO) GRATE (TYPE 24-12X)	
		d		1																							
		e														27.5		19.5								HMA APRON	
		f										94.1															
		g	88.4																							18" CMP	
		h							1																		
		i																							23		
		j																						6.6			
		k															20	0.6								HMA DIKE (TYPE D)	21+54 TO 21+78
D-2	3	a	8.5																							18" CMP	24+87 TO 25+24
		b			1								6.0													Conc COLLAR	
		c				239	1.4													3.49						DI (TYPE GO) GRATE (TYPE 24-12X)	
		d		1																						REMOVE INLET RISER	
		e														27.5		19.5								HMA APRON	
		f										84.6															
		g	77.5																							18" CMP	
		h							1																		
		i																							30		
		j																						8.6			
		k															20	0.6								HMA DIKE (TYPE D)	24+84 TO 25+08
		l	1																							18" CMP	24+87 TO 25+24
D-2	4	a				215	0.4			4.7										4.72						DI (TYPE GMP) GRATE (TYPE 36RX)	26+88.12
		b														20.9		14.8								HMA APRON	
		c	53.7																							18" CMP	
		d												90													
		e							1																		
		f																			145	217.5	50				
		g																			267	400.5	86.5				
		h																	1.4								
D-2	5	a	18.4																							18" CMP	30+41.80
		b											10.0														
		c					1.4																			BACK-TO-BACK SLOPED HEADWALL	
		d														2.8		2								HMA APRON	
		e		1																							
		f						4.8					75.2														
		g	66.2																								
		h									1																
		i																	11.1								
		j																	1.0								
D-1,2	6	a																	78.9								17+92 TO 31+50
D-2	7	a																	10.2								30+41 TO 32+25
GRAND TOTALS			409.9	3	1	932	6.0	6.9	3	4.7	1	178.7	97.2	90	86	78.7	40	*57.0	102.6		412	618.0	133.5	15.2	53		

(N) - NOT A SEPARATE PAY ITEM, FOR INFORMATION ONLY
* - QUANTITY SHOWN ON ROADWAY QUANTITIES (SHEET Q-1)

DRAINAGE QUANTITIES

DQ-1

REVISED BY | DATE REVISED
ALEX PETERSON | RYAN PRINS
CALCULATED-DESIGNED BY | CHECKED BY
FUNCTIONAL SUPERVISOR: AL TRUJILLO

STATE OF CALIFORNIA - DEPARTMENT OF TRANSPORTATION
Caltrans DESIGN

P:\proj1\02\3E690_plans\pse\23e690id001.dgn

LAST REVISION 09-12-12 | DATE PLOTTED => 17-OCT-2012 | TIME PLOTTED => 10:15

Dist	COUNTY	ROUTE	POST MILES TOTAL PROJECT	SHEET No.	TOTAL SHEETS
02	Mod	299	35.7/36.2	21	28

REGISTERED CIVIL ENGINEER 09-12-12 DATE

10-15-12
PLANS APPROVAL DATE

REGISTERED PROFESSIONAL ENGINEER KEN HALLIS No. C38203 Exp. 3-31-13 CIVIL STATE OF CALIFORNIA

THE STATE OF CALIFORNIA OR ITS OFFICERS OR AGENTS SHALL NOT BE RESPONSIBLE FOR THE ACCURACY OR COMPLETENESS OF SCANNED COPIES OF THIS PLAN SHEET.

NOTE:

EXACT SIGN LOCATIONS TO BE DETERMINED BY ENGINEER.

LEGEND

PORTABLE CHANGEABLE MESSAGE SIGN

SIGN ON WOOD POST

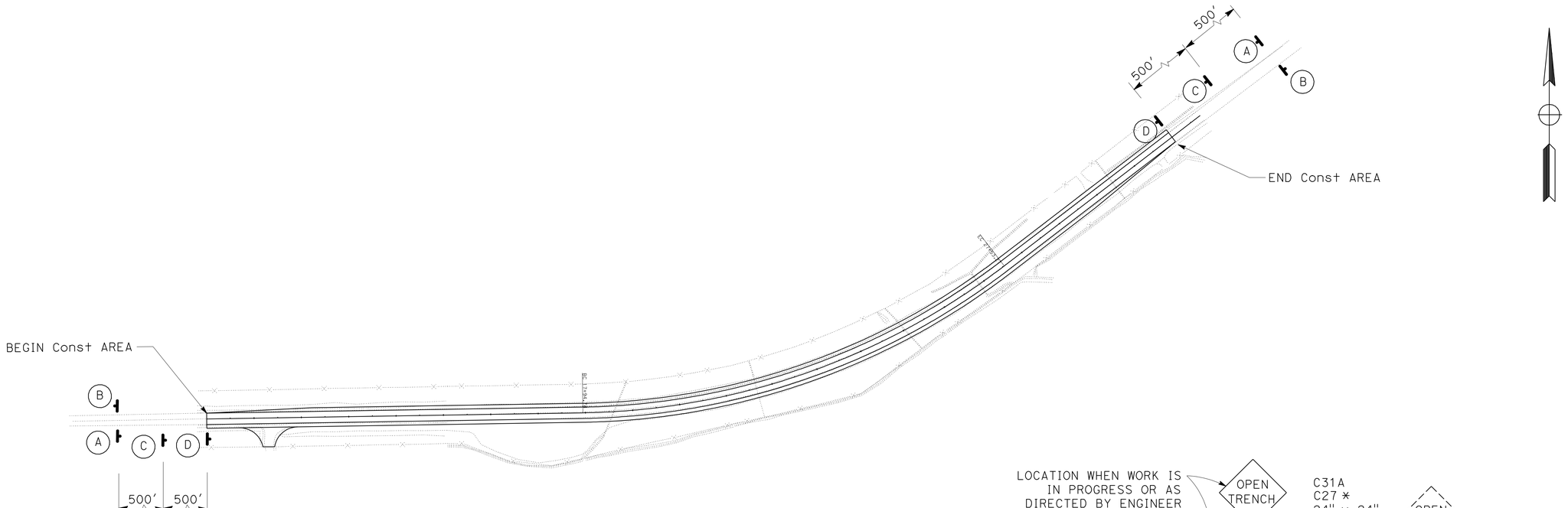

CONSTRUCTION AREA SIGNS

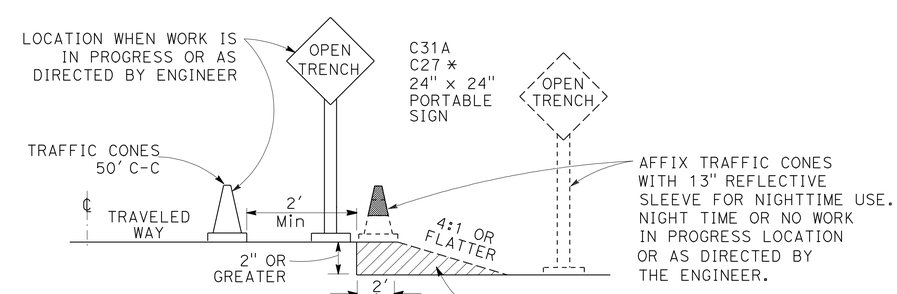

OPEN TRENCH SIGNING AND MARKING

* PLACE AT 250' INTERVALS THROUGH THE OPEN TRENCH AREA ALTERNATE C27 (OPEN TRENCH) AND C31A (NO SHOULDER) SIGNS

CONSTRUCTION AREA SIGNS (STATIONARY MOUNTED)

SIGN No.	SIGN CODE	PANEL SIZE	SIGN MESSAGE	SIZE OF POSTS	No. OF SIGNS	No. OF POSTS
A	W20-1	48" x 48"	ROAD WORK AHEAD	4" x 6"	2	1
B	G20-2	36" x 18"	END ROAD WORK	4" x 6"	2	1
C	W8-3 C29	36" x 36" 39" x 9"	PAVEMENT ENDS 500 FT	4" x 6"	2	1
D	W8-3 SW44	36" x 36" 30" x 30"	PAVEMENT ENDS ARROW	4" x 6"	2	1

CONSTRUCTION AREA SIGNS

NO SCALE

CS-1

REVISED BY | DATE REVISED

ALEX PETERSON | RYAN PRINS

CALCULATED-DESIGNED BY | CHECKED BY

FUNCTIONAL SUPERVISOR: AL TRUJILLO

STATE OF CALIFORNIA - DEPARTMENT OF TRANSPORTATION

Caltrans® DESIGN

P:\proj\02\3E690_plans\pse\23e6901a001.dgn

LAST REVISION 09-12-12 | DATE PLOTTED => 17-OCT-2012 | TIME PLOTTED => 10:15

Dist	COUNTY	ROUTE	POST MILES TOTAL PROJECT	SHEET No.	TOTAL SHEETS
02	Mod	299	35.7/36.2	22	28

REGISTERED CIVIL ENGINEER 09-12-12 DATE

10-15-12
PLANS APPROVAL DATE

REGISTERED PROFESSIONAL ENGINEER KEN HALLIS No. C38203 Exp. 3-31-13 CIVIL STATE OF CALIFORNIA

THE STATE OF CALIFORNIA OR ITS OFFICERS OR AGENTS SHALL NOT BE RESPONSIBLE FOR THE ACCURACY OR COMPLETENESS OF SCANNED COPIES OF THIS PLAN SHEET.

NOTE:

FOR ACCURATE RIGHT OF WAY DATA, CONTACT RIGHT OF WAY ENGINEERING AT THE DISTRICT OFFICE.

LEGEND

- BEGIN/END OF TRAFFIC STRIPE DETAIL
- DELINEATOR (TYPE F)
- C — MARKER (CULVERT)
- OBJECT MARKER (TYPE L-1)
- MILEPOST MARKER
- U — UNDERDRAIN MARKER
- REMOVE ROADSIDE SIGN
- #-# — ROADSIDE SIGN
- - — PAVEMENT DELINEATOR DETAIL
- CHANGE OF TRAFFIC STRIPE DETAIL

ABBREVIATION

S SPACING OF DELINEATORS

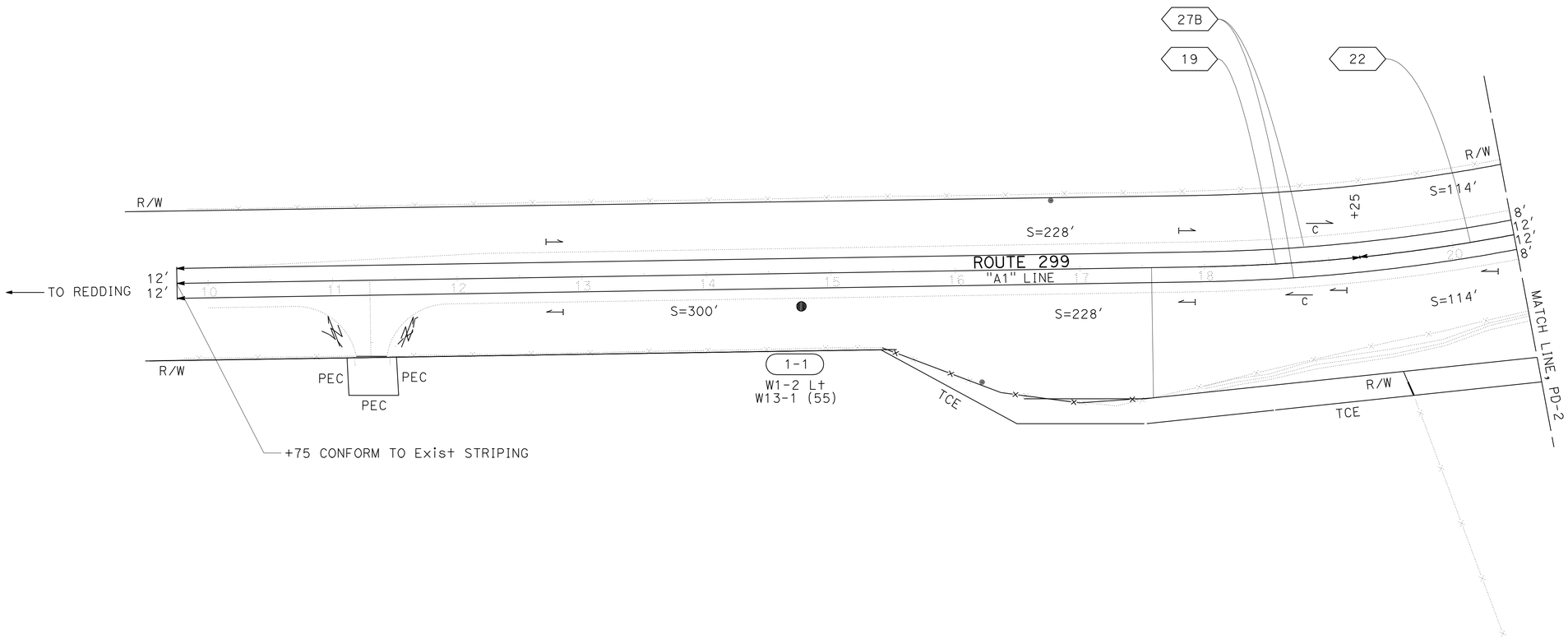

APPROVED FOR PAVEMENT DELINEATION AND SIGN WORK ONLY

PAVEMENT DELINEATION PLAN

SCALE: 1" = 50'

PD-1

REVISED BY | DATE REVISED

ALEX PETERSON | RYAN PRINS

CALCULATED-DESIGNED BY | CHECKED BY

FUNCTIONAL SUPERVISOR: AL TRUJILLO

STATE OF CALIFORNIA - DEPARTMENT OF TRANSPORTATION

Caltrans® DESIGN

P:\proj1\02\3E690_plans\pse\23e690na001.dgn

LAST REVISION 09-12-12 | DATE PLOTTED => 17-OCT-2012 | TIME PLOTTED => 10:17

Dist	COUNTY	ROUTE	POST MILES TOTAL PROJECT	SHEET No.	TOTAL SHEETS
02	Mod	299	35.7/36.2	23	28

REGISTERED CIVIL ENGINEER 09-12-12 DATE

10-15-12
PLANS APPROVAL DATE

REGISTERED PROFESSIONAL ENGINEER KEN HALLIS No. C38203 Exp. 3-31-13 CIVIL STATE OF CALIFORNIA

THE STATE OF CALIFORNIA OR ITS OFFICERS OR AGENTS SHALL NOT BE RESPONSIBLE FOR THE ACCURACY OR COMPLETENESS OF SCANNED COPIES OF THIS PLAN SHEET.

NOTE:

FOR ACCURATE RIGHT OF WAY DATA, CONTACT RIGHT OF WAY ENGINEERING AT THE DISTRICT OFFICE.

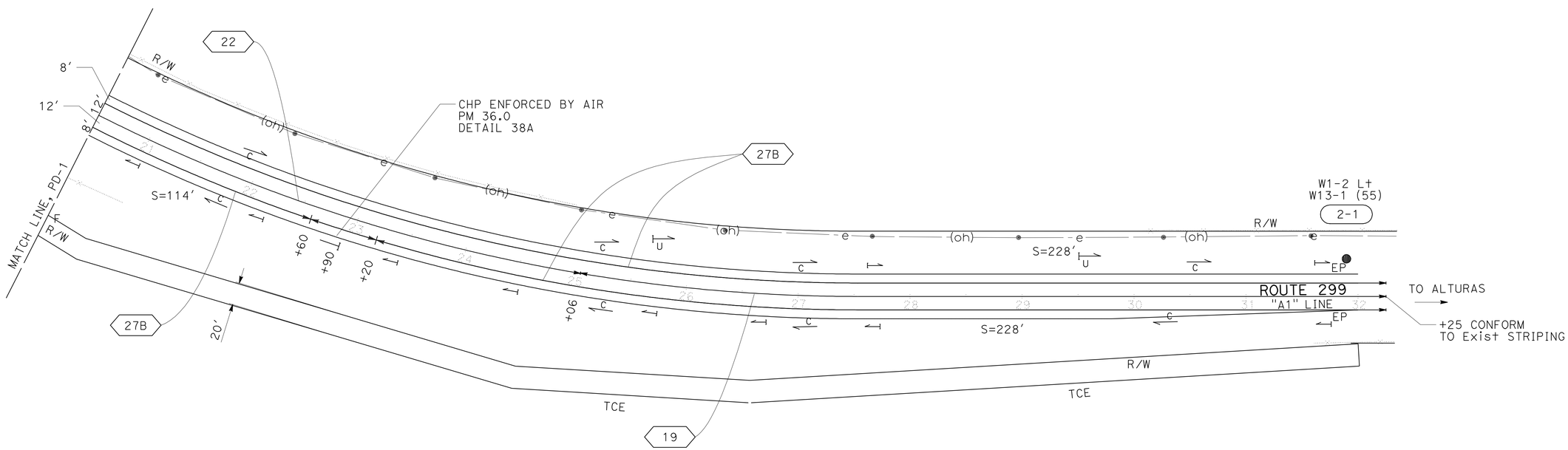

PAVEMENT DELINEATION PLAN

SCALE: 1" = 50'

PD-2

APPROVED FOR PAVEMENT DELINEATION AND SIGN WORK ONLY

REVISED BY	DATE REVISED

CALCULATED-DESIGNED BY: ALEX PETERSON
CHECKED BY: RYAN PRINS
FUNCTIONAL SUPERVISOR: AL TRUJILLO

STATE OF CALIFORNIA - DEPARTMENT OF TRANSPORTATION
Caltrans
DESIGN

P:\proj1\02\3E690_plans\pse\23e690na002.dgn

LAST REVISION 09-12-12 | DATE PLOTTED => 17-OCT-2012 | TIME PLOTTED => 10:17

Dist	COUNTY	ROUTE	POST MILES TOTAL PROJECT	SHEET No.	TOTAL SHEETS
02	Mod	299	35.7/36.2	24	28

REGISTERED CIVIL ENGINEER 09-12-12 DATE

10-15-12
PLANS APPROVAL DATE

REGISTERED PROFESSIONAL ENGINEER KEN HALLIS No. C38203 Exp. 3-31-13 CIVIL STATE OF CALIFORNIA

THE STATE OF CALIFORNIA OR ITS OFFICERS OR AGENTS SHALL NOT BE RESPONSIBLE FOR THE ACCURACY OR COMPLETENESS OF SCANNED COPIES OF THIS PLAN SHEET.

NOTES:

1. CALIFORNIA SIGN CODES ARE DESIGNATED BY (CA), OTHERWISE FEDERAL SIGN CODES ARE SHOWN.
2. (N) - NOT A SEPARATE PAY ITEM, FOR INFORMATION ONLY

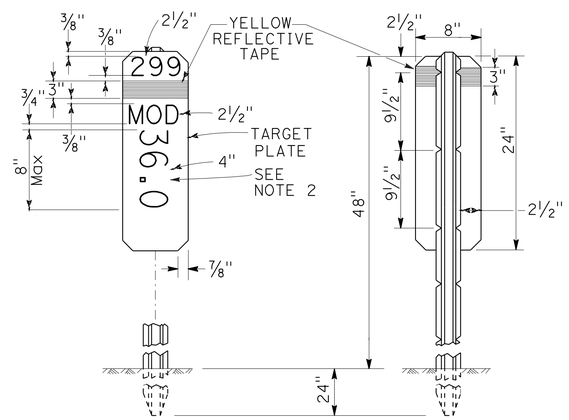

FRONT REAR

NOTES:

1. THE MARKER SHALL BE WHITE (NON-REFLECTIVE) TARGET PLATE WITH BLACK SERIES D NUMERALS AND LETTERS.
2. A POST MILE PREFIX, SUCH AS "R", SHALL APPLY ONLY WHEN DIRECTED BY THE ENGINEER.
3. ALL INFORMATION SHALL BE IN ENGLISH UNITS (MILES).

POST MILE MARKER DETAIL

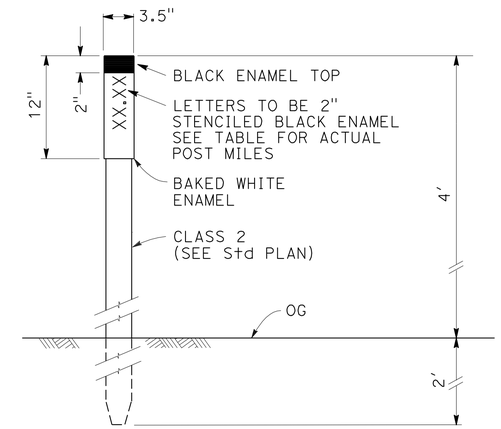

MARKER (CULVERT)

NOTE:
PLACE MARKER 2' FROM EP AT EACH CULVERT LOCATION.

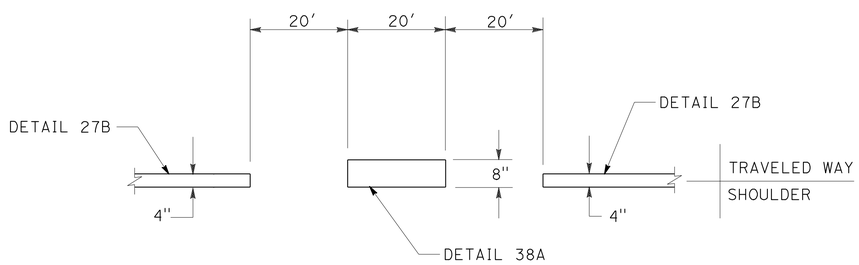

TYPICAL MILE POST STRIPE CHP ENFORCED BY AIR DETAIL (PM 36.0)

NOTE:
ON RIGHT EDGELINE AT EACH WHOLE POST MILE.

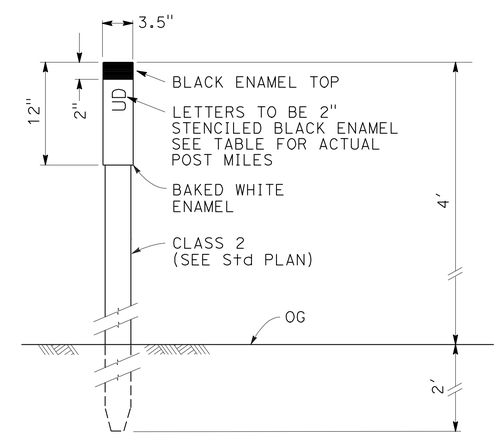

UNDERDRAIN MARKER

NOTE:
PLACE MARKER 2' FROM EACH CLEANOUT LOCATION.

PAVEMENT DELINEATION DETAILS AND SIGN DETAILS

NO SCALE

PDD-1

REVISED BY	DATE REVISED
ALEX PETERSON	RYAN PRINS
CALCULATED-DESIGNED BY	CHECKED BY
FUNCTIONAL SUPERVISOR	AL TRUJILLO

STATE OF CALIFORNIA - DEPARTMENT OF TRANSPORTATION
Caltrans DESIGN

P:\proj1\02\3E690_plans\pse\23e690nb001.dgn

LAST REVISION 09-12-12 | DATE PLOTTED => 17-OCT-2012 | TIME PLOTTED => 10:17

Dist	COUNTY	ROUTE	POST MILES TOTAL PROJECT	SHEET No.	TOTAL SHEETS
02	Mod	299	35.7/36.2	25	28

REGISTERED CIVIL ENGINEER 09-12-12 DATE

10-15-12
PLANS APPROVAL DATE

REGISTERED PROFESSIONAL ENGINEER KEN HALLIS No. C38203 Exp. 3-31-13 CIVIL STATE OF CALIFORNIA

THE STATE OF CALIFORNIA OR ITS OFFICERS OR AGENTS SHALL NOT BE RESPONSIBLE FOR THE ACCURACY OR COMPLETENESS OF SCANNED COPIES OF THIS PLAN SHEET.

NOTE:

(N) - NOT A SEPARATE PAY ITEM, FOR INFORMATION ONLY

ROADSIDE SIGNS

SHEET No.	STATION	SIGN No. #-#	SIGN CODE	REMOVE ROADSIDE SIGN
				EA
PD-1	"A1" 14+75 Rt	1-1	W1-2 W13-1	1
PD-2	"A1" 32+00 Lt	2-1	W1-2 W13-1	1
			TOTAL	2

MILEPOST MARKER

Sta	EA
22+90 Rt	1

MARKERS AND DELINEATORS

STATION	REMOVE MARKER	DELINEATOR (CLASS 2) (TYPE F)	OBJECT MARKER (TYPE L-1)	UNDERDRAIN MARKER
	EA	EA	EA	EA
"A1" 10+00 TO 32+00	15	16	2	2
TOTAL	15	16	2	2

CULVERT MARKER

Sta	PM	EA
"A1" 18+61.36	35.91	2
"A1" 21+66.80	35.97	2
"A1" 25+03.44	36.04	2
"A1" 26+88.12	36.09	2
"A1" 30+41.80	36.14	2
TOTAL		10

PAVEMENT DELINEATION QUANTITIES

STATION	THERMOPLASTIC TRAFFIC STRIPE (SPRAYABLE)				PAVEMENT MARKER (RETROREFLECTIVE-RECESSED)	
	DETAIL 22	DETAIL 19	DETAIL 27B	DETAIL 38A	TYPE D	TYPE H
	LF	LF	LF	LF	EA	EA
"A1" 9+75 TO 32+25			2250			
"A1" 9+75 TO 22+60 Rt			1285			
"A1" 23+00 TO 32+25 Rt			925			
"A1" 9+75 TO 19+25		950			21	42
"A1" 25+06 TO 32+25		719			16	31
"A1" 19+25 TO 25+06	581				26	
"A1" 22+90 Rt				20		
TOTAL	6730				136	

PAVEMENT DELINEATION AND SIGN QUANTITIES

PDQ-1

REVISED BY | DATE REVISED
ALEX PETERSON | RYAN PRINS
CALCULATED-DESIGNED BY | CHECKED BY
FUNCTIONAL SUPERVISOR
AL TRUJILLO

STATE OF CALIFORNIA - DEPARTMENT OF TRANSPORTATION
Caltrans
DESIGN

P:\proj\02\3E690_plans\pse\23e690nc001.dgn

LAST REVISION 09-12-12 | DATE PLOTTED => 17-OCT-2012 | TIME PLOTTED => 10:17

Dist	COUNTY	ROUTE	POST MILES TOTAL PROJECT	SHEET No.	TOTAL SHEETS
02	Mod	299	35.7/36.2	26	28

REGISTERED CIVIL ENGINEER 09-12-12 DATE

10-15-12
PLANS APPROVAL DATE

REGISTERED PROFESSIONAL ENGINEER KEN HALLIS No. C38203 Exp. 3-31-13 CIVIL STATE OF CALIFORNIA

THE STATE OF CALIFORNIA OR ITS OFFICERS OR AGENTS SHALL NOT BE RESPONSIBLE FOR THE ACCURACY OR COMPLETENESS OF SCANNED COPIES OF THIS PLAN SHEET.

NOTE:

(N) - NOT A SEPARATE PAY ITEM, FOR INFORMATION ONLY

TEMPORARY WATER POLLUTION CONTROL

STATION RANGE	DESCRIPTION	TEMPORARY FIBER ROLL	TEMPORARY CHECK DAM	TEMPORARY GRAVEL BAG BERM	TEMPORARY DRAINAGE INLET PROTECTION
		LF	LF	LF	EA
"A1" 10+00 TO "A1" 32+00	STORMWATER BMP ITEMS	500	30	30	4
	EMBANKMENT AREAS	2800			
	TOTAL	3300	30	30	4

ROADWAY QUANTITIES

STATION RANGE/LOCATION	ROADWAY EXCAVATION	(N) EMBANKMENT	HOT MIX ASPHALT (TYPE A)	CLASS 2 AGGREGATE BASE	SUBGRADE ENHANCEMENT GEOTEXTILE (CLASS A1)	SHOULDER BACKING	COLD PLANE ASPHALT CONCRETE PAVEMENT	TEMPORARY FENCE (TYPE BW)	REMOVE FENCE (TYPE WM)	RELOCATE GATE	TACK COAT	COMMENTS
	CY	CY	TON	CY	SQYD	TON	SQYD	LF	LF	EA	TON	
"A1" 10+00 TO "A1" 32+00	7377	7115	3387	3819		463					4.9	MAINLINE
DRAINAGE SYSTEM No. 2,3,4,5			57*									FROM DRAINAGE QUANTITIES
"D1" 0+20 TO "D1" 0+61	126	60	162	160		10						DRIVEWAY
"A1" 19+50, 105'Rt								17		1		GATE
"A1" 15+40 TO 32+00 Rt								1768	1707			
"A1" 9+75 TO 10+00							67					
"A1" 32+00 TO 32+25							67					
"A1" 25+50 TO 29+50					1800							
TOTAL	7503	7175	3606	3979	1800	473	134	1785	1707	1	4.9	

* QUANTITY SHOWN ON SHEET DQ-1

SUMMARY OF QUANTITIES
Q-1

REVISED BY | DATE REVISED

ALEX PETERSON | RYAN PRINS

CALCULATED-DESIGNED BY | CHECKED BY

FUNCTIONAL SUPERVISOR: AL TRUJILLO

STATE OF CALIFORNIA - DEPARTMENT OF TRANSPORTATION

Caltrans DESIGN

P:\proj1\02\3E690_plans\pse\23e690pa001.dgn

LAST REVISION | DATE PLOTTED => 17-OCT-2012 | TIME PLOTTED => 10:17

09-12-12

Dist	COUNTY	ROUTE	POST MILES TOTAL PROJECT	SHEET No.	TOTAL SHEETS
02	Mod	299	35.7/36.2	27	28

Raymond Don Tsztoo
REGISTERED CIVIL ENGINEER

July 20, 2012
PLANS APPROVAL DATE

REGISTERED PROFESSIONAL ENGINEER Raymond Don Tsztoo No. C37332 Exp. 6-30-14 CIVIL STATE OF CALIFORNIA

THE STATE OF CALIFORNIA OR ITS OFFICERS OR AGENTS SHALL NOT BE RESPONSIBLE FOR THE ACCURACY OR COMPLETENESS OF SCANNED COPIES OF THIS PLAN SHEET.

TO ACCOMPANY PLANS DATED 10-15-12

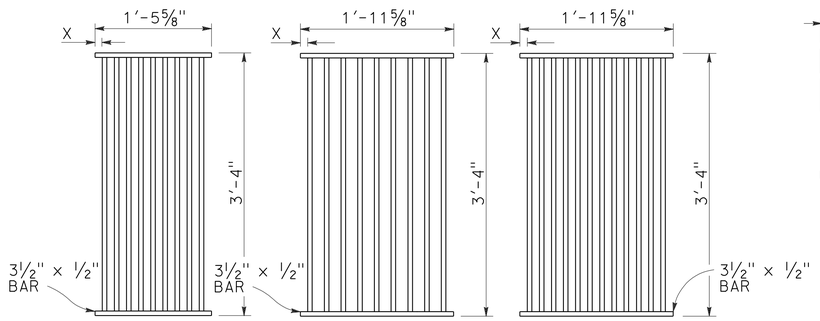

TYPE 18-9

1⅜" Clear spacing. Use within the roadbed on highways where bicycles and pedestrians are excluded.

TYPE 24-9

2" Clear spacing. Use in locations off the roadbed on all types of highways.

TYPE 24-12

1⅜" Clear spacing. Use within the roadbed on highways where bicycles and pedestrians are excluded.

RECTANGULAR GRATE DETAILS

(See table below)

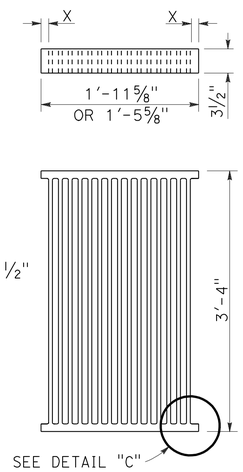

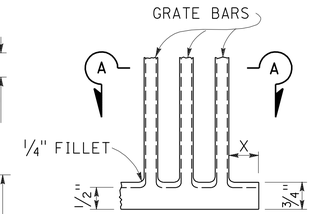

DETAIL "C"

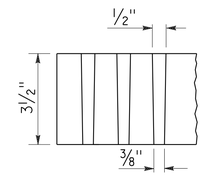

SECTION A-A

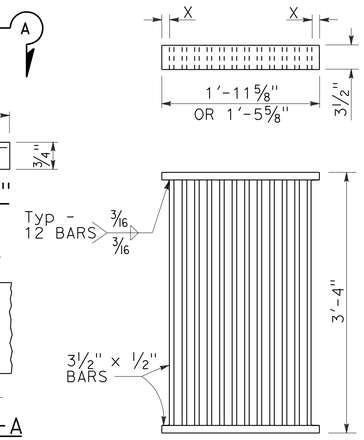

ALTERNATIVE CAST DUCTILE IRON GRATE OR CAST CARBON STEEL GRATE

ALTERNATIVE WELDED GRATE

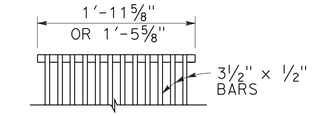

CAST END BLOCK

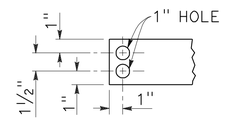

END OF BAR

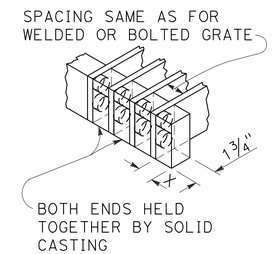

ALTERNATIVE CAST DUCTILE IRON OR CAST CARBON STEEL END BLOCK GRATE

NOTES:

1. Grate type numbers refer to approximate width of grate in inches and number of bars, respectively.
2. Contractor has the option of using cast ductile iron, cast carbon steel, welded, bolted, or cast end block grate.
3. Rounded top of bars optional on all grates.
4. Pipe inlets with a grate shall be placed so that bars parallel direction of principle surface flow.
5. Complete joint penetration butt welds may be substituted for the fillet welds on all anchors.
6. Standard square, hexagon, round or equivalent headed anchors may be substituted for the right angle hooks on the anchors shown on this plan.
7. Grate and frame weights are based on welded grates (weights of face angles, steps, protection bars, etc. are not included).
8. Connect chain to grate and frame only at locations shown on the plans. When chain is required, do not use cast ductile iron grates.

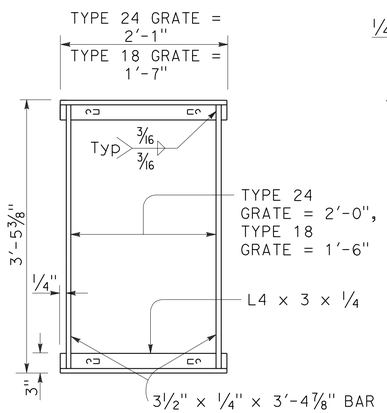

TYPICAL FRAME

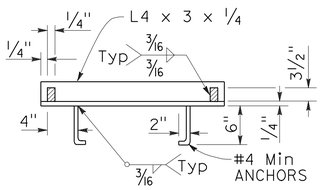

CROSS SECTION

(Thru frame)

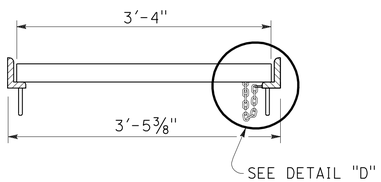

LONGITUDINAL SECTION

(Thru frame and grate)

RECTANGULAR FRAME DETAILS

(For all rectangular grates)

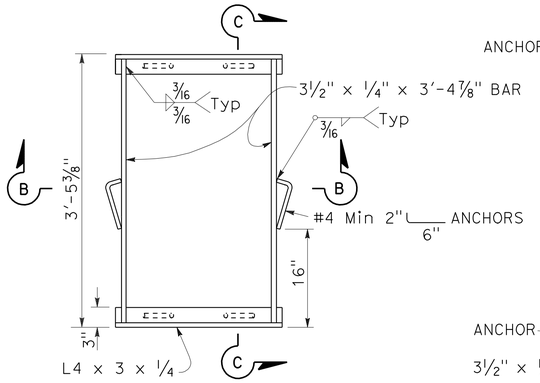

TYPICAL FRAME

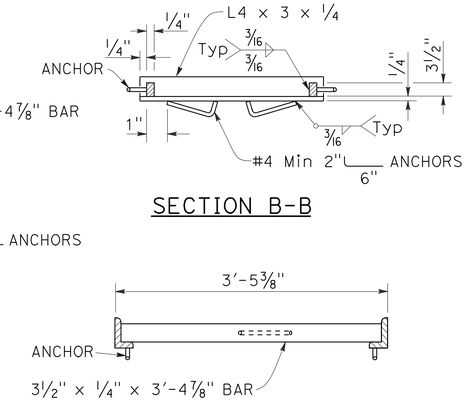

SECTION B-B

SECTION C-C

ALTERNATIVE ANCHOR FOR RECTANGULAR FRAME

(For details not shown, See Rectangular Frame Details)

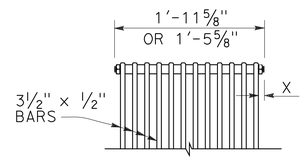

BOLTED END BLOCK

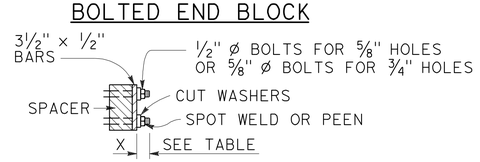

BOLTING DETAIL

ALTERNATIVE BOLTED GRATE

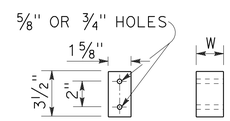

BAR SPACER

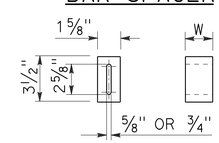

ALTERNATIVE SPACER

W = 1⅜" or 2"

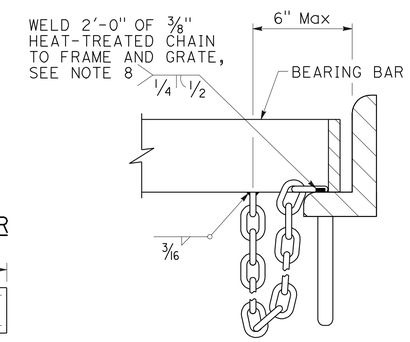

DETAIL "D"

(Steel grates only)

GRATE BAR SPACING TABLE

TYPE	No. OF BARS	CLEAR BAR SPACING	X
18-9	9	1⅜"	1 1/16"
24-9	9	2"	1 9/16"
24-12	12	1⅜"	1¼"

INLET TYPE	COVER TYPE	WEIGHT LB
OS	PLATE	174
OL-7	PLATE	170
OL-10	PLATE	170
OL-14	PLATE	170
OL-21	PLATE	170
OCP	PLATE	112
OCPI	PLATE	112
OCPI	REDWOOD	42
OMP	PLATE	177
OMPI	PLATE	177

INLET TYPE	GRATE TYPE	No. OF GRATES	WEIGHT LB
GDO	24-12	2	634
GOL-7	24-12	1	326
GOL-10	24-12	1	326
GO,G1,G2,G3,G4 (TYPE 24)	24-9	1	263
	24-12	1	326
G4 (TYPE 18),G5,G6	18-9	1	249
GT1	18-9	2	498
GT2	18-9	2	498
GT3	24-12	2	652
GT4	24-12	2	652
TRASH RACK			22
GRATE CHAIN			3

BASIS FOR Misc IRON & STEEL FINAL PAY WEIGHTS FOR DRAINAGE INLETS

(See Note 7)

STATE OF CALIFORNIA
DEPARTMENT OF TRANSPORTATION

GRATE DETAILS

NO SCALE

RSP D77A DATED JULY 20, 2012 SUPERSEDES STANDARD PLAN D77A DATED MAY 20, 2011 - PAGE 164 OF THE STANDARD PLANS BOOK DATED 2010.

REVISED STANDARD PLAN RSP D77A

2010 REVISED STANDARD PLAN RSP D77A

6-13-12

Dist	COUNTY	ROUTE	POST MILES TOTAL PROJECT	SHEET No.	TOTAL SHEETS
02	Mod	299	35.7/36.2	28	28

Raymond Don Tsztoo
REGISTERED CIVIL ENGINEER

July 20, 2012
PLANS APPROVAL DATE

REGISTERED PROFESSIONAL ENGINEER Raymond Don Tsztoo No. C37332 Exp. 6-30-14 CIVIL STATE OF CALIFORNIA

THE STATE OF CALIFORNIA OR ITS OFFICERS OR AGENTS SHALL NOT BE RESPONSIBLE FOR THE ACCURACY OR COMPLETENESS OF SCANNED COPIES OF THIS PLAN SHEET.

TO ACCOMPANY PLANS DATED 10-15-12

2010 REVISED STANDARD PLAN RSP D77B

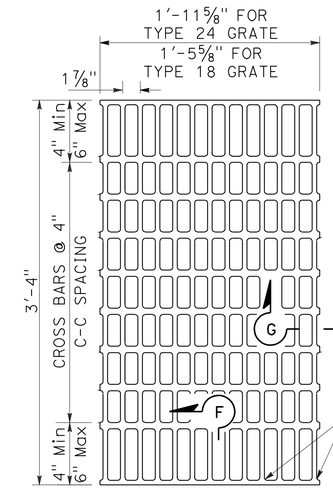

NOTES:

Bearing bars to be 3½" × ¼" bars on 1⅞" centers.

⅜"± ø Cross bars may be fillet welded, resistance welded or electroforged to bearing bars.

Weight of Type 24 grate = 141 LBS.

Weight of Type 18 grate = 107 LBS. (Type 24 grate shown).

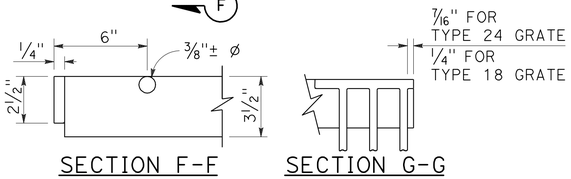

SECTION F-F SECTION G-G

TYPE 18-10 AND 24-13 GRATE

(Welded Steel)

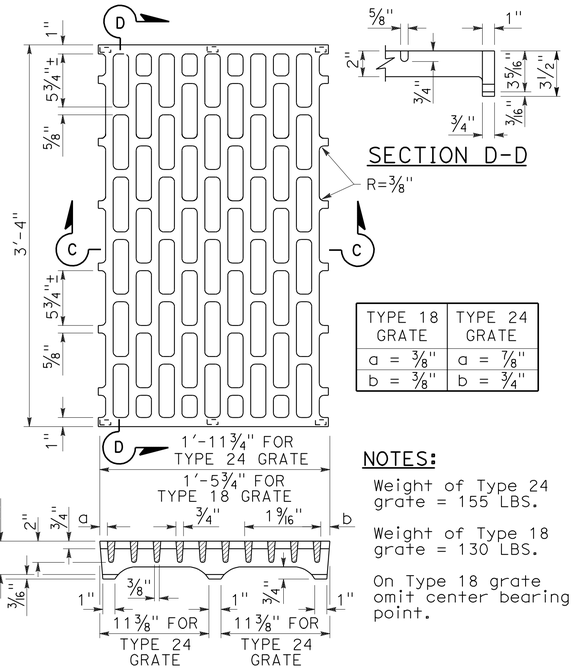

SECTION D-D

TYPE 18 GRATE	TYPE 24 GRATE
a = ⅜"	a = ⅞"
b = ⅜"	b = ¾"

NOTES:

Weight of Type 24 grate = 155 LBS.

Weight of Type 18 grate = 130 LBS.

On Type 18 grate omit center bearing point.

SECTION C-C

TYPE 18-8C AND 24-10C GRATE

(Cast ductile iron)

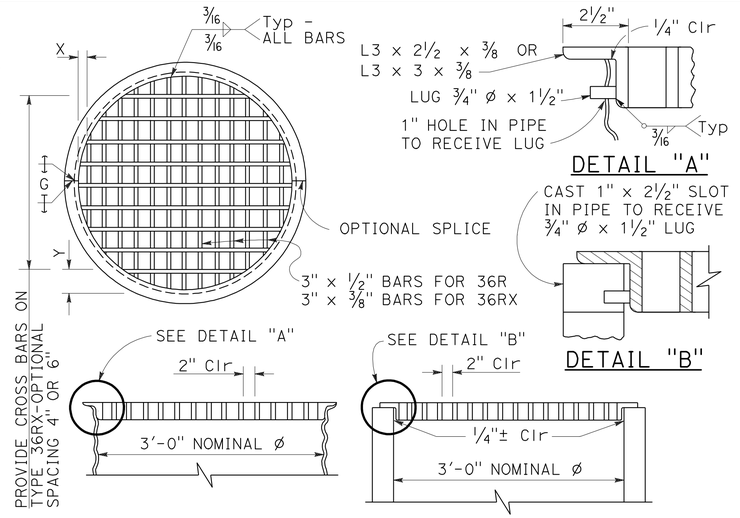

DETAIL "A"

DETAIL "B"

TYPE 36R AND 36RX GRATE DETAILS

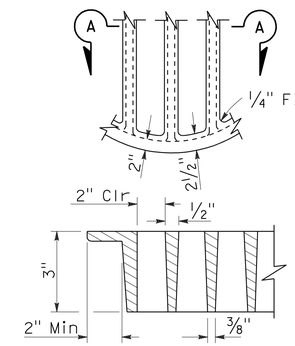

SECTION A-A

ALTERNATIVE CAST DUCTILE IRON GRATE OR CAST CARBON STEEL GRATE TYPE 36R AND 36RX

BASIS FOR Misc IRON AND STEEL FINAL PAY WEIGHTS FOR DRAINAGE INLETS

INLET TYPE	GRATE TYPE	No. OF GRATES	WEIGHT LB
GDO (SEE NOTE 4)	24-10C	2	391
	24-10S	2	456
	24-12X	2	473
	24-13	2	374
GO,GOL,G1,G2, G3,G4 (TYPE 24)	24-10C	1	202
	24-10S	1	229
	24-12X	1	239
	24-13	1	188
G4 (TYPE 18) G5,G6	18-8S	1	187
	18-9X	1	187
	18-10	1	149
GT1,GT2	18-8S	2	374
	18-9X	2	374
	18-10	2	298
GT3,GT4	24-10C	2	404
	24-10S	2	458
	24-12X	2	478
	24-13	2	376
ODI	36RX (Mod)	1	196
GMP,GCP,GCPI	36RX	1	215
ODI	36R (Mod)	1	220
GMP,GCP,GCPI	36R	1	236
TRASH RACK			22
GRATE CHAIN			3

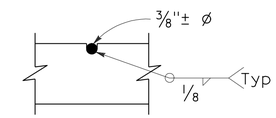

⅜"± ø Cross bars may be fillet welded, resistance welded or electroforged to bearing bars.

CROSS BAR DETAIL TYPE 36RX GRATE (WELDED STEEL)

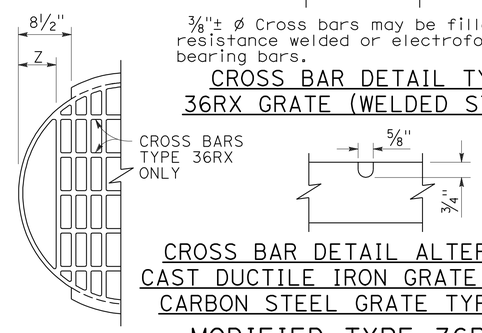

CROSS BAR DETAIL ALTERNATIVE CAST DUCTILE IRON GRATE OR CAST CARBON STEEL GRATE TYPE 36RX

MODIFIED TYPE 36R AND 36RX GRATE FOR ODI INLET

NOTES:

1. When alternative grates are allowed - Final pay based on alternative with the lesser weight.
2. Use frame shown on Standard Plan D74A, D74B or RSP D77A as appropriate.
3. When Type 24-10S, 24-12X or 24-13 grates are used with GDO Inlets, a ¼" × 3½" × 3'-4⅞" steel bar shall be welded across the center of inlet frame to separate the individual grates.
4. See Revised Standard Plan RSP D77A for connecting chain to welded grate and frame. When chain is required, do not use cast ductile iron grate.

GRATE BAR SPACING TABLE

TYPE	No. OF BARS	CLEAR BAR SPACING	X	Y 4" SPACING	Y 6" SPACING	Z
36R	13	2"	2⅛"	-	-	-
36RX (STEEL)	15	2"	9/16"	3¾"	5¾"	-
36RX (CAST)	13	2"	2⅛"	3¾"	5¾"	-
36R Mod	12	2"	2⅛"	-	-	5"
36RX Mod (STEEL)	13	2"	9/16"	3¾"	5¾"	5 11/16"
36RX Mod (CAST)	12	2"	2⅛"	3¾"	5¾"	5"

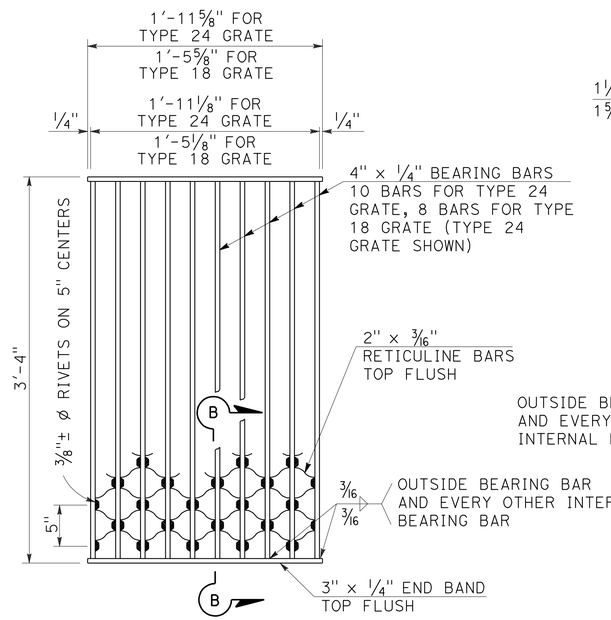

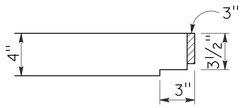

NOTES:

Weight of Type 24 grate = 182 LBS.
Weight of Type 18 grate = 145 LBS.

SECTION B-B

TYPE 18-8S AND 24-10S GRATE

(Welded Steel) Reticuline type

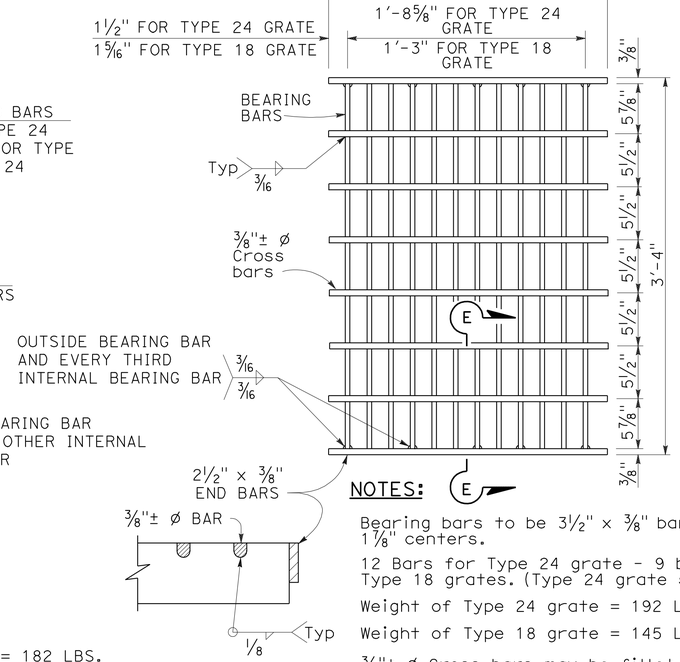

NOTES:

Bearing bars to be 3½" × ⅜" bars on 1⅞" centers.

12 Bars for Type 24 grate - 9 bars for Type 18 grates. (Type 24 grate shown).

Weight of Type 24 grate = 192 LBS.

Weight of Type 18 grate = 145 LBS.

⅜"± ø Cross bars may be fillet welded, resistance welded or electroforged to bearing bars.

SECTION E-E

TYPE 18-9X AND 24-12X GRATE

(Welded Steel)

STATE OF CALIFORNIA
DEPARTMENT OF TRANSPORTATION

BICYCLE TRAVERSABLE GRATE DETAILS

NO SCALE

RSP D77B DATED JULY 20, 2012 SUPERSEDES STANDARD PLAN D77B DATED MAY 20, 2011 - PAGE 165 OF THE STANDARD PLANS BOOK DATED 2010.

REVISED STANDARD PLAN RSP D77B

4-17-12