Dist	COUNTY	ROUTE	POST MILES TOTAL PROJECT	SHEET No.	TOTAL SHEETS
02	Sis	96	68.7/69.1	1	31

STATE OF CALIFORNIA

DEPARTMENT OF TRANSPORTATION

PROJECT PLANS FOR CONSTRUCTION ON

STATE HIGHWAY

IN SISKIYOU COUNTY AT HAMBURG FROM 2.6 MILES TO 2.1 MILES WEST OF SCOTT RIVER BRIDGE

TO BE SUPPLEMENTED BY STANDARD PLANS DATED MAY 2010

INDEX OF PLANS

SHEET No.	DESCRIPTION
1	TITLE SHEET
2-4	TYPICAL CROSS SECTIONS
5-7	LAYOUTS
8	PROFILE AND SUPERELEVATION DIAGRAM
9-10	CONSTRUCTION DETAILS
11-13	EROSION CONTROL PLANS
14	EROSION CONTROL QUANTITIES
15-16	DRAINAGE PLANS
17-18	DRAINAGE PROFILES
19-20	DRAINAGE DETAILS
21	DRAINAGE QUANTITIES
22	UTILITY PLAN
23	CONSTRUCTION AREA SIGNS
24-26	PAVEMENT DELINEATION AND SIGN PLANS
27	SUMMARY OF QUANTITIES
28	TRAFFIC CONTROL SYSTEM
29-31	REVISED STANDARD PLANS

THE STANDARD PLANS LIST APPLICABLE TO THIS CONTRACT IS INCLUDED IN THE NOTICE TO BIDDERS AND SPECIAL PROVISIONS BOOK.

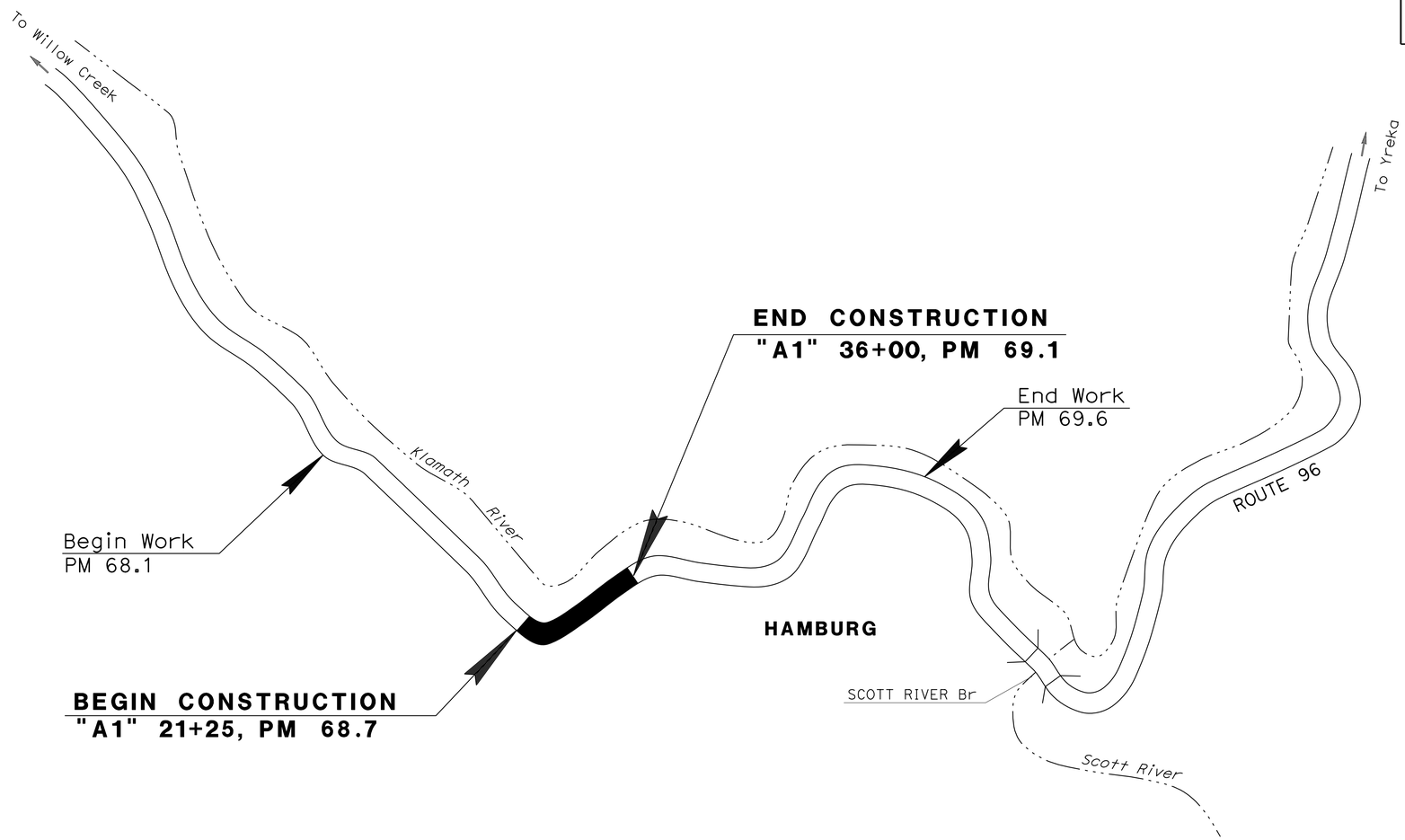

LOCATION MAP

NO SCALE

THE CONTRACTOR SHALL POSSESS THE CLASS (OR CLASSES) OF LICENSE AS SPECIFIED IN THE "NOTICE TO BIDDERS."

PROJECT MANAGER: DEREK WILLIS

DESIGN ENGINEER: STEVE TOPAL

P:\proj1\02\3E080_plans\pse\23e080ab001.dgn

Toby J. Crawford 01-03-13

PROJECT ENGINEER REGISTERED CIVIL ENGINEER — DATE

REGISTERED PROFESSIONAL ENGINEER — TOBY J. CRAWFORD — No. C71138 — Exp. 6-30-13 — CIVIL — STATE OF CALIFORNIA

January 7, 2013

PLANS APPROVAL DATE

THE STATE OF CALIFORNIA OR ITS OFFICERS OR AGENTS SHALL NOT BE RESPONSIBLE FOR THE ACCURACY OR COMPLETENESS OF ELECTRONIC COPIES OF THIS PLAN SHEET.

CONTRACT No.	02-3E0804
PROJECT ID	0200020022

LAST REVISION 01-03-13

DATE PLOTTED => 14-JAN-2013
TIME PLOTTED => 09:19

Dist	COUNTY	ROUTE	POST MILES TOTAL PROJECT	SHEET No.	TOTAL SHEETS
02	Sis	96	68.7/69.1	2	31

REGISTERED CIVIL ENGINEER 01-03-13 DATE

01-07-13
PLANS APPROVAL DATE

REGISTERED PROFESSIONAL ENGINEER TOBY J. CRAWFORD No. C71138 Exp. 6-30-13 CIVIL STATE OF CALIFORNIA

THE STATE OF CALIFORNIA OR ITS OFFICERS OR AGENTS SHALL NOT BE RESPONSIBLE FOR THE ACCURACY OR COMPLETENESS OF SCANNED COPIES OF THIS PLAN SHEET.

NOTES:

1. DIMENSIONS OF THE PAVEMENT STRUCTURES (STRUCTURAL SECTIONS) ARE SUBJECT TO TOLERANCES SPECIFIED IN THE STANDARD SPECIFICATIONS.
2. SUPERELEVATIONS ARE SHOWN ON THE SUPERELEVATION DIAGRAMS.
3. USE 7' STEEL POSTS FOR ALL METAL BEAM GUARD RAILING. REFER TO LAYOUTS AND QUANTITY SHEETS FOR METAL BEAM GUARD RAILING LOCATIONS.
4. SEE LAYOUTS FOR ADDITIONAL INFORMATION ON TEMPORARY CONSTRUCTION EASEMENT LIMITS.
5. SEE CONSTRUCTION DETAILS FOR CROSS SECTIONS AT DRIVEWAY CONFORMS.

DESIGN DESIGNATION

ADT (2013)	500	D	66%
ADT (2033)	500	T	10%
DHV	80	V	45 mph
ESAL	391,420	TI_{20}	8.0

ABBREVIATIONS:

Super	SUPERELEVATION
HMA-A	HOT MIX ASPHALT (TYPE A)

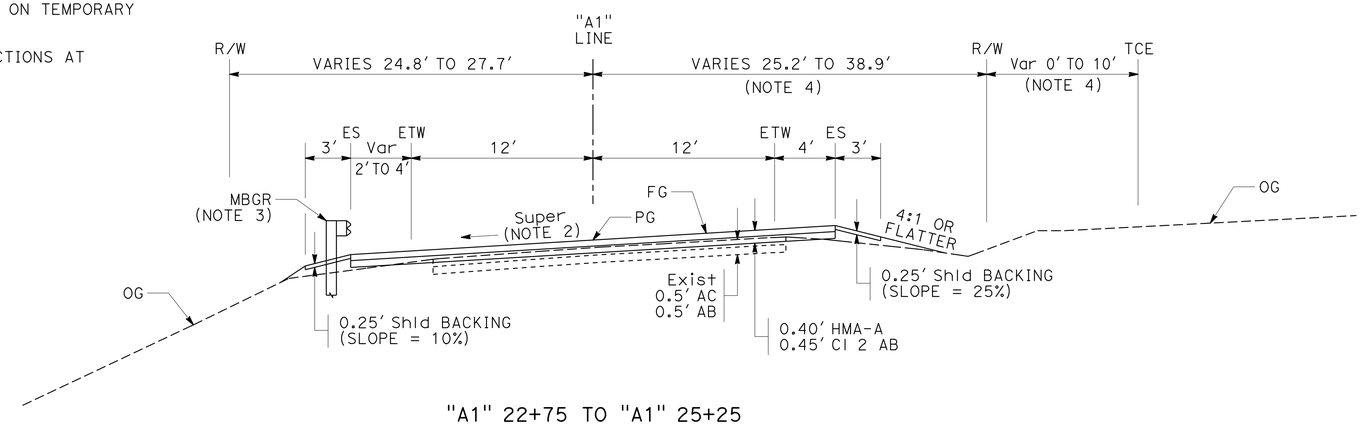

"A1" 22+75 TO "A1" 25+25

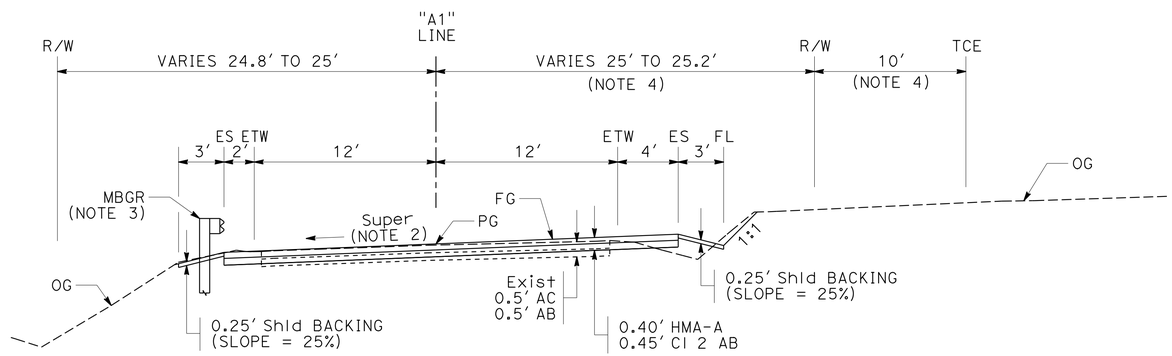

"A1" 22+18 TO "A1" 22+75

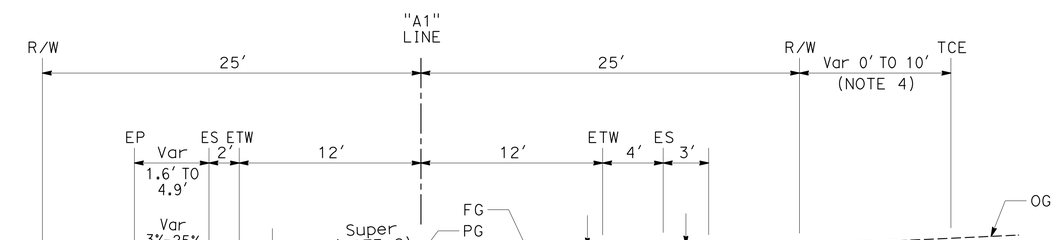

"A1" 21+75 TO "A1" 22+18

ROUTE 96

TYPICAL CROSS SECTIONS

NO SCALE

X-1

REVISED BY	DATE REVISED
TOBY CRAWFORD	RUSSELL FLOOD
CALCULATED-DESIGNED BY	CHECKED BY
FUNCTIONAL SUPERVISOR	STEVE TOPAL

STATE OF CALIFORNIA - DEPARTMENT OF TRANSPORTATION
Caltrans® **DESIGN**

P:\proj1\02\3E080_plans\pse\23e080ca001.dgn

LAST REVISION 01-03-13 | DATE PLOTTED => 14-JAN-2013 | TIME PLOTTED => 09:19

Dist	COUNTY	ROUTE	POST MILES TOTAL PROJECT	SHEET No.	TOTAL SHEETS
02	Sis	96	68.7/69.1	3	31

REGISTERED CIVIL ENGINEER 01-03-13 DATE

01-07-13
PLANS APPROVAL DATE

REGISTERED PROFESSIONAL ENGINEER TOBY J. CRAWFORD No. C71138 Exp. 6-30-13 CIVIL STATE OF CALIFORNIA

THE STATE OF CALIFORNIA OR ITS OFFICERS OR AGENTS SHALL NOT BE RESPONSIBLE FOR THE ACCURACY OR COMPLETENESS OF SCANNED COPIES OF THIS PLAN SHEET.

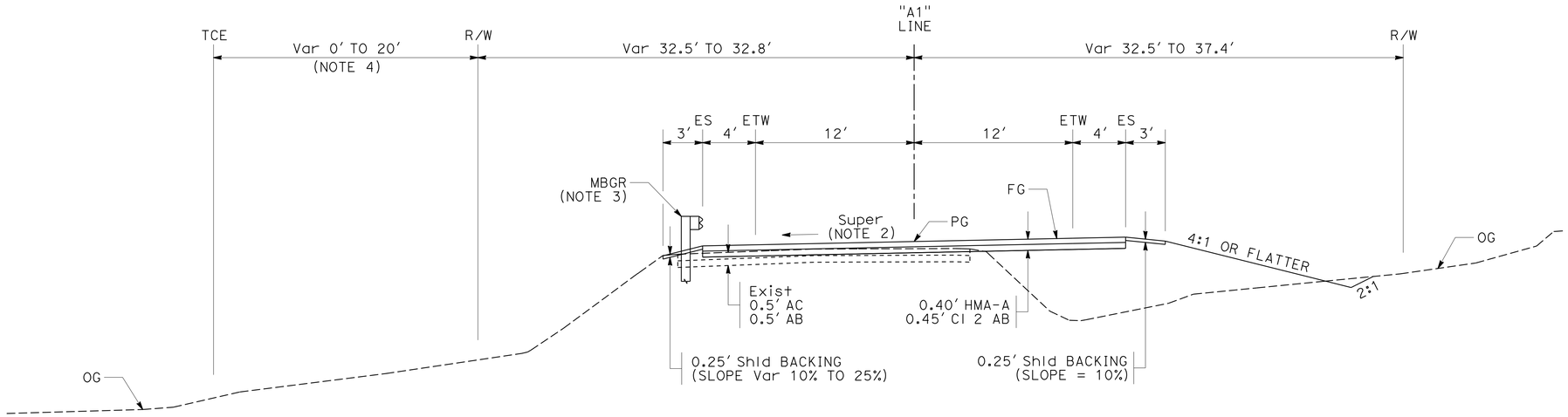

"A1" 28+25 TO "A1" 28+70

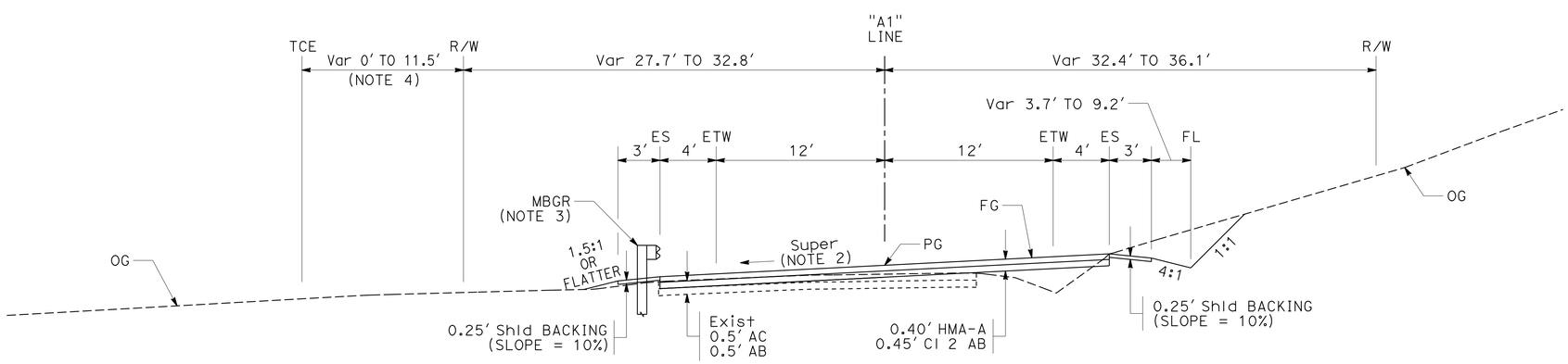

"A1" 25+25 TO "A1" 28+25
"A1" 28+70 TO "A1" 29+25

ROUTE 96

TYPICAL CROSS SECTIONS

NO SCALE

X-2

REVISED BY	DATE REVISED
TOBY CRAWFORD	RUSSELL FLOOD
CALCULATED-DESIGNED BY	CHECKED BY
FUNCTIONAL SUPERVISOR	STEVE TOPAL

STATE OF CALIFORNIA - DEPARTMENT OF TRANSPORTATION
Caltrans
DESIGN

P:\proj1\02\3E080_plans\pse\23e080ca002.dgn

LAST REVISION 01-03-13
DATE PLOTTED => 14-JAN-2013
TIME PLOTTED => 09:19

Dist	COUNTY	ROUTE	POST MILES TOTAL PROJECT	SHEET No.	TOTAL SHEETS
02	Sis	96	68.7/69.1	4	31

REGISTERED CIVIL ENGINEER 01-03-13 DATE

01-07-13
PLANS APPROVAL DATE

REGISTERED PROFESSIONAL ENGINEER TOBY J. CRAWFORD No. C71138 Exp. 6-30-13 CIVIL STATE OF CALIFORNIA

THE STATE OF CALIFORNIA OR ITS OFFICERS OR AGENTS SHALL NOT BE RESPONSIBLE FOR THE ACCURACY OR COMPLETENESS OF SCANNED COPIES OF THIS PLAN SHEET.

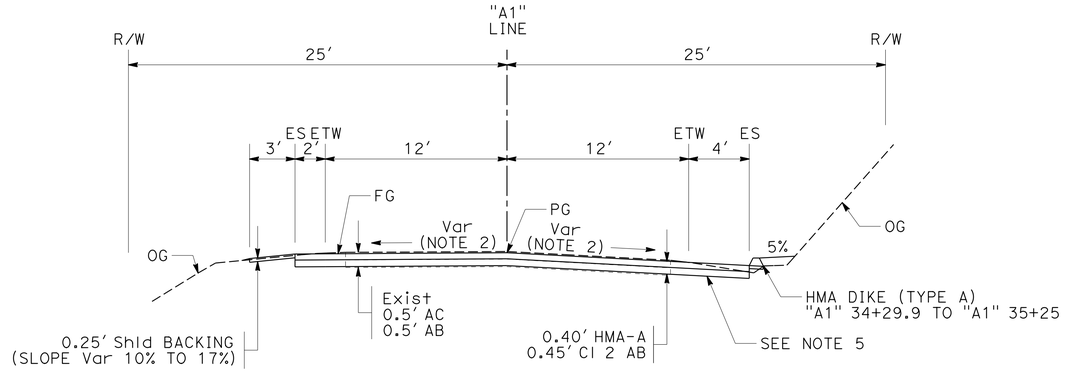

"A1" 33+87 TO "A1" 35+25

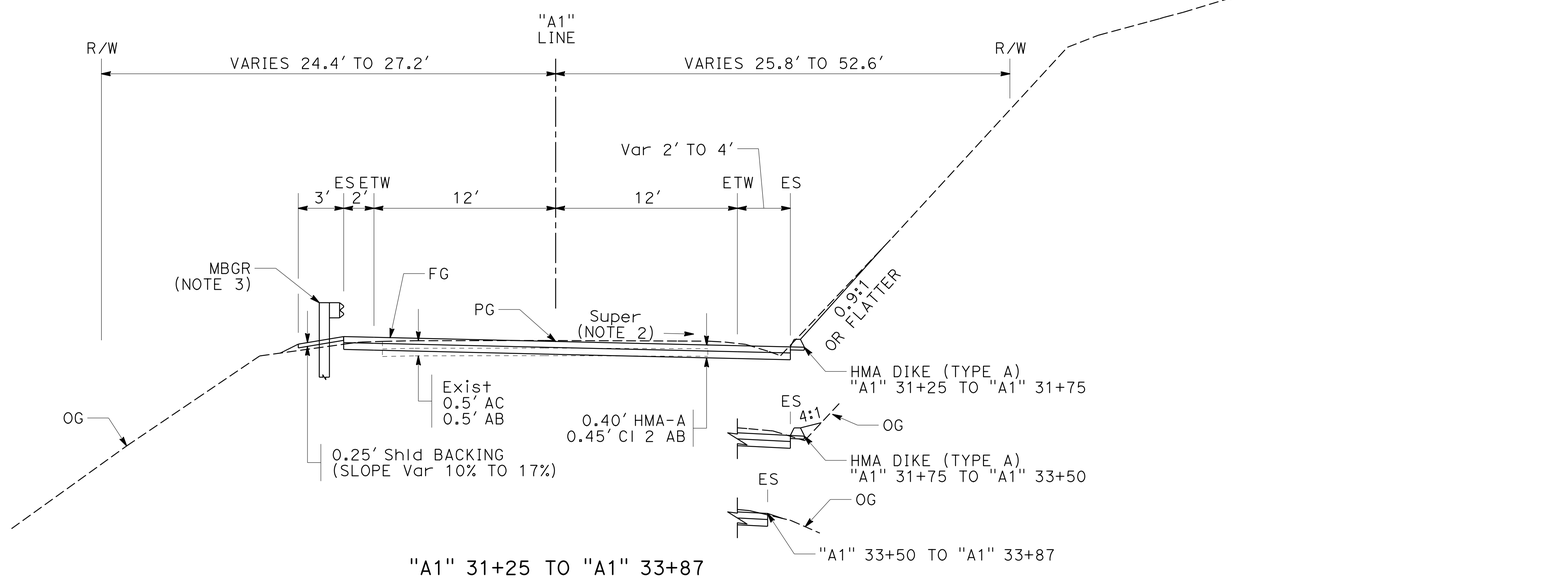

"A1" 31+25 TO "A1" 33+87

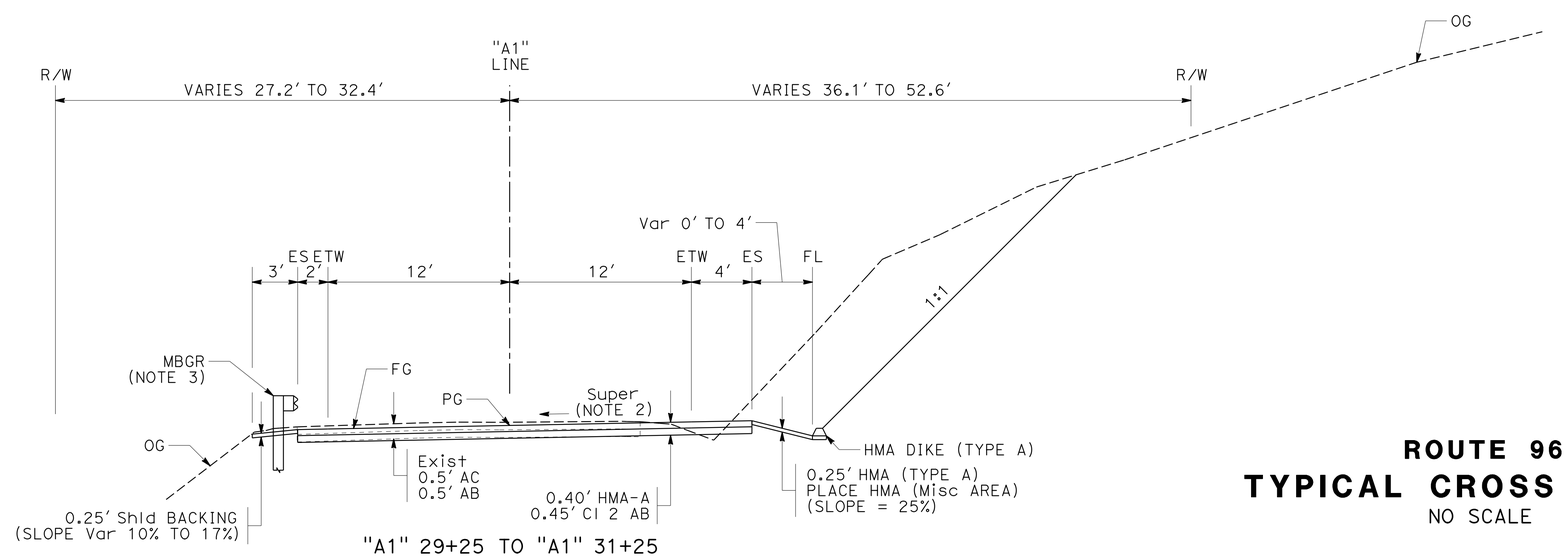

"A1" 29+25 TO "A1" 31+25

ROUTE 96
TYPICAL CROSS SECTIONS
NO SCALE

X-3

REVISED BY	DATE REVISED
TOBY CRAWFORD	RUSSELL FLOOD
CALCULATED-DESIGNED BY	CHECKED BY
FUNCTIONAL SUPERVISOR	STEVE TOPAL

STATE OF CALIFORNIA - DEPARTMENT OF TRANSPORTATION
Caltrans® DESIGN

P:\proj1\02\3E080_plans\pse\23e080ca003.dgn

LAST REVISION 01-03-13 | DATE PLOTTED => 14-JAN-2013 | TIME PLOTTED => 09:19

Dist	COUNTY	ROUTE	POST MILES TOTAL PROJECT	SHEET No.	TOTAL SHEETS
02	Sis	96	68.7/69.1	5	31

REGISTERED CIVIL ENGINEER 01-03-13 DATE

01-07-13
PLANS APPROVAL DATE

REGISTERED PROFESSIONAL ENGINEER TOBY J. CRAWFORD No. C71138 Exp. 6-30-13 CIVIL STATE OF CALIFORNIA

THE STATE OF CALIFORNIA OR ITS OFFICERS OR AGENTS SHALL NOT BE RESPONSIBLE FOR THE ACCURACY OR COMPLETENESS OF SCANNED COPIES OF THIS PLAN SHEET.

NOTES:

1. FOR ACCURATE RIGHT OF WAY DATA, CONTACT RIGHT OF WAY ENGINEERING AT THE DISTRICT OFFICE.
2. EXISTING UTILITIES NOT SHOWN. SEE SHEET U-1 FOR UTILITY INFORMATION.
3. ALL METAL BEAM GUARD RAILING SHALL HAVE 7' STEEL POSTS.
4. LOCATIONS OF RELOCATED SPRINKLERS ARE APPROXIMATE. ACTUAL LOCATION SHALL BE DETERMINED BY THE ENGINEER.

LEGEND:

- EXISTING TREE
- PLACE HMA (Misc AREA)
- EXISTING SPRINKER
- RELOCATED SPRINKLER
- EXISTING UTILITY POLE
- TEMPORARY FENCE (TYPE ESA)

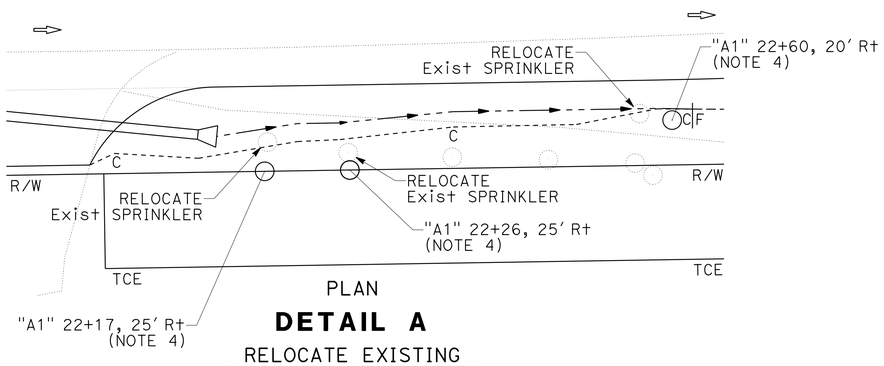

PLAN

DETAIL A

RELOCATE EXISTING IRRIGATION FACILITIES

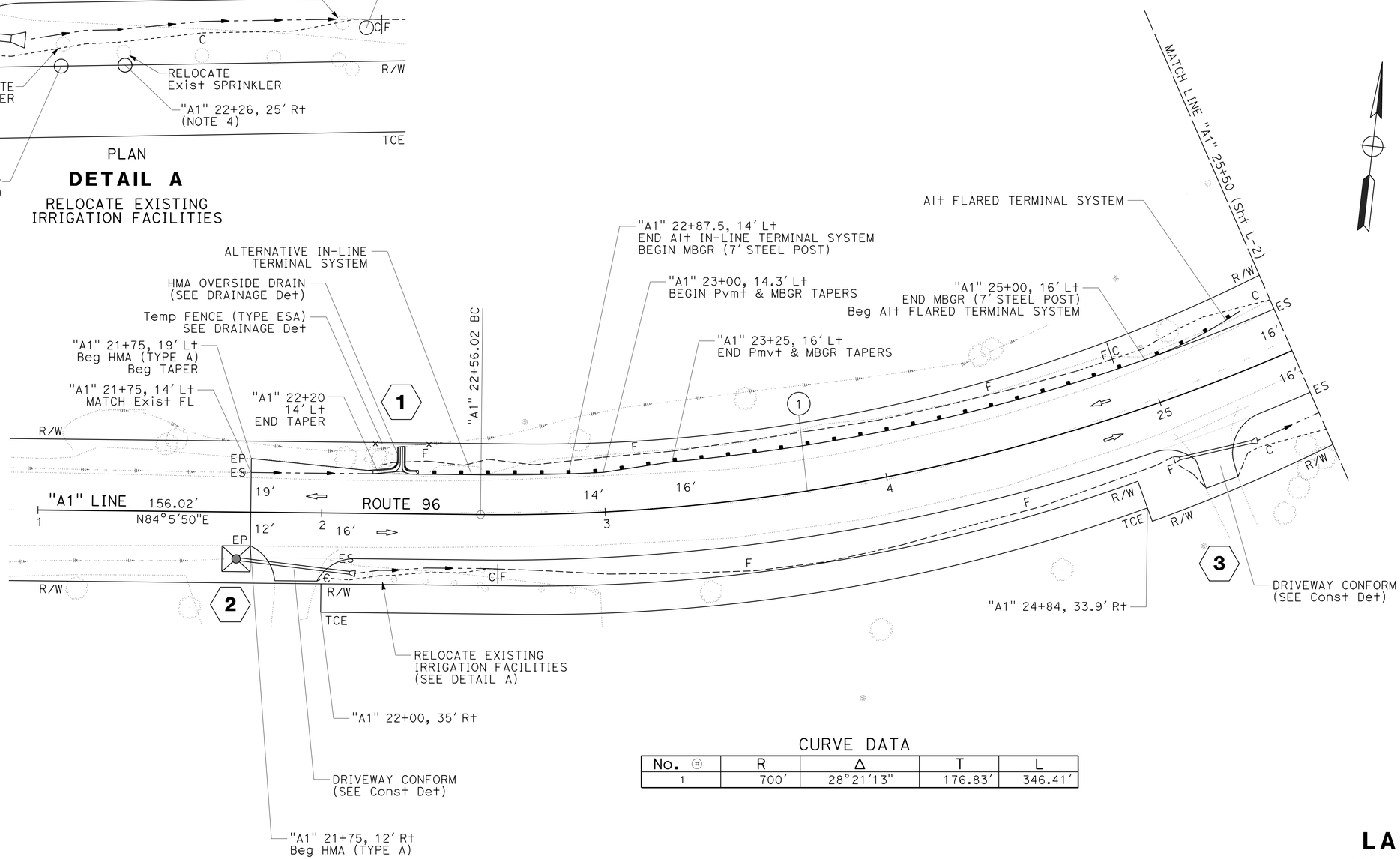

CURVE DATA

No. ⊕	R	Δ	T	L
1	700'	28°21'13"	176.83'	346.41'

LAYOUT

SCALE: 1" = 20'

L-1

REVISED BY	DATE REVISED
TOBY CRAWFORD	RUSSELL FLOOD
CALCULATED-DESIGNED BY	CHECKED BY
FUNCTIONAL SUPERVISOR	STEVE TOPAL

STATE OF CALIFORNIA - DEPARTMENT OF TRANSPORTATION

Caltrans® **DESIGN**

P:\proj\02\3E080_plans\pse\23e080ea001.dgn

LAST REVISION 01-03-13 | DATE PLOTTED => 14-JAN-2013 | TIME PLOTTED => 09:19

Dist	COUNTY	ROUTE	POST MILES TOTAL PROJECT	SHEET No.	TOTAL SHEETS
02	Sis	96	68.7/69.1	6	31

REGISTERED CIVIL ENGINEER 01-03-13 DATE

01-07-13
PLANS APPROVAL DATE

REGISTERED PROFESSIONAL ENGINEER TOBY J. CRAWFORD No. C71138 Exp. 6-30-13 CIVIL STATE OF CALIFORNIA

THE STATE OF CALIFORNIA OR ITS OFFICERS OR AGENTS SHALL NOT BE RESPONSIBLE FOR THE ACCURACY OR COMPLETENESS OF SCANNED COPIES OF THIS PLAN SHEET.

NOTES:

1. EXISTING UTILITIES NOT SHOWN. SEE SHEET U-1 FOR UTILITY INFORMATION.
2. FOR ACCURATE RIGHT OF WAY DATA, CONTACT RIGHT OF WAY ENGINEERING AT THE DISTRICT OFFICE.

CURVE DATA

No.	R	Δ	T	L
1	700′	28°21′13"	176.83′	346.41′
2	1000′	9°46′43"	85.54′	170.67′

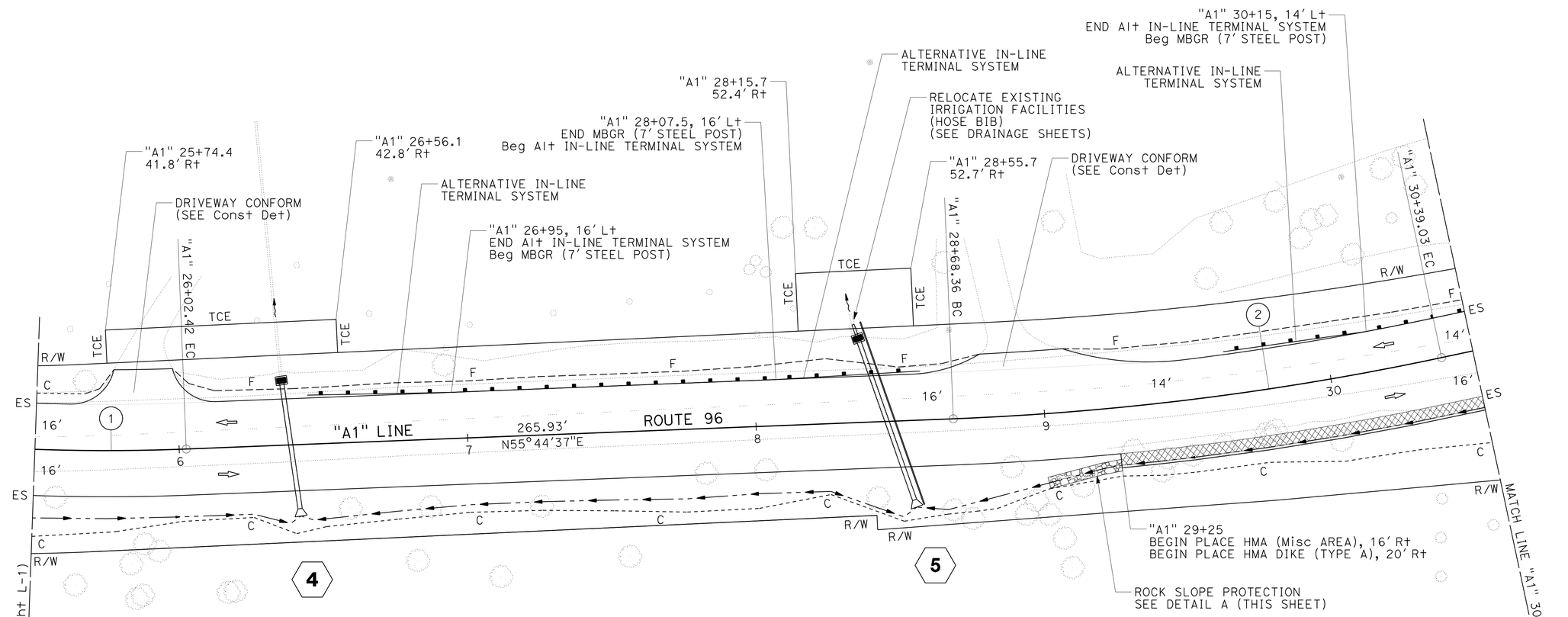

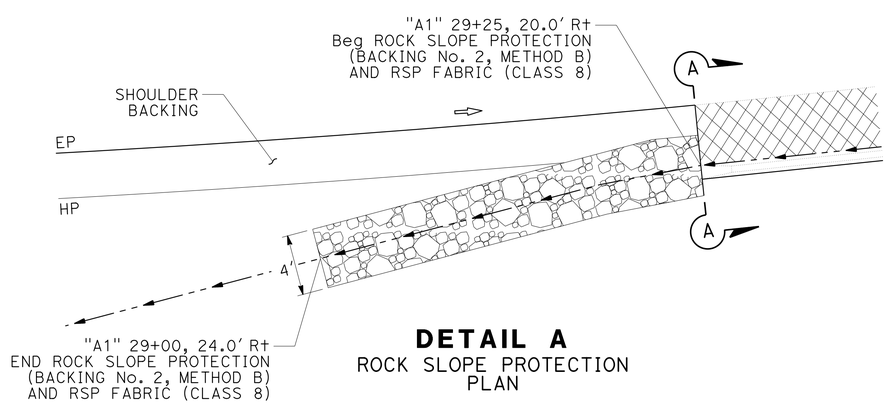

DETAIL A
ROCK SLOPE PROTECTION
PLAN

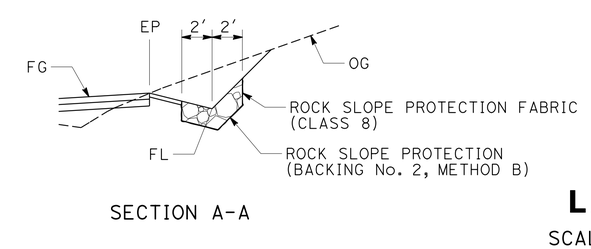

SECTION A-A

LAYOUT
SCALE: 1" = 20′

L-2

STATE OF CALIFORNIA - DEPARTMENT OF TRANSPORTATION
Caltrans
DESIGN

FUNCTIONAL SUPERVISOR: STEVE TOPAL
CALCULATED-DESIGNED BY: TOBY CRAWFORD
CHECKED BY: RUSSELL FLOOD
REVISED BY
DATE REVISED

P:\proj1\02\3E080_plans\pse\23e080ea002.dgn

LAST REVISION 01-03-13
DATE PLOTTED => 14-JAN-2013
TIME PLOTTED => 09:19

Dist	COUNTY	ROUTE	POST MILES TOTAL PROJECT	SHEET No.	TOTAL SHEETS
02	Sis	96	68.7/69.1	7	31

REGISTERED CIVIL ENGINEER 01-03-13 DATE

01-07-13
PLANS APPROVAL DATE

REGISTERED PROFESSIONAL ENGINEER TOBY J. CRAWFORD No. C71138 Exp. 6-30-13 CIVIL STATE OF CALIFORNIA

THE STATE OF CALIFORNIA OR ITS OFFICERS OR AGENTS SHALL NOT BE RESPONSIBLE FOR THE ACCURACY OR COMPLETENESS OF SCANNED COPIES OF THIS PLAN SHEET.

NOTES:

1. EXISTING UTILITIES NOT SHOWN. SEE SHEET U-1 FOR UTILITY INFORMATION.
2. FOR ACCURATE RIGHT OF WAY DATA, CONTACT RIGHT OF WAY ENGINEERING AT THE DISTRICT OFFICE.

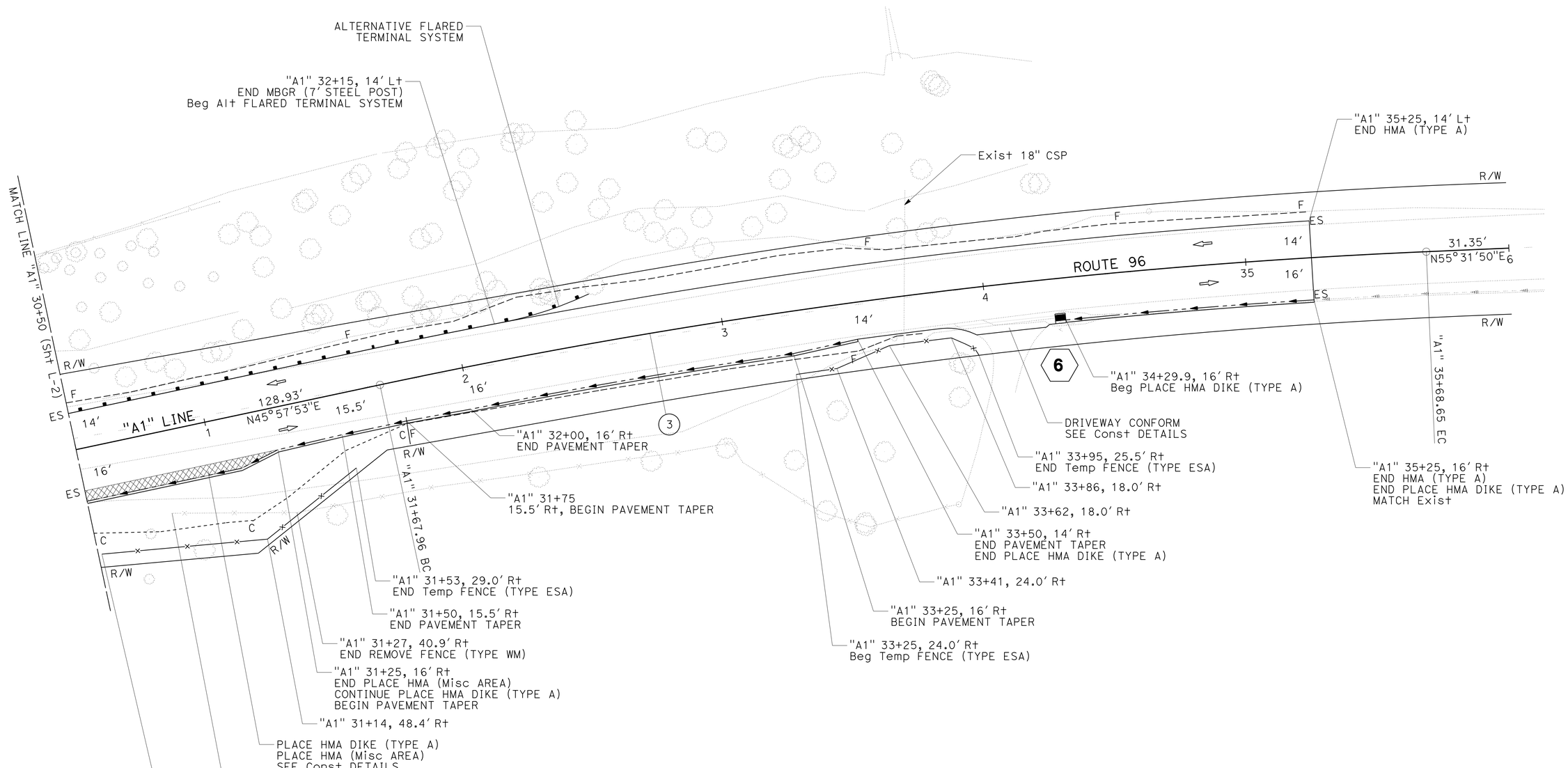

CURVE DATA

No. ⊕	R	Δ	T	L
3	2400'	9°33'57"	200.81'	400.69'

LAYOUT

SCALE: 1" = 20' **L-3**

STATE OF CALIFORNIA - DEPARTMENT OF TRANSPORTATION
Caltrans® **DESIGN**

FUNCTIONAL SUPERVISOR: STEVE TOPAL
CALCULATED-DESIGNED BY: TOBY CRAWFORD
CHECKED BY: RUSSELL FLOOD
REVISED BY / DATE REVISED

P:\proj1\02\3E080_plans\pse\23e080ea003.dgn

LAST REVISION 01-03-13 | DATE PLOTTED => 14-JAN-2013 | TIME PLOTTED => 09:19

Dist	COUNTY	ROUTE	POST MILES TOTAL PROJECT	SHEET No.	TOTAL SHEETS
02	Sis	96	68.7/69.1	8	31

REGISTERED CIVIL ENGINEER 01-03-13 DATE

01-07-13
PLANS APPROVAL DATE

REGISTERED PROFESSIONAL ENGINEER TOBY J. CRAWFORD No. C71138 Exp. 6-30-13 CIVIL STATE OF CALIFORNIA

THE STATE OF CALIFORNIA OR ITS OFFICERS OR AGENTS SHALL NOT BE RESPONSIBLE FOR THE ACCURACY OR COMPLETENESS OF SCANNED COPIES OF THIS PLAN SHEET.

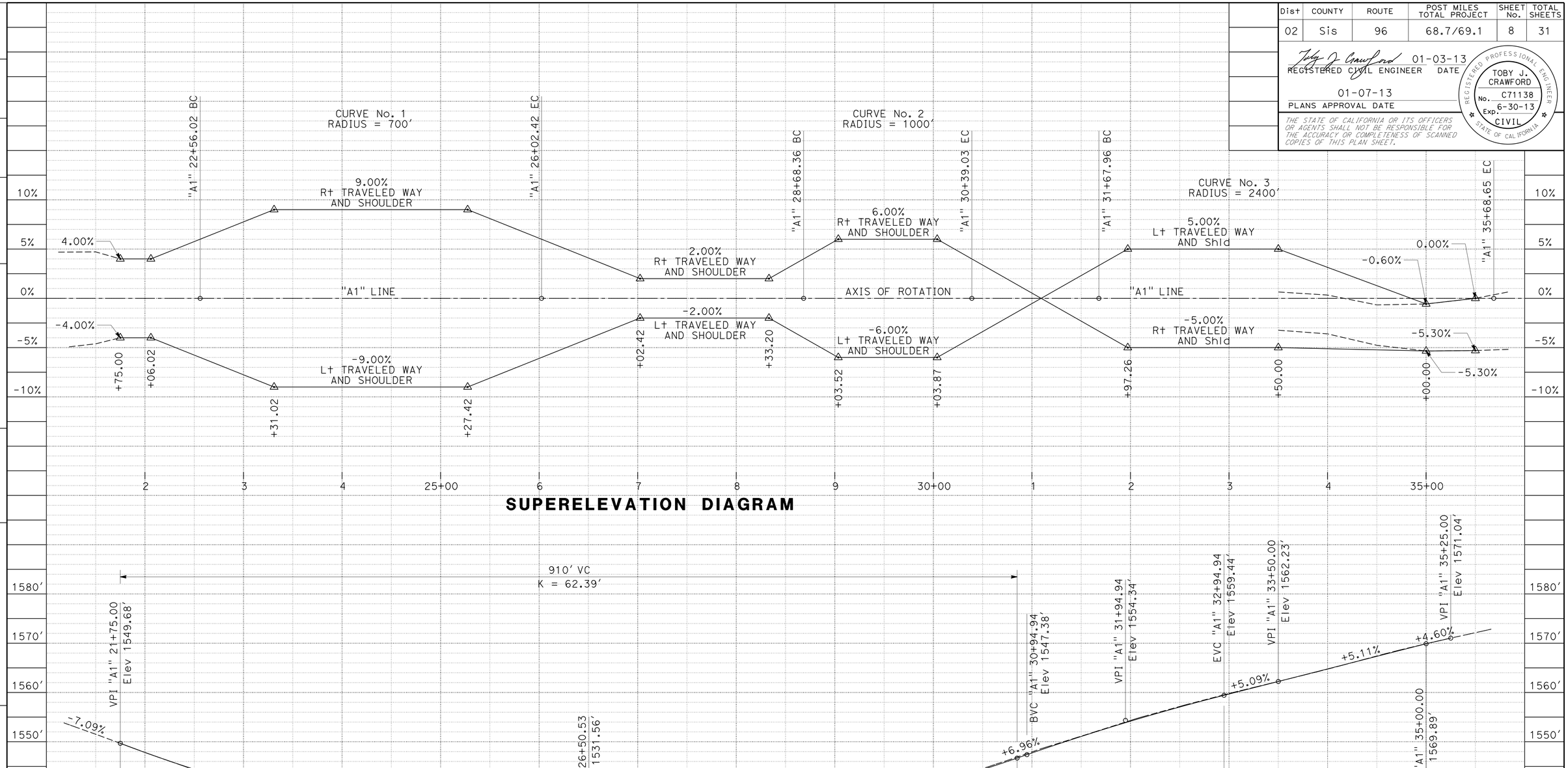

SUPERELEVATION DIAGRAM

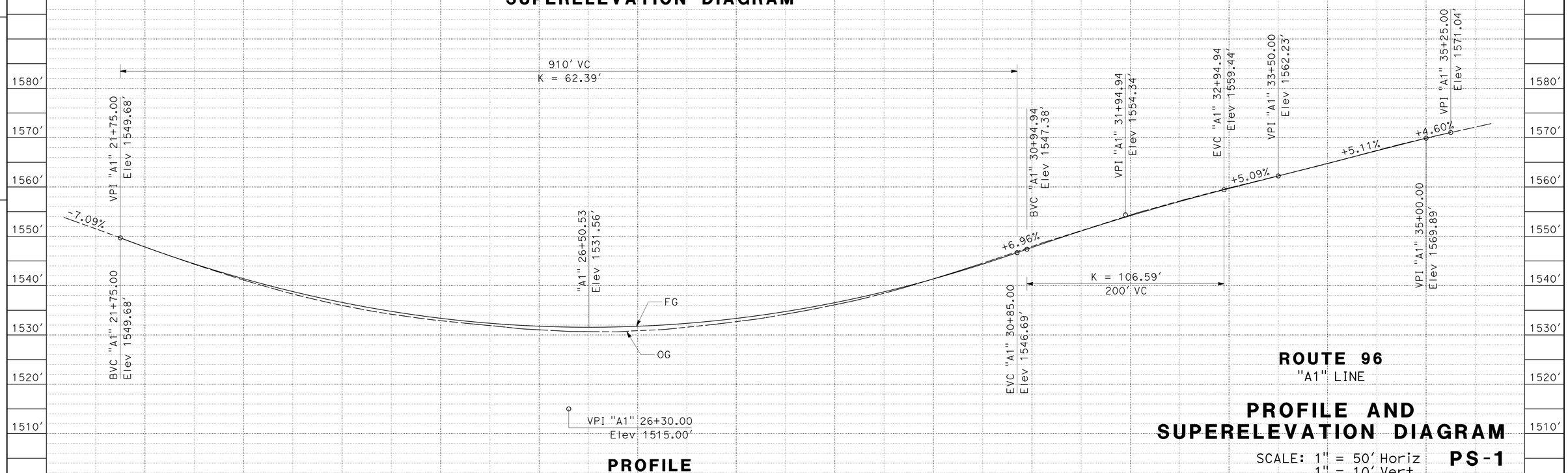

PROFILE

ROUTE 96
"A1" LINE

PROFILE AND SUPERELEVATION DIAGRAM

SCALE: 1" = 50' Horiz
1" = 10' Vert

PS-1

STATION	22+00	23+00	24+00	25+00	26+00	27+00	28+00	29+00	30+00	31+00	32+00	33+00	34+00	35+00	TOTAL
CY Exc	28	83	35	25	103	42	113	82	140	371	188	102	85	93	23	1513
CY Emb	0	13	33	42	32	53	14	104	16	2	4	11	12	5	0	341

REVISED BY | DATE REVISED
TOBY CRAWFORD | RUSSELL FLOOD
CALCULATED-DESIGNED BY | CHECKED BY
FUNCTIONAL SUPERVISOR: STEVE TOPAL

STATE OF CALIFORNIA - DEPARTMENT OF TRANSPORTATION
Caltrans®
DESIGN

P:\proj\02\3E080_plans\pse\23e080fb001.dgn

LAST REVISION 01-03-13 | DATE PLOTTED => 14-JAN-2013 | TIME PLOTTED => 09:19

Dist	COUNTY	ROUTE	POST MILES TOTAL PROJECT	SHEET No.	TOTAL SHEETS
02	Sis	96	68.7/69.1	9	31

REGISTERED CIVIL ENGINEER 01-03-13 DATE

01-07-13
PLANS APPROVAL DATE

REGISTERED PROFESSIONAL ENGINEER TOBY J. CRAWFORD No. C71138 Exp. 6-30-13 CIVIL STATE OF CALIFORNIA

THE STATE OF CALIFORNIA OR ITS OFFICERS OR AGENTS SHALL NOT BE RESPONSIBLE FOR THE ACCURACY OR COMPLETENESS OF SCANNED COPIES OF THIS PLAN SHEET.

NOTE:

1. REFER TO TYPICAL CROSS SECTIONS AND LAYOUTS FOR ADDITIONAL INFORMATION.

LEGEND:

PLACE HMA (Misc AREA)

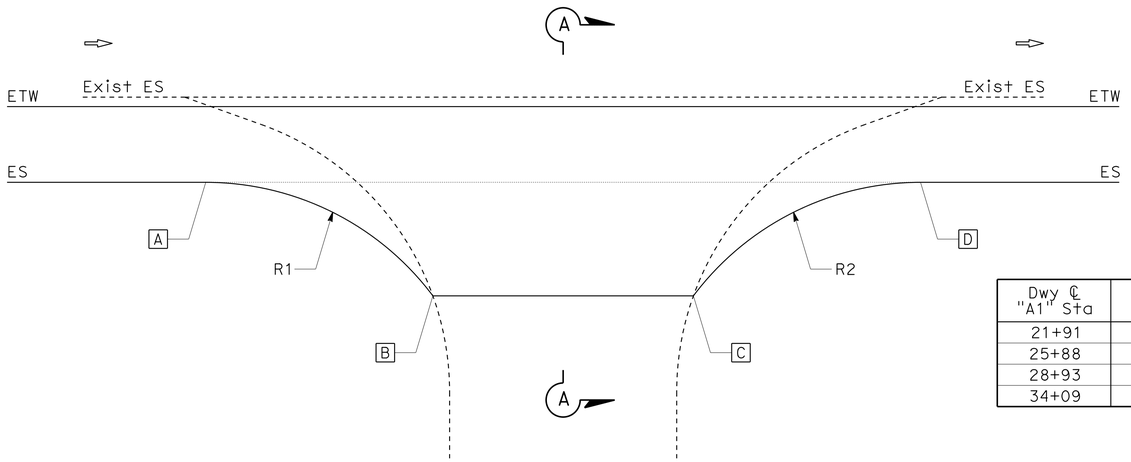

PLAN

TYPICAL DRIVEWAY CONFORM DETAIL

"A1" 21+91, "A1" 25+88, "A1" 28+93, "A1" 34+01

DRIVEWAY CONFORMS

Dwy ℄ "A1" Sta	Dir	A		B		C		D		X	R1	R2
		"A1" Sta	OFFSET	"A1" Sta	OFFSET	"A1" Sta	OFFSET	"A1" Sta	OFFSET			
21+91	EB	21+75.0	11.9′ Rt	21+83.7	24.0′ Rt	21+98.5	24.0′ Rt	22+11.8	16.0′ Rt	8′	15′	15′
25+88	WB	26+13.4	16.0′ Lt	25+98.6	28.0′ Lt	25+77.5	28.0′ Lt	25+62.1	16.0′ Lt	12′	15′	15′
28+93	WB	29+50.0	14.0′ Lt	29+07.9	22.0′ Lt	28+78.5	22.0′ Lt	28+54.5	16.0′ Lt	6′ TO 8′	100′	50′
34+09	EB	33+81.7	14.0′ Rt	33+95.4	18.0′ Rt	34+22.2	18.0′ Rt	34+23.5	17.0′ Rt	4′	25′	15′

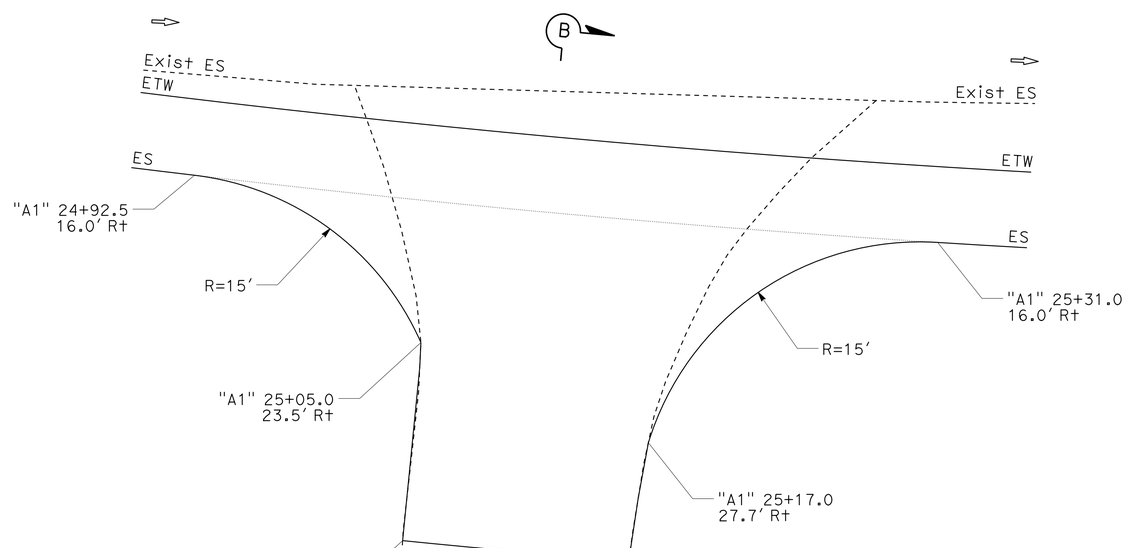

PLAN

DRIVEWAY CONFORM DETAIL

"A1" 25+11

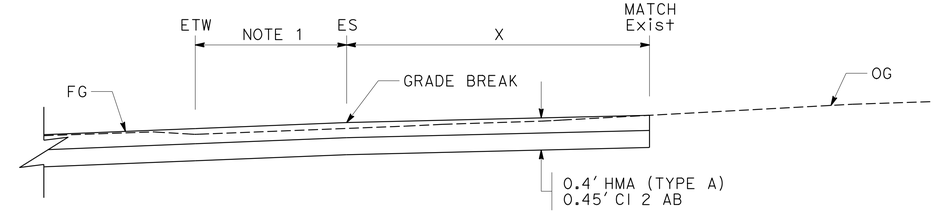

SECTION A-A
"A1" 21+91, "A1" 25+88, "A1" 28+93, "A1" 34+01

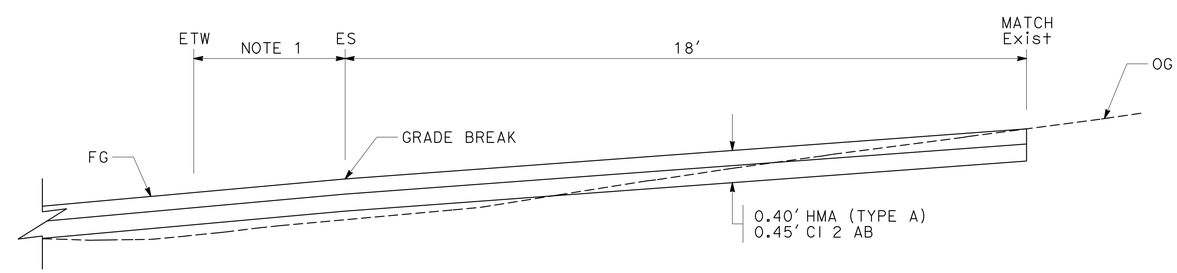

SECTION B-B
"A1" 25+11

CONSTRUCTION DETAILS

NO SCALE

C-1

REVISED BY | DATE REVISED
TOBY CRAWFORD | RUSSELL FLOOD
CALCULATED-DESIGNED BY | CHECKED BY
FUNCTIONAL SUPERVISOR | STEVE TOPAL
STATE OF CALIFORNIA - DEPARTMENT OF TRANSPORTATION
Caltrans® DESIGN
P:\proj1\02\3E080_plans\pse\23e080ga001.dgn

LAST REVISION 01-03-13 | DATE PLOTTED => 14-JAN-2013 | TIME PLOTTED => 09:19

Dist	COUNTY	ROUTE	POST MILES TOTAL PROJECT	SHEET No.	TOTAL SHEETS
02	Sis	96	68.7/69.1	10	31

REGISTERED CIVIL ENGINEER 01-03-13 DATE

01-07-13
PLANS APPROVAL DATE

REGISTERED PROFESSIONAL ENGINEER
TOBY J. CRAWFORD
No. C71138
Exp. 6-30-13
CIVIL
STATE OF CALIFORNIA

THE STATE OF CALIFORNIA OR ITS OFFICERS OR AGENTS SHALL NOT BE RESPONSIBLE FOR THE ACCURACY OR COMPLETENESS OF SCANNED COPIES OF THIS PLAN SHEET.

NOTE:

1. REFER TO TYPICAL CROSS SECTIONS, LAYOUTS, AND SUPERELEVATION DIAGRAM FOR ADDITIONAL INFORMATION.

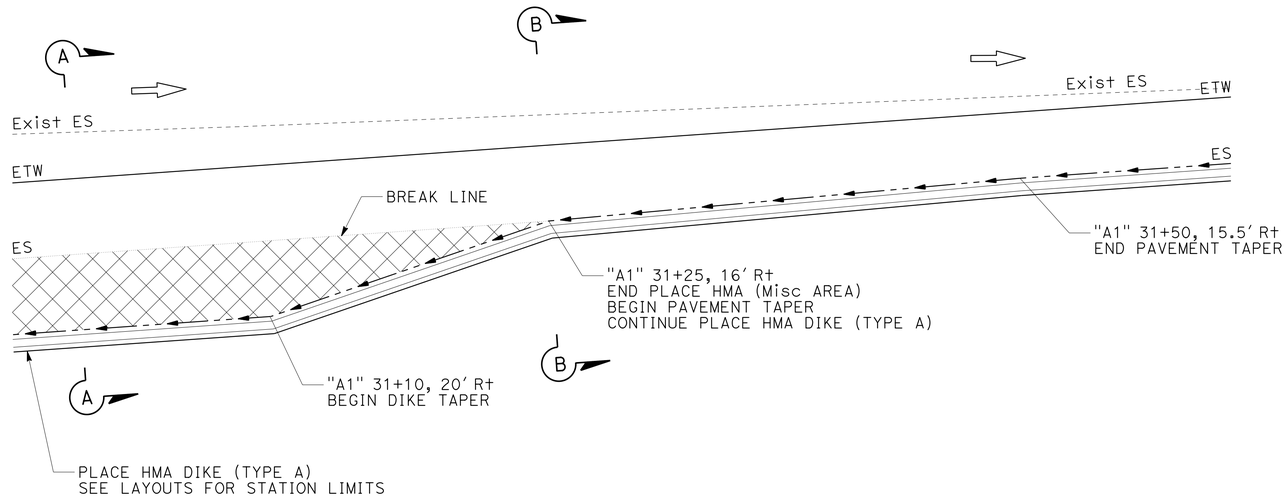

PLAN

PLACE HMA (Misc AREA) AND DIKE DETAIL

"A1" 29+25 TO "A1" 33+50

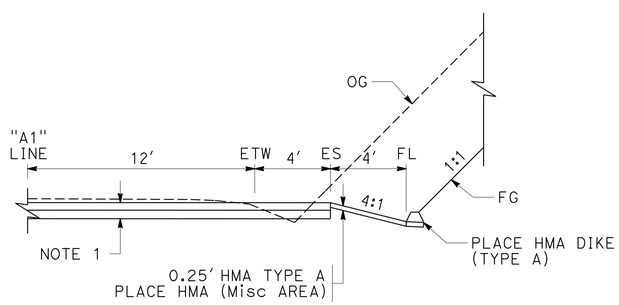

SECTION A-A

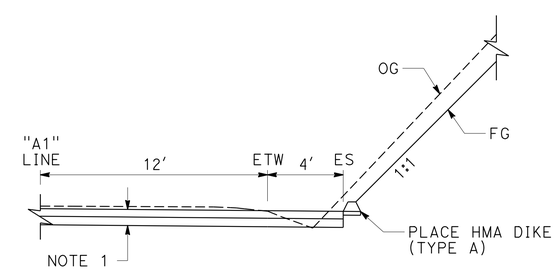

SECTION B-B

CONSTRUCTION DETAILS

NO SCALE

C-2

STATE OF CALIFORNIA - DEPARTMENT OF TRANSPORTATION
Caltrans
DESIGN

FUNCTIONAL SUPERVISOR: STEVE TOPAL
CALCULATED-DESIGNED BY: TOBY CRAWFORD
CHECKED BY: RUSSELL FLOOD
REVISED BY
DATE REVISED

P:\proj1\02\3E080_plans\pse\23e080ga002.dgn

LAST REVISION 01-03-13
DATE PLOTTED => 14-JAN-2013
TIME PLOTTED => 09:19

DIST	COUNTY	ROUTE	POST MILES TOTAL PROJECT	SHEET No	TOTAL SHEETS
02	Sis	96	68.7/69.1	11	31

LICENSED LANDSCAPE ARCHITECT

01-07-13

PLANS APPROVAL DATE

LICENSED LANDSCAPE ARCHITECT #3125 PATRICK SULLIVAN STATE OF CALIFORNIA Signature 07-31-14 Renewal Date 01-03-13 Date

The State of California or its officers or agents shall not be responsible for the accuracy or completeness of electronic copies of this plan sheet.

To get to the Caltrans web site, go to: http://www.dot.ca.gov

NOTE:

1. FOR ACCURATE RIGHT OF WAY DATA, CONTACT RIGHT OF WAY ENGINEERING AT THE DISTRICT OFFICE.

LEGEND:

ROLLED EROSION CONTROL PRODUCT (NETTING) AND HYDROSEED

HYDROSEED

ABBREVIATIONS:

RECP-N ROLLED EROSION CONTROL PRODUCT (NETTING)

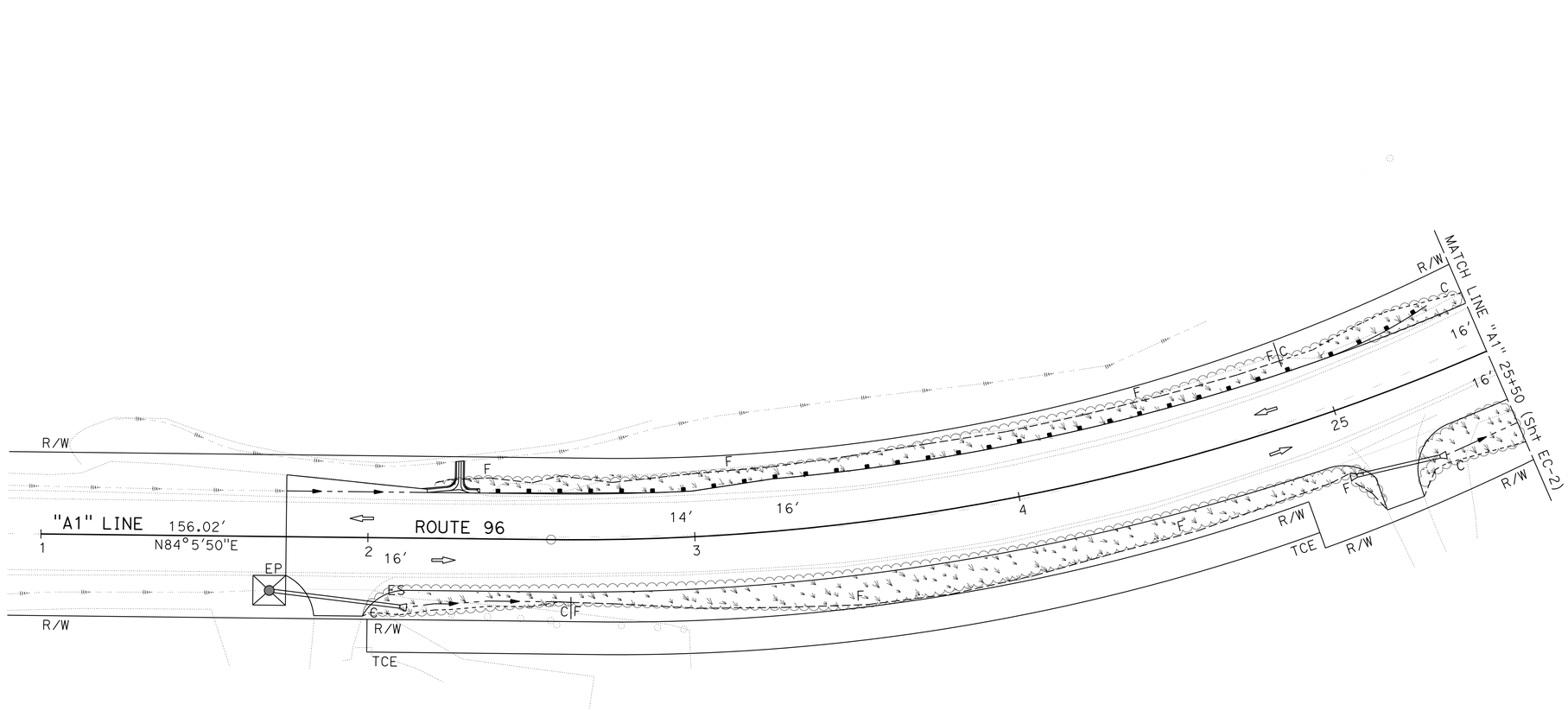

EROSION CONTROL PLAN

SCALE: 1" = 20'

EC-1

APPROVED FOR LANDSCAPE WORK ONLY

CALCULATED/ DESIGNED BY	J. PATRICK SULLIVAN	DATE	REVISED BY
CHECKED BY	RON FLORY		DATE REVISED

PROJECT LANDSCAPE ARCHITECT: RON FLORY

STATE OF CALIFORNIA - DEPARTMENT OF TRANSPORTATION

Caltrans® LANDSCAPE ARCHITECTURE

P:\proj\02\3E080_plans\pse\23e080ge001.dgn

LAST REVISION 09-18-12 | DATE PLOTTED => 14-JAN-2013 | TIME PLOTTED => 09:19

DIST	COUNTY	ROUTE	POST MILES TOTAL PROJECT	SHEET No	TOTAL SHEETS
02	Sis	96	68.7/69.1	12	31

LICENSED LANDSCAPE ARCHITECT

01-07-13

PLANS APPROVAL DATE

LICENSED LANDSCAPE ARCHITECT #3125 PATRICK SULLIVAN STATE OF CALIFORNIA

Signature 07-31-14 Renewal Date 01-03-13 Date

The State of California or its officers or agents shall not be responsible for the accuracy or completeness of electronic copies of this plan sheet.

To get to the Caltrans web site, go to: http://www.dot.ca.gov

NOTE:

1. FOR ACCURATE RIGHT OF WAY DATA, CONTACT RIGHT OF WAY ENGINEERING AT THE DISTRICT OFFICE.

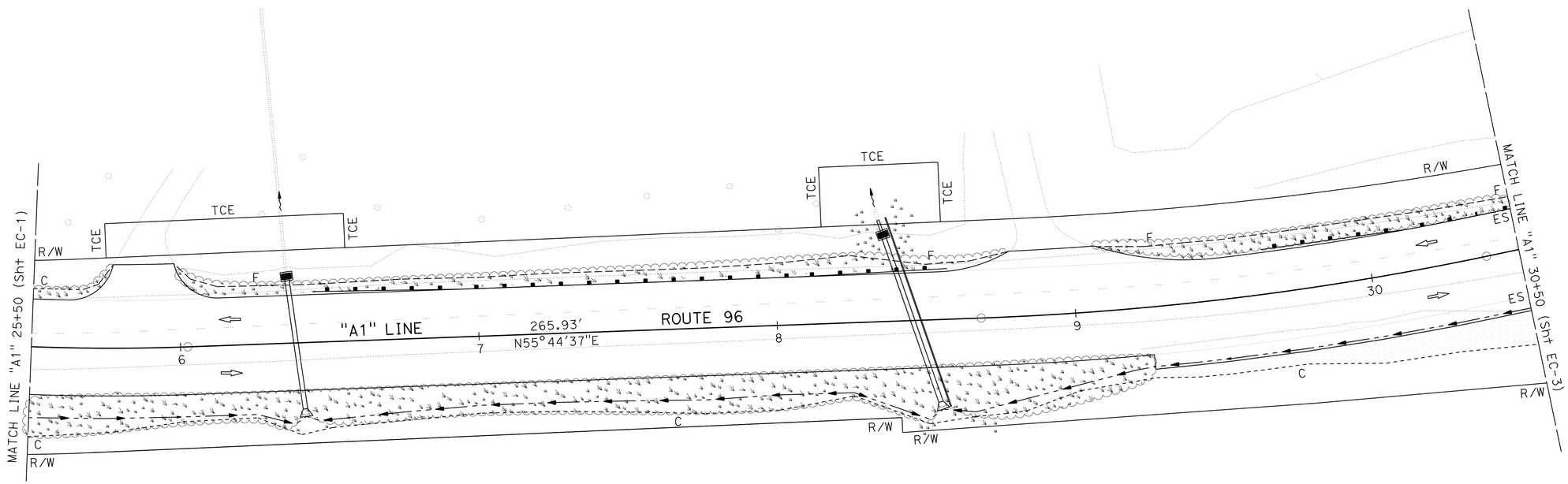

EROSION CONTROL PLAN

SCALE: 1" = 20'

EC-2

APPROVED FOR LANDSCAPE WORK ONLY

PROJECT LANDSCAPE ARCHITECT: RON FLORY

CALCULATED/DESIGNED BY: J. PATRICK SULLIVAN

CHECKED BY: RON FLORY

REVISED BY / DATE REVISED / DATE

STATE OF CALIFORNIA - DEPARTMENT OF TRANSPORTATION

Caltrans® LANDSCAPE ARCHITECTURE

P:\proj\02\3E080_plans\pse\23e080ge002.dgn

LAST REVISION 09-18-12 | DATE PLOTTED => 14-JAN-2013 | TIME PLOTTED => 09:19

BORDER LAST REVISED 7/2/2010 | USERNAME => s115152 | DGN FILE => 23e080ge002.dgn | RELATIVE BORDER SCALE IS IN INCHES 0 1 2 3 | UNIT 0383 | PROJECT NUMBER & PHASE 02000200221

DIST	COUNTY	ROUTE	POST MILES TOTAL PROJECT	SHEET No	TOTAL SHEETS
02	Sis	96	68.7/69.1	13	31

LICENSED LANDSCAPE ARCHITECT

01-07-13

PLANS APPROVAL DATE

LICENSED LANDSCAPE ARCHITECT #3125 J. PATRICK SULLIVAN Signature 07-31-14 Renewal Date 01-03-13 Date STATE OF CALIFORNIA

The State of California or its officers or agents shall not be responsible for the accuracy or completeness of electronic copies of this plan sheet.

To get to the Caltrans web site, go to: http://www.dot.ca.gov

NOTE:

1. FOR ACCURATE RIGHT OF WAY DATA, CONTACT RIGHT OF WAY ENGINEERING AT THE DISTRICT OFFICE.

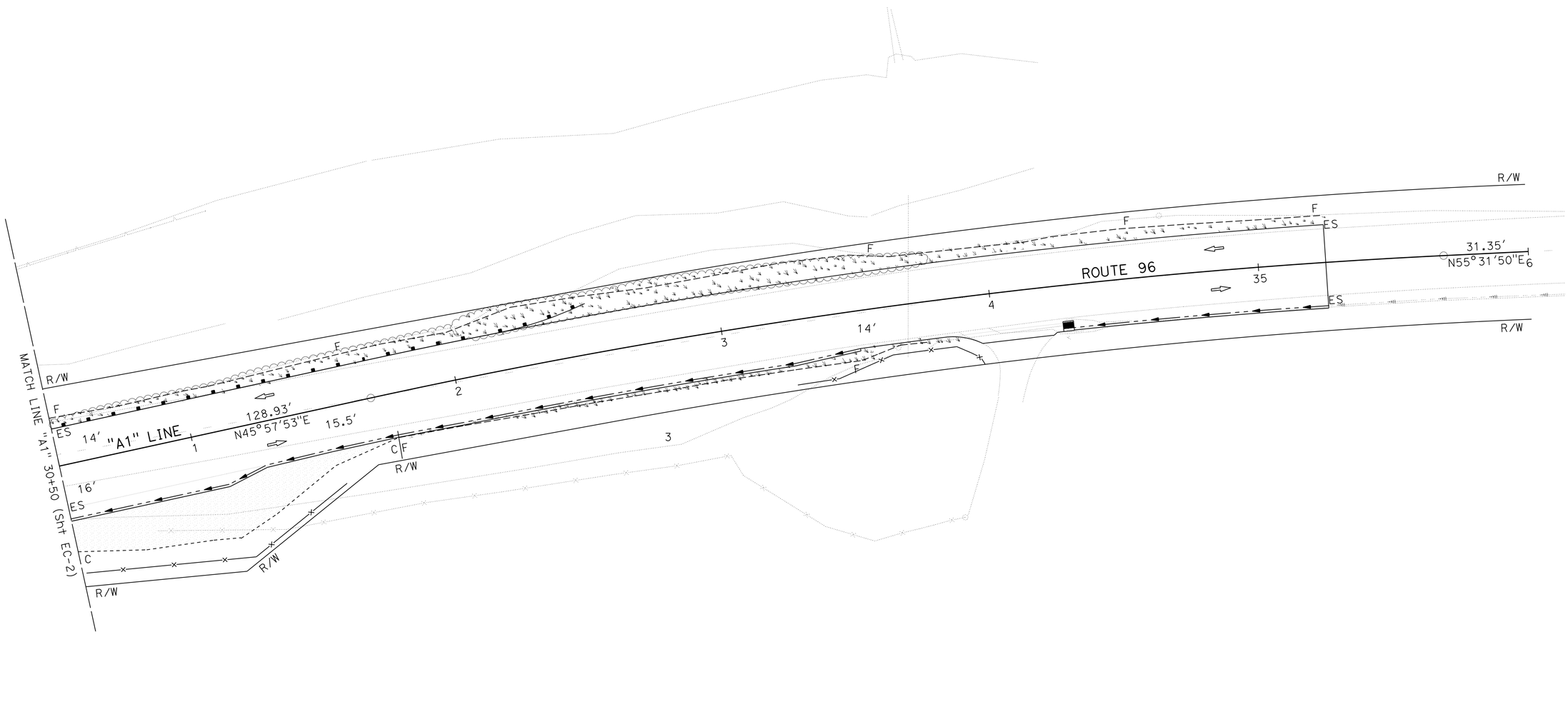

EROSION CONTROL PLAN

SCALE: 1" = 20'

EC-3

APPROVED FOR LANDSCAPE WORK ONLY

REVISED BY	DATE
DATE REVISED	
CALCULATED/DESIGNED BY	J. PATRICK SULLIVAN
CHECKED BY	RON FLORY
PROJECT LANDSCAPE ARCHITECT	RON FLORY

STATE OF CALIFORNIA - DEPARTMENT OF TRANSPORTATION

Caltrans LANDSCAPE ARCHITECTURE

P:\proj1\02\3E080_plans\pse\23e080ge003.dgn

LAST REVISION 09-18-12 DATE PLOTTED => 14-JAN-2013 TIME PLOTTED => 09:19

DIST	COUNTY	ROUTE	POST MILES TOTAL PROJECT	SHEET No	TOTAL SHEETS
02	Sis	96	68.7/69.1	14	31

LICENSED LANDSCAPE ARCHITECT

01-07-13

PLANS APPROVAL DATE

LICENSED LANDSCAPE ARCHITECT #3125 PATRICK SULLIVAN STATE OF CALIFORNIA Signature 07-31-14 Renewal Date 01-03-13 Date

The State of California or its officers or agents shall not be responsible for the accuracy or completeness of electronic copies of this plan sheet.

To get to the Caltrans web site, go to: http://www.dot.ca.gov

NOTE:

1. (N) - NOT A SEPARATE PAY ITEM, FOR INFORMATION ONLY

HYDROSEED SEQUENCE/ APPLICATION RATES (N)

SEQUENCE	ITEM	MATERIAL DESCRIPTION	MATERIAL TYPE	APPLICATION RATE (N)
STEP 1	HYDROSEED APPLICATION	PURE LIVE SEED	MIX	121 LB/ACRE
		FIBER	ALTERNATE	2000 LB/ACRE
		SLOW-RELEASE FERTLIZER	GRANULAR	100 LB/ACRE
STEP 2	HYDROSEED APPLICATION	COMPOST	WOOD PRODUCT	1.2 CU YDS/ ACRE
		FIBER	ALTERNATE	1550 LB/ACRE
		TACKIFIER	PSYLLIUM	100 LB/ACRE

EROSION CONTROL TOTALS

MATERIAL DESCRIPTION	MATERIAL TYPE	TOTALS	
PURE LIVE SEED	MIX	181.5 LBS (N)	HYDROSEED
FIBER	ALTERNATE	5325 LBS (N)	
SLOW-RELEASE FERTLIZER	GRANULAR	150 LBS (N)	
COMPOST	WOOD PRODUCT	1.8 CU YDS (N)	
TACKIFIER	PSYLLIUM	150 LBS (N)	
FROM Sta "A1" 22+00 TO "A1" 35+25		TOTAL SQFT	29,200

SEED MIX (N)

BOTANICAL NAME (COMMON NAME)	PERCENT GERMINATION (MINIMUM)	POUNDS PURE LIVE SEED PER ACRE (N) (SLOPE MEASUREMENT)
ACHILLEA MILLEFOLIUM (COMMON YARROW)	50	2
BROMUS CARNIATUS (CALIFORNIA BROME)	70	25
ELYMUS GLAUCUS (CALIFORNIA WILD RYE)	70	25
FESTUCA IDAHOENSIS (WESTERN FESCUE)	70	25
LOTUS PURSHIANUS (PURSHING)	70	2
LUPINUS NANA (DWARF LUPINES)	60	2
POA SECUNDA (BLUE PINE GRASS)	60	15
VULPIA MICROSTACHYS (SMALL FESCUE)	80	25
	TOTAL	121

ROLLED EROSION CONTROL PRODUCT TOTALS

SHEET	LOCATION STATION	L†	R†	DESCRIPTION	RECP SQFT
EC-2	"A1" 29+20 TO "A1" 30+50		X	ROLLED EROSION CONTROL PRODUCT	1302
EC-3	"A1" 30+51 TO "A1" 31+70		X	ROLLED EROSION CONTROL PRODUCT	2482
				TOTAL	3784

EROSION CONTROL SEQUENCING

SEQUENCE	ITEM	MATERIAL DESCRIPTION	MATERIAL TYPE	APPLICATION RATE	ROLLED EROSION CONTROL PRODUCT (NETTING)
STEP 1	ROLLED EROSION CONTROL PRODUCT (NETTING)	NETTING	TYPE B	PER SQFT	
				TOTAL	3784
STEP 2	HYDROSEED		(PER ABOVE APPLICATION RATES & ALL LOCATIONS INCLUDING ROLLED EROSION CONTROL PRODUCT AREAS)		

APPROVED FOR LANDSCAPE WORK ONLY

EROSION CONTROL QUANTITIES

ECQ-1

STATE OF CALIFORNIA - DEPARTMENT OF TRANSPORTATION
Caltrans LANDSCAPE ARCHITECTURE

PROJECT LANDSCAPE ARCHITECT: RON FLORY
CALCULATED/ DESIGNED BY: J. PATRICK SULLIVAN
CHECKED BY: RON FLORY
REVISED BY / DATE REVISED / DATE

P:\proj1\02\3E080_plans\pse\23e080gh001.dgn

LAST REVISION 09-18-12 | DATE PLOTTED => 14-JAN-2013 | TIME PLOTTED => 09:19

Dist	COUNTY	ROUTE	POST MILES TOTAL PROJECT	SHEET No.	TOTAL SHEETS
02	Sis	96	68.7/69.1	15	31

REGISTERED CIVIL ENGINEER 01-03-13 DATE

01-07-13
PLANS APPROVAL DATE

REGISTERED PROFESSIONAL ENGINEER TOBY J. CRAWFORD No. C71138 Exp. 6-30-13 CIVIL STATE OF CALIFORNIA

THE STATE OF CALIFORNIA OR ITS OFFICERS OR AGENTS SHALL NOT BE RESPONSIBLE FOR THE ACCURACY OR COMPLETENESS OF SCANNED COPIES OF THIS PLAN SHEET.

NOTES:

1. EXISTING UTILITIES NOT SHOWN. SEE SHEET U-1 FOR UTILITY INFORMATION.
2. ALL REINFORCED CONCRETE PIPE SHALL HAVE TONGUE AND GROOVE TYPE JOINTS.
3. FOR ACCURATE RIGHT OF WAY DATA, CONTACT RIGHT OF WAY ENGINEERING AT THE DISTRICT OFFICE.

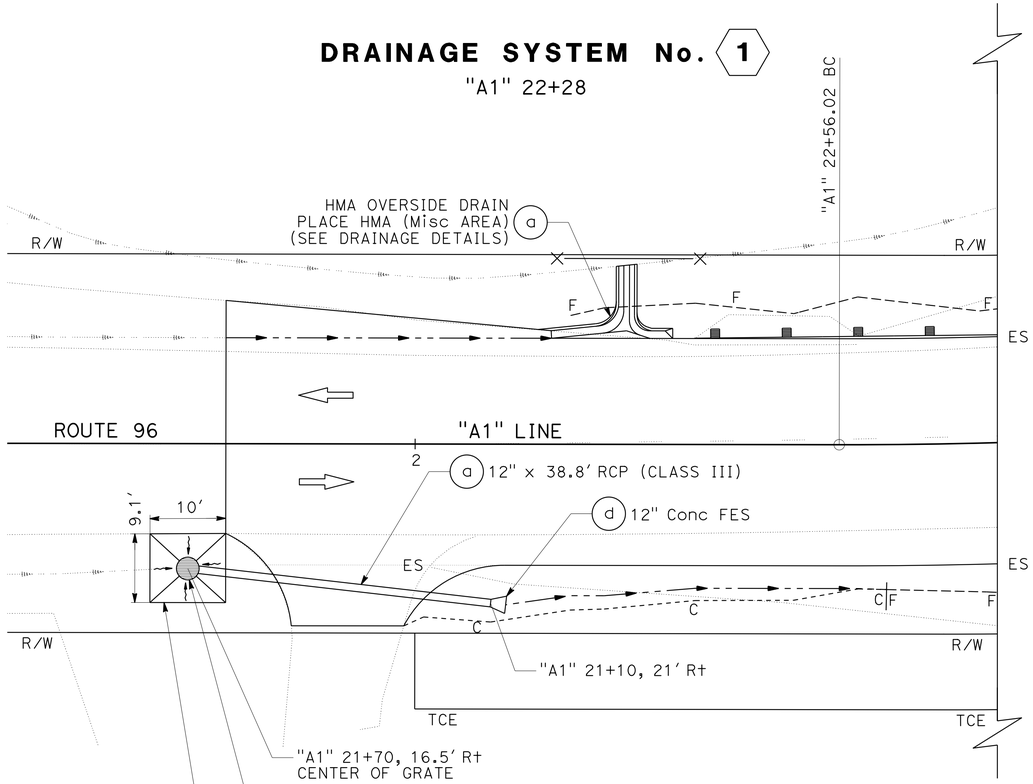

DRAINAGE SYSTEM No. 2

"A1" 21+70

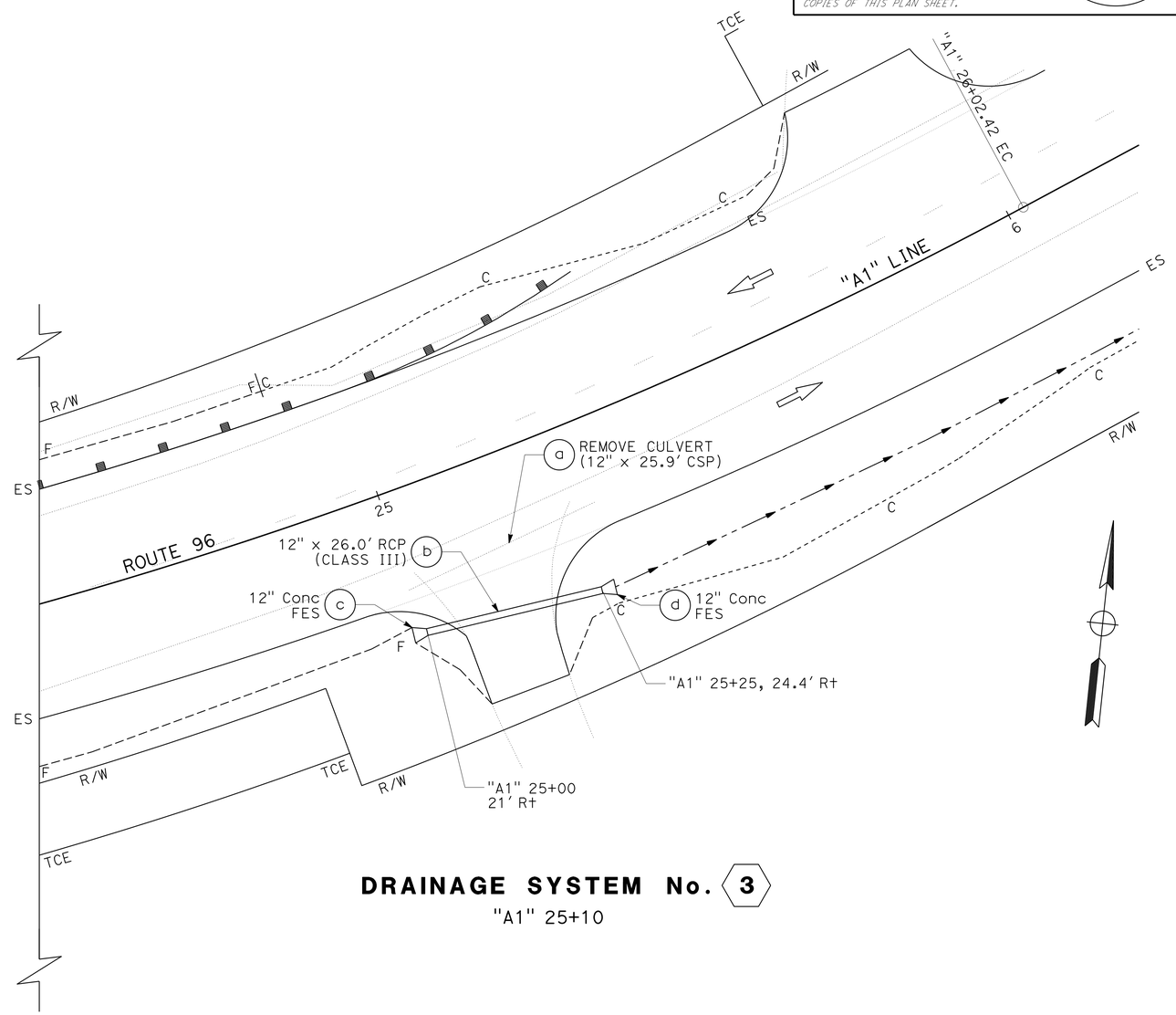

DRAINAGE SYSTEM No. 3

"A1" 25+10

DRAINAGE PLAN

SCALE: 1" = 10'

D-1

APPROVED FOR DRAINAGE WORK ONLY

REVISED BY | DATE REVISED
TOBY CRAWFORD | RUSSELL FLOOD
CALCULATED-DESIGNED BY | CHECKED BY
FUNCTIONAL SUPERVISOR: STEVE TOPAL

STATE OF CALIFORNIA - DEPARTMENT OF TRANSPORTATION
Caltrans DESIGN

P:\proj1\02\3E080_plans\pse\23e080ia001.dgn

LAST REVISION 01-03-13 | DATE PLOTTED => 14-JAN-2013 | TIME PLOTTED => 09:20

Dist	COUNTY	ROUTE	POST MILES TOTAL PROJECT	SHEET No.	TOTAL SHEETS
02	Sis	96	68.7/69.1	16	31

REGISTERED CIVIL ENGINEER 01-03-13 DATE

01-07-13
PLANS APPROVAL DATE

REGISTERED PROFESSIONAL ENGINEER TOBY J. CRAWFORD No. C71138 Exp. 6-30-13 CIVIL STATE OF CALIFORNIA

THE STATE OF CALIFORNIA OR ITS OFFICERS OR AGENTS SHALL NOT BE RESPONSIBLE FOR THE ACCURACY OR COMPLETENESS OF SCANNED COPIES OF THIS PLAN SHEET.

NOTES:

1. EXISTING UTILITIES NOT SHOWN. SEE SHEET U-1 FOR UTILITY INFORMATION.
2. FOR ACCURATE RIGHT OF WAY DATA, CONTACT RIGHT OF WAY ENGINEERING AT THE DISTRICT OFFICE.
3. EXACT LOCATION OF NEW HOSE BIB TO BE DIRECTED BY THE ENGINEER.

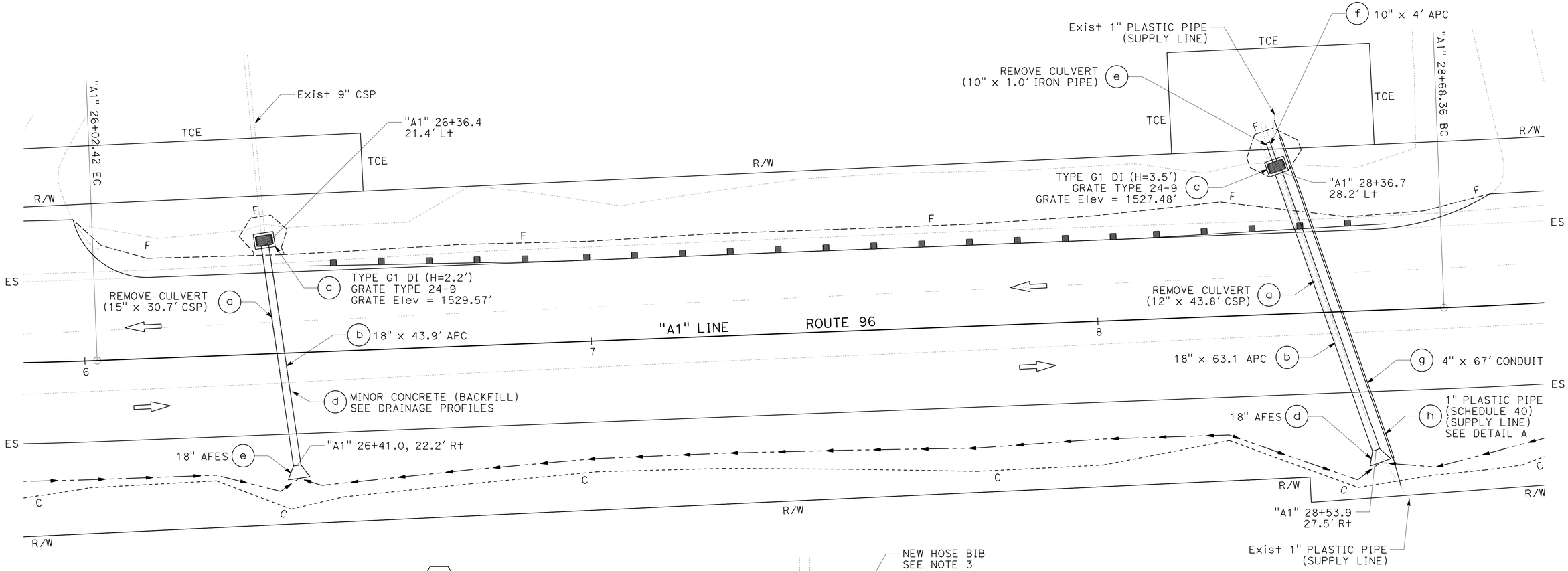

DRAINAGE SYSTEM No. 4

"A1" 26+38

DRAINAGE SYSTEM No. 5

"A1" 28+45

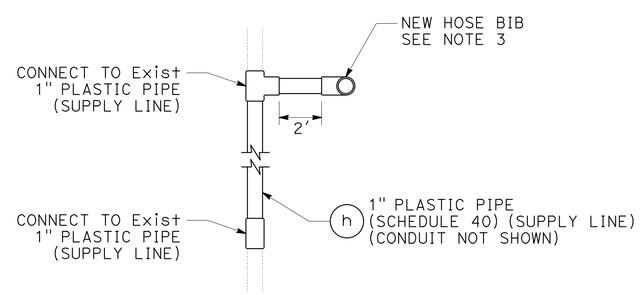

PLAN
DETAIL A

APPROVED FOR DRAINAGE WORK ONLY

DRAINAGE PLAN

SCALE: 1" = 10'

D-2

STATE OF CALIFORNIA - DEPARTMENT OF TRANSPORTATION
Caltrans
DESIGN

FUNCTIONAL SUPERVISOR: STEVE TOPAL
CALCULATED-DESIGNED BY: TOBY CRAWFORD
CHECKED BY: RUSSELL FLOOD
REVISED BY
DATE REVISED

P:\proj1\02\3E080_plans\pse\23e080ia002.dgn

LAST REVISION 01-03-13
DATE PLOTTED => 14-JAN-2013
TIME PLOTTED => 09:20

Dist	COUNTY	ROUTE	POST MILES TOTAL PROJECT	SHEET No.	TOTAL SHEETS
02	Sis	96	68.7/69.1	17	31

REGISTERED CIVIL ENGINEER 01-03-13 DATE

01-07-13
PLANS APPROVAL DATE

REGISTERED PROFESSIONAL ENGINEER TOBY J. CRAWFORD No. C71138 Exp. 6-30-13 CIVIL STATE OF CALIFORNIA

THE STATE OF CALIFORNIA OR ITS OFFICERS OR AGENTS SHALL NOT BE RESPONSIBLE FOR THE ACCURACY OR COMPLETENESS OF SCANNED COPIES OF THIS PLAN SHEET.

NOTES:

1. APPROXIMATE LOCATION OF Exist AT&T FIBER OPTIC LINE. PROTECT IN PLACE. CONTRACTOR TO NOTIFY UTILITY COMPANY PRIOR TO WORK.
2. APPROXIMATE LOCATION OF Exist SISKIYOU TELEPHONE FIBER OPTIC LINE.

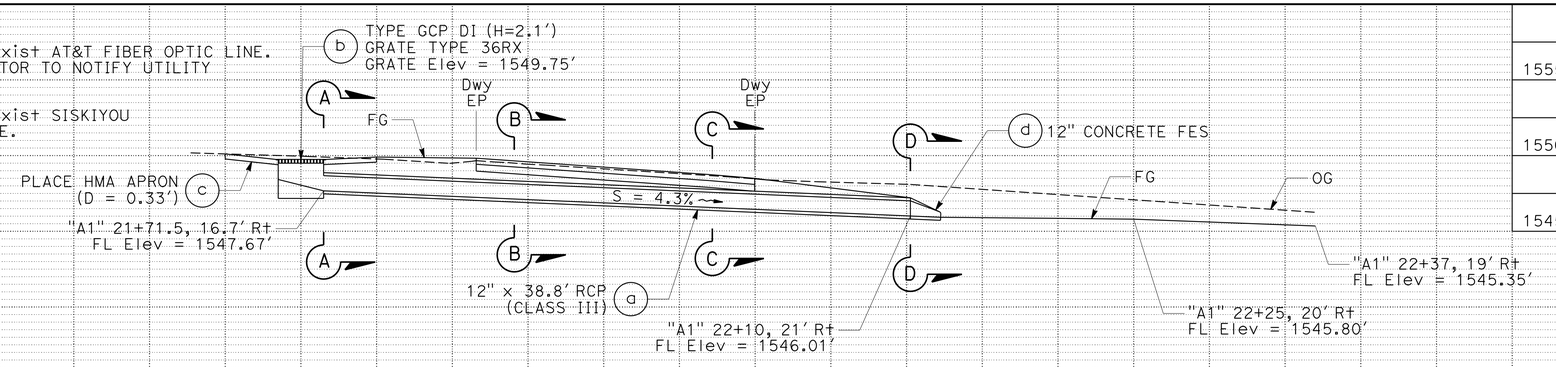

DRAINAGE SYSTEM No. 2

"A1" 21+70

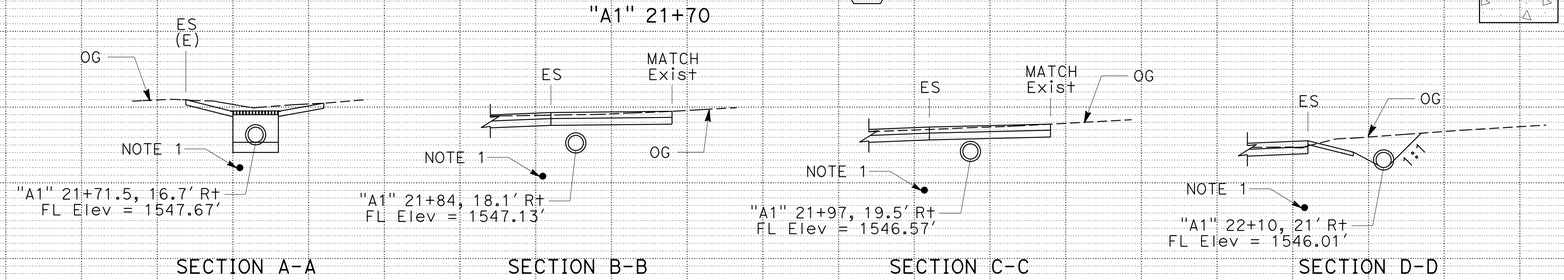

LEGEND:

MINOR CONCRETE (BACKFILL)

MINOR CONCRETE

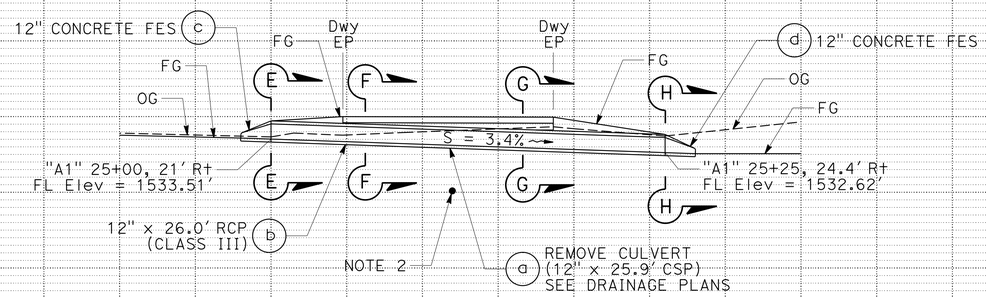

DRAINAGE SYSTEM No. 3

"A1" 25+10

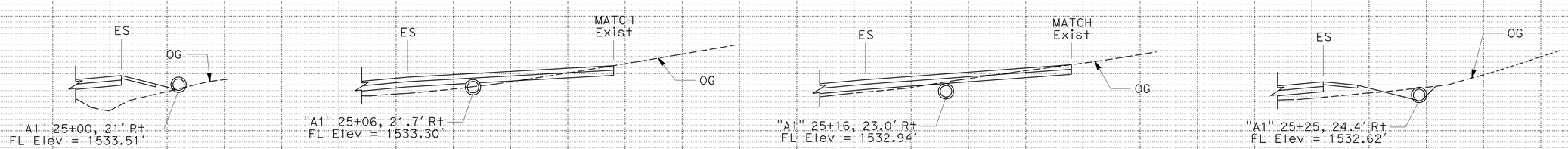

DRAINAGE PROFILES

SCALE: 1" = 5'

DP-1

TOBY CRAWFORD — REVISED BY
RUSSELL FLOOD — DATE REVISED
CALCULATED-DESIGNED BY
CHECKED BY
STEVE TOPAL — FUNCTIONAL SUPERVISOR

STATE OF CALIFORNIA - DEPARTMENT OF TRANSPORTATION
Caltrans®
DESIGN

P:\proj\02\3E080_plans\pse\23e080ib001.dgn

LAST REVISION 01-03-13 | DATE PLOTTED => 14-JAN-2013 | TIME PLOTTED => 09:20

Dist	COUNTY	ROUTE	POST MILES TOTAL PROJECT	SHEET No.	TOTAL SHEETS
02	Sis	96	68.7/69.1	18	31

REGISTERED CIVIL ENGINEER 01-03-13 DATE

01-07-13
PLANS APPROVAL DATE

REGISTERED PROFESSIONAL ENGINEER TOBY J. CRAWFORD No. C71138 Exp. 6-30-13 CIVIL STATE OF CALIFORNIA

THE STATE OF CALIFORNIA OR ITS OFFICERS OR AGENTS SHALL NOT BE RESPONSIBLE FOR THE ACCURACY OR COMPLETENESS OF SCANNED COPIES OF THIS PLAN SHEET.

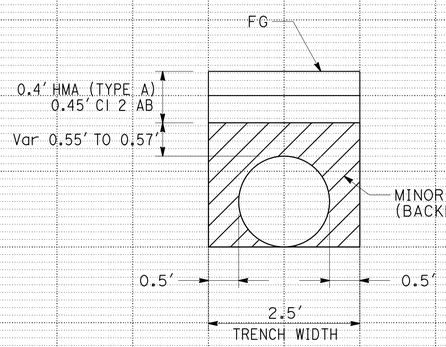

DETAIL A
MINOR CONCRETE (BACKFILL)
(NO SCALE)

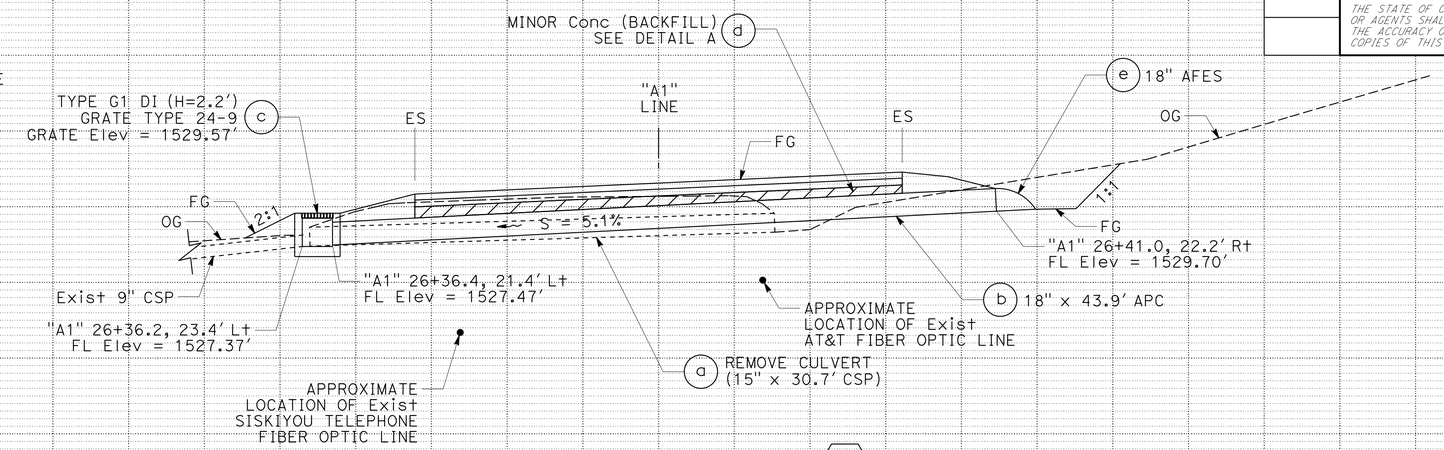

DRAINAGE SYSTEM No. 4
"A1" 26+38

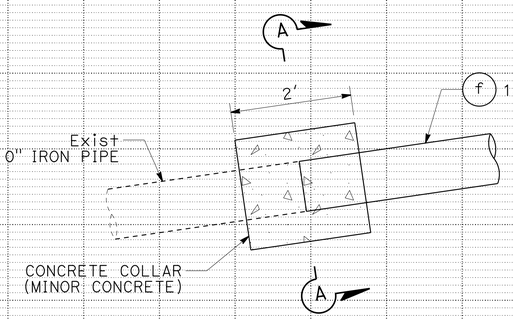

DETAIL B
CONCRETE COLLAR
(NO SCALE)

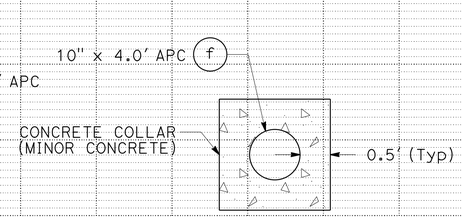

SECTION A-A
(NO SCALE)

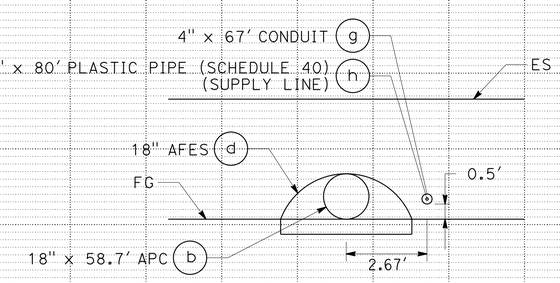

SECTION B-B
(NO SCALE)

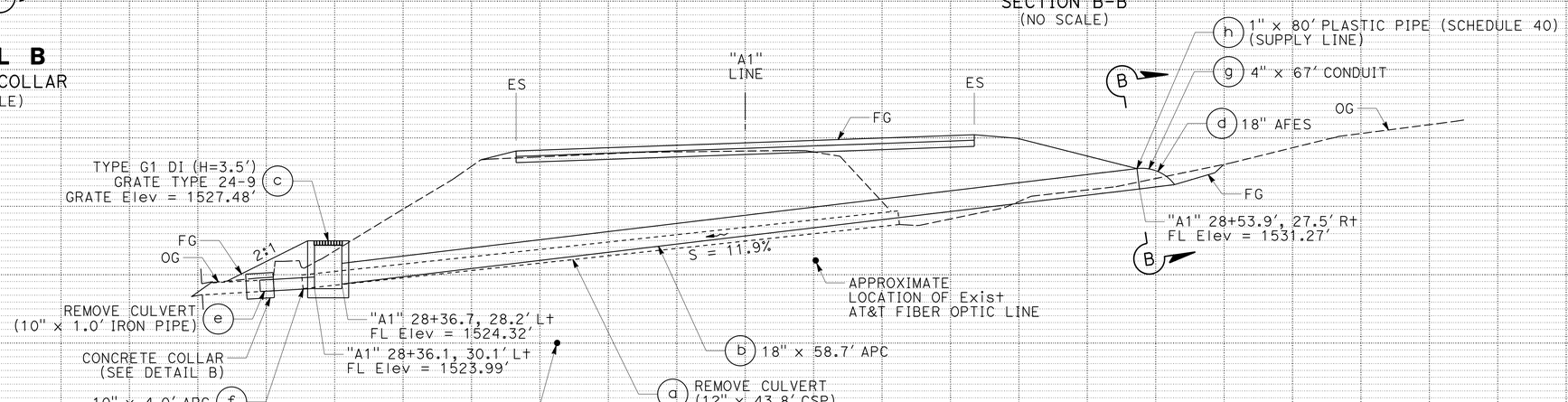

DRAINAGE SYSTEM No. 5
"A1" 28+45

DRAINAGE PROFILES

SCALE: 1" = 5'

DP-2

REVISED BY | DATE REVISED
TOBY CRAWFORD | RUSSELL FLOOD
CALCULATED-DESIGNED BY | CHECKED BY
FUNCTIONAL SUPERVISOR | STEVE TOPAL

STATE OF CALIFORNIA - DEPARTMENT OF TRANSPORTATION
Caltrans
DESIGN

P:\proj1\02\3E080_plans\pse\23e080ib002.dgn

LAST REVISION | DATE PLOTTED => 14-JAN-2013 | TIME PLOTTED => 09:20
01-03-13

Dist	COUNTY	ROUTE	POST MILES TOTAL PROJECT	SHEET No.	TOTAL SHEETS
02	Sis	96	68.7/69.1	19	31

REGISTERED CIVIL ENGINEER 01-03-13 DATE

01-07-13
PLANS APPROVAL DATE

REGISTERED PROFESSIONAL ENGINEER TOBY J. CRAWFORD No. C71138 Exp. 6-30-13 CIVIL STATE OF CALIFORNIA

THE STATE OF CALIFORNIA OR ITS OFFICERS OR AGENTS SHALL NOT BE RESPONSIBLE FOR THE ACCURACY OR COMPLETENESS OF SCANNED COPIES OF THIS PLAN SHEET.

NOTES:

1. SEE STANDARD PLAN D87D FOR ADDITIONAL DETAILS.
2. Temp FENCE (TYPE ESA) SHALL BE PLACED JUST PRIOR TO CONSTRUCTION OF THE OVERSIDE DRAIN AND SHALL BE REMOVED IMMEDIATELY FOLLOWING COMPLETION OF THE OVERSIDE DRAIN.

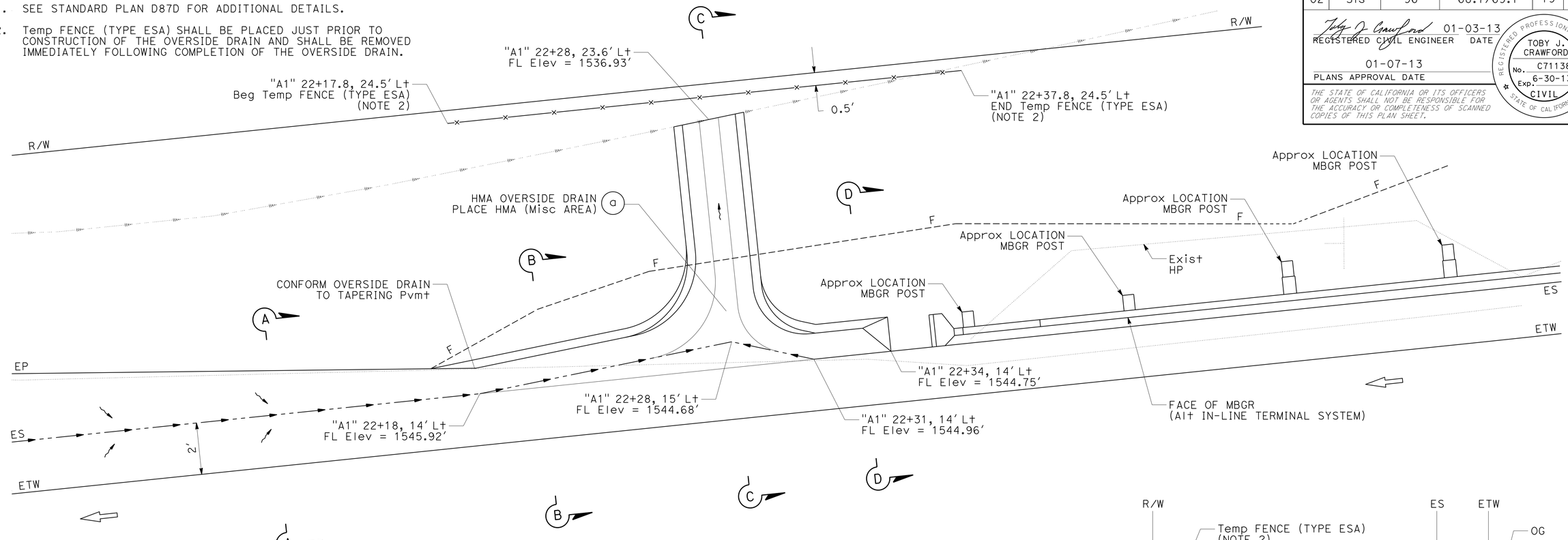

DRAINAGE SYSTEM No. 1

OVERSIDE DRAIN
Sta "A1" 22+28

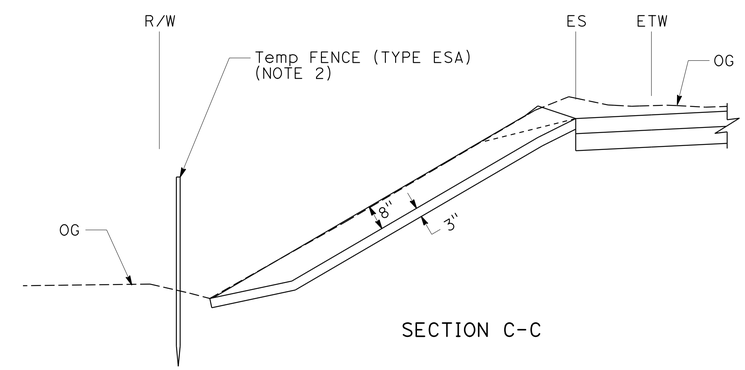

SECTION C-C

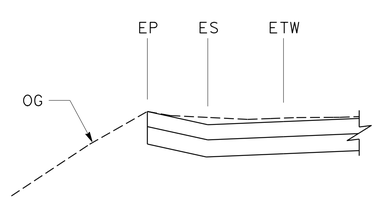

SECTION A-A

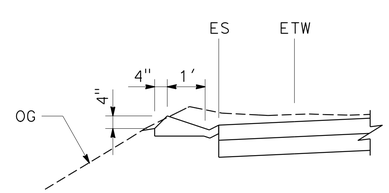

SECTION B-B

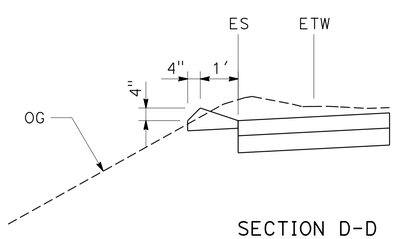

SECTION D-D

DRAINAGE DETAILS

NO SCALE

DD-1

REVISED BY | DATE REVISED
TOBY CRAWFORD | RUSSELL FLOOD
CALCULATED-DESIGNED BY | CHECKED BY
FUNCTIONAL SUPERVISOR: STEVE TOPAL

STATE OF CALIFORNIA - DEPARTMENT OF TRANSPORTATION
Caltrans
DESIGN

P:\proj1\02\3E080_plans\pse\23e080ic001.dgn

LAST REVISION 01-03-13 | DATE PLOTTED => 14-JAN-2013 | TIME PLOTTED => 09:20

Dist	COUNTY	ROUTE	POST MILES TOTAL PROJECT	SHEET No.	TOTAL SHEETS
02	Sis	96	68.7/69.1	20	31

REGISTERED CIVIL ENGINEER 01-03-13 DATE

01-07-13
PLANS APPROVAL DATE

REGISTERED PROFESSIONAL ENGINEER TOBY J. CRAWFORD No. C71138 Exp. 6-30-13 CIVIL STATE OF CALIFORNIA

THE STATE OF CALIFORNIA OR ITS OFFICERS OR AGENTS SHALL NOT BE RESPONSIBLE FOR THE ACCURACY OR COMPLETENESS OF SCANNED COPIES OF THIS PLAN SHEET.

NOTE:

1. SEE STANDARD PLANS D74B, D77A, AND D77B FOR ADDITIONAL DETAILS.

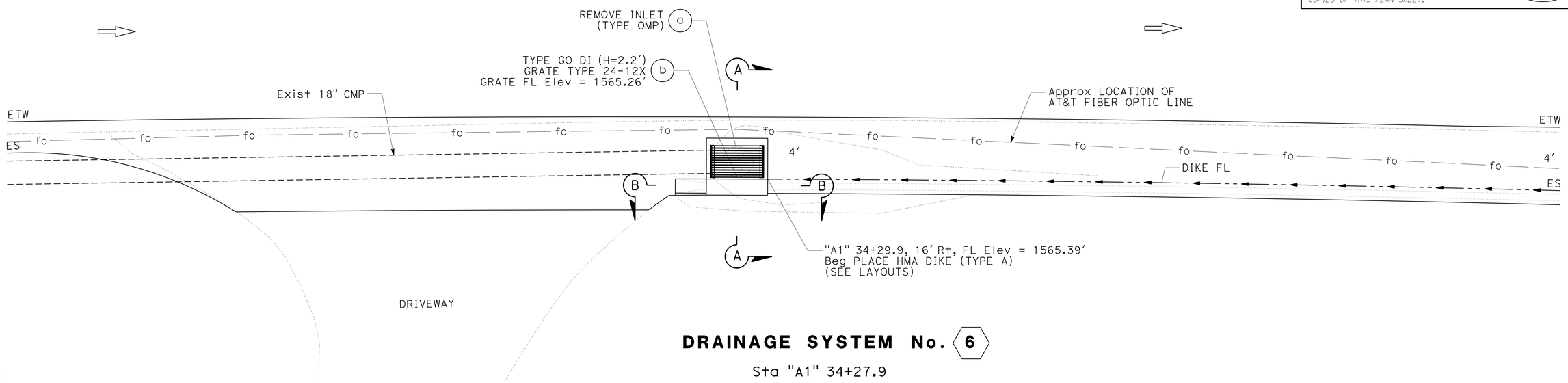

DRAINAGE SYSTEM No. 6

Sta "A1" 34+27.9

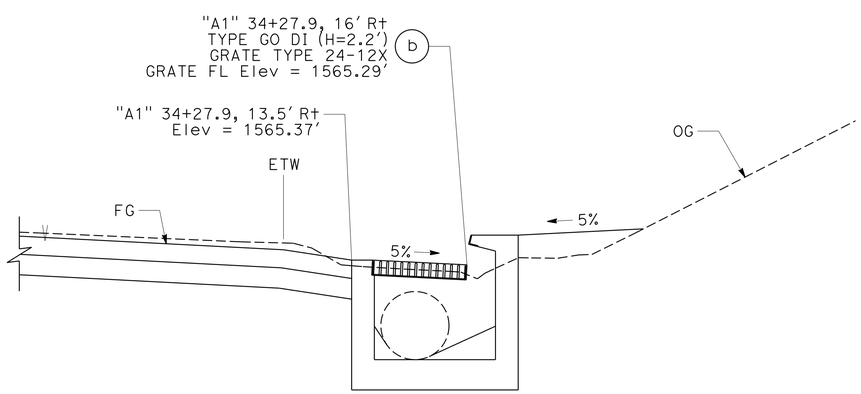

SECTION A-A

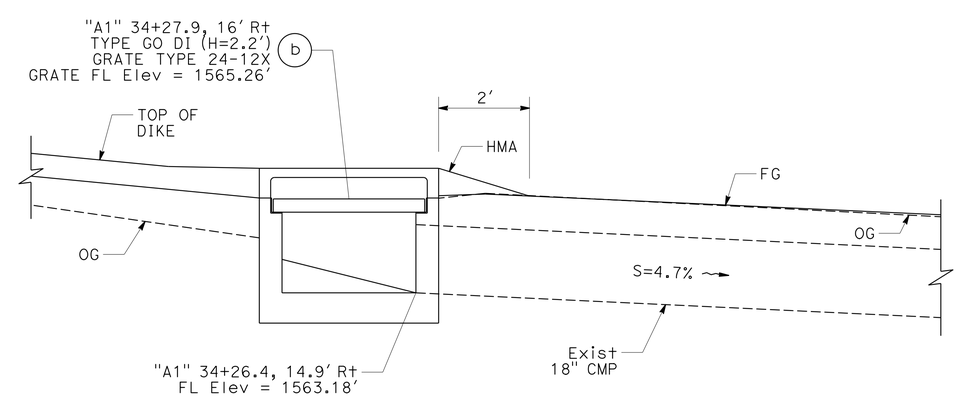

SECTION B-B

Approx LOCATION OF AT&T FIBER OPTIC LINE

DRAINAGE DETAILS

NO SCALE

DD-2

STATE OF CALIFORNIA - DEPARTMENT OF TRANSPORTATION
Caltrans® DESIGN

FUNCTIONAL SUPERVISOR: STEVE TOPAL
CALCULATED-DESIGNED BY: TOBY CRAWFORD
CHECKED BY: RUSSELL FLOOD
REVISED BY / DATE REVISED

P:\proj1\02\3E080_plans\pse\23e080ic002.dgn

LAST REVISION 01-03-13 | DATE PLOTTED => 14-JAN-2013 | TIME PLOTTED => 09:20

Dist	COUNTY	ROUTE	POST MILES TOTAL PROJECT	SHEET No.	TOTAL SHEETS
02	Sis	96	68.7/69.1	21	31

REGISTERED CIVIL ENGINEER 01-03-13 DATE

01-07-13
PLANS APPROVAL DATE

REGISTERED PROFESSIONAL ENGINEER TOBY J. CRAWFORD No. C71138 Exp. 6-30-13 CIVIL STATE OF CALIFORNIA

THE STATE OF CALIFORNIA OR ITS OFFICERS OR AGENTS SHALL NOT BE RESPONSIBLE FOR THE ACCURACY OR COMPLETENESS OF SCANNED COPIES OF THIS PLAN SHEET.

NOTES:

1. (N) - NOT A SEPARATE PAY ITEM; FOR INFORMATION ONLY
2. ALL JOINTS SHALL BE STANDARD.

ALTERNATIVE PIPE CULVERT OPTIONS

LOCATION	CORRUGATED STEEL	RCP (CLASS III)
	POLYMERIC SHEET COATING	CONCRETE CEMENT (TYPE II)
PM 68.92, 68.96	0.064"	YES

DRAINAGE QUANTITIES

APPROXIMATE STATION	PLAN SHEET No.	DRAINAGE SYSTEM No. ⬡	DRAINAGE ITEM ◯	REMOVE CULVERT (LF)	1" PLASTIC PIPE (SCHEDULE 40) (SUPPLY LINE)	4" CONDUIT	HOT MIX ASPHALT (TYPE A) *	PLACE HOT MIX ASPHALT (MISCELLANEOUS AREA) *	(N) CONCRETE COLLAR	(N) INLET HEIGHT	REMOVE INLET	MINOR CONCRETE (MINOR STRUCTURE)	MINOR CONCRETE (BACKFILL)	10" ALTERNATIVE PIPE CULVERT	18" ALTERNATIVE PIPE CULVERT	12" REINFORCED CONCRETE PIPE (CLASS III)	36" PRECAST CONCRETE PIPE INLET	12" CONCRETE FLARED END SECTION	18" ALTERNATIVE FLARED END SECTION	MISCELLANEOUS IRON AND STEEL	DESCRIPTION
				LF	LF	LF	TON	SQYD	EA	FT	EA	CY	CY	LF	LF	LF	LF	EA	EA	LB	
"A1" 22+28	DD-1	1	a				1.4	5.9													HMA OVERSIDE DRAIN
"A1" 21+70	D-1	2	a													38.8					12" RCP (Dwy CULVERT)
	DP-1		b							2.1		0.5					2.6			215	GCP DI, TYPE 36RX GRATE
			c				1.6	9.1													HMA APRON (T=0.33')
			d															1			12" CONCRETE FES
"A1" 25+10	D-1	3	a	25.9																	REMOVE CULVERT (12" CSP)
	DP-1		b													26.0					12" RCP (Dwy CULVERT)
			c															1			12" CONCRETE FES
			d															1			12" CONCRETE FES
"A1" 26+38	D-2	4	a	30.7																	REMOVE CULVERT (15" CSP)
	DP-2		b												43.9						18" APC
			c							2.2		0.8								263	G1 DI, TYPE 24-9 GRATE
			d										4.0								MINOR CONCRETE (BACKFILL)
			e																1		18" AFES
"A1" 28+45	D-2	5	a	43.8																	REMOVE CULVERT (12" CSP)
	DP-2		b												58.7						18" APC
			c							3.5		1.1								263	G1 DI, TYPE 24-9 GRATE
			d																1		18" AFES
			e	1.0																	REMOVE CULVERT (10" IRON PIPE)
			f						1					4.0							10" APC
			g			67															4" CONDUIT
			h		80																RECONSTRUCT 1" PLASTIC PIPE
"A1" 34+27.9	DD-2	6	a								1										REMOVE INLET (TYPE OMP)
			b							2.2		1.2								239	GO DI, TYPE 24-12X GRATE
TOTALS				101.4	80	67	3.0	15.0	1		1	3.6	4.0	4.0	102.6	64.8	2.6	3	2	980	

* INCLUDED IN SUMMARY OF QUANTITIES (SHEET Q-1)

DRAINAGE QUANTITIES
DQ-1

REVISED BY | DATE REVISED
TOBY CRAWFORD | RUSSELL FLOOD
CALCULATED-DESIGNED BY | CHECKED BY
FUNCTIONAL SUPERVISOR
STEVE TOPAL

STATE OF CALIFORNIA - DEPARTMENT OF TRANSPORTATION
Caltrans
DESIGN

P:\proj1\02\3E080_plans\pse\23e080id001.dgn

LAST REVISION 01-03-13 | DATE PLOTTED => 14-JAN-2013 | TIME PLOTTED => 09:20

Dist	COUNTY	ROUTE	POST MILES TOTAL PROJECT	SHEET No.	TOTAL SHEETS
02	Sis	96	68.7/69.1	22	31

REGISTERED CIVIL ENGINEER 01-03-13 DATE

01-07-13
PLANS APPROVAL DATE

REGISTERED PROFESSIONAL ENGINEER
TOBY J. CRAWFORD
No. C71138
Exp. 6-30-13
CIVIL
STATE OF CALIFORNIA

THE STATE OF CALIFORNIA OR ITS OFFICERS OR AGENTS SHALL NOT BE RESPONSIBLE FOR THE ACCURACY OR COMPLETENESS OF SCANNED COPIES OF THIS PLAN SHEET.

NOTES:

1. UNDERGROUND UTILITIES HAVE NOT BEEN POSITIVELY LOCATED.

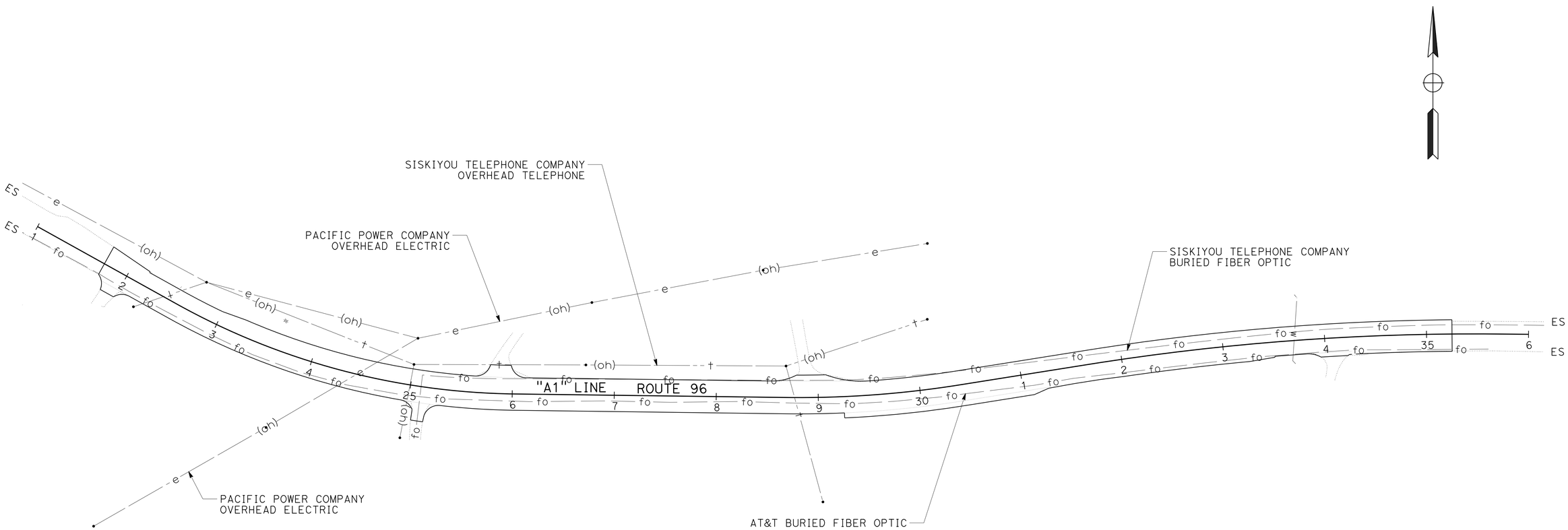

UTILITY PLAN

SCALE: 1" = 50'

U-1

APPROVED FOR UTILITY WORK ONLY

STATE OF CALIFORNIA - DEPARTMENT OF TRANSPORTATION
Caltrans
DESIGN

FUNCTIONAL SUPERVISOR: STEVE TOPAL
CALCULATED-DESIGNED BY: TOBY CRAWFORD
CHECKED BY: RUSSELL FLOOD
REVISED BY
DATE REVISED

P:\proj1\02\3E080_plans\pse\23e080ka001.dgn

LAST REVISION 01-03-13
DATE PLOTTED => 14-JAN-2013
TIME PLOTTED => 09:20

Dist	COUNTY	ROUTE	POST MILES TOTAL PROJECT	SHEET No.	TOTAL SHEETS
02	Sis	96	68.7/69.1	23	31

REGISTERED CIVIL ENGINEER 01-03-13 DATE

01-07-13
PLANS APPROVAL DATE

REGISTERED PROFESSIONAL ENGINEER TOBY J. CRAWFORD No. C71138 Exp. 6-30-13 CIVIL STATE OF CALIFORNIA

THE STATE OF CALIFORNIA OR ITS OFFICERS OR AGENTS SHALL NOT BE RESPONSIBLE FOR THE ACCURACY OR COMPLETENESS OF SCANNED COPIES OF THIS PLAN SHEET.

NOTES:

1. EXACT LOCATION OF ALL SIGNS TO BE DETERMINED BY THE ENGINEER.
2. CALIFORNIA CODES ARE DESIGNATED BY (CA), OTHERWISE FEDERAL CODES ARE SHOWN.
3. ALL CONSTRUCTION AREA SIGNS SHALL BE BLACK ON ORANGE.

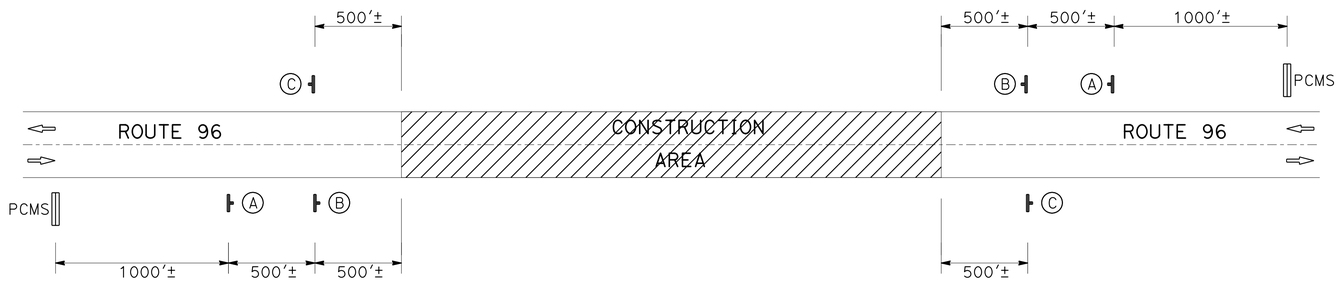

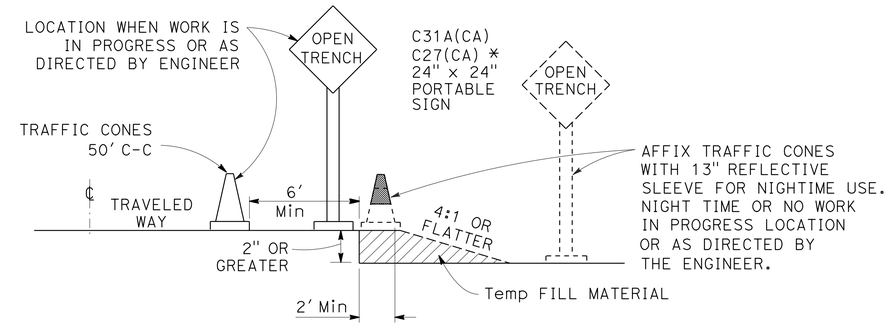

OPEN TRENCH SIGNING AND MARKING

* PLACE AT 250' INTERVALS THROUGH THE OPEN TRENCH AREA, ALTERNATE C27(CA) (OPEN TRENCH) AND C31A(CA) (NO SHOULDER) SIGNS

CONSTRUCTION AREA SIGNS (STATIONARY MOUNTED)

◯	TYPE	PANEL SIZE	SIGN MESSAGE	NUMBER AND SIZE OF POSTS	No. OF SIGNS
A	W20-1 C23B(CA)	48" x 48" 36" x 18"	ROAD WORK AHEAD HIGHWAY WIDENING	1 - 6" x 6"	2
B	W8-3	36" x 36"	PAVEMENT ENDS	1 - 4" x 6"	2
C	G20-2	36" x 18"	END ROAD WORK	1 - 4" x 4"	2

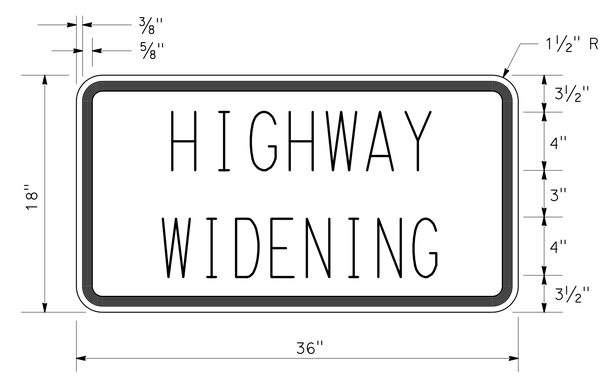

C23B(CA) SIGN PANEL DETAIL

TYPE "C" LETTERING

CONSTRUCTION AREA SIGNS

NO SCALE

CS-1

REVISED BY | DATE REVISED
TOBY CRAWFORD | RUSSELL FLOOD
CALCULATED-DESIGNED BY | CHECKED BY
FUNCTIONAL SUPERVISOR: STEVE TOPAL

STATE OF CALIFORNIA - DEPARTMENT OF TRANSPORTATION
Caltrans
DESIGN

P:\proj1\02\3E080_plans\pse\23e0801a001.dgn

LAST REVISION 01-03-13 | DATE PLOTTED => 14-JAN-2013 | TIME PLOTTED => 09:20

Dist	COUNTY	ROUTE	POST MILES TOTAL PROJECT	SHEET No.	TOTAL SHEETS
02	Sis	96	68.7/69.1	24	31

REGISTERED CIVIL ENGINEER 01-03-13 DATE

01-07-13
PLANS APPROVAL DATE

REGISTERED PROFESSIONAL ENGINEER TOBY J. CRAWFORD No. C71138 Exp. 6-30-13 CIVIL STATE OF CALIFORNIA

THE STATE OF CALIFORNIA OR ITS OFFICERS OR AGENTS SHALL NOT BE RESPONSIBLE FOR THE ACCURACY OR COMPLETENESS OF SCANNED COPIES OF THIS PLAN SHEET.

NOTE:

1. SEE SUMMARY OF QUANTITIES (Q-1) FOR APPROXIMATE STATION OF DELINEATORS AND MARKERS.

LEGEND:

- (No.) TRAFFIC STRIPE DETAIL No.
- DELINEATOR (TYPE F-2)
- LOCATION OF BEGIN/END TRAFFIC STRIPE
- (C) MARKER (CULVERT)
- MILEPOST MARKER
- ROADSIDE SIGN (ONE POST)
- DIRECTION OF TRAFFIC
- (L-1) OBJECT MARKER (TYPE L-1)
- (P) OBJECT MARKER (TYPE P)

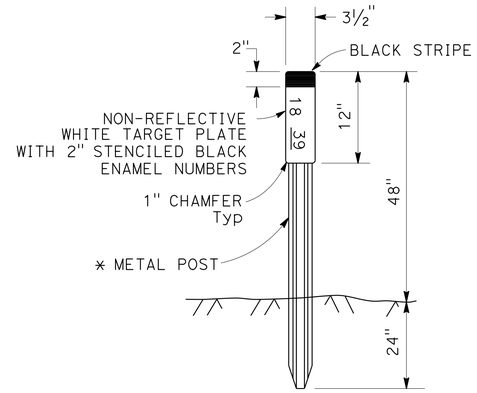

MARKER (CULVERT)

TYPICAL

* SEE STANDARD PLANS FOR METAL POST DETAILS

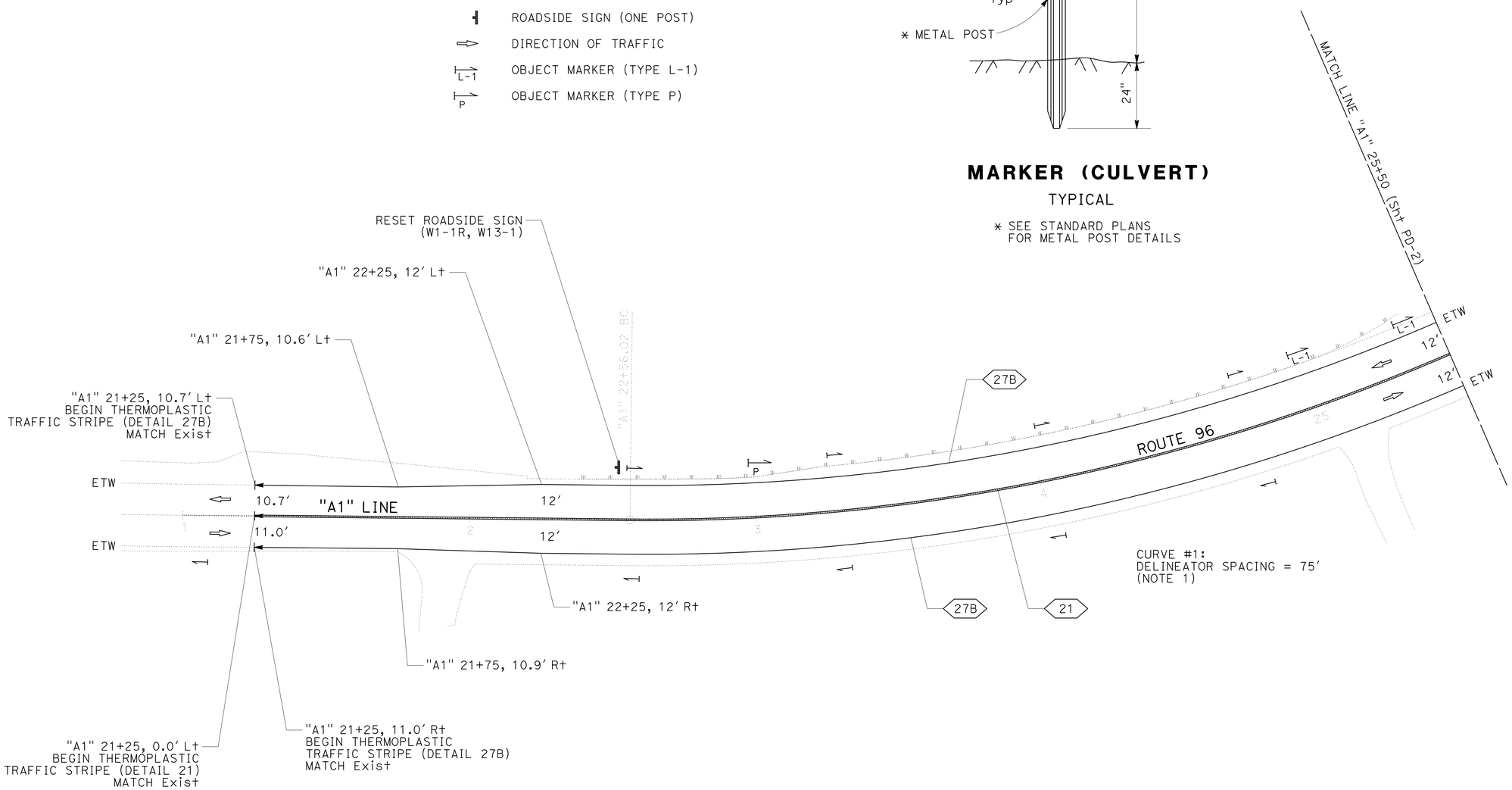

PAVEMENT DELINEATION AND SIGN PLAN

SCALE: 1" = 20'

PD-1

APPROVED FOR PAVEMENT DELINEATION AND SIGN WORK ONLY

STATE OF CALIFORNIA - DEPARTMENT OF TRANSPORTATION
Caltrans® DESIGN

FUNCTIONAL SUPERVISOR: STEVE TOPAL
CALCULATED-DESIGNED BY: TOBY CRAWFORD
CHECKED BY: RUSSELL FLOOD
REVISED BY
DATE REVISED

P:\proj1\02\3E080_plans\pse\23e080na001.dgn

LAST REVISION 01-03-13
DATE PLOTTED => 14-JAN-2013
TIME PLOTTED => 09:20

Dist	COUNTY	ROUTE	POST MILES TOTAL PROJECT	SHEET No.	TOTAL SHEETS
02	Sis	96	68.7/69.1	25	31

Toby J. Crawford 01-03-13
REGISTERED CIVIL ENGINEER DATE

01-07-13
PLANS APPROVAL DATE

REGISTERED PROFESSIONAL ENGINEER
TOBY J. CRAWFORD
No. C71138
Exp. 6-30-13
CIVIL
STATE OF CALIFORNIA

THE STATE OF CALIFORNIA OR ITS OFFICERS OR AGENTS SHALL NOT BE RESPONSIBLE FOR THE ACCURACY OR COMPLETENESS OF SCANNED COPIES OF THIS PLAN SHEET.

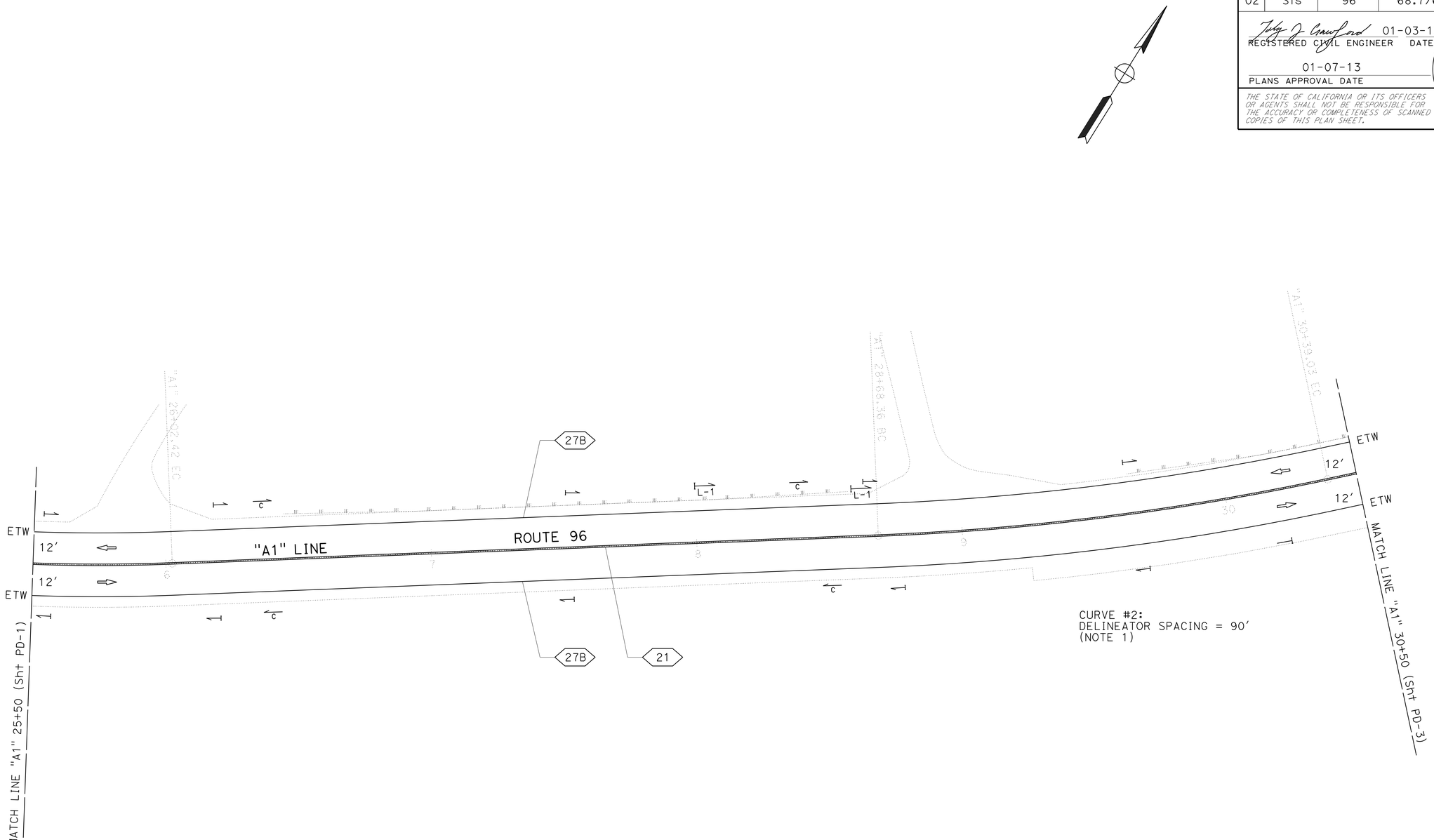

PAVEMENT DELINEATION AND SIGN PLAN

SCALE: 1" = 20'

PD-2

APPROVED FOR PAVEMENT DELINEATION AND SIGN WORK ONLY

STATE OF CALIFORNIA - DEPARTMENT OF TRANSPORTATION
Caltrans DESIGN

FUNCTIONAL SUPERVISOR: STEVE TOPAL
CALCULATED-DESIGNED BY: TOBY CRAWFORD
CHECKED BY: RUSSELL FLOOD
REVISED BY
DATE REVISED

P:\proj1\02\3E080_plans\pse\23e080na002.dgn

LAST REVISION 01-03-13
DATE PLOTTED => 14-JAN-2013
TIME PLOTTED => 09:20

Dist	COUNTY	ROUTE	POST MILES TOTAL PROJECT	SHEET No.	TOTAL SHEETS
02	Sis	96	68.7/69.1	26	31

REGISTERED CIVIL ENGINEER 01-03-13 DATE

01-07-13
PLANS APPROVAL DATE

REGISTERED PROFESSIONAL ENGINEER
TOBY J. CRAWFORD
No. C71138
Exp. 6-30-13
CIVIL
STATE OF CALIFORNIA

THE STATE OF CALIFORNIA OR ITS OFFICERS OR AGENTS SHALL NOT BE RESPONSIBLE FOR THE ACCURACY OR COMPLETENESS OF SCANNED COPIES OF THIS PLAN SHEET.

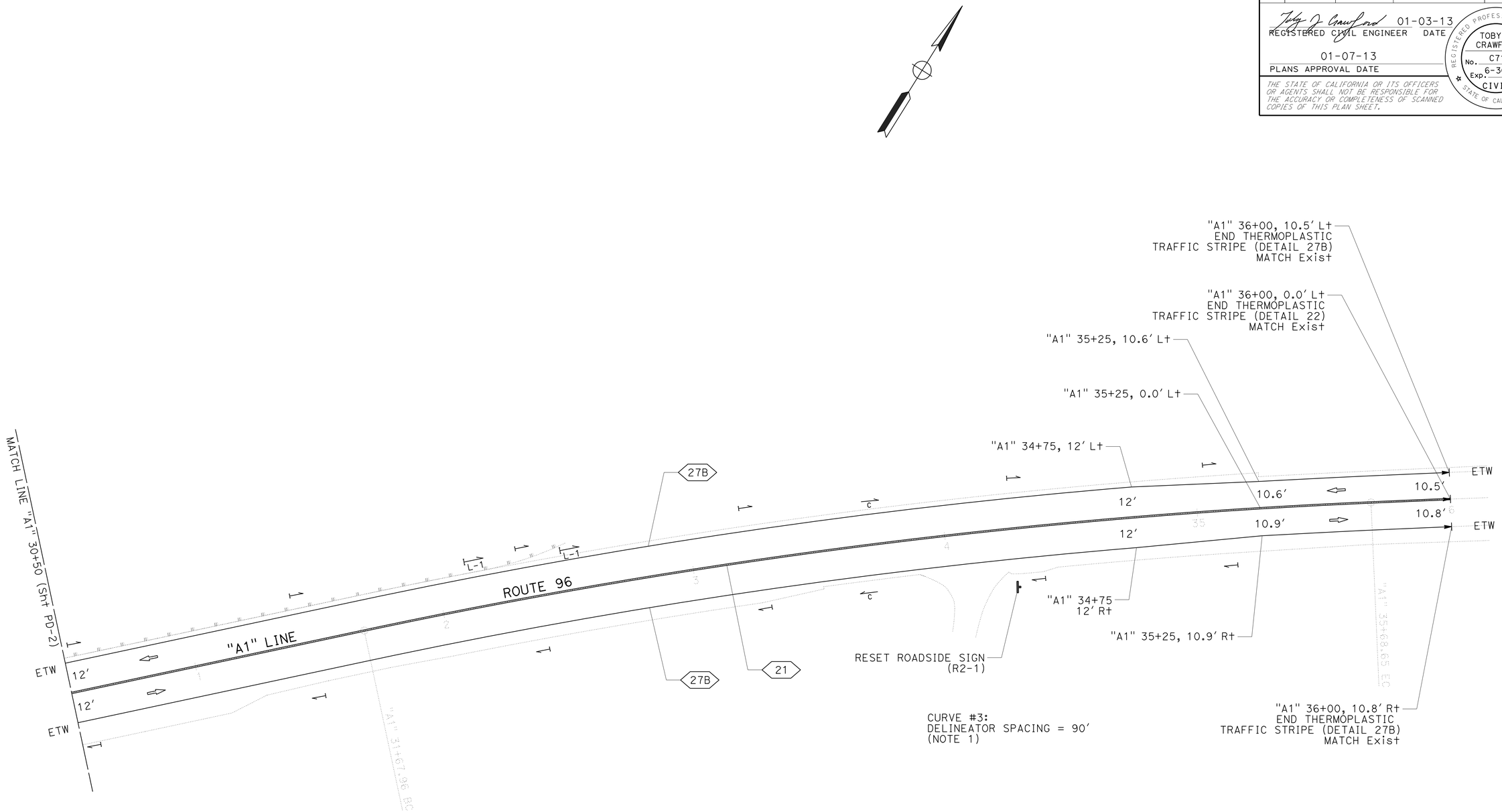

PAVEMENT DELINEATION AND SIGN PLAN

SCALE: 1" = 20′

PD-3

APPROVED FOR PAVEMENT DELINEATION AND SIGN WORK ONLY

CALCULATED-DESIGNED BY	TOBY CRAWFORD
CHECKED BY	RUSSELL FLOOD
REVISED BY	
DATE REVISED	
FUNCTIONAL SUPERVISOR	STEVE TOPAL

STATE OF CALIFORNIA - DEPARTMENT OF TRANSPORTATION
Caltrans®
DESIGN

P:\proj1\02\3E080_plans\pse\23e080na003.dgn

LAST REVISION 01-03-13
DATE PLOTTED => 14-JAN-2013
TIME PLOTTED => 09:20

Dist	COUNTY	ROUTE	POST MILES TOTAL PROJECT	SHEET No.	TOTAL SHEETS
02	Sis	96	68.7/69.1	27	31

REGISTERED CIVIL ENGINEER 01-03-13 DATE

01-07-13
PLANS APPROVAL DATE

REGISTERED PROFESSIONAL ENGINEER TOBY J. CRAWFORD No. C71138 Exp. 6-30-13 CIVIL STATE OF CALIFORNIA

THE STATE OF CALIFORNIA OR ITS OFFICERS OR AGENTS SHALL NOT BE RESPONSIBLE FOR THE ACCURACY OR COMPLETENESS OF SCANNED COPIES OF THIS PLAN SHEET.

NOTE:

1. (N) - NOT A SEPARATE PAY ITEM; FOR INFORMATION ONLY

ROADWAY AND MISCELLANEOUS ITEMS

STATION RANGE	SHEET No.	REMOVE FENCE (TYPE WM)	ROADWAY EXCAVATION	(N) EMBANKMENT	SHOULDER BACKING	CLASS 2 AGGREGATE BASE	HOT MIX ASPHALT (TYPE A)	PLACE HMA DIKE (TYPE A)	PLACE HMA (Misc AREA)	TACK COAT	RSP (No. 2, METHOD B)	RSP FABRIC (CLASS 8)
		LF	CY	CY	TON	CY	TON	LF	SQYD	TON	CY	SQYD
"A1" 21+75 TO 25+50	L-1		216	101	38	203	395			0.3		
"A1" 25+50 TO 30+50	L-2		580	207	46	273	540	125	57.3	0.4	5.8	22.4
"A1" 30+50 TO 35+25	L-3	48	717	33	27	236	477	395	30.9	0.3		
FROM DRAINAGE	DQ-1						3		15.0			
TOTAL		48	1513	341	111	712	1415	520	103.2	1.0	5.8	22.4

TRAFFIC STRIPES

STATION RANGE	SHEET No.	THERMOPLASTIC TRAFFIC STRIPE (SPRAYABLE) DETAIL No. 21	DETAIL No. 27B
		LF	LF
"A1" 21+25 TO 25+50	PD-1	425	850
"A1" 25+50 TO 30+50	PD-2	500	1000
"A1" 30+50 TO 36+00	PD-3	550	1100
SUBTOTAL		1475	2950
TOTAL		4425	

METAL BEAM GUARD RAILING

STATION RANGE	DIRECTION	SHEET No.	METAL BEAM GUARD RAILING (7' STEEL POST)	ALTERNATIVE IN-LINE TERMINAL SYSTEM	ALTERNATIVE FLARED TERMINAL SYSTEM	LAYOUT TYPE	REMARKS
			LF	EA	EA		
"A1" 22+87.5 TO 25+00	WB	L-1	212.5	1	1	11H	Std PLAN A77E4
"A1" 26+95 TO 28+07.5	WB	L-2	112.5	2		11D	Std PLAN A77E2
"A1" 30+15 TO 32+15	WB	L-2	200	1	1	11H	Std PLAN A77E4
TOTAL			525	4	2		

WATER POLLUTION CONTROL

	TEMPORARY FENCE (TYPE ESA)	TEMPORARY FIBER ROLL	TEMPORARY CHECK DAM	TEMPORARY DRAINAGE INLET PROTECTION	TEMPORARY COVER
	LF	LF	LF	EA	SQYD
TOTAL	200	650	100	4	130

DELINEATORS, MARKERS, AND SIGNS

APPROXIMATE STATION	SHEET No.	EASTBOUND	WESTBOUND	REMOVE MARKER	DELINEATOR (CLASS 2)*	MILEPOST MARKER	MARKER (CULVERT)	OBJECT MARKER (TYPE P)	OBJECT MARKER (TYPE L-1)	RESET ROADSIDE SIGN	REMARKS
				EA	EA	EA	EA	EA	EA	EA	
"A1" 21+05	PD-1	X			1						
"A1" 22+50	PD-1		X							1	30 mph CURVE WARNING
"A1" 22+55	PD-1	X	X		2						
"A1" 23+00	PD-1		X					1			
"A1" 23+30	PD-1	X	X		2						
"A1" 24+05	PD-1	X	X		2						
"A1" 24+80	PD-1	X	X		2						
"A1" 25+00	PD-1		X						1		
"A1" 25+38	PD-1		X						1		
"A1" 25+55	PD-2	X	X		2						
"A1" 26+25	PD-2	X	X		2						
"A1" 26+39	PD-2	X	X	2			2				PM 68.92
"A1" 27+50	PD-2	X	X		2						
"A1" 28+08	PD-2		X						1		
"A1" 28+45	PD-2	X	X	2			2				PM 68.96
"A1" 28+60	PD-2		X						1		
"A1" 28+75	PD-2	X	X		2						
"A1" 29+65	PD-2	X	X		2						
"A1" 30+20	PD-2	X		1		1					PM 69.00
"A1" 30+55	PD-3	X	X		2						
"A1" 31+45	PD-3	X	X		2						
"A1" 32+15	PD-3		X						1		
"A1" 32+35	PD-3	X	X		2						
"A1" 32+53	PD-3		X						1		
"A1" 33+25	PD-3	X	X		2						
"A1" 33+70	PD-3	X	X	2			2				PM 69.05
"A1" 34+28	PD-3	X								1	SPEED LIMIT 35 mph
"A1" 34+30	PD-3	X	X		2						
"A1" 35+20	PD-3	X	X		2						
TOTAL				7	31	1	6	1	6	2	

* TYPE F DELINEATORS

SUMMARY OF QUANTITIES
Q-1

REVISED BY	DATE REVISED	TOBY CRAWFORD	RUSSELL FLOOD	CALCULATED-DESIGNED BY	CHECKED BY	FUNCTIONAL SUPERVISOR	STEVE TOPAL

STATE OF CALIFORNIA - DEPARTMENT OF TRANSPORTATION
Caltrans® DESIGN

P:\proj1\02\3E080_plans\pse\23e080pa001.dgn

LAST REVISION 01-03-13 | DATE PLOTTED => 14-JAN-2013 | TIME PLOTTED => 09:20

Dist	COUNTY	ROUTE	POST MILES TOTAL PROJECT	SHEET No.	TOTAL SHEETS
02	Sis	96	68.7/69.1	28	31

REGISTERED CIVIL ENGINEER 12-7-12 DATE

01-07-13
PLANS APPROVAL DATE

REGISTERED PROFESSIONAL ENGINEER Gurinderpal Bhullar No. C48815 Exp. 9-30-14 CIVIL STATE OF CALIFORNIA

THE STATE OF CALIFORNIA OR ITS OFFICERS OR AGENTS SHALL NOT BE RESPONSIBLE FOR THE ACCURACY OR COMPLETENESS OF SCANNED COPIES OF THIS PLAN SHEET.

NOTES:

Unless otherwise specified in the special provisions, all temporary warning signs shall have black legend on orange background.

California code are designated by (CA). Otherwise, Federal (MUTCD) codes are shown.

TYPICAL LANE CLOSURE WITH REVERSIBLE CONTROL

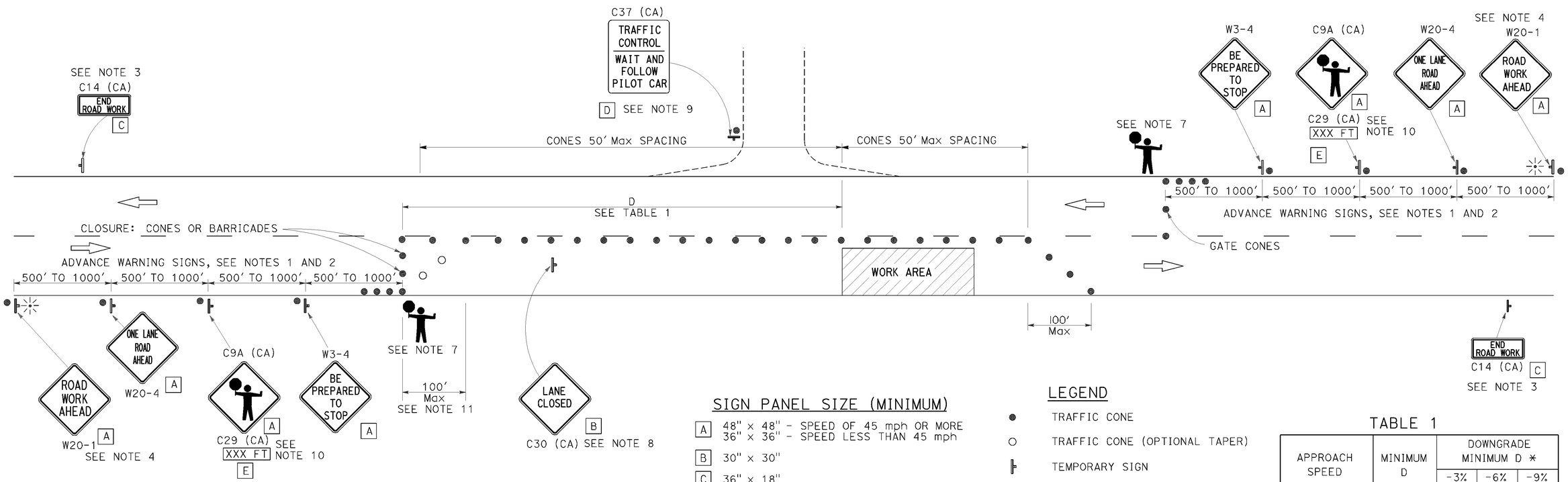

SIGN PANEL SIZE (MINIMUM)

A	48" x 48" - SPEED OF 45 mph OR MORE 36" x 36" - SPEED LESS THAN 45 mph
B	30" x 30"
C	36" x 18"
D	36" x 42"
E	36" x 9"

LEGEND

- TRAFFIC CONE
- TRAFFIC CONE (OPTIONAL TAPER)
- TEMPORARY SIGN
- PORTABLE FLASHING BEACON
- FLAGGER

TABLE 1

APPROACH SPEED	MINIMUM D	DOWNGRADE MINIMUM D *		
		-3%	-6%	-9%
mph	ft	ft	ft	ft
25 AND BELOW	155	158	165	173
30	200	205	215	227
35	250	257	271	287
40	305	315	333	354
45	360	378	400	427
50	425	446	474	507
55	495	520	553	593
60	570	598	638	686
65	645	682	728	785

* USE ON SUSTAINED DOWNGRADE STEEPER THAN -3 PERCENT AND LONGER THAN 1 MILE.

NOTES:

1. Where approach speeds are low, advance warning signs may be placed at 300' spacing, and closer in urban areas.
2. Each advance warning sign in each direction of travel shall be equipped with at least two flags for daytime closure. Each flag shall be at least 16" x 16" in size and shall be orange or fluorescent red-orange in color. Flashing beacons shall be placed at the locations indicated for lane closure during hours of darkness.
3. A C14 (CA) "END ROAD WORK" sign, as appropriate, shall be placed at the end of the lane control unless the end of work area is obvious, or ends within a larger project's limits.
4. If the W20-1 sign would follow within 2000' of a stationary W20-1 or C11 (CA) "ROAD WORK NEXT _____MILES", use a W20-4 sign for the first advance warning sign.
5. All cones used for lane closures during the hours of darkness shall be fitted with retroreflective bands (or sleeves) as specified in the specifications.
6. Portable delineators, placed at one-half the spacing indicated for traffic cones, may be used instead of cones for daytime closures only.
7. Additional advance flaggers may be required. Flagger should stand in a conspicuous place, be visible to approaching traffic as well as approaching vehicles after the first vehicle has stopped. During the hours of darkness, the flagging-station and flagger shall be illuminated and clearly visible to approaching traffic. The illumination footprint of the lighting on the ground shall be at least 20' in diameter. Place a minimum of four cones at 50' intervals in advance of flagger station as shown.
8. Place C30 (CA) "LANE CLOSED" sign at 500' to 1000' intervals throughout extended work areas. They are optional if the work area is visible from the flagger station.
9. When a pilot car is used, place a C37 (CA) "TRAFFIC CONTROL-WAIT AND FOLLOW PILOT CAR" sign at all intersections within traffic control area. Signs shall be clean and visible at all times.
10. An optional C29 (CA) sign may be placed below the C9A (CA) sign.
11. Traffic cones or barricades may be placed on the optional taper as shown, barricades shall be Type I, II, or III.

STATE OF CALIFORNIA
DEPARTMENT OF TRANSPORTATION

TRAFFIC CONTROL SYSTEM FOR LANE CLOSURE ON TWO LANE CONVENTIONAL HIGHWAYS

NO SCALE

TCS-1

STATE OF CALIFORNIA - DEPARTMENT OF TRANSPORTATION
Caltrans DESIGN
FUNCTIONAL SUPERVISOR: STEVE TOPAL
CALCULATED-DESIGNED BY: GURINDERPAL BHULLAR
CHECKED BY: TOBY CRAWFORD
REVISED BY / DATE REVISED

P:\proj1\02\3E080_plans\pse\23e080uj001.dgn

DATE PLOTTED => 14-JAN-2013
TIME PLOTTED => 09:20

LAST REVISION 12-14-12

Dist	COUNTY	ROUTE	POST MILES TOTAL PROJECT	SHEET No.	TOTAL SHEETS
02	Sis	96	68.7/69.1	29	31

Raymond Don Tsztoo
REGISTERED CIVIL ENGINEER

July 20, 2012
PLANS APPROVAL DATE

REGISTERED PROFESSIONAL ENGINEER Raymond Don Tsztoo No. C37332 Exp. 6-30-14 CIVIL STATE OF CALIFORNIA

THE STATE OF CALIFORNIA OR ITS OFFICERS OR AGENTS SHALL NOT BE RESPONSIBLE FOR THE ACCURACY OR COMPLETENESS OF SCANNED COPIES OF THIS PLAN SHEET.

TO ACCOMPANY PLANS DATED 01-07-13

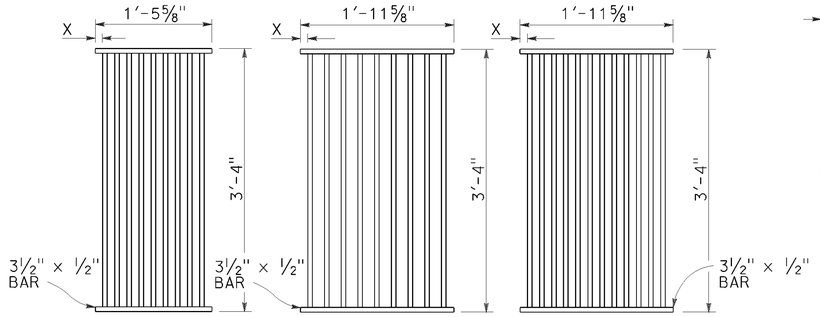

TYPE 18-9

1⅜" Clear spacing. Use within the roadbed on highways where bicycles and pedestrians are excluded.

TYPE 24-9

2" Clear spacing. Use in locations off the roadbed on all types of highways.

TYPE 24-12

1⅜" Clear spacing. Use within the roadbed on highways where bicycles and pedestrians are excluded.

RECTANGULAR GRATE DETAILS

(See table below)

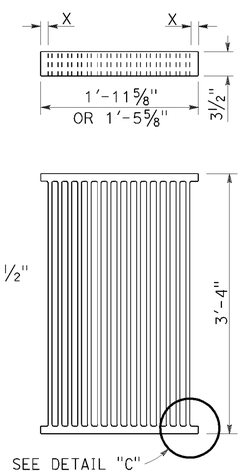

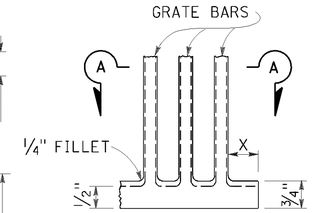

DETAIL "C"

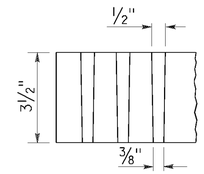

SECTION A-A

ALTERNATIVE CAST DUCTILE IRON GRATE OR CAST CARBON STEEL GRATE

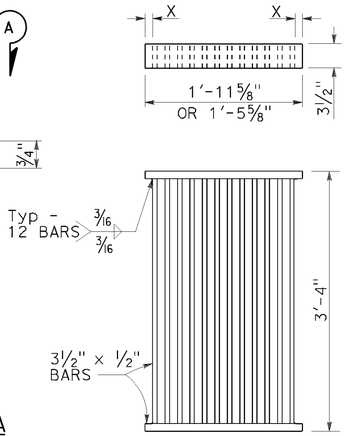

ALTERNATIVE WELDED GRATE

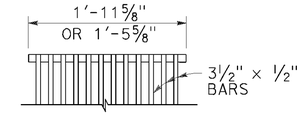

CAST END BLOCK

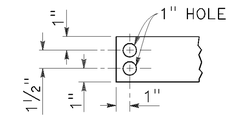

END OF BAR

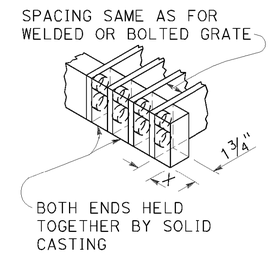

ALTERNATIVE CAST DUCTILE IRON OR CAST CARBON STEEL END BLOCK GRATE

NOTES:

1. Grate type numbers refer to approximate width of grate in inches and number of bars, respectively.
2. Contractor has the option of using cast ductile iron, cast carbon steel, welded, bolted, or cast end block grate.
3. Rounded top of bars optional on all grates.
4. Pipe inlets with a grate shall be placed so that bars parallel direction of principle surface flow.
5. Complete joint penetration butt welds may be substituted for the fillet welds on all anchors.
6. Standard square, hexagon, round or equivalent headed anchors may be substituted for the right angle hooks on the anchors shown on this plan.
7. Grate and frame weights are based on welded grates (weights of face angles, steps, protection bars, etc. are not included).
8. Connect chain to grate and frame only at locations shown on the plans. When chain is required, do not use cast ductile iron grates.

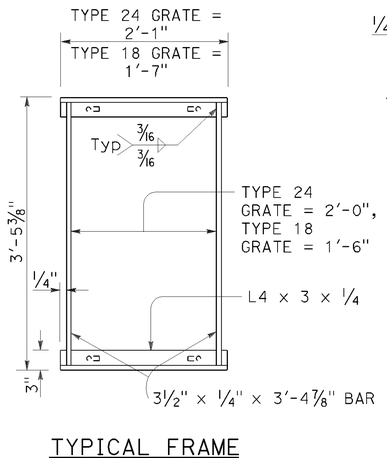

TYPICAL FRAME

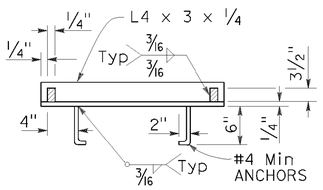

CROSS SECTION

(Thru frame)

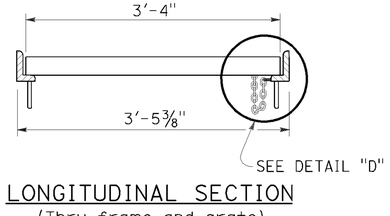

LONGITUDINAL SECTION

(Thru frame and grate)

RECTANGULAR FRAME DETAILS

(For all rectangular grates)

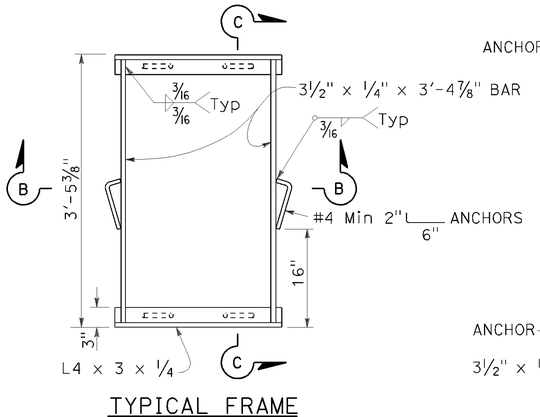

TYPICAL FRAME

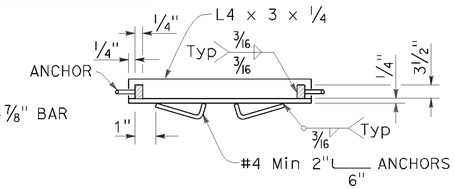

SECTION B-B

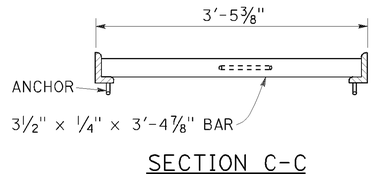

SECTION C-C

ALTERNATIVE ANCHOR FOR RECTANGULAR FRAME

(For details not shown, See Rectangular Frame Details)

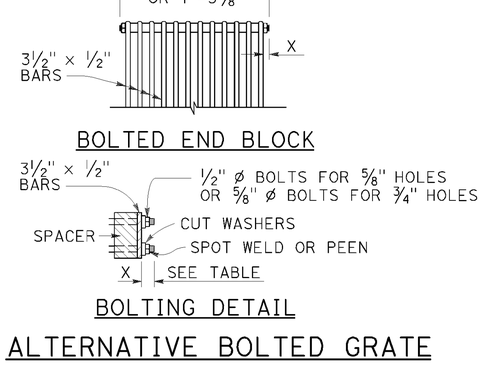

ALTERNATIVE BOLTED GRATE

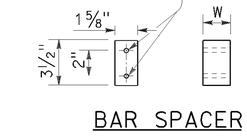

BAR SPACER

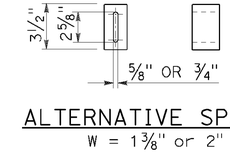

ALTERNATIVE SPACER

W = 1⅜" or 2"

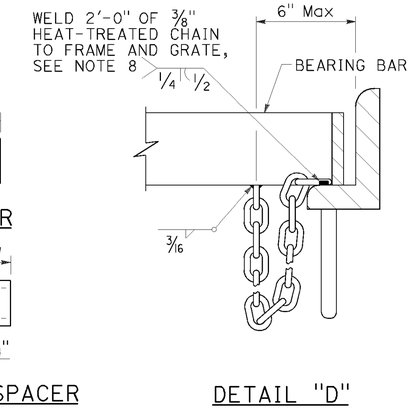

DETAIL "D"

(Steel grates only)

GRATE BAR SPACING TABLE

TYPE	No. OF BARS	CLEAR BAR SPACING	X
18-9	9	1⅜"	1 1/16"
24-9	9	2"	1 9/16"
24-12	12	1⅜"	1¼"

INLET TYPE	COVER TYPE	WEIGHT LB
OS	PLATE	174
OL-7	PLATE	170
OL-10	PLATE	170
OL-14	PLATE	170
OL-21	PLATE	170
OCP	PLATE	112
OCPI	PLATE	112
OCPI	REDWOOD	42
OMP	PLATE	177
OMPI	PLATE	177

INLET TYPE	GRATE TYPE	No. OF GRATES	WEIGHT LB
GDO	24-12	2	634
GOL-7	24-12	1	326
GOL-10	24-12	1	326
GO,G1,G2,G3,G4 (TYPE 24)	24-9	1	263
	24-12	1	326
G4 (TYPE 18),G5,G6	18-9	1	249
GT1	18-9	2	498
GT2	18-9	2	498
GT3	24-12	2	652
GT4	24-12	2	652
TRASH RACK			22
GRATE CHAIN			3

BASIS FOR Misc IRON & STEEL FINAL PAY WEIGHTS FOR DRAINAGE INLETS

(See Note 7)

STATE OF CALIFORNIA
DEPARTMENT OF TRANSPORTATION

GRATE DETAILS

NO SCALE

RSP D77A DATED JULY 20, 2012 SUPERSEDES STANDARD PLAN D77A DATED MAY 20, 2011 - PAGE 164 OF THE STANDARD PLANS BOOK DATED 2010.

REVISED STANDARD PLAN RSP D77A

2010 REVISED STANDARD PLAN RSP D77A

P:\proj1\02\3E080_plans\pse\23e080va001.dgn

USERNAME => s115152
DGN FILE => 23e080va001.dgn

DATE PLOTTED => 14-JAN-2013
TIME PLOTTED => 09:20

6-13-12

Dist	COUNTY	ROUTE	POST MILES TOTAL PROJECT	SHEET No.	TOTAL SHEETS
02	Sis	96	68.7/69.1	30	31

Raymond Don Tsztoo
REGISTERED CIVIL ENGINEER

July 20, 2012
PLANS APPROVAL DATE

REGISTERED PROFESSIONAL ENGINEER Raymond Don Tsztoo No. C37332 Exp. 6-30-14 CIVIL STATE OF CALIFORNIA

THE STATE OF CALIFORNIA OR ITS OFFICERS OR AGENTS SHALL NOT BE RESPONSIBLE FOR THE ACCURACY OR COMPLETENESS OF SCANNED COPIES OF THIS PLAN SHEET.

TO ACCOMPANY PLANS DATED 01-07-13

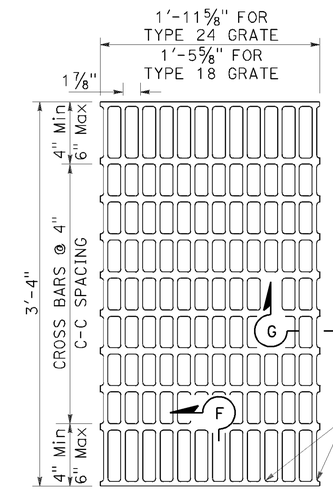

NOTES:

Bearing bars to be 3½" × ¼" bars on 1⅞" centers.

⅜"± ø Cross bars may be fillet welded, resistance welded or electroforged to bearing bars.

Weight of Type 24 grate = 141 LBS.

Weight of Type 18 grate = 107 LBS. (Type 24 grate shown).

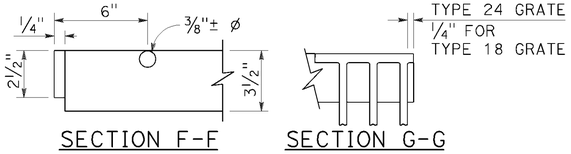

SECTION F-F SECTION G-G

TYPE 18-10 AND 24-13 GRATE

(Welded Steel)

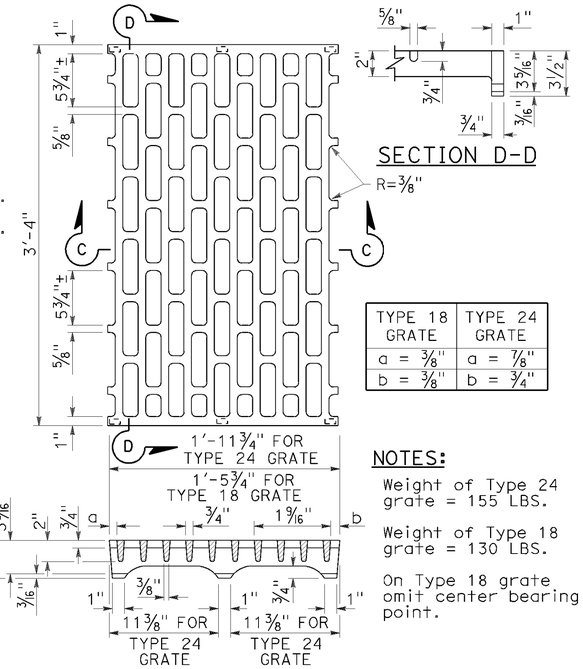

SECTION D-D

TYPE 18 GRATE	TYPE 24 GRATE
a = ⅜"	a = ⅞"
b = ⅜"	b = ¾"

NOTES:

Weight of Type 24 grate = 155 LBS.

Weight of Type 18 grate = 130 LBS.

On Type 18 grate omit center bearing point.

SECTION C-C

TYPE 18-8C AND 24-10C GRATE

(Cast ductile iron)

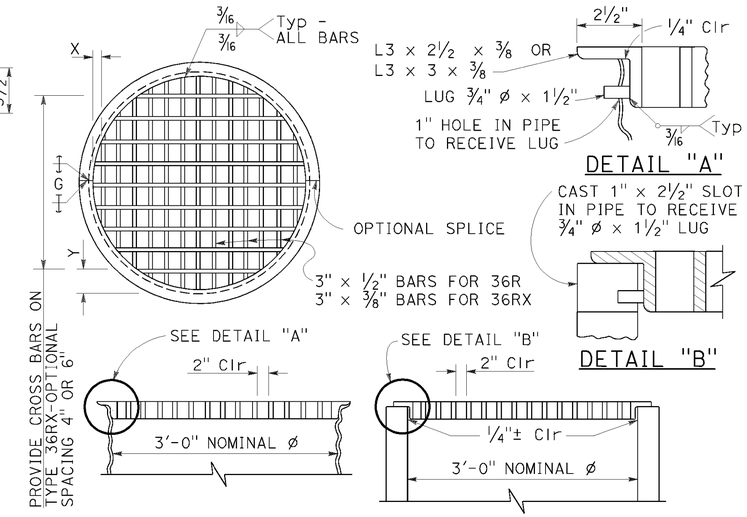

DETAIL "A"

DETAIL "B"

TYPE 36R AND 36RX GRATE DETAILS

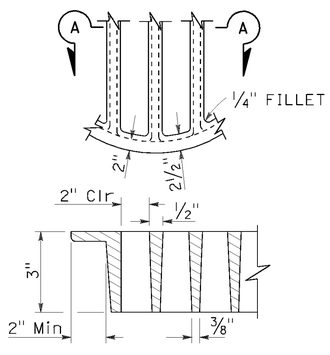

SECTION A-A

ALTERNATIVE CAST DUCTILE IRON GRATE OR CAST CARBON STEEL GRATE TYPE 36R AND 36RX

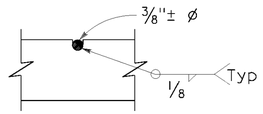

⅜"± ø Cross bars may be fillet welded, resistance welded or electroforged to bearing bars.

CROSS BAR DETAIL TYPE 36RX GRATE (WELDED STEEL)

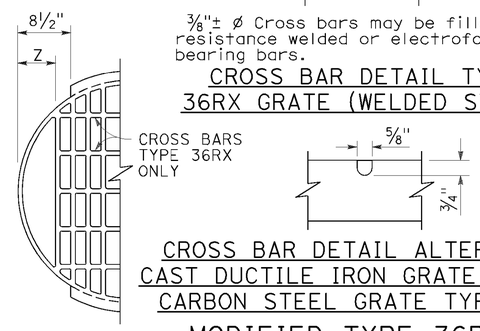

CROSS BAR DETAIL ALTERNATIVE CAST DUCTILE IRON GRATE OR CAST CARBON STEEL GRATE TYPE 36RX

MODIFIED TYPE 36R AND 36RX GRATE FOR ODI INLET

BASIS FOR Misc IRON AND STEEL FINAL PAY WEIGHTS FOR DRAINAGE INLETS

INLET TYPE	GRATE TYPE	No. OF GRATES	WEIGHT LB
GDO (SEE NOTE 4)	24-10C	2	391
	24-10S	2	456
	24-12X	2	473
	24-13	2	374
GO,GOL,G1,G2, G3,G4 (TYPE 24)	24-10C	1	202
	24-10S	1	229
	24-12X	1	239
	24-13	1	188
G4 (TYPE 18) G5,G6	18-8S	1	187
	18-9X	1	187
	18-10	1	149
GT1,GT2	18-8S	2	374
	18-9X	2	374
	18-10	2	298
GT3,GT4	24-10C	2	404
	24-10S	2	458
	24-12X	2	478
	24-13	2	376
ODI	36RX (Mod)	1	196
GMP,GCP,GCPI	36RX	1	215
ODI	36R (Mod)	1	220
GMP,GCP,GCPI	36R	1	236
TRASH RACK			22
GRATE CHAIN			3

NOTES:

1. When alternative grates are allowed - Final pay based on alternative with the lesser weight.
2. Use frame shown on Standard Plan D74A, D74B or RSP D77A as appropriate.
3. When Type 24-10S, 24-12X or 24-13 grates are used with GDO Inlets, a ¼" × 3½" × 3'-4⅞" steel bar shall be welded across the center of inlet frame to separate the individual grates.
4. See Revised Standard Plan RSP D77A for connecting chain to welded grate and frame. When chain is required, do not use cast ductile iron grate.

GRATE BAR SPACING TABLE

TYPE	No. OF BARS	CLEAR BAR SPACING	X	Y 4" SPACING	Y 6" SPACING	Z
36R	13	2"	2⅛"	–	–	–
36RX (STEEL)	15	2"	9/16"	3¾"	5¾"	–
36RX (CAST)	13	2"	2⅛"	3¾"	5¾"	–
36R Mod	12	2"	2⅛"	–	–	5"
36RX Mod (STEEL)	13	2"	9/16"	3¾"	5¾"	5 11/16"
36RX Mod (CAST)	12	2"	2⅛"	3¾"	5¾"	5"

STATE OF CALIFORNIA
DEPARTMENT OF TRANSPORTATION

BICYCLE TRAVERSABLE GRATE DETAILS

NO SCALE

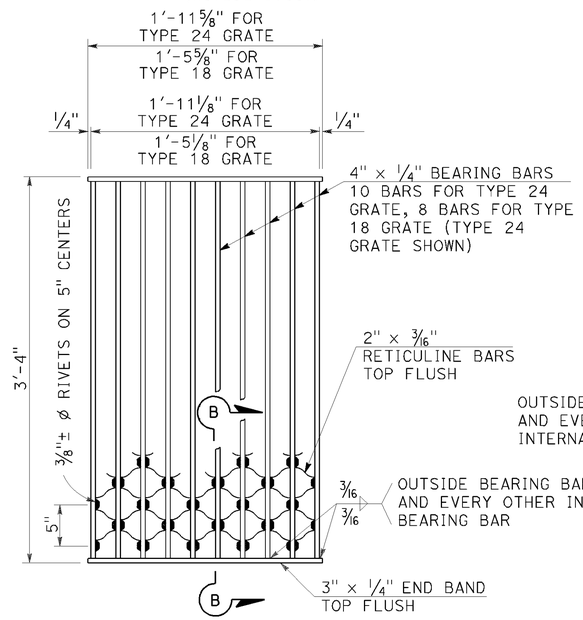

NOTES:

Weight of Type 24 grate = 182 LBS.
Weight of Type 18 grate = 145 LBS.

SECTION B-B

TYPE 18-8S AND 24-10S GRATE

(Welded Steel) Reticuline type

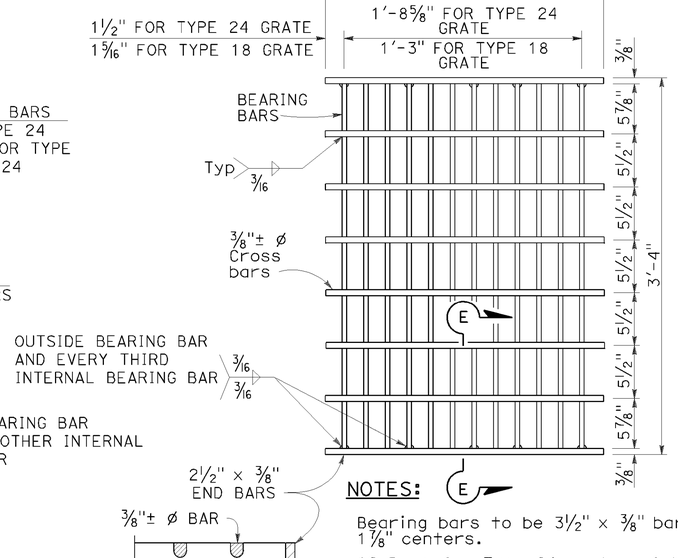

SECTION E-E

NOTES:

Bearing bars to be 3½" × ⅜" bars on 1⅞" centers.

12 Bars for Type 24 grate - 9 bars for Type 18 grates. (Type 24 grate shown).

Weight of Type 24 grate = 192 LBS.

Weight of Type 18 grate = 145 LBS.

⅜"± ø Cross bars may be fillet welded, resistance welded or electroforged to bearing bars.

TYPE 18-9X AND 24-12X GRATE

(Welded Steel)

RSP D77B DATED JULY 20, 2012 SUPERSEDES STANDARD PLAN D77B DATED MAY 20, 2011 - PAGE 165 OF THE STANDARD PLANS BOOK DATED 2010.

REVISED STANDARD PLAN RSP D77B

2010 REVISED STANDARD PLAN RSP D77B

TO ACCOMPANY PLANS DATED 01-07-13

Dist	COUNTY	ROUTE	POST MILES TOTAL PROJECT	SHEET No.	TOTAL SHEETS
02	Sis	96	68.7/69.1	31	31

Glenn De Cou
REGISTERED CIVIL ENGINEER

October 19, 2012
PLANS APPROVAL DATE

REGISTERED PROFESSIONAL ENGINEER Glenn DeCou No. C34547 Exp. 9-30-13 CIVIL STATE OF CALIFORNIA

THE STATE OF CALIFORNIA OR ITS OFFICERS OR AGENTS SHALL NOT BE RESPONSIBLE FOR THE ACCURACY OR COMPLETENESS OF SCANNED COPIES OF THIS PLAN SHEET.

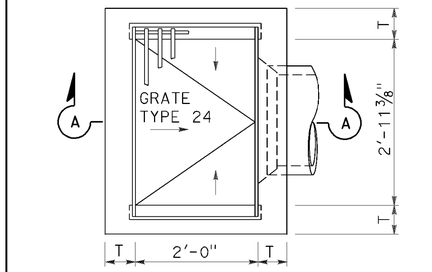

TYPE G1

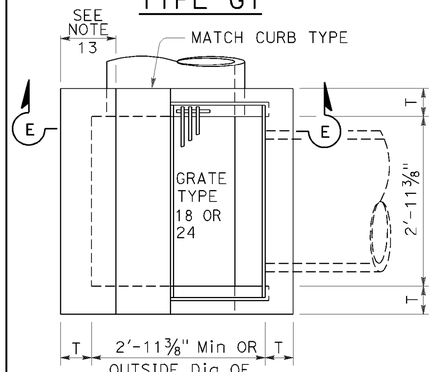

TYPE G4

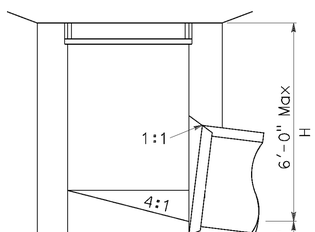

SECTION A-A

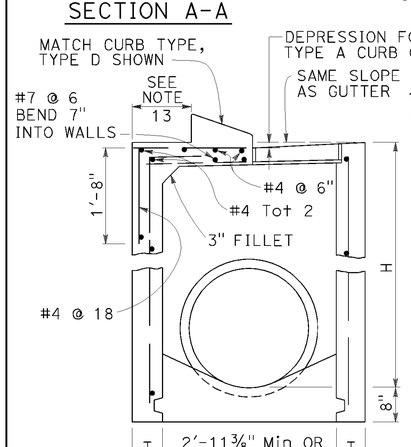

SECTION E-E

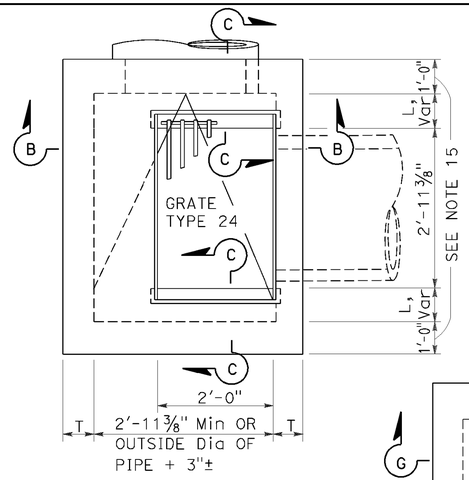

TYPE G2

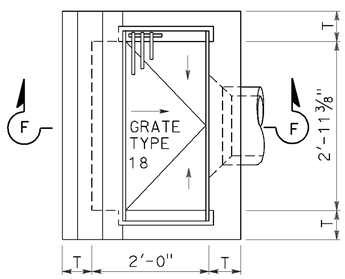

TYPE G5

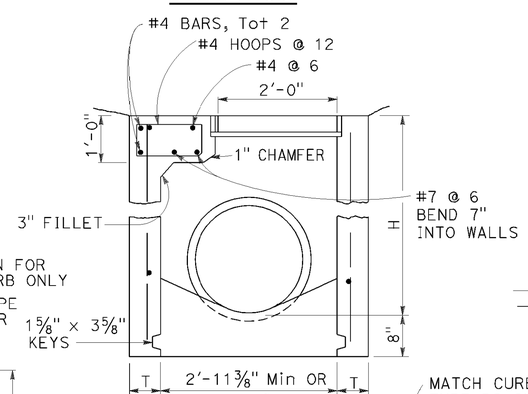

SECTION B-B

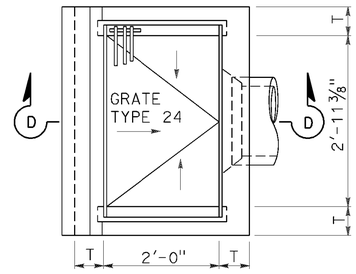

TYPE G3

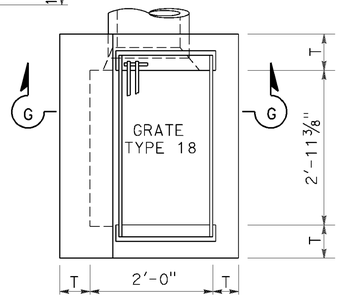

TYPE G6

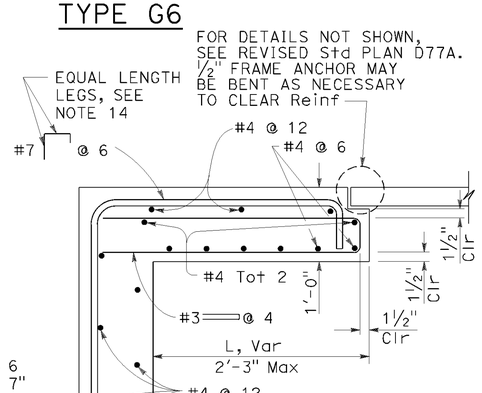

SECTION C-C

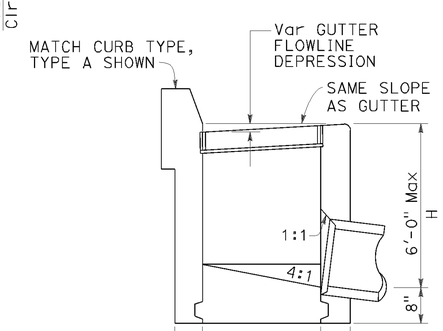

SECTION D-D

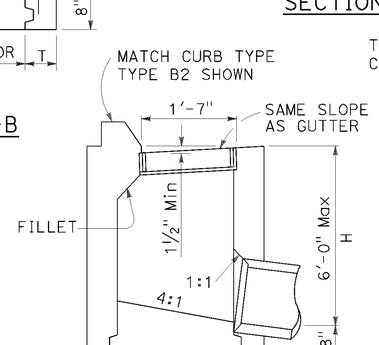

SECTION F-F

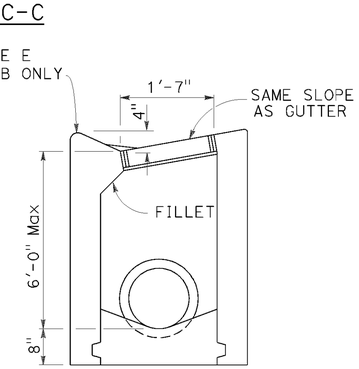

SECTION G-G

NOTES:

1. "H" is the difference in elevation between the outlet pipe flow line and the normal gutter grade line undepressed.
2. For "T" wall thickness, see Table A below.
3. Wall reinforcing not required when "H" is 8'-0" or less and the unsupported width or length is 7'-0" or less. Walls exceeding these limits shall be reinforced with #4 bars @ 1'-6" ± centers placed 1½" clear to inside of box unless otherwise shown.
4. Inlet bottom reinforcing not required. See Standard Plan D74C for alternative reinforced bottom and alternative half round bottom.
5. Steps-None required where "H" is less than 2'-6". Where "H" is 2'-6" or more, install steps with lowest rung 1'-0" above the floor and highest rung not more than 6" below top of inlet. The distance between steps shall not exceed 1'-0" and shall be uniform throughout the length of the wall. Place steps in the wall without an opening. Steps inserts may be substituted for the bar steps. Step inserts shall comply with State Industrial Safety requirements. See Standard Plan D74C for step details.
6. Details shown apply to both metal and concrete pipe.
7. Pipe(s) can be placed in any wall.
8. Curb section shall match adjacent curb.
9. Basin floors shall have wood trowel finish and a minimum slope of 12:3 from all directions toward outlet pipe.
10. Set inlet so that grate bars are parallel to direction of principal surface flow.
11. See Revised Standard Plans D77A and D77B for grate and frame details and weights of miscellaneous iron and steel.
12. See Standard Plan D78A for gutter depression details.
13. This dimenison will vary with different grates, curbs types, box width and wall thickness.
14. Bar may be rotated as necessary to clear opening. Where "L" is 6" or less, bar may be omitted.
15. Where "L" is 6" or less, wall thickness shall be as shown in Table A.
16. Cast-in-place inlets to be formed around all pipes/stubs intersecting the inlet, and concrete poured in one continuous operation. Precast inlets shall have mortared connections conforming to details for Type GCP Inlet shown on Standard Plan D75B. See Standard Specifications for mortar composition.

TABLE A

CONCRETE QUANTITIES				
TYPE	H=3'-0" TO 8'-0" (T=6")		H=8'-1" TO 20'-0" (T=8")	
	H=3'-0" (CY)	ADDITIONAL PCC PER FOOT (CY)	H=8'-1" (CY)	ADDITIONAL PCC PER FOOT (CY)
G-1	0.95	0.220	See Note A	SEE NOTE A
G-2*	1.31	0.255	3.50	0.357
G-3	1.03	0.220	See Note A	SEE NOTE A
G-4* (TYPE 24)	1.27	0.255	3.48	0.357
G-4* (TYPE 18)	1.30	0.255	3.50	0.357
G-5	1.02	0.220	SEE NOTE A	SEE NOTE A
G-6	1.04	0.220	SEE NOTE A	SEE NOTE A

TABLE BASED ON 8" FLOOR SLAB. NO DEDUCTIONS ARE TO BE MADE TO THESE QUANTITIES BECAUSE OF PIPE OPENINGS, DIFFERENT FLOOR ALTERNATIVES OR DIFFERENT CURB TYPES. * QUANTITIES FOR TYPE G-2 AND G-4 INLETS BASED ON THE MINIMUM INTERIOR DIMENSIONS.

NOTE A:

Maximum allowable height 6'-0".

STATE OF CALIFORNIA
DEPARTMENT OF TRANSPORTATION

DRAINAGE INLETS

NO SCALE

RSP D73 DATED OCTOBER 19, 2012 SUPERSEDES STANDARD PLAN D73 DATED MAY 20, 2011 - PAGE 156 OF THE STANDARD PLANS BOOK DATED 2010.

REVISED STANDARD PLAN RSP D73

2010 REVISED STANDARD PLAN RSP D73

P:\proj1\02\3E080_plans\pse\23e080va003.dgn

USERNAME => s115152
DGN FILE => 23e080va003.dgn

DATE PLOTTED => 14-JAN-2013
TIME PLOTTED => 09:20

7-19-12