Dist	COUNTY	ROUTE	POST MILES TOTAL PROJECT	SHEET No.	TOTAL SHEETS
02	Las,Plu	147	0.0/0.5, 1.1/1.8, 9.1/9.9	1	32

STATE OF CALIFORNIA

DEPARTMENT OF TRANSPORTATION

ACSTP-P147(002)E

PROJECT PLANS FOR CONSTRUCTION ON

STATE HIGHWAY

IN PLUMAS AND LASSEN COUNTIES ON ROUTE 147 FROM HAMILTON BRANCH BRIDGE TO 0.1 MILE SOUTH OF CLEAR CREEK DRIVE AND FROM COUNTY ROAD A21 TO ROUTE 36

TO BE SUPPLEMENTED BY STANDARD PLANS DATED MAY 2006

INDEX OF PLANS

SHEET No.	DESCRIPTION
1	TITLE AND LOCATION MAP
2-3	TYPICAL CROSS SECTIONS
4-9	SUPERELEVATION DIAGRAM
10	CONSTRUCTION DETAILS
11-13	CONSTRUCTION AREA SIGNS
14-16	PAVEMENT DELINEATION DETAILS AND QUANTITIES
17	SIGN QUANTITIES
18	SUMMARY OF QUANTITIES
19	ELECTRICAL
20-32	REVISED AND NEW STANDARD PLANS

LOCATION MAP

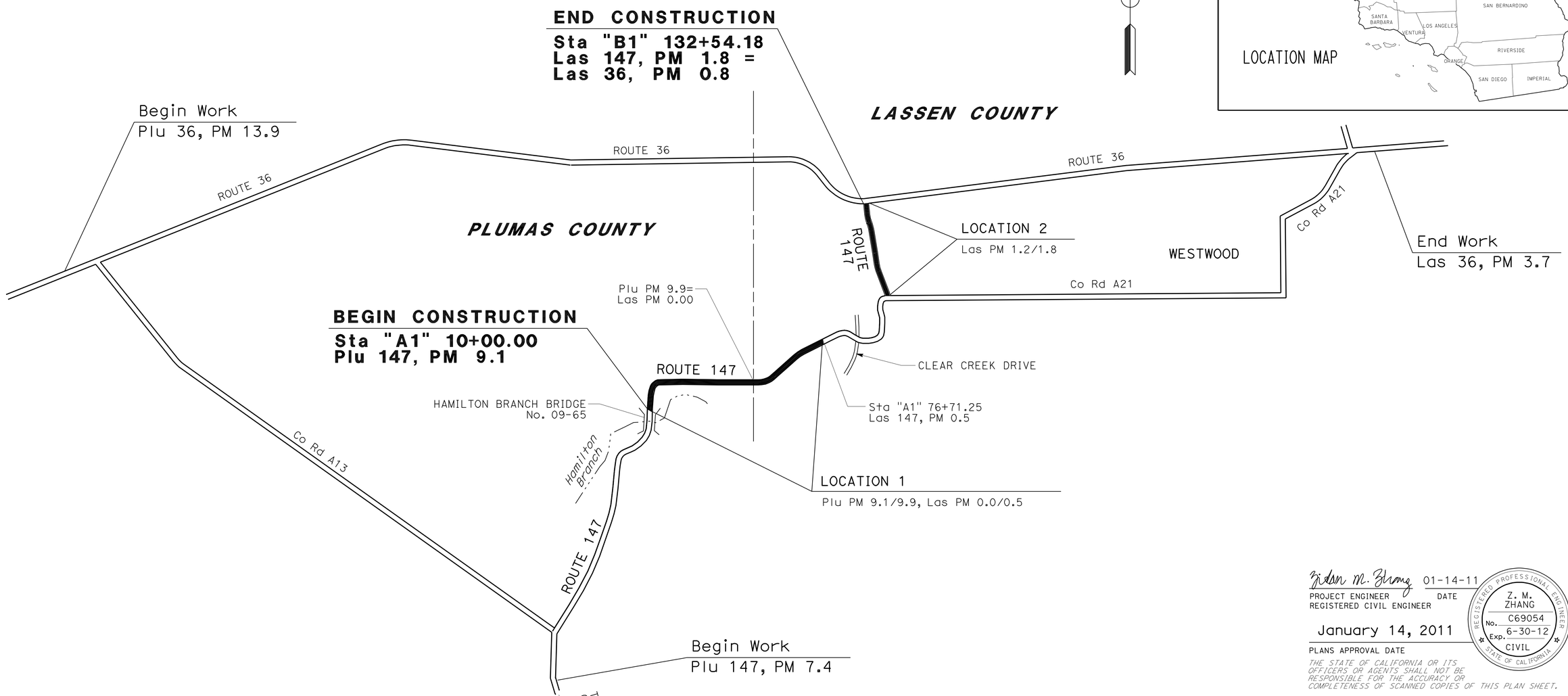

NO SCALE

THE CONTRACTOR SHALL POSSESS THE CLASS (OR CLASSES) OF LICENSE AS SPECIFIED IN THE "NOTICE TO BIDDERS."

Zidan M. Zhang 01-14-11
PROJECT ENGINEER / REGISTERED CIVIL ENGINEER — DATE

January 14, 2011
PLANS APPROVAL DATE

REGISTERED PROFESSIONAL ENGINEER — Z. M. ZHANG — No. C69054 — Exp. 6-30-12 — CIVIL — STATE OF CALIFORNIA

THE STATE OF CALIFORNIA OR ITS OFFICERS OR AGENTS SHALL NOT BE RESPONSIBLE FOR THE ACCURACY OR COMPLETENESS OF SCANNED COPIES OF THIS PLAN SHEET.

CONTRACT No.	02-3E0504
PROJECT ID	0200020088

PROJECT MANAGER: ERIC ORR
DESIGN ENGINEER: JULIE CASEY

P:\proj1\02\3E050_plans\pse\23e050ab001.dgn

LAST REVISION 01-11-11 — DATE PLOTTED => 08-FEB-2011 — TIME PLOTTED => 14:34

Dist	COUNTY	ROUTE	POST MILES TOTAL PROJECT	SHEET No.	TOTAL SHEETS
02	Las,Plu	147	0.0/0.5,1.1/1.8, 9.1/9.9	2	32

Zidan M. Zhang 01-14-01
REGISTERED CIVIL ENGINEER DATE

01-14-11
PLANS APPROVAL DATE

REGISTERED PROFESSIONAL ENGINEER Z. M. ZHANG No. C69054 Exp. 6-30-12 CIVIL STATE OF CALIFORNIA

THE STATE OF CALIFORNIA OR ITS OFFICERS OR AGENTS SHALL NOT BE RESPONSIBLE FOR THE ACCURACY OR COMPLETENESS OF SCANNED COPIES OF THIS PLAN SHEET.

NOTES:

1. FOR ACCURATE RIGHT OF WAY DATA, CONTACT RIGHT OF WAY ENGINEERING AT THE DISTRICT OFFICE.
2. DIMENSIONS OF THE PAVEMENT STRUCTURES (STRUCTURAL SECTIONS) ARE SUBJECT TO TOLERANCES SPECIFIED IN THE STANDARD SPECIFICATIONS.
3. SUPERELEVATIONS ARE SHOWN ON THE SUPERELEVATION DIAGRAM.
4. SHOULDERS SHOULD CATCH AT OR BEFORE THE EXISTING FLOW LINE.

LOCATION 1 DESIGN DESIGNATION

ADT (2011)	1950	D	70%
ADT (2031)	2450	T	9%
DHV	490	V	55 mph
ESAL	836,680	TI_{20}	10.0

LOCATION 2 DESIGN DESIGNATION

ADT (2011)	1100	D	70%
ADT (2031)	1600	T	14%
DHV	200	V	50 mph
ESAL	792,960	TI_{20}	10.0

ABBREVIATIONS:

Super Superelevation

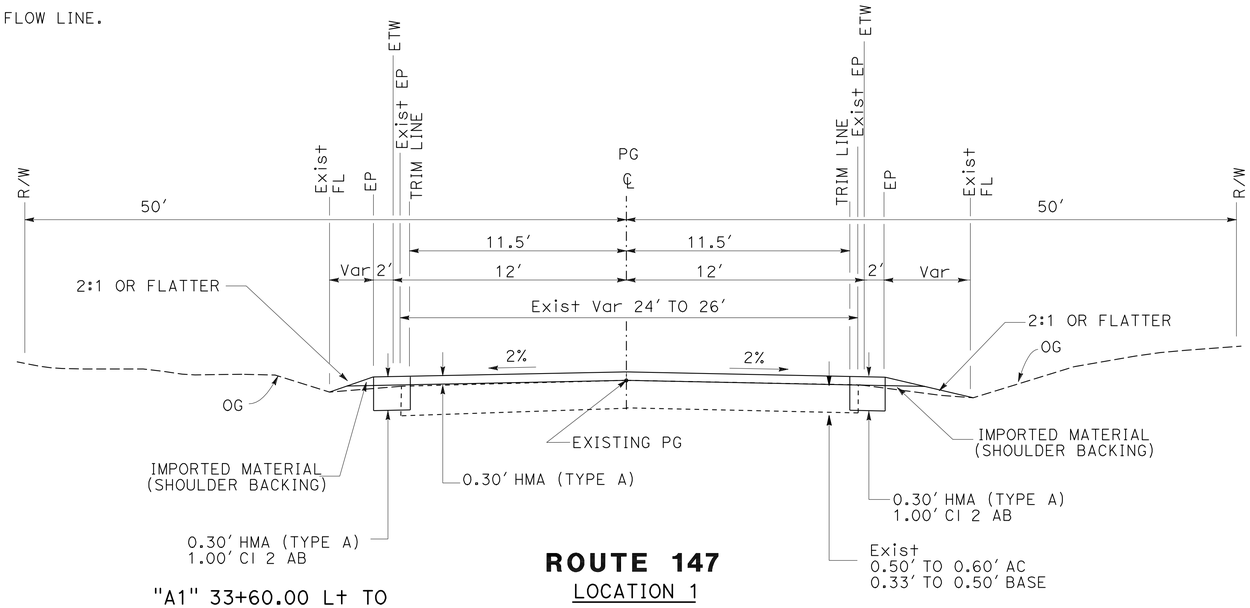

"A1" 33+60.00 Lt TO 35+08.00 Lt

ROUTE 147
LOCATION 1

"A1" 31+89.50 TO 33+36.50
"A1" 33+60.00 TO 35+08.00

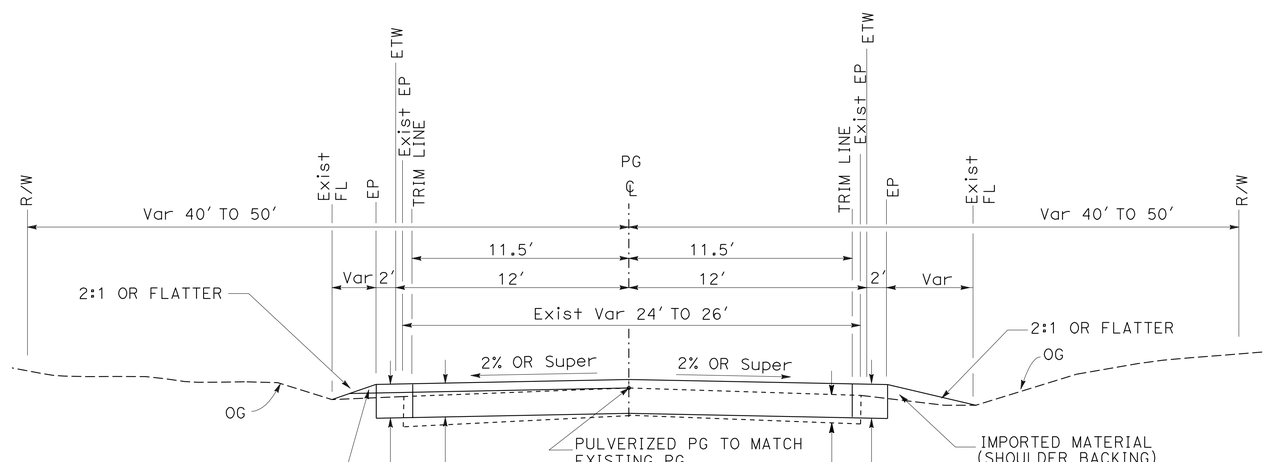

ROUTE 147
LOCATION 1

"A1" 11+70.00 TO 31+89.50
"A1" 35+08.00 TO 75+26.25

TYPICAL CROSS SECTIONS

NO SCALE

X-1

REVISED BY | DATE REVISED
ZIDAN ZHANG | JULIE CASEY
CALCULATED-DESIGNED BY | CHECKED BY
FUNCTIONAL SUPERVISOR: JULIE CASEY

STATE OF CALIFORNIA - DEPARTMENT OF TRANSPORTATION
Caltrans DESIGN

P:\proj1\02\3E050_plans\pse\23e050ca001.dgn

LAST REVISION 01-14-11 | DATE PLOTTED => 08-FEB-2011 | TIME PLOTTED => 14:34

Dist	COUNTY	ROUTE	POST MILES TOTAL PROJECT	SHEET No.	TOTAL SHEETS
02	Las,Plu	147	0.0/0.5,1.1/1.8, 9.1/9.9	3	32

Zidan M. Zhang 01-14-01
REGISTERED CIVIL ENGINEER DATE

01-14-11
PLANS APPROVAL DATE

REGISTERED PROFESSIONAL ENGINEER Z. M. ZHANG No. C69054 Exp. 6-30-12 CIVIL STATE OF CALIFORNIA

THE STATE OF CALIFORNIA OR ITS OFFICERS OR AGENTS SHALL NOT BE RESPONSIBLE FOR THE ACCURACY OR COMPLETENESS OF SCANNED COPIES OF THIS PLAN SHEET.

NOTE:

1. FOR ACCURATE RIGHT OF WAY DATA, CONTACT RIGHT OF WAY ENGINEERING AT THE DISTRICT OFFICE.

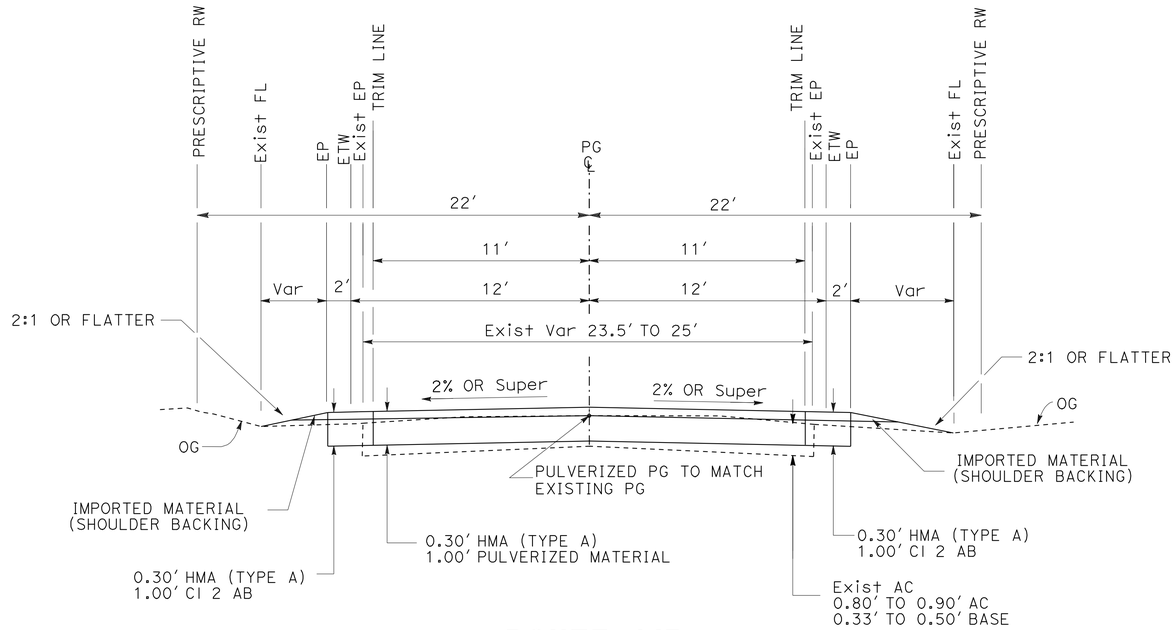

ROUTE 147

LOCATION 2

"B1" 107+00 TO 131+22.10

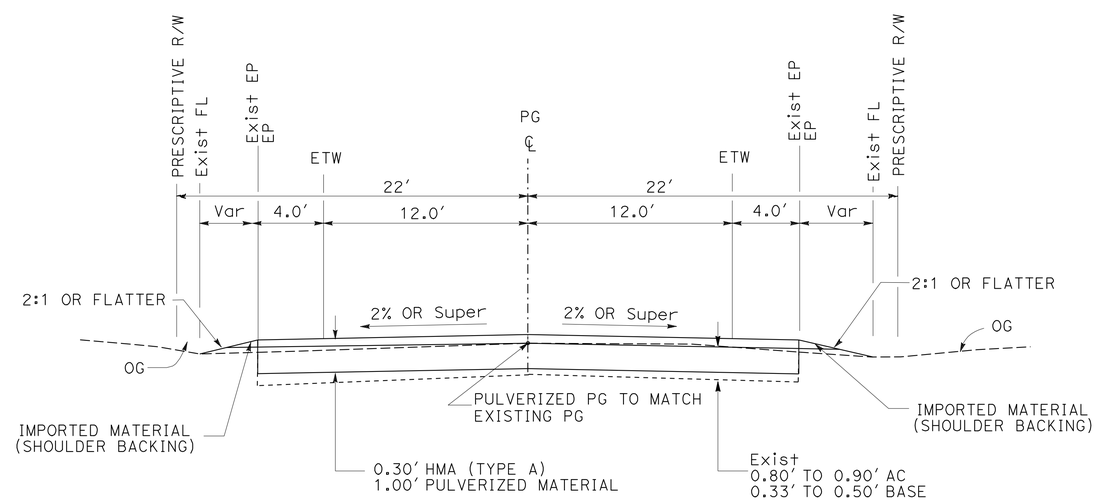

ROUTE 147

LOCATION 2

"B1" 101+45.0 TO 107+00.0

TYPICAL CROSS SECTIONS

NO SCALE

X-2

REVISED BY	DATE REVISED
ZIDAN ZHANG	JULIE CASEY
CALCULATED-DESIGNED BY	CHECKED BY
FUNCTIONAL SUPERVISOR	JULIE CASEY

STATE OF CALIFORNIA - DEPARTMENT OF TRANSPORTATION

Caltrans® **DESIGN**

P:\proj\02\3E050_plans\pse\23e050ca002.dgn

LAST REVISION 01-14-11 | DATE PLOTTED => 08-FEB-2011 | TIME PLOTTED => 14:34

Dist	COUNTY	ROUTE	POST MILES TOTAL PROJECT	SHEET No.	TOTAL SHEETS
02	Las,Plu	147	0.0/0.5,1.1/1.8, 9.1/9.9	4	32

Zidan M. Zhang 01-14-01
REGISTERED CIVIL ENGINEER DATE

01-14-11
PLANS APPROVAL DATE

REGISTERED PROFESSIONAL ENGINEER Z. M. ZHANG No. C69054 Exp. 6-30-12 CIVIL STATE OF CALIFORNIA

THE STATE OF CALIFORNIA OR ITS OFFICERS OR AGENTS SHALL NOT BE RESPONSIBLE FOR THE ACCURACY OR COMPLETENESS OF SCANNED COPIES OF THIS PLAN SHEET.

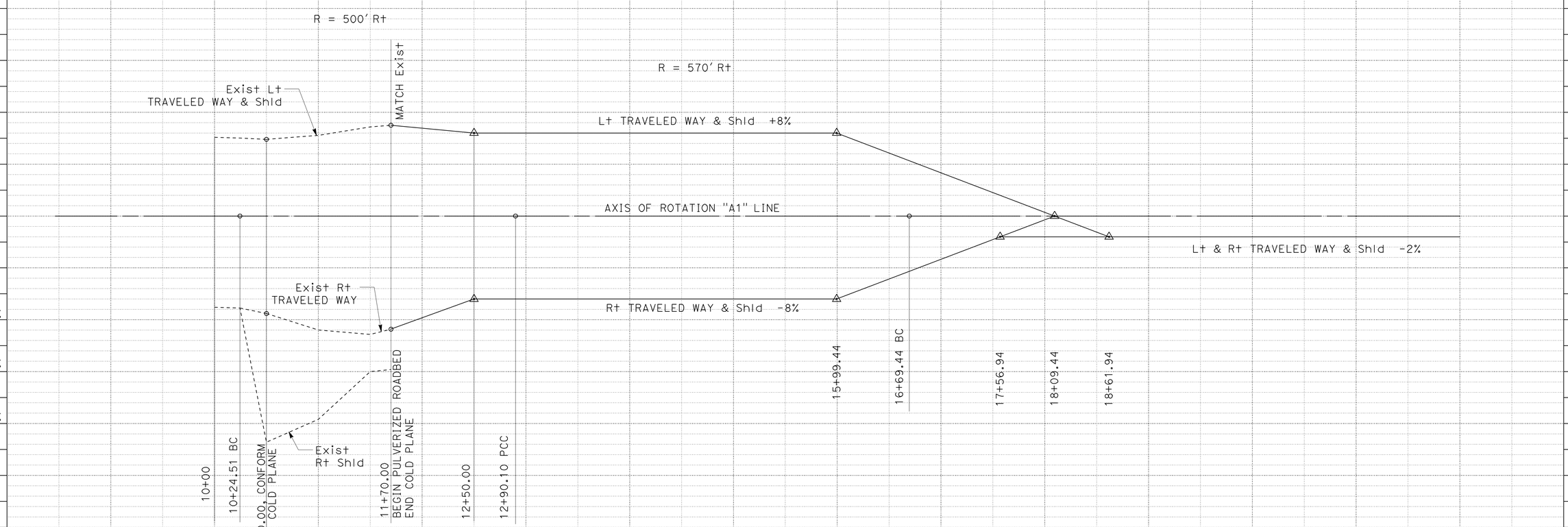

CURVE DATA "A1" LINE

No.	R	Δ	T	L
1	500.00'	30°26'05"	136.01'	265.59'
2	570.00'	38°7'52"	197.00'	379.34'

LOCATION 1

SUPERELEVATION DIAGRAM

SCALE: 1" = 50'

PS-1

STATION		10+00	11+00	12	13	14	15+00	16	17	18	19	20+00	21	22	TOTAL
CY	Exc														
	Emb														

REVISED BY | DATE REVISED
ZIDAN ZHANG | JULIE CASEY
CALCULATED-DESIGNED BY | CHECKED BY
FUNCTIONAL SUPERVISOR: JULIE CASEY

STATE OF CALIFORNIA - DEPARTMENT OF TRANSPORTATION
Caltrans
DESIGN

P:\proj1\02\3E050_plans\pse\23e050fb001.dgn

LAST REVISION 01-14-11 | DATE PLOTTED => 08-FEB-2011 | TIME PLOTTED => 14:34

Dist	COUNTY	ROUTE	POST MILES TOTAL PROJECT	SHEET No.	TOTAL SHEETS
02	Las,Plu	147	0.0/0.5,1.1/1.8, 9.1/9.9	5	32

Zidan M. Zhang 01-14-01
REGISTERED CIVIL ENGINEER DATE

01-14-11
PLANS APPROVAL DATE

REGISTERED PROFESSIONAL ENGINEER Z. M. ZHANG No. C69054 Exp. 6-30-12 CIVIL STATE OF CALIFORNIA

THE STATE OF CALIFORNIA OR ITS OFFICERS OR AGENTS SHALL NOT BE RESPONSIBLE FOR THE ACCURACY OR COMPLETENESS OF SCANNED COPIES OF THIS PLAN SHEET.

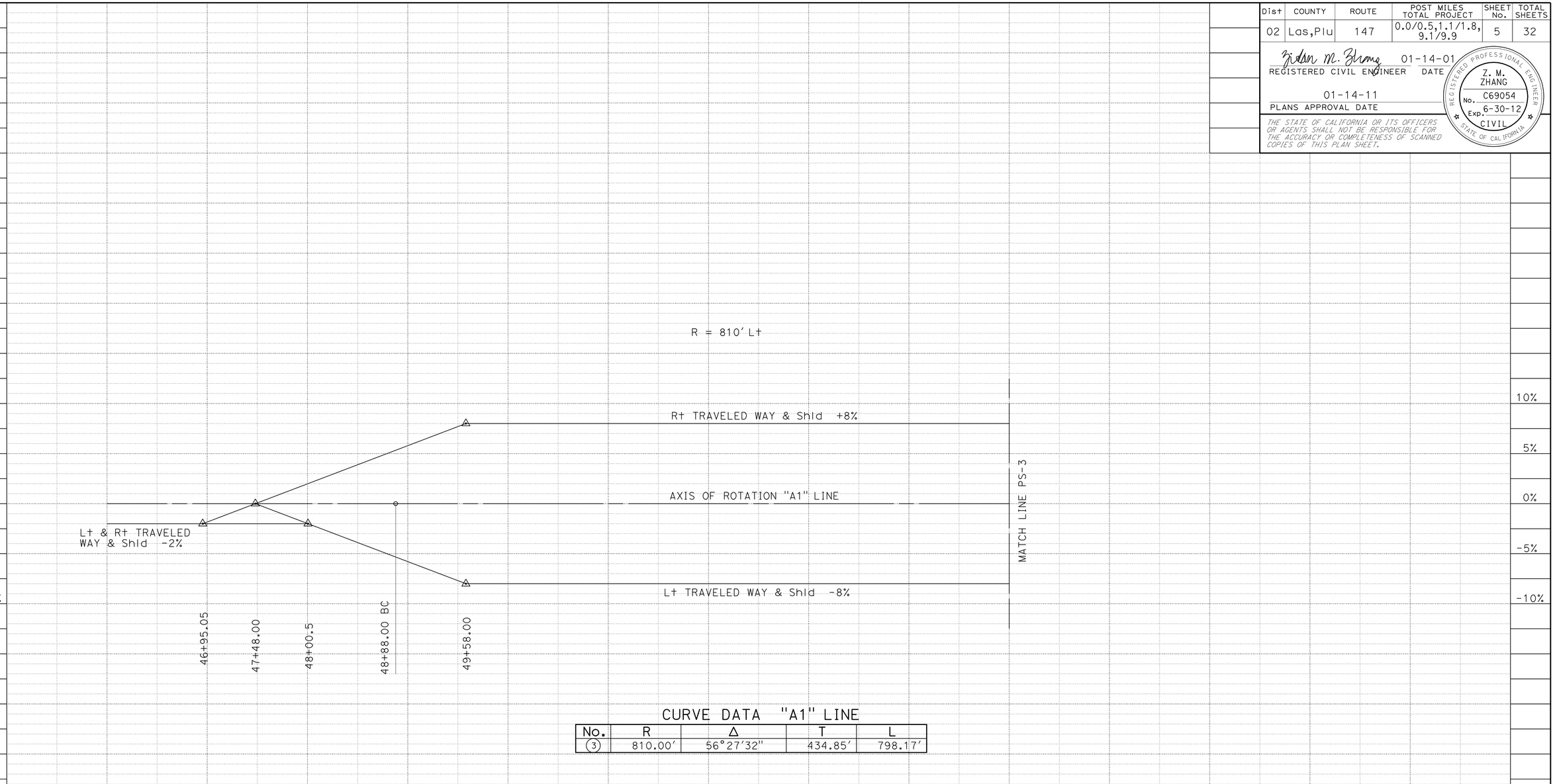

CURVE DATA "A1" LINE

No.	R	Δ	T	L
3	810.00'	56°27'32"	434.85'	798.17'

LOCATION 1

SUPERELEVATION DIAGRAM

SCALE: 1" = 50'

PS-2

ZIDAN ZHANG — REVISED BY
JULIE CASEY — DATE REVISED
CALCULATED-DESIGNED BY
CHECKED BY
FUNCTIONAL SUPERVISOR: JULIE CASEY

STATE OF CALIFORNIA - DEPARTMENT OF TRANSPORTATION
Caltrans® DESIGN

P:\proj1\02\3E050_plans\pse\23e050fb002.dgn

LAST REVISION 01-14-11 | DATE PLOTTED => 08-FEB-2011 | TIME PLOTTED => 14:34

Dist	COUNTY	ROUTE	POST MILES TOTAL PROJECT	SHEET No.	TOTAL SHEETS
02	Las,Plu	147	0.0/0.5,1.1/1.8, 9.1/9.9	6	32

Zidan M. Zhang 01-14-01
REGISTERED CIVIL ENGINEER DATE

01-14-11
PLANS APPROVAL DATE

REGISTERED PROFESSIONAL ENGINEER Z. M. ZHANG No. C69054 Exp. 6-30-12 CIVIL STATE OF CALIFORNIA

THE STATE OF CALIFORNIA OR ITS OFFICERS OR AGENTS SHALL NOT BE RESPONSIBLE FOR THE ACCURACY OR COMPLETENESS OF SCANNED COPIES OF THIS PLAN SHEET.

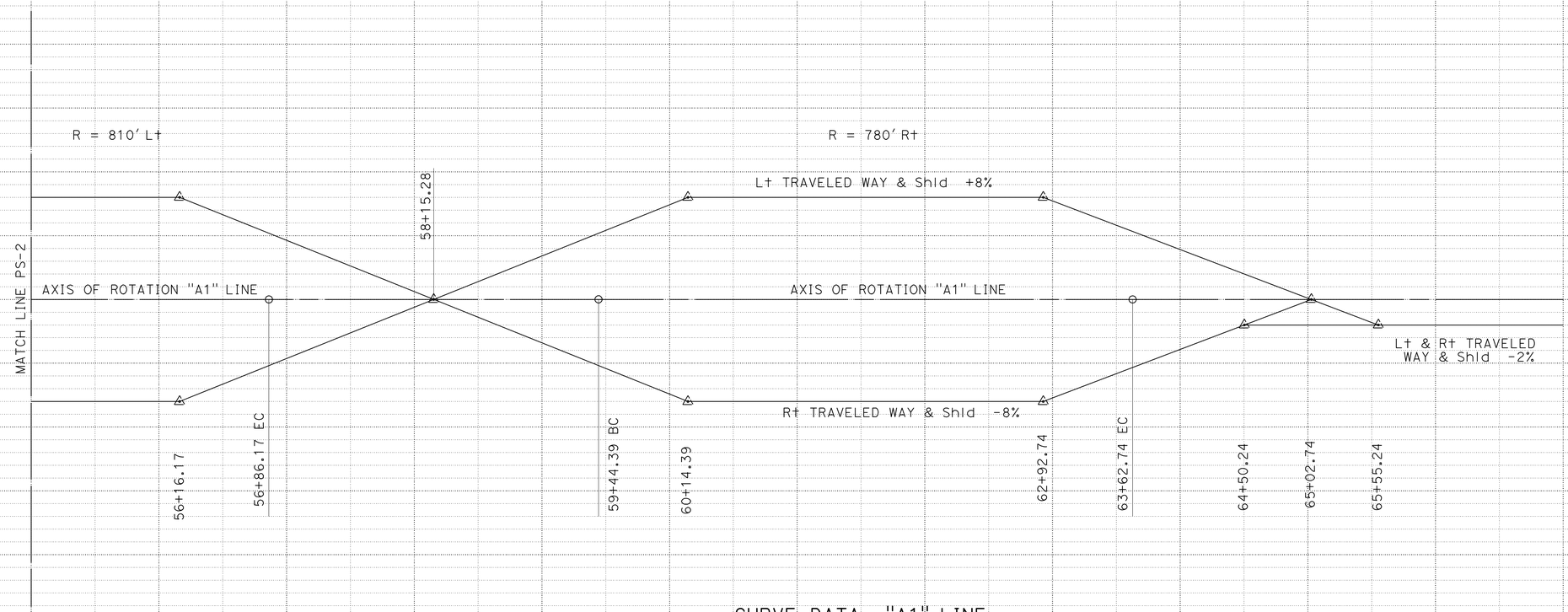

CURVE DATA "A1" LINE

No.	R	Δ	T	L
3	810.00'	56°27'32"	434.85'	798.17'

CURVE DATA "A1" LINE

No.	R	Δ	T	L
4	780.00'	30°43'51"	214.34'	418.36'

LOCATION 1

SUPERELEVATION DIAGRAM

SCALE: 1" = 50'

PS-3

STATION		55+00	56	57	58	59	61	62	63	64	65+00	66	67	TOTAL
CY	Exc													
	Emb													

STATE OF CALIFORNIA - DEPARTMENT OF TRANSPORTATION
Caltrans DESIGN

ZIDAN ZHANG — CHECKED BY
JULIE CASEY — CALCULATED-DESIGNED BY
JULIE CASEY — FUNCTIONAL SUPERVISOR
REVISED BY — DATE REVISED

P:\proj1\02\3E050_plans\pse\23e050fb003.dgn

LAST REVISION 01-14-11
DATE PLOTTED => 08-FEB-2011
TIME PLOTTED => 14:34

Dist	COUNTY	ROUTE	POST MILES TOTAL PROJECT	SHEET No.	TOTAL SHEETS
02	Las,Plu	147	0.0/0.5,1.1/1.8, 9.1/9.9	7	32

Zidan M. Zhang 01-14-01
REGISTERED CIVIL ENGINEER DATE

01-14-11
PLANS APPROVAL DATE

REGISTERED PROFESSIONAL ENGINEER Z. M. ZHANG No. C69054 Exp. 6-30-12 CIVIL STATE OF CALIFORNIA

THE STATE OF CALIFORNIA OR ITS OFFICERS OR AGENTS SHALL NOT BE RESPONSIBLE FOR THE ACCURACY OR COMPLETENESS OF SCANNED COPIES OF THIS PLAN SHEET.

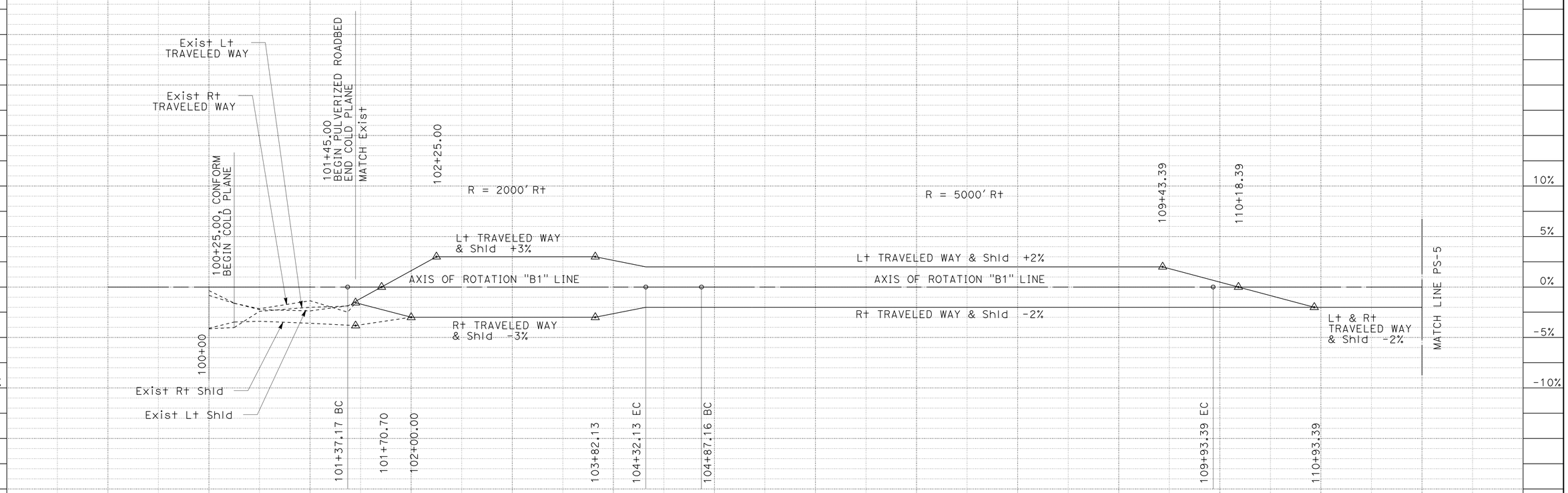

CURVE DATA "B1" LINE

No.	R	Δ	T	L
5	2000.00'	8°27'00"	147.75'	294.96'

CURVE DATA "B1" LINE

No.	R	Δ	T	L
6	5000.00'	5°48'04"	253.33'	506.24'

LOCATION 2

SUPERELEVATION DIAGRAM

SCALE: 1" = 50'

PS-4

STATION		99+00	100+00	101	102	103	104	105+00	106	107	108	109	110+00	111	112	TOTAL
CY	Exc															
	Emb															

STATE OF CALIFORNIA - DEPARTMENT OF TRANSPORTATION
Caltrans DESIGN

FUNCTIONAL SUPERVISOR: JULIE CASEY
CALCULATED-DESIGNED BY: ZIDAN ZHANG
CHECKED BY: JULIE CASEY
REVISED BY
DATE REVISED

P:\proj\02\3E050_plans\pse\23e050fb004.dgn

LAST REVISION 01-14-11
DATE PLOTTED => 08-FEB-2011
TIME PLOTTED => 14:34

Dist	COUNTY	ROUTE	POST MILES TOTAL PROJECT	SHEET No.	TOTAL SHEETS
02	Las,Plu	147	0.0/0.5,1.1/1.8, 9.1/9.9	8	32

Zidan M. Zhang 01-14-01
REGISTERED CIVIL ENGINEER DATE

01-14-11
PLANS APPROVAL DATE

REGISTERED PROFESSIONAL ENGINEER Z. M. ZHANG No. C69054 Exp. 6-30-12 CIVIL STATE OF CALIFORNIA

THE STATE OF CALIFORNIA OR ITS OFFICERS OR AGENTS SHALL NOT BE RESPONSIBLE FOR THE ACCURACY OR COMPLETENESS OF SCANNED COPIES OF THIS PLAN SHEET.

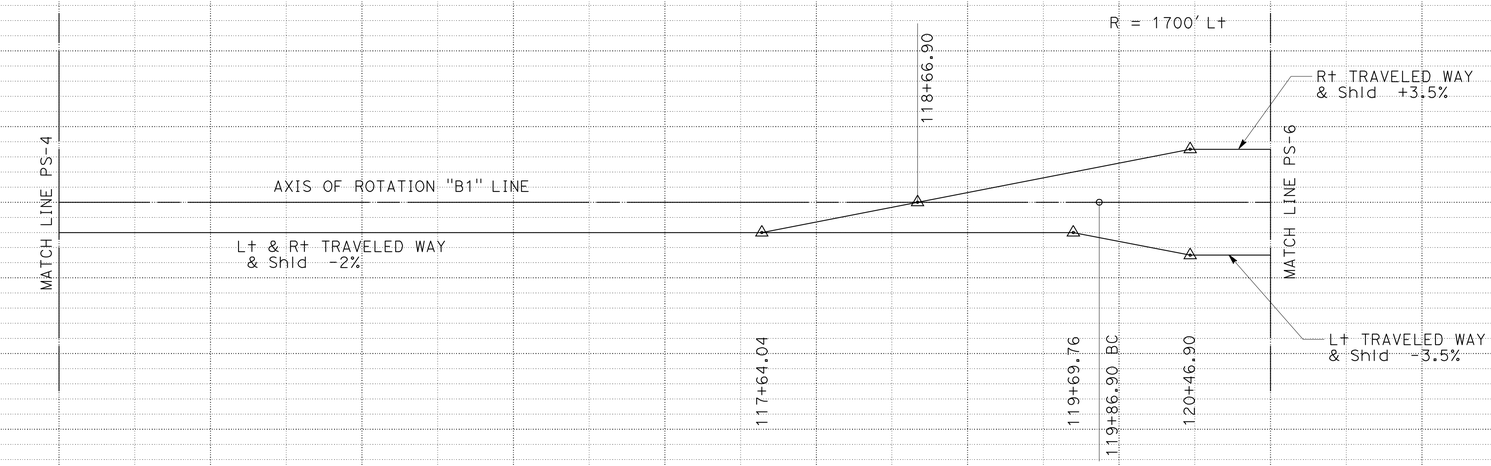

CURVE DATA "B1" LINE

No.	R	Δ	T	L
7	1700.00'	7°24'27"	110.05'	219.78'

LOCATION 2

SUPERELEVATION DIAGRAM

SCALE: 1" = 50'

PS-5

STATION		113+00	114	115	116	117	118	119	120+00	121	122+00	TOTAL
CY	Exc											
	Emb											

REVISED BY | DATE REVISED
ZIDAN ZHANG | JULIE CASEY
CALCULATED-DESIGNED BY | CHECKED BY
FUNCTIONAL SUPERVISOR: JULIE CASEY

STATE OF CALIFORNIA - DEPARTMENT OF TRANSPORTATION
Caltrans
DESIGN

P:\proj1\02\3E050_plans\pse\23e050fb005.dgn

LAST REVISION 01-14-11 | DATE PLOTTED => 08-FEB-2011 | TIME PLOTTED => 14:34

Dist	COUNTY	ROUTE	POST MILES TOTAL PROJECT	SHEET No.	TOTAL SHEETS
02	Las,Plu	147	0.0/0.5,1.1/1.8, 9.1/9.9	9	32

Zidan M. Zhang 01-14-01
REGISTERED CIVIL ENGINEER DATE

01-14-11
PLANS APPROVAL DATE

REGISTERED PROFESSIONAL ENGINEER Z. M. ZHANG No. C69054 Exp. 6-30-12 CIVIL STATE OF CALIFORNIA

THE STATE OF CALIFORNIA OR ITS OFFICERS OR AGENTS SHALL NOT BE RESPONSIBLE FOR THE ACCURACY OR COMPLETENESS OF SCANNED COPIES OF THIS PLAN SHEET.

REVISED BY | DATE REVISED
ZIDAN ZHANG | JULIE CASEY
CALCULATED-DESIGNED BY | CHECKED BY
FUNCTIONAL SUPERVISOR
JULIE CASEY

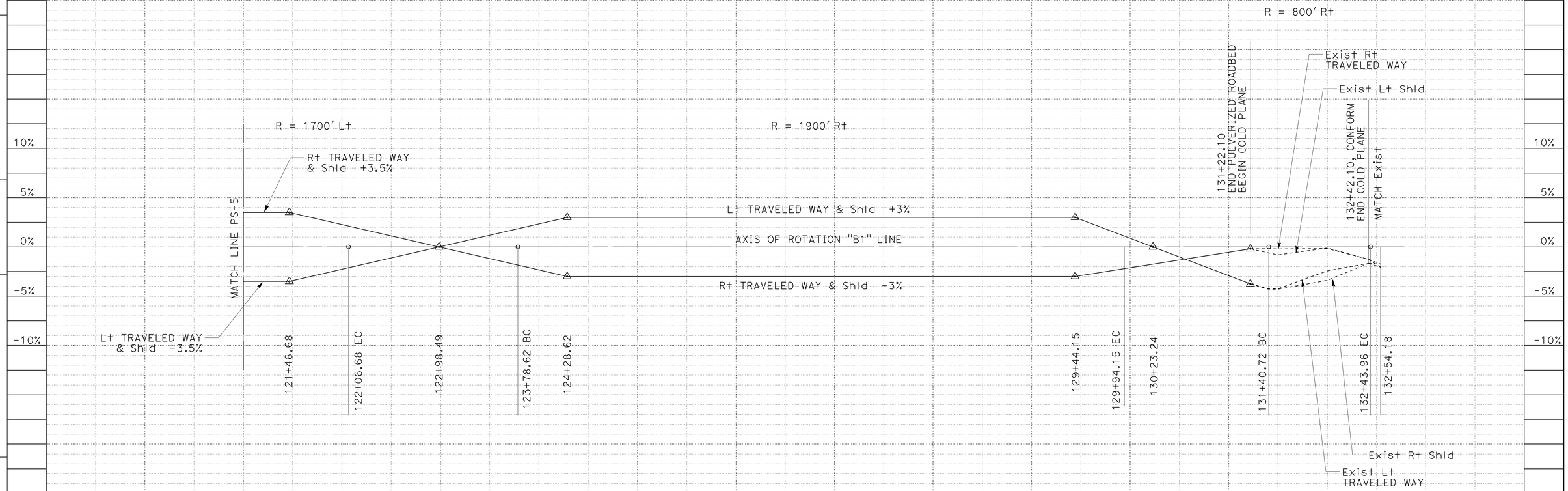

CURVE DATA "B1" LINE

No.	R	Δ	T	L
7	1700.00′	7°24′27″	110.05′	219.78′

CURVE DATA "B1" LINE

No.	R	Δ	T	L
8	1900.00′	18°33′43″	310.49′	615.53′

CURVE DATA "B1" LINE

No.	R	Δ	T	L
9	800.00′	7°23′38″	51.69′	103.24′

LOCATION 2

SUPERELEVATION DIAGRAM

SCALE: 1" = 50′

PS-6

STATION	120+00	121+00	122	123	124	125+00	126	127	128	129	130+00	131	132	TOTAL
CY Exc														
CY Emb														

STATE OF CALIFORNIA - DEPARTMENT OF TRANSPORTATION
Caltrans® DESIGN
P:\proj1\02\3E050_plans\pse\23e050fb006.dgn

LAST REVISION 01-14-11 | DATE PLOTTED => 08-FEB-2011 | TIME PLOTTED => 14:34

Dist	COUNTY	ROUTE	POST MILES TOTAL PROJECT	SHEET No.	TOTAL SHEETS
02	Las,Plu	147	0.0/0.5,1.1/1.8, 9.1/9.9	10	32

Zidan M. Zhang 01-14-01
REGISTERED CIVIL ENGINEER DATE

01-14-11
PLANS APPROVAL DATE

REGISTERED PROFESSIONAL ENGINEER Z. M. ZHANG No. C69054 Exp. 6-30-12 CIVIL STATE OF CALIFORNIA

THE STATE OF CALIFORNIA OR ITS OFFICERS OR AGENTS SHALL NOT BE RESPONSIBLE FOR THE ACCURACY OR COMPLETENESS OF SCANNED COPIES OF THIS PLAN SHEET.

NOTE:

1. SHOULDERS SHOULD CATCH AT OR BEFORE THE EXISTING FLOW LINE.

LEGEND:

COLD PLANE ASPHALT CONCRETE

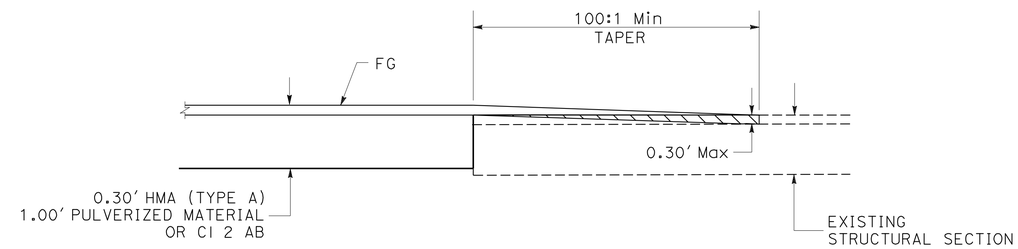

CONFORM TAPER AT PAVED DRIVEWAYS

"A1" 32+48.33 Lt
"A1" 68+09.17 Rt

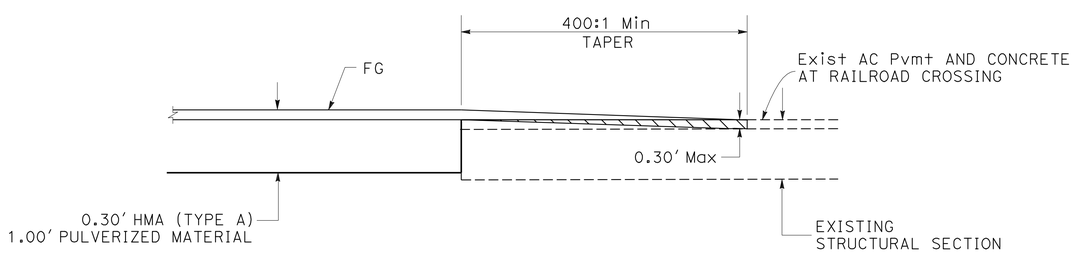

MAINLINE CONFORM TAPER

"A1" 10+50.00 TO 11+70.00
"A1" 31+89.50 TO 33+36.50 RR CROSSING
"A1" 33+60.00 TO 35+08.00 RR CROSSING
"A1" 75+26.25 TO 76+46.25
"B1" 100+25.00 TO 101+45.00
"B1" 131+22.10 TO 132+42.10

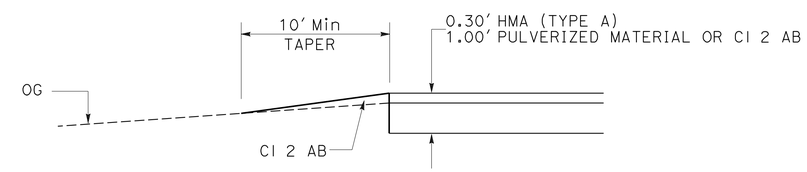

CONFORM TAPER AT NON-PAVED DRIVEWAYS

"A1" 17+83.50 Rt
"A1" 38+81.20 Rt
"A1" 48+53.50 Rt
"B1" 102+52.20 Lt
"B1" 105+00.00 Lt
"B1" 126+66.00 Lt

CONSTRUCTION DETAILS

NO SCALE

C-1

REVISED BY	DATE REVISED
ZIDAN ZHANG	JULIE CASEY
CALCULATED-DESIGNED BY	CHECKED BY
FUNCTIONAL SUPERVISOR	JULIE CASEY

STATE OF CALIFORNIA - DEPARTMENT OF TRANSPORTATION
Caltrans DESIGN

P:\proj1\02\3E050_plans\pse\23e050ga001.dgn

LAST REVISION 01-14-11 | DATE PLOTTED => 08-FEB-2011 | TIME PLOTTED => 14:34

Dist	COUNTY	ROUTE	POST MILES TOTAL PROJECT	SHEET No.	TOTAL SHEETS
02	Las,Plu	147	0.0/0.5,1.1/1.8, 9.1/9.9	11	32

Zidan M. Zhang 01-14-01
REGISTERED CIVIL ENGINEER DATE

01-14-11
PLANS APPROVAL DATE

REGISTERED PROFESSIONAL ENGINEER Z. M. ZHANG No. C69054 Exp. 6-30-12 CIVIL STATE OF CALIFORNIA

THE STATE OF CALIFORNIA OR ITS OFFICERS OR AGENTS SHALL NOT BE RESPONSIBLE FOR THE ACCURACY OR COMPLETENESS OF SCANNED COPIES OF THIS PLAN SHEET.

NOTES:

1. EXACT SIGN LOCATIONS TO BE DETERMINED BY ENGINEER.
2. CALIFORNIA SIGN CODE IS DESIGNATED BY (CA), OTHERWISE FEDERAL CODES APPLY.
3. LOCAL ROADS TO HAVE CONSTRUCTION AREA SIGNS "A" AND "B" INSTALLED AT 100' DISTANCE FROM INTERSECTION WITH WORK ZONE OR AS DETERMINED BY ENGINEER.

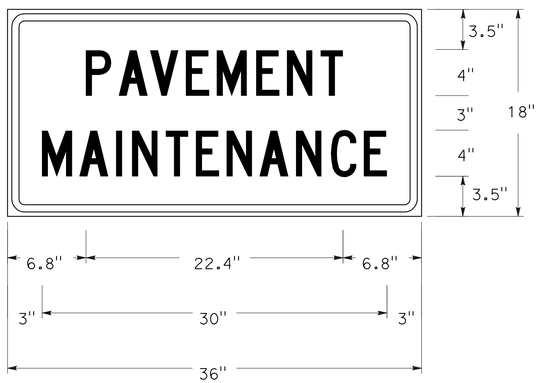

1.5" Radius, 0.6" Border, 0.4" Indent, Black on Orange;
[PAVEMENT] C;
[MAINTENANCE] C;

C23B(CA) SIGN PANEL DETAIL

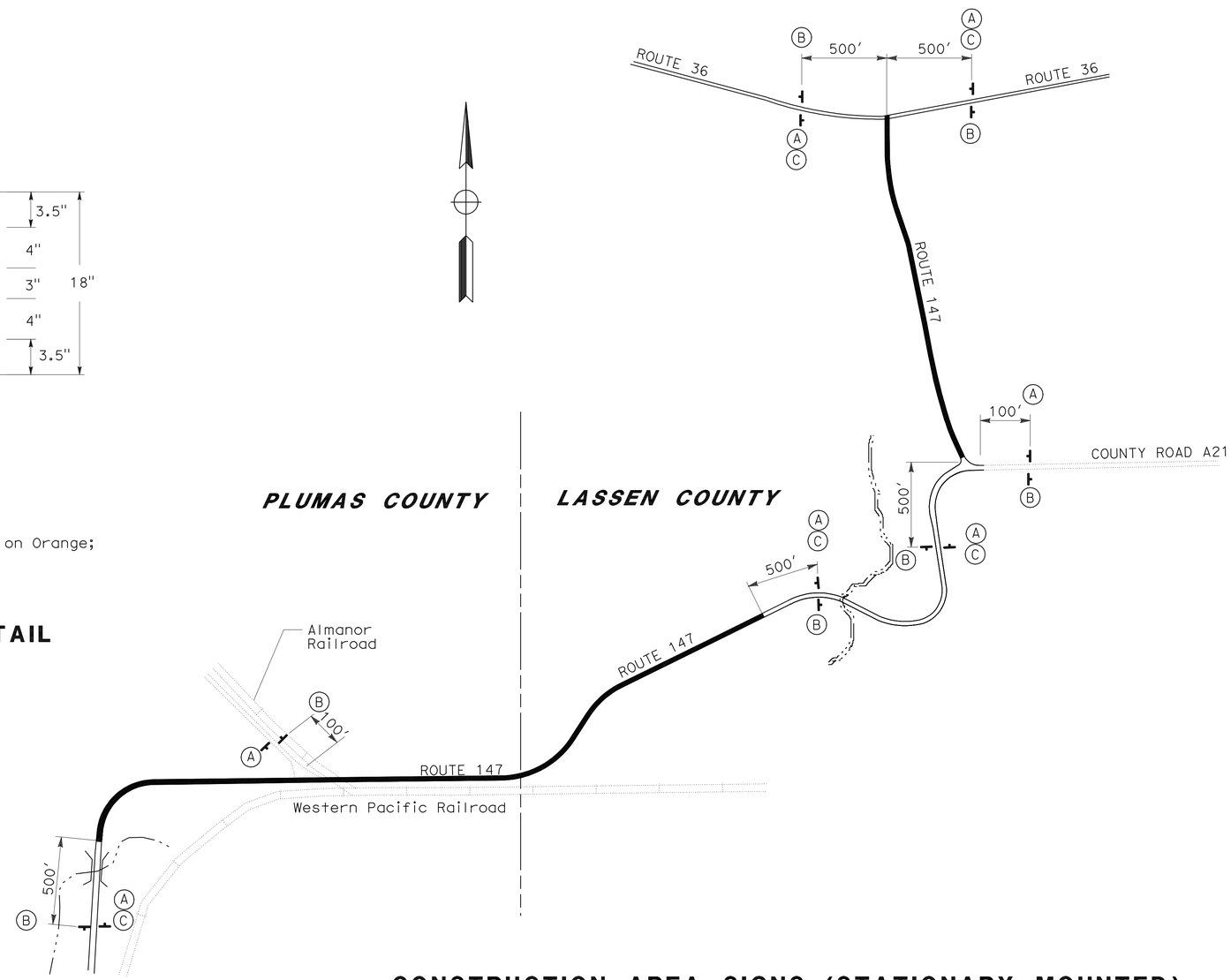

LEGEND

- ONE POST SIGN
- (X) SIGN TYPE
- CONSTRUCTION AREA

LOCAL ROAD

PM	LOCATION
Plu 9.53	NEXT TO ALMANOR RAILROAD, Lt
Las 1.14	COUNTY Rd A21

CONSTRUCTION AREA SIGNS (STATIONARY MOUNTED)

SYMBOL	TYPE	PANEL SIZE	SIGN MESSAGE	No. AND SIZE OF POST (EACH)	LOCATION 1	LOCATION 2	TOTAL No.
A	W20-1	48" x 48"	"ROAD WORK AHEAD"	1 - 4" x 6"	3	4	7
B	G20-2	36" x 18"	"END ROAD WORK"	1 - 4" x 6"	3	4	7
C	C23B (CA)	34" x 18"	"PAVEMENT MAINTENANCE"	1 - 4" x 6"	2	3	5

CONSTRUCTION AREA SIGNS

NO SCALE

CS-1

REVISED BY | DATE REVISED
ZIDAN ZHANG | JULIE CASEY
CALCULATED-DESIGNED BY | CHECKED BY
FUNCTIONAL SUPERVISOR: JULIE CASEY
STATE OF CALIFORNIA - DEPARTMENT OF TRANSPORTATION
Caltrans DESIGN

P:\proj1\02\3E050_plans\pse\23e0501a001.dgn

LAST REVISION 01-14-11 | DATE PLOTTED => 08-FEB-2011 | TIME PLOTTED => 14:34

Dist	COUNTY	ROUTE	POST MILES TOTAL PROJECT	SHEET No.	TOTAL SHEETS
02	Las,Plu	147	0.0/0.5,1.1/1.8, 9.1/9.9	12	32

Zidan M. Zhang 01-14-01
REGISTERED CIVIL ENGINEER DATE

01-14-11
PLANS APPROVAL DATE

REGISTERED PROFESSIONAL ENGINEER Z. M. ZHANG No. C69054 Exp. 6-30-12 CIVIL STATE OF CALIFORNIA

THE STATE OF CALIFORNIA OR ITS OFFICERS OR AGENTS SHALL NOT BE RESPONSIBLE FOR THE ACCURACY OR COMPLETENESS OF SCANNED COPIES OF THIS PLAN SHEET.

LEGEND:

- PORTABLE CHANGEABLE MESSAGE SIGNS (PCMS)
- ROAD CLOSURE AREA
- FLAGGER

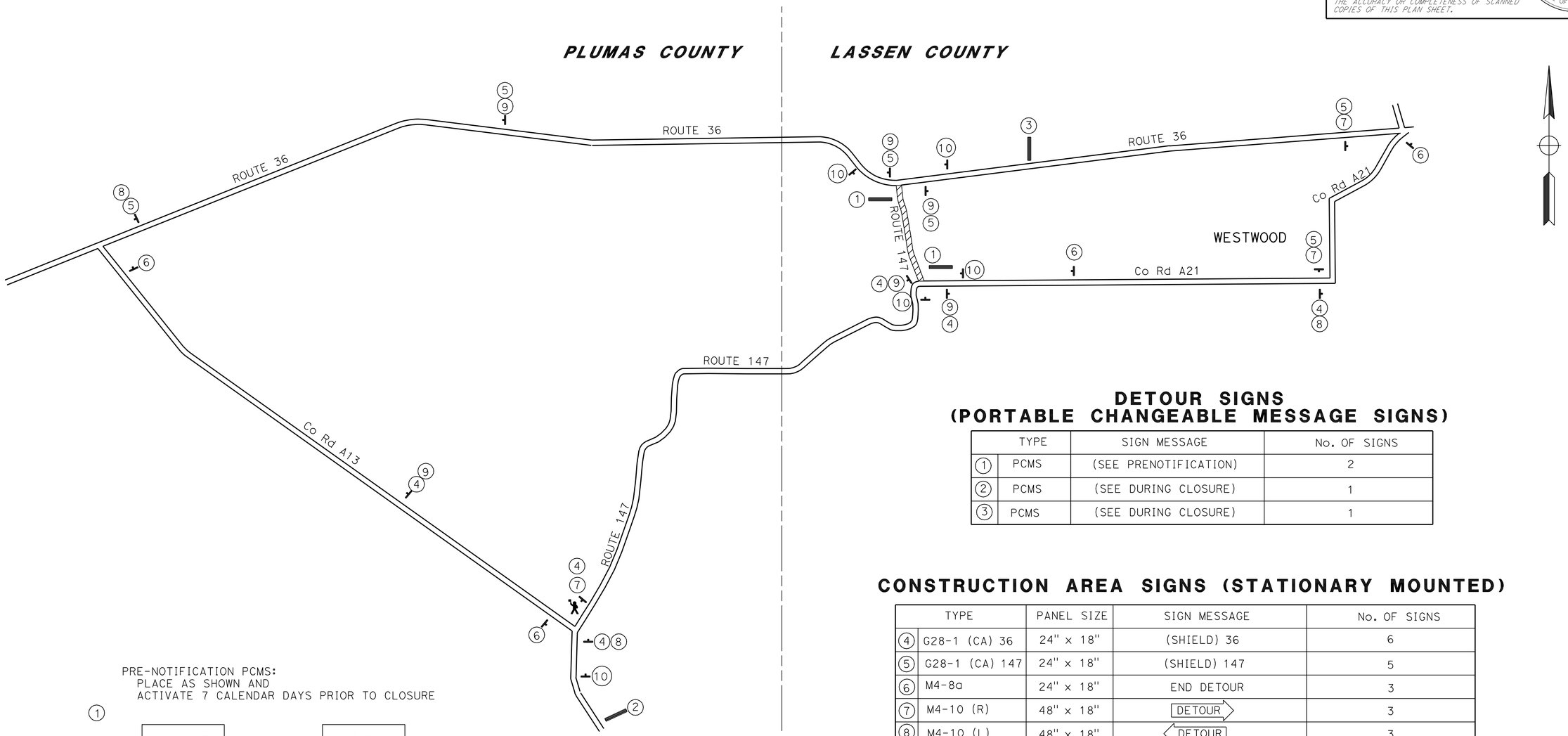

DETOUR SIGNS (PORTABLE CHANGEABLE MESSAGE SIGNS)

	TYPE	SIGN MESSAGE	No. OF SIGNS
1	PCMS	(SEE PRENOTIFICATION)	2
2	PCMS	(SEE DURING CLOSURE)	1
3	PCMS	(SEE DURING CLOSURE)	1

CONSTRUCTION AREA SIGNS (STATIONARY MOUNTED)

	TYPE	PANEL SIZE	SIGN MESSAGE	No. OF SIGNS
4	G28-1 (CA) 36	24" x 18"	(SHIELD) 36	6
5	G28-1 (CA) 147	24" x 18"	(SHIELD) 147	5
6	M4-8a	24" x 18"	END DETOUR	3
7	M4-10 (R)	48" x 18"	DETOUR →	3
8	M4-10 (L)	48" x 18"	← DETOUR	3
9	SC3 (CA)	36" x 12"	⇧ DETOUR	5
10	W20-2	36" x 36"	DETOUR AHEAD	5

PRE-NOTIFICATION PCMS:
PLACE AS SHOWN AND
ACTIVATE 7 CALENDAR DAYS PRIOR TO CLOSURE

1

HWY 147 WILL BE CLOSED	MO-DAY TO MO-DAY
FRAME 1	FRAME 2

DURING CLOSURE PCMS:
PLACE AS SHOWN

2

HWY 147 CLOSED	4 MI AHEAD	FOLLOW DETOUR
FRAME 1	FRAME 2	FRAME 3

3

JCT 147 CLOSED AHEAD	FOLLOW DETOUR
FRAME 1	FRAME 2

CONSTRUCTION AREA SIGNS (DETOUR)

NO SCALE

CS-2

REVISED BY | DATE REVISED
ZIDAN ZHANG | JULIE CASEY
CALCULATED-DESIGNED BY | CHECKED BY
FUNCTIONAL SUPERVISOR: JULIE CASEY
STATE OF CALIFORNIA - DEPARTMENT OF TRANSPORTATION
Caltrans® DESIGN
P:\proj1\02\3E050_plans\pse\23e0501a002.dgn

LAST REVISION 01-14-11 | DATE PLOTTED => 08-FEB-2011 | TIME PLOTTED => 14:34

Dist	COUNTY	ROUTE	POST MILES TOTAL PROJECT	SHEET No.	TOTAL SHEETS
02	Las,Plu	147	0.0/0.5,1.1/1.8, 9.1/9.9	13	32

Zidan M. Zhang 01-14-01
REGISTERED CIVIL ENGINEER DATE

01-14-11
PLANS APPROVAL DATE

REGISTERED PROFESSIONAL ENGINEER Z. M. ZHANG No. C69054 Exp. 6-30-12 CIVIL STATE OF CALIFORNIA

THE STATE OF CALIFORNIA OR ITS OFFICERS OR AGENTS SHALL NOT BE RESPONSIBLE FOR THE ACCURACY OR COMPLETENESS OF SCANNED COPIES OF THIS PLAN SHEET.

LEGEND:

- ● CHANNELIZER
- ‡ BARRICADE, TYPE III
- ▮ TEMPORARY SIGN

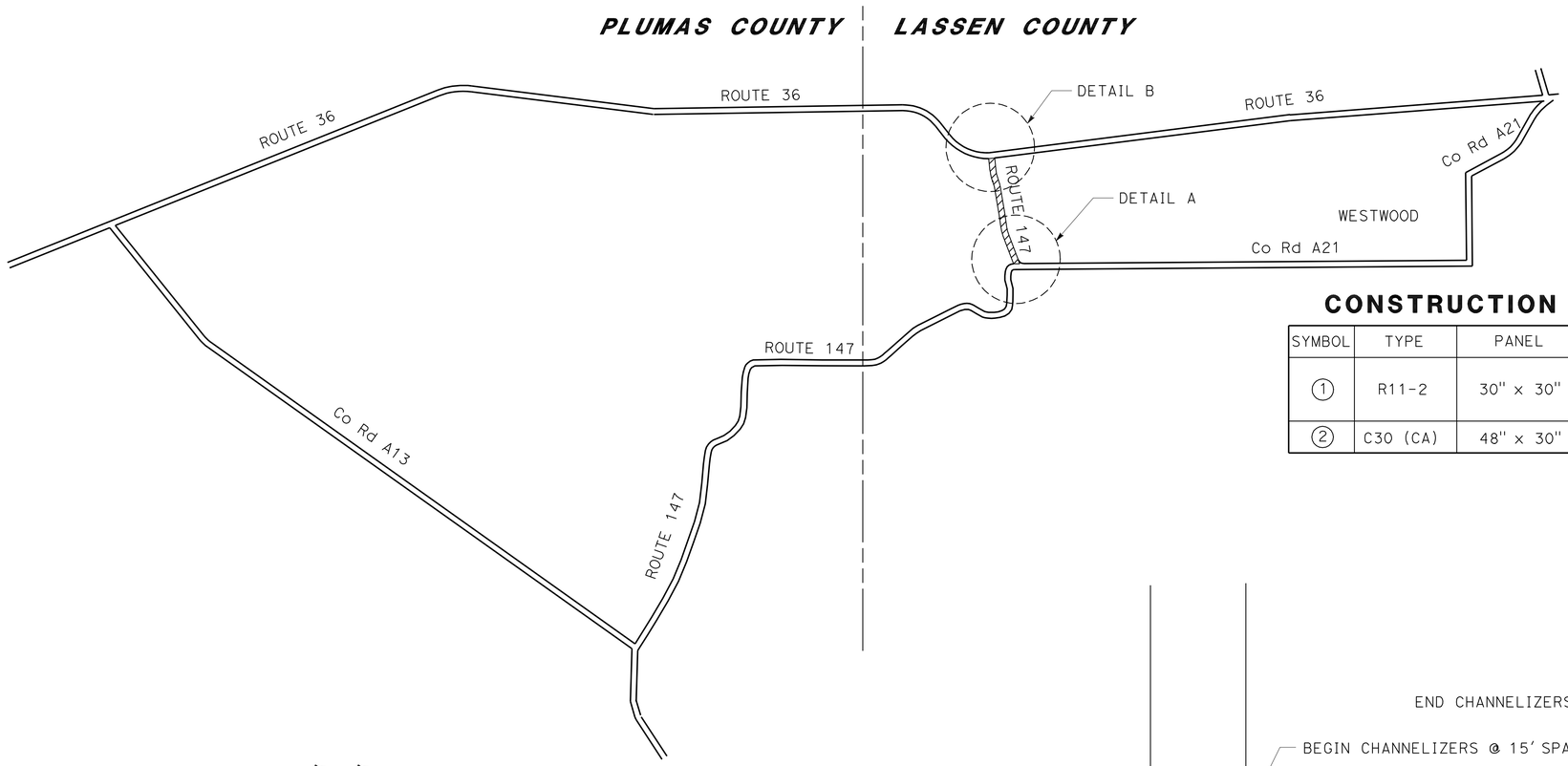

CONSTRUCTION AREA SIGNS (PORTABLE)

SYMBOL	TYPE	PANEL	MESSAGE	No. OF SIGNS
1	R11-2	30" x 30"	"ROAD CLOSED" (INSTALLED ON BARRICADE, TYPE III)	4
2	C30 (CA)	48" x 30"	"LANE CLOSED"	1

CHANNELIZERS

LOCATION	TYPE	NUMBER (EA)
EB Rte 36	CHANNELIZER	18
WB Rte 36	CHANNELIZER	70

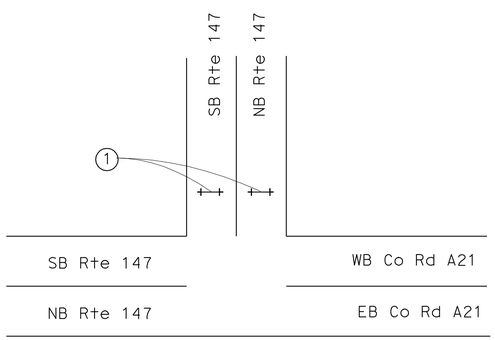

DETAIL A

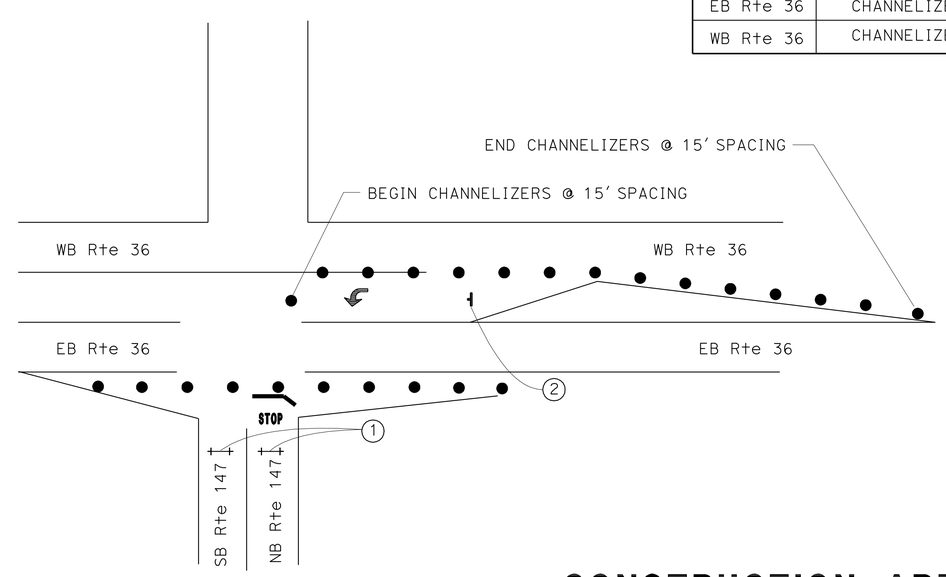

DETAIL B

CONSTRUCTION AREA SIGNS (DETOUR)

NO SCALE

CS-3

REVISED BY | DATE REVISED
ZIDAN ZHANG | JULIE CASEY
CALCULATED-DESIGNED BY | CHECKED BY
FUNCTIONAL SUPERVISOR: JULIE CASEY

STATE OF CALIFORNIA - DEPARTMENT OF TRANSPORTATION
Caltrans® DESIGN

P:\proj1\02\3E050_plans\pse\23e0501a003.dgn

LAST REVISION 01-14-11 | DATE PLOTTED => 08-FEB-2011 | TIME PLOTTED => 14:35

Dist	COUNTY	ROUTE	POST MILES TOTAL PROJECT	SHEET No.	TOTAL SHEETS
02	Las,Plu	147	0.0/0.5,1.1/1.8, 9.1/9.9	14	32

Zidan M. Zhang 01-14-01
REGISTERED CIVIL ENGINEER DATE

01-14-11
PLANS APPROVAL DATE

REGISTERED PROFESSIONAL ENGINEER Z. M. ZHANG No. C69054 Exp. 6-30-12 CIVIL STATE OF CALIFORNIA

THE STATE OF CALIFORNIA OR ITS OFFICERS OR AGENTS SHALL NOT BE RESPONSIBLE FOR THE ACCURACY OR COMPLETENESS OF SCANNED COPIES OF THIS PLAN SHEET.

LEGEND

⇨ Dir OF TRAFFIC

⟨X-X⟩ PAVEMENT DELINEATION STRIPE DETAIL No.

THERMOPLASTIC TRAFFIC STRIPE (SPRAYABLE)

POST MILE / STATION LIMITS	DETAIL 1	DETAIL 18	DETAIL 21	DETAIL 27B	DETAIL 38A
	LF	LF	LF	LF	LF
PM 0.0					20
LOCATION 1					
"A1" 10+25.00 TO 17+50.00					
"A1" 17+50.00 TO 25+00.00		750			
"A1" 25+00.00 TO 36+00.00			1100		
"A1" 36+00.00 TO 39+00.00		300			
"A1" 39+00.00 TO 40+00.00	100				
"A1" 40+00.00 TO 46+50.00		650			
"A1" 46+50.00 TO 67+93.00			2143		
"A1" 67+93.00 TO 68+53.00	60				
"A1" 68+53.00 TO 70+45.00			192		
"A1" 70+45.00 TO 76+71.25		626			
"A1" 10+25.00 TO 76+71.25				13,342	
LOCATION 2			3244		
"B1" 100+00.00 TO 132+43.96				6488	
"B1" 100+00.00 TO 132+43.96					
DETAIL TOTALS	160	2326	7404	19,830	20
GRAND TOTAL	29,740				

THERMOPLASTIC PAVEMENT MARKING

STATION	MESSAGE	SQFT
"A1" 32+00.0	R R	115.2
"A1" 34+00.0		115.2
"A1" 33+10.0	(STOP BARS)	22.6
"A1" 33+25.0		22.6
"A1" 68+15.00		48.0
"B1" 132+30.00		48.0
"B1" 104+32.00	"STOP AHEAD"	53.0
"B1" 125+00.00		53.0
"A1" 24+07.6	(½ MILE MARKINGS-SEE DETAIL A)	2.0
"A1" 76+87.6		2.0
"B1" 117+22.97		2.0
	TOTAL	483.6

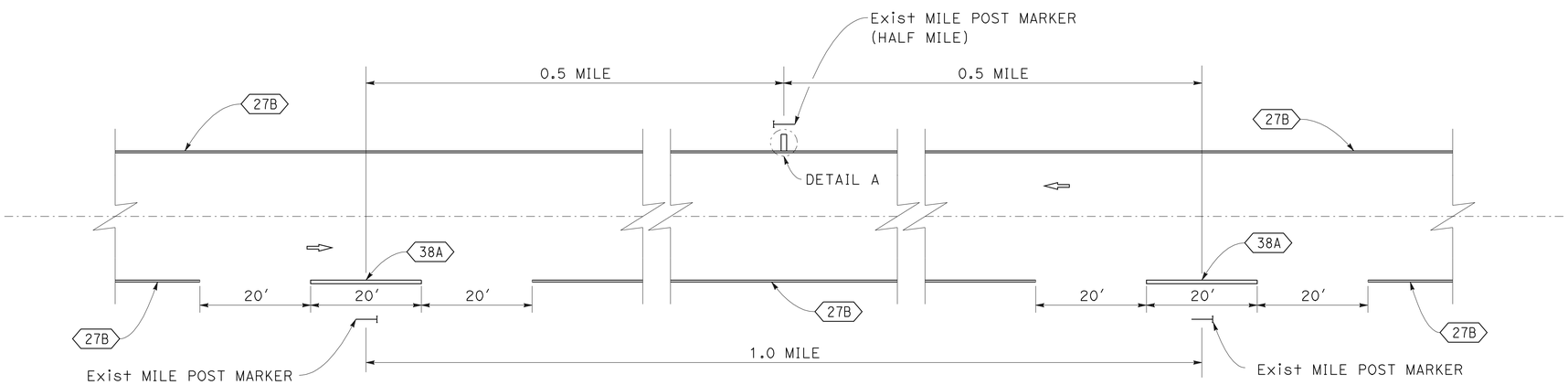

TYPICAL HALF MILE AND MILE POST STRIPE

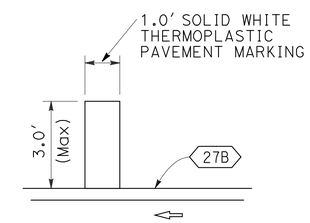

DETAIL A

* ACTUAL LENGTH MAY VARY DUE TO PAVEMENT WIDTH

PAVEMENT DELINEATION DETAILS AND QUANTITIES

NO SCALE

PDD-1

REVISED BY | DATE REVISED
ZIDAN ZHANG | JULIE CASEY
CALCULATED-DESIGNED BY | CHECKED BY
FUNCTIONAL SUPERVISOR: JULIE CASEY

STATE OF CALIFORNIA - DEPARTMENT OF TRANSPORTATION
Caltrans DESIGN

P:\proj1\02\3E050_plans\pse\23e050nb001.dgn

LAST REVISION 01-14-11 | DATE PLOTTED => 08-FEB-2011 | TIME PLOTTED => 14:35

Dist	COUNTY	ROUTE	POST MILES TOTAL PROJECT	SHEET No.	TOTAL SHEETS
02	Las,Plu	147	0.0/0.5,1.1/1.8, 9.1/9.9	15	32

Zidan M. Zhang 01-14-01
REGISTERED CIVIL ENGINEER DATE

01-14-11
PLANS APPROVAL DATE

REGISTERED PROFESSIONAL ENGINEER Z. M. ZHANG No. C69054 Exp. 6-30-12 CIVIL STATE OF CALIFORNIA

THE STATE OF CALIFORNIA OR ITS OFFICERS OR AGENTS SHALL NOT BE RESPONSIBLE FOR THE ACCURACY OR COMPLETENESS OF SCANNED COPIES OF THIS PLAN SHEET.

NOTES:

1. INSTALL DELINEATORS PERPENDICULAR TO ONCOMING TRAFFIC.
2. DELINEATOR SPACING ON TANGENT IS 525′.

LEGEND

S DELINEATOR SPACING
R CENTERLINE CURVE RADIUS
⊠ DELINEATOR

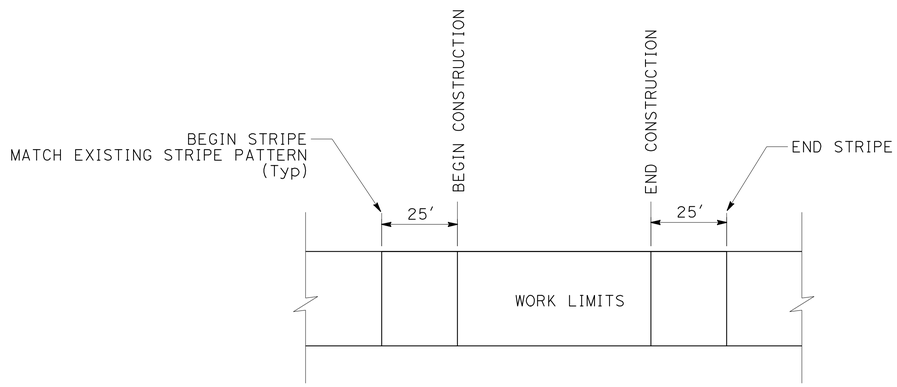

TRAFFIC STRIPE MATCH DETAIL

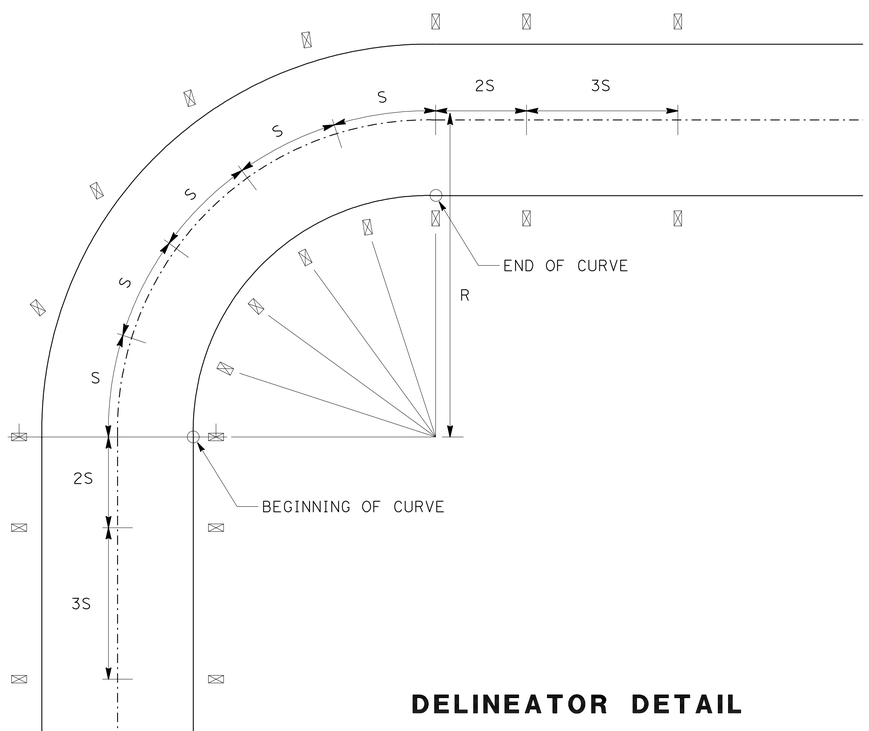

DELINEATOR DETAIL

DELINEATOR SPACING ON CURVES AND TANGENTS

STATION	CURVE RADIUS (FT)	LENGTH (LF)	S (MAX) (LF)	DELINATOR CLASS 2 (TYPE E) EA
"A1" 10+24.51 TO "A1" 16+69.44	500	615	38	36
"A1" 32+48.33	ROAD CONNECTION LT			4
"A1" 16+69.44 TO "A1" 48+88.00	TANGENT	3219	525	20
"A1" 48+88.00 TO "A1" 56+86.17	810	798	80	22
"A1" 56+86.17 TO ′A1" 59+44.93	TANGENT	258	525	4
"A1" 59+44.39 TO "A1" 63+62.74	780	418	70	14
"A1" 68+09.17	ROAD CONNECTION RT			4
"A1" 63+62.74 TO "A1" 76+71.25	TANGENT	1309	525	6
"B1" 100+00.00 TO "B1" 101+37.17	TANGENT	138	90	4
"B1" 101+37.17 TO "B1" 104+32.13	2000	295	74	10
"B1" 104+87.16 TO "B1" 109+93.39	5000	506	525	4
"B1" 109+93.39 TO "B1" 119+86.90	TANGENT	994	525	4
"B1" 119+86.90 TO "B1" 122+06.68	1700	220	73	6
" B1" 122+06.68 TO ′B1" 123+78.62	TANGENT	172	525	2
"B1" 123+78.62 TO "B1" 129+94.15	1900	616	88	18
"B1" 129+94.15 TO "B1" 131+40.72	TANGENT	147	525	2
"B1" 131+40.72 TO "B1" 132+43.96 CONNECT TO ROUTE 36	800	103	20	10
TOTAL				170

PAVEMENT DELINEATION DETAILS AND QUANTITIES

NO SCALE

PDD-2

REVISED BY | DATE REVISED
ZIDAN ZHANG | JULIE CASEY
CALCULATED-DESIGNED BY | CHECKED BY
FUNCTIONAL SUPERVISOR
JULIE CASEY

STATE OF CALIFORNIA - DEPARTMENT OF TRANSPORTATION
Caltrans DESIGN

P:\proj1\02\3E050_plans\pse\23e050nb002.dgn

LAST REVISION 01-14-11 | DATE PLOTTED => 08-FEB-2011 | TIME PLOTTED => 14:35

Dist	COUNTY	ROUTE	POST MILES TOTAL PROJECT	SHEET No.	TOTAL SHEETS
02	Las,Plu	147	0.0/0.5,1.1/1.8, 9.1/9.9	16	32

Zidan M. Zhang 01-14-01
REGISTERED CIVIL ENGINEER DATE

01-14-11
PLANS APPROVAL DATE

REGISTERED PROFESSIONAL ENGINEER Z. M. ZHANG No. C69054 Exp. 6-30-12 CIVIL STATE OF CALIFORNIA

THE STATE OF CALIFORNIA OR ITS OFFICERS OR AGENTS SHALL NOT BE RESPONSIBLE FOR THE ACCURACY OR COMPLETENESS OF SCANNED COPIES OF THIS PLAN SHEET.

NOTES:

1. THE MARKER SHALL BE WHITE (NON-REFLECTIVE) TARGET PLATE WITH BLACK SERIES D NUMERALS AND LETTERS.
2. A POST MILE PREFIX, SUCH AS "R", SHALL APPLY ONLY WHEN DIRECTED BY THE ENGINEER.
3. "BK" (BACK), "AH" (AHEAD), OR A BLANK SPACE SHALL APPLY AS DIRECTED BY THE ENGINEER.
4. ALL INFORMATION SHALL BE IN ENGLISH UNITS (MILES).

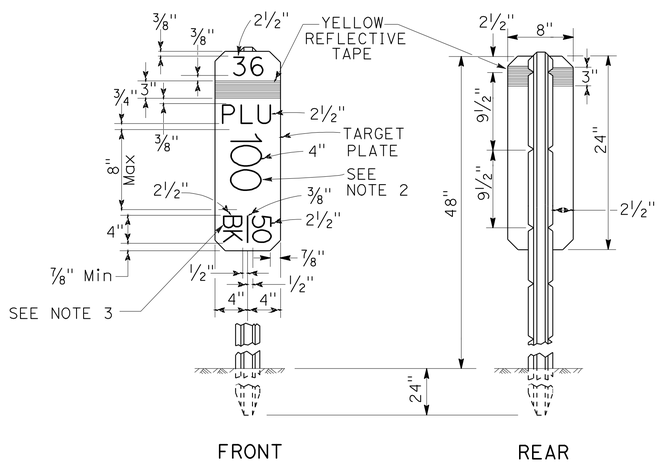

POST MILE MARKER DETAIL

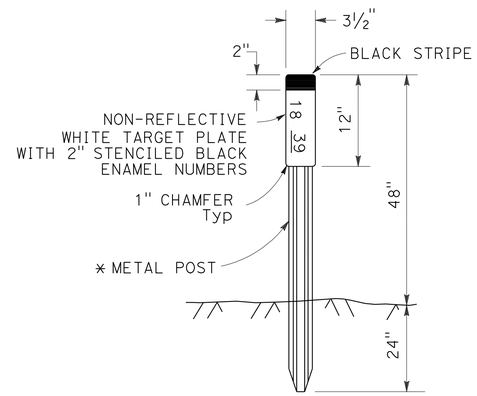

CULVERT (MARKER)

TYPICAL

* SEE STANDARD PLANS FOR METAL POST DETAILS

MARKER QUANTITIES

	TYPE		
	MILEPOST MARKER		
	HIGHWAY POST MARKER (1/2 MILE)	COUNTY LINE MARKER	CULVERT MARKER
	EA	EA	EA
	3	4	4
SUBTOTAL	7		
TOTAL	7		4

PAVEMENT DELINEATION DETAILS AND QUANTITIES

NO SCALE

PDD-3

REVISED BY | DATE REVISED
ZIDAN ZHANG | JULIE CASEY
CALCULATED-DESIGNED BY | CHECKED BY
FUNCTIONAL SUPERVISOR
JULIE CASEY

STATE OF CALIFORNIA - DEPARTMENT OF TRANSPORTATION
Caltrans
DESIGN

P:\proj\02\3E050_plans\pse\23e050nb003.dgn

LAST REVISION 01-14-11 | DATE PLOTTED => 08-FEB-2011 | TIME PLOTTED => 14:35

BORDER LAST REVISED 7/2/2010 | USERNAME => s115152 | DGN FILE => 23e050nb003.dgn | RELATIVE BORDER SCALE IS IN INCHES 0 1 2 3 | UNIT 0318 | PROJECT NUMBER & PHASE 02000200881

Dist	COUNTY	ROUTE	POST MILES TOTAL PROJECT	SHEET No.	TOTAL SHEETS
02	Las,Plu	147	0.0/0.5,1.1/1.8, 9.1/9.9	17	32

Zidan M. Zhang 01-14-01
REGISTERED CIVIL ENGINEER DATE

01-14-11
PLANS APPROVAL DATE

REGISTERED PROFESSIONAL ENGINEER Z. M. ZHANG No. C69054 Exp. 6-30-12 CIVIL STATE OF CALIFORNIA

THE STATE OF CALIFORNIA OR ITS OFFICERS OR AGENTS SHALL NOT BE RESPONSIBLE FOR THE ACCURACY OR COMPLETENESS OF SCANNED COPIES OF THIS PLAN SHEET.

NOTE:

1. (N) - NOT A SEPARATE PAY ITEM, FOR INFORMATION ONLY

ROADSIDE SIGN QUANTITIES

LOCATION No.	SIGN No.	STATION	CODE	PANEL SIZE	(N) ONE POST	(N) TWO POST	RESET ROADSIDE SIGN	(N) REMAIN IN PLACE
				IN	EA	EA	EA	EA
1	L1-1	"A1" 15+66.20	W5-2	36 x 36				1
	L1-2	"A1" 19+74.90	W1-2	36 x 36				1
	L1-2		W13-1	30 x 30				
	L1-3	"A1" 22+09.80	W10-1	24 x 24				1
	L1-4	"A1" 31+11.10	W10-1	24 x 24	1		1	
	L1-5	"A1" 32+76.70	R15-1	48 x 9	1		1	
	L1-6	"A1" 33+67.40	R15-1	48 x 9				1
	L1-7	"A1" 36+26.70	W10-1	24 x 24				1
	L1-8	"A1" 45+87.60	W1-4L	36 x 36	1		1	
	L1-8		W13-1	30 x 30				
	L1-9	"A1" 46+12.70	W10-1	24 x 24	1		1	
	L1-10	"A1" 50+74.90	G10(CA)	6 x 4.5	1		1	
	L1-11	"A1" 50+76.30	G10(CA)	6 x 4.5				1
	L1-12	"A1" 51+14.90	S32(CA)	36 x 30				1
	L1-12		S32A(CA)	10 x 12				
	L1-13	"A1" 67+70.50	W1-4L	36 x 36	1		1	
	L1-13		W13-1	30 x 30				
	L1-14	"A1" 68+54.90	R1-1	30 x 30				1
	L1-15	"A1" 70+45.60	R2-4(CA)	24 x 30				1
2	L2-1	"A1" 100+18.90	G28-2(CA)	24 x 28	1		1	
	L2-2	"A1" 100+67.60	M1-6	24 x 24	1		1	
	L2-2		M6-1	15 x 21				
	L2-3	"A1" 100+65.70	R2-1	36 x 48	1		1	
	L2-4	"A1" 100+90.80	SPL	12 x 24	1		1	
	L2-4		D6-4a	12 x 24				
	L2-5	"A1" 101+52.60	G8(CA)	108 x 42		1	1	
	L2-6	"A1" 102+14.30	SPL	12 x 24	1		1	
	L2-6		D6-4a	12 x 24				
	L2-7	"A1" 104+40.40	W3-1	36 x 36	1		1	
	L2-8	"A1" 124+32.20	G8(CA)	102 x 24		1	1	
	L2-9	"A1" 125+01.20	G5(CA)	78 x 42		1	1	
	L2-10	"A1" 124+93.60	W3-1	36 x 36	1		1	
	L2-11	"A1" 127+24.30	S32(CA)	36 x 30	1		1	
	L2-11		S32A(CA)	10 x 12				
	L2-11		M6-4	15 x 21				
	L2-12	"A1" 128+99.30	G28-2(CA)	24 x 28	1		1	
	L2-13	"A1" 131+30.80	R2-1	36 x 48	1		1	
	L2-14	"A1" 132+21.10	G28-2(CA)	24 x 28	1		1	
	L2-15	"A1" 132+11.70	R1-1	30 x 30	1		1	
				TOTAL	18	3	21	9

SIGN QUANTITIES
SQ-1

REVISED BY | DATE REVISED
ZIDAN ZHANG | JULIE CASEY
CALCULATED-DESIGNED BY | CHECKED BY
FUNCTIONAL SUPERVISOR: JULIE CASEY

STATE OF CALIFORNIA - DEPARTMENT OF TRANSPORTATION
Caltrans
DESIGN

P:\proj1\02\3E050_plans\pse\23e050oc001.dgn

LAST REVISION 01-14-11 | DATE PLOTTED => 08-FEB-2011 TIME PLOTTED => 14:35

Dist	COUNTY	ROUTE	POST MILES TOTAL PROJECT	SHEET No.	TOTAL SHEETS
02	Las,Plu	147	0.0/0.5,1.1/1.8, 9.1/9.9	18	32

Zidan M. Zhang 01-14-01
REGISTERED CIVIL ENGINEER DATE

01-14-11
PLANS APPROVAL DATE

REGISTERED PROFESSIONAL ENGINEER Z. M. ZHANG No. C69054 Exp. 6-30-12 CIVIL STATE OF CALIFORNIA

THE STATE OF CALIFORNIA OR ITS OFFICERS OR AGENTS SHALL NOT BE RESPONSIBLE FOR THE ACCURACY OR COMPLETENESS OF SCANNED COPIES OF THIS PLAN SHEET.

NOTE:

1. (N) NOT A SEPARATE PAY ITEM, FOR INFORMATION ONLY

COLD PLANE AREAS

Sta	LOCATION	Lt	Rt	COLD PLANE ASPHALT CONCRETE *	HOT MIX ASPHALT (TYPE A) *
				SQYD	TON
	LOCATION 1				
"A1" 10+50.00 TO 11+70.00	MAINLINE CONFORM	X	X	340	68.9
"A1" 31+89.50TO 33+36.50	MAINLINE CONFORM AT RR	X	X	490	99.2
"A1" 33+60.00 TO 35+08.00	MAINLINE CONFORM AT RR	X	X	493	99.8
"A1" 32+48.33	CONFORM AT PAVED DRIVEWAY	X		235	47.6
"A1" 68+09.17	CONFORM AT PAVED DRIVEWAY		X	254	51.4
"A1" 75+26.25 TO 76+46.25	MAINLINE CONFORM	X	X	327	66.2
	LOCATION 2				
"B1" 100+25.00 TO 101+45.00	MAINLINE CONFORM	X	X	427	86.4
"B1" 131+22.10 TO 132+42.10	MAINLINE CONFORM	X	X	896	181.4
TOTAL				3462	700.9

* THESE QUANTITIES ARE SHOWN ON ROADWAY QUANTITIES TABLE.

ROADWAY QUANTITIES

LOCATIONS	PULVERIZE ROADBED	(N) PULVERIZE ROADBED	ROADWAY EXCAVATION	(N) ROADWAY EMBANKMENT	HOT MIX ASPHALT (TYPE A)	COLD PLANE ASPHALT CONCRETE PAVEMENT	CLASS 2 AGGREGATE BASE	IMPORTED MATERIAL (SHOULDER BACKING)
	STA	SQYD	CY	CY	TON	SQYD	CY	TON
LOCATION 1								
"A1" 11+70.00 TO "A1" 31+89.50	20.2	5,161			1272			
"A1" 35+08.00 TO "A1" 75+26.25	40.2	10,268			2531			
"A1" 10+50.00 TO "A1" 76+46.25			1177	501			1177	87
LOCATION 2								
"B1" 101+45.00 TO "B1" 107+00.00	5.6	1,973			400			
"B1" 107+00.00 TO "B1" 131+22.10	24.2	5,921	538	322	1526		538	72
FROM COLD PLANE AREAS					701	3462		
FROM NON-PAVED DRIVEWAY							24	
TOTAL	90.2	23,323	1715	823	6430	3462	1739	159

NON-PAVED DRIVEWAYS

Sta	CLASS 2 AGGREGATE BASE
	CY
"A1" 17+83.50 Rt	4.0
"A1" 38+81.20 Rt	4.0
"A1" 48+53.50 Rt	4.0
"B1" 102+52.20 Lt	4.0
"B1" 105+00.00 Lt	4.0
"B1" 126+66.00 Lt	4.0
TOTAL	24.0

EROSION CONTROL (HYDROSEED) *

STATION RANGE	EROSION CONTROL (HYDROSEED)
	ACRE
"A1" 10+00.00 TO 76+71.25 "B1" 100+00.00 TO 132+42.10	1.0

* APPLY TO DISTURBED SOIL AREA

TEMPORARY EROSION CONTROL

STATION RANGE	TEMPORARY FIBER ROLL	TEMPORARY DRAINAGE INLET PROTECTION	TEMPORARY CHECK DAM	TEMPORARY SOIL BINDER
	LF	EA	LF	SQYD
"A1" 10+00.00 TO 76+71.25 "B1" 100+00.00 TO 132+42.1	500	2	200	15,000
TOTAL	500	2	200	15,000

SUMMARY OF QUANTITIES

Q-1

REVISED BY | DATE REVISED
ZIDAN ZHANG | JULIE CASEY
CALCULATED-DESIGNED BY | CHECKED BY
FUNCTIONAL SUPERVISOR: JULIE CASEY

STATE OF CALIFORNIA - DEPARTMENT OF TRANSPORTATION
Caltrans
DESIGN

P:\proj\02\3E050_plans\pse\23e050pa001.dgn

LAST REVISION 01-14-11 | DATE PLOTTED => 08-FEB-2011 | TIME PLOTTED => 14:35

Dist	COUNTY	ROUTE	POST MILES TOTAL PROJECT	SHEET No.	TOTAL SHEETS
02	Las,Plu	147	0.0/0.5,1.1/1.8, 9.1/9.9	19	32

J. Hannigan 01-14-01
REGISTERED ELECTRICAL ENGINEER DATE

01-14-11
PLANS APPROVAL DATE

REGISTERED PROFESSIONAL ENGINEER J.M. HANNIGAN No. E13665 Exp. 6-30-11 ELECTRICAL STATE OF CALIFORNIA

THE STATE OF CALIFORNIA OR ITS OFFICERS OR AGENTS SHALL NOT BE RESPONSIBLE FOR THE ACCURACY OR COMPLETENESS OF SCANNED COPIES OF THIS PLAN SHEET.

NOTES (THIS SHEET):

1. COIL 10' OF CONDUCTORS IN PULL BOX.
2. EXACT LOCATION TO BE DETERMINED BY THE ENGINEER.
3. CENTER LOOP IN LANE.

LEGEND

(PB) OBJECT MARKER (TYPE PB) AND PULL BOX PAVING

(pb) EXISTING OBJECT MARKER (TYPE PB)

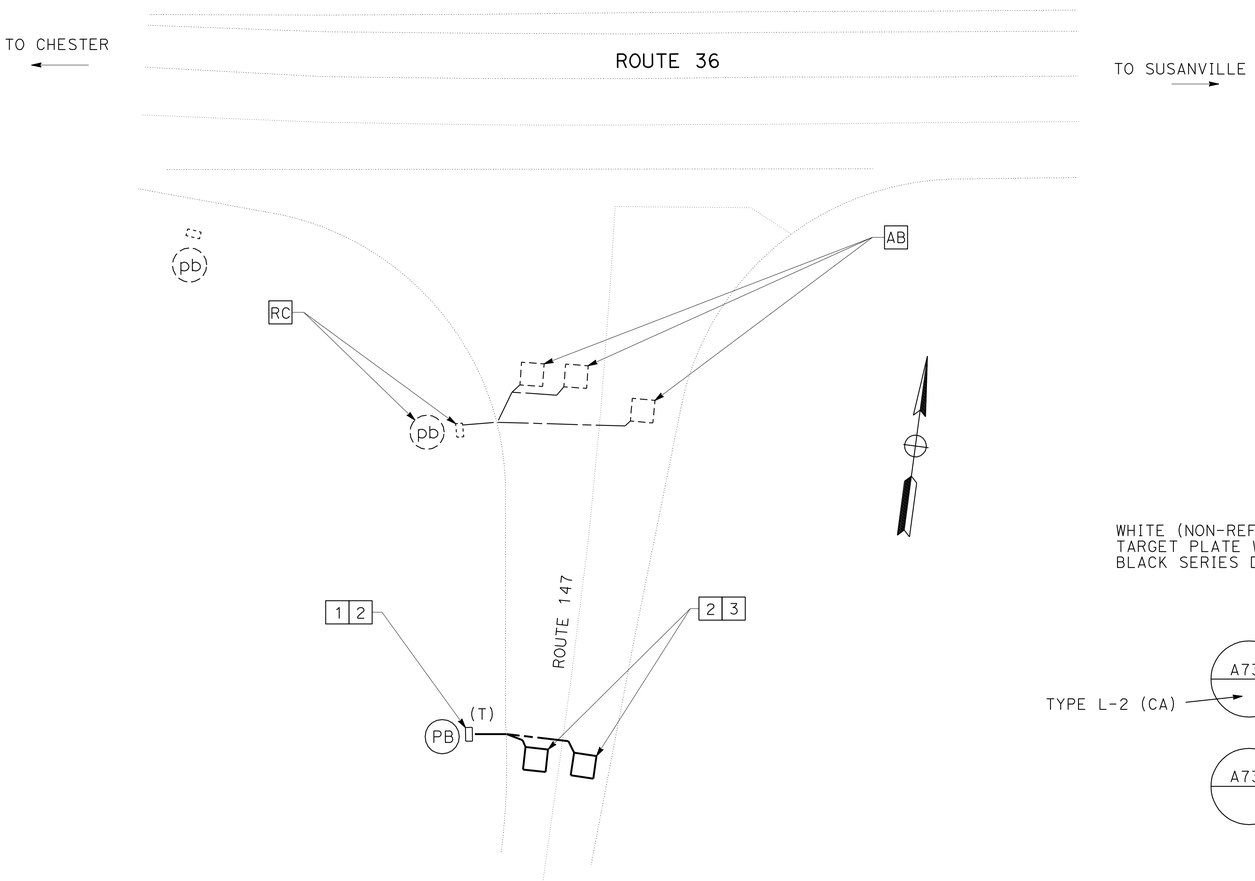

TMS No. 147

APPROXIMATE PM 1.79

EXISTING LOOP DETECTORS TO BE MAINTAINED

ELEMENT	Co-Rte-PM	LOCATION
LOOP	Las-36-PM 0.76	PB 109' WEST OF Jct 147
LOOP	Las-147-PM 1.15	SOUTH OF Co Rd A-21

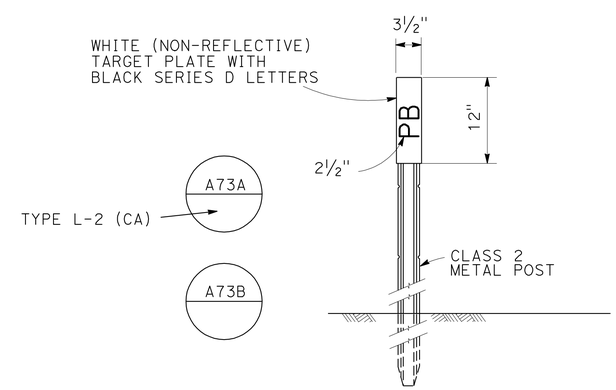

NOTE: MARKERS SHALL COMPLY WITH TYPE L-2 MODIFIED WITH A SNOW POLE BRACKET. PLACE MARKER 2" OUTSIDE PULL BOX PAVING ON SIDE AWAY FROM TRAFFIC. SEE PULL BOX PAVING DETAIL.

OBJECT MARKER (TYPE PB)

NO SCALE

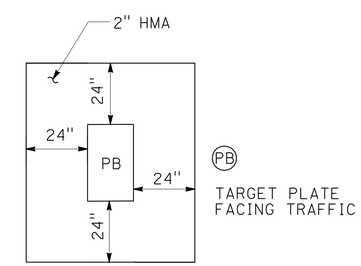

PULL BOX PAVING

NO SCALE

MODIFY TRAFFIC MONITORING STATION

SCALE: 1" = 20'

E-1

THIS PLAN IS ACCURATE FOR ELECTRICAL WORK ONLY.

REVISED BY | DATE REVISED
TERI ANDERSON | JAMES M. HANNIGAN
CALCULATED-DESIGNED BY | CHECKED BY
FUNCTIONAL SUPERVISOR: ROB STINGER

STATE OF CALIFORNIA - DEPARTMENT OF TRANSPORTATION
Caltrans® ELECTRICAL DESIGN

P:\proj1\02\3E050_plans\pse\23e050ua001.dgn

LAST REVISION 01-11-11 | DATE PLOTTED => 08-FEB-2011 | TIME PLOTTED => 14:35

DIST	COUNTY	ROUTE	POST MILES TOTAL PROJECT	SHEET NO.	TOTAL SHEETS
02	Las,Plu	147	0.0/0.5,1.1/1.8, 9.1/9.9	20	32

REGISTERED CIVIL ENGINEER

June 6, 2008
PLANS APPROVAL DATE

REGISTERED PROFESSIONAL ENGINEER Donald E. Howe No. C46402 Exp. 3-31-09 CIVIL STATE OF CALIFORNIA

The State of California or its officers or agents shall not be responsible for the accuracy or completeness of electronic copies of this plan sheet.

To accompany plans dated 01-14-11

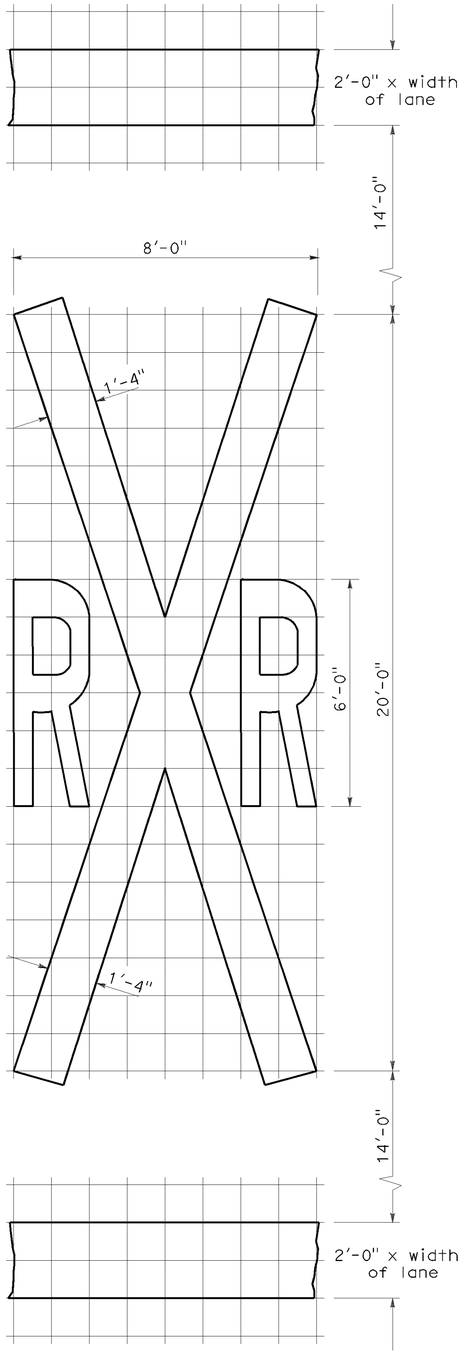

RAILROAD CROSSING SYMBOL

✳70 sq ft DOES NOT INCLUDE THE 2'-0" x VARIABLE WIDTH TRANSVERSE LINES.

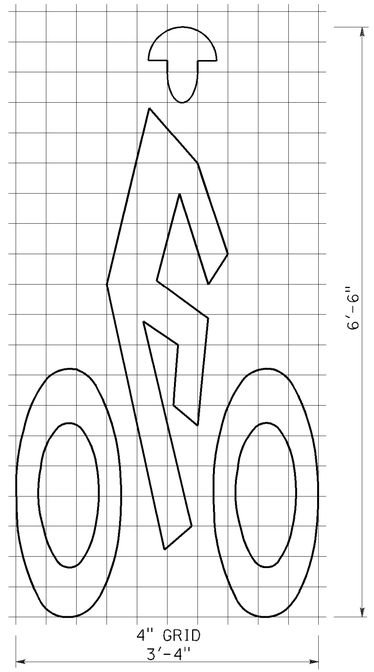

BIKE LANE SYMBOL

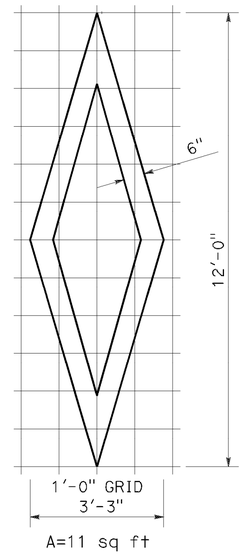

DIAMOND SYMBOL

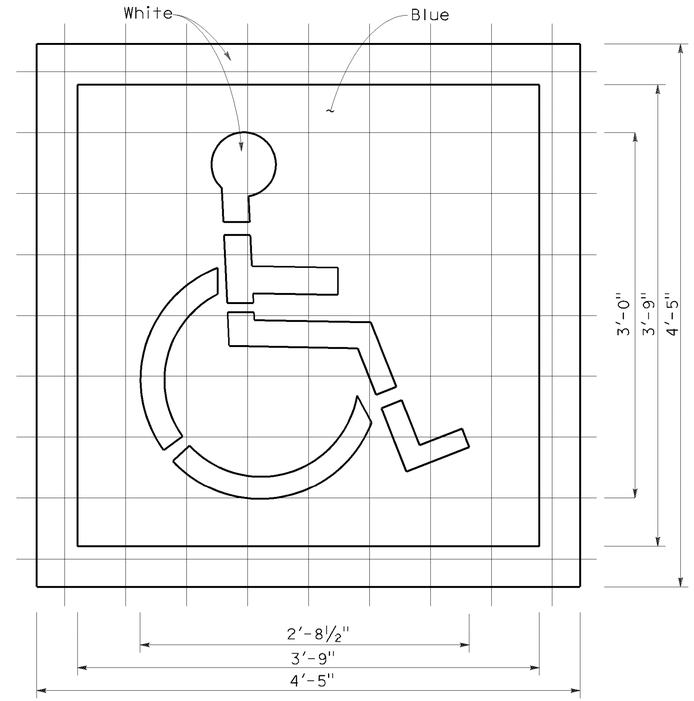

INTERNATIONAL SYMBOL OF ACCESSIBILITY MARKING

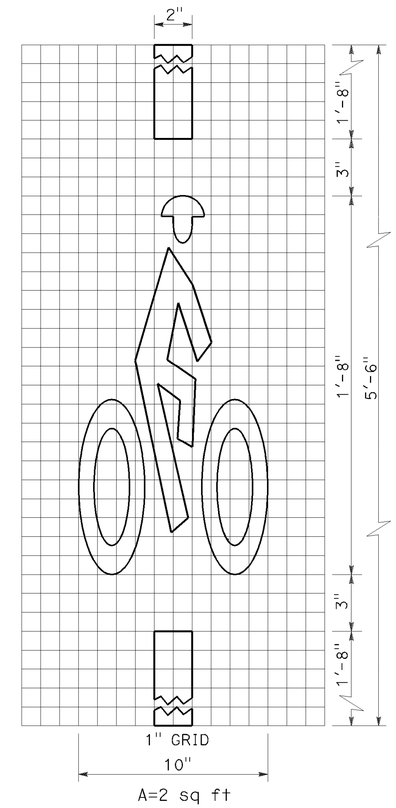

BICYCLE LOOP DETECTOR SYMBOL

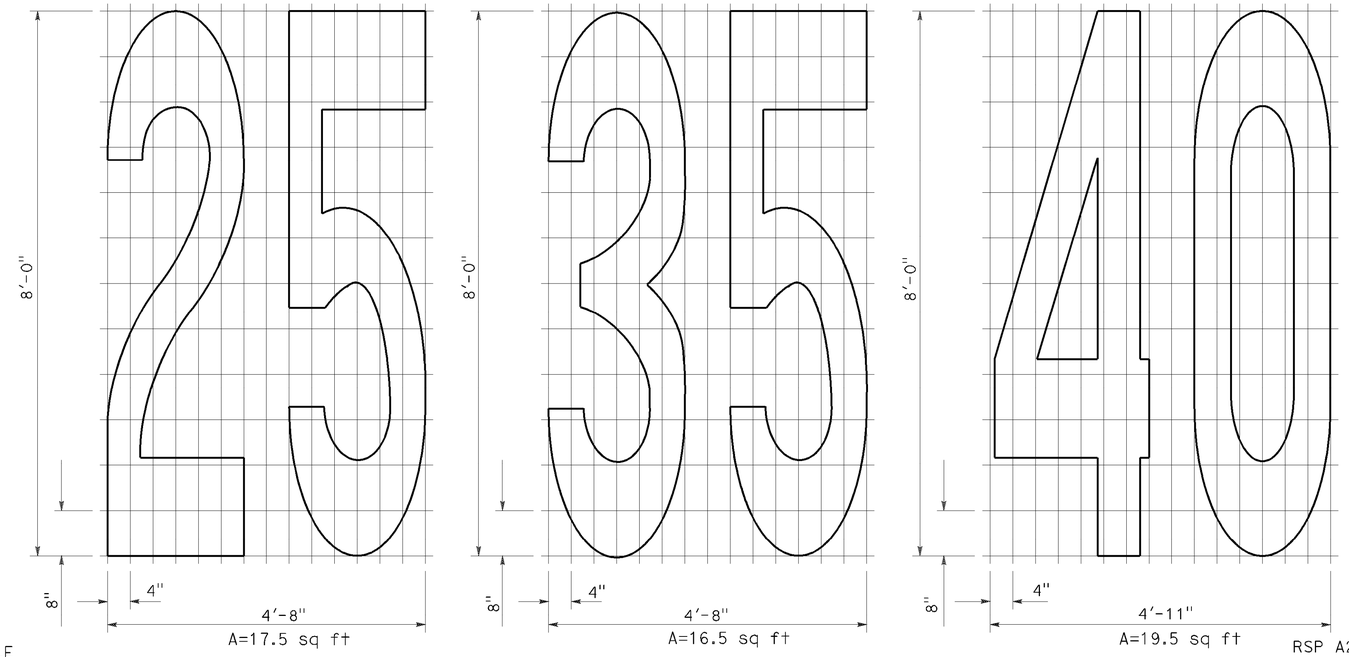

NUMERALS

NOTE:

1. Minor variations in dimensions may be accepted by the Engineer.

STATE OF CALIFORNIA
DEPARTMENT OF TRANSPORTATION

PAVEMENT MARKINGS SYMBOLS AND NUMERALS

NO SCALE

RSP A24C DATED JUNE 6, 2008 SUPERSEDES STANDARD PLAN A24C DATED MAY 1, 2006 - PAGE 11 OF THE STANDARD PLANS BOOK DATED MAY 2006.

REVISED STANDARD PLAN RSP A24C

2006 REVISED STANDARD PLAN RSP A24C

P:\proj1\02\3E050_plans\pse\23e050va001.dgn

5-27-08

DIST	COUNTY	ROUTE	POST MILES TOTAL PROJECT	SHEET NO.	TOTAL SHEETS
02	Las,Plu	147	0.0/0.5,1.1/1.8, 9.1/9.9	21	32

Randell D. Hiatt
REGISTERED CIVIL ENGINEER

June 6, 2008
PLANS APPROVAL DATE

REGISTERED PROFESSIONAL ENGINEER
Randell D. Hiatt
No. C50200
Exp. 6-30-09
CIVIL
STATE OF CALIFORNIA

The State of California or its officers or agents shall not be responsible for the accuracy or completeness of electronic copies of this plan sheet.

To accompany plans dated 01-14-11

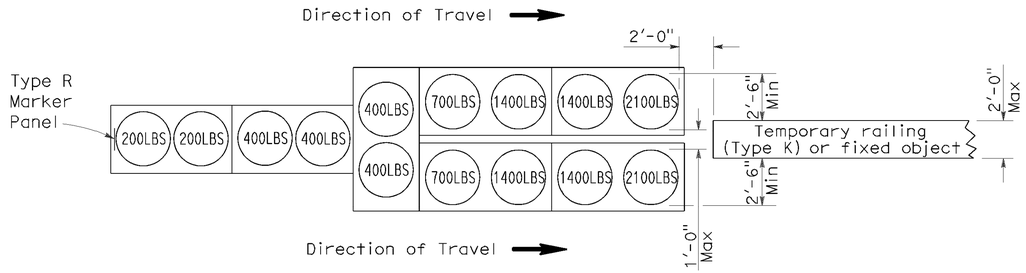

ARRAY 'TU14'

Approach speed 45 mph or more

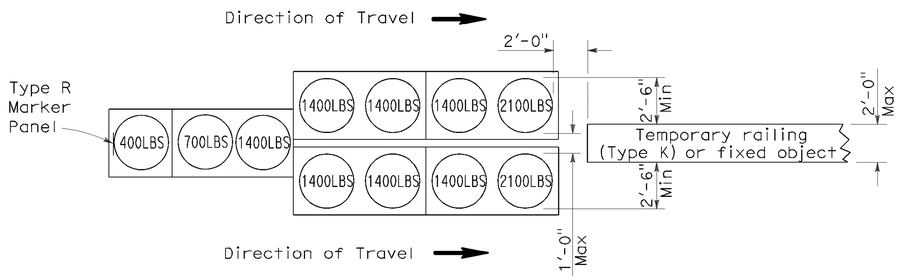

ARRAY 'TU11'

Approach speed less than 45 mph

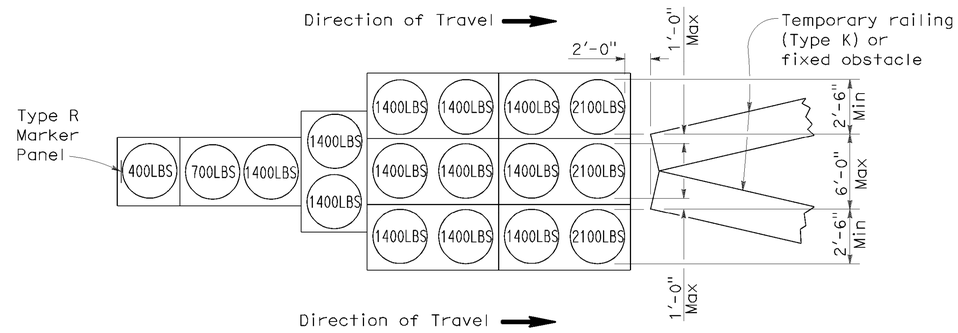

ARRAY 'TU17'

Approach speed less than 45 mph

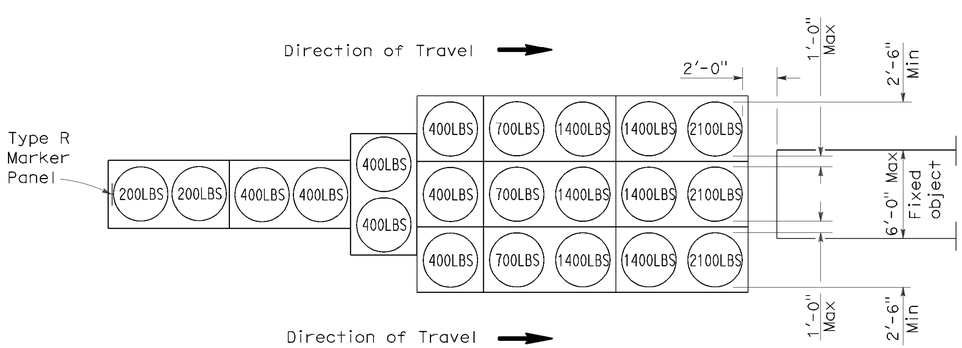

ARRAY 'TU21'

Approach speed 45 mph or more

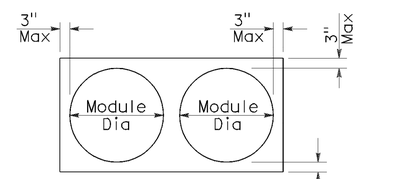

PLAN

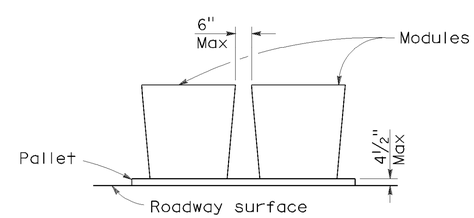

ELEVATION

CRASH CUSHION PALLET DETAIL

See Note 7

NOTES:

1. (XXX) Indicates sand filled module location and weight of sand in pounds for each module. Module spacing is based on the greater diameter of the module.
2. All sand weights are nominal.
3. Temporary crash cushion arrays shall not encroach on the traveled way.
4. Place the top of Type R marker panel 1" below the module lid.
5. Refer to Standard Plan A73B for marker details.
6. Approach speeds indicated conform to NCHRP 350 Report criteria.
7. Use of pallets is optional.

STATE OF CALIFORNIA
DEPARTMENT OF TRANSPORTATION

TEMPORARY CRASH CUSHION, SAND FILLED (UNIDIRECTIONAL)

NO SCALE

RSP T1A DATED JUNE 6, 2008 SUPERSEDES STANDARD PLAN T1A
DATED MAY 1, 2006 - PAGE 211 OF THE STANDARD PLANS BOOK DATED MAY 2006.

REVISED STANDARD PLAN RSP T1A

2006 REVISED STANDARD PLAN RSP T1A

P:\proj1\02\3E050_plans\pse\23e050va002.dgn

5-15-08

DIST	COUNTY	ROUTE	POST MILES TOTAL PROJECT	SHEET NO.	TOTAL SHEETS
02	Las,Plu	147	0.0/0.5,1.1/1.8, 9.1/9.9	22	32

Randell D. Hiatt
REGISTERED CIVIL ENGINEER

June 6, 2008
PLANS APPROVAL DATE

REGISTERED PROFESSIONAL ENGINEER
Randell D. Hiatt
No. C50200
Exp. 6-30-09
CIVIL
STATE OF CALIFORNIA

The State of California or its officers or agents shall not be responsible for the accuracy or completeness of electronic copies of this plan sheet.

To accompany plans dated 01-14-11

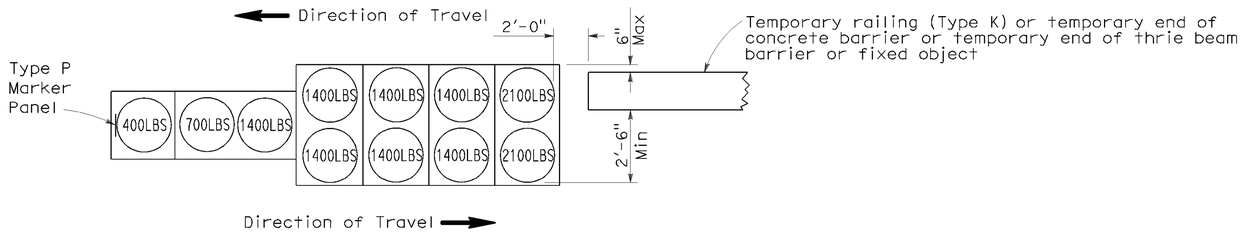

ARRAY 'TB11'

Approach speed less than 45 mph

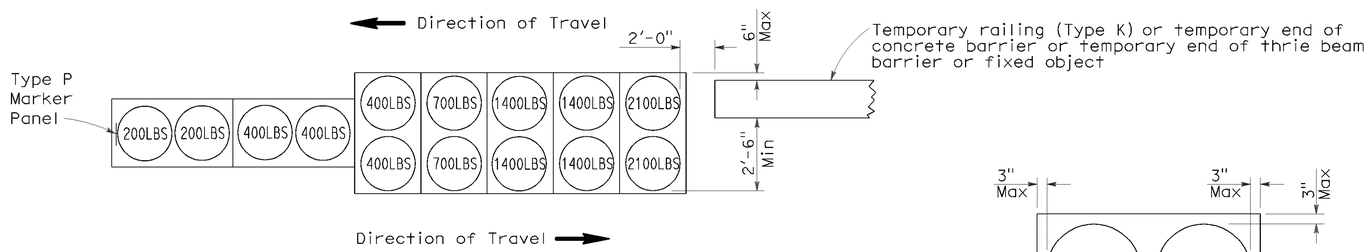

ARRAY 'TB14'

Approach speed 45 mph or more

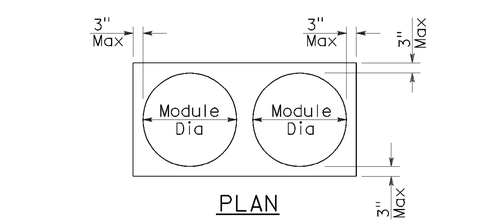

PLAN

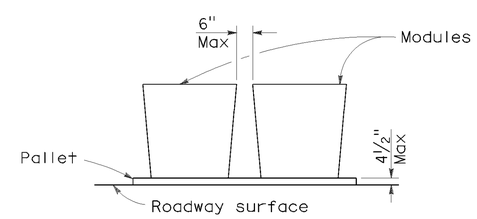

ELEVATION

CRASH CUSHION PALLET DETAIL

See Note 7

NOTES:

1. (XXX) Indicates sand filled module location and weight of sand in pounds for each module. Module spacing is based on the greater diameter of the module.
2. All sand weights are nominal.
3. Temporary crash cushion arrays shall not encroach on the traveled way.
4. Place the Type P marker panel so that the bottom of the panel rests upon the pallet.
5. Refer to Standard Plan A73B for marker details.
6. Approach speeds indicated conform to NCHRP 350 Report criteria.
7. Use of pallets is optional.

STATE OF CALIFORNIA
DEPARTMENT OF TRANSPORTATION

TEMPORARY CRASH CUSHION, SAND FILLED (BIDIRECTIONAL)

NO SCALE

RSP T1B DATED JUNE 6, 2008 SUPERSEDES STANDARD PLAN T1B
DATED MAY 1, 2006 - PAGE 212 OF THE STANDARD PLANS BOOK DATED MAY 2006.

REVISED STANDARD PLAN RSP T1B

2006 REVISED STANDARD PLAN RSP T1B

P:\proj1\02\3E050_plans\pse\23e050va003.dgn

5-15-08

DIST	COUNTY	ROUTE	POST MILES TOTAL PROJECT	SHEET NO.	TOTAL SHEETS
02	Las,Plu	147	0.0/0.5,1.1/1.8, 9.1/9.9	23	32

Randell D. Hiatt
REGISTERED CIVIL ENGINEER

June 6, 2008
PLANS APPROVAL DATE

REGISTERED PROFESSIONAL ENGINEER
Randell D. Hiatt
No. C50200
Exp. 6-30-09
CIVIL
STATE OF CALIFORNIA

The State of California or its officers or agents shall not be responsible for the accuracy or completeness of electronic copies of this plan sheet.

To accompany plans dated 01-14-11

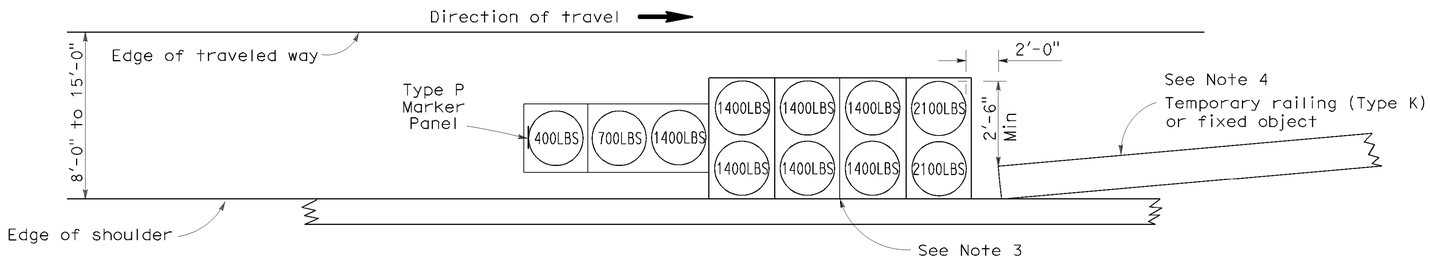

ARRAY 'TS11'

Approach speed less than 45 mph
See Note 9

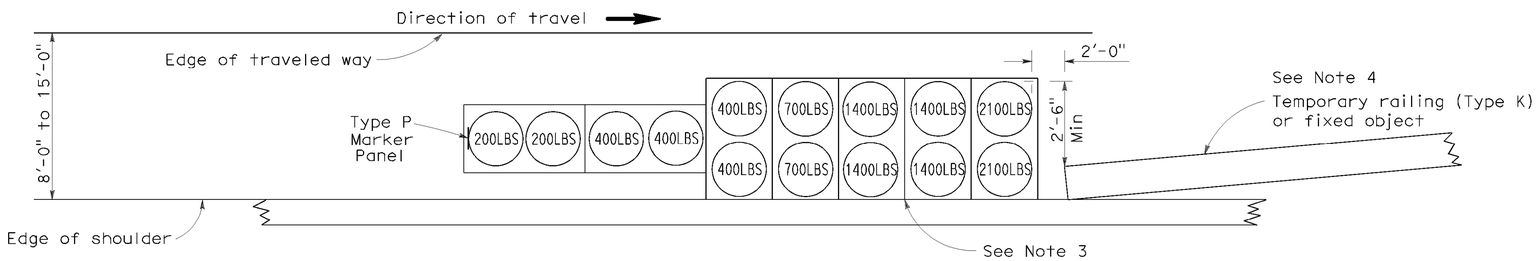

ARRAY 'TS14'

Approach speed 45 mph or more
See Note 9

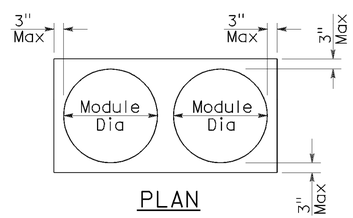

PLAN

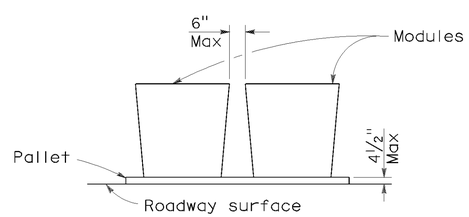

ELEVATION

CRASH CUSHION PALLET DETAIL

See Note 11

NOTES:

1. (XXX) Indicates sand filled module location and weight of sand in pounds for each module. Module spacing is based on the greater diameter of the module.
2. All sand weights are nominal.
3. The temporary crash cushion arrays shown on this plan shall be used only in locations where there will be traffic on one side of the temporary crash cushion array.
4. If the fixed object or approach end of the temporary railing is less than 15'-0" from the edge of traveled way, a temporary crash cushion is required in a construction or work zone.
5. Temporary crash cushion arrays shall not encroach on the traveled way.
6. Arrays for median shoulders shall conform to details shown on this plan for outside shoulders.
7. Place the Type P marker panel so that the bottom of the panel rests upon the pallet and faces traffic.
8. Refer to Standard Plan A73B for marker details.
9. For shoulder widths less than 8'-0", appropriate approved crash cushion protection, other than sand filled modules, shall be provided at fixed objects and at approach ends of temporary railing. The specific type of crash cushion shall be as shown on the project plans or as specified in the Special Provisions, or if not shown on the project plans or specified in the Special Provisions, shall be as approved by the Engineer.
10. Approach speeds indicated conform to NCHRP 350 Report criteria.
11. Use of pallets is optional.

STATE OF CALIFORNIA
DEPARTMENT OF TRANSPORTATION

TEMPORARY CRASH CUSHION, SAND FILLED (SHOULDER INSTALLATIONS)

NO SCALE

RSP T2 DATED JUNE 6, 2008 SUPERSEDES STANDARD PLAN T2
DATED MAY 1, 2006 - PAGE 213 OF THE STANDARD PLANS BOOK DATED MAY 2006.

REVISED STANDARD PLAN RSP T2

2006 REVISED STANDARD PLAN RSP T2

P:\proj1\02\3E050_plans\pse\23e050va004.dgn

5-15-08

DIST	COUNTY	ROUTE	POST MILES TOTAL PROJECT	SHEET NO.	TOTAL SHEETS
02	Las,Plu	147	0.0/0.5,1.1/1.8, 9.1/9.9	24	32

Robert B. Schott
LICENSED LANDSCAPE ARCHITECT

April 3, 2009
PLANS APPROVAL DATE

The State of California or its officers or agents shall not be responsible for the accuracy or completeness of electronic copies of this plan sheet.

LICENSED LANDSCAPE ARCHITECT — Robert B. Schott 3895 — Expiration Date 11-30-10 — Renewal Date 2-25-09 Date — STATE OF CALIFORNIA

To accompany plans dated 01-14-11

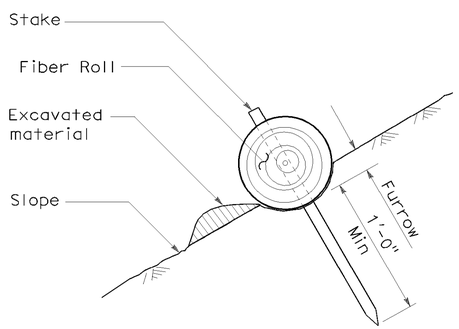

SECTION

TEMPORARY FIBER ROLL (TYPE 1)

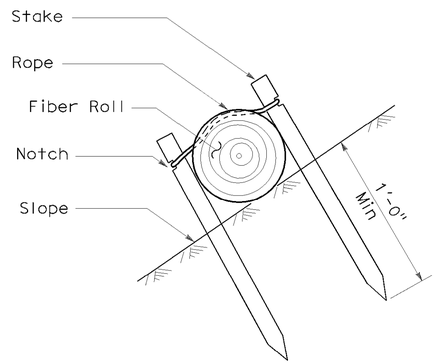

SECTION

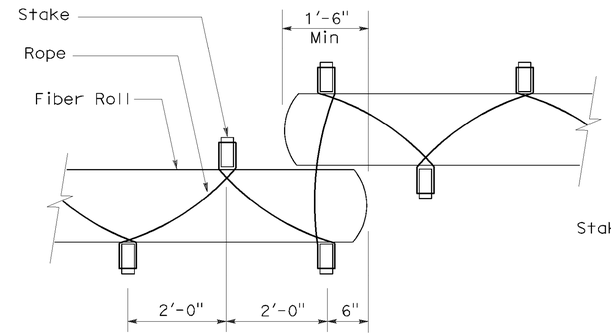

PLAN

TEMPORARY FIBER ROLL (TYPE 2)

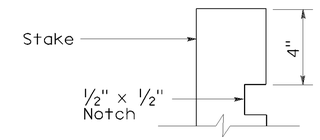

ELEVATION

STAKE NOTCH DETAIL

NOTES:

1. Temporary fiber roll spacing varies depending upon slope inclination.
2. Installations shown in the perspectives are for slope inclination of 10:1 and steeper.

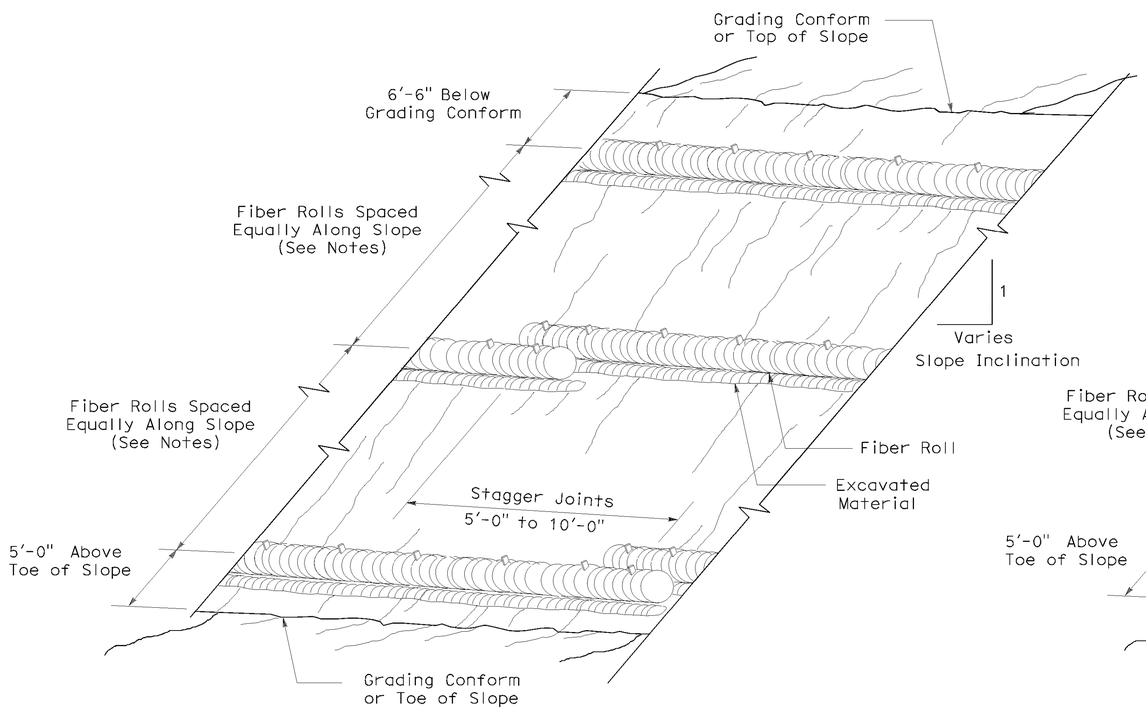

PERSPECTIVE

TEMPORARY FIBER ROLL (TYPE 1)

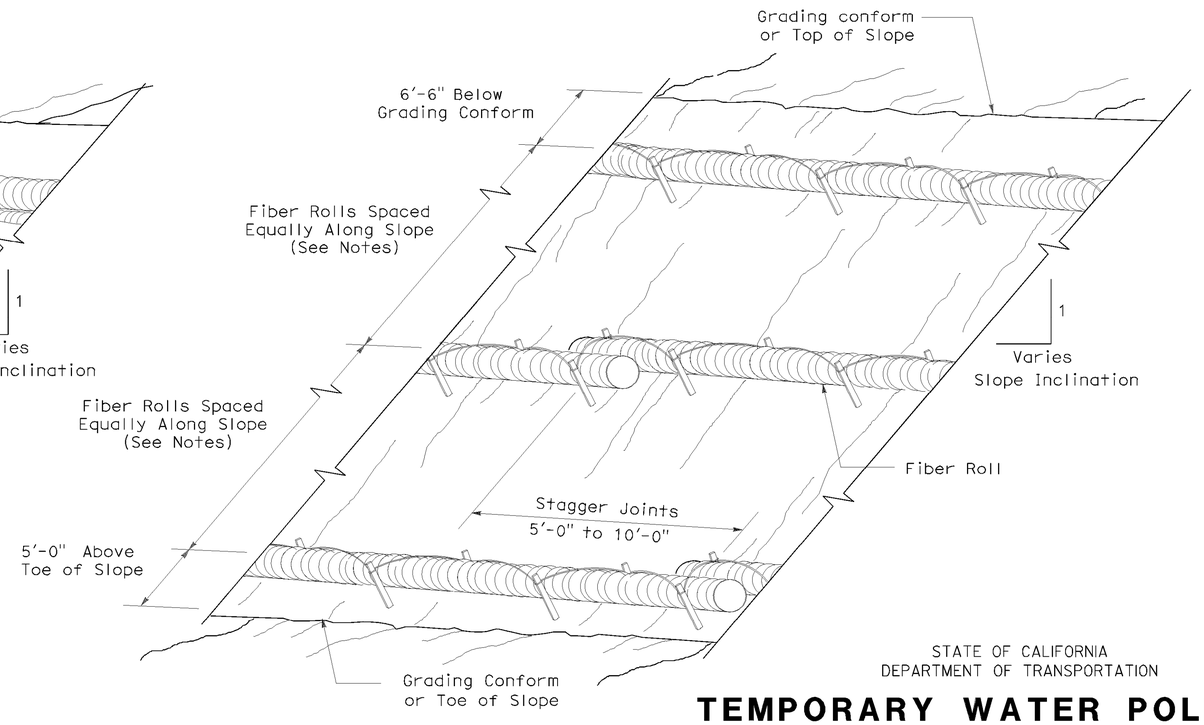

PERSPECTIVE

TEMPORARY FIBER ROLL (TYPE 2)

STATE OF CALIFORNIA
DEPARTMENT OF TRANSPORTATION

TEMPORARY WATER POLLUTION CONTROL DETAILS (TEMPORARY FIBER ROLL)

NO SCALE

RSP T56 DATED APRIL 3, 2009 SUPERSEDES STANDARD PLAN T56
DATED MAY 1, 2006 - PAGE 232 OF THE STANDARD PLANS BOOK DATED MAY 2006.

REVISED STANDARD PLAN RSP T56

2006 REVISED STANDARD PLAN RSP T56

P:\proj1\02\3E050_plans\pse\23e050va005.dgn

2-23-09

DIST	COUNTY	ROUTE	POST MILES TOTAL PROJECT	SHEET NO.	TOTAL SHEETS
02	Las,Plu	147	0.0/0.5,1.1/1.8, 9.1/9.9	25	32

LICENSED LANDSCAPE ARCHITECT

August 15, 2008
PLANS Approval DATE

The State of California or its officers or agents shall not be responsible for the accuracy or completeness of electronic copies of this plan sheet.

LICENSED LANDSCAPE ARCHITECT
Robert B. Schott 3885
Signature
11-04-08
Renewal Date
08-11-08
Date
STATE OF CALIFORNIA

To accompany plans dated 01-14-11

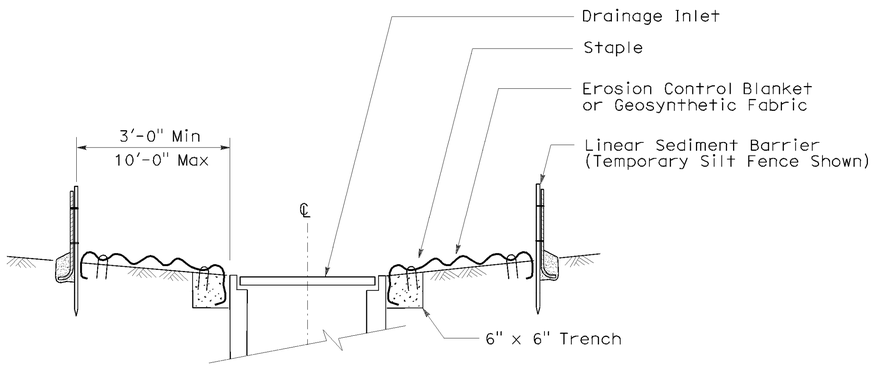

SECTION A-A

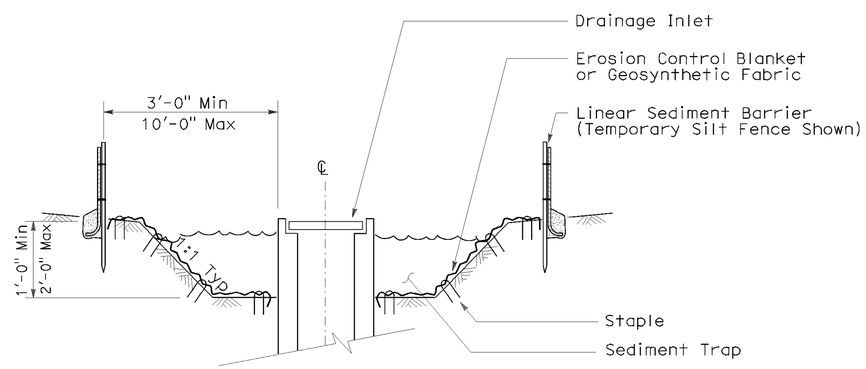

SECTION B-B

NOTES:

1. See Standard Plan T51 for Temporary Silt Fence.
2. Dimensions may vary to fit field conditions.

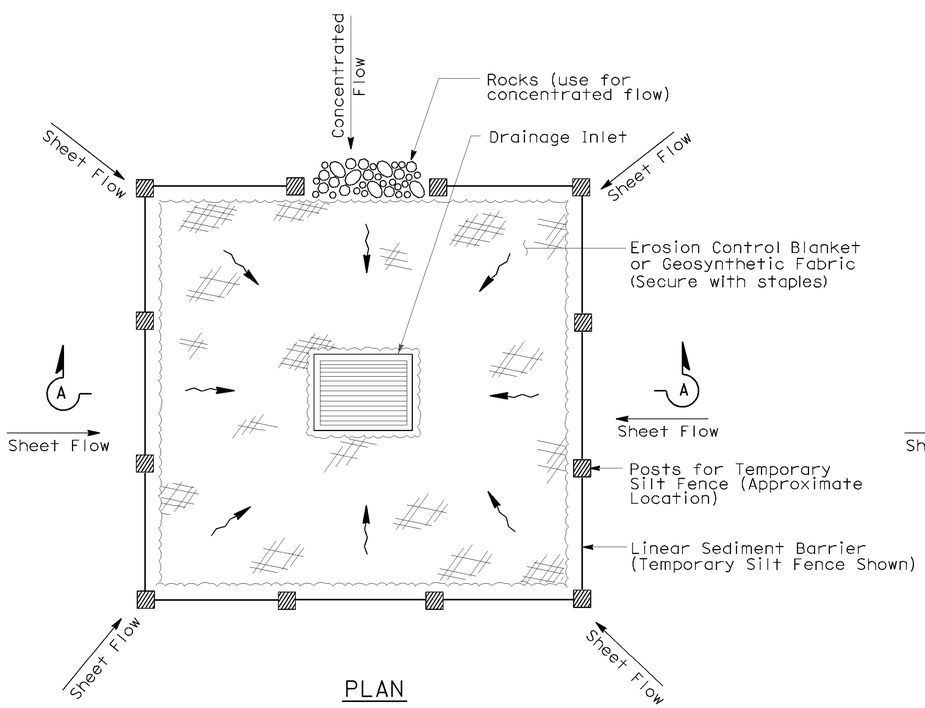

PLAN

TEMPORARY DRAINAGE INLET PROTECTION (TYPE 1)

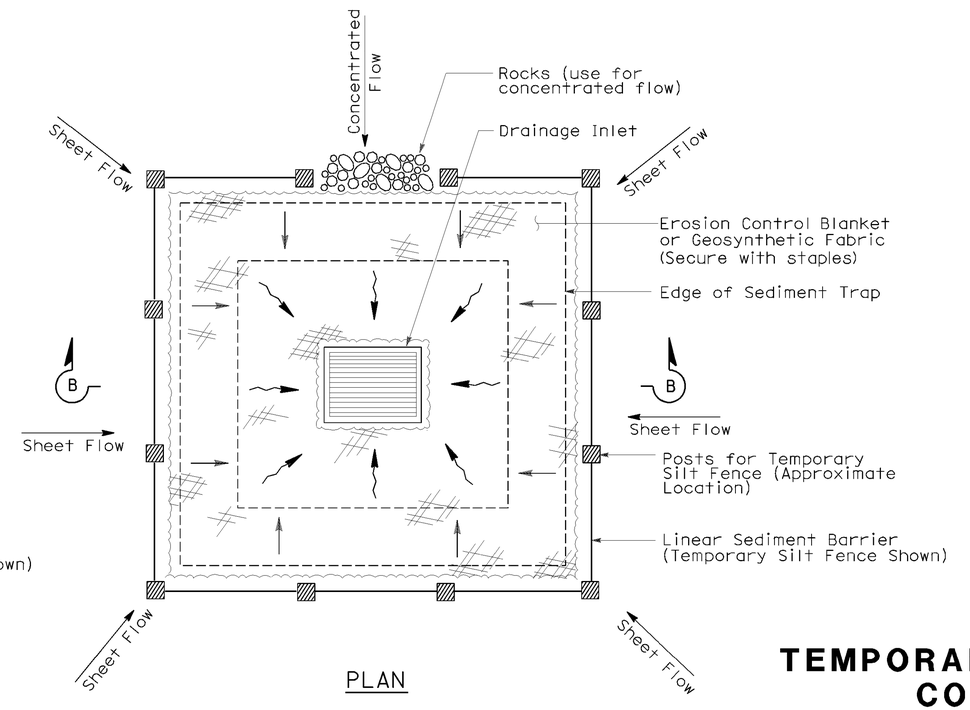

PLAN

TEMPORARY DRAINAGE INLET PROTECTION (TYPE 2) (EXCAVATED SEDIMENT TRAP)

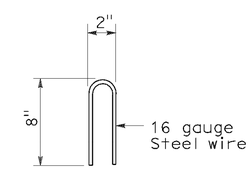

STAPLE DETAIL

STATE OF CALIFORNIA
DEPARTMENT OF TRANSPORTATION

TEMPORARY WATER POLLUTION CONTROL DETAILS (TEMPORARY DRAINAGE INLET PROTECTION)

NO SCALE

Nsp t61 dated august 15, 2008 supplements the standard plans book dated may 2006.

NEW STANDARD PLAN NSP T61

2006 NEW STANDARD PLAN NSP T61

P:\proj\02\3E050_plans\pse\23e050va006.dgn

7-11-08

DIST	COUNTY	ROUTE	POST MILES TOTAL PROJECT	SHEET NO.	TOTAL SHEETS
02	Las,Plu	147	0.0/0.5,1.1/1.8, 9.1/9.9	26	32

LICENSED LANDSCAPE ARCHITECT

August 15, 2008
PLANS APPROVAL DATE

The State of California or its officers or agents shall not be responsible for the accuracy or completeness of electronic copies of this plan sheet.

LICENSED LANDSCAPE ARCHITECT Robert B. Schott 3825 Signature 11-04-08 Renewal Date 08-11-08 Date STATE OF CALIFORNIA

To accompany plans dated 01-14-11

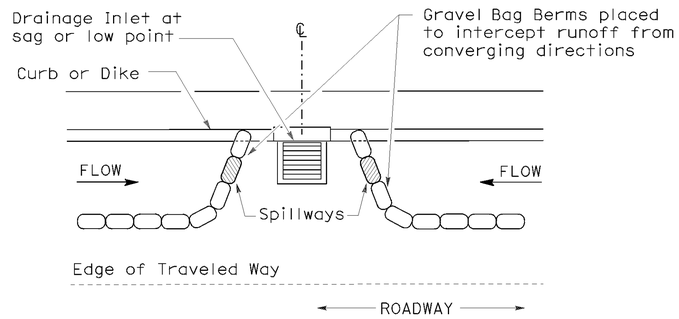

PLAN

CONFIGURATION FOR SAG POINT INLET (GRAVEL BAG BERM)

GRAVEL BAG BERM (TYPE 3A) SPACING TABLE

SLOPE OF ROADWAY (PERCENT)	1 to 3.9	4 to 5.9	6 to 7.9	8 to 10	10+
INTERVAL BETWEEN BERM	100′	75′	50′	25′	12′

For slope of less than 1%, install barriers only if erosion/sediment is prevalent

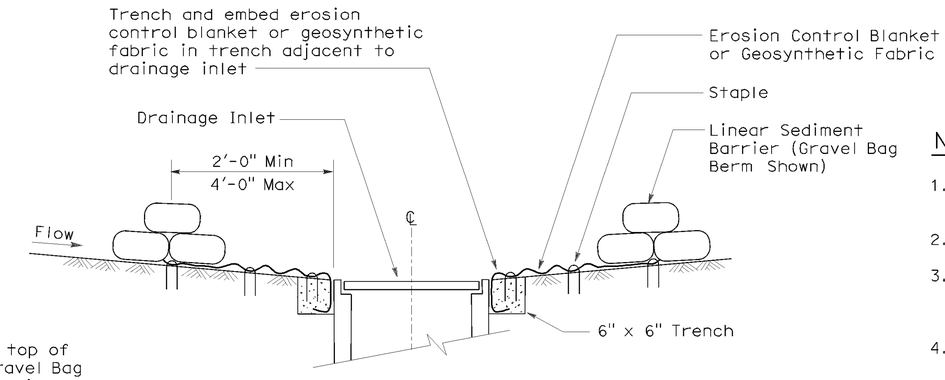

SECTION A-A

NOTES:

1. Place safety cones adjacent to drainage inlet protection.
2. Dimensions may vary to fit field conditions.
3. Install a minimum of 3 gravel bag berms upstream of each drainage inlet to be protected.
4. Position erosion control blanket or geosynthetic fabric at edge of concrete apron and secure in trench.
5. Erosion control blanket or geosynthetic fabric is not required if the area adjacent to the drainage inlet is vegetated or paved.

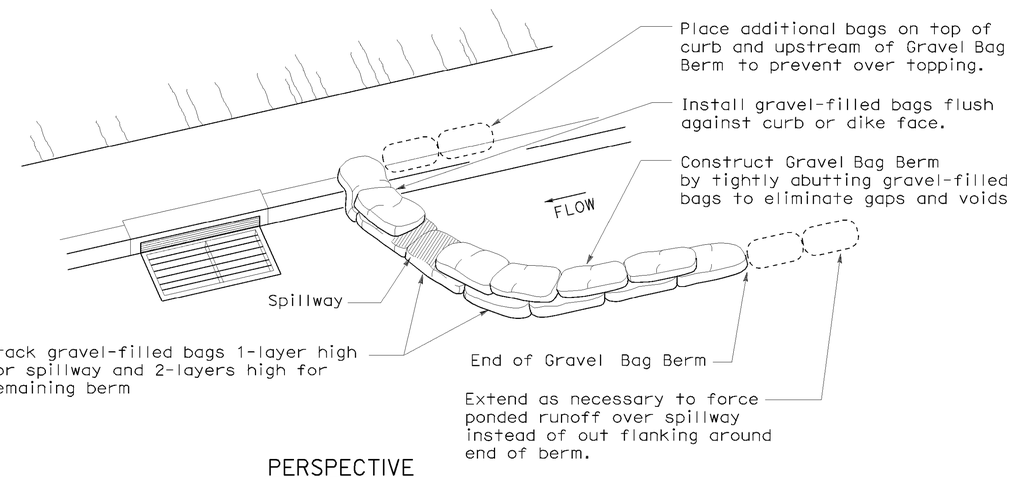

PERSPECTIVE

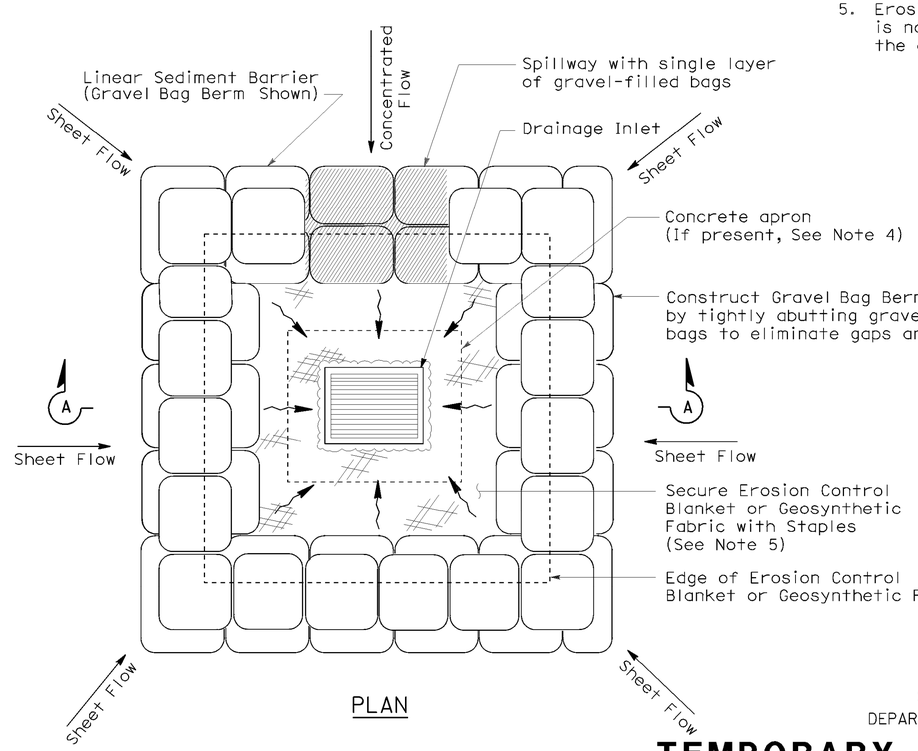

PLAN

TEMPORARY DRAINAGE INLET PROTECTION (TYPE 3B)

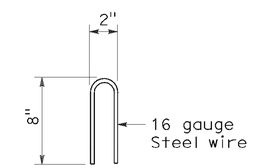

STAPLE DETAIL

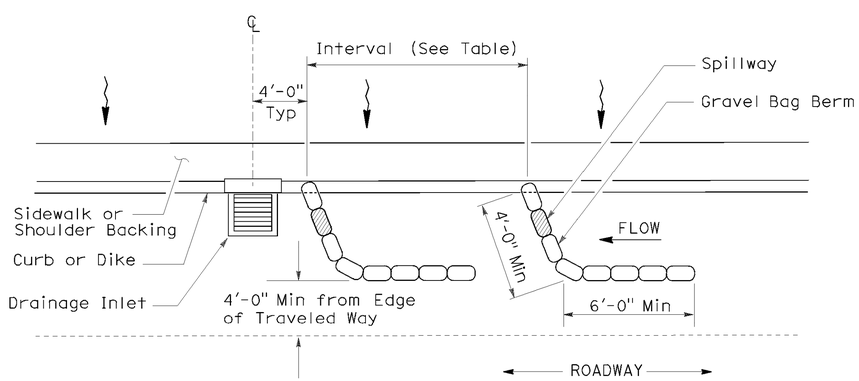

PLAN

TEMPORARY DRAINAGE INLET PROTECTION (TYPE 3A) (GRAVEL BAG BERM)

STATE OF CALIFORNIA
DEPARTMENT OF TRANSPORTATION

TEMPORARY WATER POLLUTION CONTROL DETAILS (TEMPORARY DRAINAGE INLET PROTECTION)

NO SCALE

NSP T62 DATED AUGUST 15, 2008 SUPPLEMENTS THE STANDARD PLANS BOOK DATED MAY 2006.

NEW STANDARD PLAN NSP T62

2006 NEW STANDARD PLAN NSP T62

P:\proj1\02\3E050_plans\pse\23e050va007.dgn

7-11-08

DIST	COUNTY	ROUTE	POST MILES TOTAL PROJECT	SHEET NO.	TOTAL SHEETS
02	Las,Plu	147	0.0/0.5,1.1/1.8, 9.1/9.9	27	32

LICENSED LANDSCAPE ARCHITECT

August 15, 2008
PLANS APPROVAL DATE

The State of California or its officers or agents shall not be responsible for the accuracy or completeness of electronic copies of this plan sheet.

LICENSED LANDSCAPE ARCHITECT — Robert B. Schott — 3685 — Signature — 11-04-08 Renewal Date — 08-11-08 Date — STATE OF CALIFORNIA

To accompany plans dated 01-14-11

FLEXIBLE SEDIMENT BARRIER SPACING TABLE

SLOPE OF ROADWAY (PERCENT)	0 to 0.9	1 to 1.9	2 to 2.9	3 to 4	5+
INTERVAL BETWEEN BARRIERS	50′	35′	30′	25′	20′
ANGLE FROM FACE OF CURB	70°	70°	70°	45°	45°
SUGGESTED BARRIER LENGTH	6′	6′	6′	6′	6′

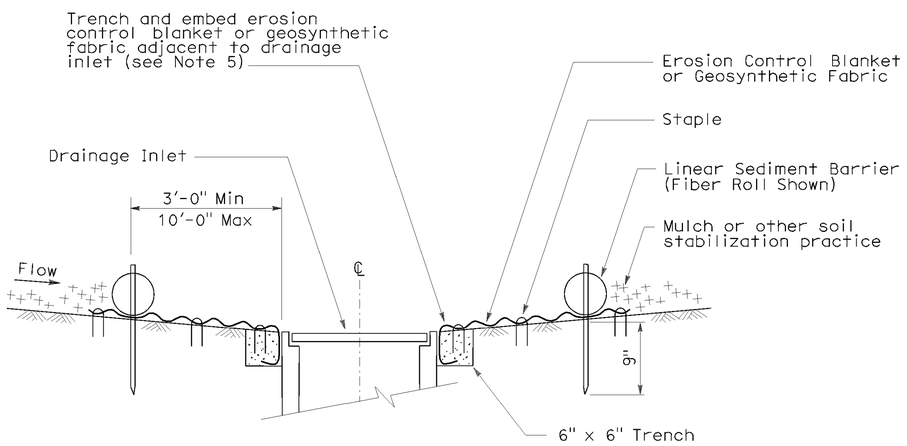

SECTION A-A

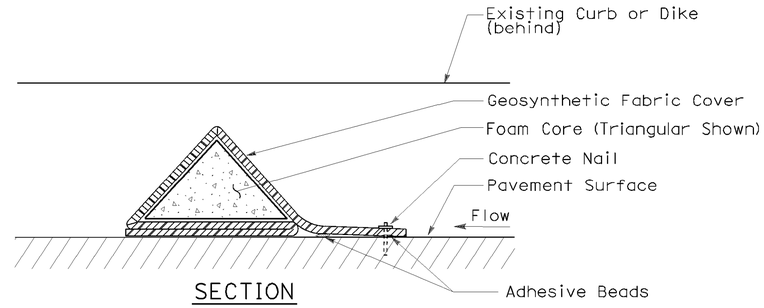

SECTION

FLEXIBLE SEDIMENT BARRIER DETAIL (FOAM BARRIER SHOWN)

NOTES:

1. See Standard Plan T51 for Temporary Silt Fence.
2. Dimensions may vary to fit field conditions.
3. Install a minimum of 3 flexible sediment barriers upstream of each drainage inlet to be protected.
4. Position erosion control blanket or geosynthetic fabric at edge of concrete apron and secure in trench.
5. Erosion control blanket or geosynthetic fabric is not required if the area adjacent to the drainage inlet is vegetated.

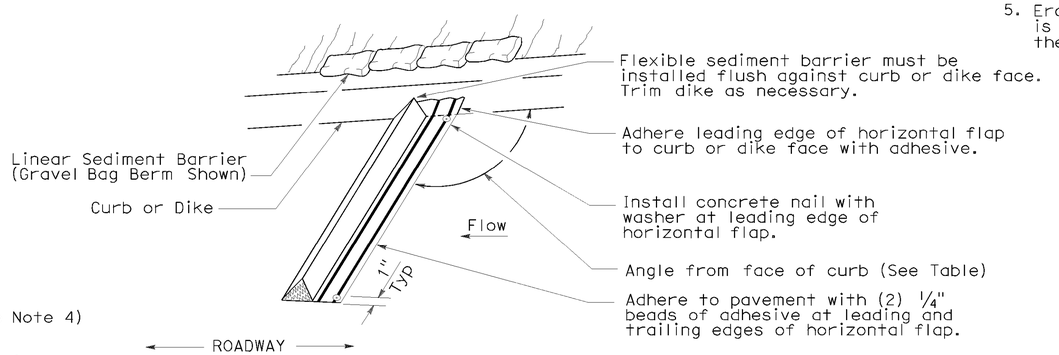

PERSPECTIVE

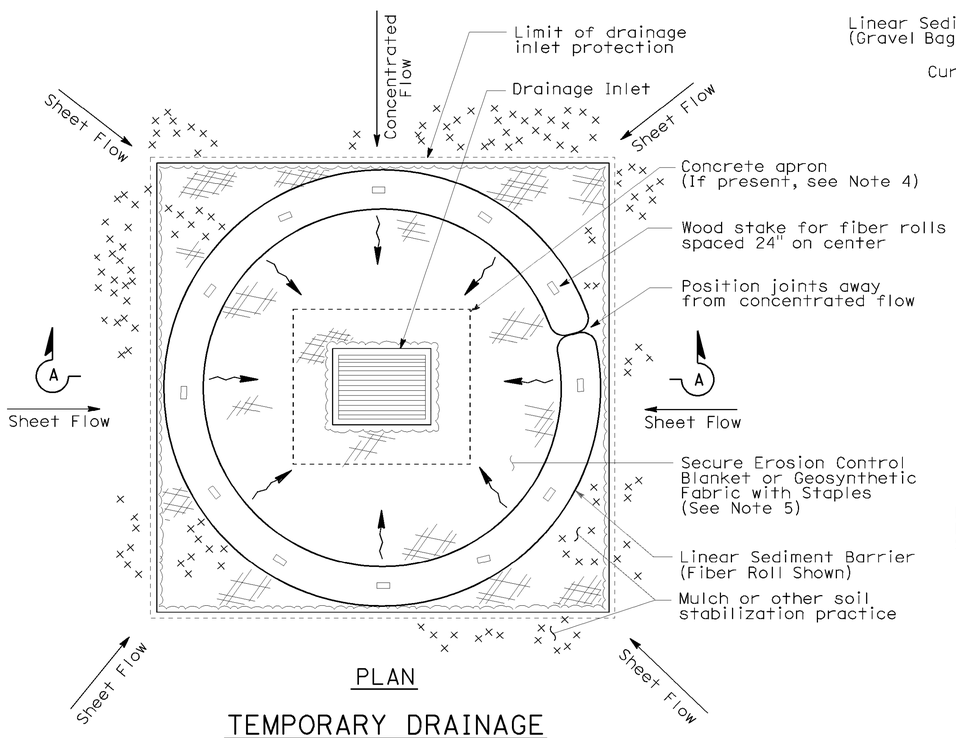

PLAN

TEMPORARY DRAINAGE INLET PROTECTION (TYPE 4A)

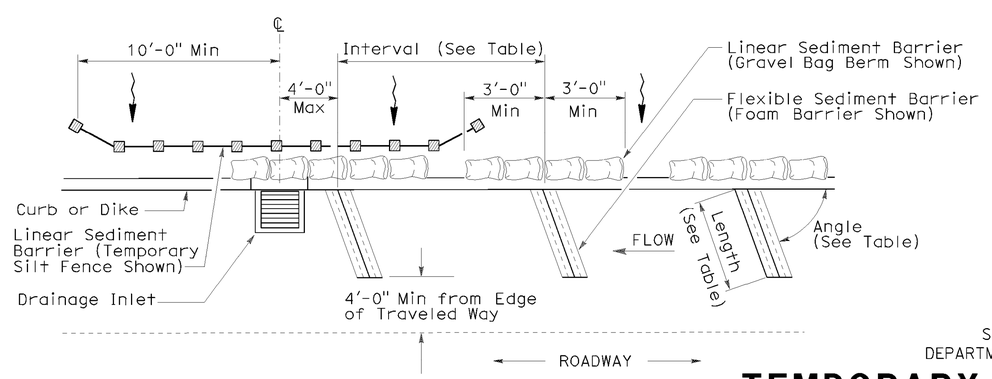

PLAN

TEMPORARY DRAINAGE INLET PROTECTION (TYPE 4B) FLEXIBLE SEDIMENT BARRIER

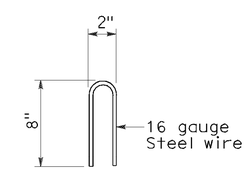

STAPLE DETAIL

STATE OF CALIFORNIA
DEPARTMENT OF TRANSPORTATION

TEMPORARY WATER POLLUTION CONTROL DETAILS (TEMPORARY DRAINAGE INLET PROTECTION)

NO SCALE

NSP T63 DATED AUGUST 15, 2008 SUPPLEMENTS THE STANDARD PLANS BOOK DATED MAY 2006.

NEW STANDARD PLAN NSP T63

2006 NEW STANDARD PLAN NSP T63

P:\proj\02\3E050_plans\pse\23e050vd008.dgn

7-11-08

DIST	COUNTY	ROUTE	POST MILES TOTAL PROJECT	SHEET NO.	TOTAL SHEETS
02	Las,Plu	147	0.0/0.5,1.1/1.8, 9.1/9.9	28	32

LICENSED LANDSCAPE ARCHITECT

August 15, 2008
PLANS APPROVAL DATE

The State of California or its officers or agents shall not be responsible for the accuracy or completeness of electronic copies of this plan sheet.

LICENSED LANDSCAPE ARCHITECT Robert B. Schott 3825 Signature 11-04-08 Renewal Date 08-11-08 Date STATE OF CALIFORNIA

To accompany plans dated 01-14-11

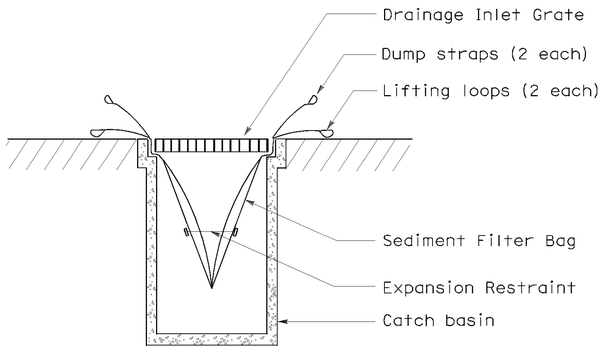

SECTION B-B

SEDIMENT FILTER BAG DETAIL

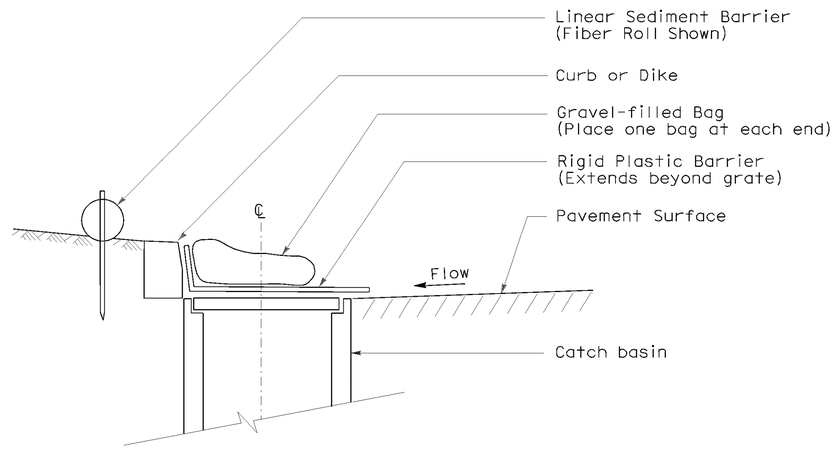

SECTION

TEMPORARY DRAINAGE INLET PROTECTION (TYPE 6A) (CATCH BASIN WITH GRATE)

NOTES:

1. See Standard Plan T51 for Temporary Silt Fence.
2. Dimensions may vary to fit field conditions.

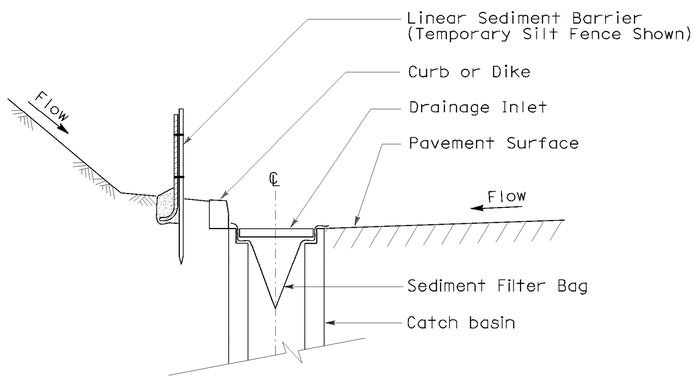

SECTION A-A

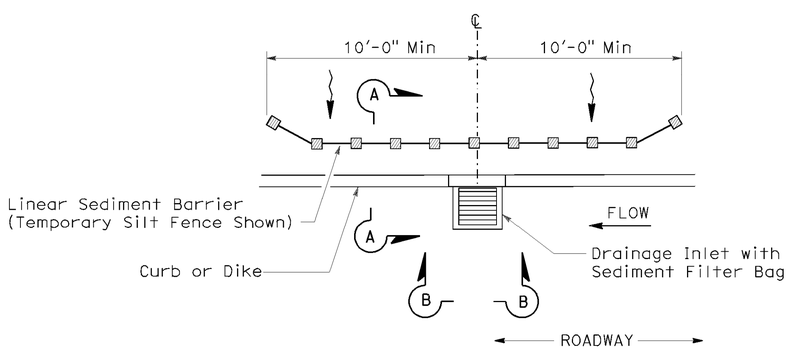

PLAN

TEMPORARY DRAINAGE INLET PROTECTION (TYPE 5) (SEDIMENT FILTER BAG)

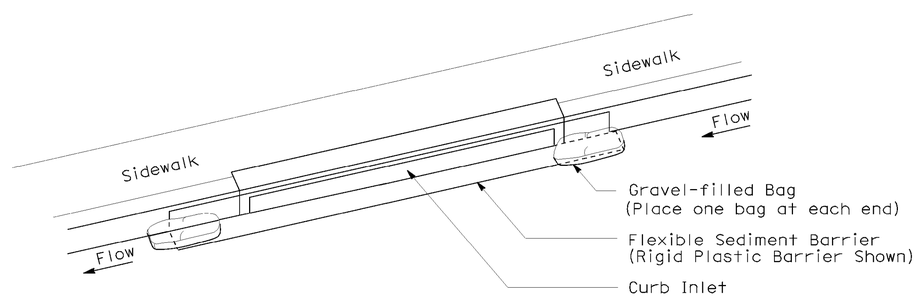

PERSPECTIVE

TEMPORARY DRAINAGE INLET PROTECTION (TYPE 6B) (CURB INLET WITHOUT GRATE)

STATE OF CALIFORNIA
DEPARTMENT OF TRANSPORTATION

TEMPORARY WATER POLLUTION CONTROL DETAILS (TEMPORARY DRAINAGE INLET PROTECTION)

NO SCALE

NSP T64 DATED AUGUST 15, 2008 SUPPLEMENTS THE STANDARD PLANS BOOK DATED MAY 2006.

NEW STANDARD PLAN NSP T64

2006 NEW STANDARD PLAN NSP T64

P:\proj1\02\3E050_plans\pse\23e050va009.dgn

7-11-08

DIST	COUNTY	ROUTE	POST MILES TOTAL PROJECT	SHEET NO.	TOTAL SHEETS
02	Las,Plu	147	0.0/0.5,1.1/1.8, 9.1/9.9	29	32

REGISTERED ELECTRICAL ENGINEER

October 5, 2007
PLANS APPROVAL DATE

REGISTERED PROFESSIONAL ENGINEER Jeffery G. McRae No. E14512 Exp. 6-30-08 ELECTRICAL STATE OF CALIFORNIA

The State of California or its officers or agents shall not be responsible for the accuracy or completeness of electronic copies of this plan sheet.

To accompany plans dated 01-14-11

ELECTROLIERS

STANDARD TYPES
15, 15D
15 STRUCTURE
21, 21D STRUCTURE
30
31
32
35
36-20A

High mast light pole

Double Arm lighting standard

Existing electrolier

Electrolier foundation (Future installation)

NOTES:

1. Luminaires shall be 310 W HPS when installed on Type 21, 21D, 30, 31, 32, 35 and 36-20A Standards, unless otherwise specified. Luminaires shall be 200 W HPS when installed on other type standards or poles, unless otherwise specified.
2. Luminaires shall be the cutoff type, ANSI Type Ⅲ medium cutoff lighting distribution, unless otherwise specified.
3. Variations noted adjacent to symbol on project plans.

Electrolier (see project notes or project plans)

Luminaire on wood pole

STANDARD NOTES:

- AB — Abandon. If applied to conduit, remove conductors.
- BC — Install pull box in existing conduit run.
- BP — Pedestrian barricade, type as indicated on plan.
- CB — Install conduit into existing pull box.
- CC — Connect new and existing conduit. Remove existing conductors and install conductors as indicated.
- CF — Conduit to remain for future use. Remove conductors. Install pull wire or rope.
- DH — Detector handhole.
- FA — Foundation to be abandoned.
- IS — Install sign on signal mast arm.
- NS — No slip base on standard.
- PEC — Photoelectric control.
- PEU — Photoelectric unit.
- RC — Equipment or material to be removed and become the property of the Contractor.
- RE — Remove electrolier, fuses and ballast. Tape ends of conductors.
- RL — Relocate equipment.
- RR — Remove and reuse equipment.
- RS — Remove and salvage equipment.
- SC — Splice new to existing conductors.
- SD — Service disconnect.
- SF — Standard to remain for future use. Remove luminaire, pole conductors, fuses and ballast.
- TSP — Telephone service point.

ABBREVIATIONS AND EQUIPMENT DESIGNATIONS

PROPOSED	EXISTING	
BBS	bbs	Battery backup system
BC	bc	Bolt circle
C	C	Conduit
CCTV	cctv	Closed circuit television
CKT	ckt	Circuit
CMS	cms	Changeable message sign
DLC	dlc	Loop detector lead-in cable
EMS	ems	Extinguishable message sign
EVC	evc	Emergency vehicle cable
EVD	evd	Emergency vehicle detector
FB	fb	Flashing beacon
FBCA	fbca	Flashing beacon control assembly
FBS	fbs	Flashing beacon with slip base
FO	fo	Fiber optic
G	G	Ground (Equipment Grounding Conductor)
GFCI	GFCI	Ground fault circuit interrupt
HAR	har	Highway advisory radio
HEX	hex	Hexagonal
HPS	hps	High pressure sodium
IISNS	iisns	Internally illuminated street name sign
ISL	isl	Induction sign lighting
LED	led	Light emitting diode
LMA	lma	Luminaire mast arm
LPS	lps	Low pressure sodium
LTG	ltg	Lighting
LUM	lum	Luminaire
MAT	mat	Mast arm mounting vehicle signal faces, top attachment
MAS	mas	Mast arm mounting vehicle signal faces, side attachment
MAS-4A	mas-4A	Mast arm mounting vehicle signal faces, side attachment - 4 signal section
MAS-4B	mas-4B	
MAS-4C	mas-4C	
MAS-5A	mas-5A	Mast arm mounting vehicle signal faces, side attachment - 5 signal section
MAS-5B	mas-5B	
MC	mc	Mercury contactor
M/M	m/m	Multiple to multiple transformer
MT	mt	Conduit with pull wire or rope only
MTG	mtg	Mounting
	mv	Mercury vapor lighting fixture
N	N	Neutral (Grounded Conductor)
NC	NC	Normally closed
NO	NO	Normally open
PB	pb	Pull box
PEC	pec	Photoelectric control (Type Ⅰ, Ⅱ, Ⅲ, Ⅳ or Ⅴ as shown)
PED	ped	Pedestrian
PEU	peu	Photoelectric unit
PPB	ppb	Pedestrian push button
RL		Relocated equipment
RM	rm	Ramp metering
SB	sb	Slip base
SIC	sic	Signal interconnect cable
SIG	sig	Signal
SMA	sma	Signal mast arm
SNS	sns	Street name sign
SP	sp	Service point
TDC	tdc	Telephone demarcation cabinet
TMS	tms	Traffic monitoring station
TOS	tos	Traffic Operations System
VEH	veh	Vehicle
XFMR	xfmr	Transformer
COMM	comm	Communication
RWIS	rwis	Roadway weather information system

SOFFIT AND WALL MOUNTED LUMINAIRES

Pendant, 70 W HPS unless otherwise specified.

Flush, 70 W HPS unless otherwise specified.

Wall surface, 70 W HPS unless otherwise specified.

Existing soffit or wall luminaire to remain unmodified.

Existing soffit or wall luminaire to be modified as specified.

NOTE:

Arrow indicates "street side" of luminaire.

STATE OF CALIFORNIA
DEPARTMENT OF TRANSPORTATION

ELECTRICAL SYSTEMS (SYMBOLS AND ABBREVIATIONS)

NO SCALE

RSP ES-1A DATED OCTOBER 5, 2007 SUPERSEDES STANDARD PLAN ES-1A DATED MAY 1, 2006 - PAGE 400 OF THE STANDARD PLANS BOOK DATED MAY 2006.

REVISED STANDARD PLAN RSP ES-1A

2006 REVISED STANDARD PLAN RSP ES-1A

P:\proj1\02\3E050_plans\pse\23e050va010.dgn

7-10-07

DIST	COUNTY	ROUTE	POST MILES TOTAL PROJECT	SHEET NO.	TOTAL SHEETS
02	Las,Plu	147	0.0/0.5,1.1/1.8, 9.1/9.9	30	32

REGISTERED ELECTRICAL ENGINEER

October 5, 2007
PLANS APPROVAL DATE

REGISTERED PROFESSIONAL ENGINEER Jeffery G. McRae No. E14512 Exp. 6-30-08 ELECTRICAL STATE OF CALIFORNIA

The State of California or its officers or agents shall not be responsible for the accuracy or completeness of electronic copies of this plan sheet.

To accompany plans dated 01-14-11

CONDUIT

PROPOSED	EXISTING	
		Lighting Conduit, unless otherwise indicated or noted
		Traffic signal conduit
C	c	Communication conduit
T	t	Telephone conduit
F	f	Fire alarm conduit
FO	fo	Fiber optic conduit
		Conduit termination (RSP ES-9A C)
R	r	Conduit riser in/on structure or service pole

SERVICE EQUIPMENT

PROPOSED	EXISTING	
OH	oh	Overhead lines
U	U	Wood pole "U" indicates utility owned
		Pole guy with anchor
		Utility transformer - ground mounted
III		Service equipment enclosure type
		Service equipment enclosure door indicates front of enclosure
T	t	Telephone demarcation cabinet

POLE-MOUNTED SERVICE DESIGNATION

Type of installation

TYPE H SERVICE - 28'-10" ← Pole height above grade

ILLUMINATED OVERHEAD SIGN

PROPOSED	EXISTING	
		Overhead sign - Single post
		Overhead sign - Two post
		Overhead sign - Mounted on structure
		Overhead sign with electrolier

SIGNAL EQUIPMENT

PROPOSED	EXISTING	
		Pedestrian signal face
		Pedestrian push button post
		Pedestrian barricade
		Vehicle signal face (with backplate, 3-Section: red, yellow and green)
		Vehicle signal face with angle visors
PV	PV	Modifications of basic symbols: "L" indicates all non-arrow sections louvered "LG" indicates louvered green section only "PV" indicates 12" programmed visibility sections "8" indicates all 8" sections (only when specified)
		Type 15TS and Vehicle signal face
		Vehicle signal face with red, yellow and green left arrow sections
		Vehicle signal face with red and yellow sections and up green arrow
		Vehicle signal face (5 Section) with red, yellow and green sections and yellow and green right arrows
		Type 1 Standard and attached vehicle signal faces
		Standard with signal mast arm only and attached vehicle signal faces and internally illuminated street name sign
		Type 33 Standard, Left-turn vehicle signal face and sign
		Standard with luminaire and signal mast arms and attached vehicle signal faces
		Cantilever flashing beacon Type 9 Frame, with a sign unless otherwise specified or indicated
		Type 15-FBS Standard with two vehicle signal face sections with lens, backplate and visor with a sign
R	Y	Flashing beacon. One vehicle signal face section with lens, backplate and visor. "R" indicates red indication, "Y" indicates yellow indication
		Controller assembly. Door indicates front of cabinet

SIGNAL EQUIPMENT Cont

PROPOSED	EXISTING	
		Guard post
		Type 1 Standard with "Meter On" sign
		Emergency Vehicle detector

NOTES:

1. All signal sections shall be 12" unless shown otherwise.
2. Signal heads shall be provided with backplates unless shown otherwise.
3. Signal indication shall be LED.

STATE OF CALIFORNIA
DEPARTMENT OF TRANSPORTATION

ELECTRICAL SYSTEMS (SYMBOLS AND ABBREVIATIONS)

NO SCALE

RSP ES-1B DATED OCTOBER 5, 2007 SUPERCEDES STANDARD PLAN ES-1B DATED MAY 1, 2006 - PAGE 401 OF THE STANDARD PLANS BOOK DATED MAY 2006.

REVISED STANDARD PLAN RSP ES-1B

2006 REVISED STANDARD PLAN RSP ES-1B

P:\proj\02\3E050_plans\pse\23e050va011.dgn

7-10-07

DIST	COUNTY	ROUTE	POST MILES TOTAL PROJECT	SHEET NO.	TOTAL SHEETS
02	Las,Plu	147	0.0/0.5,1.1/1.8, 9.1/9.9	31	32

REGISTERED ELECTRICAL ENGINEER

October 5, 2007
PLANS APPROVAL DATE

REGISTERED PROFESSIONAL ENGINEER Jeffery G. McRae No. E14512 Exp. 6-30-08 ELECTRICAL STATE OF CALIFORNIA

The State of California or its officers or agents shall not be responsible for the accuracy or completeness of electronic copies of this plan sheet.

To accompany plans dated 01-14-11

EQUIPMENT IDENTIFICATION

ILLUMINATED SIGN IDENTIFICATION NUMBER:

Sign No. 12345

10 ISL SCI 1.0

- Sign number - Place on post or structure
- Transformer rating (kVA)
- Lighting control type
- Number and type of fixtures

Do NOT place on standard or structure

ELECTROLIER OR EQUIPMENT IDENTIFICATION NUMBER:

12345 - 15'-0"

- Mast arm length, if shown. Do not place on standard or structure.
- Equipment number - Place on standard or structure. Existing equipment numbers are shown in parenthesis

CONDUIT AND CONDUCTOR IDENTIFICATION:

1½"C, 2#10, 15#14, 2 DLC

- Number and size of conductors and cables
- Size of conduit in inches

Ø1, Ø2, Ø2P, etc.	Traffic phase identification for signal faces, detectors and phase diagrams
1 2 3	Project note numbers
A B C	Equipment description, installation or item numbers
1 2 3	Conduit run numbers

SIGNAL AND LIGHTING STANDARD (TYPICAL DESIGNATION):

19A - 3 - 100

- Wind velocity = 100 mph
- Case 3 arm loading
- Standard type
- Standard Plan sheet number
- Detail number or letter

MISCELLANEOUS EQUIPMENT

PROPOSED	EXISTING	
CMS	cms	Changeable message sign
		Closed circuit television camera
		Highway advisory radio pole and antenna
EMS	ems	Extinguishable message sign
M V	m v	Detection device M = Microwave sensor V = Video image sensor

WIRING DIAGRAM LEGEND

P	Pole
CB	Circuit breaker
A	Ampere
V	Volt
M	Metered
UM	Unmetered
NB	Neutral bus
GB	Ground bus
G	Equipment grounding conductor
N	Grounded conductor (Neutral)

- External conductor
- Conductor or bus
- Tie point
- Contactor coil
- Contactor, Contact NO
- Terminal blocks
- Contactor, Contact NC
- Enclosure bond
- Grounding electrode
- Circuit breaker
- Receptacle

PULL BOXES

PROPOSED	EXISTING	
		Pull box-No. 5 unless otherwise indicated or noted.
3	9A(21)	Pull box-Additional designations or descriptions

3 = No. 3½ pull box
5 = No. 5 pull box
6 = No. 6 pull box
7 = No. 7 (Ceiling pull box)
8 = No. 8 (Pendant soffit pull box)
9 = No. 9 pull box
9A = No. 9A pull box

(C) = Communications pull box
(E) = Pull box with extension
(S) = Sprinkler control pull box
(21) = Anchor bolts and conduit for future installation of Type 21 Standard
(T) = Traffic pull box

VEHICLE DETECTORS

5 J 9 U

- Vehicle detector designation
- U = Upper
  L = Lower
- Slot number in input file
- Input file (I or J)
- Phase

PROPOSED	EXISTING	
		Type A detector loop. Outline of sawcut shown.
		Type B detector loop. Outline of sawcut shown.
		Type C detector loop. Outline of sawcut shown.
		Type D detector loop. Outline of sawcut shown.
		Type E detector loop. Outline of sawcut shown.
		Type Q detector loop. Outline of sawcut shown.
		Magnetic detector
DH	dh	Detector handhole
		Microwave or video detection zone

STATE OF CALIFORNIA
DEPARTMENT OF TRANSPORTATION

ELECTRICAL SYSTEMS (SYMBOLS AND ABBREVIATIONS)

NO SCALE

RSP ES-1C DATED OCTOBER 5, 2007 SUPERCEDES STANDARD PLAN ES-1C DATED MAY 1, 2006 - PAGE 402 OF THE STANDARD PLANS BOOK DATED MAY 2006.

REVISED STANDARD PLAN RSP ES-1C

2006 REVISED STANDARD PLAN RSP ES-1C

P:\proj1\02\3E050_plans\pse\23e050va012.dgn

7-10-07

DIST	COUNTY	ROUTE	POST MILES TOTAL PROJECT	SHEET NO.	TOTAL SHEETS
02	Las,Plu	147	0.0/0.5,1.1/1.8, 9.1/9.9	32	32

REGISTERED ELECTRICAL ENGINEER

October 5, 2007
PLANS APPROVAL DATE

REGISTERED PROFESSIONAL ENGINEER Jeffery G. McRae No. E14512 Exp. 6-30-08 ELECTRICAL STATE OF CALIFORNIA

The State of California or its officers or agents shall not be responsible for the accuracy or completeness of electronic copies of this plan sheet.

To accompany plans dated 01-14-11

2006 REVISED STANDARD PLAN RSP ES-5A

LOOP INSTALLATION PROCEDURE

1. Loops shall be centered in lanes.
2. Saw slots in pavement for loop conductors as shown in details.
3. Distance between side of loop and a lead-in saw cut from adjacent detectors shall be 2'-0" minimum. Distance between lead-in saw cuts shall be 6" minimum.
4. Bottom of saw slot shall be smooth with no sharp edges.
5. Slots shall be washed until clean, blown out and thoroughly dried before installing loop conductors.
6. Adjacent loops on the same sensor unit channel shall be wound in opposite directions.
7. Identify and tag loop circuit pairs in the pull box with loop number, start (S) and finish (F) of conductor. Identify and tag lead-in-cable with sensor number and phase.
8. Install loop conductor in slot using a 3/16" to 1/4" thick wood paddle. Hold loop conductors with wood paddles (at the bottom of the sawed slot) during sealant placement.
9. No more than 2 twisted pairs shall be installed in one sawed slot.
10. Allow additional 5'-0" of slack length of conductor for the lead-in run to pull box.
11. The additional length of each conductor for each loop shall be twisted together into a pair (6 turns per 3'-4" minimum) before being placed in the slot and conduit leading to pull box.
12. Test each loop circuit for continuity, circuit resistance and insulation resistance at the pull box before filling slots.
13. Fill slots as shown in details.
14. Splice loop conductors to lead-in-cable. Splices shall be soldered.
15. End of lead-in-cable and Type 2 loop conductor shall be waterproofed prior to installing in conduit to prevent moisture from entering the cable.
16. Lead-in-cable shall not be spliced between the pull box and the controller cabinet terminals.
17. Test each loop circuit for continuity, circuit resistance and insulation resistance at the controller cabinet location.
18. Where loop conductors are not to be spliced to a lead-in-cable, the ends of the conductors shall be taped and waterproofed with electrical insulating coating.

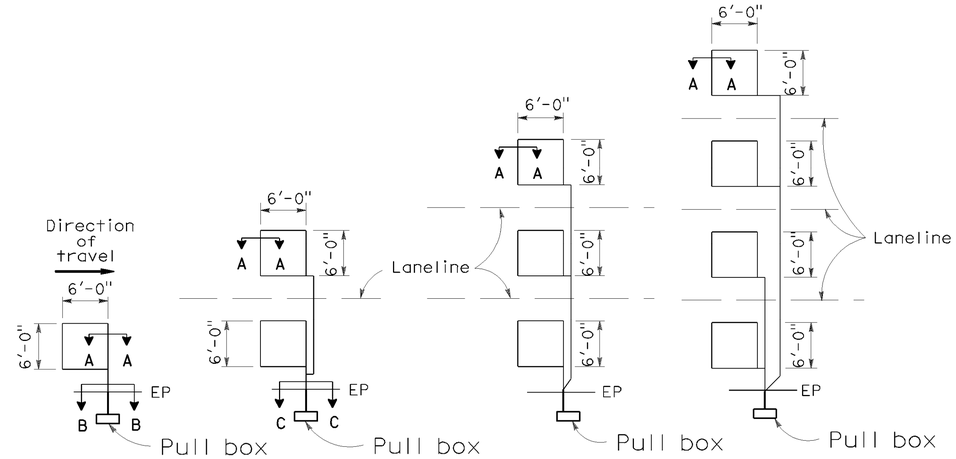

TYPE 1A INSTALLATION | TYPE 2A INSTALLATION | TYPE 3A INSTALLATION | TYPE 4A INSTALLATION

SAWCUT DETAILS

(Type A loop detector configurations illustrated)

1. 1A thru 4A = 1 Type A loop configuration in each lane.
2. 1B thru 4B = 1 Type B loop configuration in each lane.
3. 1C = 1 Type C loop configuration entering lanes as required.
4. 1D thru 4D = 1 Type D loop configuration in each lane.
5. 1E thru 4E = 1 Type E loop configuration in each lane.
6. 1Q thru 4Q = 1 Type Q loop configuration in each lane. (Use Type A, B, C, D, E or Q loop detector configurations only when specified or shown on plans)

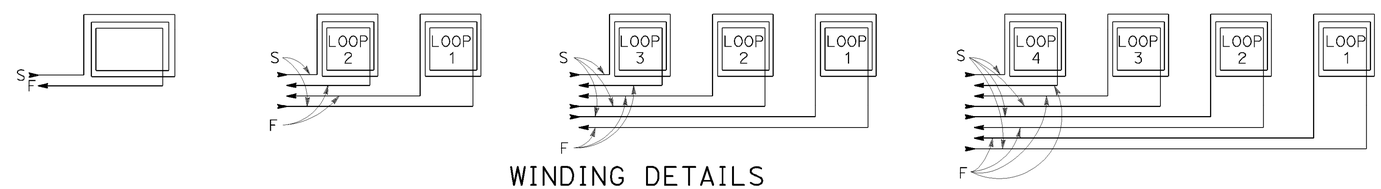

WINDING DETAILS

See Notes 6 and 7

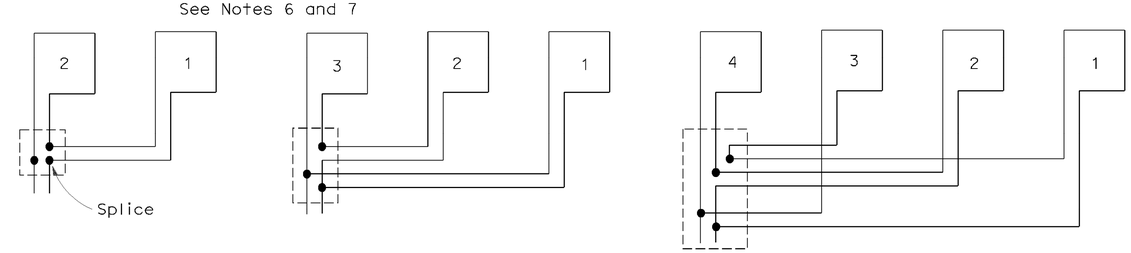

TYPICAL LOOP CONNECTIONS

(Dashed lines represent the pull box)

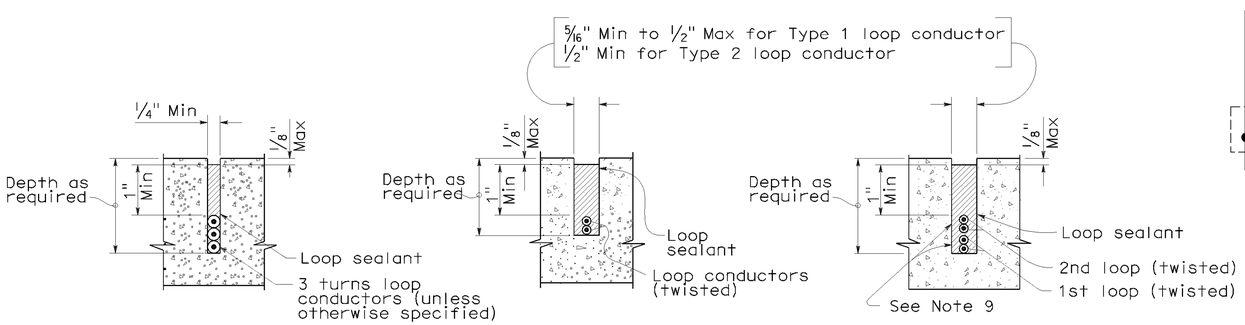

SECTION A-A | SECTION B-B | SECTION C-C

SLOT DETAILS - TYPE 1 AND TYPE 2 LOOP CONDUCTOR

STATE OF CALIFORNIA
DEPARTMENT OF TRANSPORTATION

ELECTRICAL SYSTEMS (DETECTORS)

NO SCALE

RSP ES-5A DATED OCTOBER 5, 2007 SUPERCEDES STANDARD PLAN ES-5A DATED MAY 1, 2006 - PAGE 423 OF THE STANDARD PLANS BOOK DATED MAY 2006.

REVISED STANDARD PLAN RSP ES-5A

P:\proj\02\3E050_plans\pse\23e050va013.dgn

8-17-07