Dist	COUNTY	ROUTE	POST MILES TOTAL PROJECT	SHEET No.	TOTAL SHEETS
02	Sis	5	R50.6/R52.1	1	84

ACBRIM-005-9(171)E

STATE OF CALIFORNIA
DEPARTMENT OF TRANSPORTATION

PROJECT PLANS FOR CONSTRUCTION ON
STATE HIGHWAY
IN SISKIYOU COUNTY
NEAR YREKA
FROM 0.6 MILE SOUTH OF SHASTA RIVER BRIDGES TO 0.2 MILE SOUTH OF VISTA POINT

TO BE SUPPLEMENTED BY STANDARD PLANS DATED MAY 2006

INDEX OF PLANS

SHEET No.	DESCRIPTION
1	TITLE AND LOCATION MAP
2	TYPICAL CROSS SECTIONS
3-6	LAYOUTS
7-8	PROFILES
9-11	CONSTRUCTION DETAILS
12	TEMPORARY WATER POLLUTION CONTROL DETAIL
13	EROSION CONTROL PLAN
14-17	DRAINAGE PLANS AND PROFILES
18	EDGE DRAIN PLAN
19	CONSTRUCTION AREA SIGNS
20-21	STAGE CONSTRUCTION PLANS AND TRAFFIC HANDLING PLANS
22-27	TRAFFIC HANDLING DETAILS
28	TRAFFIC HANDLING QUANTITIES
29	PAVEMENT DELINEATION DETAILS
30-31	SUMMARY OF QUANTITIES
32-64	REVISED AND NEW STANDARD PLANS

STRUCTURE PLANS

65-84	SHASTA RIVER BRIDGE, Br No. 02-0148R/L

THE STANDARD PLANS LIST APPLICABLE TO THIS CONTRACT IS INCLUDED IN THE NOTICE TO BIDDERS AND SPECIAL PROVISIONS BOOK.

LOCATION MAP

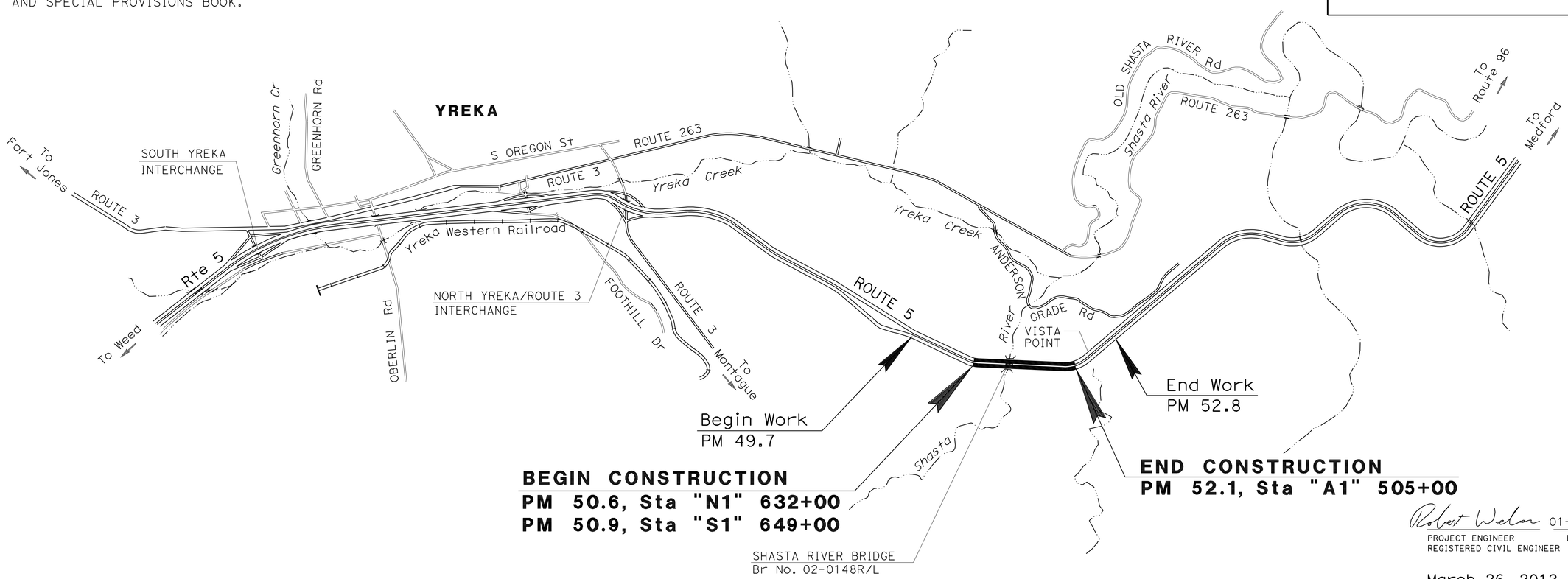

Robert Weber 01-05-12
PROJECT ENGINEER DATE
REGISTERED CIVIL ENGINEER

REGISTERED PROFESSIONAL ENGINEER
ROBERT WEBER
No. C62511
Exp. 09-30-13
CIVIL
STATE OF CALIFORNIA

March 26, 2012
PLANS APPROVAL DATE

THE STATE OF CALIFORNIA OR ITS OFFICERS OR AGENTS SHALL NOT BE RESPONSIBLE FOR THE ACCURACY OR COMPLETENESS OF ELECTRONIC COPIES OF THIS PLAN SHEET.

THE CONTRACTOR SHALL POSSESS THE CLASS (OR CLASSES) OF LICENSE AS SPECIFIED IN THE "NOTICE TO BIDDERS."

NO SCALE

CONTRACT No.	02-3C9204
PROJECT ID	0200000345

PROJECT MANAGER: DEREK WILLIS
DESIGN ENGINEER: STEVE TOPAL

P:\proj2\02\3c920_plans\pse\23c920db001.dgn

LAST REVISION 01-05-12
DATE PLOTTED => 23-MAY-2012
TIME PLOTTED => 08:13

Dist	COUNTY	ROUTE	POST MILES TOTAL PROJECT	SHEET No.	TOTAL SHEETS
02	Sis	5	R50.6/R52.1	2	84

Robert Weber 01-05-12
REGISTERED CIVIL ENGINEER DATE

3-26-12
PLANS APPROVAL DATE

REGISTERED PROFESSIONAL ENGINEER ROBERT WEBER No. C62511 Exp. 9-30-13 CIVIL STATE OF CALIFORNIA

THE STATE OF CALIFORNIA OR ITS OFFICERS OR AGENTS SHALL NOT BE RESPONSIBLE FOR THE ACCURACY OR COMPLETENESS OF SCANNED COPIES OF THIS PLAN SHEET.

NOTES:

1. SEE LAYOUTS AND DETAILS FOR ADDITIONAL INFORMATION ON CURB, DIKE AND MBGR.
2. WHERE EXISTING NB AND SB MEDIAN SHOULDER IS NOT 5′ WIDE, COLD PLANE BEYOND EP AND PLACE HMA ON EXISTING MATERIAL. SEE LAYOUTS FOR STATION AND OFFSET OF FINAL EP.

ABBREVIATIONS:

CPACP COLD PLANE ASPHALT CONCRETE PAVEMENT

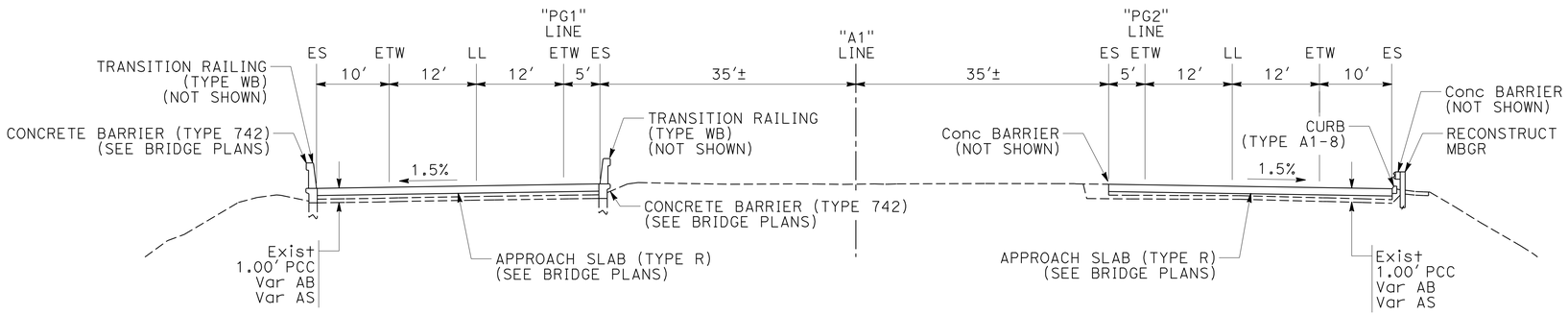

NB "A1" 459+52.4 TO 459+82.4
SB "A1" 459+71.7 TO 460+01.7

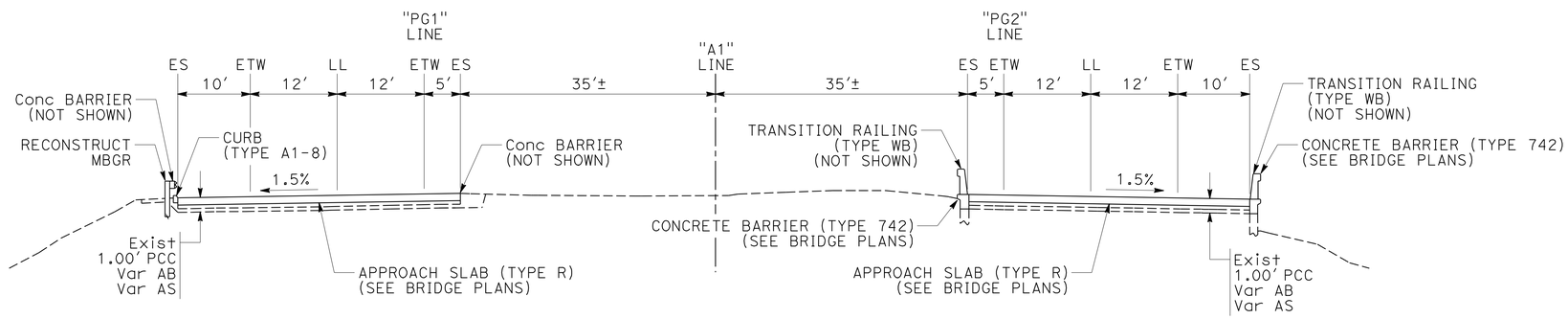

NB "A1" 453+92.6 TO 454+22.6
SB "A1" 454+11.8 TO 454+41.8

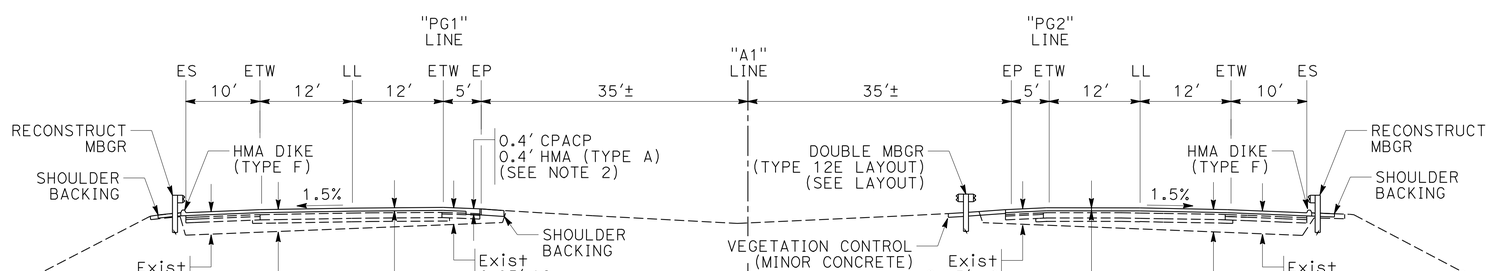

NB "A1" 451+50 TO 453+92.6
SB "A1" 451+50 TO 454+11.8

TYPICAL CROSS SECTIONS

NO SCALE

X-1

R. WEBER	01-16-12
REVISED BY	DATE REVISED
ROBERT WEBER	RUSSELL FLOOD
CALCULATED-DESIGNED BY	CHECKED BY
FUNCTIONAL SUPERVISOR	STEVE TOPAL

STATE OF CALIFORNIA - DEPARTMENT OF TRANSPORTATION
Caltrans DESIGN

P:\proj2\02\3c920_plans\pse\23c920ca001.dgn

LAST REVISION 12-01-11 | DATE PLOTTED => 30-MAR-2012 | TIME PLOTTED => 08:27

Dist	COUNTY	ROUTE	POST MILES TOTAL PROJECT	SHEET No.	TOTAL SHEETS
02	Sis	5	R50.6/R52.1	3	84

Robert Weber 01-05-12
REGISTERED CIVIL ENGINEER DATE

3-26-12
PLANS APPROVAL DATE

REGISTERED PROFESSIONAL ENGINEER ROBERT WEBER No. C62511 Exp. 9-30-13 CIVIL STATE OF CALIFORNIA

THE STATE OF CALIFORNIA OR ITS OFFICERS OR AGENTS SHALL NOT BE RESPONSIBLE FOR THE ACCURACY OR COMPLETENESS OF SCANNED COPIES OF THIS PLAN SHEET.

NOTES:

1. FOR ACCURATE RIGHT OF WAY DATA CONTACT RIGHT OF WAY ENGINEERING AT THE DISTRICT OFFICE.
2. CROSSOVERS 1 AND 2 WILL BE CONSTRUCTED UNDER CONTRACT 02-3E7604.
3. PORTIONS OF CROSSOVERS 1 AND 2 WILL BE REMOVED AND SHOULDER BACKING PLACED ALONG THE RESULTING EP AT THE END OF STAGE 2 AS DIRECTED BY THE ENGINEER.
4. SEE DRAINAGE PLANS FOR DRAINAGE WORK.

LEGEND

- COLD PLANE AC PAVEMENT PLACE HMA (TYPE A)
- DIRECTION OF TRAFFIC
- DRAINAGE SYSTEM No.
- SHOULDER RUMBLE STRIP
- REMOVE AC PAVEMENT
- TEMPORARY FENCE (TYPE ESA)
- VEGETATION CONTROL (MINOR CONCRETE)

ABBREVIATIONS

CPACP	COLD PLANE ASPHALT CONCRETE PAVEMENT
Recnst	RECONSTRUCT
SRS	SHOULDER RUMBLE STRIP (GROUND-IN INDENTATION)
TCE	TEMPORARY CONSTRUCTION EASMENT
TRWB	TRANSITION RAILING (TYPE WB)

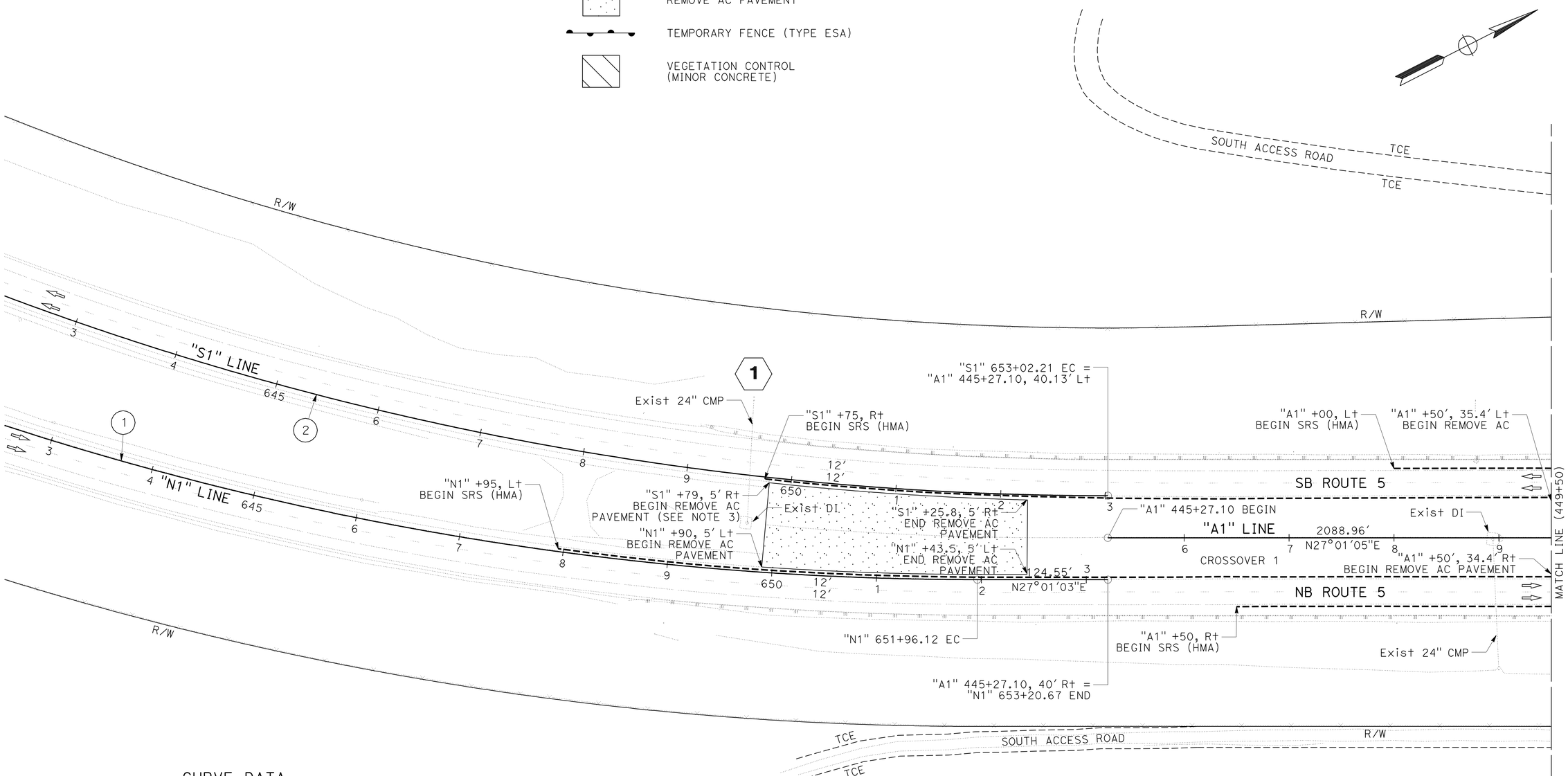

CURVE DATA

No. ⊕	R	Δ	T	L
1	3000'	35°9'00"	950.22'	1840.46'
2	3000'	35°9'00"	950.22'	1840.46'

LAYOUT

SCALE: 1" = 50'

L-1

REVISED BY	DATE REVISED
R. WEBER	01-14-12

CALCULATED-DESIGNED BY: ROBERT WEBER
CHECKED BY: RUSSELL FLOOD
FUNCTIONAL SUPERVISOR: STEVE TOPAL

STATE OF CALIFORNIA - DEPARTMENT OF TRANSPORTATION
Caltrans
DESIGN

P:\proj2\02\3c920_plans\pse\23c920ea001.dgn

LAST REVISION 01-14-12
DATE PLOTTED => 30-MAR-2012
TIME PLOTTED => 08:27

Dist	COUNTY	ROUTE	POST MILES TOTAL PROJECT	SHEET No.	TOTAL SHEETS
02	Sis	5	R50.6/R52.1	4	84

Robert Weber 01-05-12
REGISTERED CIVIL ENGINEER DATE

3-26-12
PLANS APPROVAL DATE

REGISTERED PROFESSIONAL ENGINEER ROBERT WEBER No. C62511 Exp. 9-30-13 CIVIL STATE OF CALIFORNIA

THE STATE OF CALIFORNIA OR ITS OFFICERS OR AGENTS SHALL NOT BE RESPONSIBLE FOR THE ACCURACY OR COMPLETENESS OF SCANNED COPIES OF THIS PLAN SHEET.

NOTES:

1. FOR ACCURATE RIGHT OF WAY DATA CONTACT RIGHT OF WAY ENGINEERING AT THE DISTRICT OFFICE.
2. CONSTRUCT MBGR SYSTEM USING 12E LAYOUT PER 2006 REVISED STANDARD PLAN A77F3.
3. PLACE Temp FENCE (TYPE ESA) AS DIRECTED BY THE ENGINEER.

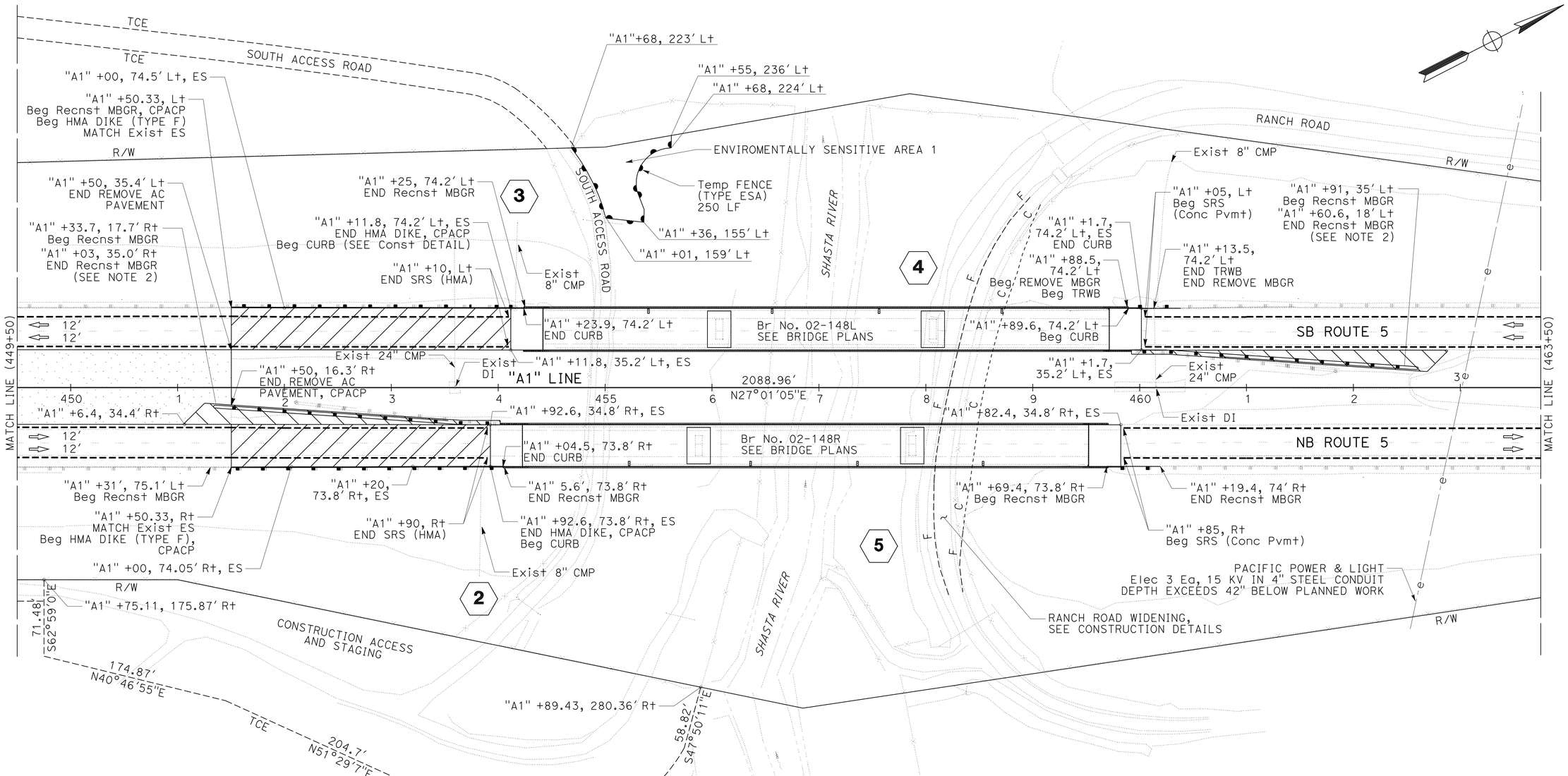

CURVE DATA

No.	R	Δ	T	L
3	158'	102°18'59"	196.24'	282.18'

LAYOUT

SCALE: 1" = 50'

L-2

REVISED BY	DATE REVISED
R. WEBER	01-14-12

CALCULATED-DESIGNED BY: ROBERT WEBER
CHECKED BY: RUSSELL FLOOD
FUNCTIONAL SUPERVISOR: STEVE TOPAL

STATE OF CALIFORNIA - DEPARTMENT OF TRANSPORTATION
Caltrans
DESIGN

P:\proj2\02\3c920_plans\pse\23c920ea002.dgn

LAST REVISION 01-14-12 | DATE PLOTTED => 30-MAR-2012 | TIME PLOTTED => 08:27

Dist	COUNTY	ROUTE	POST MILES TOTAL PROJECT	SHEET No.	TOTAL SHEETS
02	Sis	5	R50.6/R52.1	5	84

Robert Weber 01-05-12
REGISTERED CIVIL ENGINEER DATE

3-26-12
PLANS APPROVAL DATE

REGISTERED PROFESSIONAL ENGINEER ROBERT WEBER No. C62511 Exp. 9-30-13 CIVIL STATE OF CALIFORNIA

THE STATE OF CALIFORNIA OR ITS OFFICERS OR AGENTS SHALL NOT BE RESPONSIBLE FOR THE ACCURACY OR COMPLETENESS OF SCANNED COPIES OF THIS PLAN SHEET.

NOTE:

1. FOR ACCURATE RIGHT OF WAY DATA CONTACT RIGHT OF WAY ENGINEERING AT THE DISTRICT OFFICE

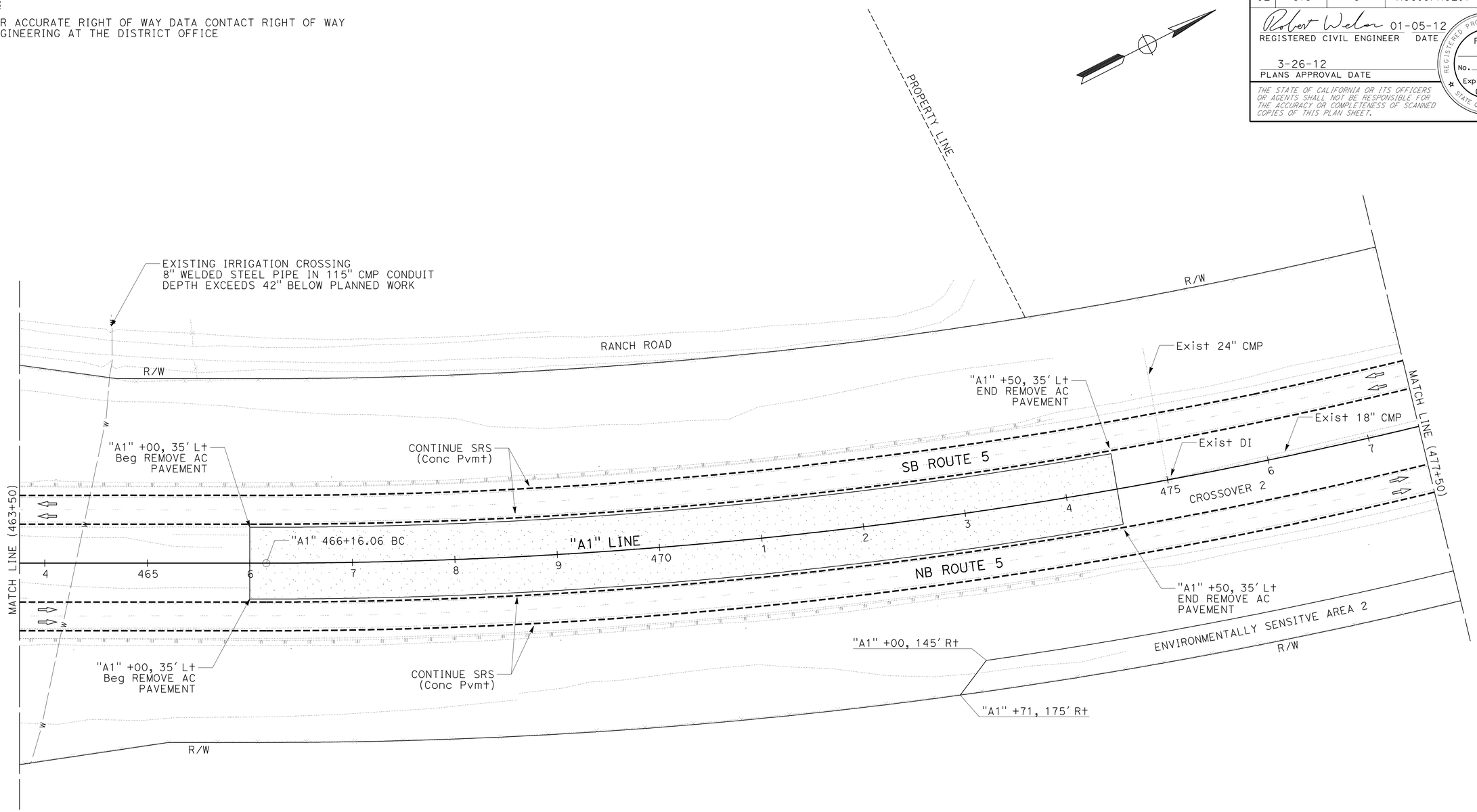

LAYOUT
SCALE: 1" = 50'

L-3

REVISED BY	DATE REVISED
R. WEBER	01-14-12

CALCULATED-DESIGNED BY	CHECKED BY
ROBERT WEBER	RUSSELL FLOOD

FUNCTIONAL SUPERVISOR
STEVE TOPAL

STATE OF CALIFORNIA - DEPARTMENT OF TRANSPORTATION
Caltrans
DESIGN

P:\proj\02\3c920_plans\pse\23c920ea003.dgn

LAST REVISION 01-14-12
DATE PLOTTED => 30-MAR-2012
TIME PLOTTED => 08:27

Dist	COUNTY	ROUTE	POST MILES TOTAL PROJECT	SHEET No.	TOTAL SHEETS
02	Sis	5	R50.6/R52.1	6	84

Robert Weber 01-05-12
REGISTERED CIVIL ENGINEER DATE

3-26-12
PLANS APPROVAL DATE

REGISTERED PROFESSIONAL ENGINEER
ROBERT WEBER
No. C62511
Exp. 9-30-13
CIVIL
STATE OF CALIFORNIA

THE STATE OF CALIFORNIA OR ITS OFFICERS OR AGENTS SHALL NOT BE RESPONSIBLE FOR THE ACCURACY OR COMPLETENESS OF SCANNED COPIES OF THIS PLAN SHEET.

NOTE:

1. FOR ACCURATE RIGHT OF WAY DATA CONTACT RIGHT OF WAY ENGINEERING AT THE DISTRICT OFFICE

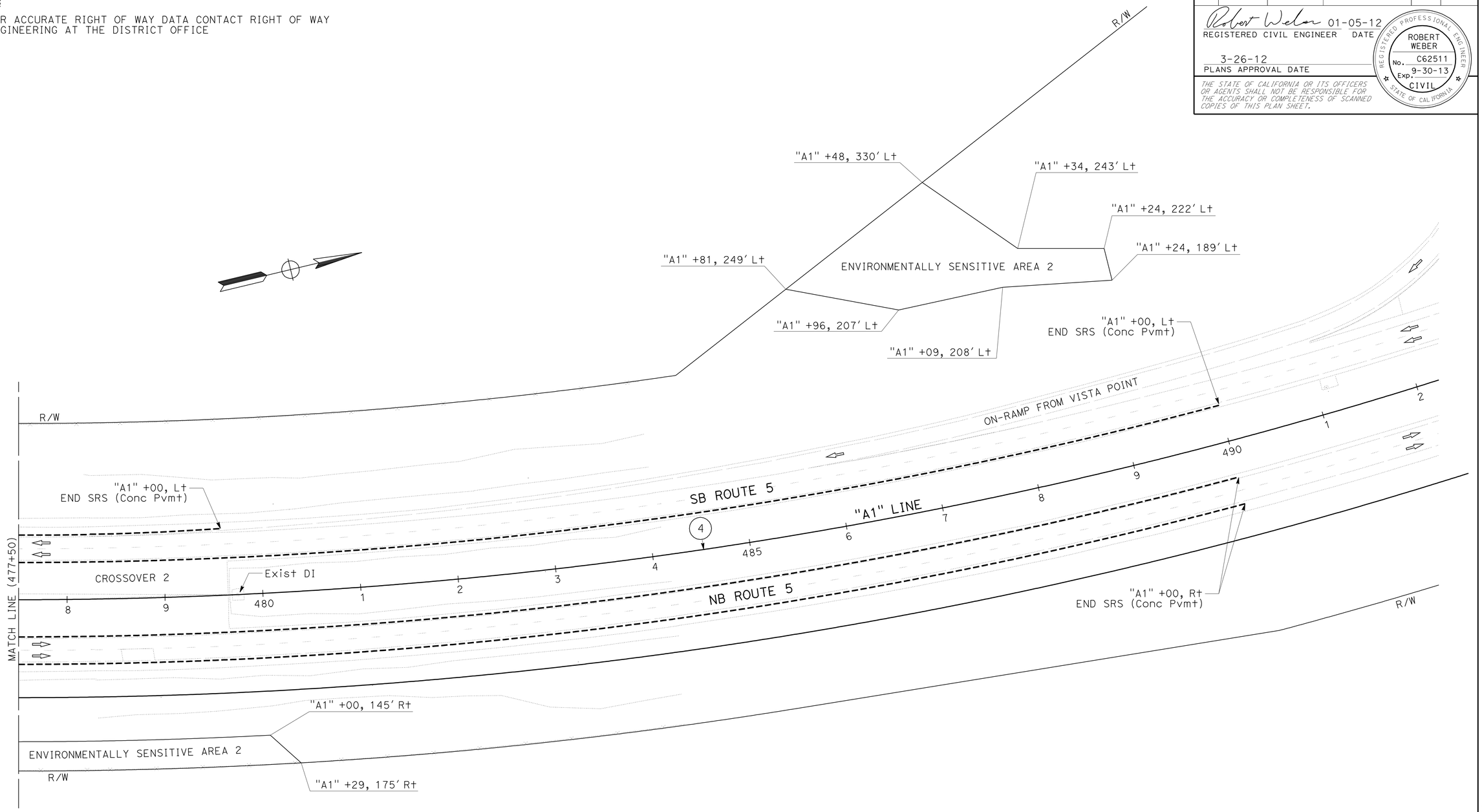

CURVE DATA

No. ⊕	R	Δ	T	L
4	4800'	39°12'00"	1709.22'	3284.04'

LAYOUT
SCALE: 1" = 50'

L-4

REVISED BY	DATE REVISED
R. WEBER	10-04-11

ROBERT WEBER — RUSSELL FLOOD
CALCULATED-DESIGNED BY — CHECKED BY
FUNCTIONAL SUPERVISOR — STEVE TOPAL

STATE OF CALIFORNIA - DEPARTMENT OF TRANSPORTATION
Caltrans
DESIGN

P:\proj2\02\3c920_plans\pse\23c920ea004.dgn

LAST REVISION 10-04-11 | DATE PLOTTED => 30-MAR-2012 | TIME PLOTTED => 08:27

Dist	COUNTY	ROUTE	POST MILES TOTAL PROJECT	SHEET No.	TOTAL SHEETS
02	Sis	5	R50.6/R52.1	7	84

Robert Weber 01-05-12
REGISTERED CIVIL ENGINEER DATE

3-26-12
PLANS APPROVAL DATE

REGISTERED PROFESSIONAL ENGINEER
ROBERT WEBER
No. C62511
Exp. 9-30-13
CIVIL
STATE OF CALIFORNIA

THE STATE OF CALIFORNIA OR ITS OFFICERS OR AGENTS SHALL NOT BE RESPONSIBLE FOR THE ACCURACY OR COMPLETENESS OF SCANNED COPIES OF THIS PLAN SHEET.

NOTE:

1. VERTICAL DATUM, NAVD 88.

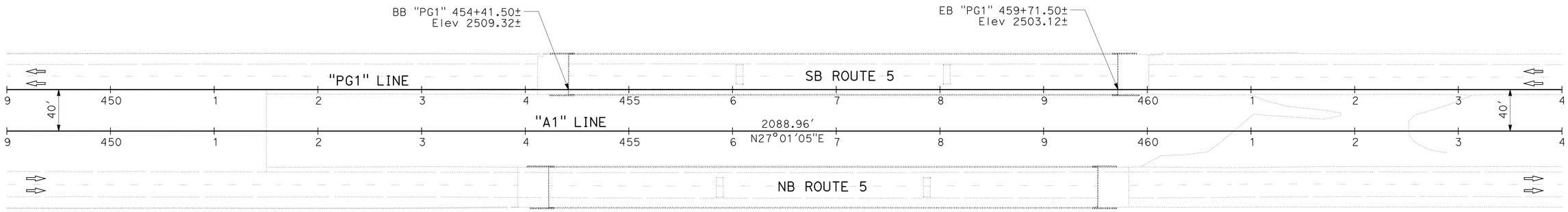

PLAN
SCALE: 1" = 50'

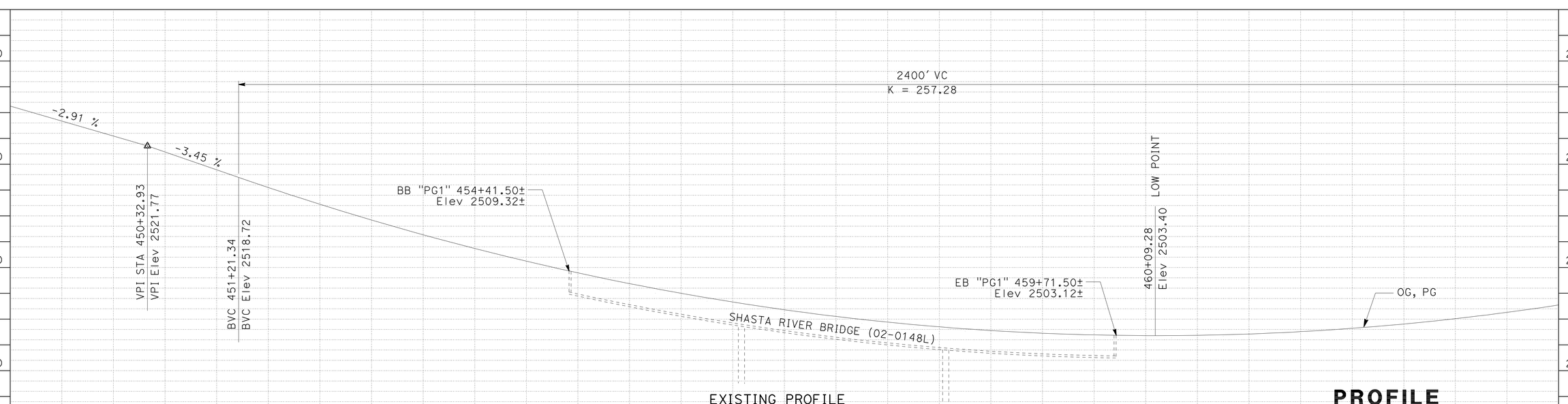

PROFILE
SCALE: Horiz 1" = 10'
Vert 1" = 1'

P-1

STATION	450	451	452	453	454	455	456	457	458	459	460	461	462	463	TOTAL
CY Exc															
CY Emb															

REVISED BY	DATE REVISED
R. WEBER	12-21-11

CALCULATED-DESIGNED BY	CHECKED BY
ROBERT WEBER	RUSSELL FLOOD

FUNCTIONAL SUPERVISOR: STEVE TOPAL

STATE OF CALIFORNIA - DEPARTMENT OF TRANSPORTATION
Caltrans
DESIGN

P:\proj2\02\3c920_plans\pse\23c920fa001.dgn

LAST REVISION 12-21-11
DATE PLOTTED => 30-MAR-2012
TIME PLOTTED => 08:27

Dist	COUNTY	ROUTE	POST MILES TOTAL PROJECT	SHEET No.	TOTAL SHEETS
02	Sis	5	R50.6/R52.1	8	84

Robert Weber 01-05-12
REGISTERED CIVIL ENGINEER DATE

3-26-12
PLANS APPROVAL DATE

REGISTERED PROFESSIONAL ENGINEER
ROBERT WEBER
No. C62511
Exp. 9-30-13
CIVIL
STATE OF CALIFORNIA

THE STATE OF CALIFORNIA OR ITS OFFICERS OR AGENTS SHALL NOT BE RESPONSIBLE FOR THE ACCURACY OR COMPLETENESS OF SCANNED COPIES OF THIS PLAN SHEET.

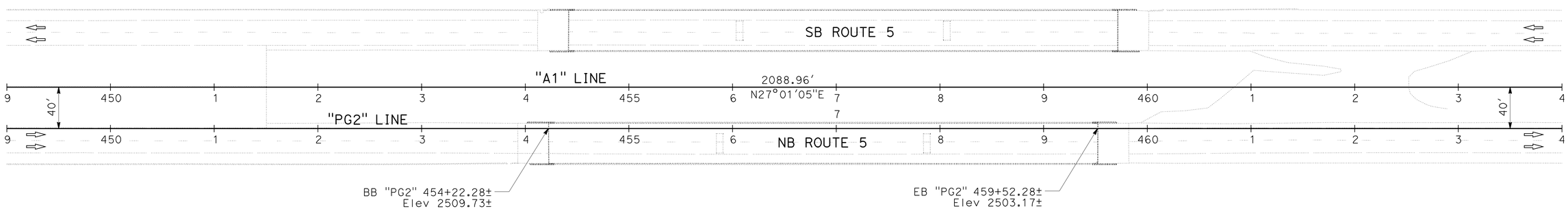

PLAN
SCALE: 1" = 50'

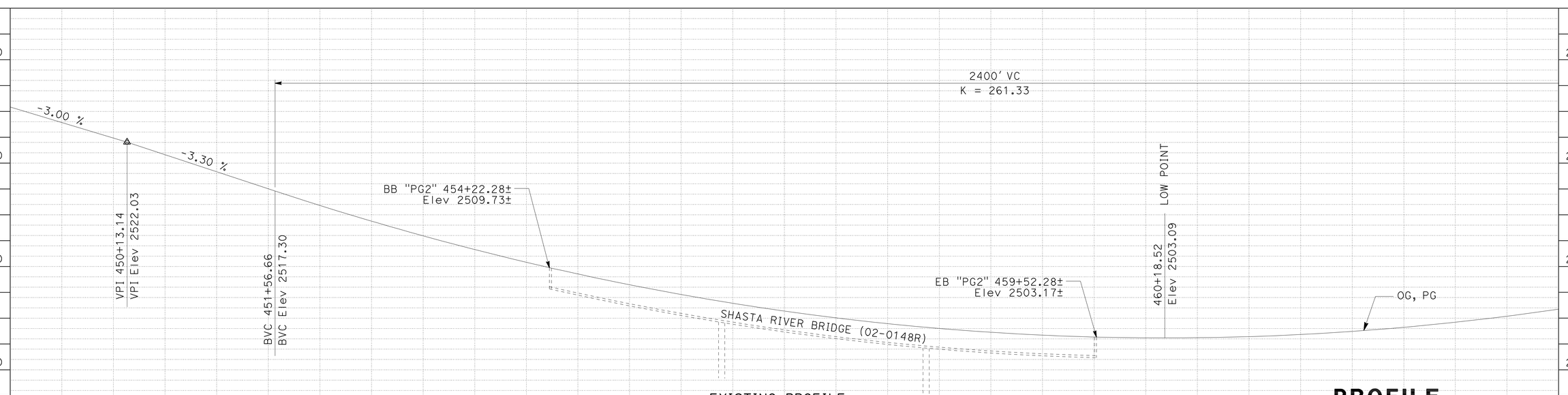

PROFILE
SCALE: Horiz 1" = 10'
Vert 1" = 1'

P-2

STATION	450	451	452	453	454	455	456	457	458	459	460	461	462	463	TOTAL
CY Exc															
CY Emb															

REVISED BY	R. WEBER
DATE REVISED	12-21-11
CALCULATED-DESIGNED BY	ROBERT WEBER
CHECKED BY	RUSSELL FLOOD
FUNCTIONAL SUPERVISOR	STEVE TOPAL

STATE OF CALIFORNIA - DEPARTMENT OF TRANSPORTATION
Caltrans® DESIGN

P:\proj2\023c920_plans\pse\23c920fa002.dgn

LAST REVISION 12-21-11
DATE PLOTTED => 30-MAR-2012
TIME PLOTTED => 08:27

Dist	COUNTY	ROUTE	POST MILES TOTAL PROJECT	SHEET No.	TOTAL SHEETS
02	Sis	5	R50.6/R52.1	9	84

Robert Weber 01-05-12
REGISTERED CIVIL ENGINEER DATE

3-26-12
PLANS APPROVAL DATE

REGISTERED PROFESSIONAL ENGINEER ROBERT WEBER No. C62511 Exp. 9-30-13 CIVIL STATE OF CALIFORNIA

THE STATE OF CALIFORNIA OR ITS OFFICERS OR AGENTS SHALL NOT BE RESPONSIBLE FOR THE ACCURACY OR COMPLETENESS OF SCANNED COPIES OF THIS PLAN SHEET.

NOTE:

1. CURB IS IDENTIFIED IN BID ITEM LIST AS MINOR CONCRETE (CURB).

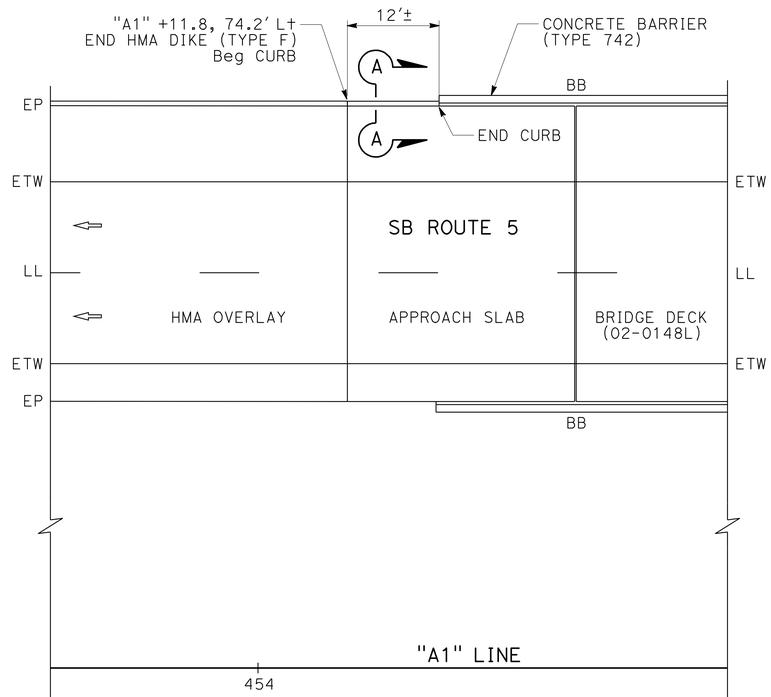

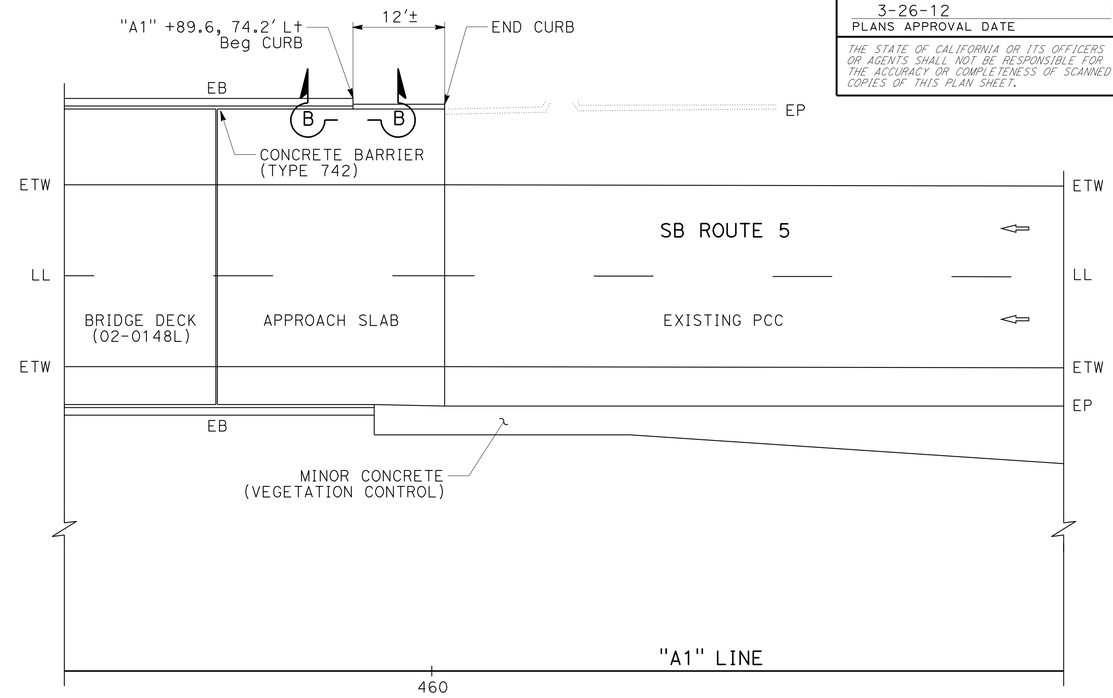

SCALE: 1" = 10'

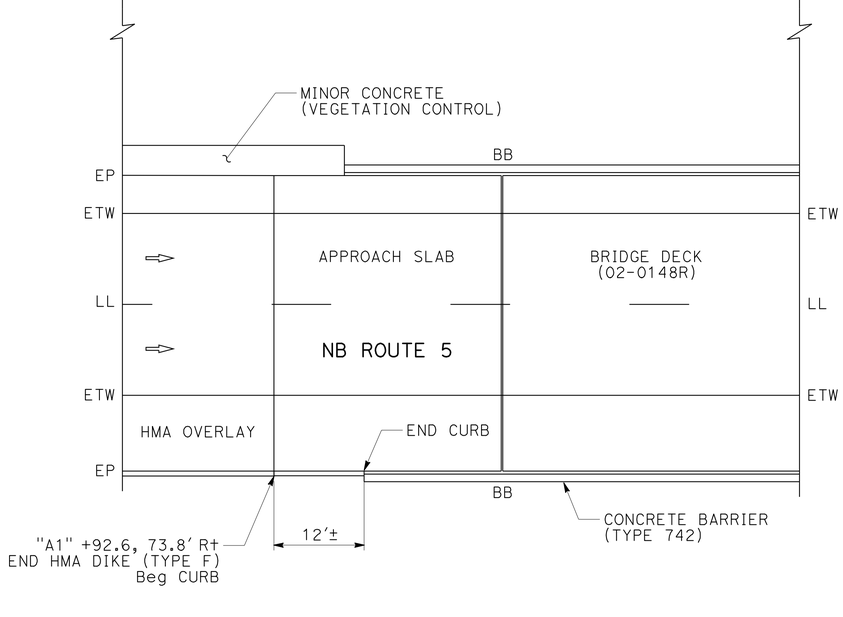

SCALE: 1" = 10'

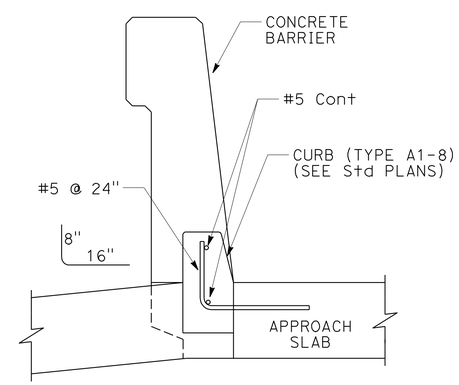

SECTION A-A

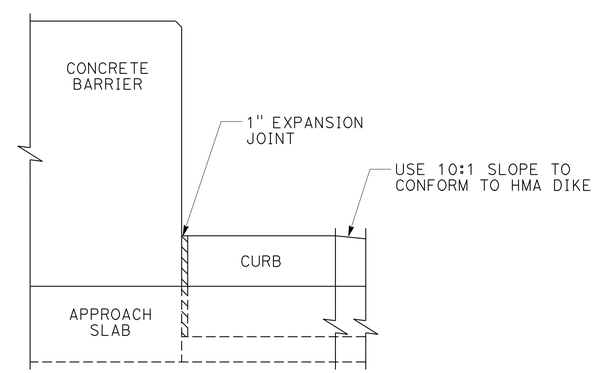

ELEVATION B-B

SCALE: 1" = 1'

CURB DETAILS

CONSTRUCTION DETAILS

SCALE AS SHOWN

C-1

REVISED BY | DATE REVISED
ROBERT WEBER | RUSSELL FLOOD
CALCULATED-DESIGNED BY | CHECKED BY
FUNCTIONAL SUPERVISOR: STEVE TOPAL

STATE OF CALIFORNIA - DEPARTMENT OF TRANSPORTATION
Caltrans DESIGN

P:\proj2\02\3c920_plans\pse\23c920ga001.dgn

LAST REVISION 12-05-11 | DATE PLOTTED => 30-MAR-2012 | TIME PLOTTED => 08:27

Dist	COUNTY	ROUTE	POST MILES TOTAL PROJECT	SHEET No.	TOTAL SHEETS
02	Sis	5	R50.6/R52.1	10	84

Robert Weber 01-05-12
REGISTERED CIVIL ENGINEER DATE

3-26-12
PLANS APPROVAL DATE

REGISTERED PROFESSIONAL ENGINEER
ROBERT WEBER
No. C62511
Exp. 9-30-13
CIVIL
STATE OF CALIFORNIA

THE STATE OF CALIFORNIA OR ITS OFFICERS OR AGENTS SHALL NOT BE RESPONSIBLE FOR THE ACCURACY OR COMPLETENESS OF SCANNED COPIES OF THIS PLAN SHEET.

NOTE:

1. PLAN VIEW OF NORTH END OF CROSSOVER 1 IS USED AS AN EXAMPLE OF TYPICAL CONDITIONS.

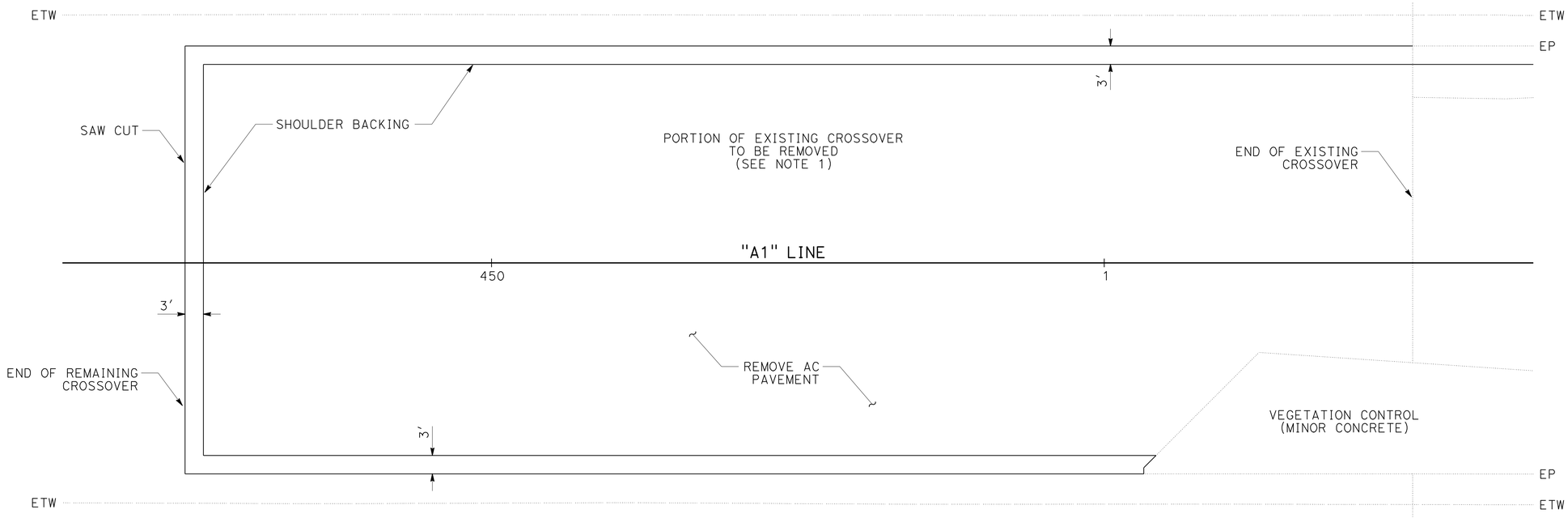

TYPICAL PLAN
CROSSOVER REMOVAL

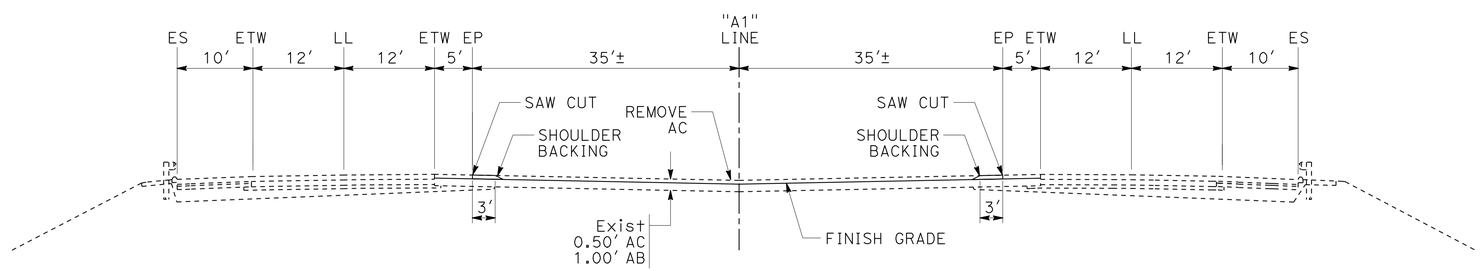

TYPICAL SECTION
CROSSOVER REMOVAL

"S1" 649+79 TO 652+26
"N1" 649+90 TO 652+44
"A1" 449+50 TO 451+50
"A1" 466+00 TO 474+50

CONSTRUCTION DETAILS

NO SCALE

C-2

REVISED BY	DATE REVISED
R. WEBER	01-03-12

CALCULATED-DESIGNED BY: ROBERT WEBER
CHECKED BY: RUSSELL FLOOD
FUNCTIONAL SUPERVISOR: STEVE TOPAL

STATE OF CALIFORNIA - DEPARTMENT OF TRANSPORTATION
Caltrans
DESIGN

P:\proj2\02\3c920_plans\pse\23c920ga002.dgn

LAST REVISION 01-03-12 | DATE PLOTTED => 30-MAR-2012 | TIME PLOTTED => 08:28

Dist	COUNTY	ROUTE	POST MILES TOTAL PROJECT	SHEET No.	TOTAL SHEETS
02	Sis	5	R50.6/R52.1	11	84

REGISTERED CIVIL ENGINEER 01-05-12 DATE

3-26-12
PLANS APPROVAL DATE

REGISTERED PROFESSIONAL ENGINEER TOBY J. CRAWFORD No. C71138 Exp. 6-30-13 CIVIL STATE OF CALIFORNIA

THE STATE OF CALIFORNIA OR ITS OFFICERS OR AGENTS SHALL NOT BE RESPONSIBLE FOR THE ACCURACY OR COMPLETENESS OF SCANNED COPIES OF THIS PLAN SHEET.

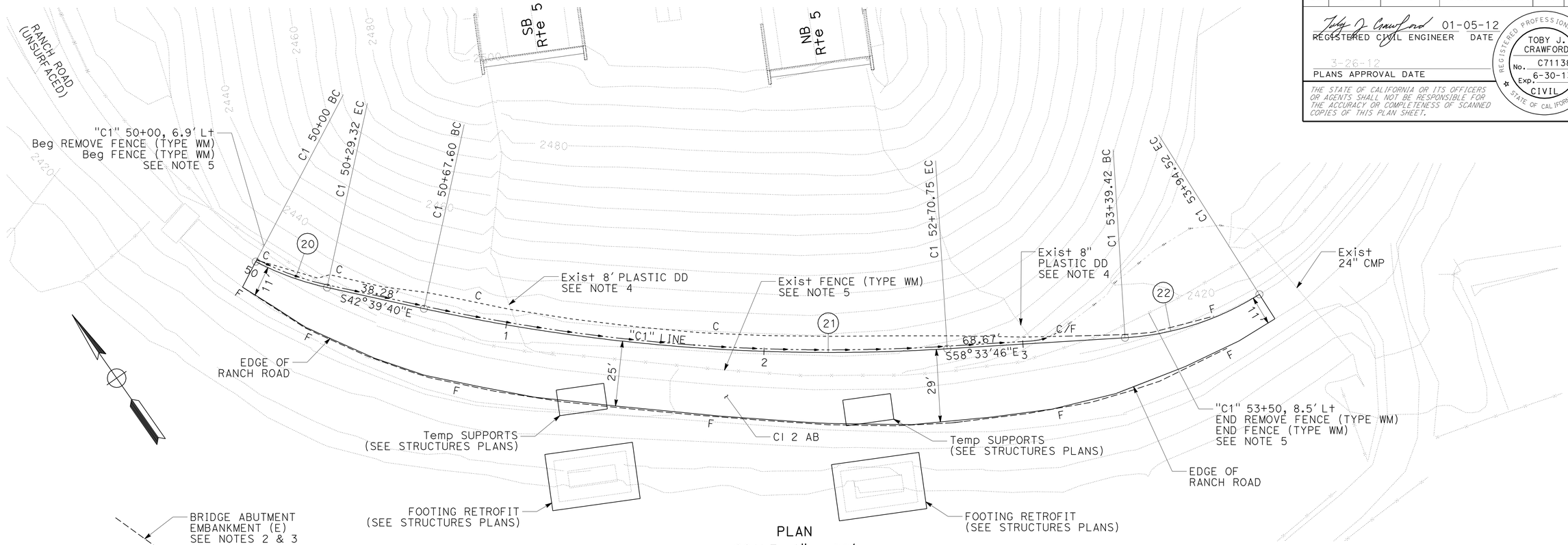

PLAN
SCALE: 1" = 20'

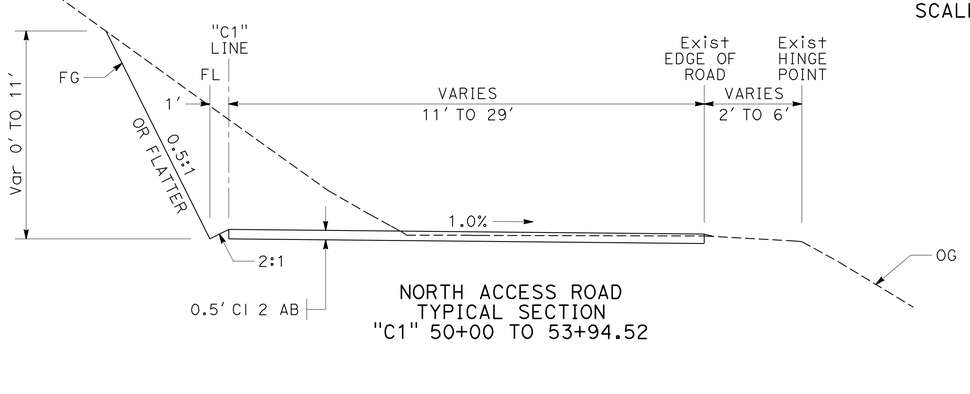

NORTH ACCESS ROAD
TYPICAL SECTION
"C1" 50+00 TO 53+94.52

CURVE DATA

No.	R	Δ	T	L
20	110'	15°16'25"	14.75'	29.32'
21	732'	15°54'05"	102.23'	203.15'
22	110'	28°41'52"	28.14'	55.10'

NOTES:

1. ALL SLOPE RATIOS ARE HORIZONTAL TO VERTICAL (H:V).
2. RESTORE SLOPE TO ORIGINAL GRADE UPON COMPLETION OF BRIDGE WORK.
3. SEE SHEET EC-1 FOR TEMPORARY SLOPE PROTECTION (EROSION CONTROL) REQUIREMENTS.
4. REPOSITION OUTLETS OF EXISTING FLEXIBLE PLASTIC DOWNDRAINS TO THE NEW FLOWLINE OF THE ACCESS ROAD.
5. REPLACE FENCE IN ORIGINAL CONFIGURATION AFTER RESTORING THE ABUTMENT EMBANKMENT SLOPE.

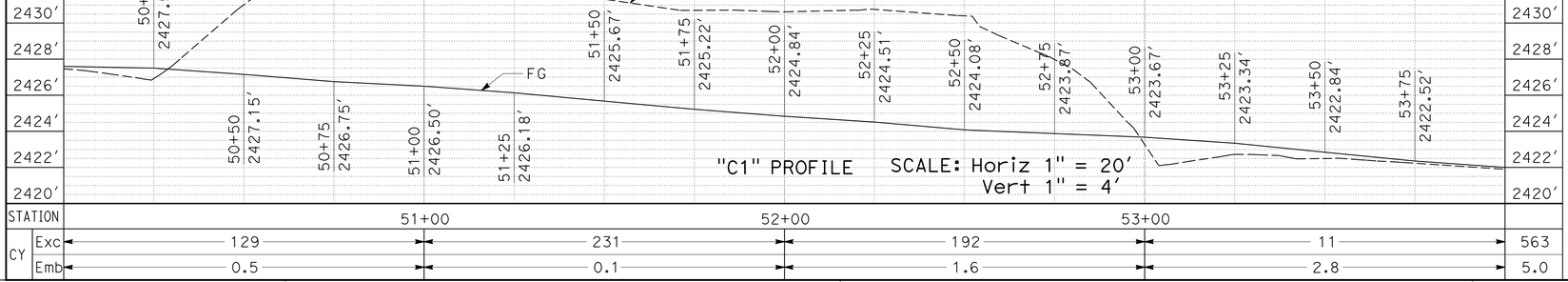

STATION		51+00	52+00	53+00	
CY	Exc	129	231	192	11	563
	Emb	0.5	0.1	1.6	2.8	5.0

TEMPORARY WIDENING OF EXISTING ACCESS ROAD

CONSTRUCTION DETAILS

SCALE AS SHOWN

C-3

REVISED BY	DATE REVISED
TOBY CRAWFORD	RUSSELL FLOOD
CALCULATED-DESIGNED BY	CHECKED BY
FUNCTIONAL SUPERVISOR	STEVE TOPAL

STATE OF CALIFORNIA - DEPARTMENT OF TRANSPORTATION
Caltrans DESIGN

P:\proj2\02\3c920_plans\pse\23c920ga003.dgn

LAST REVISION 08-15-11 | DATE PLOTTED => 30-MAR-2012 | TIME PLOTTED => 08:28

Dist	COUNTY	ROUTE	POST MILES TOTAL PROJECT	SHEET No.	TOTAL SHEETS
02	Sis	5	R50.6/R52.1	12	84

REGISTERED CIVIL ENGINEER 01-05-12 DATE

3-26-12
PLANS APPROVAL DATE

REGISTERED PROFESSIONAL ENGINEER TOBY J. CRAWFORD No. C71138 Exp. 6-30-13 CIVIL STATE OF CALIFORNIA

THE STATE OF CALIFORNIA OR ITS OFFICERS OR AGENTS SHALL NOT BE RESPONSIBLE FOR THE ACCURACY OR COMPLETENESS OF SCANNED COPIES OF THIS PLAN SHEET.

NOTES:

1. TEMPORARY COVER TO BE PLACED ON STOCKPILED MATERIAL; SEE STANDARD PLAN.
2. PLACE ESA FENCING ALONG THE ORDINARY HIGH WATER LINE (2404' CONTOUR) OR AS DETERMINED BY THE ENGINEER.

ABBREVIATIONS:

TFESA TEMPORARY FENCE (TYPE ESA)
TFR TEMPORARY FIBER ROLL
TOB TOP OF BANK
TSF TEMPORARY SILT FENCE

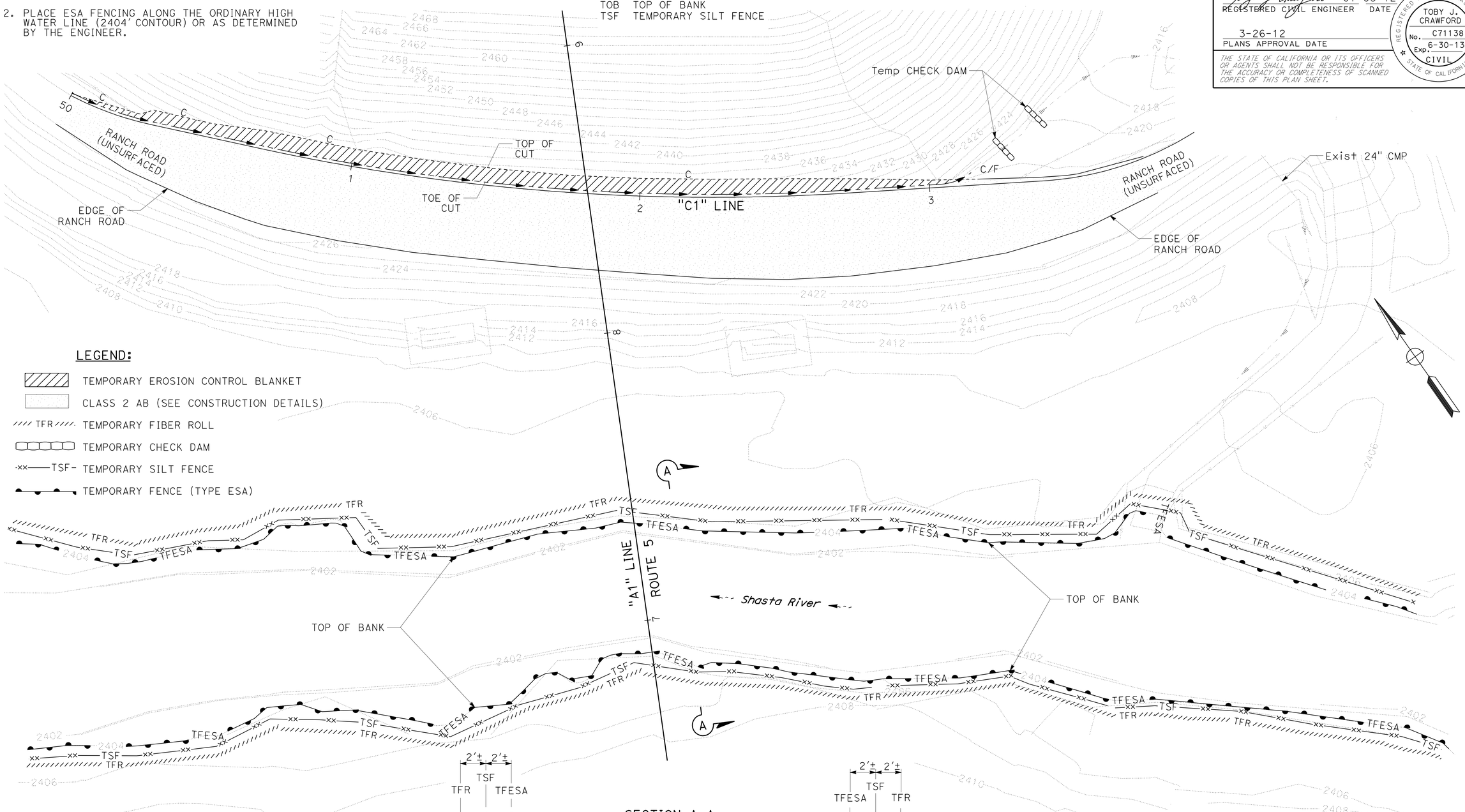

LEGEND:

- TEMPORARY EROSION CONTROL BLANKET
- CLASS 2 AB (SEE CONSTRUCTION DETAILS)
- TFR TEMPORARY FIBER ROLL
- TEMPORARY CHECK DAM
- TSF TEMPORARY SILT FENCE
- TEMPORARY FENCE (TYPE ESA)

CONCEPTUAL DETAIL OF WATER POLLUTION CONTROL ALONG THE SHASTA RIVER

APPROVED FOR TEMPORARY WATER POLLUTION CONTROL WORK ONLY

TEMPORARY WATER POLLUTION CONTROL DETAIL
NO SCALE
WPCD-1

R. WEBER	01-14-12
REVISED BY	DATE REVISED
VIRGINIA SEIBERT	TOBY CRAWFORD
CALCULATED-DESIGNED BY	CHECKED BY
FUNCTIONAL SUPERVISOR	STEVE TOPAL

STATE OF CALIFORNIA - DEPARTMENT OF TRANSPORTATION
Caltrans
DESIGN

P:\proj2\02\3c920_plans\pse\23c920gc001.dgn

LAST REVISION 01-14-12 | DATE PLOTTED => 30-MAR-2012 | TIME PLOTTED => 08:28

Dist	COUNTY	ROUTE	POST MILES TOTAL PROJECT	SHEET No.	TOTAL SHEETS
02	Sis	5	R50.6/R52.1	13	84

Robert Weber 01-05-12
REGISTERED CIVIL ENGINEER DATE

3-26-12
PLANS APPROVAL DATE

REGISTERED PROFESSIONAL ENGINEER
ROBERT WEBER
No. C62511
Exp. 9-30-13
CIVIL
STATE OF CALIFORNIA

THE STATE OF CALIFORNIA OR ITS OFFICERS OR AGENTS SHALL NOT BE RESPONSIBLE FOR THE ACCURACY OR COMPLETENESS OF SCANNED COPIES OF THIS PLAN SHEET.

NOTE:

1. FOR ACCURATE RIGHT OF WAY DATA CONTACT RIGHT OF WAY ENGINEERING AT THE DISTRICT OFFICE.
2. LOCATION OF HYDROSEEDING SHOWN IS APPROXIMATE. PLACE AS DIRECTED BY ENGINEER.

LEGEND:

HYDROSEED

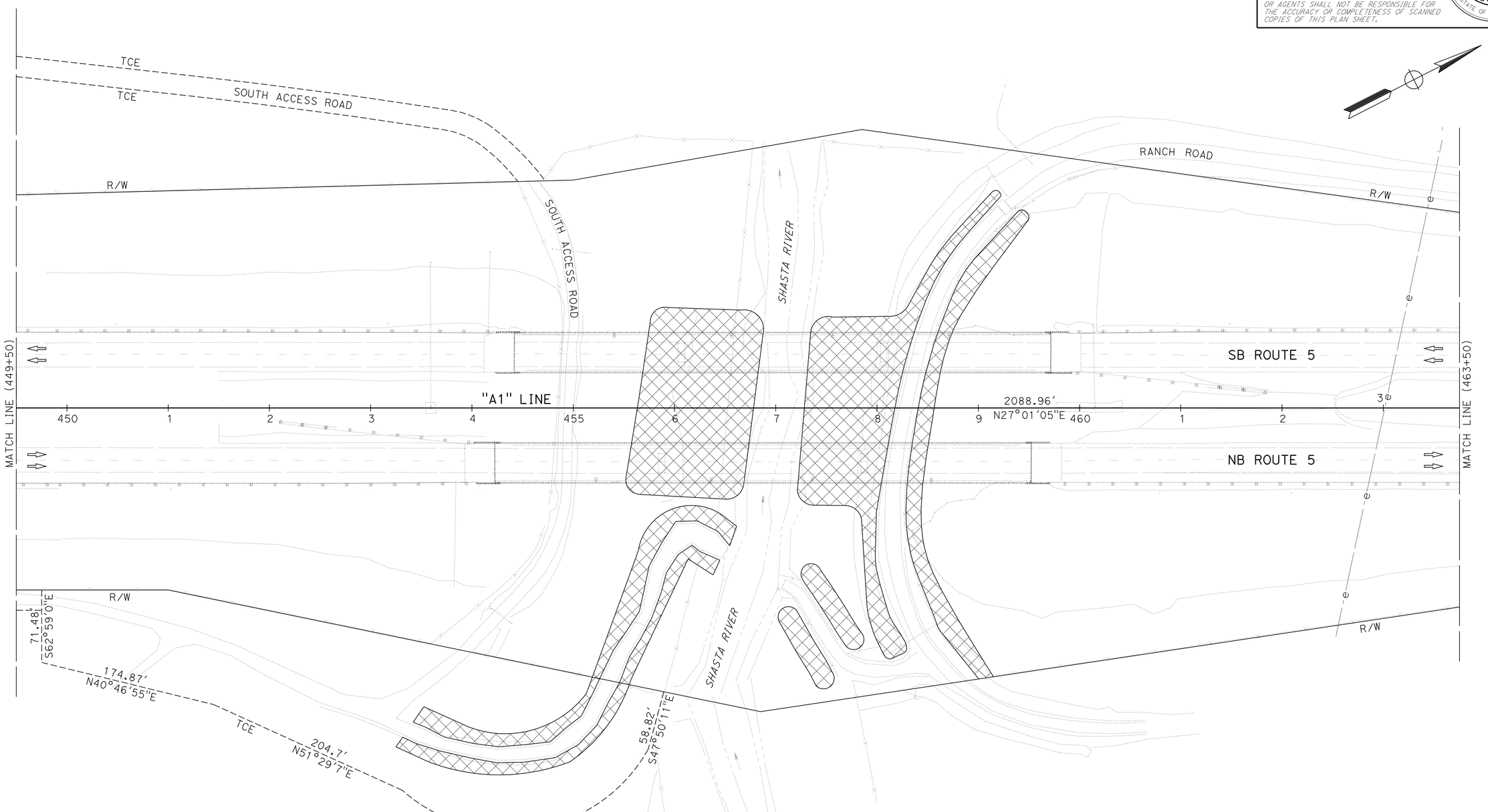

APPROVED FOR EROSION CONTROL WORK ONLY

EROSION CONTROL PLAN

SCALE: 1" = 50'

EC-1

REVISED BY	DATE REVISED
R. WEBER	01-14-12

CALCULATED-DESIGNED BY: ROBERT WEBER
CHECKED BY: RUSSELL FLOOD
FUNCTIONAL SUPERVISOR: STEVE TOPAL

STATE OF CALIFORNIA - DEPARTMENT OF TRANSPORTATION
Caltrans
DESIGN

P:\proj2\02\3c920_plans\pse\23c920ge001.dgn

LAST REVISION 01-14-12
DATE PLOTTED => 30-MAR-2012
TIME PLOTTED => 08:28

Dist	COUNTY	ROUTE	POST MILES TOTAL PROJECT	SHEET No.	TOTAL SHEETS
02	Sis	5	R50.6/R52.1	14	84

Toby J. Crawford 01-05-12
REGISTERED CIVIL ENGINEER DATE

3-26-12
PLANS APPROVAL DATE

REGISTERED PROFESSIONAL ENGINEER
TOBY J. CRAWFORD
No. C71138
Exp. 6-30-13
CIVIL
STATE OF CALIFORNIA

THE STATE OF CALIFORNIA OR ITS OFFICERS OR AGENTS SHALL NOT BE RESPONSIBLE FOR THE ACCURACY OR COMPLETENESS OF SCANNED COPIES OF THIS PLAN SHEET.

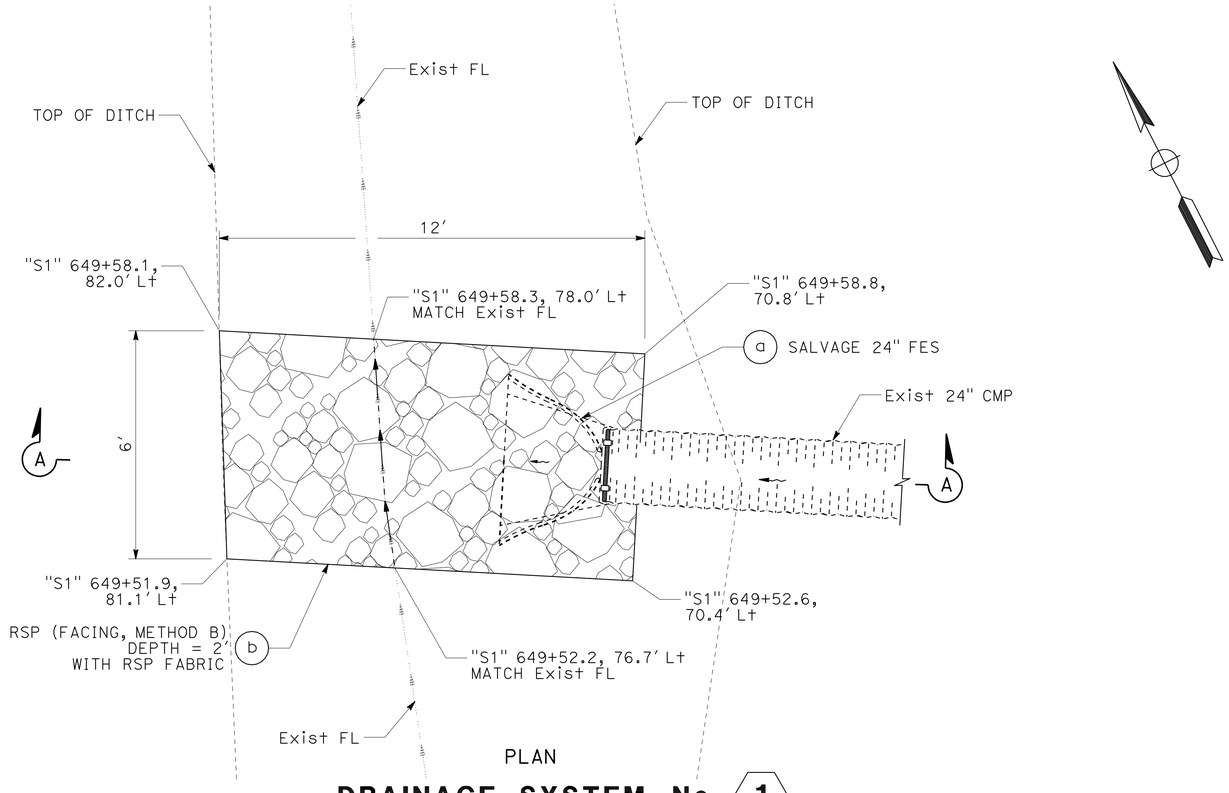

PLAN

DRAINAGE SYSTEM No. 1

"S1" 649+55

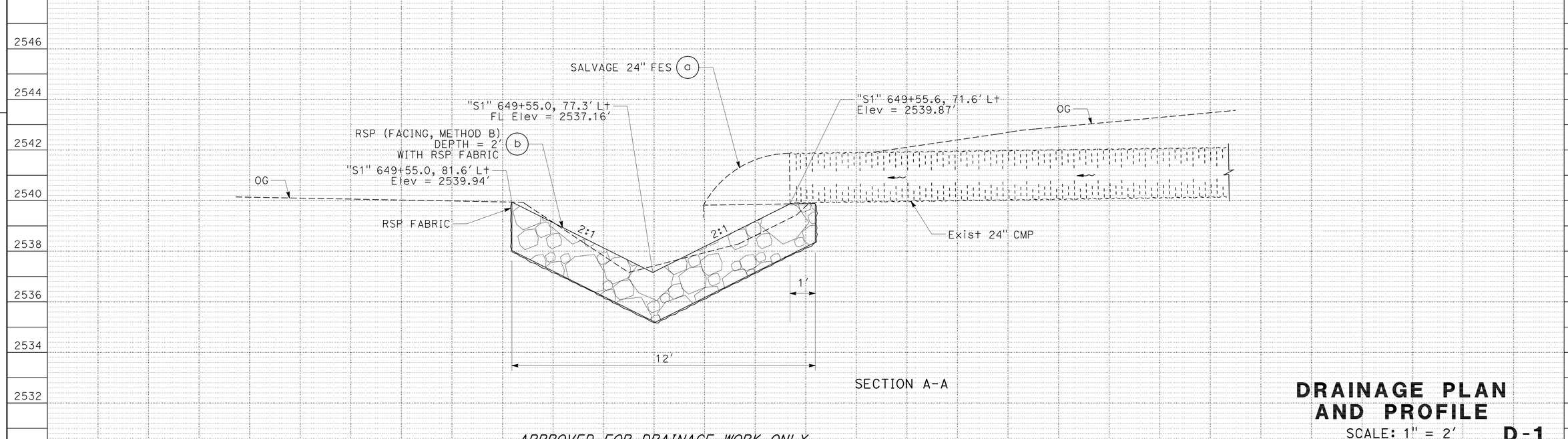

SECTION A-A

APPROVED FOR DRAINAGE WORK ONLY

DRAINAGE PLAN AND PROFILE

SCALE: 1" = 2′

D-1

STATE OF CALIFORNIA - DEPARTMENT OF TRANSPORTATION
Caltrans DESIGN

FUNCTIONAL SUPERVISOR: STEVE TOPAL
CALCULATED-DESIGNED BY: TOBY CRAWFORD
CHECKED BY: RUSSELL FLOOD
REVISED BY
DATE REVISED

P:\proj2\02\3c920_plans\pse\23c920ia001.dgn

LAST REVISION 08-15-11
DATE PLOTTED => 30-MAR-2012
TIME PLOTTED => 08:28

Dist	COUNTY	ROUTE	POST MILES TOTAL PROJECT	SHEET No.	TOTAL SHEETS
02	Sis	5	R50.6/R52.1	15	84

REGISTERED CIVIL ENGINEER 01-05-12 DATE

3-26-12
PLANS APPROVAL DATE

REGISTERED PROFESSIONAL ENGINEER TOBY J. CRAWFORD No. C71138 Exp. 6-30-13 CIVIL STATE OF CALIFORNIA

THE STATE OF CALIFORNIA OR ITS OFFICERS OR AGENTS SHALL NOT BE RESPONSIBLE FOR THE ACCURACY OR COMPLETENESS OF SCANNED COPIES OF THIS PLAN SHEET.

NOTE:

1. POSITION NEW DI AND CULVERT BETWEEN POSTS T1 AND T2 OF TRANSITION RAILING (TYPE WB); SEE STANDARD PLAN A77J4.

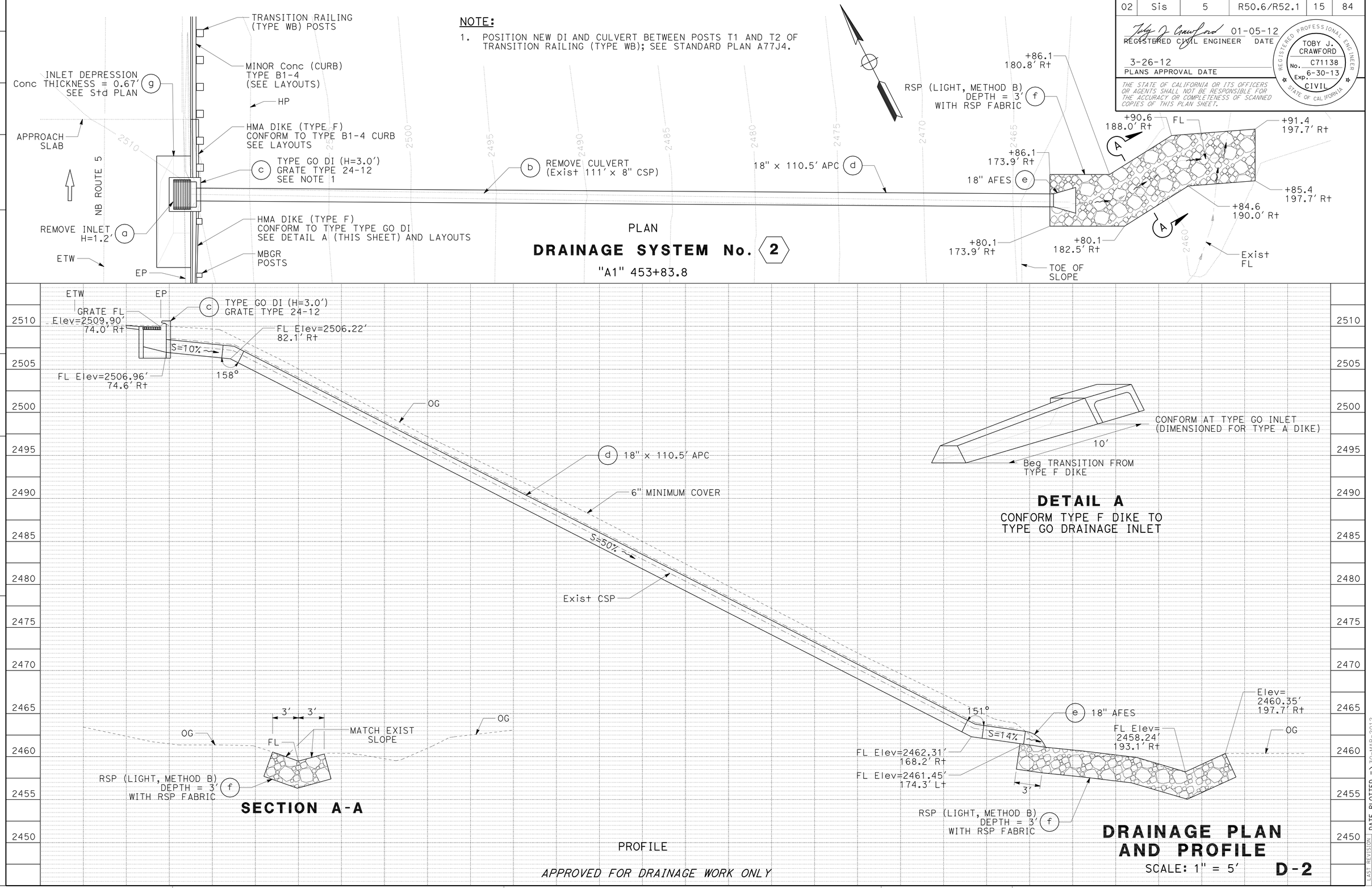

APPROVED FOR DRAINAGE WORK ONLY

DRAINAGE PLAN AND PROFILE

SCALE: 1" = 5′ D-2

REVISED BY | DATE REVISED

TOBY CRAWFORD | RUSSELL FLOOD

CALCULATED-DESIGNED BY | CHECKED BY

FUNCTIONAL SUPERVISOR: STEVE TOPAL

STATE OF CALIFORNIA - DEPARTMENT OF TRANSPORTATION

Caltrans® DESIGN

P:\proj2\02\3c920_plans\pse\23c920ia002.dgn

LAST REVISION 01-14-12 | DATE PLOTTED => 30-MAR-2012 | TIME PLOTTED => 08:28

Dist	COUNTY	ROUTE	POST MILES TOTAL PROJECT	SHEET No.	TOTAL SHEETS
02	Sis	5	R50.6/R52.1	16	84

REGISTERED CIVIL ENGINEER 01-05-12 DATE

3-26-12
PLANS APPROVAL DATE

REGISTERED PROFESSIONAL ENGINEER TOBY J. CRAWFORD No. C71138 Exp. 6-30-13 CIVIL STATE OF CALIFORNIA

THE STATE OF CALIFORNIA OR ITS OFFICERS OR AGENTS SHALL NOT BE RESPONSIBLE FOR THE ACCURACY OR COMPLETENESS OF SCANNED COPIES OF THIS PLAN SHEET.

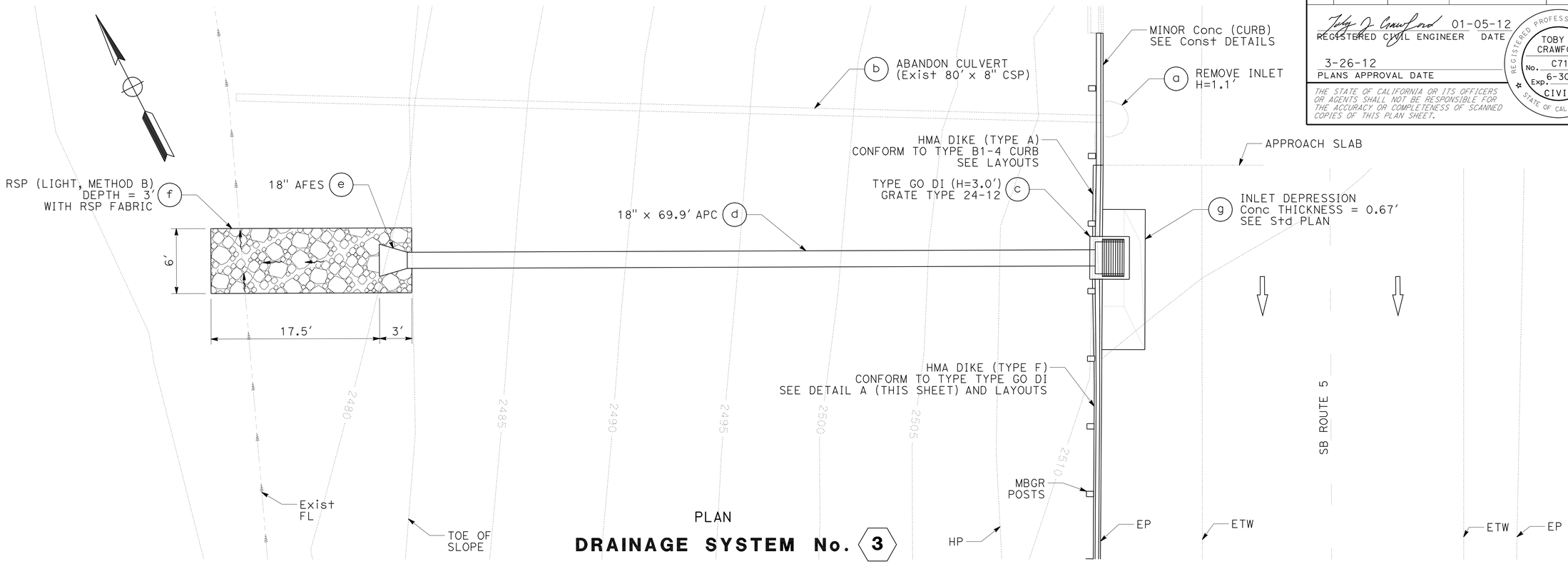

PLAN

DRAINAGE SYSTEM No. 3

"A1" 454+03

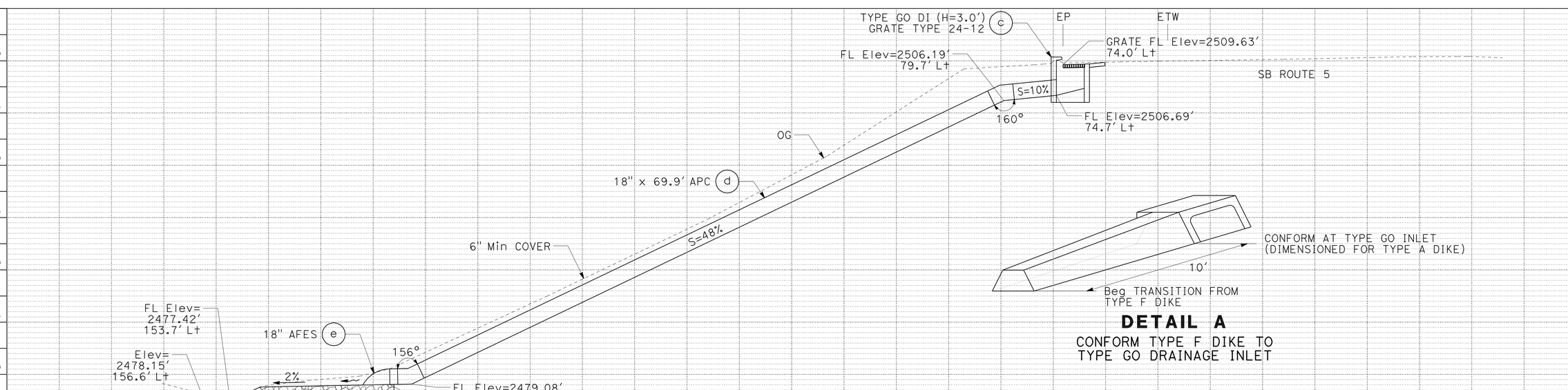

PROFILE

APPROVED FOR DRAINAGE WORK ONLY

DETAIL A

CONFORM TYPE F DIKE TO
TYPE GO DRAINAGE INLET

DRAINAGE PLAN AND PROFILE

SCALE: 1" = 5'

D-3

REVISED BY | DATE REVISED
TOBY CRAWFORD | RUSSELL FLOOD
CALCULATED-DESIGNED BY | CHECKED BY
FUNCTIONAL SUPERVISOR: STEVE TOPAL

STATE OF CALIFORNIA - DEPARTMENT OF TRANSPORTATION
DESIGN

P:\proj2\02\3c920_plans\pse\23c920ia003.dgn

LAST REVISION 08-15-11 | DATE PLOTTED => 30-MAR-2012 | TIME PLOTTED => 08:28

BORDER LAST REVISED 7/2/2010 | USERNAME => s128843 | DGN FILE => 23c920ia003.dgn | RELATIVE BORDER SCALE IS IN INCHES 0 1 2 3 | UNIT 0314 | PROJECT NUMBER & PHASE 02000003451

Dist	COUNTY	ROUTE	POST MILES TOTAL PROJECT	SHEET No.	TOTAL SHEETS
02	Sis	5	R50.6/R52.1	17	84

REGISTERED CIVIL ENGINEER 01-05-12 DATE

3-26-12
PLANS APPROVAL DATE

REGISTERED PROFESSIONAL ENGINEER TOBY J. CRAWFORD No. C71138 Exp. 6-30-13 CIVIL STATE OF CALIFORNIA

THE STATE OF CALIFORNIA OR ITS OFFICERS OR AGENTS SHALL NOT BE RESPONSIBLE FOR THE ACCURACY OR COMPLETENESS OF SCANNED COPIES OF THIS PLAN SHEET.

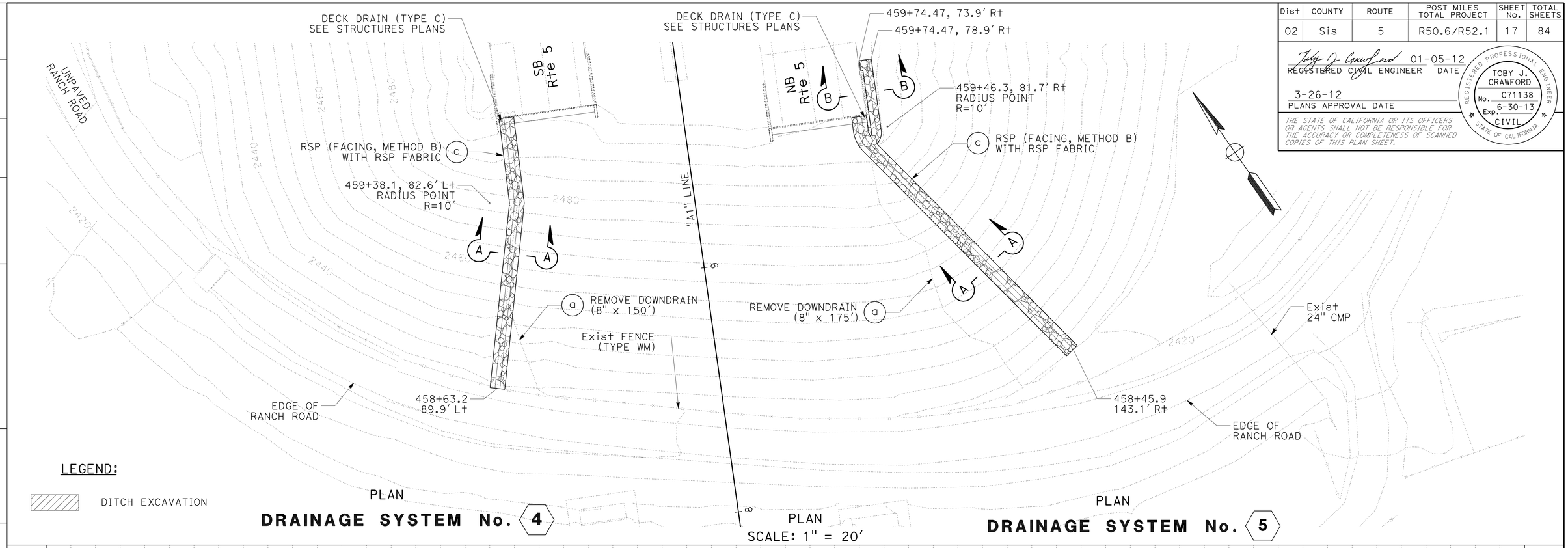

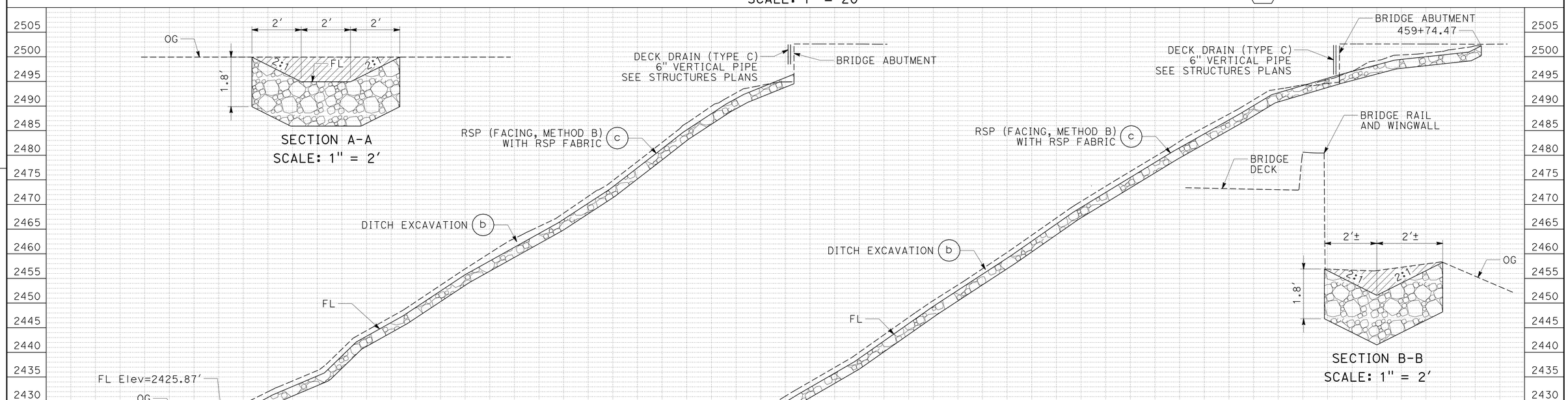

DRAINAGE PLAN AND PROFILE

SCALE: AS SHOWN **D-4**

REVISED BY | DATE REVISED

TOBY CRAWFORD | RUSSELL FLOOD

CALCULATED-DESIGNED BY | CHECKED BY

FUNCTIONAL SUPERVISOR: STEVE TOPAL

STATE OF CALIFORNIA - DEPARTMENT OF TRANSPORTATION

Caltrans® DESIGN

P:\proj2\02\3c920_plans\pse\23c920ia004.dgn

LAST REVISION 08-15-11 | DATE PLOTTED => 30-MAR-2012 | TIME PLOTTED => 08:28

BORDER LAST REVISED 7/2/2010 | USERNAME => s128843 | DGN FILE => 23c920ia004.dgn | RELATIVE BORDER SCALE IS IN INCHES 0 1 2 3 | UNIT 0314 | PROJECT NUMBER & PHASE 02000003451

Dist	COUNTY	ROUTE	POST MILES TOTAL PROJECT	SHEET No.	TOTAL SHEETS
02	Sis	5	R50.6/R52.1	18	84

REGISTERED CIVIL ENGINEER 01-05-12 DATE

3-26-12
PLANS APPROVAL DATE

REGISTERED PROFESSIONAL ENGINEER TOBY J. CRAWFORD No. C71138 Exp. 6-30-13 CIVIL STATE OF CALIFORNIA

THE STATE OF CALIFORNIA OR ITS OFFICERS OR AGENTS SHALL NOT BE RESPONSIBLE FOR THE ACCURACY OR COMPLETENESS OF SCANNED COPIES OF THIS PLAN SHEET.

NOTE:

1. (N) - NOT A SEPARATE PAY ITEM, FOR INFORMATION ONLY
2. POSITIVE JOINTS REQUIRED FOR DRAINAGE SYSTEMS 2 AND 3.

ALTERNATIVE PIPE CULVERT AND FLARED END SECTIONS OPTIONS

DRAINAGE SYSTEM No.	CORRUGATED STEEL		HIGH DENSITY POLYETHYLENE
	PLAIN	POLYMERIC SHEET COATING	
2, 3	0.109"	0.064"	YES

DRAINAGE QUANTITIES

PLAN SHEET No.	ALIGNMENT	STATION	DRAINAGE SYSTEM No.	DRAINAGE ITEM	ABANDON CULVERT	REMOVE CULVERT	REMOVE INLET	HEIGHT OF INLET	REMOVE DOWNDRAIN	SALVAGE 24" ALTERNATIVE FLARED END SECTION	DITCH EXCAVATION	MINOR CONCRETE (MINOR STRUCTURE)	18" ALTERNATIVE PIPE CULVERT	18" ALTERNATIVE FLARED END SECTION	INLET DEPRESSION	ROCK SLOPE PROTECTION (LIGHT, METHOD B)	ROCK SLOPE PROTECTION (FACING, METHOD B)	ROCK SLOPE PROTECTION FABRIC (CLASS 8)	MISCELLANEOUS IRON AND STEEL	MARKER (CULVERT)	DESCRIPTION	DRAINAGE ITEM	DRAINAGE SYSTEM No.
					EA	LF	EA	(N) FT	LF	EA	CY	CY	LF	EA	EA	CY	CY	SQYD	LB	EA			
D-1	S1	649+55	1	a						1											SALVAGE 24" FES	a	1
				b													5.2	16.4			RSP (FACING, METHOD B)	b	
D-2	A1	453+83.8	2	a			1														REMOVE INLET	a	2
				b		111															Exist 111′ x 8" CSP	b	
				c				3.0				1.24							326	1	TYPE GO DI, GRATE TYPE 24-12	c	
				d									110.5								18" x 110.5′ APC	d	
				e										1							18" AFES	e	
				f												17.1		37.3			RSP (LIGHT, METHOD B)	f	
				g											1						INLET DEPRESSION	g	
D-3	A1	454+03	3	a			1														REMOVE INLET	a	3
				b	1																Exist 80′ x 8" CSP	b	
				c				3.0				1.24							326	1	TYPE GO DI, GRATE TYPE 24-12	c	
				d									69.9								18" x 69.9′ APC	d	
				e										1							18" AFES	e	
				f												12.8		27.9			RSP (LIGHT, METHOD B)	f	
				g											1						INLET DEPRESSION	g	
D-4			4	a					150.0												Exist 150′ x 8" DOWNDRAIN	a	4
				b							19.5										DITCH EXCAVATION	b	
				c													58.4	161.8			RSP (FACING, METHOD B)	c	
D-4			5	a					175.0												Exist 175′ x 8" DOWNDRAIN	a	5
				b							22.8										DITCH EXCAVATION	b	
				c													68.9	190.1			RSP (FACING, METHOD B)	c	
			TOTAL		1	111	2		325.0	1	42.3	2.48	180.4	2	2	29.9	132.5	433.5	652	2			

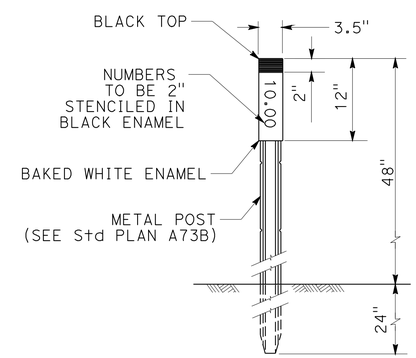

MARKER (CULVERT)

DRAINAGE QUANTITIES

NO SCALE

DQ-1

REVISED BY	R. WEBER
DATE REVISED	12-07-11

CALCULATED-DESIGNED BY
CHECKED BY

FUNCTIONAL SUPERVISOR: STEVE TOPAL

STATE OF CALIFORNIA - DEPARTMENT OF TRANSPORTATION
Caltrans®
DESIGN

P:\proj2\02\3c920_plans\pse\23c920id001.dgn

LAST REVISION 12-07-11
DATE PLOTTED => 30-MAR-2012
TIME PLOTTED => 08:28

Dist	COUNTY	ROUTE	POST MILES TOTAL PROJECT	SHEET No.	TOTAL SHEETS
02	Sis	5	R50.6/R52.1	19	84

Robert Weber 01-05-12
REGISTERED CIVIL ENGINEER DATE

3-26-12
PLANS APPROVAL DATE

REGISTERED PROFESSIONAL ENGINEER ROBERT WEBER No. C62511 Exp. 9-30-13 CIVIL STATE OF CALIFORNIA

THE STATE OF CALIFORNIA OR ITS OFFICERS OR AGENTS SHALL NOT BE RESPONSIBLE FOR THE ACCURACY OR COMPLETENESS OF SCANNED COPIES OF THIS PLAN SHEET.

NOTES:

1. EXACT SIGN LOCATIONS TO BE DETERMINED BY THE ENGINEER.
2. EXISTING UTILITY FACILITIES HAVE NOT BEEN POSITIVELY LOCATED.
3. SIGNS SHOWN WITH (CA) INDICATE CALIFORNIA SIGN CODES, OTHERWISE FEDERAL SIGN CODES ARE SHOWN.

LEGEND

⇨ DIRECTION OF TRAVEL

SIGN (1 POST)

SIGN (2 POST)

CONSTRUCTION AREA SIGNS (STATIONARY MOUNTED)

TYPE	CODE	PANEL SIZE	SIGN MESSAGE	NUMBER AND SIZE OF POSTS	No. OF SIGNS
A	C40(CA)	108" x 42"	TRAFFIC FINES DOUBLED IN CONSTRUCTION ZONES	2-4" x 6"	2
B	W20-1 C23B(CA)	48" x 48" 54" x 24"	ROAD WORK AHEAD BRIDGE REHABILITATION	2-4" x 6"	4
C	C14(CA)	48" x 24"	END ROAD WORK	1-4" x 6"	4

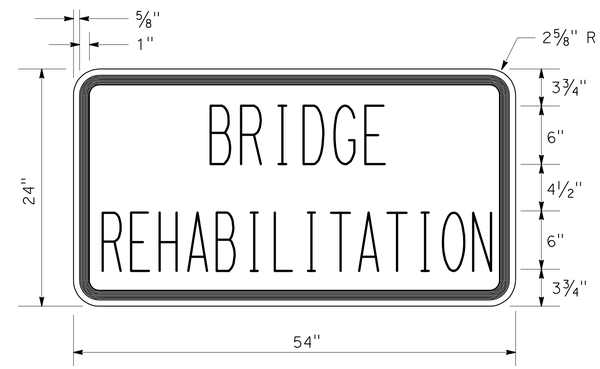

C23B(CA) SIGN PANEL DETAIL

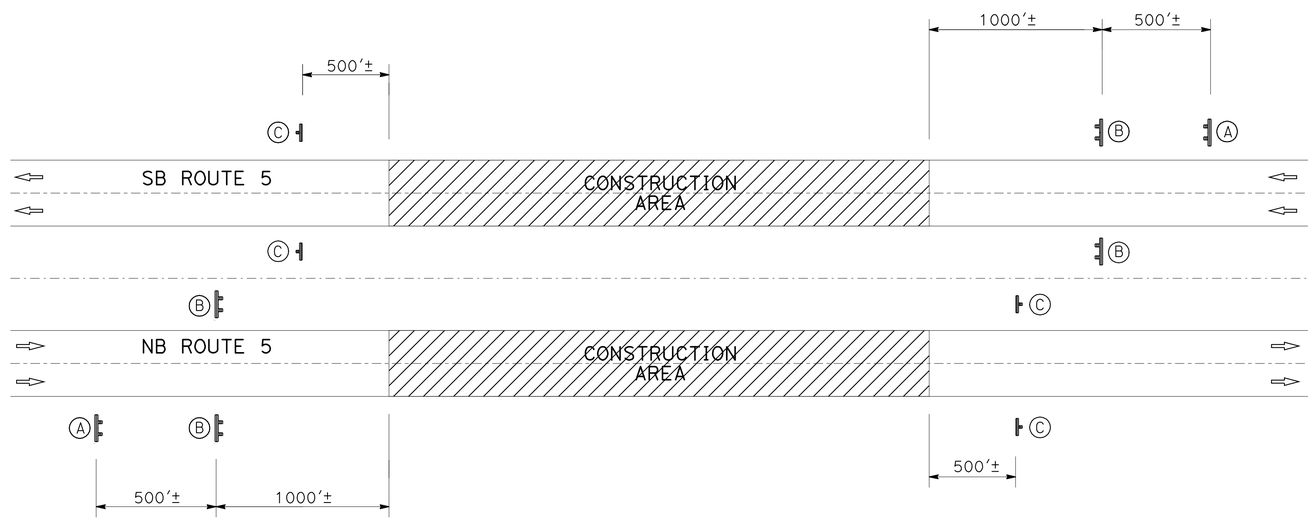

CONSTRUCTION AREA SIGNS

CONSTRUCTION AREA SIGNS

NO SCALE

CS-1

REVISED BY	DATE REVISED
R. WEBER	10-05-11

CALCULATED-DESIGNED BY: ROBERT WEBER
CHECKED BY: RUSSELL FLOOD
FUNCTIONAL SUPERVISOR: STEVE TOPAL

Caltrans® STATE OF CALIFORNIA - DEPARTMENT OF TRANSPORTATION
DESIGN

P:\proj2\02\3c920_plans\pse\23c92010a001.dgn

LAST REVISION 10-05-11
DATE PLOTTED => 30-MAR-2012
TIME PLOTTED => 08:29

Dist	COUNTY	ROUTE	POST MILES TOTAL PROJECT	SHEET No.	TOTAL SHEETS
02	Sis	5	R50.6/R52.1	20	84

Robert Weber 01-05-12
REGISTERED CIVIL ENGINEER DATE

3-26-12
PLANS APPROVAL DATE

REGISTERED PROFESSIONAL ENGINEER ROBERT WEBER No. C62511 Exp. 9-30-13 CIVIL STATE OF CALIFORNIA

THE STATE OF CALIFORNIA OR ITS OFFICERS OR AGENTS SHALL NOT BE RESPONSIBLE FOR THE ACCURACY OR COMPLETENESS OF SCANNED COPIES OF THIS PLAN SHEET.

NOTES:

1. LANE CONFIGUATION AS SHOWN ON BRIDGE IS CONTINUOUS BETWEEN CROSSOVERS 1 AND 2. STRIPING MATERIAL VARIES. SEE TRAFFIC HANDLING DETAILS.
2. PLACE REFLECTORS ON TEMPORARY RAILING (TYPE K) AS SPECIFIED.

LEGEND:

WORK AREA

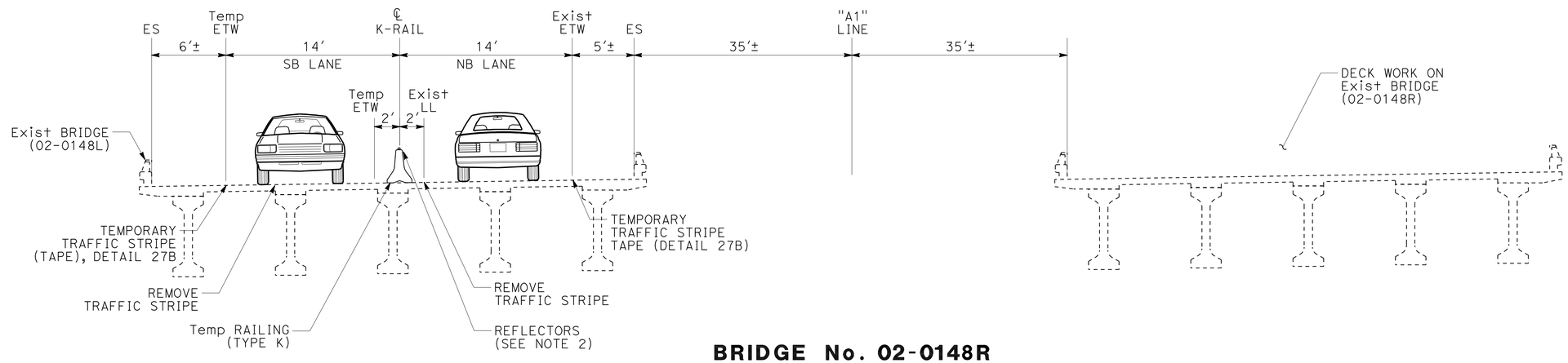

BRIDGE No. 02-0148R
STAGE 1

SECTION VIEW OF TRAFFIC HANDLING
"A1" 454+41 TO "A1" 459+72

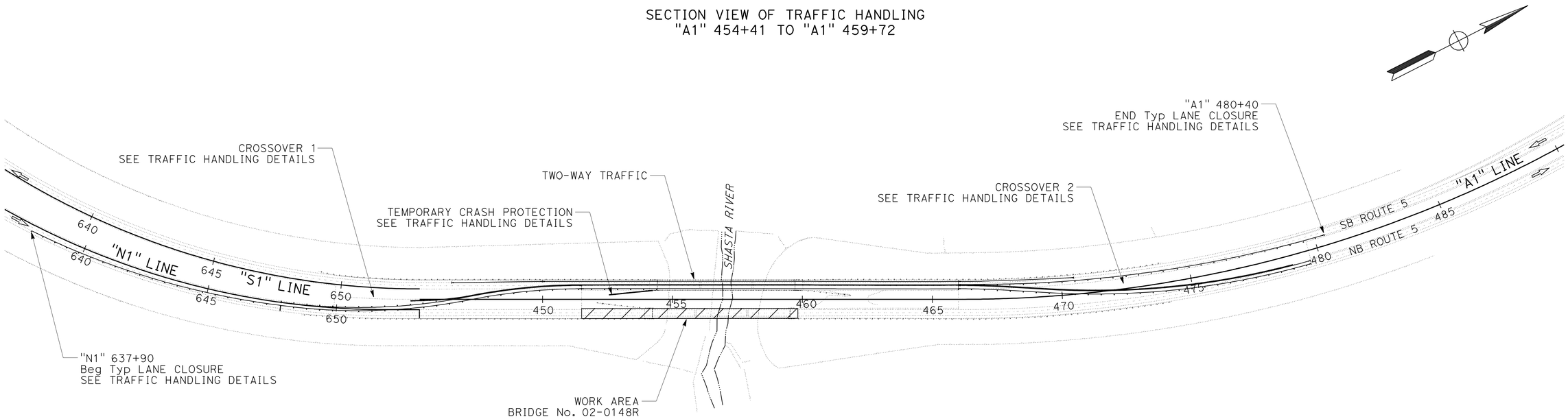

BRIDGE No. 02-0148R
STAGE 1

PLAN VIEW OF TRAFFIC HANDLING
"N1" 637+90 TO "A1" 480+40

STAGE CONSTRUCTION AND TRAFFIC HANDLING PLAN

NO SCALE

TH-1

APPROVED FOR TRAFFIC HANDLING WORK ONLY

R. WEBER	10-05-11
REVISED BY	DATE REVISED
ROBERT WEBER	RUSSELL FLOOD
CALCULATED-DESIGNED BY	CHECKED BY
FUNCTIONAL SUPERVISOR	STEVE TOPAL

STATE OF CALIFORNIA - DEPARTMENT OF TRANSPORTATION
Caltrans
DESIGN

P:\proj2\02\3c920_plans\pse\23c920md001.dgn

LAST REVISION 10-05-11 | DATE PLOTTED => 30-MAR-2012 | TIME PLOTTED => 08:29

Dist	COUNTY	ROUTE	POST MILES TOTAL PROJECT	SHEET No.	TOTAL SHEETS
02	Sis	5	R50.6/R52.1	21	84

Robert Weber 01-05-12
REGISTERED CIVIL ENGINEER DATE

3-26-12
PLANS APPROVAL DATE

REGISTERED PROFESSIONAL ENGINEER ROBERT WEBER No. C62511 Exp. 9-30-13 CIVIL STATE OF CALIFORNIA

THE STATE OF CALIFORNIA OR ITS OFFICERS OR AGENTS SHALL NOT BE RESPONSIBLE FOR THE ACCURACY OR COMPLETENESS OF SCANNED COPIES OF THIS PLAN SHEET.

NOTES:

1. LANE CONFIGUATION AS SHOWN ON BRIDGE IS CONTINUOUS BETWEEN CROSSOVERS 1 AND 2. STRIPING MATERIAL VARIES. SEE TRAFFIC HANDLING DETAILS.
2. PLACE REFLECTORS ON TEMPORARY RAILING (TYPE K) AS SPECIFIED.

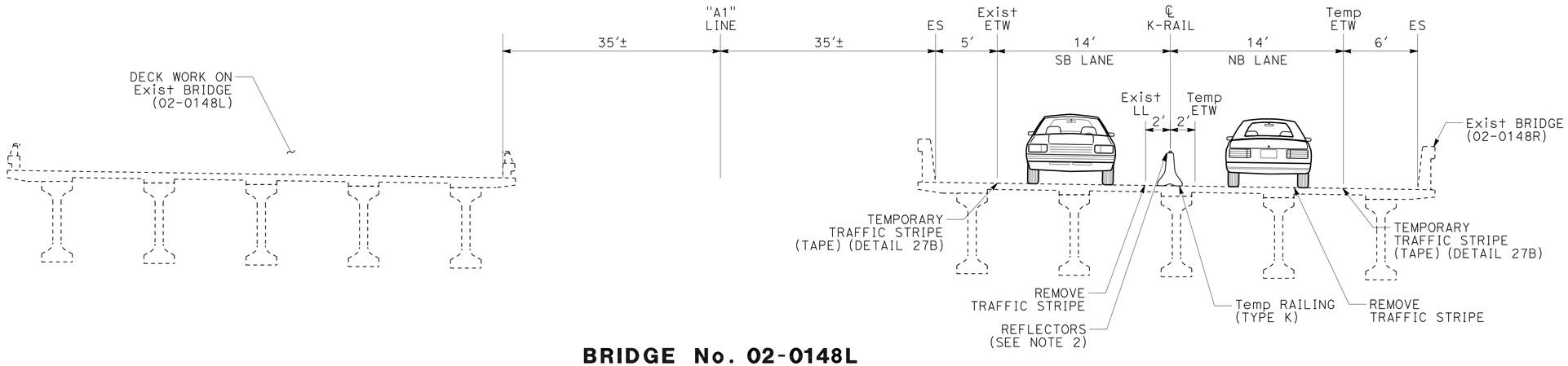

BRIDGE No. 02-0148L
STAGE 2

SECTION VIEW OF TRAFFIC HANDLING
"A1" 454+23 TO "A1" 459+52

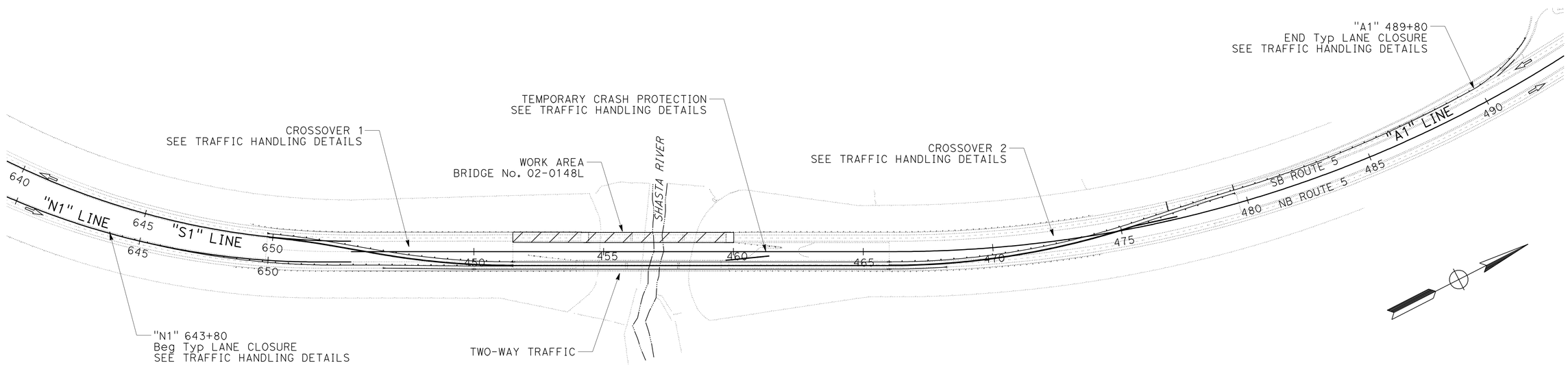

BRIDGE No. 02-0148L
STAGE 2

PLAN VIEW OF TRAFFIC HANDLING
"N1" 643+80 TO "A1" 489+80

STAGE CONSTRUCTION AND TRAFFIC HANDLING PLAN

NO SCALE

TH-2

APPROVED FOR TRAFFIC HANDLING WORK ONLY

REVISED BY	DATE REVISED
R. WEBER	10-04-11

CALCULATED-DESIGNED BY: ROBERT WEBER
CHECKED BY: RUSSELL FLOOD
FUNCTIONAL SUPERVISOR: STEVE TOPAL

STATE OF CALIFORNIA - DEPARTMENT OF TRANSPORTATION
Caltrans
DESIGN

P:\proj2\02\3c920_plans\pse\23c920md002.dgn

LAST REVISION | DATE PLOTTED => 30-MAR-2012 | TIME PLOTTED => 08:29
10-04-11

Dist	COUNTY	ROUTE	POST MILES TOTAL PROJECT	SHEET No.	TOTAL SHEETS
02	Sis	5	R50.6/R52.1	22	84

Robert Weber 01-05-12
REGISTERED CIVIL ENGINEER DATE

3-26-12
PLANS APPROVAL DATE

REGISTERED PROFESSIONAL ENGINEER ROBERT WEBER No. C62511 Exp. 9-30-13 CIVIL STATE OF CALIFORNIA

THE STATE OF CALIFORNIA OR ITS OFFICERS OR AGENTS SHALL NOT BE RESPONSIBLE FOR THE ACCURACY OR COMPLETENESS OF SCANNED COPIES OF THIS PLAN SHEET.

NOTES:

1. ALL DIMENSIONS GIVEN FOR TEMPORARY RAILING (TYPE K) ARE AT TOE, CLOSEST TO TRAFFIC.
2. MINIMUM TAPER FOR FLARED SECTIONS OF TEMPORARY RAILING (TYPE K) TO BE 10:1.
3. EXACT LOCATIONS OF PORTABLE LIGHTING SYSTEM TO BE APPROVED BY THE ENGINEER. LIGHT GLARE IS NOT TO IMPEDE VISION OF APPROACHING MOTORISTS. ONCE POSITONED, LIGHTS MAY NOT BE MOVED WITHOUT APPROVAL OF THE ENGINEER
4. OBJECT MARKER (TYPE P) REQUIRED FOR TEMPORARY RAILING (TYPE K) PER THE STANDARD SPECIFICATIONS.
5. PLACE W1-4L SIGN 500 FEET AHEAD OF CROSSOVER.

LEGEND

- BARRICADE (TYPE 3)
- CHANNELIZER (SURFACE MOUNTED)
- DIRECTION OF TRAVEL
- PORTABLE LIGHTING SYSTEM
- SINGLE STRIPE MARKER
- STRIPE CHANGE LOCATION
- nn — Temp PAVEMENT DELINETION STRIPE DETAIL No.
- Temp RAILING (TYPE K)
- Temp SIGN (STATIONARY MOUNTED)

ABBREVIATIONS

TS TRAFFIC STRIPE

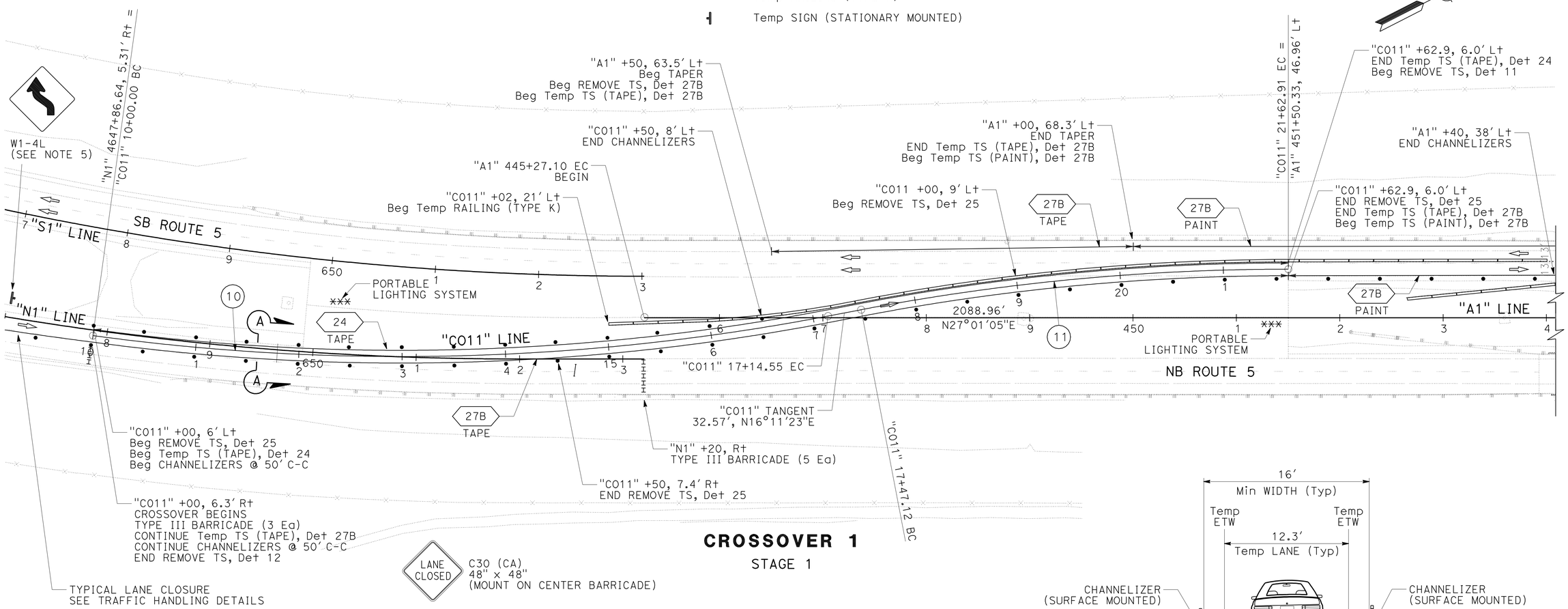

CROSSOVER 1

STAGE 1

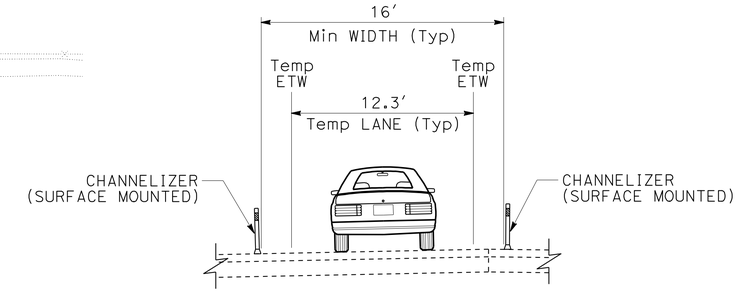

SECTION A-A

"C011" 10+00 TO "C011" 16+50
TYPICAL PLACEMENT OF CHANNELIZERS

CURVE DATA

No. ⊕	R	Δ	T	L
10	2200'	18°36'45"	360.51'	714.67'
11	2200'	10°49'43"	208.52'	415.79'

TRAFFIC HANDLING DETAILS

SCALE: 1" = 50'

THD-1

APPROVED FOR TRAFFIC HANDLING WORK ONLY

REVISED BY	DATE REVISED
R. WEBER	01-03-11

CALCULATED-DESIGNED BY: ROBERT WEBER
CHECKED BY: RUSSELL FLOOD
FUNCTIONAL SUPERVISOR: STEVE TOPAL

STATE OF CALIFORNIA - DEPARTMENT OF TRANSPORTATION
Caltrans DESIGN

P:\proj2\02\3c920_plans\pse\23c920me001.dgn

LAST REVISION 01-03-12 | DATE PLOTTED => 30-MAR-2012 | TIME PLOTTED => 08:29

Dist	COUNTY	ROUTE	POST MILES TOTAL PROJECT	SHEET No.	TOTAL SHEETS
02	Sis	5	R50.6/R52.1	23	84

Robert Weber 01-05-12
REGISTERED CIVIL ENGINEER DATE

3-26-12
PLANS APPROVAL DATE

REGISTERED PROFESSIONAL ENGINEER ROBERT WEBER No. C62511 Exp. 9-30-13 CIVIL STATE OF CALIFORNIA

THE STATE OF CALIFORNIA OR ITS OFFICERS OR AGENTS SHALL NOT BE RESPONSIBLE FOR THE ACCURACY OR COMPLETENESS OF SCANNED COPIES OF THIS PLAN SHEET.

NOTE:

1. EXACT LOCATIONS OF PORTABLE LIGHTING SYSTEM TO BE APPROVED BY THE ENGINEER. LIGHT GLARE IS NOT TO IMPEDE VISION OF APPROACHING MOTORISTS.
2. PLACE W1-4R SIGN 500 FEET AHEAD OF CROSSOVER.

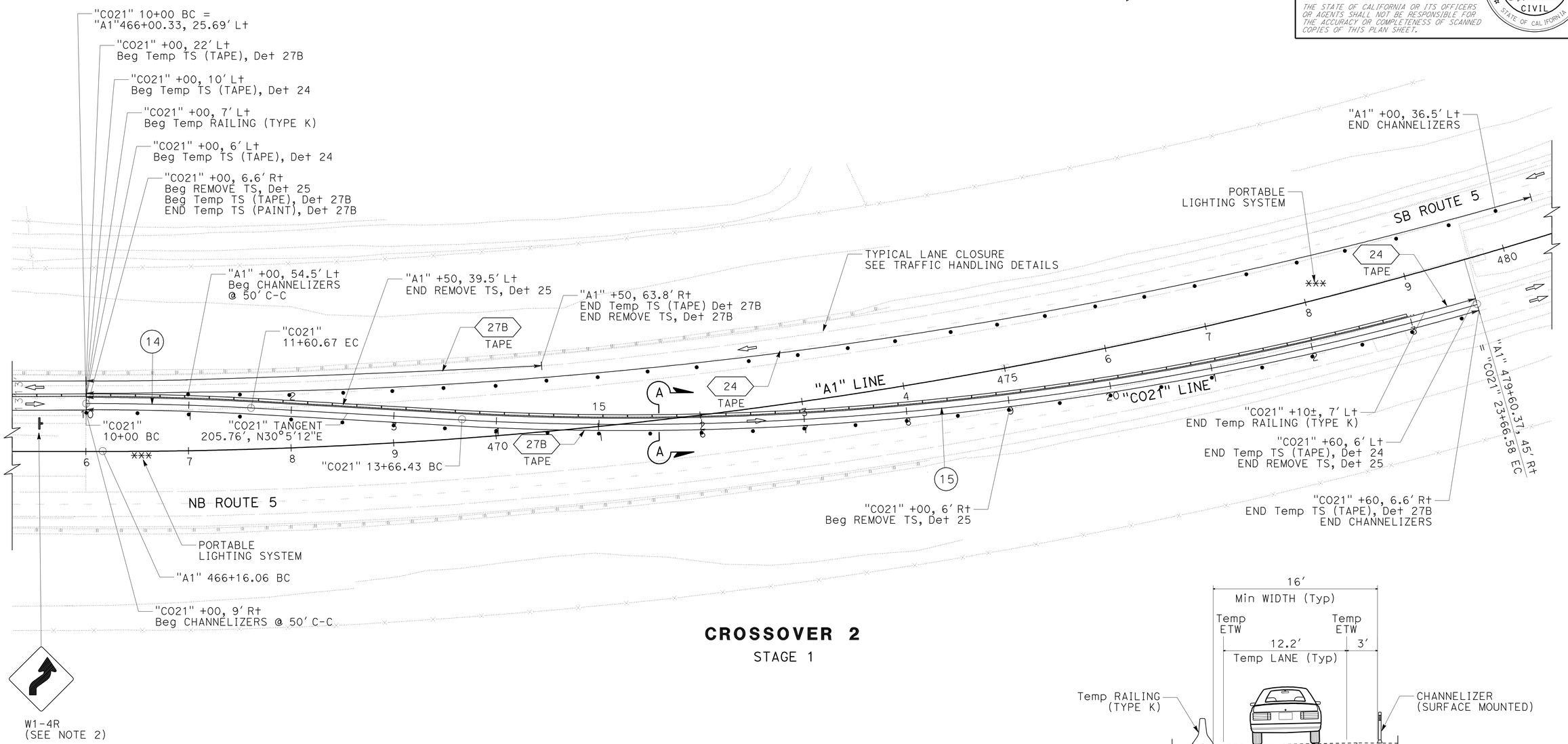

CROSSOVER 2

STAGE 1

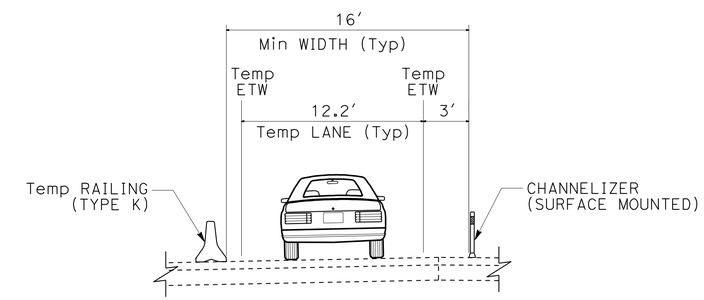

SECTION A-A

"C021" 310+00 TO "C021" 23+66
TYPICAL PLACEMENT OF
Temp RAILING (TYPE K) AND CHANNELIZERS

CURVE DATA

No.	R	Δ	T	L
14	3000'	3°18'12"	86.51'	172.97'
15	3000'	19°20'41"	511.31'	1012.88'

TRAFFIC HANDLING DETAILS

SCALE: 1" = 50'

THD-2

APPROVED FOR TRAFFIC HANDLING WORK ONLY

R. WEBER	01-03-12
ROBERT WEBER	RUSSELL FLOOD
CALCULATED-DESIGNED BY	CHECKED BY
FUNCTIONAL SUPERVISOR	STEVE TOPAL

REVISED BY / DATE REVISED

STATE OF CALIFORNIA - DEPARTMENT OF TRANSPORTATION
Caltrans DESIGN

P:\proj2\02\3c920_plans\pse\23c920me002.dgn

LAST REVISION 10-10-11 | DATE PLOTTED => 30-MAR-2012 | TIME PLOTTED => 08:29

Dist	COUNTY	ROUTE	POST MILES TOTAL PROJECT	SHEET No.	TOTAL SHEETS
02	Sis	5	R50.6/R52.1	24	84

Robert Weber 01-05-12
REGISTERED CIVIL ENGINEER DATE

3-26-12
PLANS APPROVAL DATE

REGISTERED PROFESSIONAL ENGINEER ROBERT WEBER No. C62511 Exp. 9-30-13 CIVIL STATE OF CALIFORNIA

THE STATE OF CALIFORNIA OR ITS OFFICERS OR AGENTS SHALL NOT BE RESPONSIBLE FOR THE ACCURACY OR COMPLETENESS OF SCANNED COPIES OF THIS PLAN SHEET.

NOTE:

1. EXACT LOCATIONS OF PORTABLE LIGHTING SYSTEM TO BE APPROVED BY THE ENGINEER. LIGHT GLARE IS NOT TO IMPEDE VISION OF APPROACHING MOTORISTS.
2. PLACE W1-4R SIGN 500 FEET AHEAD OF CROSSOVER.

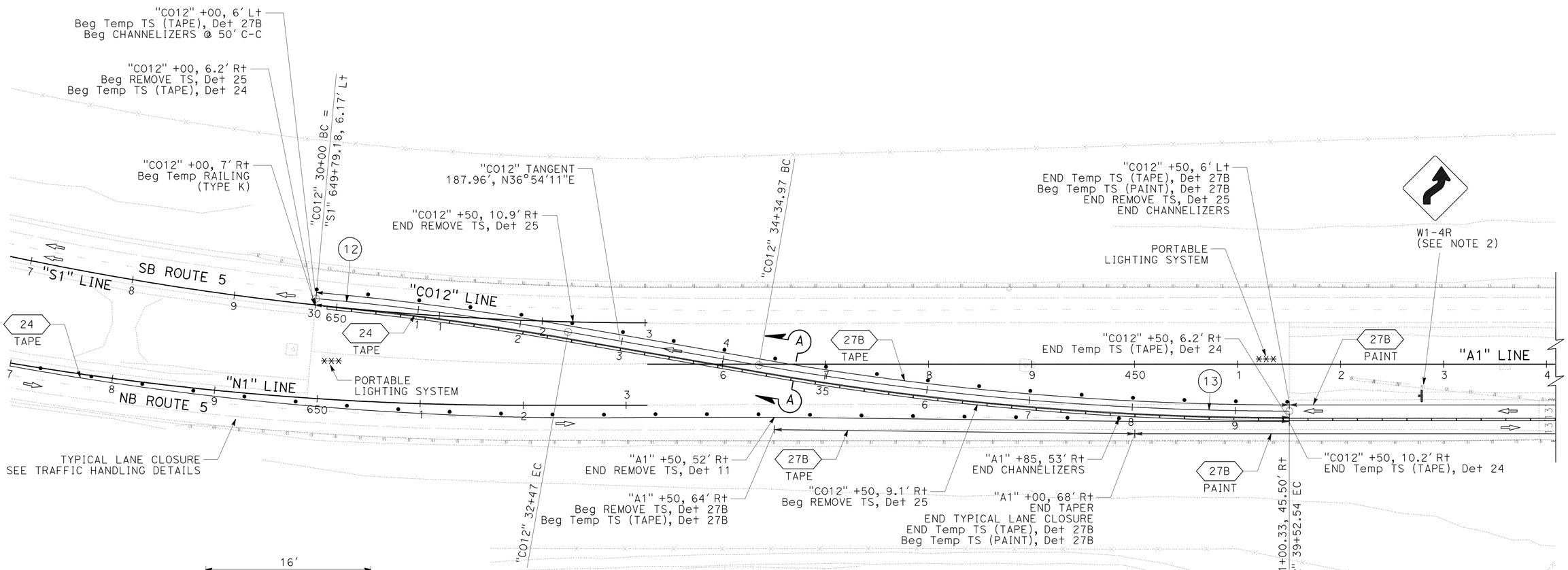

CROSSOVER 1

STAGE 2

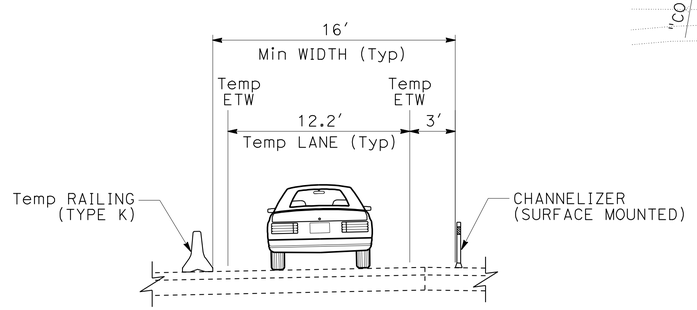

SECTION A-A

"CO12" 30+00 TO "CO12" 39+52
TYPICAL PLACEMENT OF
Temp RAILING (TYPE K) AND CHANNELIZERS

CURVE DATA

No. ⊕	R	Δ	T	L
12	3000'	4°43'03"	123.57'	247.01'
13	3000'	9°53'06"	259.43'	517.58'

TRAFFIC HANDLING DETAILS

SCALE: 1" = 50'

THD-3

APPROVED FOR TRAFFIC HANDLING WORK ONLY

REVISED BY	DATE REVISED
R. WEBER	01-03-12

CALCULATED-DESIGNED BY	CHECKED BY
ROBERT WEBER	RUSSELL FLOOD

FUNCTIONAL SUPERVISOR: STEVE TOPAL

STATE OF CALIFORNIA - DEPARTMENT OF TRANSPORTATION
DESIGN

P:\proj2\02\3c920_plans\pse\23c920me003.dgn

LAST REVISION 01-03-12
DATE PLOTTED => 30-MAR-2012
TIME PLOTTED => 08:29

Dist	COUNTY	ROUTE	POST MILES TOTAL PROJECT	SHEET No.	TOTAL SHEETS
02	Sis	5	R50.6/R52.1	25	84

Robert Weber 01-05-12
REGISTERED CIVIL ENGINEER DATE

3-26-12
PLANS APPROVAL DATE

REGISTERED PROFESSIONAL ENGINEER ROBERT WEBER No. C62511 Exp. 9-30-13 CIVIL STATE OF CALIFORNIA

THE STATE OF CALIFORNIA OR ITS OFFICERS OR AGENTS SHALL NOT BE RESPONSIBLE FOR THE ACCURACY OR COMPLETENESS OF SCANNED COPIES OF THIS PLAN SHEET.

NOTE:

1. EXACT LOCATIONS OF PORTABLE LIGHTING SYSTEM TO BE APPROVED BY THE ENGINEER. LIGHT GLARE IS NOT TO IMPEDE VISION OF APPROACHING MOTORISTS.
2. PLACE W1-4L SIGN 500 FEET AHEAD OF CROSSOVER.

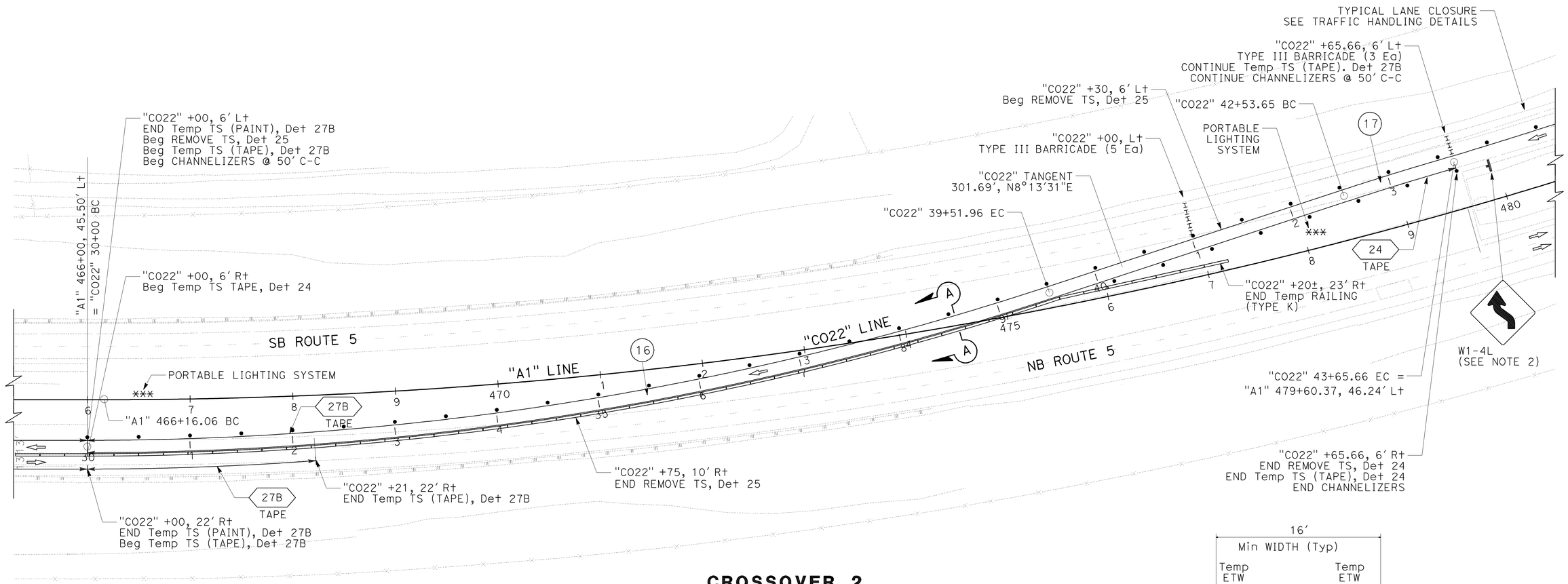

CROSSOVER 2

STAGE 2

CURVE DATA

No. ⊕	R	Δ	T	L
16	3000'	18°10'52"	480.01'	951.96'
17	3000'	18°10'52"	480.01'	951.96'

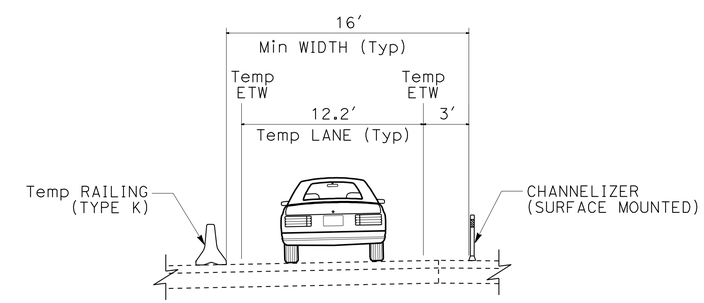

SECTION A-A

"CO22" 30+00 TO "CO22" 39+60
TYPICAL PLACEMENT OF
Temp RAILING (TYPE K) AND CHANNELIZERS

TRAFFIC HANDLING DETAILS

SCALE: 1" = 50'

THD-4

APPROVED FOR TRAFFIC HANDLING WORK ONLY

REVISED BY	DATE REVISED
R. WEBER	08-03-12

CALCULATED-DESIGNED BY: ROBERT WEBER
CHECKED BY: RUSSELL FLOOD
FUNCTIONAL SUPERVISOR: STEVE TOPAL

STATE OF CALIFORNIA - DEPARTMENT OF TRANSPORTATION
DESIGN

P:\proj2\02\3c920_plans\pse\23c920me004.dgn

LAST REVISION 10-10-11
DATE PLOTTED => 30-MAR-2012
TIME PLOTTED => 08:29

Dist	COUNTY	ROUTE	POST MILES TOTAL PROJECT	SHEET No.	TOTAL SHEETS
02	Sis	5	R50.6/R52.1	26	84

Robert Weber 01-05-12
REGISTERED CIVIL ENGINEER DATE

3-26-12
PLANS APPROVAL DATE

REGISTERED PROFESSIONAL ENGINEER ROBERT WEBER No. C62511 Exp. 9-30-13 CIVIL STATE OF CALIFORNIA

THE STATE OF CALIFORNIA OR ITS OFFICERS OR AGENTS SHALL NOT BE RESPONSIBLE FOR THE ACCURACY OR COMPLETENESS OF SCANNED COPIES OF THIS PLAN SHEET.

NOTES:

1. LANE CLOSURES WILL BE PUT IN PLACE FOR BOTH NB AND SB TRAFFIC SIMULTANEOUSLY.
2. FOR OPPOSITE HAND LANE CLOSURE, MIRROR ARROW PLACEMENT, STRIPING, CHANNELIZERS AND USE W20-5 (L+) AND W4-2 (L+).
3. SEE STANDARD PLANS FOR ADDITIONAL INFORMATION.

CONSTRUCTION AREA SIGNS (STATIONARY MOUNTED)

SIGN CODE	PANEL SIZE	SIGN MESSAGE	NUMBER AND SIZE OF POSTS	NUMBER OF SIGNS (BOTH DIRECTIONS) STAGE 1	STAGE 2
W20-5 (L+)	48" x 48"	LEFT LANE CLOSED AHEAD	1 - 4" x 6"	2	2
W20-5 (R+)	48" x 48"	RIGHT LANE CLOSED AHEAD	1 - 4" x 6"	2	2
W4-2L	48" x 48"	LEFT LANE ENDS	1 - 4" x 6"	2	2
W4-2R	48" x 48"	RIGHT LANE ENDS	1 - 4" x 6"	2	2
W6-3	48" x 48"	TWO-WAY TRAFFIC	1 - 4" x 6"	2	2
W7-3a	48" x 36"	NEXT 1 MILE			
C30 (CA)*	48" x 48"	LANE CLOSED	1 - 4" x 6"	3	3
W1-4L*	48" x 48"	REVERSE CURVE (LEFT)	1 - 4" x 6"	1	1
W1-4R*	48" x 48"	REVERSE CURVE (RIGHT)	1 - 4" x 6"	1	1
			TOTAL THIS SHEET	14	14

*SEE TRAFFIC HANDLING DETAILS FOR BARRICADE AND SIGN LOCATIONS.

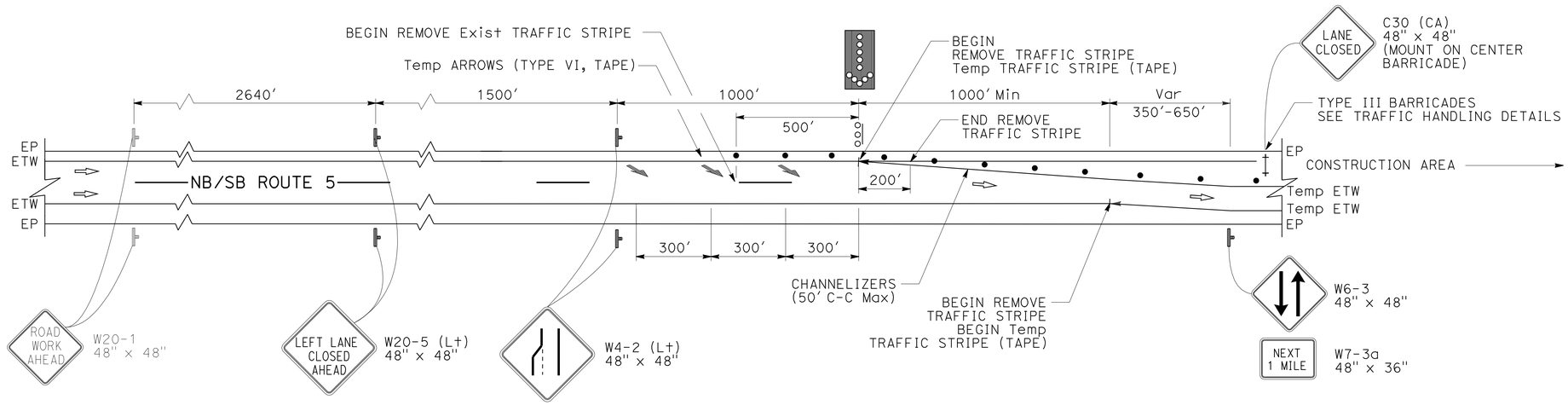

TYPICAL No. 1 LANE CLOSURE WITH PARTIAL SHOULDER USE

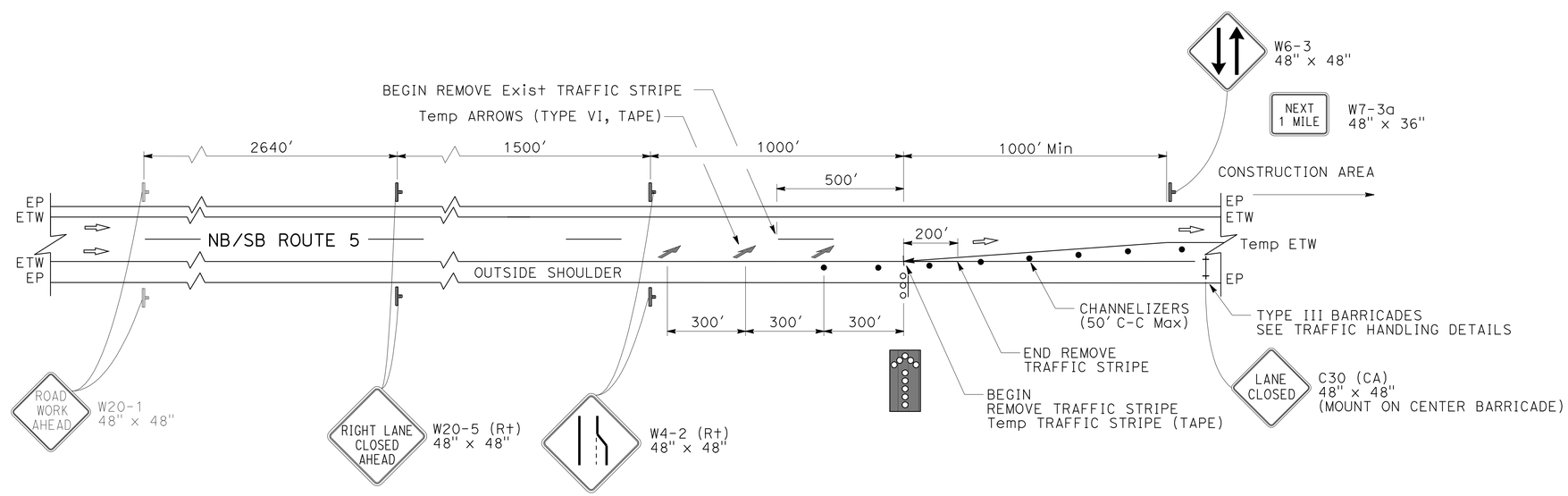

TYPICAL No. 2 LANE CLOSURE

LEGEND:

- CONSTRUCTION AREA SIGNS (STATIONARY MOUNTED)
- DIRECTION OF TRAVEL
- FAS SUPPORT OR TRAILER
- FLASHING ARROW SIGN (FAS)
- STRIPE CHANGE LOCATION

APPROVED FOR TRAFFIC HANDLING WORK ONLY

TRAFFIC HANDLING DETAILS

NO SCALE

THD-5

REVISED BY	DATE REVISED	CALCULATED-DESIGNED BY	CHECKED BY	FUNCTIONAL SUPERVISOR
R. WEBER	01-03-12	ROBERT WEBER	RUSSELL FLOOD	STEVE TOPAL

STATE OF CALIFORNIA - DEPARTMENT OF TRANSPORTATION
DESIGN

P:\proj2\02\3c920_plans\pse\23c920me005.dgn

LAST REVISION 01-03-12 | DATE PLOTTED => 30-MAR-2012 | TIME PLOTTED => 08:29

Dist	COUNTY	ROUTE	POST MILES TOTAL PROJECT	SHEET No.	TOTAL SHEETS
02	Sis	5	R50.6/R52.1	27	84

Robert Weber 01-05-12
REGISTERED CIVIL ENGINEER DATE

3-26-12
PLANS APPROVAL DATE

REGISTERED PROFESSIONAL ENGINEER ROBERT WEBER No. C62511 Exp. 9-30-13 CIVIL STATE OF CALIFORNIA

THE STATE OF CALIFORNIA OR ITS OFFICERS OR AGENTS SHALL NOT BE RESPONSIBLE FOR THE ACCURACY OR COMPLETENESS OF SCANNED COPIES OF THIS PLAN SHEET.

LEGEND

P OBJECT MARKER (TYPE P)

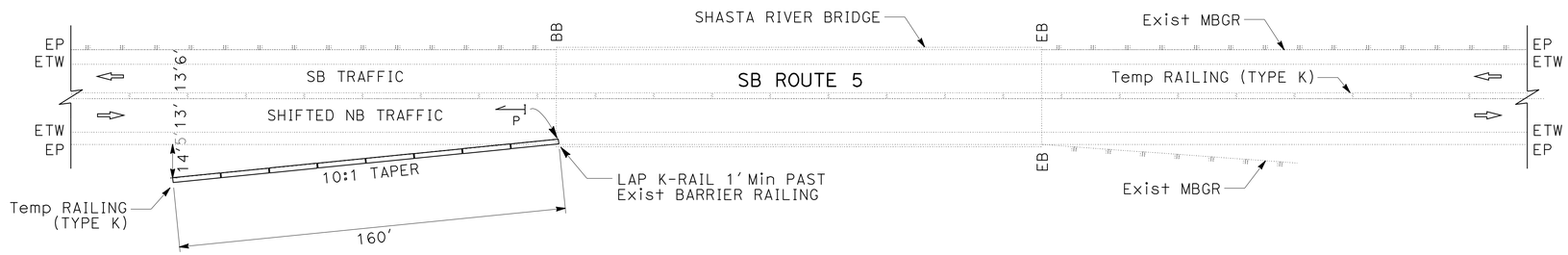

BARRIER RAILING END PROTECTION

STAGE 1
SHASTA RIVER BRIDGE (02-0148L)

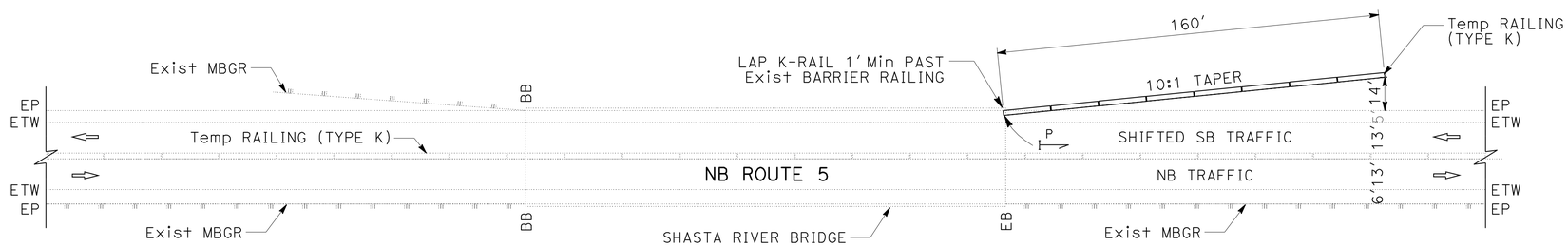

BARRIER RAILING END PROTECTION

STAGE 2
SHASTA RIVER BRIDGE (02-0148R)

APPROVED FOR TRAFFIC HANDLING WORK ONLY

TRAFFIC HANDLING DETAILS

NO SCALE

THD-6

REVISED BY	DATE REVISED
R. WEBER	01-03-12

CALCULATED-DESIGNED BY	CHECKED BY
ROBERT WEBER	RUSSELL FLOOD

FUNCTIONAL SUPERVISOR: STEVE TOPAL

STATE OF CALIFORNIA - DEPARTMENT OF TRANSPORTATION
Caltrans® DESIGN

P:\proj2\02\3c920_plans\pse\23c920me006.dgn

LAST REVISION 10-13-11 | DATE PLOTTED => 30-MAR-2012 | TIME PLOTTED => 08:29

Dist	COUNTY	ROUTE	POST MILES TOTAL PROJECT	SHEET No.	TOTAL SHEETS
02	Sis	5	R50.6/R52.1	28	84

Robert Weber 01-05-12
REGISTERED CIVIL ENGINEER DATE

3-26-12
PLANS APPROVAL DATE

REGISTERED PROFESSIONAL ENGINEER ROBERT WEBER No. C62511 Exp. 9-30-13 CIVIL STATE OF CALIFORNIA

THE STATE OF CALIFORNIA OR ITS OFFICERS OR AGENTS SHALL NOT BE RESPONSIBLE FOR THE ACCURACY OR COMPLETENESS OF SCANNED COPIES OF THIS PLAN SHEET.

TRAFFIC HANDLING QUANTITIES

STATION	NORTHBOUND	SOUTHBOUND	TEMPORARY TRAFFIC STRIPE (TAPE) YELLOW DETAIL 24	TEMPORARY TRAFFIC STRIPE (TAPE) WHITE DETAIL 27B	TEMPORARY PAVEMENT MARKING (TAPE)	TEMPORARY TRAFFIC STRIPE (PAINT) WHITE 4" DETAIL 27B	CHANNELIZER (SURFACE MOUNTED)	PAINT TRAFFIC STRIPE (2 COAT) YELLOW 4" DETAIL 24	PAINT TRAFFIC STRIPE (2 COAT) WHITE 4" (BROKEN 36-12) DETAIL 12	PAINT TRAFFIC STRIPE (2 COAT) WHITE 4" DETAIL 27B	TEMPORARY RAILING (TYPE K)	* REMOVE PAINTED TRAFFIC STRIPE	REMARKS
			LF	LF	SQFT	LF	EA	LF	LF	LF	LF	LF	
STAGE 1													
"A1" 420+00 TO 440+00	X			1000	126		26					380	TYPICAL LANE CLOSURE
"A1" 440+00 TO 479+60	X		2670	2690		1400	32						NB TRAFFIC STRIPES
"A1" 445+00 TO 479+00											3430		Temp RAILING (TYPE K)
"A1" 452+63 TO 454+23		X					13				160		PROTECT BRIDGE RAIL END
"A1" 446+50 TO 468+00		X		350		1800						370	SB TRAFFIC STRIPES
"A1" 468+00 TO 490+50		X	1350	350	126		33					380	TYPICAL LANE CLOSURE
"CO11" 10+00 TO 14+50	X											450	REMOVE ETW (LEFT)
"CO21" 10+00 TO 12+50		X										250	REMOVE ETW (LEFT)
"A1" 425+00 TO 479+60	X							4080	5580	4090			RESTORE NB STRIPES
"A1" 446+50 TO 470+50		X										2400	REMOVE ETW (RIGHT)
"A1" 446+50 TO 485+50		X						2400	3900	2400		1800	RESTORE SB STRIPES
"CO11" 19+00 TO 21+63		X										270	REMOVE ETW (LEFT)
"CO11" 19+00 TO 23+67	X											460	REMOVE ETW (LEFT)
SUBTOTAL -- STAGE 2			4020	4390	252	3200	104	6480	9480	6490	3590	6760	
STAGE 2													
"A1" 426+50 TO 450+00	X		1350	350	126		37					380	TYPICAL LANE CLOSURE
"A1" 450+00 TO 472+00	X			350		1860						400	NB TRAFFIC STRIPES
"A1" 445+00 TO 479+00											3430		Temp RAILING (TYPE K)
"A1" 459+70 TO 461+30		X					13				160		PROTECT BRIDGE RAIL END
"A1" 442+00 TO 479+50		X	2330	2330		1450							SB TRAFFIC STRIPES
"A1" 479+50 TO 499+50		X		1000	126		26					380	TYPICAL LANE CLOSURE
"A1" 442+00 TO 444+50		X										250	REMOVE ETW (LEFT)
"A1" 466+00 TO 468+50	X											250	REMOVE ETW (LEFT)
"A1" 446+50 TO 472+00	X											2560	REMOVE ETW (RIGHT)
"A1" 450+00 TO 468+50	X											1860	REMOVE ETW (RIGHT)
"A1" 448+00 TO 451+50	X											350	REMOVE ETW (LEFT)
"A1" 476+50 TO 479+50	X											300	REMOVE ETW (LEFT)
SUBTOTAL -- STAGE 3			3680	4030	252	3310	76				3590	6730	
SUBTOTAL			7700	8420				6480	9480	6490			
TOTAL			16,120		504	6510	180	22,450			7180	13,490	

* QUANTITIES INCLUDED IN SUMMARY OF QUANTITY SHEETS

TRAFFIC HANDLING QUANTITIES

THQ-1

STATE OF CALIFORNIA - DEPARTMENT OF TRANSPORTATION
Caltrans DESIGN

ROBERT WEBER | REVISED BY | R. FLOOD
RUSSELL FLOOD | DATE REVISED | 08-13-11
CALCULATED-DESIGNED BY
CHECKED BY
FUNCTIONAL SUPERVISOR
STEVE TOPAL

P:\proj2\02\3c920_plans\pse\23c920mf001.dgn

LAST REVISION 08-13-11 | DATE PLOTTED => 30-MAR-2012 | TIME PLOTTED => 08:30

Dist	COUNTY	ROUTE	POST MILES TOTAL PROJECT	SHEET No.	TOTAL SHEETS
02	Sis	5	R50.6/R52.1	29	84

REGISTERED CIVIL ENGINEER 01-05-12 DATE

3-26-12
PLANS APPROVAL DATE

REGISTERED PROFESSIONAL ENGINEER TOBY J. CRAWFORD No. C71138 Exp. 6-30-13 CIVIL STATE OF CALIFORNIA

THE STATE OF CALIFORNIA OR ITS OFFICERS OR AGENTS SHALL NOT BE RESPONSIBLE FOR THE ACCURACY OR COMPLETENESS OF SCANNED COPIES OF THIS PLAN SHEET.

NOTES:

1. CONTRAST TREATMENT TO BE PLACED ON ALL NEW PCC PAVEMENT.
2. CONTRAST TREATMENT TO BE PLACED PRIOR TO PLACING WHITE TRAFFIC STRIPE.
3. CONTRAST TREATMENT IS 2-COAT BLACK PAINT.

LEGEND:

- 4" TWO-COMPONENT PAINT TRAFFIC STRIPE (WHITE)
- 4" CONTRAST TREATMENT
- DIRECTION OF TRAVEL
- X — TRAFFIC STRIPE DETAIL No.
- BEGIN/END TRAFFIC STRIPE

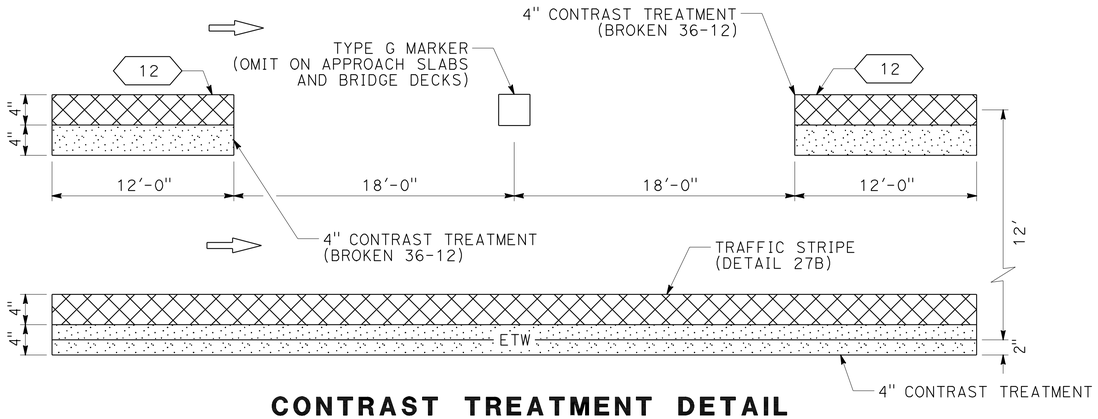

CONTRAST TREATMENT DETAIL

(SEE NOTES 1 AND 2)

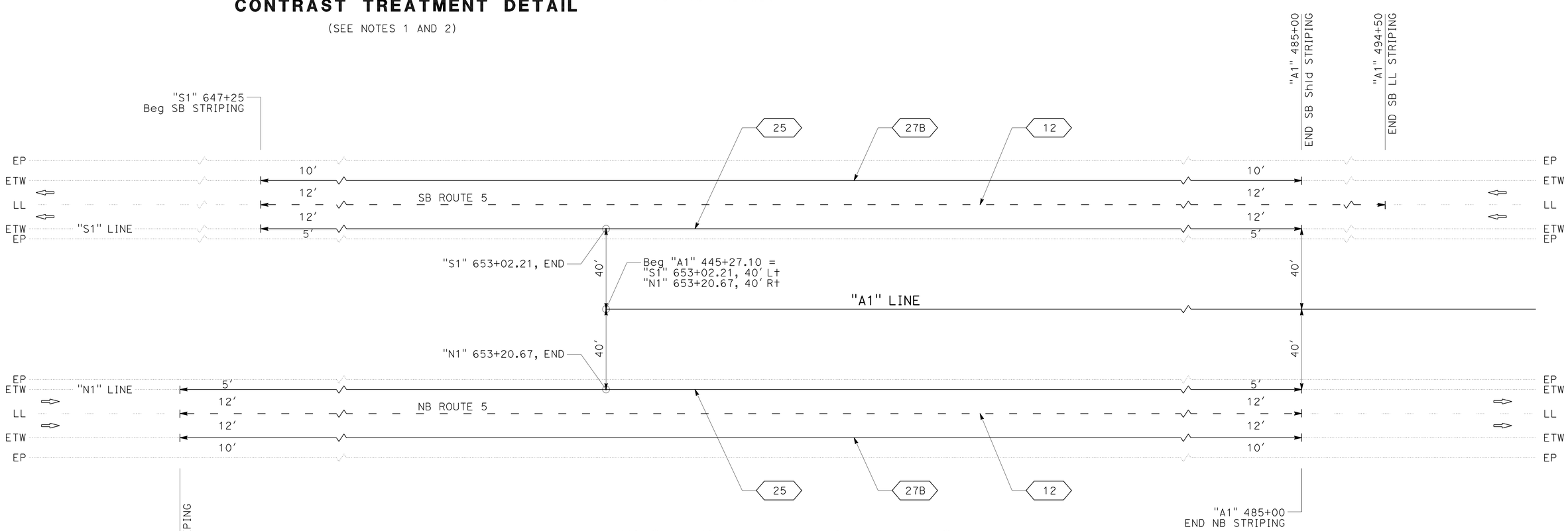

TYPICAL PAVEMENT DELINEATION

PAVEMENT DELINEATION DETAILS

NO SCALE

PDD-1

APPROVED FOR PAVEMENT DELINEATION WORK ONLY

R. WEBER	01-04-12
REVISED BY	DATE REVISED
TOBY CRAWFORD	RUSSELL FLOOD
CALCULATED-DESIGNED BY	CHECKED BY
FUNCTIONAL SUPERVISOR	STEVE TOPAL

STATE OF CALIFORNIA - DEPARTMENT OF TRANSPORTATION
Caltrans
DESIGN

P:\proj2\02\3c920_plans\pse\23c920nb001.dgn

LAST REVISION 01-04-12
DATE PLOTTED => 30-MAR-2012
TIME PLOTTED => 08:30

Dist	COUNTY	ROUTE	POST MILES TOTAL PROJECT	SHEET No.	TOTAL SHEETS
02	Sis	5	R50.6/R52.1	30	84

Robert Weber 01-05-12
REGISTERED CIVIL ENGINEER DATE

3-26-12
PLANS APPROVAL DATE

REGISTERED PROFESSIONAL ENGINEER ROBERT WEBER No. C62511 Exp. 9-30-13 CIVIL STATE OF CALIFORNIA

THE STATE OF CALIFORNIA OR ITS OFFICERS OR AGENTS SHALL NOT BE RESPONSIBLE FOR THE ACCURACY OR COMPLETENESS OF SCANNED COPIES OF THIS PLAN SHEET.

NOTE:
1. (N) - NOT A SEPARATE PAY ITEM, FOR INFORMATION ONLY

TRAFFIC STRIPES AND PAVEMENT MARKERS

STATION RANGE	NORTHBOUND	SOUTHBOUND	REMOVE PAINTED TRAFFIC STRIPE	4" TWO-COMPONENT PAINT TRAFFIC STRIPE		4" CONTRAST TREATMENT	4" CONTRAST TREATMENT (BROKEN 36-12)	4" TWO-COMPONENT PAINT TRAFFIC STRIPE (BROKEN 36-12)	PAVEMENT MARKER (RETROREFLECTIVE -RECESSED)	
				YELLOW DETAIL 25	WHITE DETAIL 27B				TYPE G	TYPE H
			LF	LF	LF	LF	LF	LF	EA	EA
"N1" 632+90 TO 647+40	X		3070	1450	1450			1450	30	31
"N1" 647+40 TO "A1" 453+92	X		3040	1440	1440			1440	31	31
"S1" 647+25 TO "A1" 454+11		X	2700	1460	1460			1460	31	31
"A1" 453+92 TO 485+00	X		6630	3110	3110	3110	3110	3110	65	65
"A1" 454+11 TO 485+00		X	6820	3090	3090	3090	3090	3090	65	65
"A1" 485+00 TO 494+50		X					950	950	20	
FROM STAGE CONSTRUCTION			13,490							
SUBTOTAL				10,550	10,550				242	223
TOTAL			35,750	21,100		6200	7150	11,500	465	

SHOULDER RUMBLE STRIP

STATION RANGE	NORTHBOUND	SOUTHBOUND	OUTSIDE SHOULDER	MEDIAN SHOULDER	(N) LENGTH	SHOULDER RUMBLE STRIP (HMA,GROUND-IN INDENTATIONS)	SHOULDER RUMBLE STRIP (CONCRETE PAVEMENT, GROUND-IN INDENTATIONS)
					FT	STA	STA
"N1" 647+95 TO "A1" 453+90	X			X	1390	13.9	
"S1" 649+75 TO "A1" 454+10		X		X	1210	12.1	
"A1" 446+50 TO 453+90	X		X		740	7.4	
"A1" 448+00 TO 454+10		X	X		610	6.1	
"A1" 459+85 TO 490+00	X		X	X	3015		60.3
"A1" 460+05 TO 490+00		X	X		2795		28.0
"A1" 460+05 TO 490+00		X		X	2995		30.0
TOTAL						39.5	118.3

METAL BEAM GUARD RAILING

STATION RANGE	NORTHBOUND	SOUTHBOUND	OUTSIDE SHOULDER	MEDIAN SHOULDER	(N) Exist LENGTH	REMOVE MBGR	RECONSTRUCT METAL BEAM GUARD RAILING					VEGETATION CONTROL (MINOR CONCRETE)	DOUBLE METAL BEAM GUARD RAILING (WOOD POST)	TRANSITION RAILING (TYPE WB)
							TRANSITION RAILING (TYPE WB)	METAL BEAM GUARD RAILING	DOUBLE METAL BEAM GUARD RAILING	TERMINAL SYSTEM (TYPE CAT)	TERMINAL SYSTEM (TYPE CAT) BACKUP			
					LF	LF	LF	LF	LF	LF	LF	SQYD	LF	EA
"A1" 451+31 TO 454+06	X		X		275		25	250						
"A1" 451+50 TO 454+26		X	X		275			275						
"A1" 452+10 TO 454+78	X			X	195		25	25	112.5	31.25	12.5	350	62.5	
"A1" 459+69 TO 460+19	X		X		50			50						
"A1" 459+88 TO 460+38		X	X		50	25								1
"A1" 459+90 TO 462+58		X		X	195	112.5		25	25	31.25	12.5	350	150	
SUBTOTAL							50	625	137.5	62.5	25			
TOTAL					1040	137.5	900					700	212.5	1

ROADWAY

STATION RANGE	NORTHBOUND	SOUTHBOUND	COLD PLANE ASPHALT CONCRETE PAVEMENT	ROADWAY EXCAVATION	(N) EMBANKMENT	CLASS 2 AGGREGATE BASE	HOT MIX ASPHALT (TYPE A)	PLACE HOT MIX ASPHALT DIKE (TYPE F)	TACK COAT	MINOR CONCRETE (CURB)	(N) BAR REINFORCING STEEL
			SQYD	CY	CY	CY	TON	LF	TON	LF	LB
"A1" 451+50 TO 454+24		X					3.7	258		12	39.6
"A1" 451+50 TO 454+06	X						3.4	239		12	39.6
"A1" 451+50 TO 453+93	X		1050				151		0.4		
"A1" 451+50 TO 454+12		X	1117				161		0.5		
"A1" 459+90 TO 460+01		X								12	39.6
"C1" 50+00 TO 53+94.5				563	563	166					
TOTAL			2167	563	563	166	319	497	0.9	36	119

SUMMARY OF QUANTITIES
Q-1

R. WEBER | 12-21-11 | REVISED BY | DATE REVISED
ROBERT WEBER | RUSSELL FLOOD | CALCULATED-DESIGNED BY | CHECKED BY
FUNCTIONAL SUPERVISOR: STEVE TOPAL
STATE OF CALIFORNIA - DEPARTMENT OF TRANSPORTATION
Caltrans® DESIGN
P:\proj2\02\3c920_plans\pse\23c920pa001.dgn

LAST REVISION 12-21-11 | DATE PLOTTED => 30-MAR-2012 | TIME PLOTTED => 08:30

Dist	COUNTY	ROUTE	POST MILES TOTAL PROJECT	SHEET No.	TOTAL SHEETS
02	Sis	5	R50.6/R52.1	31	84

Robert Weber 01-05-12
REGISTERED CIVIL ENGINEER DATE

3-26-12
PLANS APPROVAL DATE

REGISTERED PROFESSIONAL ENGINEER ROBERT WEBER No. C62511 Exp. 9-30-13 CIVIL STATE OF CALIFORNIA

THE STATE OF CALIFORNIA OR ITS OFFICERS OR AGENTS SHALL NOT BE RESPONSIBLE FOR THE ACCURACY OR COMPLETENESS OF SCANNED COPIES OF THIS PLAN SHEET.

NOTE:

1. (N) - NOT A SEPARATE PAY ITEM, FOR INFORMATION ONLY

EROSION CONTROL (HYDROSEED)

STATION RANGE	EROSION CONTROL (HYDROSEED)	MOVE IN/MOVE OUT (EROSION CONTROL)	(N) STRAW	(N) FIBER	(N) PURE LIVE SEED	(N) COMMERCIAL FERTILIZER	(N) TACKIFIER
	ACRE	EA	TON	LB	LB	LB	LB
"A1" 453+00 TO 460+00	2	2	4	9000	160	200	200

FENCING

LOCATION/STATION RANGE AND SHEET NUMBER	TEMPORARY FENCE (TYPE ESA)	REMOVE FENCE (TYPE WM)	FENCE (TYPE WM)
	LF	LF	LF
ALONG SOUTH ACCESS ROAD (L-2)	250		
ALONG SHASTA RIVER (WPCD-1)	1200		
"C1" 50+00 TO 53+50 (C-3)		355	355
TOTAL	1450	355	355

WATER POLLUTION CONTROL

TEMPORARY EROSION CONTROL BLANKET	TEMPORARY FIBER ROLL	TEMPORARY SILT FENCE	TEMPORARY CONSTRUCTION ENTRANCE	TEMPORARY COVER	TEMPORARY CHECK DAM	TEMPORARY DRAINAGE INLET PROTECTION	TEMPORARY HYDRAULIC MULCH (POLYMER STABILIZED FIBER MATRIX)	TEMPORARY SOIL BINDER	MOVE-IN/MOVE-OUT (TEMPORARY EROSION CONTROL)
SQYD	LF	LF	EA	SQYD	LF	EA	SQYD	SQYD	EA
444	1200	1200	2	1000	200	5	12,100	12,100	11

REMOVE ASPHALT CONCRETE PAVEMENT AND SHOULDER BACKING

STATION RANGE	NORTHBOUND	SOUTHBOUND	OUTSIDE SHOULDER	MEDIAN SHOULDER	MEDIAN CROSSOVER	REMOVE ASPHALT CONCRETE	SHOULDER BACKING
						CY	TON
"S1" 649+79 TO 652+26							
"N1" 649+90 TO 652+44					X	350	64
"A1" 449+50 TO 451+50					X	260	52
"A1" 451+50 TO 454+12		X	X				30
"A1" 451+50 TO 454+12		X		X			30
"A1" 451+50 TO 453+93	X		X				24
"A1" 466+00 TO 474+50					X	1260	200
TOTAL						1870	400

SUMMARY OF QUANTITIES
Q-2

R. WEBER	12-07-11
REVISED BY	DATE REVISED
ROBERT WEBER	
RUSSELL FLOOD	
CALCULATED-DESIGNED BY	
CHECKED BY	
FUNCTIONAL SUPERVISOR	
STEVE TOPAL	

Caltrans® DESIGN
STATE OF CALIFORNIA - DEPARTMENT OF TRANSPORTATION

P:\proj2\02\3c920_plans\pse\23c920pa002.dgn

LAST REVISION 12-07-11 | DATE PLOTTED => 30-MAR-2012 TIME PLOTTED => 08:30

Dist	COUNTY	ROUTE	POST MILES TOTAL PROJECT	SHEET No.	TOTAL SHEETS
02	Sis	5	R50.6/R52.1	32	84

Randell D. Hiatt
REGISTERED CIVIL ENGINEER

May 20, 2011
PLANS APPROVAL DATE

REGISTERED PROFESSIONAL ENGINEER Randell D. Hiatt No. C50200 Exp. 6-30-11 CIVIL STATE OF CALIFORNIA

The State of California or its officers or agents shall not be responsible for the accuracy or completeness of electronic copies of this plan sheet.

To accompany plans dated 3-26-12

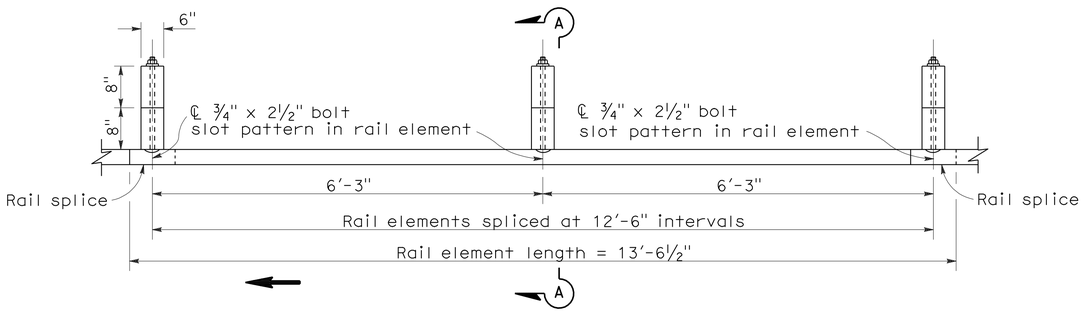

PLAN

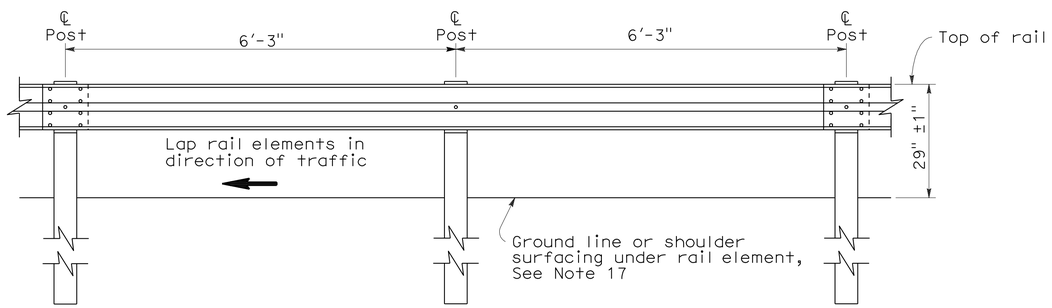

ELEVATION

METAL BEAM GUARD RAILING WITH WOOD POST AND BLOCKS

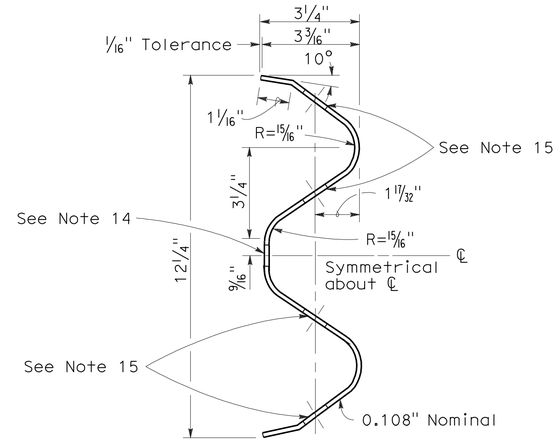

SECTION THRU RAIL ELEMENT

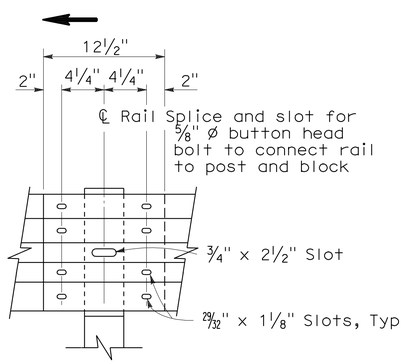

ELEVATION

RAIL ELEMENT SPLICE DETAIL

a) Connect the over lapped end of the rail elements with ⅝" ø x 1⅜" button head oval shoulder splice bolts inserted into the 29⁄32" x 1⅛" slots and bolted together with ⅝" ø recessed hex nuts. Recess of hex nut points toward rail element. A total of 8 bolts and nuts are to be used at each rail splice connection.

b) The ends of the rail elements are to be overlapped in the direction of traffic (see details).

c) Where end cap is to be attached to the end of a rail element, a total of 4 of the above described splice bolts and nuts are to be used.

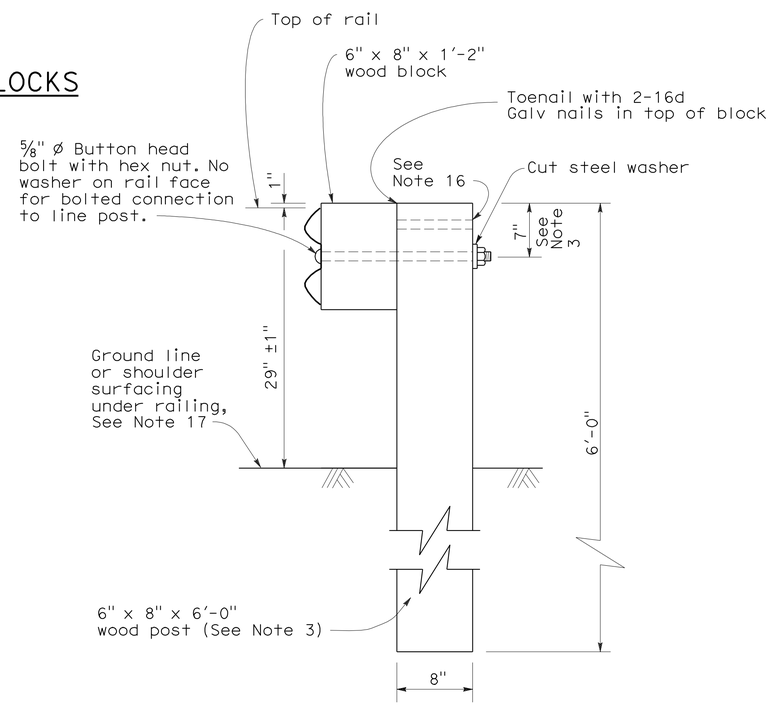

SECTION A-A

TYPICAL WOOD LINE POST INSTALLATION

See Note 4

NOTES:

1. For details of steel post installations, see Standard Plan A77A2.
2. For details of standard hardware used to construct guard railing, see Standard Plan A77B1.
3. For details of wood posts and wood blocks used to construct guard railing, see Standard Plan A77C1.
4. For additional installation details, see Standard Plan A77C3.
5. Guard railing post spacing to be 6'-3" center to center, except as otherwise noted.
6. For guard railing typical layouts, see the A77E, A77F and A77G Series of Standard Plans.
7. For terminal system end treatment details, see the A77L Series of Standard Plans. To connect railing to terminal system end treatment, transition the top of railing height at a ratio of 120:1 to terminal system end treatment height plus one 12'-6" standard railing section at the transitioned height for a horizontal connection to the end treatment.
8. For guard railing end anchor details, see Standard Plans A77H1 and A77I2.
9. For details of guard railing transition to bridge railing, see Standard Plan A77J4.
10. For additional details of guard railing connection to bridge railings, see Standard Plans A77J1, A77J2 and A77K1.
11. For guard railing connection details to abutments and walls, see Standard Plan A77J3.
12. Direction of adjacent traffic indicated by ➡.
13. For typical guard railing delineation and dike positioning details, see Standard Plan A77C4.
14. Slotted hole for bolted connection of rail element to block and post. See "Section Thru Rail Element".
15. Slotted holes for splice bolts to overlap ends of rail element. See "Section Thru Rail Element".
16. Additional hole in uppermost portion of line post is for potential future adjustments of railing height. See Standard Plan A77C1.
17. Install posts in soil.

STATE OF CALIFORNIA
DEPARTMENT OF TRANSPORTATION

METAL BEAM GUARD RAILING STANDARD RAILING SECTION (WOOD POST WITH WOOD BLOCK)

NO SCALE

RSP A77A1 DATED MAY 20, 2011 SUPERSEDES STANDARD PLAN A77A1 DATED MAY 1, 2006 - PAGE 41 OF THE STANDARD PLANS BOOK DATED MAY 2006.

REVISED STANDARD PLAN RSP A77A1

2006 REVISED STANDARD PLAN RSP A77A1

3-10-11

To accompany plans dated 3-26-12

Dist	COUNTY	ROUTE	POST MILES TOTAL PROJECT	SHEET No.	TOTAL SHEETS
02	Sis	5	R50.6/R52.1	33	84

Randell D. Hiatt
REGISTERED CIVIL ENGINEER

May 20, 2011
PLANS APPROVAL DATE

REGISTERED PROFESSIONAL ENGINEER
Randell D. Hiatt
No. C50200
Exp. 6-30-11
CIVIL
STATE OF CALIFORNIA

The State of California or its officers or agents shall not be responsible for the accuracy or completeness of electronic copies of this plan sheet.

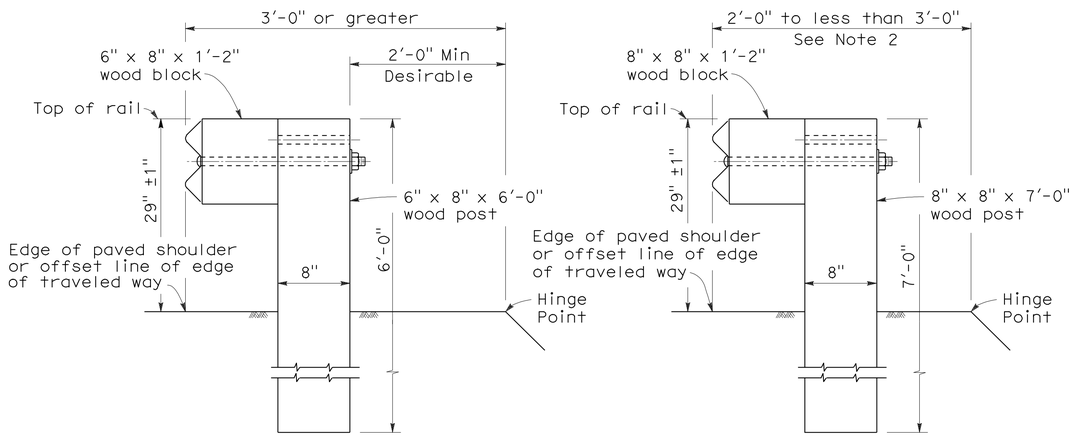

DETAIL A
TYPICAL ROADWAY INSTALLATION
See Note 1

DETAIL B
NARROW ROADWAY INSTALLATION
See Note 1

POST EMBEDMENT

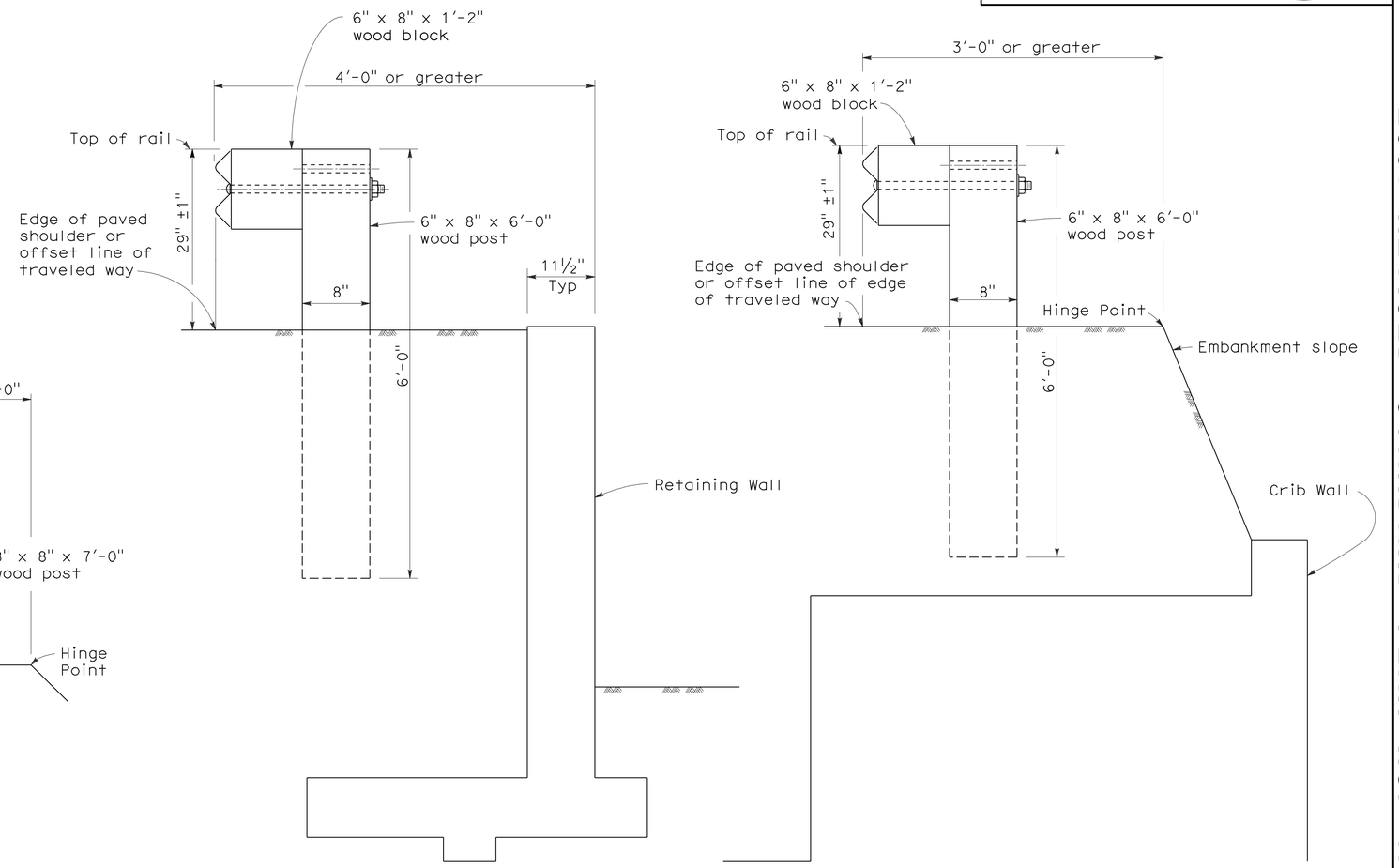

DETAIL C

DETAIL D

INSTALLATION AT EARTH RETAINING WALLS

NOTES:

1. These installation details also applicable to steel line post installations. For Detail A, C, and D, where steel line post installations are constructed, W6 x 9 steel post, 6'-0" in length, with 6" x 8" x 1'-2" notched wood blocks or notched recycled plastic blocks are to be used in place of the size of wood post and wood block shown. For Detail B, where steel line post installations are constructed, W6 x 9 steel post, 7'-0" in length, with 6" x 8" x 1'-2" notched wood blocks or notched recycled plastic blocks are to be used in place of the size of wood post and wood block shown. For additional installation details, see Standard Plans A77A1 and A77A2.
2. Where the distance between the face of the rail and the hinge point is less than 2'-0", see the Project Plans for special details.
3. For dike positioning with guard railing installations, see Standard Plan A77C4.

STATE OF CALIFORNIA
DEPARTMENT OF TRANSPORTATION

METAL BEAM GUARD RAILING TYPICAL LINE POST EMBEDMENT AND HINGE POINT OFFSET DETAILS

NO SCALE

RSP A77C3 DATED MAY 20, 2011 SUPERSEDES STANDARD PLAN A77C3
DATED MAY 1, 2006 - PAGE 46 OF THE STANDARD PLANS BOOK DATED MAY 2006.

REVISED STANDARD PLAN RSP A77C3

2006 REVISED STANDARD PLAN RSP A77C3

3-10-11

Dist	COUNTY	ROUTE	POST MILES TOTAL PROJECT	SHEET No.	TOTAL SHEETS
02	Sis	5	R50.6/R52.1	34	84

Randell D. Hiatt
REGISTERED CIVIL ENGINEER

May 20, 2011
PLANS APPROVAL DATE

REGISTERED PROFESSIONAL ENGINEER
Randell D. Hiatt
No. C50200
Exp. 6-30-11
CIVIL
STATE OF CALIFORNIA

The State of California or its officers or agents shall not be responsible for the accuracy or completeness of electronic copies of this plan sheet.

To accompany plans dated 3-26-12

NOTES:

1. When necessary to place dike in front of face of guard railing, only Type C dike may be used. For dike details, see Standard Plan A87B.
2. For standard railing post embedment, see Standard Plans A77C3.
3. Guard railing delineation to be used where shown on the Project Plans.
4. When dike or curb is placed under guard railing, the maximum height of the dike or curb shall be 4". Mountable dike should not be used. For dike and curb details, see Standard Plans A87A and A87B.
5. For details of typical distance between the face of rail and hinge point, see Standard Plan A77C3.
6. For steel line posts, use ¼ - 20 self-tapping screws in 0.22" diameter holes or ¼" bolts in 9/32" diameter holes.

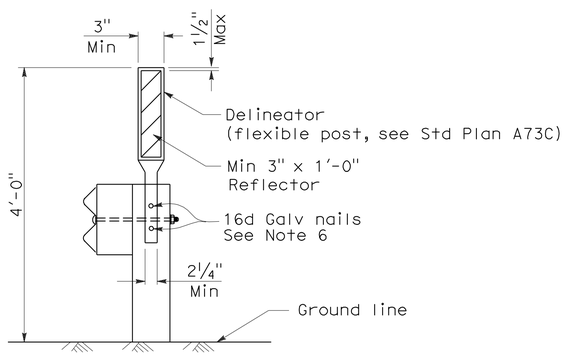

GUARD RAILING DELINEATION

See Note 3

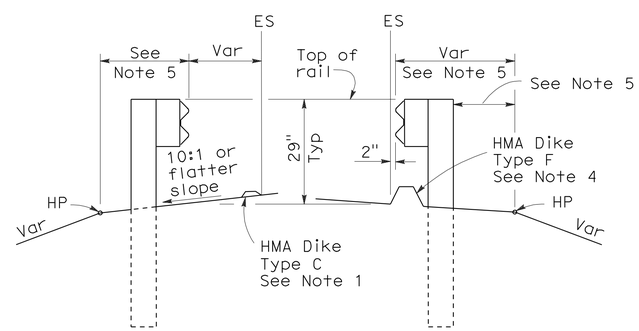

DIKE POSITIONING

See Note 1

STATE OF CALIFORNIA
DEPARTMENT OF TRANSPORTATION

METAL BEAM GUARD RAILING TYPICAL RAILING DELINEATION AND DIKE POSITIONING DETAILS

NO SCALE

RSP A77C4 DATED MAY 20, 2011 SUPERSEDES RSP A77C4 DATED JUNE 6, 2008 AND STANDARD PLAN A77C4 DATED MAY 1, 2006 - PAGE 47 OF THE STANDARD PLANS BOOK DATED MAY 2006.

REVISED STANDARD PLAN RSP A77C4

2006 REVISED STANDARD PLAN RSP A77C4

3-10-11

DIST	COUNTY	ROUTE	POST MILES TOTAL PROJECT	SHEET NO.	TOTAL SHEETS
02	Sis	5	R50.6/R52.1	35	84

Randell D. Hiatt
REGISTERED CIVIL ENGINEER

October 20, 2006
PLANS APPROVAL DATE

REGISTERED PROFESSIONAL ENGINEER
Randell D. Hiatt
No. C50200
Exp. 6-30-07
CIVIL
STATE OF CALIFORNIA

The State of California or its officers or agents shall not be responsible for the accuracy or completeness of electronic copies of this plan sheet.

To accompany plans dated 3-26-12

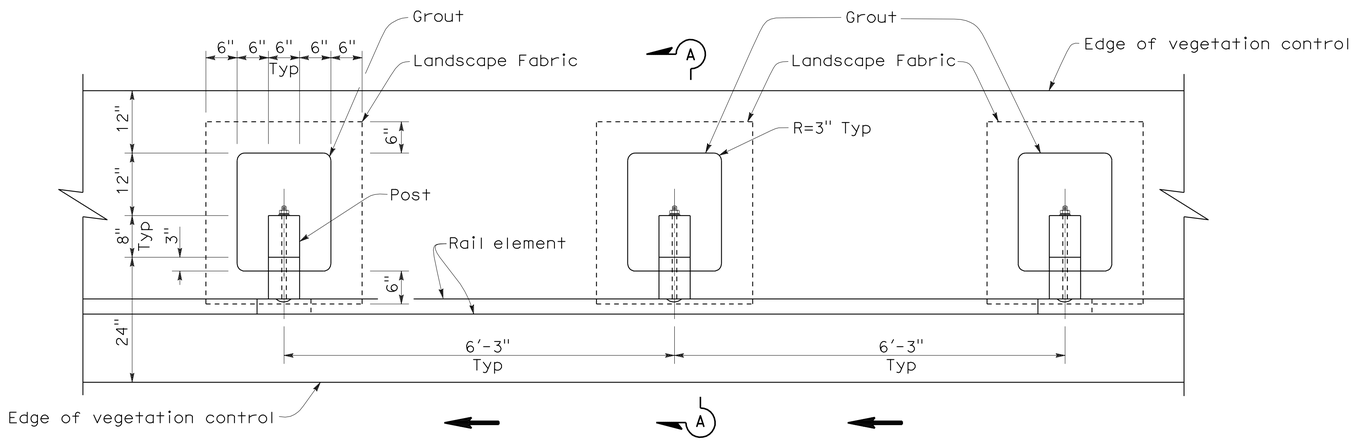

PLAN

NOTES:

1. Where the distance between back of post and hinge point is less than 24", vegetation control to be constructed flush with the back edge of the post.
2. Where dike is constructed under railing, construct vegetation control to back edge of dike. Where paved shoulder is constructed within 24" in front of the post, construct vegetation control to the edge of paved shoulder.
3. Direction of adjacent traffic indicated by ← .

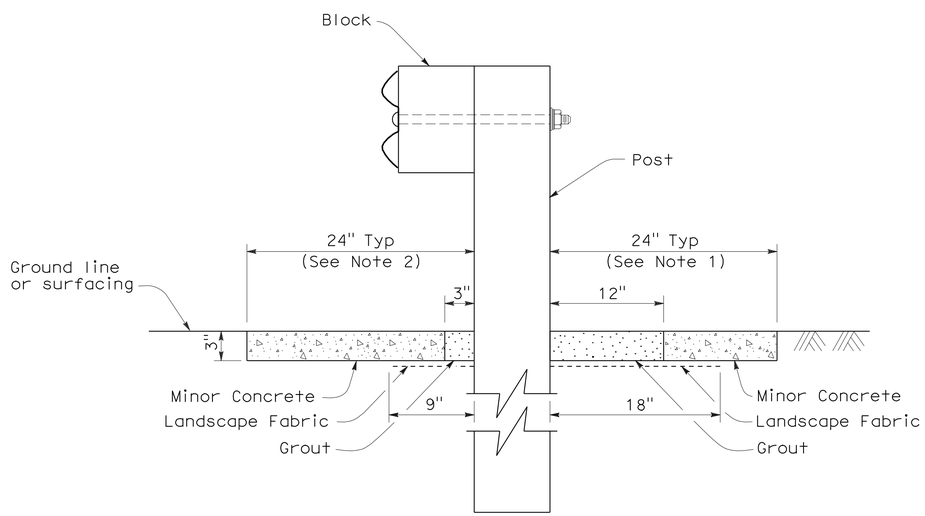

SECTION A-A

STATE OF CALIFORNIA
DEPARTMENT OF TRANSPORTATION

METAL BEAM GUARD RAILING TYPICAL VEGETATION CONTROL STANDARD RAILING SECTION

NO SCALE

NSP A77C5 DATED OCTOBER 20, 2006 SUPPLEMENTS THE STANDARD PLANS BOOK DATED MAY 2006.

NEW STANDARD PLAN NSP A77C5

2006 NEW STANDARD PLAN NSP A77C5

7-17-06

DIST	COUNTY	ROUTE	POST MILES TOTAL PROJECT	SHEET NO.	TOTAL SHEETS
02	Sis	5	R50.6/R52.1	36	84

Randell D. Hiatt
REGISTERED CIVIL ENGINEER

October 20, 2006
PLANS APPROVAL DATE

REGISTERED PROFESSIONAL ENGINEER
Randell D. Hiatt
No. C50200
Exp. 6-30-07
CIVIL
STATE OF CALIFORNIA

The State of California or its officers or agents shall not be responsible for the accuracy or completeness of electronic copies of this plan sheet.

To accompany plans dated 3-26-12

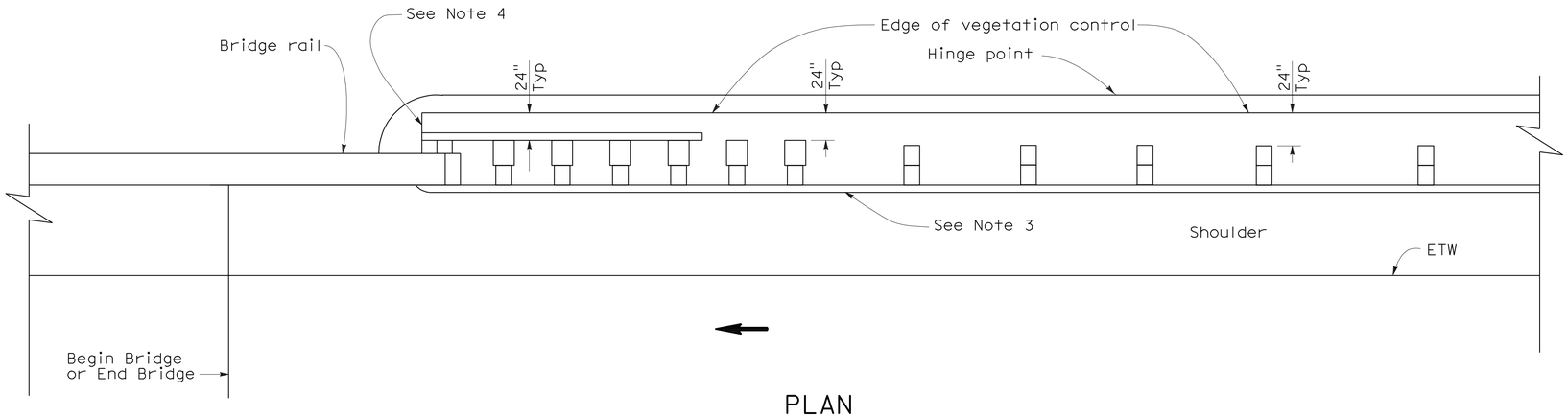

PLAN

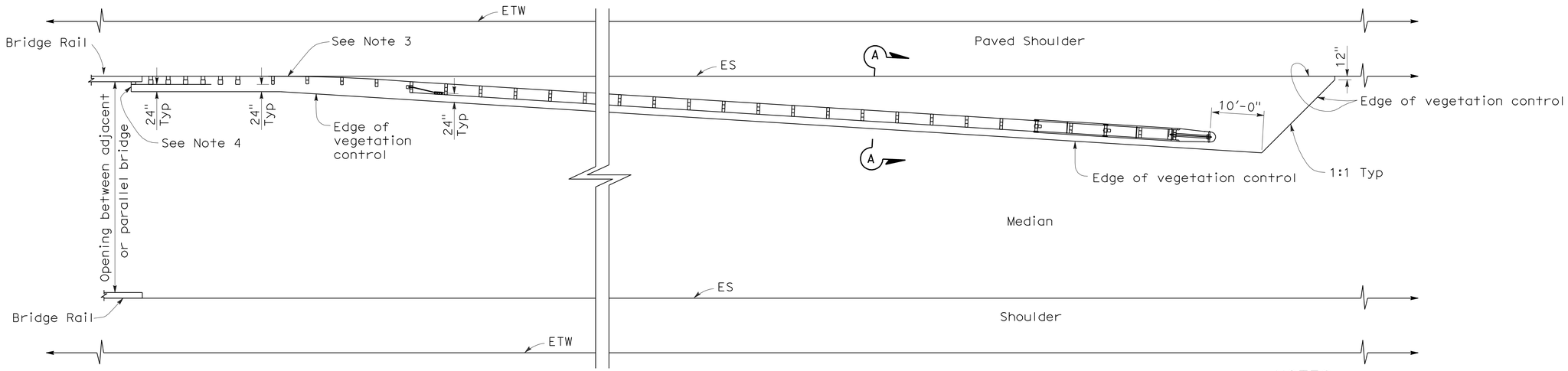

PLAN

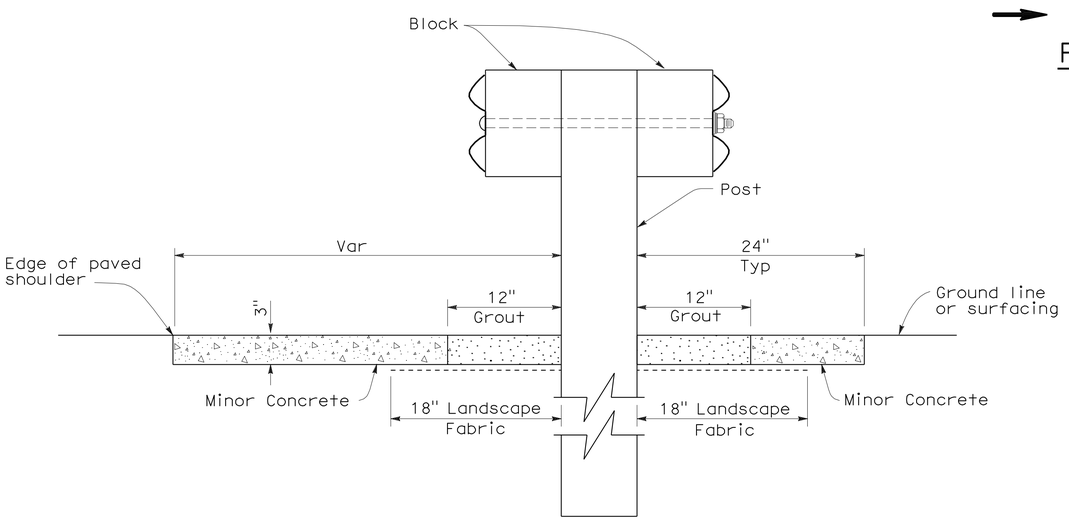

SECTION A-A

NOTES:

1. See New Standard Plan NSP A77C5 for additional vegetation control details.
2. Where the distance between back of post and hinge point is less than 24", vegetation control to be constructed flush with the back edge of the post.
3. Where dike is constructed under railing, construct vegetation control to back edge of dike. Where paved shoulder is constructed within 24" in front of the post, construct vegetation control to the edge of paved shoulder.
4. End vegetation control at end of backside rail element.
5. Direction of adjacent traffic indicated by ←.

STATE OF CALIFORNIA
DEPARTMENT OF TRANSPORTATION

METAL BEAM GUARD RAILING TYPICAL VEGETATION CONTROL AT STRUCTURE APPROACH AND DEPARTURE

NO SCALE

NSP A77C7 DATED OCTOBER 20, 2006 SUPPLEMENTS THE STANDARD PLANS BOOK DATED MAY 2006.

NEW STANDARD PLAN NSP A77C7

2006 NEW STANDARD PLAN NSP A77C7

7-17-06

DIST	COUNTY	ROUTE	POST MILES TOTAL PROJECT	SHEET NO.	TOTAL SHEETS
02	Sis	5	R50.6/R52.1	37	84

Randell D. Hiatt
REGISTERED CIVIL ENGINEER

June 6, 2008
PLANS APPROVAL DATE

REGISTERED PROFESSIONAL ENGINEER
Randell D. Hiatt
No. C50200
Exp. 6-30-09
CIVIL
STATE OF CALIFORNIA

The State of California or its officers or agents shall not be responsible for the accuracy or completeness of electronic copies of this plan sheet.

To accompany plans dated 3-26-12

2006 REVISED STANDARD PLAN RSP A77F1

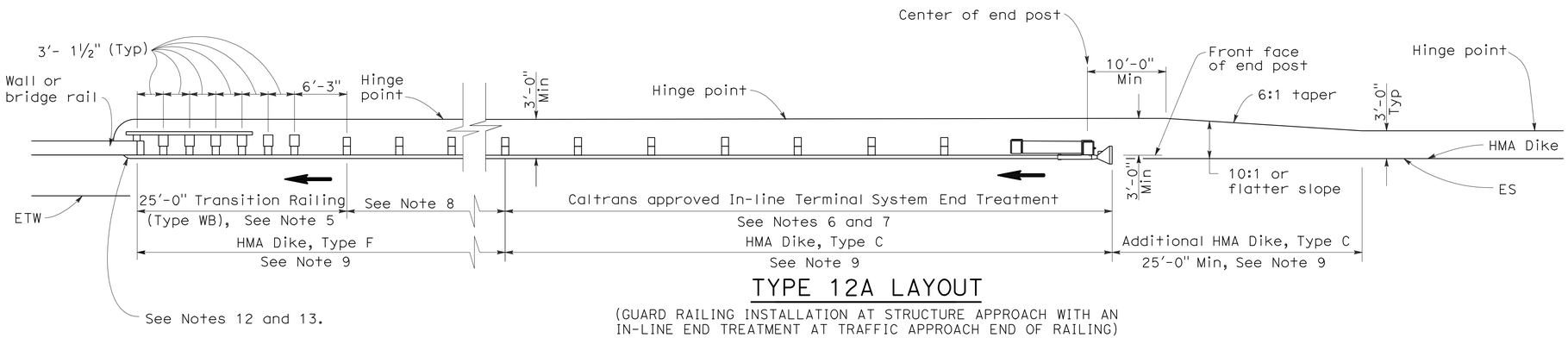

TYPE 12A LAYOUT

(GUARD RAILING INSTALLATION AT STRUCTURE APPROACH WITH AN IN-LINE END TREATMENT AT TRAFFIC APPROACH END OF RAILING)
See Notes 10

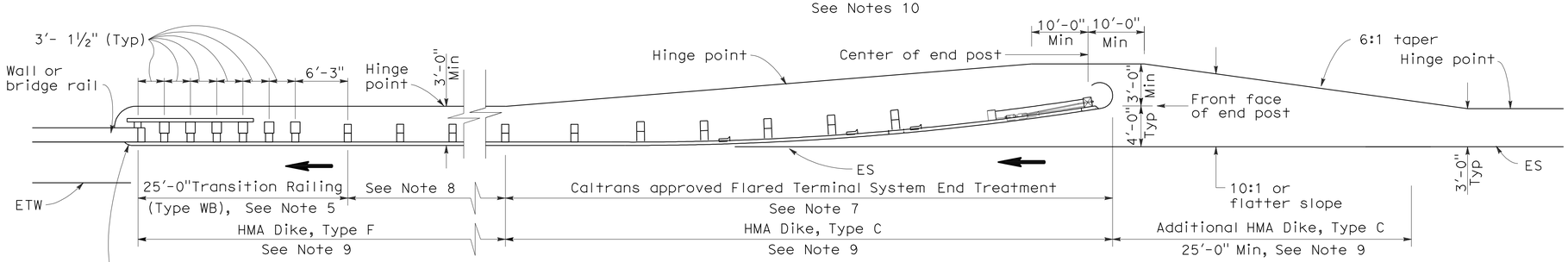

TYPE 12B LAYOUT

(GUARD RAILING INSTALLATION AT STRUCTURE APPROACH WITH A FLARED END TREATMENT AT TRAFFIC APPROACH END OF RAILING)
See Notes 10

NOTES:

1. Line post, blocks and hardware to be used are shown on Standard Plans A77A1, A77A2, A77B1, A77C1 and A77C2.
2. Guard rail post spacing to be 6'-3" center to center, except as otherwise noted.
3. Except as noted, line posts are 6" x 8" x 6'-0" wood with 6" x 8" x 1'-2" wood blocks. W6 x 9 steel posts, 6'-0" in length, with 6" x 8" x 1'-2" notched wood blocks or plastic blocks may be used for 6" x 8" x 6'-0" wood posts with 6" x 8" x 1'-2" wood blocks where applicable and when specified.
4. Direction of adjacent traffic indicated by ➡.
5. For Transition Railing (Type WB) details for Types 12A and 12B Layouts, see Standard Plan A77J4.
6. In-line Terminal System End Treatments are used where site conditions will not accommodate a flared end treatment.
7. The type of terminal system end treatment to be used will be shown on the Project Plans.
8. Dependent on site conditions (embankment height, side slopes, or other fixed objects), it may be advisable to construct additional guard railing (a length equal to multiples of 12'-6" with 6'-3" post spacing) between the transition railing and end treatment.
9. Where placement of dike is required with guard railing installations, see Revised Standard Plan RSP A77C4 for dike positioning details.
10. Type 12A or Type 12B Layouts are typically used:
    a. To the right of approaching traffic, at the end of a structure, on two-lane conventional highway where the roadbed width across the structure is less than 40 feet.
    b. To the left of approaching traffic, at the end of a structure, on two-lane conventional highway where the roadbed width across the structure is less than 40 feet.
    c. To the right of approaching traffic at the end of each structure on multilane freeways or expressways with separate adjacent or parallel bridges.
    d. To the right of approaching traffic at the end of the structure on multilane freeways or expressways with decked median on the bridge.
11. See Revised Standard Plan RSP A77F3 for typical layout used left of approaching traffic at the ends of each structure on multilane freeways or expressways with separate adjacent or parallel bridges.
12. For additional details of typical connections to bridge rail, see Connection Detail AA on Revised Standard Plans RSP A77J1 and RSP A77J2 and Connection Detail FF on Standard Plans A77K1 and A77K2.
13. For additional details of a typical connection to walls or abutments, see Standard Plan A77J3.

STATE OF CALIFORNIA
DEPARTMENT OF TRANSPORTATION

METAL BEAM GUARD RAILING TYPICAL LAYOUTS FOR STRUCTURE APPROACH

NO SCALE

RSP A77F1 DATED JUNE 6, 2008 SUPERSEDES STANDARD PLAN A77F1
DATED MAY 1, 2006 - PAGE 54 OF THE STANDARD PLANS BOOK DATED MAY 2006.

REVISED STANDARD PLAN RSP A77F1

Dist	COUNTY	ROUTE	POST MILES TOTAL PROJECT	SHEET No.	TOTAL SHEETS
02	Sis	5	R50.6/R52.1	38	84

Randell D. Hiatt
REGISTERED CIVIL ENGINEER

May 20, 2011
PLANS APPROVAL DATE

REGISTERED PROFESSIONAL ENGINEER
Randell D. Hiatt
No. C50200
Exp. 6-30-11
CIVIL
STATE OF CALIFORNIA

The State of California or its officers or agents shall not be responsible for the accuracy or completeness of electronic copies of this plan sheet.

To accompany plans dated 3-26-12

2006 REVISED STANDARD PLAN RSP A77F3

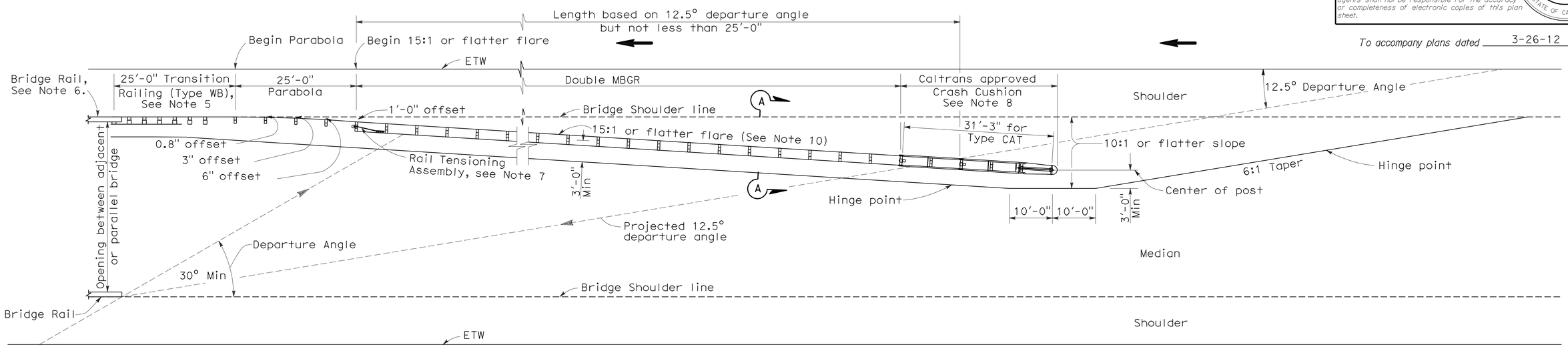

TYPE 12E LAYOUT

See Note 10

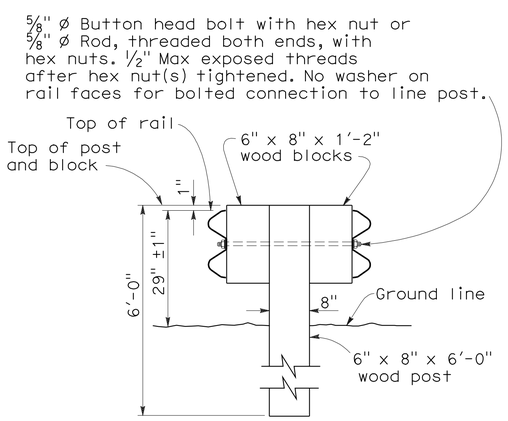

SECTION A-A

TYPICAL DOUBLE METAL BEAM GUARD RAILING

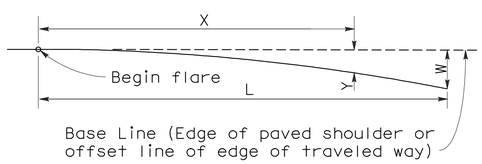

$$Y = \frac{WX^2}{L^2}$$

Y = Offset from base line
W = Maximum offset
X = Distance along base line
L = Length of flare

PARABOLIC FLARE OFFSETS

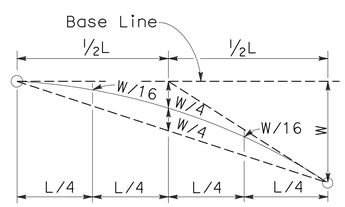

TYPICAL PARABOLIC LAYOUT

NOTES:

1. Line post, blocks and hardware to be used are shown on Standard Plans A77A1, A77A2, A77B1, A77C1 and A77C2.
2. Guard railing post spacing to be 6'-3" center to center, except as otherwise noted.
3. Except as noted, line posts are 6" x 8" x 6'-0" wood with 6" x 8" x 1'-2" wood blocks. W6 x 9 steel posts, 6'-0" in length, with 6" x 8" x 1'-2" notched wood blocks or notched recycled plastic blocks may be used for 6" x 8" x 6'-0" wood line posts with 6" x 8" x 1'-2" wood blocks where applicable and when specified.
4. Direction of adjacent traffic indicated by ➡.
5. For Transition Railing (Type WB) details, see Standard Plan A77J4.
6. For additional details of a typical connection to bridge rail, see Connection Detail AA on Revised Standard Plan RSP A77J1.
7. For Rail Tensioning Assembly details, see Standard Plan A77H2.
8. The type of Crash Cushion to be used will be shown on the Project Plans.
9. Type 12E Layout is typically used left of approaching traffic at the end of each structure on multilane freeways or expressways where a median type barrier is not constructed between separated roadbeds.
10. The 15:1 or flatter flare is measured off of the edge of traveled way.

STATE OF CALIFORNIA
DEPARTMENT OF TRANSPORTATION

METAL BEAM GUARD RAILING TYPICAL LAYOUTS FOR STRUCTURE APPROACH

NO SCALE

RSP A77F3 DATED MAY 20, 2011 SUPERSEDES RSP A77F3 DATED JUNE 6, 2008 AND STANDARD PLAN A77F3 DATED MAY 1, 2006 - PAGE 56 OF THE STANDARD PLANS BOOK DATED MAY 2006.

REVISED STANDARD PLAN RSP A77F3

3-10-11

Dist	COUNTY	ROUTE	POST MILES TOTAL PROJECT	SHEET No.	TOTAL SHEETS
02	Sis	5	R50.6/R52.1	39	84

Randell D. Hiatt
REGISTERED CIVIL ENGINEER

May 20, 2011
PLANS APPROVAL DATE

REGISTERED PROFESSIONAL ENGINEER
Randell D. Hiatt
No. C50200
Exp. 6-30-11
CIVIL
STATE OF CALIFORNIA

The State of California or its officers or agents shall not be responsible for the accuracy or completeness of electronic copies of this plan sheet.

To accompany plans dated 3-26-12

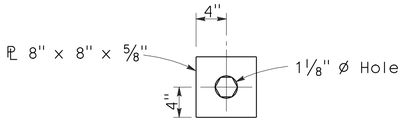

DETAIL A
CABLE CONNECTION
END PLATE

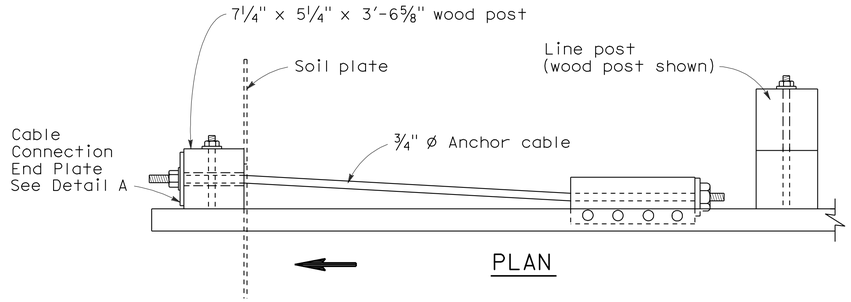

PLAN

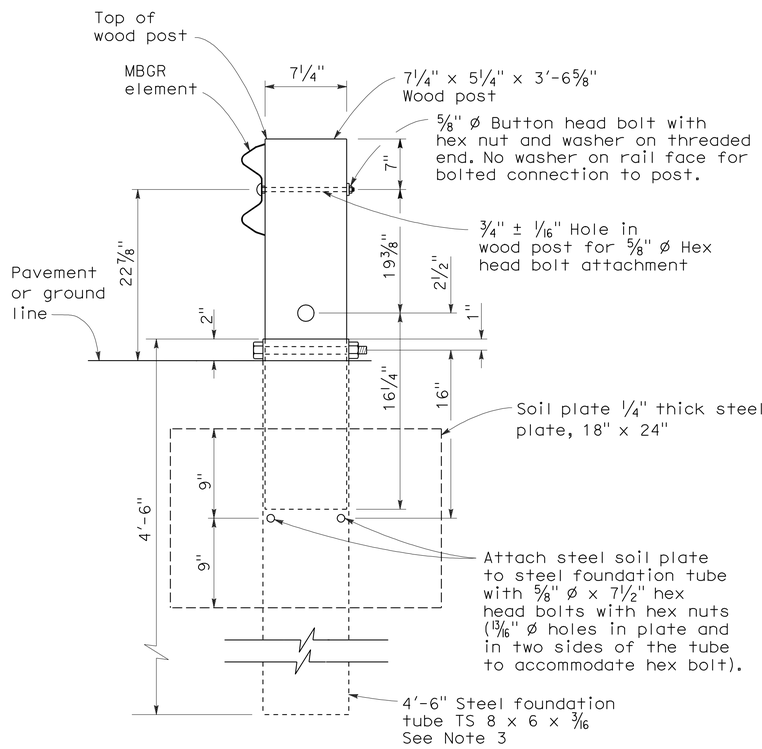

SECTION A-A

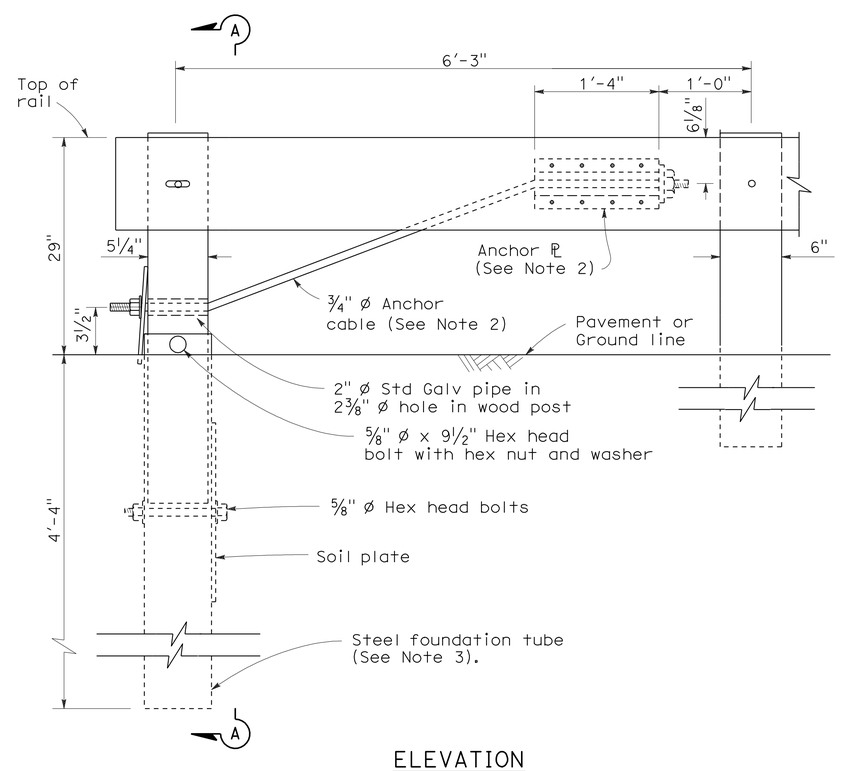

ELEVATION
END ANCHOR
ASSEMBLY (TYPE SFT)
See Note 1

NOTES:

1. See the A77E, A77F and A77G series of Standard Plans for typical use of End Anchor Assembly (Type SFT).
2. For details of the anchor plate and 3/4" cable, see Standard Plan A77H3.
3. A 6'-0" length steel foundation tube, TS 8 x 6 x 3/16, without a soil plate, may be furnished and installed in place of the 4'-6" length steel foundation tube and soil plate shown. Minimum embedment of the 6'-0" length tube shall be 5'-9". A 5/8" Ø hex head bolt and nut shall be installed in the hole in the 6'-0" length tube to keep the wood post from dropping into the tube.
4. Direction of traffic indicated by ⟹.
5. Install line post, steel foundation tube and soil plate in soil.

STATE OF CALIFORNIA
DEPARTMENT OF TRANSPORTATION

METAL RAILING END ANCHOR ASSEMBLY (TYPE SFT)

NO SCALE

RSP A77H1 DATED MAY 20, 2011 SUPERSEDES STANDARD PLAN A77H1
DATED MAY 1, 2006 - PAGE 67 OF THE STANDARD PLANS BOOK DATED MAY 2006.

REVISED STANDARD PLAN RSP A77H1

2006 REVISED STANDARD PLAN RSP A77H1

2-10-07

Dist	COUNTY	ROUTE	POST MILES TOTAL PROJECT	SHEET No.	TOTAL SHEETS
02	Sis	5	R50.6/R52.1	40	84

Randell D. Hiatt
REGISTERED CIVIL ENGINEER

May 20, 2011
PLANS APPROVAL DATE

REGISTERED PROFESSIONAL ENGINEER
Randell D. Hiatt
No. C50200
Exp. 6-30-11
CIVIL
STATE OF CALIFORNIA

The State of California or its officers or agents shall not be responsible for the accuracy or completeness of electronic copies of this plan sheet.

To accompany plans dated 3-26-12

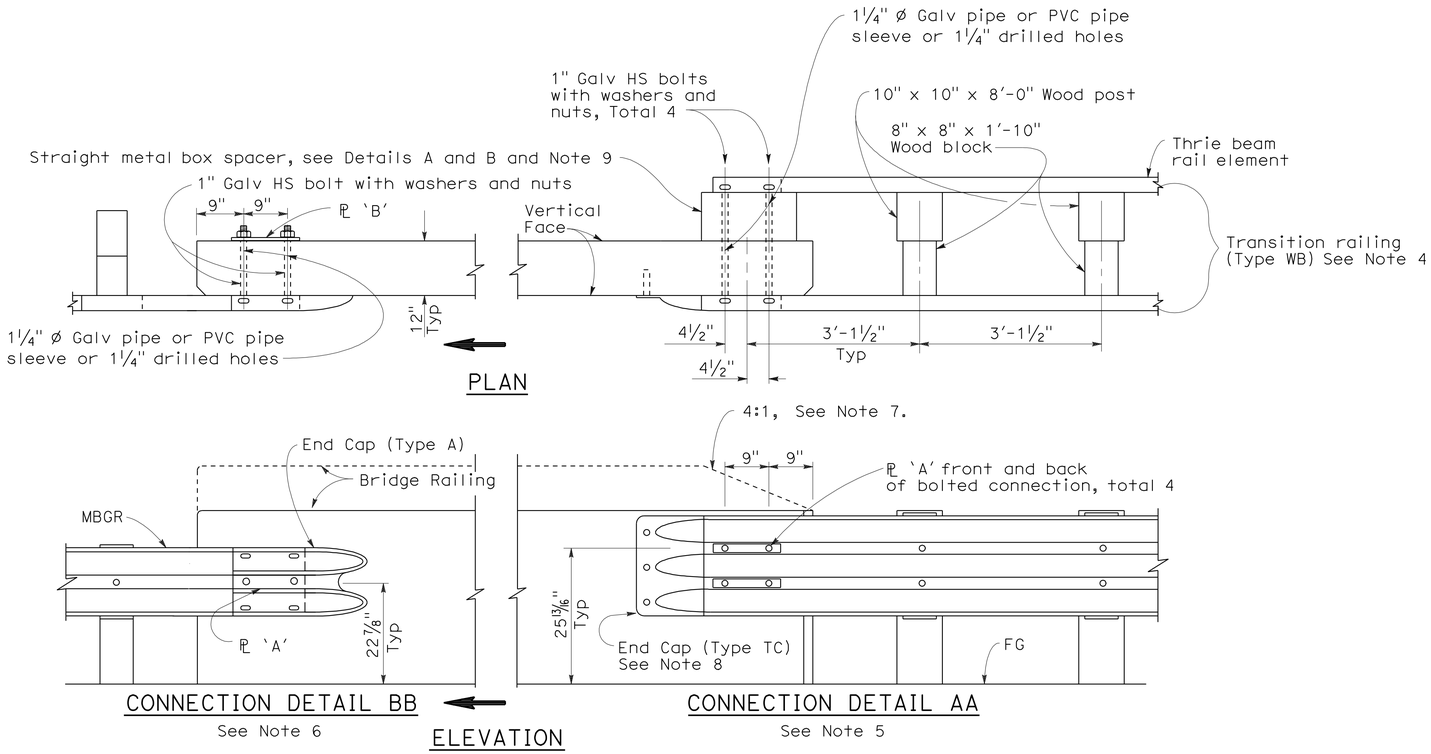

GUARD RAILING CONNECTION TO BRIDGE RAILING WITHOUT SIDEWALK

NOTES:

1. See Revised Standard Plan RSP A77J2 for additional connection details to bridges without sidewalks.
2. Additional details of posts, blocks and hardware are shown on Standard Plan A77B1, A77C1 and A77C2.
3. Direction of adjacent traffic indicated by ➡.
4. For additional details of Transition Railing (Type WB), see Standard Plan A77J4. Transition Railing (Type WB) transitions the 12 gage w-beam standard railing section of guard railing to a heavier gage nested thrie beam railing section which is connected to the concrete bridge railing.
5. For typical use of Connection Detail AA, see Layout Types 12A and 12B on Revised Standard Plan RSP A77F1, Layout Types 12C and 12D on Standard Plan A77F2, and Layout Type 12E on Revised Standard Plan RSP A77F3.
6. For typical use of Connection Detail BB, see Layout Type 12D (structure departure railing connection) on Standard Plan A77F2 and Layout Type 12DD on Standard Plan A77F5.
7. Where the height of the bridge railing exceeds the height of the thrie beam railing by more than 1" at Connection Detail AA, taper the top of the end of the bridge railing at 4:1 to match the top elevation of the thrie beam rail.
8. For details of End Cap (Type TC), see Standard Plan A77J4.
9. See Standard Plan A77J4 for additional details regarding depth dimension for straight metal box spacer.

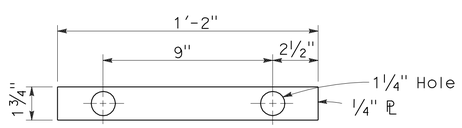

PLATE 'A'

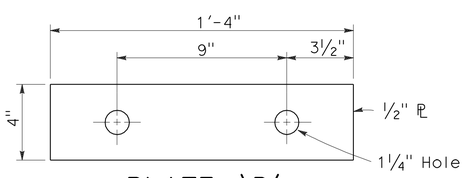

PLATE 'B'
(For backside of connection BB)

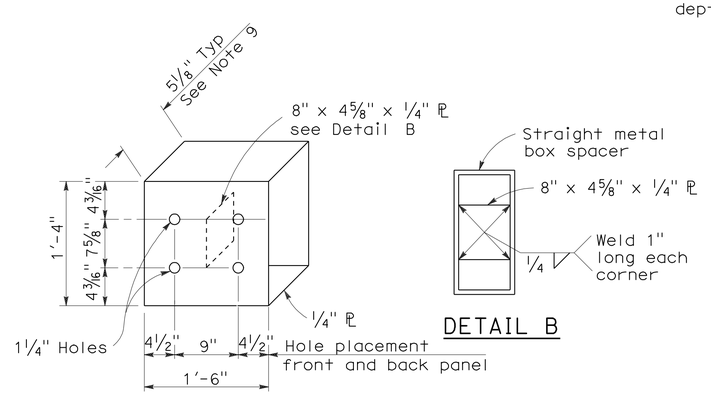

DETAIL B

DETAIL A

STRAIGHT METAL BOX SPACER

STATE OF CALIFORNIA
DEPARTMENT OF TRANSPORTATION

METAL BEAM GUARD RAILING CONNECTIONS TO BRIDGE RAILINGS WITHOUT SIDEWALKS DETAILS No.1

NO SCALE

RSP A77J1 DATED MAY 20, 2011 SUPERSEDES RSP A77J1 DATED JUNE 6, 2008 AND STANDARD PLAN A77J1 DATED MAY 1, 2006 - PAGE 72 OF THE STANDARD PLANS BOOK DATED MAY 2006.

REVISED STANDARD PLAN RSP A77J1

2006 REVISED STANDARD PLAN RSP A77J1

3-10-11

Dist	COUNTY	ROUTE	POST MILES TOTAL PROJECT	SHEET No.	TOTAL SHEETS
02	Sis	5	R50.6/R52.1	41	84

Randell D. Hiatt
REGISTERED CIVIL ENGINEER

May 20, 2011
PLANS APPROVAL DATE

REGISTERED PROFESSIONAL ENGINEER Randell D. Hiatt No. C50200 Exp. 6-30-11 CIVIL STATE OF CALIFORNIA

To accompany plans dated 3-26-12

The State of California or its officers or agents shall not be responsible for the accuracy or completeness of electronic copies of this plan sheet.

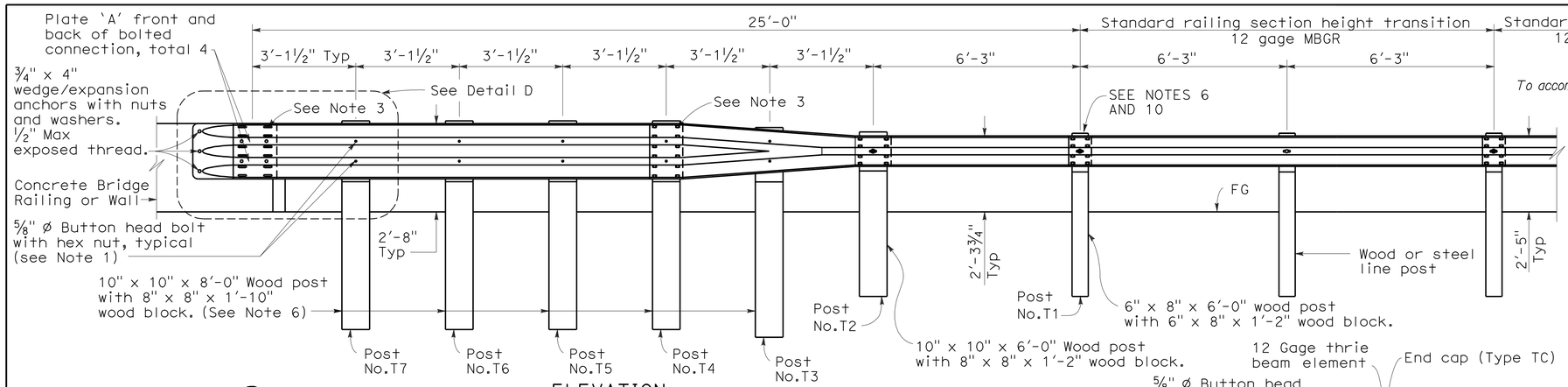

ELEVATION

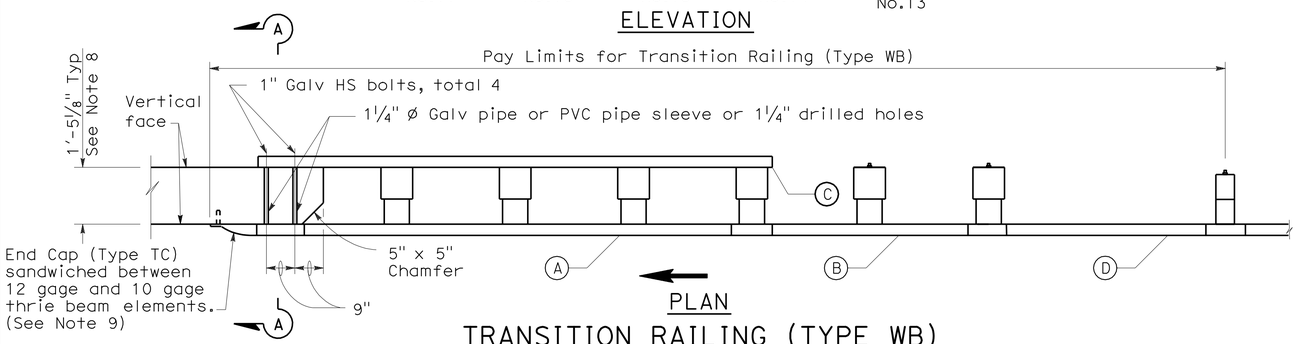

PLAN

TRANSITION RAILING (TYPE WB)

(No Blockout Attachment)

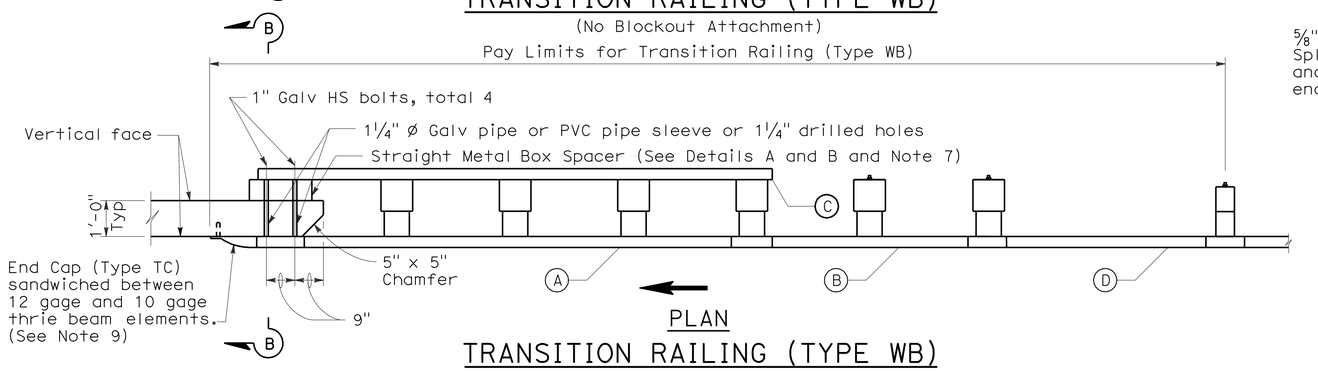

PLAN

TRANSITION RAILING (TYPE WB)

(Blockout Attachment)

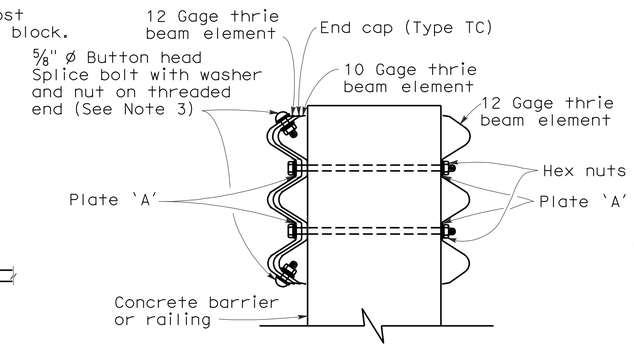

SECTION A-A

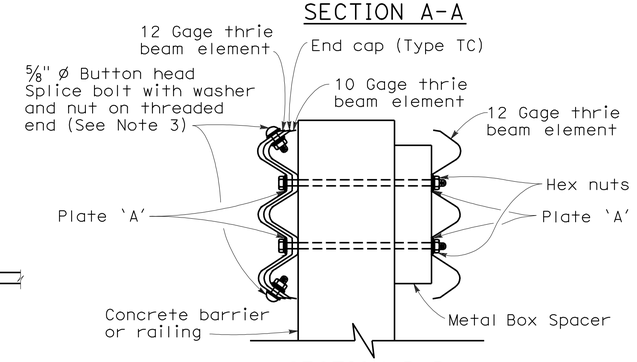

SECTION B-B

NOTES:

1. Use ⅝" ø Button head bolts and hex nuts for connections to posts. No washer on rail face for bolted connections to post.
2. The nested rail elements, end cap, and 'W' beam to thrie beam element may be spliced together prior to bolting the elements to the wood post and concrete barrier or railing.
3. Exterior splice bolt holes for rail element splices at Post No. T4 and the connection to the concrete barrier or railing shall be the standard 29/32" x 1⅛" slot size. Interior splice bolt holes at these locations may be increased up to 1¼" ø. Only the top 2 and the bottom 2 splice bolts with washers and nuts are required for rail splices at Post No. T4 and the connection to the concrete barrier or railing.
4. Direction of adjacent traffic indicated by ➡.
5. The top elevation of Posts No. T2 through No. T7 shall not project more than 1" above the top elevation of the rail element.
6. Typically, the railing connected to Transition Railing (Type WB) will be either standard railing section of metal beam guard railing with height transition ratio of 120:1 or an approved Caltrans end treatment attached to Post No. T1.
7. The depth of the metal box spacer varies from the 5⅛" to 1½" and is dependent on the width of the concrete railing or wall. The combined dimension for the depth of the metal box spacer plus the width of railing or wall is typically 17⅛". Where the space between the backside of the concrete railing or wall and the rear thrie beam element is less than 1½", metal plates similar to Plate 'A' are to be used as spacers.
8. Where the width of the concrete railing or wall is greater than 17⅛", wood blocks are to be used to fill the space created between the backside of Posts No. T4 through No. T7 and the rear thrie beam element. These wood blocks shall be 8" in width and 1'-2" in length. The dimension between the front thrie beam element and the rear thrie beam element is to match the width of the concrete railing or wall.
9. End cap may be installed over 12 gage and 10 gage thrie beam elements where transition railing is installed on the departure end of bridge railing.
10. Conform standard railing section height to 2'-3¾" at Post No. T1 using height transition ratio of 120:1.

LEGEND

(A) Nested thrie beam elements (one 12 gage element nested over one 10 gage element).

(B) One 10 gage "W" beam to thrie beam element.

(C) One 12 gage thrie beam element.

(D) One 10 gage "W" beam rail element (7'-3½" length)

10 gage = 0.135" thick

12 gage = 0.108" thick

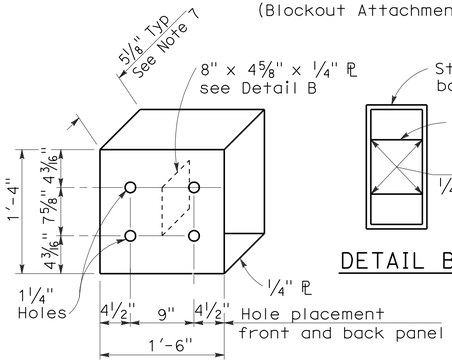

DETAIL A

STRAIGHT METAL BOX SPACER

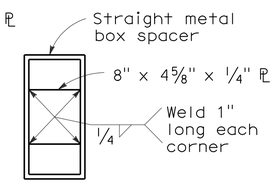

DETAIL B

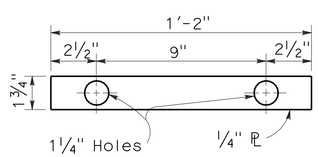

DETAIL C

PLATE 'A'

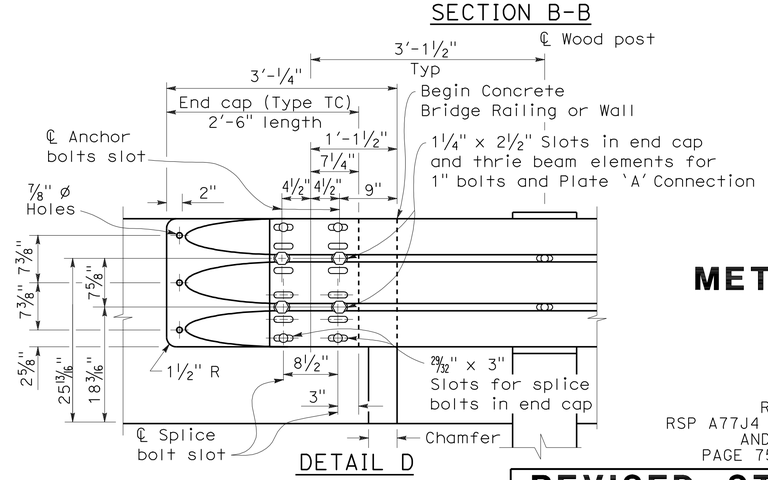

DETAIL D

STATE OF CALIFORNIA
DEPARTMENT OF TRANSPORTATION

METAL BEAM GUARD RAILING TRANSITION RAILING (TYPE WB)

NO SCALE

RSP A77J4 DATED MAY 20, 2011 SUPERSEDES
RSP A77J4 DATED JUNE 5, 2009, RSP A77J4 DATED JUNE 6, 2008
AND STANDARD PLAN A77J4 DATED MAY 1, 2006 -
PAGE 75 OF THE STANDARD PLANS BOOK DATED MAY 2006.

REVISED STANDARD PLAN RSP A77J4

2006 REVISED STANDARD PLAN RSP A77J4

5-14-09

DIST	COUNTY	ROUTE	POST MILES TOTAL PROJECT	SHEET No.	TOTAL SHEETS
02	Sis	5	R50.6/R52.1	42	84

Randell D. Hiatt
REGISTERED CIVIL ENGINEER

June 6, 2008
PLANS APPROVAL DATE

REGISTERED PROFESSIONAL ENGINEER
Randell D. Hiatt
No. C50200
Exp. 6-30-09
CIVIL
STATE OF CALIFORNIA

The State of California or its officers or agents shall not be responsible for the accuracy or completeness of electronic copies of this plan sheet.

To accompany plans dated 3-26-12

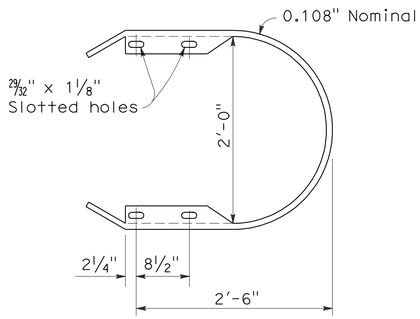

RETURN CAP
(TYPE TA)

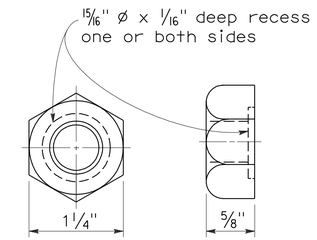

5/8" ø RECESS NUT

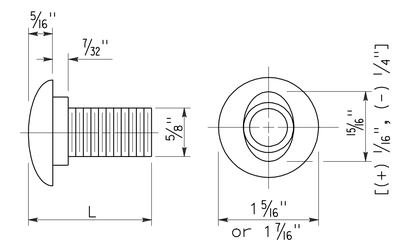

5/8" ø BUTTON HEAD BOLT

L	THREAD LENGTH
1 1/4"	full thread length
2"	full thread length
9 1/2"	4" Min thread length
18"	4" Min thread length

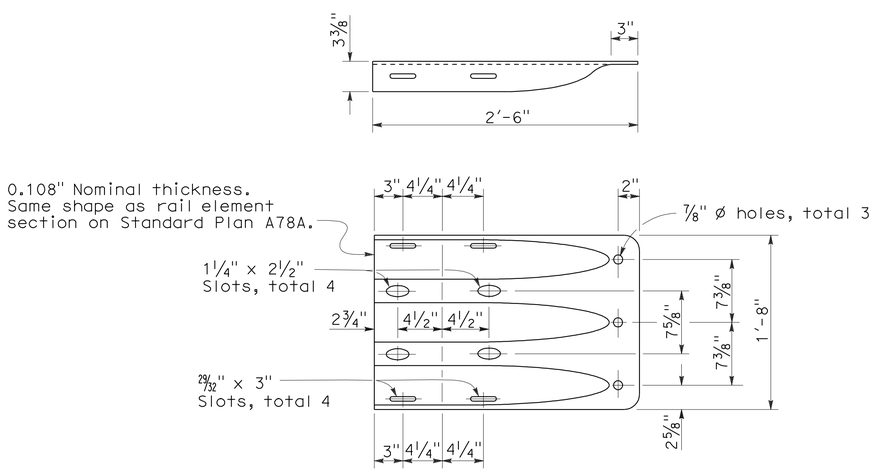

END CAP
(TYPE TC)

STATE OF CALIFORNIA
DEPARTMENT OF TRANSPORTATION

THRIE BEAM BARRIER STANDARD HARDWARE DETAILS

NO SCALE

RSP A78C1 DATED JUNE 6, 2008 SUPERSEDES STANDARD PLAN A78C1
DATED MAY 1, 2006 - PAGE 85 OF THE STANDARD PLANS BOOK DATED MAY 2006.

REVISED STANDARD PLAN RSP A78C1

2006 REVISED STANDARD PLAN RSP A78C1

4-21-08

DIST	COUNTY	ROUTE	POST MILES TOTAL PROJECT	SHEET NO.	TOTAL SHEETS
02	Sis	5	R50.6/R52.1	43	84

REGISTERED CIVIL ENGINEER

June 5, 2009
PLANS APPROVAL DATE

REGISTERED PROFESSIONAL ENGINEER Glenn DeCou No. C34547 Exp. 9-30-09 CIVIL STATE OF CALIFORNIA

The State of California or its officers or agents shall not be responsible for the accuracy or completeness of electronic copies of this plan sheet.

To accompany plans dated 3-26-12

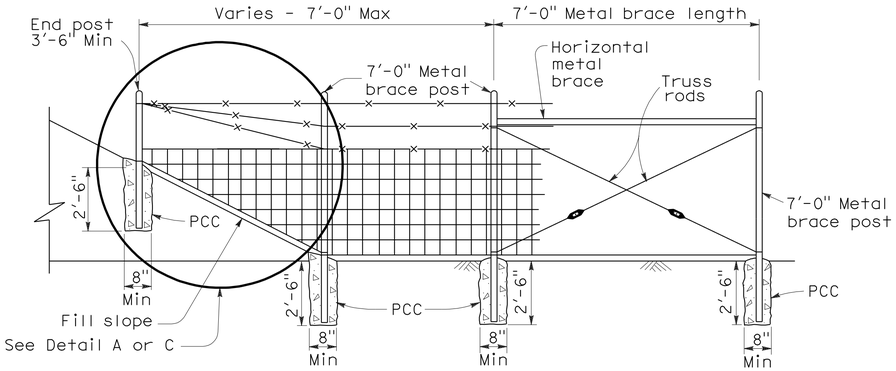

METAL POST

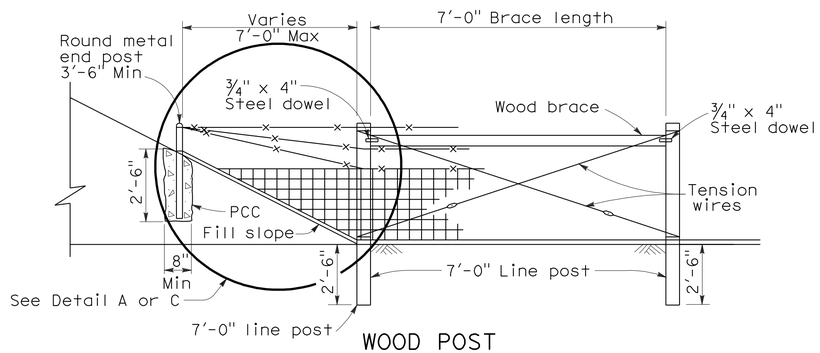

WOOD POST

METHOD OF ERECTING FENCE FOR FILL SLOPE

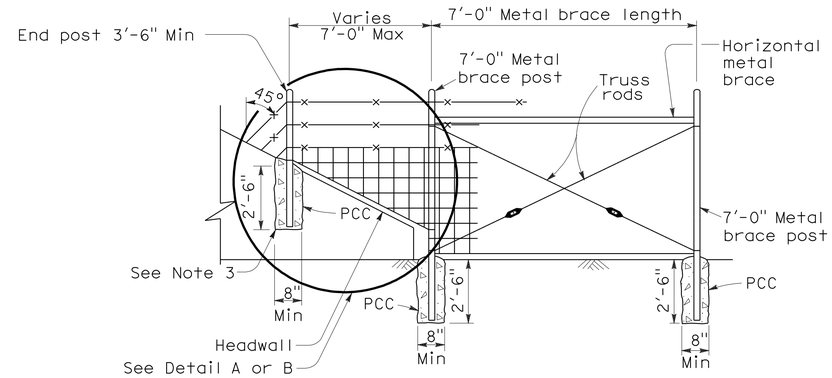

METAL POST

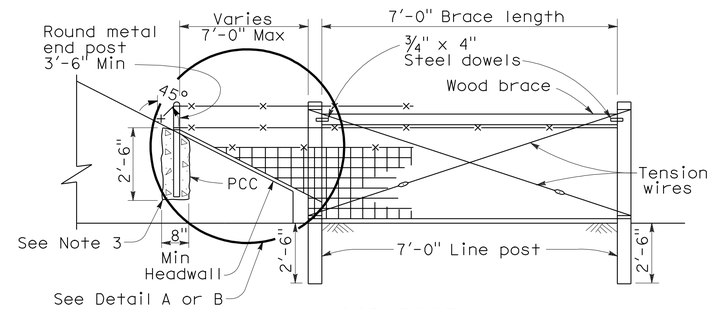

WOOD POST

METHOD OF TYING FENCE TO HEADWALL

NOTES:

1. Wire Mesh fencing shown, can also use Barbed Wire fencing.
2. See Standard Plan A86 for Wire Mesh and Barbed Wire fence dimensions.
3. See Standard Plan B11-7 Alternative Anchorage Detail for connection at headwall. Round metal post to be used for all fence types.

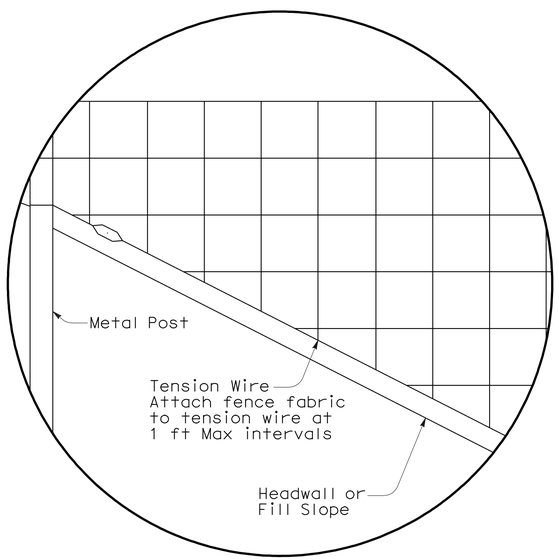

DETAIL A

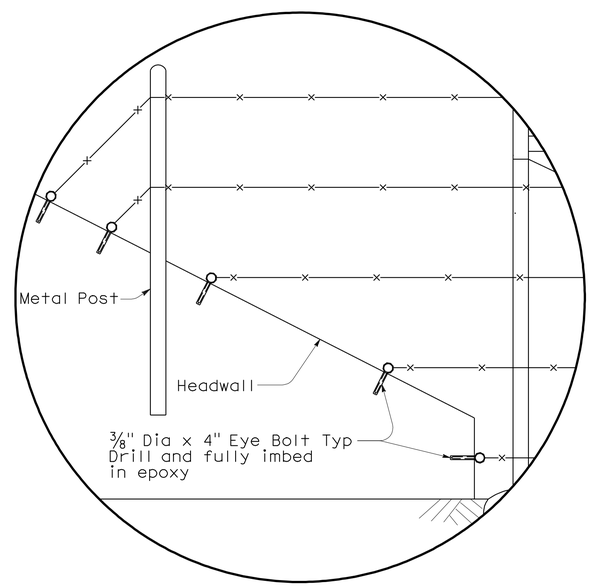

DETAIL B

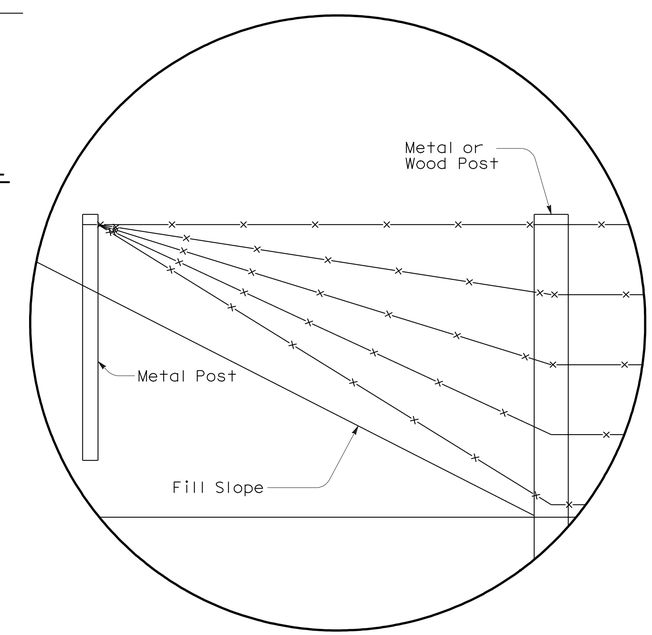

DETAIL C

STATE OF CALIFORNIA
DEPARTMENT OF TRANSPORTATION

BARBED WIRE AND WIRE MESH FENCE DETAILS

NSP A86B DATED JUNE 5, 2009 SUPPLEMENTS THE STANDARD PLANS BOOK DATED MAY 2006.

NEW STANDARD PLAN NSP A86B

2006 NEW STANDARD PLAN NSP A86B

5-12-09

DIST	COUNTY	ROUTE	POST MILES TOTAL PROJECT	SHEET NO.	TOTAL SHEETS
02	Sis	5	R50.6/R52.1	44	84

REGISTERED CIVIL ENGINEER

November 17, 2006
PLANS APPROVAL DATE

REGISTERED PROFESSIONAL ENGINEER Michael Janzen No. 44788 Exp. 03-31-08 CIVIL STATE OF CALIFORNIA

The State of California or its officers or agents shall not be responsible for the accuracy or completeness of electronic copies of this plan sheet.

To accompany plans dated 3-26-12

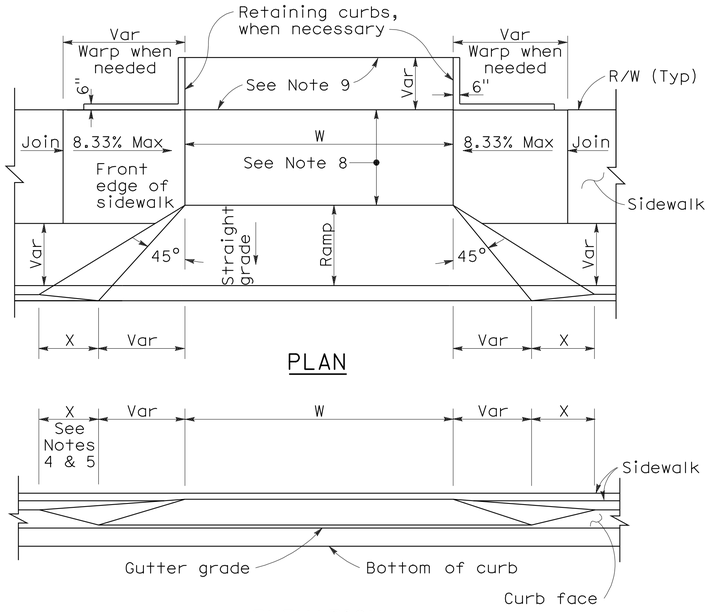

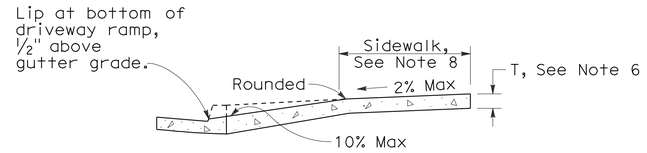

CASE A

Typical driveway, sidewalk not depressed

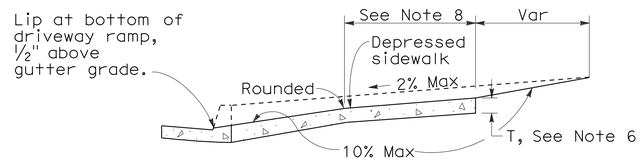

CASE B

Driveway with depressed sidewalk

SECTIONS

CURB QUANTITIES

TYPE	CUBIC YARDS PER LINEAR FOOT
A1-6	0.02585
A1-8	0.03084
A2-6	0.05903
A2-8	0.06379
A3-6	0.01036
A3-8	0.01435
B1-4	0.02185
B1-6	0.02930
B2-4	0.05515
B2-6	0.06171
B3-4	0.00641
B3-6	0.01074
B4	0.05709
D-4	0.04083
D-6	0.06804
E	0.06661

TABLE A

CURB TYPE	DIMENSIONS "H1"	"H2"	"W1"	"W2"
A1-6	1'-2"	6"	7½"	1½"
A1-8	1'-4"	8"	8"	2"
A2-6	1'-0"	6"	2'-7½"	1½"
A2-8	1'-2"	8"	2'-8"	2"
A3-6	6"	5"	7¼"	1¼"
A3-8	8"	7"	7¾"	1¾"
B1-4	1'-0"	4"	7½"	2½"
B1-6	1'-2"	6"	9"	4"
B2-4	10"	4"	2'-7½"	2½"
B2-6	1'-0"	6"	2'-9"	4"
B3-4	4"	3"	7"	2"
B3-6	6"	5"	8½"	3½"
D-4	10"	4"	1'-6"	1'-1"
D-6	1'-0"	6"	2'-2"	1'-8"

DRIVEWAYS

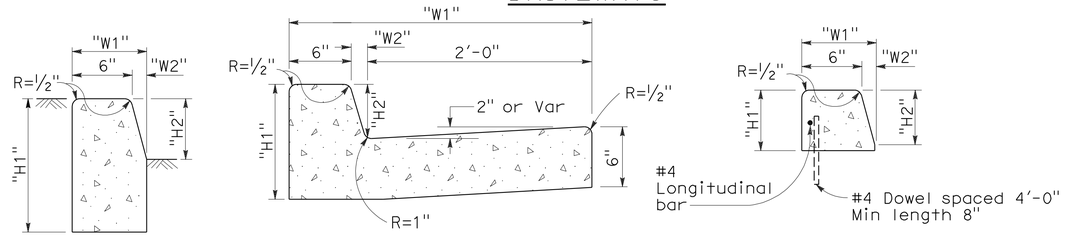

TYPE A1 CURBS
See Table A

TYPE A2 CURBS
See Table A

TYPE A3 CURBS
Superimposed on existing pavement
See Table A

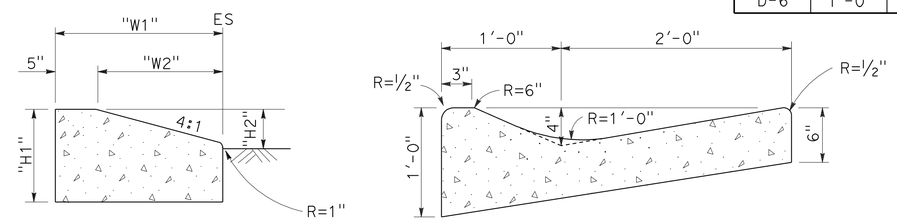

TYPE D CURBS
See Table A

TYPE E CURB

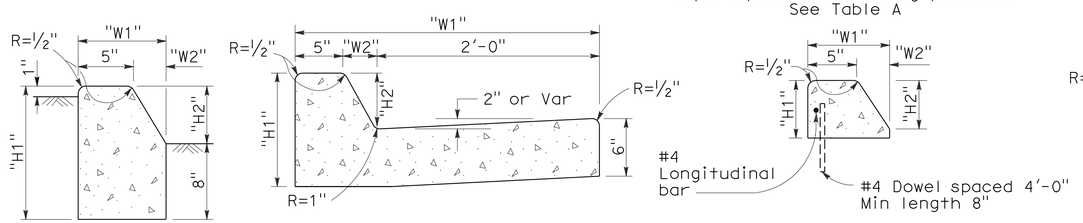

TYPE B1 CURBS
See Table A

TYPE B2 CURBS
See Table A

TYPE B3 CURBS
Superimposed on existing pavement
See Table A

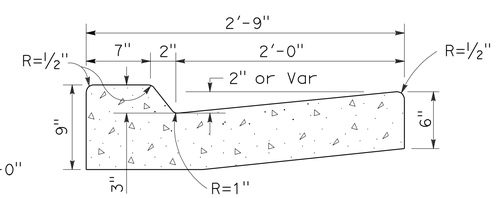

TYPE B4 CURBS

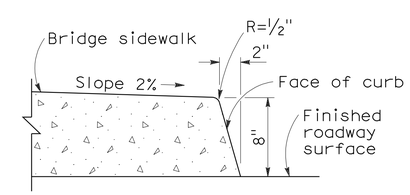

TYPE H CURB
On Bridges

CURBS

NOTES:

1. Case A driveway section typically applies.
2. Use Case B driveway section when ramp slopes would exceed 10% in Case A.
3. Use Case B driveway section when sidewalk cross slope would exceed 2% in Case A.
4. X=3'-0" except for curb heights over 10" where 4:1 slopes shall be used on curb slope.
5. X is a variable when sidewalk is located where wheelchairs may traverse the surface. Slopes shall not exceed 8.33%.
6. Sidewalk and ramp thickness "T" at driveway shall be 4" for residental and 6" for commercial.
7. Difference in slope of the driveway ramp and the slope of a line between the gutter and a point on the roadway 5'-0" from gutter line shall not exceed 15%. Reduce driveway ramp slope, not gutter slope, where required.
8. Minimum width of clear passageway for sidewalk shall be 4'-0".
9. Retaining curbs and acquisition of construction easement may be necessary for narrow sidewalks or curb heights in excess of 6".
10. Across the pedestrian route at curb ramp locations, the gutter pan slope shall not exceed 1" of depth for each 2'-0" of width.

STATE OF CALIFORNIA
DEPARTMENT OF TRANSPORTATION

CURBS AND DRIVEWAYS

NO SCALE

RSP A87A DATED NOVEMBER 17, 2006 SUPERSEDES STANDARD PLAN A87A DATED MAY 1, 2006 - PAGE 113 OF THE STANDARD PLANS BOOK DATED MAY 2006.

REVISED STANDARD PLAN RSP A87A

2006 REVISED STANDARD PLAN RSP A87A

10-25-06

DIST	COUNTY	ROUTE	POST MILES TOTAL PROJECT	SHEET NO.	TOTAL SHEETS
02	Sis	5	R50.6/R52.1	45	84

William K. Farnbach
REGISTERED CIVIL ENGINEER

May 15, 2009
PLANS APPROVAL DATE

REGISTERED PROFESSIONAL ENGINEER — William K. Farnbach — No. C49042 — Exp. 9-30-10 — CIVIL — STATE OF CALIFORNIA

The State of California or its officers or agents shall not be responsible for the accuracy or completeness of electronic copies of this plan sheet.

To accompany plans dated 3-26-12

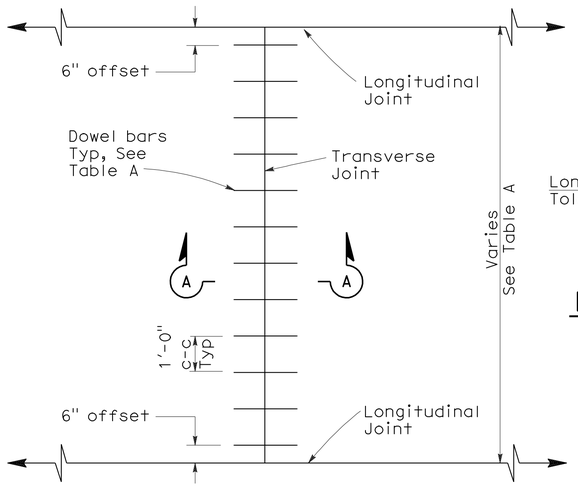

TRANSVERSE JOINT DOWEL BAR LAYOUT

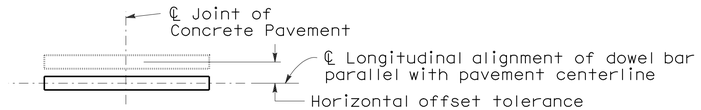

PLAN

HORIZONTAL OFFSET TOLERANCE

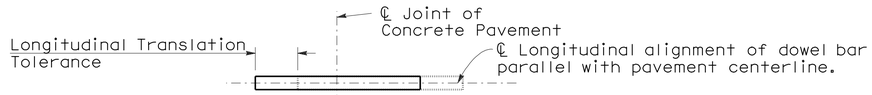

PLAN

LONGITUDINAL TRANSLATION TOLERANCE

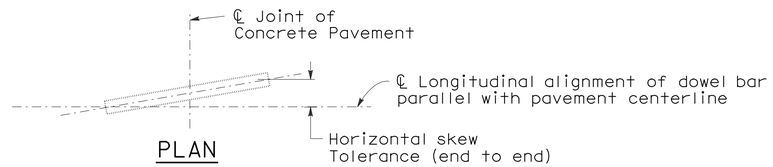

PLAN

HORIZONTAL SKEW TOLERANCE

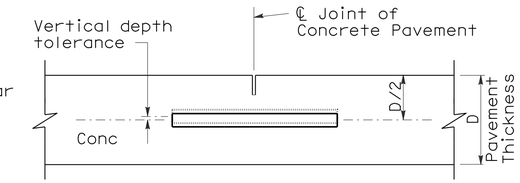

ELEVATION

VERTICAL DEPTH TOLERANCE

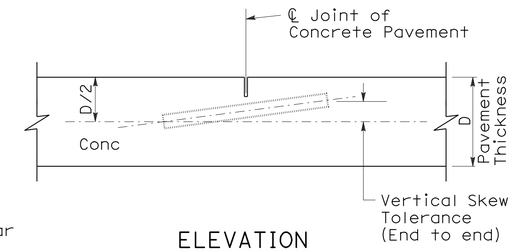

ELEVATION

VERTICAL SKEW TOLERANCE

NOTES:

1. See Revised Standard Plan RSP P1 for typical dowel bar placement and locations.
2. 1½" Dia smooth dowel bars are to be used with a pavement thickness, D, equal to or greater than 0.70 feet. For pavement thickness, D, less than 0.70 feet, use 1¼" Dia smooth dowel bars.
3. For widths not shown, see Project Plans.
4. If fresh concrete pavement is placed adjacent to existing concrete pavement, the top corner of the existing concrete pavement does not need to be rounded to the ¼" radius, as shown.

TABLE A (See Note 3)

Dowel Bar Transverse Spacing Table	
Width between Longitudinal Joints	Number of Dowels between Longitudinal Joints
14'-0"	14
13'-0"	13
12'-0"	12
11'-0"	11
10'-0"	10
8'-0"	8
5'-0"	5
4'-0"	4

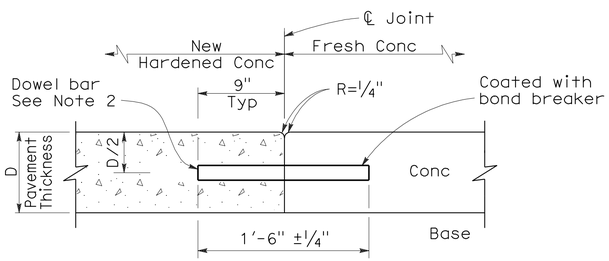

SECTION A-A

TRANSVERSE CONSTRUCTION JOINT DETAIL

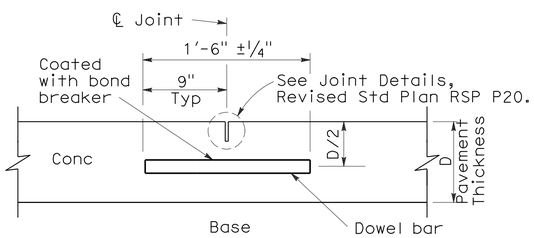

TRANSVERSE CONTRACTION JOINT

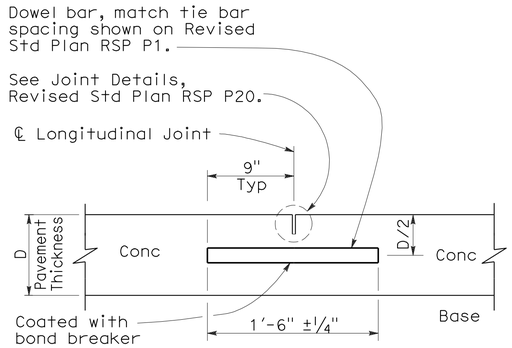

LONGITUDINAL CONTRACTION JOINT WITH DOWEL BARS

(See Revised Std Plan RSP P18)

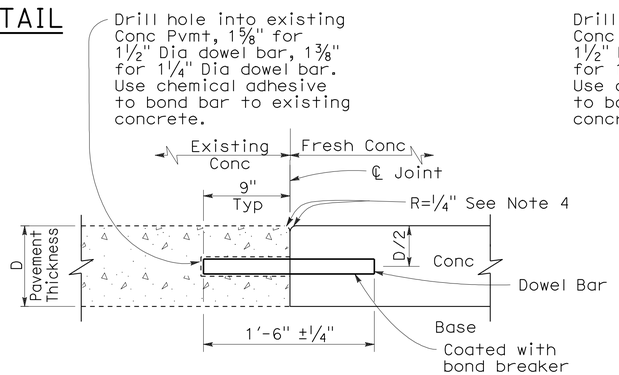

TRANSVERSE CONSTRUCTION JOINT FOR EXISTING CONCRETE PAVEMENT

(Drill and bond locations)

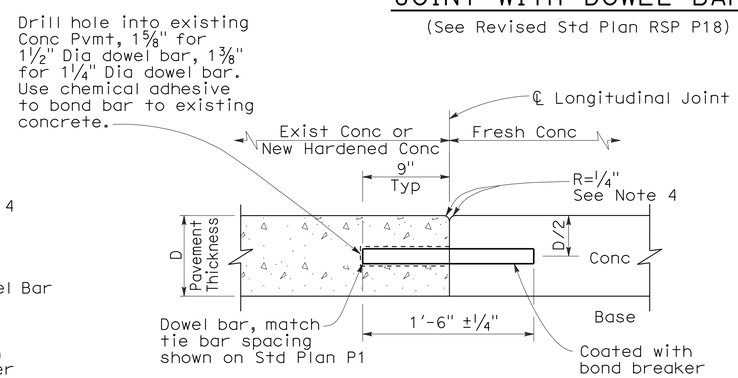

LONGITUDINAL CONSTRUCTION JOINT WITH DOWEL BARS

(See Revised Std Plan RSP P18)

STATE OF CALIFORNIA
DEPARTMENT OF TRANSPORTATION

CONCRETE PAVEMENT-DOWEL BAR DETAILS

NO SCALE

RSP P10 DATED MAY 15, 2009 SUPERSEDES STANDARD PLAN P10 DATED MAY 1, 2006 - PAGE 124 OF THE STANDARD PLANS BOOK DATED MAY 2006.

REVISED STANDARD PLAN RSP P10

2006 REVISED STANDARD PLAN RSP P10

5-8-09

DIST	COUNTY	ROUTE	POST MILES TOTAL PROJECT	SHEET NO.	TOTAL SHEETS
02	Sis	5	R50.6/R52.1	46	84

William K. Farnbach
REGISTERED CIVIL ENGINEER

May 15, 2009
PLANS APPROVAL DATE

REGISTERED PROFESSIONAL ENGINEER
William K. Farnbach
No. C49042
Exp. 9-30-10
CIVIL
STATE OF CALIFORNIA

The State of California or its officers or agents shall not be responsible for the accuracy or completeness of electronic copies of this plan sheet.

To accompany plans dated 3-26-12

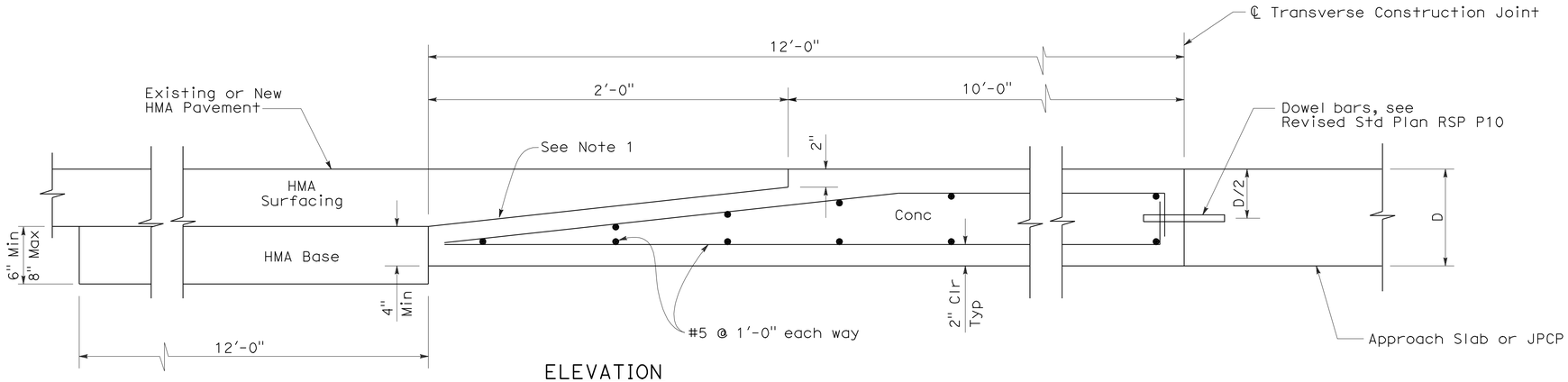

ELEVATION

CONCRETE PAVEMENT TO HOT MIXED ASPHALT PAVEMENT TRANSITION PANEL

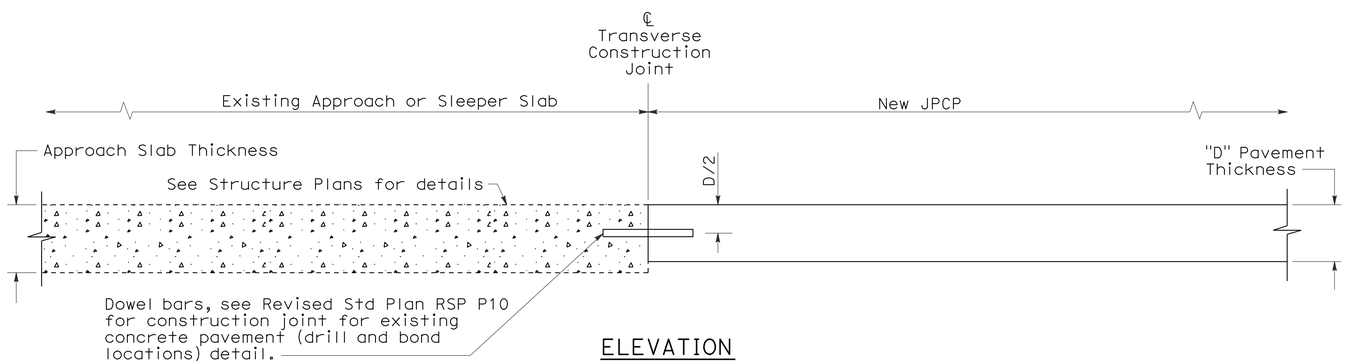

ELEVATION

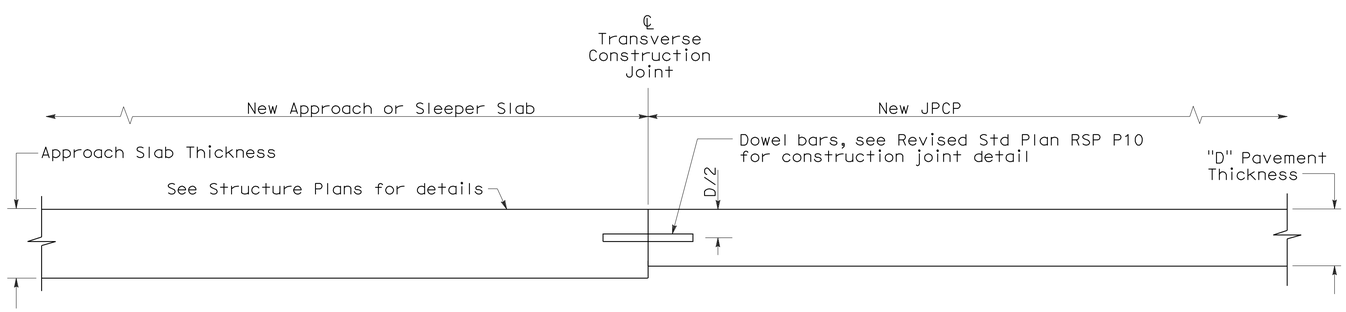

ELEVATION

CONCRETE PAVEMENT TRANSITION TO APPROACH OR SLEEPER SLAB

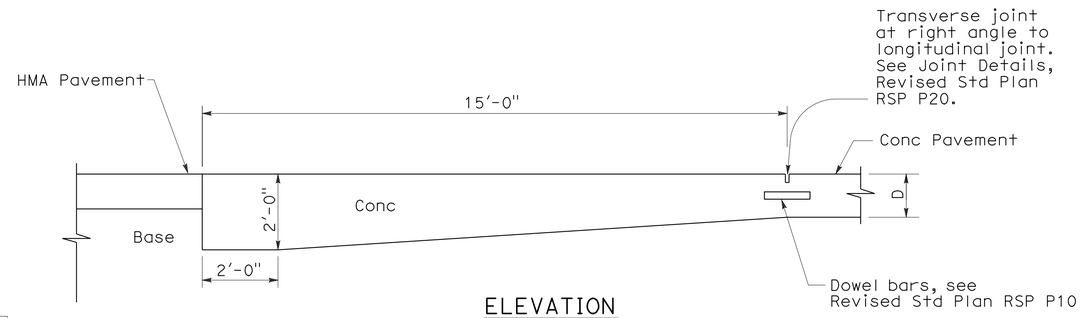

ELEVATION

PAVEMENT END ANCHOR

NOTE:

1. Heavy broom finish.

STATE OF CALIFORNIA
DEPARTMENT OF TRANSPORTATION

JOINTED PLAIN CONCRETE PAVEMENT-END PANEL PAVEMENT TRANSITIONS

NO SCALE

RSP P30 DATED MAY 15, 2009 SUPERSEDES STANDARD PLAN P30
DATED MAY 1, 2006 - PAGE 129 OF THE STANDARD PLANS BOOK DATED MAY 2006.

REVISED STANDARD PLAN RSP P30

2006 REVISED STANDARD PLAN RSP P30

5-8-09

DIST	COUNTY	ROUTE	POST MILES TOTAL PROJECT	SHEET NO.	TOTAL SHEETS
02	Sis	5	R50.6/R52.1	47	84

William K. Farnbach
REGISTERED CIVIL ENGINEER

June 5, 2009
PLANS APPROVAL DATE

REGISTERED PROFESSIONAL ENGINEER
William K. Farnbach
No. 49042
Exp. 09-30-10
STATE OF CALIFORNIA

The State of California or its officers or agents shall not be responsible for the accuracy or completeness of electronic copies of this plan sheet.

To accompany plans dated 3-26-12

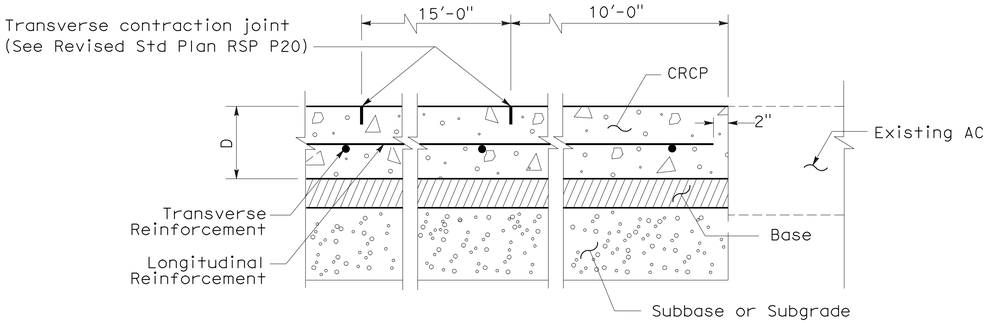

TERMINAL JOINT TYPE A

(For Existing AC)

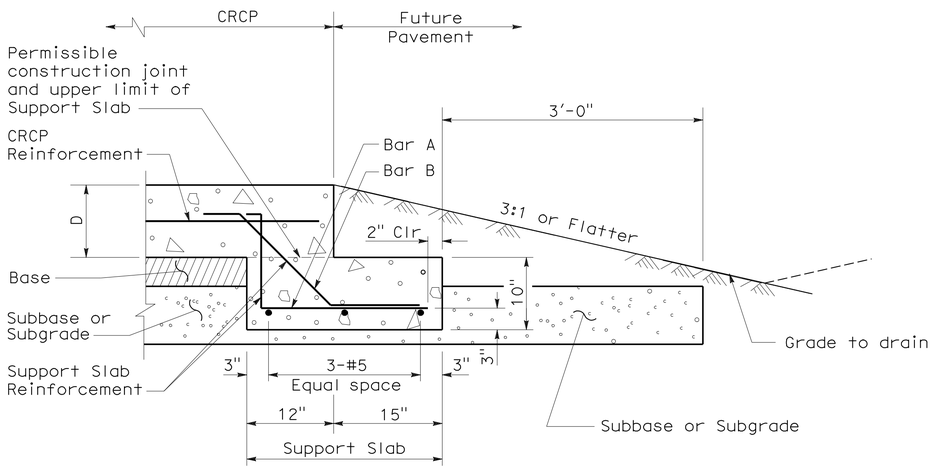

TERMINAL JOINT TYPE B

(For Future Pavement)

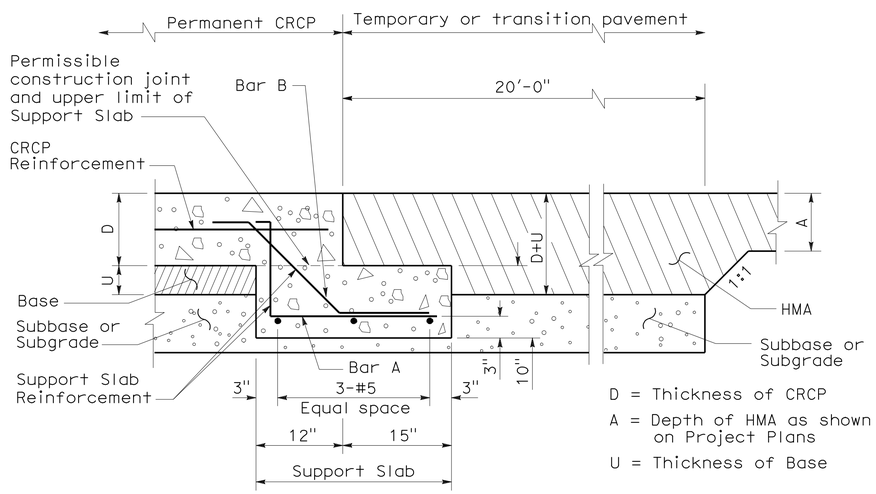

TERMINAL JOINT TYPE C

(For Temporary HMA Pavement)

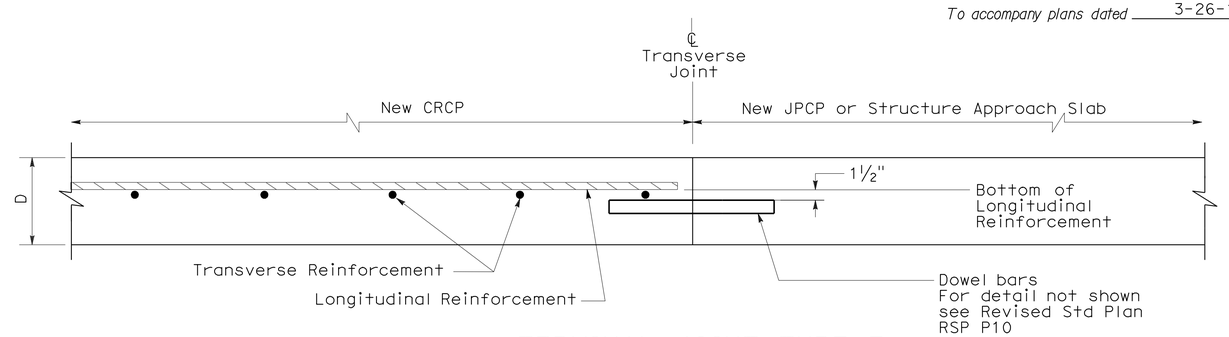

TERMINAL JOINT TYPE E

(For New JPCP or Structure Appproach Slabs)

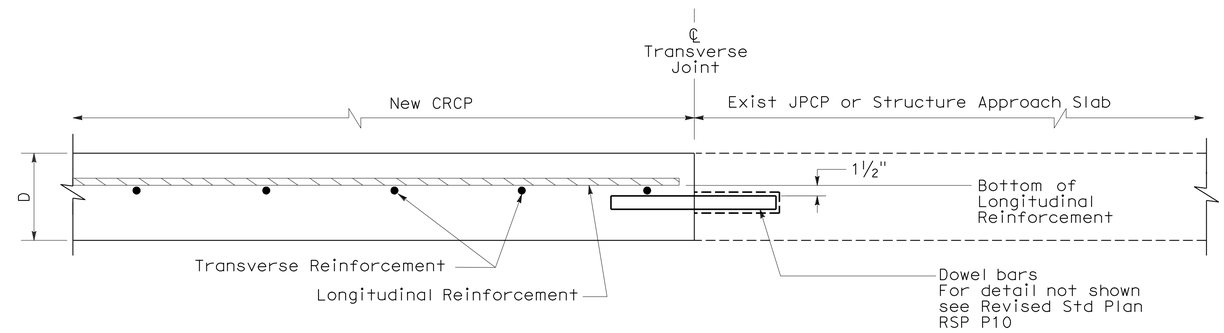

TERMINAL JOINT TYPE D

(For Existing JPCP or Structure Appproach Slabs)

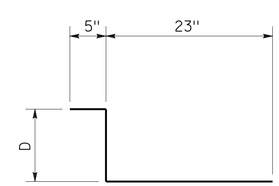

BAR "A" (#5)

AT 12" C-C

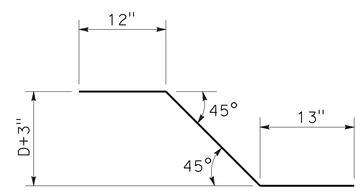

BAR "B" (#5)

AT 12" C-C

STATE OF CALIFORNIA
DEPARTMENT OF TRANSPORTATION

CONTINUOUSLY REINFORCED CONCRETE PAVEMENT-TERMINAL JOINT DETAILS

NO SCALE

NSP P31A DATED JUNE 5, 2009 SUPPLEMENTS THE STANDARD PLANS BOOK DATED MAY 2006.

NEW STANDARD PLAN NSP P31A

2006 NEW STANDARD PLAN NSP P31A

DIST	COUNTY	ROUTE	POST MILES TOTAL PROJECT	SHEET NO.	TOTAL SHEETS
02	Sis	5	R50.6/R52.1	48	84

REGISTERED CIVIL ENGINEER

June 15, 2007
PLANS APPROVAL DATE

REGISTERED PROFESSIONAL ENGINEER Glenn DeCou No. C34547 Exp. 9-30-07 CIVIL STATE OF CALIFORNIA

The State of California or its officers or agents shall not be responsible for the accuracy or completeness of electronic copies of this plan sheet.

To accompany plans dated 3-26-12

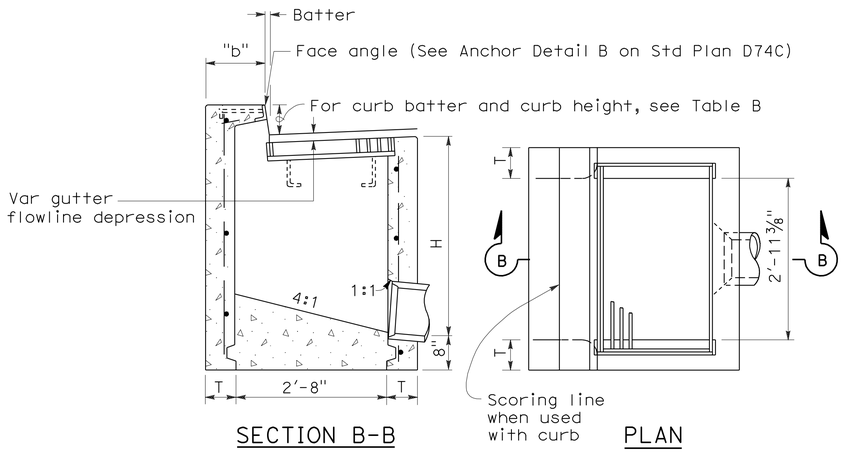

SECTION B-B PLAN

TYPE GO

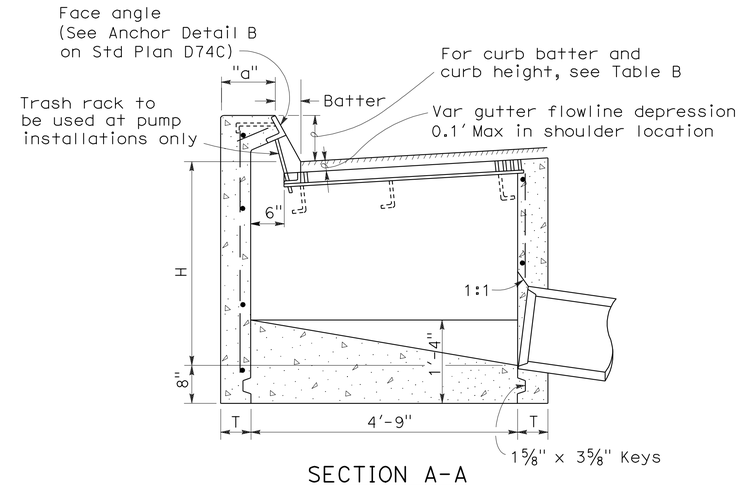

SECTION A-A

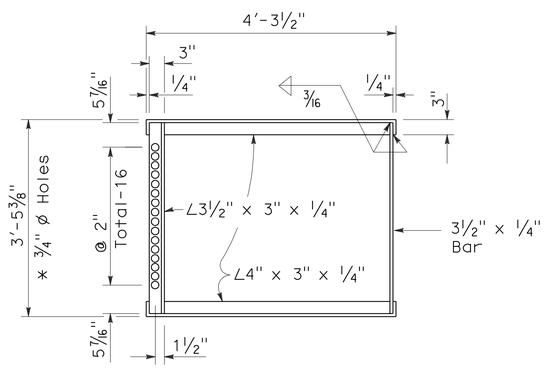

* 3/4" ø Holes required only with trash rack

GRATE FRAME FOR TYPE GDO INLET

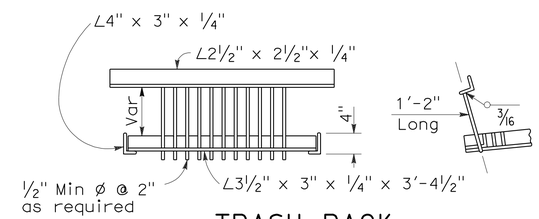

TRASH RACK

(For use with pump installation)

TABLE A

CONCRETE QUANTITIES				
	H=3'-0" TO 8'-0" (T=6")		H=8'-1" TO 20'-0" (T=8")	
TYPE	H=3'-0" (CY)	ADDITIONAL PCC PER FOOT (CY)	H=8'-1" (CY)	ADDITIONAL PCC PER FOOT (CY)
GO	1.24	0.245	3.39	0.346
GDO	1.62	0.322	4.36	0.446

Table based on 8" floor slab, no deduction for pipe openings, and curb type giving highest quantity of concrete. No deductions or adjustments are to be made to these quantities because of pipe openings, different floor alternatives or different curb type.

TABLE B

CURB TYPE	NORMAL CURB HEIGHT	CURB BATTER	"a" DIMENSION	"b" DIMENSION
A1-6	6"	1 1/2"	T+7 1/2"	T+6 1/2"
A1-8	8"	2"	T+7"	T+6"
B1-6	6"	4"	T+5"	T+4"
Type A Dike	6"	3"	T+6"	T+5"

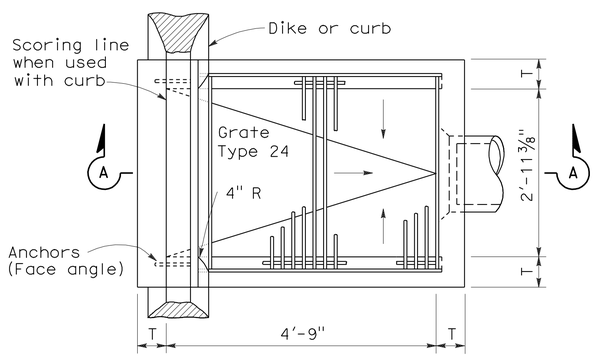

PLAN

TYPE GDO

NOTES:

1. "H" is the difference in elevation between the outlet pipe flow line and the normal gutter grade line undepressed.
2. For "T" wall thickness, see Table A below.
3. Wall reinforcing not required when "H" is 8'-0" or less and the unsupported width or length is 7'-0" or less. Walls exceeding these limits shall be reinforced with #4 @ 18"± centers placed 1 1/2" clear to inside of box unless otherwise shown.
4. Inlet bottom reinforcing not required. See Standard Plan D74C for alternative reinforced bottom.
5. Steps - None required where "H" is less than 2'-6" Where "H" is 2'-6" or more, install steps with lowest rung 1'-0" above the floor and highest rung not more than 6" below top of inlet. The distance between steps shall not exceed 1'-0" and shall be uniform throughout the length of the wall. Place steps in the wall without an opening. Step inserts may be substituted for the bar steps. Step Inserts shall comply with State Industrial Safety requirements. See Standard Plan D74C for step details.
6. When shown on the project plans, place a 3/4" plain round protection bar horizontally across the length of the opening and bend back 4" into the inlet wall on each side.
7. Pipe(s) can be placed in any wall.
8. Curb section shall match adjacent curb.
9. Basin floors shall have wood trowel finish and shall slope toward the outlet pipe as shown.
10. Galvanizing - See Standard Specifications or Special Provisions.
11. See Standard Plan D77A and D77B for grate and frame details and weights of miscellaneous iron and Steel.
12. See Standard Plan D78A for gutter depression details.
13. Full penetration butt welds may be substituted for the fillet welds on all anchors.
14. Standard square, hexagon, round or equivalent headed anchors may be substituted for the right angle hooks on the anchors shown on this plan.
15. Cast-in-place or precast alternative is optional with contractor. See Standard Specifications.
16. Cast-in-place inlets to be formed around all pipes/stubs intersecing the inlet and concrete poured in one continuous operation. Precast inlets shall have mortared pipe connections conforming to details for Type GCP inlets on Standard Plan D75B. See Standard Specifications for mortar composition.

STATE OF CALIFORNIA
DEPARTMENT OF TRANSPORTATION

DRAINAGE INLETS

NO SCALE

RSP D74B DATED JUNE 15, 2007 SUPERSEDES STANDARD PLAN D74B DATED MAY 1, 2006 - PAGE 150 OF THE STANDARD PLANS BOOK DATED MAY 2006.

REVISED STANDARD PLAN RSP D74B

2006 REVISED STANDARD PLAN RSP D74B

4-16-07

DIST	COUNTY	ROUTE	POST MILES TOTAL PROJECT	SHEET NO.	TOTAL SHEETS
02	Sis	5	R50.6/R52.1	49	84

Raymond Don Tsztoo
REGISTERED CIVIL ENGINEER

January 18, 2008
PLANS APPROVAL DATE

REGISTERED PROFESSIONAL ENGINEER
Raymond Don Tsztoo
No. C37332
Exp. 6-30-08
CIVIL
STATE OF CALIFORNIA

The State of California or its officers or agents shall not be responsible for the accuracy or completeness of electronic copies of this plan sheet.

To accompany plans dated 3-26-12

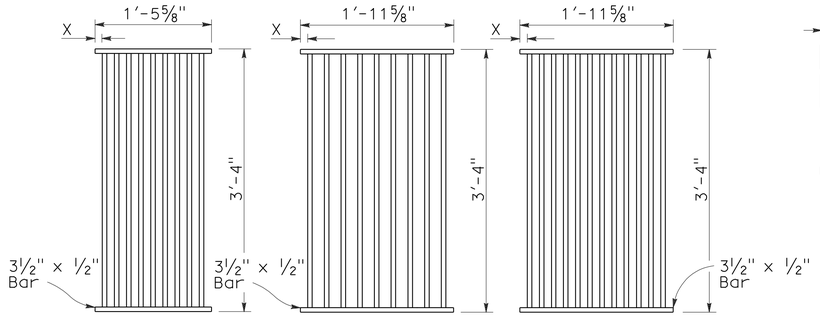

TYPE 18-9

1⅜" Clear spacing. Use within the roadbed on highways where bicycles and pedestrians are excluded.

TYPE 24-9

2" Clear spacing. Use in locations off the roadbed on all types of highways.

TYPE 24-12

1⅜" Clear spacing. Use within the roadbed on highways where bicycles and pedestrians are excluded.

RECTANGULAR GRATE DETAILS

(See table below)

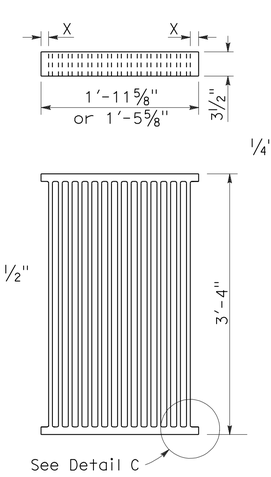

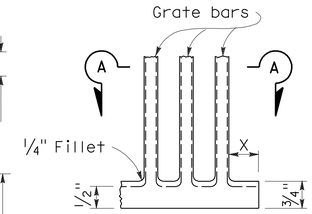

DETAIL C

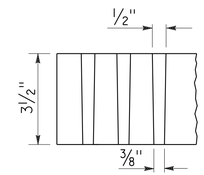

SECTION A-A

ALTERNATIVE CAST NODULAR IRON GRATE OR CAST STEEL GRATE

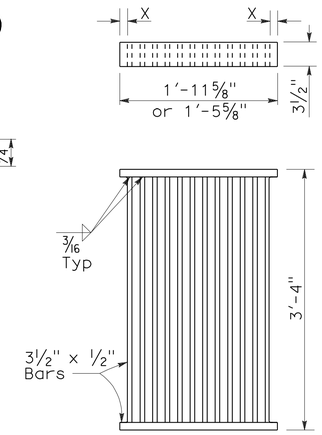

ALTERNATIVE WELDED GRATE

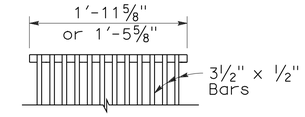

CAST END BLOCK

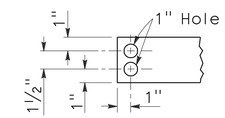

END OF BAR

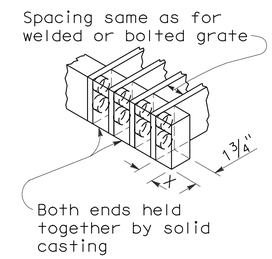

ALTERNATIVE CAST NODULAR IRON OR CAST STEEL END BLOCK GRATE

NOTES:

1. Grate type numbers refer to approximate width of grate in inches and number of bars, respectively.
2. Contractor has the option of using cast nodular iron, cast steel, welded, bolted, or cast end block grate.
3. See Special Provisions for requirements pertaining to galvanizing or asphalt dipping of grates and frames.
4. Rounded top of bars optional on all grates.
5. Pipe inlets with a grate shall be placed so that bars parallel direction of principle surface flow.
6. Full penetration butt welds may be substituted for the fillet welds on all anchors.
7. Standard square, hexagon, round or equivalent headed anchors may be substituted for the right angle hooks on the anchors shown on this plan.
8. Grate and frame weights are based on welded grates (weights of face angles, steps, protection bars, etc. are not included).

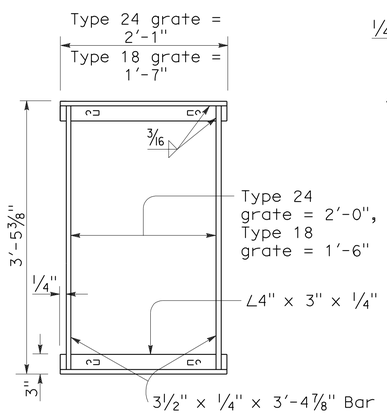

TYPICAL FRAME

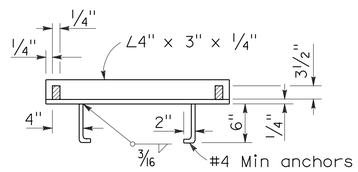

CROSS SECTION

(Thru frame)

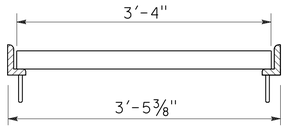

LONGITUDINAL SECTION

(Thru frame and grate)

RECTANGULAR FRAME DETAILS

(For all rectangular grates)

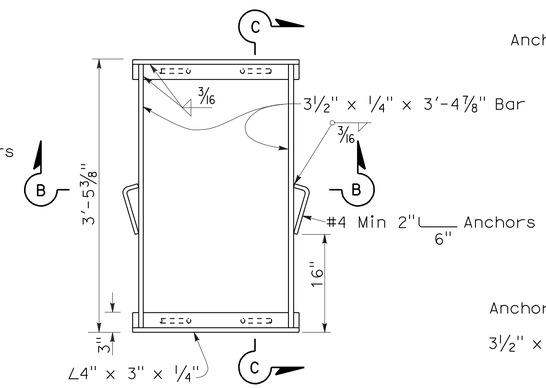

TYPICAL FRAME

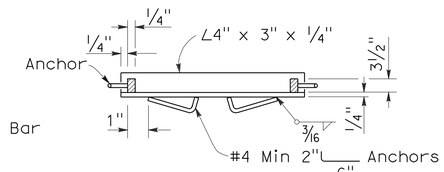

SECTION B-B

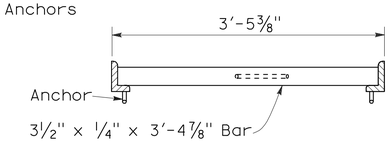

SECTION C-C

ALTERNATIVE ANCHOR FOR RECTANGULAR FRAME

(For details not shown, See Rectangular Frame Details)

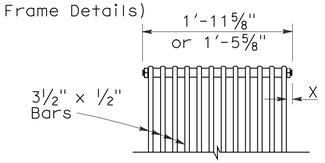

BOLTED END BLOCK

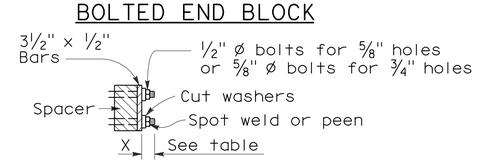

BOLTING DETAIL

ALTERNATIVE BOLTED GRATE

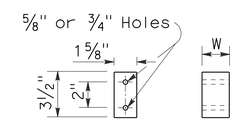

BAR SPACER

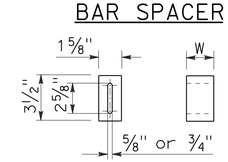

ALTERNATIVE SPACER

W = 1⅜" or 2"

GRATE BAR SPACING TABLE

TYPE	No. OF BARS	CLEAR BAR SPACING	X
18-9	9	1⅜"	1 1/16"
24-9	9	2"	1 9/16"
24-12	12	1⅜"	1¼"

INLET TYPE	COVER TYPE	WEIGHT LB
OS	PLATE	174
OL-7	PLATE	170
OL-10	PLATE	170
OL-14	PLATE	170
OL-21	PLATE	170
OCP	PLATE	112
OCPI	PLATE	112
OCPI	REDWOOD	42
OMP	PLATE	177
OMPI	PLATE	177

INLET TYPE	GRATE TYPE	No. OF GRATES	WEIGHT LB
GDO	24-12	2	634
GOL-7	24-12	1	326
GOL-10	24-12	1	326
GO,G1,G2,G3,G4 (TYPE 24)	24-9	1	263
	24-12	1	326
G4 (TYPE 18),G5,G6	18-9	1	249
GT1	18-9	2	498
GT2	18-9	2	498
GT3	24-12	2	652
GT4	24-12	2	652
TRASH RACK			22

BASIS FOR MISC IRON & STEEL FINAL PAY WEIGHTS FOR DRAINAGE INLETS

(See General Notes, No 8)

STATE OF CALIFORNIA
DEPARTMENT OF TRANSPORTATION

GRATE DETAILS

NO SCALE

RSP D77A DATED JANUARY 18, 2008 SUPERSEDES STANDARD PLAN D77A DATED MAY 1, 2006 - PAGE 155 OF THE STANDARD PLANS BOOK DATED MAY 2006.

REVISED STANDARD PLAN RSP D77A

2006 REVISED STANDARD PLAN RSP D77A

12-14-07

DIST	COUNTY	ROUTE	POST MILES TOTAL PROJECT	SHEET NO.	TOTAL SHEETS
02	Sis	5	R50.6/R52.1	50	84

Raymond Don Tsztoo
REGISTERED CIVIL ENGINEER

June 6, 2008
PLANS APPROVAL DATE

REGISTERED PROFESSIONAL ENGINEER
Raymond Don Tsztoo
No. C37332
Exp. 6-30-08
CIVIL
STATE OF CALIFORNIA

The State of California or its officers or agents shall not be responsible for the accuracy or completeness of electronic copies of this plan sheet.

To accompany plans dated 3-26-12

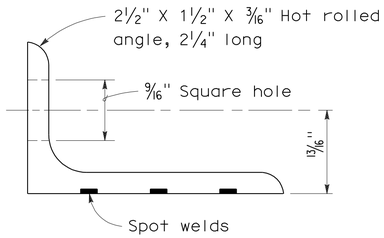

ANGLE

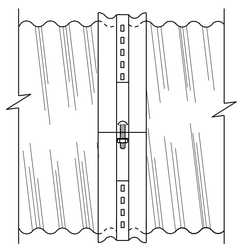

SIDE VIEW
ANGLE

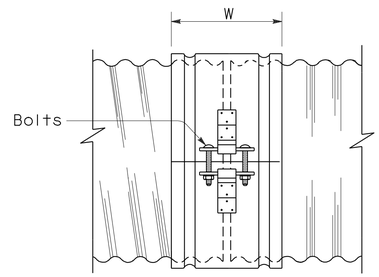

SIDE VIEW
SINGLE BAR AND STRAP

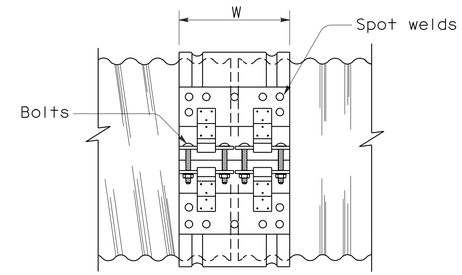

SIDE VIEW
DOUBLE BAR AND STRAP

NOTES:

1. All ferrous metal coupling band connection hardware shall be galvanized or electroplated in accordance with the Standard Specifications.
2. Dimensions and thicknesses shown are minimum.
3. Spot welds shall develop minimum required strength of strap.
4. Fillet welds of equivalent strength may be substituted for spot welds or rivets.
5. Dimension depends upon whether end condition is lips up or lips down.

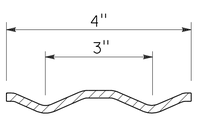

SECTION

H-4 HUGGER BAND

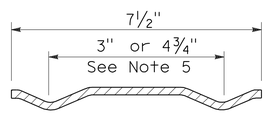

SECTION

H-7 HUGGER BAND

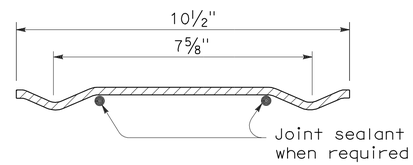

SECTION

H-10 HUGGER BAND

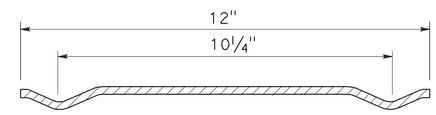

SECTION

H-12 HUGGER BAND

HUGGER COUPLING BANDS

STATE OF CALIFORNIA
DEPARTMENT OF TRANSPORTATION

CORRUGATED METAL PIPE COUPLING DETAILS No. 4 HUGGER COUPLING BANDS

NO SCALE

RSP D97D DATED JUNE 6, 2008 SUPERSEDES STANDARD PLAN D97D
DATED MAY 1, 2006 - PAGE 186 OF THE STANDARD PLANS BOOK DATED MAY 2006.

REVISED STANDARD PLAN RSP D97D

2006 REVISED STANDARD PLAN RSP D97D

3-24-08

DIST	COUNTY	ROUTE	POST MILES TOTAL PROJECT	SHEET NO.	TOTAL SHEETS
02	Sis	5	R50.6/R52.1	51	84

Raymond Don Tsztoo
REGISTERED CIVIL ENGINEER

June 6, 2008
PLANS APPROVAL DATE

REGISTERED PROFESSIONAL ENGINEER Raymond Don Tsztoo No. C37332 Exp. 6-30-08 CIVIL STATE OF CALIFORNIA

The State of California or its officers or agents shall not be responsible for the accuracy or completeness of electronic copies of this plan sheet.

2006 REVISED STANDARD PLAN RSP D97E

ANNULAR AND HELICAL PROFILE

COUPLING TYPE	PIPE CORRUGATION	PIPE SIZE	W OR A	PIPE WALL THICKNESS CSP	PIPE WALL THICKNESS CAP	BAND THICKNESS CSP	BAND THICKNESS CAP	BAR AND STRAP (CSP ONLY) STRAP THICKNESS	BOLTS Dia	BAR Dia	BAR YIELD STRENGTH	ANGLE DIMENSIONS CSP	ANGLE DIMENSIONS CAP	BOLTS (No.- Dia) CSP	BOLTS (No.- Dia) CAP	RIVETS ANGLE TO BAND CSP	RIVETS ANGLE TO BAND CAP	SPOT WELDS ANGLE TO BAND CSP
TWO PIECE INTEGRAL FLANGE	1½′ × ¼"	6"-10"	7"	0.052"-0.079"	0.048"-0.060"	0.052"	0.060"							2-⅜"	2-⅜"			
		12"-18"	7"	0.052"-0.079"		0.064"								2-½"				
	2⅔" × ½"	12"-24"	7"	0.052"-0.079"	0.060"-0.105"	0.064"	0.060"							2-½"	2-½"			
UNIVERSAL	2⅔" × ½"	THROUGH 36"	12"	0.052"-0.138"	0.060"-0.135"	0.052"	0.060"					2" × 2" × 3/16"	2" × 2" × 3/16"	3-½"	3-½"	3-⅜"	3-⅜"	3-½"
		42"-60"	12"	0.052"-0.168"	0.075"-0.164"	0.052"	0.060"					2" × 2" × 3/16"	2" × 2" × 3/16"	3-½"	3-½"	3-⅜"	3-⅜"	5-½"
		THROUGH 72"	12"	0.052"-0.168"	0.164"	0.052"	0.105"	0.079"	½"	⅞"	32 ksi	2" × 2" × 3/16"	2" × 2" × 3/16"	3-½"	3-½"	3-⅜"	3-⅜"	5-½"
		78"-84"	16¼"	0.168"		0.079"		DOUBLE 0.079"	½"	⅞"	32 ksi							
ANNULAR	2⅔" × ½"	THROUGH 36"	7"	0.064"-0.138"	0.060"-0.135"	0.052"	0.060"	0.079"	½"	⅞"	32 ksi	2" × 2" × 3/16"	2" × 2" × 3/16"	2-½"	2-½"	3-⅜"	3-⅜"	3-½"
		42"-72"	12"	0.064"-0.168"	0.075"-0.164"	0.052"	0.105"	0.079"	½"	⅞"	32 ksi	2" × 2" × 3/16"	2" × 2" × 3/16"	3-½"	3-½"	3-⅜"	3-⅜"	5-½"
		78"-84"	12"	0.168"		0.079"		0.109"	½"	⅞"	45 ksi	2" × 2" × 3/16"		3-½"		3-⅜"		5-½"
	3" × 1"	48"-90"	14"	0.064"-0.109"		0.052"		0.079"	½"	⅞"	32 ksi	2" × 2" × 3/16"		3-½"		3-⅜"		5-½"
		96"-120"	14"	0.079"-0.109"		0.052"		0.109"	½"	⅞"	45 ksi	2" × 2" × 3/16"		3-½"		4-⅜"		
		42"-108"	14"		0.060"-0.135"		0.060"						2" × 2" × 3/16"		3-½"		3-⅜"	
HELICAL	2⅔" × ½"	THROUGH 36"	12"	0.052"-0.138"	0.060"-0.135"	0.052"	0.060"	0.079"	½"	⅞"	32 ksi	2" × 2" × 3/16"	2" × 2" × 3/16"	3-½"	3-½"	3-⅜"	3-⅜"	3-½"
		42"-72"	12"	0.052"-0.168"	0.075"-0.164"	0.052"	0.060"	0.079"	½"	⅞"	32 ksi	2" × 2" × 3/16"	2" × 2" × 3/16"	3-½"	3-½"	3-⅜"	3-⅜"	5-½"
		78"-84"	12"	0.168"		0.079"		0.109"	½"	⅞"	45 ksi	2" × 2" × 3/16"		3-½"		3-⅜"		5-½"
	3" × 1"	48"-90"	14"	0.064"-0.109"		0.052"		0.079"	½"	⅞"	32 ksi	2" × 2" × 3/16"		3-½"		3-⅜"		5-½"
		96"-120"	14"	0.079"-0.109"		0.052"		0.109"	½"	⅞"	45 ksi	2" × 2" × 3/16"		3-½"		4-⅜"		
		42"-108"	14"		0.060"-0.135"		0.060"						2" × 2" × 3/16"		3-½"		3-⅜"	
HUGGER	2⅔" × ½" REROLLED END	12"-54"	4"	0.052"-0.109"		0.052"						2½" × 1½" × 3/16"	2½" × 1½" × 3/16"	1-½"				3-½"
		60"-66"	4"	0.109"		0.064"						2½" × 1½" × 3/16"	2½" × 1½" × 3/16"	1-½"				3-½"
		36"-48"	4"	0.138"		0.064"						2½" × 1½" × 3/16"	2½" × 1½" × 3/16"	1-½"				3-½"
		THROUGH 72"	10½"	0.052"-0.168"		0.052"		0.079"	½"	⅞"	32 ksi							
		78"-84"	10½"	0.168"		0.079"		0.109"	½"	⅞"	45 ksi							
	3" × 1" REROLLED END	48"-90"	10½"	0.064"-0.109"		0.052"		0.079"	½"	⅞"	32 ksi							
		96"-120"	10½"	0.079"-0.109"		0.052"		0.109"	½"	⅞"	45 ksi							
	5" × 1" REROLLED END	48"-66"	7½"	0.064"-0.109"		0.064"		0.079"	½"	⅞"	32 ksi	2½" × 1½" × 3/16"	2½" × 1½" × 3/16"	1-½"				3-½"
		72"-90"	7½"	0.064"-0.079"		0.064"		0.079"	½"	⅞"	32 ksi	2½" × 1½" × 3/16"	2½" × 1½" × 3/16"	1-½"				3-½"
		48"-90"	7½"	0.064"-0.138"		0.064"		0.079"	½"	⅞"	32 ksi							
		48"-120"	12" SEE	0.064"-0.109"		0.064"		0.079"	½"	⅞"	32 ksi							
		48"-84"	12" NOTE	0.138"		0.064"		0.079"	½"	⅞"	32 ksi							
		90"-120"	12" 11	0.138"		0.064"		DOUBLE 0.079"	½"	⅞"	32 ksi							

SPIRAL RIB PROFILE

COUPLING TYPE	PIPE CORRUGATION	PIPE SIZE	W	PIPE WALL THICKNESS SSRP	PIPE WALL THICKNESS ASRP	BAND THICKNESS SSRP	BAND THICKNESS ASRP	BAR AND STRAP (SSRP ONLY) STRAP THICKNESS	BOLTS Dia	BAR Dia	BAR YIELD STRENGTH	ANGLE DIMENSIONS SSRP	ANGLE DIMENSIONS ASRP	BOLTS (No.- Dia) SSRP	BOLTS (No.- Dia) ASRP	RIVETS ANGLE TO BAND SSRP	RIVETS ANGLE TO BAND ASRP	SPOT WELDS ANGLE TO BAND SSRP
ANNULAR	2⅔" × ½" * REROLLED END	24"-36"	12"	0.064"-0.109"	0.060"-0.105"	0.052"	0.060"	0.079"	½"	⅞"	32 ksi	2" × 2" × 3/16"	2" × 2" × 3/16"	3-½"	3-½"	3-⅜"	3-⅜"	5-½"
		42"-60"	12"	0.064"-0.109"	0.075"-0.105"	0.052"	0.105"	0.079"	½"	⅞"	32 ksi	2" × 2" × 3/16"	2" × 2" × 3/16"	3-½"	3-½"	3-⅜"	3-⅜"	5-½"
		66"-72"	12"	0.064"-0.109"		0.052"		0.079"	½"	⅞"	32 ksi	2" × 2" × 3/16"	2" × 2" × 3/16"	3-½"	3-½"	3-⅜"	3-⅜"	5-½"
		78"-114"	12"	0.079"-0.109"		0.079"		0.109"	½"	⅞"	45 ksi	2" × 2" × 3/16"	2" × 2" × 3/16"	3-½"	3-½"	3-⅜"	3-⅜"	5-½"
HUGGER	2⅔" × ½" * REROLLED END	24"-72"	10½"	0.064"-0.109"		0.052"		0.079"	½"	⅞"	32 ksi							
		78"-84"	10½"	0.109"		0.079"		0.109"	½"	⅞"	45 ksi							

* See Note 14.

14. All profiles of Spiral Rib Pipe (¾" × ¾" ribs at 7½" pitch and ¾" × 1" ribs at 11½" pitch in both steel and aluminum and ¾" × 1" ribs at 8½" pitch in steel only) shall be manufactured with rerolled ends. Corrugation profile of the rerolled ends shall be 2⅔" × ½" annual corrugations with a minimum of two full corrugations at each end.

NOTES:

To accompany plans dated 3-26-12

1. All ferrous metal coupling band connection hardware shall be galvanized or electro-plated in accordance with the Standard Specifications.
2. For helically corrugated coupling bands, the connection angles may be oriented parallel to the pipe axis, provided connecting holes are slotted lengthwise sufficiently to allow adjustment for the helix angle.
3. Tension strap may be connected to band with either spot welds or fillet welds that develop minimum required strength of strap.
4. Use 1¼" gage line dimension on attached angle leg for rivets and spot welds.
5. Band thickness shall not be less than:
   a. 3 standard thicknesses lighter than the thickness of the pipe for Corrugated Steel Pipe.
   b. 2 standard thicknesses lighter than the thickness of the pipe and in no case lighter than 0.060" for Corrugated Aluminum Pipe.
6. Dimensions, thicknesses and strengths shown are minimum.
7. For pipe arches use same width band as for round pipe of equal periphery.
8. Fillet welds of equivalent strenght may be substituted for spot welds or rivets.
9. Spot welds shall develop minimum required strength of strap.
10. Pipe with rerolled ends having at least two 2⅔" × ½" annular corrugations at each end with or without an upturned flange may be connected with any of the annular coupling bands shown for pipe of the same diameter and wall thickness and having 2⅔" × ½" corrugations.
11. In the case of H-12 huggerbands, two piece bands are required for diameters through 96" and three piece bands are required for diameters 102" through 120".
12. Two piece bands are required for pipes greater than 42" diameter.
13. The 2¼" × 2" × 0.109" thick galvanized die-formed angle connector may be used in lieu of the 2" × 2" × 3/16" angle connector for standard joints only on pipes through 72" diameter.

STATE OF CALIFORNIA
DEPARTMENT OF TRANSPORTATION

CORRUGATED METAL PIPE COUPLING DETAILS No. 5 STANDARD JOINT

NO SCALE

RSP D97E DATED JUNE 6, 2008 SUPERSEDES STANDARD PLAN D97E
DATED MAY 1, 2006 - PAGE 187 OF THE STANDARD PLANS BOOK DATED MAY 2006.

REVISED STANDARD PLAN RSP D97E

4-2-08

DIST	COUNTY	ROUTE	POST MILES TOTAL PROJECT	SHEET NO.	TOTAL SHEETS
02	Sis	5	R50.6/R52.1	52	84

Raymond Don Tsztoo
REGISTERED CIVIL ENGINEER

March 7, 2008
PLANS APPROVAL DATE

REGISTERED PROFESSIONAL ENGINEER
Raymond Don Tsztoo
No. C37332
Exp. 6-30-08
CIVIL
STATE OF CALIFORNIA

The State of California or its officers or agents shall not be responsible for the accuracy or completeness of electronic copies of this plan sheet.

To accompany plans dated 3-26-12

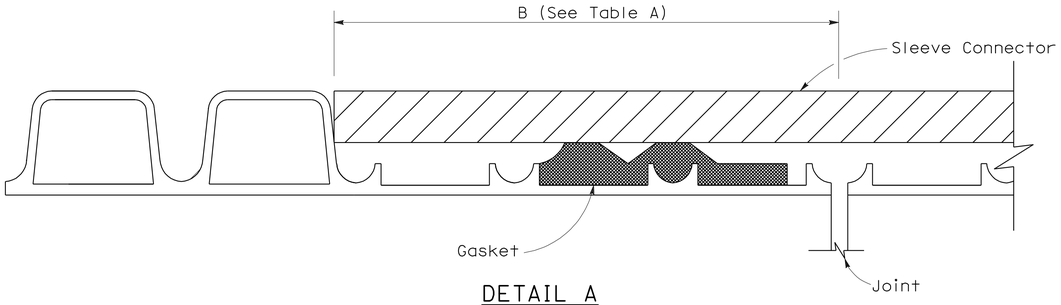

DETAIL A

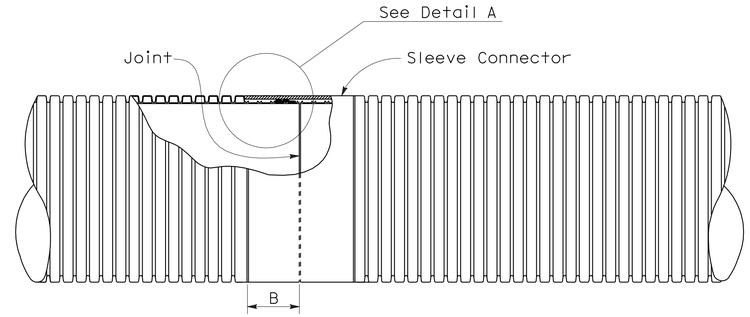

PLAN VIEW
Liner Insert
See Note 4

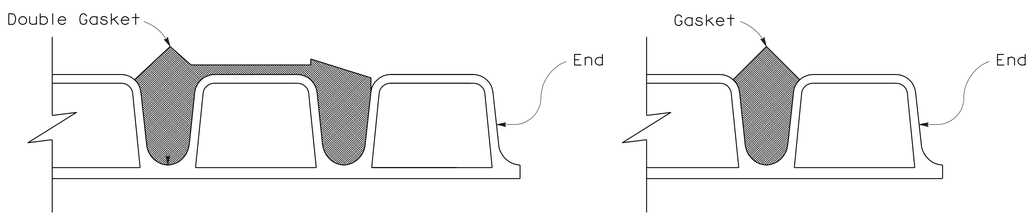

Double Gasket

Single Gasket

DETAIL B

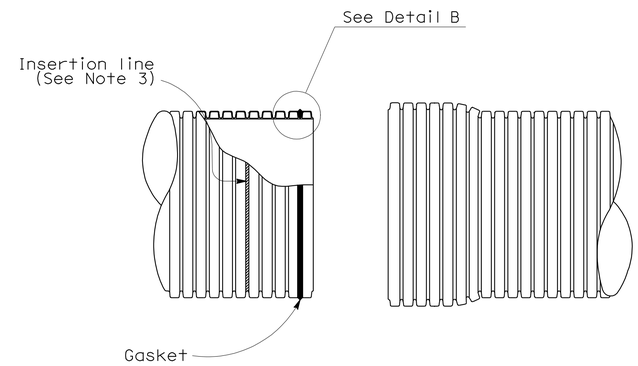

SPIGOT

BELL

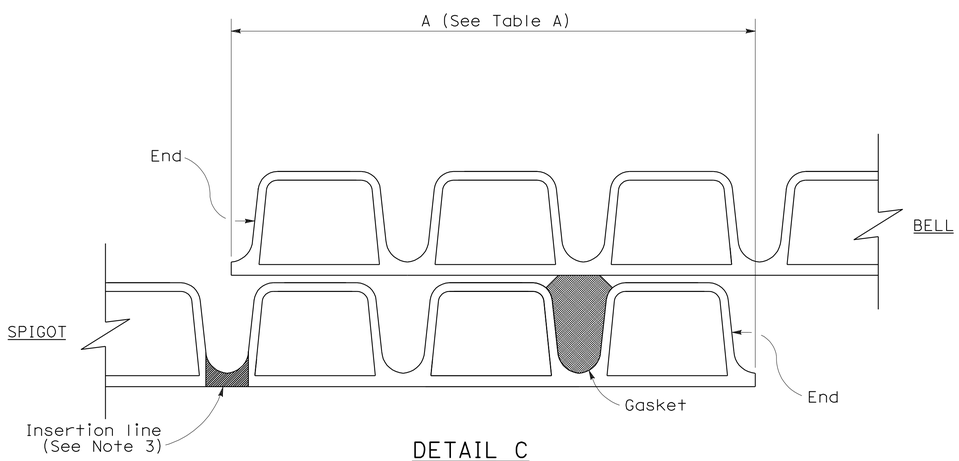

DETAIL C
(Single gasket shown)

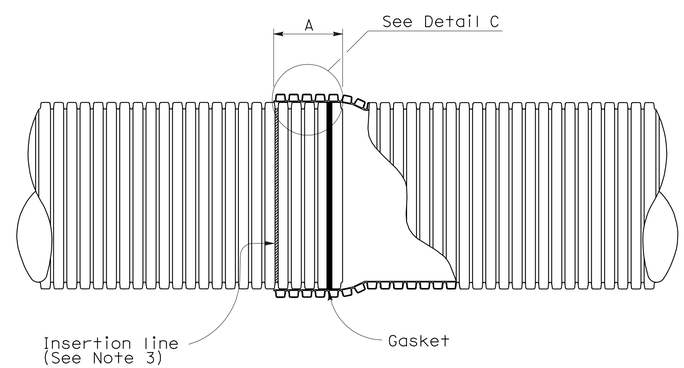

BELL AND SPIGOT JOINT

NOTES:

1. For pipe sections installed on straight alignment, the pipe sections shall be joined to achieve maxium joint overlap at all points on the periphery as indicated in Table A where the plans call for positive or watertight joints. Maxium joint overlap is recommended where the plans call for standard joints, but in no case shall the joint overlap be less than 3½".

2. For pipe sections installed on curved alignment, the maxium angle of deflection from straight alignment at any joint shall not exceed two degrees. Where the plans call for watertightness, field testing for compliance is required. Where plans call for positive joints, the pipe sections shall be joined to achieve Table A Dimensions on one side of the joint. Joints classified as standard shall have no less than 3½" joint overlap at any point on the periphery.

3. Factory applied insertion line limit shall be placed on spigot.

4. Liner insert to be used inside of existing pipe.

TABLE A

JOINT OVERLAP DIMENSIONS		
PIPE Dia (NOMINAL)	A	B
12"	5¾"	4¼"
15"	6¾"	5⅝"
18"	6¾"	5⅝"
21"	8½"	5⅝"
24"	8½"	6⅛"
30"	8½"	7⅛"
36"	8½"	8⅛"

STATE OF CALIFORNIA
DEPARTMENT OF TRANSPORTATION

CORRUGATED POLYVINYL CHLORIDE PIPE WITH SMOOTH INTERIOR STANDARD AND POSITIVE JOINTS

NO SCALE

NSP D97I DATED MARCH 7, 2008 SUPPLEMENTS THE STANDARD PLANS BOOK DATED MAY 2006.

NEW STANDARD PLAN NSP D97I

2006 NEW STANDARD PLAN NSP D97I

2-13-08

DIST	COUNTY	ROUTE	POST MILES TOTAL PROJECT	SHEET NO.	TOTAL SHEETS
02	Sis	5	R50.6/R52.1	53	84

Raymond Don Tsztoo
REGISTERED CIVIL ENGINEER

June 6, 2008
PLANS APPROVAL DATE

REGISTERED PROFESSIONAL ENGINEER
Raymond Don Tsztoo
No. C37332
Exp. 6-30-08
CIVIL
STATE OF CALIFORNIA

The State of California or its officers or agents shall not be responsible for the accuracy or completeness of electronic copies of this plan sheet.

To accompany plans dated 3-26-12

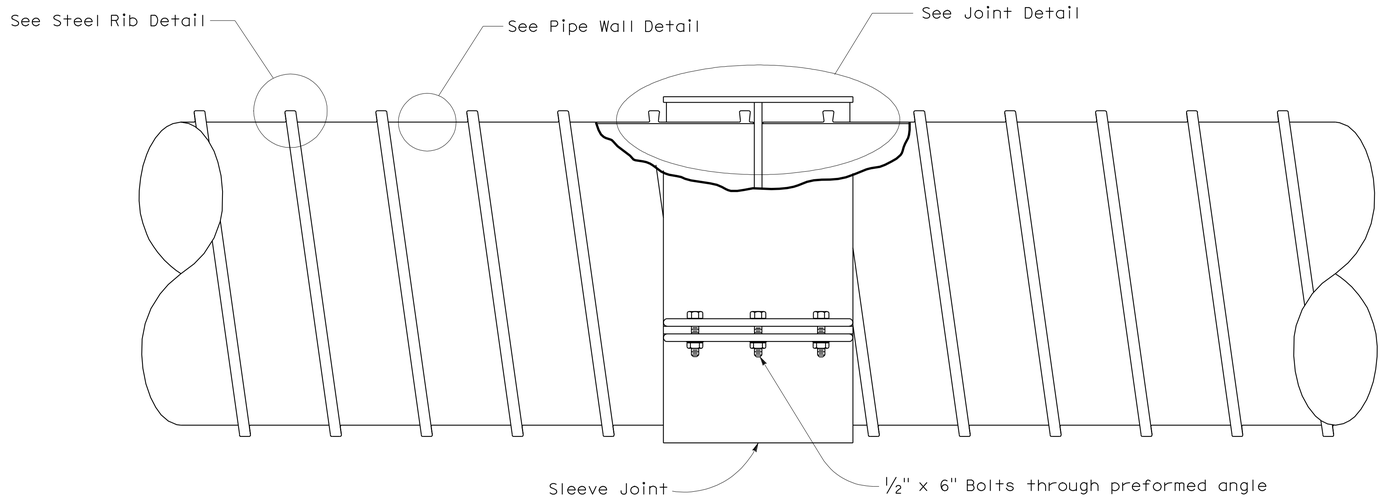

COMPOSITE STEEL SPIRAL RIB PIPE

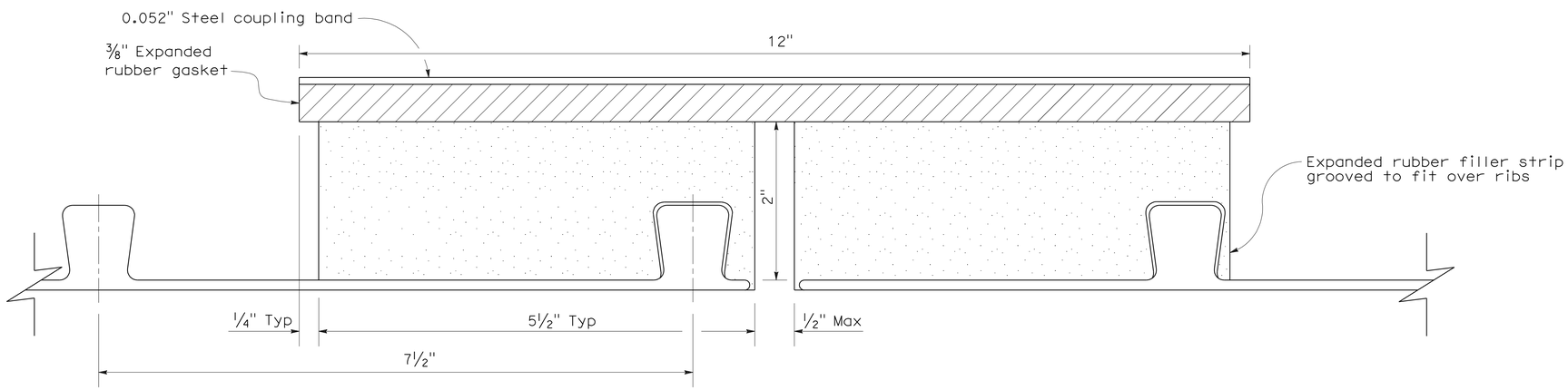

JOINT DETAIL

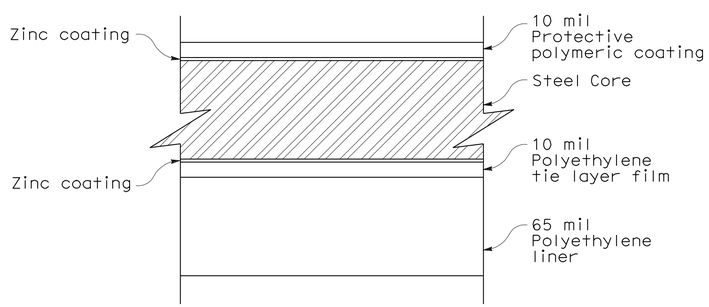

PIPE WALL DETAIL

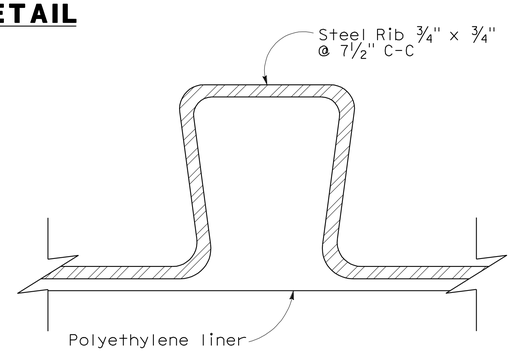

STEEL RIB DETAIL

NOTES:

1. Pipe to conform to ASTM A 978.
2. See Standard Plan A62F for backfill details.
3. Protective polymer film to conform to ASTM A 742 and AASHTO M 246.
4. See Standard Plan D97C for Universal Coupling details.
5. Strap joint connection shall consist of 2 separate bolted preformed connectors joined to form one strap when pipe inside diameter is greater than or equal to 60".

STATE OF CALIFORNIA
DEPARTMENT OF TRANSPORTATION

COMPOSITE STEEL SPIRAL RIB PIPE WITH SMOOTH INTERIOR STANDARD JOINT

NO SCALE

NSP D97J DATED JUNE 6, 2008 SUPPLEMENTS THE STANDARD PLANS BOOK DATED MAY 2006.

NEW STANDARD PLAN NSP D97J

2006 NEW STANDARD PLAN NSP D97J

4-24-08

DIST	COUNTY	ROUTE	POST MILES TOTAL PROJECT	SHEET NO.	TOTAL SHEETS
02	Sis	5	R50.6/R52.1	54	84

LICENSED LANDSCAPE ARCHITECT

April 3, 2009
PLANS APPROVAL DATE

The State of California or its officers or agents shall not be responsible for the accuracy or completeness of electronic copies of this plan sheet.

LICENSED LANDSCAPE ARCHITECT — Gregory A. Balzer 2572 — Signature — 02-28-11 Renewal Date — 03-04-09 Date — STATE OF CALIFORNIA

To accompany plans dated 3-26-12

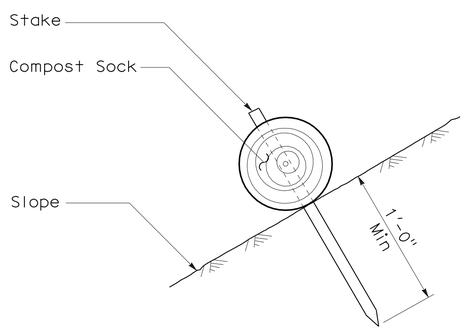

SECTION

COMPOST SOCK (TYPE 1)

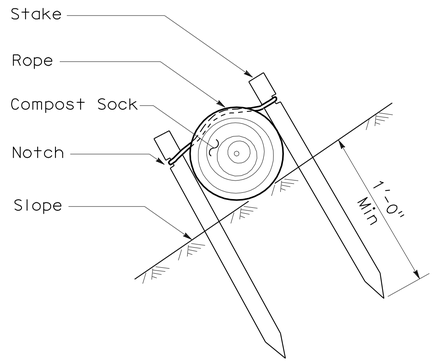

SECTION

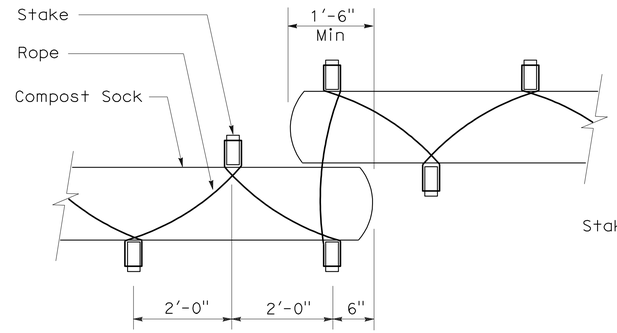

PLAN

COMPOST SOCK (TYPE 2)

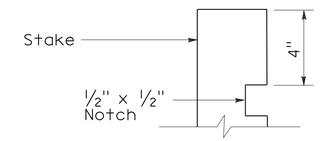

ELEVATION

STAKE NOTCH DETAIL

NOTE:

Compost sock spacing varies depending upon slope inclination.

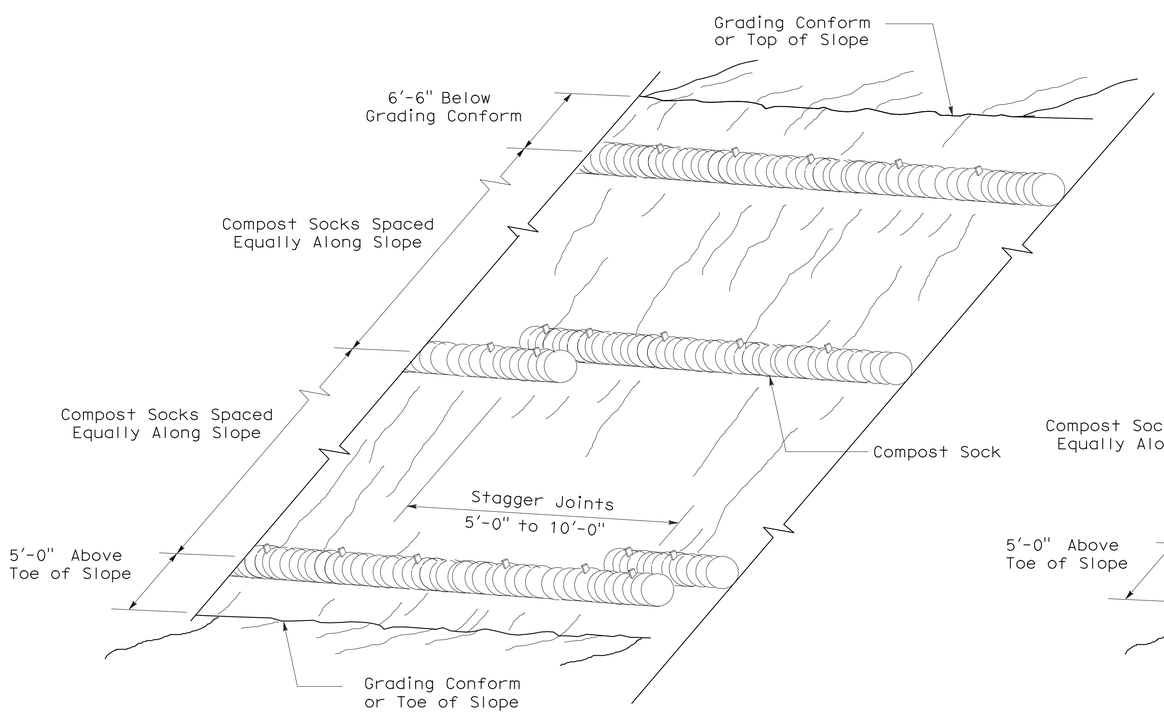

PERSPECTIVE

COMPOST SOCK (TYPE 1)

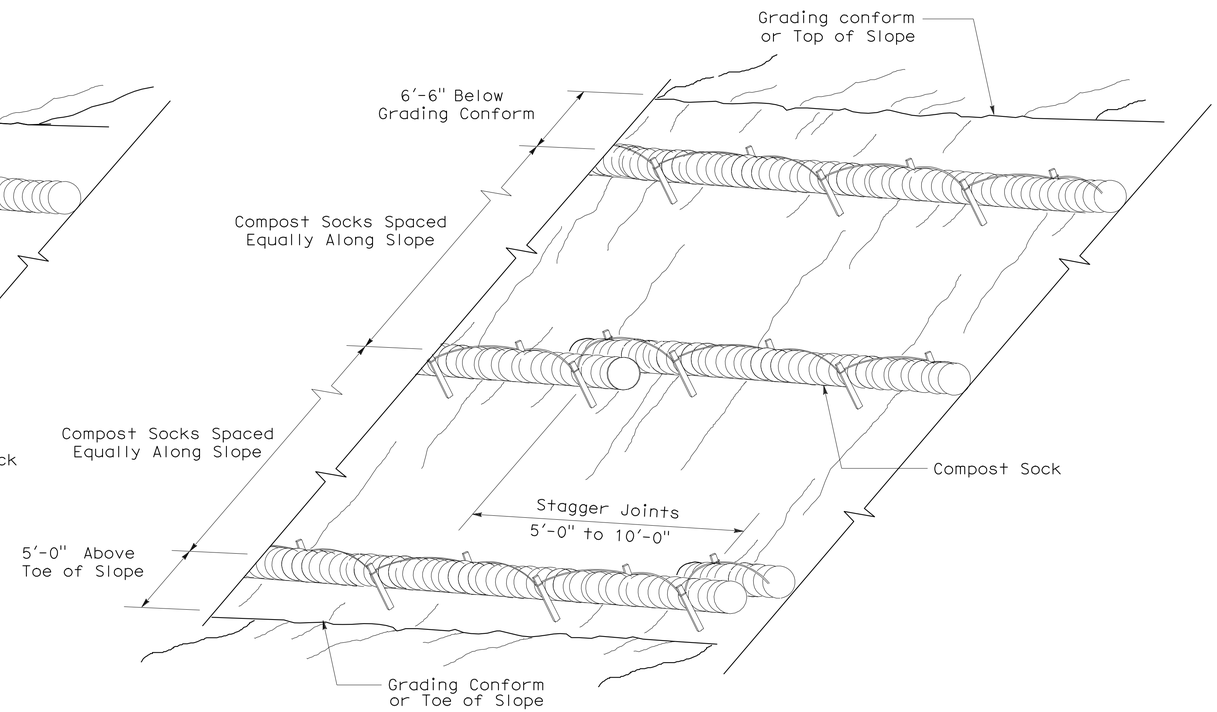

PERSPECTIVE

COMPOST SOCK (TYPE 2)

STATE OF CALIFORNIA
DEPARTMENT OF TRANSPORTATION

EROSION CONTROL DETAILS (COMPOST SOCK)

NO SCALE

NSP H52 DATED APRIL 3, 2009 SUPPLEMENTS
THE STANDARD PLANS BOOK DATED MAY 2006.

NEW STANDARD PLAN NSP H52

2006 NEW STANDARD PLAN NSP H52

3-3-09

DIST	COUNTY	ROUTE	POST MILES TOTAL PROJECT	SHEET NO.	TOTAL SHEETS
02	Sis	5	R50.6/R52.1	55	84

Randell D. Hiatt
REGISTERED CIVIL ENGINEER

June 6, 2008
PLANS APPROVAL DATE

REGISTERED PROFESSIONAL ENGINEER
Randell D. Hiatt
No. C50200
Exp. 6-30-09
CIVIL
STATE OF CALIFORNIA

The State of California or its officers or agents shall not be responsible for the accuracy or completeness of electronic copies of this plan sheet.

To accompany plans dated 3-26-12

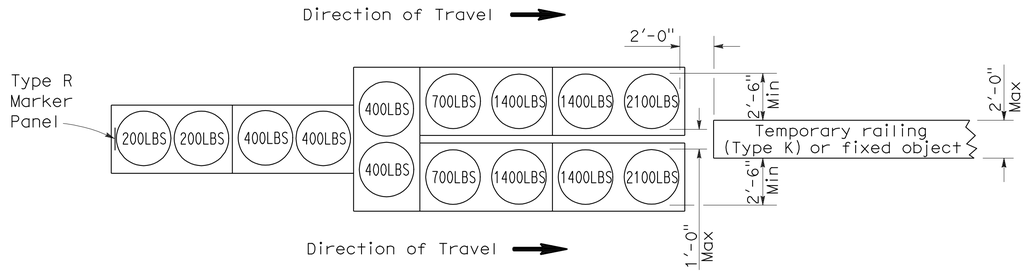

ARRAY `TU14'

Approach speed 45 mph or more

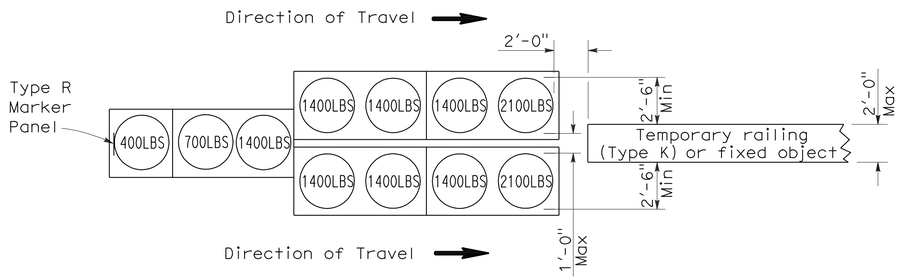

ARRAY `TU11'

Approach speed less than 45 mph

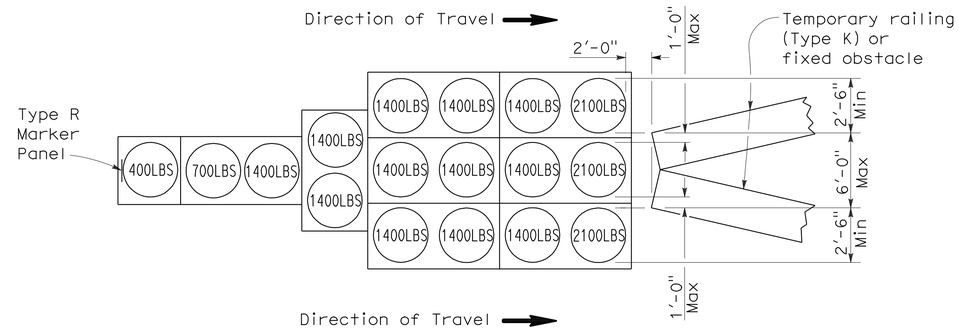

ARRAY `TU17'

Approach speed less than 45 mph

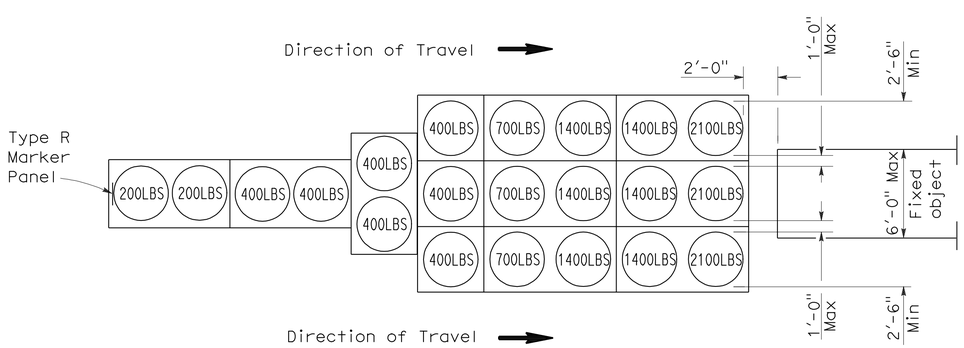

ARRAY `TU21'

Approach speed 45 mph or more

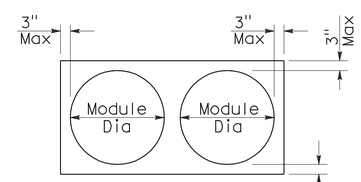

PLAN

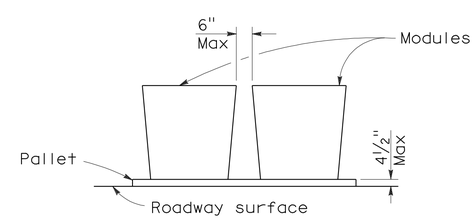

ELEVATION

CRASH CUSHION PALLET DETAIL

See Note 7

NOTES:

1. (XXX) Indicates sand filled module location and weight of sand in pounds for each module. Module spacing is based on the greater diameter of the module.
2. All sand weights are nominal.
3. Temporary crash cushion arrays shall not encroach on the traveled way.
4. Place the top of Type R marker panel 1" below the module lid.
5. Refer to Standard Plan A73B for marker details.
6. Approach speeds indicated conform to NCHRP 350 Report criteria.
7. Use of pallets is optional.

STATE OF CALIFORNIA
DEPARTMENT OF TRANSPORTATION

TEMPORARY CRASH CUSHION, SAND FILLED (UNIDIRECTIONAL)

NO SCALE

RSP T1A DATED JUNE 6, 2008 SUPERSEDES STANDARD PLAN T1A
DATED MAY 1, 2006 - PAGE 211 OF THE STANDARD PLANS BOOK DATED MAY 2006.

REVISED STANDARD PLAN RSP T1A

2006 REVISED STANDARD PLAN RSP T1A

DIST	COUNTY	ROUTE	POST MILES TOTAL PROJECT	SHEET NO.	TOTAL SHEETS
02	Sis	5	R50.6/R52.1	56	84

Randell D. Hiatt
REGISTERED CIVIL ENGINEER

June 6, 2008
PLANS APPROVAL DATE

REGISTERED PROFESSIONAL ENGINEER
Randell D. Hiatt
No. C50200
Exp. 6-30-09
CIVIL
STATE OF CALIFORNIA

The State of California or its officers or agents shall not be responsible for the accuracy or completeness of electronic copies of this plan sheet.

To accompany plans dated 3-26-12

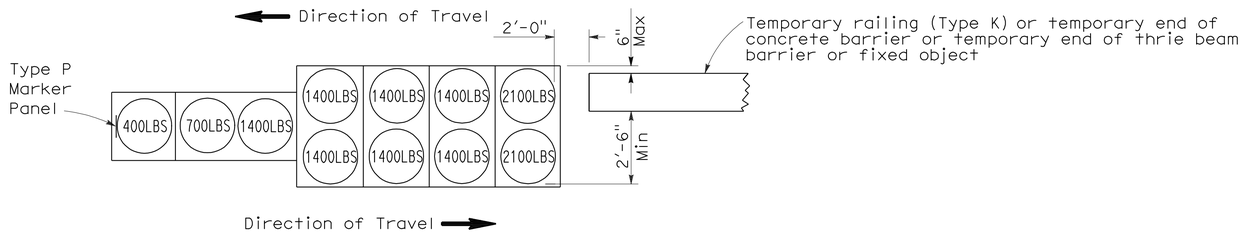

ARRAY 'TB11'

Approach speed less than 45 mph

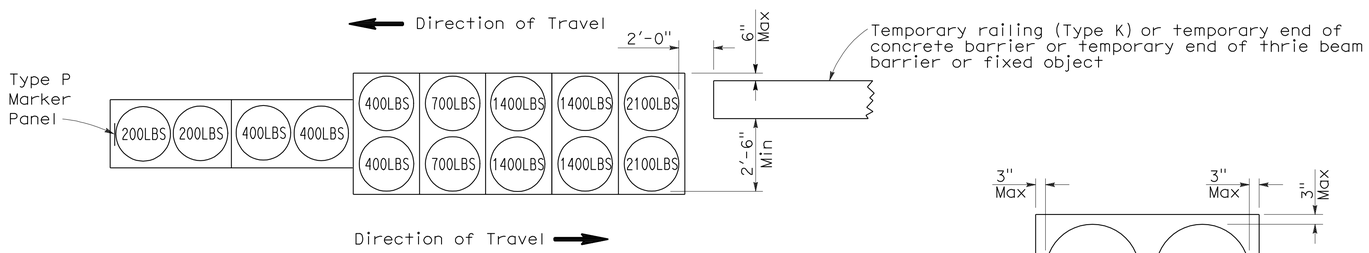

ARRAY 'TB14'

Approach speed 45 mph or more

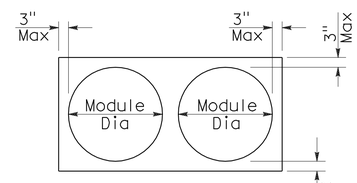

PLAN

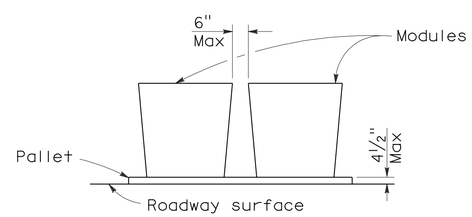

ELEVATION

CRASH CUSHION PALLET DETAIL

See Note 7

NOTES:

1. (XXX) Indicates sand filled module location and weight of sand in pounds for each module. Module spacing is based on the greater diameter of the module.
2. All sand weights are nominal.
3. Temporary crash cushion arrays shall not encroach on the traveled way.
4. Place the Type P marker panel so that the bottom of the panel rests upon the pallet.
5. Refer to Standard Plan A73B for marker details.
6. Approach speeds indicated conform to NCHRP 350 Report criteria.
7. Use of pallets is optional.

STATE OF CALIFORNIA
DEPARTMENT OF TRANSPORTATION

TEMPORARY CRASH CUSHION, SAND FILLED (BIDIRECTIONAL)

NO SCALE

RSP T1B DATED JUNE 6, 2008 SUPERSEDES STANDARD PLAN T1B
DATED MAY 1, 2006 - PAGE 212 OF THE STANDARD PLANS BOOK DATED MAY 2006.

REVISED STANDARD PLAN RSP T1B

2006 REVISED STANDARD PLAN RSP T1B

DIST	COUNTY	ROUTE	POST MILES TOTAL PROJECT	SHEET NO.	TOTAL SHEETS
02	Sis	5	R50.6/R52.1	57	84

Randell D. Hiatt
REGISTERED CIVIL ENGINEER

June 6, 2008
PLANS APPROVAL DATE

REGISTERED PROFESSIONAL ENGINEER
Randell D. Hiatt
No. C50200
Exp. 6-30-09
CIVIL
STATE OF CALIFORNIA

The State of California or its officers or agents shall not be responsible for the accuracy or completeness of electronic copies of this plan sheet.

To accompany plans dated 3-26-12

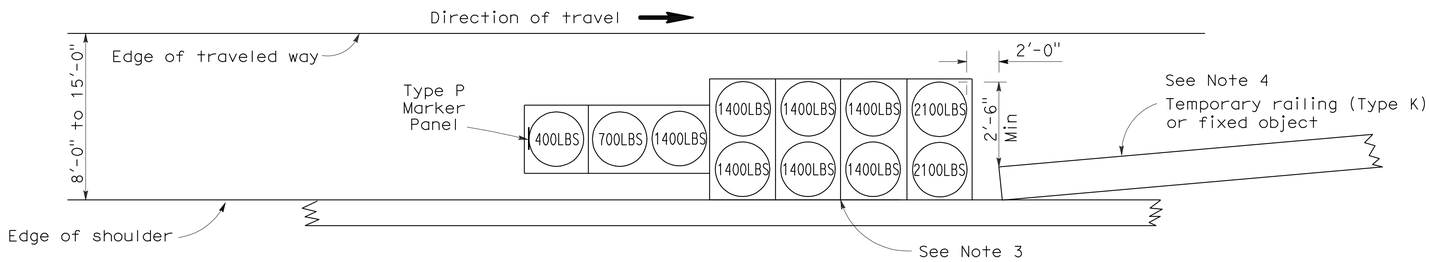

ARRAY 'TS11'

Approach speed less than 45 mph
See Note 9

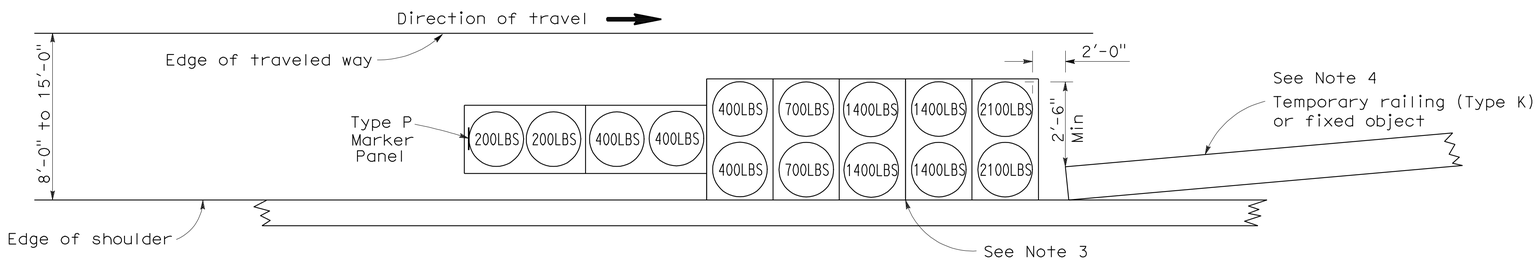

ARRAY 'TS14'

Approach speed 45 mph or more
See Note 9

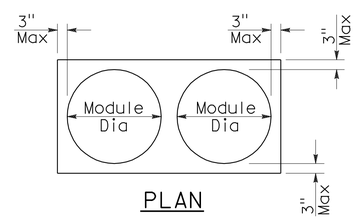

PLAN

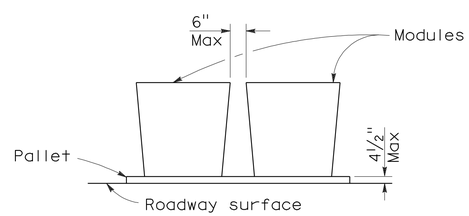

ELEVATION

CRASH CUSHION PALLET DETAIL

See Note 11

NOTES:

1. (XXX) Indicates sand filled module location and weight of sand in pounds for each module. Module spacing is based on the greater diameter of the module.
2. All sand weights are nominal.
3. The temporary crash cushion arrays shown on this plan shall be used only in locations where there will be traffic on one side of the temporary crash cushion array.
4. If the fixed object or approach end of the temporary railing is less than 15'-0" from the edge of traveled way, a temporary crash cushion is required in a construction or work zone.
5. Temporary crash cushion arrays shall not encroach on the traveled way.
6. Arrays for median shoulders shall conform to details shown on this plan for outside shoulders.
7. Place the Type P marker panel so that the bottom of the panel rests upon the pallet and faces traffic.
8. Refer to Standard Plan A73B for marker details.
9. For shoulder widths less than 8'-0", appropriate approved crash cushion protection, other than sand filled modules, shall be provided at fixed objects and at approach ends of temporary railing. The specific type of crash cushion shall be as shown on the project plans or as specified in the Special Provisions, or if not shown on the project plans or specified in the Special Provisions, shall be as approved by the Engineer.
10. Approach speeds indicated conform to NCHRP 350 Report criteria.
11. Use of pallets is optional.

STATE OF CALIFORNIA
DEPARTMENT OF TRANSPORTATION

TEMPORARY CRASH CUSHION, SAND FILLED (SHOULDER INSTALLATIONS)

NO SCALE

RSP T2 DATED JUNE 6, 2008 SUPERSEDES STANDARD PLAN T2
DATED MAY 1, 2006 - PAGE 213 OF THE STANDARD PLANS BOOK DATED MAY 2006.

REVISED STANDARD PLAN RSP T2

2006 REVISED STANDARD PLAN RSP T2

5-15-08

Dist	COUNTY	ROUTE	POST MILES TOTAL PROJECT	SHEET No.	TOTAL SHEETS
02	Sis	5	R50.6/R52.1	58	84

Randell D. Hiatt
REGISTERED CIVIL ENGINEER

May 20, 2011
PLANS APPROVAL DATE

REGISTERED PROFESSIONAL ENGINEER
Randell D. Hiatt
No. C50200
Exp. 6-30-11
CIVIL
STATE OF CALIFORNIA

The State of California or its officers or agents shall not be responsible for the accuracy or completeness of electronic copies of this plan sheet.

To accompany plans dated 3-26-12

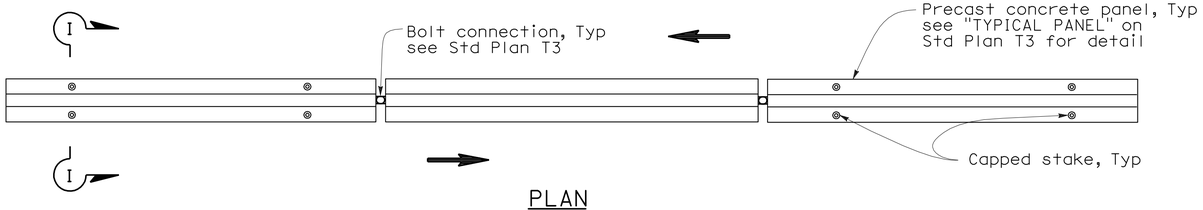

PLAN

RAILING STAKING CONFIGURATION FOR TWO-WAY TRAFFIC

See Note 1

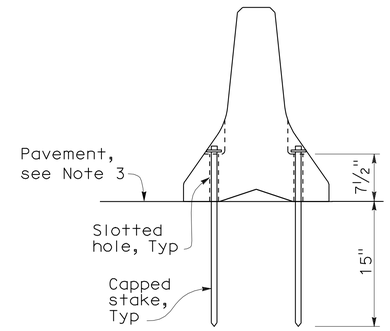

SECTION I-I

NOTES:

1. Where Type K Temporary Railing is placed as a temporary or long term barrier in two-way traffic on highways with less than 24" from the edge of traveled way, use four capped stakes per every other panel with end panels staked.
2. Where Type K Temporary Railing is placed 3" to 24" from the edge of an excavation on highways, use two capped stakes per panel along the traffic side.
3. Staked Type K Temporary Railing must be supported by at least 4" thick concrete, hot mix asphalt or existing asphalt concrete pavement.
4. The minimum yield strength for the washer must be 60,000 psi.
5. Direction of adjacent traffic indicated by ⟹.

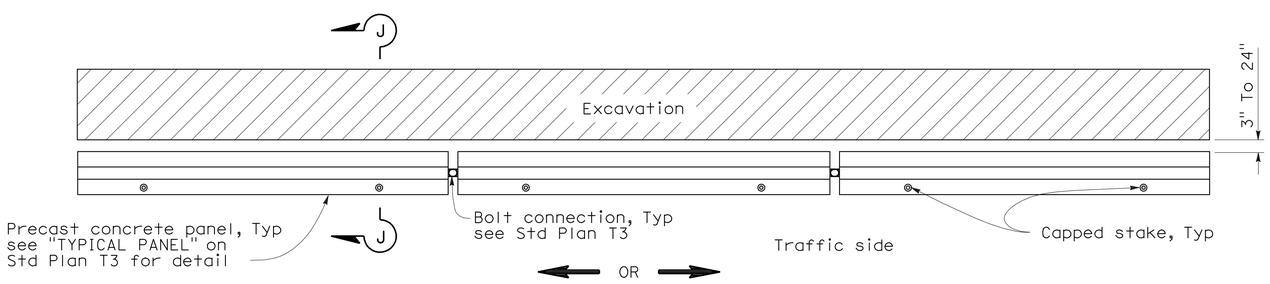

PLAN

RAILING STAKING CONFIGURATION ADJACENT TO AN EXCAVATION

See Note 2

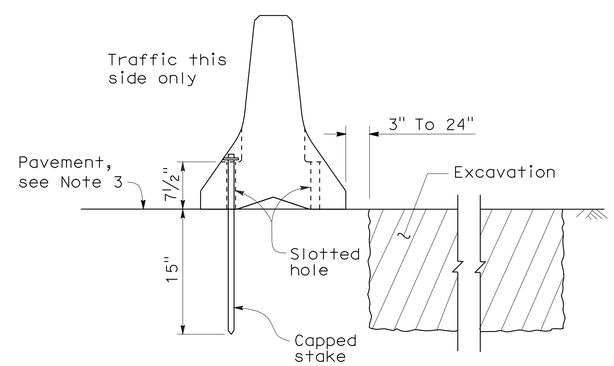

SECTION J-J

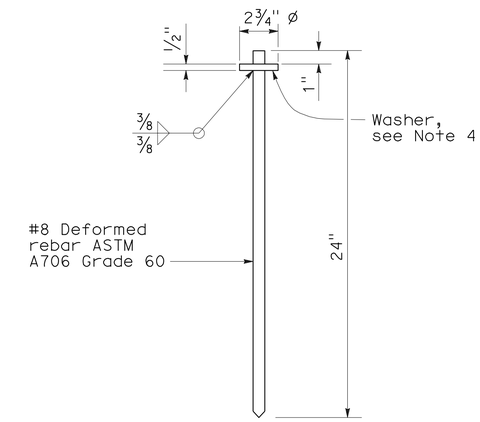

CAPPED STAKE DETAIL

STATE OF CALIFORNIA
DEPARTMENT OF TRANSPORTATION

TEMPORARY RAILING (TYPE K)

NO SCALE

NSP T3A DATED MAY 20, 2011 SUPPLEMENTS THE STANDARD PLANS BOOK DATED MAY 2006.

NEW STANDARD PLAN NSP T3A

2006 NEW STANDARD PLAN NSP T3A

DIST	COUNTY	ROUTE	POST MILES TOTAL PROJECT	SHEET NO.	TOTAL SHEETS
02	Sis	5	R50.6/R52.1	59	84

Robert B. Schott
LICENSED LANDSCAPE ARCHITECT

April 3, 2009
PLANS APPROVAL DATE

LICENSED LANDSCAPE ARCHITECT
ROBERT B. SCHOTT 3035
Robert B. Schott
Signature
11-30-10
Renewal Date
2-25-09
Date
STATE OF CALIFORNIA

The State of California or its officers or agents shall not be responsible for the accuracy or completeness of electronic copies of this plan sheet.

To accompany plans dated 3-26-12

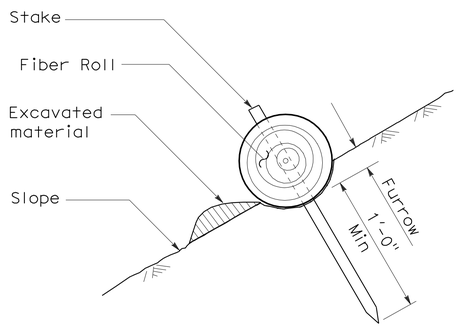

SECTION

TEMPORARY FIBER ROLL (TYPE 1)

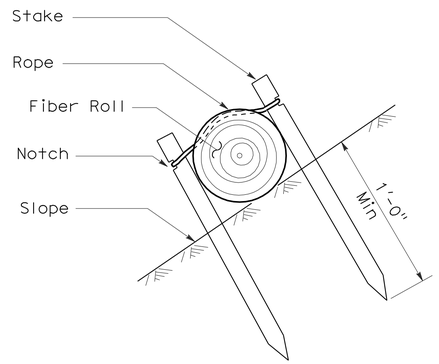

SECTION

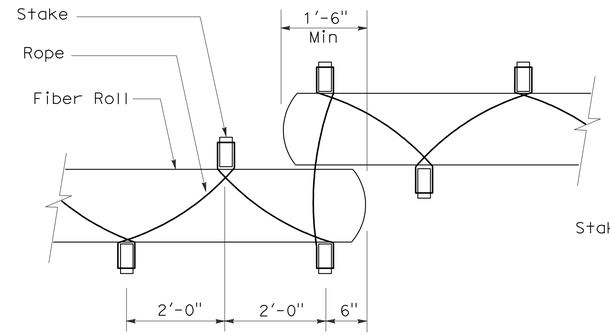

PLAN

TEMPORARY FIBER ROLL (TYPE 2)

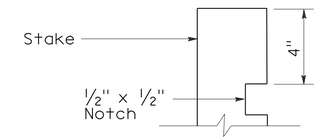

ELEVATION

STAKE NOTCH DETAIL

NOTES:

1. Temporary fiber roll spacing varies depending upon slope inclination.
2. Installations shown in the perspectives are for slope inclination of 10:1 and steeper.

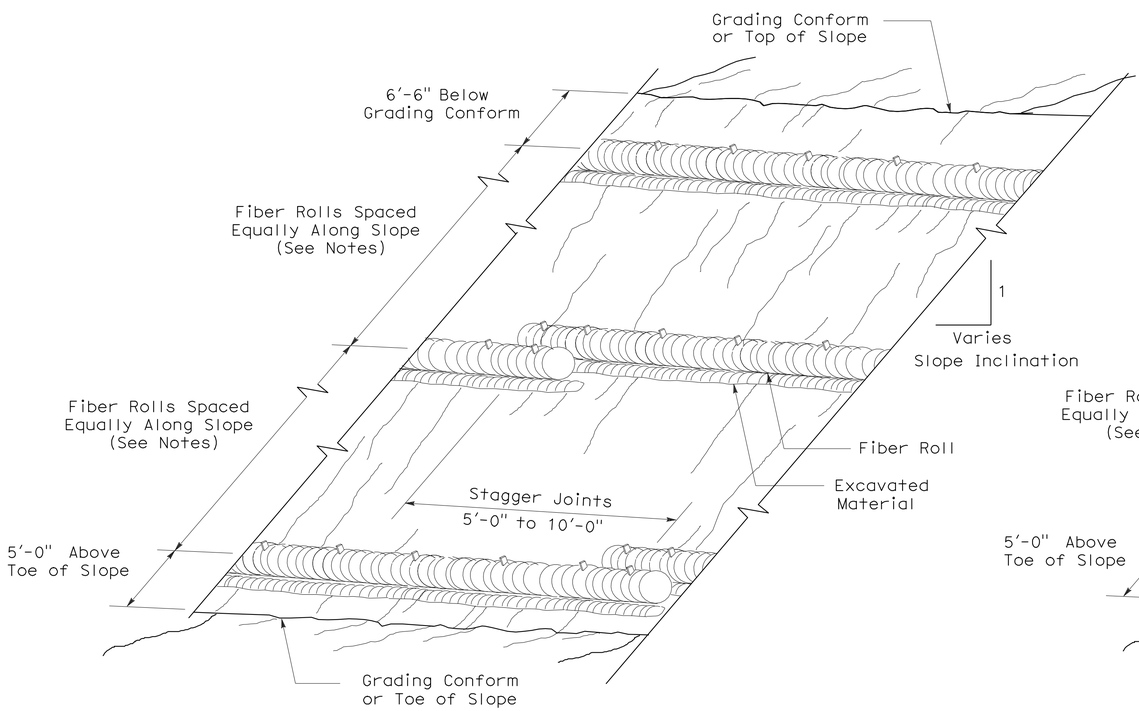

PERSPECTIVE

TEMPORARY FIBER ROLL (TYPE 1)

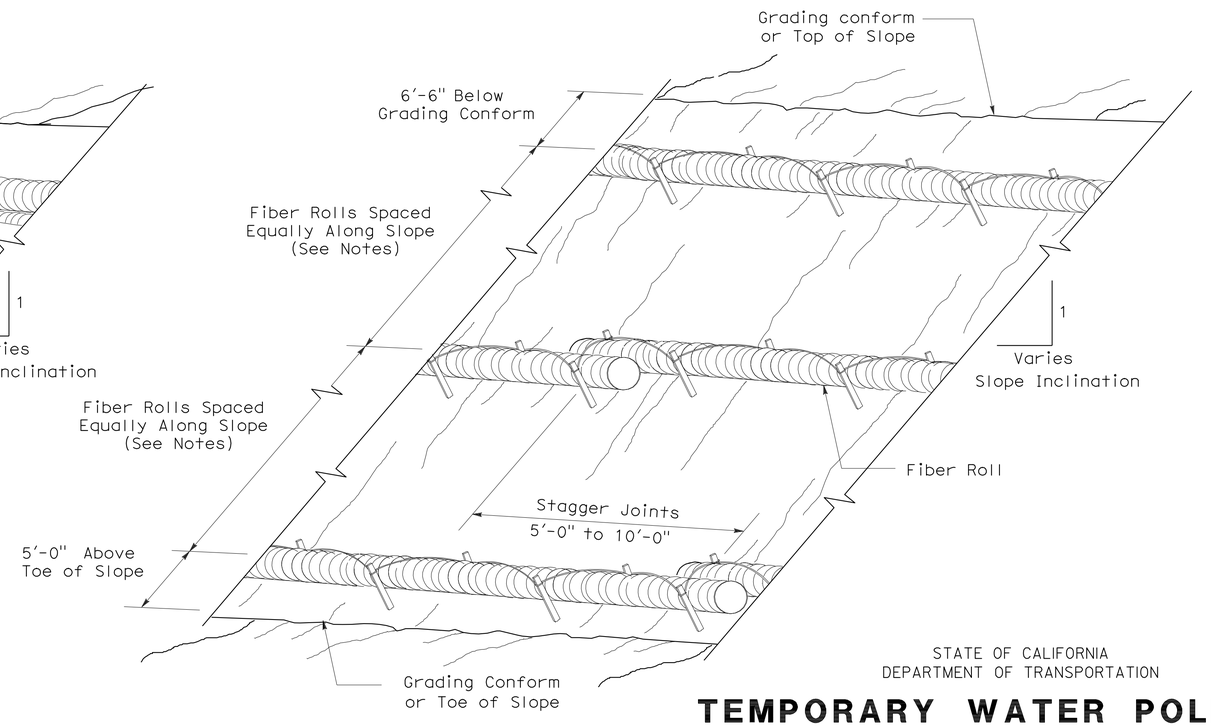

PERSPECTIVE

TEMPORARY FIBER ROLL (TYPE 2)

STATE OF CALIFORNIA
DEPARTMENT OF TRANSPORTATION

TEMPORARY WATER POLLUTION CONTROL DETAILS (TEMPORARY FIBER ROLL)

NO SCALE

RSP T56 DATED APRIL 3, 2009 SUPERSEDES STANDARD PLAN T56
DATED MAY 1, 2006 - PAGE 232 OF THE STANDARD PLANS BOOK DATED MAY 2006.

REVISED STANDARD PLAN RSP T56

2006 REVISED STANDARD PLAN RSP T56

2-23-09

DIST	COUNTY	ROUTE	POST MILES TOTAL PROJECT	SHEET NO.	TOTAL SHEETS
02	Sis	5	R50.6/R52.1	60	84

LICENSED LANDSCAPE ARCHITECT

August 15, 2008
PLANS Approval DATE

LICENSED LANDSCAPE ARCHITECT
Robert B. Schott
Signature
11-04-08
Renewal Date
08-11-08
Date
STATE OF CALIFORNIA

The State of California or its officers or agents shall not be responsible for the accuracy or completeness of electronic copies of this plan sheet.

To accompany plans dated 3-26-12

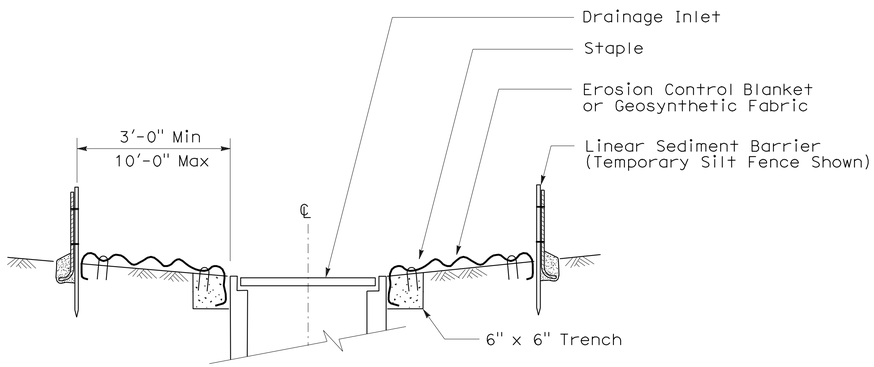

SECTION A-A

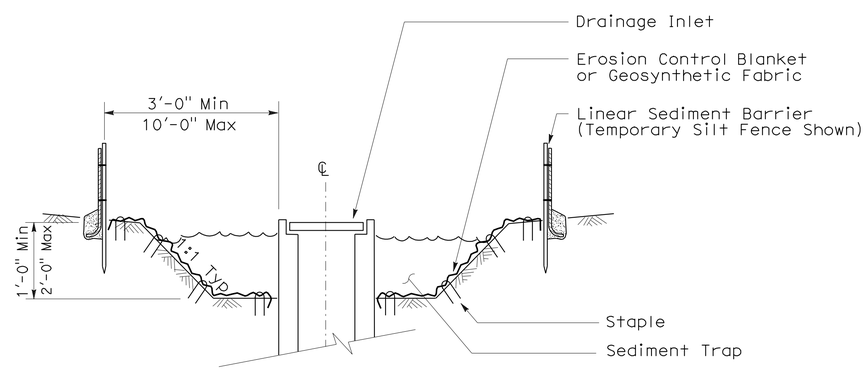

SECTION B-B

NOTES:

1. See Standard Plan T51 for Temporary Silt Fence.
2. Dimensions may vary to fit field conditions.

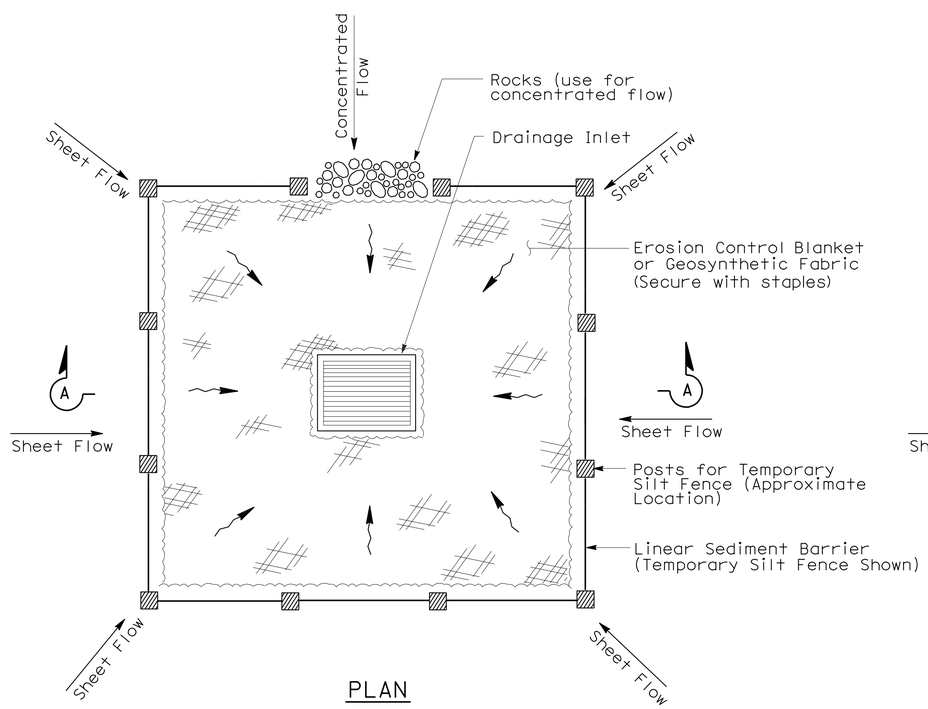

PLAN

TEMPORARY DRAINAGE
INLET PROTECTION (TYPE 1)

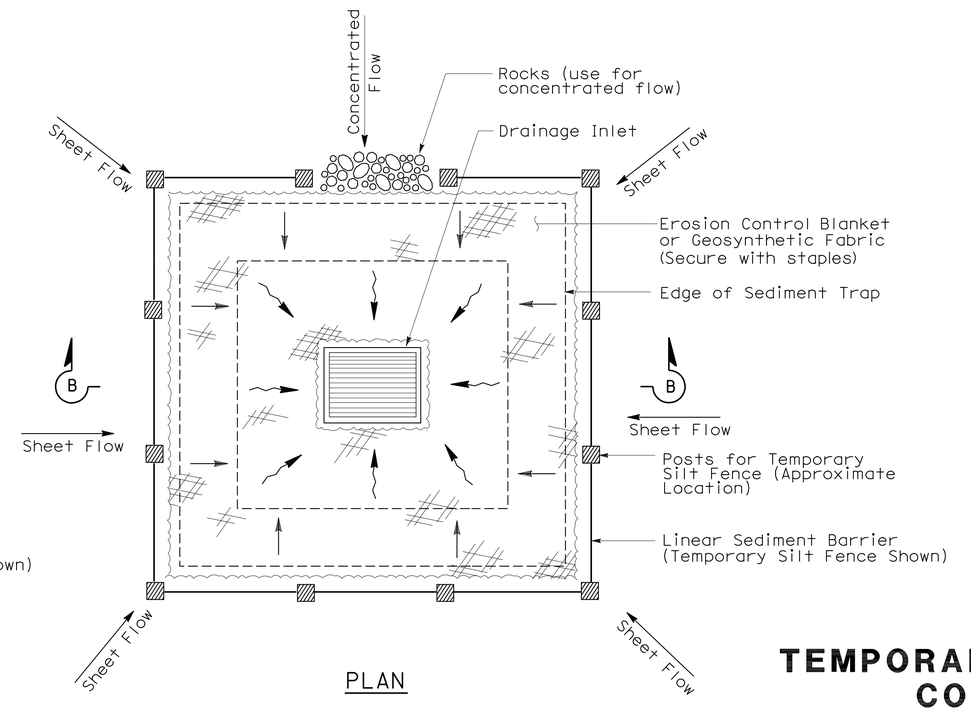

PLAN

TEMPORARY DRAINAGE
INLET PROTECTION (TYPE 2)
(EXCAVATED SEDIMENT TRAP)

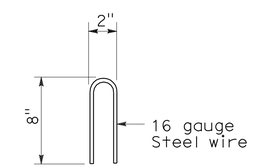

STAPLE DETAIL

STATE OF CALIFORNIA
DEPARTMENT OF TRANSPORTATION

TEMPORARY WATER POLLUTION CONTROL DETAILS (TEMPORARY DRAINAGE INLET PROTECTION)

NO SCALE

NSP T61 DATED AUGUST 15, 2008 SUPPLEMENTS
THE STANDARD PLANS BOOK DATED MAY 2006.

NEW STANDARD PLAN NSP T61

2006 NEW STANDARD PLAN NSP T61

7-11-08

DIST	COUNTY	ROUTE	POST MILES TOTAL PROJECT	SHEET NO.	TOTAL SHEETS
02	Sis	5	R50.6/R52.1	61	84

LICENSED LANDSCAPE ARCHITECT

August 15, 2008
PLANS APPROVAL DATE

The State of California or its officers or agents shall not be responsible for the accuracy or completeness of electronic copies of this plan sheet.

LICENSED LANDSCAPE ARCHITECT — Robert B. Schott — Signature — 11-04-08 Renewal Date — 08-11-08 Date — STATE OF CALIFORNIA

To accompany plans dated 3-26-12

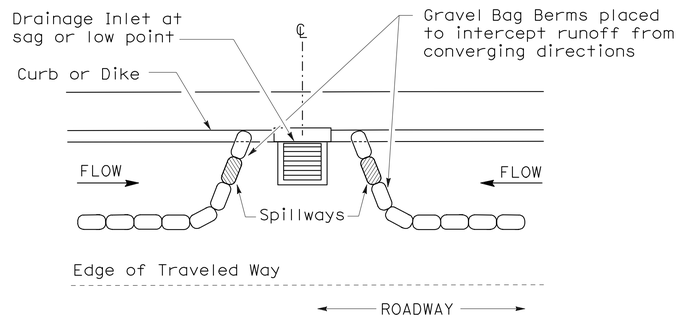

PLAN

CONFIGURATION FOR SAG POINT INLET (GRAVEL BAG BERM)

GRAVEL BAG BERM (TYPE 3A) SPACING TABLE

SLOPE OF ROADWAY (PERCENT)	1 to 3.9	4 to 5.9	6 to 7.9	8 to 10	10+
INTERVAL BETWEEN BERM	100′	75′	50′	25′	12′

For slope of less than 1%, install barriers only if erosion/sediment is prevalent

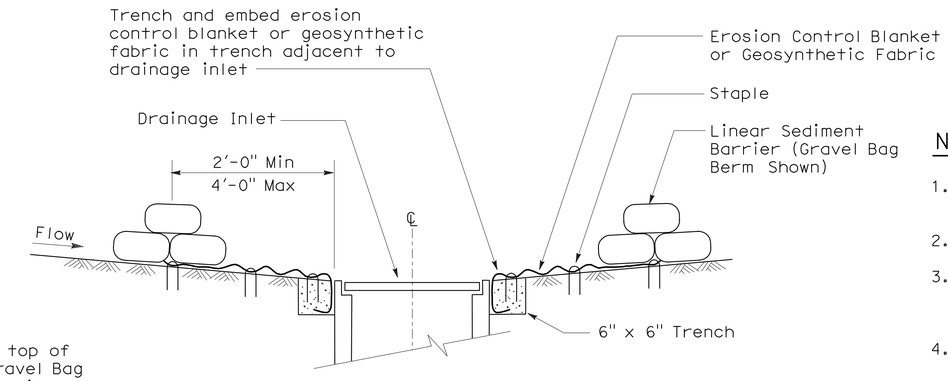

SECTION A-A

NOTES:

1. Place safety cones adjacent to drainage inlet protection.
2. Dimensions may vary to fit field conditions.
3. Install a minimum of 3 gravel bag berms upstream of each drainage inlet to be protected.
4. Position erosion control blanket or geosynthetic fabric at edge of concrete apron and secure in trench.
5. Erosion control blanket or geosynthetic fabric is not required if the area adjacent to the drainage inlet is vegetated or paved.

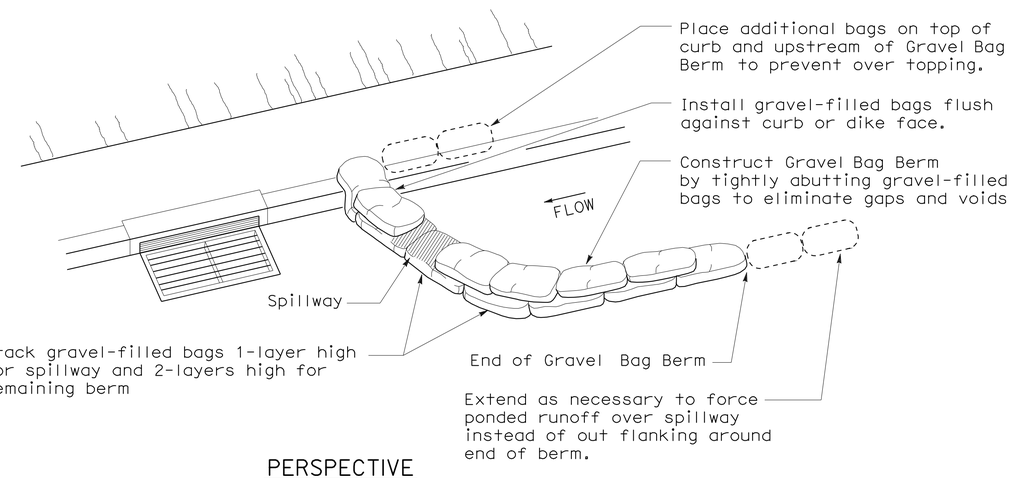

PERSPECTIVE

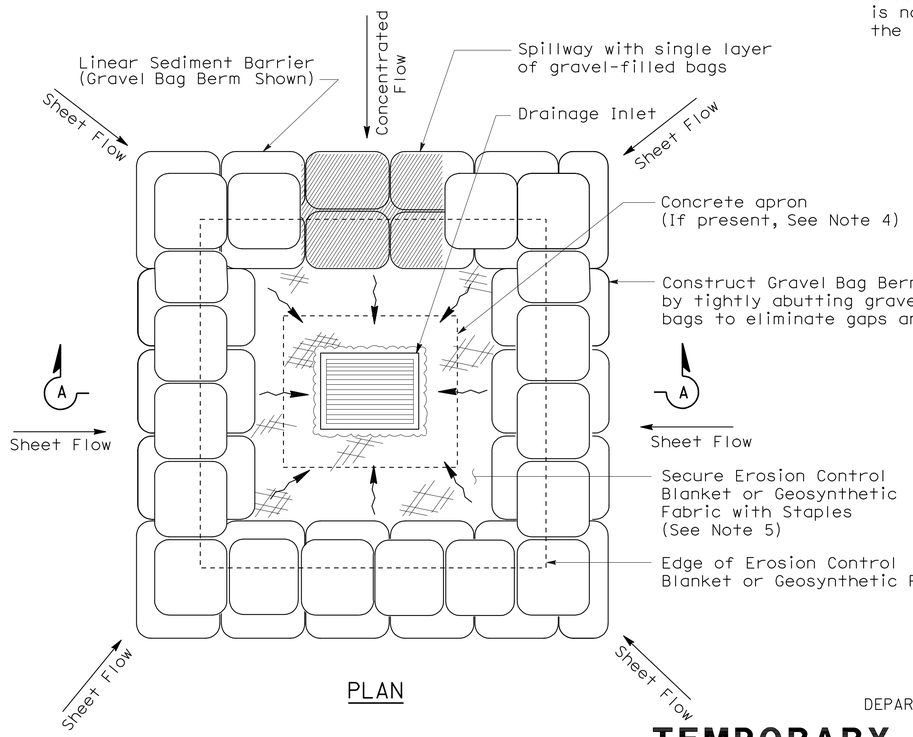

PLAN

TEMPORARY DRAINAGE INLET PROTECTION (TYPE 3B)

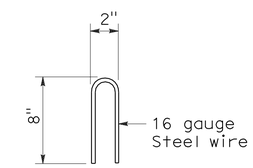

STAPLE DETAIL

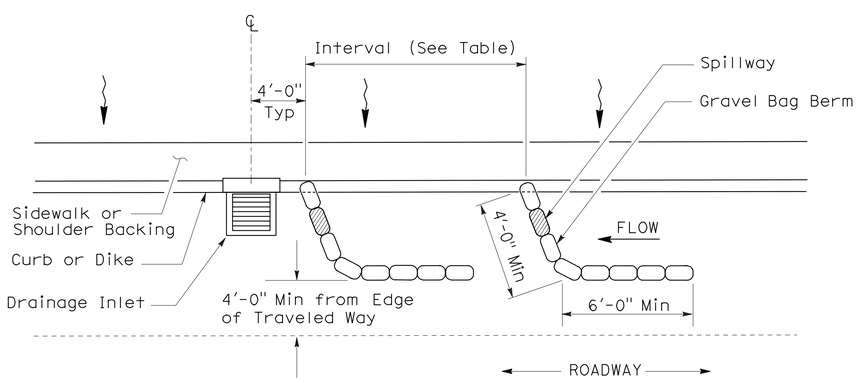

PLAN

TEMPORARY DRAINAGE INLET PROTECTION (TYPE 3A) (GRAVEL BAG BERM)

STATE OF CALIFORNIA
DEPARTMENT OF TRANSPORTATION

TEMPORARY WATER POLLUTION CONTROL DETAILS (TEMPORARY DRAINAGE INLET PROTECTION)

NO SCALE

NSP T62 DATED AUGUST 15, 2008 SUPPLEMENTS THE STANDARD PLANS BOOK DATED MAY 2006.

NEW STANDARD PLAN NSP T62

2006 NEW STANDARD PLAN NSP T62

7-11-08

DIST	COUNTY	ROUTE	POST MILES TOTAL PROJECT	SHEET NO.	TOTAL SHEETS
02	Sis	5	R50.6/R52.1	62	84

Robert B Schott
LICENSED LANDSCAPE ARCHITECT

August 15, 2008
PLANS APPROVAL DATE

LICENSED LANDSCAPE ARCHITECT Robert B. Schott 3025 Signature 11-04-08 Renewal Date 08-11-08 Date STATE OF CALIFORNIA

The State of California or its officers or agents shall not be responsible for the accuracy or completeness of electronic copies of this plan sheet.

To accompany plans dated 3-26-12

FLEXIBLE SEDIMENT BARRIER SPACING TABLE

SLOPE OF ROADWAY (PERCENT)	0 to 0.9	1 to 1.9	2 to 2.9	3 to 4	5+
INTERVAL BETWEEN BARRIERS	50′	35′	30′	25′	20′
ANGLE FROM FACE OF CURB	70°	70°	70°	45°	45°
SUGGESTED BARRIER LENGTH	6′	6′	6′	6′	6′

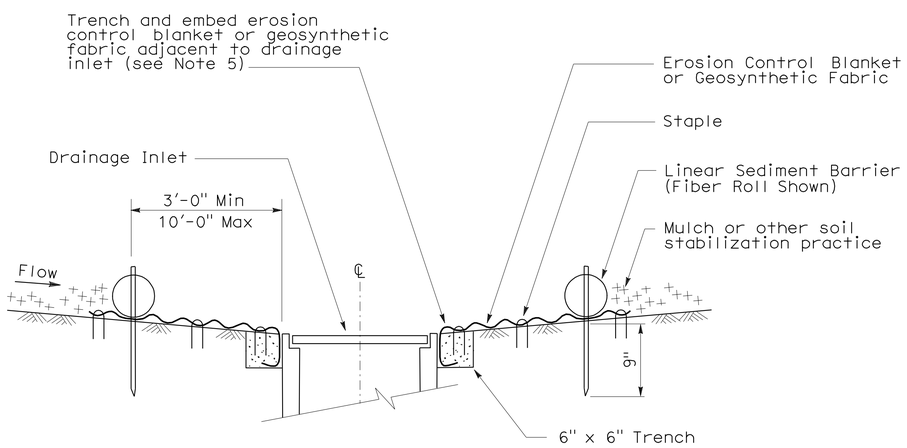

SECTION A-A

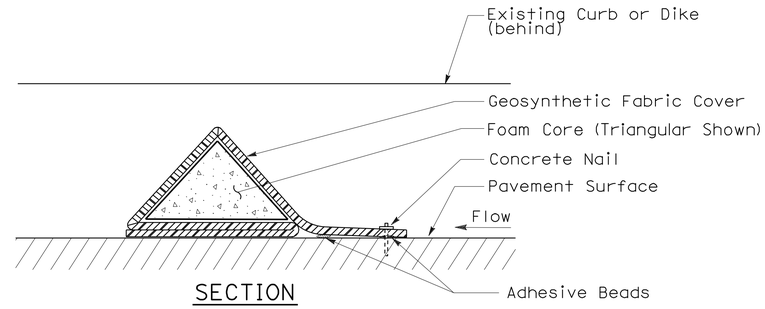

SECTION

FLEXIBLE SEDIMENT BARRIER DETAIL (FOAM BARRIER SHOWN)

NOTES:

1. See Standard Plan T51 for Temporary Silt Fence.
2. Dimensions may vary to fit field conditions.
3. Install a minimum of 3 flexible sediment barriers upstream of each drainage inlet to be protected.
4. Position erosion control blanket or geosynthetic fabric at edge of concrete apron and secure in trench.
5. Erosion control blanket or geosynthetic fabric is not required if the area adjacent to the drainage inlet is vegetated.

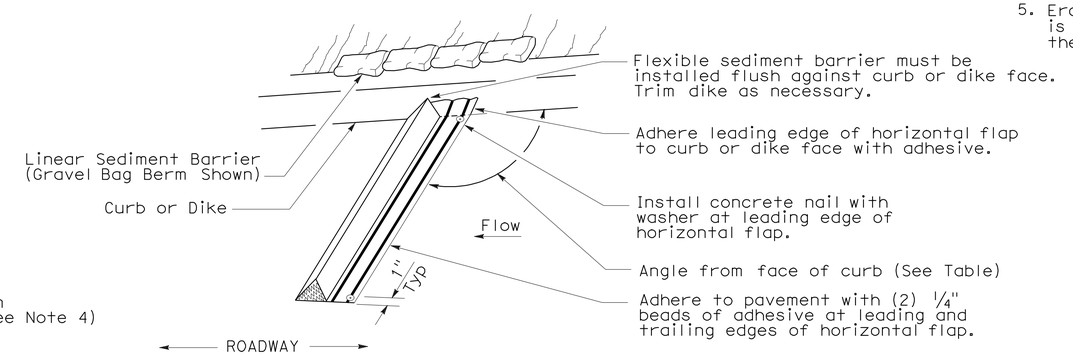

PERSPECTIVE

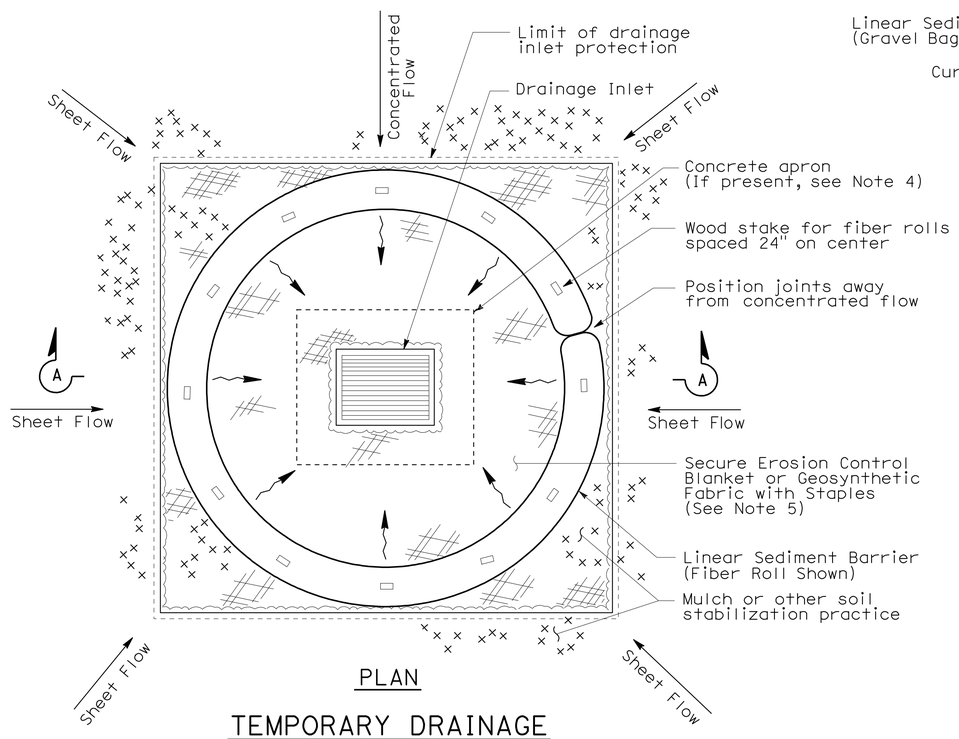

PLAN

TEMPORARY DRAINAGE INLET PROTECTION (TYPE 4A)

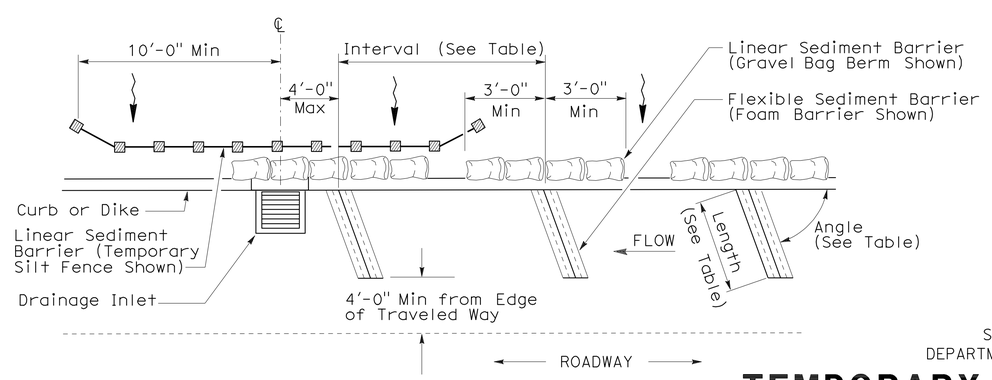

PLAN

TEMPORARY DRAINAGE INLET PROTECTION (TYPE 4B) FLEXIBLE SEDIMENT BARRIER

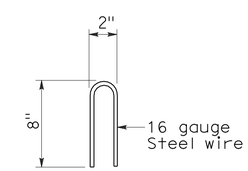

STAPLE DETAIL

STATE OF CALIFORNIA
DEPARTMENT OF TRANSPORTATION

TEMPORARY WATER POLLUTION CONTROL DETAILS (TEMPORARY DRAINAGE INLET PROTECTION)

NO SCALE

NSP T63 DATED AUGUST 15, 2008 SUPPLEMENTS THE STANDARD PLANS BOOK DATED MAY 2006.

NEW STANDARD PLAN NSP T63

2006 NEW STANDARD PLAN NSP T63

7-11-08

DIST	COUNTY	ROUTE	POST MILES TOTAL PROJECT	SHEET NO.	TOTAL SHEETS
02	Sis	5	R50.6/R52.1	63	84

LICENSED LANDSCAPE ARCHITECT

August 15, 2008
PLANS APPROVAL DATE

LICENSED LANDSCAPE ARCHITECT — Robert B. Schott — Signature 11-04-08 Renewal Date — 08-11-08 Date — STATE OF CALIFORNIA

The State of California or its officers or agents shall not be responsible for the accuracy or completeness of electronic copies of this plan sheet.

To accompany plans dated 3-26-12

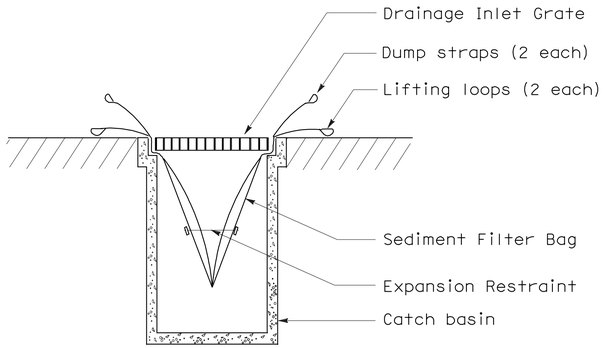

SECTION B-B

SEDIMENT FILTER BAG DETAIL

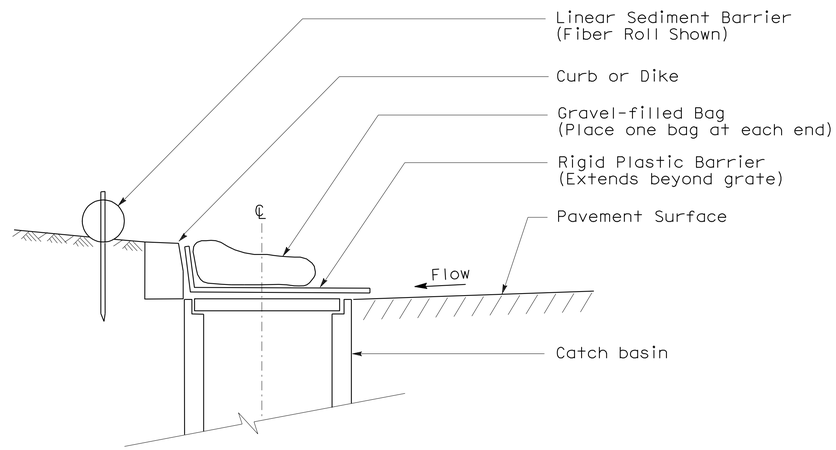

SECTION

TEMPORARY DRAINAGE INLET PROTECTION (TYPE 6A) (CATCH BASIN WITH GRATE)

NOTES:

1. See Standard Plan T51 for Temporary Silt Fence.
2. Dimensions may vary to fit field conditions.

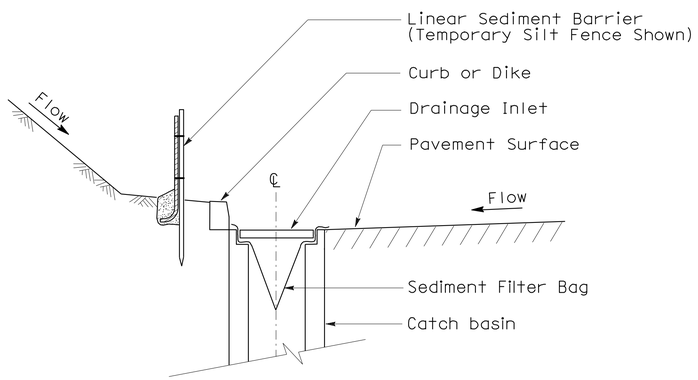

SECTION A-A

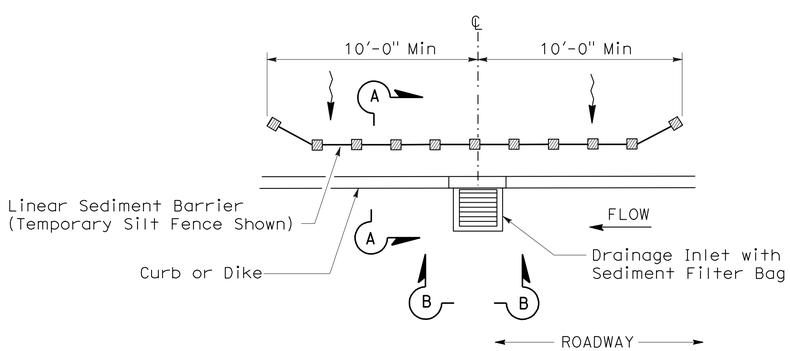

PLAN

TEMPORARY DRAINAGE INLET PROTECTION (TYPE 5) (SEDIMENT FILTER BAG)

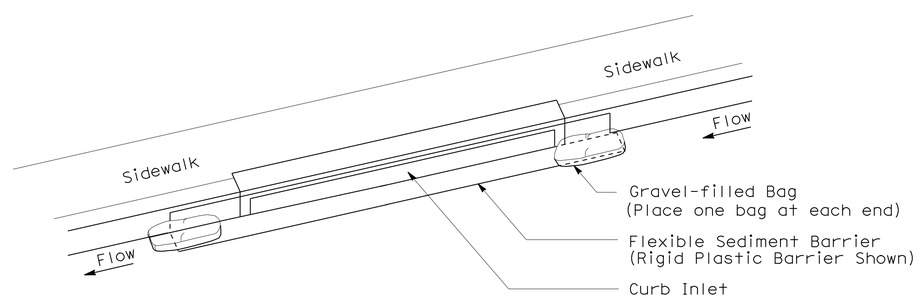

PERSPECTIVE

TEMPORARY DRAINAGE INLET PROTECTION (TYPE 6B) (CURB INLET WITHOUT GRATE)

STATE OF CALIFORNIA
DEPARTMENT OF TRANSPORTATION

TEMPORARY WATER POLLUTION CONTROL DETAILS (TEMPORARY DRAINAGE INLET PROTECTION)

NO SCALE

NSP T64 DATED AUGUST 15, 2008 SUPPLEMENTS THE STANDARD PLANS BOOK DATED MAY 2006.

NEW STANDARD PLAN NSP T64

2006 NEW STANDARD PLAN NSP T64

DIST	COUNTY	ROUTE	POST MILES TOTAL PROJECT	SHEET NO.	TOTAL SHEETS
02	Sis	5	R50.6/R52.1	64	84

LICENSED LANDSCAPE ARCHITECT

April 3, 2009
PLANS APPROVAL DATE

The State of California or its officers or agents shall not be responsible for the accuracy or completeness of electronic copies of this plan sheet.

LICENSED LANDSCAPE ARCHITECT
Robert B. Schott 3025
Signature
11-30-10
Renewal Date
2-25-09
Date
STATE OF CALIFORNIA

To accompany plans dated 3-26-12

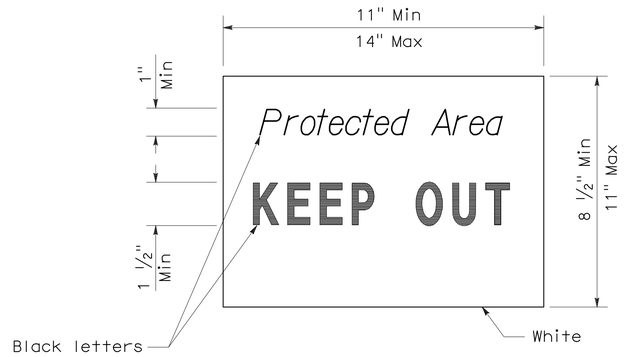

SIGN DETAIL

NOTE:

1. Temporary silt fence and temporary straw bale barrier shown for reference purposes only.

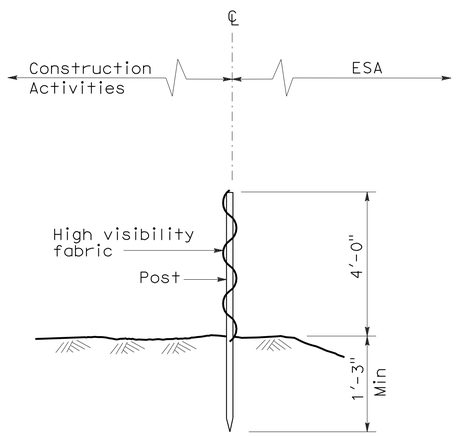

SECTION
TEMPORARY FENCE (TYPE ESA)

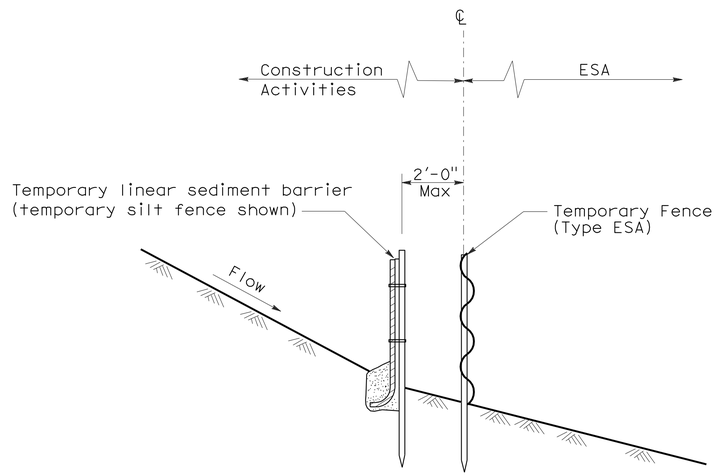

SECTION
PLACEMENT DETAIL
FOR TEMPORARY LINEAR SEDIMENT BARRIER
USED WITH TEMPORARY
FENCE (TYPE ESA)
(See Note 1)

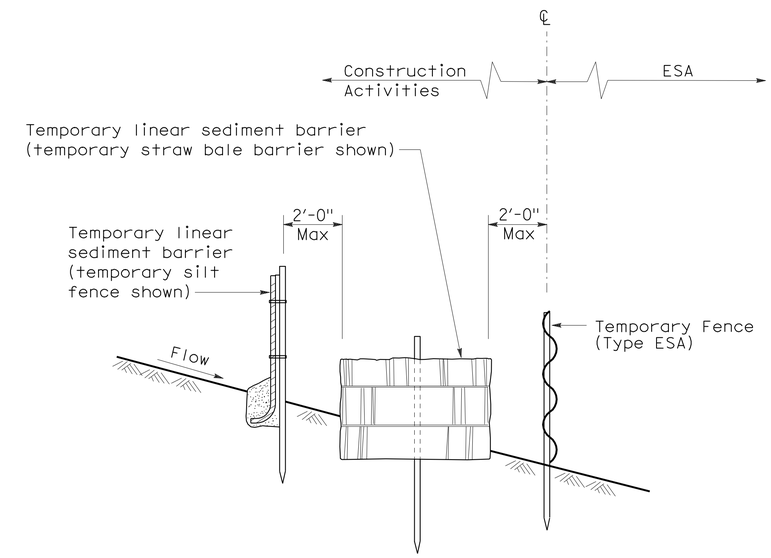

SECTION
PLACEMENT DETAIL
FOR TEMPORARY SILT FENCE
AND TEMPORARY STRAW BALE BARRIER
USED WITH TEMPORARY FENCE (TYPE ESA)
(See Note 1)

STATE OF CALIFORNIA
DEPARTMENT OF TRANSPORTATION

TEMPORARY WATER POLLUTION CONTROL DETAILS [TEMPORARY FENCE (TYPE ESA)]

NO SCALE

NSP T65 DATED APRIL 3, 2009 SUPPLEMENTS
THE STANDARD PLANS BOOK DATED MAY 2006.

NEW STANDARD PLAN NSP T65

2006 NEW STANDARD PLAN NSP T65

DIST	COUNTY	ROUTE	POST MILES TOTAL PROJECT	SHEET No.	TOTAL SHEETS
02	Sis	5	R50.6/R52.1	65	84

REGISTERED CIVIL ENGINEER 12-1-11 DATE

3-26-12
PLANS APPROVAL DATE

REGISTERED PROFESSIONAL ENGINEER Ashraf Ahmed No. 64787 Exp. 6-30-13 CIVIL STATE OF CALIFORNIA

The State of California or its officers or agents shall not be responsible for the accuracy or completeness of electronic copies of this plan sheet.

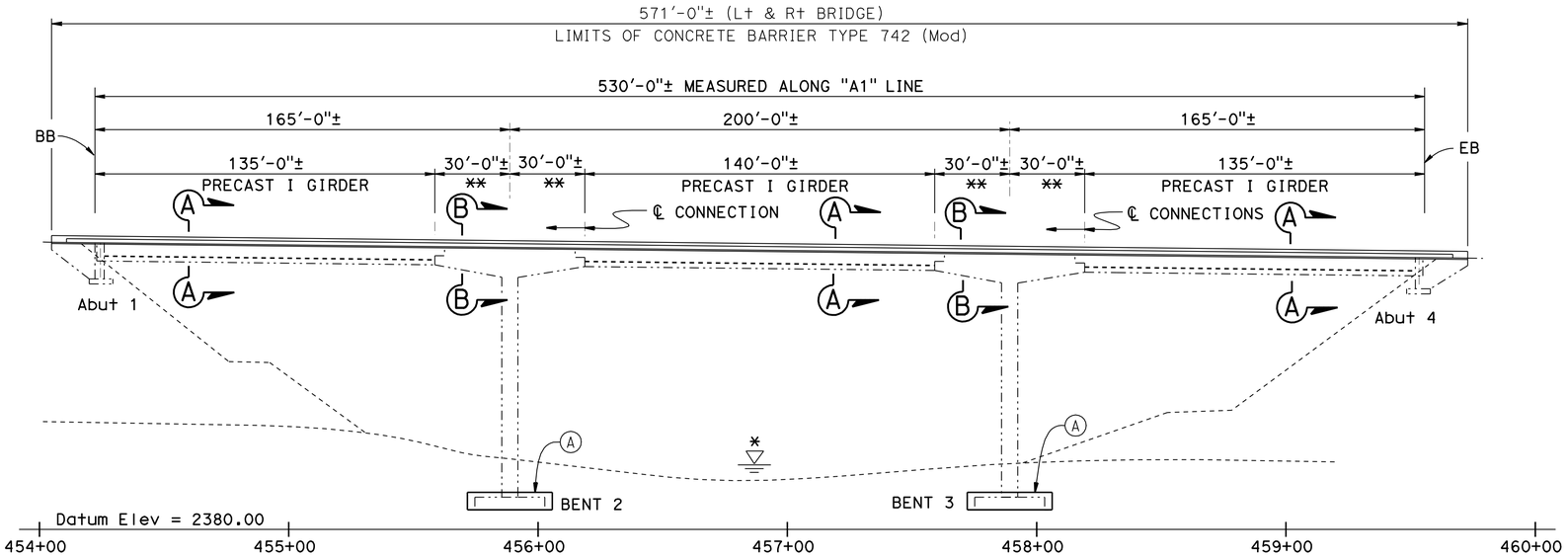

ELEVATION

1"=30'

* For HYDROLOGIC SUMMARY, see "FOUNDATION PLAN" sheet

** RC BOX GIRDER

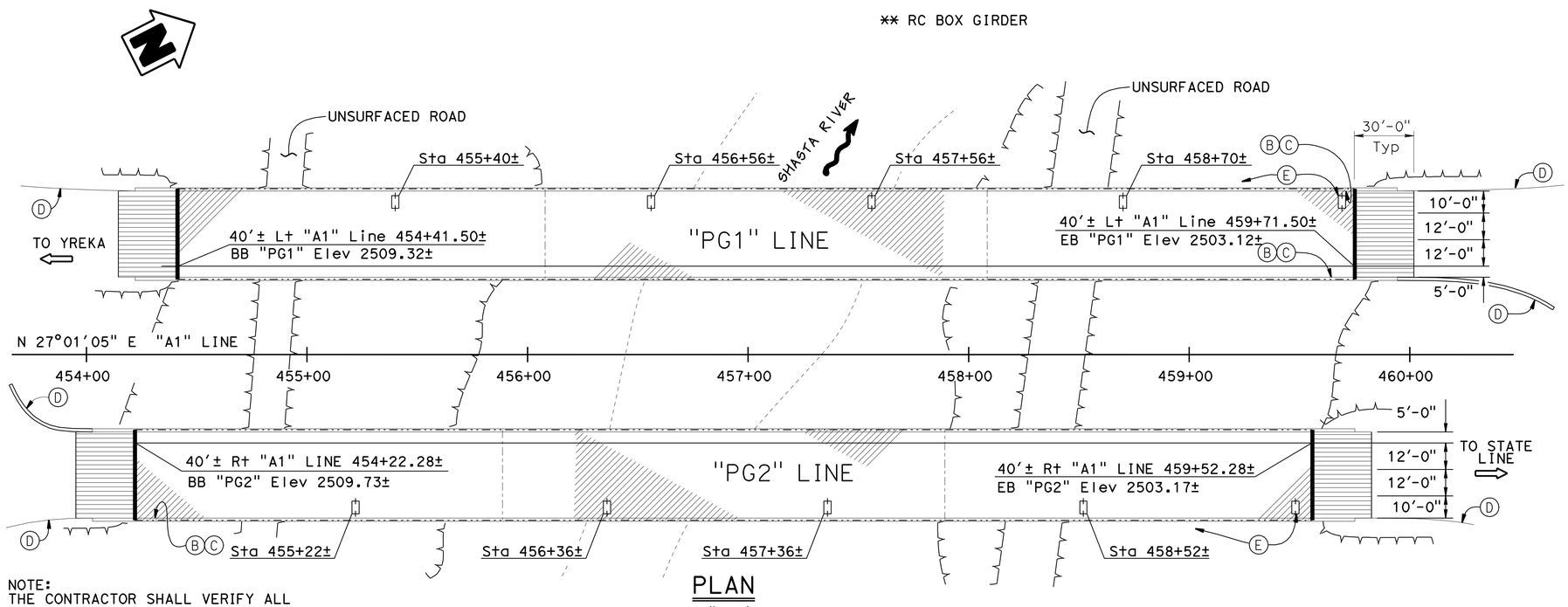

PLAN

1"=30'

NOTE:
THE CONTRACTOR SHALL VERIFY ALL CONTROLLING FIELD DIMENSIONS BEFORE ORDERING OR FABRICATING ANY MATERIAL.

LEGEND:

- Indicates limits of removal of existing approach slab and placement of new structure approach Type R(30S)
- Indicates limits of existing joint seal assembly removal and placement of new joint seal assembly (MR = 2½"). For limits of cleaning existing expansion joints, see joint seal table on "ABUTMENT DETAILS NO. 2" sheet
- Indicates limits of removal of existing deck and railing. Place new reinforced concrete deck (contractor shall maintain & re-establish existing deck grades), ¾" polyester concrete overlay and concrete barriers Type 742 (MOD).
- Indicates Type C Deck Drains, see "DECK DRAIN - TYPE C" sheet

NOTES:

1. For "GENERAL NOTES" and "INDEX TO PLANS", SEE "INDEX TO PLANS" sheet
2. For Sections A-A & B-B, see "GENERAL PLAN NO. 2" sheet

NOTES:

(A) Existing Footing Retrofit
(B) Paint, "BRIDGE NO.02-0148L/R"
(C) Paint, "SHASTA RIVER BRIDGE"
(D) MBGR, see "ROAD PLANS"
(E) Existing deck drains to be replaced with Type C Deck Drains, for outlets, see "ROAD PLANS"

QUANTITIES

TEMPORARY SUPPORT	LUMP	SUM
SALVAGE METAL BRIDGE RAILING	1,064	LF
PREPARE CONCRETE BRIDGE DECK SURFACE	41,496	SQFT
BRIDGE REMOVAL (PORTION)	LUMP	SUM
STRUCTURE EXCAVATION (BRIDGE)	24	CY
STRUCTURE EXCAVATION (TYPE D)	2,513	CY
STRUCTURE BACKFILL (BRIDGE)	2,123	CY
AGGREGATE BASE (APPROACH SLAB)	18	CY
STRUCTURAL CONCRETE, BRIDGE FOOTING	421	CY
STRUCTURAL CONCRETE, BRIDGE	1,136	CY
STRUCTURAL CONCRETE, APPROACH SLAB (TYPE R)	177	CY
DRILL AND BOND DOWEL	5,115	LF
FURNISH POLYESTER CONCRETE OVERLAY	3,459	CF
PLACE POLYESTER CONCRETE OVERLAY	41,496	SQFT
JOINT SEAL ASSEMBLY (MR 2½")	168	LF
BAR REINFORCING STEEL (BRIDGE)	76,952	LB
BAR REINFORCING STEEL (EPOXY COATED) (BRIDGE)	588,269	LB
HEADED BAR REINFORCEMENT	1,344	EA
BRIDGE DECK DRAINAGE SYSTEM	4,733	LB
CONCRETE BARRIER (TYPE 742 MOD)	2,284	LF

DECK REPLACEMENT / SEISMIC RETROFIT

SHASTA RIVER BRIDGE

GENERAL PLAN NO. 1

DESIGN	BY Ashraf Ahmed	CHECKED Joey Aquino	LOAD & RESISTANCE FACTOR DESIGN — LIVE LOADING: HS20-44 AND ALTERNATIVE; AND PERMIT DESIGN VEHICLE
DETAILS	BY Jay Reid	CHECKED Joey Aquino	LAYOUT: BY Ashraf Ahmed — CHECKED Joey Aquino
QUANTITIES	BY Alshraf Ahmed	CHECKED Ye Yang	SPECIFICATIONS: BY Tanya Kershell — PLANS AND SPECS COMPARED Tanya Kershell

Joseph E Downing
DESIGN ENGINEER

STATE OF CALIFORNIA
DEPARTMENT OF TRANSPORTATION

DIVISION OF ENGINEERING SERVICES
STRUCTURE DESIGN
DESIGN BRANCH 3

BRIDGE NO. 02-0148R/L
POST MILE 51.4

ORIGINAL SCALE IN INCHES FOR REDUCED PLANS 0 1 2 3

UNIT: 3578
PROJECT NUMBER & PHASE: 02000003451
CONTRACT NO.: 3C9201

DISREGARD PRINTS BEARING EARLIER REVISION DATES
REVISION DATES: 2-6-09, 9-22-11, 11-28-11
SHEET 1 OF 20

USERNAME => s128843 DATE PLOTTED => 30-MAR-2012 TIME PLOTTED => 09:10

STRUCTURES DESIGN GENERAL PLAN SHEET (ENGLISH) (REV.09-01-10)

FILE => 02-0148lr-a-gp01.dgn

DIST	COUNTY	ROUTE	POST MILES TOTAL PROJECT	SHEET No.	TOTAL SHEETS
02	Sis	5	R50.6/R52.1	66	84

REGISTERED CIVIL ENGINEER 12-1-11 DATE

3-26-12
PLANS APPROVAL DATE

REGISTERED PROFESSIONAL ENGINEER Ashraf Ahmed No. 64787 Exp. 6-30-13 CIVIL STATE OF CALIFORNIA

The State of California or its officers or agents shall not be responsible for the accuracy or completeness of electronic copies of this plan sheet.

Right Bridge shown,
Left Bridge similar

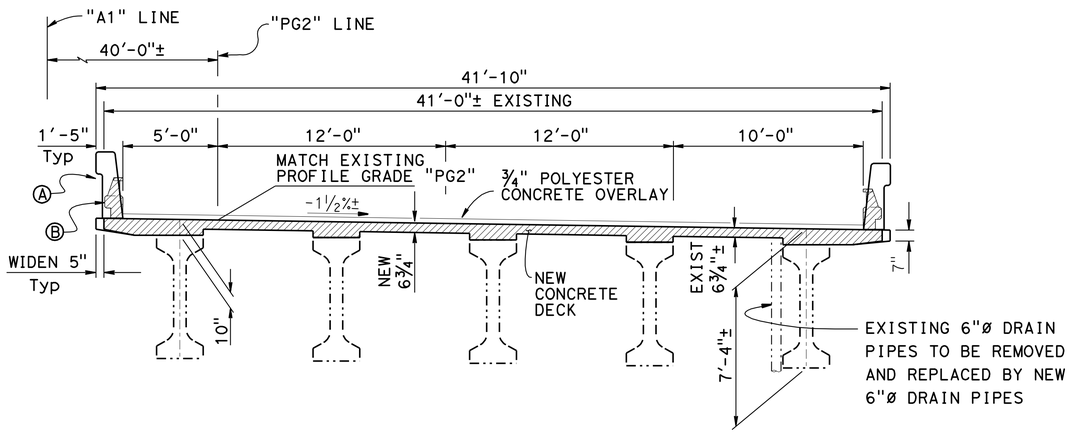

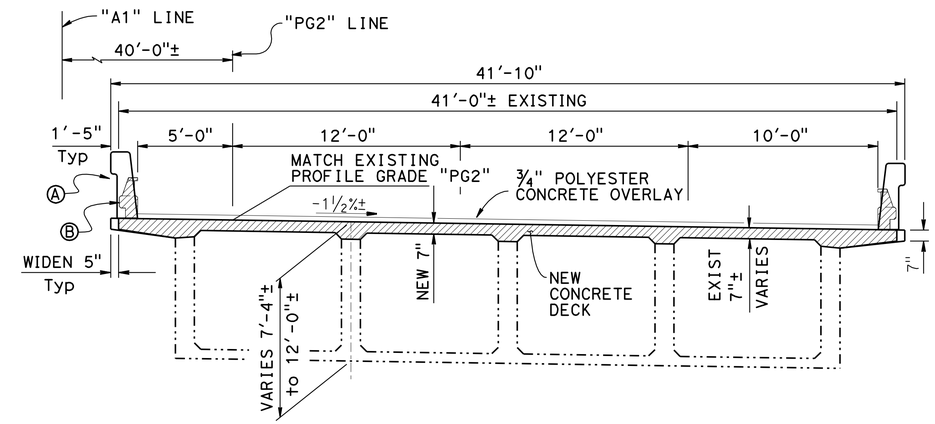

SECTION A-A

1/4"=1'-0"

SECTION B-B

1/4"=1'-0"

LEGEND:

Indicates Limits of Bridge Removal (Portion)

NOTES:

1. For Locations of Sections A-A & B-B, see "GENERAL PLAN NO. 1" sheet

NOTES:

(A) Concrete Barrier Type 742 (MOD)
(B) Existing Barrier Railing Type 9 to be Removed, salvage metal bridge railing

NOTE:
THE CONTRACTOR SHALL VERIFY ALL CONTROLLING FIELD DIMENSIONS BEFORE ORDERING OR FABRICATING ANY MATERIAL.

DECK REPLACEMENT / SEISMIC RETROFIT

SHASTA RIVER BRIDGE

GENERAL PLAN NO. 2

DESIGN	BY Ashraf Ahmed	CHECKED Joey Aquino	LOAD & RESISTANCE FACTOR DESIGN	LIVE LOADING: HS20-44 AND ALTERNATIVE; AND PERMIT DESIGN VEHICLE	
DETAILS	BY Jay Reid	CHECKED Joey Aquino	LAYOUT	BY Ashraf Ahmed	CHECKED Joey Aquino
QUANTITIES	BY Alshraf Ahmed	CHECKED Ye Yang	SPECIFICATIONS	BY Tanya Kershell	PLANS AND SPECS COMPARED Tanya Kershell

Joseph E Downing
DESIGN ENGINEER

ORIGINAL SCALE IN INCHES FOR REDUCED PLANS 0 1 2 3

STATE OF CALIFORNIA
DEPARTMENT OF TRANSPORTATION

DIVISION OF ENGINEERING SERVICES
STRUCTURE DESIGN
DESIGN BRANCH 3

BRIDGE NO. 02-0148R/L
POST MILE 51.4

UNIT: 3578
PROJECT NUMBER & PHASE: 02000003451
CONTRACT NO.: 3C9201

DISREGARD PRINTS BEARING EARLIER REVISION DATES

REVISION DATES: 5-5-11 10-4-11 10-24-11

SHEET 2 OF 20

USERNAME => s128843 DATE PLOTTED => 30-MAR-2012 TIME PLOTTED => 09:10

STRUCTURES DESIGN GENERAL PLAN SHEET (ENGLISH) (REV.09-01-10)

FILE => 02-0148lr-a-gp02.dgn

DIST	COUNTY	ROUTE	POST MILES TOTAL PROJECT	SHEET No.	TOTAL SHEETS
02	Sis	5	R50.6/R52.1	67	84

REGISTERED CIVIL ENGINEER 12-1-11 DATE

3-26-12
PLANS APPROVAL DATE

REGISTERED PROFESSIONAL ENGINEER
Ashraf Ahmed
No. 64787
Exp. 6-30-13
CIVIL
STATE OF CALIFORNIA

The State of California or its officers or agents shall not be responsible for the accuracy or completeness of electronic copies of this plan sheet.

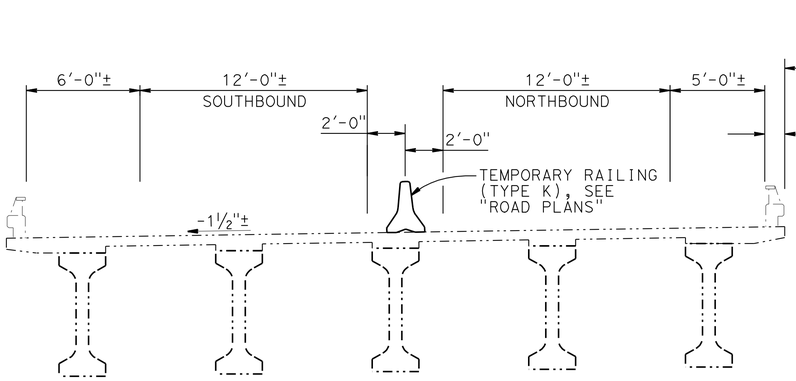

STAGE 1 TRAFFIC

LEFT BRIDGE
¼"=1'-0"

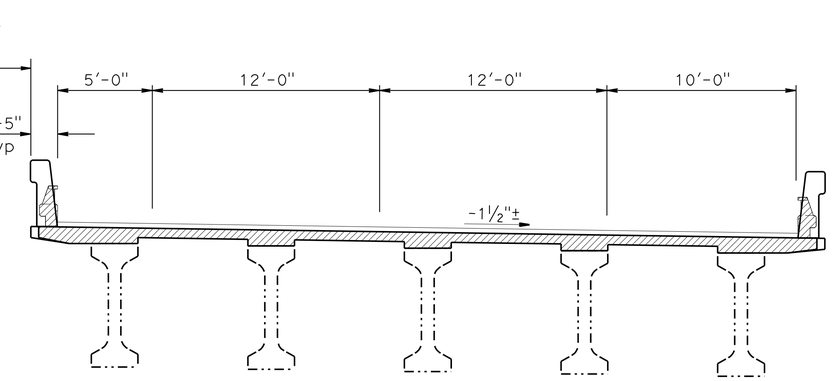

STAGE 1 CONSTRUCTION

RIGHT BRIDGE
¼"=1'-0"

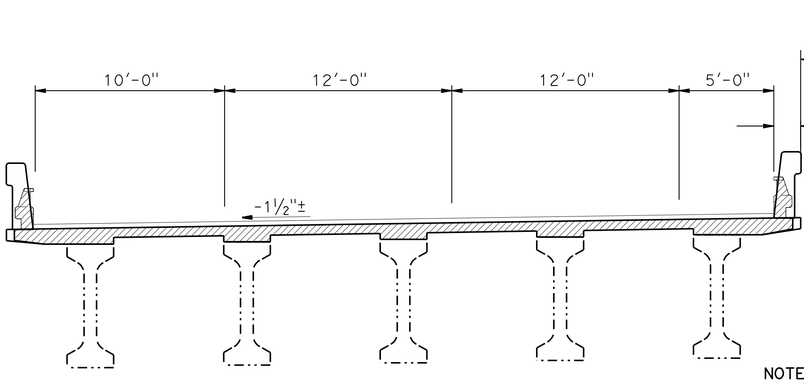

STAGE 2 CONSTRUCTION

LEFT BRIDGE
¼"=1'-0"

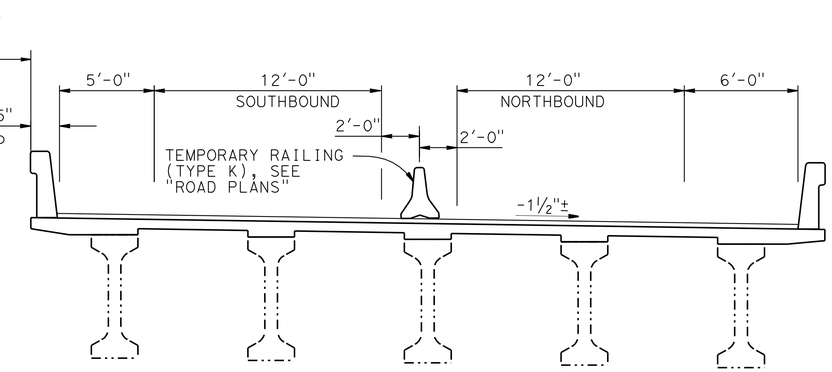

STAGE 2 TRAFFIC

RIGHT BRIDGE
¼"=1'-0"

NOTE:
1. For details not shown, see "GENERAL PLAN NO. 2" sheet
2. PC/PS I Girder Shown
RC Box girder Similar

LEGEND:

Indicates Limits of Bridge Removal (Portion)

Indicates Existing Structure

Indicates New Structure

NOTE:
THE CONTRACTOR SHALL VERIFY ALL CONTROLLING FIELD DIMENSIONS BEFORE ORDERING OR FABRICATING ANY MATERIAL.

DECK REPLACEMENT / SEISMIC RETROFIT

SHASTA RIVER BRIDGE

GENERAL PLAN NO. 3

Joseph E Downing
DESIGN ENGINEER

	BY	CHECKED
DESIGN	Ashraf Ahmed	Joey Aquino
DETAILS	Jay Reid	Joey Aquino
QUANTITIES	Alshraf Ahmed	Ye Yang

LOAD & RESISTANCE FACTOR DESIGN — LIVE LOADING: HS20-44 AND ALTERNATIVE; AND PERMIT DESIGN VEHICLE

	BY	CHECKED
LAYOUT	Ashraf Ahmed	Joey Aquino
SPECIFICATIONS	Tanya Kershell	Tanya Kershell (PLANS AND SPECS COMPARED)

ORIGINAL SCALE IN INCHES FOR REDUCED PLANS 0 1 2 3

STATE OF CALIFORNIA
DEPARTMENT OF TRANSPORTATION

DIVISION OF ENGINEERING SERVICES
STRUCTURE DESIGN
DESIGN BRANCH 3

BRIDGE NO. 02-0148R/L
POST MILE 51.4

UNIT: 3578
PROJECT NUMBER & PHASE: 02000003451
CONTRACT NO.: 3C9201

DISREGARD PRINTS BEARING EARLIER REVISION DATES

REVISION DATES: 5-9-11 10-24-11 6-15-11

SHEET 3 OF 20

DIST	COUNTY	ROUTE	POST MILES TOTAL PROJECT	SHEET No.	TOTAL SHEETS
02	Sis	5	R50.6/R52.1	68	84

REGISTERED CIVIL ENGINEER 12-1-11 DATE

3-26-12
PLANS APPROVAL DATE

REGISTERED PROFESSIONAL ENGINEER
Ashraf Ahmed
No. 64787
Exp. 6-30-13
CIVIL
STATE OF CALIFORNIA

The State of California or its officers or agents shall not be responsible for the accuracy or completeness of electronic copies of this plan sheet.

GENERAL NOTES
LOAD FACTOR DESIGN

DESIGN:
Bridge Design Specifications, April 2000
(1996 AASHTO w/ Interims & Revisions by Caltrans)

SEISMIC DESIGN:
Caltrans Seismic Design Criteria (SDC), Version 1.5

DEAD LOAD:
Includes ¾" polyester concrete overlay.

LIVE LOADING:
HS20-44 and alternative and permit design load.

SEISMIC LOADING:
Magnitude group (Mmax = 7.3)
Peak Rock Acceleration 0.23 g

CONCRETE:
f_y = 60 ksi
f'_c = 4000 psi
n = 8

TRANSVERSE DECK SLAB (working stress):
fs = 20 ksi
f_c = 1200 psi
n = 10

No permanent deck forms for constructing deck in the precast I-Girder section shall be used

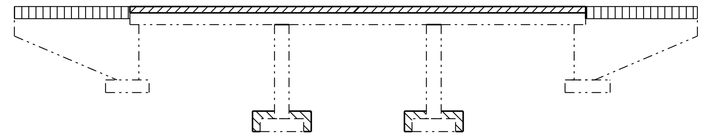

Existing Structural Concrete, Bridge
Structural Concrete, Bridge
Structural Concrete, Bridge Footing (3,600 psi at 28 days)
Structural Concrete, Bridge (3,600 psi at 28 days)

CONCRETE STRENGTH AND TYPE LIMITS
No Scale

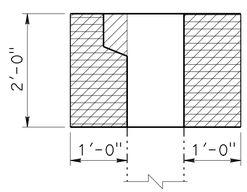

WINGWALL

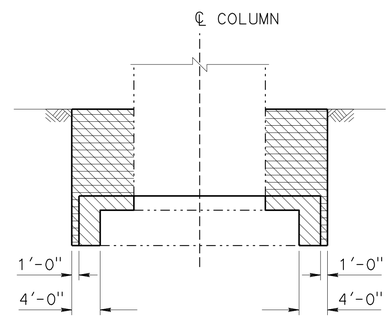

BENT FOOTING

LEGEND:
Indicate New Structure
Indicates Existing Structure
Indicates Structure Backfill, Bridge
Indicates Structure Excavation, Bridge
Indicates Structure Excavation, (Type D)

LIMITS OF STRUCTURE EXCAVATION AND STRUCTURE BACKFILL
NO SCALE

INDEX TO PLANS

SHEET NO.	TITLE
1	GENERAL PLAN NO. 1
2	GENERAL PLAN NO. 2
3	GENERAL PLAN NO. 3
4	INDEX TO PLANS
5	FOUNDATION PLAN
6	ABUTMENT LAYOUT
7	ABUTMENT DETAILS NO. 1
8	ABUTMENT DETAILS NO. 2
9	BENT DETAILS NO. 1
10	BENT DETAILS NO. 2
11	BENT DETAILS NO. 3
12	TYPICAL SECTION NO. 1
13	TYPICAL SECTION NO. 2
14	GIRDER REINFORCEMENT
15	CONNECTION DETAILS
16	DECK DRAIN DETAILS
17	DECK REMOVAL DETAILS
18	DECK DRAIN - TYPE C
19	JOINT SEAL ASSEMBLY (MAXIMUM MOVEMENT RATING = 4")
20	STRUCTURE APPROACH TYPE R(30S)

STANDARD PLANS DATED MAY 2006

A10A	ACRONYMS AND ABBREVIATIONS (SHEET 1 OF 2)
A10B	ACRONYMS AND ABBREVIATIONS (SHEET 2 OF 2)
A10C	SYMBOLS (SHEET 1 OF 2)
A10D	SYMBOLS (SHEET 2 OF 2)
A62C	LIMITS OF PAYMENT FOR EXCAVATION AND BACKFILL BRIDGE
B0-1	BRIDGE DETAILS
B0-5	BRIDGE DETAILS
B7-1	BOX GIRDER DETAILS
B11-57	CONCRETE BARRIER TYPE 742

STANDARD PLAN SHEET NO.
DETAIL NO.

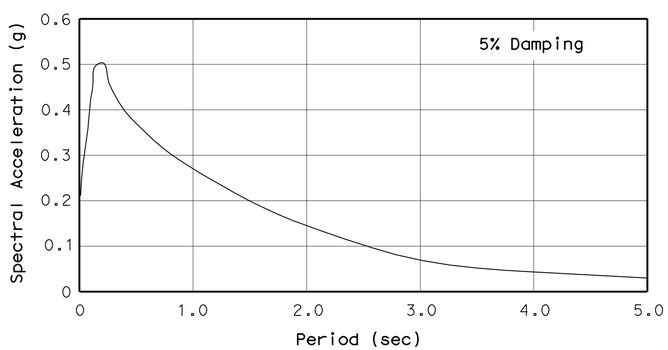

SITE SPECIFIC ARS CURVE

DESIGN BEARING PRESSURE FOR SPREAD FOOTINGS

SUPPORT LOCATION	RECOMMENDED BEARING LIMITS	
	WSD (ksf)	LFD (ksf)
	GROSS ALLOWABLE BEARING CAPACITY (q_{all})	NOMINAL BEARING RESISTANCE (q_n)
BENT 2 (RIGHT)	N/A	36
BENT 3 (RIGHT)	N/A	36
BENT 2 (LEFT)	N/A	36
BENT 3 (LEFT)	N/A	36

NOTE:
THE CONTRACTOR SHALL VERIFY ALL CONTROLLING FIELD DIMENSIONS BEFORE ORDERING OR FABRICATING ANY MATERIAL.

	BY	CHECKED
DESIGN	Ashraf Ahmed	Joey Aquino
DETAILS	Jay Reid	Joey Aquino
QUANTITIES	Ashraf Ahmed	Ye Yang

STATE OF CALIFORNIA
DEPARTMENT OF TRANSPORTATION

DIVISION OF ENGINEERING SERVICES
STRUCTURE DESIGN
DESIGN BRANCH 3

BRIDGE NO. 02-0148R/L
POST MILE 51.4

DECK REPLACEMENT / SEISMIC RETROFIT
SHASTA RIVER BRIDGE
INDEX TO PLANS

STRUCTURES DESIGN DETAIL SHEET (ENGLISH) (REV. 09-01-10)

ORIGINAL SCALE IN INCHES FOR REDUCED PLANS 0 1 2 3

UNIT: 3578
PROJECT NUMBER & PHASE: 02000003451
CONTRACT NO.: 3C9201

DISREGARD PRINTS BEARING EARLIER REVISION DATES

REVISION DATES: 5-5-11 | 10-4-11 | 11-28-11

SHEET 4 OF 20

FILE => 02-0148lr-a-ltp.dgn

USERNAME => s128843 DATE PLOTTED => 30-MAR-2012 TIME PLOTTED => 09:10

DIST	COUNTY	ROUTE	POST MILES TOTAL PROJECT	SHEET No	TOTAL SHEETS
02	Sis	5	R50.6/R52.1	69	84

REGISTERED CIVIL ENGINEER 12-1-11 DATE

3-26-12
PLANS APPROVAL DATE

REGISTERED PROFESSIONAL ENGINEER Ashraf Ahmed No. 64787 Exp. 6-30-13 CIVIL STATE OF CALIFORNIA

The State of California or its officers or agents shall not be responsible for the accuracy or completeness of electronic copies of this plan sheet.

SOFFIT ELEVATIONS

LEFT BRIDGE

1 - 2501.71	10 - 2496.32	19 - 2495.81	28 - 2498.42
2 - 2501.08	11 - 2491.47	20 - 2495.94	29 - 2494.23
3 - 2500.53	12 - 2495.78	21 - 2496.09	30 - 2499.34
4 - 2499.75	13 - 2495.44	22 - 2496.30	31 - 2500.44
5 - 2498.79	14 - 2495.34	23 - 2491.97	32 - 2501.18
6 - 2493.63	15 - 2495.32	24 - 2496.76	33 - 2501.69
7 - 2497.92	16 - 2495.79	25 - 2597.09	34 - 2502.11
8 - 2497.41	17 - 2495.84	26 - 2497.41	
9 - 2496.47	18 - 2495.76	27 - 2498.06	

RIGHT BRIDGE

35 - 2502.39	44 - 2496.98	53 - 2495.64	62 - 2501.49
36 - 2501.96	45 - 2492.20	54 - 2495.89	63 - 2501.78
37 - 2501.41	46 - 2496.21	55 - 2491.49	
38 - 2500.78	47 - 2496.01	56 - 2496.40	
39 - 2494.85	48 - 2495.84	57 - 2498.35	
40 - 2498.77	49 - 2495.77	58 - 2494.23	
41 - 2498.22	50 - 2495.28	59 - 2499.20	
41 - 2497.65	51 - 2495.27	60 - 2500.49	
43 - 2497.40	52 - 2495.43	61 - 2500.93	

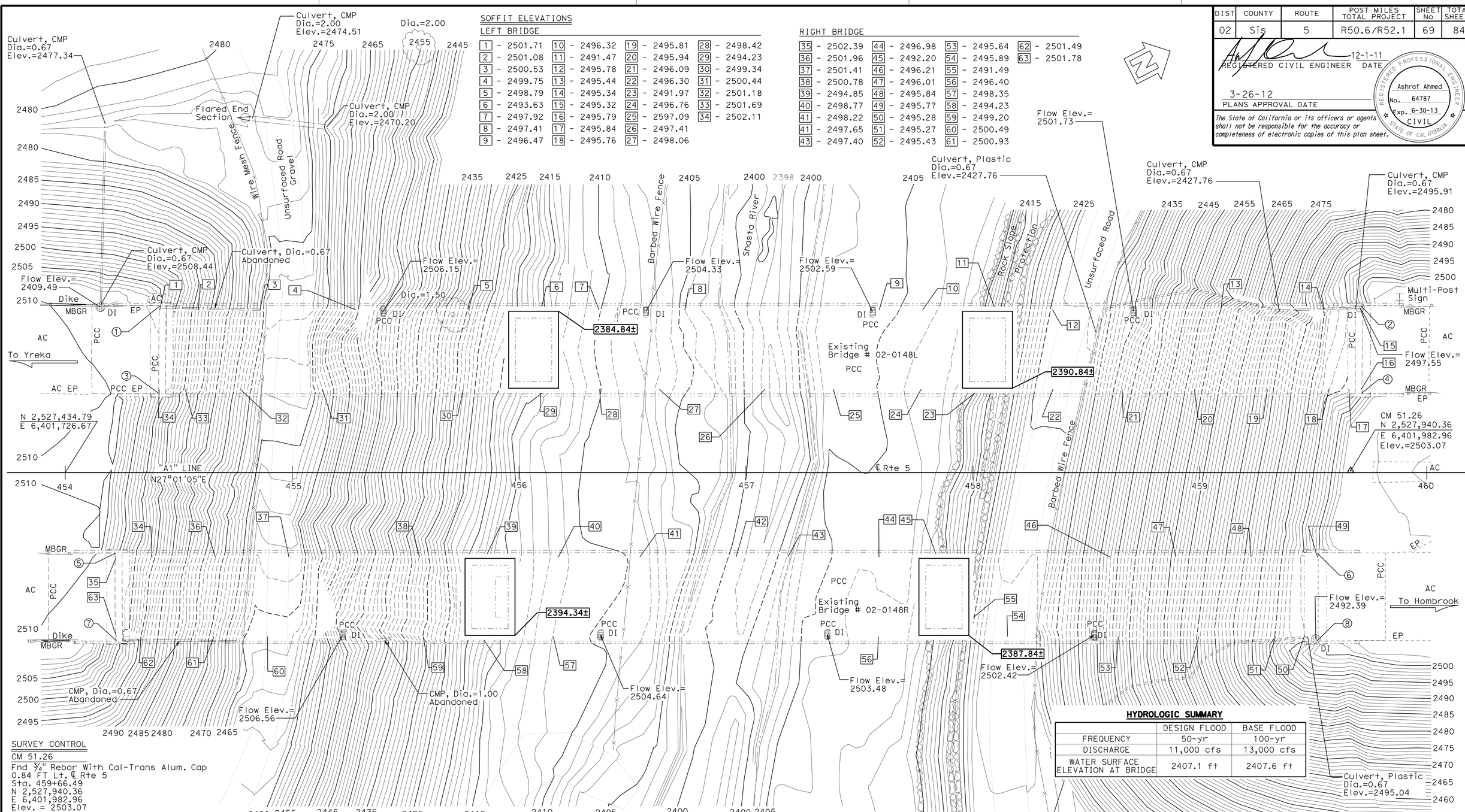

HYDROLOGIC SUMMARY

	DESIGN FLOOD	BASE FLOOD
FREQUENCY	50-yr	100-yr
DISCHARGE	11,000 cfs	13,000 cfs
WATER SURFACE ELEVATION AT BRIDGE	2407.1 ft	2407.6 ft

SURVEY CONTROL

CM 51.26
Fnd ¾" Rebar With Cal-Trans Alum. Cap
0.84 FT Lt. ℄ Rte 5
Sta. 459+66.49
N 2,527,940.36
E 6,401,982.96
Elev. = 2503.07

CM 51.29 (Not Shown On Plan)
Fnd ¾" Rebar With Cal-Trans Alum. Cap
11.35 FT Lt. ℄ Rte 5
Sta. 461+73.89
N 2,528,129.89
E 6,402,067.81
Elev. = 2502.36

NOTE:
Indicates Bottom of footing elevation

Bridge Location # 02-0148L

① - 74.08 Lt. ℄, Sta.454+42.07, Elev.=2508.83 ±
② - 74.08 Lt. ℄, Sta.459+71.35, Elev.=2502.58 ±
③ - 35.32 Lt. ℄, Sta.454+41.77, Elev.=2509.39 ±
④ - 35.39 Lt. ℄, Sta.459+71.42, Elev.=2503.19 ±

Bridge Location # 02-0148R

⑤ - 34.91 Rt. ℄, Sta.454+22.66, Elev.=2509.80 ±
⑥ - 34.89 Rt. ℄, Sta.459+52.05, Elev.=2503.20 ±
⑦ - 73.68 Rt. ℄, Sta.454+22.97, Elev.=2509.18 ±
⑧ - 73.72 Rt. ℄, Sta.459+51.96, Elev.=2502.58 ±

DECK REPLACEMENT / SEISMIC RETROFIT

SHASTA RIVER BRIDGE

FOUNDATION PLAN

PRELIMINARY INVESTIGATION SECTION

SCALE	VERT.DATUM NAVD88	PHOTOGRAMMETRY AS OF: X				
1"=20'	HORZ.DATUM NAD83 (1991.35)	SURVEYED	BY District/ J.Borden	CHECKED	BY S.Sou	04/2009
ALIGNMENT TIES Dist.Traverse Sheet		DRAFTED	BY T.Zolnikova 04/2009	CHECKED	BY S.Sou	04/2009

	BY	CHECKED
DESIGN	Ashraf Ahmed	Joey Aquino
DETAILS	Jay Reid	Joey Aquino
QUANTITIES	Ashraf Ahmed	Ye Yang

STATE OF CALIFORNIA
DEPARTMENT OF TRANSPORTATION

DIVISION OF ENGINEERING SERVICES
STRUCTURE DESIGN
DESIGN BRANCH 3

BRIDGE NO. 02-0148R/L
POST MILE 51.4

STRUCTURES FOUNDATION PLAN SHEET (ENGLISH) (REV. 10/25/05)

ORIGINAL SCALE IN INCHES FOR REDUCED PLANS 0 1 2 3

UNIT: 3646
PROJECT NUMBER & PHASE: 0200000345-1
CONTRACT NO.: 3C9201

DISREGARD PRINTS BEARING EARLIER REVISION DATES

REVISION DATES 04/14/09 02/09/11 06/22/11 07/14/11

SHEET 5 OF 20

FILE => 02-0148lr-e-fp101-rev2.dgn

USERNAME => s128843 DATE PLOTTED => 30-MAR-2012 TIME PLOTTED => 09:10

DIST	COUNTY	ROUTE	POST MILES TOTAL PROJECT	SHEET No.	TOTAL SHEETS
02	Sis	5	R50.6/R52.1	70	84

REGISTERED CIVIL ENGINEER 12-1-11 DATE

3-26-12
PLANS APPROVAL DATE

REGISTERED PROFESSIONAL ENGINEER
Ashraf Ahmed
No. 64787
Exp. 6-30-13
CIVIL
STATE OF CALIFORNIA

The State of California or its officers or agents shall not be responsible for the accuracy or completeness of electronic copies of this plan sheet.

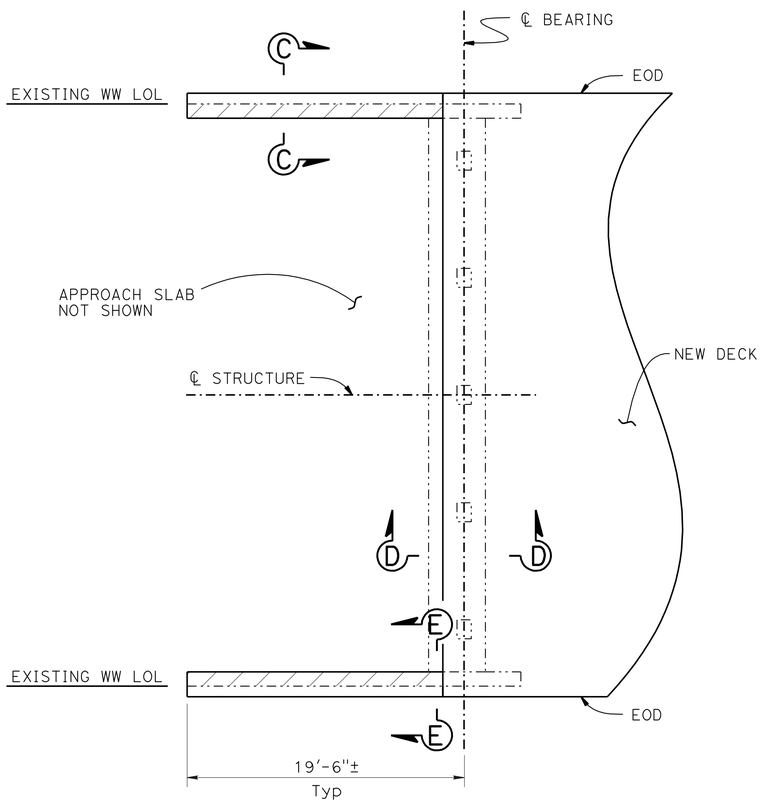

ABUTMENT LAYOUT

3/16" = 1'-0"

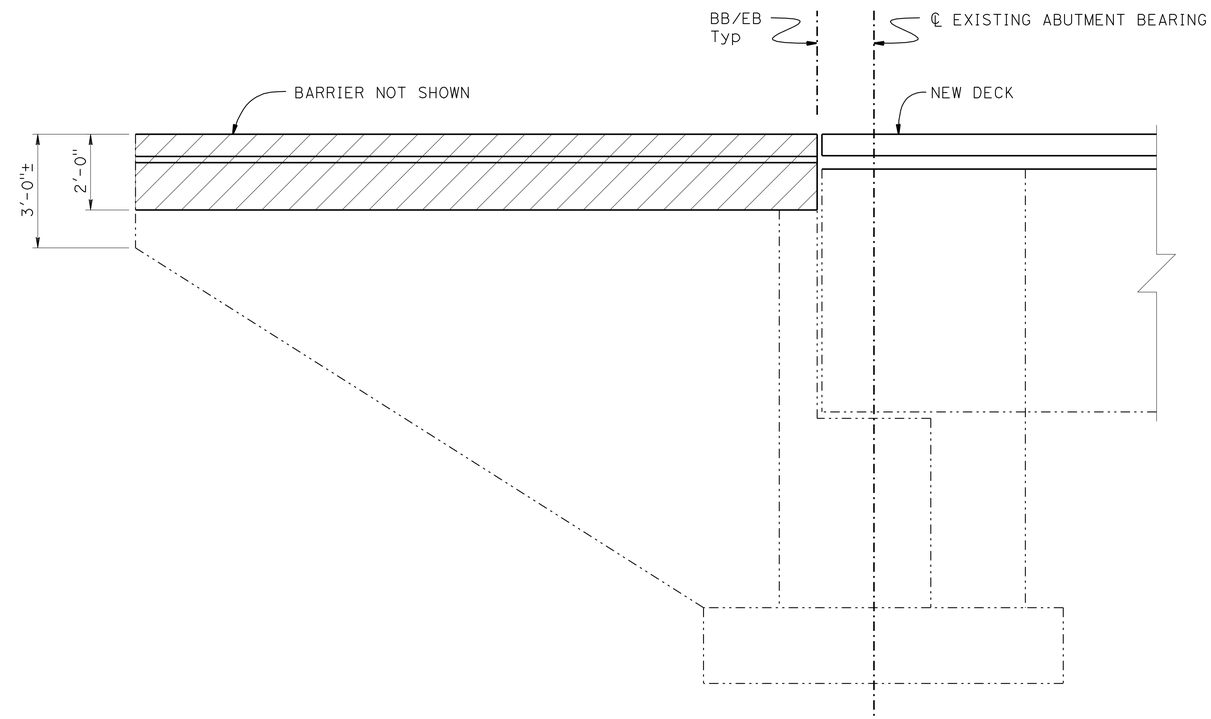

WINGWALL ELEVATION

1/2" = 1'-0"

LEGEND:

- Indicates Limits of Bridge Removal (Portion)
- Indicates Existing Structure
- Indicates New Structure

NOTES:

1. This Layout is Typical for all Abutment Locations
2. For SECTION C-C & D-D, see "ABUTMENT DETAILS NO. 1" Sheet
3. For SECTION E-E, see "ABUTMENT DETAILS NO. 2" Sheet

NOTE:
THE CONTRACTOR SHALL VERIFY ALL CONTROLLING FIELD DIMENSIONS BEFORE ORDERING OR FABRICATING ANY MATERIAL.

	BY	CHECKED
DESIGN	Ashraf Ahmed	Joey Aquino
DETAILS	Jay Reid	Joey Aquino
QUANTITIES	Ashraf Ahmed	Ye Yang

STATE OF CALIFORNIA
DEPARTMENT OF TRANSPORTATION

DIVISION OF ENGINEERING SERVICES
STRUCTURE DESIGN
DESIGN BRANCH 3

BRIDGE NO. 02-0148R/L
POST MILE 51.4

DECK REPLACEMENT / SEISMIC RETROFIT
SHASTA RIVER BRIDGE
ABUTMENT LAYOUT

STRUCTURES DESIGN DETAIL SHEET (ENGLISH) (REV. 09-01-10)

ORIGINAL SCALE IN INCHES FOR REDUCED PLANS 0 1 2 3

UNIT: 3578
PROJECT NUMBER & PHASE: 02000003451
CONTRACT NO.: 3C9201

DISREGARD PRINTS BEARING EARLIER REVISION DATES

REVISION DATES: 5-5-11 7-28-11 10-24-11

SHEET 6 OF 20

FILE => 02-0148lr-g-a01_lo1.dgn

USERNAME => s128813 DATE PLOTTED => 30-MAR-2012 TIME PLOTTED => 08:31

DIST	COUNTY	ROUTE	POST MILES TOTAL PROJECT	SHEET No.	TOTAL SHEETS
02	Sis	5	R50.6/R52.1	71	84

REGISTERED CIVIL ENGINEER 12-1-11 DATE

3-26-12
PLANS APPROVAL DATE

REGISTERED PROFESSIONAL ENGINEER Ashraf Ahmed No. 64787 Exp. 6-30-13 CIVIL STATE OF CALIFORNIA

The State of California or its officers or agents shall not be responsible for the accuracy or completeness of electronic copies of this plan sheet.

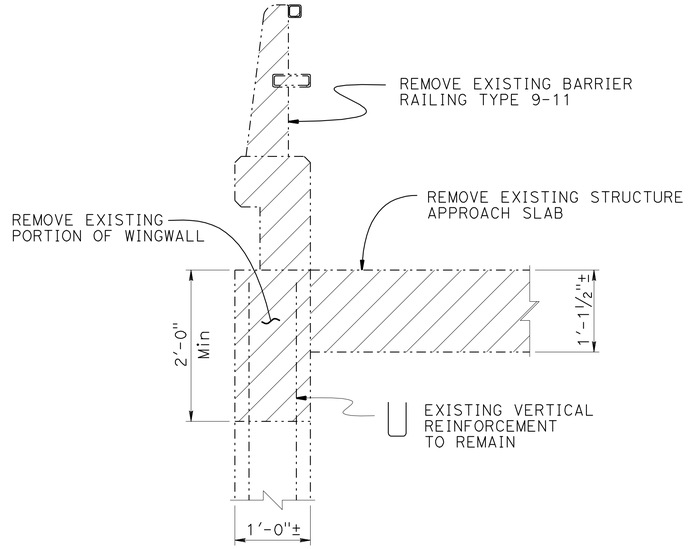

WINGWALL (EXISTING)

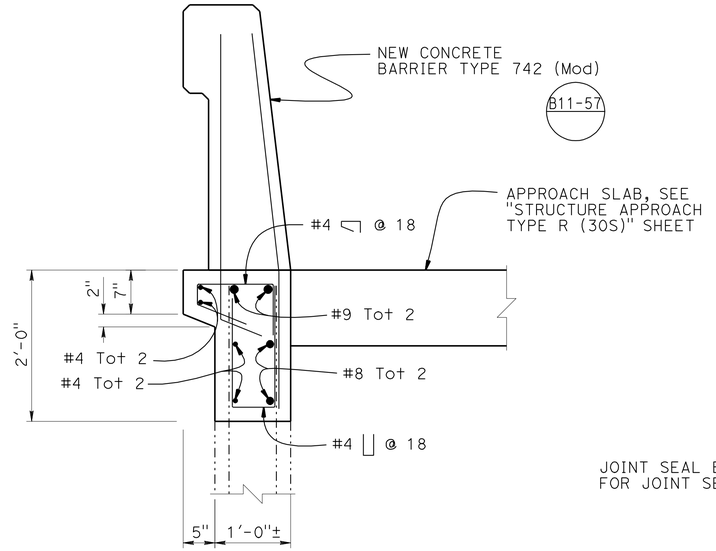

WINGWALL (RECONSTRUCTION) B0-1

SECTION C-C
1" = 1'-0"

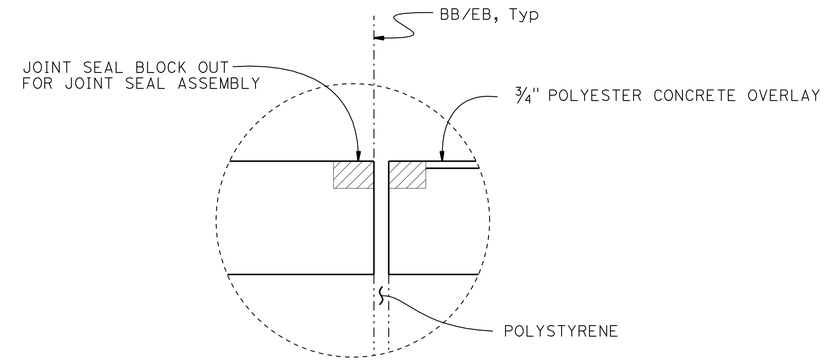

DETAIL "A"
1½" = 1'-0"

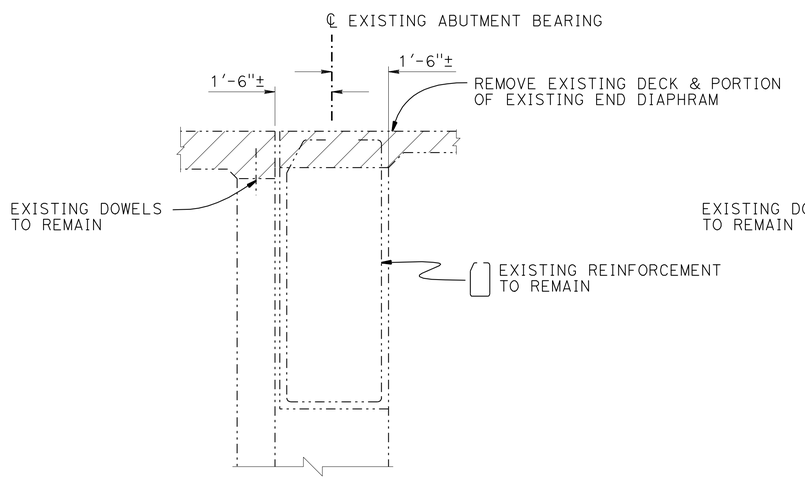

END DIAPHRAGM (EXISTING)

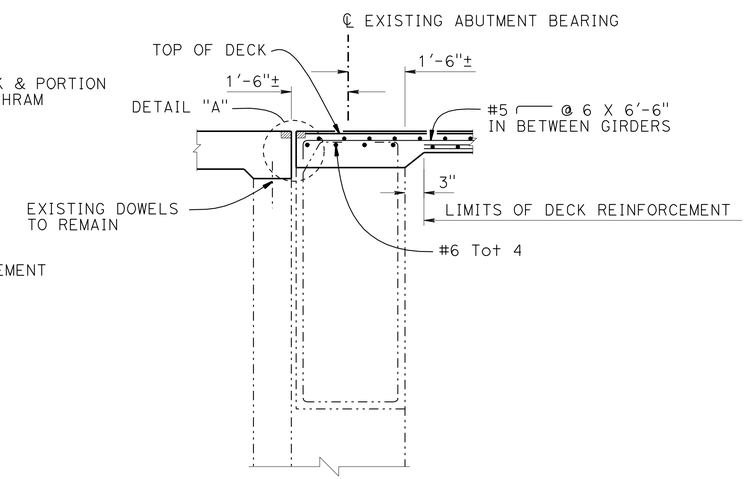

END DIAPHRAGM (RECONSTRUCTION)

LEGEND:

- Indicates Limits of Bridge Removal (Portion)
- Indicates Existing Structure
- Indicates New Structure

NOTES:

1. This sheet is typical for all Abutment layouts
2. All New Reinforcement to be Epoxy Coated including barrier rail reinforcement
3. Existing Reinforcement not affected not shown for clarity
4. For Location of "SECTION C-C & D-D", see "ABUTMENT LAYOUT" sheet
5. For Joint Seal Details, see "JOINT SEAL ASSEMBLY" sheet

NOTE:
THE CONTRACTOR SHALL VERIFY ALL CONTROLLING FIELD DIMENSIONS BEFORE ORDERING OR FABRICATING ANY MATERIAL.

SECTION D-D
½" = 1'-0"

	BY	CHECKED
DESIGN	Ashraf Ahmed	Joey Aquino
DETAILS	Jay Reid	Joey Aquino
QUANTITIES	Ashraf Ahmed	Ye Yang

STATE OF CALIFORNIA
DEPARTMENT OF TRANSPORTATION

DIVISION OF ENGINEERING SERVICES
STRUCTURE DESIGN
DESIGN BRANCH 3

BRIDGE NO. 02-0148R/L
POST MILE 51.4

DECK REPLACEMENT / SEISMIC RETROFIT
SHASTA RIVER BRIDGE
ABUTMENT DETAILS NO. 1

STRUCTURES DESIGN DETAIL SHEET (ENGLISH) (REV. 09-01-10)

ORIGINAL SCALE IN INCHES FOR REDUCED PLANS 0 1 2 3

UNIT: 3578
PROJECT NUMBER & PHASE: 02000003451
CONTRACT NO.: 3C9201

DISREGARD PRINTS BEARING EARLIER REVISION DATES

REVISION DATES: 5-5-11 | 9-22-11 | 11-28-11

SHEET 7 OF 20

FILE => 02-0148lr-g-a01dt01.dgn

USERNAME => s128843 DATE PLOTTED => 30-MAR-2012 TIME PLOTTED => 09:11

DIST	COUNTY	ROUTE	POST MILES TOTAL PROJECT	SHEET No.	TOTAL SHEETS
02	Sis	5	R50.6/R52.1	72	84

REGISTERED CIVIL ENGINEER 12-1-11 DATE

3-26-12
PLANS APPROVAL DATE

REGISTERED PROFESSIONAL ENGINEER
Ashraf Ahmed
No. 64787
Exp. 6-30-13
CIVIL
STATE OF CALIFORNIA

The State of California or its officers or agents shall not be responsible for the accuracy or completeness of electronic copies of this plan sheet.

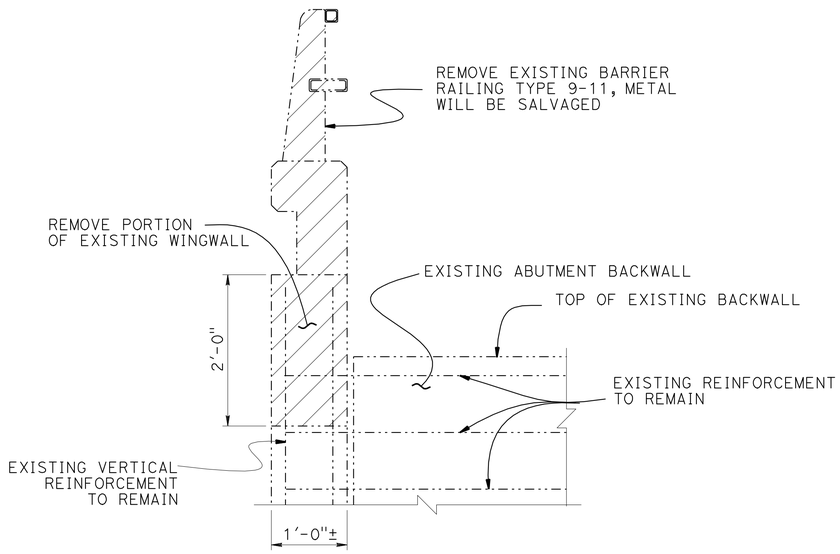

BACKWALL (EXISTING)

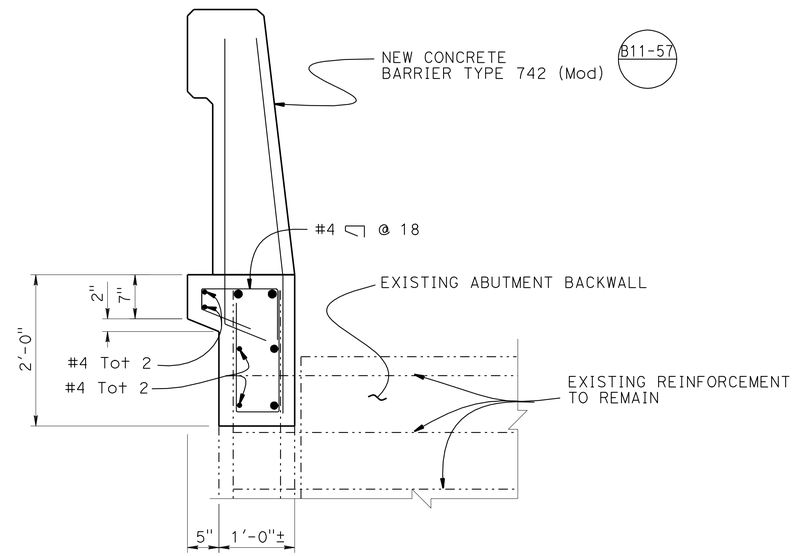

BACKWALL (RECONSTRUCTION)

SECTION E-E

1" = 1'-0"

JOINT SEAL TABLE

BRIDGE NO	LOCATION	JOINT SEAL TYPE	Min "MR" (IN)	Aprox LENGTH (FT)	Approx DEPTH TO CLEAN Exp JOINT (FT)
02-0148L	Abut 1 (BW)	JSA	2½"	41'-10"	6'-6"
	Abut 4 (BW)	JSA	2½"	41'-10"	6'-6"
02-0148R	Abut 1 (BW)	JSA	2½"	41'-10"	6'-6"
	Abut 4 (BW)	JSA	2½"	41'-10"	6'-6"

LEGEND:
BW = Abutment Backwall
JSA = Joint Seal Assembly

LEGEND:
Indicates Limits of Bridge Removal (Portion)
Indicates Existing Structure
Indicates New Structure

NOTES:
1. This sheet is typical for all Abutment layouts
2. All New Reinforcement to be Epoxy Coated including barrier rail reinforcement
3. Existing Reinforcement not affected not shown for clarity
4. For Location of Section E-E, see "ABUTMENT LAYOUT" sheet
5. For Joint Seal Assembly, see "JOINT SEAL ASSEMBLY" sheet

NOTE:
THE CONTRACTOR SHALL VERIFY ALL CONTROLLING FIELD DIMENSIONS BEFORE ORDERING OR FABRICATING ANY MATERIAL.

	BY	CHECKED
DESIGN	Ashraf Ahmed	Joey Aquino
DETAILS	Jay Reid	Joey Aquino
QUANTITIES	Ashraf Ahmed	Ye Yang

STATE OF CALIFORNIA
DEPARTMENT OF TRANSPORTATION

DIVISION OF ENGINEERING SERVICES
STRUCTURE DESIGN
DESIGN BRANCH 3

BRIDGE NO. 02-0148R/L
POST MILE 51.4

DECK REPLACEMENT / SEISMIC RETROFIT
SHASTA RIVER BRIDGE
ABUTMENT DETAILS NO. 2

STRUCTURES DESIGN DETAIL SHEET (ENGLISH) (REV. 09-01-10)

ORIGINAL SCALE IN INCHES FOR REDUCED PLANS 0 1 2 3

UNIT: 3578
PROJECT NUMBER & PHASE: 02000003451
CONTRACT NO.: 3C9201

DISREGARD PRINTS BEARING EARLIER REVISION DATES

REVISION DATES 5-11-11 10-28-11 11-28-11

SHEET 8 OF 20

FILE => 02-0148lr-g-a02dt02.dgn

USERNAME => s128843 DATE PLOTTED => 30-MAR-2012 TIME PLOTTED => 09:11

DIST	COUNTY	ROUTE	POST MILES TOTAL PROJECT	SHEET No.	TOTAL SHEETS
02	Sis	5	R50.6/R52.1	73	84

REGISTERED CIVIL ENGINEER 12-1-11 DATE

3-26-12
PLANS APPROVAL DATE

REGISTERED PROFESSIONAL ENGINEER
Ashraf Ahmed
No. 64787
Exp. 6-30-13
CIVIL
STATE OF CALIFORNIA

The State of California or its officers or agents shall not be responsible for the accuracy or completeness of electronic copies of this plan sheet.

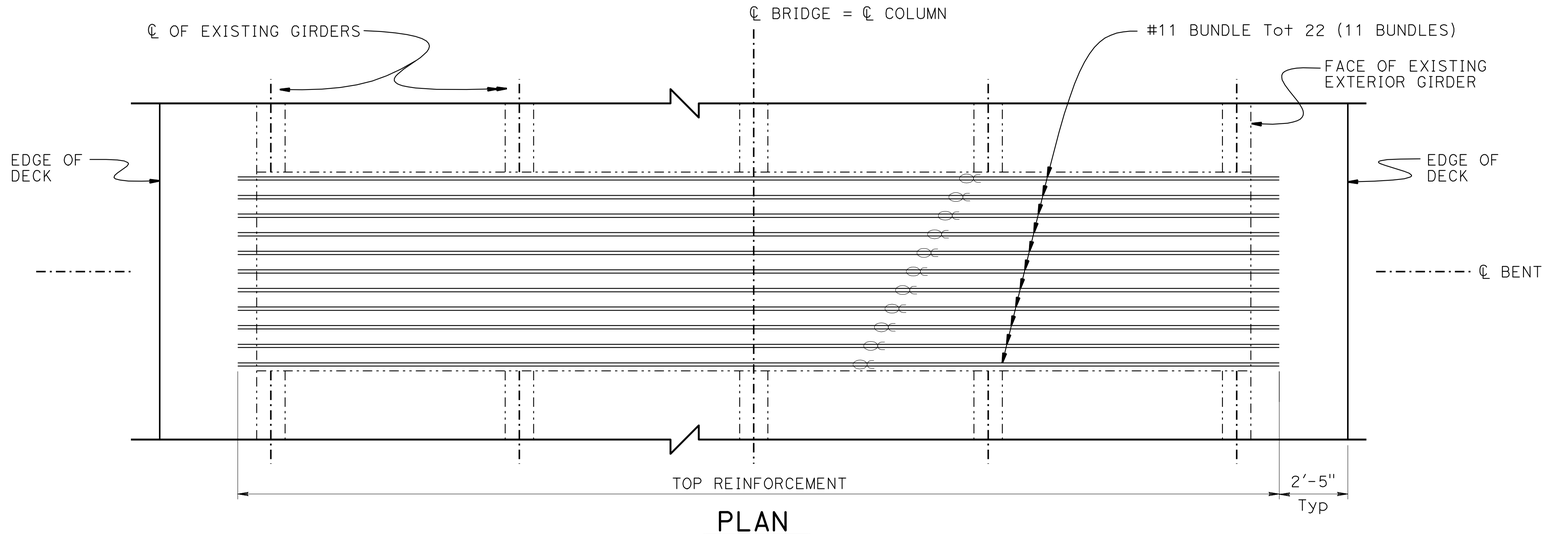

PLAN
3/8" = 1'-0"

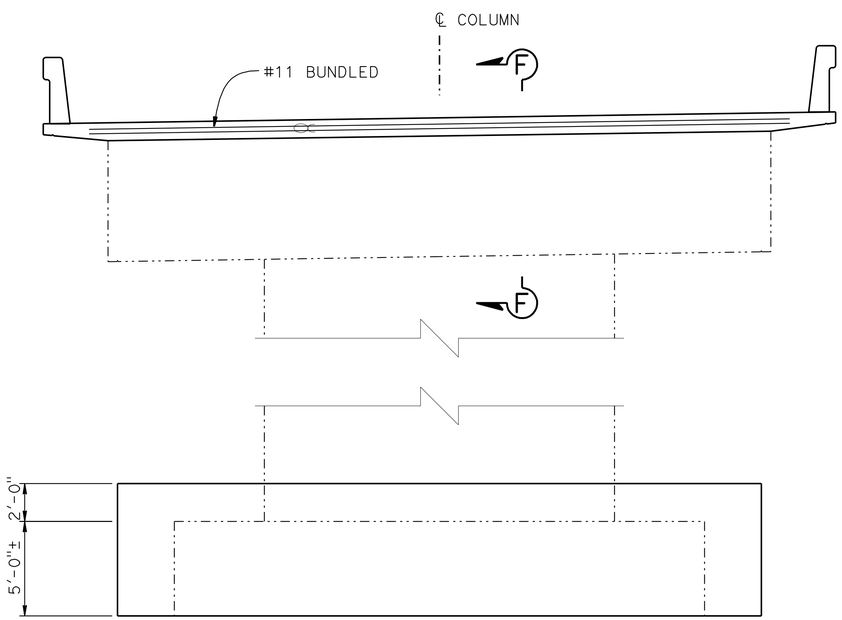

BENT 2 SHOWN BENT 3 SIMILAR FOR BOTH LEFT AND RIGHT BRIDGES

BENT ELEVATION
1/4" = 1'-0"

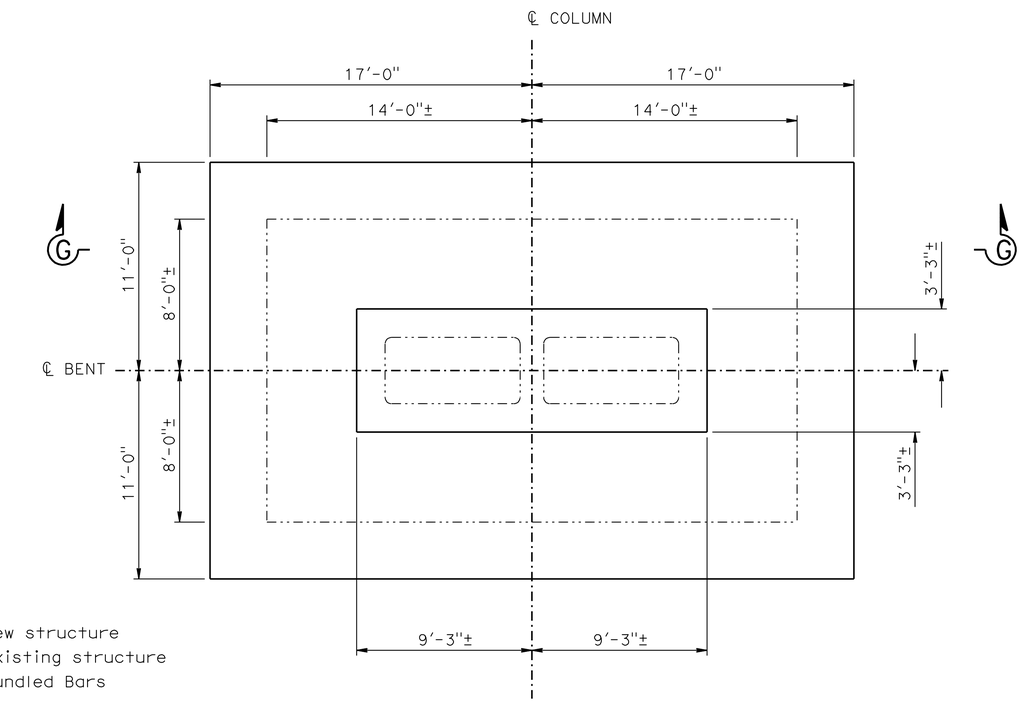

FOOTING PLAN
1/4" = 1'-0"

LEGEND:
- Indicates new structure
- Indicates existing structure
- Indicates Bundled Bars

NOTE:
1. For Reinforcement and Details not shown, see "BENT DETAILS NO. 3" Sheet
2. For "SECTION F-F & G-G", see "BENT DETAILS NO. 2" & "BENT DETAILS NO. 3" Sheets
3. All New Reinforcment to be Epoxy Coated

NOTE:
THE CONTRACTOR SHALL VERIFY ALL CONTROLLING FIELD DIMENSIONS BEFORE ORDERING OR FABRICATING ANY MATERIAL.

	BY	CHECKED
DESIGN	Ashraf Ahmed	Joey Aquino
DETAILS	Jay Reid	Joey Aquino
QUANTITIES	Ashraf Ahmed	Ye Yang

STATE OF CALIFORNIA
DEPARTMENT OF TRANSPORTATION

DIVISION OF ENGINEERING SERVICES
STRUCTURE DESIGN
DESIGN BRANCH 3

BRIDGE NO. 02-0148R/L
POST MILE 51.4

DECK REPLACEMENT / SEISMIC RETROFIT
SHASTA RIVER BRIDGE
BENT DETAILS NO. 1

STRUCTURES DESIGN DETAIL SHEET (ENGLISH) (REV. 09-01-10)

ORIGINAL SCALE IN INCHES FOR REDUCED PLANS 0 1 2 3

UNIT: 3578
PROJECT NUMBER & PHASE: 02000003451
CONTRACT NO.: 3C9201

DISREGARD PRINTS BEARING EARLIER REVISION DATES

REVISION DATES: 5-5-11 8-4-11 10-21-11

SHEET 9 OF 20

FILE => 02-0148lr-h-b01dt01.dgn

USERNAME => s128843 DATE PLOTTED => 30-MAR-2012 TIME PLOTTED => 09:11

DIST	COUNTY	ROUTE	POST MILES TOTAL PROJECT	SHEET No.	TOTAL SHEETS
02	Sis	5	R50.6/R52.1	74	84

REGISTERED CIVIL ENGINEER 12-1-11 DATE

3-26-12
PLANS APPROVAL DATE

REGISTERED PROFESSIONAL ENGINEER
Ashraf Ahmed
No. 64787
Exp. 6-30-13
CIVIL
STATE OF CALIFORNIA

The State of California or its officers or agents shall not be responsible for the accuracy or completeness of electronic copies of this plan sheet.

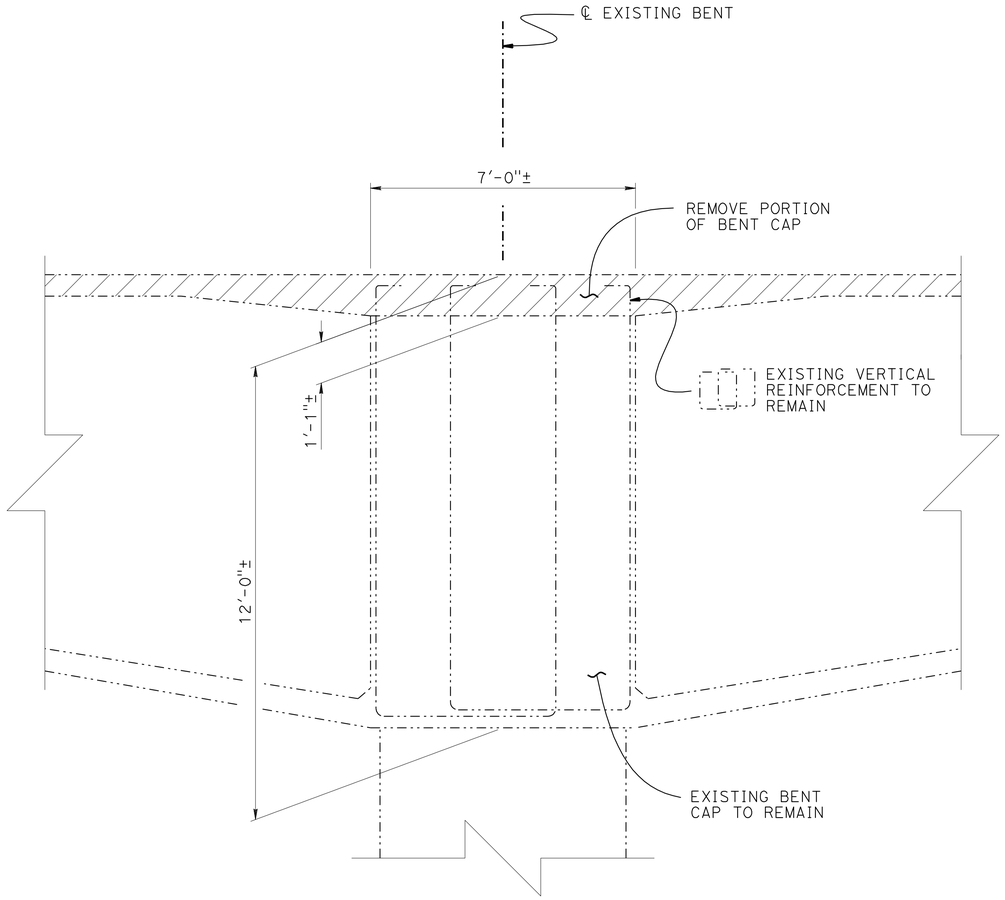

BENT CAP (EXISTING)

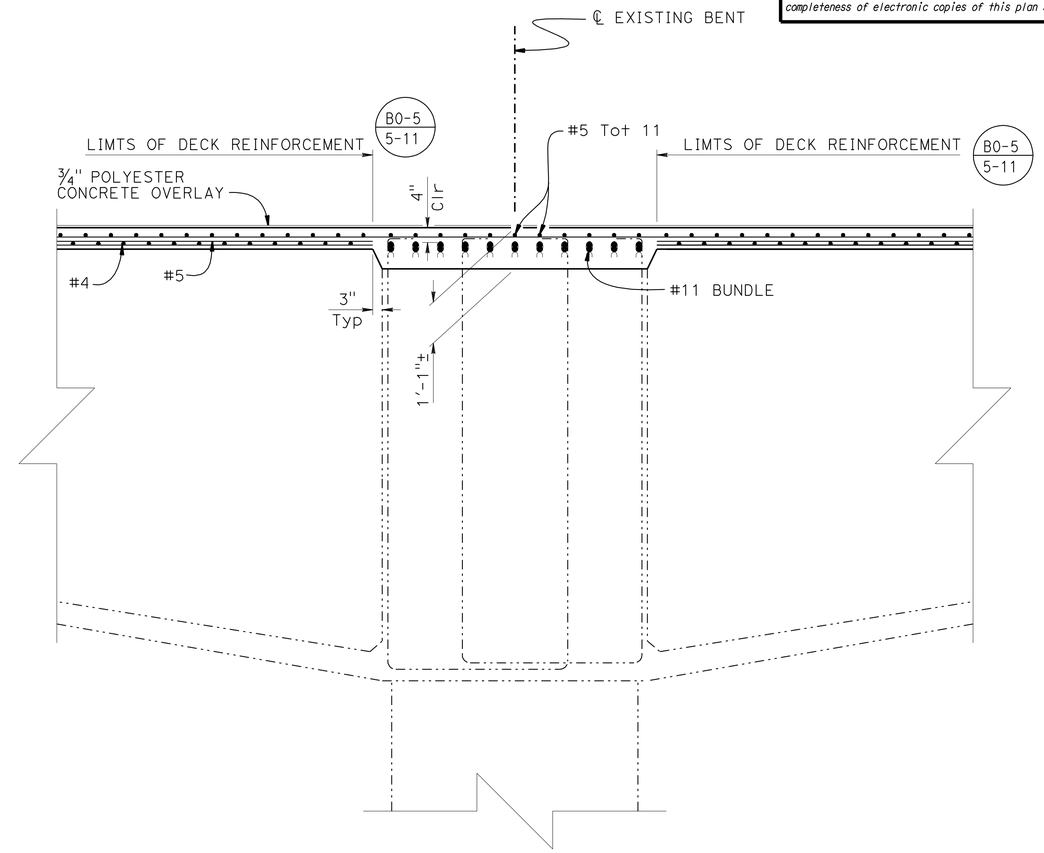

BENT CAP (RECONSTRUCTION)

SECTION F-F

1/2" = 1'-0"

LEGEND:

- Indicates Limits of Bridge Removal (Portion)
- Indicates Existing Structure
- Indicates New Structure
- Indicates bundled Bars

NOTES:

1. This sheet is typical for all bent locations
2. All New Reinforcement to be Epoxy Coated
3. For locations of Section F-F, see "BENT DETAILS NO. 1"

NOTE:
THE CONTRACTOR SHALL VERIFY ALL CONTROLLING FIELD DIMENSIONS BEFORE ORDERING OR FABRICATING ANY MATERIAL.

	BY	CHECKED
DESIGN	Ashraf Ahmed	Joey Aquino
DETAILS	Jay Reid	Joey Aquino
QUANTITIES	Ashraf Ahmed	Ye Yang

STATE OF CALIFORNIA
DEPARTMENT OF TRANSPORTATION

DIVISION OF ENGINEERING SERVICES
STRUCTURE DESIGN
DESIGN BRANCH 3

BRIDGE NO. 02-0148R/L
POST MILE 51.4

DECK REPLACEMENT / SEISMIC RETROFIT
SHASTA RIVER BRIDGE
BENT DETAILS NO. 2

STRUCTURES DESIGN DETAIL SHEET (ENGLISH) (REV. 09-01-10)

ORIGINAL SCALE IN INCHES FOR REDUCED PLANS 0 1 2 3

UNIT: 3578
PROJECT NUMBER & PHASE: 02000003451
CONTRACT NO.: 3C9201

DISREGARD PRINTS BEARING EARLIER REVISION DATES

REVISION DATES: 5-5-11 | 5-23-11 | 10-24-11

SHEET 10 OF 20

FILE => 02-0148lr-h-b01dt02.dgn

USERNAME => s128843 DATE PLOTTED => 30-MAR-2012 TIME PLOTTED => 09:11

DIST	COUNTY	ROUTE	POST MILES TOTAL PROJECT	SHEET No.	TOTAL SHEETS
02	Sis	5	R50.6/R52.1	75	84

REGISTERED CIVIL ENGINEER 12-1-11 DATE

3-26-12
PLANS APPROVAL DATE

REGISTERED PROFESSIONAL ENGINEER Ashraf Ahmed No. 64787 Exp. 6-30-13 CIVIL STATE OF CALIFORNIA

The State of California or its officers or agents shall not be responsible for the accuracy or completeness of electronic copies of this plan sheet.

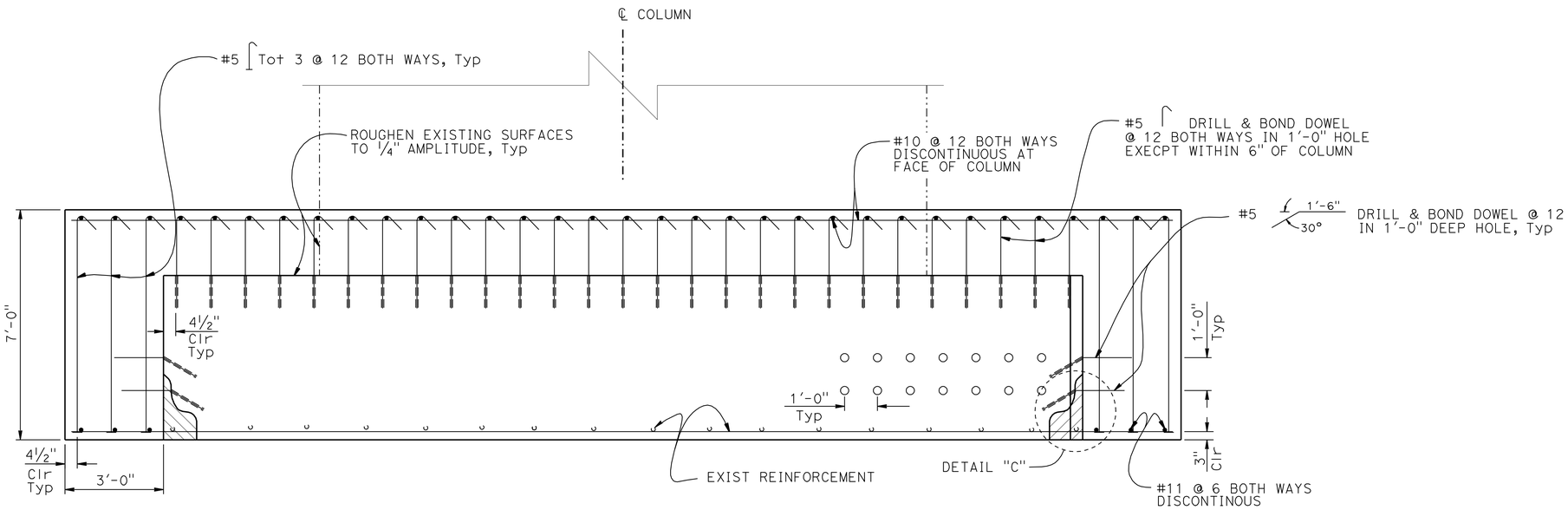

SECTION G-G

1/2" = 1'-0"

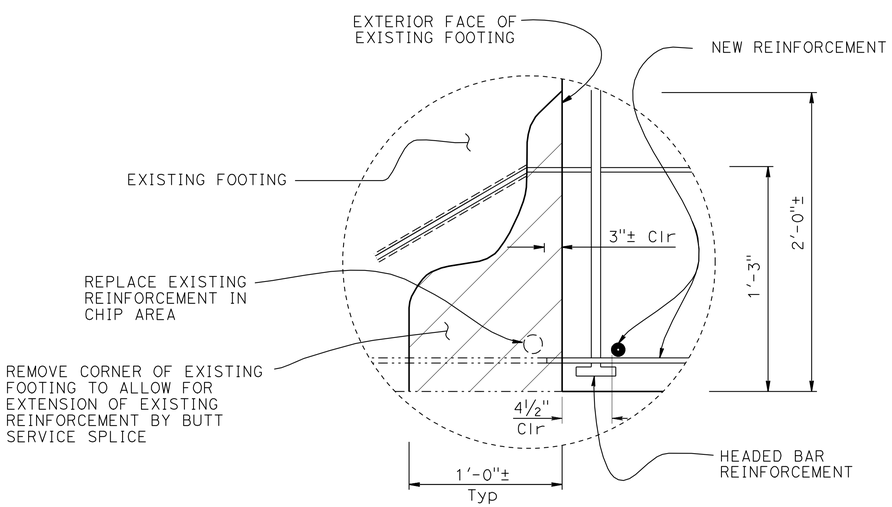

DETAIL "C"

NO SCALE

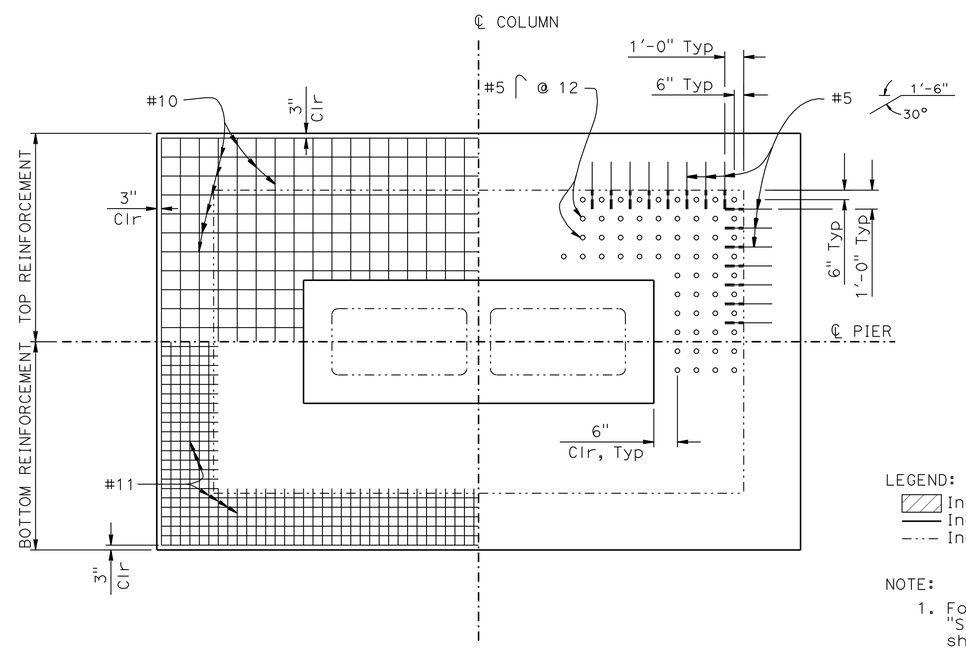

FOOTING REINFORCEMENT PLAN

1/4" = 1'-0"

LEGEND:
- Indicates Limits of Bridge Removal (Portion)
- Indicates New Structure
- Indicates Existing Structure

NOTE:
1. For footing dimensions & Location of "SECTION G-G" see "BENT DETAILS NO. 1" sheet

NOTE:
THE CONTRACTOR SHALL VERIFY ALL CONTROLLING FIELD DIMENSIONS BEFORE ORDERING OR FABRICATING ANY MATERIAL.

	BY	CHECKED
DESIGN	Ashraf Ahmed	Joey Aquino
DETAILS	Jay Reid	Joey Aquino
QUANTITIES	Ashraf Ahmed	Ye Yang

STATE OF CALIFORNIA DEPARTMENT OF TRANSPORTATION

DIVISION OF ENGINEERING SERVICES STRUCTURE DESIGN DESIGN BRANCH 3

BRIDGE NO. 02-0148R/L
POST MILE 51.4

DECK REPLACEMENT / SEISMIC RETROFIT
SHASTA RIVER BRIDGE
BENT DETAILS NO. 3

STRUCTURES DESIGN DETAIL SHEET (ENGLISH) (REV. 09-01-10)

ORIGINAL SCALE IN INCHES FOR REDUCED PLANS 0 1 2 3

UNIT: 3578
PROJECT NUMBER & PHASE: 02000003451
CONTRACT NO.: 3C9201

DISREGARD PRINTS BEARING EARLIER REVISION DATES

REVISION DATES: 5-5-11 | 9-22-11 | 11-28-11

SHEET 11 OF 20

FILE => 02-0148lr-h-b01dt03.dgn

USERNAME => s128843 DATE PLOTTED => 30-MAR-2012 TIME PLOTTED => 09:11

DIST	COUNTY	ROUTE	POST MILES TOTAL PROJECT	SHEET No.	TOTAL SHEETS
02	Sis	5	R50.6/R52.1	76	84

REGISTERED CIVIL ENGINEER 12-1-11 DATE

3-26-12
PLANS APPROVAL DATE

REGISTERED PROFESSIONAL ENGINEER
Ashraf Ahmed
No. 64787
Exp. 6-30-13
CIVIL
STATE OF CALIFORNIA

The State of California or its officers or agents shall not be responsible for the accuracy or completeness of electronic copies of this plan sheet.

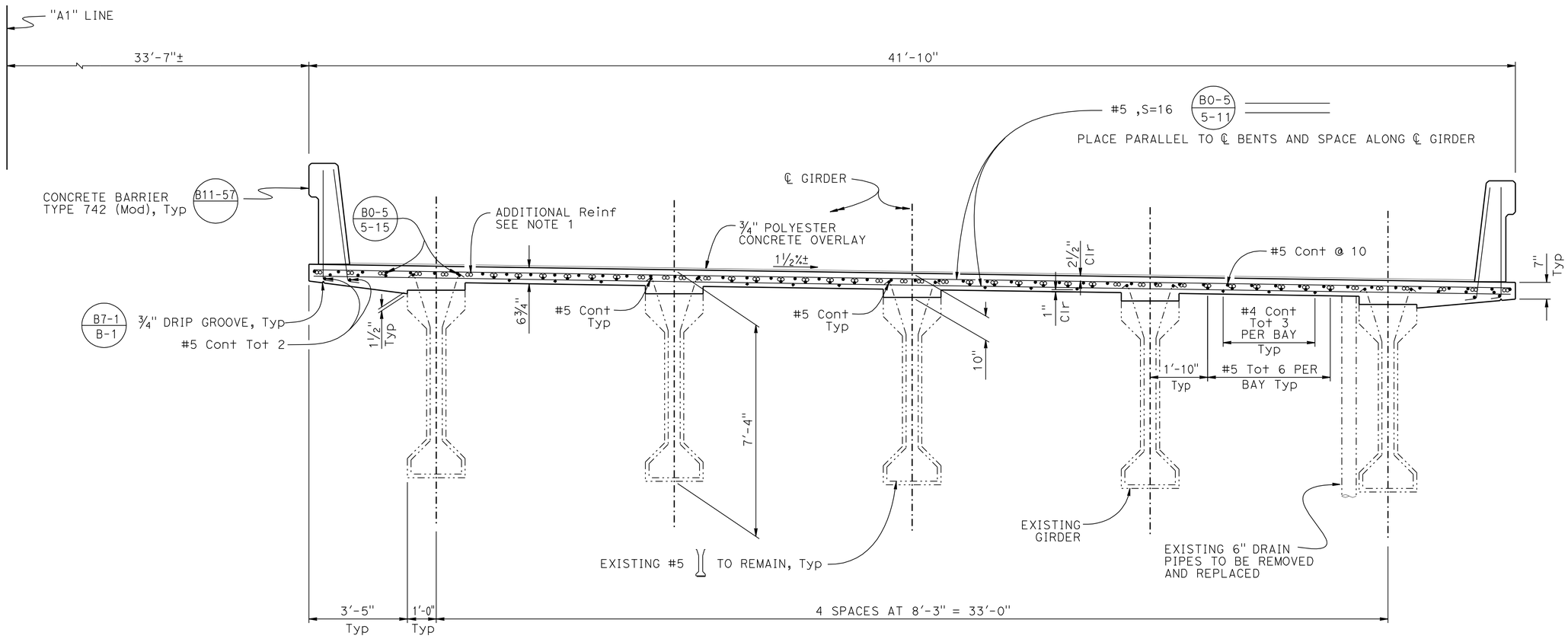

TYPICAL SECTION

DECK REPLACEMENT AT PRECAST I GIRDERS

½" = 1'-0"

NOTES:

1. For Additional Reinforcement, see "GIRDER REINFORCEMENT" sheet
2. Right Bridge shown Left Bridge similar
3. All New Reinforcement to be Epoxy Coated including barrier rail reinforcement
4. ¾" Polyester Concrete overlay not shown for Clarity

NOTE:
THE CONTRACTOR SHALL VERIFY ALL CONTROLLING FIELD DIMENSIONS BEFORE ORDERING OR FABRICATING ANY MATERIAL.

	BY	CHECKED
DESIGN	Ashraf Ahmed	Joey Aquino
DETAILS	Jay Reid	Joey Aquino
QUANTITIES	Ashraf Ahmed	Ye Yang

STATE OF CALIFORNIA
DEPARTMENT OF TRANSPORTATION

DIVISION OF ENGINEERING SERVICES
STRUCTURE DESIGN
DESIGN BRANCH 3

BRIDGE NO. 02-0148R/L
POST MILE 51.4

DECK REPLACEMENT / SEISMIC RETROFIT
SHASTA RIVER BRIDGE
TYPICAL SECTION NO. 1

STRUCTURES DESIGN DETAIL SHEET (ENGLISH) (REV. 09-01-10)

ORIGINAL SCALE IN INCHES FOR REDUCED PLANS 0 1 2 3

UNIT: 3578
PROJECT NUMBER & PHASE: 02000003451
CONTRACT NO.: 3C9201

DISREGARD PRINTS BEARING EARLIER REVISION DATES

REVISION DATES: 5-3-11 | 7-29-11 | 10-26-11

SHEET 12 OF 20

FILE => 02-0148lr-k-ts01.dgn

USERNAME => s128843 DATE PLOTTED => 30-MAR-2012 TIME PLOTTED => 09:11

DIST	COUNTY	ROUTE	POST MILES TOTAL PROJECT	SHEET No.	TOTAL SHEETS
02	Sis	5	R50.6/R52.1	77	84

REGISTERED CIVIL ENGINEER 12-1-11 DATE

3-26-12
PLANS APPROVAL DATE

REGISTERED PROFESSIONAL ENGINEER
Ashraf Ahmed
No. 64787
Exp. 6-30-13
CIVIL
STATE OF CALIFORNIA

The State of California or its officers or agents shall not be responsible for the accuracy or completeness of electronic copies of this plan sheet.

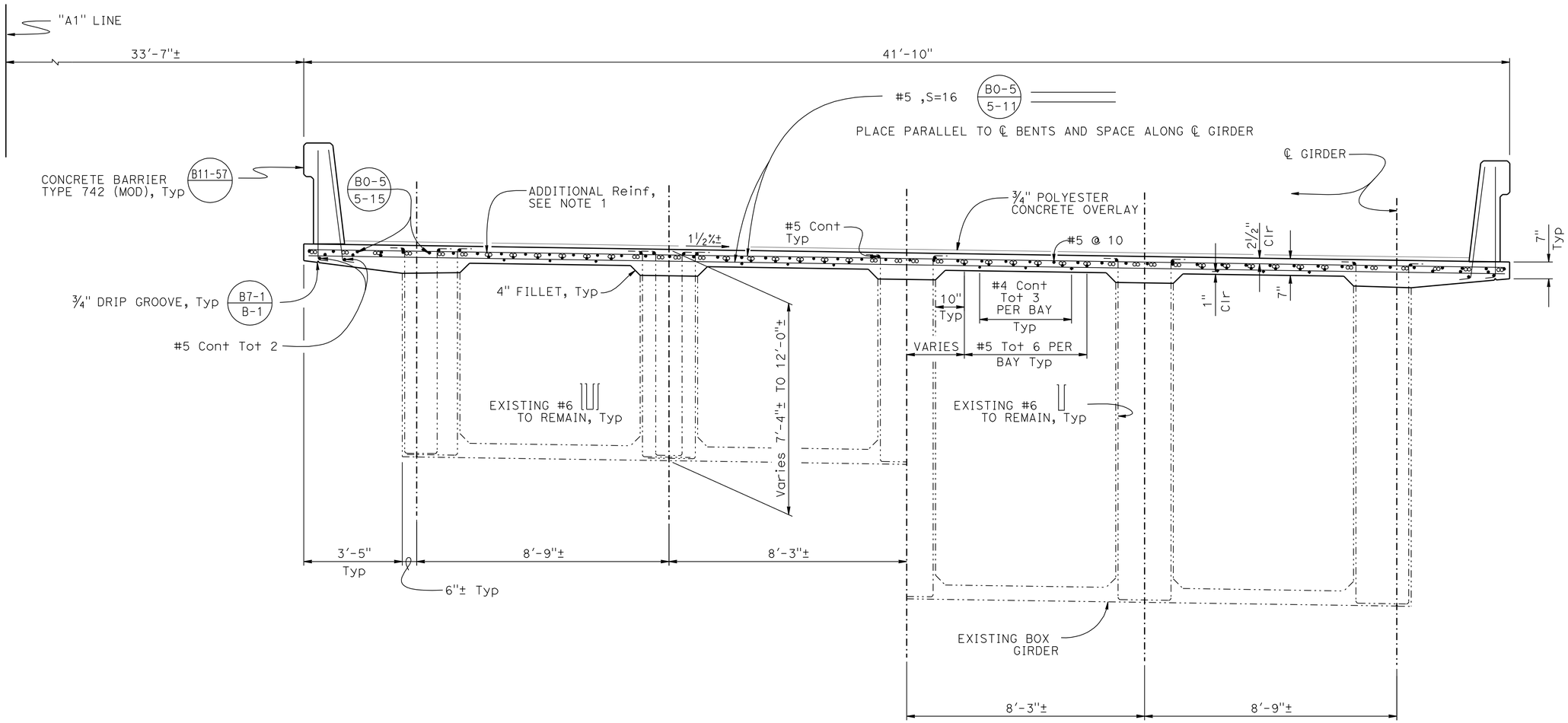

TYPICAL SECTION

DECK REPLACEMENT AT CAST IN PLACE BOX GIRDER LOCATIONS
½" = 1'-0"

NOTES:

1. For Additional Reinforcement, see "GIRDER REINFORCEMENT" sheet
2. Right Bridge shown Left Bridge similar
3. All New Reinforcement to be Epoxy Coated including barrier rail reinforcement
4. ¾" Polyester Concrete overlay not shown for Clarity

NOTE:
THE CONTRACTOR SHALL VERIFY ALL CONTROLLING FIELD DIMENSIONS BEFORE ORDERING OR FABRICATING ANY MATERIAL.

	BY	CHECKED
DESIGN	Ashraf Ahmed	Joey Aquino
DETAILS	Jay Reid	Joey Aquino
QUANTITIES	Ashraf Ahmed	Ye Yang

STATE OF CALIFORNIA
DEPARTMENT OF TRANSPORTATION

DIVISION OF ENGINEERING SERVICES
STRUCTURE DESIGN
DESIGN BRANCH 3

BRIDGE NO. 02-0148R/L
POST MILE 51.4

DECK REPLACEMENT / SEISMIC RETROFIT
SHASTA RIVER BRIDGE
TYPICAL SECTION NO. 2

STRUCTURES DESIGN DETAIL SHEET (ENGLISH) (REV. 09-01-10)

ORIGINAL SCALE IN INCHES FOR REDUCED PLANS 0 1 2 3

UNIT: 3578
PROJECT NUMBER & PHASE: 02000003451
CONTRACT NO.: 3C9201

DISREGARD PRINTS BEARING EARLIER REVISION DATES

REVISION DATES: 5-3-11 | 3-29-11 | 10-26-11

SHEET 13 OF 20

FILE => 02-0148lr-k-ts02.dgn

USERNAME => s128843 DATE PLOTTED => 30-MAR-2012 TIME PLOTTED => 09:11

DIST	COUNTY	ROUTE	POST MILES TOTAL PROJECT	SHEET No.	TOTAL SHEETS
02	Sis	5	R50.6/R52.1	78	84

REGISTERED CIVIL ENGINEER 12-1-11 DATE

3-26-12
PLANS APPROVAL DATE

REGISTERED PROFESSIONAL ENGINEER
Ashraf Ahmed
No. 64787
Exp. 6-30-13
CIVIL
STATE OF CALIFORNIA

The State of California or its officers or agents shall not be responsible for the accuracy or completeness of electronic copies of this plan sheet.

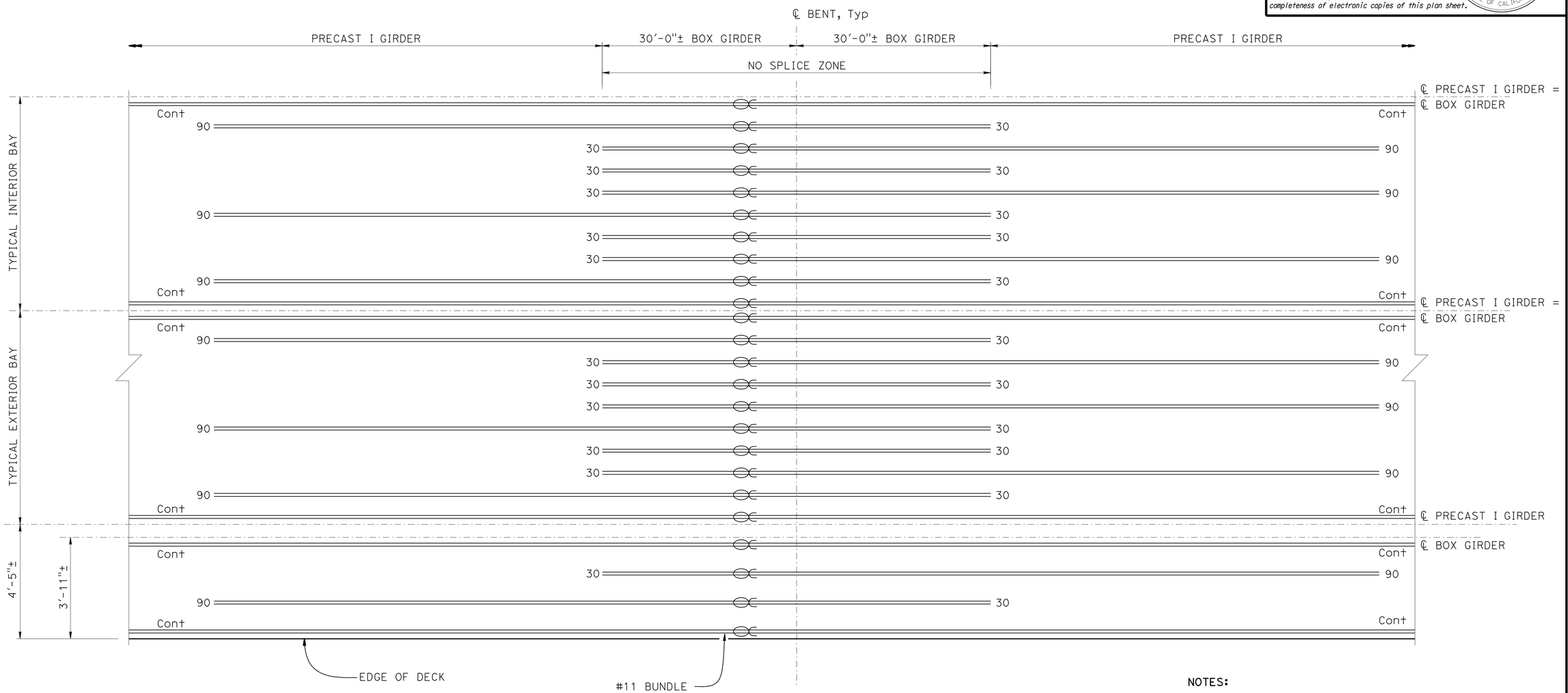

NOTES:

1. ⊂⊃ Indicates Bundled Bars
2. Numbers at the end of bars indicate distance in feet from ℄ Bent
3. All New Reinforcement to be Epoxy Coated

TOP REINFORCEMENT

½" = 1'-0" VERT
⅛" = 1'-0" HORZ

NOTE:
THE CONTRACTOR SHALL VERIFY ALL CONTROLLING FIELD DIMENSIONS BEFORE ORDERING OR FABRICATING ANY MATERIAL.

	BY	CHECKED
DESIGN	Ashraf Ahmed	Joey Aquino
DETAILS	Jay Reid	Joey Aquino
QUANTITIES	Ashraf Ahmed	Ye Yang

STATE OF CALIFORNIA
DEPARTMENT OF TRANSPORTATION

DIVISION OF ENGINEERING SERVICES
STRUCTURE DESIGN
DESIGN BRANCH 3

BRIDGE NO. 02-0148R/L
POST MILE 51.4

DECK REPLACEMENT / SEISMIC RETROFIT
SHASTA RIVER BRIDGE
GIRDER REINFORCEMENT

STRUCTURES DESIGN DETAIL SHEET (ENGLISH) (REV. 09-01-10)

ORIGINAL SCALE IN INCHES FOR REDUCED PLANS 0 1 2 3

UNIT: 3578
PROJECT NUMBER & PHASE: 02000003451
CONTRACT NO.: 3C9201

DISREGARD PRINTS BEARING EARLIER REVISION DATES

REVISION DATES: 5-3-11 7-28-11 11-29-11

SHEET 14 OF 20

FILE => 02-0148lr-o-gr01.dgn

USERNAME => s128843 DATE PLOTTED => 30-MAR-2012 TIME PLOTTED => 09:12

DIST	COUNTY	ROUTE	POST MILES TOTAL PROJECT	SHEET No.	TOTAL SHEETS
02	Sis	5	R50.6/R52.1	79	84

REGISTERED CIVIL ENGINEER 12-1-11 DATE

3-26-12
PLANS APPROVAL DATE

REGISTERED PROFESSIONAL ENGINEER
Ashraf Ahmed
No. 64787
Exp. 6-30-13
CIVIL
STATE OF CALIFORNIA

The State of California or its officers or agents shall not be responsible for the accuracy or completeness of electronic copies of this plan sheet.

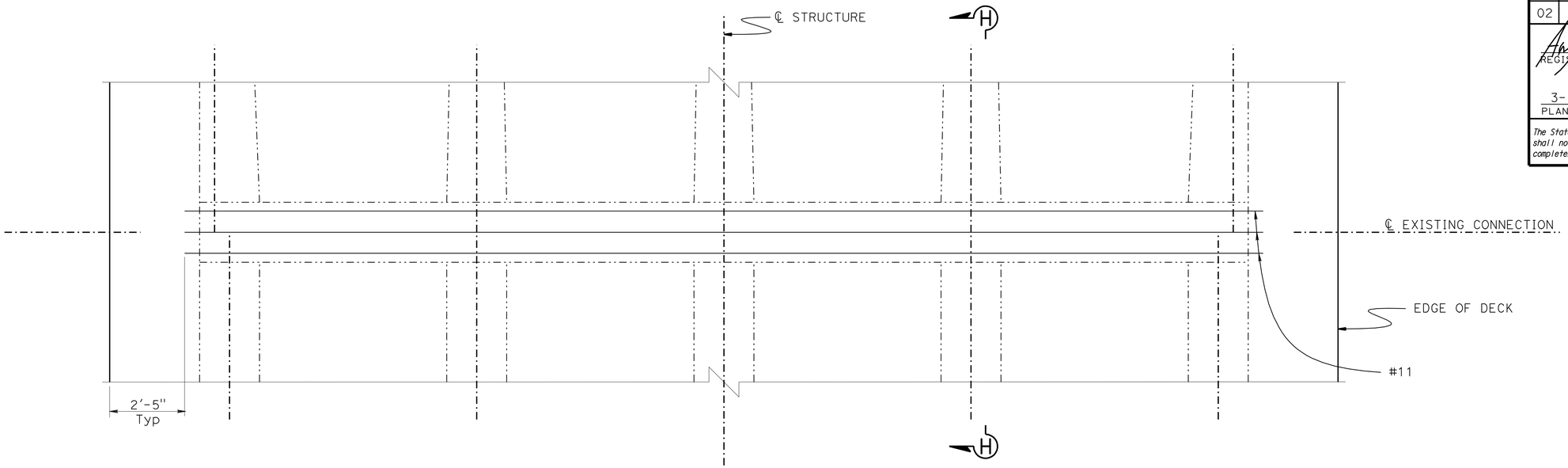

PLAN
½" = 1'-0"

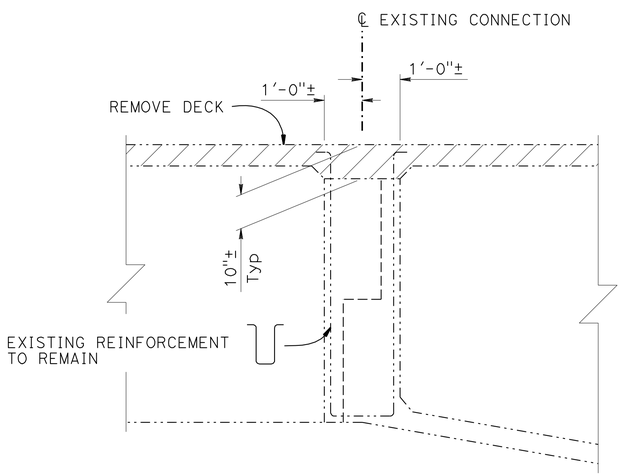

DECK REMOVAL @ CONNECTION LOCATIONS (EXISTING)

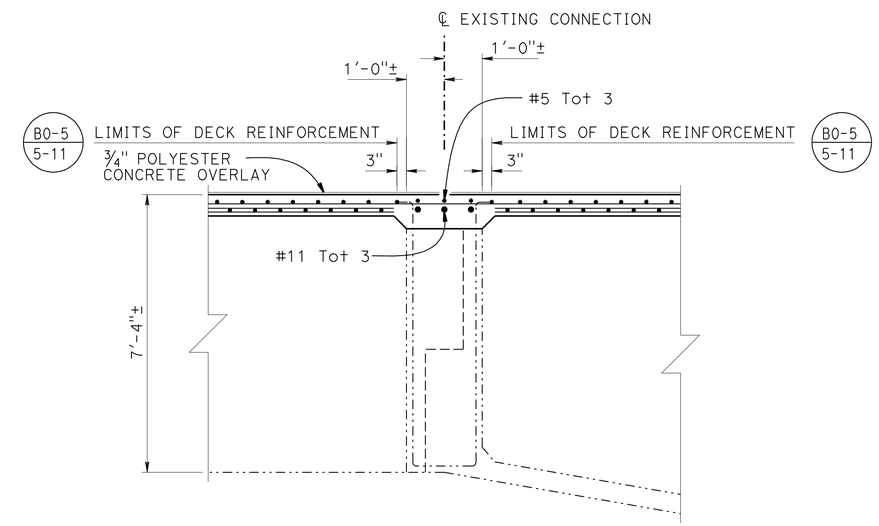

NOTE:

All Existing Connection Beam Reinforcement to Remain

DECK DETAIL @ CONNECTION LOCATIONS (RECONSTRUCTION)

LEGEND:

- Indicates Limits of Bridge Removal (Portion)
- Indicates Existing Structure
- Indicates New Structure

NOTES:

1. All New Reinforcement to be Epoxy Coated
2. For locations of connections, see "GENERAL PLAN NO. 1" sheet

NOTE:
THE CONTRACTOR SHALL VERIFY ALL CONTROLLING FIELD DIMENSIONS BEFORE ORDERING OR FABRICATING ANY MATERIAL.

SECTION H-H
½" = 1'-0"

	BY	CHECKED
DESIGN	Ashraf Ahmed	Joey Aquino
DETAILS	Jay Reid	Joey Aquino
QUANTITIES	Ashraf Ahmed	Ye Yang

STATE OF CALIFORNIA
DEPARTMENT OF TRANSPORTATION

DIVISION OF ENGINEERING SERVICES
STRUCTURE DESIGN
DESIGN BRANCH 3

BRIDGE NO. 02-0148R/L
POST MILE 51.4

DECK REPLACEMENT / SEISMIC RETROFIT
SHASTA RIVER BRIDGE
CONNECTION DETAILS

STRUCTURES DESIGN DETAIL SHEET (ENGLISH) (REV. 09-01-10)

ORIGINAL SCALE IN INCHES FOR REDUCED PLANS 0 1 2 3

UNIT: 3578
PROJECT NUMBER & PHASE: 02000003451
CONTRACT NO.: 3C9201

DISREGARD PRINTS BEARING EARLIER REVISION DATES
REVISION DATES 5-3-11 10-21-11 11-29-11

SHEET 15 OF 20

FILE => 02-0148lr-r-co01.dgn

USERNAME => s128843 DATE PLOTTED => 30-MAR-2012 TIME PLOTTED => 09:12

DIST	COUNTY	ROUTE	POST MILES TOTAL PROJECT	SHEET No.	TOTAL SHEETS
02	Sis	5	R50.6/R52.1	80	84

REGISTERED CIVIL ENGINEER 12-1-11 DATE

3-26-12
PLANS APPROVAL DATE

REGISTERED PROFESSIONAL ENGINEER
Ashraf Ahmed
No. 64787
Exp. 6-30-13
CIVIL
STATE OF CALIFORNIA

The State of California or its officers or agents shall not be responsible for the accuracy or completeness of electronic copies of this plan sheet.

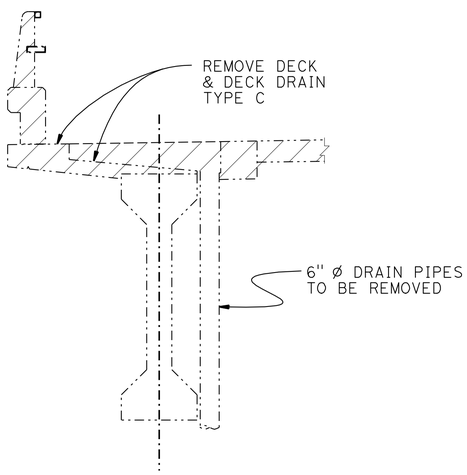

DECK DRAIN (EXISTING)

½" = 1'-0"

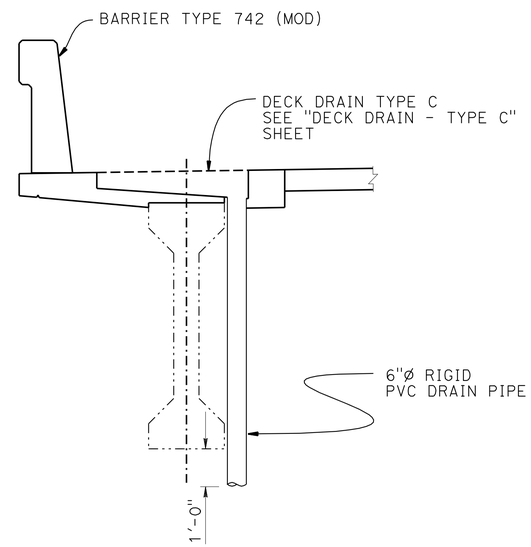

DECK DRAIN (RECONSTRUCTION)

½" = 1'-0"

LEGEND:

- Indicates Limits of Bridge Removal (Portion)
- Indicates Existing Structure
- Indicates New Structure

NOTES:

1. Right Bridge shown Left Bridge similar
2. All New Reinforcement to be Epoxy Coated including barrier rail reinforcement
3. For Location of Deck Drains, see "GENERAL PLANS NO. 1" sheet

NOTE:
THE CONTRACTOR SHALL VERIFY ALL CONTROLLING FIELD DIMENSIONS BEFORE ORDERING OR FABRICATING ANY MATERIAL.

DECK REPLACEMENT / SEISMIC RETROFIT
SHASTA RIVER BRIDGE
DECK DRAIN DETAILS

	BY	CHECKED
DESIGN	Ashraf Ahmed	Joey Aquino
DETAILS	Jay Reid	Joey Aquino
QUANTITIES	Ashraf Ahmed	Ye Yang

STATE OF CALIFORNIA
DEPARTMENT OF TRANSPORTATION

DIVISION OF ENGINEERING SERVICES
STRUCTURE DESIGN
DESIGN BRANCH 3

BRIDGE NO. 02-0148R/L
POST MILE 51.4

STRUCTURES DESIGN DETAIL SHEET (ENGLISH) (REV. 09-01-10)

ORIGINAL SCALE IN INCHES FOR REDUCED PLANS 0 1 2 3

UNIT: 3578
PROJECT NUMBER & PHASE: 02000003451
CONTRACT NO.: 3C9201

DISREGARD PRINTS BEARING EARLIER REVISION DATES

REVISION DATES: 5-3-11 | 8-4-11 | 11-29-11

SHEET 16 OF 20

FILE => 02-0148lr-r-dd01.dgn

USERNAME => s128843 DATE PLOTTED => 30-MAR-2012 TIME PLOTTED => 09:12

DIST	COUNTY	ROUTE	POST MILES TOTAL PROJECT	SHEET No.	TOTAL SHEETS
02	Sis	5	R50.6/R52.1	81	84

REGISTERED CIVIL ENGINEER 12-1-11 DATE

3-26-12
PLANS APPROVAL DATE

REGISTERED PROFESSIONAL ENGINEER
Ashraf Ahmed
No. 64787
Exp. 6-30-13
CIVIL
STATE OF CALIFORNIA

The State of California or its officers or agents shall not be responsible for the accuracy or completeness of electronic copies of this plan sheet.

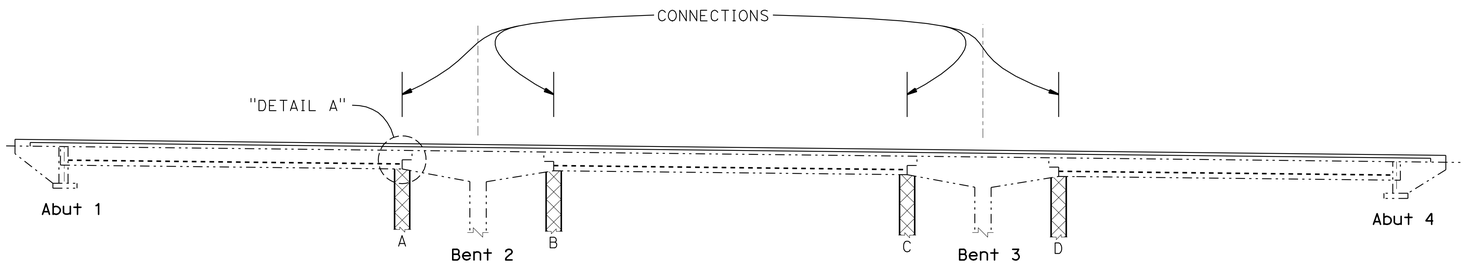

DECK REMOVAL SEQUENCE

1"=30'

SEQUENCE:

1. Temporary supports shall be installed at specifed locations (A, B, C, & D) before deck removal
2. Jack the bridge at support locations with specified jacking force, all girders per temporary support shall be jacked equally at the same time

   Jacking Force = 600 kips per temporary support location
   Lateral Design Force = 120 kips
3. Remove deck
4. Temporary supports shall not be released until new deck reaches f'c = 4000psi and Min 14 days cure

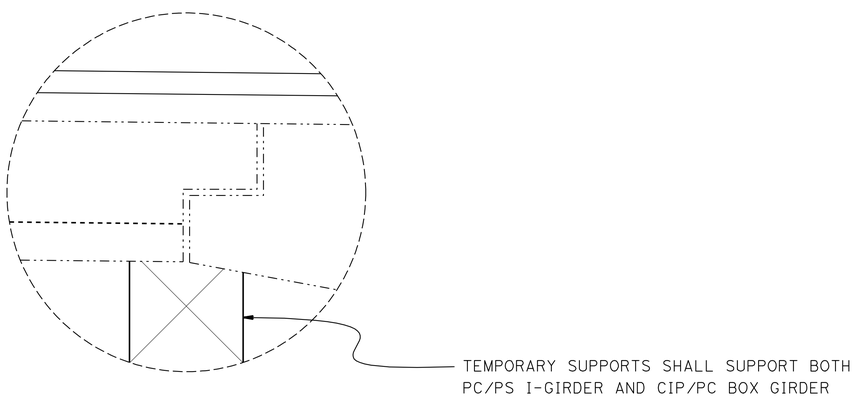

DETAIL A

½" = 1'-0"

NOTE:
THE CONTRACTOR SHALL VERIFY ALL CONTROLLING FIELD DIMENSIONS BEFORE ORDERING OR FABRICATING ANY MATERIAL.

	BY	CHECKED
DESIGN	Ashraf Ahmed	Joey Aquino
DETAILS	Jay Reid	Joey Aquino
QUANTITIES	Ashraf Ahmed	Ye Yang

STATE OF CALIFORNIA
DEPARTMENT OF TRANSPORTATION

DIVISION OF ENGINEERING SERVICES
STRUCTURE DESIGN
DESIGN BRANCH 3

BRIDGE NO. 02-0148R/L
POST MILE 51.4

DECK REPLACEMENT / SEISMIC RETROFIT
SHASTA RIVER BRIDGE
DECK REMOVAL DETAILS

STRUCTURES DESIGN DETAIL SHEET (ENGLISH) (REV. 09-01-10)

ORIGINAL SCALE IN INCHES FOR REDUCED PLANS 0 1 2 3

UNIT: 3578
PROJECT NUMBER & PHASE: 02000003451
CONTRACT NO.: 3C9201

DISREGARD PRINTS BEARING EARLIER REVISION DATES

REVISION DATES: 4-26-11 10-4-11 10-25-11

SHEET 17 OF 20

FILE => 02-0148lr-v-const.dgn

USERNAME => s128843 DATE PLOTTED => 30-MAR-2012 TIME PLOTTED => 09:12

DIST	COUNTY	ROUTE	POST MILES TOTAL PROJECT	SHEET No.	TOTAL SHEETS
02	Sis	5	R50.6/R52.1	82	84

REGISTERED CIVIL ENGINEER 12-1-11 DATE

3-26-12
PLANS APPROVAL DATE

REGISTERED PROFESSIONAL ENGINEER Ashraf Ahmed No. 64787 Exp. 6-30-13 CIVIL STATE OF CALIFORNIA

The State of California or its officers or agents shall not be responsible for the accuracy or completeness of electronic copies of this plan sheet.

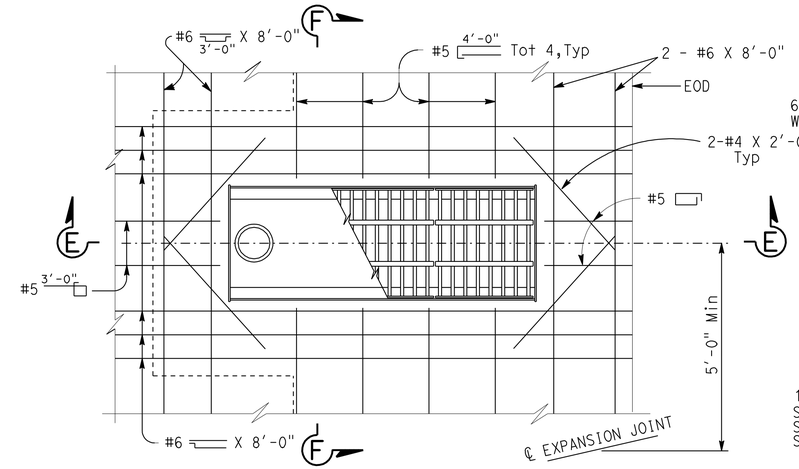

PLAN - CURB INSTALLATION

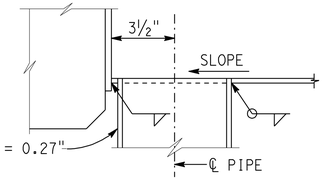

PIPE SECTION

NOTE:
Galvanize deck drain assembly after fabrication. Reinforcement shown at drains is to be placed in addition to typical slab reinforcement. Typical slab reinforcement not shown

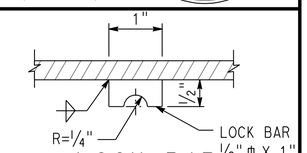

LOCK BAR

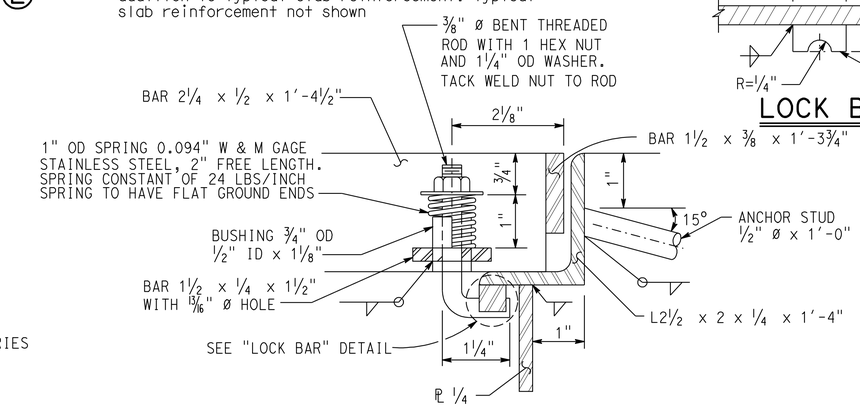

DETAIL A

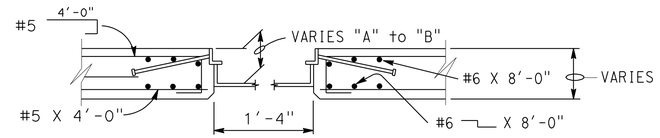

SECTION F-F

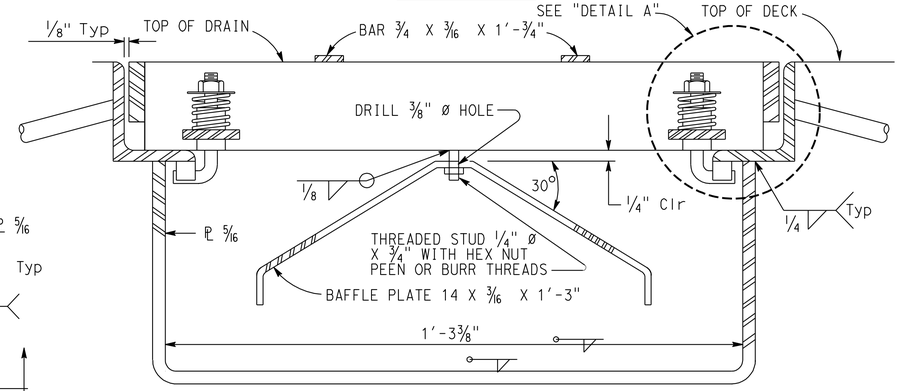

SECTION A-A (FRAME & GRATE)

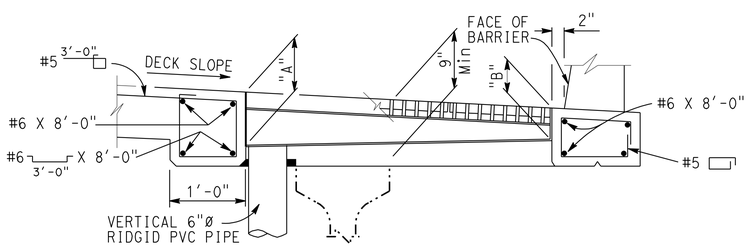

SECTION E-E

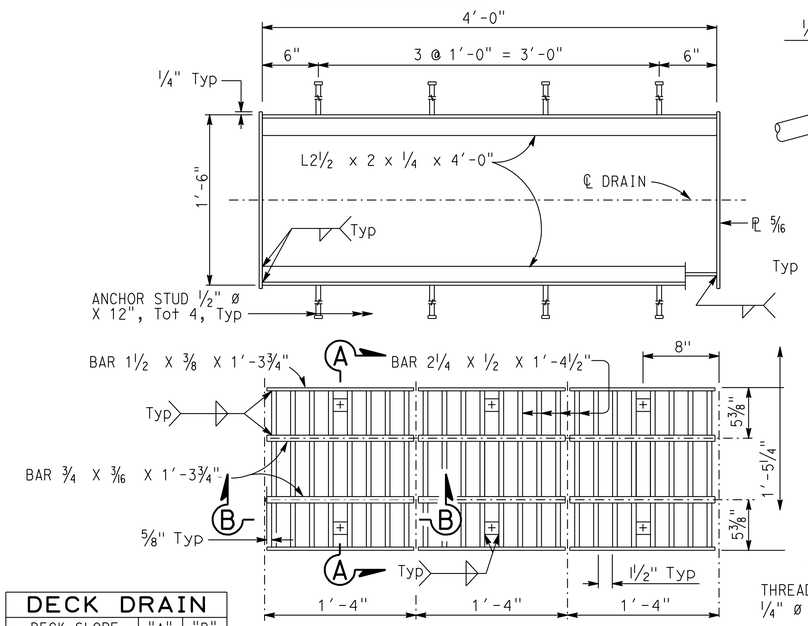

PLAN - FRAME & GRATE

NOTE:
Grating consists of 3 identical units except for baffle plate. Baffle plate is required only for the grate over the 6" ø pipe

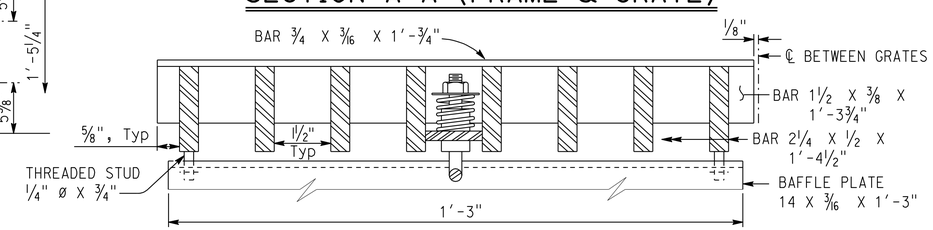

SECTION B-B

NO SCALE

DECK DRAIN		
DECK SLOPE	"A"	"B"
0% TO 6%	9"	5"
7% TO 9%	10"	5"
10% TO 12%	10½"	4"

NOTE:
THE CONTRACTOR SHALL VERIFY ALL CONTROLLING FIELD DIMENSIONS BEFORE ORDERING OR FABRICATING ANY MATERIAL.

	BY	CHECKED
DESIGN	Ashraf Ahmed	Joey Aquino
DETAILS	Jay Reid	Joey Aquino
QUANTITIES	Ashraf Ahmed	Ye Yang

STATE OF CALIFORNIA
DEPARTMENT OF TRANSPORTATION

DIVISION OF ENGINEERING SERVICES
STRUCTURE DESIGN
DESIGN BRANCH 3

BRIDGE NO. 02-0148R/L
POST MILE 51.4

DECK REPLACEMENT / SEISMIC RETROFIT
SHASTA RIVER BRIDGE
DECK DRAIN - TYPE C

STRUCTURES DESIGN DETAIL SHEET (ENGLISH) (REV. 09-01-10)

ORIGINAL SCALE IN INCHES FOR REDUCED PLANS 0 1 2 3

UNIT: 3578
PROJECT NUMBER & PHASE: 02000003451
CONTRACT NO.: 3C9201

DISREGARD PRINTS BEARING EARLIER REVISION DATES

REVISION DATES: 9-22-11

SHEET 18 OF 20

FILE => 02-0148lr-x-dd.dgn

USERNAME => s128843 DATE PLOTTED => 30-MAR-2012 TIME PLOTTED => 08:12

DIST.	COUNTY	ROUTE	POST MILES TOTAL PROJECT	SHEET NO.	TOTAL SHEETS
02	Sis	5	R50.6/R52.1	83	84

12-1-11
REGISTERED ENGINEER - CIVIL

3-26-12
PLANS APPROVAL DATE

REGISTERED PROFESSIONAL ENGINEER Ashraf Ahmed No. 64787 Exp. 6-30-13 CIVIL STATE OF CALIFORNIA

The State of California or its officers or agents shall not be responsible for the accuracy or completeness of electronic copies of this plan sheet.

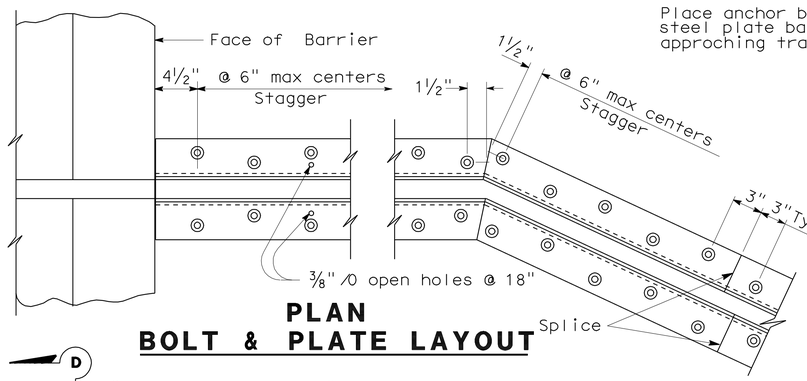

PLAN
BOLT & PLATE LAYOUT

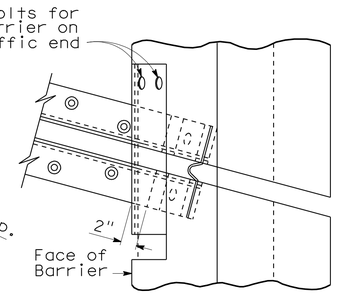

SKEW ≤ 20°

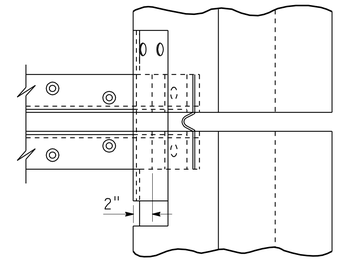

SKEW > 20°

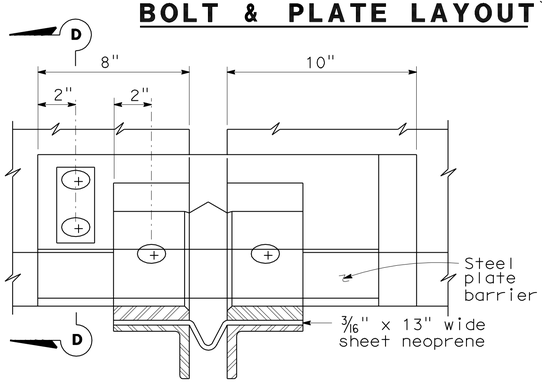

VIEW B-B

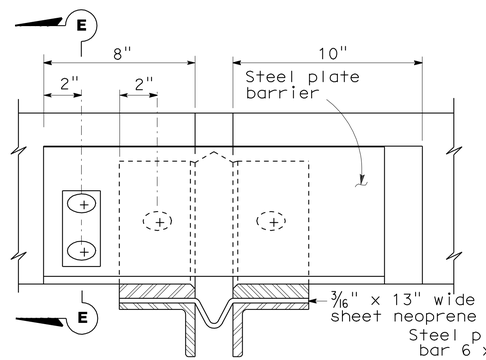

VIEW C-C

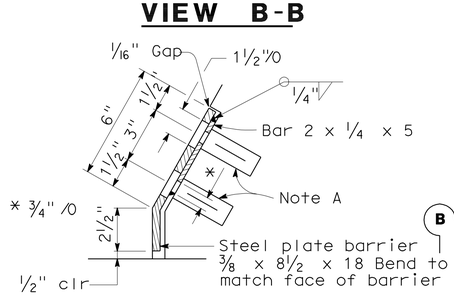

SECTION D-D

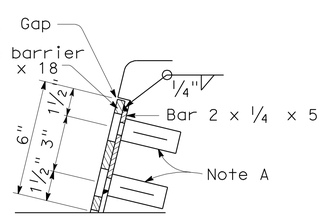

SECTION E-E

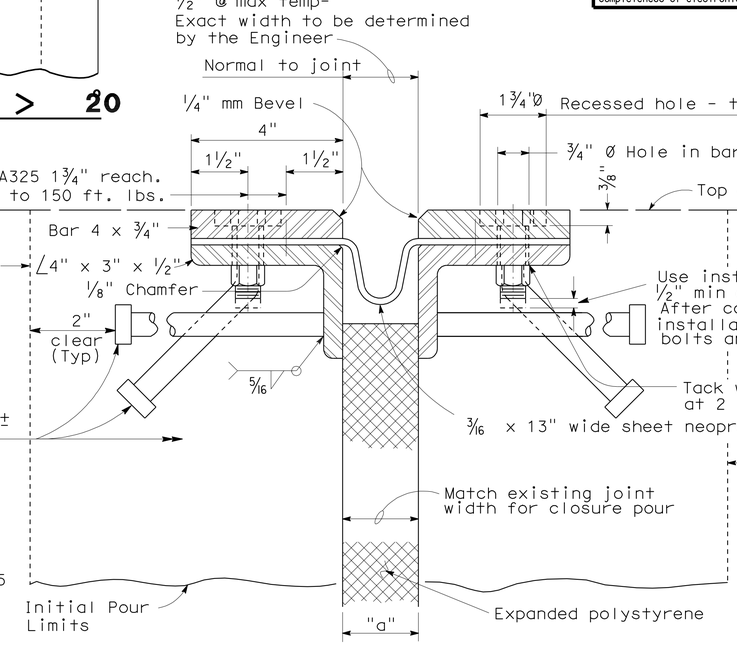

SECTION A-A

Note :
Stagger anchor studs @ 4½"± on centers thus:

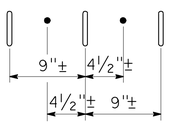

Joint Information			"a" Dimensions		
Location	Movement Rating (MR)	Skew	Winter	Spring & Fall	Summer
Abut 1	2½"	0	2½"	1⅞"	1¼"
Abut 4	2½"	0	2½"	1⅞"	1¼"

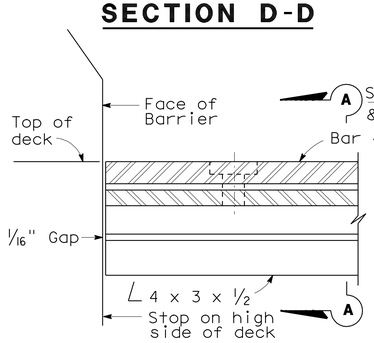

HIGH SIDE BARRIER DETAIL

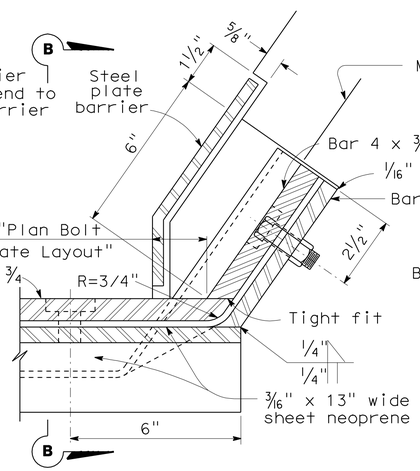

LOW SIDE BARRIER DETAIL
(See Note B)

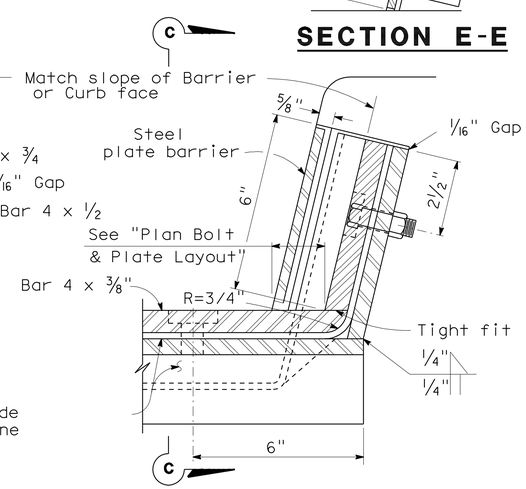

SIDEWALK DETAIL
(See Note B)

NOTES:

Full penetration butt welds may be substituted for fillet welds on all anchor studs.

Alternate types of anchor studs may be permitted subject to the approval by the Engineer.

Joint seal assembly to be used in conjunction with closure pour. (See other sheets for limits). Closure pour shall not be placed until final deck surface is within the tolerances specified.

Use joint at crown of roadway, at any change in traverse slope in deck and at changes in horizontal direction. Place other joints at or near lanes. All metal parts to be painted or galvanized after fabrication.

Sheet neoprene shall be fabricated in one continuous piece or joints shall be vulcanized. Neoprene shall be fabricated to bend around corners. 1" holes in neoprene sheets shall be drilled or punched so that the neoprene is not distorted at the time of installation.

NOTE A

Insert assembly or expansion anchorage for ⅝" x 1¾" A325 bolt.

NOTE B

Use the sidewalk Detail at all sidewalk joints. Use the Barrier Detail at both sides if the roadway is crowned or if the difference in elevation between the ends of the seal is 0.5' or less.

NO SCALE

STANDARD DRAWING

FILE NO. xs8-010e

APPROVED BY T. DELIS — RESPONSIBLE TECHNICAL SPECIALIST
APPROVAL DATE 5-8-08

RELEASED BY ROBERTO LACALLE — RESPONSIBLE OFFICE CHIEF
RELEASE DATE 5-8-08

STATE OF CALIFORNIA
DEPARTMENT OF TRANSPORTATION

DIVISION OF ENGINEERING SERVICES

BRIDGE NO. 02-0148R/L
POST MILE 51.4

DECK REPLACEMENT / SEISMIC RETROFIT
SHASTA RIVER BRIDGE
JOINT SEAL ASSEMBLY (MAXIMUM MOVEMENT RATING = 4")

DS OSD 2147A (ENGLISH STANDARD DRAWING "XS" BORDER REV. 01/11/08)

ORIGINAL SCALE IN INCHES FOR REDUCED PLANS 0 1 2 3

CU 03247
EA 3C9201

DISREGARD PRINTS BEARING EARLIER REVISION DATES

REVISION DATES (PRELIMINARY STAGE ONLY) 4-27-11 5-10-11 5-23-11

SHEET 19 OF 20

USERNAME => s128843

02-0148lr-x-jntdt.dgn

DATE PLOTTED => 30-MAR-2012 TIME PLOTTED => 09:12

DIST.	COUNTY	ROUTE	MILE POST TOTAL PROJECT	SHEET NO.	TOTAL SHEETS
02	Sis	5	R50.6/R52.1	84	84

REGISTERED ENGINEER - CIVIL 12-1-11

3-26-12
PLANS APPROVAL DATE

REGISTERED PROFESSIONAL ENGINEER Ashraf Ahmed No. 64787 Exp. 6-30-13 CIVIL STATE OF CALIFORNIA

The State of California or its officers or agents shall not be responsible for the accuracy or completeness of electronic copies of this plan sheet.

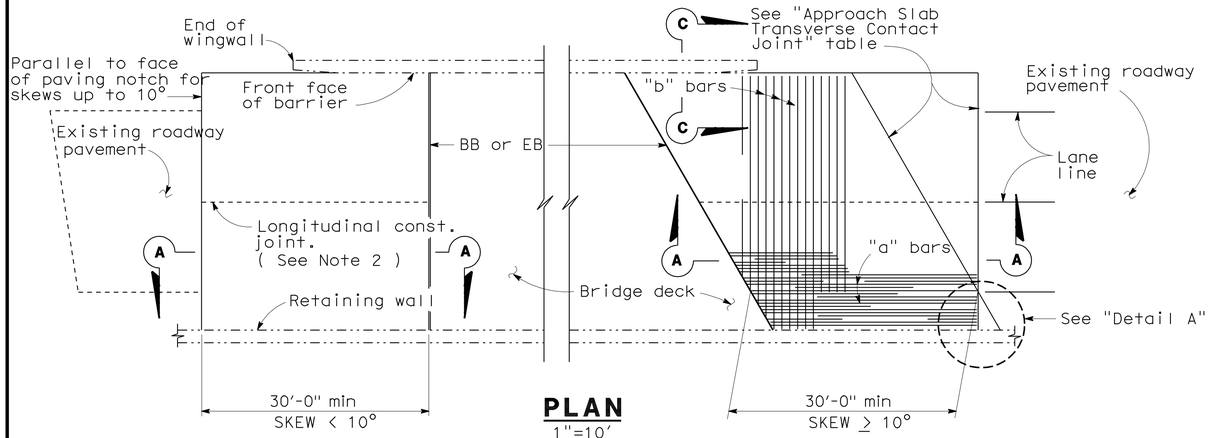

PLAN
1"=10'

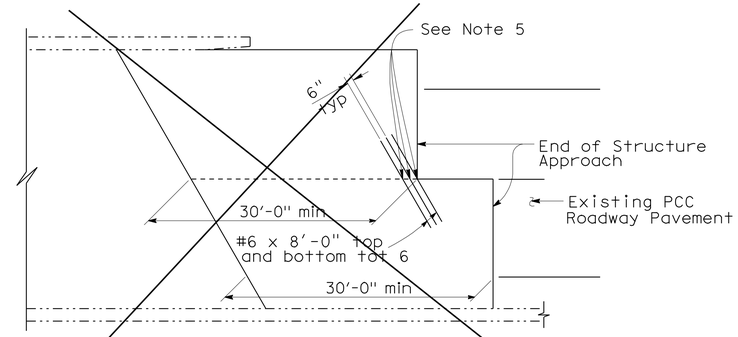

⑤ STRUCTURE APPROACH - END STAGGER DETAIL
No Scale

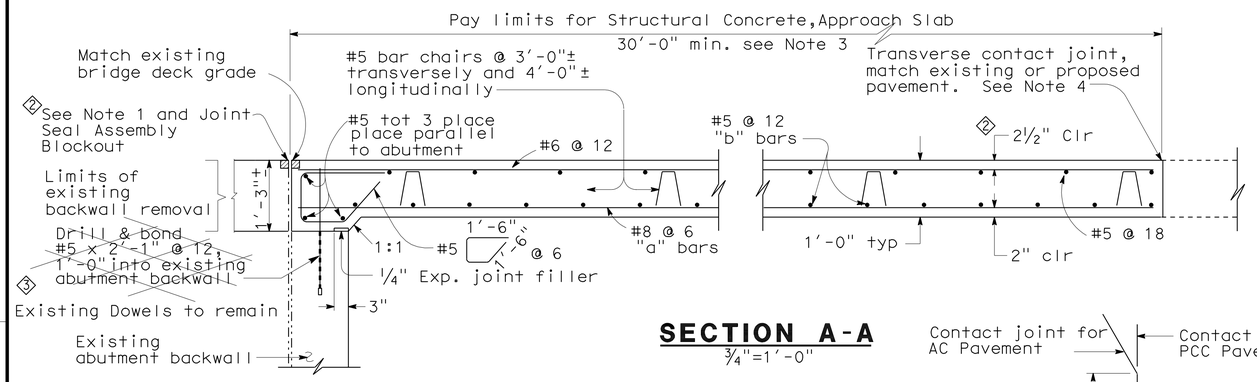

SECTION A-A
¾"=1'-0"

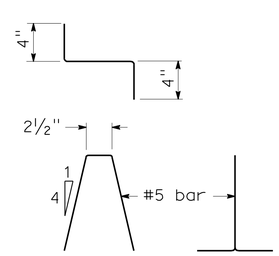

BAR CHAIR DETAIL
1½"=1'-0"

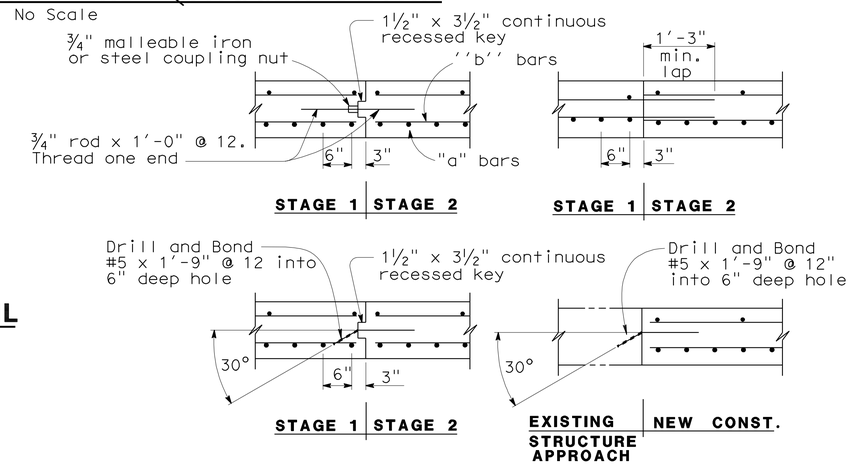

LONGITUDINAL CONSTRUCTION JOINT ALTERNATIVES
¾"=1'-0"

NOTES:

② 1. Joint Seal Assembly,for M.R. see Structure Plans. Adjust bar reinforcement to clear a sawcut for sealed joint,when required.

2. Longitudinal construction joints,when permitted by Engineer,shall be located on lane lines.

3. Transverse contact joint shall be a minimum of 5'-0" from an existing or constructed weakened plane joint.

4. For transverse contact joint with new PCC paving, refer to Standard Plan P10.

5. Couplers are required for stage construction.

6. End angle or plate at beginning of barrier transition, end of wingwall or end of structure approach as applicable.

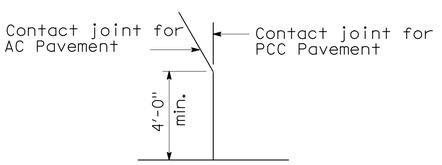

DETAIL A
No Scale

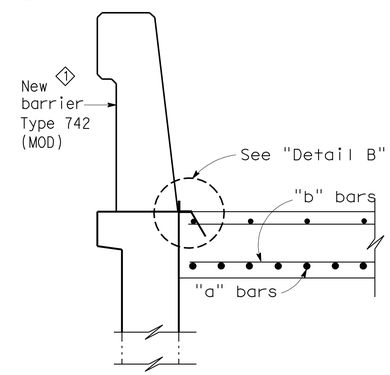

SECTION C-C
¾"=1'-0"

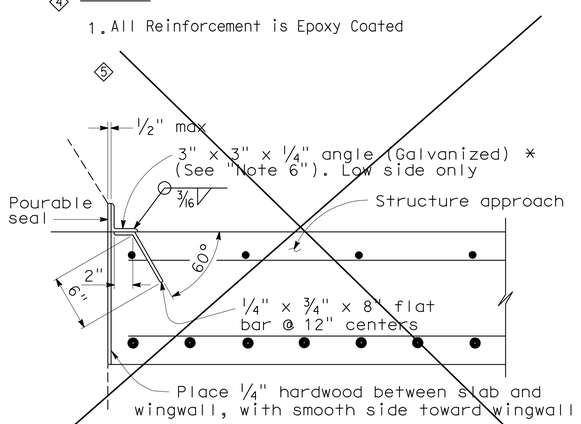

***(TO BE USED WITH TYPE 25 OR TYPE 27 CONCRETE BARRIER)**

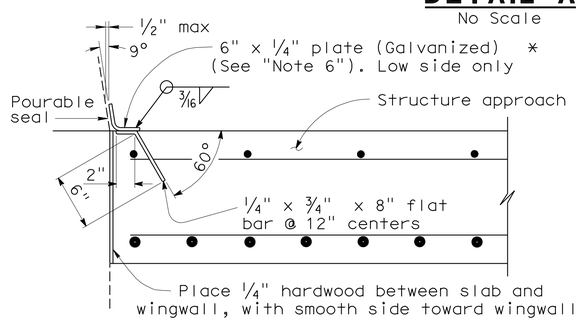

TYPE 742 ①

***(TO BE USED WITH TYPE ~~732 OR TYPE 736~~ CONCRETE BARRIER)**

DETAIL B
1½"=1'-0"

NOTES:

1. All Reinforcement is Epoxy Coated

NOTE:
THE CONTRACTOR SHALL VERIFY ALL CONTROLLING FIELD DIMENSIONS BEFORE ORDERING OR FABRICATING ANY MATERIAL.

APPROACH SLAB TRANSVERSE CONTACT JOINT		
APPROACH SKEW	WITH AC ROADWAY PAVEMENT	WITH PCC ROADWAY PAVEMENT
< 10°	Parallel to face of paving notch	Parallel to face of paving notch
10°- 45°	Parallel to face of P N use (Detail A)	Stagger lines 24' to 36' apart
> 45°	Parallel to face of P N use (Detail A)	Stagger at each lane line

SPECIAL DETAILS

REVISED STANDARD DRAWING				
RELEASE DATE 3/14/05	DESIGN BY M.TRAFFALIS	CHECKED E.THORKILDSEN	RELEASED BY	
FILE NO. xs3-130e	DETAILS BY R.YEE	CHECKED E.THORKILDSEN		
	SUBMITTED BY M.HA	DRAWING DATE 8/92	OFFICE CHIEF	

① Change to new barrier type
② Changed Notes
③ Revised Note
④ New Note
⑤ Does Not Apply

STATE OF CALIFORNIA
DEPARTMENT OF TRANSPORTATION

DIVISION OF ENGINEERING SERVICES

BRIDGE NO. 02-0148R/L
MILE POST 51.4

DECK REPLACEMENT / SEISMIC RETROFIT
SHASTA RIVER BRIDGE
STRUCTURE APPROACH TYPE R(30S)

DS OSD 2147A (ENGLISH) (REV. X/XX/XX)

ORIGINAL SCALE IN INCHES FOR REDUCED PLANS 0 1 2 3

CU 03247
EA 3C9201

DISREGARD PRINTS BEARING EARLIER REVISION DATES

REVISION DATES (PRELIMINARY STAGE ONLY) 4-26-11 5-10-11 5-23-11 7-28-11

SHEET 20 OF 20

USERNAME => s128843

02-0148lr-x-strapp-r30s.dgn

DATE PLOTTED => 30-MAR-2012 TIME PLOTTED => 09:12