Dist	COUNTY	ROUTE	POST MILES TOTAL PROJECT	SHEET No.	TOTAL SHEETS
02	Las	395	61.5/R76.6	101	161

REGISTERED CIVIL ENGINEER 01-10-14 DATE

03-24-14
PLANS APPROVAL DATE

REGISTERED PROFESSIONAL ENGINEER BYRON STANLEY No. C60161 Exp. 6-30-14 CIVIL STATE OF CALIFORNIA

THE STATE OF CALIFORNIA OR ITS OFFICERS OR AGENTS SHALL NOT BE RESPONSIBLE FOR THE ACCURACY OR COMPLETENESS OF SCANNED COPIES OF THIS PLAN SHEET.

NOTES:

1. MIRROR PLAN FOR NORTHBOUND CONCRETE BRIDGE BARRIER CONSTRUCTION.
2. ALLOW ACCESS TO DRIVEWAYS.
3. SEE GENERAL PLAN FOR ADDITIONAL INFORMATION.

LEGEND:

- CHANNELIZER (SURFACE MOUNT)

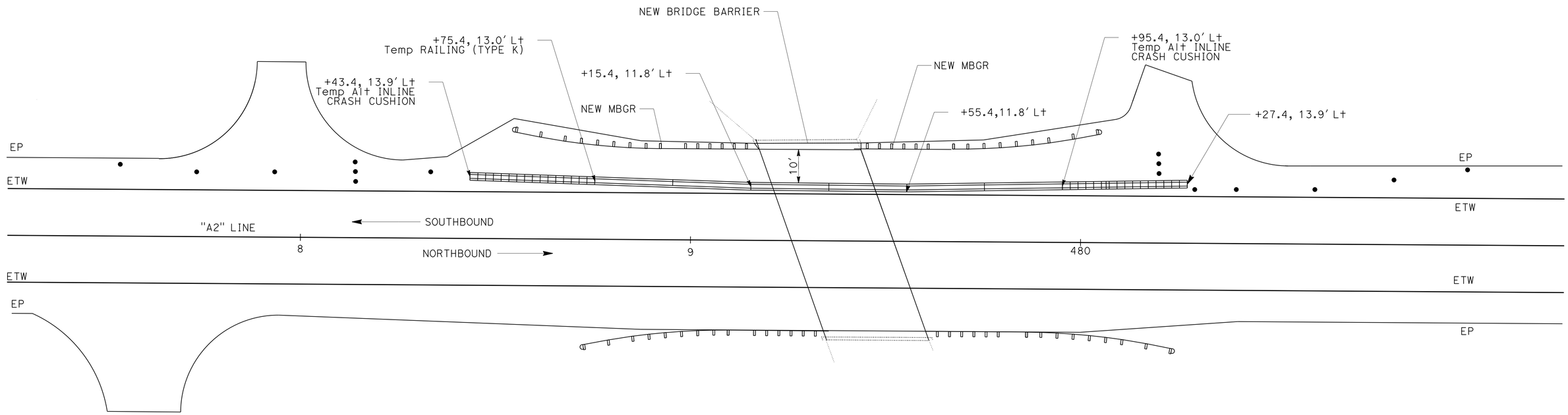

STANDISH IRRIGATION CANAL, BRIDGE No. 07-0030, PM 62.19

SOUTHBOUND CONCRETE BRIDGE BARRIER CONSTRUCTION

TRAFFIC HANDLING PLAN

NO SCALE

TH-1

STATE OF CALIFORNIA - DEPARTMENT OF TRANSPORTATION
Caltrans
DESIGN

FUNCTIONAL SUPERVISOR: STEVE TOPAL
CALCULATED-DESIGNED BY: WILL LESLIE
CHECKED BY: BYRON STANLEY
REVISED BY
DATE REVISED

P:\proj2\02\3c071_plans\pse\23c071md001.dgn

LAST REVISION DATE PLOTTED => 27-MAR-2014
01-10-14 TIME PLOTTED => 11:49

BORDER LAST REVISED 7/2/2010 | USERNAME => s123119 | DGN FILE => 23c071md001.dgn | RELATIVE BORDER SCALE IS IN INCHES 0 1 2 3 | UNIT 0319 | PROJECT NUMBER & PHASE 02-1200-0037-1 | EA: 02-3C071

Dist	COUNTY	ROUTE	POST MILES TOTAL PROJECT	SHEET No.	TOTAL SHEETS
02	Las	395	61.5/R76.6	102	161

REGISTERED CIVIL ENGINEER 01-10-14 DATE

03-24-14
PLANS APPROVAL DATE

REGISTERED PROFESSIONAL ENGINEER
BYRON STANLEY
No. C60161
Exp. 6-30-14
CIVIL
STATE OF CALIFORNIA

THE STATE OF CALIFORNIA OR ITS OFFICERS OR AGENTS SHALL NOT BE RESPONSIBLE FOR THE ACCURACY OR COMPLETENESS OF SCANNED COPIES OF THIS PLAN SHEET.

TRAFFIC HANDLING QUANTITES

SHEET NUMBER	TEMPORARY RAILING (TYPE K)	TEMPORARY IN-LINE CRASH CUSHION	CHANNELIZER (SURFACE MOUNT)
	LF	EA	EA
TH-1	240	4	20
TOTAL	240	4	20

TRAFFIC HANDLING QUANTITES
THQ-1

REVISED BY | DATE REVISED

WILL LESLIE | BYRON STANLEY

CALCULATED-DESIGNED BY | CHECKED BY

FUNCTIONAL SUPERVISOR: STEVE TOPAL

STATE OF CALIFORNIA - DEPARTMENT OF TRANSPORTATION
Caltrans
DESIGN

P:\proj2\02\3c071_plans\pse\23c071mf001.dgn

LAST REVISION 01-10-14 | DATE PLOTTED => 27-MAR-2014 | TIME PLOTTED => 11:49

Dist	COUNTY	ROUTE	POST MILES TOTAL PROJECT	SHEET No.	TOTAL SHEETS
02	Las	395	61.5/R76.6	103	161

REGISTERED CIVIL ENGINEER 01-10-14 DATE

03-24-14
PLANS APPROVAL DATE

REGISTERED PROFESSIONAL ENGINEER BYRON STANLEY No. C60161 Exp. 6-30-14 CIVIL STATE OF CALIFORNIA

THE STATE OF CALIFORNIA OR ITS OFFICERS OR AGENTS SHALL NOT BE RESPONSIBLE FOR THE ACCURACY OR COMPLETENESS OF SCANNED COPIES OF THIS PLAN SHEET.

LEGEND:

- SINGLE STRIPE MARKER
- STRIPE CHANGE LOCATION
- DELINEATOR (TYPE F)
- MARKER (CULVERT)
- MILEPOST MARKER
- MBGR MARKER (TYPE L-1)
- DELINEATOR (TYPE E)
- S = DELINEATOR SPACING
- TYPE IV ARROW
- TYPE III ARROW
- 1-1 ROADSIDE SIGN
- 1-1 PAVEMENT DELINEATION STRIPE DETAIL No.
- EXISTING SIGN TO REMAIN
- RESET ROADSIDE SIGN
- REMOVE ROADSIDE SIGN

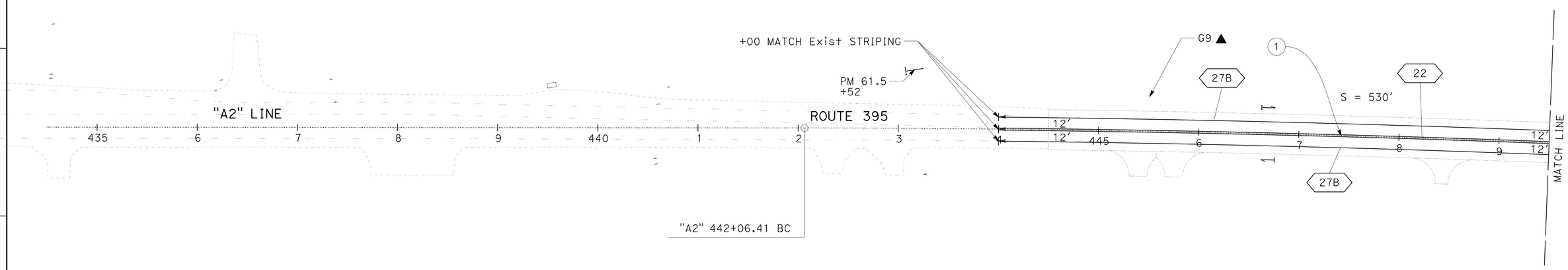

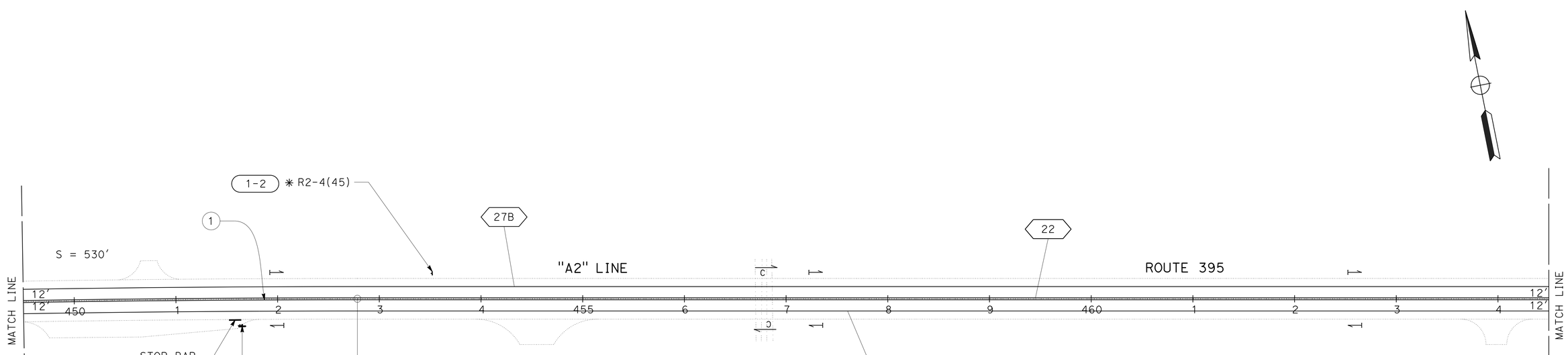

APPROVED FOR PAVEMENT DELINEATION AND SIGN WORK ONLY

PAVEMENT DELINEATION AND SIGN PLAN

SCALE: 1" = 50'

PD-1

REVISED BY | DATE REVISED

WILL LESLIE | FRANK RIVAS

CALCULATED-DESIGNED BY | CHECKED BY

FUNCTIONAL SUPERVISOR: STEVE TOPAL

STATE OF CALIFORNIA - DEPARTMENT OF TRANSPORTATION

Caltrans® DESIGN

P:\proj2\02\3c071_plans\pse\23c071na001.dgn

LAST REVISION 01-10-14 | DATE PLOTTED => 27-MAR-2014 | TIME PLOTTED => 11:49

Dist	COUNTY	ROUTE	POST MILES TOTAL PROJECT	SHEET No.	TOTAL SHEETS
02	Las	395	61.5/R76.6	104	161

REGISTERED CIVIL ENGINEER 01-10-14 DATE

03-24-14
PLANS APPROVAL DATE

REGISTERED PROFESSIONAL ENGINEER
BYRON STANLEY
No. C60161
Exp. 6-30-14
CIVIL
STATE OF CALIFORNIA

THE STATE OF CALIFORNIA OR ITS OFFICERS OR AGENTS SHALL NOT BE RESPONSIBLE FOR THE ACCURACY OR COMPLETENESS OF SCANNED COPIES OF THIS PLAN SHEET.

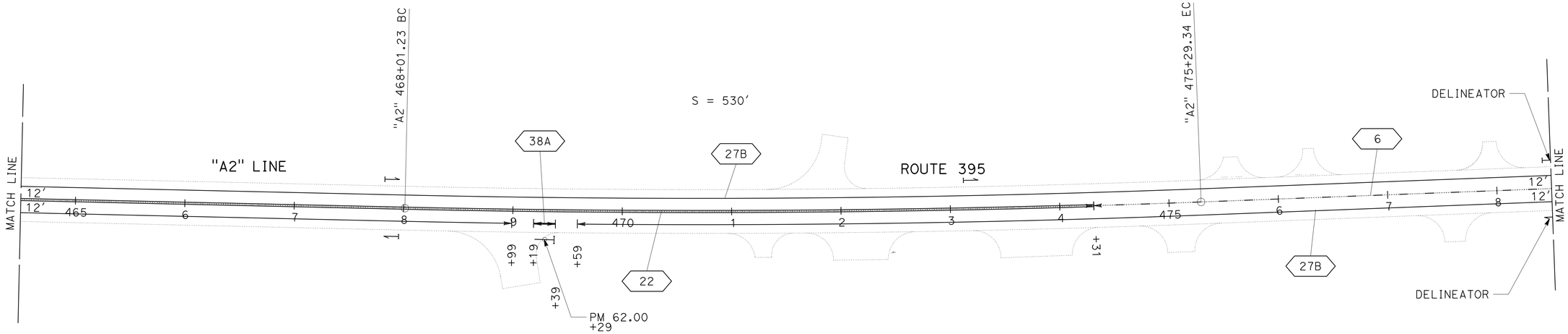

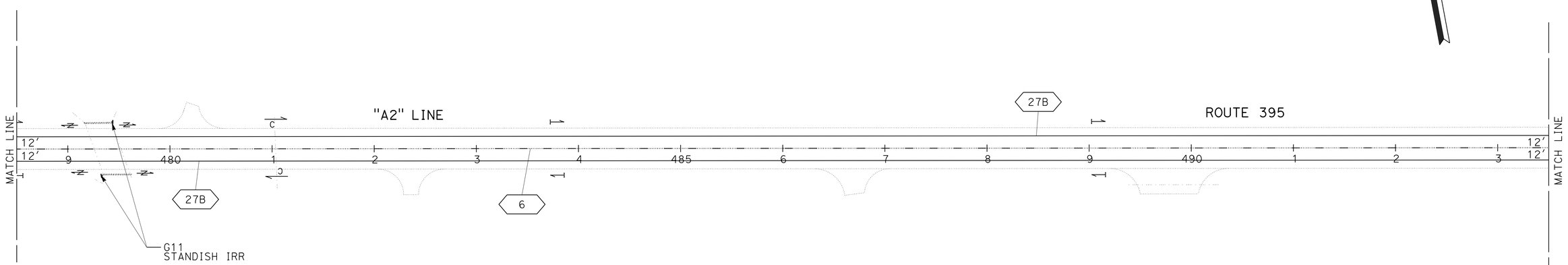

PAVEMENT DELINEATION AND SIGN PLAN

SCALE: 1" = 50'

PD-2

APPROVED FOR PAVEMENT DELINEATION AND SIGN WORK ONLY

REVISED BY	DATE REVISED

WILL LESLIE	FRANK RIVAS
CALCULATED-DESIGNED BY	CHECKED BY
FUNCTIONAL SUPERVISOR	STEVE TOPAL

STATE OF CALIFORNIA - DEPARTMENT OF TRANSPORTATION
Caltrans
DESIGN

P:\proj2\02\3c071_plans\pse\23c071na002.dgn

LAST REVISION 01-10-14
DATE PLOTTED => 27-MAR-2014
TIME PLOTTED => 11:49

Dist	COUNTY	ROUTE	POST MILES TOTAL PROJECT	SHEET No.	TOTAL SHEETS
02	Las	395	61.5/R76.6	105	161

REGISTERED CIVIL ENGINEER 01-10-14 DATE

03-24-14
PLANS APPROVAL DATE

REGISTERED PROFESSIONAL ENGINEER
BYRON STANLEY
No. C60161
Exp. 6-30-14
CIVIL
STATE OF CALIFORNIA

THE STATE OF CALIFORNIA OR ITS OFFICERS OR AGENTS SHALL NOT BE RESPONSIBLE FOR THE ACCURACY OR COMPLETENESS OF SCANNED COPIES OF THIS PLAN SHEET.

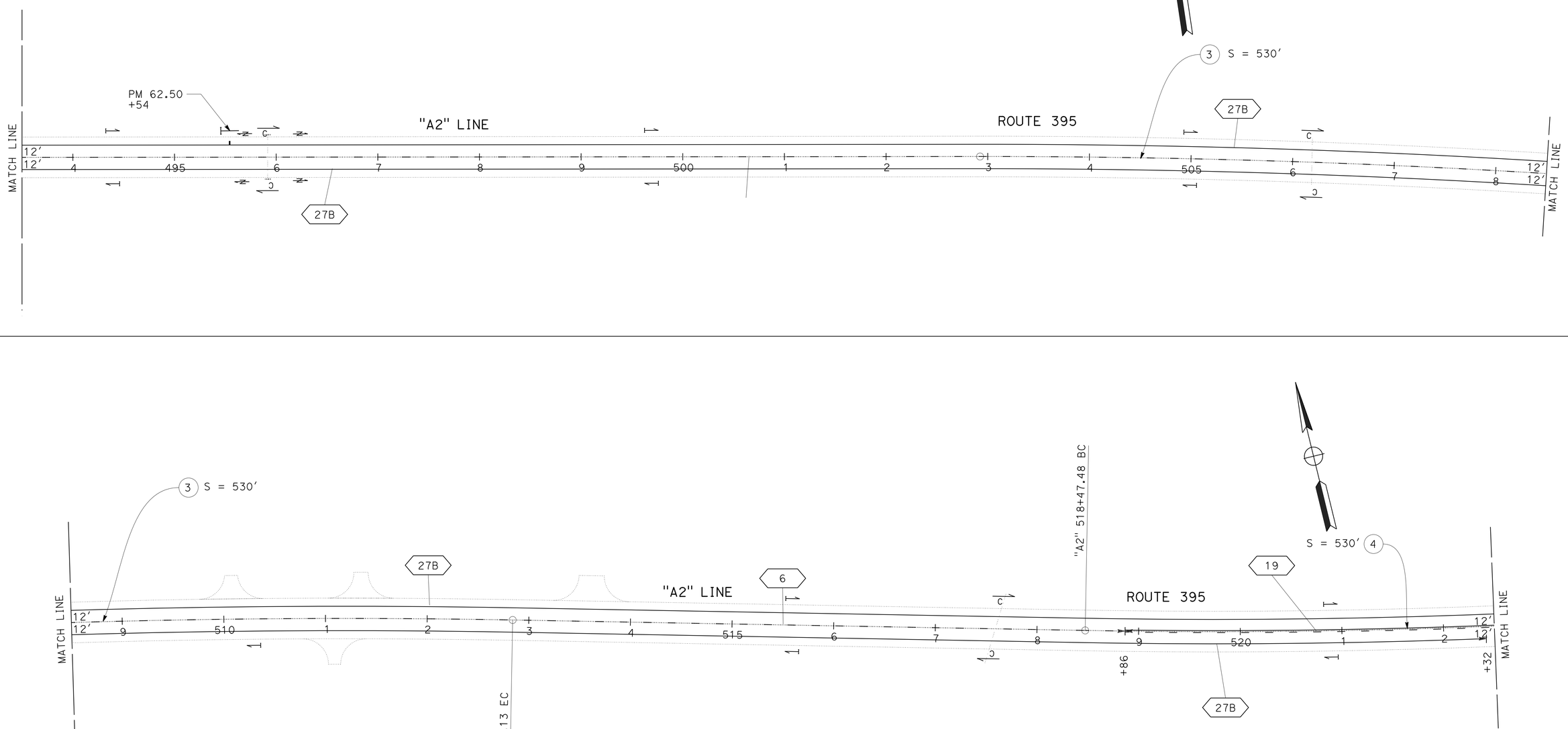

PAVEMENT DELINEATION AND SIGN PLAN

SCALE: 1" = 50′ **PD-3**

APPROVED FOR PAVEMENT DELINEATION AND SIGN WORK ONLY

REVISED BY	WILL LESLIE
DATE REVISED	FRANK RIVAS
CALCULATED-DESIGNED BY	
CHECKED BY	
FUNCTIONAL SUPERVISOR	STEVE TOPAL

STATE OF CALIFORNIA - DEPARTMENT OF TRANSPORTATION
Caltrans® **DESIGN**

P:\proj2\02\3c071_plans\pse\23c071na003.dgn

LAST REVISION 01-10-14 | DATE PLOTTED => 27-MAR-2014 TIME PLOTTED => 11:49

Dist	COUNTY	ROUTE	POST MILES TOTAL PROJECT	SHEET No.	TOTAL SHEETS
02	Las	395	61.5/R76.6	106	161

REGISTERED CIVIL ENGINEER 01-10-14 DATE

03-24-14
PLANS APPROVAL DATE

REGISTERED PROFESSIONAL ENGINEER BYRON STANLEY No. C60161 Exp. 6-30-14 CIVIL STATE OF CALIFORNIA

THE STATE OF CALIFORNIA OR ITS OFFICERS OR AGENTS SHALL NOT BE RESPONSIBLE FOR THE ACCURACY OR COMPLETENESS OF SCANNED COPIES OF THIS PLAN SHEET.

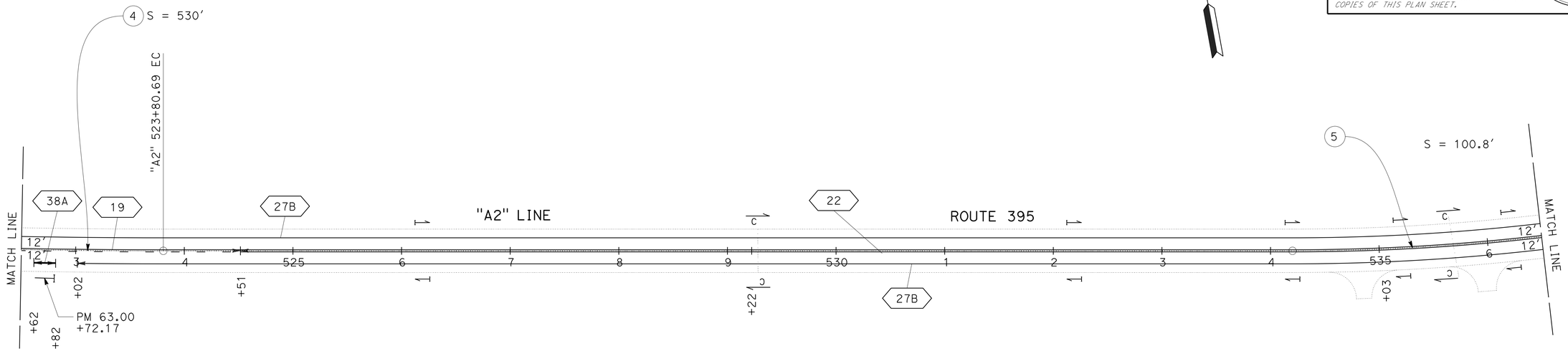

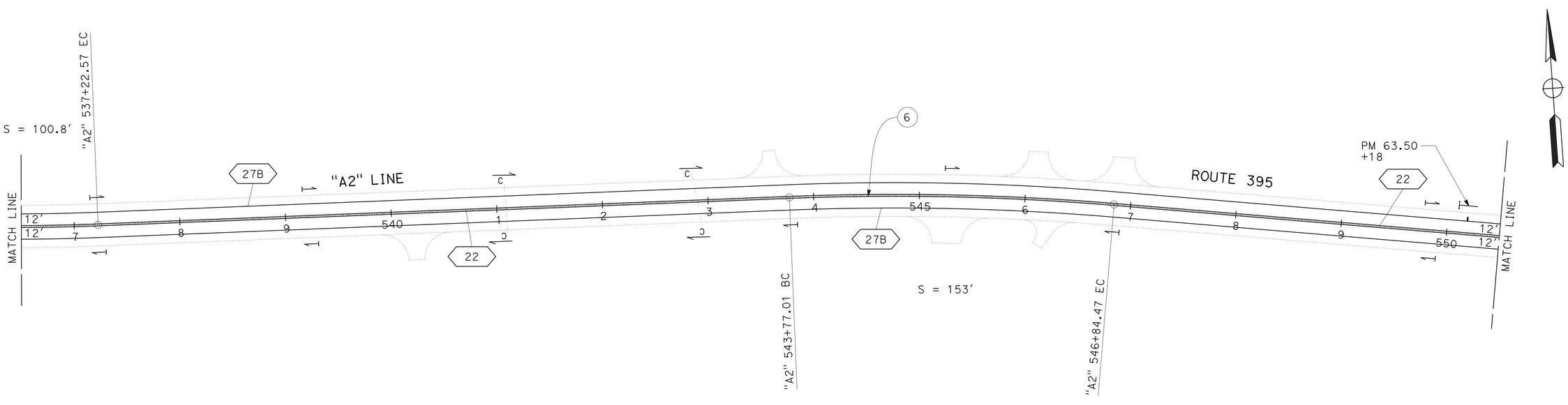

PAVEMENT DELINEATION AND SIGN PLAN

SCALE: 1" = 50′

PD-4

APPROVED FOR PAVEMENT DELINEATION AND SIGN WORK ONLY

REVISED BY	DATE REVISED

CALCULATED-DESIGNED BY: WILL LESLIE
CHECKED BY: FRANK RIVAS
FUNCTIONAL SUPERVISOR: STEVE TOPAL

STATE OF CALIFORNIA - DEPARTMENT OF TRANSPORTATION
Caltrans® **DESIGN**

P:\proj2\02\3c071_plans\pse\23c071na004.dgn

LAST REVISION 01-10-14 | DATE PLOTTED => 27-MAR-2014 | TIME PLOTTED => 11:49

Dist	COUNTY	ROUTE	POST MILES TOTAL PROJECT	SHEET No.	TOTAL SHEETS
02	Las	395	61.5/R76.6	107	161

REGISTERED CIVIL ENGINEER 01-10-14 DATE

03-24-14
PLANS APPROVAL DATE

REGISTERED PROFESSIONAL ENGINEER
BYRON STANLEY
No. C60161
Exp. 6-30-14
CIVIL
STATE OF CALIFORNIA

THE STATE OF CALIFORNIA OR ITS OFFICERS OR AGENTS SHALL NOT BE RESPONSIBLE FOR THE ACCURACY OR COMPLETENESS OF SCANNED COPIES OF THIS PLAN SHEET.

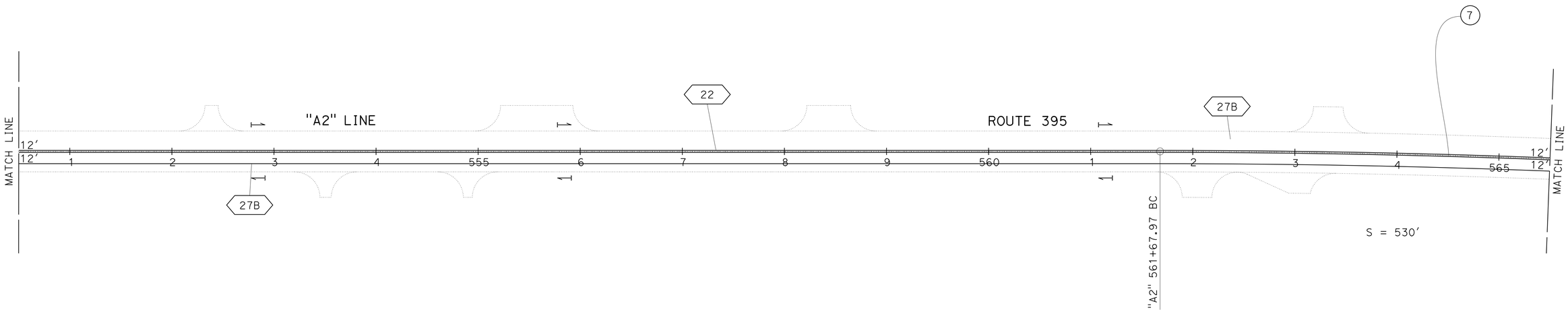

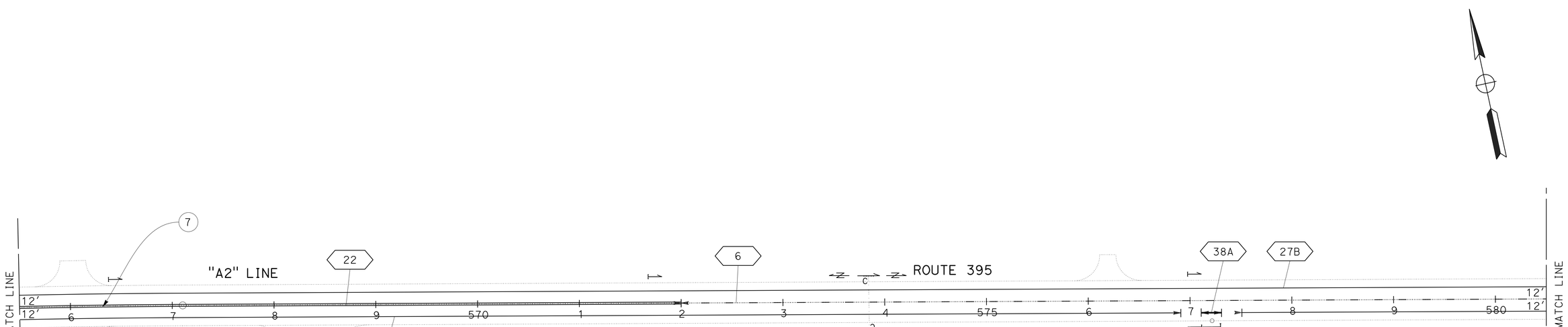

PAVEMENT DELINEATION AND SIGN PLAN

SCALE: 1" = 50′

PD-5

APPROVED FOR PAVEMENT DELINEATION AND SIGN WORK ONLY

REVISED BY	DATE REVISED

CALCULATED-DESIGNED BY	WILL LESLIE
CHECKED BY	FRANK RIVAS
FUNCTIONAL SUPERVISOR	STEVE TOPAL

STATE OF CALIFORNIA - DEPARTMENT OF TRANSPORTATION
Caltrans® **DESIGN**

P:\proj2\02\3c071_plans\pse\23c071na005.dgn

LAST REVISION 01-10-14 | DATE PLOTTED => 27-MAR-2014 | TIME PLOTTED => 11:49

Dist	COUNTY	ROUTE	POST MILES TOTAL PROJECT	SHEET No.	TOTAL SHEETS
02	Las	395	61.5/R76.6	108	161

REGISTERED CIVIL ENGINEER 01-10-14 DATE

03-24-14
PLANS APPROVAL DATE

REGISTERED PROFESSIONAL ENGINEER BYRON STANLEY No. C60161 Exp. 6-30-14 CIVIL STATE OF CALIFORNIA

THE STATE OF CALIFORNIA OR ITS OFFICERS OR AGENTS SHALL NOT BE RESPONSIBLE FOR THE ACCURACY OR COMPLETENESS OF SCANNED COPIES OF THIS PLAN SHEET.

NOTE:

1. SEE PAVEMENT DELINEATION DETAILS FOR STOP BAR DIMENSIONS.

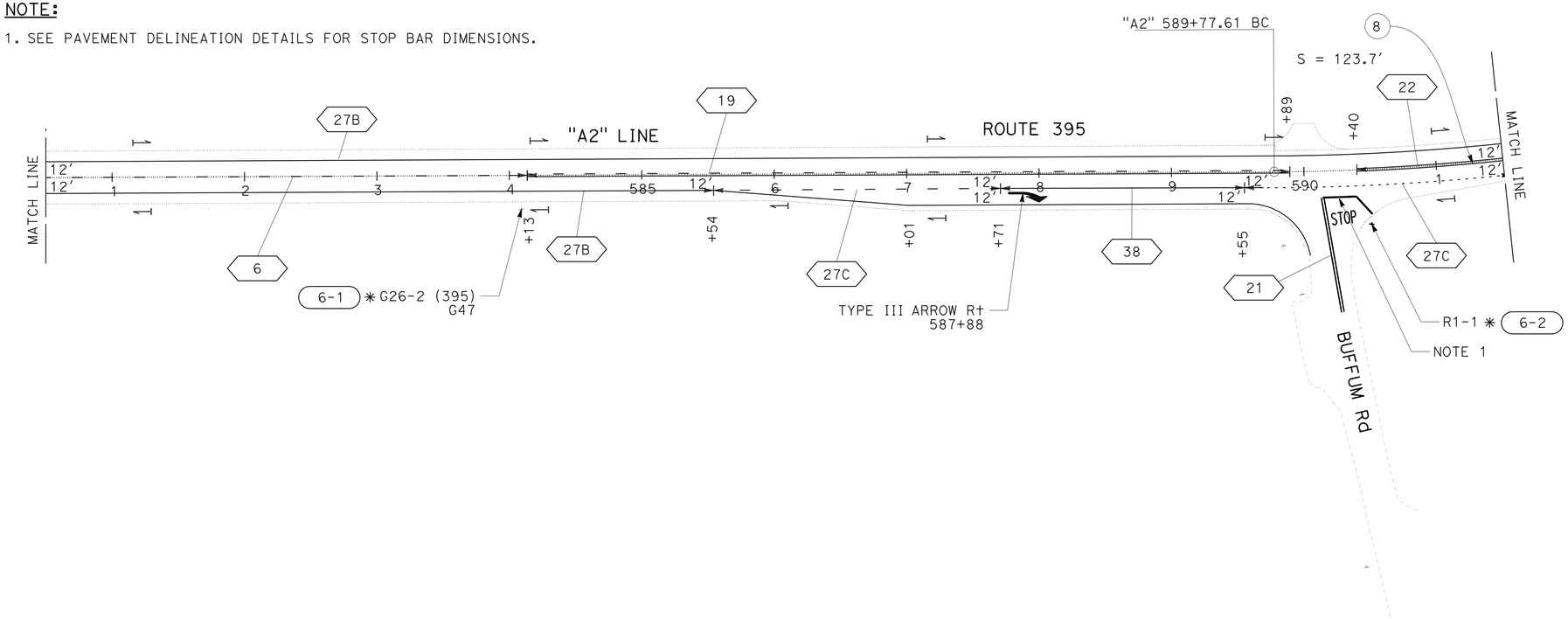

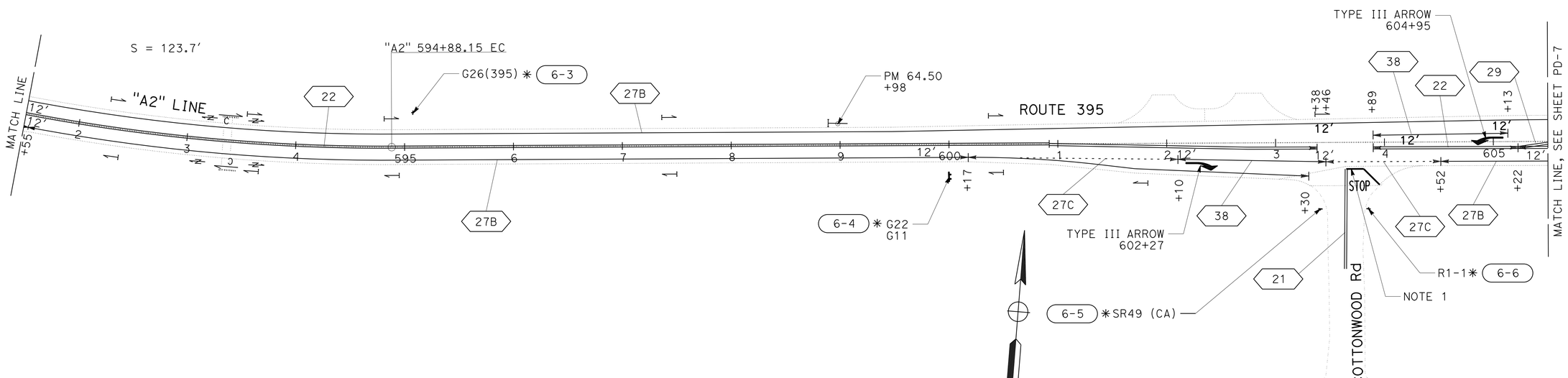

PAVEMENT DELINEATION AND SIGN PLAN

SCALE: 1" = 50'

PD-6

APPROVED FOR PAVEMENT DELINEATION AND SIGN WORK ONLY

REVISED BY | DATE REVISED
WILL LESLIE | FRANK RIVAS
CALCULATED-DESIGNED BY | CHECKED BY
FUNCTIONAL SUPERVISOR
STEVE TOPAL

STATE OF CALIFORNIA - DEPARTMENT OF TRANSPORTATION
Caltrans
DESIGN

P:\proj2\02\3c071_plans\pse\23c071na006.dgn

LAST REVISION 01-10-14 | DATE PLOTTED => 27-MAR-2014 | TIME PLOTTED => 11:49

Dist	COUNTY	ROUTE	POST MILES TOTAL PROJECT	SHEET No.	TOTAL SHEETS
02	Las	395	61.5/R76.6	109	161

REGISTERED CIVIL ENGINEER 01-10-14 DATE

03-24-14
PLANS APPROVAL DATE

REGISTERED PROFESSIONAL ENGINEER BYRON STANLEY No. C60161 Exp. 6-30-14 CIVIL STATE OF CALIFORNIA

THE STATE OF CALIFORNIA OR ITS OFFICERS OR AGENTS SHALL NOT BE RESPONSIBLE FOR THE ACCURACY OR COMPLETENESS OF SCANNED COPIES OF THIS PLAN SHEET.

NOTE:

1. SEE PAVEMENT DELINEATION DETAILS FOR STOP BAR DIMENSIONS.

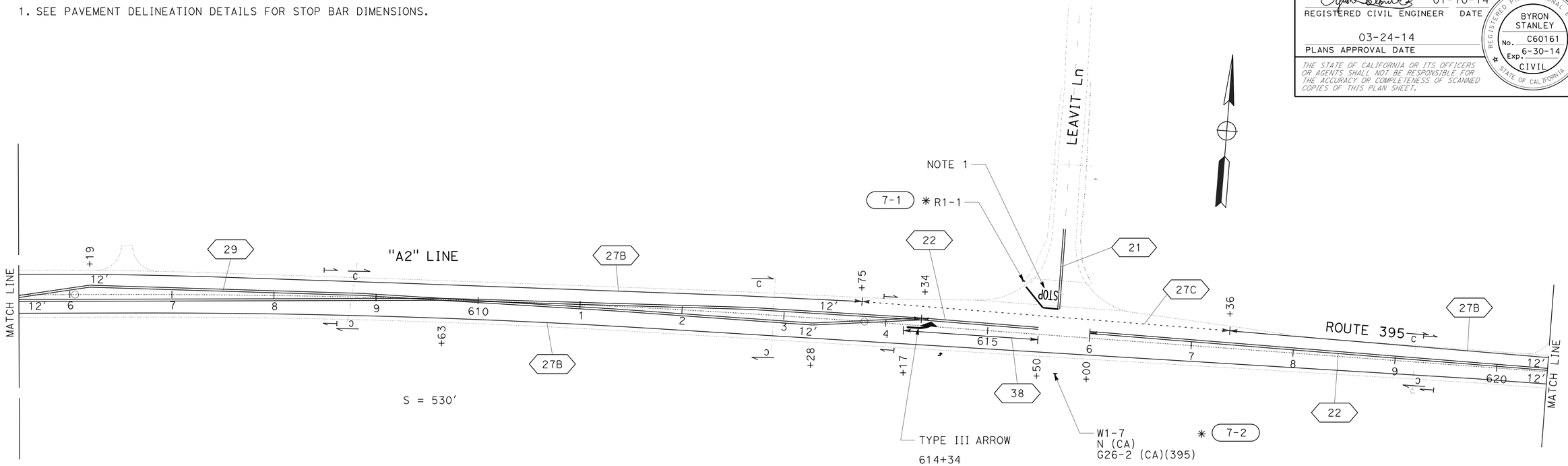

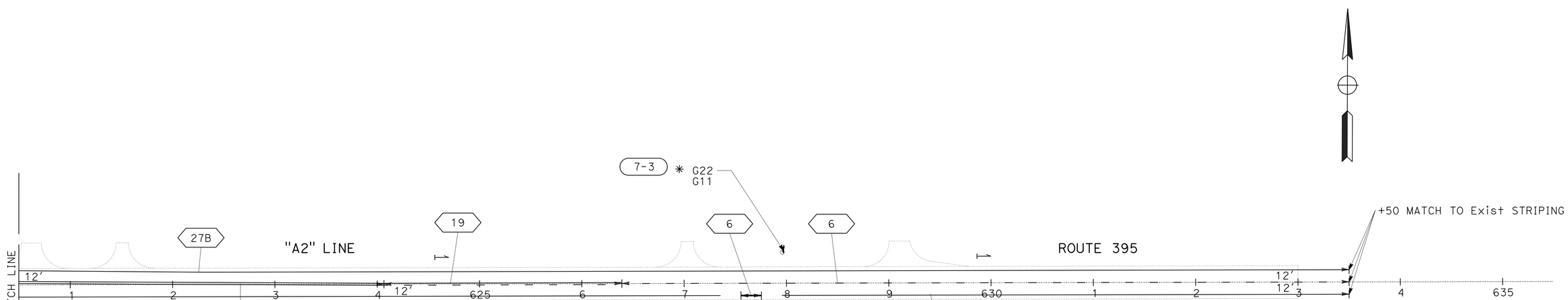

APPROVED FOR PAVEMENT DELINEATION AND SIGN WORK ONLY

PAVEMENT DELINEATION AND SIGN PLAN

SCALE: 1" = 50'

PD-7

REVISED BY | DATE REVISED
WILL LESLIE | FRANK RIVAS
CALCULATED-DESIGNED BY | CHECKED BY
FUNCTIONAL SUPERVISOR: STEVE TOPAL

STATE OF CALIFORNIA - DEPARTMENT OF TRANSPORTATION
Caltrans® DESIGN

P:\proj2\02\3c071_plans\pse\23c071na007.dgn

LAST REVISION 01-10-14 | DATE PLOTTED => 27-MAR-2014 | TIME PLOTTED => 11:49

Dist	COUNTY	ROUTE	POST MILES TOTAL PROJECT	SHEET No.	TOTAL SHEETS
02	Las	395	61.5/R76.6	110	161

REGISTERED CIVIL ENGINEER 01-10-14 DATE

03-24-14
PLANS APPROVAL DATE

REGISTERED PROFESSIONAL ENGINEER BYRON STANLEY No. C60161 Exp. 6-30-14 CIVIL STATE OF CALIFORNIA

THE STATE OF CALIFORNIA OR ITS OFFICERS OR AGENTS SHALL NOT BE RESPONSIBLE FOR THE ACCURACY OR COMPLETENESS OF SCANNED COPIES OF THIS PLAN SHEET.

NOTE:

1. SEE PAVEMENT DELINEATION DETAILS FOR STOP BAR DIMENSIONS.

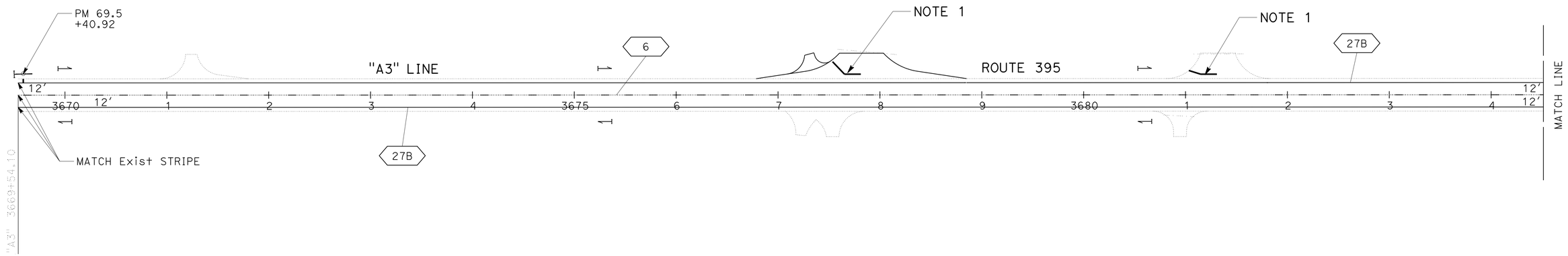

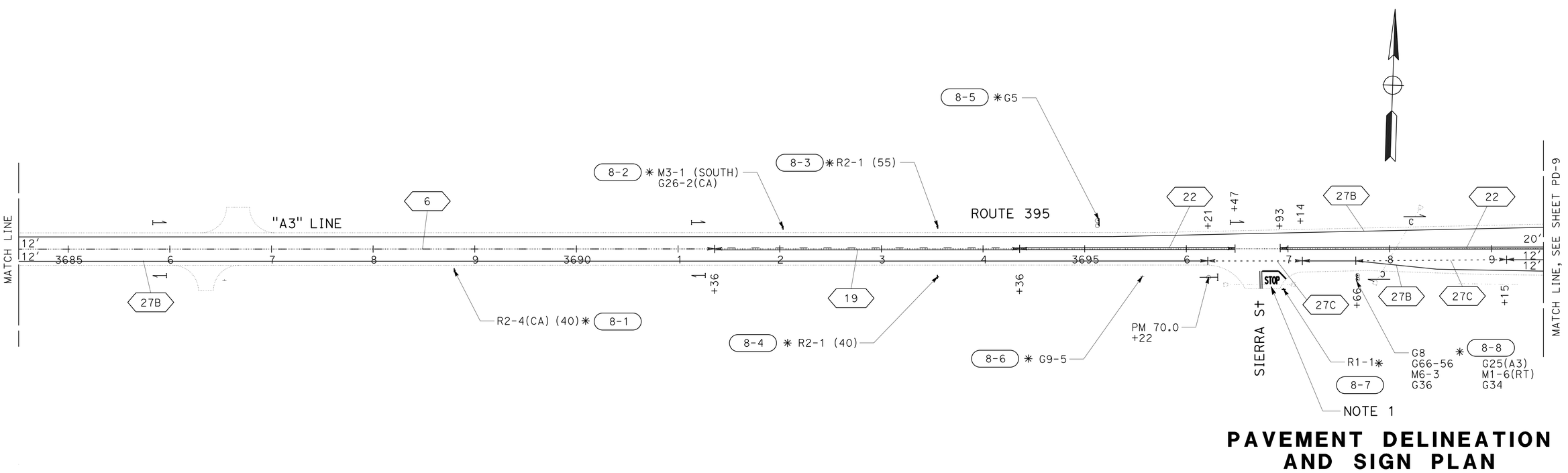

PAVEMENT DELINEATION AND SIGN PLAN

SCALE: 1" = 50'

PD-8

APPROVED FOR PAVEMENT DELINEATION AND SIGN WORK ONLY

REVISED BY	DATE REVISED
WILL LESLIE	FRANK RIVAS
CALCULATED-DESIGNED BY	CHECKED BY
FUNCTIONAL SUPERVISOR	STEVE TOPAL

STATE OF CALIFORNIA - DEPARTMENT OF TRANSPORTATION
Caltrans
DESIGN

P:\proj2\02\3c071_plans\pse\23c071na008.dgn

LAST REVISION 01-10-14 | DATE PLOTTED => 27-MAR-2014 | TIME PLOTTED => 11:49

Dist	COUNTY	ROUTE	POST MILES TOTAL PROJECT	SHEET No.	TOTAL SHEETS
02	Las	395	61.5/R76.6	111	161

REGISTERED CIVIL ENGINEER 01-10-14 DATE

03-24-14
PLANS APPROVAL DATE

REGISTERED PROFESSIONAL ENGINEER BYRON STANLEY No. C60161 Exp. 6-30-14 CIVIL STATE OF CALIFORNIA

THE STATE OF CALIFORNIA OR ITS OFFICERS OR AGENTS SHALL NOT BE RESPONSIBLE FOR THE ACCURACY OR COMPLETENESS OF SCANNED COPIES OF THIS PLAN SHEET.

NOTE:

1. SEE PAVEMENT DELINEATION DETAILS FOR STOP BAR DIMENSIONS.

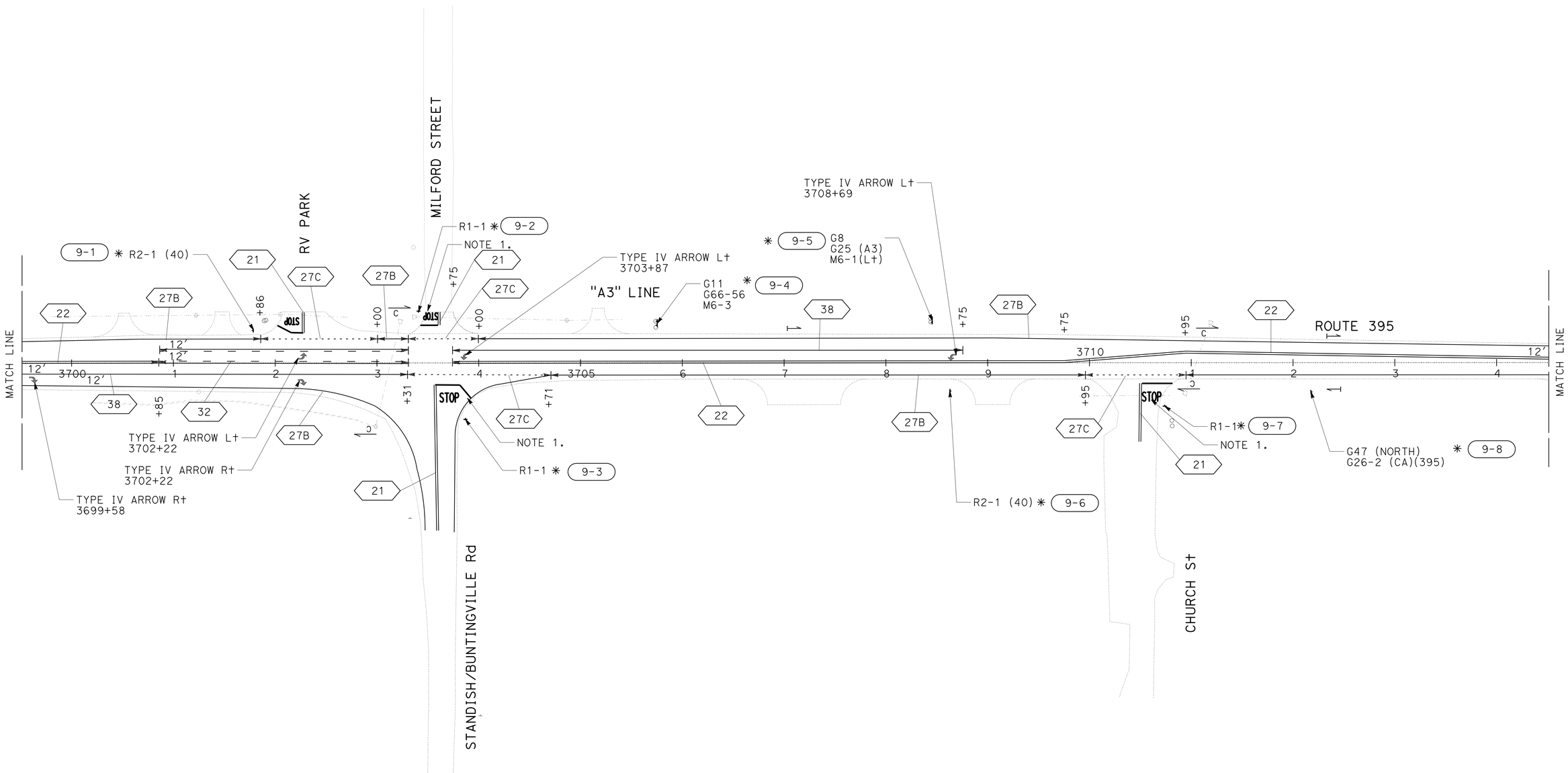

APPROVED FOR PAVEMENT DELINEATION AND SIGN WORK ONLY

PAVEMENT DELINEATION AND SIGN PLAN

SCALE: 1" = 50'

PD-9

REVISED BY	DATE REVISED

CALCULATED-DESIGNED BY: WILL LESLIE
CHECKED BY: FRANK RIVAS
FUNCTIONAL SUPERVISOR: STEVE TOPAL

STATE OF CALIFORNIA - DEPARTMENT OF TRANSPORTATION
Caltrans DESIGN

P:\proj2\02\3c071_plans\pse\23c071na009.dgn

LAST REVISION 01-10-14 | DATE PLOTTED => 27-MAR-2014 | TIME PLOTTED => 11:49

BORDER LAST REVISED 7/2/2010 | USERNAME => s123119 | DGN FILE => 23c071na009.dgn | RELATIVE BORDER SCALE IS IN INCHES 0 1 2 3 | UNIT 0319 | PROJECT NUMBER & PHASE 02-1200-0037-1 | EA: 02-3C071

NOTE:

1. SEE PAVEMENT DELINEATION DETAILS FOR STOP BAR DIMENSIONS.

Dist	COUNTY	ROUTE	POST MILES TOTAL PROJECT	SHEET No.	TOTAL SHEETS
02	Las	395	61.5/R76.6	112	161

REGISTERED CIVIL ENGINEER 01-10-14 DATE

03-24-14
PLANS APPROVAL DATE

REGISTERED PROFESSIONAL ENGINEER BYRON STANLEY No. C60161 Exp. 6-30-14 CIVIL STATE OF CALIFORNIA

THE STATE OF CALIFORNIA OR ITS OFFICERS OR AGENTS SHALL NOT BE RESPONSIBLE FOR THE ACCURACY OR COMPLETENESS OF SCANNED COPIES OF THIS PLAN SHEET.

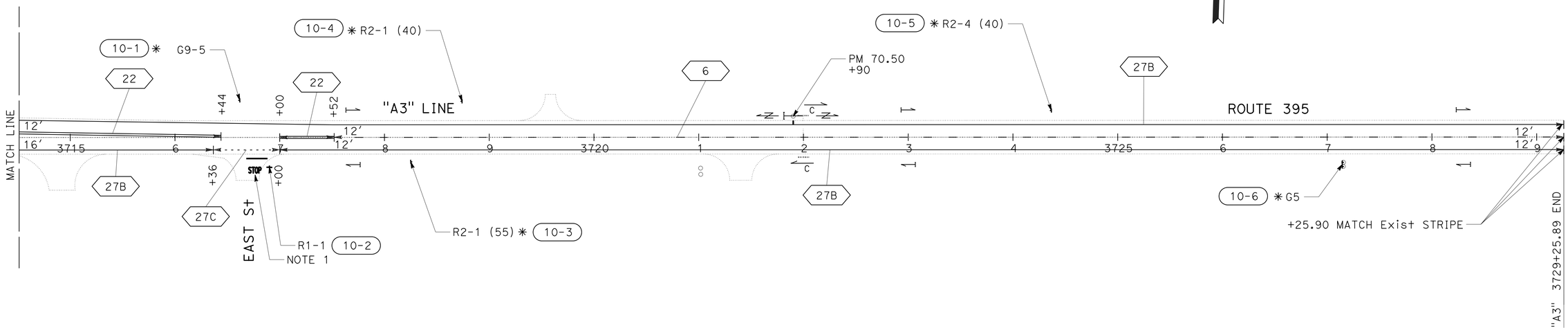

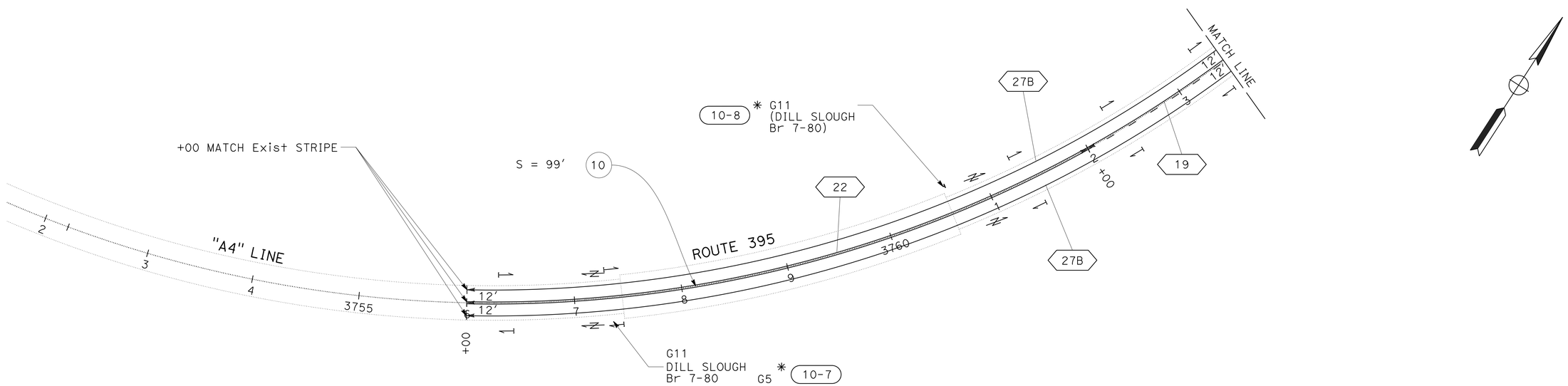

PAVEMENT DELINEATION AND SIGN PLAN

SCALE: 1" = 50'

PD-10

APPROVED FOR PAVEMENT DELINEATION AND SIGN WORK ONLY

REVISED BY	DATE REVISED
WILL LESLIE	FRANK RIVAS
CALCULATED-DESIGNED BY	CHECKED BY
FUNCTIONAL SUPERVISOR	STEVE TOPAL

STATE OF CALIFORNIA - DEPARTMENT OF TRANSPORTATION
Caltrans® DESIGN

P:\proj2\02\3c071_plans\pse\23c071na010.dgn

LAST REVISION 01-10-14 | DATE PLOTTED => 27-MAR-2014 TIME PLOTTED => 11:49

Dist	COUNTY	ROUTE	POST MILES TOTAL PROJECT	SHEET No.	TOTAL SHEETS
02	Las	395	61.5/R76.6	113	161

REGISTERED CIVIL ENGINEER 01-10-14 DATE

03-24-14
PLANS APPROVAL DATE

REGISTERED PROFESSIONAL ENGINEER BYRON STANLEY No. C60161 Exp. 6-30-14 CIVIL STATE OF CALIFORNIA

THE STATE OF CALIFORNIA OR ITS OFFICERS OR AGENTS SHALL NOT BE RESPONSIBLE FOR THE ACCURACY OR COMPLETENESS OF SCANNED COPIES OF THIS PLAN SHEET.

NOTE:

1. SEE PAVEMENT DELINEATION DETAILS FOR STOP BAR DIMENSIONS.

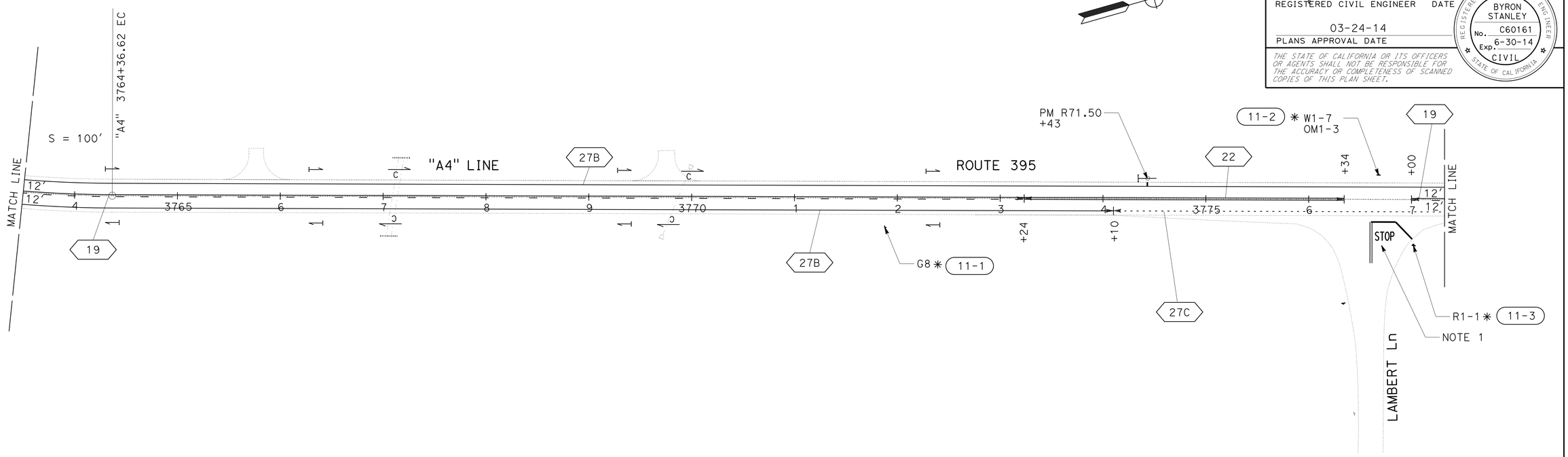

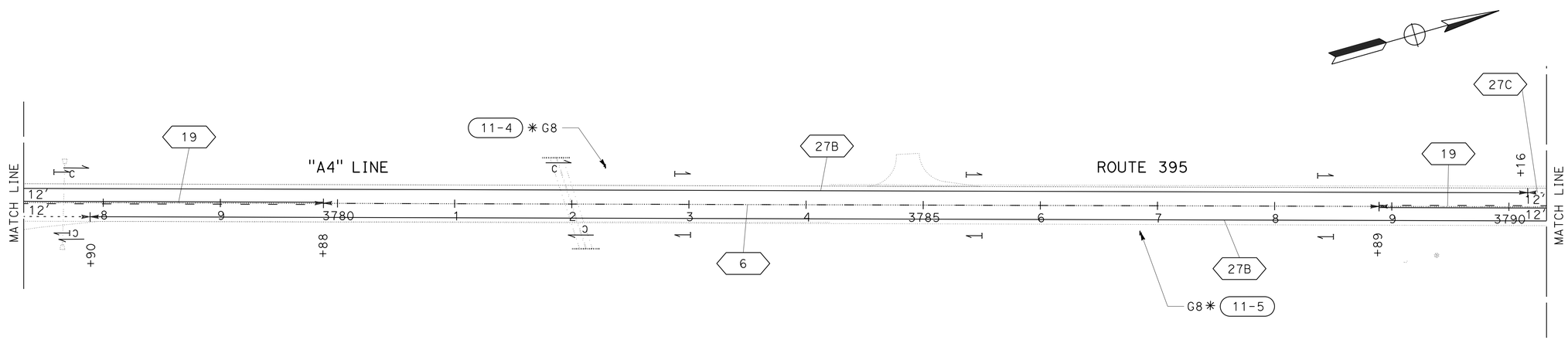

PAVEMENT DELINEATION AND SIGN PLAN

SCALE: 1" = 50'

PD-11

APPROVED FOR PAVEMENT DELINEATION AND SIGN WORK ONLY

REVISED BY	DATE REVISED

CALCULATED-DESIGNED BY: WILL LESLIE
CHECKED BY: FRANK RIVAS
FUNCTIONAL SUPERVISOR: STEVE TOPAL

STATE OF CALIFORNIA - DEPARTMENT OF TRANSPORTATION
Caltrans DESIGN

P:\proj2\02\3c071_plans\pse\23c071na011.dgn

LAST REVISION 01-10-14 | DATE PLOTTED => 27-MAR-2014 TIME PLOTTED => 11:49

Dist	COUNTY	ROUTE	POST MILES TOTAL PROJECT	SHEET No.	TOTAL SHEETS
02	Las	395	61.5/R76.6	114	161

REGISTERED CIVIL ENGINEER 01-10-14 DATE

03-24-14
PLANS APPROVAL DATE

REGISTERED PROFESSIONAL ENGINEER BYRON STANLEY No. C60161 Exp. 6-30-14 CIVIL STATE OF CALIFORNIA

THE STATE OF CALIFORNIA OR ITS OFFICERS OR AGENTS SHALL NOT BE RESPONSIBLE FOR THE ACCURACY OR COMPLETENESS OF SCANNED COPIES OF THIS PLAN SHEET.

1. SEE PAVEMENT DELINEATION DETAILS FOR STOP BAR DIMENSIONS.

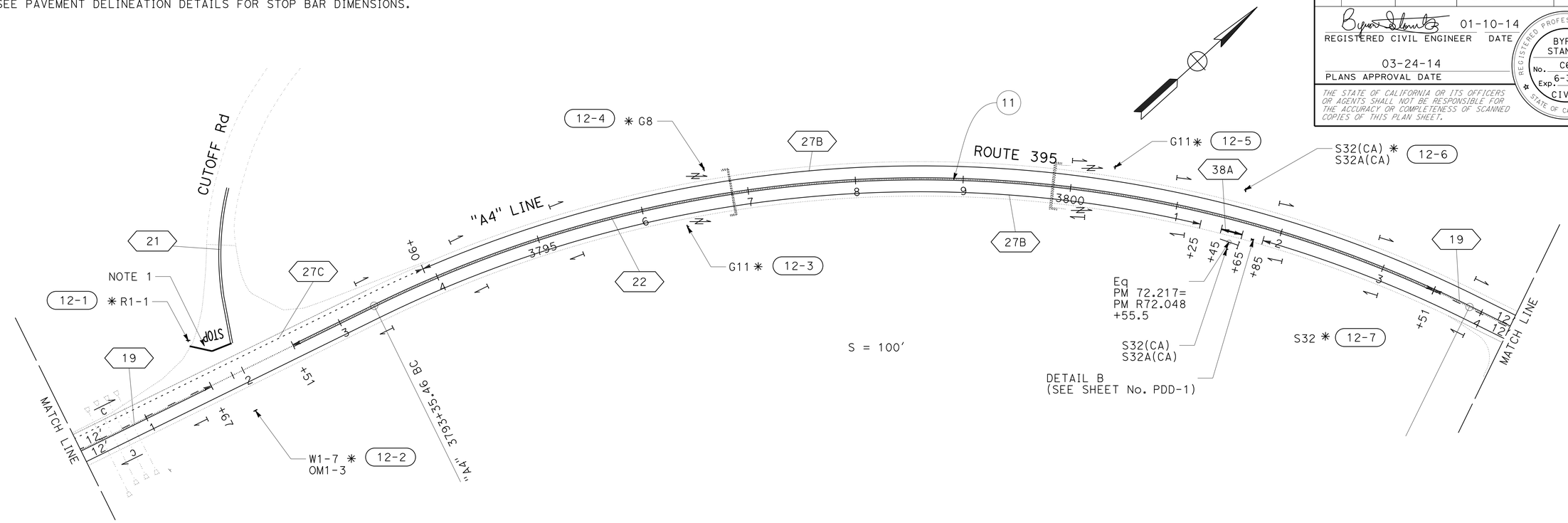

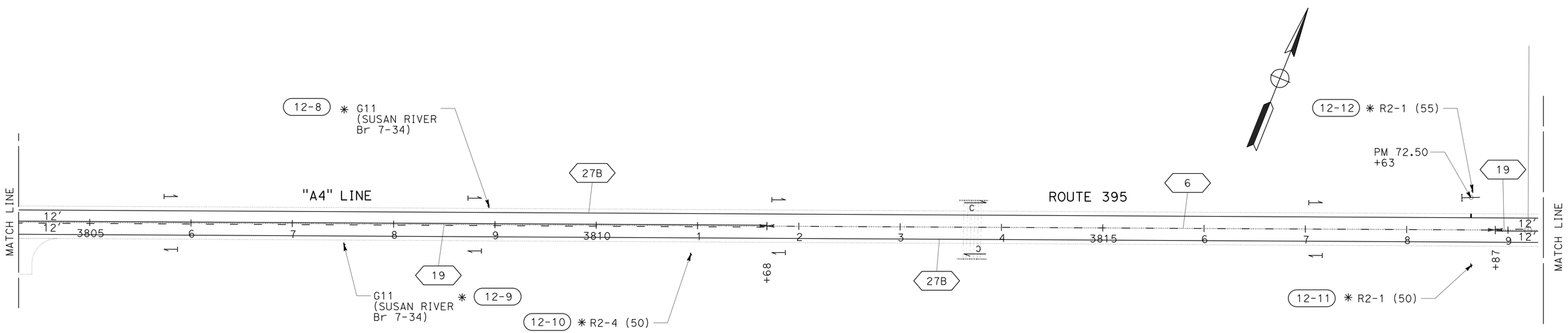

PAVEMENT DELINEATION AND SIGN PLAN

SCALE: 1" = 50'

PD-12

APPROVED FOR PAVEMENT DELINEATION AND SIGN WORK ONLY

REVISED BY | DATE REVISED
WILL LESLIE | FRANK RIVAS
CALCULATED-DESIGNED BY | CHECKED BY
FUNCTIONAL SUPERVISOR: STEVE TOPAL

STATE OF CALIFORNIA - DEPARTMENT OF TRANSPORTATION
Caltrans DESIGN

P:\proj2\02\3c071_plans\pse\23c071na012.dgn

LAST REVISION 01-10-14 | DATE PLOTTED => 27-MAR-2014 TIME PLOTTED => 11:49

Dist	COUNTY	ROUTE	POST MILES TOTAL PROJECT	SHEET No.	TOTAL SHEETS
02	Las	395	61.5/R76.6	115	161

REGISTERED CIVIL ENGINEER 01-10-14 DATE

03-24-14
PLANS APPROVAL DATE

REGISTERED PROFESSIONAL ENGINEER
BYRON STANLEY
No. C60161
Exp. 6-30-14
CIVIL
STATE OF CALIFORNIA

THE STATE OF CALIFORNIA OR ITS OFFICERS OR AGENTS SHALL NOT BE RESPONSIBLE FOR THE ACCURACY OR COMPLETENESS OF SCANNED COPIES OF THIS PLAN SHEET.

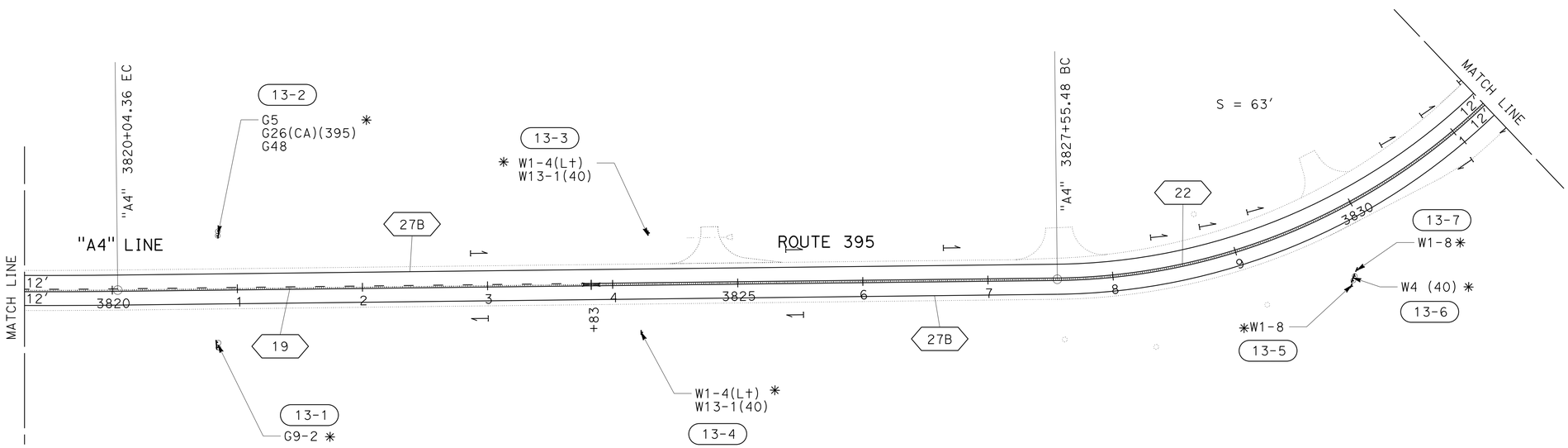

APPROVED FOR PAVEMENT DELINEATION AND SIGN WORK ONLY

PAVEMENT DELINEATION AND SIGN PLAN

SCALE: 1" = 50'

PD-13

REVISED BY	DATE REVISED

CALCULATED-DESIGNED BY: WILL LESLIE
CHECKED BY: FRANK RIVAS
FUNCTIONAL SUPERVISOR: STEVE TOPAL

STATE OF CALIFORNIA - DEPARTMENT OF TRANSPORTATION
Caltrans
DESIGN

P:\proj2\02\3c071_plans\pse\23c071na013.dgn

LAST REVISION 01-10-14 | DATE PLOTTED => 27-MAR-2014 | TIME PLOTTED => 11:49

Dist	COUNTY	ROUTE	POST MILES TOTAL PROJECT	SHEET No.	TOTAL SHEETS
02	Las	395	61.5/R76.6	116	161

REGISTERED CIVIL ENGINEER 01-10-14 DATE

03-24-14
PLANS APPROVAL DATE

REGISTERED PROFESSIONAL ENGINEER BYRON STANLEY No. C60161 Exp. 6-30-14 CIVIL STATE OF CALIFORNIA

THE STATE OF CALIFORNIA OR ITS OFFICERS OR AGENTS SHALL NOT BE RESPONSIBLE FOR THE ACCURACY OR COMPLETENESS OF SCANNED COPIES OF THIS PLAN SHEET.

NOTE:

1. SEE PAVEMENT DELINEATION DETAILS FOR STOP BAR DIMENSIONS.

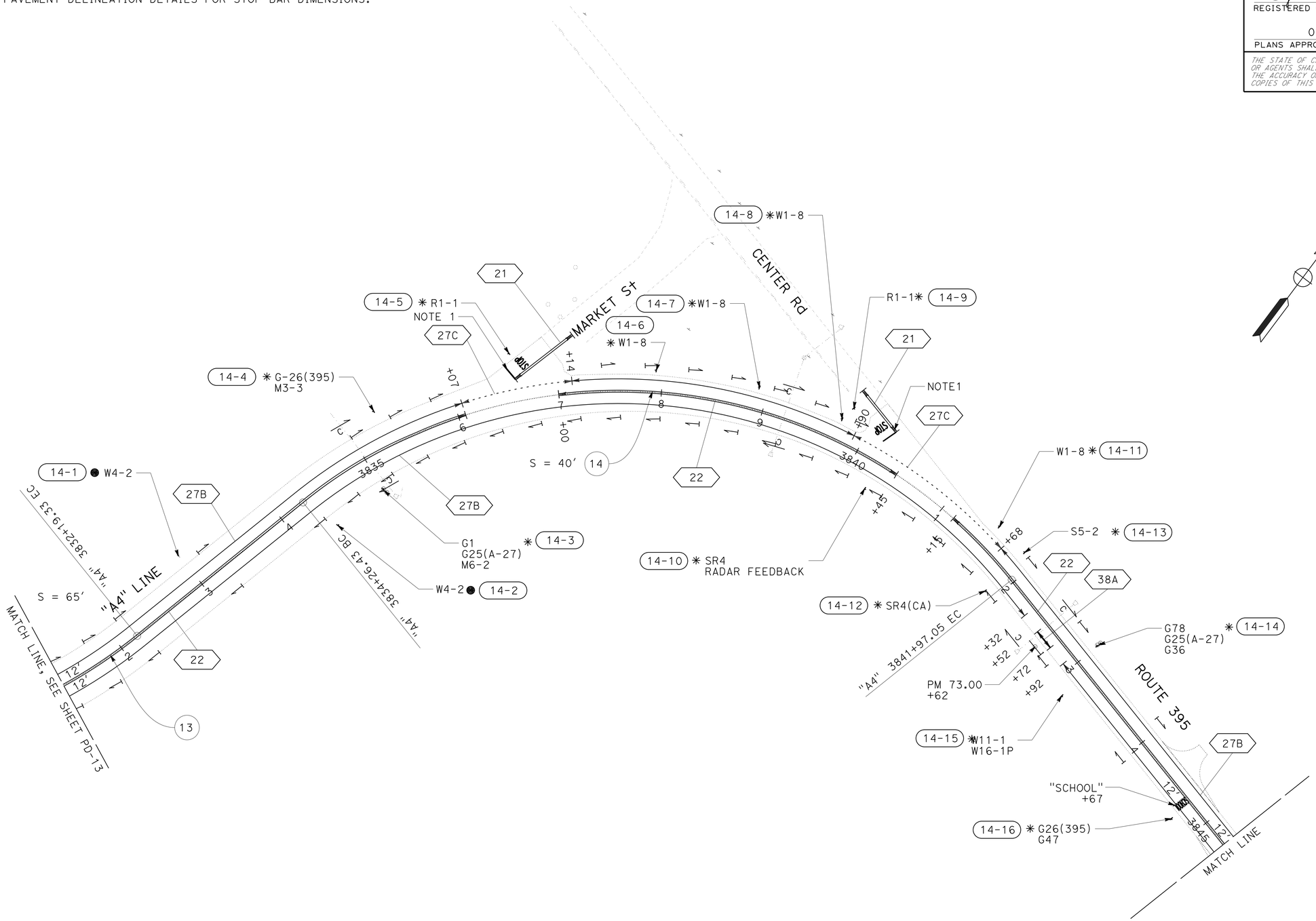

PAVEMENT DELINEATION AND SIGN PLAN

SCALE: 1" = 50' **PD-14**

APPROVED FOR PAVEMENT DELINEATION AND SIGN WORK ONLY

REVISED BY	DATE REVISED

CALCULATED-DESIGNED BY	CHECKED BY
WILL LESLIE	FRANK RIVAS

FUNCTIONAL SUPERVISOR: STEVE TOPAL

STATE OF CALIFORNIA - DEPARTMENT OF TRANSPORTATION

Caltrans® DESIGN

P:\proj2\02\3c071_plans\pse\23c071na014.dgn

LAST REVISION 01-10-14 | DATE PLOTTED => 27-MAR-2014 | TIME PLOTTED => 11:49

Dist	COUNTY	ROUTE	POST MILES TOTAL PROJECT	SHEET No.	TOTAL SHEETS
02	Las	395	61.5/R76.6	117	161

REGISTERED CIVIL ENGINEER 01-10-14 DATE

03-24-14
PLANS APPROVAL DATE

REGISTERED PROFESSIONAL ENGINEER BYRON STANLEY No. C60161 Exp. 6-30-14 CIVIL STATE OF CALIFORNIA

THE STATE OF CALIFORNIA OR ITS OFFICERS OR AGENTS SHALL NOT BE RESPONSIBLE FOR THE ACCURACY OR COMPLETENESS OF SCANNED COPIES OF THIS PLAN SHEET.

NOTE:

1. SEE PAVEMENT DELINEATION DETAILS FOR STOP BAR DIMENSIONS.

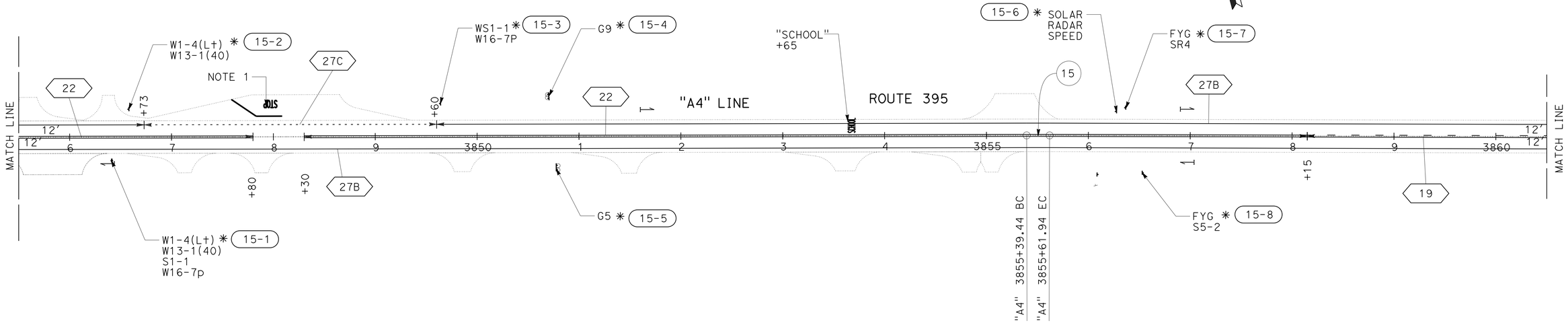

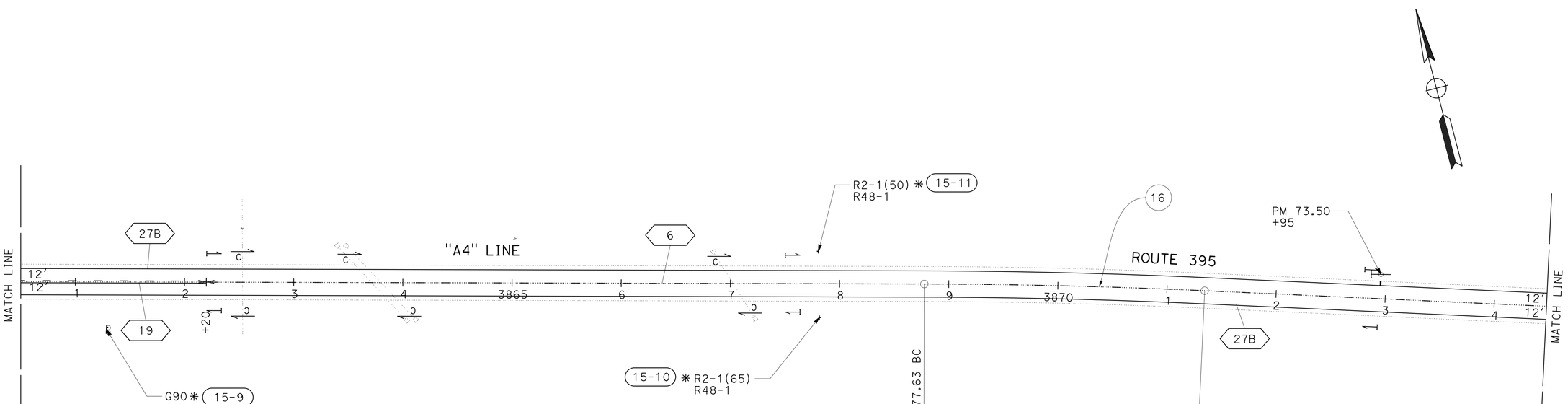

PAVEMENT DELINEATION AND SIGN PLAN

SCALE: 1" = 50′ **PD-15**

APPROVED FOR PAVEMENT DELINEATION AND SIGN WORK ONLY

REVISED BY	DATE REVISED

CALCULATED-DESIGNED BY: WILL LESLIE
CHECKED BY: FRANK RIVAS
FUNCTIONAL SUPERVISOR: STEVE TOPAL

STATE OF CALIFORNIA - DEPARTMENT OF TRANSPORTATION
Caltrans® **DESIGN**

P:\proj2\02\3c071_plans\pse\23c071na015.dgn

LAST REVISION 01-10-14
DATE PLOTTED => 27-MAR-2014
TIME PLOTTED => 11:49

Dist	COUNTY	ROUTE	POST MILES TOTAL PROJECT	SHEET No.	TOTAL SHEETS
02	Las	395	61.5/R76.6	118	161

REGISTERED CIVIL ENGINEER 01-10-14 DATE

03-24-14
PLANS APPROVAL DATE

REGISTERED PROFESSIONAL ENGINEER
BYRON STANLEY
No. C60161
Exp. 6-30-14
CIVIL
STATE OF CALIFORNIA

THE STATE OF CALIFORNIA OR ITS OFFICERS OR AGENTS SHALL NOT BE RESPONSIBLE FOR THE ACCURACY OR COMPLETENESS OF SCANNED COPIES OF THIS PLAN SHEET.

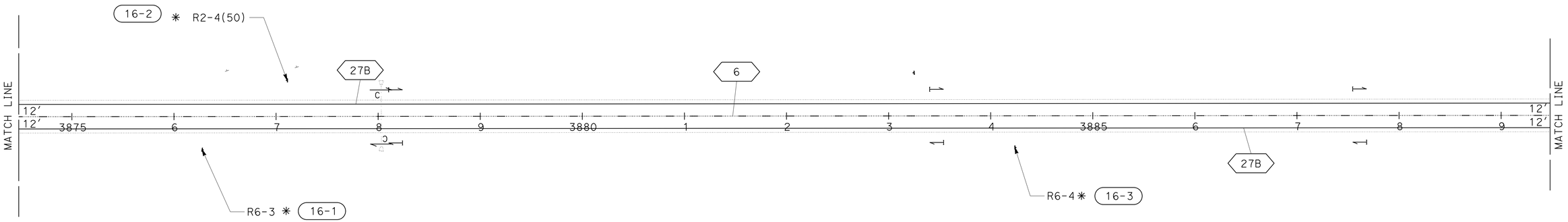

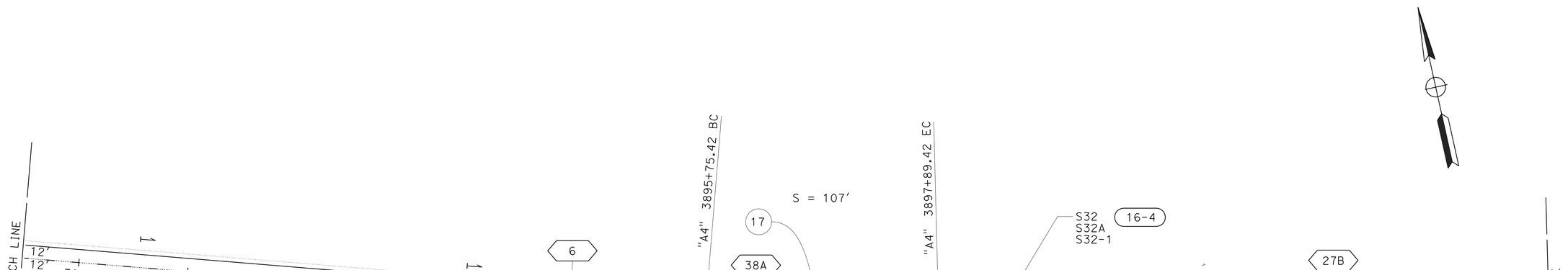

PAVEMENT DELINEATION AND SIGN PLAN

SCALE: 1" = 50'

PD-16

APPROVED FOR PAVEMENT DELINEATION AND SIGN WORK ONLY

REVISED BY | DATE REVISED
WILL LESLIE | FRANK RIVAS
CALCULATED-DESIGNED BY | CHECKED BY
FUNCTIONAL SUPERVISOR
STEVE TOPAL

STATE OF CALIFORNIA - DEPARTMENT OF TRANSPORTATION
Caltrans
DESIGN

P:\proj2\02\3c071_plans\pse\23c071na016.dgn

LAST REVISION 01-10-14 | DATE PLOTTED => 27-MAR-2014 | TIME PLOTTED => 11:49

Dist	COUNTY	ROUTE	POST MILES TOTAL PROJECT	SHEET No.	TOTAL SHEETS
02	Las	395	61.5/R76.6	119	161

REGISTERED CIVIL ENGINEER 01-10-14 DATE

03-24-14
PLANS APPROVAL DATE

REGISTERED PROFESSIONAL ENGINEER
BYRON STANLEY
No. C60161
Exp. 6-30-14
CIVIL
STATE OF CALIFORNIA

THE STATE OF CALIFORNIA OR ITS OFFICERS OR AGENTS SHALL NOT BE RESPONSIBLE FOR THE ACCURACY OR COMPLETENESS OF SCANNED COPIES OF THIS PLAN SHEET.

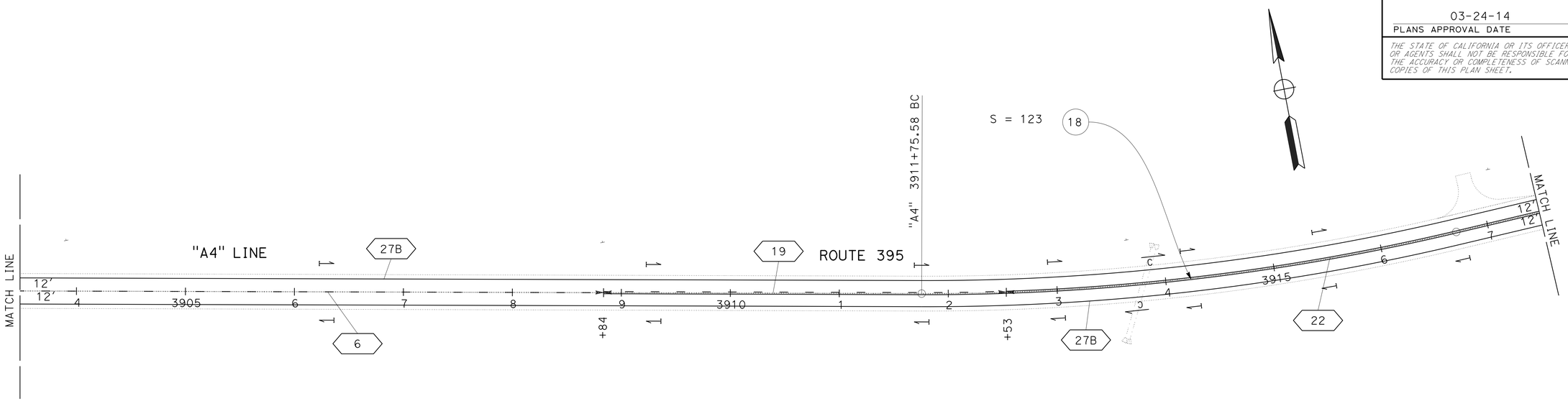

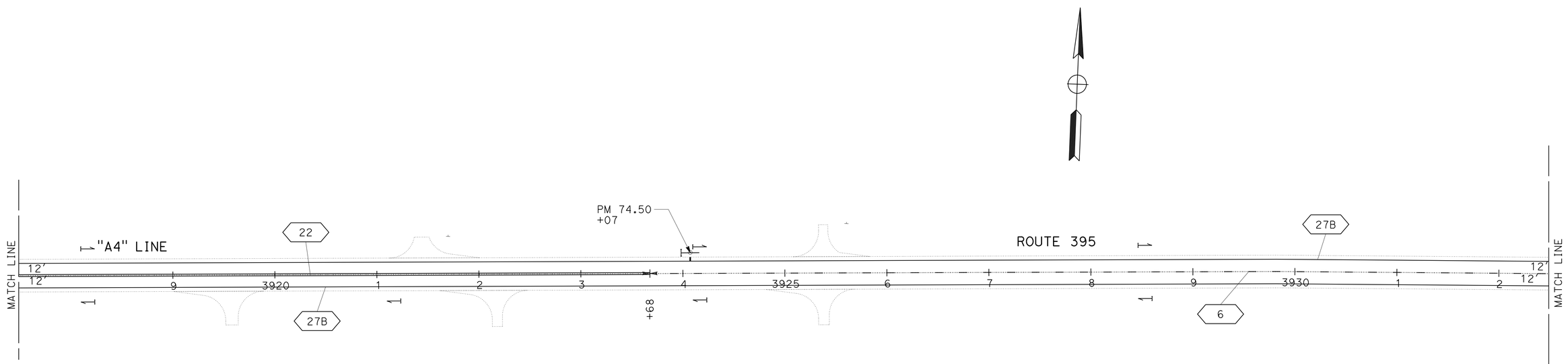

APPROVED FOR PAVEMENT DELINEATION AND SIGN WORK ONLY

PAVEMENT DELINEATION AND SIGN PLAN

SCALE: 1" = 50'

PD-17

REVISED BY	DATE REVISED

CALCULATED-DESIGNED BY: WILL LESLIE
CHECKED BY: FRANK RIVAS
FUNCTIONAL SUPERVISOR: STEVE TOPAL

STATE OF CALIFORNIA - DEPARTMENT OF TRANSPORTATION
Caltrans
DESIGN

P:\proj2\02\3c071_plans\pse\23c071na017.dgn

LAST REVISION 01-10-14
DATE PLOTTED => 27-MAR-2014
TIME PLOTTED => 11:49

Dist	COUNTY	ROUTE	POST MILES TOTAL PROJECT	SHEET No.	TOTAL SHEETS
02	Las	395	61.5/R76.6	120	161

REGISTERED CIVIL ENGINEER 01-10-14 DATE

03-24-14
PLANS APPROVAL DATE

REGISTERED PROFESSIONAL ENGINEER
BYRON STANLEY
No. C60161
Exp. 6-30-14
CIVIL
STATE OF CALIFORNIA

THE STATE OF CALIFORNIA OR ITS OFFICERS OR AGENTS SHALL NOT BE RESPONSIBLE FOR THE ACCURACY OR COMPLETENESS OF SCANNED COPIES OF THIS PLAN SHEET.

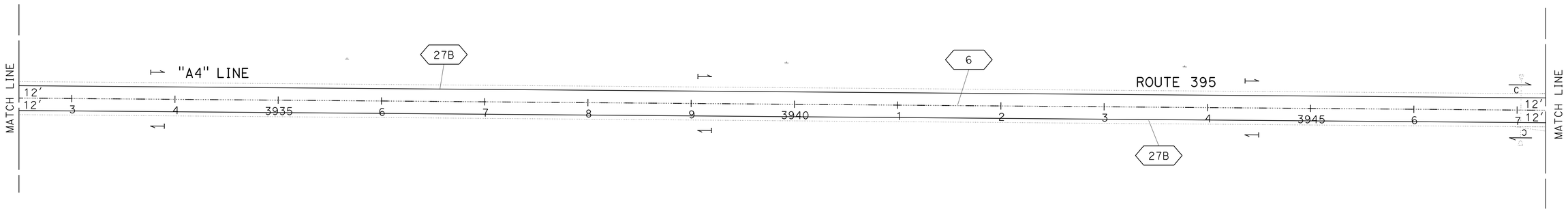

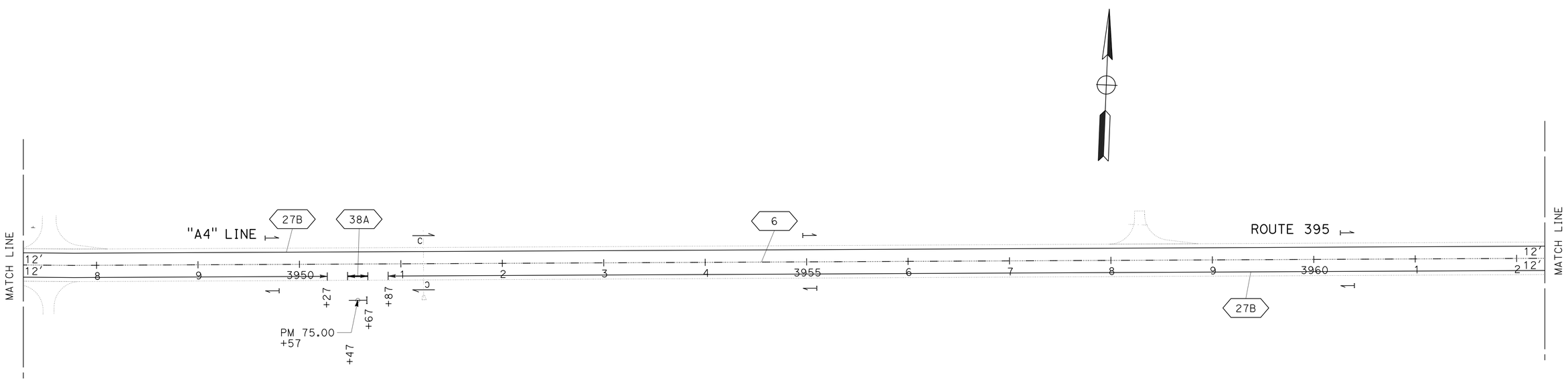

PAVEMENT DELINEATION AND SIGN PLAN

SCALE: 1" = 50'

PD-18

APPROVED FOR PAVEMENT DELINEATION AND SIGN WORK ONLY

REVISED BY	
DATE REVISED	
CALCULATED-DESIGNED BY	WILL LESLIE
CHECKED BY	FRANK RIVAS
FUNCTIONAL SUPERVISOR	STEVE TOPAL

STATE OF CALIFORNIA - DEPARTMENT OF TRANSPORTATION
Caltrans
DESIGN

P:\proj2\02\3c071_plans\pse\23c071na018.dgn

LAST REVISION 01-10-14
DATE PLOTTED => 27-MAR-2014
TIME PLOTTED => 11:49

Dist	COUNTY	ROUTE	POST MILES TOTAL PROJECT	SHEET No.	TOTAL SHEETS
02	Las	395	61.5/R76.6	121	161

REGISTERED CIVIL ENGINEER 01-10-14 DATE

03-24-14
PLANS APPROVAL DATE

REGISTERED PROFESSIONAL ENGINEER
BYRON STANLEY
No. C60161
Exp. 6-30-14
CIVIL
STATE OF CALIFORNIA

THE STATE OF CALIFORNIA OR ITS OFFICERS OR AGENTS SHALL NOT BE RESPONSIBLE FOR THE ACCURACY OR COMPLETENESS OF SCANNED COPIES OF THIS PLAN SHEET.

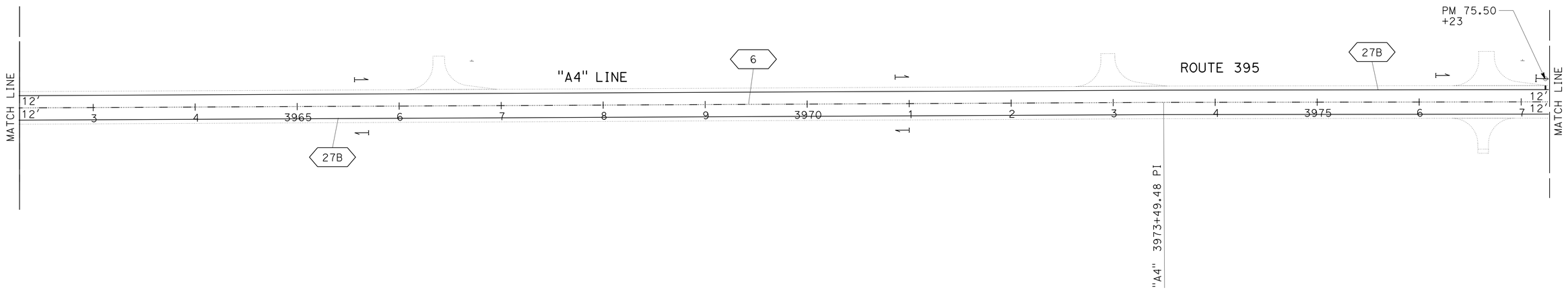

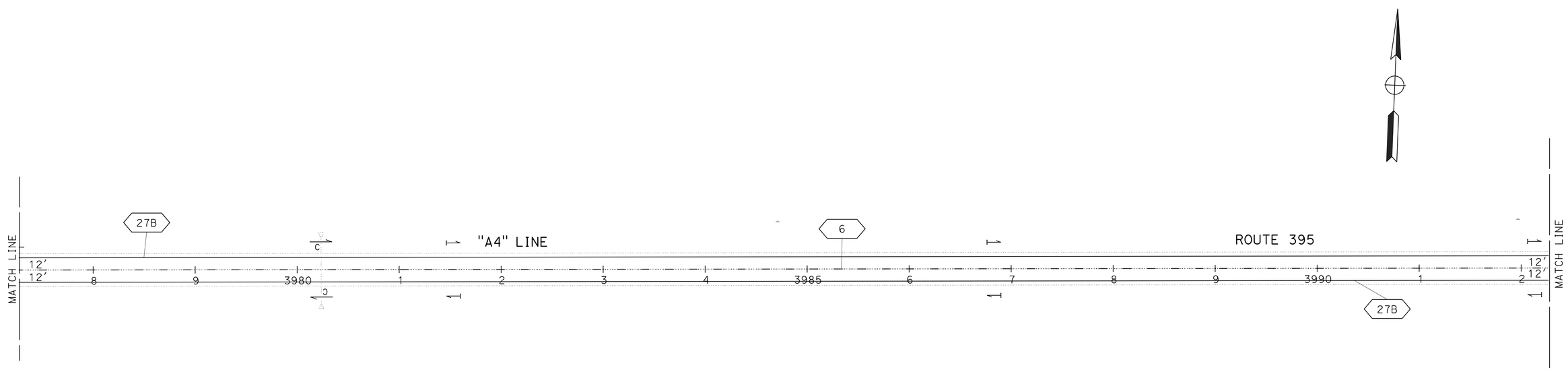

PAVEMENT DELINEATION AND SIGN PLAN

SCALE: 1" = 50'

PD-19

APPROVED FOR PAVEMENT DELINEATION AND SIGN WORK ONLY

REVISED BY	DATE REVISED

CALCULATED-DESIGNED BY	WILL LESLIE
CHECKED BY	FRANK RIVAS
FUNCTIONAL SUPERVISOR	STEVE TOPAL

STATE OF CALIFORNIA - DEPARTMENT OF TRANSPORTATION
Caltrans
DESIGN

P:\proj2\02\3c071_plans\pse\23c071na019.dgn

LAST REVISION 01-10-14
DATE PLOTTED => 27-MAR-2014
TIME PLOTTED => 11:49

Dist	COUNTY	ROUTE	POST MILES TOTAL PROJECT	SHEET No.	TOTAL SHEETS
02	Las	395	61.5/R76.6	122	161

REGISTERED CIVIL ENGINEER 01-10-14 DATE

03-24-14
PLANS APPROVAL DATE

REGISTERED PROFESSIONAL ENGINEER BYRON STANLEY No. C60161 Exp. 6-30-14 CIVIL STATE OF CALIFORNIA

THE STATE OF CALIFORNIA OR ITS OFFICERS OR AGENTS SHALL NOT BE RESPONSIBLE FOR THE ACCURACY OR COMPLETENESS OF SCANNED COPIES OF THIS PLAN SHEET.

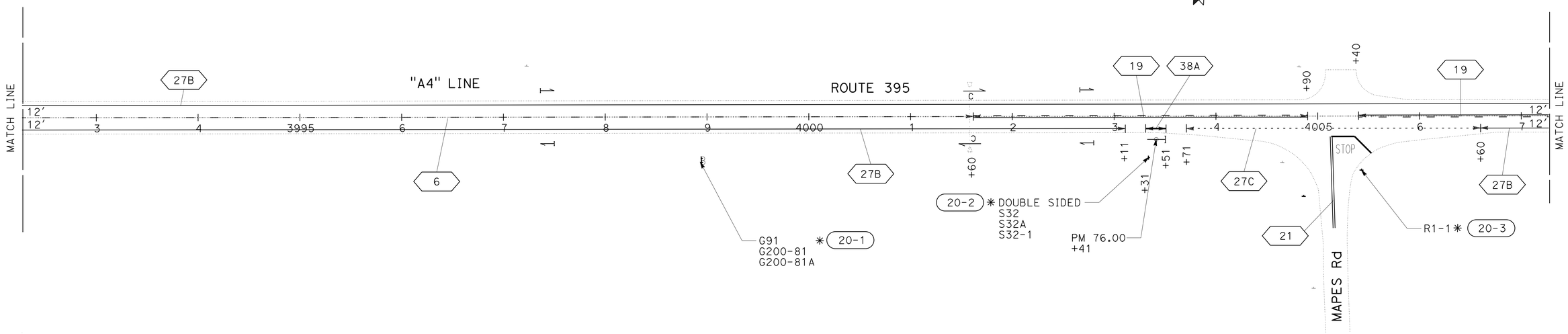

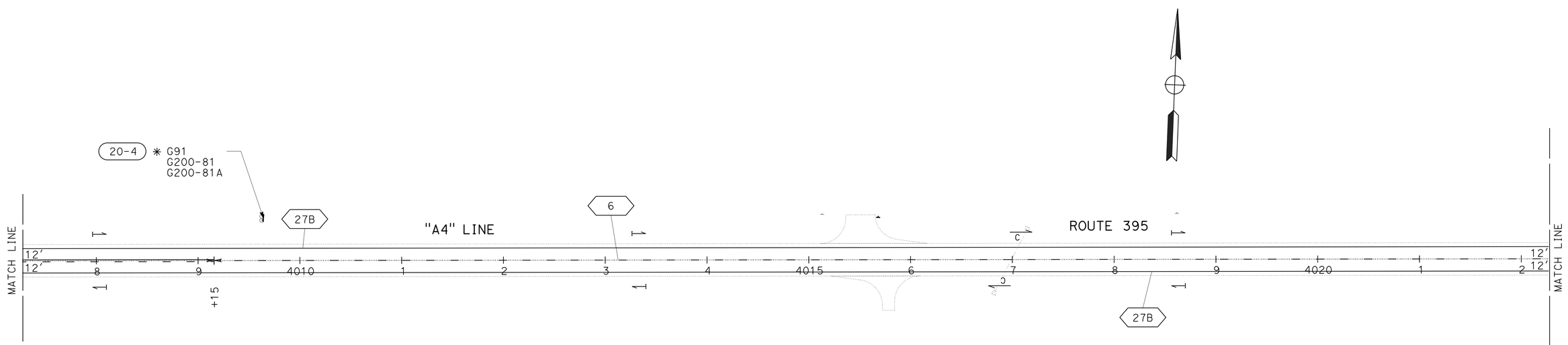

APPROVED FOR PAVEMENT DELINEATION AND SIGN WORK ONLY

PAVEMENT DELINEATION AND SIGN PLAN

SCALE: 1" = 50'

PD-20

REVISED BY	DATE REVISED

CALCULATED-DESIGNED BY	WILL LESLIE
CHECKED BY	FRANK RIVAS
FUNCTIONAL SUPERVISOR	STEVE TOPAL

STATE OF CALIFORNIA - DEPARTMENT OF TRANSPORTATION
Caltrans
DESIGN

P:\proj2\02\3c071_plans\pse\23c071na020.dgn

LAST REVISION 01-10-14 | DATE PLOTTED => 27-MAR-2014 TIME PLOTTED => 11:49

Dist	COUNTY	ROUTE	POST MILES TOTAL PROJECT	SHEET No.	TOTAL SHEETS
02	Las	395	61.5/R76.6	123	161

REGISTERED CIVIL ENGINEER 01-10-14 DATE

03-24-14
PLANS APPROVAL DATE

REGISTERED PROFESSIONAL ENGINEER
BYRON STANLEY
No. C60161
Exp. 6-30-14
CIVIL
STATE OF CALIFORNIA

THE STATE OF CALIFORNIA OR ITS OFFICERS OR AGENTS SHALL NOT BE RESPONSIBLE FOR THE ACCURACY OR COMPLETENESS OF SCANNED COPIES OF THIS PLAN SHEET.

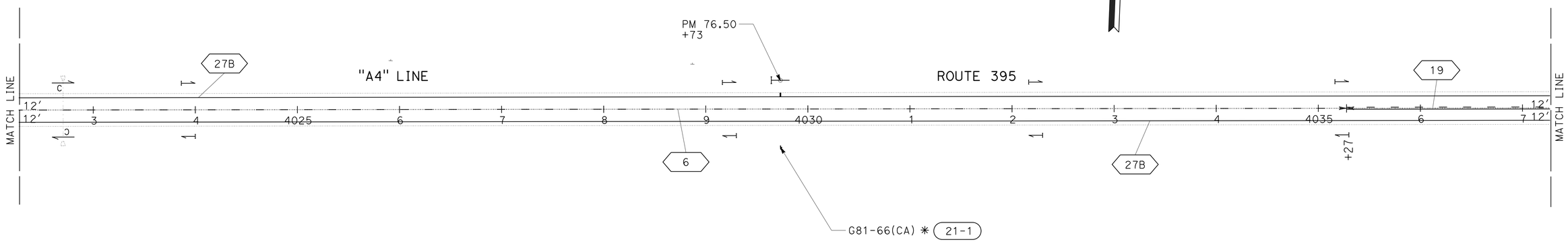

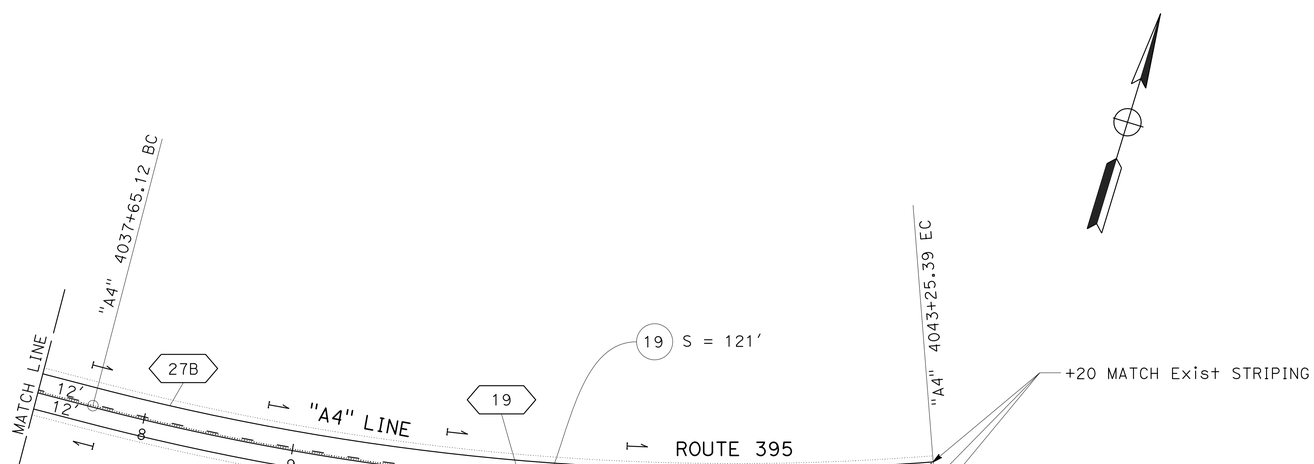

APPROVED FOR PAVEMENT DELINEATION AND SIGN WORK ONLY

PAVEMENT DELINEATION AND SIGN PLAN

SCALE: 1" = 50'

PD-21

REVISED BY	DATE REVISED

CALCULATED-DESIGNED BY: WILL LESLIE
CHECKED BY: FRANK RIVAS
FUNCTIONAL SUPERVISOR: STEVE TOPAL

STATE OF CALIFORNIA - DEPARTMENT OF TRANSPORTATION
Caltrans® **DESIGN**

P:\proj2\02\3c071_plans\pse\23c071na021.dgn

LAST REVISION 01-10-14 | DATE PLOTTED => 27-MAR-2014 | TIME PLOTTED => 11:49

Dist	COUNTY	ROUTE	POST MILES TOTAL PROJECT	SHEET No.	TOTAL SHEETS
02	Las	395	61.5/R76.6	124	161

REGISTERED CIVIL ENGINEER 01-10-14 DATE

03-24-14
PLANS APPROVAL DATE

REGISTERED PROFESSIONAL ENGINEER BYRON STANLEY No. C60161 Exp. 6-30-14 CIVIL STATE OF CALIFORNIA

THE STATE OF CALIFORNIA OR ITS OFFICERS OR AGENTS SHALL NOT BE RESPONSIBLE FOR THE ACCURACY OR COMPLETENESS OF SCANNED COPIES OF THIS PLAN SHEET.

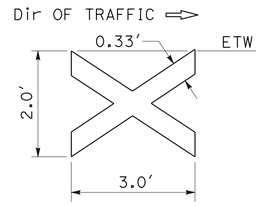

DETAIL B
0.33′ SOLID WHITE THERMOPLASTIC

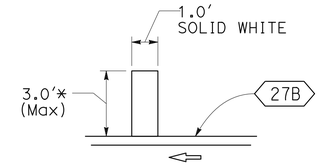

DETAIL A
* ACTUAL LENGTH MAY VARY DUE TO PAVEMENT WIDTH

LEGEND

- Dir OF TRAFFIC
- XXX TRAFFIC STRIPE DETAIL No.
- MILE POST MARKER
- OBJECT MARKER (TYPE L)
- DELINEATOR (TYPE F)
- DELINEATOR (TYPE E)

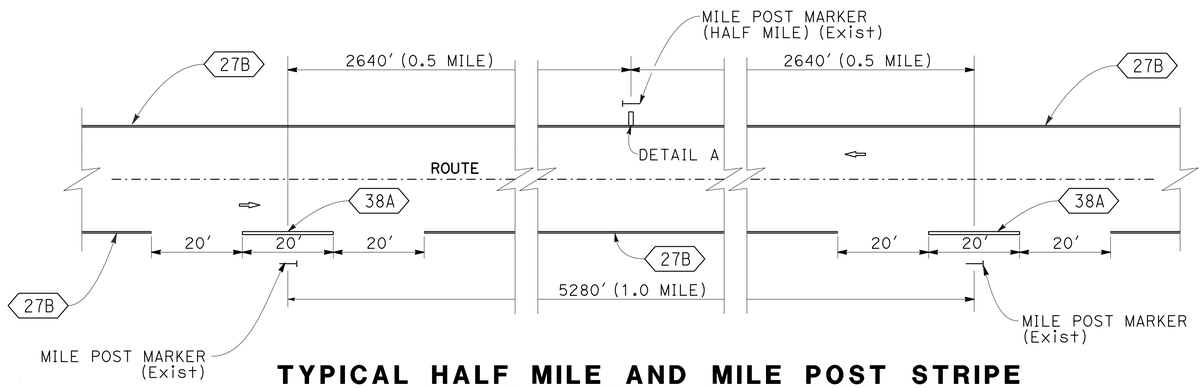

TYPICAL HALF MILE AND MILE POST STRIPE (CONVENTIONAL ROADWAY)
NO HALF MILE STRIPE WITHIN AN EQUATION

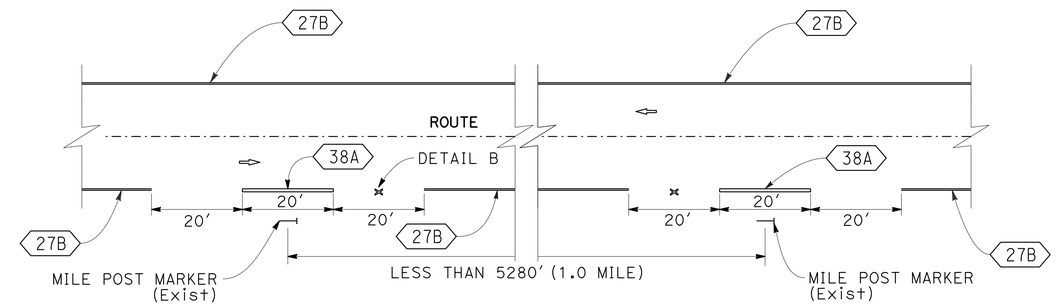

TYPICAL MILE POST STRIPE FOR EQUATIONS (CONVENTIONAL ROADWAY)
NO HALF MILE STRIPE WITHIN AN EQUATION

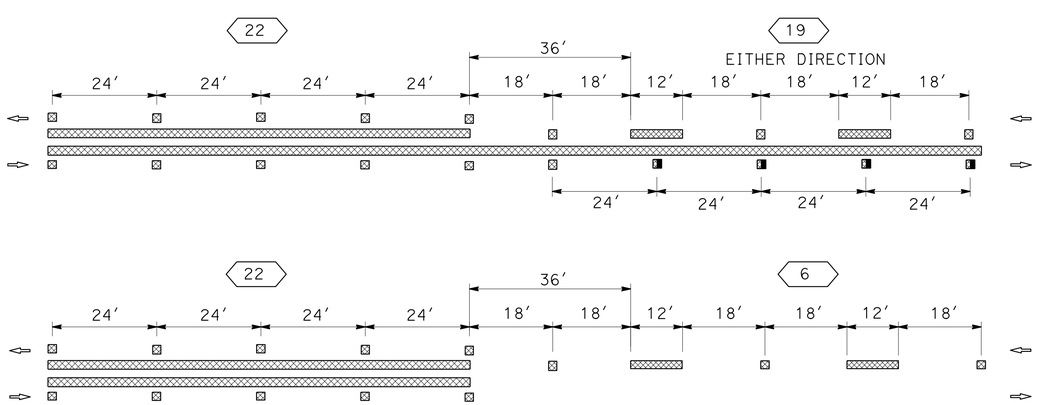

TYPICAL STRIPE TRANSITION DETAILS

PAVEMENT DELINEATION DETAILS (CONVENTIONAL ROADWAY)

NO SCALE

PDD-1

STATE OF CALIFORNIA - DEPARTMENT OF TRANSPORTATION
Caltrans® DESIGN

FUNCTIONAL SUPERVISOR: STEVE TOPAL
CALCULATED-DESIGNED BY: WILL LESLIE
CHECKED BY: FRANK RIVAS
REVISED BY
DATE REVISED

P:\proj2\02\3c071_plans\pse\23c071nb001.dgn

LAST REVISION 01-10-14
DATE PLOTTED => 27-MAR-2014
TIME PLOTTED => 11:49

Dist	COUNTY	ROUTE	POST MILES TOTAL PROJECT	SHEET No.	TOTAL SHEETS
02	Las	395	61.5/R76.6	125	161

REGISTERED CIVIL ENGINEER 01-10-14 DATE

03-24-14
PLANS APPROVAL DATE

REGISTERED PROFESSIONAL ENGINEER BYRON STANLEY No. C60161 Exp. 6-30-14 CIVIL STATE OF CALIFORNIA

THE STATE OF CALIFORNIA OR ITS OFFICERS OR AGENTS SHALL NOT BE RESPONSIBLE FOR THE ACCURACY OR COMPLETENESS OF SCANNED COPIES OF THIS PLAN SHEET.

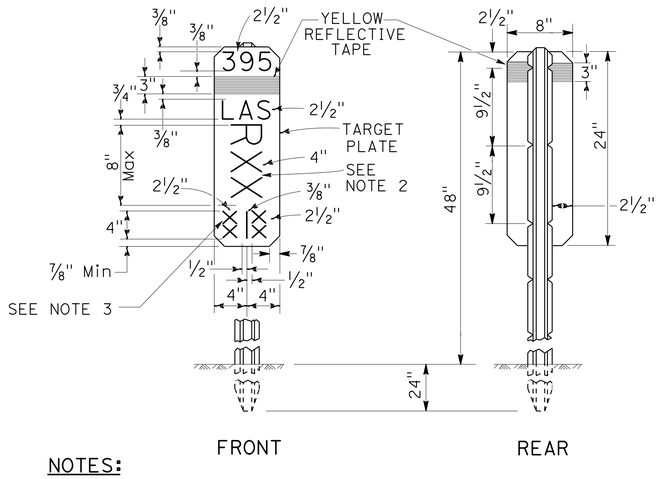

NOTES:

1. THE MARKER SHALL BE WHITE (NON-REFLECTIVE) TARGET PLATE WITH BLACK SERIES D NUMERALS AND LETTERS.
2. A POST MILE PREFIX, SUCH AS "R", SHALL APPLY ONLY WHEN DIRECTED BY THE ENGINEER.
3. "BK" (BACK), "AH" (AHEAD), OR A BLANK SPACE SHALL APPLY AS DIRECTED BY THE ENGINEER.
4. ALL INFORMATION SHALL BE IN ENGLISH UNITS (MILES).

POST MILE MARKER DETAIL

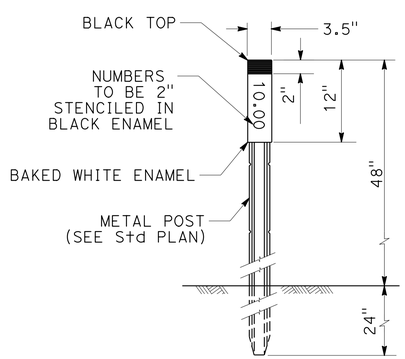

MARKER (CULVERT)

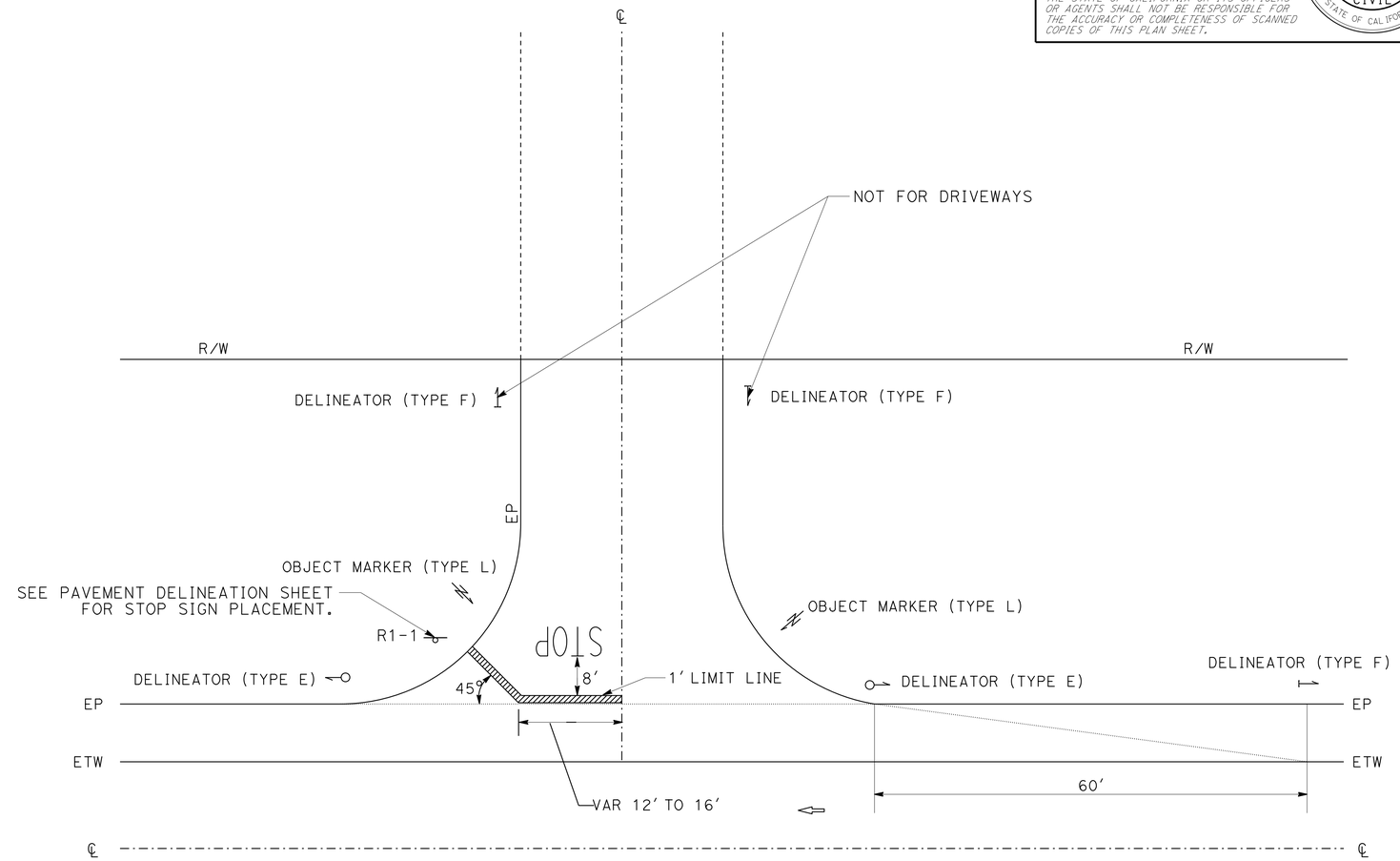

DRIVEWAY AND MINOR ROAD CONNECTION DELINEATOR PLACEMENT DETAIL

PAVEMENT DELINEATION DETAILS

NO SCALE

PDD-2

REVISED BY	DATE REVISED

CALCULATED-DESIGNED BY	WILL LESLIE
CHECKED BY	BYRON STANLEY
FUNCTIONAL SUPERVISOR	STEVE TOPAL

STATE OF CALIFORNIA - DEPARTMENT OF TRANSPORTATION
Caltrans
DESIGN

P:\proj2\02\3c071_plans\pse\23c071nb002.dgn

LAST REVISION 01-10-14 | DATE PLOTTED => 27-MAR-2014 | TIME PLOTTED => 11:49

Dist	COUNTY	ROUTE	POST MILES TOTAL PROJECT	SHEET No.	TOTAL SHEETS
02	Las	395	61.5/R76.6	126	161

REGISTERED CIVIL ENGINEER 01-10-14 DATE

03-24-14
PLANS APPROVAL DATE

REGISTERED PROFESSIONAL ENGINEER BYRON STANLEY No. C60161 Exp. 6-30-14 CIVIL STATE OF CALIFORNIA

THE STATE OF CALIFORNIA OR ITS OFFICERS OR AGENTS SHALL NOT BE RESPONSIBLE FOR THE ACCURACY OR COMPLETENESS OF SCANNED COPIES OF THIS PLAN SHEET.

NOTES:

1. DELINEATOR SPACING IS ALONG CENTER LINE ALIGNMENT.
2. FOR CURVES WITH A RADIUS GREATER THAN 3000' USE TANGENT SPACING OF 530' AND DISREGARD ADVANCED SPACING.
3. NOT TO EXCEED 300'
4. INTERSECTION AND DRIVEWAY DELINEATION TAKES PRECEDENCE OVER MAIN LINE DELINEATORS.

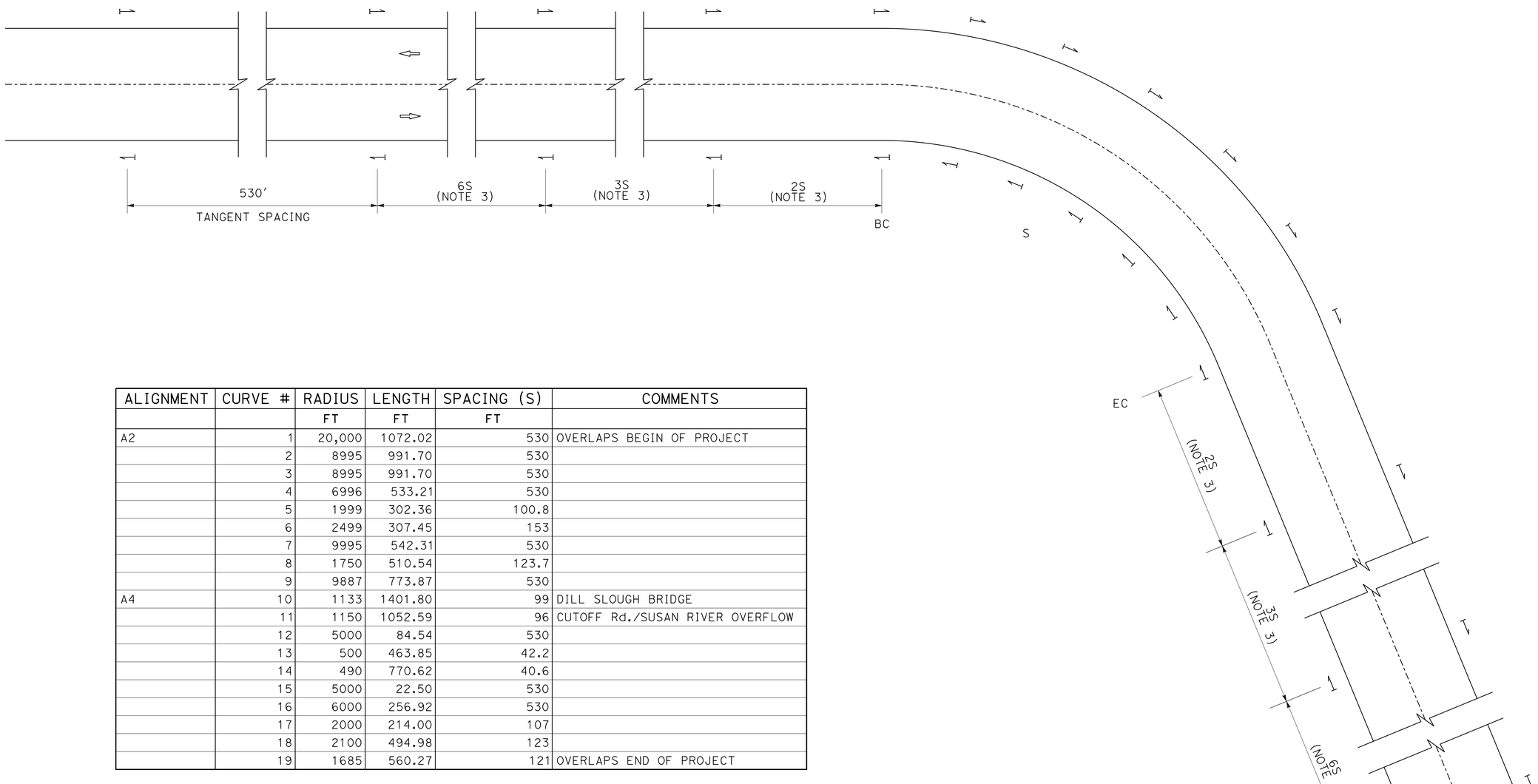

ALIGNMENT	CURVE #	RADIUS	LENGTH	SPACING (S)	COMMENTS
		FT	FT	FT	
A2	1	20,000	1072.02	530	OVERLAPS BEGIN OF PROJECT
	2	8995	991.70	530	
	3	8995	991.70	530	
	4	6996	533.21	530	
	5	1999	302.36	100.8	
	6	2499	307.45	153	
	7	9995	542.31	530	
	8	1750	510.54	123.7	
	9	9887	773.87	530	
A4	10	1133	1401.80	99	DILL SLOUGH BRIDGE
	11	1150	1052.59	96	CUTOFF Rd./SUSAN RIVER OVERFLOW
	12	5000	84.54	530	
	13	500	463.85	42.2	
	14	490	770.62	40.6	
	15	5000	22.50	530	
	16	6000	256.92	530	
	17	2000	214.00	107	
	18	2100	494.98	123	
	19	1685	560.27	121	OVERLAPS END OF PROJECT

PAVEMENT DELINEATION DETAILS

NO SCALE

PDD-3

REVISED BY | DATE REVISED
WILL LESLIE | BYRON STANLEY
CALCULATED-DESIGNED BY | CHECKED BY
FUNCTIONAL SUPERVISOR | STEVE TOPAL

STATE OF CALIFORNIA - DEPARTMENT OF TRANSPORTATION
Caltrans
DESIGN

P:\proj2\02\3c071_plans\pse\23c071nb003.dgn

LAST REVISION 01-10-14 | DATE PLOTTED => 27-MAR-2014 | TIME PLOTTED => 11:49

BORDER LAST REVISED 7/2/2010 | USERNAME => s123119 | DGN FILE => 23c071nb003.dgn | RELATIVE BORDER SCALE IS IN INCHES 0 1 2 3 | UNIT 0319 | PROJECT NUMBER & PHASE 02-1200-0037-1 | EA: 02-3C071

Dist	COUNTY	ROUTE	POST MILES TOTAL PROJECT	SHEET No.	TOTAL SHEETS
02	Las	395	61.5/R76.6	127	161

REGISTERED CIVIL ENGINEER 01-10-14 DATE

03-24-14
PLANS APPROVAL DATE

REGISTERED PROFESSIONAL ENGINEER BYRON STANLEY No. C60161 Exp. 6-30-14 CIVIL STATE OF CALIFORNIA

THE STATE OF CALIFORNIA OR ITS OFFICERS OR AGENTS SHALL NOT BE RESPONSIBLE FOR THE ACCURACY OR COMPLETENESS OF SCANNED COPIES OF THIS PLAN SHEET.

NOTE:

1. (N) - NOT A SEPARATE PAY ITEM, FOR INFORMATION ONLY

MAINLINE STRIPING QUANTITIES

ALIGNMENT	STATION			THERMOPLASTIC TRAFIC STRIPE (SPRAYABLE) 4" YELLOW DETAIL 6	DETAIL 19	DETAIL 22	DETAIL 29	DETAIL 32	4" WHITE DETAIL 27B	DETAIL 27C	8" WHITE DETAIL 38	DETAIL 38A	PAVEMENT MARKER (RETROREFLECTIVE-RECESSED) TYPE D	TYPE G	TYPE H
				LF	LF	LF	LF	LF	LF	LF	LF	LF	EA	EA	EA
A2	444+00	TO	474+31			3031			6062			20	254		
A2	474+31	TO	518+86	4455					8910				93		
A2	518+86	TO	524+51		565				1130			20	12		24
A2	524+51	TO	572+00			4749			9498				398		
A2	572+00	TO	584+13	1213					2426			20	26		
A2	584+13	TO	585+54		141				282				3		6
A2	585+54	TO	587+71		217				434	217			5		10
A2	587+71	TO	589+55		184				368		184		4		8
A2	589+55	TO	590+40		34				85	85			2		4
A2	590+40	TO	600+17			977			1839	115			84		
A2	600+17	TO	602+10			193			386	193			18		
A2	602+10	TO	605+22			261			502	106	260		22	11	
A2	605+22	TO	614+34				1824		1824		17		76	2	
A2	614+34	TO	624+06			922			1642	302	116		78	5	
A2	624+06	TO	626+40		234				468				5		10
A2	626+40	TO	633+50	710					1420			20	16		
A3	3669+40	TO	3691+36	2196					4392				47		
A3	3691+36	TO	3694+36		300				600				7		14
A3	3694+36	TO	3696+21			185			370				16		
A3	3696+21	TO	3697+14			47			93	93			4		
A3	3697+14	TO	3697+66			52			104				6		
A3	3697+66	TO	3699+15			149			298	149			14		
A3	3699+15	TO	3700+85			170			340		170		16	8	
A3	3700+85	TO	3703+31					492	492	114	246		26		
A3	3703+31	TO	3708+75			500			879	209	500		42	21	
A3	3708+75	TO	3717+52			821			1590	164			70		
A3	3717+52	TO	3728+26	1074					2148				23		
A4	3756+00	TO	3762+00			600			1200				52		
A4	3762+00	TO	3773+24		1124				2248				24		48
A4	3773+24	TO	3776+34			310			396	224			28		
A4	3776+34	TO	3779+88		288				552	156			6		12
A4	3779+88	TO	3788+89	901					1802				19		
A4	3788+89	TO	3791+67		278				405	151			6		12
A4	3791+67	TO	3803+51			1100			2145	223		20	92		
A4	3803+51	TO	3811+68		817				1634				18		36
A4	3811+68	TO	3818+87	719					1438				16		
A4	3818+87	TO	3823+83		496				992				11		21
A4	3823+83	TO	3836+07			1224			2448				104		
A4	3836+07	TO	3840+45			345			714	162			30		
A4	3840+45	TO	3847+80			665			1240	230		20	56		
A4	3847+80	TO	3858+15			985			1890	180			84		
A4	3858+15	TO	3862+20		405				810				9		18
A4	3862+20	TO	3908+84	4664					9328			20	98		
A4	3908+84	TO	3912+53		369				738				8		16
A4	3912+53	TO	3923+68			1115			2230				94		
A4	3923+68	TO	4001+60	7792					15584			20	163		
A4	4001+60	TO	4004+90		330				481	119		20	7		14
A4	4004+90	TO	4009+15		375				680	170			8		16
A4	4009+15	TO	4035+27	2612					5224				55		
A4	4035+27	TO	4043+20		793				1586				17		34
TOTALS MAINLINE				26,336	6,950	18,401	1824	492	104,347	3,362	1,493	180	2,372	47	303
TOTALS INTERSECTION				920											
SUB TOTAL				162,632							1,673		2,722		
TOTAL				164,305									2,722		

INTERSECTION STRIPING QUANTITIES
THERMOPLASTIC TRAFIC STRIPE (SPRAYABLE)
4" YELLOW

LOCATION	SHEET No.	ALIGNMENT	STATION	PM	DETAIL 21
					LF
BUFFUM Rd	PD-6	A2	590+11.0	64.29	85
COTTONWOOD Rd	PD-6	A2	603+64.4	64.55	90
LEAVIT Ln	PD-7	A2	615+67.9	64.75	80
SIERRA St	PD-8	A3	3696+74.9	70.01	20
RV PARK ENTRANCE (Dwy 2-13)	PD-9	A3	3702+28.0	70.10	30
MILFORD STREET	PD-9	A3	3703+60.0	70.12	30
STANDISH BUNTINGVILLE Rd	PD-9	A3	3703+60.0	70.12	140
CHURCH St	PD-9	A3	3710+54.5	70.30	50
LAMBERT Ln	PD-11	A4	3776+60.0	71.53	40
CUTOFF Rd	PD-12	A4	3791+94.4	71.82	145
MARKET St	PD-14	A4	3836+28.2	72.83	70
CENTER Rd	PD-14	A4	3840+59.1	72.94	50
MAPES ROAD	PD-20	A4	4005+12.7	76.05	90
				TOTAL	920

PAVEMENT DELINEATION QUANTITIES

PDQ-1

REVISED BY | DATE REVISED
WILL LESLIE | FRANK RIVAS
CALCULATED-DESIGNED BY | CHECKED BY
FUNCTIONAL SUPERVISOR: STEVE TOPAL

STATE OF CALIFORNIA - DEPARTMENT OF TRANSPORTATION
Caltrans® DESIGN

P:\proj2\02\3c071_plans\pse\23c071nc001.dgn

LAST REVISION 01-10-14 | DATE PLOTTED => 27-MAR-2014 | TIME PLOTTED => 11:49

Dist	COUNTY	ROUTE	POST MILES TOTAL PROJECT	SHEET No.	TOTAL SHEETS
02	Las	395	61.5/R76.6	128	161

REGISTERED CIVIL ENGINEER 01-10-14 DATE

03-24-14
PLANS APPROVAL DATE

REGISTERED PROFESSIONAL ENGINEER BYRON STANLEY No. C60161 Exp. 6-30-14 CIVIL STATE OF CALIFORNIA

THE STATE OF CALIFORNIA OR ITS OFFICERS OR AGENTS SHALL NOT BE RESPONSIBLE FOR THE ACCURACY OR COMPLETENESS OF SCANNED COPIES OF THIS PLAN SHEET.

THERMOPLASTIC PAVEMENT MARKINGS

SHEET No.	STATION	ELEMENT	AREA SQYD	NOTES
PD-1	"A2" 451+52	STOP BAR	1.3	STORE
PD-6	"A2" 587+88	TYPE III ARROW (R+)	4.7	RIGHT TURN LANE TO BUFFUM ROAD
		STOP BAR	4.9	BUFFUM ROAD
		STOP LEGEND	2.4	BUFFUM ROAD
	"A2" 602+27	TYPE III ARROW (R+)	4.7	RIGHT TURN LANE TO COTTONWOOD ROAD
		STOP BAR	4.1	COTTONWOOD ROAD
		STOP LEGEND	2.4	COTTONWOOD ROAD
	"A2" 604+95	TYPE III ARROW (L+)	4.7	LEFT TURN LANE TO COTTONWOOD ROAD
PD-7	"A2" 614+34	TYPE III ARROW (L+)	4.7	LEFT TURN LANE TO LEAVIT LANE
		STOP BAR	4.7	LEAVIT LANE
		STOP LEGEND	2.4	LEAVIT LANE
PD-8	"A3" 3677+53	STOP BAR	3.1	CHURCH DRIVEWAY
	"A3" 3681+13	STOP BAR	3.1	CHURCH DRIVEWAY
	"A3" 3696+84	STOP BAR	3.0	SIERRA STREET
		STOP LEGEND	2.4	SIERRA STREET
PD-9	"A3" 3699+58	TYPE IV ARROW (R+)	1.7	RIGHT TURN LANE TO STANDISH/BUNTINGVILLE ROAD
		STOP BAR	3.0	RV PARK
		STOP LEGEND	2.4	RV PARK
	"A3" 3702+22	TYPE IV ARROW (L+)	1.7	LEFT TURN LANE
	"A3" 3702+22	TYPE IV ARROW (R+)	1.7	RIGHT TURN LANE
		STOP BAR	2.1	MILFORD STREET
		STOP LEGEND	2.4	MILFORD STREET
		STOP BAR	4.6	STANDISH/BUNTINGVILLE ROAD
		STOP LEGEND	2.4	STANDISH/BUNTINGVILLE ROAD
	"A3" 3703+87	TYPE IV ARROW (L+)	1.7	LEFT TURN TO STANDISH/BUNTINGVILLE ROAD
	"A3" 3708+69	TYPE IV ARROW (L+)	1.7	LEFT TURN TO STANDISH/BUNTINGVILLE ROAD
		STOP BAR	3.0	CHURCH STREET
		STOP LEGEND	2.4	CHURCH STREET
PD-10	"A3" 3716+75	STOP BAR	2.2	EAST STREET
		STOP LEGEND	2.4	EAST STREET
PD-11		STOP BAR	5.2	LAMBERT LANE
		STOP LEGEND	2.4	LAMBERT LANE
PD-12		STOP BAR	4.6	CUTOFF ROAD
		STOP LEGEND	2.4	CUTOFF ROAD
PD-14		STOP BAR	1.9	MARKET STREET
		STOP LEGEND	2.4	MARKET STREET
		STOP BAR	1.8	CENTER ROAD
		STOP LEGEND	2.4	CENTER ROAD
	"A4" 3844+75	SCHOOL LEGEND	3.9	LITCHFIELD SCHOOL
PD-15		STOP BAR	6.1	LITCHFIELD SCHOOL DRIVEWAY
		STOP LEGEND	2.4	LITCHFIELD SCHOOL DRIVEWAY
	"A4" 3853+65	SCHOOL LEGEND	3.9	LITCHFIELD SCHOOL
PD-20		STOP BAR	5.1	MAPES ROAD
		STOP LEGEND	2.4	MAPES ROAD
		HALF MILE MARKING	6.6	ENTIRE PROJECT
		TOTAL	141.5	

PAVEMENT DELINEATION QUANTITIES

PDQ-2

REVISED BY | DATE REVISED
WILL LESLIE | FRANK RIVAS
CALCULATED-DESIGNED BY | CHECKED BY
FUNCTIONAL SUPERVISOR: STEVE TOPAL

STATE OF CALIFORNIA - DEPARTMENT OF TRANSPORTATION
Caltrans® DESIGN

P:\proj2\02\3c071_plans\pse\23c071nc002.dgn

LAST REVISION 01-10-14 | DATE PLOTTED => 27-MAR-2014 | TIME PLOTTED => 11:49

Dist	COUNTY	ROUTE	POST MILES TOTAL PROJECT	SHEET No.	TOTAL SHEETS
02	Las	395	61.5/R76.6	129	161

REGISTERED CIVIL ENGINEER 01-10-14 DATE

03-24-14
PLANS APPROVAL DATE

REGISTERED PROFESSIONAL ENGINEER BYRON STANLEY No. C60161 Exp. 6-30-14 CIVIL STATE OF CALIFORNIA

THE STATE OF CALIFORNIA OR ITS OFFICERS OR AGENTS SHALL NOT BE RESPONSIBLE FOR THE ACCURACY OR COMPLETENESS OF SCANNED COPIES OF THIS PLAN SHEET.

MARKER (CULVERT)

SHEET No.	STATION	PM	EA
PD-1	456+79.33	61.76	2
PD-2	481+04.52	62.22	2
PD-3	495+92.36	62.51	2
PD-3	506+19.00	62.70	2
PD-3	517+59.24	62.92	2
PD-4	529+27.84	63.14	2
PD-4	535+68.61	63.26	2
PD-4	541+08.76	63.36	2
PD-4	542+89.72	63.40	2
PD-5	573+84.49	63.98	2
PD-6	593+37.52	64.35	2
PD-7	608+75.55	64.64	2
PD-7	612+89.35	64.72	2
PD-7	619+19.32	64.84	2
PD-8	3698+05.72	70.04	2
PD-9	3703+13.23	70.14	2
PD-9	3711+05.39	70.29	2
PD-10	3722+00.00	70.49	2
PD-11	3767+12.01	71.35	2
PD-11	3769+86.80	71.40	2
PD-11	3777+66.18	71.55	2
PD-11	3782+00.00	71.63	2
PD-12	3790+71.19	71.80	2
PD-12	3813+73.86	72.40	2
PD-14	3835+00.00	72.81	2
PD-14	3839+21.47	72.89	2
PD-14	3842+54.20	72.95	2
PD-15	3862+53.12	73.33	2
PD-15	3863+75.73	73.35	2
PD-15	3867+02.00	73.41	2
PD-16	3878+04.12	73.62	2
PD-16	3898+03.70	74.00	2
PD-17	3913+78.31	74.30	2
PD-18	3947+03.69	74.93	2
PD-18	3951+22.29	75.01	2
PD-19	3980+23.40	75.56	2
PD-20	4001+58.11	75.96	2
PD-20	4016+98.43	76.25	2
PD-21	4022+70.51	76.36	2
		TOTAL	78

DELINEATORS AND MARKERS

SHEET No.	DELINEATORS (CLASS 2)			OBJECT MARKERS	
	MAINLINE	DRIVEWAY/ROAD CONNECTIONS			MBGR
	TYPE F	TYPE F	TYPE E	TYPE L-1	TYPE L-1
	EA	EA	EA	EA	EA
PD-1	8	6	14	14	
PD-2	8	18	28	28	4
PD-3	11	4	8	8	4
PD-4	21	8	16	16	
PD-5	12	12	24	24	2
PD-6	22	9	10	10	4
PD-7	10	8	12	12	
PD-8	11	12	20	20	
PD-9	3	17	18	18	
PD-10	16	6	8	8	6
PD-11	16	6	8	8	
PD-12	25	4	4	4	4
PD-13	11	3	6	6	
PD-14	41	7	6	6	
PD-15	10	14	24	24	
PD-16	20				
PD-17	20	6	12	12	
PD-18	12	3	6	6	
PD-19	11	4	8	8	
PD-20	10	8	8	8	
PD-21	16				
SUBTOTAL	314	155	240	240	24
TOTAL	709			264	

MILEPOST MARKERS

SHEET No.	ALIGNMENT	STATION	PM	EA
PD-1	A2	443+52	61.50	1
PD-2	A2	469+29	62.00	1
PD-3	A2	495+54	62.50	1
PD-4	A2	522+72	63.00	1
PD-4	A2	550+18	63.50	1
PD-5	A2	577+22	64.00	1
PD-6	A2	598+98	64.50	1
PD-7	A2	627+66	65.00	1
PD-8	A3	3669+41	69.50	1
PD-8	A3	3696+22	70.00	1
PD-10	A3	3721+90	70.50	1
PD-11	A4	3774+43	R71.50	1
PD-12	A4	3801+56	R72.05	1
PD-14	A4	3842+62	73.00	1
PD-15	A4	3872+95	73.50	1
PD-16	A4	3896+23	74.00	1
PD-17	A4	3924+07	74.50	1
PD-18	A4	3950+57	75.00	1
PD-19	A4	3977+23	75.50	1
PD-20	A4	4003+41	76.00	1
PD-21	A4	4029+73	76.50	1
			TOTAL	21

PAVEMENT DELINEATION QUANTITIES

PDQ-3

REVISED BY | DATE REVISED
WILL LESLIE | FRANK RIVAS
CALCULATED-DESIGNED BY | CHECKED BY
FUNCTIONAL SUPERVISOR: STEVE TOPAL

STATE OF CALIFORNIA - DEPARTMENT OF TRANSPORTATION
Caltrans® DESIGN

P:\proj2\02\3c071_plans\pse\23c071nc003.dgn

LAST REVISION 01-10-14 | DATE PLOTTED => 27-MAR-2014 | TIME PLOTTED => 11:49

Dist	COUNTY	ROUTE	POST MILES TOTAL PROJECT	SHEET No.	TOTAL SHEETS
02	Las	395	61.5/R76.6	130	161

REGISTERED CIVIL ENGINEER 01-10-14 DATE

03-24-14
PLANS APPROVAL DATE

REGISTERED PROFESSIONAL ENGINEER BYRON STANLEY No. C60161 Exp. 6-30-14 CIVIL STATE OF CALIFORNIA

THE STATE OF CALIFORNIA OR ITS OFFICERS OR AGENTS SHALL NOT BE RESPONSIBLE FOR THE ACCURACY OR COMPLETENESS OF SCANNED COPIES OF THIS PLAN SHEET.

ROADSIDE SIGN QUANTITIES

SHEET No.	SIGN No. (X-X)	SIGN CODE FEDERAL	SIGN CODE CALIFORNIA	PANEL SIZE INCHES	SIGN MESSAGE/DESCRIPTION	POST SIZE AND LENGTH METAL		ROADSIDE SIGN ONE POST EACH	ROADSIDE SIGN TWO POST EACH	FURNISH SINGLE SHEET ALUMINUM SIGN (0.063"-UNFRAMED) SQFT	RESET ROADSIDE SIGN EACH	REMOVE ROADSIDE SIGN EACH	RESET ROADSIDE SIGN EACH	REMARKS
1	1-1	R1-1			STOP								1	
	1-2		R2-4		45 ZONE AHEAD								1	
6	6-1		G26-2		US 395								1	
		M3-1			NORTH									BLACK ON WHITE
	6-2	R1-1			STOP								1	
	6-3		G26-2		US 395								1	
	6-4		G22	102" x 72"	Ca. Corr. Ctr. L+ TURN 1/4 MILE								1	
			Spl	102" x 36"	HIGH DESERT ST PRISON									
	6-5		SR49		SNOW REMOVAL								1	
	6-6	R1-1			STOP								1	
7	7-1	R1-1			STOP								1	
	7-2	W1-7			TWO DIRECTION LARGE ARROW								1	
			N		YELLOW DIAMOND									
			G26-2		US 395									
	7-3		G22	102" x 72"	Ca. Corr. Ctr. R+ TURN1/4MILE								1	
			Spl	102" x 36"	HIGH DESERT ST PRISON									
8	8-1		R2-4		40 ZONE AHEAD								1	
	8-2	M3-1			SOUTH								1	
			G26-2		US 395									
	8-3	R2-1			SPEED LIMIT 55								1	
	8-4	R2-1			SPEED LIMIT 40								1	
	8-5	G5		102" x 42"									1	
	8-6	G9-5		54" x 24"									1	STANDISH
	8-7	R1-1			STOP								1	
	8-8	G8		66" x 24"	RENO, R+ ARROW								1	
			G66-56		STAA TRUCK TERMINAL ACCESS									
		M6-3			DIRECTIONAL ARROW									AHEAD
		M1-6			COUNTY ROUTE MARKER									LASSEN A3
		M6-3			DIRECTIONAL ARROW									RIGHT
9	9-1	R2-1			40 MPH								1	
	9-2	R1-1			STOP								1	
	9-3	R1-1			STOP								1	
	9-4	G11			SUSANVILLE/RENO								1	
			G66-56		STAA TRUCK TERMINAL ACCESS									
		M6-3			DIRECTIONAL ARROW									
	9-5	G8		66" x 24"	RENO, LEFT ARROW								1	
		G25			LASSEN A-3									LASSEN A-3
		M6-1			LEFT									LEFT
	9-6	R2-1			SPEED LIMIT 40								1	
	9-7	R1-1			STOP								1	
	9-8	G47			NORTH								1	
			G26-2		395									
10	10-1	G9-5			CITY LIMIT								1	STANDISH
	10-2	R1-1		30" x 30"	STOP	2½"x2½"	12'	1		6.25				
	10-3	R2-1			SPEED LIMIT 55								1	
	10-4	R2-1			SPEED LIMIT 40								1	
	10-5	R2-4			40 ZONE AHEAD								1	
	10-6	G5											1	LITCHFIELD 3, ALTURAS 93
	10-7		G11-4.1		DILL SLOUGH								1	
	10-8		G11-4.1		DILL SLOUGH								1	
					SHEET TOTALS			1	0	6.25	0	0	34	

SIGN QUANTITIES

SQ-1

REVISED BY | DATE REVISED
WILL LESLIE | FRANK RIVAS
CALCULATED-DESIGNED BY | CHECKED BY
FUNCTIONAL SUPERVISOR: STEVE TOPAL

STATE OF CALIFORNIA - DEPARTMENT OF TRANSPORTATION
Caltrans® DESIGN

P:\proj2\02\3c071_plans\pse\23c071oc001.dgn

LAST REVISION 01-10-14 | DATE PLOTTED => 27-MAR-2014 | TIME PLOTTED => 11:49

Dist	COUNTY	ROUTE	POST MILES TOTAL PROJECT	SHEET No.	TOTAL SHEETS
02	Las	395	61.5/R76.6	131	161

REGISTERED CIVIL ENGINEER 01-10-14 DATE

03-24-14
PLANS APPROVAL DATE

REGISTERED PROFESSIONAL ENGINEER BYRON STANLEY No. C60161 Exp. 6-30-14 CIVIL STATE OF CALIFORNIA

THE STATE OF CALIFORNIA OR ITS OFFICERS OR AGENTS SHALL NOT BE RESPONSIBLE FOR THE ACCURACY OR COMPLETENESS OF SCANNED COPIES OF THIS PLAN SHEET.

ROADSIDE SIGN QUANTITIES

SHEET No.	SIGN No. (1-2)	SIGN CODE		PANEL SIZE	SIGN MESSAGE/DESCRIPTION	POST SIZE AND LENGTH		ROADSIDE SIGN		FURNISH SINGLE SHEET ALUMINUM SIGN (0.063"-UNFRAMED)	RESET ROADSIDE SIGN	REMOVE ROADSIDE SIGN	RESET ROADSIDE SIGN	REMARKS
		FEDERAL	CALIFORNIA	INCHES		METAL		ONE POST	TWO POST					
								EACH	EACH	SQFT	EACH	EACH	EACH	
11	11-1	G8			LAMBERT Ln								1	
	11-2	W1-7			TWO DIRECTION LARGE ARROW								1	
		OM1-3												
	11-3	R1-1			STOP								1	
	11-4	G8			LAMBERT Ln								1	LEFT
	11-5	G8			CUTOFF ROAD								1	LEFT
12	12-1	R1-1			STOP								1	
	12-2	W1-7			TWO DIRECTION LARGE ARROW								1	
		OM1-3												
	12-3		G11-4.1		SUSAN RIVER OVERFLOW								1	
	12-4	G8			CUTOFF ROAD								1	
	12-5		G11-4.1		SUSAN RIVER OVERFLOW								1	
	12-6		S32		ADOPT A HIGHWAY								1	
			S32A											
	12-7		S32		ADOPT A HIGHWAY								1	
			S32A											
	12-8		G11-4.1		SUSAN RIVER								1	
	12-9		G11-4.1		SUSAN RIVER								1	
	12-10	R2-4			50 ZONE AHEAD								1	
	12-11	R2-1			SPEED LIMIT 50								1	
	12-12	R2-1			SPEED LIMIT 55								1	
13	13-1	G9-2		72" x 30"									1	LITCHFIELD
	13-2	G5		72" x 42"									1	STANDISH 3, SUSANVILLE 16, RENO 92
			G26-2		395									
		G48			SOUTH									
	13-3	W1-4			REVERSE CURVE								1	LEFT
		W13-1			40 MPH									
	13-4	W1-4			REVERSE CURVE								1	LEFT
		W13-1			40 MPH									
	13-5	W1-8			CHEVRON ALIGNMENT								1	LEFT
	13-6		W4-22	72" x 72"	COMBINATION TURN/Adv. SPEED								1	40
	13-7	W1-8			CHEVRON ALIGNMENT								1	LEFT
14	14-1	W4-2			LANE ENDS							1		
	14-2	W4-2			LANE ENDS							1		
	14-3		G1-1										1	STATE PRISON 7
		G25			COUNTY ROUTE MARKER									LASSEN A-27
		M6-2			DIRECTIONAL ARROW									
	14-4		G26-2		ROUTE SHEILD								1	395
		M3-3			SOUTH									
	14-5	R1-1			STOP								1	
	14-6	W1-8			CHEVRON ALIGNMENT								1	
	14-7	W1-8			CHEVRON ALIGNMENT								1	
	14-8	W1-8			CHEVRON ALIGNMENT								1	
	14-9	R1-1			STOP								1	
	14-10		SR4										1	SCHOOL, SPEED LIMIT 25
	14-11	W1-8			CHEVRON ALIGNMENT								1	
SHEET TOTALS								0	0	0	0	2	33	

REVISED BY | DATE REVISED
WILL LESLIE | FRANK RIVAS
CALCULATED-DESIGNED BY | CHECKED BY
FUNCTIONAL SUPERVISOR | STEVE TOPAL
STATE OF CALIFORNIA - DEPARTMENT OF TRANSPORTATION
Caltrans® DESIGN

P:\proj2\02\3c071_plans\pse\23c071oc002.dgn

SIGN QUANTITIES

SQ-2

LAST REVISION 01-10-14 | DATE PLOTTED => 27-MAR-2014 TIME PLOTTED => 11:49

Dist	COUNTY	ROUTE	POST MILES TOTAL PROJECT	SHEET No.	TOTAL SHEETS
02	Las	395	61.5/R76.6	132	161

REGISTERED CIVIL ENGINEER 01-10-14 DATE

03-24-14
PLANS APPROVAL DATE

REGISTERED PROFESSIONAL ENGINEER BYRON STANLEY No. C60161 Exp. 6-30-14 CIVIL STATE OF CALIFORNIA

THE STATE OF CALIFORNIA OR ITS OFFICERS OR AGENTS SHALL NOT BE RESPONSIBLE FOR THE ACCURACY OR COMPLETENESS OF SCANNED COPIES OF THIS PLAN SHEET.

ROADSIDE SIGN QUANTITIES

SHEET No.	SIGN No. (1-2)	SIGN CODE FEDERAL	SIGN CODE CALIFORNIA	PANEL SIZE INCHES	SIGN MESSAGE/DESCRIPTION	POST SIZE AND LENGTH METAL		ROADSIDE SIGN ONE POST EACH	ROADSIDE SIGN TWO POST EACH	FURNISH SINGLE SHEET ALUMINUM SIGN (0.063"-UNFRAMED) SQFT	REMOVE ROADSIDE SIGN EACH	RESET ROADSIDE SIGN EACH	REMARKS
14	14-12		SR4									1	
	14-13	S5-2			END SCHOOL ZONE							1	
	14-14	G78										1	
		G25			LASSEN A-27								
		G36			DIRECTIONAL ARROW								
	14-15	W11-1			BICYCLE CROSSING							1	FLOURESCENT YELLOW-GREEN
		W16-1P			SHARE THE ROAD								
	14-16		G26-2		395								
		G47											NORTH
15	15-1	W1-4			REVERSE CURVE							1	FACING SOUTH BOUND, LEFT
		W13-1			40 MPH								DOUBLE SIDED ONE POST
		S1-1			SCHOOL PLAQUE								FACING NORTH BOUND, FYG
		W16-7P			SCHOOL CROSSING								FLOURESCENT YELLOW-GREEN
	15-2	W1-4			LEFT							1	
		W13-1			40 MPH								
	15-3	S1-1			SCHOOL PLAQUE							1	FLOURESCENT YELLOW-GREEN
		W16-7P			SCHOOL CROSSING								FLOURESCENT YELLOW-GREEN
	15-4	G9		72" x 30"								1	LITCHFIELD
	15-5	G5		78" x 42"								1	RAVENDALE 27, ALTURAS 87, LAKEVIEW 142
	15-6		SPL		RADAR FEEDBACK							1	SOLAR
	15-7		SR4									1	SCHOOL, SPEED LIMIT 25
	15-8	S5-2			END SCHOOL ZONE							1	FLOURESCENT YELLOW-GREEN
	15-9	G90		84" x 30"	NEXT SERVICES 70 MILES							1	
	15-10	R2-1			65 MPH							1	
			R48-1		RADAR ENFORCED								
	15-11	R2-1			50 MPH							1	
			R48-1		RADAR ENFORCED								
16	16-1		R6-3		TRUCKS 3 AXELS OR MORE, 55 MAXIMUM							1	
	16-2		R2-4		SPEED ZONE AHEAD (50)							1	
	16-3		R6-4		ALL VEHICLES WHEN TOWING 55 MAXIMUM							1	
	16-4		S32		ADOPT A HIGHWAY	2½" x 2½"	12'	1		7.5			
			S32A							0.83			
			S32-1										RECOGNITION PANEL PROVIDED BY STATE
	16-5		S32		ADOPT A HIGHWAY							1	
			S32A										
			S32-1										
20	20-1	G91		78" x 18"								1	HONEY LAKE WILDLIFE AREA, FLEMING UNIT
			G200-81		WILDLIFE VIEWING								
			G200-81A										
	20-2		S32		ADOPT A HIGHWAY							1	DOUBLE SIDED
			S32A										
			S32-1										
	20-3	R1-1			STOP							1	
	20-4	G91		78" x 18"								1	HONEY LAKE WILDLIFE AREA, FLEMING UNIT
			G200-81		WILDLIFE VIEWING								
			G200-81A										
21	21-1		G81-66									1	
SHEET 1 TOTALS								1	0	6.25	0	34	
SHEET 2 TOTALS								0	0	0	2	33	
SHEET 3 TOTALS								1	0	8.33	0	24	
GRAND TOTAL								2	0	14.58	2	91	

SIGN QUANTITIES
SQ-3

REVISED BY | DATE REVISED
WILL LESLIE | FRANK RIVAS
CALCULATED-DESIGNED BY | CHECKED BY
FUNCTIONAL SUPERVISOR: STEVE TOPAL

STATE OF CALIFORNIA - DEPARTMENT OF TRANSPORTATION
Caltrans DESIGN

P:\proj2\02\3c071_plans\pse\23c071oc003.dgn

LAST REVISION 01-10-14 | DATE PLOTTED => 27-MAR-2014 | TIME PLOTTED => 11:49

Dist	COUNTY	ROUTE	POST MILES TOTAL PROJECT	SHEET No.	TOTAL SHEETS
02	Las	395	61.5/R76.6	133	161

REGISTERED CIVIL ENGINEER 01-10-14 DATE

03-24-14
PLANS APPROVAL DATE

REGISTERED PROFESSIONAL ENGINEER BYRON STANLEY No. C60161 Exp. 6-30-14 CIVIL STATE OF CALIFORNIA

THE STATE OF CALIFORNIA OR ITS OFFICERS OR AGENTS SHALL NOT BE RESPONSIBLE FOR THE ACCURACY OR COMPLETENESS OF SCANNED COPIES OF THIS PLAN SHEET.

NOTE:

1. (N) - NOT A SEPARATE PAY ITEM, FOR INFORMATION ONLY

ROADWAY QUANTITIES

POSTMILE		STATION			HMA TYPE A	CLASS 2 AGGREGATE BASE	ROADWAY EXCAVATION	SHOULDER BACKING	TACK COAT	PULVERIZED ROADBED	ASPHALTIC EMULSION (PULVERIZED ROADBED)	CEMENT (PULVERIZED ROADBED)	SAND COVER (PULVERIZED ROADBED)	(N) EMBANKMENT	COMMENTS
BEGIN	END	LINE	BEGIN	END	TON	CY	CY	TON	TON	SQYD	TON	TON	TON	CY	
R61.6	62.2	"A2"	444+50	479+40	5698	5125	6442	536	6.6					620	BEGIN LOCATION 1
62.2	62.7	"A2"	479+40	506+00	4322	3897	5473	450	5.0					954	
62.7	63.2	"A2"	506+00	532+40	4329	3908	5197	450	5.0					954	
63.2	63.7	"A2"	532+40	558+80	4320	3894	5116	466	5.0					785	
63.7	64.3	"A2"	558+80	590+11	5168	4662	6100	544	6.0					694	
64.3	64.8	"A2"	590+11	615+68	4104	3724	4834	484	4.8					262	
64.8	65.1	"A2"	615+68	630+25	2119	1914	2780	246	2.5					45	END LOCATION 1
69.5	70.1	"A3"	3669+50	3703+57	4953	4461	6681	510	5.7					983	BEGIN LOCATION 2 (ROAD A3)
70.1	70.6	"A3"	3703+57	3729+00	3998	3593	5254	358	4.6					252	END LOCATION 2
71.0	71.5	"A4"	3760+60	3776+60	2140	1941	2908	392	2.5					62	Beg LOCATION 3 ,LAMBERT LANE
71.5	71.8	"A4"	3776+60	3792+00	2103	1899	2775	316	2.5					45	CUTOFF ROAD
71.8	72.5	"A4"	3792+00	3828+00	4002	3633	5638	722	4.7					68	TULE AVENUE
72.5	72.8	"A4"	3828+00	3842+00	1830	1649	2343	268	2.2					20	CENTER ROAD
72.8	73.0	"A4"	3842+00	3854+50	1629	1468	1915	226	1.9					53	
73.0	73.5	"A4"	3854+50	3883+00	3730		2771	630	4.3	10,362	2.4	51.8	15.5	665	BEGIN PULVERIZATION
73.5	74.0	"A4"	3883+00	3907+20	3154		2219	620	3.7	8760	2.0	43.8	13.1	750	STURGILL LANE (LOOP)
74.0	74.5	"A4"	3907+20	3933+60	3478		2846	640	4.0	9660	2.2	48.3	14.5	554	
74.5	75.0	"A4"	3933+60	3960+00	3478		2794	646	4.0	9660	2.2	48.3	14.5	647	STURGILL LANE (LOOP)
75.0	75.5	"A4"	3960+00	3986+40	3478		2794	652	4.0	9660	2.2	48.3	14.5	698	
75.5	R76.0	"A4"	3986+40	4005+12	2428		2155	456	2.8	6745	1.5	33.7	10.1	423	MAPES LANE
R76.0	R76.6	"A4"	4005+12	4040+50	4657		2780	854	5.4	12,936	3.0	64.7	19.4	662	END LOCATON 3
ROADWAY TOTAL					75,118	45,768	81,815	10,466	87.2	67,783	15.5	338.9	101.7	10,196	
DRIVEWAY TOTAL					1866	1730	1170	450	4.3						
ROAD CONNECTIONS TOTAL					330	311	15	98	1.1						
TOTAL					77,314	47,809	83,000	11,014	92.6	67,783	15.5	338.9	101.7	10,196	

RESET MAILBOX

STATION	MAILBOX
	EA
"A2" 446+95	2
"A2" 451+60	3
"A2" 469+36	2
"A2" 472+10	2
"A2" 473+26	1
"A2" 474+71	1
"A2" 477+21	3
"A2" 482+53	1
"A2" 486+40	1
"A2" 510+50	1
"A2" 534+99	1
"A2" 540+40	1
"A2" 545+50	2
"A2" 554+50	3
"A2" 557+69	1
"A2" 561+67	1
"A2" 565+56	1
"A2" 569+03	1
"A2" 575+95	1
"A2" 620+45	1
"A2" 626+95	1
"A2" 629+15	2
TOTAL	35

COLD PLANE ASPHALT CONCRETE PAVEMENT

LOCATION	SHEET	COLD PLANE ASPHALT CONCRETE PAVEMENT
		SQYD
MAINLINE "A2"	L-1	180
STANDISH CANAL	L-4	6
BUFFUM Rd	L-11	165
COTTONWOOD Rd	L-12	155
LEAVIT Ln	L-13	245
MAINLINE "A2"	L-14	115
MAINLINE "A3"	L-15	115
SIERRA St	L-16	110
MILFORD STREET	L-17	55
STANDISH BUNTINGVILLE Rd	L-17	290
CHURCH St	L-17	170
MAINLINE "A3"	L-18	130
MAINLINE "A4" DILL SLOUGH	L-19	180
LAMBERT Ln	L-20	515
CUTOFF Rd	L-22	550
MARKET St	L-25	120
CENTER Rd	L-25	275
MAPES ROAD	L-37	530
MAINLINE "A4"	L-39	720
TOTAL		4626

RUMBLE STRIP

LOCATION	STA
"A2" 444+00 TO 633+50	380
TOTAL	380

SUBGRADE ENHANCEMENT GEOTEXTILE, (CLASS A1)

STATION		AREA
BEGIN	END	SQYD
"A2" 470+00	"A2" 630+25	71,028
"A4" 3761+00	"A4" 3854+40	35,311
	TOTAL	106,339

PLACE HMA (MISCELLANEOUS AREA)

STATION		AREA
BEGIN	END	SQYD
"A2" 479+04	"A2" 479+31	10
	TOTAL	10

SUMMARY OF QUANTITIES

Q-1

BYRON STANLEY | REVISED BY | DATE REVISED
WILL LESLIE | CALCULATED-DESIGNED BY | CHECKED BY
FUNCTIONAL SUPERVISOR: STEVE TOPAL

STATE OF CALIFORNIA - DEPARTMENT OF TRANSPORTATION
Caltrans DESIGN

P:\proj2\02\3c071_plans\pse\23c071pa001.dgn

LAST REVISION 01-10-14 | DATE PLOTTED => 27-MAR-2014 | TIME PLOTTED => 11:49

Dist	COUNTY	ROUTE	POST MILES TOTAL PROJECT	SHEET No.	TOTAL SHEETS
02	Las	395	61.5/R76.6	134	161

REGISTERED CIVIL ENGINEER 01-10-14 DATE

03-24-14
PLANS APPROVAL DATE

REGISTERED PROFESSIONAL ENGINEER BYRON STANLEY No. C60161 Exp. 6-30-14 CIVIL STATE OF CALIFORNIA

THE STATE OF CALIFORNIA OR ITS OFFICERS OR AGENTS SHALL NOT BE RESPONSIBLE FOR THE ACCURACY OR COMPLETENESS OF SCANNED COPIES OF THIS PLAN SHEET.

NOTE:

1. (N) - NOT A SEPARATE PAY ITEM, FOR INFORMATION ONLY

METAL BEAM GUARD RAILING QUANTITIES

LOCATION	SHEET	STATION BEGIN	STATION END	APPROACH QUADRANT		REMOVE GUARDRAIL LF	MBGR (7' POST) LF	TRANSITION RAILING (TYPE WB) EA	ALTERNATIVE FLARED TERMINAL SYSTEM EA	TREATED WOOD WASTE LB	CONTROLLED LOW STRENGTH MATERIAL CY	MINOR CONCRETE (MINOR STRUCTURE) CY
STANDISH CANAL (BRIDGE No. 07-0030)	L-4	"A2" 478+53.0	"A2" 480+25.0	BB	L+			1	1			3.1
					R+			1	1			3.1
				EB	L+			1	1			3.1
					R+			1	1			3.1
CULVERT	L-5	"A2" 495+49.2	"A2" 496+36.7		L+		12.5		2		0.03	
					R+		12.5		2		0.03	
CULVERT	L-10	"A2" 573+33.5	"A2" 574+33.5		L+		25.0		2		0.06	
CULVERT	L-12	"A2" 592+86.0	"A2" 593+99.5		L+		37.5		2		0.09	
					R+		37.5		2		0.10	
CULVERT	L-18	"A4" 3721+48.0	"A4" 3722+48.0		L+		25		2		0.10	
DILL SLOUGH (BRIDGE No. 07-0080)	L-19	"A4" 3756+53.0	"A4" 3761+99.0	BB	L+	75	25.0	1	1	375	0.06	3.1
					R+	100	25.0	1	1	500	0.06	3.1
				EB	L+	87.5	25.0	1	1	435	0.06	3.1
					R+	137.5	75.0	1	1	690	1.97	3.1
SUSAN RIVER OVERFLOW (BRIDGE No. 07-0081)	L-22	"A4" 3795+40.0	"A4" 3801+00.0	BB	L+	62.5	25.0	1	1	325	0.06	3.1
					R+	62.5	25.0	1	1	325	0.06	3.1
				EB	L+	62.5	25.0	1	1	325	0.06	3.1
					R+	62.5	25.0	1	1	325	0.06	3.1
FROM SHEET DQ-3												10.52
					TOTAL	625.0	400.0	12	24	3300	2.80	47.7

OBJECT MARKER (TYPE P)

TOTAL	24	EA

WATER POLLUTION CONTROL

	TEMPORARY FIBER ROLL	TEMPORARY SILT FENCE	TEMPORARY GRAVEL BAG BERM	TEMPORARY CHECK DAM	TEMPORARY COVER	TEMPORARY HYDRAULIC MULCH (BONDED FIBER MATRIX)	TEMPORARY SOIL BINDER
	LF	LF	LF	LF	SQYD	SQYD	SQYD
TOTAL	12,000	1000	300	400	250	87,100	87,100

SUMMARY OF QUANTITIES

Q-2

REVISED BY | DATE REVISED
WILL LESLIE | BYRON STANLEY
CALCULATED-DESIGNED BY | CHECKED BY
FUNCTIONAL SUPERVISOR: STEVE TOPAL

STATE OF CALIFORNIA - DEPARTMENT OF TRANSPORTATION
Caltrans® DESIGN

P:\proj2\02\3c071_plans\pse\23c071pa002.dgn

LAST REVISION 01-10-14 | DATE PLOTTED => 27-MAR-2014 | TIME PLOTTED => 11:49

Dist	COUNTY	ROUTE	POST MILES TOTAL PROJECT	SHEET No.	TOTAL SHEETS
02	Las	395	61.5/R76.6	135	161

LICENSED LANDSCAPE ARCHITECT

03-24-14
PLANS APPROVAL DATE

LICENSED LANDSCAPE ARCHITECT J. PATRICK SULLIVAN #3125 Signature 07/31/14 Renewal Date 01/10/14 Date STATE OF CALIFORNIA

THE STATE OF CALIFORNIA OR ITS OFFICERS OR AGENTS SHALL NOT BE RESPONSIBLE FOR THE ACCURACY OR COMPLETENESS OF SCANNED COPIES OF THIS PLAN SHEET.

NOTE:

1. SEE SUMMARY OF EROSION CONTROL QUANTITIES.

DISTURBED AREA

LOCATION	ACRE
LOCATION 1 "A2" Sta 444+25 TO Sta 630+50	5.9
LOCATION 2 "A3" Sta 3669+25 TO Sta 3729+50	1.9
LOCATION 3 "A4" Sta 3760+75 TO Sta 4040+75	10.3
TOTAL	18.1

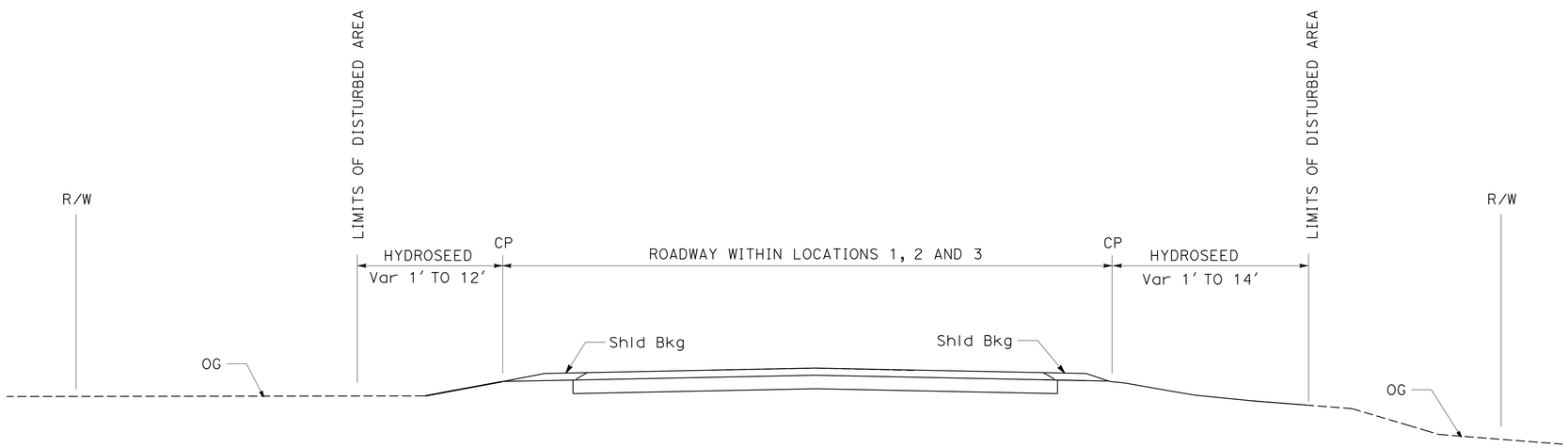

ROUTE 395

CONSTRUCTION WITHIN ALIGNMENTS "A2", "A3" AND "A4"

EROSION CONTROL DETAILS

NO SCALE

ECD-1

APPROVED FOR LANDSCAPE WORK ONLY

REVISED BY | DATE REVISED

J. PATRICK SULLIVAN | RON FLORY

CALCULATED-DESIGNED BY | CHECKED BY

SENIOR LANDSCAPE ARCHITECT | RON FLORY

STATE OF CALIFORNIA - DEPARTMENT OF TRANSPORTATION
Caltrans® LANDSCAPE ARCHITECTURE

P:\proj2\02\3c071_plans\pse\23c071ef001.dgn

LAST REVISION 01-08-14 | DATE PLOTTED => 27-MAR-2014 | TIME PLOTTED => 11:49

Dist	COUNTY	ROUTE	POST MILES TOTAL PROJECT	SHEET No.	TOTAL SHEETS
02	Las	395	61.5/R76.6	136	161

LICENSED LANDSCAPE ARCHITECT

03-24-14
PLANS APPROVAL DATE

LICENSED LANDSCAPE ARCHITECT J. PATRICK SULLIVAN #3125 Signature 07/31/14 Renewal Date 01/10/14 Date STATE OF CALIFORNIA

THE STATE OF CALIFORNIA OR ITS OFFICERS OR AGENTS SHALL NOT BE RESPONSIBLE FOR THE ACCURACY OR COMPLETENESS OF SCANNED COPIES OF THIS PLAN SHEET.

NOTE:

1. (N) - NOT A SEPARATE PAY ITEM, FOR INFORMATION ONLY.

HYDROSEED SEQUENCE/APPLICATION RATES (N)

SEQUENCE	ITEM	MATERIAL DESCRIPTION	MATERIAL TYPE	APPLICATION RATE (N)
STEP 1	HYDROSEED	PURE LIVE SEED	MIX	82 LB/ACRE
		FIBER	ALTERNATE	1200 LB/ACRE
		SLOW RELEASE FERTLIZER	GRANULAR	100 LB/ACRE
STEP 2	HYDROSEED	COMPOST	WOOD PRODUCT	1.2 CY/ACRE
		FIBER	ALTERNATE	2200 LB/ACRE
		TACKIFIER	PSYLLIUM	100 LB/ACRE

SEED MIX (N)

BOTANICAL NAME (COMMON NAME)	PERCENT GERMINATION (MINIMUM)	POUNDS PURE LIVE SEED PER ACRE (N) (SLOPE MEASUREMENT)
ACHILLEA MILLEFOLIUM (COMMON YARROW)	50	2
ARTEMESIA TRIDENDATA (BIG BASIN SAGE)	50	10
CHRYSOTHAMNUS NAUSEOSUS (RUBBER RABBITBRUSH)	60	10
ELYMUS ELYMIOIDES (SQUIRREL TAIL WILD RYE)	70	10
FESTUCA IDAHOENSIS (WESTERN FESCUE)	70	25
LOTUS PURSHIANUS (PURSHING)	70	8
LUPINUS BICOLOR (DWARF LUPINES)	60	2
VULPIA MICROSTACHYS (SMALL FESCUE)	80	15
	TOTAL	82

HYDROSEED TOTALS

MATERIAL DESCRIPTION	MATERIAL TYPE	TOTALS	
PURE LIVE SEED	MIX	1490 LBS (N)	HYDROSEED
FIBER	ALTERNATE	61778 LBS (N)	HYDROSEED
SLOW RELEASE FERTLIZER	GRANULAR	1817 LBS (N)	HYDROSEED
COMPOST	WOOD PRODUCT	21.8 CY (N)	HYDROSEED
TACKIFIER	PSYLLIUM	1817 LBS (N)	SQFT
LOCATION 1	FROM STA "A2" 444+25 TO 630+50		257,005
LOCATION 2	FROM STA "A3" 3669+25 TO 3729+50		84,071
LOCATION 3	FROM STA "A4" 3760+75 TO 4040+75		450,412
		TOTAL	791,488

EROSION CONTROL QUANTITIES

ECQ-1

APPROVED FOR LANDSCAPE WORK ONLY

REVISED BY | DATE REVISED
J. PATRICK SULLIVAN | RON FLORY
CALCULATED-DESIGNED BY | CHECKED BY
SENIOR LANDSCAPE ARCHITECT | RON FLORY
STATE OF CALIFORNIA - DEPARTMENT OF TRANSPORTATION
Caltrans LANDSCAPE ARCHITECTURE

P:\proj2\02\3c071_plans\pse\23c071tg001.dgn

LAST REVISION 01-08-14 | DATE PLOTTED => 27-MAR-2014 | TIME PLOTTED => 11:49

Dist	COUNTY	ROUTE	POST MILES TOTAL PROJECT	SHEET No.	TOTAL SHEETS
02	Las	395	61.5/R76.6	137	161

REGISTERED CIVIL ENGINEER 01-10-14 DATE

03-24-14
PLANS APPROVAL DATE

REGISTERED PROFESSIONAL ENGINEER THERESA ANDERSON No. C77957 Exp. 6-30-15 CIVIL STATE OF CALIFORNIA

THE STATE OF CALIFORNIA OR ITS OFFICERS OR AGENTS SHALL NOT BE RESPONSIBLE FOR THE ACCURACY OR COMPLETENESS OF SCANNED COPIES OF THIS PLAN SHEET.

NOTE:

1. FOR ACCURATE RIGHT OF WAY DATA, CONTACT RIGHT OF WAY ENGINEERING AT THE DISTRICT OFFICE.

NOTES (THIS SHEET):

1 COIL 10' OF CABLES IN THE PULL BOX.

CENSUS LOOPS

LOCATION		LOOP DETECTOR
PM	STATION	EA
69.929	"A3" 3691+69	1
70.216	"A3" 3706+84	1
	TOTAL	2

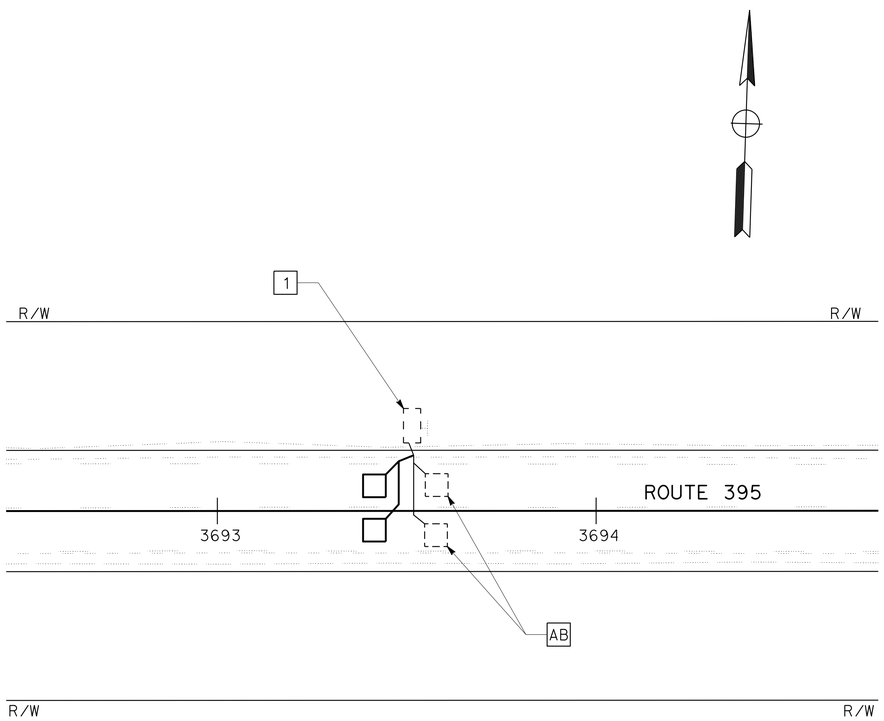

TRAFFIC COUNT STATION #307

"A3" 3693+50

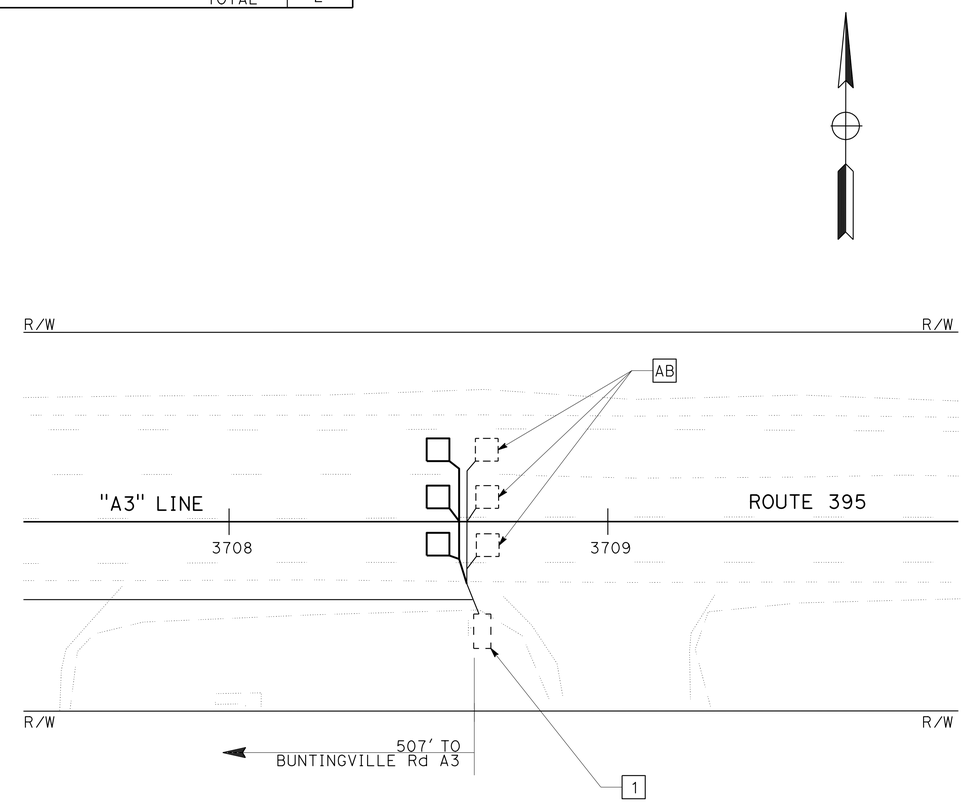

TRAFFIC COUNT STATION #261

"A3" 3708+50

MODIFY TRAFFIC COUNT STATION

NO SCALE

E-1

APPROVED FOR ELECTRICAL WORK ONLY

STATE OF CALIFORNIA - DEPARTMENT OF TRANSPORTATION
Caltrans ELECTRICAL DESIGN

FUNCTIONAL SUPERVISOR: ROB STINGER
CALCULATED-DESIGNED BY: TERI ANDERSON
CHECKED BY: ARTURO ROBLES
REVISED BY
DATE REVISED

P:\proj\02\3c071_plans\pse\23c071ua001.dgn

LAST REVISION 01-10-14 | DATE PLOTTED => 27-MAR-2014 | TIME PLOTTED => 11:50

M

Maint	MAINTENANCE
Max	MAXIMUM
MB	METAL BEAM
MBB	METAL BEAM BARRIER
MBGR	METAL BEAM GUARD RAILING
Med	MEDIAN
MGS	MIDWEST GUARDRAIL SYSTEM
MH	MANHOLE
Min	MINIMUM
Misc	MISCELLANEOUS
Misc I & S	MISCELLANEOUS IRON AND STEEL
Mkr	MARKER
Mod	MODIFIED,
	MODIFY
Mon	MONUMENT
MP	METAL PLATE
MPGR	METAL PLATE GUARD RAILING
MR	MOVEMENT RATING
MSE	MECHANICALLY STABILIZED EMBANKMENT
Mt	MOUNTAIN, MOUNT
Mtl	MATERIAL
MVP	MAINTENANCE VEHICLE PULLOUT

N

N	NORTH
NB	NORTHBOUND
No.	NUMBER (MUST HAVE PERIOD)
Nos.	NUMBERS (MUST HAVE PERIOD)
NPS	NOMINAL PIPE SIZE
NS	NEAR SIDE
NSP	NEW STANDARD PLAN
NTS	NOT TO SCALE

O

Oblr	OBLITERATE
OC	OVERCROSSING
OD	OUTSIDE DIAMETER
OF	OUTSIDE FACE
OG	ORIGINAL GROUND
OGAC	OPEN GRADED ASPHALT CONCRETE
OGFC	OPEN GRADED FRICTION COURSE
OH	OVERHEAD
OHWM	ORDINARY HIGH WATER MARK
O-O	OUT TO OUT
Opp	OPPOSITE
OSD	OVERSIDE DRAIN

P

P	PAGE
PAP	PERFORATED ALUMINUM PIPE
PB	PULL BOX
PC	POINT OF CURVATURE,
	PRECAST
PCC	POINT OF COMPOUND CURVE,
	PORTLAND CEMENT CONCRETE
PCMS	PORTABLE CHANGEABLE MESSAGE SIGN
PCP	PERFORATED CONCRETE PIPE,
	PRESTRESSED CONCRETE PIPE
PCVC	POINT OF COMPOUND VERTICAL CURVE
PEC	PERMIT TO ENTER AND CONSTRUCT
Ped	PEDESTRIAN
Ped OC	PEDESTRIAN OVERCROSSING
Ped UC	PEDESTRIAN UNDERCROSSING
Perm Mtl	PERMEABLE MATERIAL

P continued

PG	PROFILE GRADE
PI	POINT OF INTERSECTION
PJP	PARTIAL JOINT PENETRATION
Pkwy	PARKWAY
ℙ,PL	PLATE
P/L	PROPERTY LINE
PM	POST MILE,
	TIME FROM NOON TO MIDNIGHT
PN	PAVING NOTCH
POC	POINT OF HORIZONTAL CURVE
POT	POINT OF TANGENT
POVC	POINT OF VERTICAL CURVE
PP	PIPE PILE,
	PLASTIC PIPE,
	POWER POLE
PPL	PREFORMED PERMEABLE LINER
PPP	PERFORATED PLASTIC PIPE
PRC	POINT OF REVERSE CURVE
PRF	PAVEMENT REINFORCING FABRIC
PRVC	POINT OF REVERSE VERTICAL CURVE
PS&E	PLANS, SPECIFICATIONS AND ESTIMATES
PS, P/S	PRESTRESSED
PSP	PERFORATED STEEL PIPE
PT	POINT OF TANGENCY
PVC	POLYVINYL CHLORIDE
Pvmt	PAVEMENT

Q

Qty	QUANTITY

R

R	RADIUS
R & D	REMOVE AND DISPOSE
R & S	REMOVE AND SALVAGE
R/C	RATE OF CHANGE
RCA	REINFORCED CONCRETE ARCH
RCB	REINFORCED CONCRETE BOX
RCP	REINFORCED CONCRETE PIPE
RCPA	REINFORCED CONCRETE PIPE ARCH
Rd	ROAD
Reinf	REINFORCED,
	REINFORCEMENT,
	REINFORCING
Rel	RELOCATE
Repl	REPLACEMENT
Ret	RETAINING
Rev	REVISED, REVISION
Rdwy	ROADWAY
RHMA	RUBBERIZED HOT MIX ASPHALT
Riv	RIVER
RM	ROAD-MIXED
RP	RADIUS POINT,
	REFERENCE POINT
RR	RAILROAD
RSP	ROCK SLOPE PROTECTION,
	REVISED STANDARD PLAN
Rt	RIGHT
Rte	ROUTE
RW	REDWOOD,
	RETAINING WALL
R/W	RIGHT OF WAY
Rwy	RAILWAY

S

S	SOUTH,
	SUPPLEMENT
SAE	STRUCTURE APPROACH EMBANKMENT
Salv	SALVAGE
SAPP	STRUCTURAL ALUMINUM PLATE PIPE
SB	SOUTHBOUND
SC	SAND CUSHION
SCSP	SLOTTED CORRUGATED STEEL PIPE
SD	STORM DRAIN
Sec	SECOND,
	SECTION
Sep	SEPARATION
SG	SUBGRADE
Shld	SHOULDER
Sht	SHEET
Sim	SIMILAR
℄	STATION LINE
SM	SELECTED MATERIAL
Spec	SPECIAL,
	SPECIFICATIONS
SPP	SLOTTED PLASTIC PIPE
SS	SLOPE STAKE
SSBM	STRAP AND SADDLE BRACKET METHOD
SSD	STRUCTURAL SECTION DRAIN
SSPA	STRUCTURAL STEEL PLATE ARCH
SSPP	STRUCTURAL STEEL PLATE PIPE
SSPPA	STRUCTURAL STEEL PLATE PIPE ARCH
SSRP	STEEL SPIRAL RIB PIPE
St	STREET
Sta	STATION
STBB	SINGLE THRIE BEAM BARRIER
Std	STANDARD
Str	STRUCTURE
Surf	SURFACING
SW	SIDEWALK,
	SOUND WALL
Swr	SEWER
Sym	SYMMETRICAL
S4S	SURFACE 4 SIDES

T

T	SEMI-TANGENT
Tan	TANGENT
TBB	THRIE BEAM BARRIER
Tbr	TIMBER
TC	TOP OF CURB
TCB	TRAFFIC CONTROL BOX
TCE	TEMPORARY CONSTRUCTION EASEMENT
Tel	TELEPHONE
Temp	TEMPORARY
TG	TOP OF GRADE
Tot	TOTAL
TP	TELEPHONE POLE
TPB	TREATED PERMEABLE BASE
TPM	TREATED PERMEABLE MATERIAL
Trans	TRANSITION

T continued

TS	TRANSVERSE,
	TRAFFIC SIGNAL,
	TUBULAR STEEL
Typ	TYPICAL

U

UC	UNDERCROSSING
UD	UNDERDRAIN
UG	UNDERGROUND
UON	UNLESS OTHERWISE NOTED
UP	UNDERPASS

V

V	VALVE,
	DESIGN SPEED
Var	VARIABLE,
	VARIES
VC	VERTICAL CURVE
VCP	VITRIFIED CLAY PIPE
Vert	VERTICAL
Via	VIADUCT
Vol	VOLUME

W

W	WEST,
	WIDTH
WB	WESTBOUND
WH	WEEP HOLE
WM	WIRE MESH
WS	WATER SURFACE
WSP	WELDED STEEL PIPE
Wt	WEIGHT
WV	WATER VALVE
WW	WINGWALL
WWLOL	WINGWALL LAYOUT LINE

X

X Sec	CROSS SECTION
Xing	CROSSING

Y

Yr	YEAR
Yrs	YEARS

Dist	COUNTY	ROUTE	POST MILES TOTAL PROJECT	SHEET No.	TOTAL SHEETS
02	Las	395	61.5/R76.6	138	161

Grace M. Tsushima
REGISTERED CIVIL ENGINEER

July 19, 2013
PLANS APPROVAL DATE

REGISTERED PROFESSIONAL ENGINEER Grace M. Tsushima No. C49814 Exp. 9-30-14 CIVIL STATE OF CALIFORNIA

THE STATE OF CALIFORNIA OR ITS OFFICERS OR AGENTS SHALL NOT BE RESPONSIBLE FOR THE ACCURACY OR COMPLETENESS OF SCANNED COPIES OF THIS PLAN SHEET.

TO ACCOMPANY PLANS DATED 03-24-14

UNIT OF MEASUREMENT SYMBOLS:

Some of the symbols used in the project plan quantity tables and in the Bid Item List are:

TABLE A

SYMBOL USED	DEFINITIONS
ACRE	ACRE
CF	CUBIC FOOT
CY	CUBIC YARD
EA	EACH
GAL	GALLON
LB	POUND
LF	LINEAR FOOT
SQFT	SQUARE FOOT
SQYD	SQUARE YARD
STA	100 FEET
TAB	TABLET
TON	2,000 POUNDS

Some of the symbols used in the plans other than in the project plan quantity tables are:

TABLE B

SYMBOL USED	DEFINITIONS
ksi	KIPS PER SQUARE INCH
ksf	KIPS PER SQUARE FOOT
psi	POUNDS PER SQUARE INCH
psf	POUNDS PER SQUARE FOOT
lb/ft^3, pcf	POUNDS PER CUBIC FOOT
tsf	TONS PER SQUARE FOOT
mph, MPH *	MILES PER HOUR
ø	NOMINAL DIAMETER
oz	OUNCE
lb	POUND
kip	1,000 POUNDS
cal	CALORIE
ft	FOOT OR FEET
gal	GALLON

* For use on a sign panel only

STATE OF CALIFORNIA
DEPARTMENT OF TRANSPORTATION

ABBREVIATIONS (SHEET 2 OF 2)

NO SCALE

RSP A10B DATED JULY 19, 2013 SUPERSEDES STANDARD PLAN A10B DATED MAY 20, 2011 - PAGE 2 OF THE STANDARD PLANS BOOK DATED 2010.

REVISED STANDARD PLAN RSP A10B

2010 REVISED STANDARD PLAN RSP A10B

DATE PLOTTED => 27-MAR-2014
TIME PLOTTED => 11:50

Dist	COUNTY	ROUTE	POST MILES TOTAL PROJECT	SHEET No.	TOTAL SHEETS
02	Las	395	61.5/R76.6	139	161

REGISTERED CIVIL ENGINEER

April 20, 2012
PLANS APPROVAL DATE

REGISTERED PROFESSIONAL ENGINEER
Roberta L. McLaughlin
No. C40375
Exp. 3-31-13
CIVIL
STATE OF CALIFORNIA

THE STATE OF CALIFORNIA OR ITS OFFICERS OR AGENTS SHALL NOT BE RESPONSIBLE FOR THE ACCURACY OR COMPLETENESS OF SCANNED COPIES OF THIS PLAN SHEET.

TO ACCOMPANY PLANS DATED 03-24-14

2010 REVISED STANDARD PLAN RSP A24A

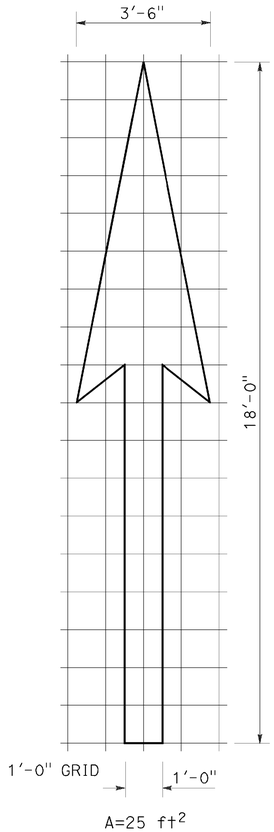

A=25 ft²

TYPE I 18'-0" ARROW

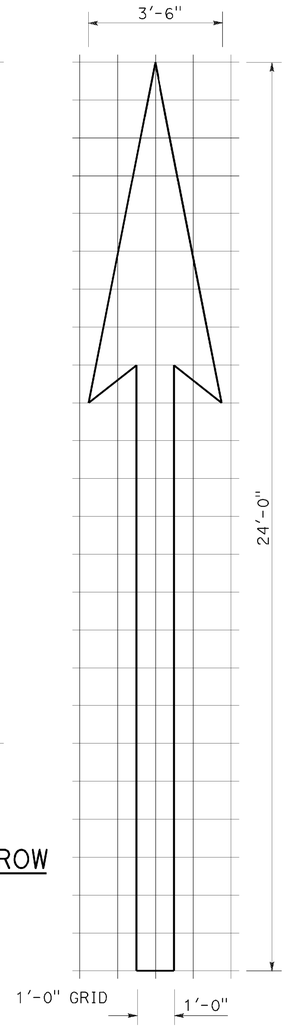

A=31 ft²

TYPE I 24'-0" ARROW

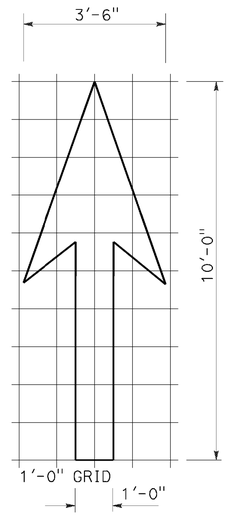

A=14 ft²

TYPE I 10'-0" ARROW

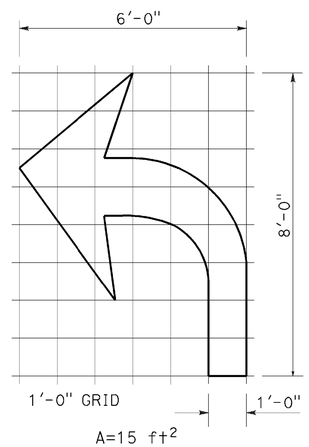

A=15 ft²

TYPE IV (L) ARROW

(For Type IV (R) arrow, use mirror image)

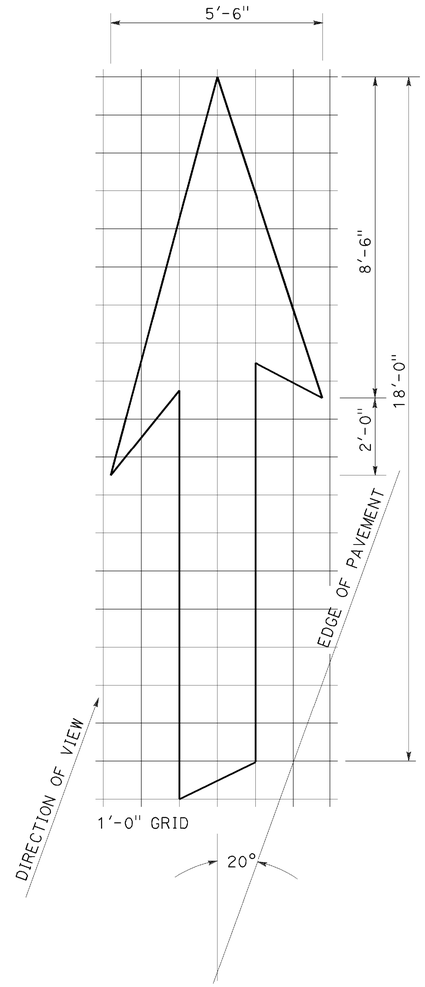

A=42 ft²

TYPE VI ARROW

Right lane drop arrow
(For left lane, use mirror image)

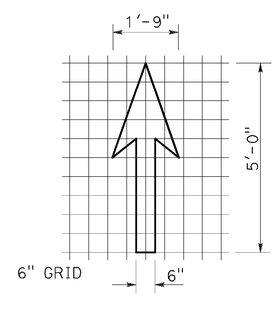

A=3.5 ft²

BIKE LANE ARROW

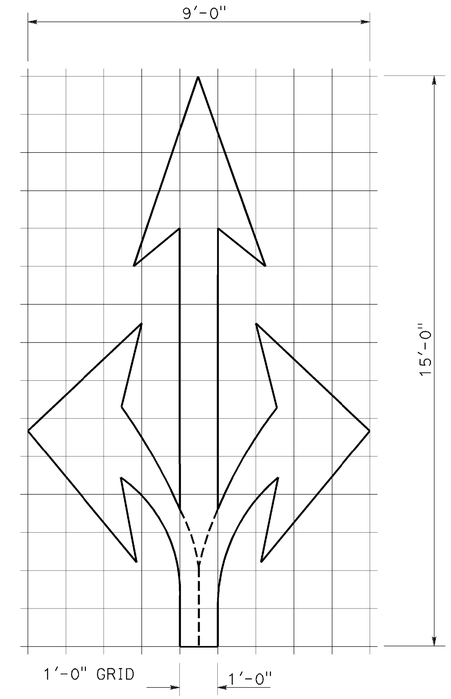

A=36 ft²

TYPE VIII ARROW

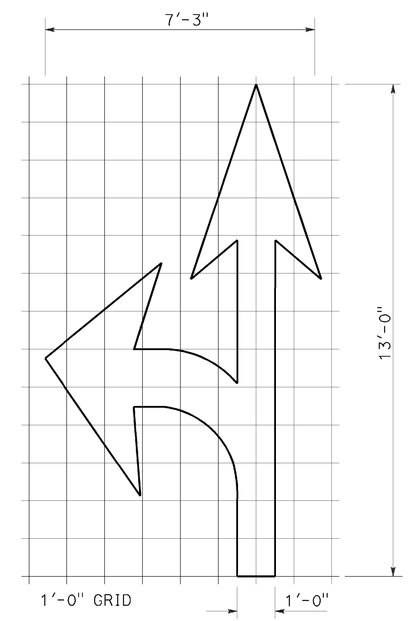

A=27 ft²

TYPE VII (L) ARROW

(For Type VII (R) arrow, use mirror image)

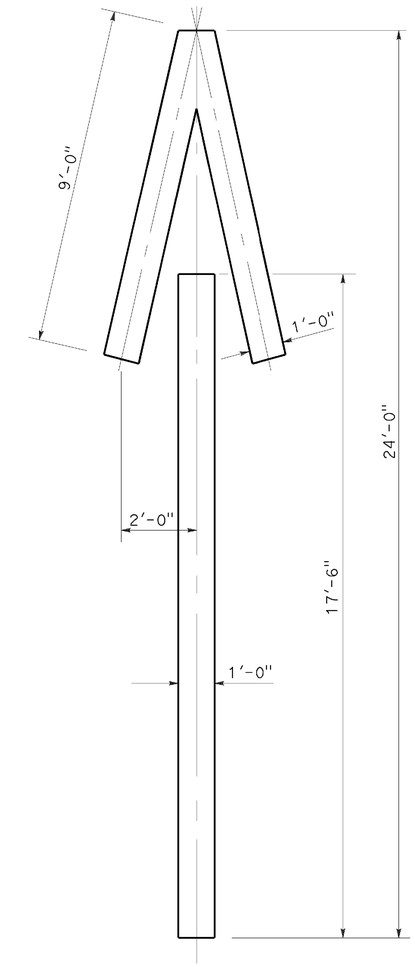

A=33 ft²

TYPE V ARROW

NOTE:
Minor variations in dimensions may be accepted by the Engineer.

STATE OF CALIFORNIA
DEPARTMENT OF TRANSPORTATION

PAVEMENT MARKINGS ARROWS

NO SCALE

RSP A24A DATED APRIL 20, 2012 SUPERSEDES STANDARD PLAN A24A DATED MAY 20, 2011 - PAGE 13 OF THE STANDARD PLANS BOOK DATED 2010.

REVISED STANDARD PLAN RSP A24A

DATE PLOTTED => 27-MAR-2014
TIME PLOTTED => 11:50

Dist	COUNTY	ROUTE	POST MILES TOTAL PROJECT	SHEET No.	TOTAL SHEETS
02	Las	395	61.5/R76.6	140	161

REGISTERED CIVIL ENGINEER

July 20, 2012
PLANS APPROVAL DATE

REGISTERED PROFESSIONAL ENGINEER
Roberta L. McLaughlin
No. C40375
Exp. 3-31-13
CIVIL
STATE OF CALIFORNIA

THE STATE OF CALIFORNIA OR ITS OFFICERS OR AGENTS SHALL NOT BE RESPONSIBLE FOR THE ACCURACY OR COMPLETENESS OF SCANNED COPIES OF THIS PLAN SHEET.

TO ACCOMPANY PLANS DATED 03-24-14

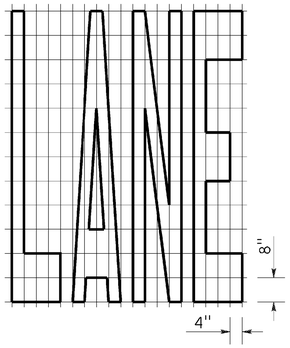

A=24 ft^2

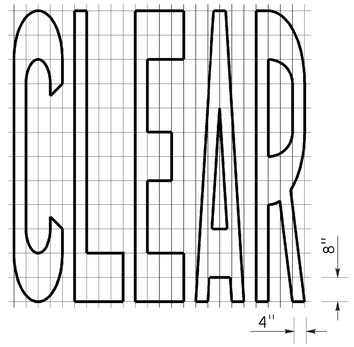

A=27 ft^2

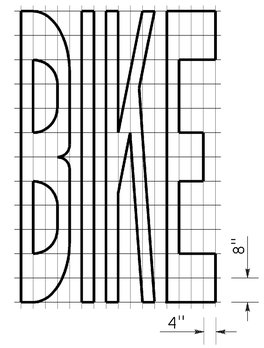

A=21 ft^2

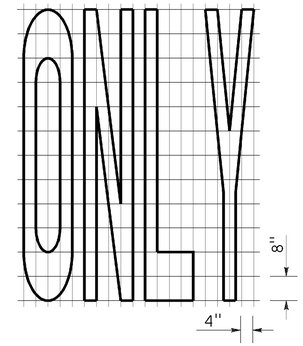

A=22 ft^2

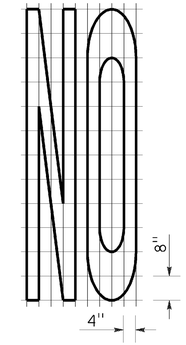

A=14 ft^2

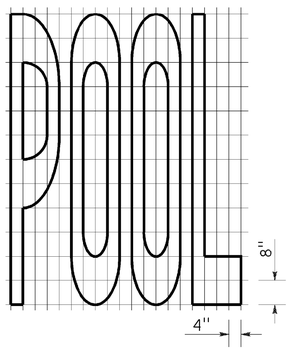

A=23 ft^2

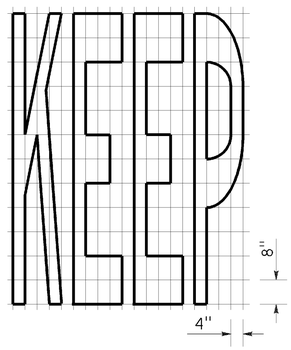

A=24 ft^2

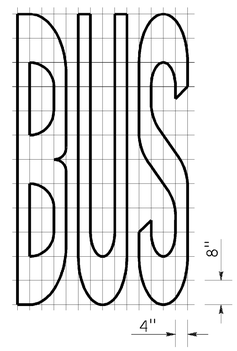

A=20 ft^2

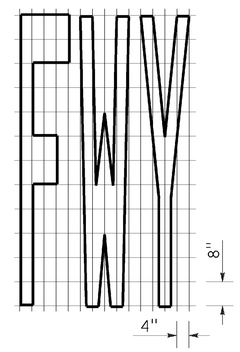

A=16 ft^2

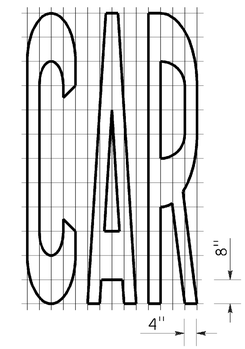

A=17 ft^2

WORD MARKINGS			
ITEM	ft^2	ITEM	ft^2
LANE	24	NO	14
POOL	23	BIKE	21
CAR	17	BUS	20
CLEAR	27	ONLY	22
KEEP	24	FWY	16

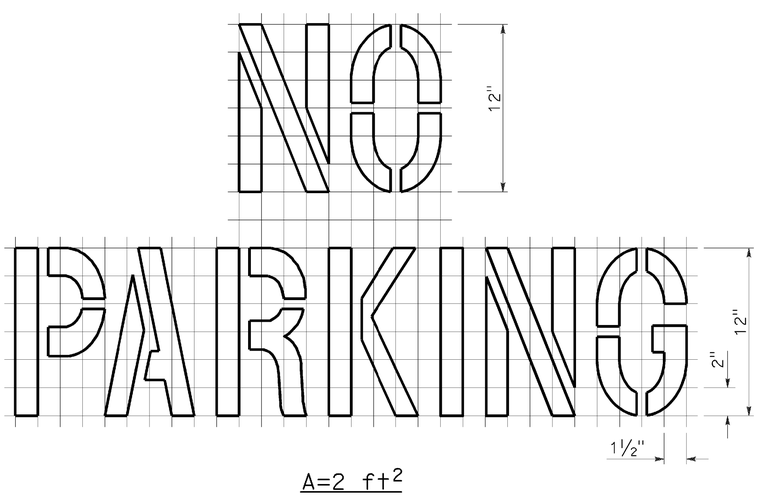

A=2 ft^2
See Notes 6 and 7

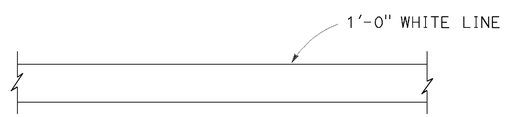

LIMIT LINE (STOP LINE)

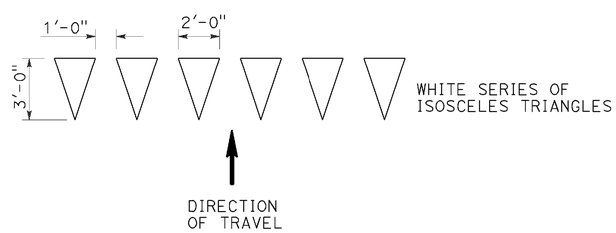

YIELD LINE

NOTES:

1. If a message consists of more than one word, it should read "UP", i.e., the first word should be nearest the driver.
2. The space between words should be at least four times the height of the characters for low speed roads, but not more than ten times the height of the characters. The space may be reduced appropriately where there is limited space because of local conditions.
3. Minor variations in dimensions may be accepted by the Engineer.
4. Portions of a letter, number or symbol may be separated by connecting segments not to exceed 2" in width.
5. The words "NO PARKING" pavement marking is to be used for parking facilities. For typical locations of markings, see Standard Plans A90A and A90B.
6. The words "NO PARKING", shall be painted in white letters no less than 1'-0" high on a contrasting background and located so that it is visible to traffic enforcement officials.

STATE OF CALIFORNIA
DEPARTMENT OF TRANSPORTATION

PAVEMENT MARKINGS
WORDS, LIMIT AND YIELD LINES

NO SCALE

RSP A24E DATED JULY 20, 2012 SUPERSEDES STANDARD PLAN A24E
DATED MAY 20, 2011 - PAGE 17 OF THE STANDARD PLANS BOOK DATED 2010.

REVISED STANDARD PLAN RSP A24E

2010 REVISED STANDARD PLAN RSP A24E

DATE PLOTTED => 27-MAR-2014
TIME PLOTTED => 11:50

Dist	COUNTY	ROUTE	POST MILES TOTAL PROJECT	SHEET No.	TOTAL SHEETS
02	Las	395	61.5/R76.6	141	161

REGISTERED CIVIL ENGINEER

July 19, 2013
PLANS APPROVAL DATE

REGISTERED PROFESSIONAL ENGINEER
Michael Janzen
No. 44788
Exp. 03-31-14
CIVIL
STATE OF CALIFORNIA

THE STATE OF CALIFORNIA OR ITS OFFICERS OR AGENTS SHALL NOT BE RESPONSIBLE FOR THE ACCURACY OR COMPLETENESS OF SCANNED COPIES OF THIS PLAN SHEET.

TO ACCOMPANY PLANS DATED 03-24-14

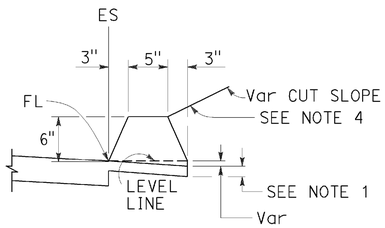

TYPE A
See Note 3

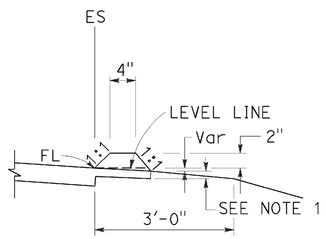

TYPE C

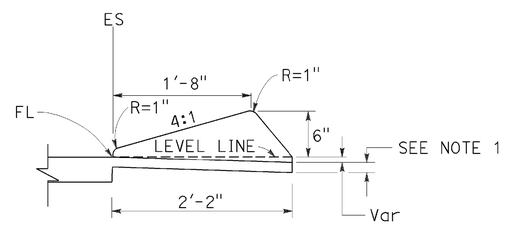

TYPE D

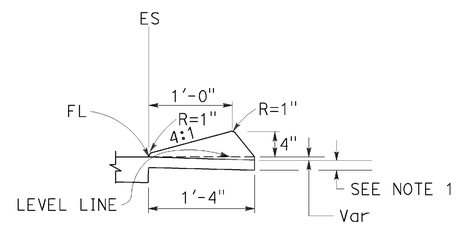

TYPE E

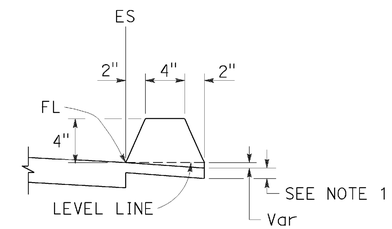

TYPE F
See Note 5

DIKES

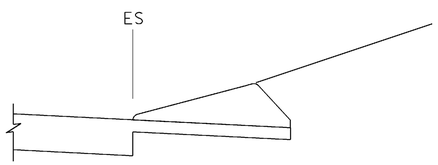

CASE C-1
Cut Slope

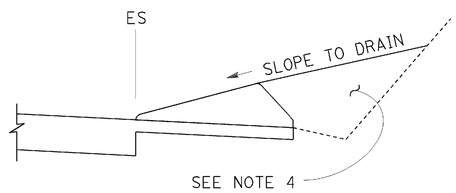

CASE C-2
Cut Slope

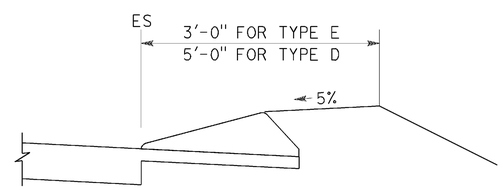

CASE F

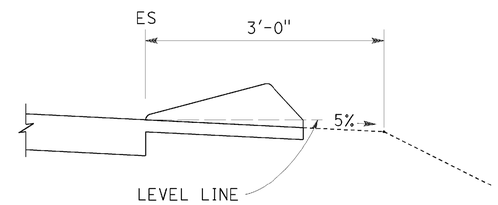

CASE R
See Note 2

TYPE D AND E BACKFILL DETAILS

NOTES:

1. For HMA shoulders only, extend top layer of HMA placed on the shoulder under dike with no joint at the ES. For projects with OGFC shoulders, do not extend OGFC under dike. See project plans for modified dike detail.
2. Case R applies to retrofit only projects where restrictive conditions do not provide enough width for Case F backfill.
3. Type A dike only to be used where restrictive slope conditions do not provide enough width to use Type D or Type E dike.
4. Fill and compact with excavated material to top of dike.
5. Use Type F dike, where dike is required with guard railing installations. See Revised Standard Plan RSP A77N4 for dike positioning details.

DIKE QUANTITIES

TYPE	CUBIC YARDS PER LINEAR FOOT
A	0.0135
C	0.0038
D	0.0293
E	0.0130
F	0.0066

Quantities based on 5% cross slope.

STATE OF CALIFORNIA
DEPARTMENT OF TRANSPORTATION

HOT MIX ASPHALT DIKES

NO SCALE

RSP A87B DATED JULY 19, 2013 SUPERSEDES STANDARD PLAN A87B
DATED MAY 20, 2011 - PAGE 120 OF THE STANDARD PLANS BOOK DATED 2010.

REVISED STANDARD PLAN RSP A87B

2010 REVISED STANDARD PLAN RSP A87B

DATE PLOTTED => 27-MAR-2014
TIME PLOTTED => 11:50

DIST	COUNTY	ROUTE	POST MILES TOTAL PROJECT	SHEET No.	TOTAL SHEETS
02	Las	395	61.5/R76.6	142	161

REGISTERED CIVIL ENGINEER

November 15, 2013
PLANS APPROVAL DATE

REGISTERED PROFESSIONAL ENGINEER Cornelis M. Hokim No. C55610 Exp. 12-31-14 CIVIL STATE OF CALIFORNIA

THE STATE OF CALIFORNIA OR ITS OFFICERS OR AGENTS SHALL NOT BE RESPONSIBLE FOR THE ACCURACY OR COMPLETENESS OF SCANNED COPIES OF THIS PLAN SHEET.

TO ACCOMPANY PLANS DATED 03-24-14

2010 REVISED STANDARD PLAN RSP P74

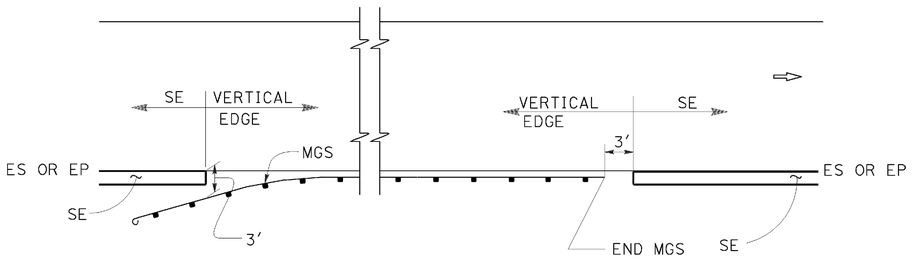

MGS

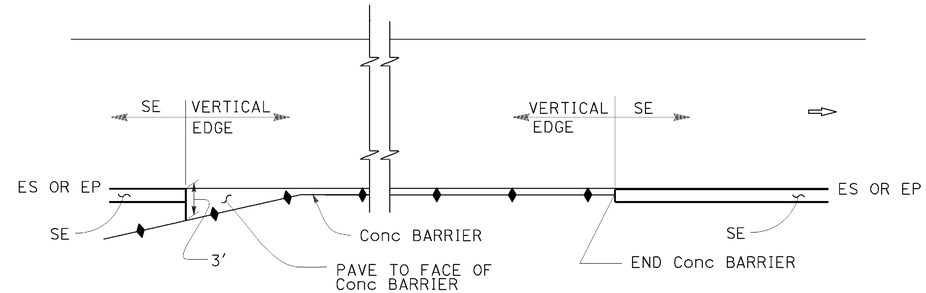

CONCRETE BARRIER

ABBREVIATIONS:

SE SAFETY EDGE

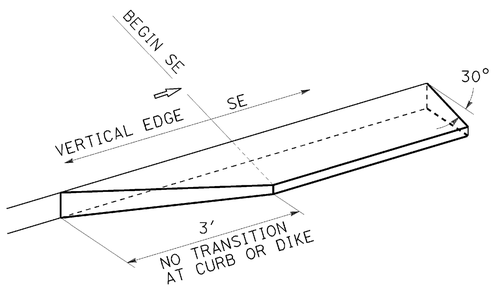

TRANSITION DETAIL FOR CONCRETE ONLY

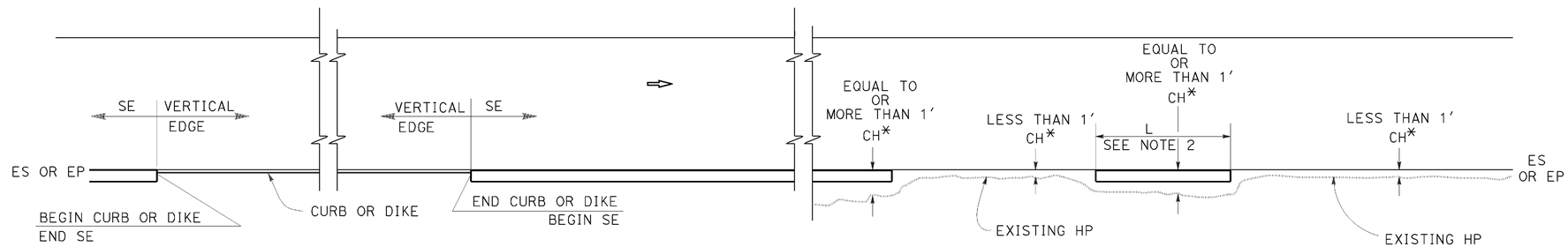

CURB OR DIKE

NARROW SIDE SLOPE

* CH = Distance from ES or EP to existing HP.

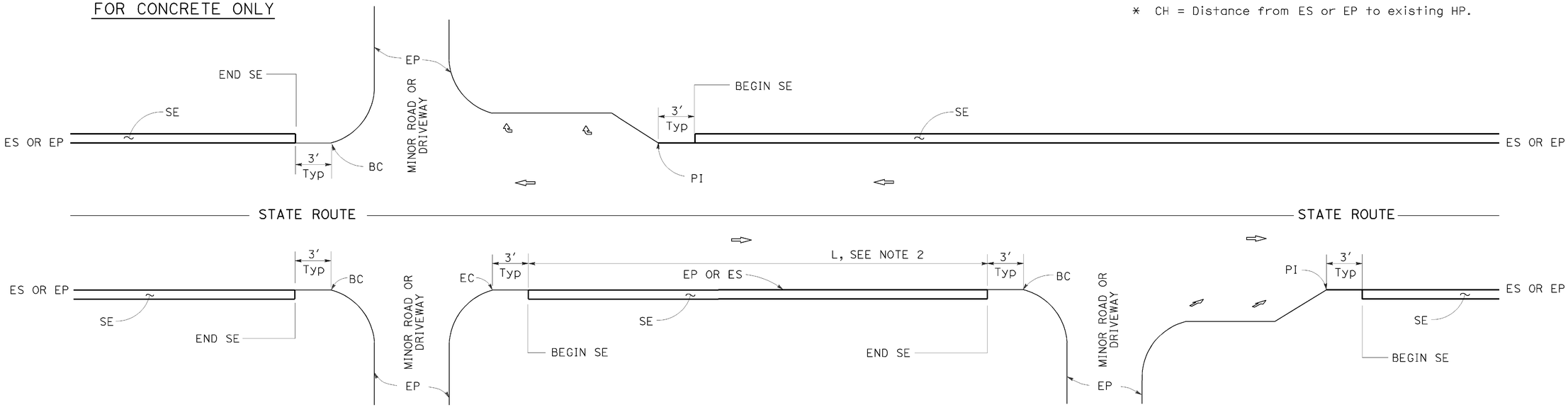

INTERSECTION

MINOR ROADWAY OR DRIVEWAY

DRIVEWAY AND INTERSECTION

STATE OF CALIFORNIA
DEPARTMENT OF TRANSPORTATION

PAVEMENT EDGE TREATMENTS

NO SCALE

RSP P74 DATED NOVEMBER 15, 2013 SUPERSEDES RSP P74 DATED JANUARY 20, 2012 THAT SUPPLEMENTS THE STANDARD PLANS BOOK DATED 2010.

REVISED STANDARD PLAN RSP P74

NOTES:

1. For details not shown, see Revised Standard Plans RSP P75 and RSP P76.
2. Safety edge is optional when L is less than 30′.

DATE PLOTTED => 27-MAR-2014
TIME PLOTTED => 11:50

DIST	COUNTY	ROUTE	POST MILES TOTAL PROJECT	SHEET No.	TOTAL SHEETS
02	Las	395	61.5/R76.6	143	161

REGISTERED CIVIL ENGINEER

November 15, 2013
PLANS APPROVAL DATE

REGISTERED PROFESSIONAL ENGINEER Cornelis M. Hakim No. C55610 Exp. 12-31-14 CIVIL STATE OF CALIFORNIA

THE STATE OF CALIFORNIA OR ITS OFFICERS OR AGENTS SHALL NOT BE RESPONSIBLE FOR THE ACCURACY OR COMPLETENESS OF SCANNED COPIES OF THIS PLAN SHEET.

TO ACCOMPANY PLANS DATED 03-24-14

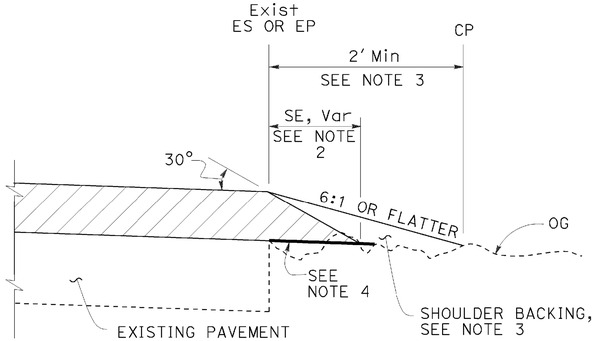

CASE A
Safety Edge

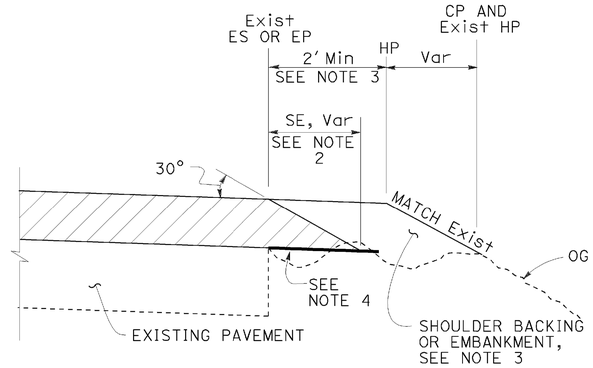

CASE B
Safety Edge

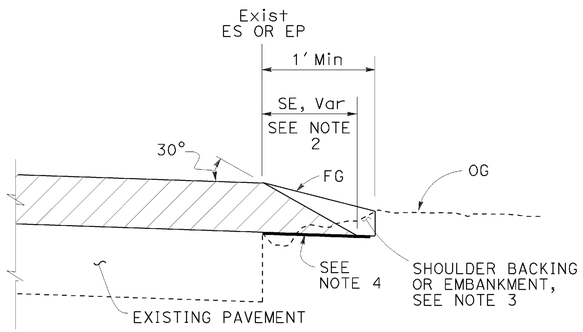

CASE C
Safety Edge

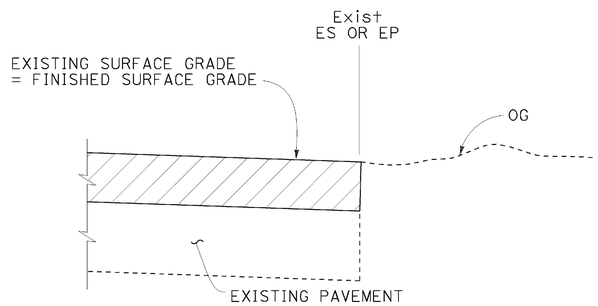

CASE D
Vertical Edge

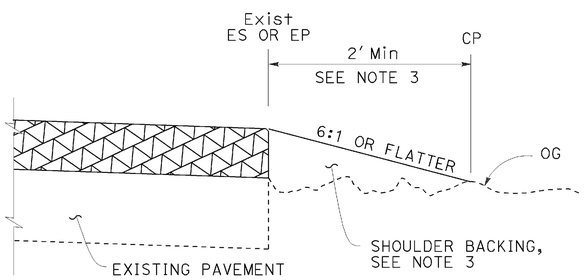

CASE E
Vertical Edge

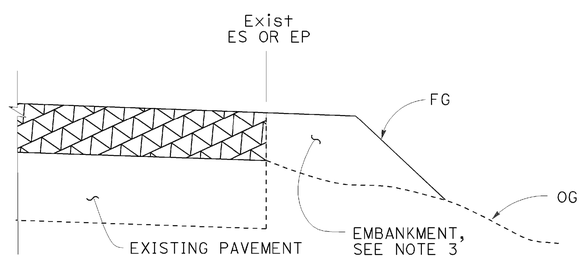

CASE F
Vertical Edge
* See Table A and Revised Std Plan RSP P74

LEGEND:

- HMA OVERLAY
- HMA OR CONCRETE OVERLAY
- CONCRETE OVERLAY

ABBREVIATIONS:

SE SAFETY EDGE
TT TOTAL THICKNESS OF SE

TABLE A
EDGE TREATMENT FOR VARIOUS OVERLAY THICKNESS AND CONDITIONS

	OVERLAY THICKNESS	
FIELD CONDITION	LESS THAN 0.15'	0.15' OR MORE
Exist SLOPE 6:1 OR FLATTER	CASE E	CASE A
Exist SLOPE 3:1 TO 6:1	CASE E	CASE B
Exist SLOPE STEEPER THAN 3:1	CASE F	CASE F
CUT SECTION (REPLACE, COLD PLANE, MILL PAVEMENT)	CASE D	CASE C

ADDITIONAL HMA OR CONCRETE QUANTITIES FOR SE/SIDE/MILE

TYPICAL CROSS SECTION	TT	TOTAL ADDITIONAL MATERIAL FOR SE/SIDE/MILE		
		HMA (TON)	CONCRETE (CY)*	CONCRETE (CY)**
TT	0.15'	NA	NA	NA
	0.20'	13.7	NA	NA
	0.30'	30.9	NA	NA
	0.40'	54.9	NA	NA
	0.45'	69.4	NA	NA
TT 0.43'	0.50'	84.2	NA	NA
	0.60'	113.9	NA	NA
	0.70'	143.6	70.9	94.2
	0.80'	173.3	85.6	112.2
	0.90'	203.0	100.3	130.2
	1.00'	232.7	114.9	148.2
	1.10'	262.4	129.6	166.2
	1.20'	292.1	144.3	184.2

* For Detail "A"
** For Optional Detail "A"

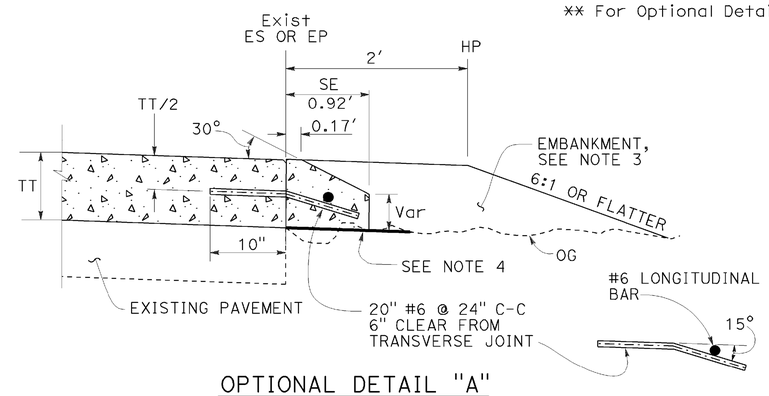

OPTIONAL DETAIL "A"
For concrete overlay
See Note 5

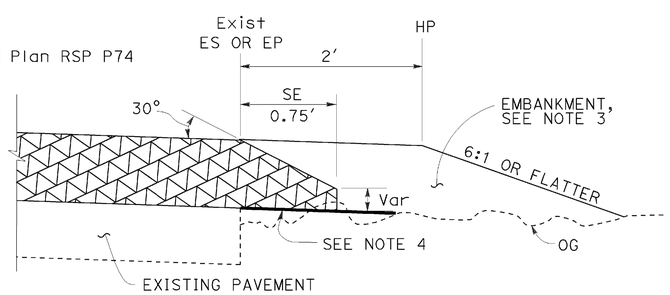

DETAIL "A"
For HMA overlay thickness more than 0.43' or concrete overlay

NOTES:

1. For limits of safety edge and vertical edge treatments, see Revised Standard Plan RSP P74.
2. Details shown for HMA overlay thickness less than 0.43'. See Detail "A" for HMA overlay thickness more than 0.43' or concrete overlay.
3. For locations and limits of shoulder backing or embankment see project plans.
4. Grade existing ground to place safety edge. 1' minimum width
5. Safety edge transverse joint must match overlay transverse joint. End of #6 longitudinal bar must be 2" ±½" clear from transverse joint.
6. Safety edge is not needed in the area of MGS, barrier, right turn lane and acceleration lane. See Revised Standard Plan RSP P74.

STATE OF CALIFORNIA
DEPARTMENT OF TRANSPORTATION

PAVEMENT EDGE TREATMENTS-OVERLAYS

NO SCALE

RSP P75 DATED NOVEMBER 15, 2013 SUPERSEDES RSP P75 DATED JANUARY 20, 2012 THAT SUPPLEMENTS THE STANDARD PLANS BOOK DATED 2010.

REVISED STANDARD PLAN RSP P75

2010 REVISED STANDARD PLAN RSP P75

DATE PLOTTED => 27-MAR-2014
TIME PLOTTED => 11:50

DIST	COUNTY	ROUTE	POST MILES TOTAL PROJECT	SHEET No.	TOTAL SHEETS
02	Las	395	61.5/R76.6	144	161

REGISTERED CIVIL ENGINEER

November 15, 2013
PLANS APPROVAL DATE

REGISTERED PROFESSIONAL ENGINEER
Cornelis M. Hakim
No. C55610
Exp. 12-31-14
CIVIL
STATE OF CALIFORNIA

THE STATE OF CALIFORNIA OR ITS OFFICERS OR AGENTS SHALL NOT BE RESPONSIBLE FOR THE ACCURACY OR COMPLETENESS OF SCANNED COPIES OF THIS PLAN SHEET.

TO ACCOMPANY PLANS DATED 03-24-14

LEGEND:

- HMA PAVEMENT
- HMA OR CONCRETE PAVEMENT
- CONCRETE PAVEMENT

ABBREVIATIONS:

SE SAFETY EDGE
TT TOTAL THICKNESS OF SE
HW HINGE WIDTH, DISTANCE FROM ES OR EP TO HP

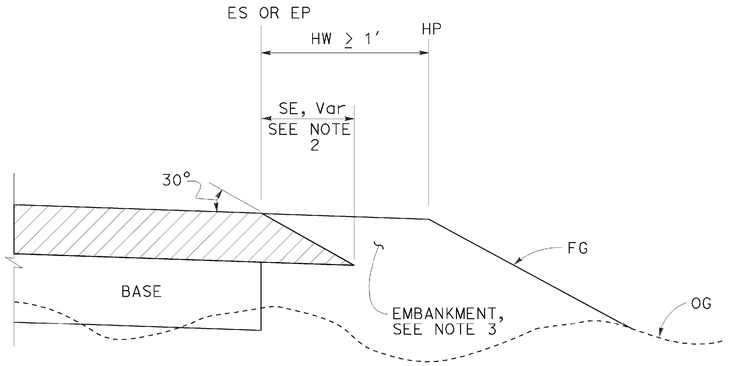

CASE K
Safety Edge - Fill Section, HW ≥ 1′

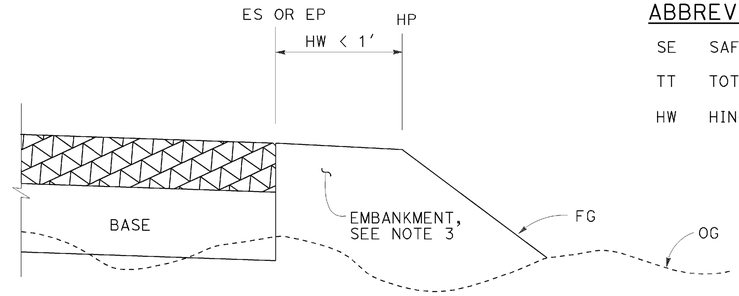

CASE L
Vertical Edge - Fill Section, HW < 1′

FILL SECTION

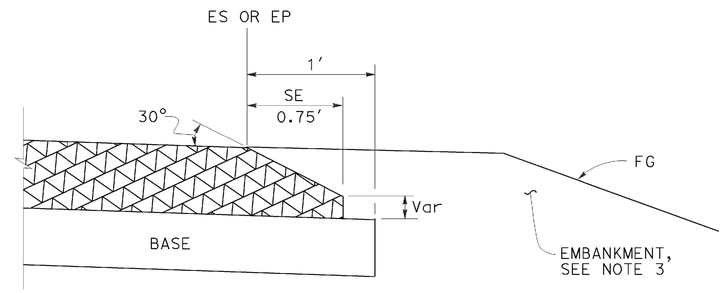

DETAIL "B"
For HMA pavement thickness
more than 0.43′ or concrete pavement

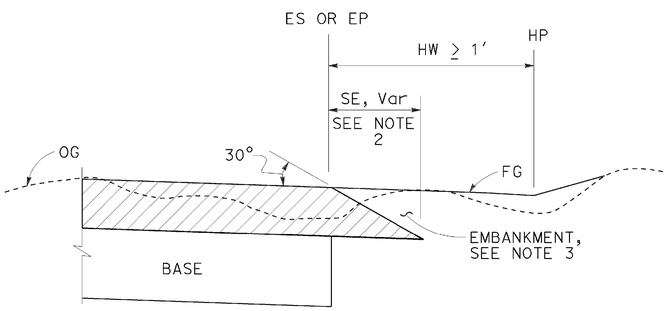

CASE M
Safety Edge - Cut Section, HW ≥ 1′

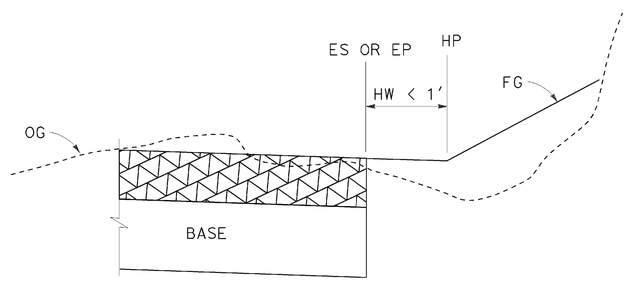

CASE N
Vertical Edge - Cut Section, HW < 1′

CUT SECTION

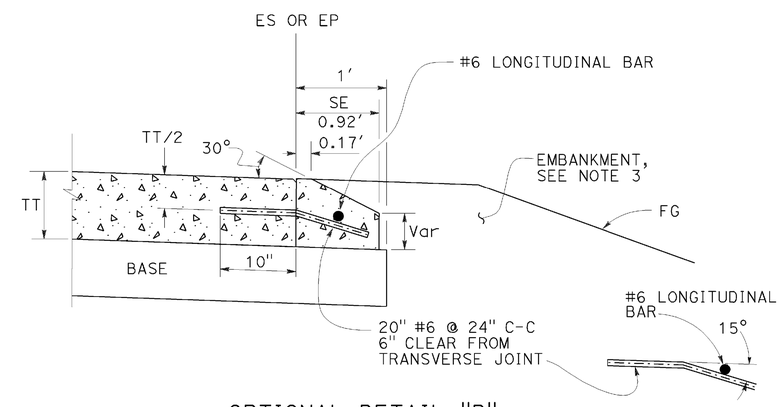

OPTIONAL DETAIL "B"
For concrete pavement
See Note 4

NOTES:

1. For limits of safety edge and vertical edge treatments, see Revised Standard Plan RSP P74
2. Details shown for HMA pavement thickness less than 0.43′. See Detail "B" for HMA pavement thickness more than 0.43′ or concrete pavement.
3. For locations and limits of embankment see project plans.
4. Safety edge transverse joint must match pavement transverse joint. End of #6 longitudinal bar must be 2" ±½" clear from transverse joint.
5. Safety edge is not needed in the area of MGS, barrier, right turn lane and acceleration lane. See Revised Standard Plan RSP P74.

STATE OF CALIFORNIA
DEPARTMENT OF TRANSPORTATION

PAVEMENT EDGE TREATMENTS-NEW CONSTRUCTION

NO SCALE

RSP P76 DATED NOVEMBER 15, 2013 SUPERSEDES RSP P76 DATED JANUARY 20, 2012 THAT SUPPLEMENTS THE STANDARD PLANS BOOK DATED 2010.

REVISED STANDARD PLAN RSP P76

2010 REVISED STANDARD PLAN RSP P76

DATE PLOTTED => 27-MAR-2014
TIME PLOTTED => 11:51

Dist	COUNTY	ROUTE	POST MILES TOTAL PROJECT	SHEET No.	TOTAL SHEETS
02	Las	395	61.5/R76.6	145	161

REGISTERED CIVIL ENGINEER

July 19, 2013
PLANS APPROVAL DATE

REGISTERED PROFESSIONAL ENGINEER
Gurinderpal Bhullar
No. C48815
Exp. 9-30-14
CIVIL
STATE OF CALIFORNIA

THE STATE OF CALIFORNIA OR ITS OFFICERS OR AGENTS SHALL NOT BE RESPONSIBLE FOR THE ACCURACY OR COMPLETENESS OF SCANNED COPIES OF THIS PLAN SHEET.

TO ACCOMPANY PLANS DATED 03-24-14

TABLE 1

TAPER LENGTH CRITERIA AND CHANNELIZING DEVICE SPACING

SPEED (S)	MINIMUM TAPER LENGTH * FOR WIDTH OF OFFSET 12 FEET (W)				MAXIMUM CHANNELIZING DEVICE SPACING		
					X	Y	Z **
	TANGENT 2L	MERGING L	SHIFTING L/2	SHOULDER L/3	TAPER	TANGENT	CONFLICT
mph	ft	ft	ft	ft	ft	ft	ft
20	160	80	40	27	20	40	10
25	250	125	63	42	25	50	12
30	360	180	90	60	30	60	15
35	490	245	123	82	35	70	17
40	640	320	160	107	40	80	20
45	1080	540	270	180	45	90	22
50	1200	600	300	200	50	100	25
55	1320	660	330	220	55	110	27
60	1440	720	360	240	60	120	30
65	1560	780	390	260	65	130	32
70	1680	840	420	280	70	140	35

* - For other offsets, use the following merging taper length formula for L:
For speed of 40 mph or less, $L = WS^2/60$
For speed of 45 mph or more, $L = WS$

Where: L = Taper length in feet
W = Width of offset in feet
S = Posted speed limit, off-peak 85th-percentile speed prior to work starting, or the anticipated operating speed in mph

** - Use for taper and tangent sections where there are no pavement markings or where there is a conflict between existing pavement markings and channelizers (CA).

TABLE 2

LONGITUDINAL BUFFER SPACE AND FLAGGER STATION SPACING

SPEED *	Min D **	DOWNGRADE Min D ***		
		-3%	-6%	-9%
mph	ft	ft	ft	ft
20	115	116	120	126
25	155	158	165	173
30	200	205	215	227
35	250	257	271	287
40	305	315	333	354
45	360	378	400	427
50	425	446	474	507
55	495	520	553	593
60	570	598	638	686
65	645	682	728	785
70	730	771	825	891

* - Speed is posted speed limit, off-peak 85th-percentile speed prior to work starting, or the anticipated operating speed in mph

** - Longitudinal buffer space or flagger station spacing

*** - Use on sustained downgrade steeper than -3 percent and longer than 1 mile.

TABLE 3

ADVANCE WARNING SIGN SPACING

ROAD TYPE	DISTANCE BETWEEN SIGNS *		
	A	B	C
	ft	ft	ft
URBAN - 25 mph OR LESS	100	100	100
URBAN - MORE THAN 25 mph TO 40 mph	250	250	250
URBAN - MORE THAN 40 mph	350	350	350
RURAL	500	500	500
EXPRESSWAY / FREEWAY	1000	1500	2640

* - The distances are approximate, are intended for guidance purposes only, and should be applied with engineering judgment. These distances should be adjusted by the Engineer for field conditions, if necessary, by increasing or decreasing the recommmended distances.

STATE OF CALIFORNIA
DEPARTMENT OF TRANSPORTATION

TRAFFIC CONTROL SYSTEM TABLES FOR LANE AND RAMP CLOSURES

NO SCALE

RSP T9 DATED JULY 19, 2013 SUPERSEDES RSP T9 DATED APRIL 19, 2013 THAT SUPPLEMENTS THE STANDARD PLANS BOOK DATED 2010.

REVISED STANDARD PLAN RSP T9

2010 REVISED STANDARD PLAN RSP T9

DATE PLOTTED => 27-MAR-2014
TIME PLOTTED => 11:51

Dist	COUNTY	ROUTE	POST MILES TOTAL PROJECT	SHEET No.	TOTAL SHEETS
02	Las	395	61.5/R76.6	146	161

REGISTERED CIVIL ENGINEER

April 19, 2013
PLANS APPROVAL DATE

REGISTERED PROFESSIONAL ENGINEER
Gurinderpal Bhullar
No. C48815
Exp. 9-30-14
CIVIL
STATE OF CALIFORNIA

THE STATE OF CALIFORNIA OR ITS OFFICERS OR AGENTS SHALL NOT BE RESPONSIBLE FOR THE ACCURACY OR COMPLETENESS OF SCANNED COPIES OF THIS PLAN SHEET.

TO ACCOMPANY PLANS DATED 03-24-14

NOTES:

See Revised Standard Plan RSP T9 for tables.

Use cone spacing X for taper segment, Y for tangent segment or Z for conflict situations, as approriate, per Table 1, unless X, Y, or Z cone spacing is shown on this sheet.

Unless otherwise specified in the special provisions, all temporary warning signs shall have black legend on fluorescent orange background.

California codes are designated by (CA). Otherwise, Federal (MUTCD) codes are shown.

TYPICAL LANE CLOSURE WITH REVERSIBLE CONTROL

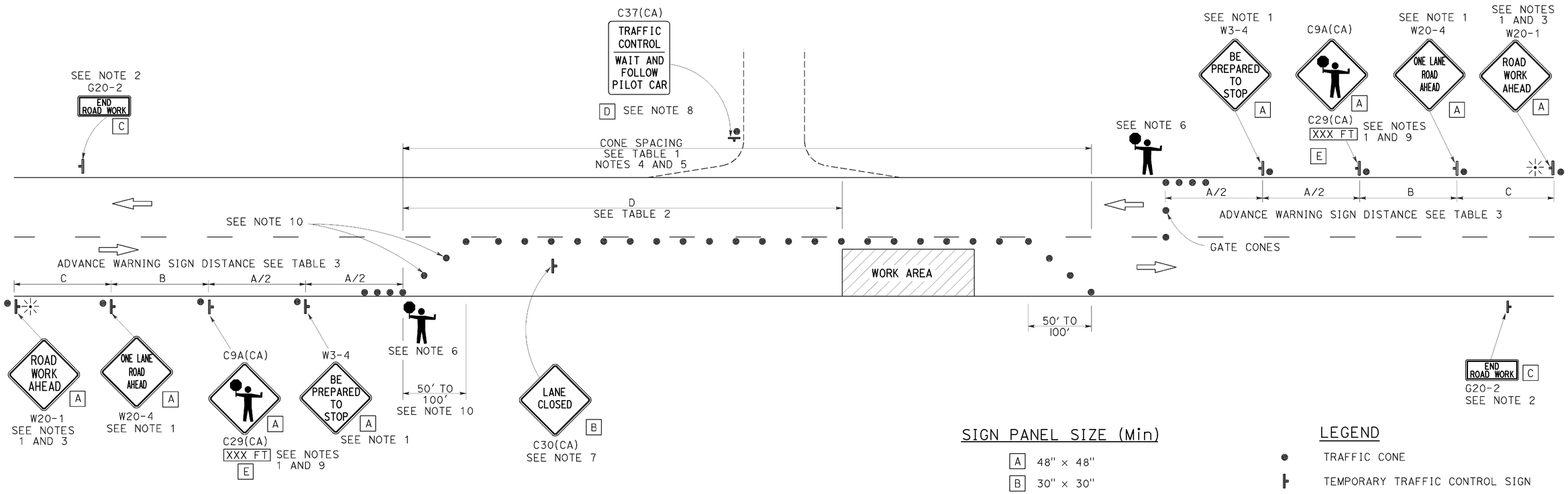

SIGN PANEL SIZE (Min)

A	48" × 48"
B	30" × 30"
C	36" × 18"
D	36" × 42"
E	20" × 7"

LEGEND

- TRAFFIC CONE
- TEMPORARY TRAFFIC CONTROL SIGN
- PORTABLE FLASHING BEACON
- FLAGGER

NOTES:

1. Each advance warning sign in each direction of travel shall be equipped with at least two flags for daytime closure. Each flag shall be at least 16" x 16" in size and shall be orange or fluorescent red-orange in color. Flashing beacons shall be placed at the locations indicated for lane closure during hours of darkness.
2. A G20-2 "END ROAD WORK" sign, as appropriate, shall be placed at the end of the lane control unless the end of work area is obvious, or ends within a larger project's limits.
3. If the W20-1 sign would follow within 2000' of a stationary W20-1 or G20-1 "ROAD WORK NEXT _____ MILES", use a W20-4 sign for the first advance warning sign.
4. All cones used for lane closures during the hours of darkness shall be fitted with retroreflective bands (or sleeves) as specified in the specifications.
5. Portable delineators, placed at one-half the spacing indicated for traffic cones, may be used instead of cones for daytime closures only.
6. Additional advance flaggers may be required. Flagger should stand in a conspicuous place, be visible to approaching traffic as well as approaching vehicles after the first vehicle has stopped. During the hours of darkness, the flagging-station and flagger shall be illuminated and clearly visible to approaching traffic. The illumination footprint of the lighting on the ground shall be at least 20' in diameter. Place a minimum of four cones at 50' intervals in advance of flagger station as shown.
7. Place C30(CA) "LANE CLOSED" sign at 500' to 1000' intervals throughout extended work areas. They are optional if the work area is visible from the flagger station.
8. When a pilot car is used, place a C37(CA) "TRAFFIC CONTROL-WAIT AND FOLLOW PILOT CAR" sign with black legend on white background at all intersections, driveways and alleys without a flagger within traffic control area. Signs shall be clean and visible at all times. Where traffic can not be effectively self-regulated, at least one flagger shall be used at each intersection within traffic control area.
9. An optional C29(CA) sign may be placed below the C9A(CA) sign.
10. Either traffic cones or barricades shall be placed on the taper. Barricades shall be Type I, II, or III.

STATE OF CALIFORNIA
DEPARTMENT OF TRANSPORTATION

TRAFFIC CONTROL SYSTEM FOR LANE CLOSURE ON TWO LANE CONVENTIONAL HIGHWAYS

NO SCALE

RSP T13 DATED APRIL 19, 2013 SUPERSEDES STANDARD PLAN T13
DATED MAY 20, 2011 - PAGE 241 OF THE STANDARD PLANS BOOK DATED 2010.

REVISED STANDARD PLAN RSP T13

2010 REVISED STANDARD PLAN RSP T13

DATE PLOTTED => 27-MAR-2014
TIME PLOTTED => 11:51

Dist	COUNTY	ROUTE	POST MILES TOTAL PROJECT	SHEET No.	TOTAL SHEETS
02	Las	395	61.5/R76.6	147	161

REGISTERED CIVIL ENGINEER

April 19, 2013
PLANS APPROVAL DATE

REGISTERED PROFESSIONAL ENGINEER Gurinderpal Bhullar No. C48815 Exp. 9-30-14 CIVIL STATE OF CALIFORNIA

THE STATE OF CALIFORNIA OR ITS OFFICERS OR AGENTS SHALL NOT BE RESPONSIBLE FOR THE ACCURACY OR COMPLETENESS OF SCANNED COPIES OF THIS PLAN SHEET.

TO ACCOMPANY PLANS DATED 03-24-14

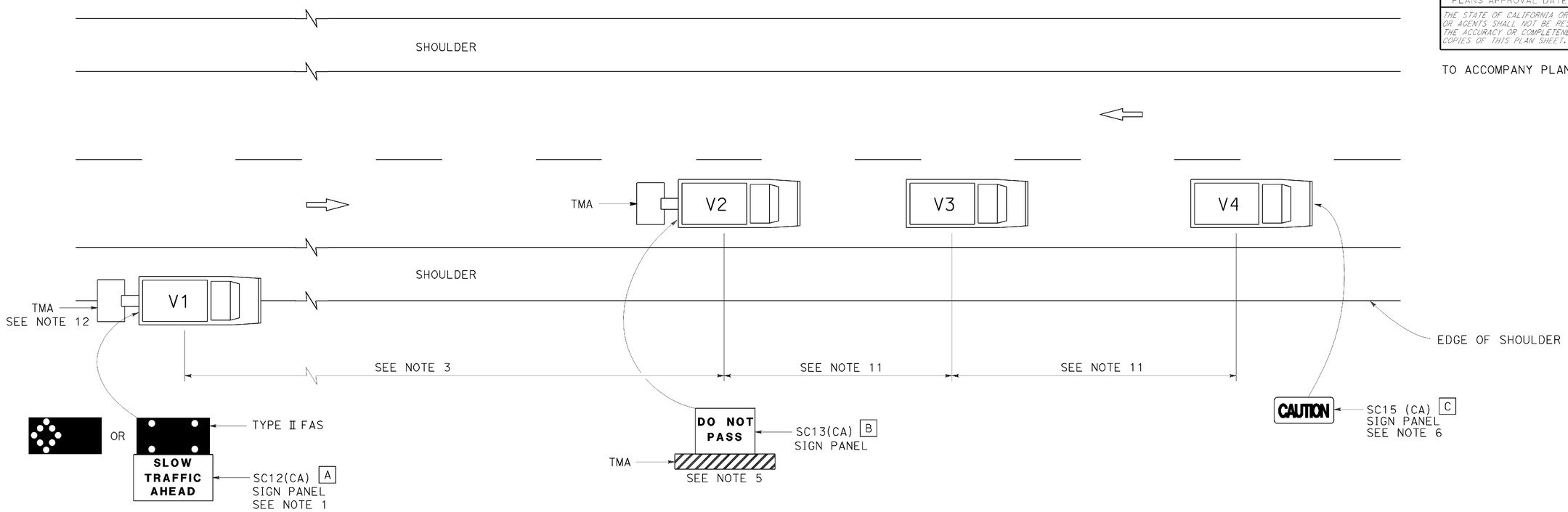

LEGEND

V1	SIGN VEHICLE
V2	SHADOW VEHICLE
V3	WORK/APPLICATION VEHICLE
V4	SIGN VEHICLE
TMA	TRUCK-MOUNTED ATTENUATOR
	FLASHING ARROW SIGN (FAS) IN FLASHING CAUTION MODE
	FLASHING ARROW SIGN (FAS) IN ALTERNATING DIAMOND CAUTION

SIGN PANEL SIZE (Min)

A	72" x 42"
B	54" x 42"
C	54" x 24"

NOTES:

1. Either a changeable message sign or a SC12(CA) "SLOW TRAFFIC AHEAD" sign shall be mounted on the rear of sign vehicle V1. The changeable message sign shall be sequenced to show the "CAUTION" message first, follow by the "SLOW TRAFFIC AHEAD" message. A Type II flashing arrow sign may be used with the SC12(CA) sign panel.
2. Sign vehicle V1 should be positioned where highly visible when shoulders are not available.
3. If traffic queues develop, sign vehicle V1 should be positioned upstream from the end of queue.
4. Vehicle-mounted sign panels shall have Type III or above retroreflective sheeting, black on white, or black on fluorescent orange, with 6" minimum series D letters per Caltrans sign specifications.
5. Shadow vehicle shall be equipped with a truck-mounted attenuator. The sign panel shown shall be mounted on the rear of shadow vehicle V2. The message "LANE CLOSED" may be used in place of the "DO NOT PASS" message.
6. The sign panel shown shall be mounted on the front of sign vehicle V4, facing opposing traffic.
7. All vehicles shall be equipped with flashing or rotating amber lights.
8. Sign vehicle V4 will not be required when the work and vehicles V2 and V3 are 2′ or more from the centerline of the highway during the work or application operations.
9. All vehicles used for lane closures shall be equipped with two-way radios and the vehicle operators shall maintain communication during the work or application operation.
10. This plan shall not be used where workers would be on foot in the work area. Use a stationary type lane closure (Revised Standard Plan T13) for this condition.
11. Minimize spacing between vehicles V2 and V3 and vehicles V3 and V4 to deter road users from driving in between them.
12. If sign vehicle V1 encroaches into the traffic lane due to insufficient shoulder width, sign vehicle V1 shall be equipped with a truck-mounted attenuator. Sign vehicle V1 shall stay as close to the edge of shoulder as practicable.

STATE OF CALIFORNIA
DEPARTMENT OF TRANSPORTATION

TRAFFIC CONTROL SYSTEM FOR MOVING LANE CLOSURE ON TWO LANE HIGHWAYS

NO SCALE

RSP T17 DATED APRIL 19, 2013 SUPERSEDES STANDARD PLAN T17
DATED MAY 20, 2011 - PAGE 245 OF THE STANDARD PLANS BOOK DATED 2010.

REVISED STANDARD PLAN RSP T17

2010 REVISED STANDARD PLAN RSP T17

DATE PLOTTED => 27-MAR-2014
TIME PLOTTED => 11:51

Dist	COUNTY	ROUTE	POST MILES TOTAL PROJECT	SHEET No.	TOTAL SHEETS
02	Las	395	61.5/R76.6	148	161

REGISTERED CIVIL ENGINEER

November 15, 2013
PLANS APPROVAL DATE

REGISTERED PROFESSIONAL ENGINEER
Tillat Satter
No. C42892
Exp. 3-31-14
CIVIL
STATE OF CALIFORNIA

THE STATE OF CALIFORNIA OR ITS OFFICERS OR AGENTS SHALL NOT BE RESPONSIBLE FOR THE ACCURACY OR COMPLETENESS OF SCANNED COPIES OF THIS PLAN SHEET.

TO ACCOMPANY PLANS DATED 03-24-14

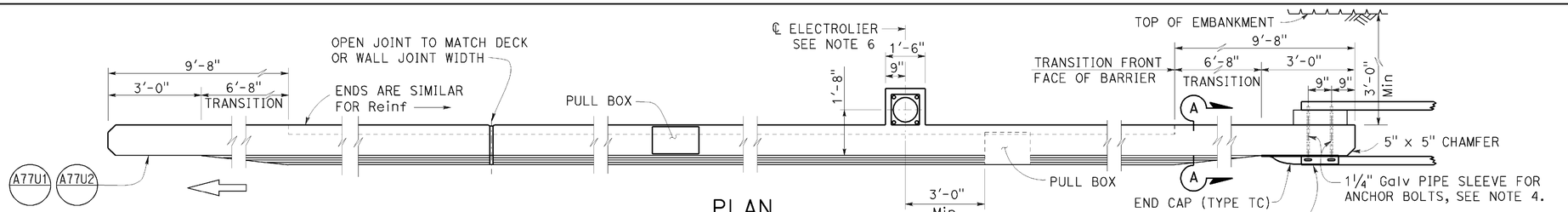

PLAN

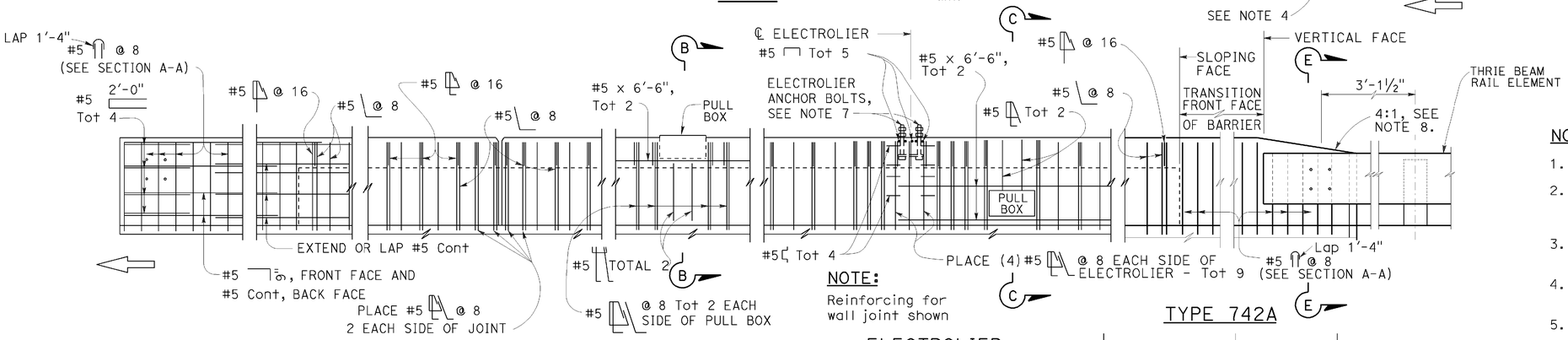

METAL RAILING CONNECTION

DECK OR WALL JOINT

NOTE:
Reinforcing for wall joint shown

ELEVATION

ELECTROLIER
(See Note 5)

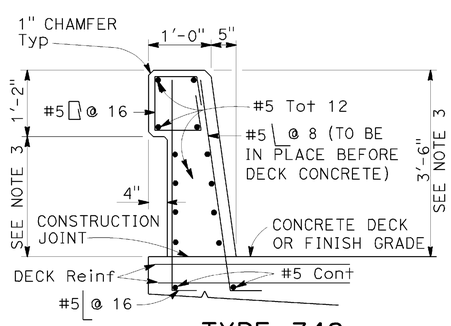

TYPE 742

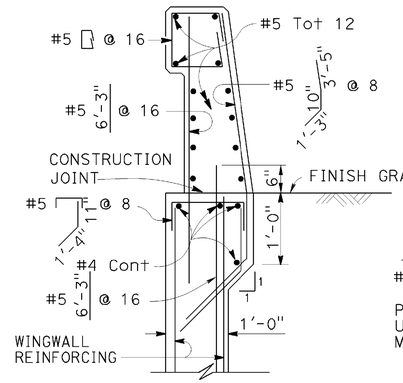

TYPE 742A

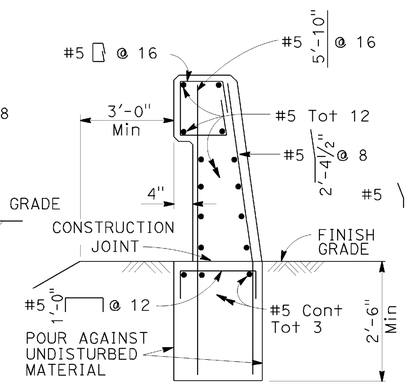

TYPE 742B

NOTE:
Types 742A & 742B are similar to Type 742 except as noted

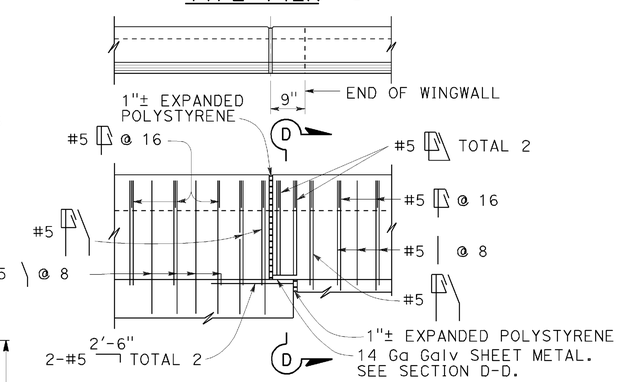

TYPE 742A TYPE 742B

NOTES:

1. Walls are to be backfilled before barrier is placed.
2. Clearance to reinforcing steel in barrier to be 1", except as noted. Longitudinal reinforcement to stop at all expansion joints.
3. Dimensions may vary with roadway cross slope and with certain thickness of surfacing. See Project Plans.
4. For typical metal railing connection details not shown, see Revised Standard Plans RSP A77U1 and RSP A77U2.
5. See Standard Plans ES-9A, ES-9B, ES-9C, ES-9D and ES-9E for electrical details. The maximum number of conduits in the barrier is limited to two 2" conduits along with one 3" conduit. When a 3" conduit is used, it is restricted to the base of the barrier.
6. For electrolier mounting details, See Standard Plans ES-6A and ES-6B.
7. Minimum concrete edge distance, to the reinforcing shown, shall be maintained. Edge distance may be adjusted to accommodate increase in concrete cover for architectual treatment.
8. Taper the top of the end of the bridge railing at 4:1 to match the top elevation of the thrie beam rail element.

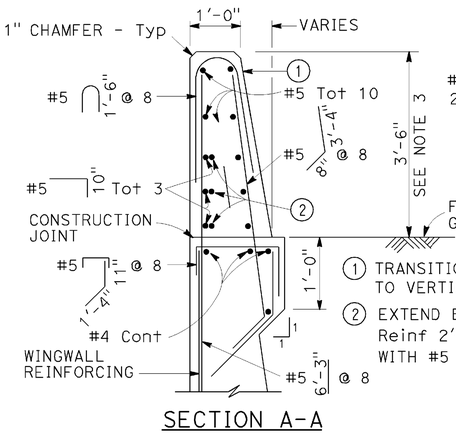

SECTION A-A

Details shown for barrier anchorage to Type 742A. Anchorage for barrier Types 742 and 742A are similar to their respective details.

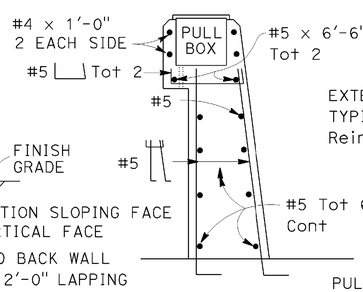

SECTION B-B

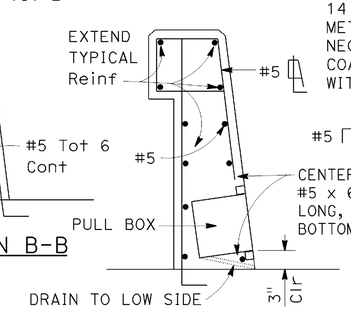

SECTION C-C
See Notes

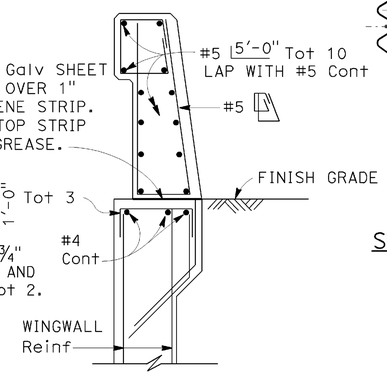

SECTION D-D

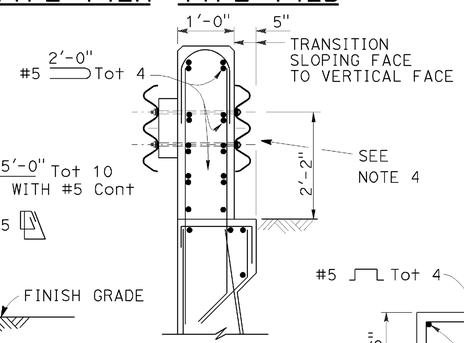

SECTION E-E
See Note 4

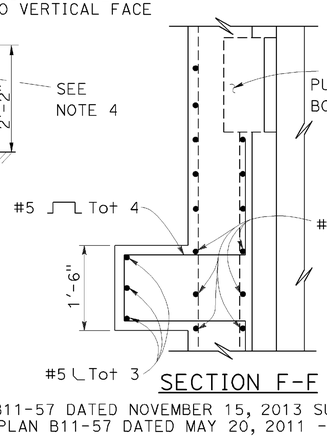

SECTION F-F

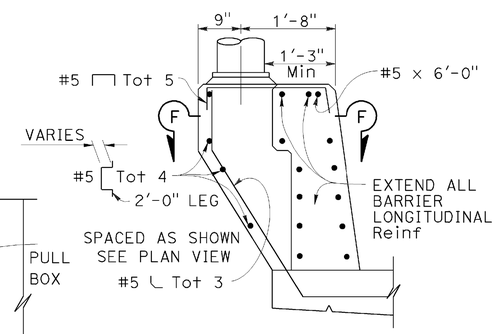

PEDESTAL ELEVATION

STATE OF CALIFORNIA
DEPARTMENT OF TRANSPORTATION

CONCRETE BARRIER TYPE 742

NO SCALE

RSP B11-57 DATED NOVEMBER 15, 2013 SUPERSEDES RSP B11-57 DATED JULY 19, 2013 AND STANDARD PLAN B11-57 DATED MAY 20, 2011 - PAGE 299 OF THE STANDARD PLANS BOOK DATED 2010.

REVISED STANDARD PLAN RSP B11-57

2010 REVISED STANDARD PLAN RSP B11-57

DATE PLOTTED => 27-MAR-2014
TIME PLOTTED => 11:51

USERNAME => s123119
DGN FILE => 23c071va011.dgn

P:\proj2\02\3c071_plans\pse\23c071va011.dgn

10-4-13

Dist	COUNTY	ROUTE	POST MILES TOTAL PROJECT	SHEET No.	TOTAL SHEETS
02	Las	395	61.5/R76.6	149	161

Theresa Gabriel
REGISTERED ELECTRICAL ENGINEER

July 19, 2013
PLANS APPROVAL DATE

Theresa Aziz Gabriel No. E15129 Exp. 6-30-14 ELECTRICAL — REGISTERED PROFESSIONAL ENGINEER — STATE OF CALIFORNIA

THE STATE OF CALIFORNIA OR ITS OFFICERS OR AGENTS SHALL NOT BE RESPONSIBLE FOR THE ACCURACY OR COMPLETENESS OF SCANNED COPIES OF THIS PLAN SHEET.

TO ACCOMPANY PLANS DATED 03-24-14

LEGEND:

AB	ABANDON. IF APPLIED TO CONDUIT, REMOVE CONDUCTORS
BC	INSTALL PULL BOX IN EXISTING CONDUIT RUN
BP	PEDESTRIAN BARRICADE, TYPE AS INDICATED ON PLAN
CB	INSTALL CONDUIT INTO EXISTING PULL BOX
CC	CONNECT NEW AND EXISTING CONDUIT. REMOVE EXISTING CONDUCTORS AND INSTALL CONDUCTORS AS INDICATED
CF	CONDUIT TO REMAIN FOR FUTURE USE. REMOVE CONDUCTORS. INSTALL PULL TAPE
DH	DETECTOR HANDHOLE
FA	FOUNDATION TO BE ABANDONED
IS	INSTALL SIGN ON SIGNAL MAST ARM
NS	NO SLIP BASE ON STANDARD
PEC	PHOTOELECTRIC CONTROL
PEU	PHOTOELECTRIC UNIT
RC	EQUIPMENT OR MATERIAL TO BE REMOVED AND BECOME THE PROPERTY OF THE CONTRACTOR
RE	REMOVE ELECTROLIER, FUSES AND BALLAST. TAPE ENDS OF CONDUCTORS
RL	RELOCATE EQUIPMENT
RR	REMOVE AND REUSE EQUIPMENT
RS	REMOVE AND SALVAGE EQUIPMENT
SC	SPLICE NEW TO EXISTING CONDUCTORS
SD	SERVICE DISCONNECT
TSP	TELEPHONE SERVICE POINT

ABBREVIATIONS

APS	ACCESSIBLE PEDESTRIAN SIGNAL
BBS	BATTERY BACKUP SYSTEM
BC	BOLT CIRCLE
BPB	BICYCLE PUSH BUTTON
C	CONDUIT
CB	CIRCUIT BREAKER
CCTV	CLOSED CIRCUIT TELEVISION
Ckt	CIRCUIT
CMS	CHANGEABLE MESSAGE SIGN
Ctid	CALTRANS IDENTIFICATION
Comm	COMMUNICATION
DLC	LOOP DETECTOR LEAD-IN CABLE
EMS	EXTINGUISHABLE MESSAGE SIGN
EVUC	EMERGENCY VEHICLE UNIT CABLE
EVUD	EMERGENCY VEHICLE UNIT DETECTOR
FB	FLASHING BEACON
FBCA	FLASHING BEACON CONTROL ASSEMBLY
FBS	FLASHING BEACON WITH SLIP BASE
FO	FIBER OPTIC
G	EQUIPMENT GROUNDING CONDUCTOR
GB	GROUND BUS
GFCI	GROUND FAULT CIRCUIT INTERRUPTER
HAR	HIGHWAY ADVISORY RADIO
Hex	HEXAGONAL
HPS	HIGH PRESSURE SODIUM
IISNS	INTERNALLY ILLUMINATED STREET NAME SIGN
ISL	INDUCTION SIGN LIGHTING
LED	LIGHT EMITTING DIODE
LMA	LUMINAIRE MAST ARM
LPS	LOW PRESSURE SODIUM
Ltg	LIGHTING
Lum	LUMINAIRE
M	METERED
MAT	MAST ARM MOUNTING TOP ATTACHMENT
MAS	MAST ARM MOUNTING SIDE ATTACHMENT
M/M	MULTIPLE TO MULTIPLE TRANSFORMER
Mtg	MOUNTING
MV	MERCURY VAPOR LIGHTING FIXTURE
MVDS	MICROWAVE VEHICLE DETECTION SYSTEM
N	NEUTRAL (GROUNDED CONDUCTOR)
NB	NEUTRAL BUS
NC	NORMALLY CLOSE
NO	NORMALLY OPEN
P	CIRCUIT BREAKER'S POLE
PB	PULL BOX
PBA	PUSH BUTTON ASSEMBLY
PEC	PHOTOELECTRIC CONTROL
Ped	PEDESTRIAN
PEU	PHOTOELECTRIC UNIT
PT	CONDUIT WITH PULL TAPE
RE	RELOCATED EQUIPMENT
RM	RAMP METERING
RWIS	ROADSIDE WEATHER INFORMATION SYSTEM
SB	SLIP BASE
SIC	SIGNAL INTERCONNECT CABLE
Sig	SIGNAL
SMA	SIGNAL MAST ARM
SNS	STREET NAME SIGN
SP	SERVICE POINT
TDC	TELEPHONE DEMARCATION CABINET
TMS	TRAFFIC MONITORING STATION
TOS	TRAFFIC OPERATIONS SYSTEM
Veh	VEHICLE
VIVDS	VIDEO IMAGE VEHICLE DETECTION SYSTEM
WIM	WEIGH-IN-MOTION
Xfmr	TRANSFORMER

SOFFIT AND WALL MOUNTED LUMINAIRES

- PENDANT, 70 W HPS UNLESS OTHERWISE SPECIFIED
- FLUSH, 70 W HPS UNLESS OTHERWISE SPECIFIED
- WALL SURFACE, 70 W HPS UNLESS OTHERWISE SPECIFIED
- EXISTING SOFFIT OR WALL LUMINAIRE TO REMAIN UNMODIFIED
- EXISTING SOFFIT OR WALL LUMINAIRE TO BE MODIFIED AS SPECIFIED

NOTE:
Arrow indicates "street side" of luminaire.

COMMONLY USED SYMBOLS FOR UNITED STATES CUSTOMARY UNITS OF MEASUREMENT:

SYMBOL USED	DEFINITIONS
Ω	OHMS
min	MINUTE
s	SECOND
bps	BITS PER SECOND
Bps	BYTES PER SECOND
A	AMPERE
V	VOLT
V(dc)	VOLT (DIRECT CURRENT)
V(ac)	VOLT (ALTERNATING CURRENT)
FC	FOOT - CANDLE
W	WATTS
VA	VOLT-AMPERE
M	MEGA
k	KILO
m	MILLI
μ	MICRO
P	PICO
Hz	HERTZ

MISCELLANEOUS ELECTROLIERS

NEW	EXISTING	
		LUMINAIRE ON WOOD POLE
		NON-STANDARD ELECTROLIER (SEE PROJECT NOTES OR PROJECT PLANS)
		CITY ELECTROLIER
		ELECTROLIER FOUNDATION (FUTURE INSTALLATION)

NOTES:

1. HPS luminaires shall be 310 W HPS when installed on Type 21, 21D, 30, 31 and 32 Standards, unless otherwise specified. HPS luminaires shall be 200 W when installed on other type standards or poles, unless otherwise specified.
2. LED luminaires shall be 235 W when installed on Type 21, 21D, 30, 31 and 32 Standards, unless otherwise specified. LED luminaires shall be 165 W when installed on other type standards or poles, unless otherwise specified.
3. Luminaires shall be the cutoff type, ANSI Type III medium cutoff lighting distribution, unless otherwise specified.

STANDARD ELECTROLIER

NEW	EXISTING	STANDARD TYPE
		15
		15D
		15 STRUCTURE
		15D STRUCTURE
		21
		21D
		21 STRUCTURE
		21D STRUCTURE
		30
		31
		32

STATE OF CALIFORNIA
DEPARTMENT OF TRANSPORTATION

ELECTRICAL SYSTEMS (LEGEND AND ABBREVIATIONS)

NO SCALE

RSP ES-1A DATED JULY 19, 2013 SUPERSEDES STANDARD PLAN ES-1A DATED MAY 20, 2011 - PAGE 425 OF THE STANDARD PLANS BOOK DATED 2010.

REVISED STANDARD PLAN RSP ES-1A

2010 REVISED STANDARD PLAN RSP ES-1A

DATE PLOTTED => 27-MAR-2014
TIME PLOTTED => 11:52

Dist	COUNTY	ROUTE	POST MILES TOTAL PROJECT	SHEET No.	TOTAL SHEETS
02	Las	395	61.5/R76.6	150	161

Theresa Gabriel
REGISTERED ELECTRICAL ENGINEER

July 19, 2013
PLANS APPROVAL DATE

Theresa Aziz Gabriel No. E15129 Exp. 6-30-14 ELECTRICAL
REGISTERED PROFESSIONAL ENGINEER STATE OF CALIFORNIA

THE STATE OF CALIFORNIA OR ITS OFFICERS OR AGENTS SHALL NOT BE RESPONSIBLE FOR THE ACCURACY OR COMPLETENESS OF SCANNED COPIES OF THIS PLAN SHEET.

TO ACCOMPANY PLANS DATED 03-24-14

CONDUIT

NEW	EXISTING	
		LIGHTING CONDUIT, UNLESS OTHERWISE INDICATED OR NOTED
		TRAFFIC SIGNAL CONDUIT
C	c	COMMUNICATION CONDUIT
T	t	TELEPHONE CONDUIT
F	f	FIRE ALARM CONDUIT
FO	fo	FIBER OPTIC CONDUIT
		CONDUIT TERMINATION
R	r	CONDUIT RISER ATTACHED TO THE STRUCTURE OR SERVICE POLE

SERVICE EQUIPMENT

NEW	EXISTING	
OH	oh	OVERHEAD LINES
U	U	WOOD POLE, "U" INDICATES UTILITY OWNED
		POLE GUY WITH ANCHOR
		UTILITY TRANSFORMER - GROUND MOUNTED
III	III	SERVICE EQUIPMENT ENCLOSURE TYPE. DOOR INDICATES FRONT OF ENCLOSURE
T	t	TELEPHONE DEMARCATION CABINET

POLE-MOUNTED SERVICE DESIGNATION

TYPE H SERVICE, 28'-10" — TYPE OF INSTALLATION AND POLE HEIGHT ABOVE GRADE

FLASHING BEACON

NEW	EXISTING	
R	R	FLASHING BEACON (ONE VEHICLE SIGNAL HEAD WITH BACKPLATE AND VISOR) "R" INDICATES RED INDICATION, "Y" INDICATES YELLOW INDICATION
Y Y	Y Y	FLASHING BEACON WITH TYPE 15-FBS STANDARD AND A SIGN.
R R	R R	FLASHING BEACON WITH TYPES 9, 9A OR 9B SIGN UNLESS OTHERWISE SPECIFIED OR INDICATED

SIGNAL EQUIPMENT

NEW	EXISTING	
C	C	PEDESTRIAN SIGNAL HEAD "C" INDICATES COUNTDOWN PEDESTRIAN HEAD
		PUSH BUTTON ASSEMBLY POST
		PEDESTRIAN BARRICADE
		VEHICLE SIGNAL HEAD (WITH BACKPLATE AND 3-SECTIONS: RED, YELLOW AND GREEN)
		VEHICLE SIGNAL HEAD WITH ANGLE VISOR
PV	PV	MODIFICATIONS OF BASIC SYMBOL: "L" INDICATES ALL NON-ARROW SECTIONS LOUVERED "LG" INDICATES LOUVERED GREEN SECTION ONLY "PV" INDICATES ALL 12" SECTIONS PROGRAMMED VISIBILITY "8" INDICATES ALL 8" SECTIONS (ONLY WHEN SPECIFIED)
		VEHICLE SIGNAL HEAD CONSISTING OF RED, YELLOW AND GREEN LEFT ARROW SECTIONS
		VEHICLE SIGNAL HEAD CONSISTING OF RED AND YELLOW SECTIONS WITH AN UP GREEN ARROW SECTION
		VEHICLE SIGNAL HEAD (5 SECTION) CONSISTING OF RED, YELLOW AND GREEN SECTIONS WITH YELLOW AND GREEN RIGHT ARROW SECTIONS
		TYPE 15TS STANDARD WITH VEHICLE SIGNAL HEAD AND LUMINAIRE
		TYPE 21TS STANDARD WITH VEHICLE SIGNAL HEAD AND LUMINAIRE
		STANDARD WITH LUMINAIRE AND SIGNAL MAST ARMS AND ATTACHED VEHICLE SIGNAL HEADS
		TYPE 1 STANDARD WITH ATTACHED VEHICLE SIGNAL HEADS
		STANDARD WITH A SIGNAL MAST ARM, ATTACHED VEHICLE SIGNAL HEADS AND INTERNALLY ILLUMINATED STREET NAME SIGN
		CONTROLLER ASSEMBLY. DOOR INDICATES FRONT OF CABINET

SIGNAL EQUIPMENT Cont

NEW	EXISTING	
		GUARD POST
		TYPE 1 STANDARD WITH RAMP METERING SIGN
		OPTICAL DETECTOR FOR THE EMERGENCY VEHICLE DETECTION SYSTEM

NOTES:

1. All signal sections shall be 12" unless shown otherwise.
2. Signal heads shall be provided with backplates unless shown otherwise.

ILLUMINATED OVERHEAD SIGN

NEW	EXISTING	
		SINGLE POST, SINGLE ILLUMINATED SIGN, BALANCED BUTTERFLY
		SINGLE POST, DOUBLE ILLUMINATED SIGN, BALANCED BUTTERFLY
		SINGLE POST, SINGLE ILLUMINATED SIGN, FULL CANTILEVER
		DOUBLE POST, SINGLE ILLUMINATED SIGN
		SINGLE ILLUMINATED SIGN MOUNTED ON STRUCTURE
		DOUBLE POST, SINGLE ILLUMINATED SIGN WITH ELECTROLIER

STATE OF CALIFORNIA
DEPARTMENT OF TRANSPORTATION

ELECTRICAL SYSTEMS (LEGEND AND ABBREVIATIONS)

NO SCALE

RSP ES-1B DATED JULY 19, 2013 SUPERSEDES STANDARD PLAN ES-1B DATED MAY 20, 2011 - PAGE 426 OF THE STANDARD PLANS BOOK DATED 2010.

REVISED STANDARD PLAN RSP ES-1B

2010 REVISED STANDARD PLAN RSP ES-1B

DATE PLOTTED => 27-MAR-2014
TIME PLOTTED => 11:52

Dist	COUNTY	ROUTE	POST MILES TOTAL PROJECT	SHEET No.	TOTAL SHEETS
02	Las	395	61.5/R76.6	151	161

Theresa Gabriel
REGISTERED ELECTRICAL ENGINEER

July 19, 2013
PLANS APPROVAL DATE

REGISTERED PROFESSIONAL ENGINEER
Theresa Aziz Gabriel
No. E15129
Exp. 6-30-14
ELECTRICAL
STATE OF CALIFORNIA

THE STATE OF CALIFORNIA OR ITS OFFICERS OR AGENTS SHALL NOT BE RESPONSIBLE FOR THE ACCURACY OR COMPLETENESS OF SCANNED COPIES OF THIS PLAN SHEET.

TO ACCOMPANY PLANS DATED 03-24-14

EQUIPMENT IDENTIFICATION

ILLUMINATED SIGN IDENTIFICATION NUMBER:

SIGN No. 12345
10 ISL SCI 1.0

- SIGN NUMBER - PLACE ON POST OR STRUCTURE
- TRANSFORMER RATING (kVA)
- LIGHTING CONTROL TYPE
- NUMBER AND TYPE OF FIXTURES

} DO NOT PLACE ON STANDARD OR STRUCTURE

ELECTROLIER OR EQUIPMENT IDENTIFICATION NUMBER:

12345 - 15'-0"

- MAST ARM LENGTH, IF SHOWN. DO NOT PLACE ON STANDARD OR STRUCTURE
- EQUIPMENT NUMBER - PLACE ON STANDARD OR STRUCTURE. EXISTING EQUIPMENT NUMBERS ARE SHOWN IN PARENTHESIS

CONDUIT AND CONDUCTOR IDENTIFICATION:

1½"C, 2#10, 15#14, 2 DLC, 12P#18

- PAIR
- NUMBER AND SIZE OF CONDUCTORS AND CABLES
- SIZE OF CONDUIT IN INCHES

ø1, ø2, ø2P, etc.	TRAFFIC PHASE IDENTIFICATION FOR SIGNAL FACES, DETECTORS AND PHASE DIAGRAMS
1 2 3	LEGEND NUMBERS
A B C	EQUIPMENT, SIGNAL POLES, INSTALLATION OR ITEMS
1 2 3	CONDUIT RUN NUMBERS

SIGNAL AND LIGHTING STANDARD (TYPICAL DESIGNATION):

19A - 3 - 100

- WIND VELOCITY = 100 mph
- CASE 3 ARM LOADING
- STANDARD TYPE
- STANDARD PLAN SHEET NUMBER
- DETAIL, NUMBER, SECTION, TYPE OR ELEVATION

MISCELLANEOUS EQUIPMENT

NEW	EXISTING	
CMS	cms	CHANGEABLE MESSAGE SIGN
		CLOSED CIRCUIT TELEVISION CAMERA
		HIGHWAY ADVISORY RADIO POLE AND ANTENNA
EMS	ems	EXTINGUISHABLE MESSAGE SIGN
M V	m v	DETECTION DEVICE M = MICROWAVE SENSOR V = VIDEO IMAGE SENSOR

WIRING DIAGRAM LEGEND

----	EXTERNAL CONDUCTOR
	CONDUCTOR OR BUS
	TIE POINT
	CONTACTOR COIL
	CONTACTOR, NO CONTACT
	TERMINAL BLOCKS
	CONTACTOR, NC CONTACT
	ENCLOSURE BOND
	GROUNDING ELECTRODE
	CIRCUIT BREAKER
	RECEPTACLE

PULL BOXES

NEW	EXISTING	
		PULL BOX, No. 5 UNLESS OTHERWISE INDICATED OR NOTED
3	9A(21)	PULL BOX, ADDITIONAL DESIGNATIONS OR DESCRIPTIONS

3 No. 3½ PULL BOX
5 No. 5 PULL BOX
6 No. 6 PULL BOX
7 No. 7 (CEILING PULL BOX)
8 No. 8 (PENDANT SOFFIT PULL BOX)
9 No. 9 PULL BOX
9A No. 9A PULL BOX

(C) COMMUNICATIONS PULL BOX
(E) PULL BOX WITH EXTENSION
(S) SPRINKLER CONTROL PULL BOX
(21) ANCHOR BOLTS AND CONDUIT FOR FUTURE INSTALLATION OF TYPE 21 STANDARD
(T) TRAFFIC PULL BOX

VEHICLE DETECTORS

5 J 9 U

- VEHICLE DETECTOR DESIGNATION
- U = UPPER
  L = LOWER
- SLOT NUMBER IN INPUT FILE
- INPUT FILE (I OR J)
- PHASE

NEW	EXISTING	
		TYPE A DETECTOR LOOP. OUTLINE OF SAWCUT SHOWN
		TYPE B DETECTOR LOOP. OUTLINE OF SAWCUT SHOWN
		TYPE C DETECTOR LOOP. OUTLINE OF SAWCUT SHOWN
		TYPE D DETECTOR LOOP. OUTLINE OF SAWCUT SHOWN
		TYPE E DETECTOR LOOP. OUTLINE OF SAWCUT SHOWN
		TYPE Q DETECTOR LOOP. OUTLINE OF SAWCUT SHOWN
		MAGNETIC DETECTOR
DH	dh	DETECTOR HANDHOLE
		MICROWAVE OR VIDEO DETECTION ZONE

STATE OF CALIFORNIA
DEPARTMENT OF TRANSPORTATION

ELECTRICAL SYSTEMS (LEGEND AND ABBREVIATIONS)

NO SCALE

RSP ES-1C DATED JULY 19, 2013 SUPERSEDES STANDARD PLAN ES-1C DATED MAY 20, 2011 - PAGE 427 OF THE STANDARD PLANS BOOK DATED 2010.

REVISED STANDARD PLAN RSP ES-1C

2010 REVISED STANDARD PLAN RSP ES-1C

DATE PLOTTED => 27-MAR-2014
TIME PLOTTED => 11:52

Dist	COUNTY	ROUTE	POST MILES TOTAL PROJECT	SHEET No.	TOTAL SHEETS
02	Las	395	61.5/R76.6	152	161

Theresa Gabriel
REGISTERED ELECTRICAL ENGINEER

July 19, 2013
PLANS APPROVAL DATE

REGISTERED PROFESSIONAL ENGINEER Theresa Aziz Gabriel No. E15129 Exp. 6-30-14 ELECTRICAL STATE OF CALIFORNIA

THE STATE OF CALIFORNIA OR ITS OFFICERS OR AGENTS SHALL NOT BE RESPONSIBLE FOR THE ACCURACY OR COMPLETENESS OF SCANNED COPIES OF THIS PLAN SHEET.

TO ACCOMPANY PLANS DATED 03-24-14

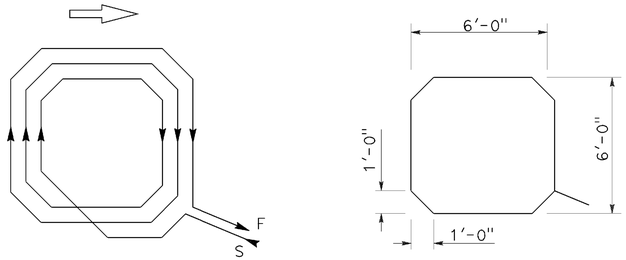

WINDING DETAIL SAWCUT DETAIL

TYPE A LOOP DETECTOR CONFIGURATION

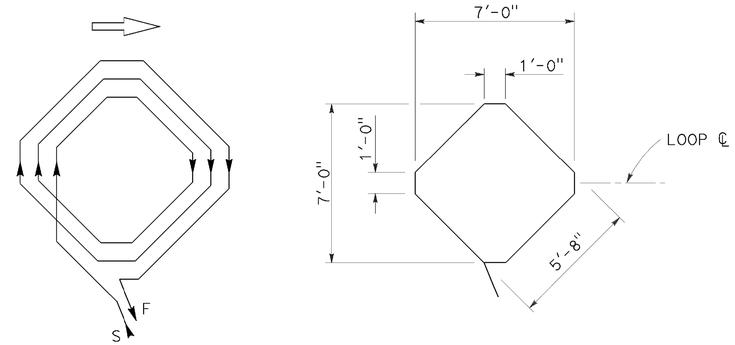

WINDING DETAIL SAWCUT DETAIL

TYPE B LOOP DETECTOR CONFIGURATION

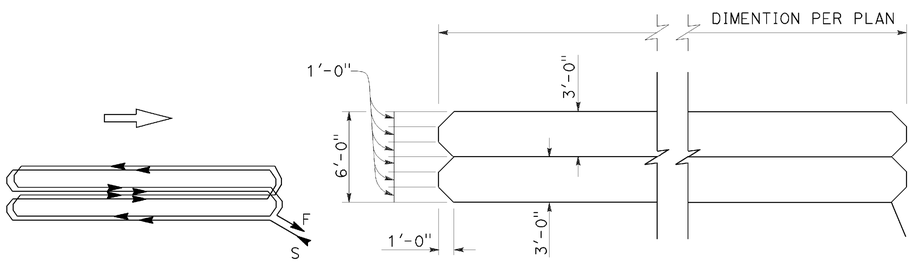

WINDING DETAIL SAWCUT DETAIL

TYPE C LOOP DETECTOR CONFIGURATION

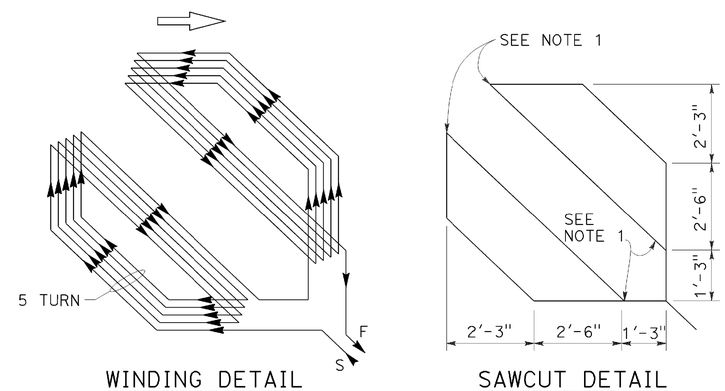

WINDING DETAIL SAWCUT DETAIL

TYPE D LOOP DETECTOR CONFIGURATION

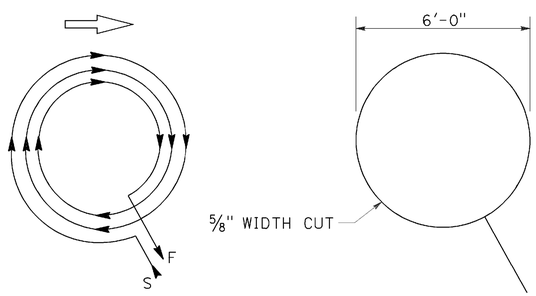

WINDING DETAIL SAWCUT DETAIL

TYPE E LOOP DETECTOR CONFIGURATION

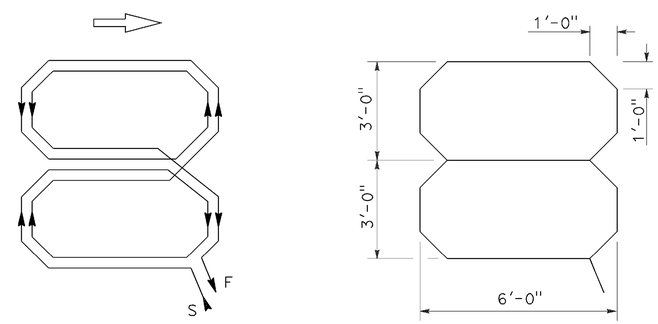

WINDING DETAIL SAWCUT DETAIL

TYPE Q LOOP DETECTOR CONFIGURATION

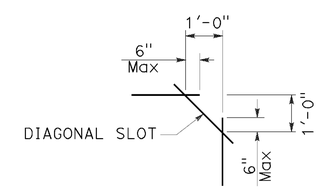

PLAN VIEW OF DIAGONAL SLOT AT CORNERS

NOTES:

1. Round corners of acute angle sawcuts to prevent damage to conductors.
2. Typical distance separating loops from edge to edge is 10' for Type A, B, D and E installation in single lane.

STATE OF CALIFORNIA
DEPARTMENT OF TRANSPORTATION

ELECTRICAL SYSTEMS (DETECTORS)

NO SCALE

RSP ES-5B DATED JULY 19, 2013 SUPERSEDES STANDARD PLAN ES-5B DATED MAY 20, 2011 - PAGE 449 OF THE STANDARD PLANS BOOK DATED 2010.

REVISED STANDARD PLAN RSP ES-5B

2010 REVISED STANDARD PLAN RSP ES-5B

DATE PLOTTED => 27-MAR-2014
TIME PLOTTED => 11:52

Dist	COUNTY	ROUTE	POST MILES TOTAL PROJECT	SHEET No.	TOTAL SHEETS
02	Las	395	61.5/R76.6	153	161

Theresa Gabriel
REGISTERED ELECTRICAL ENGINEER

July 19, 2013
PLANS APPROVAL DATE

REGISTERED PROFESSIONAL ENGINEER
Theresa Aziz Gabriel
No. E15129
Exp. 6-30-14
ELECTRICAL
STATE OF CALIFORNIA

THE STATE OF CALIFORNIA OR ITS OFFICERS OR AGENTS SHALL NOT BE RESPONSIBLE FOR THE ACCURACY OR COMPLETENESS OF SCANNED COPIES OF THIS PLAN SHEET.

TO ACCOMPANY PLANS DATED 03-24-14

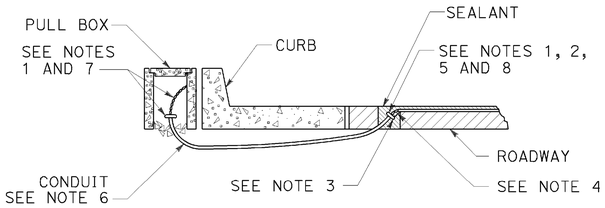

TYPE A
CURB TERMINATION DETAIL

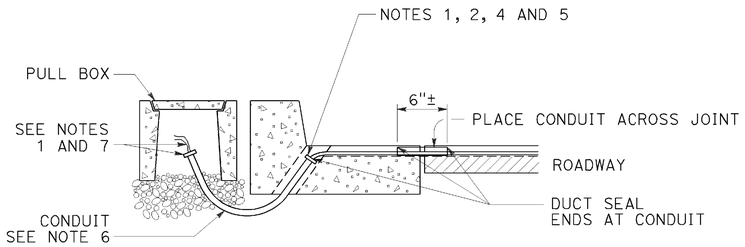

CROSS SECTION

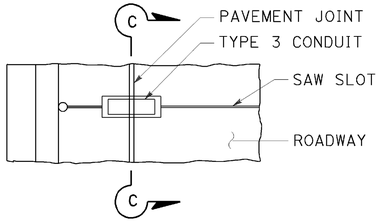

PLAN VIEW

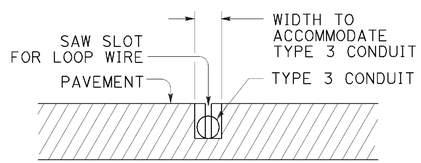

SECTION C-C

TYPE B
CURB TERMINATION DETAIL

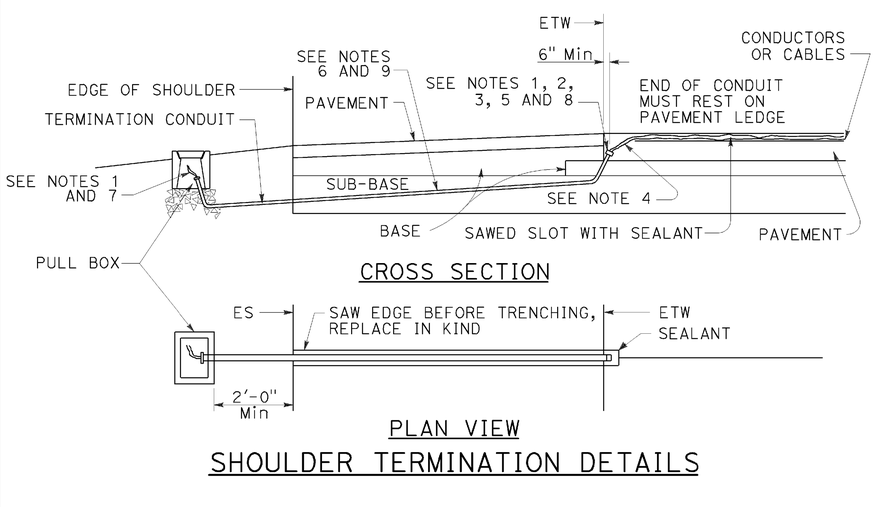

CROSS SECTION

PLAN VIEW

SHOULDER TERMINATION DETAILS

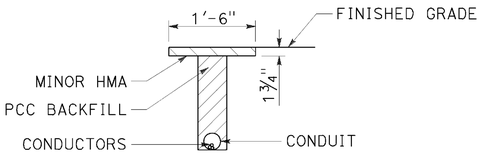

"T" TRENCH
DETAIL T

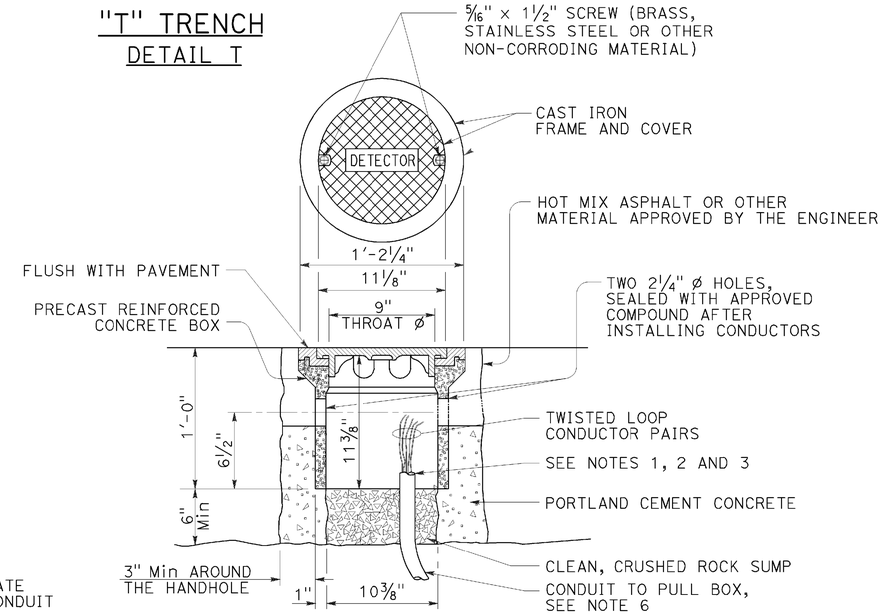

DETECTOR HANDHOLE DETAIL

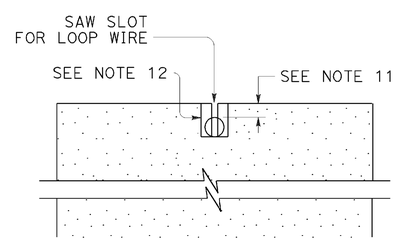

SECTION A-A

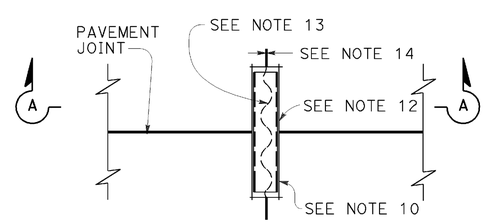

PLAN VIEW

TYPICAL LOOP LEAD-IN DETAIL AT PAVEMENT JOINT

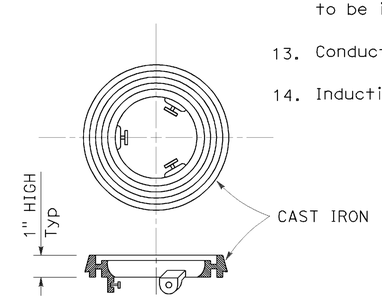

LOCKING GRADE RING

NOTES:

1. Bushing shall be used at end of conduit.
2. Tape detector conductors or cables 3" each side of bushings.
3. Install duct seal compound to each end of termination conduit before installing sealant.
4. Round all sharp edges where detector conductors or cables have to pass.
5. End of conduit shall be 3⅛" below roadway surface.
6.

Conduit size	Loop conductors
1"C minimum	1 to 2 pairs
1½"C minimum	3 to 4 pairs
2"C minimum	5 or more pairs

7. Splice detector conductors or cables to detector lead-in-cable.
8. Location of detector handhole when shown on plans.
9. When the shoulder and traveled way are paved with the same material and there is no joint between them, the conduit shall extend only 2'-0" into the shoulder pavement.
10. ¾"C, Type 3 conduit 6" long minimum, plug both ends with duct compound to keep out sealant.
11. ½" Minimum between top of conduit and pavement surface.
12. Sawcut shall not exceed 1" in width and ⅛" longer than conduit to be installed.
13. Conductors with ½" minimum slack inside conduit.
14. Inductive loop detector saw slot.

STATE OF CALIFORNIA
DEPARTMENT OF TRANSPORTATION

ELECTRICAL SYSTEMS (CURB TERMINATION AND HANDHOLE)

NO SCALE

RSP ES-5D DATED JULY 19, 2013 SUPERSEDES STANDARD PLAN ES-5D DATED MAY 20, 2011 - PAGE 451 OF THE STANDARD PLANS BOOK DATED 2010.

REVISED STANDARD PLAN RSP ES-5D

2010 REVISED STANDARD PLAN RSP ES-5D

DATE PLOTTED => 27-MAR-2014
TIME PLOTTED => 11:53

DIST	COUNTY	ROUTE	POST MILES TOTAL PROJECT	SHEET No.	TOTAL SHEETS
02	Las	395	61.5/R76.6	154	161

REGISTERED CIVIL ENGINEER 08-29-13 DATE

03-24-14
PLANS APPROVAL DATE

REGISTERED PROFESSIONAL ENGINEER Jiffay Lee No. 63599 Exp. 09-30-14 CIVIL STATE OF CALIFORNIA

The State of California or its officers or agents shall not be responsible for the accuracy or completeness of electronic copies of this plan sheet.

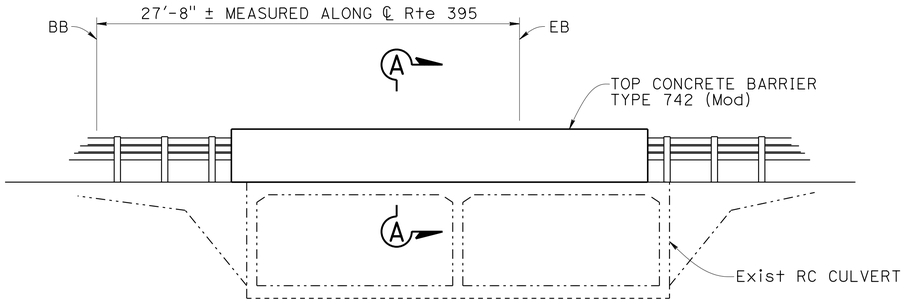

ELEVATION
1" = 5'

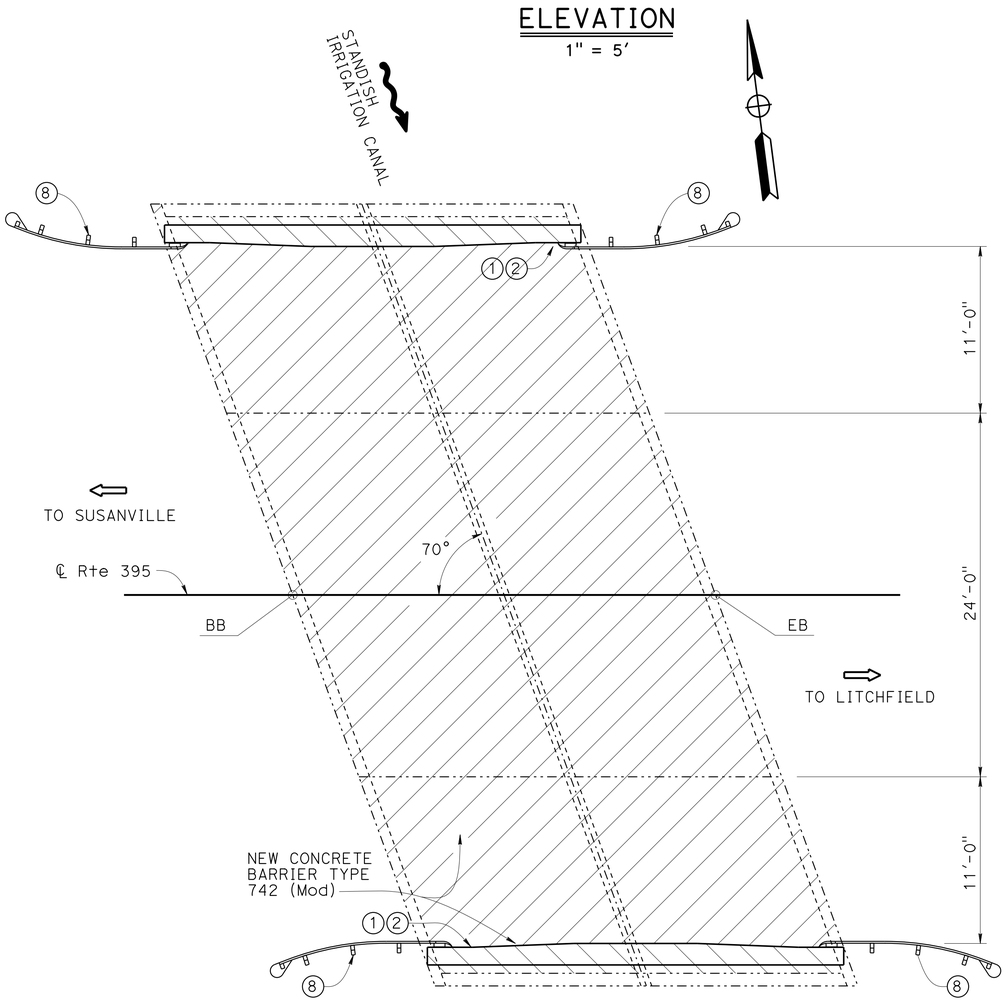

PLAN
1" = 5'

NOTE:
THE CONTRACTOR SHALL VERIFY ALL CONTROLLING FIELD DIMENSIONS BEFORE ORDERING OR FABRICATING ANY MATERIAL.

NOTE:
1. Paint "Standish Irrigation Canal".
2. Paint "Br. No. 07-0030".
3. For Section A-A see "DETAILS" sheet.
4. Slope to match existing slope.
5. Remove existing 5" AC and 5" base and place new HMA.
6. Temporary Railing Type K see "Road Plans".
7. CONCRETE BARRIER TYPE 742 (Mod) RSP B11-57
8. MGS Railing, see "Road Plans".
9. For HMA construction staging, see "Road Plans".

LEGEND:

-·-·-·- Indicates existing structure

Indicates limits of the removal of existing 5"± AC surface, 5"± base, and placing of new HMA overlay with a new membrane. See "Road Plans" for base removal. Prior to placing new HMA overlay, remove unsound concrete and patch with rapid setting concrete, then place slurry leveling course and membrane. For details see "Deck Overlay Detail" and "Deck Overlay Notes" on "Details" sheet.

Indicates limits of the removal of existing 5"± AC surface and 5"± base see "Road Plans" for base removal.

QUANTITIES

RAPID SETTING CONCRETE (PATCH)	7	CF
REMOVE ASPHALT CONCRETE SURFACING	1,382	SQFT
REMOVE UNSOUND CONCRETE	7	CF
HOT MIX ASPHALT (TYPE B)	74	TON
DECK SEAL	1,319	SQFT
SLURRY LEVELING COURSE	78	GAL
CONCRETE BARRIER (TYPE 742 Mod)	56	LF

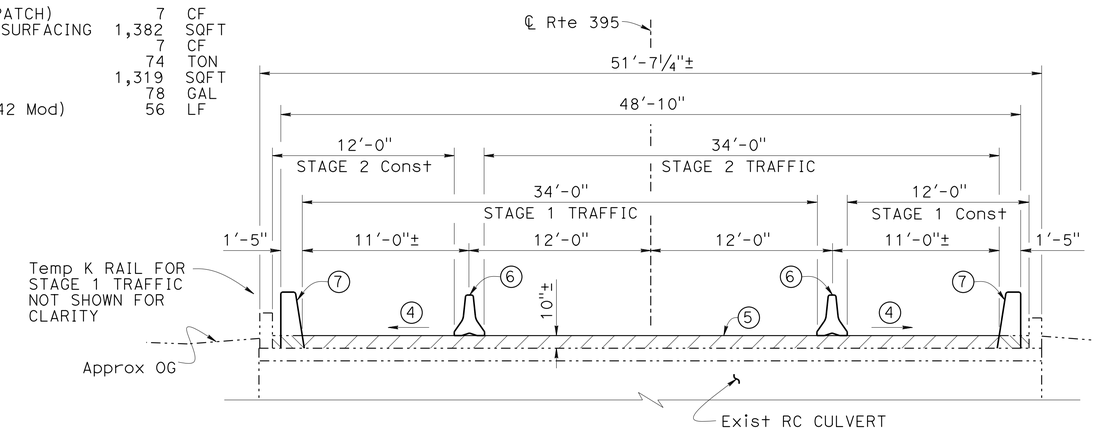

TYPICAL SECTION
1" = 5'

STANDARD PLANS DATED MAY 2010

SHEET NO.	TITLE
A10A	ABBREVIATIONS (SHEET 1 OF 2)
RSP A10B	ABBREVIATIONS (SHEET 2 OF 2)
B6-21	JOINT SEALS (MAXIMUM MOVEMENT RATING = 2")
RSP B11-57	CONCRETE BARRIER TYPE 742

STANDARD PLAN SHEET NO.

DETAIL NO.

INDEX TO PLANS

Sheet No.	Title
1	GENERAL PLAN - STANDISH IRRIGATION CANAL
2	DETAILS - STANDISH IRRIGATION CANAL
3	GENERAL PLAN - SUSAN RIVER
4	DETAILS - SUSAN RIVER
5	GENERAL PLAN - DILL SLOUGH
6	DETAILS - DILL SLOUGH
7	GENERAL PLAN - SUSAN RIVER OVERFLOW
8	DETAILS - SUSAN RIVER OVERFLOW

DESIGN ENGINEER

	BY	CHECKED
DESIGN	J. Lee	G. Slocum
DETAILS	C. Figuerres/J. Yang	G. Slocum
QUANTITIES	G. Slocum	G. Slocum

LOAD & RESISTANCE FACTOR DESIGN — LIVE LOADING: HL93 W/"LOW-BOY": PERMIT DESIGN VEHICLE

LAYOUT BY J. Lee CHECKED G. Slocum

SPECIFICATIONS BY James Corrado PLANS AND SPECS COMPARED J.C

ORIGINAL SCALE IN INCHES FOR REDUCED PLANS 0 1 2 3

STATE OF CALIFORNIA DEPARTMENT OF TRANSPORTATION

DIVISION OF ENGINEERING SERVICES STRUCTURE DESIGN DESIGN BRANCH 2

BRIDGE NO. 07-0030
POST MILE 62.19

JOHNSTONVILLE PAVEMENT REHAB.
STANDISH IRRIGATION CANAL
GENERAL PLAN

UNIT: 3577
PROJECT NUMBER & PHASE: 02120000371
CONTRACT NO.: 02-3C0711

DISREGARD PRINTS BEARING EARLIER REVISION DATES

REVISION DATES 9-15-10 10-14-10 12-22-10 08-14-13

SHEET 1 OF 8

USERNAME => s123119 DATE => 08/29/2014 TIME PLOTTED => 11:53

STRUCTURES DESIGN GENERAL PLAN SHEET (ENGLISH) (REV.09-01-10)

FILE => 07-0030-a-gp01.dgn

DIST	COUNTY	ROUTE	POST MILES TOTAL PROJECT	SHEET No.	TOTAL SHEETS
02	Las	395	61.5/R76.6	155	161

REGISTERED CIVIL ENGINEER 08-29-13 DATE

03-24-14
PLANS APPROVAL DATE

REGISTERED PROFESSIONAL ENGINEER Jiffay Lee No. 63599 Exp. 09-30-14 CIVIL STATE OF CALIFORNIA

The State of California or its officers or agents shall not be responsible for the accuracy or completeness of electronic copies of this plan sheet.

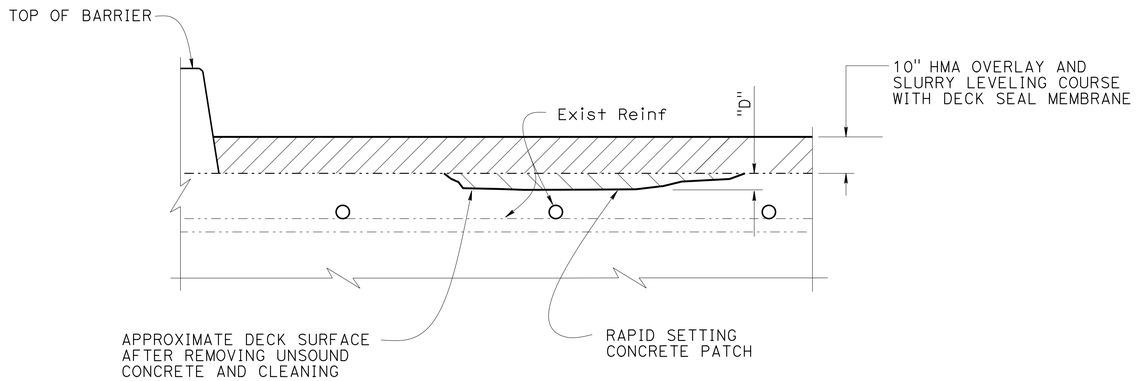

NEW DECK OVERLAY DETAIL

No Scale

SEE NOTE 6

NOTES:

1. #5 drill & bond dowel to replace #5 shown on RSP B11-57
2. All bridge rail bar reinforcement to be epoxy coated. For details not shown see RSP B11-57

LEGEND:

-·-·- Indicates existing structure

Indicates limits of the new AC surface, slurry leveling course and deck seal membrane

Indicates limits of the removal of unsound concrete and patch with rapid setting concrete

DECK OVERLAY NOTES:

1. Existing reinforcement shall be protected in place during unsound concrete removal and patching operation.
2. It is the responsibility of the Contractor to repair any reinforcement that is accidentally cut by saw cutting operations.
3. When existing transverse reinforcement is exposed in the deck surface, saw cutting may be waived with the approval of the Engineer.
4. The saw cut depth shall not exceed 1 inch or the concrete cover over the top steel reinforcing bars, whichever is less.
5. Remove unsound Portland cement concrete and unsound concrete patches to expose sound, hard concrete substrate. Replace original deck surface with rapid setting concrete patch.
6. Locations to be determined by the Engineer. Reinforcement may be encountered during deck concrete removal and is to remain undamaged.

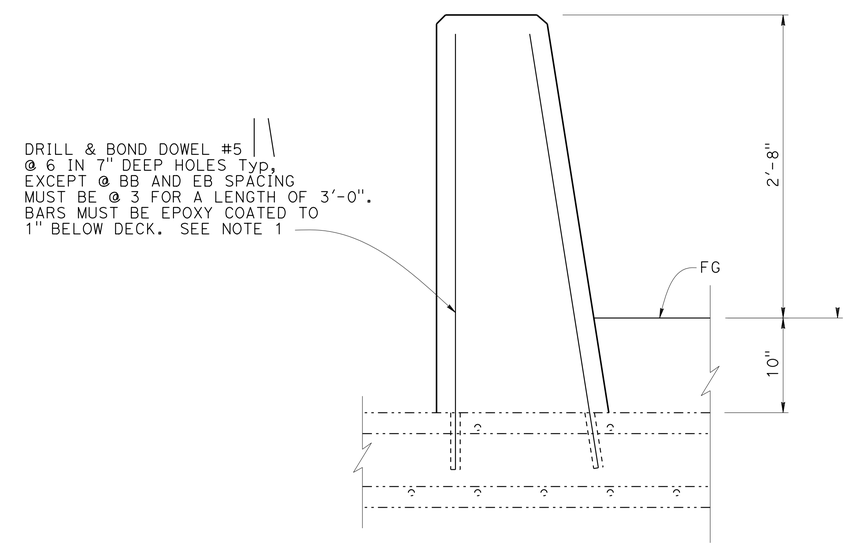

SECTION A-A

1½" = 1'

SEE NOTE 2

DECK REPAIR TABLE

REMOVE UNSOUND CONCRETE AND RAPID SETTING CONCRETE (PATCH)

APPROXIMATE DAMAGED %	APPROXIMATE DEPTH (IN)
2%	3.0

NOTE:
THE CONTRACTOR SHALL VERIFY ALL CONTROLLING FIELD DIMENSIONS BEFORE ORDERING OR FABRICATING ANY MATERIAL.

	BY	CHECKED
DESIGN	J. Lee	G. Slocum
DETAILS	J. Yang	G. Slocum
QUANTITIES	G. Slocum	G. Slocum

STATE OF CALIFORNIA
DEPARTMENT OF TRANSPORTATION

DIVISION OF ENGINEERING SERVICES
STRUCTURE DESIGN
DESIGN BRANCH 2

BRIDGE NO. 07-0030
POST MILE 62.19

JOHNSTONVILLE PAVEMENT REHAB.
STANDISH IRRIGATION CANAL
DETAILS

STRUCTURES DESIGN DETAIL SHEET (ENGLISH) (REV. 09-01-10)

ORIGINAL SCALE IN INCHES FOR REDUCED PLANS 0 1 2 3

UNIT: 3577
PROJECT NUMBER & PHASE: 02120000371
CONTRACT NO.: 02-3C0711

DISREGARD PRINTS BEARING EARLIER REVISION DATES

REVISION DATES 12-22-10 03-29-11 06-22-11 08-27-13

SHEET 2 OF 8

FILE => 07-0030-b-de01.dgn

USERNAME => s123119 DATE PLOTTED => 27-MAR-2014 TIME PLOTTED => 11:53

DIST	COUNTY	ROUTE	POST MILES TOTAL PROJECT	SHEET No.	TOTAL SHEETS
02	Las	395	61.5/R76.6	156	161

REGISTERED CIVIL ENGINEER — DATE 08-29-13

PLANS APPROVAL DATE 03-24-14

REGISTERED PROFESSIONAL ENGINEER — Jiffay Lee — No. 63599 — Exp. 09-30-14 — CIVIL — STATE OF CALIFORNIA

The State of California or its officers or agents shall not be responsible for the accuracy or completeness of electronic copies of this plan sheet.

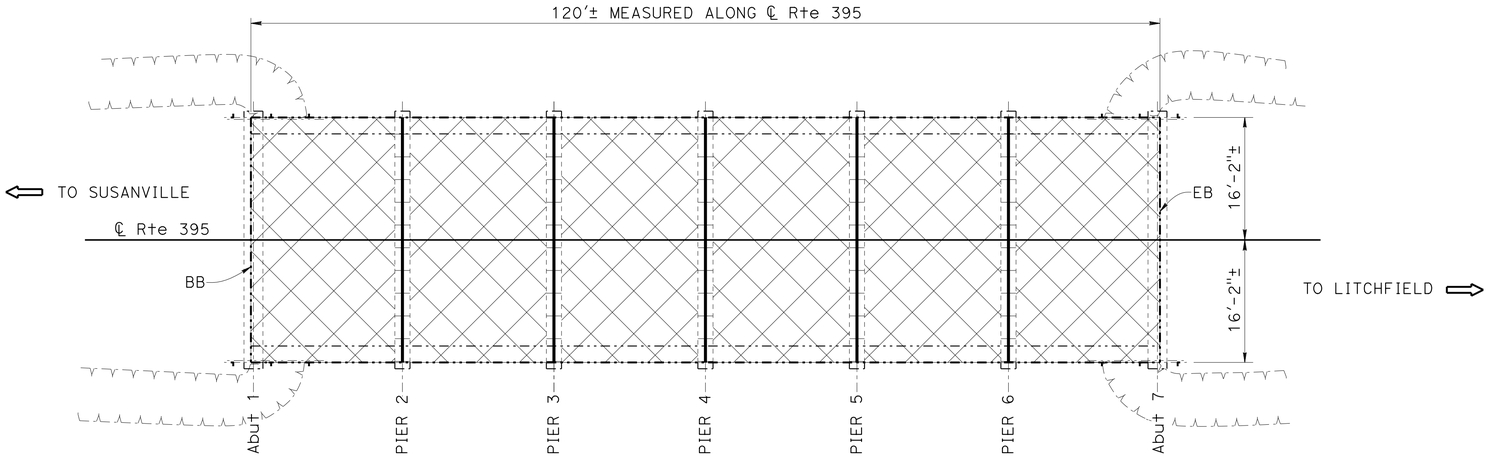

PLAN

1" = 10'

LEGEND:

-·-·- Indicates existing structure.

Indicates location of joint seal removal and placement of new joint seals. For details, see "Details" sheet.

Polyester concrete expansion dam, see "Details" sheet.

Indicates limits of removal of 3"± existing AC surface and deck seal membrane, furnish and place new HMA overlay with a new membrane. Prior to placing new HMA overlay, remove unsound concrete and patch with rapid setting concrete, then place slurry leveling course and membrane. For details see "Deck Overlay Detail" and "Deck Overlay Notes" on "Details" sheet. See Road Plans" for traffic staging.

QUANTITIES

RAPID SETTING CONCRETE (PATCH)	49	CF
REMOVE ASPHALT CONCRETE SURFACING	3,880	SQFT
REMOVE UNSOUND CONCRETE	49	CF
POLYESTER CONCRETE EXPANSION DAM	81	CF
HOT MIX ASPHALT (TYPE B)	73	TON
CLEAN EXPANSION JOINT	162	LF
JOINT SEAL (MR1/2)	162	LF
DECK SEAL	3,880	SQFT
SLURRY LEVELING COURSE	238	GAL

NOTE:
THE CONTRACTOR SHALL VERIFY ALL CONTROLLING FIELD DIMENSIONS BEFORE ORDERING OR FABRICATING ANY MATERIAL.

DESIGN ENGINEER

	BY	CHECKED
DESIGN	J. Lee	G. Slocum
DETAILS	C. Figuerres/J. Yang	G. Slocum
QUANTITIES	G. Slocum	G. Slocum

LOAD & RESISTANCE FACTOR DESIGN — LIVE LOADING: HL93 W/"LOW-BOY"; PERMIT DESIGN VEHICLE

	BY	CHECKED
LAYOUT	J. Lee	G. Slocum
SPECIFICATIONS	James Corrado	PLANS AND SPECS COMPARED J.C

ORIGINAL SCALE IN INCHES FOR REDUCED PLANS 0 1 2 3

STATE OF CALIFORNIA
DEPARTMENT OF TRANSPORTATION

DIVISION OF ENGINEERING SERVICES
STRUCTURE DESIGN
DESIGN BRANCH 2

BRIDGE NO. 07-0034
POST MILE 72.29

JOHNSTONVILLE PAVEMENT REHAB.
SUSAN RIVER
GENERAL PLAN

UNIT: 3577
PROJECT NUMBER & PHASE: 02120000371
CONTRACT NO.: 02-3C0711

DISREGARD PRINTS BEARING EARLIER REVISION DATES

REVISION DATES: 8-18-10 9-23-10 12-22-10

SHEET 3 OF 8

USERNAME => s123119 DATE PLOTTED => 27-MAR-2014 TIME PLOTTED => 11:53

DIST	COUNTY	ROUTE	POST MILES TOTAL PROJECT	SHEET No.	TOTAL SHEETS
02	Las	395	61.5/R76.6	157	161

REGISTERED CIVIL ENGINEER 06-22-11 DATE

03-24-14
PLANS APPROVAL DATE

REGISTERED PROFESSIONAL ENGINEER Jiffay Lee No. 63599 Exp. 09-30-14 CIVIL STATE OF CALIFORNIA

The State of California or its officers or agents shall not be responsible for the accuracy or completeness of electronic copies of this plan sheet.

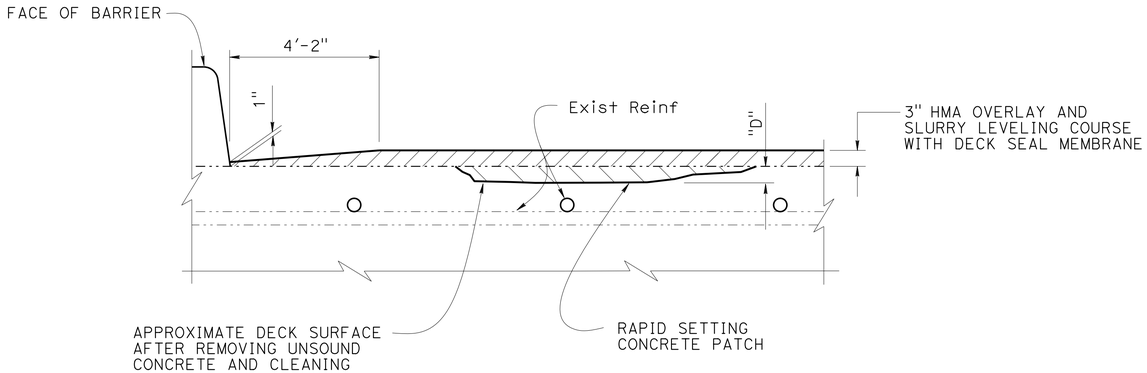

DECK OVERLAY DETAIL

No Scale

SEE NOTE 6

LEGEND:

Indicates existing structure.

Indicates limits of the removal of 3"± existing AC surface, base and deck seal membrane, furnish and place new HMA overlay with a new membrane.

Indicates limits of the removal of unsound concrete and patch with rapid setting concrete

Indicates limits of polyester concrete expansion dam.

DECK OVERLAY NOTES:

1. Existing reinforcement shall be protected in place during unsound concrete removal and patching operation.
2. It is the responsibility of the Contractor to repair any reinforcement that is accidentally cut by saw cutting operations.
3. When existing transverse reinforcement is exposed in the deck surface, saw cutting may be waived with the approval of the Engineer.
4. The saw cut depth shall not exceed 1 inch or the concrete cover over the top steel reinforcing bars, whichever is less.
5. Remove unsound Portland cement concrete and unsound concrete patches to expose sound, hard concrete substrate. Replace original deck surface with rapid setting concrete patch.
6. Locations to be determined by the Engineer.

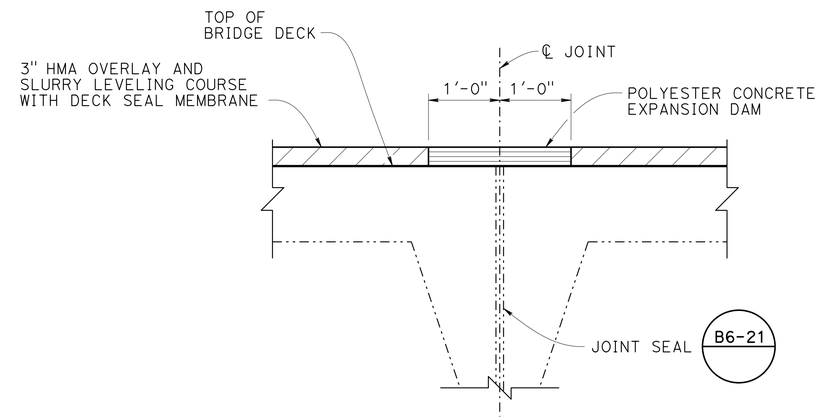

AT PIER

JOINT SEAL LOCATION

No Scale

DECK REPAIR TABLE

REMOVE UNSOUND CONCRETE AND RAPID SETTING CONCRETE (PATCH)

APPROXIMATE DAMAGED %	APPROXIMATE DEPTH (IN)
5%	3.0

JOINT SEAL TABLE

LOCATION	WATER STOP	APPROXIMATE LENGTH (FT)	"MR" (IN)	DEPTH TO CLEAN EXPANSION JOINT INCH	Min W1 (IN)
PIER 2 - PIER 6	NO	162.00	½"	18.25	1.40

NOTE:
THE CONTRACTOR SHALL VERIFY ALL CONTROLLING FIELD DIMENSIONS BEFORE ORDERING OR FABRICATING ANY MATERIAL.

	BY	CHECKED
DESIGN	J. Lee	G. Slocum
DETAILS	J. Yang	G. Slocum
QUANTITIES	G. Slocum	G. Slocum

STATE OF CALIFORNIA
DEPARTMENT OF TRANSPORTATION

DIVISION OF ENGINEERING SERVICES
STRUCTURE DESIGN
DESIGN BRANCH 2

BRIDGE NO. 07-0034
POST MILE 72.29

JOHNSTONVILLE PAVEMENT REHAB.
SUSAN RIVER
DETAILS

STRUCTURES DESIGN DETAIL SHEET (ENGLISH) (REV. 09-01-10)

ORIGINAL SCALE IN INCHES FOR REDUCED PLANS 0 1 2 3

UNIT: 3577
PROJECT NUMBER & PHASE: 02120000371
CONTRACT NO.: 02-3C0711

DISREGARD PRINTS BEARING EARLIER REVISION DATES

REVISION DATES 9-13-10 06-22-11 12-22-10

SHEET 4 OF 8

FILE => 07-0034-v-det02.dgn

USERNAME => s123119 DATE PLOTTED => 27-MAR-2014 TIME PLOTTED => 11:53

DIST	COUNTY	ROUTE	POST MILES TOTAL PROJECT	SHEET No.	TOTAL SHEETS
02	Las	395	61.5/R76.6	158	161

REGISTERED CIVIL ENGINEER 08-29-13 DATE

03-24-14
PLANS APPROVAL DATE

REGISTERED PROFESSIONAL ENGINEER Jiffay Lee No. 63599 Exp. 09-30-14 CIVIL STATE OF CALIFORNIA

The State of California or its officers or agents shall not be responsible for the accuracy or completeness of electronic copies of this plan sheet.

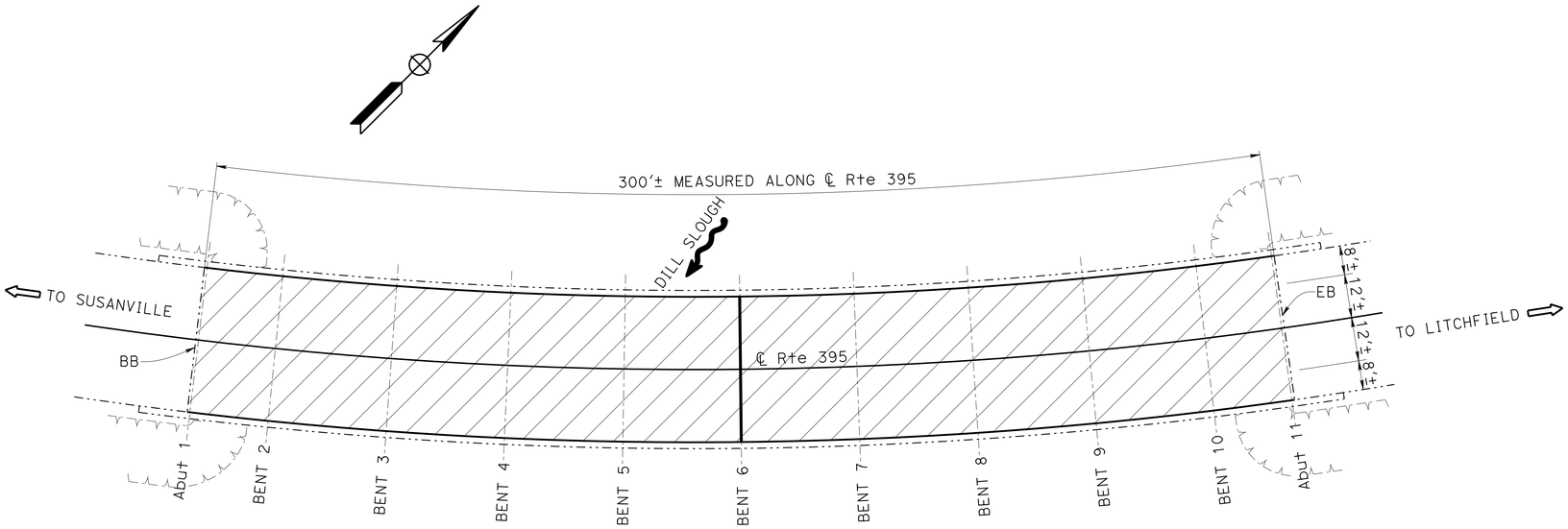

PLAN
1" = 20'

LEGEND:

-·-·- Indicates existing structure

Indicates location of joint seal removal and placement of new joint seals. For details, see "Details" sheet.

Indicates limits of prepare existing concrete deck surface, furnish and place new 1" minimum depth polyester concrete overlay. Prior to placing new polyester concrete overlay, remove unsound concrete and patch with rapid setting concrete. For details see "Deck Overlay Detail" and "Deck Overlay Notes" on "Details" sheet. See "Road Plans" for traffic staging.

QUANTITIES

RAPID SETTING CONCRETE (PATCH)	60	CF
REMOVE UNSOUND CONCRETE	60	CF
PREPARE CONCRETE BRIDGE DECK SURFACE	12,000	SQFT
FURNISH POLYESTER CONCRETE OVERLAY	1,200	CF
PLACE POLYESTER CONCRETE OVERLAY	12,000	SQFT
CLEAN EXPANSION JOINT	44	LF
JOINT SEAL (MR 1 ½")	44	LF

NOTE:
THE CONTRACTOR SHALL VERIFY ALL CONTROLLING FIELD DIMENSIONS BEFORE ORDERING OR FABRICATING ANY MATERIAL.

DESIGN ENGINEER

	BY	CHECKED			
DESIGN	J. Lee	G. Slocum	LOAD & RESISTANCE FACTOR DESIGN	LIVE LOADING: HL93 W/"LOW-BOY": PERMIT DESIGN VEHICLE	
DETAILS	C. Figuerres/J. Yang	G. Slocum	LAYOUT	J. Lee	G. Slocum
QUANTITIES	G. Slocum	G. Slocum	SPECIFICATIONS	James Corrado	PLANS AND SPECS COMPARED J.C

ORIGINAL SCALE IN INCHES FOR REDUCED PLANS 0 1 2 3

STATE OF CALIFORNIA
DEPARTMENT OF TRANSPORTATION

DIVISION OF ENGINEERING SERVICES
STRUCTURE DESIGN
DESIGN BRANCH 2

BRIDGE NO. 07-0080
POST MILE R71.17

JOHNSTONVILLE PAVEMENT REHAB.
DILL SLOUGH
GENERAL PLAN

UNIT: 3577
PROJECT NUMBER & PHASE: 02120000371
CONTRACT NO.: 02-3C0711

DISREGARD PRINTS BEARING EARLIER REVISION DATES

REVISION DATES: 8-19-10 9-08-10 9-23-10 12-22-10

SHEET 5 OF 8

USERNAME => s123119 DATE PLOTTED => 27-MAR-2014 TIME PLOTTED => 11:53

DIST	COUNTY	ROUTE	POST MILES TOTAL PROJECT	SHEET No.	TOTAL SHEETS
02	Las	395	61.5/R76.6	159	161

REGISTERED CIVIL ENGINEER 08-29-13 DATE

03-24-14
PLANS APPROVAL DATE

REGISTERED PROFESSIONAL ENGINEER Jiffay Lee No. 63599 Exp. 09-30-14 CIVIL STATE OF CALIFORNIA

The State of California or its officers or agents shall not be responsible for the accuracy or completeness of electronic copies of this plan sheet.

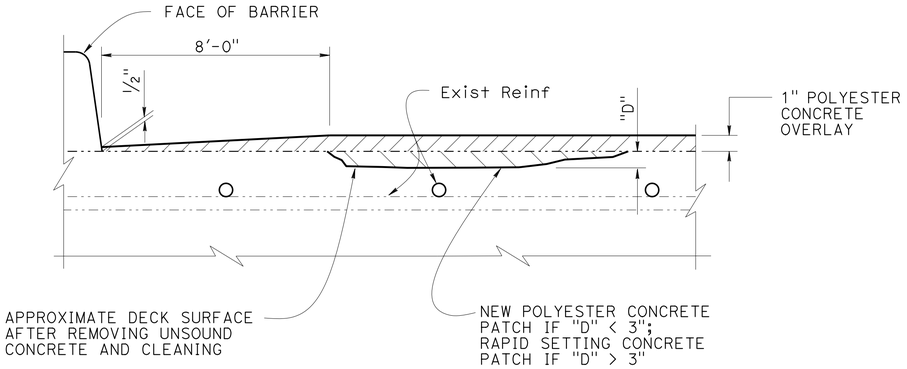

DECK OVERLAY DETAIL

No Scale

SEE NOTE 6

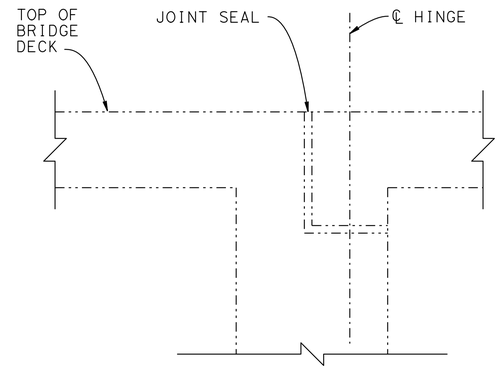

LEGEND:

- Indicates existing structure.
- Indicates limits of prepare existing concrete deck surface, furnish and place new 1" minimum depth polyester concrete overlay.
- Indicates limits of removal of unsound concrete and patch with polyester concrete or rapid setting concrete.

AT HINGE

JOINT SEAL LOCATION

No Scale

DECK OVERLAY NOTES:

1. Existing reinforcement shall be protected in place during unsound concrete removal and patching operation.
2. It is the responsibility of the Contractor to repair any reinforcement that is accidentally cut by saw cutting operations.
3. When existing transverse reinforcement is exposed in the deck surface, saw cutting may be waived with the approval of the Engineer.
4. The saw cut depth shall not exceed 1 inch or the concrete cover over the top steel reinforcing bars, whichever is less.
5. Remove unsound Portland cement concrete and unsound concrete patches to expose sound, hard concrete substrate. Replace original deck surface with rapid setting concrete patch.
6. Locations to be determined by the Engineer.

DECK REPAIR TABLE

REMOVE UNSOUND CONCRETE AND RAPID SETTING CONCRETE (PATCH)

APPROXIMATE DAMAGED %	APPROXIMATE DEPTH (IN)
2%	3.0

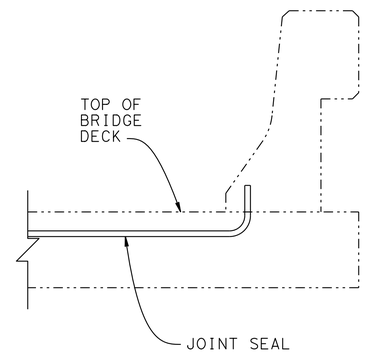

JOINT SEAL AT LOW SIDE OF DECK

No Scale

Joint Seal Note:

The following note applies to JOINT SEAL TYPE B:

1. Seal must satisfy both minimum Movement Rating (MR) and minimum W1 requirements.
2. Minimum W1 is the calculated maximum width of the joint based on field measurements. After the joints have been cleaned, minimum W1 is to be calculated by the Engineer.
3. W1 shall be the smaller of the values determined as follows:
   A. 0.85 times the manufacturer's designed minimum uncompressed width of the seal.
   B. The width of the seal on the third successive test cycle of the pressure deflection test, when compressed to an average pressure of 3 psi.
4. Bend seal 6" up into curb or rail on the low side of the deck where deck joint matches curb or rail joint.
5. For details not shown see B6-21

JOINT SEAL TABLE

LOCATION	WATER STOP	APPROXIMATE LENGTH (FT)	"MR" (IN)	DEPTH TO CLEAN EXPANSION JOINT INCH	Min W1 (IN)
BENT 6	NO	44.00	1 1/2"	18.00	4.12

NOTE:
THE CONTRACTOR SHALL VERIFY ALL CONTROLLING FIELD DIMENSIONS BEFORE ORDERING OR FABRICATING ANY MATERIAL.

DESIGN	BY J. Lee	CHECKED G. Slocum	
DETAILS	BY J. Yang	CHECKED G. Slocum	
QUANTITIES	BY G. Slocum	CHECKED G. Slocum	

STATE OF CALIFORNIA
DEPARTMENT OF TRANSPORTATION

DIVISION OF ENGINEERING SERVICES
STRUCTURE DESIGN
DESIGN BRANCH 2

BRIDGE NO. 07-0080
POST MILE R71.17

JOHNSTONVILLE PAVEMENT REHAB.
DILL SLOUGH
DETAILS

STRUCTURES DESIGN DETAIL SHEET (ENGLISH) (REV. 09-01-10)

ORIGINAL SCALE IN INCHES FOR REDUCED PLANS 0 1 2 3

UNIT: 3577
PROJECT NUMBER & PHASE: 02120000371
CONTRACT NO.: 02-3C0711

DISREGARD PRINTS BEARING EARLIER REVISION DATES

REVISION DATES 9-13-10 06-22-11 12-22-10

SHEET 6 OF 8

FILE => 07-0080-v-det02.dgn

USERNAME => s123119 DATE PLOTTED => 27-MAR-2014 TIME PLOTTED => 11:53

DIST	COUNTY	ROUTE	POST MILES TOTAL PROJECT	SHEET No.	TOTAL SHEETS
02	Las	395	61.5/R76.6	160	161

REGISTERED CIVIL ENGINEER 08-29-13 DATE

03-24-14
PLANS APPROVAL DATE

REGISTERED PROFESSIONAL ENGINEER Jiffay Lee No. 63599 Exp. 09-30-14 CIVIL STATE OF CALIFORNIA

The State of California or its officers or agents shall not be responsible for the accuracy or completeness of electronic copies of this plan sheet.

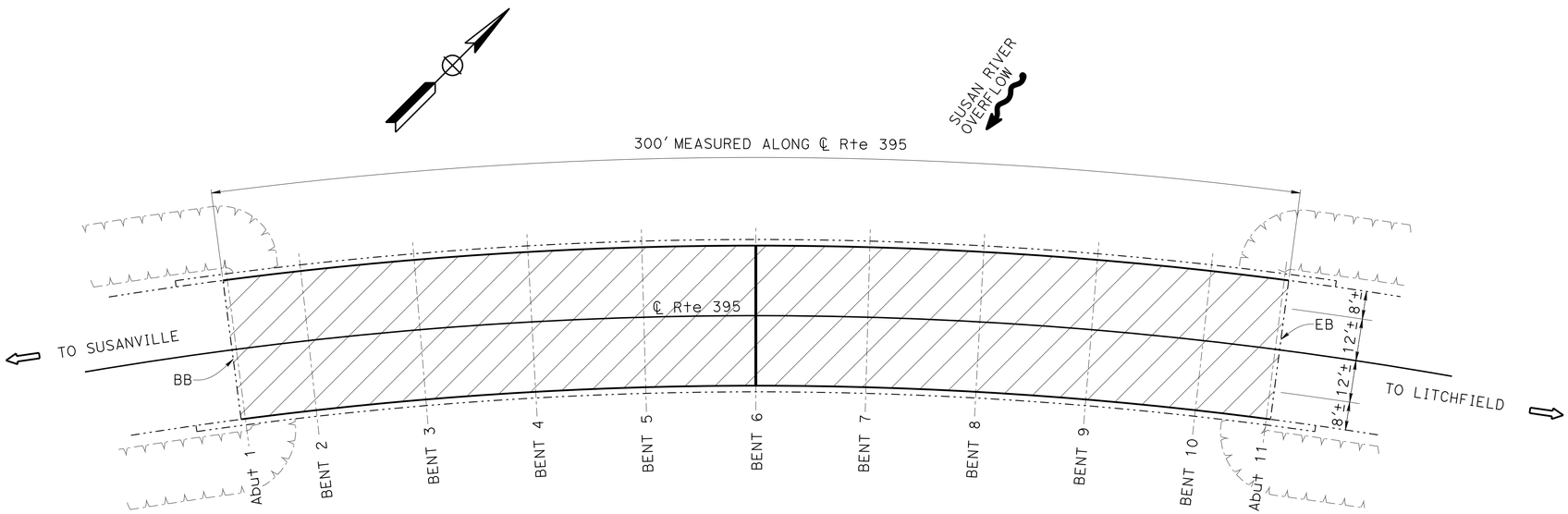

PLAN
1" = 20'

LEGEND:

-·-·- Indicates existing structure

Indicates location of joint seal removal and placement of new joint seals. For details, see "Details" sheet.

Indicates limits of prepare existing concrete deck surface, furnish and place new 1" minimum depth polyester concrete overlay. Prior to placing new polyester concrete overlay, remove unsound concrete and patch with rapid setting concrete. For details see "Deck Overlay Detail" and "Deck Overlay Notes" on "Details" sheet. See "Road Plans" for traffic staging.

QUANTITIES

RAPID SETTING CONCRETE (PATCH)	45	CF
REMOVE UNSOUND CONCRETE	45	CF
PREPARE CONCRETE BRIDGE DECK SURFACE	12,000	SQFT
FURNISH POLYESTER CONCRETE OVERLAY	1,200	CF
PLACE POLYESTER CONCRETE OVERLAY	12,000	SQFT
CLEAN EXPANSION JOINT	44	LF
JOINT SEAL (MR 1 ½")	44	LF

NOTE:
THE CONTRACTOR SHALL VERIFY ALL CONTROLLING FIELD DIMENSIONS BEFORE ORDERING OR FABRICATING ANY MATERIAL.

DESIGN ENGINEER

	BY	CHECKED			
DESIGN	J. Lee	G. Slocum	LOAD & RESISTANCE FACTOR DESIGN	LIVE LOADING: HL93 W/"LOW-BOY"; PERMIT DESIGN VEHICLE	
DETAILS	C. Figuerres/J. Yang	G. Slocum	LAYOUT	J. Lee	G. Slocum
QUANTITIES	G. Slocum	G. Slocum	SPECIFICATIONS	James Corrado	PLANS AND SPECS COMPARED J.C

ORIGINAL SCALE IN INCHES FOR REDUCED PLANS 0 1 2 3

STATE OF CALIFORNIA
DEPARTMENT OF TRANSPORTATION

DIVISION OF ENGINEERING SERVICES
STRUCTURE DESIGN
DESIGN BRANCH 2

BRIDGE NO. 07-0081
POST MILE R71.92

JOHNSTONVILLE PAVEMENT REHAB.
SUSAN RIVER OVERFLOW
GENERAL PLAN

UNIT: 3577
PROJECT NUMBER & PHASE: 02120000371
CONTRACT NO.: 02-3C0711

DISREGARD PRINTS BEARING EARLIER REVISION DATES

REVISION DATES: 8-18-10 9-08-10 9-23-10 12-22-10

SHEET 7 OF 8

USERNAME => s123119 DATE PLOTTED => 27-MAR-2014 TIME PLOTTED => 11:53

DIST	COUNTY	ROUTE	POST MILES TOTAL PROJECT	SHEET No.	TOTAL SHEETS
02	Las	395	61.5/R76.6	161	161

REGISTERED CIVIL ENGINEER 08-29-13 DATE

03-24-14
PLANS APPROVAL DATE

REGISTERED PROFESSIONAL ENGINEER Jiffay Lee No. 63599 Exp. 09-30-14 CIVIL STATE OF CALIFORNIA

The State of California or its officers or agents shall not be responsible for the accuracy or completeness of electronic copies of this plan sheet.

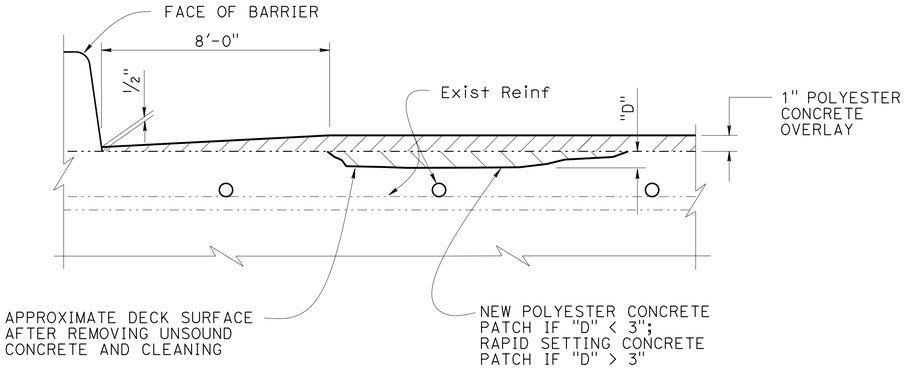

DECK OVERLAY DETAIL

No Scale

SEE NOTE 6

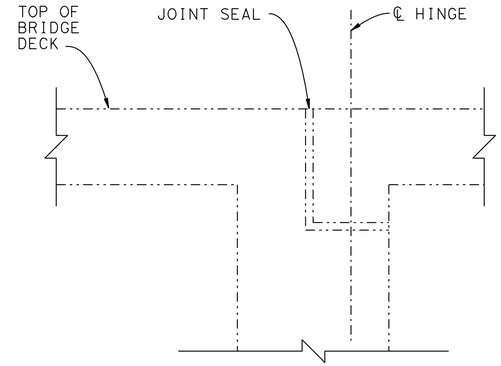

AT HINGE

JOINT SEAL LOCATION

No Scale

LEGEND:

- Indicates existing structure.
- Indicates limits of prepare existing concrete deck surface, furnish and place new 1" minimum depth polyester concrete overlay.
- Indicates limits of removal of unsound concrete and patch with polyester concrete or rapid setting concrete.

DECK OVERLAY NOTES:

1. Existing reinforcement shall be protected in place during unsound concrete removal and patching operation.
2. It is the responsibility of the Contractor to repair any reinforcement that is accidentally cut by saw cutting operations.
3. When existing transverse reinforcement is exposed in the deck surface, saw cutting may be waived with the approval of the Engineer.
4. The saw cut depth shall not exceed 1 inch or the concrete cover over the top steel reinforcing bars, whichever is less.
5. Remove unsound Portland cement concrete and unsound concrete patches to expose sound, hard concrete substrate. Replace original deck surface with rapid setting concrete patch.
6. Locations to be determined by the Engineer.

DECK REPAIR TABLE

REMOVE UNSOUND CONCRETE AND RAPID SETTING CONCRETE (PATCH)

APPROXIMATE DAMAGED %	APPROXIMATE DEPTH (IN)
1.5%	3.0

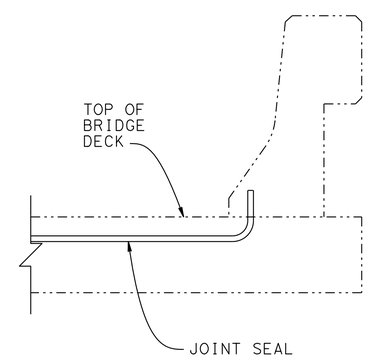

JOINT SEAL AT LOW SIDE OF DECK

No Scale

Joint Seal Note:

The following note applies to JOINT SEAL TYPE B:

1. Seal must satisfy both minimum Movement Rating (MR) and minimum W1 requirements.
2. Minimum W1 is the calculated maximum width of the joint based on field measurements. After the joints have been cleaned, minimum W1 is to be calculated by the Engineer.
3. W1 shall be the smaller of the values determined as follows:
   A. 0.85 times the manufacturer's designed minimum uncompressed width of the seal.
   B. The width of the seal on the third successive test cycle of the pressure deflection test, when compressed to an average pressure of 3 psi.
4. Bend seal 6" up into curb or rail on the low side of the deck where deck joint matches curb or rail joint.
5. For details not shown see B6-21

JOINT SEAL TABLE

LOCATION	WATER STOP	APPROXIMATE LENGTH (FT)	"MR" (IN)	DEPTH TO CLEAN EXPANSION JOINT INCH	Min W1 (IN)
BENT 6	NO	44.00	1 1/2"	18.00	4.12

NOTE:
THE CONTRACTOR SHALL VERIFY ALL CONTROLLING FIELD DIMENSIONS BEFORE ORDERING OR FABRICATING ANY MATERIAL.

	BY	CHECKED
DESIGN	J. Lee	G. Slocum
DETAILS	J. Yang	G. Slocum
QUANTITIES	G. Slocum	G. Slocum

STATE OF CALIFORNIA
DEPARTMENT OF TRANSPORTATION

DIVISION OF ENGINEERING SERVICES
STRUCTURE DESIGN
DESIGN BRANCH 2

BRIDGE NO. 07-0081
POST MILE R71.92

JOHNSTONVILLE PAVEMENT REHAB.
SUSAN RIVER OVERFLOW
DETAILS

STRUCTURES DESIGN DETAIL SHEET (ENGLISH) (REV. 09-01-10)

ORIGINAL SCALE IN INCHES FOR REDUCED PLANS 0 1 2 3

UNIT: 3577
PROJECT NUMBER & PHASE: 02120000371
CONTRACT NO.: 02-3C0711

DISREGARD PRINTS BEARING EARLIER REVISION DATES

REVISION DATES 12-29-10 06-22-11

SHEET 8 OF 8

FILE => 07-0081-v-det02.dgn

USERNAME => s123119 DATE PLOTTED => 27-MAR-2014 TIME PLOTTED => 11:53