Dist	COUNTY	ROUTE	KILOMETER POST TOTAL PROJECT	SHEET No.	TOTAL SHEETS
02	Sha	5	R69.4	1	120

ACSHNH-005-8(338)E

STATE OF CALIFORNIA
DEPARTMENT OF TRANSPORTATION

PROJECT PLANS FOR CONSTRUCTION ON
STATE HIGHWAY

IN SHASTA COUNTY
ABOUT 0.8 KM NORTH OF THE LAKEHEAD OVERCROSSING AT THE LAKEHEAD SAFETY ROADSIDE REST AREA

TO BE SUPPLEMENTED BY STANDARD PLANS DATED JULY 2004

INDEX OF SHEETS

SHEET No.	DESCRIPTION
1	TITLE AND LOCATION MAP
2-3	LAYOUTS
4-6	PROFILES
7-10	CONSTRUCTION DETAILS
11	CONTOUR GRADING
12	CONSTRUCTION AREA SIGNS
13	TRAFFIC HANDLING PLANS
14	SUMMARY OF QUANTITIES
15-20	HIGHWAY PLANTING
21-31	REVISED AND NEW STANDARD PLANS

BUILDING PLANS

32	GENERAL PLAN
33-57	ARCHITECTURAL PLANS
58-76	STRUCTURAL PLANS
77-88	MECHANICAL PLANS
89-107	ELECTRICAL PLANS
108-120	SANITARY PLANS

THE STANDARD PLANS LIST APPLICABLE TO THIS CONTRACT IS INCLUDED IN THE NOTICE TO BIDDERS AND SPECIAL PROVISIONS BOOK.

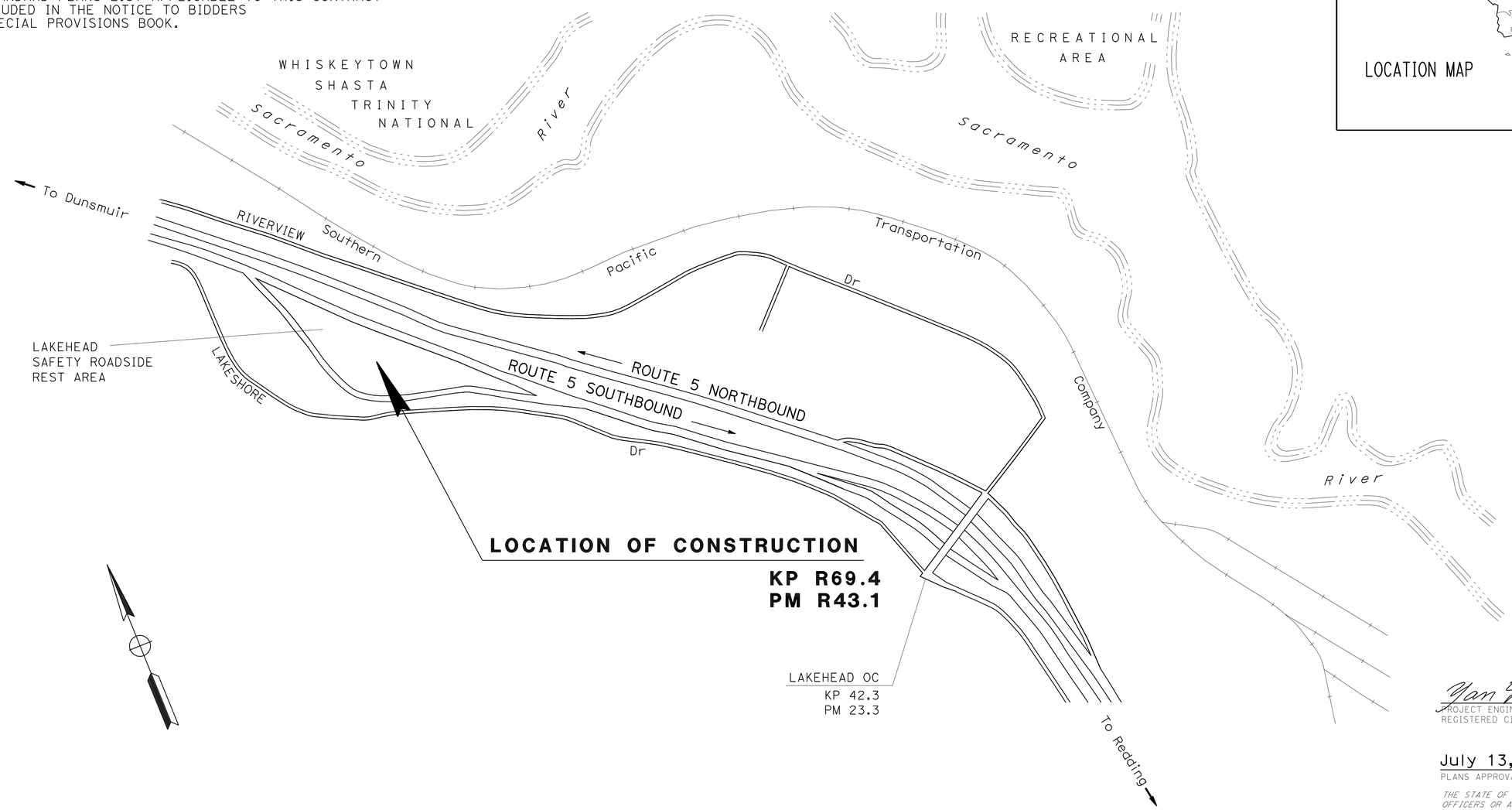

LOCATION MAP

Caltrans

Caltrans Metric

NO SCALE

THE CONTRACTOR SHALL POSSESS THE CLASS (OR CLASSES) OF LICENSE AS SPECIFIED IN THE ''NOTICE TO BIDDERS.''

PROJECT MANAGER G. GUTIERREZ

DESIGN ENGINEER A. LIU

Yan Liu 4-21-09
PROJECT ENGINEER DATE
REGISTERED CIVIL ENGINEER

July 13, 2009
PLANS APPROVAL DATE

REGISTERED PROFESSIONAL ENGINEER
AMY YAN LIU
No. 66615
Exp. 6-30-10
CIVIL
STATE OF CALIFORNIA

THE STATE OF CALIFORNIA OR ITS OFFICERS OR AGENTS SHALL NOT BE RESPONSIBLE FOR THE ACCURACY OR COMPLETENESS OF ELECTRONIC COPIES OF THIS PLAN SHEET.

LAST REVISION 00-00-00
DATE PLOTTED => 28-JUL-2009
TIME PLOTTED => 14:32

CONTRACT No. 02-395804

Dist	COUNTY	ROUTE	KILOMETER POST TOTAL PROJECT	SHEET No.	TOTAL SHEETS
02	Sha	5	R69.4	2	120

Yan Liu 4-21-09
REGISTERED CIVIL ENGINEER DATE

7-13-09
PLANS APPROVAL DATE

REGISTERED PROFESSIONAL ENGINEER AMY YAN LIU No. 66615 Exp. 6-30-10 CIVIL STATE OF CALIFORNIA

THE STATE OF CALIFORNIA OR ITS OFFICERS OR AGENTS SHALL NOT BE RESPONSIBLE FOR THE ACCURACY OR COMPLETENESS OF ELECTRONIC COPIES OF THIS PLAN SHEET.

Caltrans Metric

NOTES:

1. FOR COMPLETE RIGHT OF WAY AND ACCURATE ACCESS DATA, SEE RIGHT OF WAY RECORD MAPS AT DISTRICT OFFICE.
2. REPLACE SIDEWALKS WITH Exist LAYOUT AND WIDTHS EXCEPT AS SHOWN ON THE PLANS.
3. MAXIMUM SIDEWALK GRADE IS 8.33%.
4. MAXIMUM SIDEWALK CROSS SLOPE IS 2%.

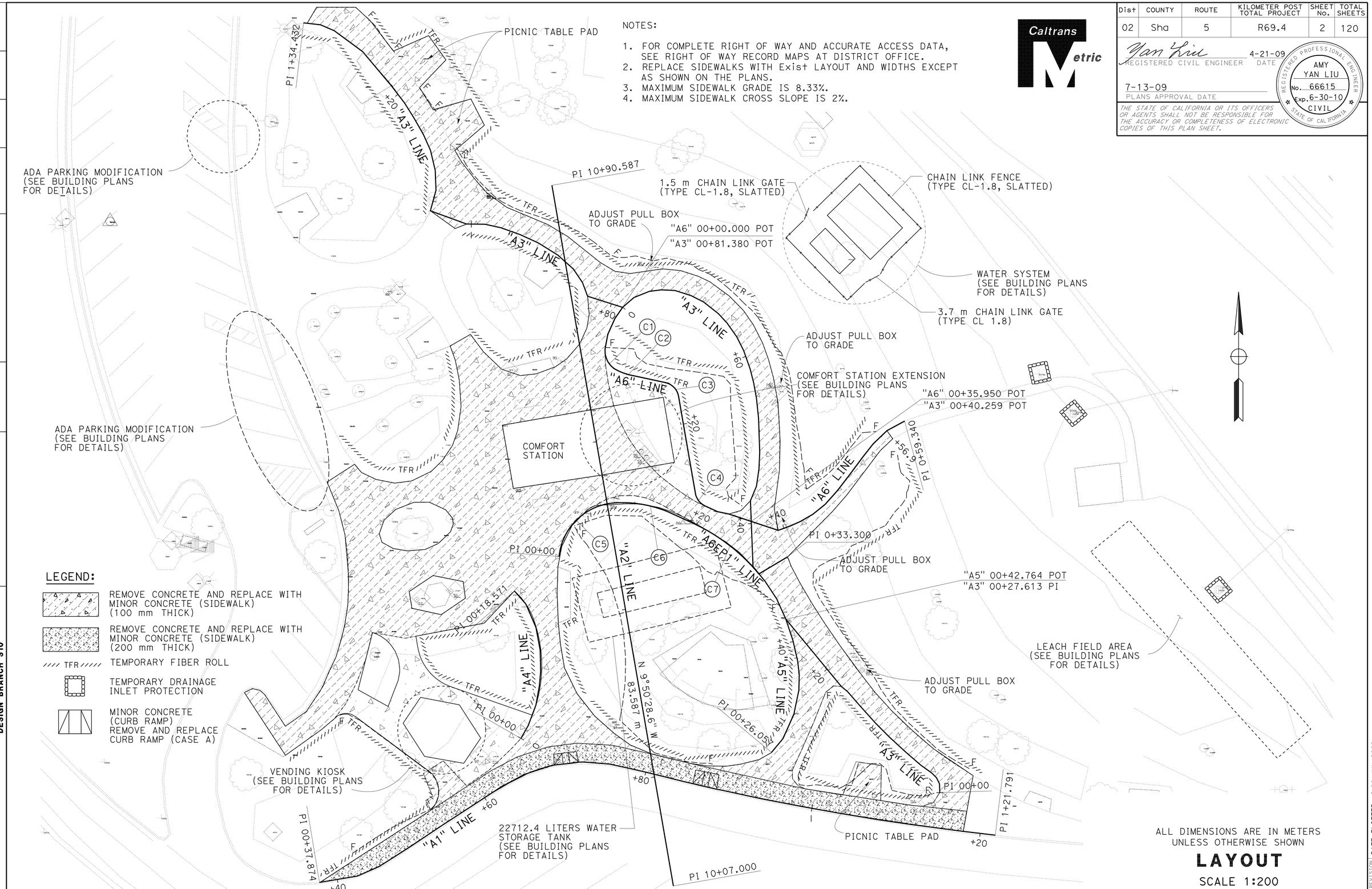

ALL DIMENSIONS ARE IN METERS UNLESS OTHERWISE SHOWN

LAYOUT

SCALE 1:200

LAKEHEAD SAFETY ROADSIDE REST AREA

L-1

STATE OF CALIFORNIA - DEPARTMENT OF TRANSPORTATION
NORTH REGION
OFFICE OF DESIGN, SOUTH
DESIGN BRANCH S10

FUNCTIONAL SUPERVISOR: C. OLSON

CALCULATED-DESIGNED BY | CHECKED BY | REVISED BY | DATE REVISED

LAST REVISION 00-00-00 | DATE PLOTTED => 28-JUL-2009 | TIME PLOTTED => 14:33

Dist	COUNTY	ROUTE	KILOMETER POST TOTAL PROJECT	SHEET No.	TOTAL SHEETS
02	Sha	5	R69.4	3	120

Yan Liu 4-21-09
REGISTERED CIVIL ENGINEER DATE

7-13-09
PLANS APPROVAL DATE

REGISTERED PROFESSIONAL ENGINEER AMY YAN LIU No. 66615 Exp. 6-30-10 CIVIL STATE OF CALIFORNIA

THE STATE OF CALIFORNIA OR ITS OFFICERS OR AGENTS SHALL NOT BE RESPONSIBLE FOR THE ACCURACY OR COMPLETENESS OF ELECTRONIC COPIES OF THIS PLAN SHEET.

Caltrans Metric

"A1" LINE DATA

STATION	DISTANCE (m)	BEARING
0+37.874	4.523	N 80°31′53.9" E
0+42.397	2.793	N 66°22′59.1" E
0+45.190	4.367	N 57°20′58.5" E
0+49.557	4.268	N 56°11′10.7" E
0+53.825	5.202	N 56°58′24.6" E
0+59.026	3.288	N 56°52′36.5" E
0+62.315	3.108	N 61°50′59.9" E
0+65.422	3.039	N 71°24′34.1" E
0+68.462	0.674	N 76°42′28.4" E
0+69.136	0.726	N 85°53′57.1" E
0+69.862	1.497	N 83°38′05.6" E
0+71.359	0.651	N 80°37′28.3" E
0+72.010	0.575	N 88°53′38.0" E
0+72.585	3.045	S 85°36′34.3" E
0+75.630	2.566	S 77°40′20.8" E
0+78.196	1.933	S 76°59′21.0" E
0+80.128	4.691	S 76°02′09.8" E
0+84.819	0.808	S 77°12′01.6" E
0+85.627	0.740	S 75°59′44.4" E
0+86.367	1.151	S 77°09′03.4" E
0+87.518	1.059	S 77°17′21.4" E
0+88.577	0.637	S 79°02′03.3" E
0+89.213	4.730	S 77°44′02.7" E
0+93.944	4.804	S 79°12′45.5" E
0+98.747	4.538	S 79°50′47.3" E
1+03.285	4.641	S 80°31′32.5" E
1+07.927	3.871	S 81°42′45.8" E
1+11.798	6.133	S 82°33′39.4" E
1+17.931	3.860	S 83°04′57.6" E
1+21.791		

"A4" LINE DATA

STATION	DISTANCE (m)	BEARING
0+00.000	1.724	N 29°45′40.9" E
0+01.724	2.590	N 20°45′28.8" E
0+04.315	2.310	N 10°07′22.5" E
0+06.625	1.724	N 4°49′27.7" E
0+08.349	2.486	N 1°22′59.3" W
0+10.834	2.690	N 10°34′58.9" W
0+13.524	2.990	N 23°12′13.0" W
0+16.514	2.057	N 41°21′13.1" W
0+18.571		

"A5" LINE DATA

STATION	DISTANCE (m)	BEARING
0+26.057	2.105	N 39°40′48.4" E
0+28.162	3.273	N 24°08′44.0" E
0+31.435	0.033	N 54°51′56.9" W
0+31.468	2.734	N 11°49′10.5" E
0+34.202	1.804	N 1°27′41.3" E
0+36.006	1.565	N 6°23′04.8" W
0+37.571	2.527	N 12°49′35.0" W
0+40.098	2.666	N 18°24′28.0" W
0+42.764		

"A3" LINE DATA

STATION	DISTANCE (m)	BEARING
0+00.000	1.012	N 1°45′16.4" W
0+01.012	0.834	N 26°02′33.1" W
0+01.846	0.796	N 45°15′16.7" W
0+02.642	1.586	N 54°26′43.9" W
0+04.227	2.321	N 49°03′11.8" W
0+06.548	2.458	N 47°33′19.5" W
0+09.006	2.414	N 44°51′56.7" W
0+11.420	2.711	N 41°58′45.7" W
0+14.131	2.299	N 41°01′52.2" W
0+16.430	0.920	N 51°23′54.8" W
0+17.350	10.264	N 39°31′28.8" W
0+27.613	2.620	N 24°21′51.6" W
0+30.234	2.482	N 33°18′44.2" W
0+32.716	2.250	N 38°59′37.8" W
0+34.966	7.725	N 2°13′05.8" W
0+42.691	1.861	N 22°15′52.4" E
0+44.551	2.031	N 8°21′12.9" E
0+46.582	1.980	N 2°43′14.9" E
0+48.562	4.013	N 2°00′47.9" W
0+52.576	2.329	N 5°56′26.7" W
0+54.904	1.860	N 10°30′01.6" W
0+56.764	1.684	N 14°16′02.3" W
0+58.448	2.300	N 19°27′03.9" W
0+60.749	1.803	N 26°45′50.4" W
0+62.552	1.992	N 35°02′46.4" W
0+64.544	1.485	N 42°45′42.3" W
0+66.029	2.216	N 51°54′34.5" W
0+68.245	1.622	N 62°58′36.6" W
0+69.867	2.006	N 72°06′57.8" W
0+71.873	1.612	N 87°17′50.5" W
0+73.484	1.415	S 82°36′31.5" W
0+74.899	1.954	S 68°11′15.7" W
0+76.853	1.767	S 49°13′22.2" W
0+78.620	4.314	N 72°24′18.4" W
0+82.934	1.721	N 20°36′52.2" W
0+84.655	1.908	N 33°55′53.8" W
0+86.563	2.459	N 48°02′00.9" W
0+89.021	2.701	N 58°09′47.6" W
0+91.723	2.391	N 65°23′07.8" W
0+94.114	2.385	N 70°17′45.9" W
0+96.499	1.898	N 77°38′52.8" W
0+98.397	2.164	N 89°28′13.7" W
1+00.561	4.537	N 69°58′54.6" W
1+05.098	2.510	N 15°23′06.2" E
1+07.608	2.335	N 2°18′17.4" W
1+09.943	2.434	N 13°13′53.8" W
1+12.376	2.012	N 24°03′23.3" W
1+14.388	2.282	N 29°44′33.7" W
1+16.669	2.076	N 32°04′09.0" W
1+18.745	2.540	N 37°37′33.4" W
1+21.286	5.218	N 40°06′41.3" W
1+26.504	4.152	N 53°30′00.6" W
1+30.656	1.769	N 66°47′43.6" W
1+32.426	2.006	N 83°23′29.2" W
1+34.432		

"A6" LINE DATA

* CURVE		STATION	DISTANCE (m)	BEARING
		0+00.000	1.588	S 34°49′14.3" W
		0+01.588	2.046	S 24°11′03.6" W
		0+03.634	1.376	S 10°36′01.7" W
C1	PC	0+05.010		
	PI	0+06.809		
	PT	0+08.146	0.000	N 60°41′46.8" W
C2	PC	0+08.146		
	PI	0+09.157		
	PT	0+10.153	4.163	S 77°50′17.1" E
C3	PC	0+14.316		
	PI	0+15.665		
	PT	0+16.690	7.370	S 9°50′28.4" E
		0+24.059	4.209	S 9°50′29.2" E
C4	PC	0+28.268		
	PI	0+29.319		
	PT	0+30.204	1.619	S 65°18′02.6" E
		0+31.822	1.356	S 78°30′57.8" E
		0+33.179	6.111	S 71°38′53.1" E
		0+39.289	1.431	N 70°21′44.4" E
		0+40.721	1.38	N 65°44′17.4" E
		0+42.101	1.698	N 60°05′00.8" E
		0+43.799	1.837	N 51°04′37.6" E
		0+45.636	2.133	N 41°48′27.1" E
		0+47.769	2.364	N 37°43′57.3" E
		0+50.133	2.589	N 36°31′13.1" E
		0+52.723	1.995	N 38°25′35.7" E
		0+54.718	2.249	N 45°54′02.9" E
		0+56.967	2.373	N 61°30′46.3" E
		0+59.340		

* SEE "A6" CURVE DATA TABLE

"A6" CURVE DATA

No.	R (m)	Δ	T (m)	L (m)
C1	2.559	-70°12′54.9"	1.799	3.136
C2	6.563	-17°31′28.0"	1.012	2.007
C3	2.000	67°59′50.4"	1.349	2.374
C4	2.000	-55°27′33.9"	1.051	1.936

"A6EP1" LINE DATA

** CURVE		STATION	DISTANCE (m)	BEARING
C5	PC	0+00.000		
	PI	0+05.941		
	PT	0+09.853	0.000	S 86°16′56.4" W
C6	PC	0+09.853		
	PI	0+13.398		
	PT	0+16.797	2.701	S 65°18′02.6" E
C7	PC	0+19.498		
	PI	0+24.521		
	PT	0+29.375	0.020	N 50°25′19.0" E
		0+29.395	3.906	N 59°11′36.5" E
		0+33.301		

** SEE "A6EP1" CURVE DATA TABLE

"A6EP1" CURVE DATA

No.	R (m)	Δ	T (m)	L (m)
C5	7.000	80°38′51.3"	5.941	9.853
C6	14.000	28°25′08.6"	3.545	6.944
C7	5.023	25°43′19.9"	5.023	9.877

ALIGNMENT DATA

LAKEHEAD SAFETY ROADSIDE REST AREA

LAYOUT

NO SCALE

L-2

REVISED BY | DATE REVISED

CALCULATED-DESIGNED BY | CHECKED BY

FUNCTIONAL SUPERVISOR: C. OLSON

STATE OF CALIFORNIA - DEPARTMENT OF TRANSPORTATION
NORTH REGION
OFFICE OF DESIGN, SOUTH
DESIGN BRANCH S10
Caltrans

LAST REVISION 00-00-00 | DATE PLOTTED => 28-JUL-2009 | TIME PLOTTED => 14:33

Dist	COUNTY	ROUTE	KILOMETER POST TOTAL PROJECT	SHEET No.	TOTAL SHEETS
02	Sha	5	R69.4	4	120

Yan Liu 4-21-09
REGISTERED CIVIL ENGINEER DATE

7-13-09
PLANS APPROVAL DATE

REGISTERED PROFESSIONAL ENGINEER AMY YAN LIU No. 66615 Exp. 6-30-10 CIVIL STATE OF CALIFORNIA

THE STATE OF CALIFORNIA OR ITS OFFICERS OR AGENTS SHALL NOT BE RESPONSIBLE FOR THE ACCURACY OR COMPLETENESS OF ELECTRONIC COPIES OF THIS PLAN SHEET.

Caltrans Metric

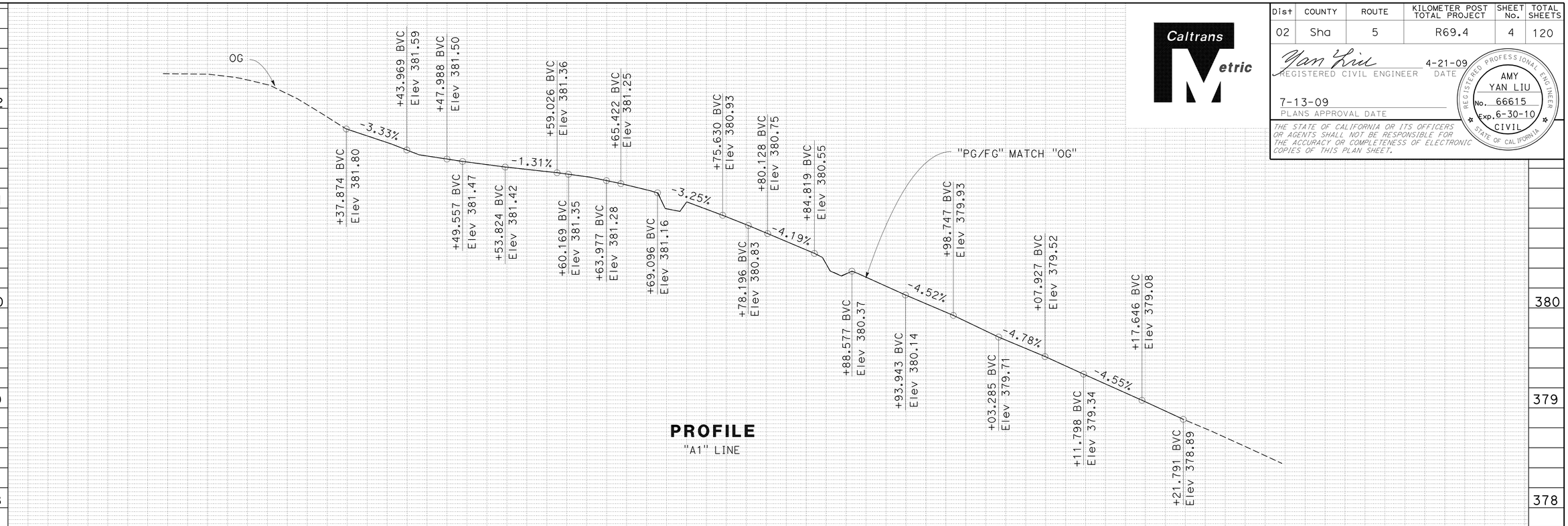

PROFILE
"A1" LINE

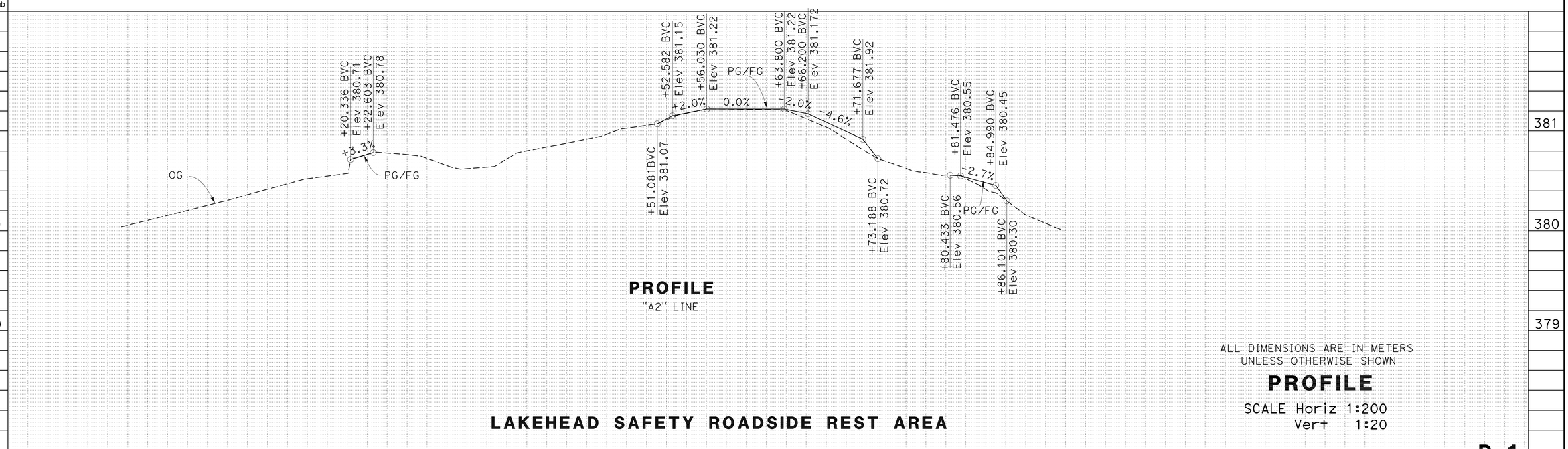

PROFILE
"A2" LINE

ALL DIMENSIONS ARE IN METERS
UNLESS OTHERWISE SHOWN

PROFILE

SCALE Horiz 1:200
Vert 1:20

LAKEHEAD SAFETY ROADSIDE REST AREA

P-1

REVISED BY | DATE REVISED

CALCULATED-DESIGNED BY | CHECKED BY

FUNCTIONAL SUPERVISOR
C. OLSON

STATE OF CALIFORNIA - DEPARTMENT OF TRANSPORTATION
NORTH REGION
OFFICE OF DESIGN, SOUTH
DESIGN BRANCH S10
Caltrans

LAST REVISION 00-00-00 DATE PLOTTED => 28-JUL-2009 TIME PLOTTED => 14:33

Dist	COUNTY	ROUTE	KILOMETER POST TOTAL PROJECT	SHEET No.	TOTAL SHEETS
02	Sha	5	R69.4	5	120

Caltrans Metric

Yan Liu 4-21-09
REGISTERED CIVIL ENGINEER DATE

7-13-09
PLANS APPROVAL DATE

REGISTERED PROFESSIONAL ENGINEER
AMY YAN LIU
No. 66615
Exp. 6-30-10
CIVIL
STATE OF CALIFORNIA

THE STATE OF CALIFORNIA OR ITS OFFICERS OR AGENTS SHALL NOT BE RESPONSIBLE FOR THE ACCURACY OR COMPLETENESS OF ELECTRONIC COPIES OF THIS PLAN SHEET.

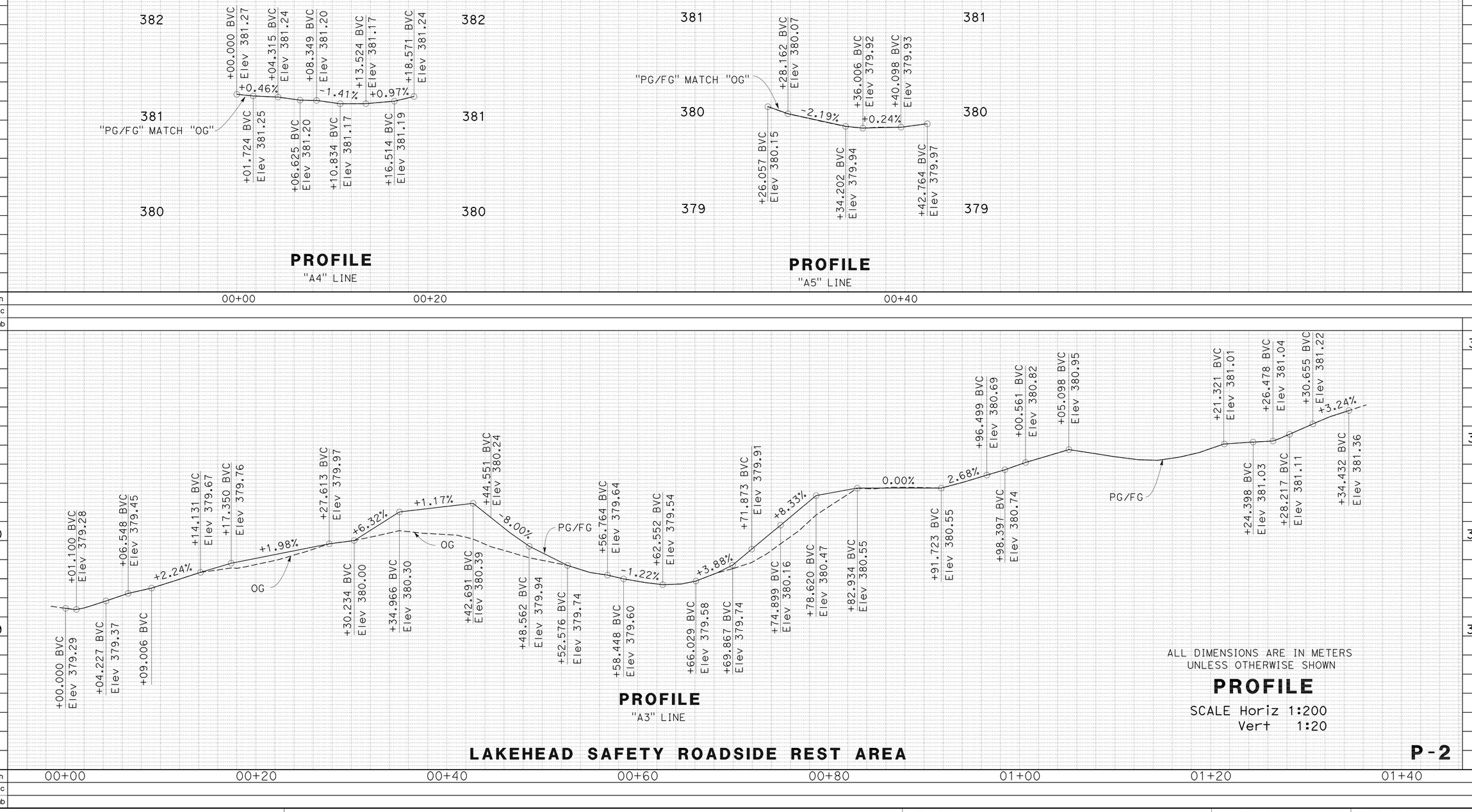

ALL DIMENSIONS ARE IN METERS
UNLESS OTHERWISE SHOWN

PROFILE

SCALE Horiz 1:200
Vert 1:20

LAKEHEAD SAFETY ROADSIDE REST AREA

P-2

REVISED BY | DATE REVISED

CALCULATED-DESIGNED BY | CHECKED BY

FUNCTIONAL SUPERVISOR
C. OLSON

STATE OF CALIFORNIA - DEPARTMENT OF TRANSPORTATION
NORTH REGION
OFFICE OF DESIGN, SOUTH
DESIGN BRANCH 510
Caltrans

LAST REVISION DATE PLOTTED => 28-JUL-2009
00-00-00 TIME PLOTTED => 14:33

Dist	COUNTY	ROUTE	KILOMETER POST TOTAL PROJECT	SHEET No.	TOTAL SHEETS
02	Sha	5	R69.4	6	120

Yan Liu 4-21-09
REGISTERED CIVIL ENGINEER DATE

7-13-09
PLANS APPROVAL DATE

REGISTERED PROFESSIONAL ENGINEER
AMY YAN LIU
No. 66615
Exp. 6-30-10
CIVIL
STATE OF CALIFORNIA

THE STATE OF CALIFORNIA OR ITS OFFICERS OR AGENTS SHALL NOT BE RESPONSIBLE FOR THE ACCURACY OR COMPLETENESS OF ELECTRONIC COPIES OF THIS PLAN SHEET.

Caltrans Metric

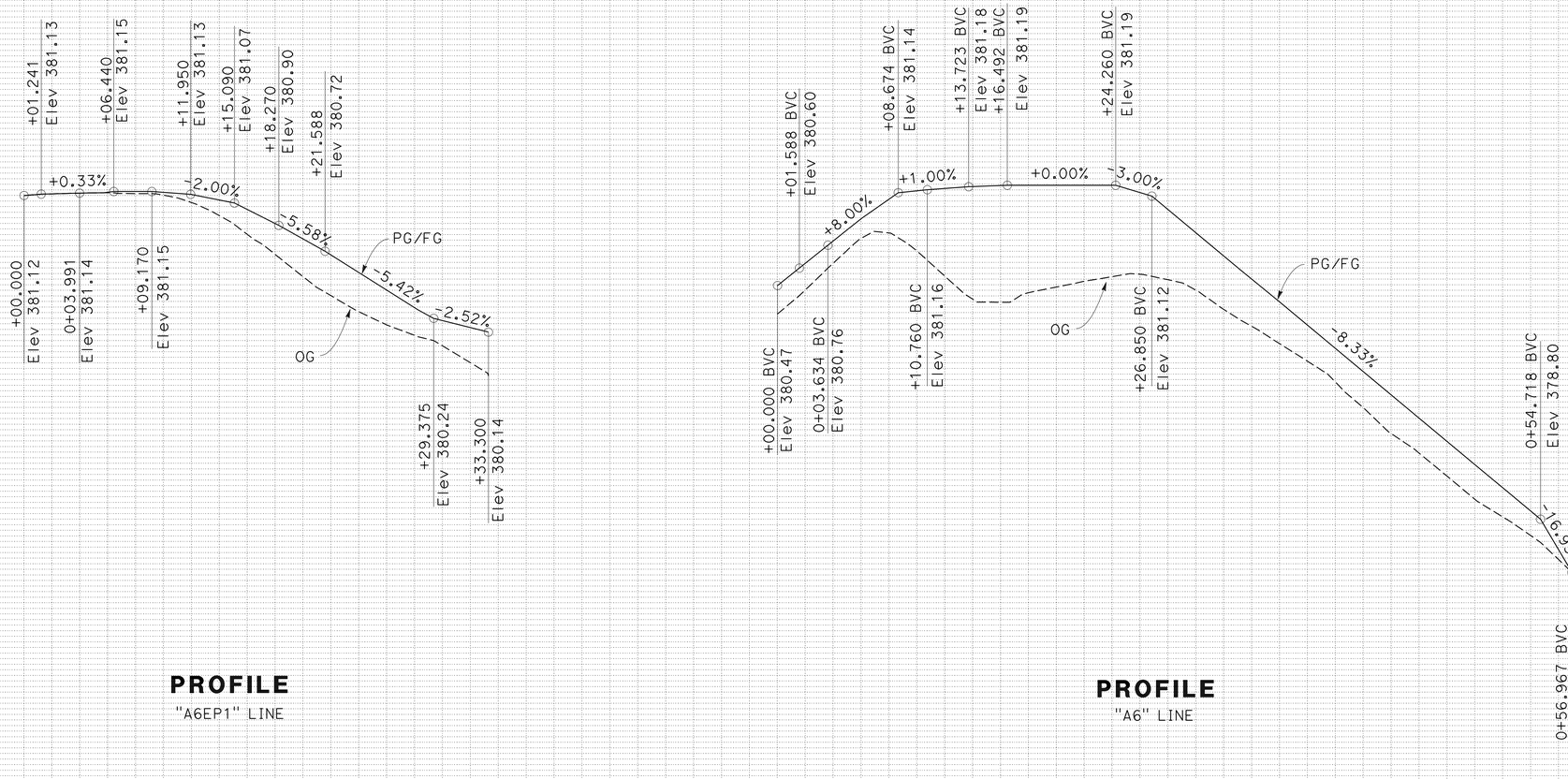

PROFILE
"A6EP1" LINE

PROFILE
"A6" LINE

ALL DIMENSIONS ARE IN METERS
UNLESS OTHERWISE SHOWN

PROFILE

SCALE Horiz 1:200
Vert 1:20

LAKEHEAD SAFETY ROADSIDE REST AREA

P-3

Station	00+00	00+20	00+00	00+20	00+40	00+60
m^3 Exc						
m^3 Emb						

STATE OF CALIFORNIA - DEPARTMENT OF TRANSPORTATION
NORTH REGION
OFFICE OF DESIGN,SOUTH
DESIGN BRANCH S10

FUNCTIONAL SUPERVISOR: C. OLSON

CALCULATED-DESIGNED BY | CHECKED BY | REVISED BY | DATE REVISED

LAST REVISION 00-00-00 | DATE PLOTTED => 28-JUL-2009 | TIME PLOTTED => 14:33

Dist	COUNTY	ROUTE	KILOMETER POST TOTAL PROJECT	SHEET No.	TOTAL SHEETS
02	Sha	5	R69.4	7	120

Caltrans Metric

Yan Liu 4-21-09
REGISTERED CIVIL ENGINEER DATE

7-13-09
PLANS APPROVAL DATE

REGISTERED PROFESSIONAL ENGINEER AMY YAN LIU No. 66615 Exp. 6-30-10 CIVIL STATE OF CALIFORNIA

THE STATE OF CALIFORNIA OR ITS OFFICERS OR AGENTS SHALL NOT BE RESPONSIBLE FOR THE ACCURACY OR COMPLETENESS OF ELECTRONIC COPIES OF THIS PLAN SHEET.

POINT	STATION "A2" LINE	OFF-SET
V1	10+29.6	12.9 Lt
V2	10+42.4	29.8 Lt
V3	10+36.0	32.6 Lt
V4	10+33.5	29.4 Lt
V5	10+31.3	28.0 Lt
V6	10+33.9	25.5 Lt
V7	10+32.3	21.2 Lt
V8	10+28.0	19.4 Lt
V9	10+25.4	21.9 Lt
V10	10+27.0	26.2 Lt

POINT	STATION	OFF-SET
P1	"A1" 1+07.9	2.4 Lt
P2	"A3" 1+11.7	2.8 Rt
P3	"A3" 1+19.3	2.4 Rt

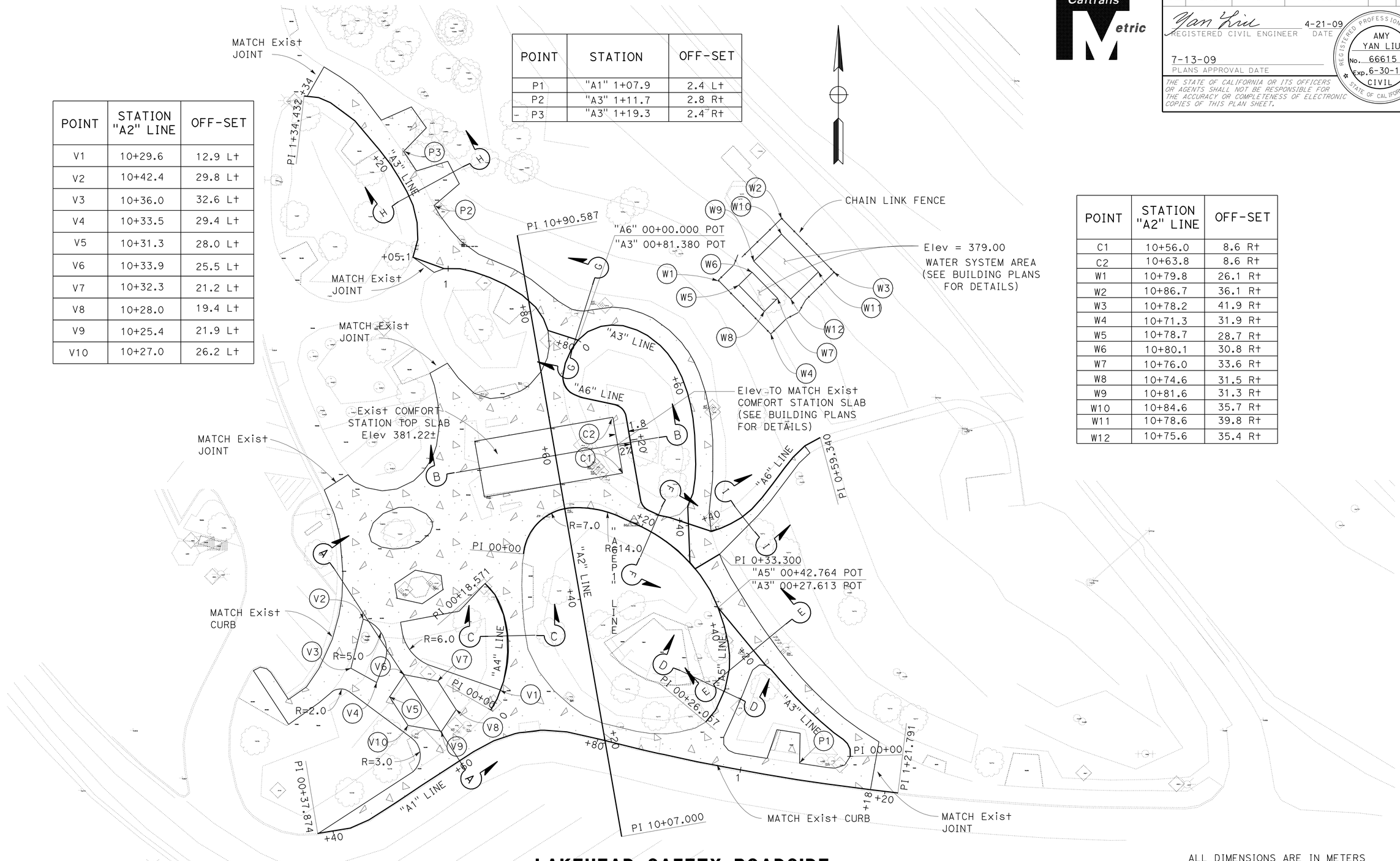

POINT	STATION "A2" LINE	OFF-SET
C1	10+56.0	8.6 Rt
C2	10+63.8	8.6 Rt
W1	10+79.8	26.1 Rt
W2	10+86.7	36.1 Rt
W3	10+78.2	41.9 Rt
W4	10+71.3	31.9 Rt
W5	10+78.7	28.7 Rt
W6	10+80.1	30.8 Rt
W7	10+76.0	33.6 Rt
W8	10+74.6	31.5 Rt
W9	10+81.6	31.3 Rt
W10	10+84.6	35.7 Rt
W11	10+78.6	39.8 Rt
W12	10+75.6	35.4 Rt

LAKEHEAD SAFETY ROADSIDE REST AREA

ALL DIMENSIONS ARE IN METERS UNLESS OTHERWISE SHOWN

CONSTRUCTION DETAILS

NO SCALE

C-1

STATE OF CALIFORNIA - DEPARTMENT OF TRANSPORTATION
NORTH REGION
OFFICE OF DESIGN, SOUTH
DESIGN BRANCH S10

Caltrans

FUNCTIONAL SUPERVISOR: C. OLSON

CALCULATED-DESIGNED BY | CHECKED BY

REVISED BY | DATE REVISED

LAST REVISION 00-00-00 | DATE PLOTTED => 28-JUL-2009 | TIME PLOTTED => 14:33

BORDER LAST REVISED 3/1/2007

RELATIVE BORDER SCALE IS IN MILLIMETERS 0 20 40 60 80

USERNAME => trlenard
DGN FILE => 239580ga001.dgn

CU 03262

EA 395801

Dist	COUNTY	ROUTE	KILOMETER POST TOTAL PROJECT	SHEET No.	TOTAL SHEETS
02	Sha	5	R69.4	8	120

Caltrans Metric

Yan Liu 4-21-09
REGISTERED CIVIL ENGINEER DATE

7-13-09
PLANS APPROVAL DATE

REGISTERED PROFESSIONAL ENGINEER
AMY YAN LIU
No. 66615
Exp. 6-30-10
CIVIL
STATE OF CALIFORNIA

THE STATE OF CALIFORNIA OR ITS OFFICERS OR AGENTS SHALL NOT BE RESPONSIBLE FOR THE ACCURACY OR COMPLETENESS OF ELECTRONIC COPIES OF THIS PLAN SHEET.

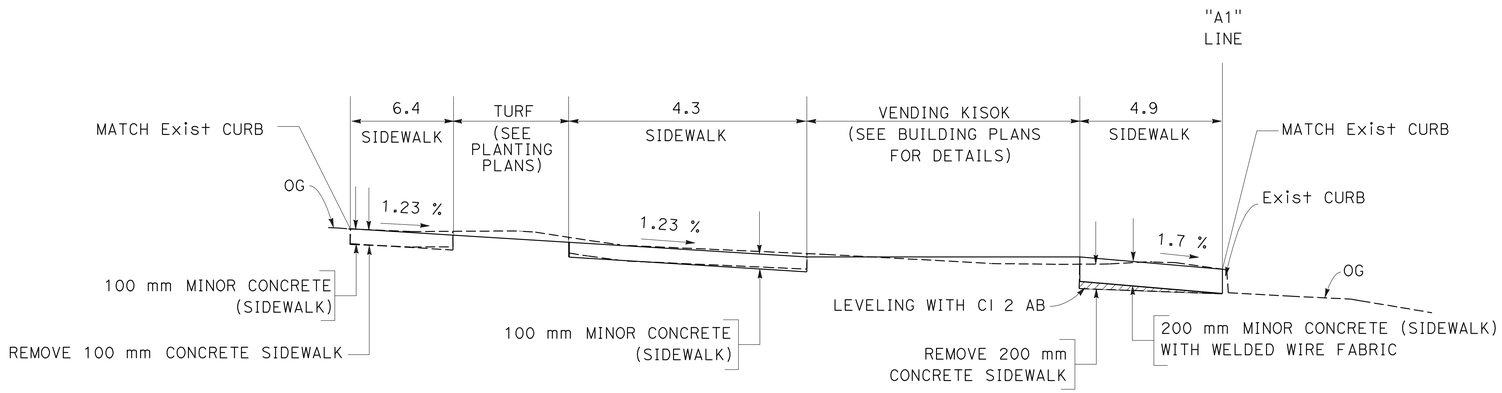

SECTION A-A
"A1" STA 00+60

LEGEND

LEVELING WITH CI 2 AB

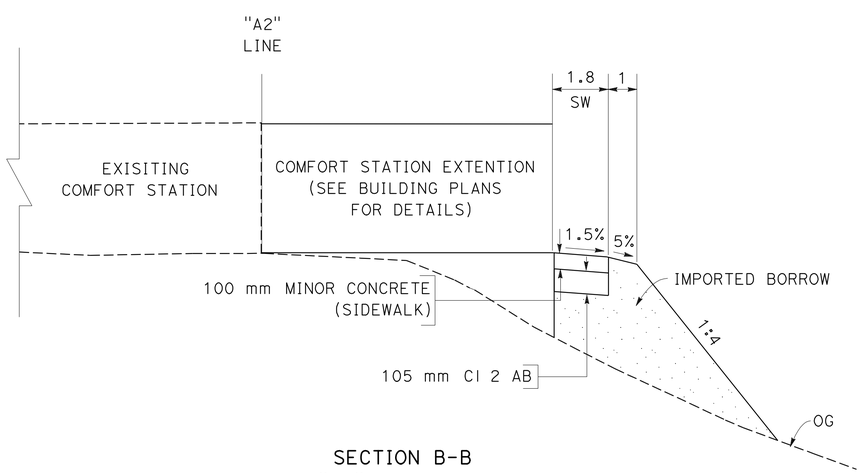

SECTION B-B
"A2" STA 10+60

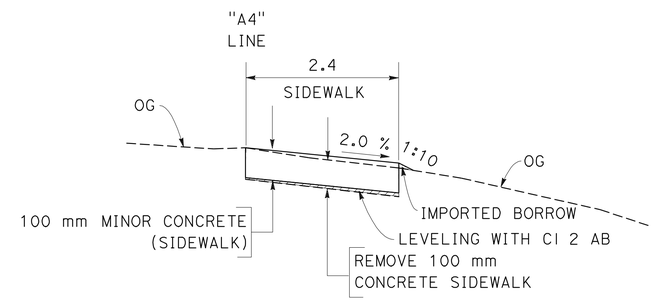

SECTION C-C
"A4" STA 00+10

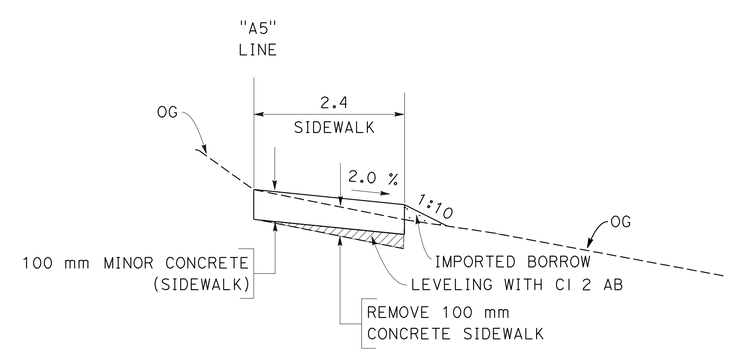

SECTION D-D
"A5" STA 00+30

ALL DIMENSIONS ARE IN METERS
UNLESS OTHERWISE SHOWN

CONSTRUCTION DETAILS

NO SCALE

C-2

LAKEHEAD SAFETY ROADSIDE REST AREA

STATE OF CALIFORNIA - DEPARTMENT OF TRANSPORTATION
NORTH REGION
OFFICE OF DESIGN, SOUTH
DESIGN BRANCH S10

FUNCTIONAL SUPERVISOR: C. OLSON

CALCULATED-DESIGNED BY | CHECKED BY

REVISED BY | DATE REVISED

LAST REVISION 00-00-00 | DATE PLOTTED => 28-JUL-2009 | TIME PLOTTED => 14:34

Dist	COUNTY	ROUTE	KILOMETER POST TOTAL PROJECT	SHEET No.	TOTAL SHEETS
02	Sha	5	R69.4	9	120

Caltrans Metric

Yan Liu 4-21-09
REGISTERED CIVIL ENGINEER DATE

7-13-09
PLANS APPROVAL DATE

REGISTERED PROFESSIONAL ENGINEER AMY YAN LIU No. 66615 Exp. 6-30-10 CIVIL STATE OF CALIFORNIA

THE STATE OF CALIFORNIA OR ITS OFFICERS OR AGENTS SHALL NOT BE RESPONSIBLE FOR THE ACCURACY OR COMPLETENESS OF ELECTRONIC COPIES OF THIS PLAN SHEET.

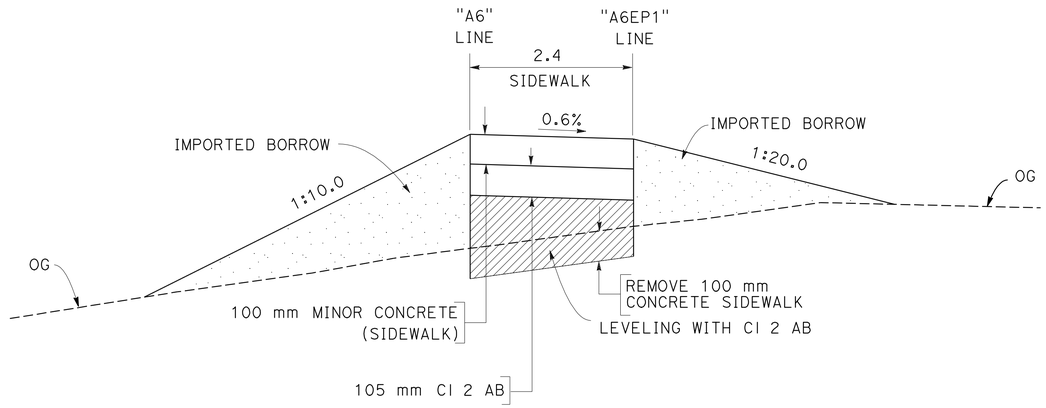

SECTION F-F
"A6" STA 00+32

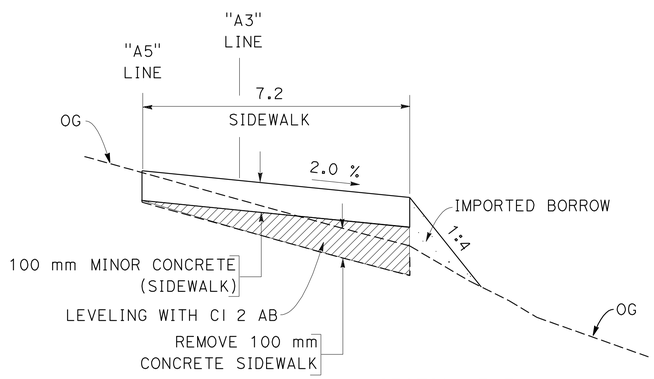

SECTION E-E
"A3" STA 00+20

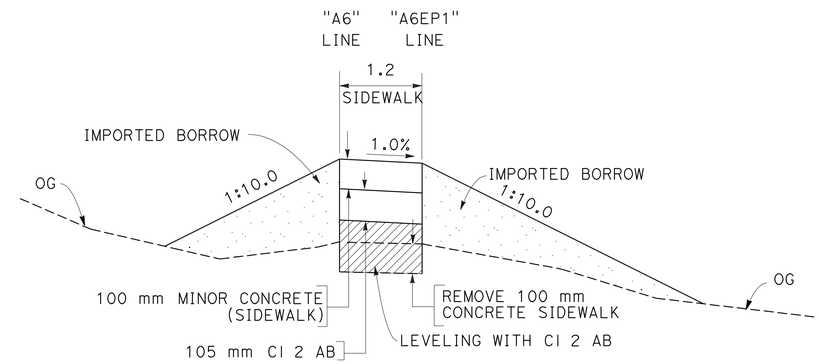

SECTION I-I
"A6" STA 00+44

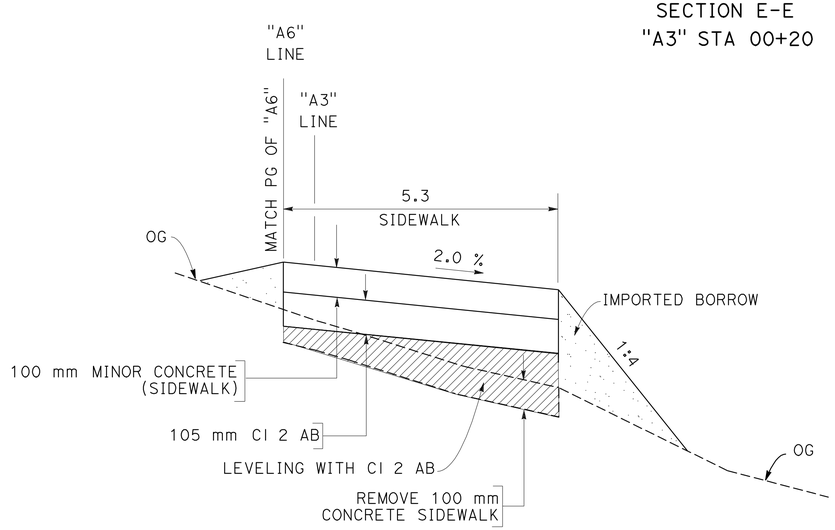

SECTION G-G
"A3" STA 00+79

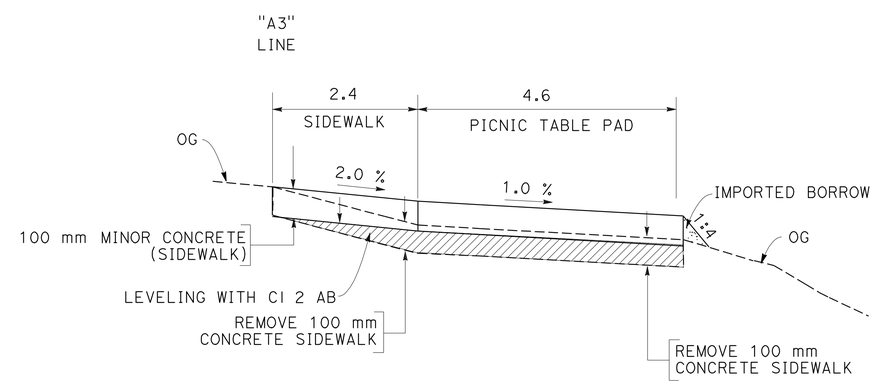

SECTION H-H
"A3" STA 01+14

ALL DIMENSIONS ARE IN METERS
UNLESS OTHERWISE SHOWN

CONSTRUCTION DETAILS

NO SCALE

LAKEHEAD SAFETY ROADSIDE REST AREA

C-3

STATE OF CALIFORNIA - DEPARTMENT OF TRANSPORTATION
NORTH REGION
OFFICE OF DESIGN, SOUTH
DESIGN BRANCH S10

Caltrans

FUNCTIONAL SUPERVISOR: C. OLSON

CALCULATED-DESIGNED BY | CHECKED BY | REVISED BY | DATE REVISED

LAST REVISION 00-00-00 | DATE PLOTTED => 28-JUL-2009 | TIME PLOTTED => 14:34

Dist	COUNTY	ROUTE	KILOMETER POST TOTAL PROJECT	SHEET No.	TOTAL SHEETS
02	Sha	5	R69.4	10	120

Caltrans Metric

Yan Liu 4-21-09
REGISTERED CIVIL ENGINEER DATE

7-13-09
PLANS APPROVAL DATE

REGISTERED PROFESSIONAL ENGINEER AMY YAN LIU No. 66615 Exp. 6-30-10 CIVIL STATE OF CALIFORNIA

THE STATE OF CALIFORNIA OR ITS OFFICERS OR AGENTS SHALL NOT BE RESPONSIBLE FOR THE ACCURACY OR COMPLETENESS OF ELECTRONIC COPIES OF THIS PLAN SHEET.

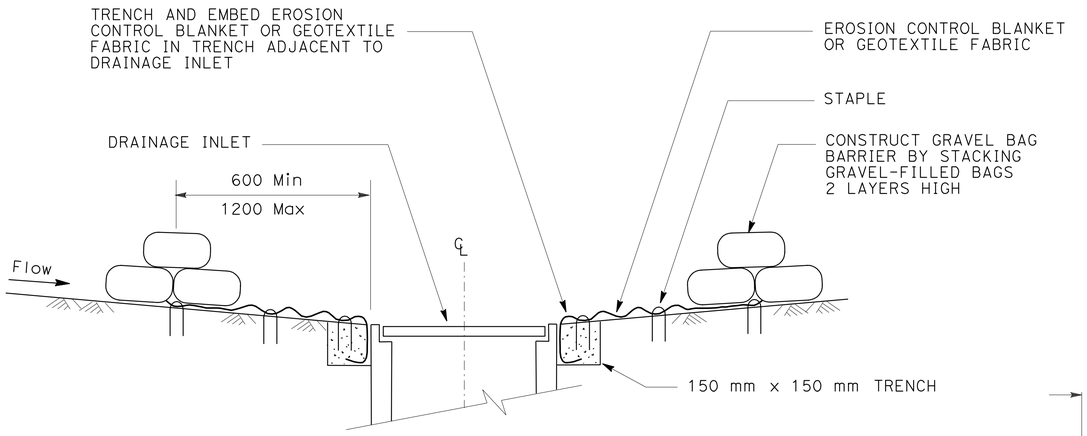

SECTION A-A

NOTES:

1. PLACE SAFETY CONES ADJACENT TO DRAINAGE INLET PROTECTION.
2. DIMENSIONS MAY VARY TO FIT FIELD CONDITIONS.
3. POSITION EROSION CONTROL BLANKET OR GEOTEXTILE FABRIC AT EDGE OF CONCRETE APRON AND SECURE IN TRENCH.
4. EROSION CONTROL BLANKET/GEOTEXTILE FABRIC IS NOT REQUIRED IF THE AREA ADJACENT TO THE DRAINAGE INLET IS VEGETATED OR PAVED.

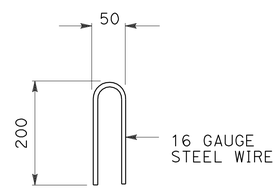

STAPLE DETAIL

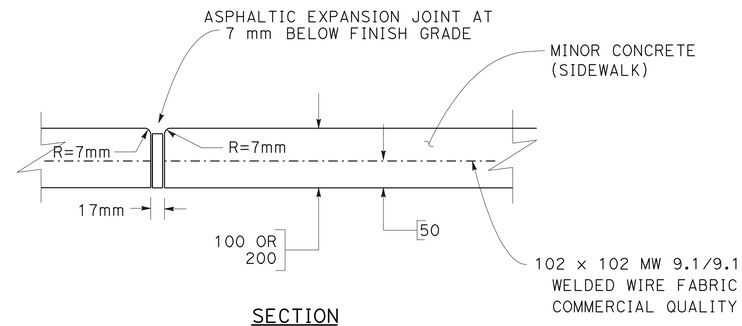

SECTION

TYPICAL PCC SIDEWALK/PICNIC TABLE PAD WITH ASPHALTIC EXPANSION JOINT DETAIL

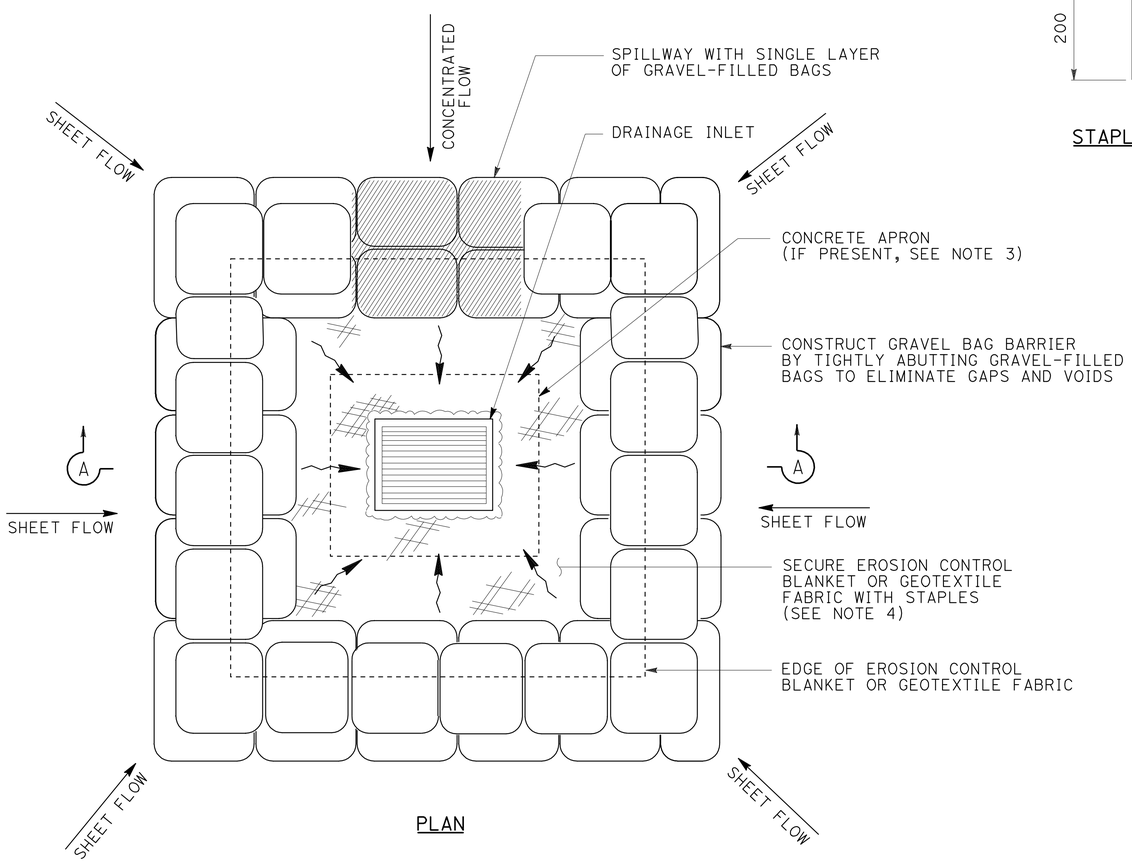

PLAN

TEMPORARY DRAINAGE INLET PROTECTION (TYPE 3B) (GRAVEL BAG BARRIER)

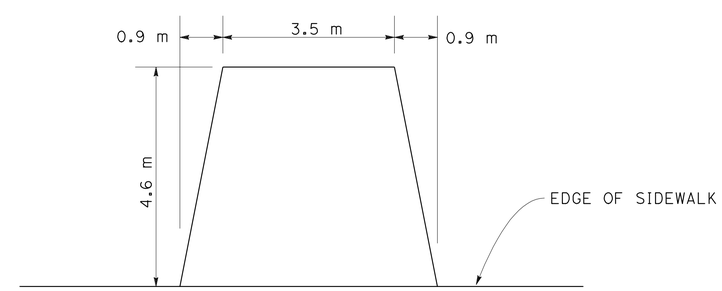

TYPICAL 100 mm PCC TABLE PAD LAYOUT

LAKEHEAD SAFETY ROADSIDE REST AREA

ALL DIMENSIONS ARE IN MILLIMETERS UNLESS OTHERWISE SHOWN

CONSTRUCTION DETAILS

NO SCALE

C-4

STATE OF CALIFORNIA - DEPARTMENT OF TRANSPORTATION
NORTH REGION
OFFICE OF DESIGN,SOUTH
DESIGN BRANCH S10
Caltrans

FUNCTIONAL SUPERVISOR: C. OLSON
CALCULATED-DESIGNED BY
CHECKED BY
REVISED BY
DATE REVISED

LAST REVISION 00-00-00 | DATE PLOTTED => 28-JUL-2009 | TIME PLOTTED => 14:34

Dist	COUNTY	ROUTE	KILOMETER POST TOTAL PROJECT	SHEET No.	TOTAL SHEETS
02	Sha	5	R69.4	11	120

Yan Liu 4-21-09
REGISTERED CIVIL ENGINEER DATE

7-13-09
PLANS APPROVAL DATE

REGISTERED PROFESSIONAL ENGINEER
AMY YAN LIU
No. 66615
Exp. 6-30-10
CIVIL
STATE OF CALIFORNIA

THE STATE OF CALIFORNIA OR ITS OFFICERS OR AGENTS SHALL NOT BE RESPONSIBLE FOR THE ACCURACY OR COMPLETENESS OF ELECTRONIC COPIES OF THIS PLAN SHEET.

Caltrans Metric

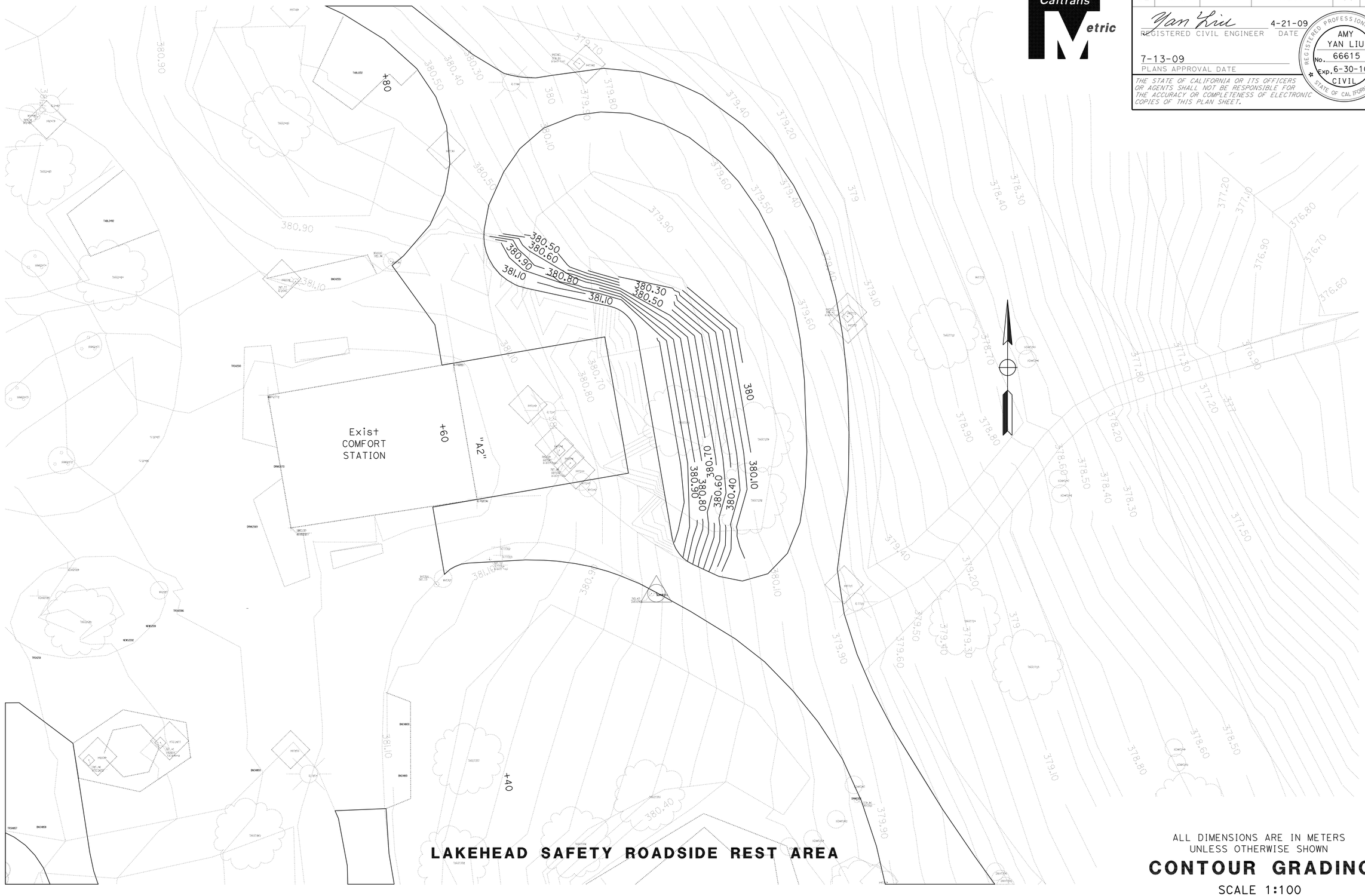

LAKEHEAD SAFETY ROADSIDE REST AREA

ALL DIMENSIONS ARE IN METERS
UNLESS OTHERWISE SHOWN

CONTOUR GRADING

SCALE 1:100

G-1

REVISED BY	DATE REVISED

CALCULATED-DESIGNED BY
CHECKED BY

FUNCTIONAL SUPERVISOR
C. OLSON

STATE OF CALIFORNIA - DEPARTMENT OF TRANSPORTATION
Caltrans
NORTH REGION
OFFICE OF DESIGN, SOUTH
DESIGN BRANCH S10

LAST REVISION 00-00-00
DATE PLOTTED => 28-JUL-2009
TIME PLOTTED => 14:34

Dist	COUNTY	ROUTE	KILOMETER POST TOTAL PROJECT	SHEET No.	TOTAL SHEETS
02	Sha	5	R69.4	12	120

Yan Liu 4-21-09
REGISTERED CIVIL ENGINEER DATE

7-13-09
PLANS APPROVAL DATE

REGISTERED PROFESSIONAL ENGINEER
AMY YAN LIU
No. 66615
Exp. 6-30-10
CIVIL
STATE OF CALIFORNIA

THE STATE OF CALIFORNIA OR ITS OFFICERS OR AGENTS SHALL NOT BE RESPONSIBLE FOR THE ACCURACY OR COMPLETENESS OF ELECTRONIC COPIES OF THIS PLAN SHEET.

Caltrans Metric

NOTES:

1. ATTACH PANELS TO EXISTING ROADSIDE SRRA SIGN POSTS.
2. SIGNS SHALL BECOME PROPERTY OF THE STATE.
3. PORTABLE CHANGEABLE MESSAGE SIGN (PCMS) SHALL BE PLACED 24 HOURS PRIOR TO AND DURING REST AREA CLOSURES. EXACT LOCATIONS TO BE DETERMINED BY ENGINEER.
4. SIGNS SHOWN DO NOT INCLUDE ADDITIONAL SIGNS NECESSARY FOR OTHER TRAFFIC CONTROL SUCH AS RAMP CLOSURE.
5. SIGNS SHALL BE REFLECTIVE ORANGE WITH BLACK LETTERS.

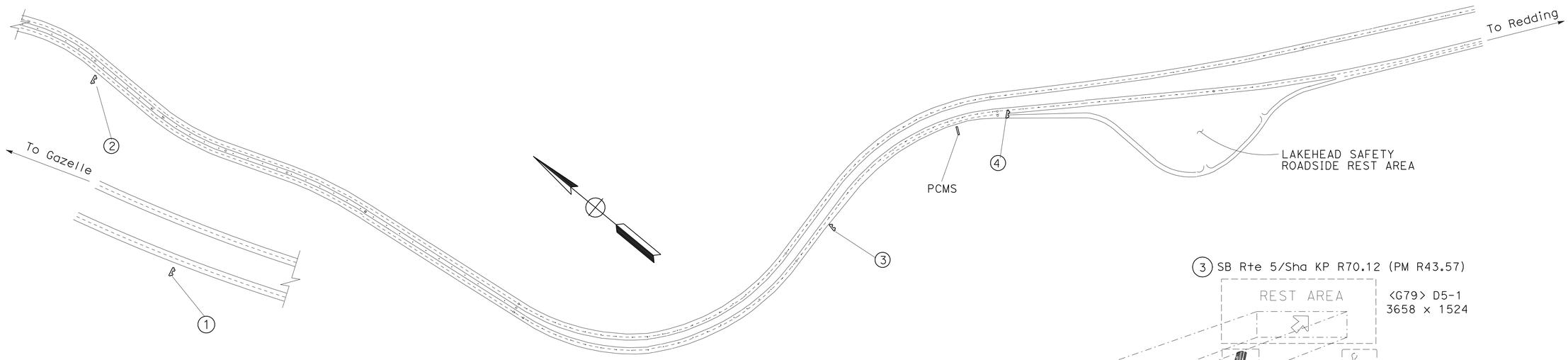

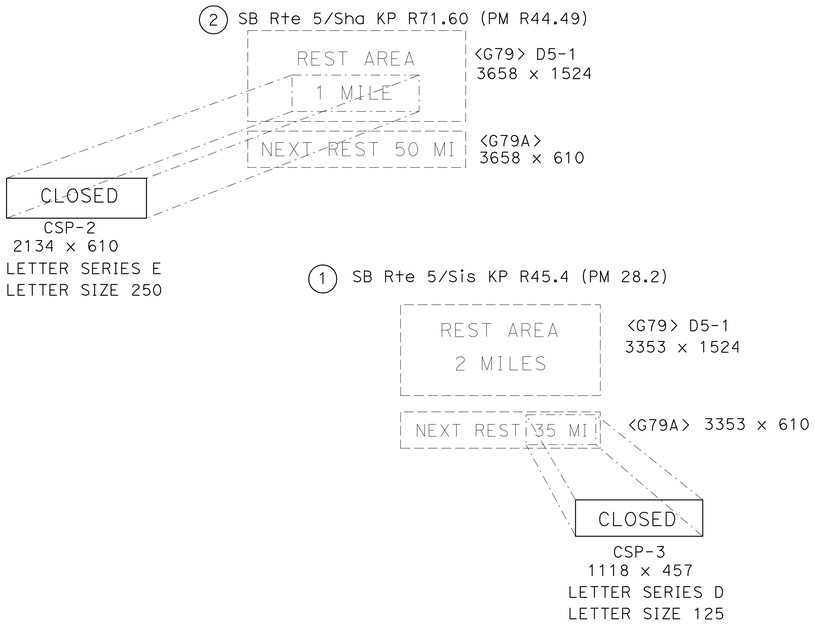

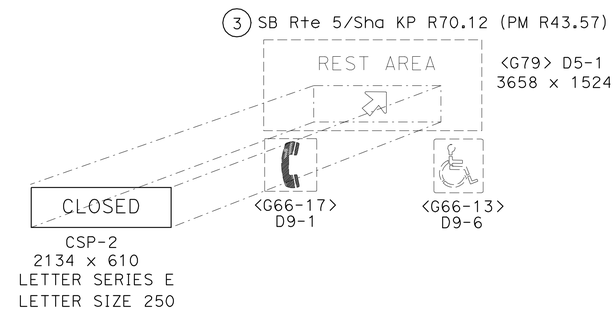

STATIONARY MOUNTED CONSTRUCTION AREA SIGNS

No.	Dir	KP	SIGN CODE	PANEL SIZE (NP)	SIGN MESSAGE	No. OF SIGNS (NP)
1	SB	R44.9/Sis	CSP-3	2134 x 610	CLOSED	1
2	SB	R71.6/Sha	CSP-2	2134 x 610	CLOSED	1
3	SB	R70.1/Sha	CSP-2	2134 x 610	CLOSED	1
4	SB	R69.7/Sha	CSP-1	1372 x 305	CLOSED	1
					TOTAL	4

(NP) - FOR INFORMATION ONLY, NOT A SEPARATE ITEM

ALL DIMENSIONS ARE IN MILLIMETERS UNLESS OTHERWISE SHOWN

CONSTRUCTION AREA SIGNS

NO SCALE

CS-1

STATE OF CALIFORNIA - DEPARTMENT OF TRANSPORTATION
NORTH REGION
OFFICE OF DESIGN, SOUTH
DESIGN BRANCH S10
Caltrans

FUNCTIONAL SUPERVISOR: C. OLSON
CALCULATED-DESIGNED BY
CHECKED BY
REVISED BY
DATE REVISED

LAST REVISION 00-00-00
DATE PLOTTED => 28-JUL-2009
TIME PLOTTED => 14:34

Dist	COUNTY	ROUTE	KILOMETER POST TOTAL PROJECT	SHEET No.	TOTAL SHEETS
02	Sha	5	R69.4	13	120

Yan Liu 4-21-09
REGISTERED CIVIL ENGINEER DATE

7-13-09
PLANS APPROVAL DATE

REGISTERED PROFESSIONAL ENGINEER
AMY YAN LIU
No. 66615
Exp. 6-30-10
CIVIL
STATE OF CALIFORNIA

THE STATE OF CALIFORNIA OR ITS OFFICERS OR AGENTS SHALL NOT BE RESPONSIBLE FOR THE ACCURACY OR COMPLETENESS OF ELECTRONIC COPIES OF THIS PLAN SHEET.

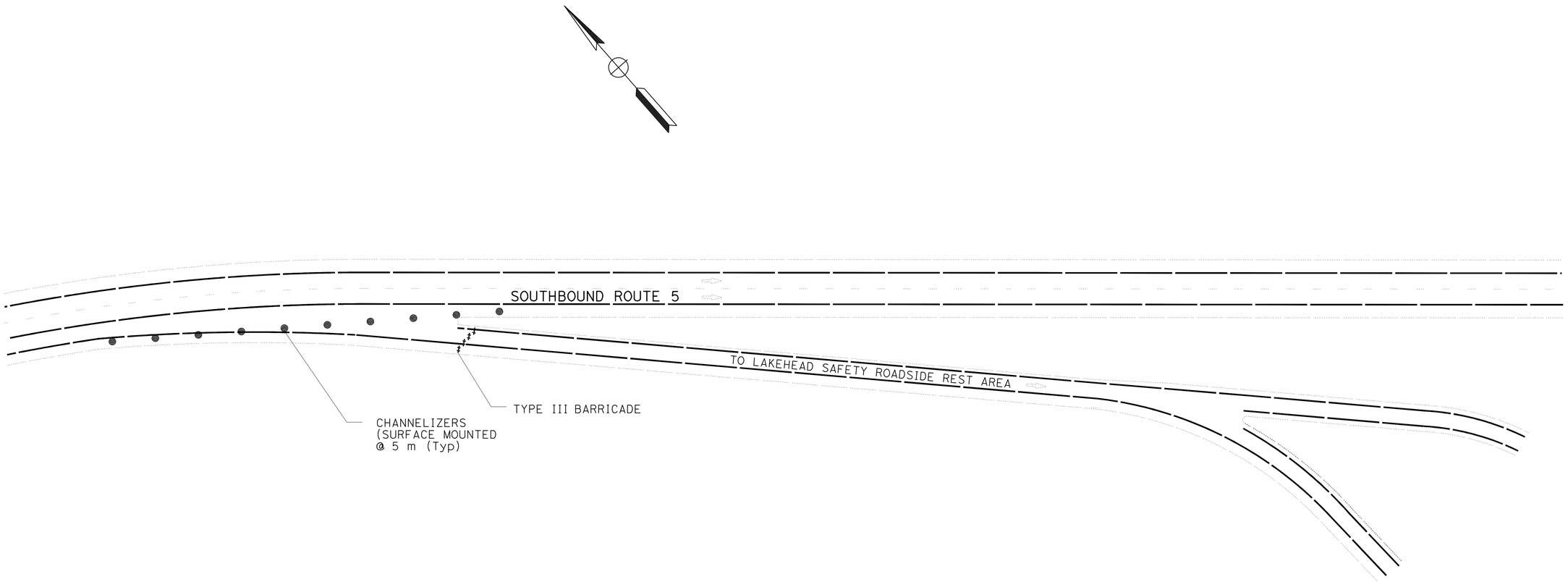

RAMP CLOSURE QUANTITIES

	TYPE III BARRICADE	CHANNELIZERS (SURFACE MOUNTED)
	4	10
TOTAL	4	10

TRAFFIC CONTROL SYSTEM
SAFETY ROADSIDE REST AREA CLOSURE

ALL DIMENSIONS ARE IN METERS
UNLESS OTHERWISE SHOWN

TRAFFIC HANDLING PLAN

NO SCALE

TH-1

STATE OF CALIFORNIA - DEPARTMENT OF TRANSPORTATION
NORTH REGION
OFFICE OF DESIGN,SOUTH
DESIGN BRANCH S10

FUNCTIONAL SUPERVISOR: C. OLSON

CALCULATED-DESIGNED BY
CHECKED BY
REVISED BY
DATE REVISED

LAST REVISION 00-00-00 DATE PLOTTED => 28-JUL-2009 TIME PLOTTED => 14:34

Dist	COUNTY	ROUTE	KILOMETER POST TOTAL PROJECT	SHEET No.	TOTAL SHEETS
02	Sha	5	R69.4	14	120

Yan Liu 4-21-09
REGISTERED CIVIL ENGINEER DATE

7-13-09
PLANS APPROVAL DATE

REGISTERED PROFESSIONAL ENGINEER
AMY YAN LIU
No. 66615
Exp. 6-30-10
CIVIL
STATE OF CALIFORNIA

THE STATE OF CALIFORNIA OR ITS OFFICERS OR AGENTS SHALL NOT BE RESPONSIBLE FOR THE ACCURACY OR COMPLETENESS OF ELECTRONIC COPIES OF THIS PLAN SHEET.

Caltrans Metric

SIDEWALK

	REMOVE CONCRETE SIDEWALK	MINOR CONCRETE (SIDEWALK)	MINOR CONCRETE (CURB RAMP)	IMPORTED BORROW	CLASS 2 AGGREGATE BASE	(N) WELDED WIRE FABRIC 102x102 MW 9.1/9.1
	m^2	m^3	m^3	m^3	m^3	m^2
	1545	181.5	5	140	60	1689
TOTAL	1545	181.5	5	140	60	1689

(N) FOR INFORMATION ONLY, NOT A SEPARATE ITEM

ADJUST PULLBOX TO GRADE

	EA
	4
TOTAL	4

CHAIN LINK FENCE

LOCATION	CHAIN LINK FENCE (TYPE CL-1.8, SLATTED)	3.7 m CHAIN LINK GATE (TYPE CL-1.8)	1.5 m CHAIN LINK GATE (TYPE CL-1.8)
	m	EA	EA
AT PROPOSED WATER TANK	39.7	1	1
TOTAL	39.7	1	1

TEMPORARY WATER POLLUTION CONTROL

	TEMPORARY CONCRETE WASHOUT FACILITY	TEMPORARY FIBER ROLL	TEMPORARY DRAINAGE INLET PROTECTION
	EA	m	EA
	1	500	3
TOTAL	1	500	3

SUMMARY OF QUANTITIES

Q-1

REVISED BY | DATE REVISED
CALCULATED-DESIGNED BY | CHECKED BY
FUNCTIONAL SUPERVISOR
C. OLSON

STATE OF CALIFORNIA - DEPARTMENT OF TRANSPORTATION
NORTH REGION
OFFICE OF DESIGN, SOUTH
DESIGN BRANCH S10
Caltrans

LAST REVISION 00-00-00
DATE PLOTTED => 28-JUL-2009
TIME PLOTTED => 14:34

Dist	COUNTY	ROUTE	KILOMETER POST TOTAL PROJECT	SHEET No.	TOTAL SHEETS
02	Sha	5	R69.4	15	120

LICENSED LANDSCAPE ARCHITECT

7-13-09
PLANS APPROVAL DATE

LICENSED LANDSCAPE ARCHITECT — J. Patrick Sullivan, Jr. — Signature — 07/31/10 Renewal Date — 04/20/09 Date — STATE OF CALIFORNIA

THE STATE OF CALIFORNIA OR ITS OFFICERS OR AGENTS SHALL NOT BE RESPONSIBLE FOR THE ACCURACY OR COMPLETENESS OF ELECTRONIC COPIES OF THIS PLAN SHEET.

Caltrans Metric

ABBREVIATIONS

AMEND — amendment
B & B — balled and burlapped
DIA — diameter
EA — each
g — gram
kg — kilogram
m — meter
m^2 — square meter
m^3 — cubic meter
MAX — maximum
MIN — minimum
mm — millimeter
No — number
Pkt — packet
PLT ESTB - plant establishment
PVMT — pavement
R/W — right of way
SF — state furnished
TRVD — traveled
TBLTS. — Tablets

PLANT LIST AND PLANTING SPECIFICATIONS

PLANT GROUP	PLANT No	SYMBOL	BOTANICAL NAME	COMMON NAME	SIZE	QUANTITY EACH	HOLE SIZE (mm) DIA	HOLE SIZE (mm) DEPTH	BASIN TYPE	IRON SULFATE	SOIL AMEND ⑨	⑨COMMERCIAL FERTILIZER PLANTING	⑨COMMERCIAL FERTILIZER PLT ESTB	BASIN MULCH	STAKING	PLANTING LIMITS MINIMUM DISTANCE (m) FROM TRVD WAY	PVMT	FENCE	WALL	PAVED DITCH	EARTH DITCH	ON CENTER (m)	REMARKS
T	1		TURF TYPE SOD	FESCUE MIX	SOD	640 M2	—	—	—	2.6 m3 per 100 m^2	8.25 Kg per 100 m^2	8.25 Kg per 100 m^2	—	—	-	-	-	-	-	-	-	⑨ SOD

APPLICABLE WHEN CIRCLED:

1 - Quantities shown are "per plant" unless shown as m^2 application rates.
2 - Sufficient to receive root ball & Admendments
3 - Does not apply to mulch areas.
4 - As shown on plans.
5 - Unless otherwise shown on plans.
6 - See detail.
7 - See Special Provisions.
8 - Required. See Standard Plans.
⑨ - Required. Cultivate Soil prior to installing; See Special Provisions.

NOTE:

Underlined portions of botanical name indicate abbreviations used on Planting Plans.

PLANT LIST
PL-1

REVISED BY | DATE REVISED
CALCULATED-DESIGNED BY | CHECKED BY
SENIOR LANDSCAPE ARCHITECT: J. PATRICK SULLIVAN

STATE OF CALIFORNIA - DEPARTMENT OF TRANSPORTATION
Caltrans LANDSCAPE ARCHITECTURE

LAST REVISION 00-00-00 | DATE PLOTTED => 28-JUL-2009 | TIME PLOTTED => 14:34

Dist	COUNTY	ROUTE	KILOMETER POST TOTAL PROJECT	SHEET No.	TOTAL SHEETS
02	Sha	5	R69.4	16	120

LICENSED LANDSCAPE ARCHITECT

7-13-09
PLANS APPROVAL DATE

LICENSED LANDSCAPE ARCHITECT
Patrick Sullivan
Signature
07/31/10
Renewal Date
4/20/09
Date
STATE OF CALIFORNIA

THE STATE OF CALIFORNIA OR ITS OFFICERS OR AGENTS SHALL NOT BE RESPONSIBLE FOR THE ACCURACY OR COMPLETENESS OF ELECTRONIC COPIES OF THIS PLAN SHEET.

Caltrans Metric

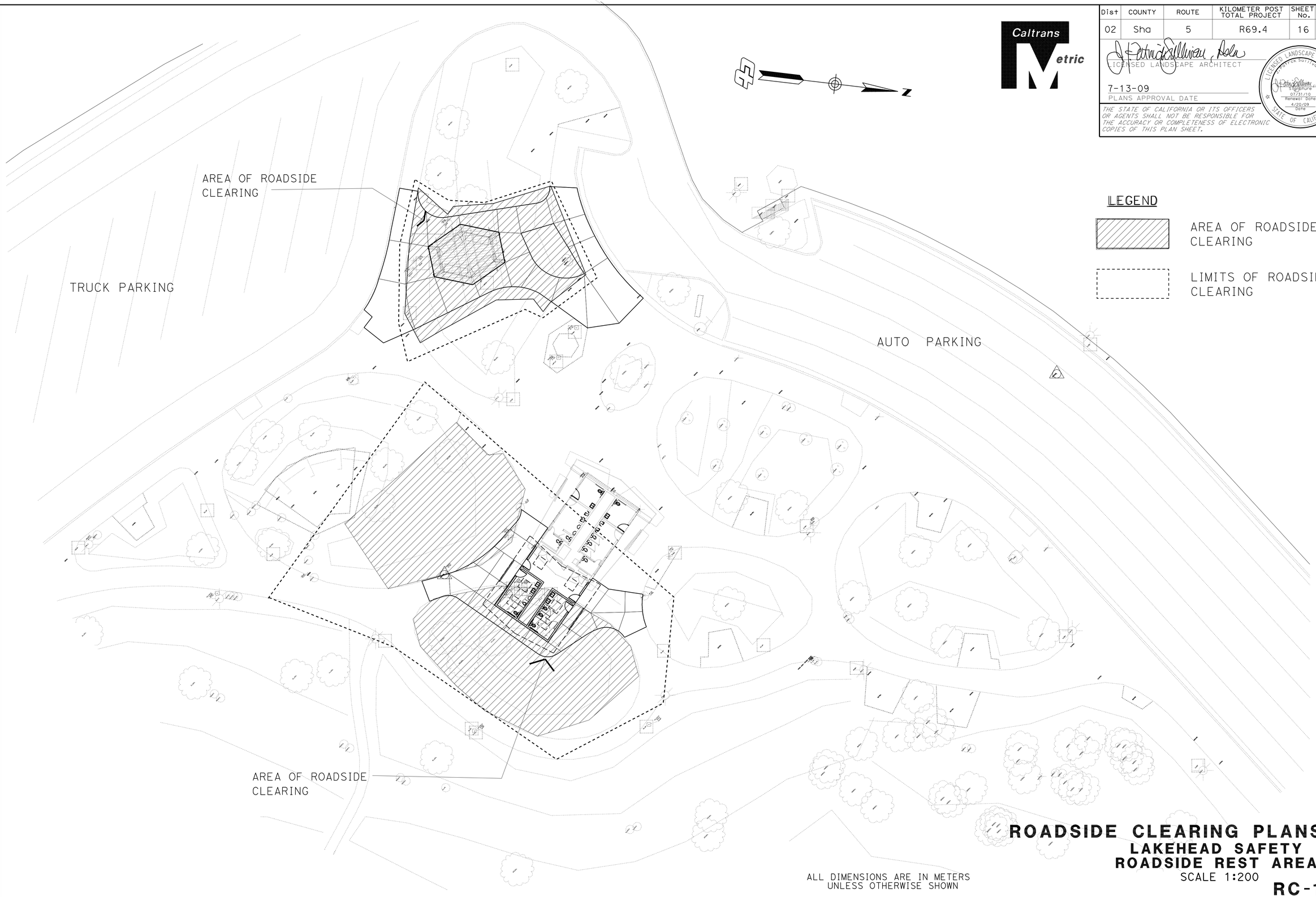

LEGEND

AREA OF ROADSIDE CLEARING

LIMITS OF ROADSIDE CLEARING

ALL DIMENSIONS ARE IN METERS UNLESS OTHERWISE SHOWN

ROADSIDE CLEARING PLANS
LAKEHEAD SAFETY ROADSIDE REST AREA
SCALE 1:200

RC-1

REVISED BY	DATE REVISED

CALCULATED-DESIGNED BY: PATRICK SULLIVAN
CHECKED BY:

SENIOR LANDSCAPE ARCHITECT: PATRICK SULLIVAN ASLA

STATE OF CALIFORNIA - DEPARTMENT OF TRANSPORTATION
Caltrans LANDSCAPE ARCHITECTURE

LAST REVISION 00-00-00 | DATE PLOTTED => 28-JUL-2009 | TIME PLOTTED => 14:35

Dist	COUNTY	ROUTE	KILOMETER POST TOTAL PROJECT	SHEET No.	TOTAL SHEETS
02	Sha	5	R69.4	17	120

Patrick Sullivan, ASLA
LICENSED LANDSCAPE ARCHITECT

7-13-09
PLANS APPROVAL DATE

LICENSED LANDSCAPE ARCHITECT
Patrick Sullivan
Signature
01/31/10
Renewal Date
4/20/09
Date
STATE OF CALIFORNIA

THE STATE OF CALIFORNIA OR ITS OFFICERS OR AGENTS SHALL NOT BE RESPONSIBLE FOR THE ACCURACY OR COMPLETENESS OF ELECTRONIC COPIES OF THIS PLAN SHEET.

Caltrans Metric

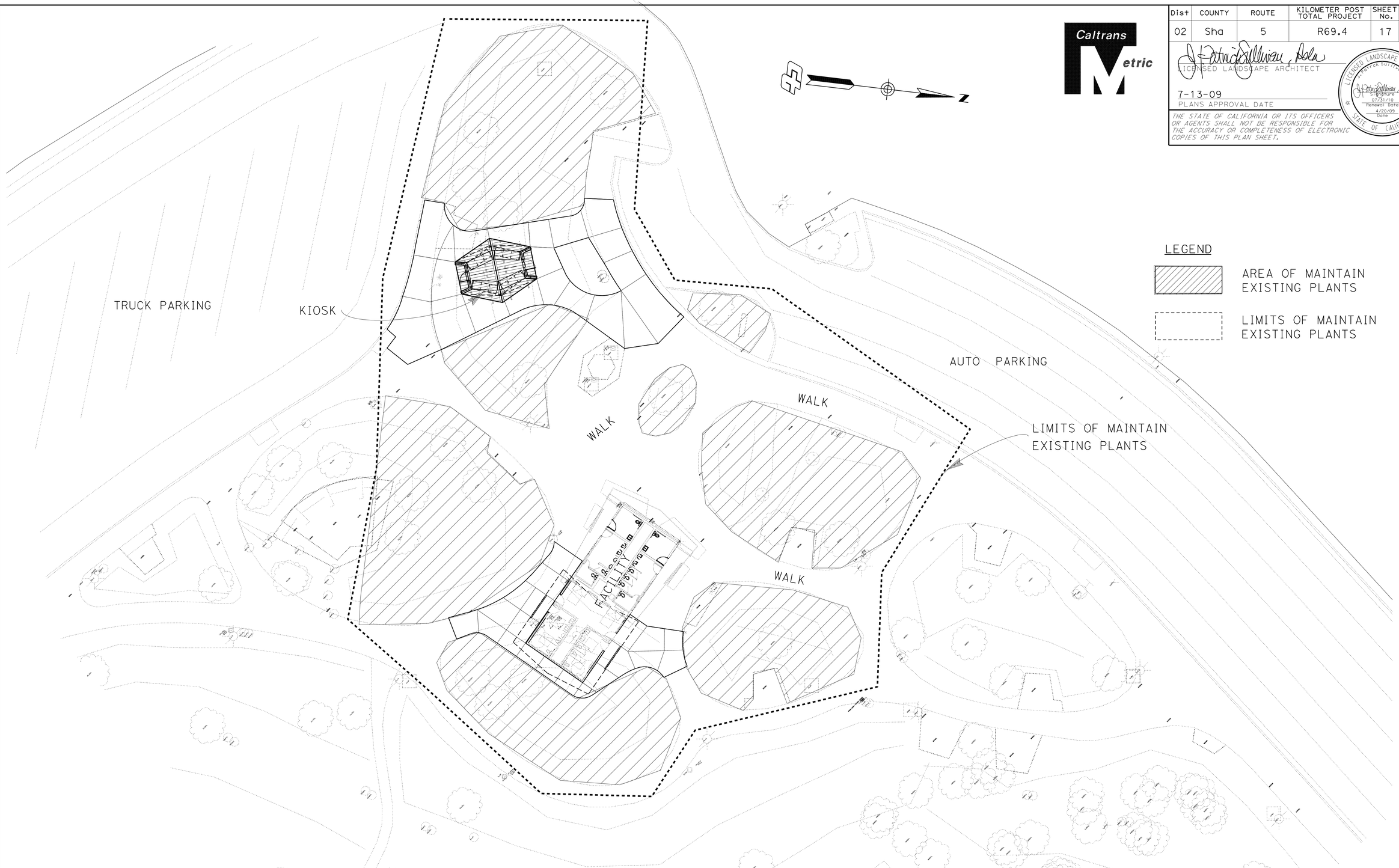

ALL DIMENSIONS ARE IN METERS UNLESS OTHERWISE SHOWN

MAINTAIN EXISTING PLANTS PLANS
LAKEHEAD SAFETY ROADSIDE REST AREA
SCALE 1:200

MA-1

STATE OF CALIFORNIA - DEPARTMENT OF TRANSPORTATION
Caltrans LANDSCAPE ARCHITECTURE

SENIOR LANDSCAPE ARCHITECT: PATRICK SULLIVAN ASLA
CALCULATED-DESIGNED BY: PATRICK SULLIVAN
CHECKED BY:
REVISED BY
DATE REVISED

LAST REVISION 00-00-00
DATE PLOTTED => 28-JUL-2009
TIME PLOTTED => 14:35

Dist	COUNTY	ROUTE	KILOMETER POST TOTAL PROJECT	SHEET No.	TOTAL SHEETS
02	Sha	5	R69.4	18	120

Caltrans Metric

LICENSED LANDSCAPE ARCHITECT

7-13-09
PLANS APPROVAL DATE

LICENSED LANDSCAPE ARCHITECT
Patrick Sullivan
Signature
07/31/10
Renewal Date
4/20/09
Date
STATE OF CALIFORNIA

THE STATE OF CALIFORNIA OR ITS OFFICERS OR AGENTS SHALL NOT BE RESPONSIBLE FOR THE ACCURACY OR COMPLETENESS OF ELECTRONIC COPIES OF THIS PLAN SHEET.

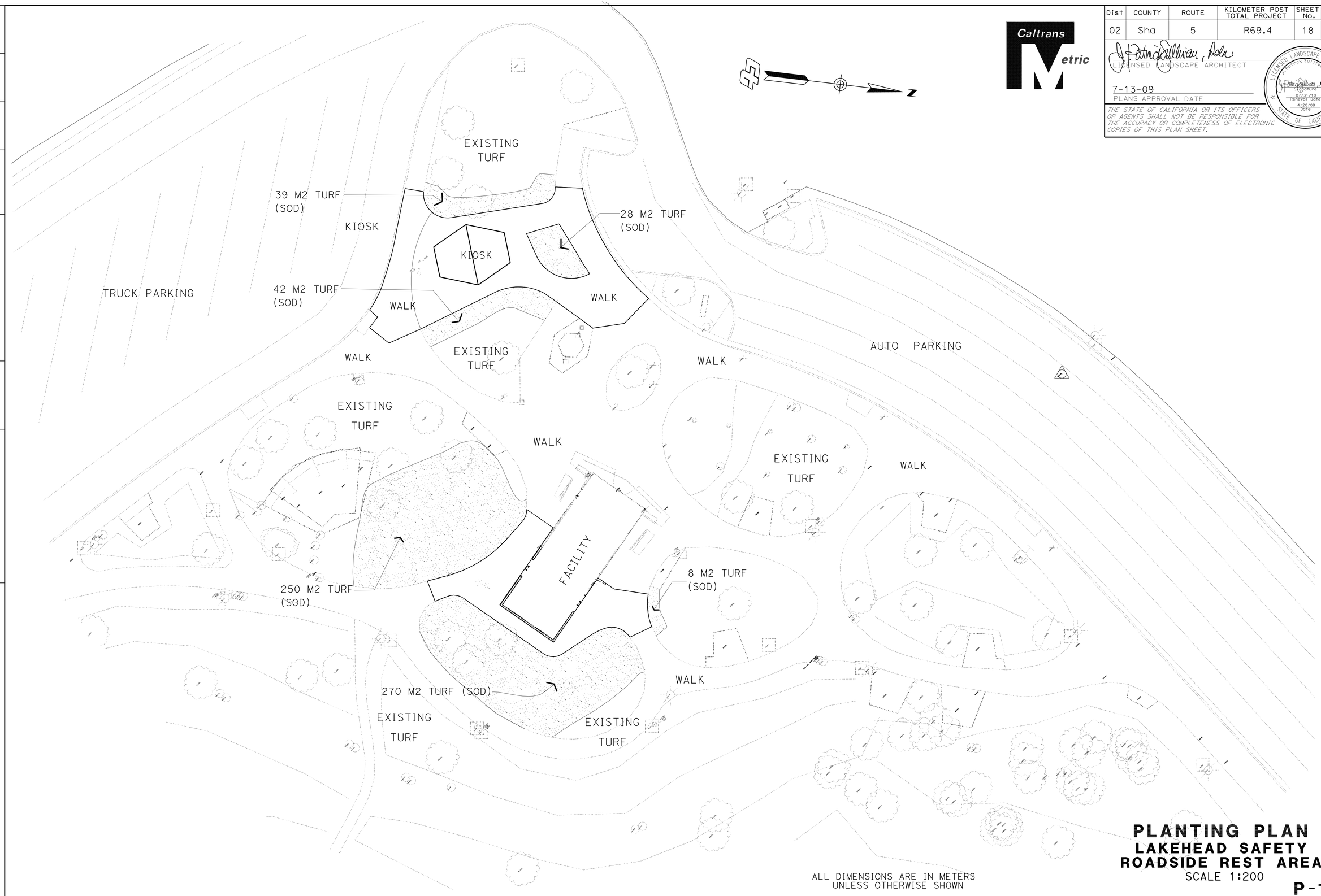

ALL DIMENSIONS ARE IN METERS UNLESS OTHERWISE SHOWN

PLANTING PLAN
LAKEHEAD SAFETY ROADSIDE REST AREA
SCALE 1:200

P-1

STATE OF CALIFORNIA - DEPARTMENT OF TRANSPORTATION
Caltrans LANDSCAPE ARCHITECTURE

SENIOR LANDSCAPE ARCHITECT: PATRICK SULLIVAN ASLA

CALCULATED-DESIGNED BY: PATRICK SULLIVAN

CHECKED BY

REVISED BY

DATE REVISED

LAST REVISION 00-00-00

DATE PLOTTED => 28-JUL-2009
TIME PLOTTED => 14:35

Dist	COUNTY	ROUTE	KILOMETER POST TOTAL PROJECT	SHEET No.	TOTAL SHEETS
02	Sha	5	R69.4	19	120

Caltrans Metric

J. Patrick Sullivan, Jr.
LICENSED LANDSCAPE ARCHITECT

7-13-09
PLANS APPROVAL DATE

LICENSED LANDSCAPE ARCHITECT
J. Patrick Sullivan, Jr.
Signature
07/31/10
Renewal Date
4/20/09
Date
STATE OF CALIFORNIA

THE STATE OF CALIFORNIA OR ITS OFFICERS OR AGENTS SHALL NOT BE RESPONSIBLE FOR THE ACCURACY OR COMPLETENESS OF ELECTRONIC COPIES OF THIS PLAN SHEET.

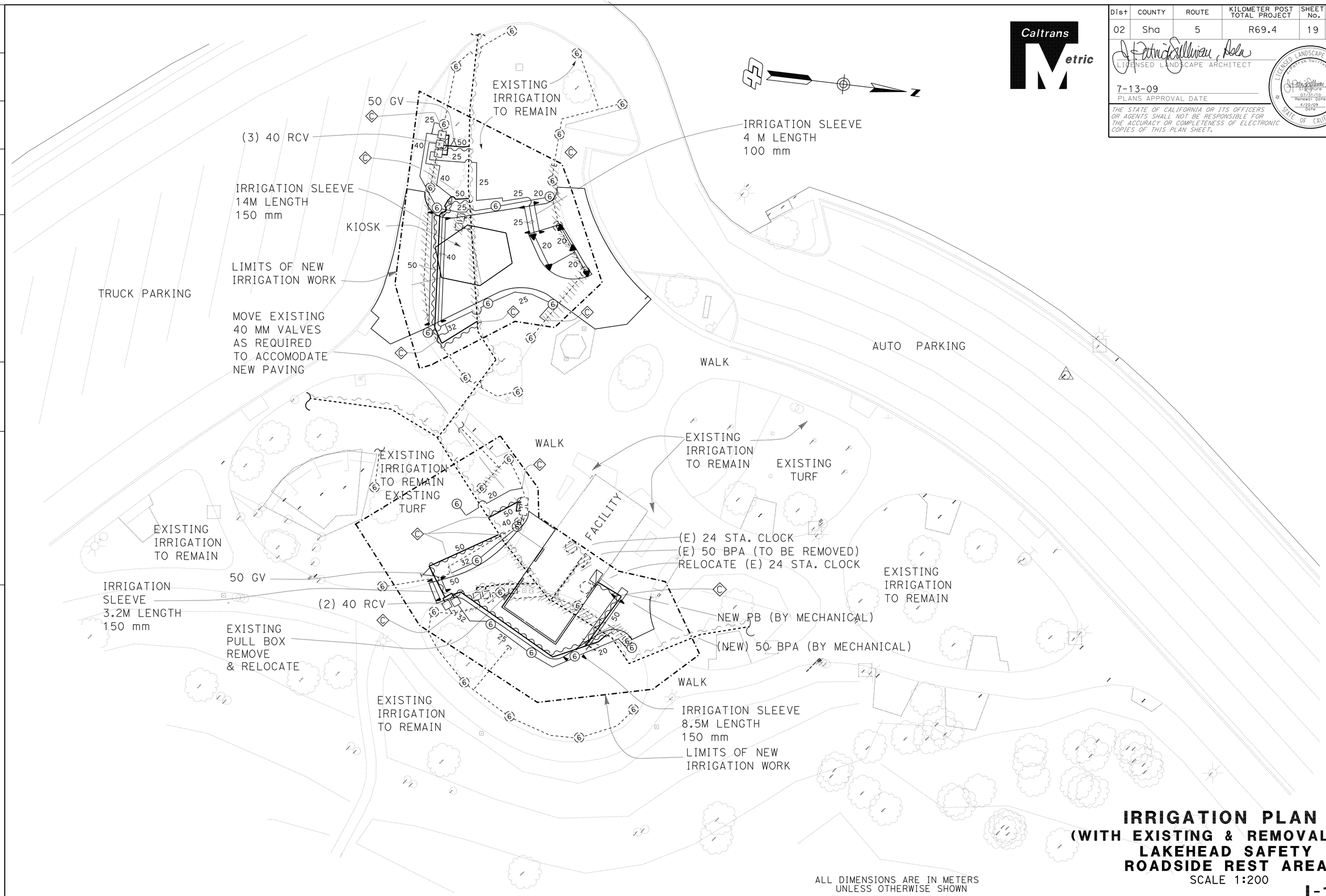

ALL DIMENSIONS ARE IN METERS UNLESS OTHERWISE SHOWN

IRRIGATION PLAN
(WITH EXISTING & REMOVALS)
LAKEHEAD SAFETY ROADSIDE REST AREA
SCALE 1:200

I-1

REVISED BY	DATE REVISED

PATRICK SULLIVAN

CALCULATED-DESIGNED BY
CHECKED BY

SENIOR LANDSCAPE ARCHITECT
PATRICK SULLIVAN ASLA

STATE OF CALIFORNIA - DEPARTMENT OF TRANSPORTATION
Caltrans LANDSCAPE ARCHITECTURE

LAST REVISION 00-00-00
DATE PLOTTED => 28-JUL-2009
TIME PLOTTED => 14:35

Dist	COUNTY	ROUTE	KILOMETER POST TOTAL PROJECT	SHEET No.	TOTAL SHEETS
02	Sha	5	R69.4	20	120

Caltrans Metric

LICENSED LANDSCAPE ARCHITECT

7-13-09
PLANS APPROVAL DATE

LICENSED LANDSCAPE ARCHITECT PATRICK SULLIVAN Signature 07/31/10 Renewal Date 4/20/09 Date STATE OF CALIFORNIA

THE STATE OF CALIFORNIA OR ITS OFFICERS OR AGENTS SHALL NOT BE RESPONSIBLE FOR THE ACCURACY OR COMPLETENESS OF ELECTRONIC COPIES OF THIS PLAN SHEET.

SPRINKLER SCHEDULE

SYMBOL	TYPE	DESCRIPTION	SPRAY PATTERN	OPERATING PRESSURE (KILOPASCAL) (kPa)	PRESSURE COMPENSATING	PLUS / MINUS 5% DISCHARGE LITERS PER SECOND L/s	LITERS PER MINUTE L/min	LITERS PER HOUR L/h	RADIUS (IN METERS)(m)	WIDTH x LENGTH (IN METERS)(m)	MATERIAL	NOZZLE SIZE IN MILLIMETERS (mm)	INLET CONNECTION (NPT) (DN IN MILLIMETERS)(mm)	POSITIVE-LOCKING ADJ ARC STOP (SET SCREW)	BACKSPLASH PREVENTER	DIFFUSER PIN	DISTANCE CONTROL FLAP	ADJ DISCHARGE	RISER TYPE	RISER MATERIAL PLASTIC	RISER MATERIAL GALVANIZED	RISER SIZE (IPS) (IN MILLIMETERS)(mm)	RISER HEIGHT (IN MILLIMETERS)(mm)	RISER FLOW SHUTOFF DEVICE	⑤ SWING JOINT (TYPE)	RISER SUPPORT	SPRINKLER PROTECTOR (TYPE)	REMARKS
⑥	A-6	GEAR DRIVEN POP-UP ROTOR	P	207	—	—	2.4 to 9.5	—	5.85 to 9.75	—	PL	—	20	X	—	—	—	X	-	X	—	20	—	—	I	—	—	⑤⑧ POP-UP (LAWN/SHRUB)
6	A-6	GEAR DRIVEN POP-UP ROTOR	F	207	—	—	7.56 to 11.34	—	5.85 to 9.75	—	PL	—	20	X	—	—	—	X	-	X	—	20	—	—	I	—	—	⑤⑧ POP-UP (LAWN/SHRUB)
▲	B-2	POP UP SPRAY	P/F	207	X	—	13.99, 6.99, 3.48	—	4.8-3.9	—	PL	—	12	—	—	—	—	X	-	X	—	12	—	—	I	—	—	⑤⑧ POP-UP (LAWN/SHRUB)

X IN BOX DENOTES REQUIREMENT
— IN BOX DENOTES DOES NOT APPLY

APPLICABLE WHEN CIRCLED BELOW:

1 - SEE SPECIAL PROVISIONS.
2 - IF A PRESSURE COMPENSATING DEVICE IS SPECIFIED, THE DISCHARGE AND RADII SHOWN REFLECT ITS USE.
3 - ARC STOP SHALL BE FITTED WITH ALLEN SET SCREW.
4 - VINYL-COATED CAST IRON HOUSING.
⑤ - SWING JOINTS REQUIRED.
6 - UNLESS OTHERWISE SHOWN ON PLANS.
7 - 300 mm POP UPS IN SHRUB AREAS.
⑧ - 150 mm POP UPS IN LAWN AREAS

ABBREVIATIONS

ADJ — ADJUSTABLE
B/B — BRASS/BRONZE
B/B/PL - BRASS/BRONZE/PLASTIC
B/PL — BRASS/PLASTIC
CST — CENTER STRIP
DN — DIAMETER NOMINAL
EST — END STRIP
F — FULL CIRCLE
F/P — FULL/PART CIRCLE
H — HALF CIRCLE
IPS — IRON PIPE SIZE
kPa — KILOPASCAL
L/h — LITERS PER HOUR
L/min - LITERS PER MINUTE
L/s — LITERS PER SECOND
m — METERS
mm — MILLIMETERS
NPT — NATIONAL PIPE THREAD
P — PART CIRCLE
PL — PLASTIC
Q — QUARTER CIRCLE
SST — SIDE STRIP
T — THIRD CIRCLE
TQ — THREE QUARTER CIRCLE
TT — TWO THIRDS CIRCLE

IRRIGATION SPRINKLER SCHEDULE

LD-1

REVISED BY	DATE REVISED
	11/06

CALCULATED-DESIGNED BY
CHECKED BY

SENIOR LANDSCAPE ARCHITECT
PATRICK SULLIVAN

STATE OF CALIFORNIA - DEPARTMENT OF TRANSPORTATION
Caltrans LANDSCAPE ARCHITECTURE

LAST REVISION 00-00-00
DATE PLOTTED => 28-JUL-2009
TIME PLOTTED => 14:35

DIST	COUNTY	ROUTE	KILOMETER POST TOTAL PROJECT	SHEET NO.	TOTAL SHEETS
02	Sha	5	R69.4	21	120

Caltrans Metric

REGISTERED CIVIL ENGINEER

November 17, 2006
PLANS APPROVAL DATE

REGISTERED PROFESSIONAL ENGINEER Michael Janzen No. 44788 Exp. 03-31-08 CIVIL STATE OF CALIFORNIA

The State of California or its officers or agents shall not be responsible for the accuracy or completeness of electronic copies of this plan sheet.

To get to the Caltrans web site, go to: http://www.dot.ca.gov

To accompany plans dated 7-13-09

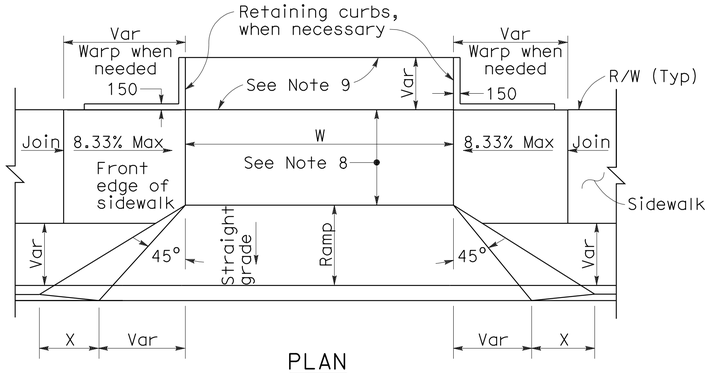

PLAN

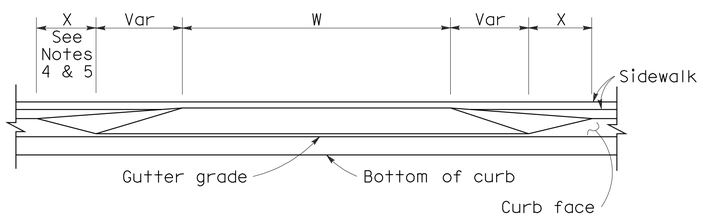

ELEVATION

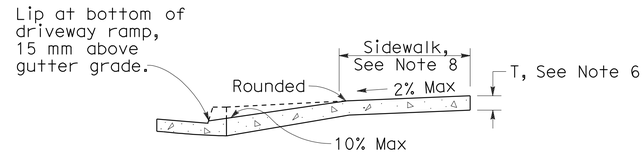

CASE A

Typical driveway, sidewalk not depressed

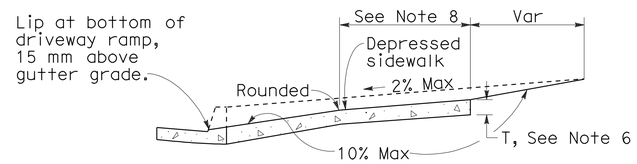

CASE B

Driveway with depressed sidewalk

SECTIONS

DRIVEWAYS

CURB QUANTITIES

TYPE	CUBIC METERS PER METER
A1-150	0.064
A1-200	0.075
A2-150	0.144
A2-200	0.155
A3-150	0.025
A3-200	0.035
B1-100	0.056
B1-150	0.073
B2-100	0.137
B2-150	0.152
B3-100	0.017
B3-150	0.027
B4	0.142
D-100	0.100
D-150	0.162
E	0.161

TABLE A

CURB TYPE	DIMENSIONS "H1"	"H2"	"W1"	"W2"
A1-150	350	150	190	40
A1-200	400	200	200	50
A2-150	300	150	790	40
A2-200	350	200	800	50
A3-150	150	130	185	35
A3-200	200	180	198	48
B1-100	300	100	200	70
B1-150	350	150	230	100
B2-100	250	100	800	70
B2-150	300	150	830	100
B3-100	100	80	185	55
B3-150	150	130	217	87
D-100	250	100	452	322
D-150	300	150	652	522

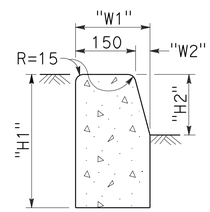

TYPE A1 CURBS

See Table A

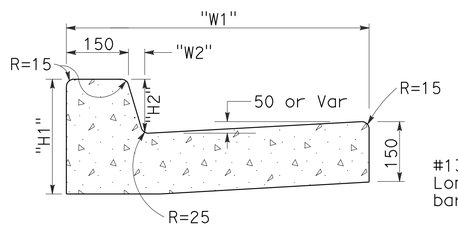

TYPE A2 CURBS

See Table A

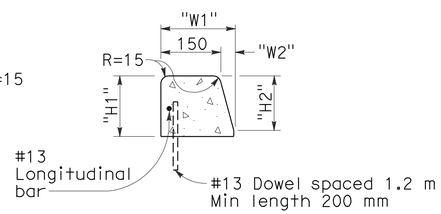

TYPE A3 CURBS

Superimposed on existing pavement
See Table A

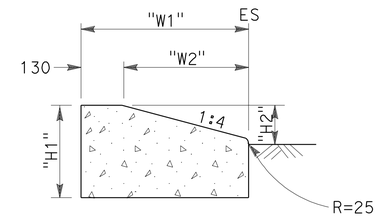

TYPE D CURBS

See Table A

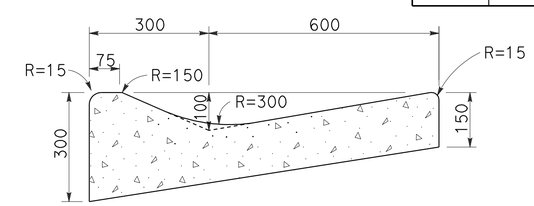

TYPE E CURB

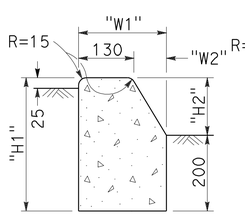

TYPE B1 CURBS

See Table A

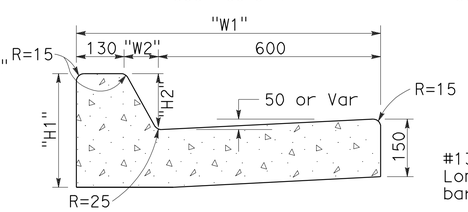

TYPE B2 CURBS

See Table A

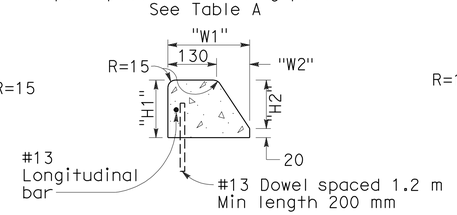

TYPE B3 CURBS

Superimposed on existing pavement
See Table A

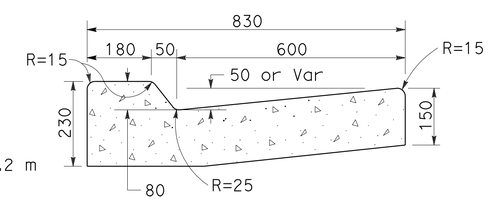

TYPE B4 CURBS

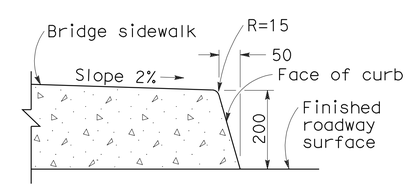

TYPE H CURB

On Bridges

CURBS

NOTES

1. Case A driveway section typically applies.
2. Use Case B driveway section when ramp slopes would exceed 10% in Case A.
3. Use Case B driveway section when sidewalk cross slope would exceed 2% in Case A.
4. X=900 mm except for curb heights over 250 mm where 1:4 slopes shall be used on curb slope.
5. X is a variable when sidewalk is located where wheelchairs may traverse the surface. Slopes shall not exceed 8.33%.
6. Sidewalk and ramp thickness ``T'' at driveway shall be 100 mm for residental and 150 mm for commercial.
7. Difference in slope of the driveway ramp and the slope of a line between the gutter and a point on the roadway 1.5 meters from gutter line shall not exceed 15%. Reduce driveway ramp slope, not gutter slope, where required.
8. Minimum width of clear passageway for sidewalk shall be 1.22 meters.
9. Retaining curbs and acquisition of construction easement may be necessary for narrow sidewalks or curb heights in excess of 150 mm.
10. Across the pedestrian route at curb ramp locations, the gutter pan slope shall not exceed 25 mm of depth for each 600 mm of width.

STATE OF CALIFORNIA
DEPARTMENT OF TRANSPORTATION

CURBS AND DRIVEWAYS

NO SCALE

ALL DIMENSIONS ARE IN MILLIMETERS UNLESS OTHERWISE SHOWN

RSP A87A DATED NOVEMBER 17, 2006 SUPERSEDES STANDARD PLAN A87A DATED JULY 1, 2004-PAGE 115 OF THE STANDARD PLANS BOOK DATED JULY 2004.

REVISED STANDARD PLAN RSP A87A

2004 REVISED Std PLAN RSP A87A

10-25-06

DIST	COUNTY	ROUTE	KILOMETER POST TOTAL PROJECT	SHEET NO.	TOTAL SHEETS
02	Sha	5	R69.4	22	120

REGISTERED CIVIL ENGINEER

December 16, 2005
PLANS APPROVAL DATE

Hector David Cordova No. C41957 Exp. 3-31-06 CIVIL — REGISTERED PROFESSIONAL ENGINEER — STATE OF CALIFORNIA

The State of California or its officers or agents shall not be responsible for the accuracy or completeness of electronic copies of this plan sheet.

To get to the Caltrans web site, go to: http://www.dot.ca.gov

To accompany plans dated 7-13-09

Caltrans Metric

2004 REVISED Std PLAN RSP A88A

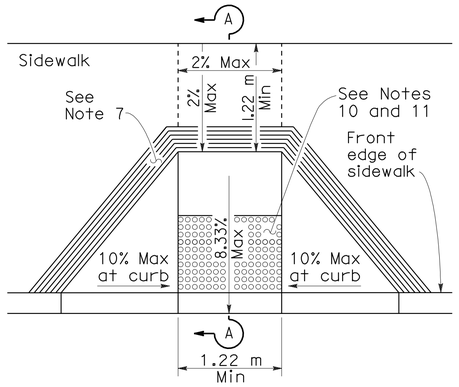

CASE A

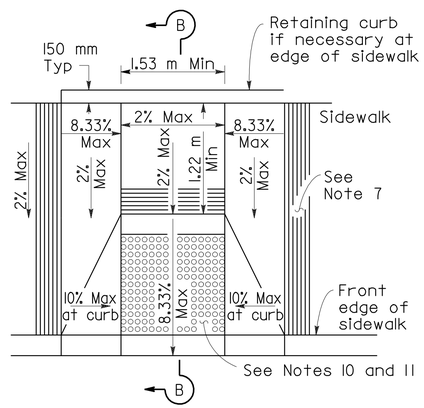

CASE B

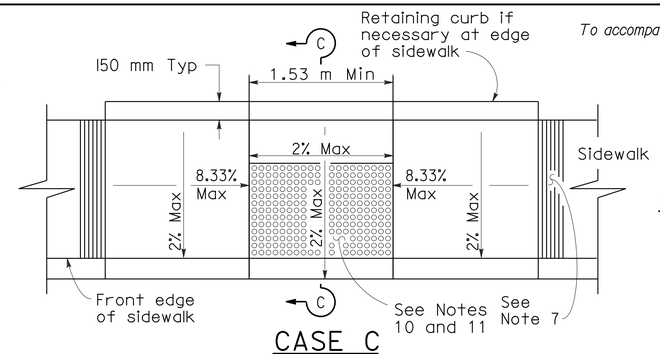

CASE C

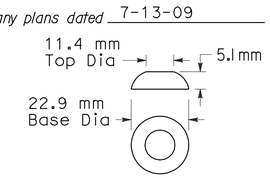

RAISED TRUNCATED DOME

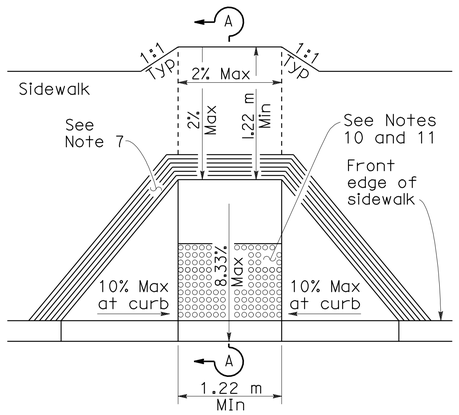

CASE D

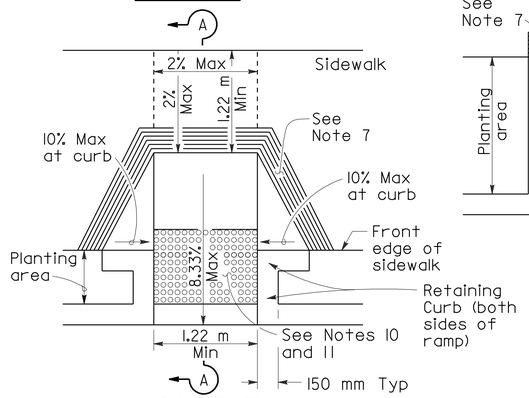

CASE E

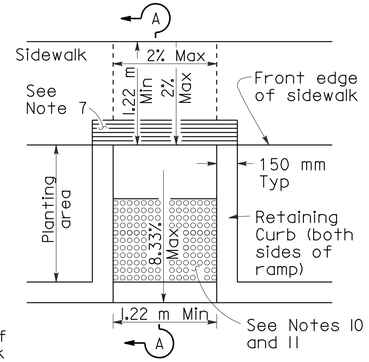

CASE F

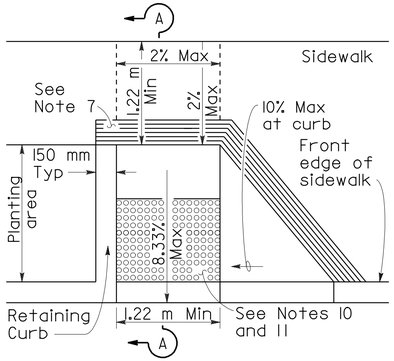

CASE G

See Note 4

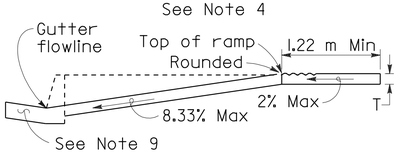

SECTION A-A

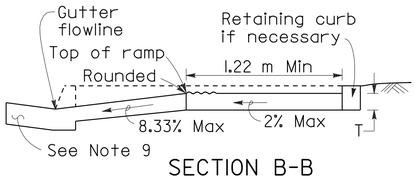

SECTION B-B

Depress entire sidewalk as required

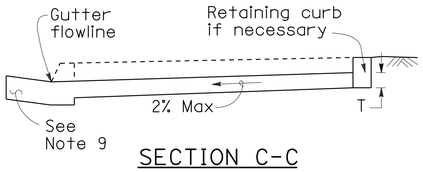

SECTION C-C

NOTES

1. As site conditions dictate, Case A through Case G curb ramps may be used for corner installations similar to those shown in Detail A and Detail B. The case of curb ramps used in Detail A do not have to be the same. Case A through Case G curb ramps also may be used at mid block locations, as site conditions dictate. For Cases B and C, the side of the curb ramp should always be perpendicular to curb face.
2. If distance from curb to back of sidewalk is too short to accommodate ramp and 1.22 m platform (landing) as shown in Case A, the sidewalk may be depressed longitudinally as in Case B, or C or may be widened as in Case D.
3. When ramp is located in center of curb return, crosswalk configuration must be similar to that shown for Detail B.
4. As site conditions dictate, the retaining curb side and the flared side of the Case G ramp shall be constructed in reversed position.
5. If located on a curve, the sides of the ramp need not be parallel, but the minimum width of the ramp shall be 1.22 m.
6. Side slope of ramp flares vary uniformly from a maximum of 10% at curb to conform with longitudinal sidewalk slope adjacent to top of the ramp, except in Case C and Case F.
7. The curb ramp shall be outlined, as shown, with a 305 mm wide border with 6 mm grooves approximately 19 mm on center. See grooving detail.
8. Transitions from ramps and landings to walks, gutters or streets shall be flush and free of abrupt changes.
9. Maximum slopes of adjoining gutters, the road surface immediately adjacent to the curb ramp, or accessible route shall not exceed 5 percent within 1.22 m of the top and bottom of the curb ramp.
10. Curb ramps shall have a detectable warning surface that extends the full width and 914 mm depth of the ramp. Detectable Warning Surfaces shall conform to the details on this plan and the requirements in the Special Provisions.
11. The edge of the detectable warning surface nearest the street shall be between 150 mm and 205 mm from the gutter flowline.
12. Sidewalk and ramp thickness, "T", shall be 90 mm minimum.
13. Utility pull boxes, manholes, vaults and all other utility facilities within the boundaries of the curb ramp will be relocated or adjusted to grade by the owner prior to, or in conjunction with, curb ramp construction.
14. For retrofit conditions, removal and replacement of curb apron will be at the Contractor's option, unless otherwise shown on project plans.

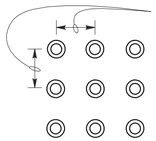

RAISED TRUNCATED DOME PATTERN (IN-LINE)
DETECTABLE WARNING SURFACE
See Note 10

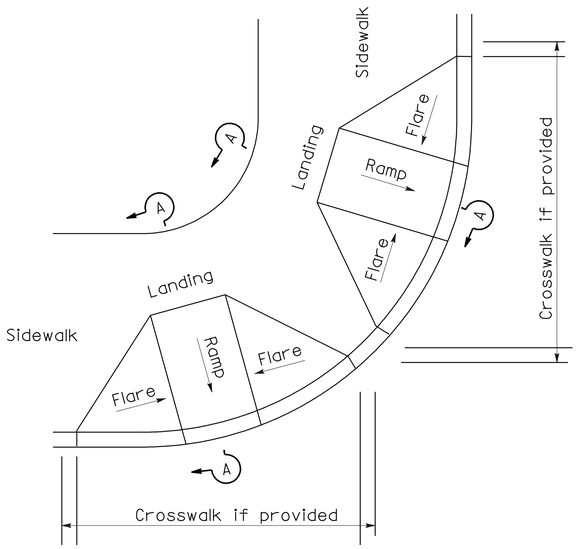

DETAIL A

TYPICAL TWO-RAMP CORNER INSTALLATION
See Note 1

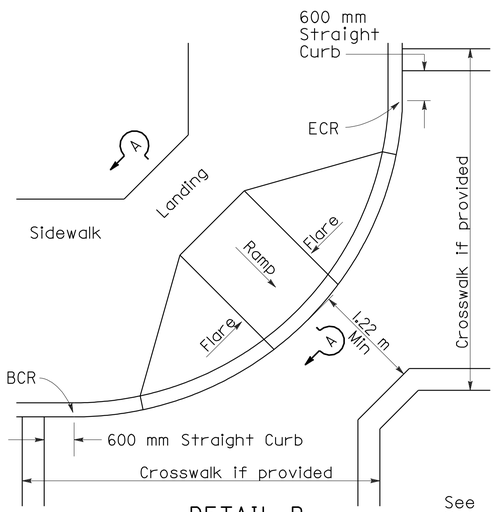

DETAIL B
TYPICAL ONE-RAMP CORNER INSTALLATION
See Notes 1 and 3

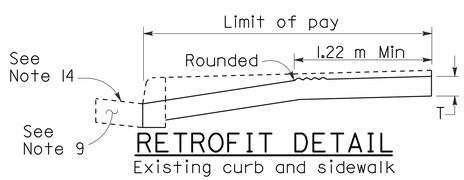

RETROFIT DETAIL
Existing curb and sidewalk

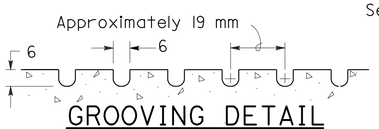

GROOVING DETAIL

STATE OF CALIFORNIA
DEPARTMENT OF TRANSPORTATION

CURB RAMP DETAILS

NO SCALE

ALL DIMENSIONS ARE IN MILLIMETERS UNLESS OTHERWISE SHOWN

RSP A88A DATED DECEMBER 16, 2005 SUPERSEDES STANDARD PLAN A88A DATED JULY 1, 2004-PAGE 117 OF THE STANDARD PLANS BOOK DATED JULY 2004.

REVISED STANDARD PLAN RSP A88A

12-16-05

DIST	COUNTY	ROUTE	KILOMETER POST TOTAL PROJECT	SHEET NO.	TOTAL SHEETS
02	Sha	5	R69.4	23	120

Caltrans Metric

REGISTERED CIVIL ENGINEER

December 16, 2005
PLANS APPROVAL DATE

REGISTERED PROFESSIONAL ENGINEER Hector David Cordova No. C41957 Exp. 3-31-06 CIVIL STATE OF CALIFORNIA

The State of California or its officers or agents shall not be responsible for the accuracy or completeness of electronic copies of this plan sheet.

To get to the Caltrans web site, go to: http://www.dot.ca.gov

To accompany plans dated 7-13-09

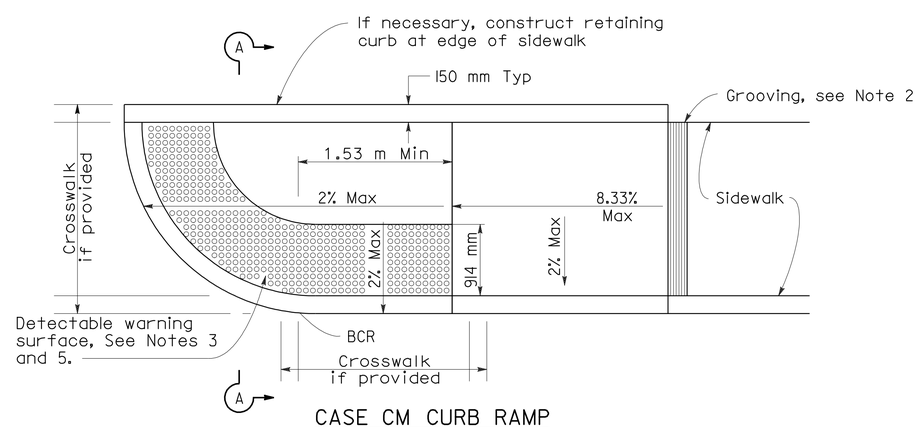

CASE CM CURB RAMP

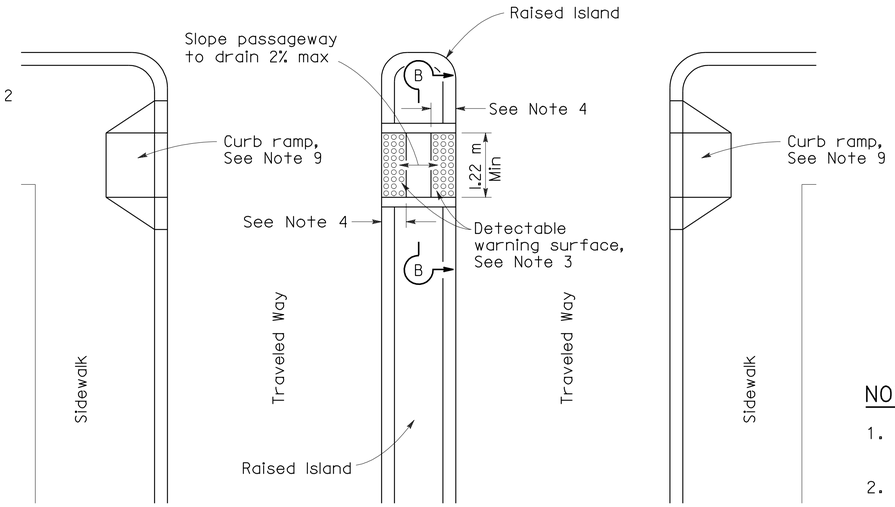

TYPE A PASSAGEWAY

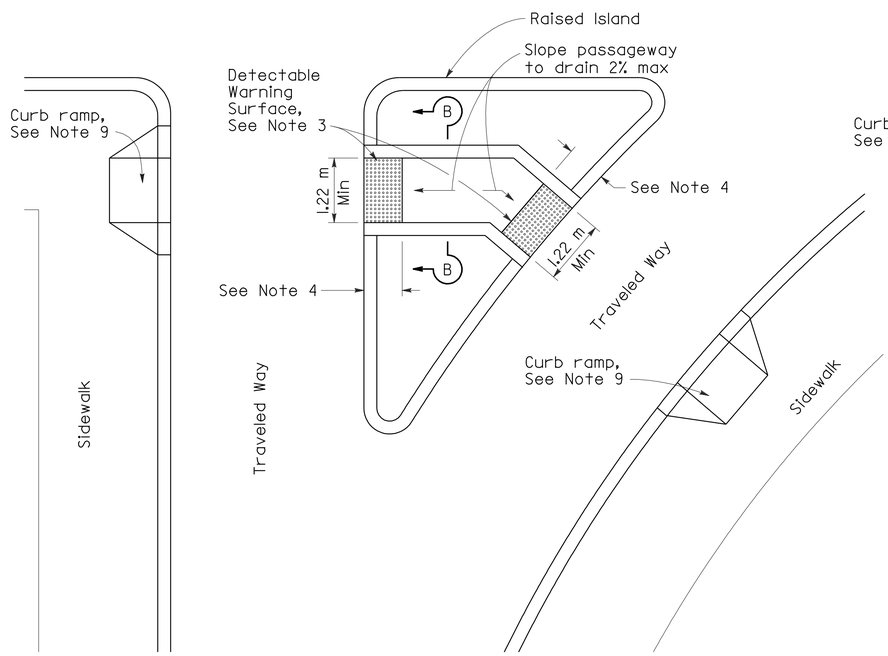

TYPE B PASSAGEWAY

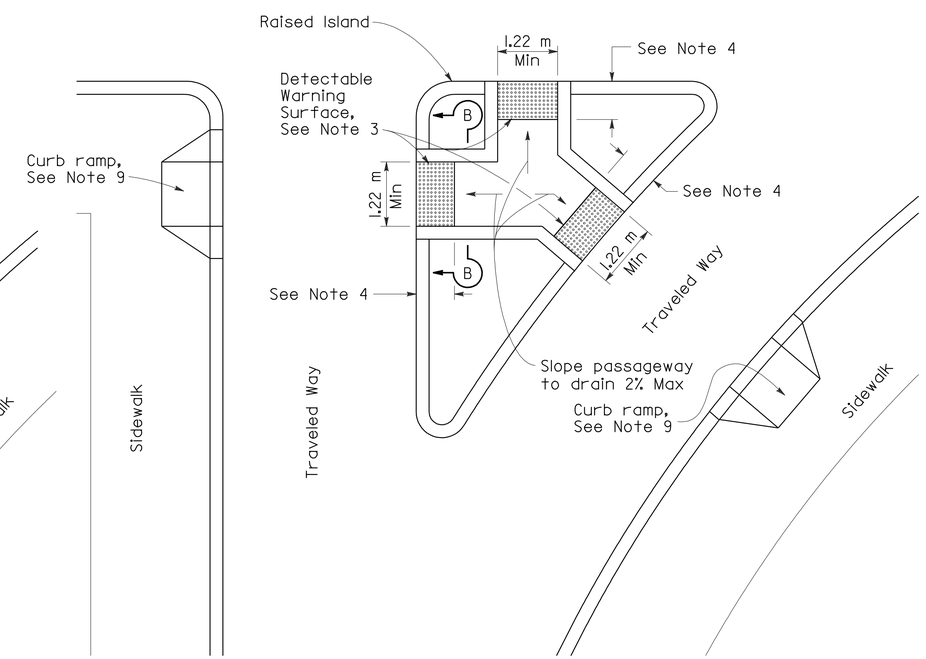

TYPE C PASSAGEWAY

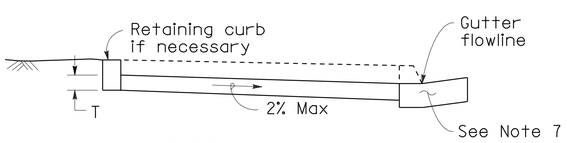

SECTION A-A

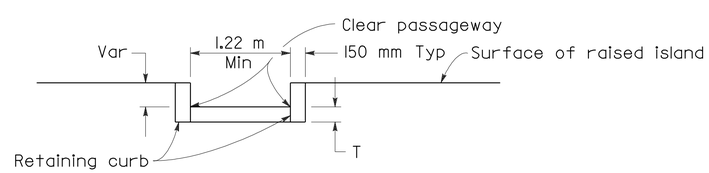

SECTION B-B

NOTES

1. Sidewalk, ramp and passageway thickness, ``T'', shall be 90 mm minimum.
2. For details of grooving used with Case CM curb ramp, see Revised Standard Plan RSP A88A.
3. For details of detectable warning surfaces, see Revised Standard Plan RSP A88A.
4. Where an island passage way length is less than 1.8 m, the detectable warning surface shall extend the full width and full depth of the passage way length. Where an island passage way length is greater than or equal to 1.8 m, but less than 2.44 m, each detectable warning surface shall extend the full width and 600 mm depth of the passage way length. Where an island passage way length is greater than or equal to 2.44 m, each detectable warning surface shall extend the full width and 914 mm depth of the passage way length.
5. For Case CM curb ramp, the edge of the detectable warning surface nearest the street shall be between 150 mm and 205 mm from the gutter flowline.
6. Transitions from ramps to walks, gutters or streets shall be flush and free of abrupt changes.
7. Maximum slopes of adjoining gutters, the road surface immediately adjacent to the curb ramp, or accessible route shall not exceed 5 percent within 1.22 m of the top and bottom of the curb ramp.
8. Utility pull boxes, manholes, vaults and all other utility facilities within the boundaries of the curb ramp will be relocated or adjusted to grade by the owner prior to, or in conjunction with, curb ramp construction.
9. For additional curb ramp details, see Revised Standard Plan RSP A88A.

STATE OF CALIFORNIA
DEPARTMENT OF TRANSPORTATION

CURB RAMP AND ISLAND PASSAGEWAY DETAILS

NO SCALE

ALL DIMENSIONS ARE IN MILLIMETERS UNLESS OTHERWISE SHOWN

RSP A88B DATED DECEMBER 16, 2005 SUPERSEDES STANDARD PLAN A88B DATED JULY 1, 2004-PAGE 118 OF THE STANDARD PLANS BOOK DATED JULY 2004.

REVISED STANDARD PLAN RSP A88B

2004 REVISED Std PLAN RSP A88B

12-16-05

DIST	COUNTY	ROUTE	KILOMETER POST TOTAL PROJECT	SHEET NO.	TOTAL SHEETS
02	Sha	5	R69.4	24	120

Caltrans Metric

LICENSED LANDSCAPE ARCHITECT

March 7, 2008
PLANS APPROVAL DATE

LICENSED LANDSCAPE ARCHITECT Gregory A. Balzer 2576 Signature 02-28-2009 Renewal Date 02-21-08 Date STATE OF CALIFORNIA

The State of California or its officers or agents shall not be responsible for the accuracy or completeness of electronic copies of this plan sheet.

To get to the Caltrans web site, go to: http://www.dot.ca.gov

To accompany plans dated 7-13-09

2004 REVISED Std PLAN RSP H2

EXISTING	PROPOSED	ITEM DESCRIPTION
		WATER METER (WM)
		BACKFLOW PREVENTER ASSEMBLY (BPA)
		BACKFLOW PREVENTER ASSEMBLY IN ENCLOSURE (BPAE)
		BACKFLOW PREVENTER ENCLOSURE (BPE)
		BOOSTER PUMP (BP)
		TRUCK LOADING STANDPIPE (TLS)
fs	FS	FLOW SENSOR (FS)
		MASTER IRRIGATION CONTROLLER (MIC)
		AUXILIARY IRRIGATION CONTROLLER (AIC)
		IRRIGATION CONTROLLER (IC)/ IRRIGATION CONTROLLER (IC) (BATTERY)
		IRRIGATION CONTROLLER(S) IN CONTROLLER ENCLOSURE CABINET (ICC)
		CONTROL AND NEUTRAL CONDUCTORS (CNC)
scc	SCC	SPRINKLER CONTROL CONDUIT (SCC)
		CONDUIT (COND)
		IRRIGATION SLEEVE
dip	DIP	DUCTILE IRON PIPE (SUPPLY LINE) (MAIN) (DIP)
		GALVANIZED STEEL PIPE (SUPPLY LINE) (MAIN) (GSP)
		GALVANIZED STEEL PIPE (SUPPLY LINE) (LATERAL) (GSP)
		PLASTIC PIPE (PR 200) (SUPPLY LINE) (MAIN)
		PLASTIC PIPE (PR 200) (SUPPLY LINE) (LATERAL)
		PLASTIC PIPE (IRRIGATION LINE)
		REMOTE CONTROL VALVE (RCV) REMOTE CONTROL VALVE (MASTER) (RCVM)
		MANUAL CONTROL VALVE (MCV)
		VALVE ASSEMBLY UNIT (VAU)
		WYE STRAINER (WS)
		FILTER ASSEMBLY UNIT (FAU)
		GATE VALVE (GV)
		BALL VALVE (BV)

EXISTING	PROPOSED	ITEM DESCRIPTION
		QUICK COUPLING VALVE (QCV)
		CAM COUPLING ASSEMBLY (CCA)
		PRESSURE REDUCING VALVE (PRV)
		PRESSURE RELIEF VALVE (PRLV)
		FLOW CONTROL VALVE (FCV)
		COMBINATION AIR RELEASE VALVE (CARV)
		CHECK VALVE (CV)
		FLUSH VALVE (FV)
		NOZZLE LINE W/TURNING UNION
		IRRIGATION SYSTEM
		IRRIGATION SYSTEM TO BE REMOVED
		CHAIN LINK GATE
		QUICK COUPLING VALVE W/SPRINKLER PROTECTOR
3	3	SPRINKLER W/SPRINKLER PROTECTOR
		CONNECT TO EXISTING SYSTEM
		CAP
		CAP EXISTING

VALVE CODE

RCV SIZE (mm)
IRRIGATION CONTROLLER
CONTROLLER STATION
VALVE IN PARALLEL (IF APPLICABLE)
L/min
QUANTITY OF SPRINKLERS (WHEN SHOWN)

* 63.5-A-2b-151.4-60

MCV SIZE (mm)
VALVE NUMBER
L/min
QUANTITY OF TYPE SPRINKLERS (WHEN SHOWN)

* 50.8-3-113.5-50

* VALVE CODES FOR EXISTING VALVES ARE SHOWN IN A DASHED ENCLOSURE.

STATE OF CALIFORNIA
DEPARTMENT OF TRANSPORTATION

PLANTING AND IRRIGATION SYMBOLS

NO SCALE

ALL DIMENSIONS ARE IN MILLIMETERS UNLESS OTHERWISE SHOWN

RSP H2 DATED MARCH 7, 2008 SUPERSEDES STANDARD PLAN H2 DATED JULY 1, 2004 - PAGE 202 OF THE STANDARD PLANS BOOK DATED JULY 2004.

REVISED STANDARD PLAN RSP H2

2-20-08

DIST	COUNTY	ROUTE	KILOMETER POST TOTAL PROJECT	SHEET NO.	TOTAL SHEETS
02	Sha	5	R69.4	25	120

Randell D. Hiatt
REGISTERED CIVIL ENGINEER

June 6, 2008
PLANS APPROVAL DATE

REGISTERED PROFESSIONAL ENGINEER
Randell D. Hiatt
No. C50200
Exp. 6-30-09
CIVIL
STATE OF CALIFORNIA

The State of California or its officers or agents shall not be responsible for the accuracy or completeness of electronic copies of this plan sheet.

To get to the Caltrans web site, go to: http://www.dot.ca.gov

To accompany plans dated 7-13-09

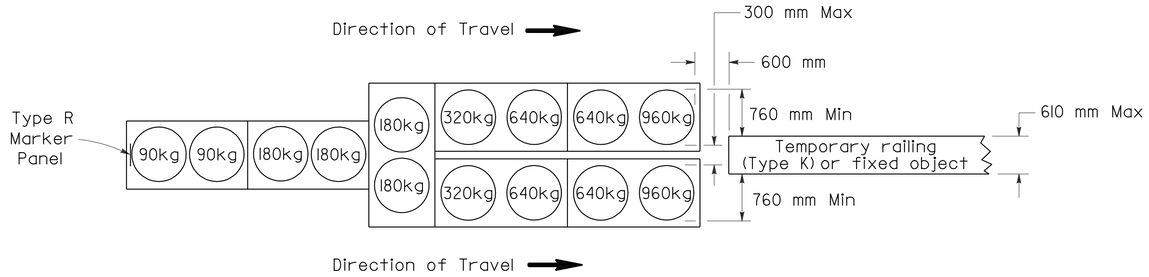

ARRAY 'TU14'

Approach speed 70 km/h or more

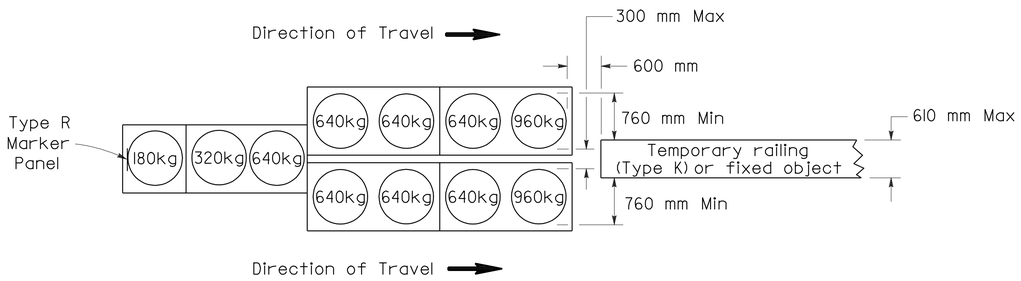

ARRAY 'TU11'

Approach speed less than 70 km/h

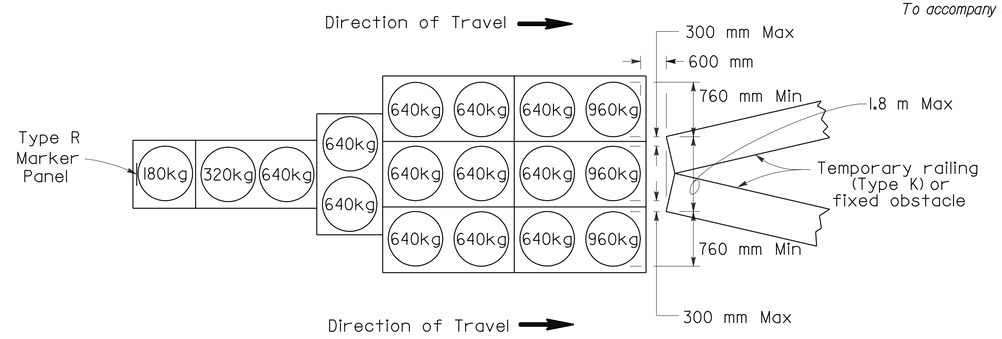

ARRAY 'TU17'

Approach speed less than 70 km/h

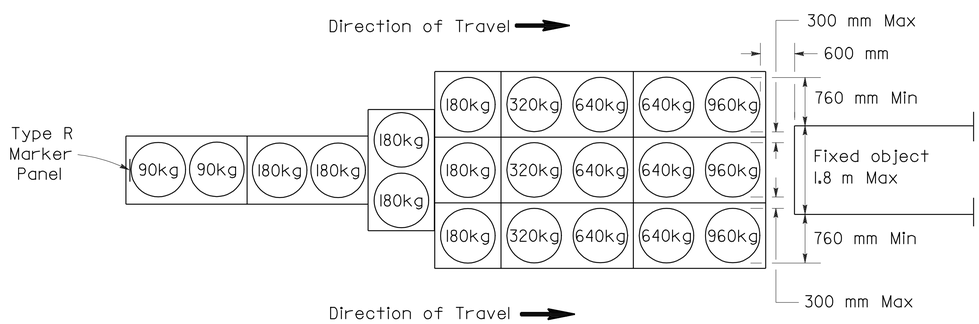

ARRAY 'TU21'

Approach speed 70 km/h or more

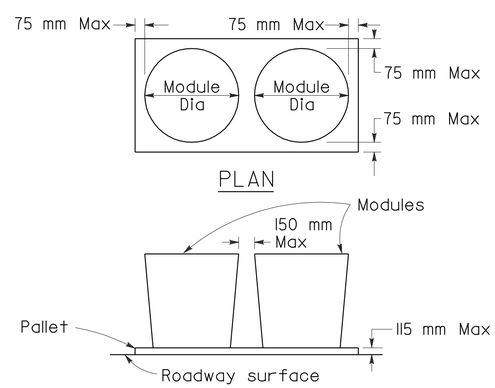

CRASH CUSHION PALLET DETAIL

See Note 7

NOTES

1. (XXX) Indicates sand filled module location and mass of sand in kilograms for each module. Module spacing is based on the greater diameter of the module.
2. All sand masses are nominal.
3. Temporary crash cushion arrays shall not encroach on the traveled way.
4. Place the top of Type R marker panel 25 mm below the module lid.
5. Refer to Standard Plan A73B for marker details.
6. Approach speeds indicated conform to NCHRP 350 Report criteria.
7. Use of Pallets is optional.

STATE OF CALIFORNIA
DEPARTMENT OF TRANSPORTATION

TEMPORARY CRASH CUSHION, SAND FILLED (UNIDIRECTIONAL)

NO SCALE

ALL DIMENSIONS ARE IN MILLIMETERS UNLESS OTHERWISE SHOWN

RSP T1A DATED JUNE 6, 2008 SUPERSEDES STANDARD PLAN T1A
DATED July 1, 2004 - PAGE 211 OF THE STANDARD PLANS BOOK DATED July 2004.

REVISED STANDARD PLAN RSP T1A

2004 REVISED Std PLAN RSP T1A

5-16-08

DIST	COUNTY	ROUTE	KILOMETER POST TOTAL PROJECT	SHEET NO.	TOTAL SHEETS
02	Sha	5	R69.4	26	120

Caltrans Metric

Randell D. Hiatt
REGISTERED CIVIL ENGINEER

June 6, 2008
PLANS APPROVAL DATE

REGISTERED PROFESSIONAL ENGINEER
Randell D. Hiatt
No. C50200
Exp. 6-30-09
CIVIL
STATE OF CALIFORNIA

The State of California or its officers or agents shall not be responsible for the accuracy or completeness of electronic copies of this plan sheet.

To get to the Caltrans web site, go to: http://www.dot.ca.gov

To accompany plans dated 7-13-09

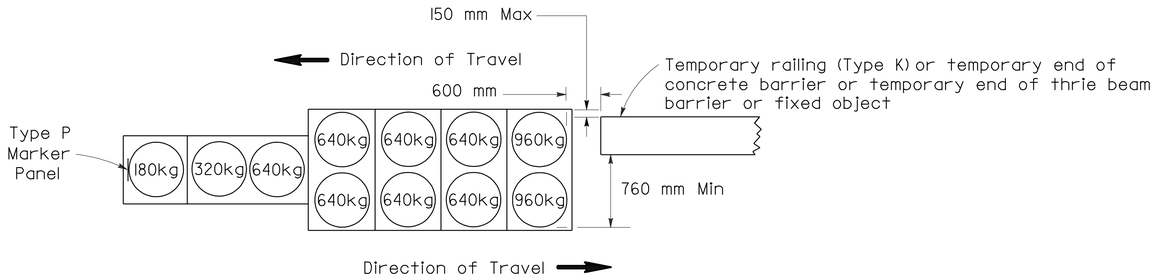

ARRAY 'TBI1'

Approach speed less than 70 km/h

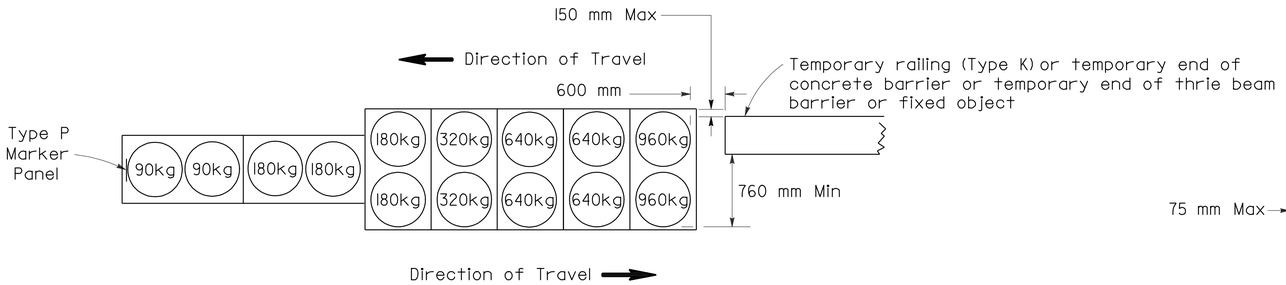

ARRAY 'TBI4'

Approach speed 70 km/h or more

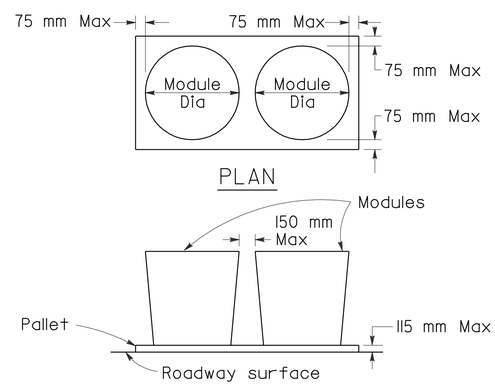

CRASH CUSHION PALLET DETAIL

See Note 7

NOTES

1. (XXX) Indicates sand filled module location and mass of sand in kilograms for each module. Module spacing is based on the greater diameter of the module.
2. All sand masses are nominal.
3. Temporary crash cushion arrays shall not encroach on the traveled way.
4. Place the Type P marker panel so that the bottom of the panel rests upon the pallet.
5. Refer to Standard Plan A73B for marker details.
6. Approach speeds indicated conform to NCHRP 350 Report criteria.
7. Use of Pallets is optional.

STATE OF CALIFORNIA
DEPARTMENT OF TRANSPORTATION

TEMPORARY CRASH CUSHION, SAND FILLED (BIDIRECTIONAL)

NO SCALE

ALL DIMENSIONS ARE IN MILLIMETERS UNLESS OTHERWISE SHOWN

RSP T1B DATED JUNE 6, 2008 SUPERSEDES STANDARD PLAN T1B DATED July 1, 2004 - PAGE 212 OF THE STANDARD PLANS BOOK DATED July 2004.

REVISED STANDARD PLAN RSP T1B

2004 REVISED Std PLAN RSP T1B

5-16-08

DIST	COUNTY	ROUTE	KILOMETER POST TOTAL PROJECT	SHEET NO.	TOTAL SHEETS
02	Sha	5	R69.4	27	120

Caltrans Metric

Randell D. Hiatt
REGISTERED CIVIL ENGINEER

June 6, 2008
PLANS APPROVAL DATE

REGISTERED PROFESSIONAL ENGINEER
Randell D. Hiatt
No. C50200
Exp. 6-30-09
CIVIL
STATE OF CALIFORNIA

The State of California or its officers or agents shall not be responsible for the accuracy or completeness of electronic copies of this plan sheet.

To get to the Caltrans web site, go to: http://www.dot.ca.gov

To accompany plans dated 7-13-09

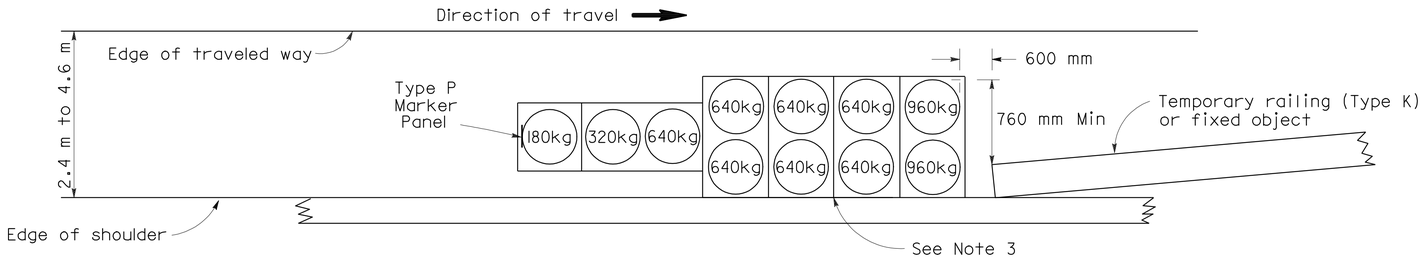

ARRAY 'TSI1'

Approach speed less than 70 km/h
See Note 9

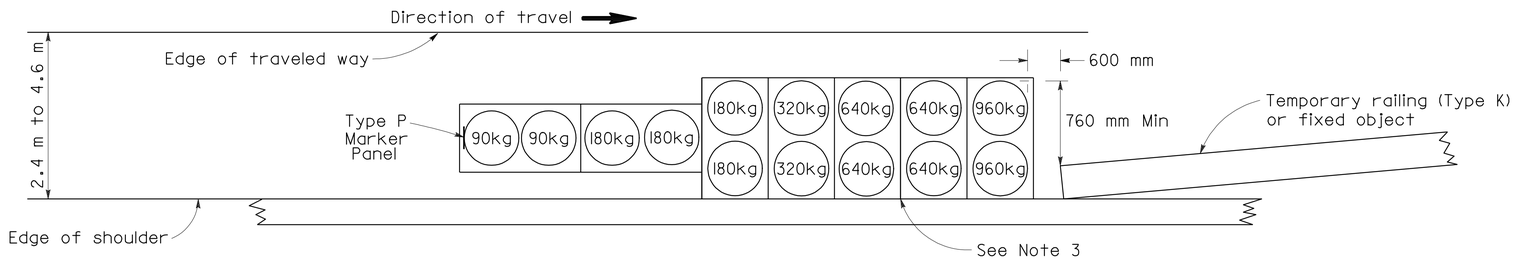

ARRAY 'TSI4'

Approach speed 70 km/h or more
See Note 9

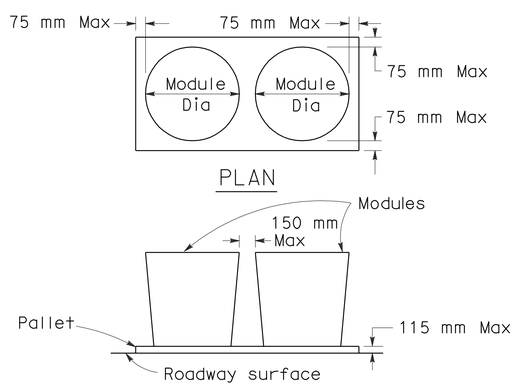

CRASH CUSHION PALLET DETAIL

See Note 11

NOTES

1. (XXX) Indicates sand filled module location and mass of sand in kilograms for each module. Module spacing is based on the greater diameter of the module.
2. All sand masses are nominal.
3. The temporary crash cushion arrays shown on this plan shall be used only in locations where there will be traffic on one side of the temporary crash cushion array.
4. If the fixed object or approach end of the temporary railing is less than 4.60 meters from the edge of traveled way, a temporary crash cushion is required.
5. Temporary crash cushion arrays shall not encroach on the traveled way.
6. Arrays for median shoulders shall conform to details shown on this plan for outside shoulders.
7. Place the Type P marker panel so that the bottom of the panel rest upon the pallet and faces traffic.
8. Refer to Standard Plan A73B for marker details.
9. For shoulder widths less than 2.4 m, appropriate approved crash cushion protection, other than sand filled modules, shall be provided at fixed objects and at approach ends of temporary railing. The specific type of crash cushion shall be as shown on the project plans or as specified in the Special Provisions, or if not shown on the project plans or specified in the Special Provisions, shall be as approved by the Engineer.
10. Approach speeds indicated conform to NCHRP 350 Report criteria.
11. Use of Pallets is optional.

STATE OF CALIFORNIA
DEPARTMENT OF TRANSPORTATION

TEMPORARY CRASH CUSHION, SAND FILLED (SHOULDER INSTALLATIONS)

NO SCALE

ALL DIMENSIONS ARE IN MILLIMETERS UNLESS OTHERWISE SHOWN

RSP T2 DATED JUNE 6, 2008 SUPERSEDES STANDARD PLAN T2
DATED July 1, 2004 - PAGE 213 OF THE STANDARD PLANS BOOK DATED July 2004.

REVISED STANDARD PLAN RSP T2

2004 REVISED Std PLAN RSP T2

5-16-08

To accompany plans dated 7-13-09

Caltrans Metric

DIST	COUNTY	ROUTE	KILOMETER POST TOTAL PROJECT	SHEET NO.	TOTAL SHEETS
02	Sha	5	R69.4	28	120

REGISTERED CIVIL ENGINEER

November 17, 2006
PLANS APPROVAL DATE

REGISTERED PROFESSIONAL ENGINEER Greg W. Edwards No. C36386 Exp. 6-30-08 CIVIL STATE OF CALIFORNIA

The State of California or its officers or agents shall not be responsible for the accuracy or completeness of electronic copies of this plan sheet.

To get to the Caltrans web site, go to: http://www.dot.ca.gov

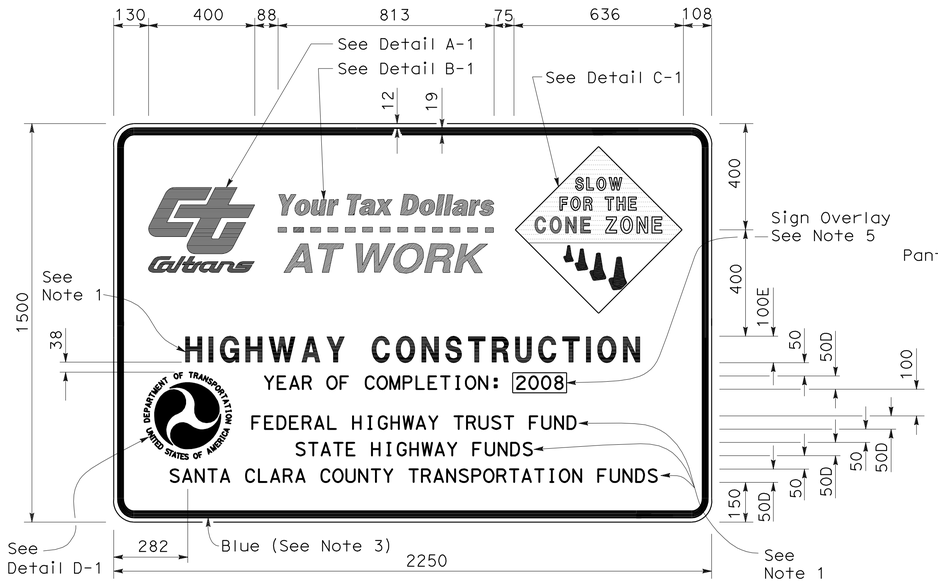

TYPE 1

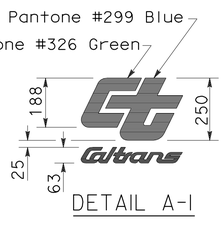

DETAIL A-1

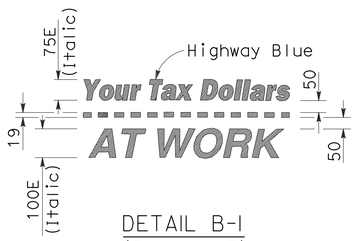

DETAIL B-1
(See Note 3)

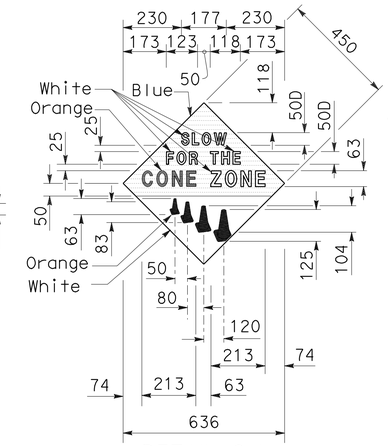

DETAIL C-1
(See Note 4)

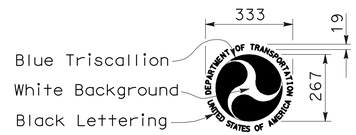

DETAIL D-1
(See Note 6)

NOTES:

1. The sign messages shown for type of project and fund types are examples only. See the Special Provisions for the applicable type of project and fund type messages to be used.
2. Except as otherwise shown, the legend of sign shall be black on a white background (non-reflective).
3. The border of the signs and details "B-1" and "B-2" shall be blue (non-reflective).
4. The diamond in details "C-1" and "C-2" shall be blue for the background of message, " SLOW FOR THE CONE ZONE", and white background for the orange cones. The color and type of font for the "SLOW FOR THE CONE ZONE" message shall be: "SLOW" white D; "FOR THE" white D; "CONE" orange Arial font; "ZONE" white Arial font.
5. Year of completion of project construction shown on the overlay is an example only. See the Special Provisions.
6. Use when the Project involves Federal Highway Trust Fund.

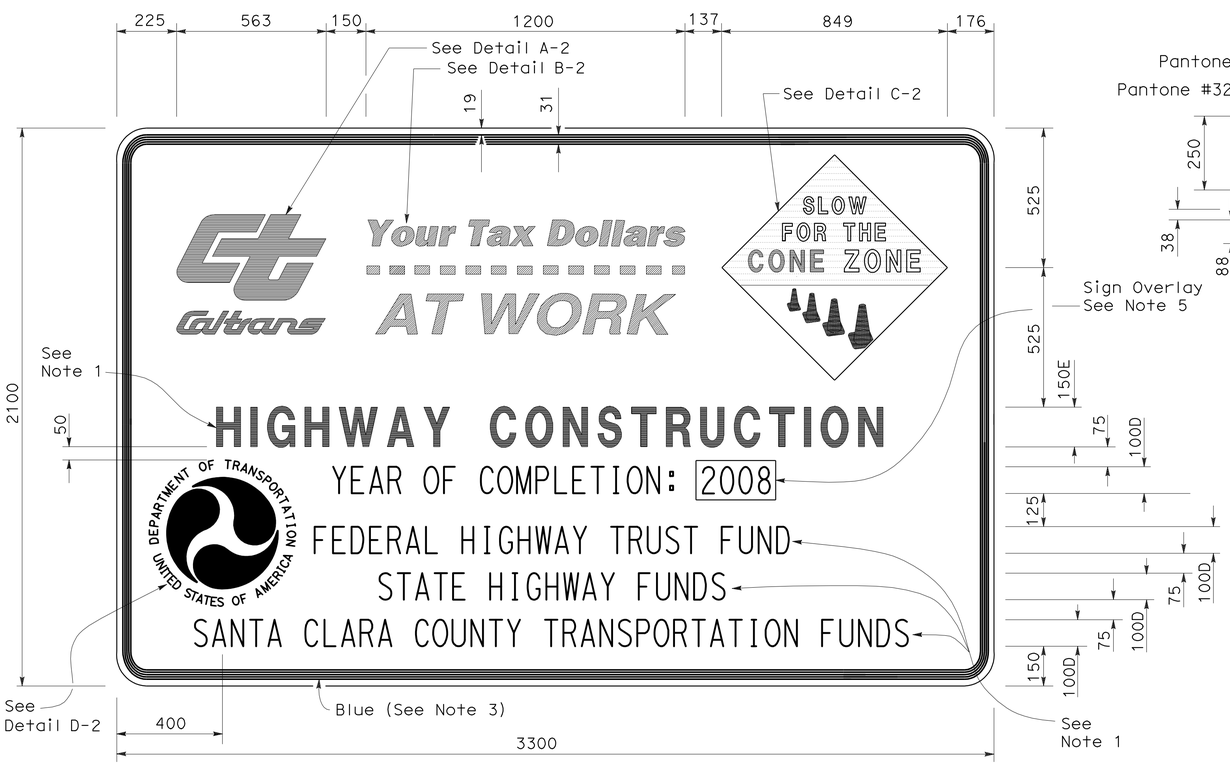

TYPE 2

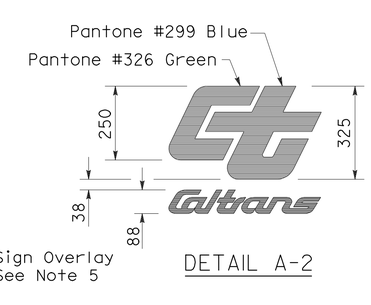

DETAIL A-2

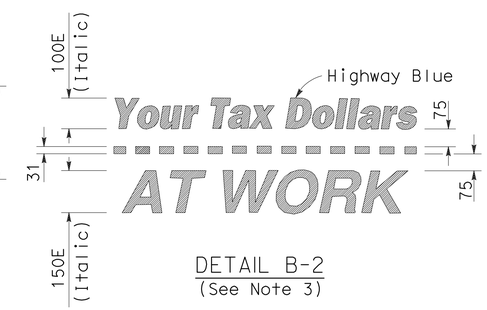

DETAIL B-2
(See Note 3)

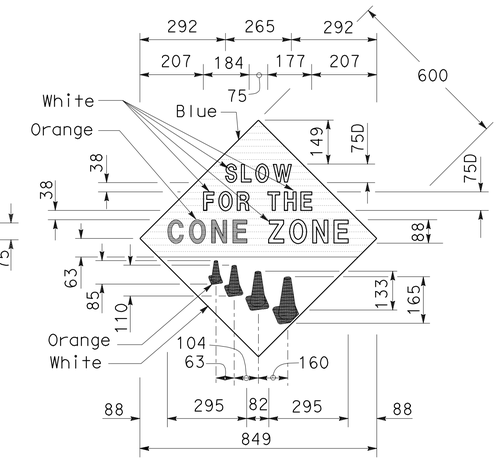

DETAIL C-2
(See Note 4)

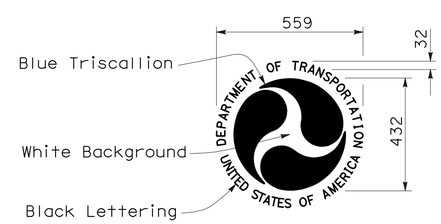

DETAIL D-2
(See Note 6)

STATE OF CALIFORNIA
DEPARTMENT OF TRANSPORTATION

CONSTRUCTION PROJECT FUNDING IDENTIFICATION SIGNS

NO SCALE

ALL DIMENSIONS ARE IN MILLIMETERS UNLESS OTHERWISE SHOWN

RSP T7 DATED NOVEMBER 17, 2006 SUPERSEDES RSP T7 DATED APRIL 28, 2005 AND STANDARD PLAN T7 DATED JULY 1, 2004-PAGE 217 OF THE STANDARD PLANS BOOK DATED JULY 2004.

REVISED STANDARD PLAN RSP T7

2004 REVISED Std PLAN RSP T7

9-7-06

DIST	COUNTY	ROUTE	KILOMETER POST TOTAL PROJECT	SHEET NO.	TOTAL SHEETS
02	Sha	5	R69.4	29	120

REGISTERED ELECTRICAL ENGINEER

October 5, 2007
PLANS APPROVAL DATE

REGISTERED PROFESSIONAL ENGINEER Jeffery G. McRae No. E14512 Exp. 6-30-08 ELECTRICAL STATE OF CALIFORNIA

The State of California or its officers or agents shall not be responsible for the accuracy or completeness of electronic copies of this plan sheet.

To get to the Caltrans web site, go to: http://www.dot.ca.gov

To accompany plans dated 7-13-09

Caltrans Metric

LOOP INSTALLATION PROCEDURE

1. Loops shall be centered in lanes.
2. Saw slots in pavement for loop conductors as shown in details.
3. Distance between side of loop and a lead-in saw cut from adjacent detectors shall be 600 mm minimum. Distance between lead-in saw cuts shall be 150 mm minimum.
4. Bottom of saw slot shall be smooth with no sharp edges.
5. Slots shall be washed until clean, blown out and thoroughly dried before installing loop conductors.
6. Adjacent loops on the same sensor unit channel shall be wound in opposite directions.
7. Identify and tag loop circuit pairs in the pull box with loop number, start (S) and finish (F) of conductor. Identify and tag lead-in-cable with sensor number and phase.
8. Install loop conductor in slot using a 5 mm to 6 mm thick wood paddle. Hold loop conductors with wood paddles (at the bottom of the sawed slot) during sealant placement.
9. No more than 2 twisted pairs shall be installed in one sawed slot.
10. Allow additional 1.5 m of slack length of conductor for the lead-in run to pull box.
11. The additional length of each conductor for each loop shall be twisted together into a pair (6 turns per meter minimum) before being placed in the slot and conduit leading to pull box.
12. Test each loop circuit for continuity, circuit resistance and insulation resistance at the pull box before filling slots.
13. Fill slots as shown in details.
14. Splice loop conductors to lead-in cable. Splices shall be soldered.
15. End of lead-in-cable and Type 2 loop conductor shall be waterproofed prior to installing in conduit to prevent moisture from entering the cable.
16. Lead-in-cable shall not be spliced between the pull box and the controller cabinet terminals.
17. Test each loop circuit for continuity, circuit resistance and insulation resistance at the controller cabinet location.
18. Where loop conductors are not to be spliced to a lead-in-cable, the ends of the conductors shall be taped and waterproofed with electrical insulating coating.

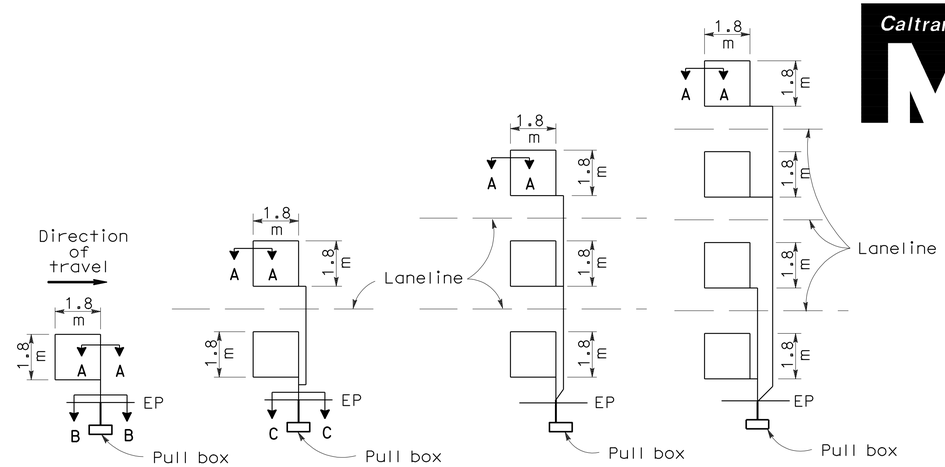

TYPE 1A INSTALLATION | TYPE 2A INSTALLATION | TYPE 3A INSTALLATION | TYPE 4A INSTALLATION

SAWCUT DETAILS

(Type A loop detector configurations illustrated)

1. 1A thru 4A = 1 Type A loop configuration in each lane.
2. 1B thru 4B = 1 Type B loop configuration in each lane.
3. 1C = 1 Type C loop configuration entering lanes as required.
4. 1D thru 4D = 1 Type D loop configuration in each lane.
5. 1E thru 4E = 1 Type E loop configuration in each lane.
6. 1Q thru 4Q = 1 Type Q loop configuration in each lane.
   (Use Type A, B, C, D, E or Q loop detector configurations only when specified or shown on plans)

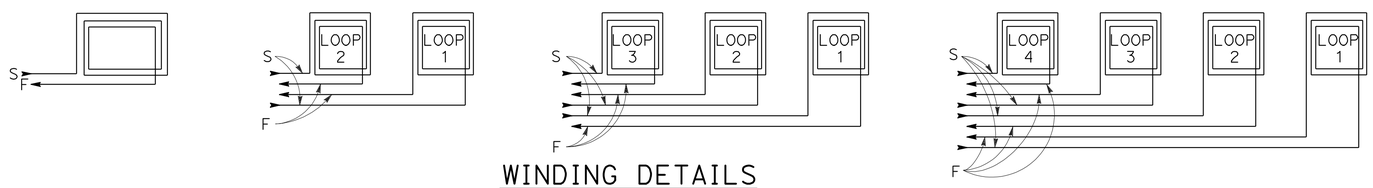

WINDING DETAILS

See Notes 6 and 7

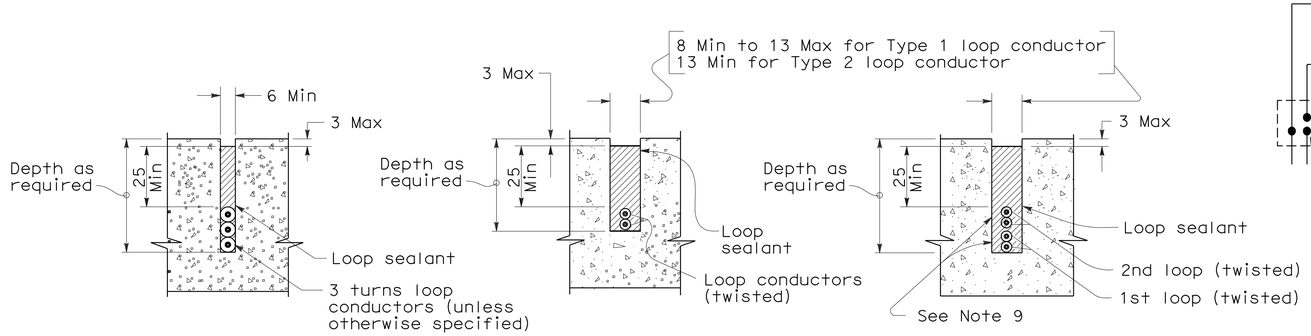

SECTION A-A | SECTION B-B | SECTION C-C

SLOT DETAILS - TYPE 1 AND TYPE 2 LOOP CONDUCTOR

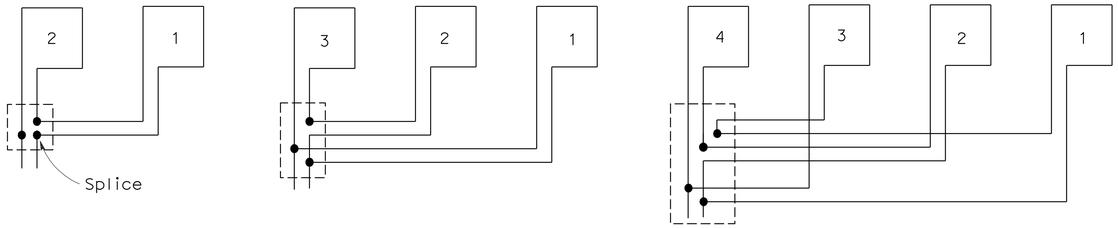

TYPICAL LOOP CONNECTIONS

(Dashed lines represent the pull box)

STATE OF CALIFORNIA
DEPARTMENT OF TRANSPORTATION

ELECTRICAL SYSTEMS (DETECTORS)

NO SCALE

ALL DIMENSIONS ARE IN MILLIMETERS UNLESS OTHERWISE SHOWN

RSP ES-5A DATED OCTOBER 5, 2007 SUPERSEDES STANDARD PLAN ES-5A DATED JULY 1, 2004-PAGE 436 OF THE STANDARD PLANS BOOK DATED JULY 2004.

REVISED STANDARD PLAN RSP ES-5A

2004 REVISED Std PLAN RSP ES-5A

8-9-07

DIST	COUNTY	ROUTE	KILOMETER POST TOTAL PROJECT	SHEET NO.	TOTAL SHEETS
02	Sha	5	R69.4	30	120

Caltrans Metric

REGISTERED ELECTRICAL ENGINEER

October 5, 2007
PLANS APPROVAL DATE

REGISTERED PROFESSIONAL ENGINEER Jeffery G. McRae No. E14512 Exp. 6-30-08 ELECTRICAL STATE OF CALIFORNIA

The State of California or its officers or agents shall not be responsible for the accuracy or completeness of electronic copies of this plan sheet.

To get to the Caltrans web site, go to: http://www.dot.ca.gov

To accompany plans dated 7-13-09

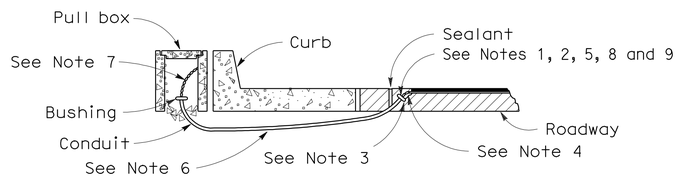

TYPE A
CURB TERMINATION DETAIL

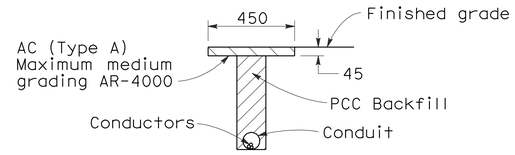

"T" TRENCH DETAIL

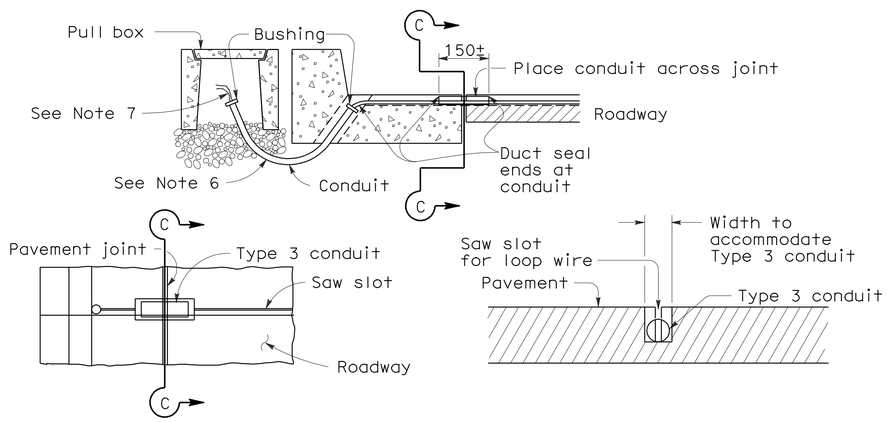

PLAN VIEW

SECTION C-C

TYPE B
CURB TERMINATION DETAILS

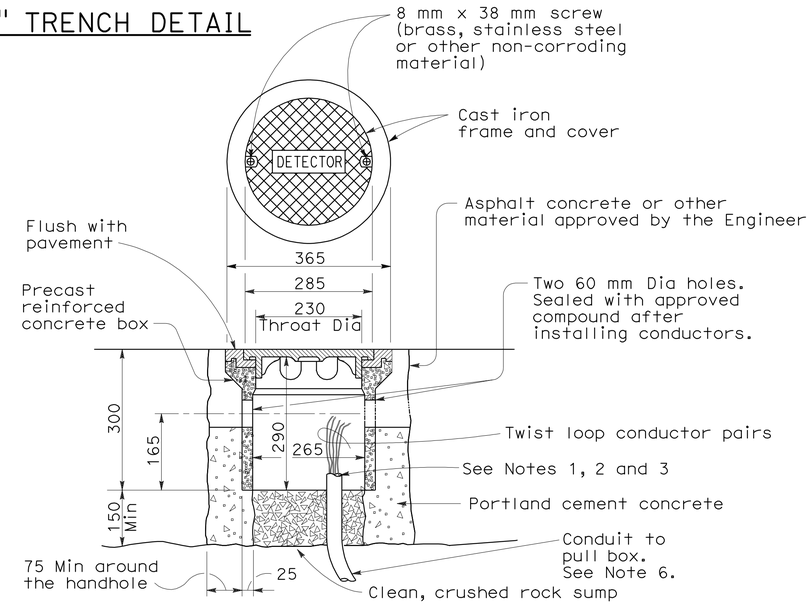

DETECTOR HANDHOLE DETAILS

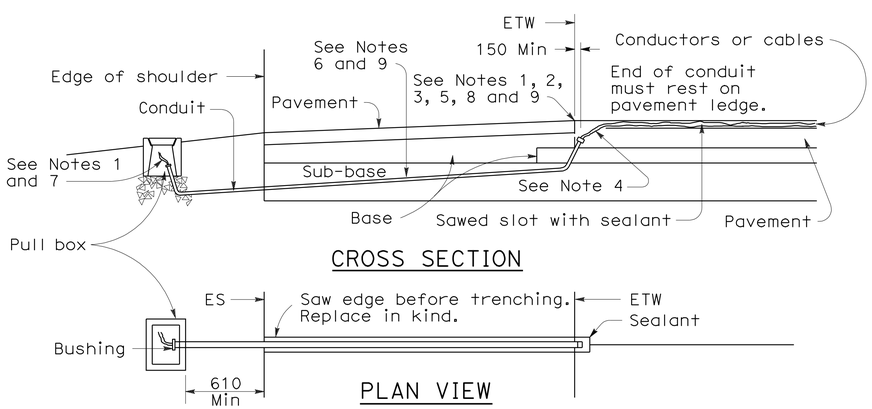

CROSS SECTION

PLAN VIEW

SHOULDER TERMINATION DETAILS

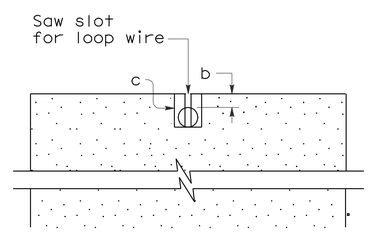

SECTION A-A

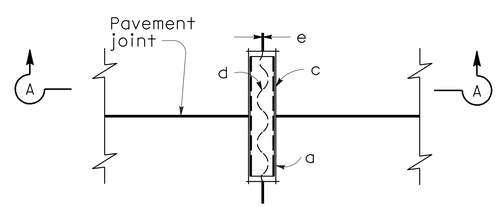

PLAN VIEW

TYPICAL LOOP LEAD-IN DETAILS AT PAVEMENT JOINT

NOTES (This sheet only):

1. Bushing shall be used at end of conduit.
2. Tape detector conductors or cables 75 mm each side of bushings.
3. Install duct seal compound to each end of termination conduit before installing sealant.
4. Round all sharp edges where detector conductors or cables have to pass.
5. End of conduit shall be 80 mm below roadway surface.
6. Conduit size / Loop Conductors
   - 27C Minimum — 1 to 2 pairs
   - 41C Minimum — 3 to 4 pairs
   - 53C Minimum — 5 or more pairs
7. Splice detector conductors or cables to lead-in-cable run to controller cabinet.
8. Location of detector handhole when shown on plans.
9. When the shoulder and traveled way are paved with the same material and there is no joint between them, the conduit shall extend only 600 mm into the shoulder pavement.

NOTES:

a. 21C, Type 3 conduit 150 mm long minimum, plug both ends with caulking compound to keep out sealant.
b. 13 mm minimum between top of conduit and pavement surface.
c. Saw cut shall not exceed 25 mm in width and 3 mm longer than conduit to be installed.
d. Conductors with 13 mm minimum slack inside conduit.
e. Inductive loop detector saw slot.

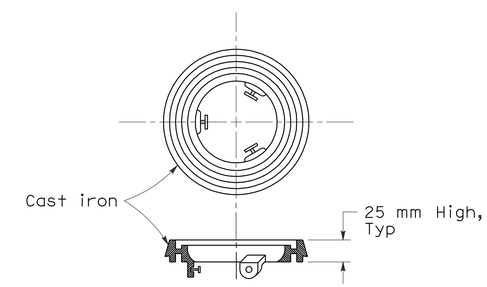

NOTE:
Use for Type A detector handhole on pavement resurfacing only.

LOCKING GRADE RING

STATE OF CALIFORNIA
DEPARTMENT OF TRANSPORTATION

ELECTRICAL SYSTEMS (DETECTORS)

NO SCALE

ALL DIMENSIONS ARE IN
MILLIMETERS UNLESS OTHERWISE SHOWN

RSP ES-5D DATED OCTOBER 5, 2007 SUPERSEDES STANDARD PLAN ES-5D
DATED JULY 1, 2004-PAGE 439 OF THE STANDARD PLANS BOOK DATED JULY 2004.

REVISED STANDARD PLAN RSP ES-5D

2004 REVISED Std PLAN RSP ES-5D

10-1-07

DIST	COUNTY	ROUTE	KILOMETER POST TOTAL PROJECT	SHEET NO.	TOTAL SHEETS
02	Sha	5	R69.4	31	120

REGISTERED CIVIL ENGINEER

October 5, 2007
PLANS APPROVAL DATE

REGISTERED PROFESSIONAL ENGINEER
Stanley P. Johnson
No. C57793
Exp. 03-31-08
CIVIL
STATE OF CALIFORNIA

The State of California or its officers or agents shall not be responsible for the accuracy or completeness of electronic copies of this plan sheet.

To get to the Caltrans web site, go to: http://www.dot.ca.gov

To accompany plans dated 7-13-09

2004 REVISED Std PLAN RSP ES-6A

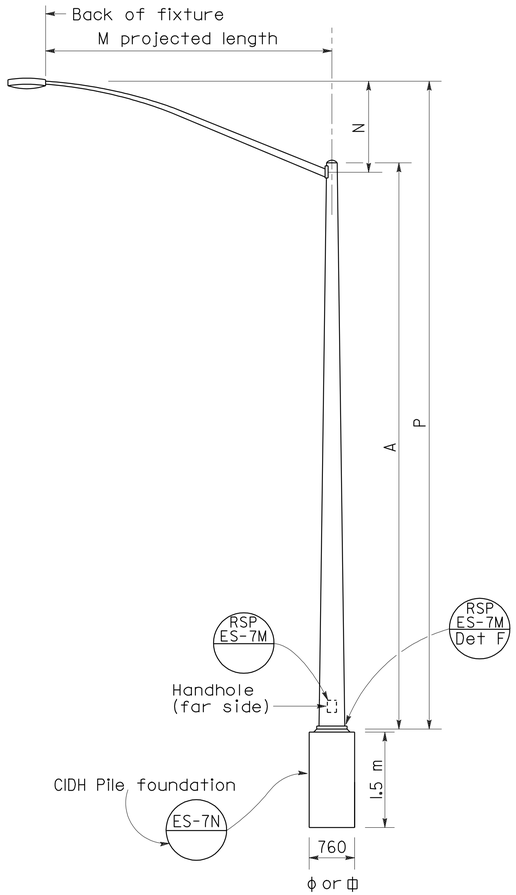

ELEVATION
TYPE 15 AND TYPE 21

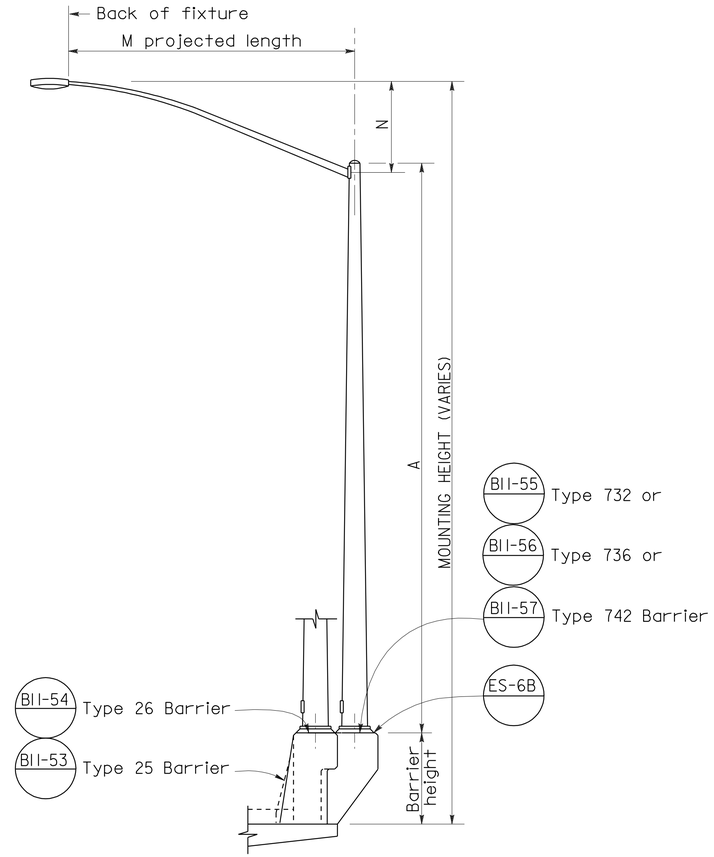

ELEVATION
TYPE 15 AND TYPE 21 BARRIER RAIL MOUNTED

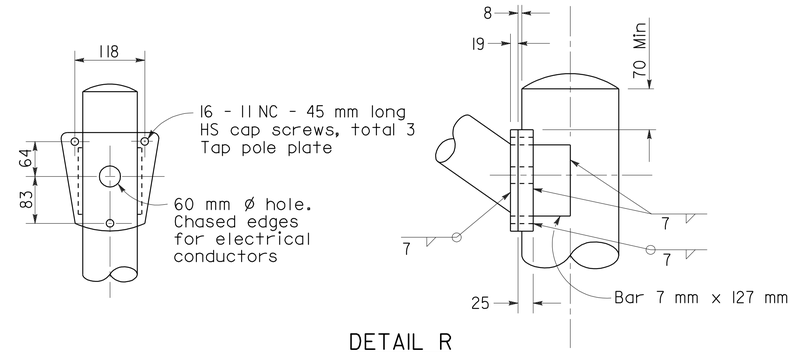

DETAIL R
LUMINAIRE ARM CONNECTION

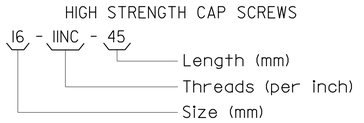

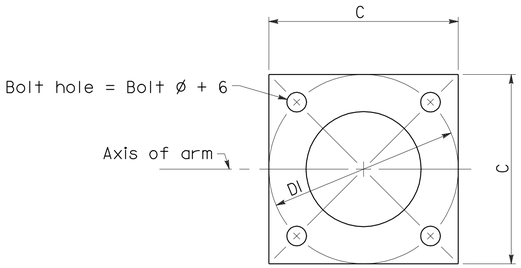

BASE PLATE

POLE TYPE	POLE DATA				BASE PLATE DATA				LUMINAIRE ARM	
	A Height	Min OD Base	Min OD Top	Wall Thickness	C	D1 Bolt Circle	Thick-ness	Anchor Bolts Size		
	m	mm	mm	mm	mm				m	
15	9.1	203	98	3.04	305	305	25	25 ϕ x 915 x 102*	1.8-4.6	3.7
21	10.7	219	98	3.04	305	305	25	See ES-6B	1.8-4.6	3.7

*For barrier rail bolts, see Standard Plan ES-6B.

LUMINAIRE ARM DATA					
M Projected Length	N Rise	Min OD At Pole	Nominal Thickness	P Type 15	P Type 21
m	mm	mm	mm	m	m
1.8	610±	83	3.04	9.5±	11.2±
2.4	760±	89	3.04	9.7±	11.3±
3.1	990±	98	3.04	9.9±	11.5±
3.7	1290±	98	3.04	10.2±	11.8±
4.6	1450±	108	3.04	10.3±	11.9±

NOTES:

1. ☐ Indicates arm length to be used unless otherwise noted on the plans.
2. For Type 15-SB, use Type 15 standard with Type 30 base plate details, see Standard Plan ES-6F.
3. For additional notes, see Revised Standard Plan RSP ES-7M and ES-7N.

STATE OF CALIFORNIA
DEPARTMENT OF TRANSPORTATION

ELECTRICAL SYSTEMS (LIGHTING STANDARD TYPES 15 AND 21)

NO SCALE

ALL DIMENSIONS ARE IN MILLIMETERS UNLESS OTHERWISE SHOWN

RSP ES-6A DATED OCTOBER 5, 2007 SUPERSEDES STANDARD PLAN ES-6A DATED JULY 1, 2004-PAGE 440 OF THE STANDARD PLANS BOOK DATED JULY 2004.

REVISED STANDARD PLAN RSP ES-6A

6-20-07

DIST.	COUNTY	ROUTE	KILOMETER POST TOTAL PROJECT	SHEET NO.	TOTAL SHEETS
02	Sha	5	R69.4	32	120

Donald E. Alsey
LICENSED ARCHITECT

LICENSED ARCHITECT
DONALD E. ALSEY
No. C-26676
Exp. 07-31-11
STATE OF CALIFORNIA

7-13-09
PLANS APPROVAL DATE

The State of California or its officers or agents shall not be responsible for the accuracy or completeness of electronic copies of this plan sheet.

ALL DIMENSIONS ARE IN MILLIMETERS UNLESS NOTED OTHERWISE.

CALIFORNIA STATE FIRE MARSHAL APPROVED
Approval of this plan does not authorize or approve any omission or deviation from applicable regulations. Final approval is subject to field inspection. One set of approved plans shall be available on the project site at all times.
Reviewed by: MIKE TANAKA
Approval date: 4/9/2009
CSFM FILE NO. 01-45-11-0067

IDENTIFICATION STAMP
DIV. OF THE STATE ARCHITECT
SACRAMENTO REGIONAL OFFICE
02-108545
AC Antonio Florendo
ANTONIO FLORENDO
DATE 3-8-2007

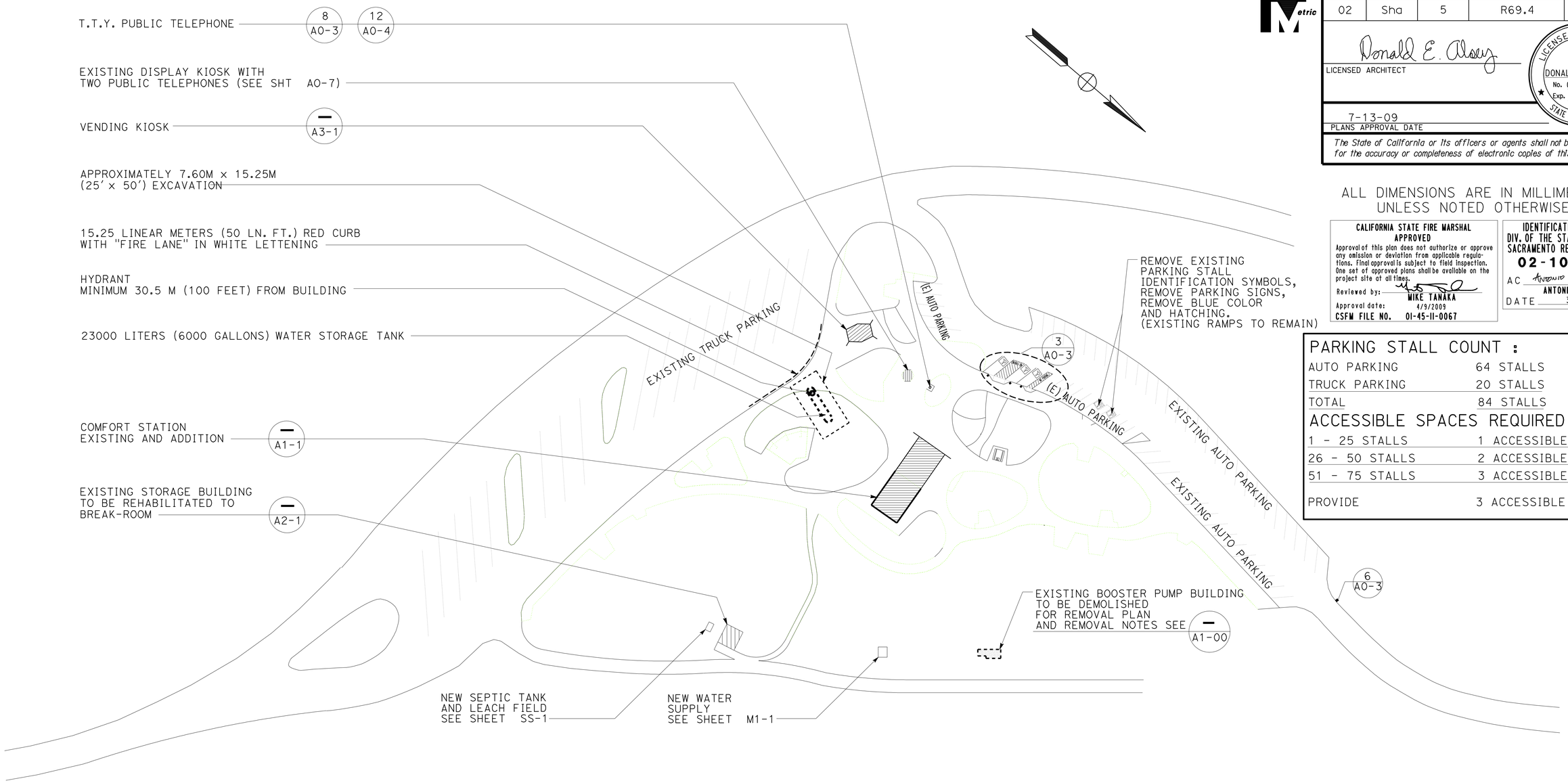

PARKING STALL COUNT :	
AUTO PARKING	64 STALLS
TRUCK PARKING	20 STALLS
TOTAL	84 STALLS
ACCESSIBLE SPACES REQUIRED :	
1 - 25 STALLS	1 ACCESSIBLE STALL
26 - 50 STALLS	2 ACCESSIBLE STALLS
51 - 75 STALLS	3 ACCESSIBLE STALLS
PROVIDE	3 ACCESSIBLE STALLS

S I T E P L A N

FOR PATH OF TRAVEL SEE SHEET A0-7

SCALE 1:500

ROBERT E. TRAVIS RE Travis
DESIGN SUPERVISOR
DONALD E. ALSEY Donald E. Alsey
DESIGN ARCHITECT

DESIGNER MIKE AGHEKIAN
DRAWN BY MIKE AGHEKIAN
CHECKED BY:
STRUCTURAL REVIEW

SHEET LEGEND
A-1 ARCHITECTURAL ST-1 STRUCTURAL
M-1 MECHANICAL EE-1 ELECTRICAL
W-1 WATER SUPPLY SS-1 SANITARY

STATE OF CALIFORNIA
DEPARTMENT OF TRANSPORTATION

DIVISION OF STRUCTURES
ARCHITECTURAL DESIGN

BRIDGE NO. 06R0001
KM POST R69.4

LAKEHEAD, SAFETY ROADSIDE REST AREA UPGRADE AND ADDITION
GENERAL PLAN

SHEET **GP**

DS OSD 2180 (08/92)
FILE => A-GP.dgn
DATE PLOTTED => 28-JUL-2009 TIME PLOTTED => 14:37

ORIGINAL SCALE IN MILLIMETERS FOR REDUCED PLANS 0 10 20 30 40 50 60 70 80 90 100

CU 02-305
EA 02-395801

EARLIER REVISION DATES → REVISION DATES (PRELIMINARY STAGE ONLY) 9-1-06 10-2-06 12-1-06 2-23-07 1-20-09 3-30-09

X OF XX

FILE => A-GP.dgn

USERNAME => trlenard DATE PLOTTED => 28-JUL-2009 TIME PLOTTED => 14:37

ARCHITECTURAL ABBREVIATIONS

&	AND
∟	ANGLE
℄	CENTER LINE
Ø	DIAMETER OR ROUND
□	SQUARE
d	PENNY
°	DEGREE
A/C	AIR CONDITIONING
AC	ASPHALT CONCRETE
AB	ANCHOR BOLT
ABV	ABOVE
ACOUS	ACOUSTICAL
ADA	AMERICANS WITH DISABILITIES ACT
ADJ	ADJUSTABLE
ALT	ALTERNATE
ALUM	ALUMINUM
APA	AMERICAN PLYWOOD ASSOCIATION
ARCH	ARCHITECTURAL, ARCHITECT
ASPH	ASPHALT
BD	BOARD
BIT	BITUMINOUS
BLDG	BUILDING
BLK	BLOCK
BLKG	BLOCKING
BM	BEAM
BN	BOUNDARY NAILING
BOT	BOTTOM
BR	BRIDGE
BTWN	BETWEEN
BUR	BUILT-UP-ROOFING
CJ	CONTROL JOINT
CL	CHAIN LINK
CAB	CABINET
CB	CATCH BASIN
CEM	CEMENT
CER	CERAMIC
CIP	CAST IN PLACE
CKBD	CHALKBOARD
CLG	CEILING
CMU	CONCRETE MASONRY UNIT
CLO	CLOSET
CLR	CLEAR
COL	COLUMN
CONC	CONCRETE
CONN	CONNECTION
CONST	CONSTRUCTION
CONT	CONTINUOUS
CORR	CORRIDOR
CPT	CARPET
CT	CERAMIC TILE
CTR	CENTER
CTSK	COUNTERSUNK
CY	CUBIC YARD
DBL	DOUBLE
DEPT	DEPARTMENT
DET	DETAIL
DF	DOUGLAS FIR
DIA	DIAMETER
DIM	DIMENSION
DN	DOWN
DP	DEEP
DR	DOOR
DS	DOWNSPOUT
DWG	DRAWING
DWR	DRAWER
(E)	EXISTING
E	EAST
EA	EACH
EHD	ELECTRIC HAND DRYER
EJ	EXPANSION JOINT
EL	ELEVATION (HEIGHT)
ELECT	ELECTRICAL
ELEV	ELEVATION (VIEW)
ELVR	ELEVATOR
EMER	EMERGENCY
ENCL	ENCLOSURE
EQ	EQUAL
EPB	ELECTRICAL PANELBOARD
EQUIP	EQUIPMENT
ESCL	ESCALATOR
EWC	ELECTRIC WATER COOLER
EXP	EXPANSION
EXPO	EXPOSED, EXPOSURE
EXT	EXTERIOR
FD	FLOOR DRAIN
FDN	FOUNDATION
FE	FIRE EXTINGUISHER
FEC	FIRE EXTINGUISHER CABINET
FG	FINISH GRADE
FH	FIRE HYDRANT
FHC	FIRE HOSE CABINET
FHMS	FLATHEAD METAL SCREW
FHWS	FLATHEAD WOOD SCREW
FIN	FINISH
FJ	FLOOR JOIST
FLASH	FLASHING
FLR	FLOOR
FLUOR	FLUORESCENT
FOC	FACE OF CONCRETE
FOF	FACE OF FINISH
FOM	FACE OF MASONRY
FOS	FACE OF STUD
FRP	FIBERGLASS REINFORCED PANEL
FT	FEET, FOOT
FTG	FOOTING
FURR	FURRING
FWY	FREEWAY
GA	GAUGE
GAL	GALLON
GALV	GALVANIZED
GB	GRAB BAR
GI	GALVANIZED IRON
GL	GLASS
GLM	GLUE LAMINATED MEMBER
GLZ	GLAZING
GR	GRADE
GSM	GALVANIZED SHEET METAL
GYBD	GYPSUM BOARD
GYP SHTG	GYPSUM SHEATHING
HB	HOSE BIB
HC	HOLLOW CORE
HD	HEAD, HOLD DOWN
HDR	HEADER
HDWD	HARDWOOD
HDWR	HARDWARE
HEX	HEXAGONAL
HF	HEMLOCK-FIR
HGR	HANGER
HM	HOLLOW METAL
HORIZ	HORIZONTAL
HP	HIGH POINT
HR	HOUR
HSB	HIGH STRENGTH BOLT
HT	HEIGHT
HVAC	HEATING, VENTILATING, AIR CONDITIONING
HWY	HIGHWAY
ID	INSIDE DIAMETER
IN	INCH
INSUL	INSULATION
INT	INTERIOR
JAN	JANITOR
JB	JUNCTION BOX
JH	JOIST HANGER
JST	JOIST
JT	JOINT
KIT	KITCHEN
LAB	LABORATORY
LAV	LAVATORY
LBS	POUNDS
LF	LINEAR FEET
LKR	LOCKER
LPG	LIQUIFIED PETROLEUM GAS
LS	LAG SCREW
M	METER
MAT	MATERIAL
MAX	MAXIMUM
MB	MACHINE BOLT
MBR	MEMBER
MECH	MECHANICAL
MEMB	MEMBRANE
MET	METAL
MFR	MANUFACTURER
MH	MAN HOLE
MIN	MINIMUM
MIR	MIRROR
MISC	MISCELLANEOUS
MIW	MALLEABLE IRON WASHER
MM	MILLIMETER
MO	MASONRY OPENING
MTD	MOUNTED
MUL	MULLION
N	NORTH
ND	NAPKIN DISPOSAL
NIC	NOT IN CONTRACT
NO	NUMBER
NOM	NOMINAL
NTS	NOT TO SCALE
NA	NOT APPLICABLE
OBSC	OBSCURE
OC	ON CENTER
OD	OUTSIDE DIAMETER
OFF	OFFICE
OH	OPPOSITE HAND
OHD	OVERHEAD
OHWS	OVALHEAD WOOD SCREW
OPNG	OPENING
OPP	OPPOSITE
OPT	OPTION, OPTIONAL
P	PITCH
PB	POST BASE
PC	POST CAP
PCC	PORTLAND CEMENT CONCRETE
PH	PHILLIPS HEAD
PL	PLATE
PLAM	PLASTIC LAMINATE
PLAS	PLASTER
PLWD	PLYWOOD
PMF	PRESSED METAL FRAME
PR	PAIR
PRTN	PARTITION
PT	POINT
PTD	PAPER TOWEL DISPENSER
PTD/R	COMBINATION PTD & WASTE RECEPTACLE
PVC	POLYVINYL CHLORIDE
PWB	PREFABRICATED WOOD I BEAM
QT	QUARRY TILE
(R)	RELOCATED
R	RADIUS, RISER
R/W	RIGHT OF WAY
RD	ROOF DRAIN
RDWD	REDWOOD
REF	REFERENCE
REFG	REFRIGERATOR
REINF	REINFORCED(ING)
REQ	REQUIRED
RFG	ROOFING
RFSWN	ROUGHSAWN
RH	ROUND HEAD
RHWS	ROUNDHEAD WOOD SCREW
RJ	ROOF JOIST
RM	ROOM
RO	ROUGH OPENING
RSWN	RESAWN
RTE	ROUTE
RWL	RAINWATER LEADER
S	SOUTH
SC	SOLID CORE
SCHED	SCHEDULE
SD	SOAP DISPENSER
SDST	SELF DRILLING SELF TAPPING
SF	SQUARE FEET
SM	SQUARE METER
SH	SHELF
SHWR	SHOWER
SHT	SHEET
SHTG	SHEATHING
SIM	SIMILAR
SMS	SHEET METAL SCREW
SOHD	SECTIONAL OVERHEAD DOOR
SPEC	SPECIFICATION
SPS	STRUCTURAL PLYWOOD SHEATHING
SQ	SQUARE
SRRA	SAFETY ROADSIDE REST AREA
SS	SERVICE SINK
SST	STAINLESS STEEL
STA	STATION
STAG	STAGGER
STD	STANDARD
STL	STEEL
STOR	STORAGE
STRUC	STRUCTURAL
SUSP	SUSPENDED
T	TREAD
T&G	TONGUE & GROOVE
TB	TOLL BOOTH
TEL	TELEPHONE
TEMP	TEMPERED
TER	TERRAZZO
THK	THICK
THLD	THRESHOLD
TJ	TOOLED JOINT
TKBD	TACKBOARD
TN	TOE NAIL
TOC	TOP OF CURB OR CONCRETE
TOP	TOP OF PAVEMENT
TOS	TOE OF SLOPE
TOT	TOTAL
TOW	TOP OF WALL
TS	TUBULAR STEEL
TSCD	TOILET SEAT COVER DISPENSER
TTD	TOILET TISSUE DISPENSER
TYP	TYPICAL
UNF	UNFINISHED
UON	UNLESS OTHERWISE NOTED
UR	URINAL
VAR	VARIES
VCT	VINYL COMPOSITION TILE
VERT	VERTICAL
VEST	VESTIBULE
VR	VENT RISER
VTR	VENT THROUGH ROOF
W	WEST
W/	WITH
W/O	WITHOUT
WC	WATER CLOSET
WD	WOOD
WDW	WINDOW
WH	WATER HEATER
WP	WORKING POINT
WR	WATER RESISTANT
WSCT	WAINSCOT
WT	WEIGHT
WTPR	WATERPROOFING
WWF	WELDED WIRE FABRIC
YD	YARD

WALL LEGEND AND SYMBOL

CONC MASONRY UNIT WALL

(E) TO BE REMOVED

ROOM DESIGNATION AND WALL NUMBER/LETTER FOR INTERIOR ELEVATIONS (A, B, C, D; 102)

DETAIL NUMBER

SHEET NUMBER

DOOR

WINDOW

DIST.	COUNTY	ROUTE	KILOMETER POST TOTAL PROJECT	SHEET NO.	TOTAL SHEETS
02	Sha	5	R69.4	33	120

LICENSED ARCHITECT

7-13-09
PLANS APPROVAL DATE

LICENSED ARCHITECT DONALD E. ALSEY No. C-26676 Exp. 07-31-11 STATE OF CALIFORNIA

The State of California or its officers or agents shall not be responsible for the accuracy or completeness of electronic copies of this plan sheet.

CALIFORNIA STATE FIRE MARSHAL APPROVED
Approval of this plan does not authorize or approve any omission or deviation from applicable regulations. Final approval is subject to field inspection. One set of approved plans shall be available on the project site at all times.
Reviewed by: MIKE TANAKA
Approval date: 4/9/2009
CSFM FILE NO. 01-45-11-0067

IDENTIFICATION STAMP
DIV. OF THE STATE ARCHITECT
SACRAMENTO REGIONAL OFFICE
02-108545
AC ANTONIO FLORENDO
ANTONIO FLORENDO
DATE 3-8-2007

INDEX OF SHEETS

ARCHITECTURAL

TITLE SHEET / COVER SHEET
GP GENERAL PLAN
A0-0 ARCHITECTURAL ABBREVIATIONS, SYMBOLS AND SHEET INDEX
A0-1 FINISH SCHEDULE, GENERAL NOTES AND PROJECT DATA
A0-2 DOOR AND WINDOW SCHEDULE
A0-3 PROJECT SITE ACCESSIBILITY DETAILS
A0-4 ACCESSIBILITY DETAILS
A0-5 BUILDING INTERIOR ACCESSIBILITY, TELEPHONE AND DRINKING FOUNTAIN DETAILS
A0-6 TITLE 24, ENERGY COMPLIANCE FORMS
A0-7 PARTIAL SITE PLAN, PATH OF TRAVEL
A1-00 BOOSTER PUMP BUILDING, REMOVAL PLAN AND REMOVAL NOTES
A1-0 (E) COMFORT BUILDING, REMOVAL PLAN AND REMOVAL NOTES
A1-1 COMFORT BUILDING, FLOOR PLAN
A1-2 COMFORT BUILDING, EXTERIOR ELEVATIONS
A1-3 COMFORT BUILDING, ROOF PLAN
A1-4 COMFORT BUILDING, INTERIOR ELEVATIONS
A2-1 BREAK ROOM, FLOOR PLAN INTERIOR ELEV, ROOF PLAN AND REFLECTED CEILING PLAN
A2-2 BREAK ROOM, WALL AND CEILING DETAILS
A3-1 VENDING KIOSK, FLOOR PLAN, ROOF PLAN, AND WALL CONNECTION DETAIL
A3-2 VENDING KIOSK, EXTERIOR ELEVATIONS
A3-3 VENDING KIOSK, BUILDING SECTIONS, A-A AND B-B
A4-1 COMFORT BUILDING, ROOF DETAILS
A4-2 VENDING KIOSK, ROOF DETAILS
A4-3 TILE INSTALLATION DETAILS
A4-4 DOOR AND WINDOW DETAILS
A4-5 WATER-CLOSET, URINAL AND LAVATORY INFRARED SENSOR ACTIVATED DETAILS
A4-6 PRIVACY SCREEN DETAILS

STRUCTURAL

ST-1 LEGEND
ST-1A WOOD FRAMING STANDARDS - NOTES
ST-1B WOOD FRAMING STANDARDS - DETAILS
ST-2 CONCRETE STANDARD
ST-3 CONCRETE MASONARY UNIT STANDARD
ST1-1 FOUNDATION PLAN
ST1-2 ROOF FRAMING PLAN
ST1-3 BUILDING SECTION
ST1-4 FOUNDATION DETAILS 1 OF 2
ST1-5 FOUNDATION DETAILS 2 OF 2
ST1-6 FRAMING DETAILS 1 OF 2
ST1-7 FRAMING DETAILS 2 OF 2
ST3-1 KIOSK FOUNDATION PLAN
ST3-2 KIOSK ROOF FRAMING PLAN
ST3-3 KIOSK BUILDING SECTION
ST3-4 KIOSK FOUNDATION DETAILS
ST3-5 KIOSK FRAMING DETAILS 1 OF 3
ST3-6 KIOSK FRAMING DETAILS 2 OF 3
ST3-7 KIOSK FRAMING DETAILS 3 OF 3

MECHANICAL

MI-0 ABBREVIATIONS AND LEGEND
MI-1 MECHANICAL SITE PLAN
MI-2 BREAK ROOM MECHANICAL DETAILS
MI-3 EXISTING PLUMBING PLAN
MI-4 MODIFIED WATER PLAN
MI-5 MODIFIED SEWER PLAN
MI-6 EXISTING AND MODIFIED WATER ISOMETRIC
MI-7 EXISTING AND MODIFIED SEWER ISOMETRIC
MI-8 EXISTING MECHANICAL PLAN
MI-9 MODIFIED MECHANICAL PLAN
MI-10 MECHANICAL DETAILS
MI-11 COMFORT STATION / ROUGH-IN DETAILS

ELECTRICAL

EE0-1 LEGEND
EE0-2 EXISTING SITE PLAN
EE0-3 SINGLE LINE DIAGRAM
EE0-4 MODIFIED SITE PLAN
EE1-1 COMFORT STATION, EXISTING POWER AND LIGHTING PLAN
EE1-2 COMFORT STATION, MODIFIED POWER PLAN 1
EE1-3 COMFORT STATION, MODIFIED POWER PLAN 2
EE1-4 COMFORT STATION, MODIFIED POWER PLAN 3
EE1-5 COMFORT STATION, MODIFIED LIGHTING PLAN
EE1-6 COMFORT STATION, CCTV SYSTEM
EE1-7 COMFORT STATION, CCTV SYSTEM BLOCK DIAGRAM
EE1-8 HEATER CONTROL STATION SCHEMATIC DIAGRAM
EE1-9 LIGHTING CONTROL STATION SCHEMATIC DIAGRAM
EE1-10 PANEL SCHEDULES
EE2-1 BREAK ROOM BUILDING, POWER AND LIGHTING PLAN
EE3-1 VENDING KIOSK, POWER AND LIGHTING PLAN
EE4-1 WATER SYSTEM PLAN
EE4-2 WATER SYSTEM CONTROL SCHEMATIC DIAGRAM
EE4-3 WATER SYSTEM CONTROL STATION

SANITARY

W-0 NOTES, LEGEND AND ABBREVIATIONS
W-1 MODIFIED SITE PLAN
W-2 WATER SYSTEM REMOVAL PLAN
W-3 WATER SYSTEM PLAN
W-4 PRESSURE TANK DETAILS
W-5 STORAGE TANK DETAILS
W-6 DETAILS
W-7 BOOSTER PUMP PLAN AND DETAILS
W-8 WATER STORAGE TANK
SS-0 NOTES, LEGEND AND ABBREVIATIONS
SS-1 MODIFIED SITE PLAN
SS-2 SEPTIC TANK
SS-3 DETAILS

DESIGN	BY MIKE AGHEKIAN	CHECKED
DETAILS	BY MIKE AGHEKIAN	CHECKED
QUANTITIES	BY	CHECKED

STATE OF CALIFORNIA
DEPARTMENT OF TRANSPORTATION

DIVISION OF ENGINEERING SERVICES
ARCHITECTURAL AND STRUCTURAL DESIGN

BRIDGE NO. 06R0001
KM POST R69.4

LAKEHEAD SAFETY ROADSIDE REST AREA UPGRADE AND ADDITION
ARCHITECTURAL ABBREVIATIONS SYMBOLS AND SHEET INDEX

SHEET **A0-0**

A0-0.dgn
DS OSD metric Rev. 11/98 28-JUL-2009 14:37

SCALE: ALL DIMENSIONS ARE IN MILLIMETERS UNLESS OTHERWISE NOTED.

ORIGINAL SCALE IN MILLIMETERS FOR REDUCED PLANS 0 10 20 30 40 50 60 70 80 90 100

CU 02-305
EA 02-395801

DISREGARD PRINTS BEARING EARLIER REVISION DATES → 9-1-06 10-2-06 12-1-06 2-23-07

REVISION DATES (PRELIMINARY STAGE ONLY) SHEET OF

28-JUL-2009 14:37
A0-0.dgn

DIST.	COUNTY	ROUTE	KILOMETER POST TOTAL PROJECT	SHEET NO.	TOTAL SHEETS
02	Sha	5	R69.4	34	120

LICENSED ARCHITECT

7-13-09
PLANS APPROVAL DATE

LICENSED ARCHITECT DONALD E. ALSEY No. C-26676 Exp. 07-31-11 STATE OF CALIFORNIA

The State of California or its officers or agents shall not be responsible for the accuracy or completeness of electronic copies of this plan sheet.

ROOM FINISH SCHEDULE

BUILDING NAME	ROOM NUMBER	ROOM NAME	FLOOR: VINYL COMPOSITION TILE	FLOOR: 203x203mm SLIP RESISTANT PORCELAIN TILES	FLOOR: CONC SLAB WITH HARDNER AND SEALER (BROOM FINISH)	FLOOR: EXISTING FLOOR TILE	BASE: 102mm RESILIENT BASE	BASE: EXISTING COVED TILES	BASE: 203x203mm COVED PORCELAIN TILE FLOOR TILE COLOR	WALLS A: GYPSUM BOARD	WALLS A: EXISTING WALL TILES	WALLS A: 203x203mm PORCELAIN TILES (2235 HIGH)	WALLS A: EXPOSED CMU WALL	WALLS B: GYPSUM BOARD	WALLS B: EXISTING WALL TILES	WALLS B: 203x203mm PORCELAIN TILES (2235 HIGH)	WALLS B: EXPOSED CMU WALL	WALLS C: GYPSUM BOARD	WALLS C: EXISTING WALL TILES	WALLS C: 203x203mm PORCELAIN TILES (2235 HIGH)	WALLS C: EXPOSED CMU WALL	WALLS D: GYPSUM BOARD	WALLS D: EXISTING WALL TILES	WALLS D: 203x203mm PORCELAIN TILES (2235 HIGH)	WALLS D: EXPOSED CMU WALL	CEILING: EXPOSED ROOF DECK, BEAM AND FRAMING	CEILING: EXPOSED ROOF DECK AND FRAMING	CEILING: GYPSUM BOARD	CEILING HEIGHT
COMFORT BUILDING	101	MEN'S ROOM		O					O			O				O				O				O		O			SLOPED CEILING
	102	WOMEN'S ROOM		O					O			O				O				O				O		O			
	103	MEN'S ROOM		O					O			O				O				O				O		O			
	104	WOMEN'S ROOM		O					O			O				O				O				O		O			SLOPED CEILING
	105	AUXILIARY RESTROOM		O					O			O				O				O				O		O			
	106	AUXILIARY RESTROOM		O					O			O				O				O				O		O			
	107	STORAGE			O								O				O				O				O				
BREAK ROOM BUILDING	201	CREW BREAK ROOM	O				O			O				O				O				O						O	3048

COLOR/FINISH SCHEDULE AND NOTES

INTERIOR

1	EXPOSED BEAMS	KM 4183-3 GINGERBREAD MAN (MATCH EXISTING)
2	CEILING DECK AND FRAMING	SHERWIN WILLIAMS SW114, CROISSANT
3	DOOR FRAMES	KELLY MOORE "COPPER PENNY" COLOR
4	DOORS	KM 4183-3 GINGERBREAD MAN (MATCH EXISTING)
5	EXISTING AND NEW WINDOWS	KELLY MOORE "FOREST GREEN" COLOR
6	EXPOSED CMU WALLS	ENAMEL PAINT MATCH WITH WALL TILE COLOR
7	AUXILIARY RESTROOM, (SOUTH) COVED BASE AND FLOOR TILES	DALTILE, D452 CYPRESS
8	AUXILIARY RESTROOM, (SOUTH) WALL TILES	DALTILE, D140 SILVER SAGE
9	AUXILIARY RESTROOM, (NORTH) COVED BASE AND FLOOR TILES	DALTILE, D174 MEXICAN SAND
10	AUXILIARY RESTROOM, (NORTH) WALL TILES	DALTILE, D137 CANVAS
11	MEN'S RESTROOMS, COVED BASE AND FLOOR TILES	DALTILE, D452 CYPRESS
12	MEN'S RESTROOMS, WALL TILES	DALTILE, D140 SILVER SAGE
13	WOMEN'S RESTROOMS, COVED BASE AND FLOOR TILES	DALTILE, D174 MEXICAN SAND
14	WOMEN'S RESTROOMS, WALL TILES	DALTILE, D137 CANVAS
15	STORAGE AND UTILITY ROOMS, EXPOSED CONCRETE FLOOR SLAB	SLIP RESISTANT CONCRETE COATING
16	CONCRETE TOILET PARTITIONS (FOR MEN)	MANUFACTURER,S FINISH
17	BAKED ON ENAMEL STEEL TOILET PARTITIONS (FOR WOMEN)	MANUFACTURER,S FINISH
18	BREAK ROOM, GYPSUM BOARD WALLS	KELLY MOORE 344I-1 ANGEL KISS
19	BREAK ROOM, PLASTIC LAMINATE FINISH AT ALL CABINETS FACES AND FIRE EXTINGUISHER CABINET	KELLY MOORE, 3199-3 NAVAJO TURQUOISE
20	BREAK ROOM, FLOOR, VINYL COMPOSITION TILE	ARMSTRONG 52514 JUBILEE WHITE
21	BREAK ROOM WALLS, 102mm RESILIENT BASE	BURKE MERCER, 505 TRUE BLUE
22	STORAGE AND UTILITY ROOM, CONCRETE/SLAB FLOOR	HARDNER AND SEALER (BROOM FINISH)
23	VENDING KIOSK, EXPOSED CMU WALLS	KM 3444-1 MEADOWLAND (MATCH TI-11 SIDING)
24	VENDING KIOSK, DOOR AND DOOR FRAME	MATCH COMFORT BUILDING DOORS AND FRAMES
25	VENDING KIOSK, CEILING GBEAMS AND ROOF FRAMING	KM 4183-3 GINGERBREAD MAN

EXTERIOR

1	EXISTING AND NEW PRIVACY SCREENS	KELLY MOORE, KM4183-3 GINGERBREAD MAN
2	COMFORT BLDG AND BREAK ROOM BLDG, EXISTING CMU WALLS	POWER-WASHED, PATCHED AND REPAIRED
3	COMFORT BUILDING, EXISTING STONE FACING WALLS	POWER-WASHED, PATCHED AND REPAIRED
4	COMFORT AND BREAK ROOM BLDG, DOOR FRAMES	KELLY MOORE "COPPER PENNY" COLOR
5	COMFORT AND BREAK ROOM BLDG, DOORS	KM 4183-3 GINGERBREAD MAN (MATCH EXISTING)
6	COMFORT AND BREAK ROOM BLDG, EXISTING AND NEW WINDOWS	SHERWIN WILLIAMS "FOREST GREEN" COLOR
7	COMFORT AND BREAK ROOM BLDG, EXISTING AND NEW BEAMS AT SOFFIT	KM 4183-3 GINGERBREAD MAN (MATCH EXISTING)
8	COMFORT AND BREAK ROOM BLDG, EXISTING AND NEW EAVE AND RAKE SOFFIT/DECK	SHERWIN WILLIAMS "COPPER PENNY" COLOR
9	COMFORT AND BREAK ROOM BLDG, EXISTING AND NEW FASCIA AND FLASHING	KM 4183-3 GINGERBREAD MAN (MATCH EXISTING)
10	COMFORT BLDG, NEW METAL ROOFING	MATCH EXISTING ROOF
11	DRINKING FOUNTAIN WALL TILES	DALTILE, D178 BOMBAY
12	BREAK ROOM BLDG, EXISTING DOUBLE DOOR AND FRAME	MATCH COMFORT BUILDING DOORS
13	VENDING KIOSK, TI-11 SIDING	KM 3444-1 MEADOWLAND (MATCH EXISTING)
14	VENDING KIOSK, BEAMS AND ROOF FRAMING	KM 4183-3 GINGERBREAD MAN (MATCH EXISTING)
15	VENDING KIOSK, METAL ROOFING	MATCH COMFORT BUILDING ROOF

SCOPE OF WORK

1. REHABILITATION AND ADDTION TO EXISTING COMFORT STATION
2. CONSTRUCT NEW VENDING KIOSK
3. BREAKROOM CONVERSION

DESIGN CRITERIA

THE BUILDING WORK FOR THIS PROJECT HAS BEEN DESIGN TO CONFORM TO THE 2007 EDITION OF TITLE 24, CALIFORNIA CODE OF REGULATIONS:
PART 2 - CALIFORNIA BUILDING CODE 2007,
PART 3 - CALIFORNIA ELECTRICAL CODE 2007,
PART 4 - CALIFORNIA MECHANICAL CODE 2007,
PART 5 - CALIFORNIA PLUMBING CODE 2007,
PART 6 - CALIFORNIS ENERGY CODE 2007,
PART 9 - CALIFORNIA FIRE CODE 2007.
AND THE CURRENT EDITION OF ADA

BUILDING DATA

1 - COMFORT STATION	
OCCUPANCY TYPE	B
CONSTRUCTION TYPE	V-B
NUMBER OF STORIES	1
BUILDING HEIGHT	3962 mm
BUILDING AREA	160 m2
ALLOWABLE AREA	836 m2
AREA INCREASE	N/A
FIRE SPRINKLER	NOT REQUIRED
FIRE ALARM	NOT REQUIRED
FIRE PROTECTION SYSTEM	N/A
SMOKE CONTROL	NOT REQUIRED
OCCUPANT LOAD	17.2
2 - BREAKROOM BUILDING	
OCCUPANCY TYPE	B
CONSTRUCTION TYPE	V-B
NUMBER OF STORIES	1
BUILDING HEIGHT	3000 mm
BUILDING AREA	23.62 m2
ALLOWABLE AREA	836 m2
AREA INCREASE	N/A
FIRE SPRINKLER	NOT REQUIRED
FIRE ALARM	NOT REQUIRED
FIRE PROTECTION SYSTEM	N/A
SMOKE CONTROL	NOT REQUIRED
OCCUPANT LOAD	2.5
3 - VENDING KIOSK	
OCCUPANCY TYPE	B
CONSTRUCTION TYPE	V-B
NUMBER OF STORIES	1
BUILDING HEIGHT	4400 mm
BUILDING AREA	32.12 m2
ALLOWABLE AREA	836 m2
AREA INCREASE	N/A
FIRE SPRINKLER	NOT REQUIRED
FIRE ALARM	NOT REQUIRED
FIRE PROTECTION SYSTEM	N/A
SMOKE CONTROL	NOT REQUIRED
OCCUPANT LOAD	NONE

FIRE-FLOW REQUIREMENT PER NFPA 1142

$$\frac{\text{TOTAL VOLUME OF STRUCTURE}}{\text{OCCUPANCY HAZARD CLASSIFICATION NUMBER}} \times \text{CONSTRUCTION CLASSIFICATION NUMBER} = \text{MINIMUM WATER SUPPLY}$$

$$\frac{634 \text{ CU M } (22{,}387 \text{ CU FT})}{7} \times 1.5 = 4{,}797 \text{ GALLONS}$$

USE 23000 LITERS (6000 GALLONS)

CALIFORNIA STATE FIRE MARSHAL
APPROVED
Approval of this plan does not authorize or approve any omission or deviation from applicable regulations. Final approval is subject to field inspection. One set of approved plans shall be available on the project site at all times.
Reviewed by: MIKE TANAKA
Approval date: 4/9/2009
CSFM FILE NO. 01-45-11-0067

IDENTIFICATION STAMP
DIV. OF THE STATE ARCHITECT
SACRAMENTO REGIONAL OFFICE
02-108545
AC Antonio Florendo
ANTONIO FLORENDO
DATE 3-8-2007

GENERAL NOTES :

1. THE BUILDING WORK ON THIS PROJECT HAS BEEN DESIGNED TO CONFORM THE 2007 CALIFORNIA BUILDING CODE.
2. THE CONTRACTOR SHALL VERIFY ALL CONTROLLING FIELD DIMENSIONS AND CONDITIONS BEFORE ORDERING OR FABRICATING ANY MATERIAL.
3. THE CONTRACTOR SHALL NOTIFY THE ENGINEER IN WRITING OF ANY DISCREPANCIES BETWEEN THESE PLANS AND ACTUAL MEASUREMENTS OR CONDITIONS.
4. THE CONTRACTOR SHALL NOT SCALE THE DRAWINGS BUT SHALL RELY ON WRITTEN DIMENSION GIVEN.
5. THE COLOR AND FINISH OF ANY MATERIAL NOT LISTED TO BE SELECTED BY THE ENGINEER.
6. MANUFACTURER'S DESIGNATIONS ARE LISTED TO INDICATE COLOR ONLY AND DOES NOT INTEND TO SHOW PREFERANCE FOR A PARTICULAR BRAND.

	BY	CHECKED
DESIGN	MIKE AGHEKIAN	
DETAILS	MIKE AGHEKIAN	
QUANTITIES		

STATE OF CALIFORNIA
DEPARTMENT OF TRANSPORTATION

DIVISION OF ENGINEERING SERVICES
ARCHITECTURAL AND STRUCTURAL DESIGN

BRIDGE NO. 06R0001
KM POST R69.4

LAKEHEAD SAFETY ROADSIDE REST AREA UPGRADE AND ADDITION
FINISH SCHEDULE, GENERAL NOTES AND PROJECT DATA

SHEET A0-1

A0-1.dgn
DS OSD metric Rev. 11/98 28-JUL-2009 14:37

SCALE: ALL DIMENSIONS ARE IN MILLIMETERS UNLESS OTHERWISE NOTED.

ORIGINAL SCALE IN MILLIMETERS FOR REDUCED PLANS 0 10 20 30 40 50 60 70 80 90 100

CU 02-305
EA 02-395801

DISREGARD PRINTS BEARING EARLIER REVISION DATES → 9-1-06 10-2-06 12-1-06 2-23-07 3-30-09

REVISION DATES (PRELIMINARY STAGE ONLY) SHEET OF

28-JUL-2009 14:37
A0-1.dgn

DIST.	COUNTY	ROUTE	KILOMETER POST TOTAL PROJECT	SHEET NO.	TOTAL SHEETS
02	Sha	5	R69.4	35	120

Donald E. Alsey
LICENSED ARCHITECT

LICENSED ARCHITECT
DONALD E. ALSEY
No. C-26676
Exp. 07-31-11
STATE OF CALIFORNIA

7-13-09
PLANS APPROVAL DATE

The State of California or its officers or agents shall not be responsible for the accuracy or completeness of electronic copies of this plan sheet.

DOOR SCHEDULE

DOOR							FRAME					
NUMBER		WIDTH	HEIGHT	THICK	MATERIAL	GLASS	MATERIAL	WIDTH	HARDWARE GROUP	DETAIL	SIGN	REMARKS
1		915	2134	44	HM		PMF		1	A4-4	3/A0-4	MEN'S
2		915	2134	44	HM		PMF		1		2/A0-4	WOMEN'S
3		915	2134	44	HM		PMF		1		3/A0-4	MEN'S
4		915	2134	44	HM		PMF		1		2/A0-4	WOMEN'S
5		915	2134	44	HM		PMF		2		1/A0-4	AUXILIARY RESTROOM
6		915	2134	44	HM		PMF		2		1/A0-4	AUXILIARY RESTROOM
7		915	2134	44	HM		PMF		3		8/A0-4	UTILITY ROOM
8		1118	2134	44	HM		PMF		3		8/A0-4	VENDING KIOSK
9		1525	2134	44	HM		PMF		4		8/A0-4	EXISTING

WINDOW SCHEDULE

WINDOW							FRAME			
NUMBER		WIDTH	HEIGHT	THICK	MATERIAL	GLASS			DETAIL	REMARKS
A		1220	610	51	MTL	O	MTL		A4-4	COMFORT BUILDING, OPERABLE WINDOW
B		1220	406	51	MTL	O	MTL		A4-4	BREAK ROOM BUILDING, OPERABLE WINDOW

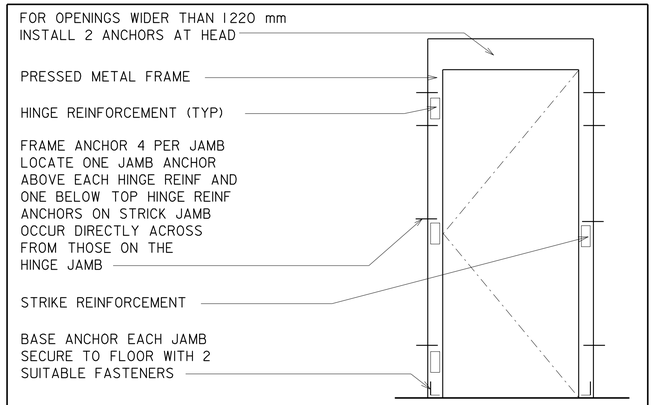

DOOR FRAME ANCHORAGE

NOTE :

THE CONTRACTOR SHALL VERIFY ALL CONTROLLING FIELD DIMENSIONS AND CONDITIONS BEFORE ORDERING OR FABRICATING ANY MATERIAL.

CALIFORNIA STATE FIRE MARSHAL
APPROVED
Approval of this plan does not authorize or approve any omission or deviation from applicable regulations. Final approval is subject to field inspection. One set of approved plans shall be available on the project site at all times.
Reviewed by: MIKE TANAKA
Approval date: 4/9/2009
CSFM FILE NO. 01-45-11-0067

IDENTIFICATION STAMP
DIV. OF THE STATE ARCHITECT
SACRAMENTO REGIONAL OFFICE
02-108545
AC Antonio Florendo
ANTONIO FLORENDO
DATE 3-8-2007

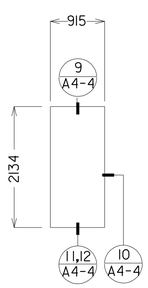

HM DOORS # 1, 2, 3, 4, 5, 6 & 7

DOOR TYPE

NO SCALE

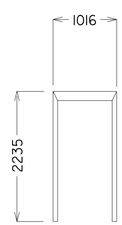

FOR DOORS # 1, 2, 4, 5, 6 & 7

DOOR FRAME TYPE

NO SCALE

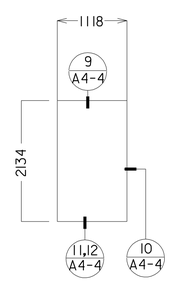

HM DOOR # 8 (VENDING KIOSK)

DOOR TYPE

NO SCALE

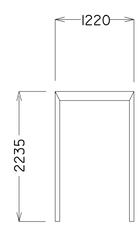

FOR DOOR # 8 (VENDING KIOSK)

DOOR FRAME TYPE

NO SCALE

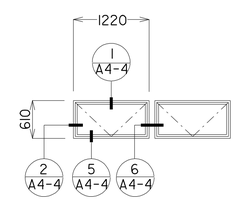

COMFORT BUILDING
OBSCURE WIRE SAFETY
GLAZING OPERABLE WINDOWS

WINDOW 'A'

NO SCALE

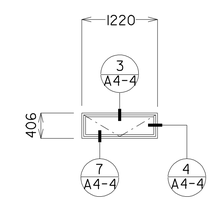

BREAK ROOM BUILDING
OBSCURE WIRE SAFETY
GLAZING OPERABLE WINDOW

WINDOW 'B'

NO SCALE

DESIGN	BY MIKE AGHEKIAN	CHECKED	
DETAILS	BY MIKE AGHEKIAN	CHECKED	
QUANTITIES	BY	CHECKED	

STATE OF
CALIFORNIA
DEPARTMENT OF TRANSPORTATION

DIVISION OF ENGINEERING SERVICES
ARCHITECTURAL
AND
STRUCTURAL DESIGN

BRIDGE NO. 06R0001
KM POST R69.4

LAKEHEAD SAFETY ROADSIDE REST AREA UPGRADE AND ADDITION
DOOR AND WINDOW SCHEDULE

SHEET **A0-2**

A0-2.dgn
DS OSD metric Rev. 11/98 28-JUL-2009 14:38

SCALE: ALL DIMENSIONS ARE IN MILLIMETERS UNLESS OTHERWISE NOTED.

ORIGINAL SCALE IN MILLIMETERS FOR REDUCED PLANS 0 10 20 30 40 50 60 70 80 90 100

CU 02-305
EA 02-395801

DISREGARD PRINTS BEARING EARLIER REVISION DATES →
REVISION DATES (PRELIMINARY STAGE ONLY) 9-1-06 10-2-06 12-1-06 2-23-07 1-20-09 3-30-09
SHEET OF

28-JUL-2009 14:38
A0-2.dgn

DIST.	COUNTY	ROUTE	KILOMETER POST TOTAL PROJECT	SHEET NO.	TOTAL SHEETS
02	Sha	5	R69.4	36	120

LICENSED ARCHITECT

LICENSED ARCHITECT DONALD E. ALSEY No. C-26676 Exp. 07-31-11 STATE OF CALIFORNIA

7-13-09
PLANS APPROVAL DATE

The State of California or its officers or agents shall not be responsible for the accuracy or completeness of electronic copies of this plan sheet.

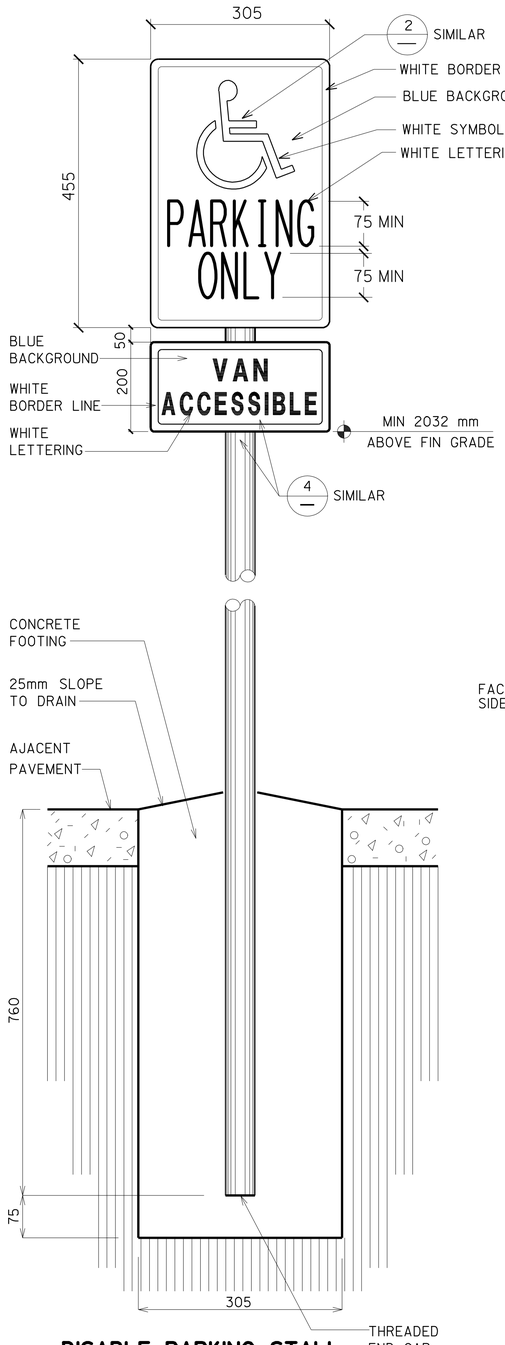

1 DISABLE PARKING STALL IDENTIFICATION SIGNS

NO SCALE

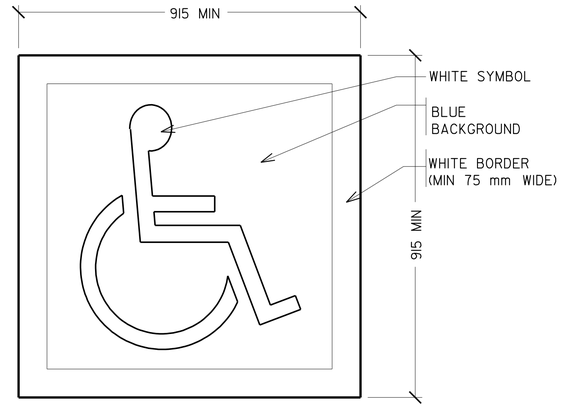

2 PARKING STALL IDENTIFICATION

NO SCALE

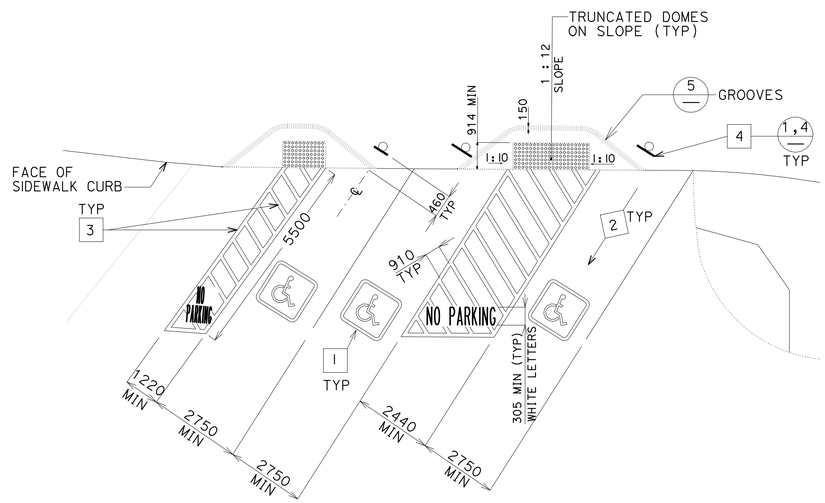

KEYED NOTE LEGEND

1. INTERNATIONAL SYMBOL OF ACCESSIBILITY PAINTED ON ASPHALT CONCRETE. REFER TO DETAIL 2 ON THIS SHEET.
2. MAXIMUM SLOPE ON PARKING STALL PAVED AREA TO BE 2%.
3. 100 mm WIDE BLUE PARKING STALL DESIGNATION STRIPE.
4. DISABLE PARKING SPACE SIGNAGE AND VAN ACCESSIBLE SIGNAGE REFER TO DETAIL 1 THIS SHEET.

3 DISABLED ACCESSIBLE PARKING STALL

NO SCALE

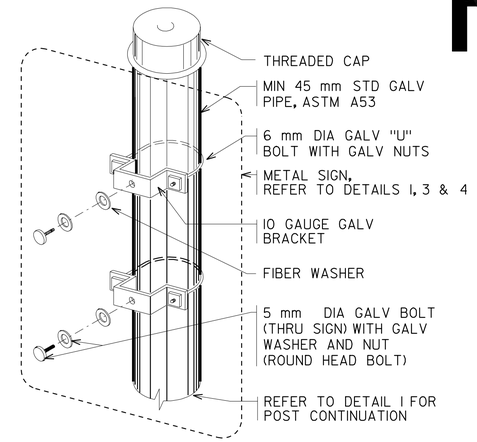

4 SIGN CONNECTIONS

NO SCALE

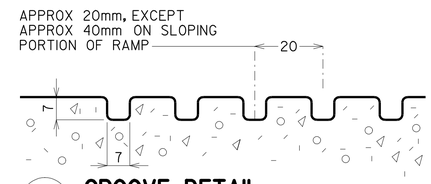

5 GROOVE DETAIL

NO SCALE

CALIFORNIA STATE FIRE MARSHAL
APPROVED
Approval of this plan does not authorize or approve any omission or deviation from applicable regulations. Final approval is subject to field inspection. One set of approved plans shall be available on the project site at all times.
Reviewed by: MIKE TANAKA
Approval date: 4/9/2009
CSFM FILE NO. 01-45-11-0067

IDENTIFICATION STAMP
DIV. OF THE STATE ARCHITECT
SACRAMENTO REGIONAL OFFICE
02-108545
AC ANTONIO FLORENDO
ANTONIO FLORENDO
DATE 3-8-2007

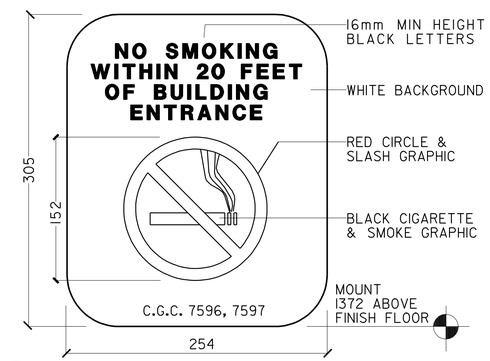

7 NO SMOKING SIGN

NO SCALE
INSTALL PER SIGNAGE NOTE ON SHT A0-4

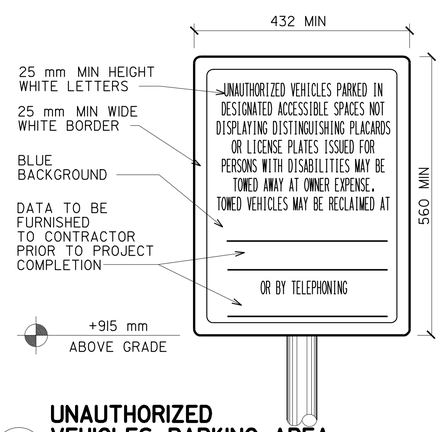

6 UNAUTHORIZED VEHICLES, PARKING AREA

NO SCALE

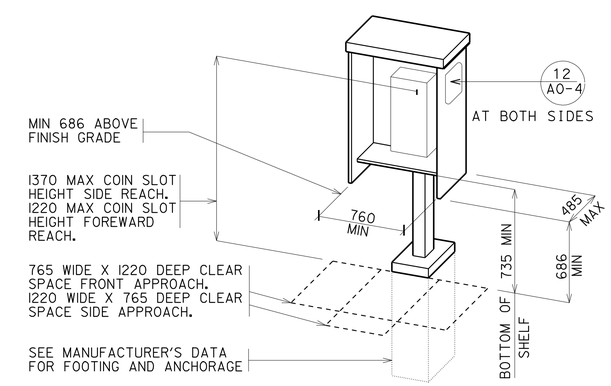

8 TELEPHONE ENCLOSURE

NO SCALE

DESIGN	BY MIKE AGHEKIAN	CHECKED	
DETAILS	BY MIKE AGHEKIAN	CHECKED	
QUANTITIES	BY	CHECKED	

STATE OF CALIFORNIA
DEPARTMENT OF TRANSPORTATION

DIVISION OF ENGINEERING SERVICES
ARCHITECTURAL AND STRUCTURAL DESIGN

BRIDGE NO. 06R0001
KM POST R69.4

LAKEHEAD SAFETY ROADSIDE REST AREA UPGRADE AND ADDITION

PROJECT SITE ACCESSIBILITY DETAILS

SHEET A0-3

A0-3.dgn
DS OSD metric Rev. 11/98 28-JUL-2009 14:38

SCALE: ALL DIMENSIONS ARE IN MILLIMETERS UNLESS OTHERWISE NOTED.

ORIGINAL SCALE IN MILLIMETERS FOR REDUCED PLANS 0 10 20 30 40 50 60 70 80 90 100

CU 02-305
EA 02-395801

DISREGARD PRINTS BEARING EARLIER REVISION DATES → REVISION DATES (PRELIMINARY STAGE ONLY) 9-1-06 10-2-06 12-1-06 2-23-07 1-20-09 3-30-09 SHEET OF

28-JUL-2009 14:38
A0-3.dgn

DIST.	COUNTY	ROUTE	KILOMETER POST TOTAL PROJECT	SHEET NO.	TOTAL SHEETS
02	Sha	5	R69.4	37	120

LICENSED ARCHITECT

LICENSED ARCHITECT DONALD E. ALSEY No. C-26676 EXP. 07-31-11 STATE OF CALIFORNIA

7-13-09
PLANS APPROVAL DATE

The State of California or its officers or agents shall not be responsible for the accuracy or completeness of electronic copies of this plan sheet.

NO SCALE UNLESS OTHERWISE NOTED

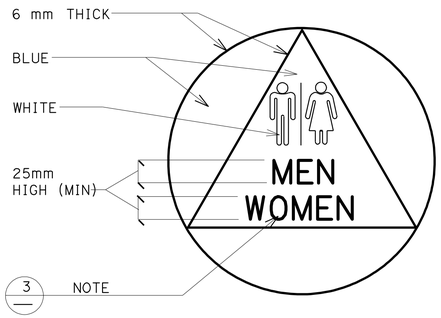

1 UNISEX RESTROOM SIGN

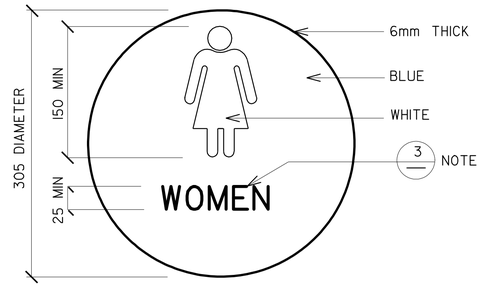

2 WOMEN'S RESTROOM SIGN

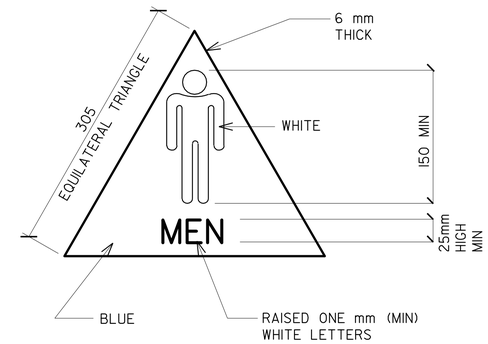

3 MEN'S RESTROOM SIGN

CALIFORNIA STATE FIRE MARSHAL APPROVED
Approval of this plan does not authorize or approve any omission or deviation from applicable regulations. Final approval is subject to field inspection. One set of approved plans shall be available on the project site at all times.
Reviewed by: MIKE TANAKA
Approval date: 4/9/2009
CSFM FILE NO. 01-45-11-0067

IDENTIFICATION STAMP
DIV. OF THE STATE ARCHITECT
SACRAMENTO REGIONAL OFFICE
02-108545
AC Antonio Florendo
ANTONIO FLORENDO
DATE 3-8-2007

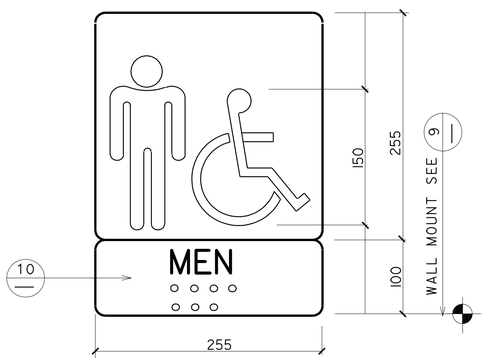

4 RESTROOM WALL SIGN

INSTALL PER SIGNAGE NOTES

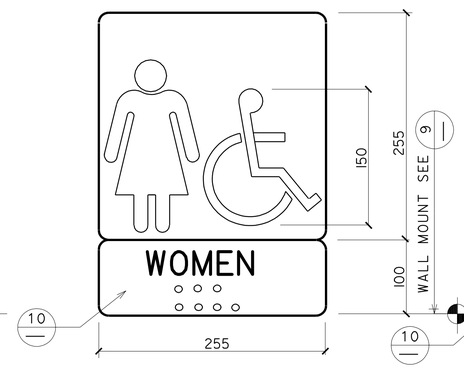

5 RESTROOM WALL SIGN

INSTALL PER SIGNAGE NOTES

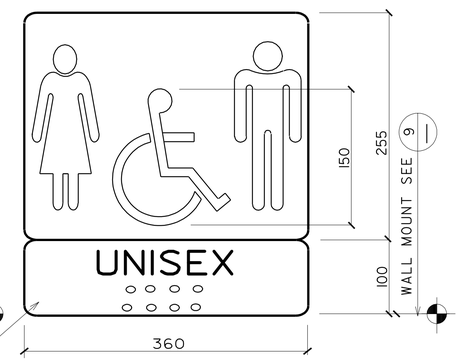

6 RESTROOM WALL SIGN

INSTALL PER SIGNAGE NOTES

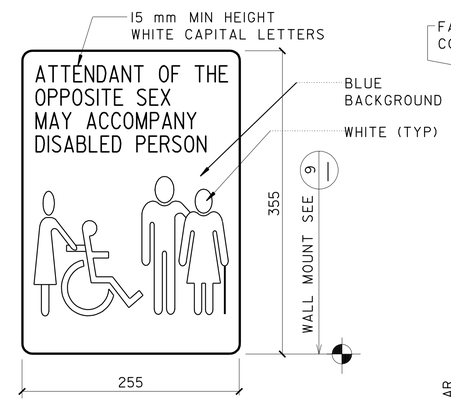

7 OPPOSITE SEX ATTENDANT SIGN

INSTALL PER SIGNAGE NOTES

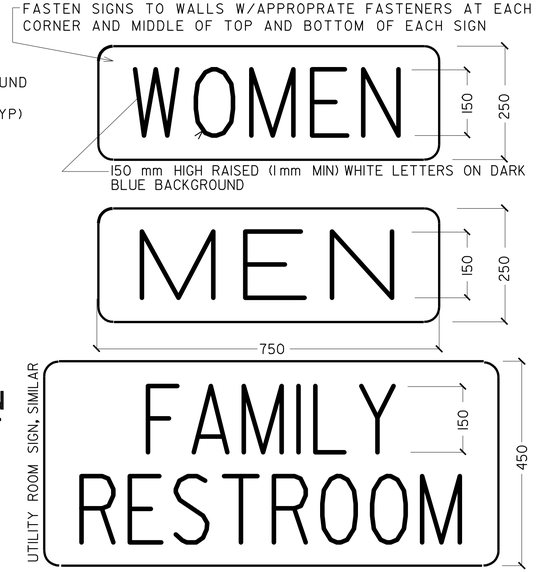

8 RESTROOM SIGNS ON BUILDING

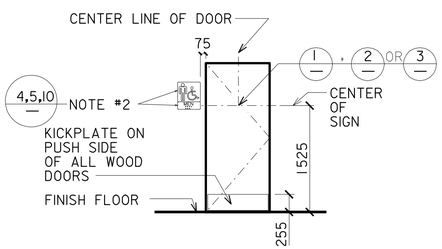

9 RESTROOM DOOR/ WALL SIGNS

REFER TO "SIGNAGE NOTES"

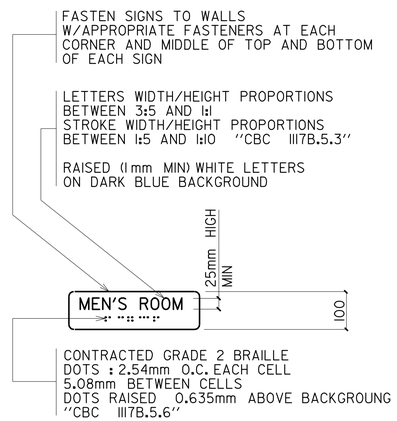

10 ROOM IDENTIFICATION SIGN

WOMEN AND UNISEX SIMILAR

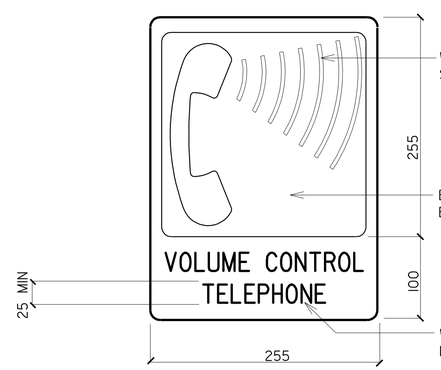

11 VOLUME CONTROL TELEPHONE

FOR LOCATION SEE SHEET A0-7

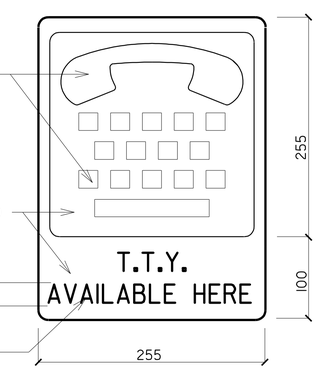

12 T.T.Y. SIGN

FOR LOCATION SEE 8/A0-3

SIGNAGE NOTES:

1. DOOR COLOR TO DISTINCTLY CONTRAST WITH COLOR OF SIGN INDICATED IN DETAIL 1.
2. LOCATE ROOM IDENTIFICATION SIGNS ON WALL ADJACENT TO DOOR ON LATCH SIDE. MOUNTING HEIGHT SHALL BE 1525 mm MIN ABOVE FINISH FLOOR TO CENTER LINE OF SIGN (U.N.O.) SEE 9
3. REFER TO SPECIFICATIONS FOR COLORS AND MATERIALS FOR SIGNS INDICATED IN DETAILS 1, 2 & 3.
4. LETTERS AND SYMBOLS SHALL BE RAISED ONE mm MINIMUM ABOVE BACKGROUND.
5. INSTALL SIGN USING 4, 38 mm EXPANSION ANCHORS.
6. 1117B.5.6 BRAILLE : CONTRACTED GRADE 2 BRAILLE SHALL BE USED WHEREVER BRAILLE BRAILLE IS REQUIRED IN OTHER PORTION OF THESE STANDARDE. DOTS SHALL BE 1/10 INCH (2.54 mm) ON CENTER IN EACH CELL WITH 2/10 INCH (5.08mm) SPACE BETWEEN CELLS, MEASURED FROM THE SECOND COLUMN OF DOTS IN THE FIRST COLUMN OF DOTS IN THE SECOND CELL. DOTS SHALL BE RAISED A MINIMUM OF 1/40 INCH (0.635 mm) ABOVE THE BACKGROUND.

	BY		CHECKED
DESIGN	MIKE AGHEKIAN		
DETAILS	MIKE AGHEKIAN		
QUANTITIES			

STATE OF CALIFORNIA
DEPARTMENT OF TRANSPORTATION

DIVISION OF ENGINEERING SERVICES
ARCHITECTURAL AND STRUCTURAL DESIGN

BRIDGE NO. 06R0001
KM POST R69.4

LAKEHEAD SAFETY ROADSIDE REST AREA UPGRADE AND ADDITION

ACCESSIBILITY DETAILS

SHEET A0-4

A0-4.dgn
DS OSD metric Rev. 11/98 28-JUL-2009 14:38

SCALE: ALL DIMENSIONS ARE IN MILLIMETERS UNLESS OTHERWISE NOTED.

ORIGINAL SCALE IN MILLIMETERS FOR REDUCED PLANS 0 10 20 30 40 50 60 70 80 90 100

CU 02-305
EA 02-395801

DISREGARD PRINTS BEARING EARLIER REVISION DATES → 9-1-06 10-2-06 12-1-06 2-23-07 1-20-09 3-30-09

REVISION DATES (PRELIMINARY STAGE ONLY) SHEET OF

28-JUL-2009 14:38
A0-4.dgn

DIST.	COUNTY	ROUTE	KILOMETER POST TOTAL PROJECT	SHEET NO.	TOTAL SHEETS
02	Sha	5	R69.4	38	120

LICENSED ARCHITECT

7-13-09
PLANS APPROVAL DATE

LICENSED ARCHITECT DONALD E. ALSEY No. C-26676 Exp. 07-31-11 STATE OF CALIFORNIA

The State of California or its officers or agents shall not be responsible for the accuracy or completeness of electronic copies of this plan sheet.

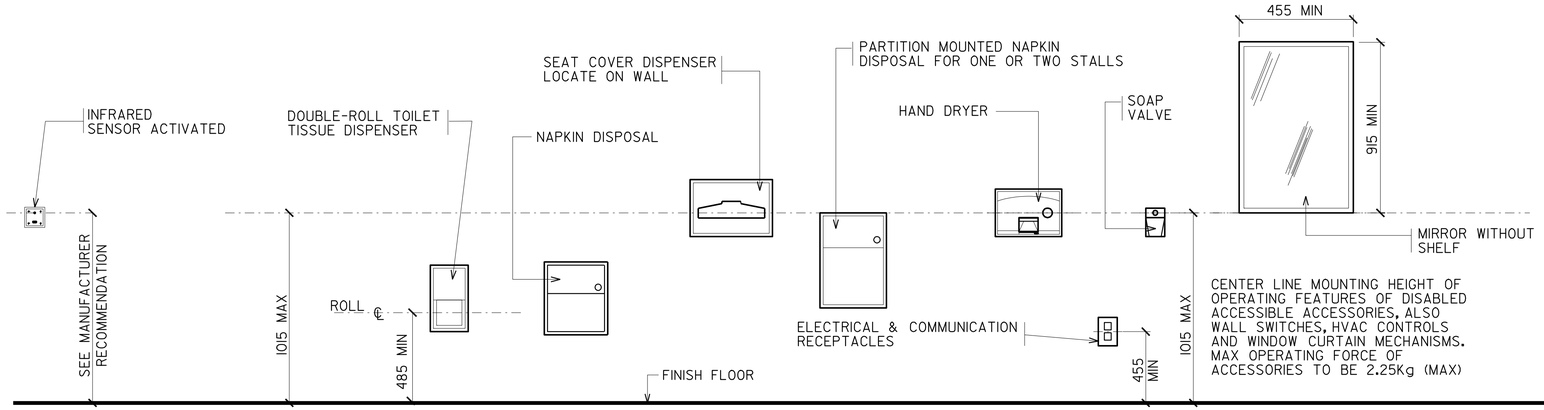

1 TOILET ACCESSORIES — MOUNTING HEIGHTS OF ACCESSORIES FOR DISABLED ACCESSIBILITY

NO SCALE

CALIFORNIA STATE FIRE MARSHAL APPROVED
Approval of this plan does not authorize or approve any omission or deviation from applicable regulations. Final approval is subject to field inspection. One set of approved plans shall be available on the project site at all times.
Reviewed by: MIKE TANAKA
Approval date: 4/9/2009
CSFM FILE NO. 01-45-11-0067

IDENTIFICATION STAMP
DIV. OF THE STATE ARCHITECT
SACRAMENTO REGIONAL OFFICE
02-108545
AC ANTONIO FLORENDO
ANTONIO FLORENDO
DATE 3-8-2007

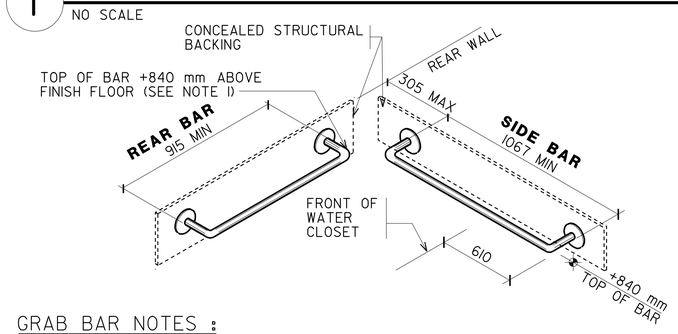

GRAB BAR NOTES :

1. IF TANK TYPE TOILET IS USED, TOP OF REAR BAR MAY BE SET TO 915 mm MAX ABOVE FINISH FLOOR. SIDE BAR TO REMAIN AS SHOWN ABOVE.
2. GRAB BARS TO BE 38 mm DIAMETER WITH CLEAR SPACE OF 40 mm TO SMOOTH SURFACE
3. 1115B.8.3 STRUCTURAL STRENGTH. THE STRUCTURAL STRENGTH OF GRAB BAR, TUB AND SHOWER SEATS, FASTENERS AND MOUNTING DEVICES SHALL MEET THE FOLLOWING SPECIFICATIONS:

   (A) BENDING STRESS IN A GRAB BAR OR SEAT INDUCED BY THE MAXIMUM BENDING MOMENT FROM THE APPLICATION OF A 1112N POINT LOAD SHALL BE LESS THAN THE ALLOWABLE STRESS FOR THE MATERIAL OF THE GRAB BAR OR SEAT.

   (B) SHEAR STRESS INDUCED IN A GRAB BAR OR SEAT BY THE APPLICATION OF A 1112 NEWTON POINT LOAD SHALL BE LESS THAN THE ALLOWABLE SHEAR STRESS FOR THE MATERIAL OF THE GRAB BAR OR SEAT, AND ITS MOUNTING BRACKET OR OTHER SUPPORT IS CONSIDERED TO BE FULLY RESTRAINED, THEN DIRECT AND TORSIONAL SHEAR STRESSES SHALL NOT EXCEED THE ALLOWABLE SHEAR STRESS.

   (C) SHEAR FORCE INDUCED IN FASTENER OR MOUNTING DEVICE FROM THE APPLICATION OF A 1112 NEWTON POINT LOAD SHALL BE LESS THAN THE ALLOWABLE LATERAL LOAD OF EITHER THE FASTENER OR MOUNTING DEVICE OR THE SUPPORTING STRUCTURE, WHICHEVER IS THE SMALLER ALLOWABLE LOAD.

   (D) TENSILE FORCE INDUCED IN A FASTENER BY A DIRECT TENSION FORCE OF A 1112 NEWTON POINT LOAD, PLUS THE MAXIMUM MOMENT FROM THE APPLICATION OF A 1112 NEWTON POINT LOAD, SHALL BE LESS THAN THE ALLOWABLE WITHDRAWAL LOAD BETWEEN THE FASTENER AND SUPPORTING STRUCTURE.

   (E) GRAB BARS SHALL NOT ROTATE WITHIN THEIR FITTING.

2 GRAB BARS

NO SCALE

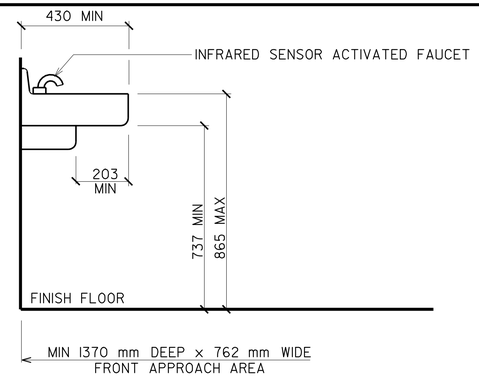

3 LAVATORY CLEARANCES

NO SCALE

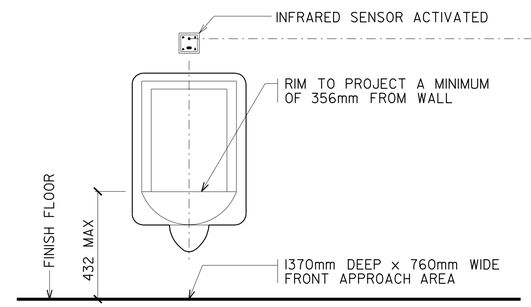

4 URINAL

NO SCALE

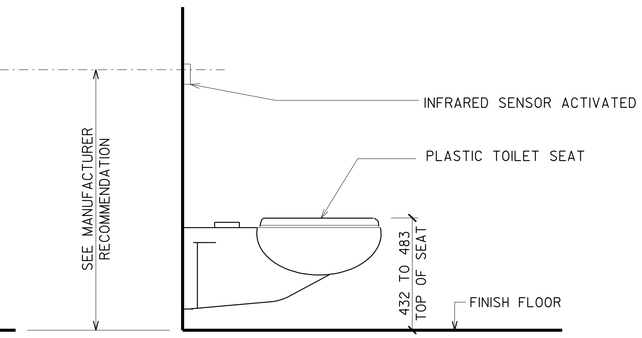

5 WALL HUNG WATER CLOSET

NO SCALE

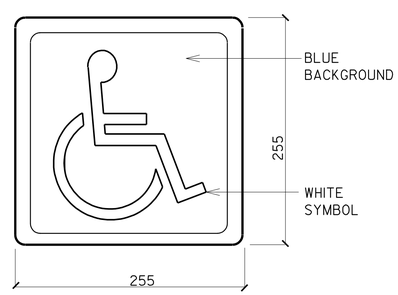

6 DISABLED TELEPHONE SIGN

NO SCALE

DESIGN	BY MIKE AGHEKIAN	CHECKED	
DETAILS	BY MIKE AGHEKIAN	CHECKED	
QUANTITIES	BY	CHECKED	

STATE OF CALIFORNIA DEPARTMENT OF TRANSPORTATION

DIVISION OF ENGINEERING SERVICES ARCHITECTURAL AND STRUCTURAL DESIGN

BRIDGE NO. 06R0001
KM POST R69.4

LAKEHEAD SAFETY ROADSIDE REST AREA UPGRADE AND ADDITION
BUILDING INTERIOR ACCESSIBILITY, TELEPHONE AND DRINKING FOUNTAIN DETAILS

SHEET A0-5

A0-5.dgn
DS OSD metric Rev. 11/98 28-JUL-2009 14:38

SCALE: ALL DIMENSIONS ARE IN MILLIMETERS UNLESS OTHERWISE NOTED.

ORIGINAL SCALE IN MILLIMETERS FOR REDUCED PLANS 0 10 20 30 40 50 60 70 80 90 100

CU 02-305
EA 02-395801

DISREGARD PRINTS BEARING EARLIER REVISION DATES → 9-1-06 10-2-06 12-1-06 2-23-07 1-20-09 3-30-09

REVISION DATES (PRELIMINARY STAGE ONLY) SHEET OF

28-JUL-2009 14:38
A0-5.dgn

DIST.	COUNTY	ROUTE	KILOMETER POST TOTAL PROJECT	SHEET NO.	TOTAL SHEETS
02	Sha	5	R69.4	39	120

Donald E. Alsey
LICENSED ARCHITECT

LICENSED ARCHITECT
DONALD E. ALSEY
No. C-26676
Exp. 07-31-11
STATE OF CALIFORNIA

7-13-09
PLANS APPROVAL DATE

The State of California or its officers or agents shall not be responsible for the accuracy or completeness of electronic copies of this plan sheet.

CERTIFICATE OF COMPLIANCE — PART 1 OF 2 — ENV-1

PROJECT NAME: LAKEHEAD SRRA		DATE	
PROJECT ADDRESS: SOUTHBOUND OF ROUTE 5, NEAR THE CITY OF LAKEHEAD DISTRICT 02, SHASTA COUNTY		Building Permit #	
PRINCIPAL DESIGNER - ENVELOPE: DON ALSEY	TELEPHONE: (916) 227-8262		
DOCUMENTATION AUTHOR: MIKE AGHEKIAN	TELEPHONE: (916) 227-8280	Checked by/Date Enforcement Agency Use	

GENERAL INFORMATION

DATE OF PLANS | BUILDING CONDITIONED FLOOR AREA | CLIMATE ZONE

BUILDING TYPE: [X] NONRESIDENTIAL [ ] HIGH RISE RESIDENTIAL [ ] HOTEL/MOTEL GUEST ROOM

PHASE OF CONSTRUCTION: [X] NEW CONSTRUCTION [ ] ADDITION [ ] ALTERATION [ ] UNCONDITIONED (File Affidavit)

METHOD OF MECHANICAL COMPLIANCE: [ ] COMPONENT [ ] OVERALL ENVELOPE [ ] PERFORMANCE

STATEMENT OF COMPLIANCE

This Certificate of Compliance lists the building features and performance specifications needed to comply with Title 24, Parts 1 and 6 of the California Code of Regulations. This certificate applies only to building envelope requirements.

The Principal Envelope Designer hereby certifies that the proposed building design represented in this set of construction documents is consistant with the other compliance forms and worksheets, with the specifications, and with any other calculations submitted with this permit application. The proposed building has been designed to meet the envelope requirements contained in sections 110, 116 through 118, and 143 or 149 of Title 24, Part 6, Chapter 1.

Please check one:

[X] *I hereby affirm that I am eligible under the provisions of Division 3 of the Business and Professions Code to sign this document as the person responsible for its preparation; and that I am a civil engineer, or architect.*

[ ] *I affirm that I am eligible under the exemption to Division 3 of the Business and Professions Code by Section 5537.2 of the Business and Professions Code to sign this document as the person responsible for its preparation; and that I am a licensed contractor preparing documents for the work I have contracted to perform.*

[ ] *I affirm that I am eligible under the exemption to Division 3 of the Business and Professions Code by Section ____ of the ____ Code to sign this document as the person responsible for its preparation; and for the following reason: ____*

PRINCIPAL ENVELOPE DESIGNER - NAME	SIGNATURE	LIC.NO.	DATE
DON ALSEY	Donald E. Alsey	C-26676	07-31-07

ENVELOPE MANDATORY MEASURES

Indicate location on plans of Note Block for Mandatory Measures

INSTRUCTIONS TO APPLICANT

For detailed instructions on the use of this and all Energy Efficiency Standards compliance forms, please refer to the Nonresidential Manual published by the California Energy Commission.
ENV-1: Required on plans for all submittals. Part 2 may be incorporated in schedules on plans.
ENV-2: Used for all submittals; choose appropriate version depending on method of envelope compliance.
ENV-3: Optional. Use if default U-values are not used. Choose appropriate version for assembly U-value to be calculated.

Nonresidential Compliance Form — *December 1991*

CERTIFICATE OF COMPLIANCE — PART 1 OF 3 — MECH-1

PROJECT NAME: LAKEHEAD SRRA		DATE	
PROJECT ADDRESS: SOUTHBOUND OF ROUTE 5, NEAR THE CITY OF LAKEHEAD DISTRICT 02, SHASTA COUNTY		Building Permit #	
PRINCIPAL DESIGNER - MECHANICAL: MICHAEL S. SLAVENSKY	TELEPHONE: (916) 227-8202		
DOCUMENTATION AUTHOR: JESUS E. RAMIREZ	TELEPHONE: (916) 227-8490	Checked by/Date Enforcement Agency Use	

GENERAL INFORMATION

DATE OF PLANS | BUILDING CONDITIONED FLOOR AREA

BUILDING TYPE: [X] NONRESIDENTIAL [ ] HIGH RISE RESIDENTIAL [ ] HOTEL/MOTEL GUEST ROOM

PHASE OF CONSTRUCTION: [X] NEW CONSTRUCTION [ ] ADDITION [ ] ALTERATION

METHOD OF MECHANICAL COMPLIANCE: [X] PRESCRIPTIVE [ ] PERFORMANCE

PROOF OF ENVELOPE COMPLIANCE: [ ] PREVIOUS ENVELOPE PERMIT [X] ENVELOPE COMPLIANCE ATTACHED

STATEMENT OF COMPLIANCE

This Certificate of Compliance lists the building features and performance specifications needed to comply with Title 24, Parts 1 and 6 of the California Code of Regulations. This certificate applies only to building mechanical requirements.

The Principal Mechanical Designer hereby certifies that the proposed building design represented in this set of construction documents is consistant with the other compliance forms and worksheets, with the specifications, and with any other calculations submitted with this permit application. The proposed building has been designed to meet the mechanical requirements contained in sections 110 through 115, 120 through 124, 140 through 142, 144 and 145.

Please check one:

[X] *I hereby affirm that I am eligible under the provisions of Division 3 of the Business and Professions Code to sign this document as the person responsible for its preparation; and that I am a civil engineer, mechanical engineer or architect.*

[ ] *I affirm that I am eligible under the exemption to Division 3 of the Business and Professions Code by Section 5537.2 of the Business and Professions Code to sign this document as the person responsible for its preparation; and that I am a licensed contractor preparing documents for the work I have contracted to perform.*

[ ] *I affirm that I am eligible under the exemption to Division 3 of the Business and Professions Code by Section ____ of the ____ Code to sign this document as the person responsible for its preparation; and for the following reason: ____*

PRINCIPAL MECHANICAL DESIGNER - NAME	SIGNATURE	LIC.NO.	DATE
MICHAEL S. SLAVENSKY	Michael Slavensky	M-28530	06-30-07

MECHANICAL MANDATORY MEASURES

Indicate location on plans of Note Block for Mandatory Measures: SEE ATTACHED

INSTRUCTIONS TO APPLICANT

For detailed instructions on the use of this and all Energy Efficiency Standards compliance forms, please refer to the Nonresidential Manual published by the California Energy Commission.
MECH-1: Required on plans for all submittals. Parts 2 & 3 may be incorporated in schedules on plans.
MECH-2: Required for all submittals; choose appropriate version depending on method of mechanical compliance.
MECH-3 and MECH-4: Required on all submittals.

Nonresidential Compliance Form — *December 1991*

CERTIFICATE OF COMPLIANCE - LIGHTING — PART 1 OF 2 — LTG-1

PROJECT NAME: LAKEHEAD SRRA		DATE	
PROJECT ADDRESS: SOUTHBOUND OF ROUTE 5, NEAR THE CITY OF LAKEHEAD DISTRICT 02, SHASTA COUNTY		Building Permit #	
PRINCIPAL DESIGNER - LIGHTING: J. S. SANDHU	TELEPHONE: (916) 227-8343		
DOCUMENTATION AUTHOR: TOMMY F. LEE	TELEPHONE: (916) 227-9492	Checked by/Date Enforcement Agency Use	

GENERAL INFORMATION

DATE OF PLANS | BUILDING CONDITIONED FLOOR AREA

BUILDING TYPE: [X] NONRESIDENTIAL [ ] HIGH RISE RESIDENTIAL [ ] HOTEL/MOTEL GUEST ROOM

PHASE OF CONSTRUCTION: [X] NEW CONSTRUCTION [ ] ADDITION [ ] ALTERATION

METHOD OF LIGHTING COMPLIANCE: [ ] COMPLETE BUILDING [X] AREA CATEGORY [ ] TAILORED [ ] PERFORMANCE

STATEMENT OF COMPLIANCE

This Certificate of Compliance lists the building features and performance specifications needed to comply with Title 24, Parts 1 and 6 of the California Code of Regulations. This certificate applies only to building lighting requirements.

The Principal Lighting Designer hereby certifies that the proposed building design represented in this set of construction documents is consistant with the other compliance forms and worksheets, with the specifications, and with any other calculations submitted with this permit application. The proposed building has been designed to meet the lighting requirements contained in sections 110, 119, 130 through 132, and 146 or 149.

Please check one:

[X] *I hereby affirm that I am eligible under the provisions of Division 3 of the Business and Professions Code to sign this document as the person responsible for its preparation; and that I am a civil engineer, electrical engineer or architect.*

[ ] *I affirm that I am eligible under the exemption to Division 3 of the Business and Professions Code by Section 5537.2 of the Business and Professions Code to sign this document as the person responsible for its preparation; and that I am a licensed contractor preparing documents for the work I have contracted to perform.*

[ ] *I affirm that I am eligible under the exemption to Division 3 of the Business and Professions Code by Section ____ of the ____ Code to sign this document as the person responsible for its preparation; and for the following reason: ____*

PRINCIPAL LIGHTING DESIGNER - NAME	SIGNATURE	LIC.NO.	DATE
J. S. SANDHU	Jasvinder S Sandhu	E-11803	9-30-08

LIGHTING MANDATORY MEASURES

Indicate location on plans of Note Block for Mandatory Measures: SEE ATTACHED

INSTRUCTIONS TO APPLICANT

For detailed instructions on the use of this and all Energy Efficiency Standards compliance forms, please refer to the Nonresidential Manual published by the California Energy Commission.
LTG-1: Required on plans for all submittals. Part 2 may be incorporated in schedules on plans.
LTG-2: Required for all submittals.
LTG-3: Optional use only if lighting control credits are taken.
LTG-4: Optional. Use only if Tailored Method is used. Parts 2 and 3 used only if applicable.

Nonresidential Compliance Form — *December 1991*

CALIFORNIA STATE FIRE MARSHAL APPROVED
Approval of this plan does not authorize or approve any omission or deviation from applicable regulations. Final approval is subject to field inspection. One set of approved plans shall be available on the project site at all times.
Reviewed by: MIKE TANAKA
Approval date: 4/9/2009
CSFM FILE NO. 01-45-11-0067

IDENTIFICATION STAMP
DIV. OF THE STATE ARCHITECT
SACRAMENTO REGIONAL OFFICE
02-108545
AC Antonio Florendo
ANTONIO FLORENDO
DATE 3-8-2007

DESIGN	BY MIKE AGHEKIAN	CHECKED	
DETAILS	BY MIKE AGHEKIAN	CHECKED	
QUANTITIES	BY	CHECKED	

STATE OF CALIFORNIA
DEPARTMENT OF TRANSPORTATION

DIVISION OF ENGINEERING SERVICES
ARCHITECTURAL AND STRUCTURAL DESIGN

BRIDGE NO. 06R0001
KM POST R69.4

LAKEHEAD SAFETY ROADSIDE REST AREA UPGRADE AND ADDITION

TITLE 24 ENERGY COMPLIANCE FORMS

SHEET A0-6

A0-6.dgn
DS OSD metric Rev. 11/98 28-JUL-2009 14:38

SCALE: ALL DIMENSIONS ARE IN MILLIMETERS UNLESS OTHERWISE NOTED.

ORIGINAL SCALE IN MILLIMETERS FOR REDUCED PLANS 0 10 20 30 40 50 60 70 80 90 100

CU 02-305
EA 02-395801

DISREGARD PRINTS BEARING EARLIER REVISION DATES →

REVISION DATES (PRELIMINARY STAGE ONLY): 9-1-06 | 10-2-06 | 12-1-06 | 2-23-07 | 1-20-09 | 3-30-09

SHEET OF

28-JUL-2009 14:38
A0-6.dgn

DIST.	COUNTY	ROUTE	KILOMETER POST TOTAL PROJECT	SHEET NO.	TOTAL SHEETS
02	Sha	5	R69.4	40	120

Donald E. Alsey
LICENSED ARCHITECT

LICENSED ARCHITECT
DONALD E. ALSEY
No. C-26676
EXP. 07-31-11
STATE OF CALIFORNIA

7-13-09
PLANS APPROVAL DATE

The State of California or its officers or agents shall not be responsible for the accuracy or completeness of electronic copies of this plan sheet.

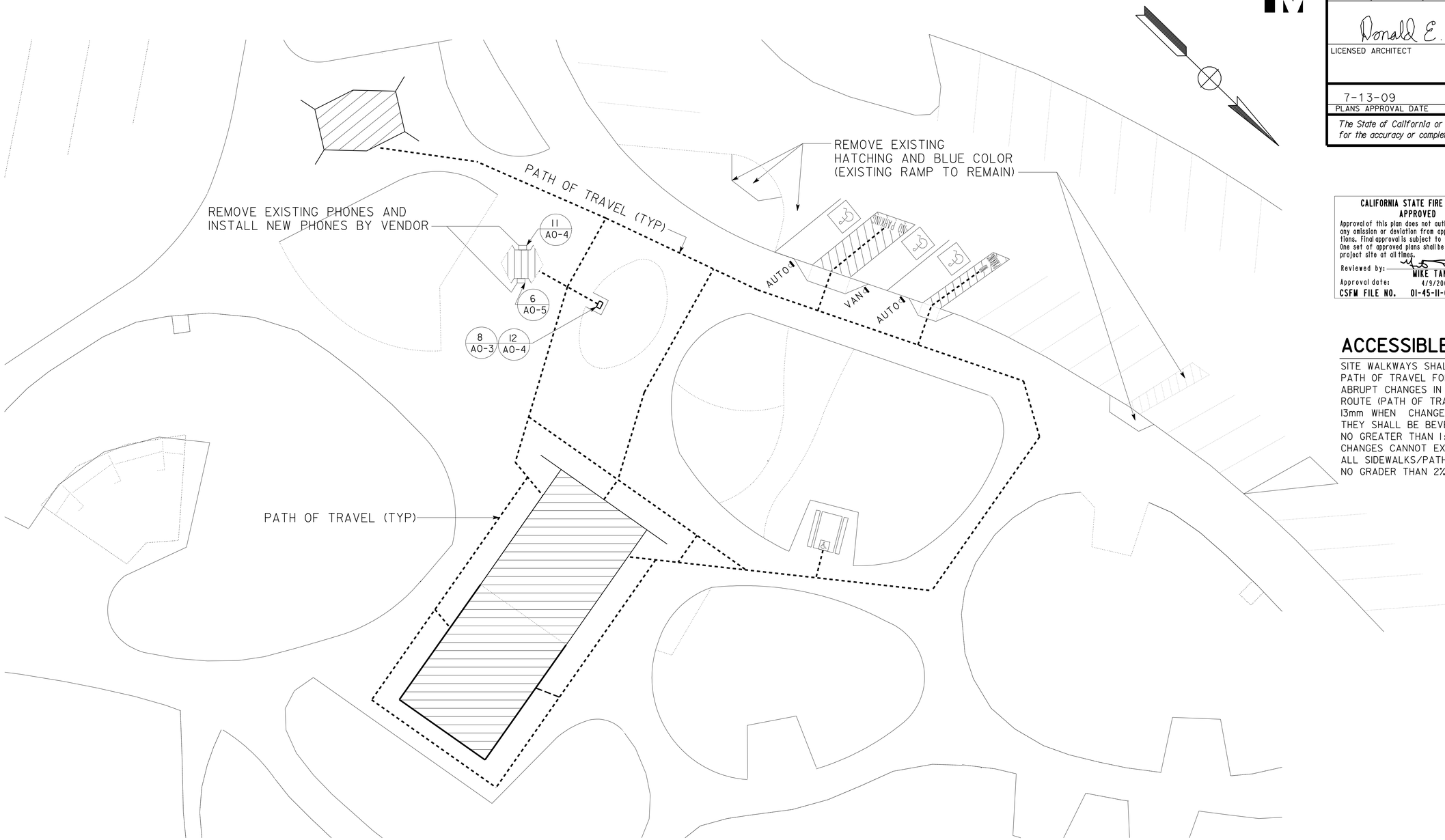

CALIFORNIA STATE FIRE MARSHAL APPROVED
Approval of this plan does not authorize or approve any omission or deviation from applicable regulations. Final approval is subject to field inspection. One set of approved plans shall be available on the project site at all times.
Reviewed by: MIKE TANAKA
Approval date: 4/9/2009
CSFM FILE NO. 01-45-11-0067

IDENTIFICATION STAMP
DIV. OF THE STATE ARCHITECT
SACRAMENTO REGIONAL OFFICE
02-108545
AC Antonio Florendo
ANTONIO FLORENDO
DATE 3-8-2007

ACCESSIBLE ROUTE NOTE :

SITE WALKWAYS SHALL PROVIDE A BARRIER FREE PATH OF TRAVEL FOR A PERSON IN A WHEELCHAIR. ABRUPT CHANGES IN LEVEL ALONG ANY ACCESSIBLE ROUTE (PATH OF TRAVEL) SHALL NOT EXCEED 13mm WHEN CHANGES DO OCCUR, THEY SHALL BE BEVELED WITH A SLOPE NO GREATER THAN 1:2, EXCEPT THAT LEVEL CHANGES CANNOT EXCEED 6mm VERTICAL. ALL SIDEWALKS/PATH OF TRAVEL SLOPE NO GRADER THAN 2%

PARTIAL SITE PLAN, PATH OF TRAVEL

SCALE 1:150

DESIGN	BY MIKE AGHEKIAN	CHECKED	
DETAILS	BY MIKE AGHEKIAN	CHECKED	
QUANTITIES	BY	CHECKED	

STATE OF CALIFORNIA
DEPARTMENT OF TRANSPORTATION

DIVISION OF ENGINEERING SERVICES
ARCHITECTURAL AND STRUCTURAL DESIGN

BRIDGE NO. 06R0001
KM POST R69.4

LAKEHEAD SAFETY ROADSIDE REST AREA UPGRADE AND ADDITION
PARTIAL SITE PLAN PATH OF TRAVEL

SHEET **AO-7**

AO-7.dgn
DS OSD metric Rev. 11/98 28-JUL-2009 14:38

SCALE: ALL DIMENSIONS ARE IN MILLIMETERS UNLESS OTHERWISE NOTED.

ORIGINAL SCALE IN MILLIMETERS FOR REDUCED PLANS 0 10 20 30 40 50 60 70 80 90 100

CU 02-305
EA 02-395801

DISREGARD PRINTS BEARING EARLIER REVISION DATES →
REVISION DATES (PRELIMINARY STAGE ONLY) 9-1-06 10-2-06 12-1-06 1-20-09 3-30-09

SHEET OF

28-JUL-2009 14:38
AO-7.dgn

DIST.	COUNTY	ROUTE	KILOMETER POST TOTAL PROJECT	SHEET NO.	TOTAL SHEETS
02	Sha	5	R69.4	41	120

Donald E. Alsey
LICENSED ARCHITECT

LICENSED ARCHITECT
DONALD E. ALSEY
No. C-26676
Exp. 07-31-11
STATE OF CALIFORNIA

7-13-09
PLANS APPROVAL DATE

The State of California or its officers or agents shall not be responsible for the accuracy or completeness of electronic copies of this plan sheet.

REMOVAL NOTES:

1. REMOVE EXISTING EQUIPMENT
2. REMOVE EXISTING WIRING AND FIXTURES
3. REMOVE EXISTING PLUMBING AND FIXTURES
4. REMOVE EXISTING METAL ROOF PANELS AND FLASHINGS
5. REMOVE EXISTING FASCIA AT ROOF EAVE AND ROOF RAKE
6. REMOVE EXISTING ROOF DECK AND ROOF FRAMING
7. REMOVE EXISTING DOOR, DOOR FRAME AND LOUVER
8. REMOVE EXISTING METAL SIDING PANELS AND WALL FRAMING AT TOP OF CMU WALL
9. REMOVE EXISTING CMU WALL
10. REMOVE EXISTING CONCRETE SLAB
11. REMOVE EXISTING CONCRETE FOOTING AND REPLACE WITH COMPACTED FILL
12. REMOVE EXISTING CONCRETE APRON AND FOOTING

NOTE:

FOR MORE REMOVAL NOTES SEE MECHANICAL, ELECTRICAL, WATER AND WASTE WATER SHEETS

CALIFORNIA STATE FIRE MARSHAL
APPROVED
Approval of this plan does not authorize or approve any omission or deviation from applicable regulations. Final approval is subject to field inspection. One set of approved plans shall be available on the project site at all times.
Reviewed by: MIKE TANAKA
Approval date: 4/9/2009
CSFM FILE NO. 01-45-11-0067

IDENTIFICATION STAMP
DIV. OF THE STATE ARCHITECT
SACRAMENTO REGIONAL OFFICE
02-108545
AC Antonio Florendo
ANTONIO FLORENDO
DATE 3-8-2007

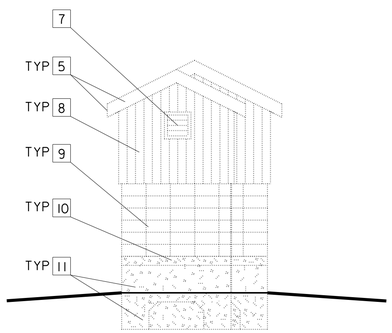

REAR ELEVATION REMOVAL NOTES

SCALE 1:50

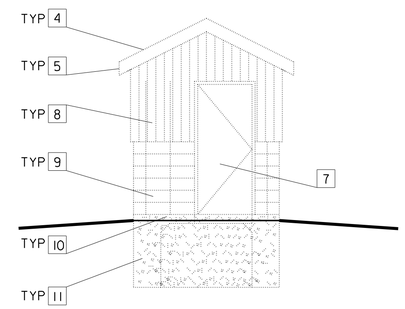

FRONT ELEVATION REMOVAL NOTES

SCALE 1:50

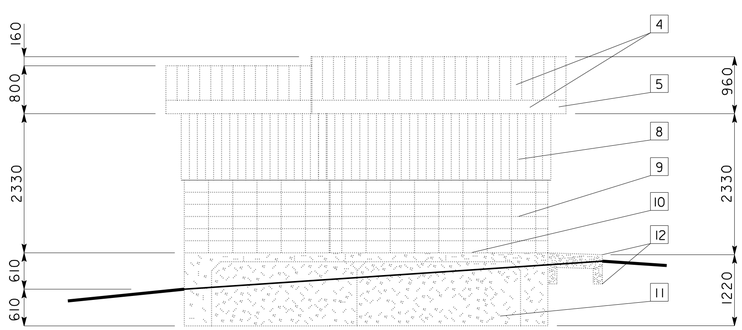

SIDE ELEVATIONS REMOVAL NOTES

SCALE 1:50

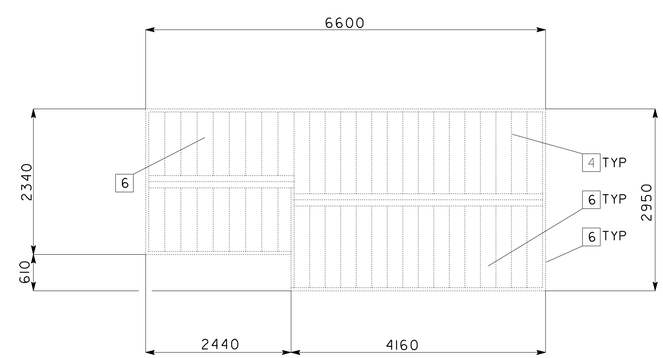

ROOF REMOVAL NOTES

SCALE 1:50

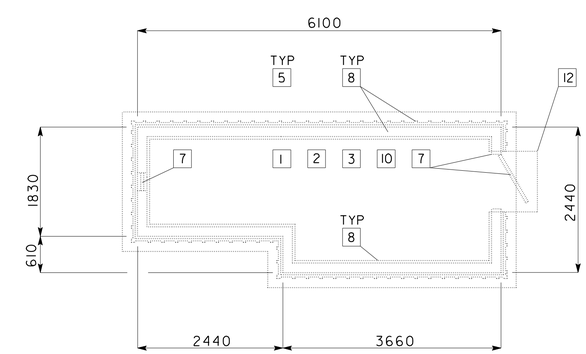

REMOVAL PLAN AND REMOVAL NOTES

SCALE 1:50

DESIGN	BY MIKE AGHEKIAN	CHECKED	
DETAILS	BY MIKE AGHEKIAN	CHECKED	
QUANTITIES	BY	CHECKED	

STATE OF CALIFORNIA
DEPARTMENT OF TRANSPORTATION

DIVISION OF ENGINEERING SERVICES
ARCHITECTURAL AND STRUCTURAL DESIGN

BRIDGE NO. 06R0001
KM POST R69.4

LAKEHEAD SAFETY ROADSIDE REST AREA UPGRADE AND ADDITION
BOOSTER PUMP BUILDING
REMOVAL PLAN AND REMOVAL NOTES

SHEET **A1-00**

A1-00.dgn
DS OSD metric Rev. 11/98 28-JUL-2009 14:39

SCALE: ALL DIMENSIONS ARE IN MILLIMETERS UNLESS OTHERWISE NOTED.

ORIGINAL SCALE IN MILLIMETERS FOR REDUCED PLANS 0 10 20 30 40 50 60 70 80 90 100

CU 02-305
EA 02-395801

DISREGARD PRINTS BEARING EARLIER REVISION DATES →
REVISION DATES (PRELIMINARY STAGE ONLY): 9-1-06 | 10-2-06 | 12-1-06 | 2-23-07 | 1-20-09 | 3-30-09

SHEET OF

28-JUL-2009 14:39
A1-00.dgn

DIST.	COUNTY	ROUTE	KILOMETER POST TOTAL PROJECT	SHEET NO.	TOTAL SHEETS
02	Sha	5	R69.4	42	120

Donald E. Alsey
LICENSED ARCHITECT

LICENSED ARCHITECT
DONALD E. ALSEY
No. C-26676
Exp. 07-31-11
STATE OF CALIFORNIA

7-13-09
PLANS APPROVAL DATE

The State of California or its officers or agents shall not be responsible for the accuracy or completeness of electronic copies of this plan sheet.

REMOVAL NOTES:

1. REMOVE EXISTING TOILET TISSUE & TOILET SEAT COVER DISPENSERS
2. REMOVE EXISTING NAPKIN DISPOSALS
3. REMOVE EXISTING TOILET PARTITIONS, DOORS AND PILASTERS
4. REMOVE EXISTING LAVATORIES AND MIRRORS
5. REMOVE EXISTING URINALS & URINAL SCREENS
6. REMOVE EXISTING WATER CLOSETS AND GRAB BARS
7. REMOVE EXISTING HAND-DRYERS
8. REMOVE EXISTING LIQUID SOAP SYSTEM
9. EXISTING TELEPHONES SHALL BE REMOVED AND REPLACED BY PHONE COMPANY (SEE SHEET A0-7)
10. REMOVE EXISTING INTERIOR LIGHT FIXTURES AT COMFORT BUILDING
11. REMOVE EXISTING EXTERIOR LIGHT FIXTURES AT COMFORT BUILDING
12. REMOVE EXISTING AIR COMPRESSOR WHOLE SYSTEM (SEE MECH AND ELEC SHTS)
13. REMOVE EXISTING SERVICE SINK WHOLE SYSTEM (SEE MECH AND ELEC SHTS)
14. REMOVE EAST SIDE OF EXISTING ROOF MATERIALS AND ROOF DECK DOWN TO EXISTING BEAMS AT EDGE OF EXISTING BUILDING WALL
15. CUT EXISTING BEAMS FLUSH WITH FACE OF EXISTING FASCIA ON WEST SIDE OF EXISTING ROOF
16. REMOVE EXISTING DRINKING FOUNTAIN AND RE-INSTALL AFTER INSTALLATION OF THE NEW WALL TILES
17. REMOVE EXISTING DRINKING FOUNTAIN WALL TILES AND MORTAR BED
18. REMOVE EXISTING RESTROOMS WALL TILES AND MORTAR BED
19. REMOVE EXISTING RESTROOMS FLOOR TILES AND MORTAR BED
20. REMOVE EXISTING CONC STEP AT DRINKING FOUNTAIN, SAW-CUT FLUSH WITH WALLS AND SIDEWALK, PATCH SIDEWALK AND WALLS AS REQUIRED
21. REMOVE EXISTING SIGNS FOR PARKING, BUILDING, DOOR AND RESTROOMS
22. REMOVE EXISTING DOORS THRESHOLDS
23. REMOVE EXISTING DOOR AND DOOR FRAMES
24. REMOVE EXISTING WALL
25. REMOVE EXISTING WALL/PARTITION
26. PATCH WALL AT EXISTING WASTE RECEPTACLE OPENING
27. REMOVE EXISTING PLUMBING
28. REMOVE EXISTING WATER CHILER WHOLE SYSTEM
29. REMOVE EXISTING WINDOWS AND FRAMES
30. REMOVE EXISTING MULLION, SILL, HEAD AND JAMB WOOD
31. SANDBLAST EXISTING PAINTED WALLS

NOTES:

1. FOR MORE REMOVAL NOTES SEE MECHANICAL AND ELECTRICAL SHEETS
2. FOR THE BEAMS ON REMOVAL NOTE NUMBER 14 SEE STRUCTURAL SHEETS

LEGEND FOR THIS SHEET ONLY

- EXISTING CMU WALLS
- EXISTING WALLS TO BE REMOVED SHOWN WITH DOTTED LINE
- EXISTING ROOF LINE
- EXISTING FIXTURES TO BE REMOVED SHOWN WITH A DOTTED LINE
- EXISTING ITEMS TO BE REMOVED SHOWN AS A DOTTED LINE

CALIFORNIA STATE FIRE MARSHAL APPROVED
Approval of this plan does not authorize or approve any omission or deviation from applicable regulations. Final approval is subject to field inspection. One set of approved plans shall be available on the project site at all times.
Reviewed by: MIKE TANAKA
Approval date: 4/9/2009
CSFM FILE NO. 01-45-11-0067

IDENTIFICATION STAMP
DIV. OF THE STATE ARCHITECT
SACRAMENTO REGIONAL OFFICE
02-108545
AC Antonio Florendo
ANTONIO FLORENDO
DATE 3-8-2007

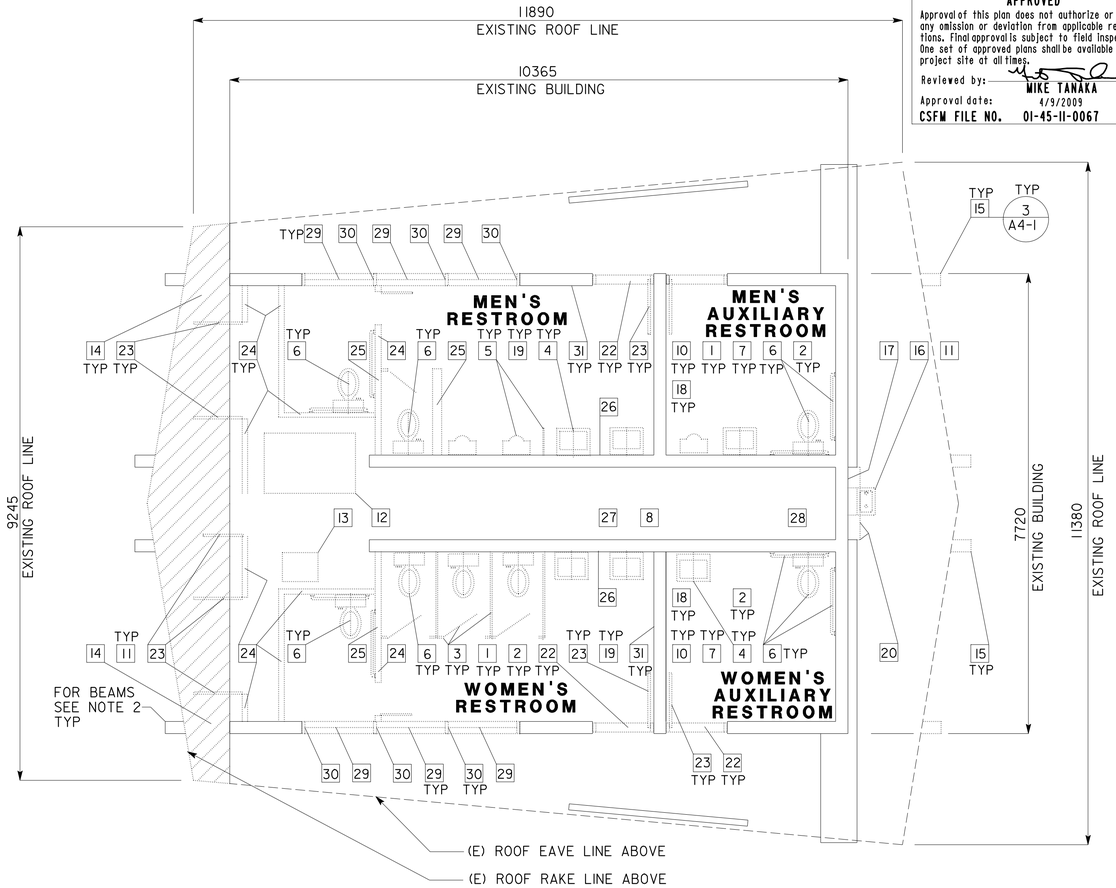

EXISTING COMFORT BUILDING, REMOVAL PLAN AND NOTES

SCALE 1:50

DESIGN	BY MIKE AGHEKIAN	CHECKED	
DETAILS	BY MIKE AGHEKIAN	CHECKED	
QUANTITIES	BY	CHECKED	

STATE OF CALIFORNIA
DEPARTMENT OF TRANSPORTATION

DIVISION OF ENGINEERING SERVICES
ARCHITECTURAL AND STRUCTURAL DESIGN

BRIDGE NO. 06R0001
KM POST R69.4

LAKEHEAD SAFETY ROADSIDE REST AREA UPGRADE AND ADDITION
(E) COMFORT BUILDING
REMOVAL PLAN AND REMOVAL NOTES

SHEET A1-0

A1-0.dgn
DS OSD metric Rev. 11/98 28-JUL-2009 14:39

SCALE: ALL DIMENSIONS ARE IN MILLIMETERS UNLESS OTHERWISE NOTED.

ORIGINAL SCALE IN MILLIMETERS FOR REDUCED PLANS 0 10 20 30 40 50 60 70 80 90 100

CU 02-305
EA 02-395801

DISREGARD PRINTS BEARING EARLIER REVISION DATES → 9-1-06 | 10-2-06 | 12-1-06 | 2-23-07 | 1-20-09 | 3-30-09

REVISION DATES (PRELIMINARY STAGE ONLY) SHEET OF

28-JUL-2009 14:39
A1-0.dgn

DIST.	COUNTY	ROUTE	KILOMETER POST TOTAL PROJECT	SHEET NO.	TOTAL SHEETS
02	Sha	5	R69.4	43	120

LICENSED ARCHITECT

LICENSED ARCHITECT DONALD E. ALSEY No. C-26676 Exp. 07-31-11 STATE OF CALIFORNIA

7-13-09
PLANS APPROVAL DATE

The State of California or its officers or agents shall not be responsible for the accuracy or completeness of electronic copies of this plan sheet.

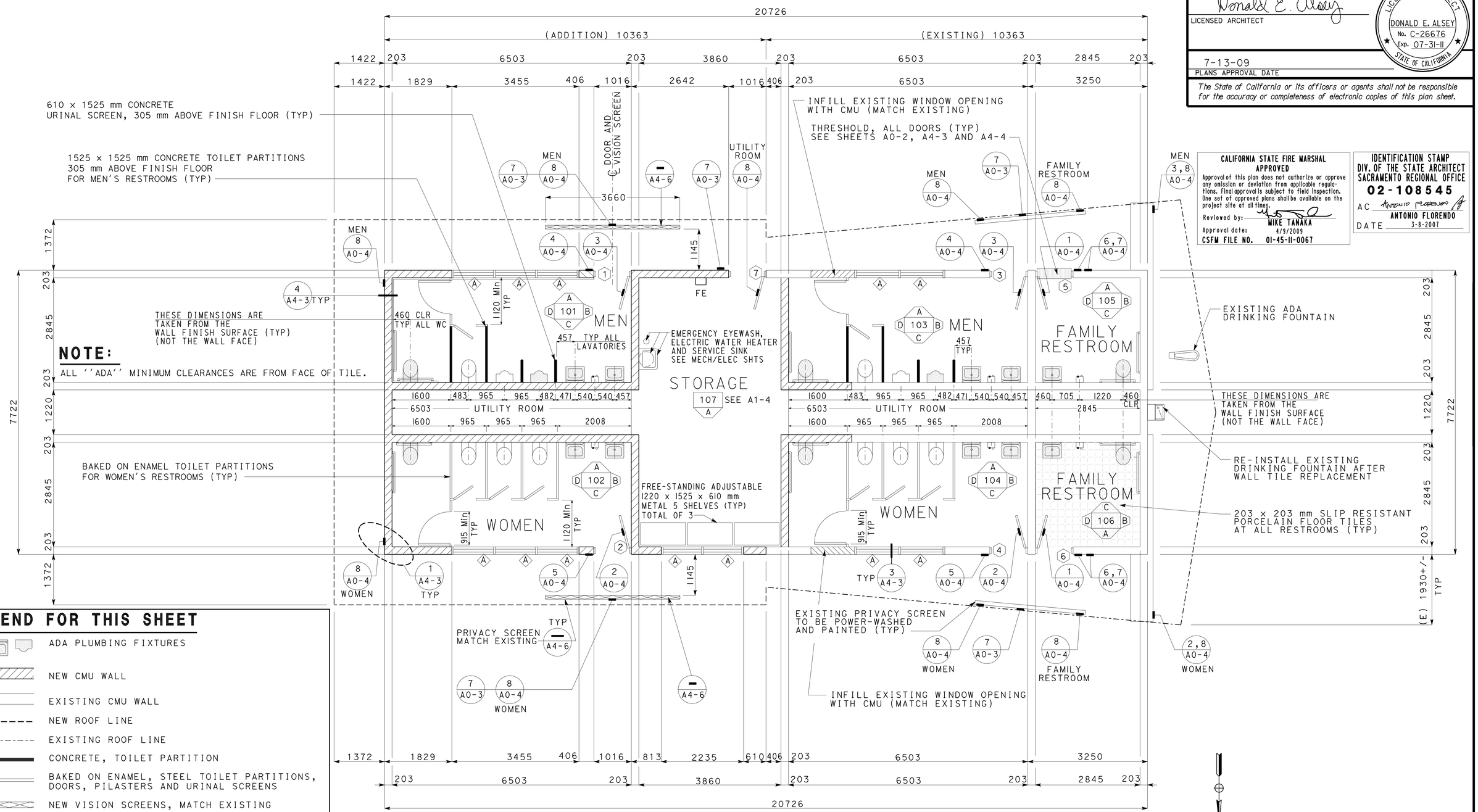

NOTE:

ALL ''ADA'' MINIMUM CLEARANCES ARE FROM FACE OF TILE.

LEGEND FOR THIS SHEET

- ADA PLUMBING FIXTURES
- NEW CMU WALL
- EXISTING CMU WALL
- NEW ROOF LINE
- EXISTING ROOF LINE
- CONCRETE, TOILET PARTITION
- BAKED ON ENAMEL, STEEL TOILET PARTITIONS, DOORS, PILASTERS AND URINAL SCREENS
- NEW VISION SCREENS, MATCH EXISTING

CALIFORNIA STATE FIRE MARSHAL APPROVED

Approval of this plan does not authorize or approve any omission or deviation from applicable regulations. Final approval is subject to field inspection. One set of approved plans shall be available on the project site at all times.

Reviewed by: MIKE TANAKA

Approval date: 4/9/2009

CSFM FILE NO. 01-45-11-0067

IDENTIFICATION STAMP
DIV. OF THE STATE ARCHITECT
SACRAMENTO REGIONAL OFFICE
02-108545
AC Antonio Florendo
ANTONIO FLORENDO
DATE 3-8-2007

FLOOR PLAN

SCALE 1:50

DESIGN	BY MIKE AGHEKIAN	CHECKED	
DETAILS	BY MIKE AGHEKIAN	CHECKED	
QUANTITIES	BY	CHECKED	

STATE OF CALIFORNIA
DEPARTMENT OF TRANSPORTATION

DIVISION OF ENGINEERING SERVICES
ARCHITECTURAL AND STRUCTURAL DESIGN

BRIDGE NO. 06R0001
KM POST R69.4

LAKEHEAD SAFETY ROADSIDE REST AREA UPGRADE AND ADDITION
COMFORT BUILDING
FLOOR PLAN

SHEET **A1-1**

A1-1.dgn
DS OSD metric Rev. 11/98 28-JUL-2009 14:39

SCALE: ALL DIMENSIONS ARE IN MILLIMETERS UNLESS OTHERWISE NOTED.

ORIGINAL SCALE IN MILLIMETERS FOR REDUCED PLANS 0 10 20 30 40 50 60 70 80 90 100

CU 02-305
EA 02-395801

DISREGARD PRINTS BEARING EARLIER REVISION DATES → 9-1-06 10-2-06 12-1-06 2-23-07 1-20-09 3-30-09

SHEET OF

28-JUL-2009 14:39
A1-1.dgn

DIST.	COUNTY	ROUTE	KILOMETER POST TOTAL PROJECT	SHEET NO.	TOTAL SHEETS
02	Sha	5	R69.4	44	120

LICENSED ARCHITECT

LICENSED ARCHITECT DONALD E. ALSEY No. C-26676 EXP. 07-31-11 STATE OF CALIFORNIA

7-13-09
PLANS APPROVAL DATE

The State of California or its officers or agents shall not be responsible for the accuracy or completeness of electronic copies of this plan sheet.

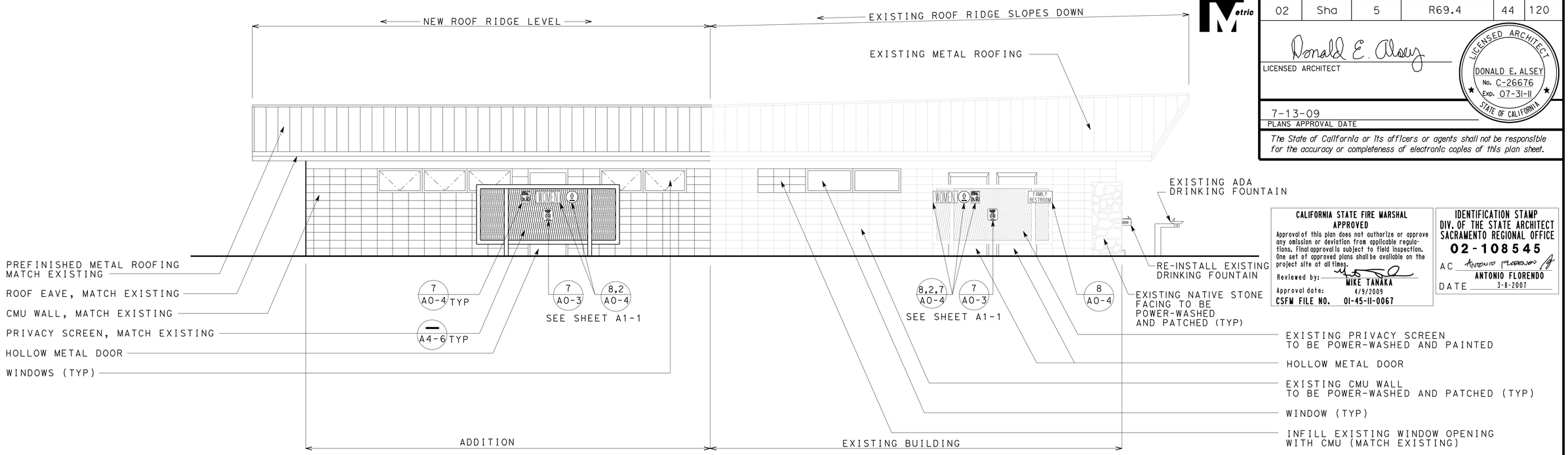

CALIFORNIA STATE FIRE MARSHAL APPROVED

Approval of this plan does not authorize or approve any omission or deviation from applicable regulations. Final approval is subject to field inspection. One set of approved plans shall be available on the project site at all times.

Reviewed by: MIKE TANAKA
Approval date: 4/9/2009
CSFM FILE NO. 01-45-11-0067

IDENTIFICATION STAMP
DIV. OF THE STATE ARCHITECT
SACRAMENTO REGIONAL OFFICE
02-108545
AC ANTONIO FLORENDO
ANTONIO FLORENDO
DATE 3-8-2007

SIDE ELEVATION

OTHER SIDE ELEVATION SIMILAR

SCALE 1:50

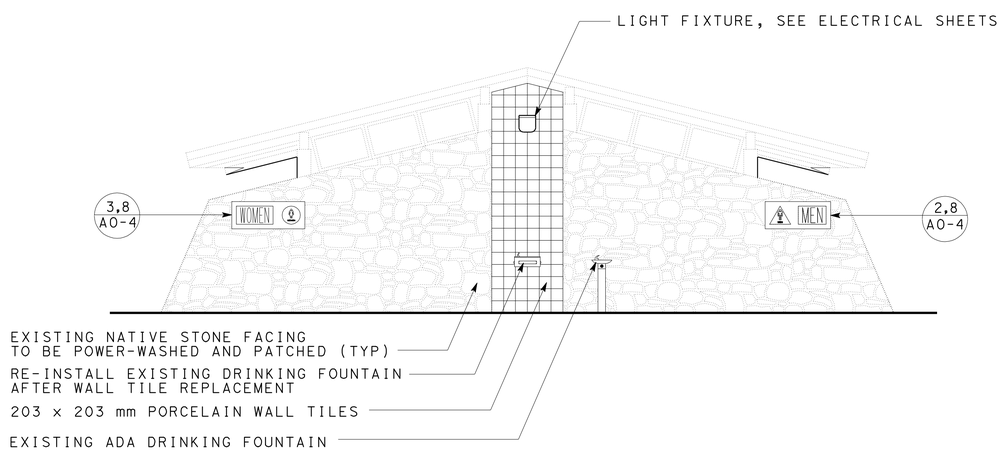

FRONT ELEVATION

SCALE 1:50

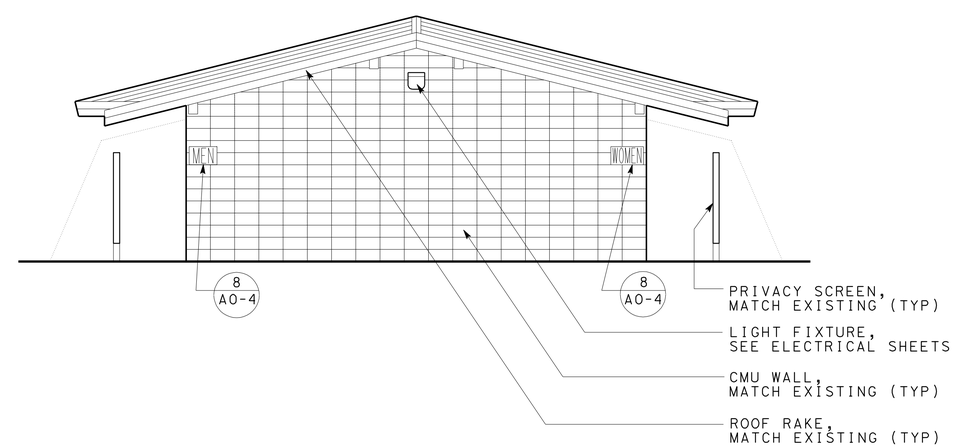

BACK ELEVATION

SCALE 1:50

DESIGN	BY MIKE AGHEKIAN	CHECKED	
DETAILS	BY MIKE AGHEKIAN	CHECKED	
QUANTITIES	BY	CHECKED	

STATE OF CALIFORNIA
DEPARTMENT OF TRANSPORTATION

DIVISION OF ENGINEERING SERVICES
ARCHITECTURAL AND STRUCTURAL DESIGN

BRIDGE NO. 06R0001
KM POST R69.4

LAKEHEAD SAFETY ROADSIDE REST AREA UPGRADE AND ADDITION
COMFORT BUILDING
EXTERIOR ELEVATIONS

SHEET **A1-2**

A1-2.dgn
DS OSD metric Rev. 11/98 28-JUL-2009 14:39

SCALE: ALL DIMENSIONS ARE IN MILLIMETERS UNLESS OTHERWISE NOTED.

ORIGINAL SCALE IN MILLIMETERS FOR REDUCED PLANS 0 10 20 30 40 50 60 70 80 90 100

CU 02-305
EA 02-395801

DISREGARD PRINTS BEARING EARLIER REVISION DATES → 9-1-06 | 10-2-06 | 12-1-06 | 2-23-07 | 1-20-09 | 3-30-09

REVISION DATES (PRELIMINARY STAGE ONLY) | SHEET | OF

28-JUL-2009 14:39
A1-2.dgn

DIST.	COUNTY	ROUTE	KILOMETER POST TOTAL PROJECT	SHEET NO.	TOTAL SHEETS
02	Sha	5	R69.4	45	120

Donald E. Alsey
LICENSED ARCHITECT

LICENSED ARCHITECT
DONALD E. ALSEY
No. C-26676
EXP. 07-31-11
STATE OF CALIFORNIA

7-13-09
PLANS APPROVAL DATE

The State of California or its officers or agents shall not be responsible for the accuracy or completeness of electronic copies of this plan sheet.

CALIFORNIA STATE FIRE MARSHAL APPROVED

Approval of this plan does not authorize or approve any omission or deviation from applicable regulations. Final approval is subject to field inspection. One set of approved plans shall be available on the project site at all times.

Reviewed by: MIKE TANAKA
Approval date: 4/9/2009
CSFM FILE NO. 01-45-11-0067

IDENTIFICATION STAMP
DIV. OF THE STATE ARCHITECT
SACRAMENTO REGIONAL OFFICE
02-108545
AC Antonio Florendo
ANTONIO FLORENDO
DATE 3-8-2007

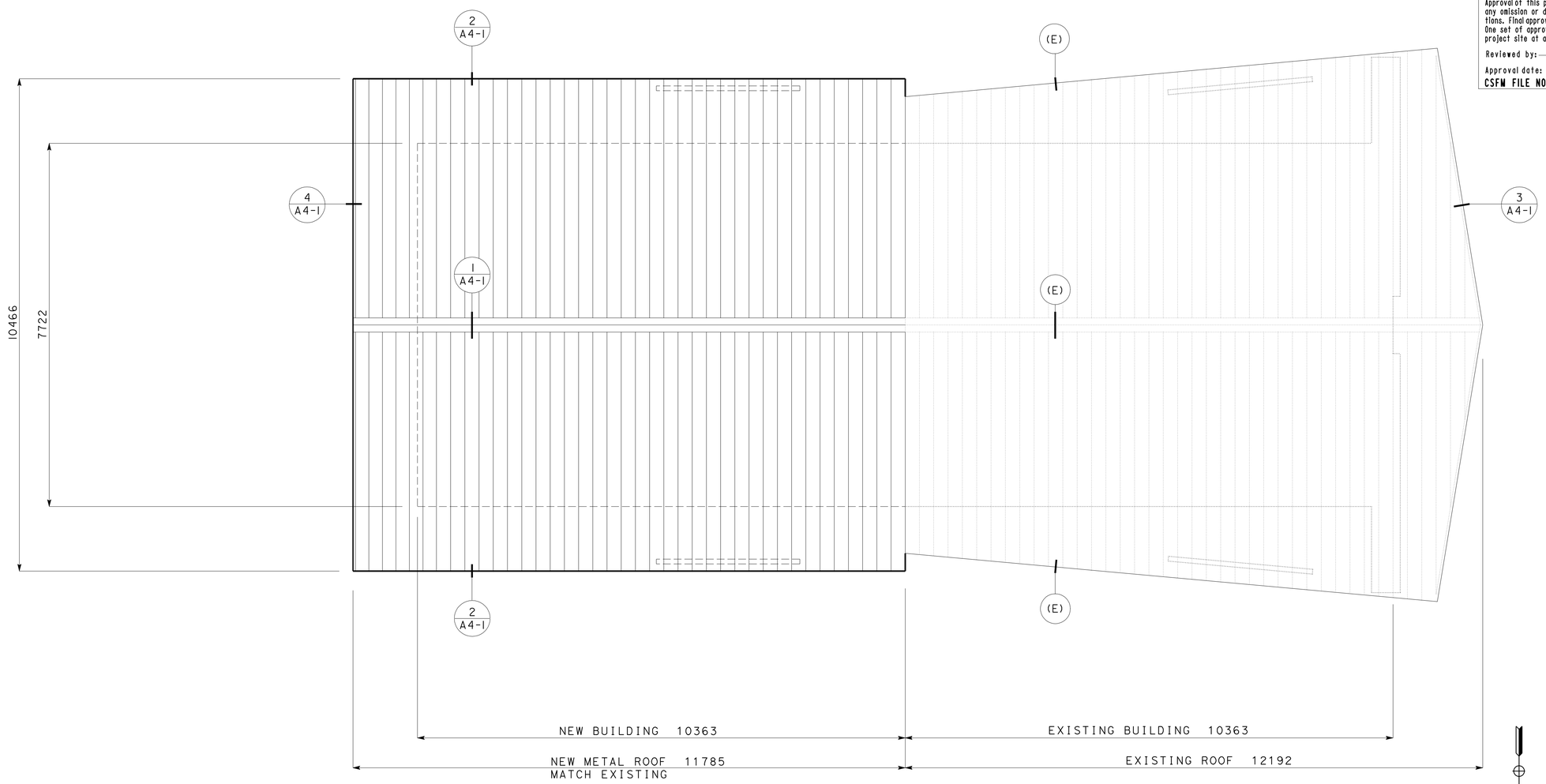

ROOF PLAN

SCALE 1:50

DESIGN	BY MIKE AGHEKIAN	CHECKED	
DETAILS	BY MIKE AGHEKIAN	CHECKED	
QUANTITIES	BY	CHECKED	

STATE OF CALIFORNIA
DEPARTMENT OF TRANSPORTATION

DIVISION OF ENGINEERING SERVICES
ARCHITECTURAL AND STRUCTURAL DESIGN

BRIDGE NO. 06R0001
KM POST R69.4

LAKEHEAD SAFETY ROADSIDE REST AREA UPGRADE AND ADDITION
COMFORT BUILDING
ROOF PLAN

SHEET **A1-3**

A1-3.dgn
DS OSD metric Rev. 11/98 28-JUL-2009 14:39

SCALE: ALL DIMENSIONS ARE IN MILLIMETERS UNLESS OTHERWISE NOTED.

ORIGINAL SCALE IN MILLIMETERS FOR REDUCED PLANS 0 10 20 30 40 50 60 70 80 90 100

CU 02-305
EA 02-395801

DISREGARD PRINTS BEARING EARLIER REVISION DATES →
REVISION DATES (PRELIMINARY STAGE ONLY): 9-1-06 | 10-2-06 | 12-1-06 | 2-23-07 | 1-20-09 | 3-30-09

SHEET OF

28-JUL-2009 14:39
A1-3.dgn

DIST.	COUNTY	ROUTE	KILOMETER POST TOTAL PROJECT	SHEET NO.	TOTAL SHEETS
02	Sha	5	R69.4	46	120

LICENSED ARCHITECT

DONALD E. ALSEY No. C-26676 Exp. 07-31-11 STATE OF CALIFORNIA

7-13-09
PLANS APPROVAL DATE

The State of California or its officers or agents shall not be responsible for the accuracy or completeness of electronic copies of this plan sheet.

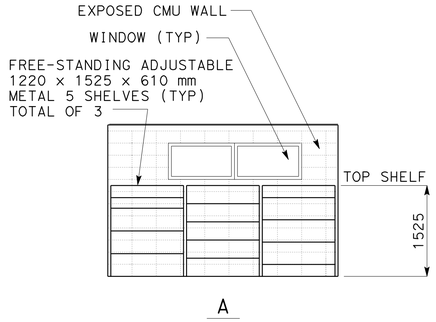

STORAGE ROOM INTERIOR NORTH ELEVATION 107

SCALE 1:50

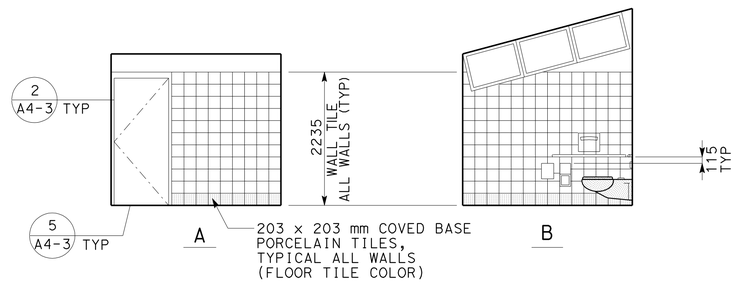

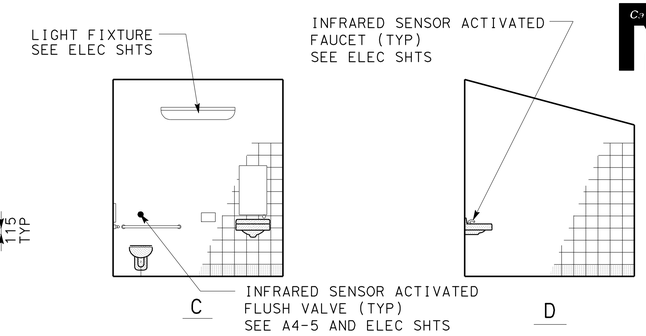

AUXILIARY RESTROOMS, INTERIOR ELEVATIONS

105 AND 106 SIM

SCALE 1:50

CALIFORNIA STATE FIRE MARSHAL APPROVED

Approval of this plan does not authorize or approve any omission or deviation from applicable regulations. Final approval is subject to field inspection. One set of approved plans shall be available on the project site at all times.

Reviewed by: MIKE TANAKA

Approval date: 4/9/2009

CSFM FILE NO. 01-45-11-0067

IDENTIFICATION STAMP
DIV. OF THE STATE ARCHITECT
SACRAMENTO REGIONAL OFFICE
02-108545

AC ANTONIO FLORENDO
ANTONIO FLORENDO
DATE 3-8-2007

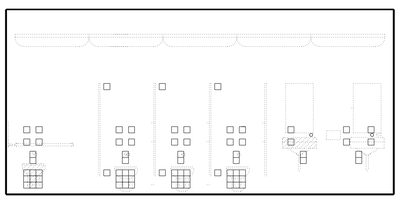

PATCHING MASONRY WALLS TYPICAL

SEE PATCHING MASONRY WALL NOTE

SCALE 1:50

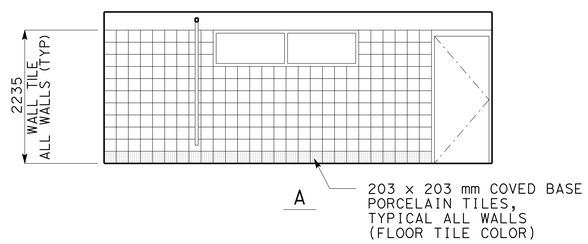

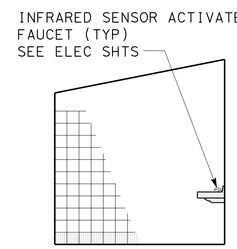

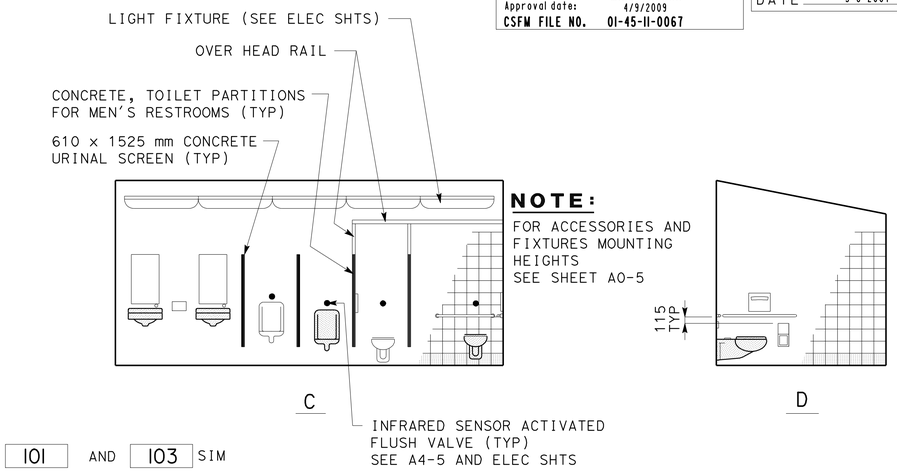

NOTE:
FOR ACCESSORIES AND FIXTURES MOUNTING HEIGHTS SEE SHEET A0-5

MEN'S RESTROOM, INTERIOR ELEVATIONS

101 AND 103 SIM

SCALE 1:50

PATCHING MASONRY WALLS NOTE

PROVIDE STRUCTURAL REPAIRS AND PATCHES TO THE HOLES IN THE MASONRY WALLS RESULTING FROM THE REMOVAL OF EXISTING PLUMBING FIXTURES, WASTE, VENT AND WATER PIPING, TOILET PARTITIONS AND ACCESSORIES. HOLES ARE TO BE PATCHED AFTER EXISTING FIXTURES AND ACCESSORIES ARE REMOVED AND BEFORE NEW HOLES ARE CUT OR CORED FOR FIXTURES, IN THE NEW LOCATIONS.

PATCHES ARE TO BE PREPARED AND MATERIALS APPLIED IN STRICT CONFORMANCE WITH MANUFACTURES SPECIFICATIONS AND TECHNICAL DATA SHEETS.

LEGEND FOR THIS SHEET ONLY

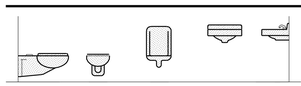

ADA PLUMBING FIXTURES.
FOR MOUNTING HEIGHTS
SEE SHEET A0-5

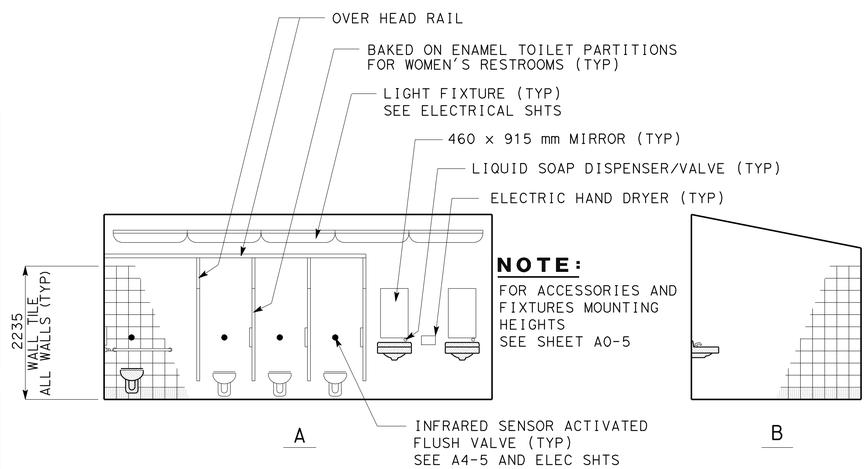

NOTE:
FOR ACCESSORIES AND FIXTURES MOUNTING HEIGHTS SEE SHEET A0-5

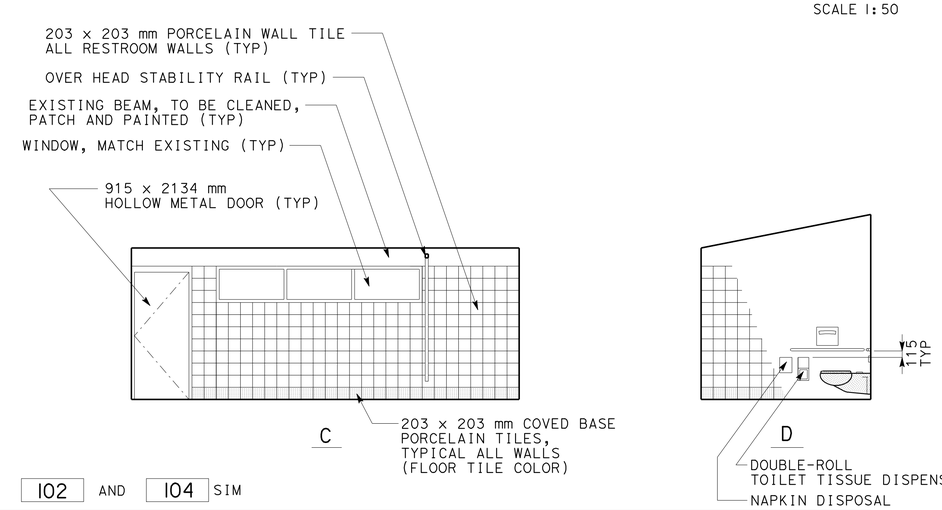

WOMEN'S RETROOM, INTERIOR ELEVATIONS

102 AND 104 SIM

SCALE 1:50

DESIGN	BY MIKE AGHEKIAN	CHECKED	
DETAILS	BY MIKE AGHEKIAN	CHECKED	
QUANTITIES	BY	CHECKED	

STATE OF CALIFORNIA
DEPARTMENT OF TRANSPORTATION

DIVISION OF ENGINEERING SERVICES
ARCHITECTURAL AND STRUCTURAL DESIGN

BRIDGE NO. 06R0001
KM POST R69.4

LAKEHEAD SAFETY ROADSIDE REST AREA UPGRADE AND ADDITION
COMFORT BUILDING | **INTERIOR ELEVATIONS**

SHEET **A1-4**

A1-4.dgn
DS OSD metric Rev. 11/98 28-JUL-2009 14:39

SCALE: ALL DIMENSIONS ARE IN MILLIMETERS UNLESS OTHERWISE NOTED.

ORIGINAL SCALE IN MILLIMETERS FOR REDUCED PLANS 0 10 20 30 40 50 60 70 80 90 100

CU 02-305
EA 02-395801

DISREGARD PRINTS BEARING EARLIER REVISION DATES → 9-1-06 | 10-2-06 | 12-1-06 | 2-23-07 | 1-20-09 | 3-30-09

REVISION DATES (PRELIMINARY STAGE ONLY) | SHEET | OF

28-JUL-2009 14:39
A1-4.dgn

DIST.	COUNTY	ROUTE	KILOMETER POST TOTAL PROJECT	SHEET NO.	TOTAL SHEETS
02	Sha	5	R69.4	47	120

LICENSED ARCHITECT

LICENSED ARCHITECT DONALD E. ALSEY No. C-26676 EXP. 07-31-11 STATE OF CALIFORNIA

7-13-09
PLANS APPROVAL DATE

The State of California or its officers or agents shall not be responsible for the accuracy or completeness of electronic copies of this plan sheet.

REMOVAL NOTE :

REMOVE PORTION OF CMU WALL
TO PROVIDE 1220x406 WINDOW OPENING

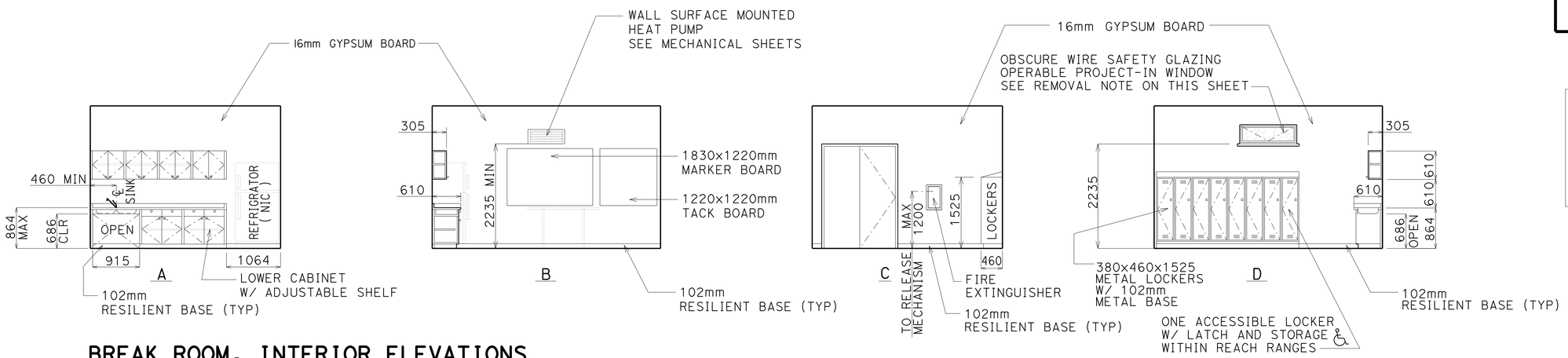

BREAK ROOM, INTERIOR ELEVATIONS

SCALE 1:50

CALIFORNIA STATE FIRE MARSHAL
APPROVED
Approval of this plan does not authorize or approve any omission or deviation from applicable regulations. Final approval is subject to field inspection. One set of approved plans shall be available on the project site at all times.
Reviewed by: MIKE TANAKA
Approval date: 4/9/2009
CSFM FILE NO. 01-45-11-0067

IDENTIFICATION STAMP
DIV. OF THE STATE ARCHITECT
SACRAMENTO REGIONAL OFFICE
02-108545
AC ANTONIO FLORENDO
ANTONIO FLORENDO
DATE 3-8-2007

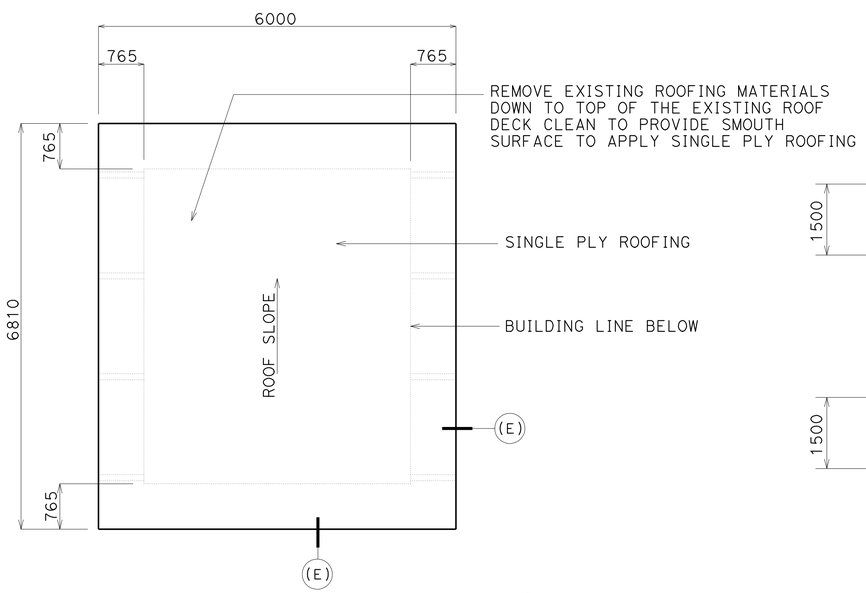

ROOF PLAN

SCALE 1:50

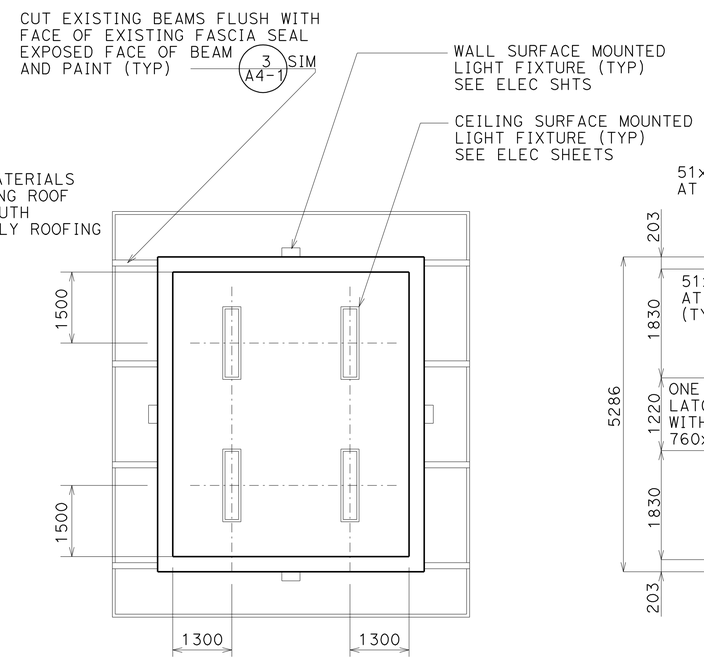

REFLECTED CEILING PLAN

SCALE 1:50

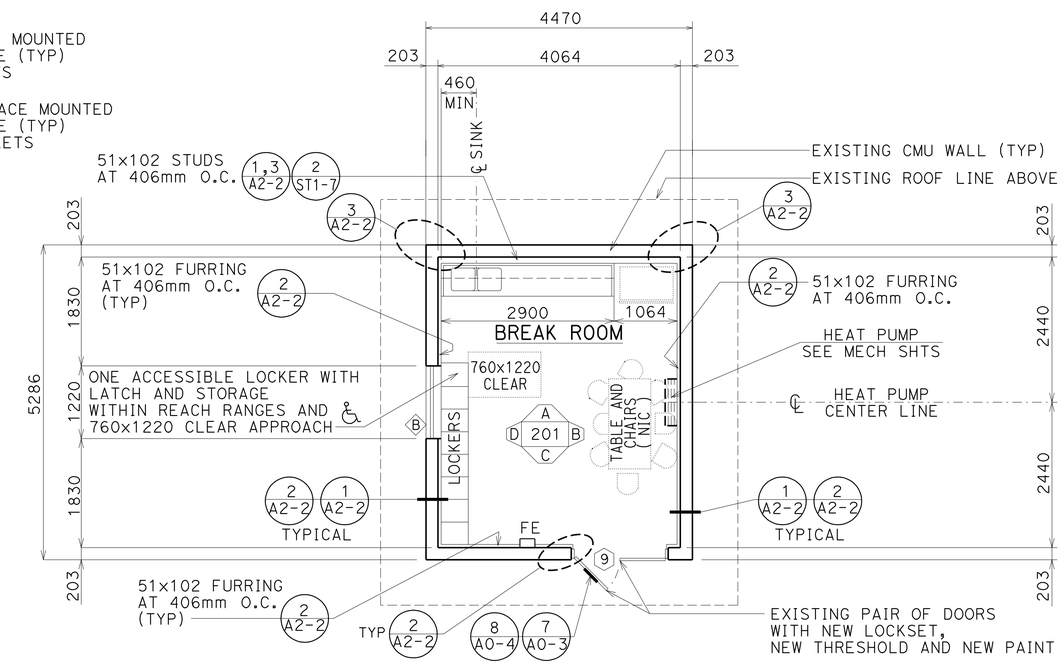

FLOOR PLAN

SCALE 1:50

DESIGN	BY MIKE AGHEKIAN	CHECKED	
DETAILS	BY MIKE AGHEKIAN	CHECKED	
QUANTITIES	BY	CHECKED	

STATE OF CALIFORNIA
DEPARTMENT OF TRANSPORTATION

DIVISION OF ENGINEERING SERVICES
ARCHITECTURAL AND STRUCTURAL DESIGN

BRIDGE NO. 06R0001
KM POST R69.4

LAKEHEAD SAFETY ROADSIDE REST AREA UPGRADE AND ADDITION
BREAK ROOM BUILDING
FLOOR PLAN, INTER ELEV, ROOF PLAN AND REFLECTED CEILING PLAN

SHEET **A2-1**

A2-1.dgn
DS OSD metric Rev. 11/98 28-JUL-2009 14:39

SCALE: ALL DIMENSIONS ARE IN MILLIMETERS UNLESS OTHERWISE NOTED.

ORIGINAL SCALE IN MILLIMETERS FOR REDUCED PLANS 0 10 20 30 40 50 60 70 80 90 100

CU 02-305
EA 02-395801

DISREGARD PRINTS BEARING EARLIER REVISION DATES → 9-1-06 10-2-06 12-1-06 2-23-07 1-20-09 3-30-09

REVISION DATES (PRELIMINARY STAGE ONLY) SHEET OF

28-JUL-2009 14:39
A2-1.dgn

DIST.	COUNTY	ROUTE	KILOMETER POST TOTAL PROJECT	SHEET NO.	TOTAL SHEETS
02	Sha	5	R69.4	48	120

LICENSED ARCHITECT

LICENSED ARCHITECT DONALD E. ALSEY No. C-26676 EXP. 07-31-11 STATE OF CALIFORNIA

7-13-09
PLANS APPROVAL DATE

The State of California or its officers or agents shall not be responsible for the accuracy or completeness of electronic copies of this plan sheet.

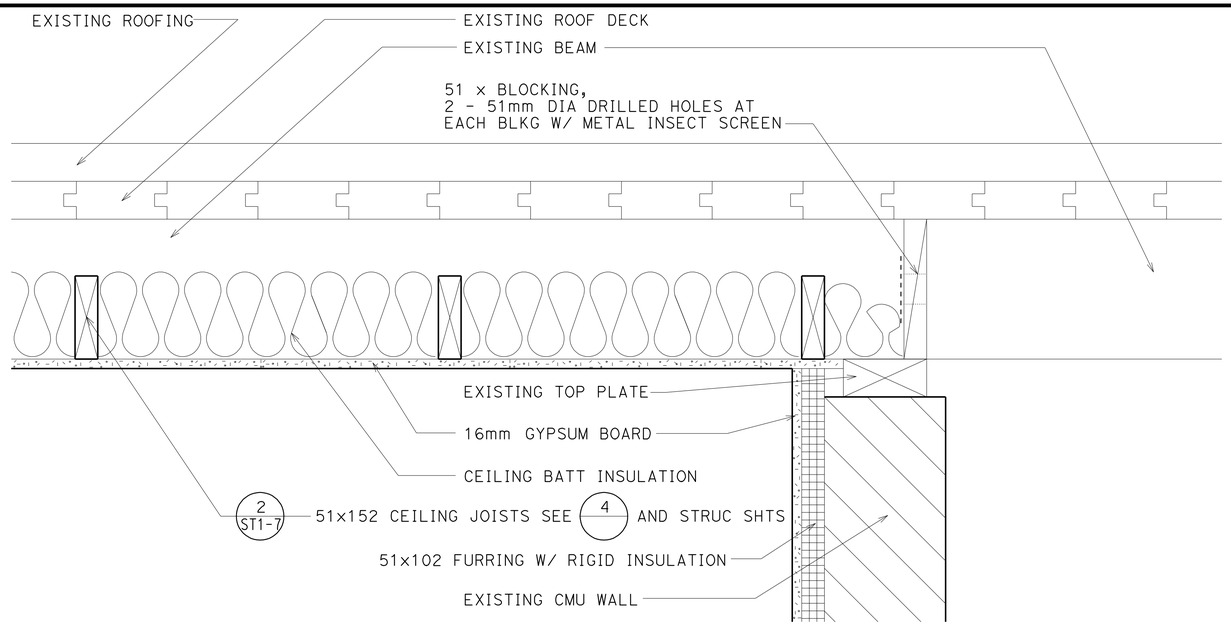

1 CEILING AND WALL DETAILS

PARTIAL BUILDING SECTION VIEW

SCALE 1:5

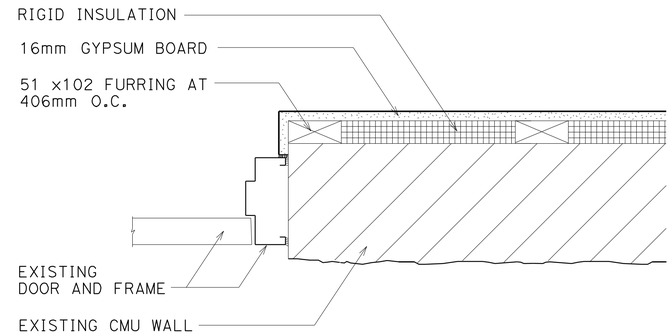

2 WALL FINISH AND INSULATION DETAILS

SCALE 1:5

CALIFORNIA STATE FIRE MARSHAL APPROVED

Approval of this plan does not authorize or approve any omission or deviation from applicable regulations. Final approval is subject to field inspection. One set of approved plans shall be available on the project site at all times.

Reviewed by: MIKE TANAKA

Approval date: 4/9/2009

CSFM FILE NO. 01-45-11-0067

IDENTIFICATION STAMP
DIV. OF THE STATE ARCHITECT
SACRAMENTO REGIONAL OFFICE
02-108545
AC Antonio Florendo
ANTONIO FLORENDO
DATE 3-8-2007

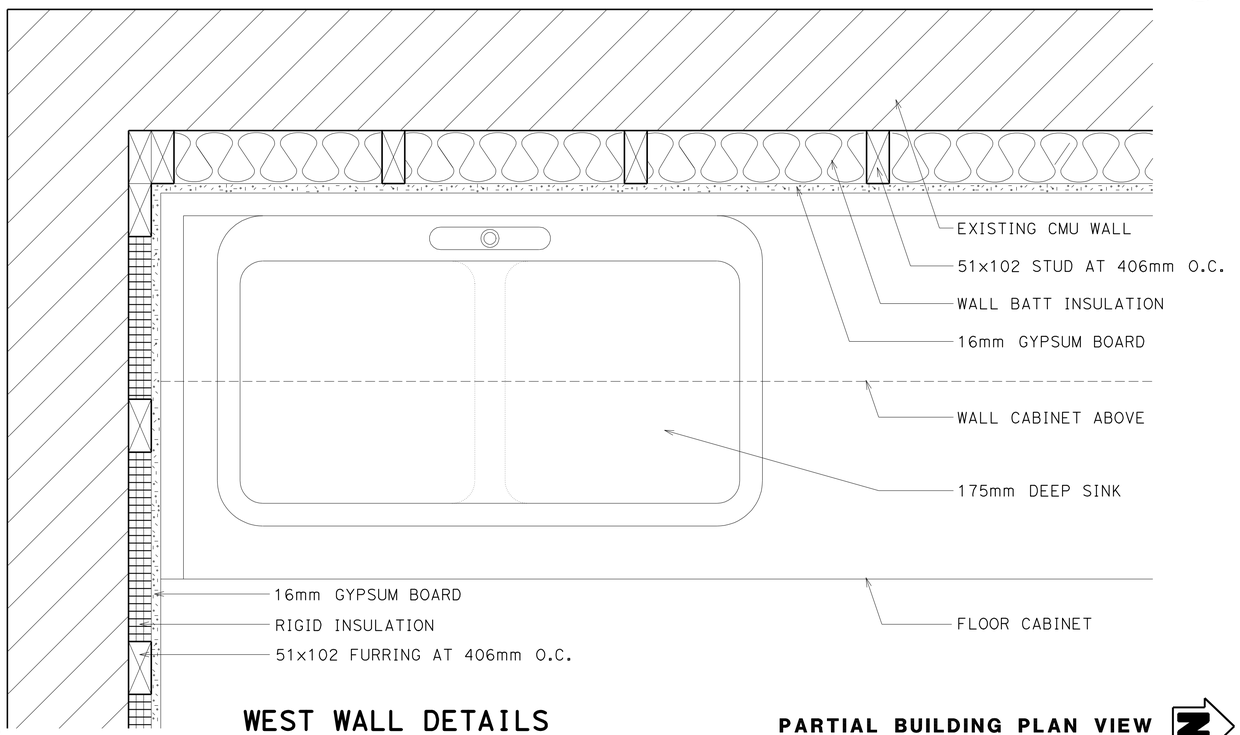

3 WEST WALL DETAILS

PARTIAL BUILDING PLAN VIEW

SEE FLOOR PLAN, ON SHEET A2-1

SCALE 1:5

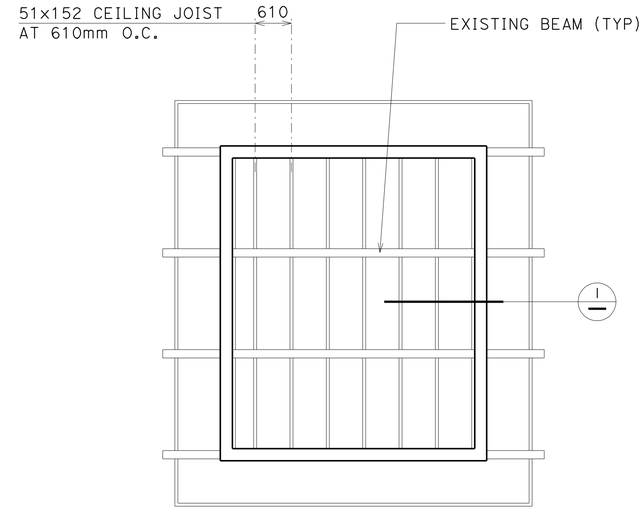

4 CEILING, EXISTING BEAMS AND NEW CEILING JOISTS

SCALE 1:50

DESIGN	BY MIKE AGHEKIAN	CHECKED	
DETAILS	BY MIKE AGHEKIAN	CHECKED	
QUANTITIES	BY	CHECKED	

STATE OF CALIFORNIA
DEPARTMENT OF TRANSPORTATION

DIVISION OF ENGINEERING SERVICES
ARCHITECTURAL AND STRUCTURAL DESIGN

BRIDGE NO. 06R0001
KM POST R69.4

LAKEHEAD SAFETY ROADSIDE REST AREA UPGRADE AND ADDITION
BREAK ROOM BUILDING
WALL AND CEILING DETAILS

SHEET **A2-2**

A2-2.dgn
DS OSD metric Rev. 11/98 28-JUL-2009 14:40

SCALE: ALL DIMENSIONS ARE IN MILLIMETERS UNLESS OTHERWISE NOTED.

ORIGINAL SCALE IN MILLIMETERS FOR REDUCED PLANS 0 10 20 30 40 50 60 70 80 90 100

CU 02-305
EA 02-395801

DISREGARD PRINTS BEARING EARLIER REVISION DATES

REVISION DATES (PRELIMINARY STAGE ONLY): 9-1-06 | 10-2-06 | 12-1-06 | 2-23-07 | 1-20-09 | 3-30-09

SHEET OF

28-JUL-2009 14:40

A2-2.dgn

DIST.	COUNTY	ROUTE	KILOMETER POST TOTAL PROJECT	SHEET NO.	TOTAL SHEETS
02	Sha	5	R69.4	49	120

LICENSED ARCHITECT

LICENSED ARCHITECT
DONALD E. ALSEY
No. C-26676
EXP. 07-31-11
STATE OF CALIFORNIA

7-13-09
PLANS APPROVAL DATE

The State of California or its officers or agents shall not be responsible for the accuracy or completeness of electronic copies of this plan sheet.

CALIFORNIA STATE FIRE MARSHAL APPROVED

Approval of this plan does not authorize or approve any omission or deviation from applicable regulations. Final approval is subject to field inspection. One set of approved plans shall be available on the project site at all times.

Reviewed by: MIKE TANAKA
Approval date: 4/9/2009
CSFM FILE NO. 01-45-11-0067

IDENTIFICATION STAMP
DIV. OF THE STATE ARCHITECT
SACRAMENTO REGIONAL OFFICE
02-108545
AC ANTONIO FLORENDO
ANTONIO FLORENDO
DATE 3-8-2007

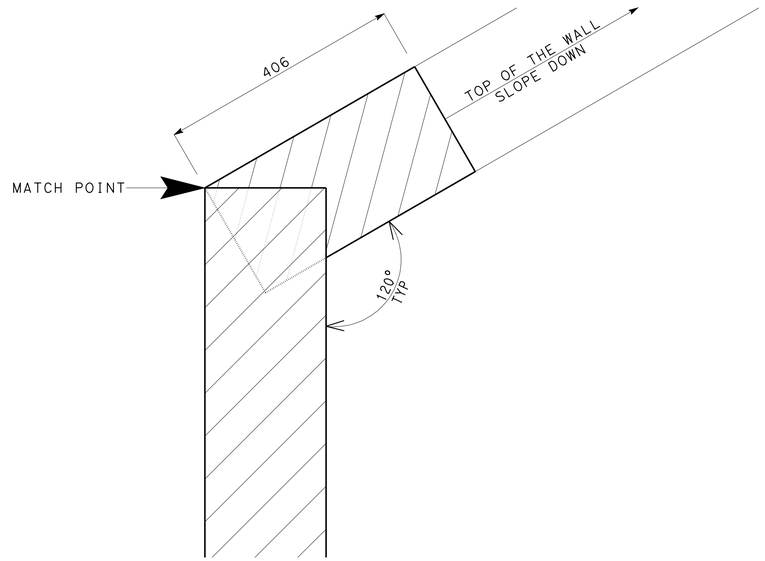

1 WALLS CONNECTION DETAIL

SCALE 1:5

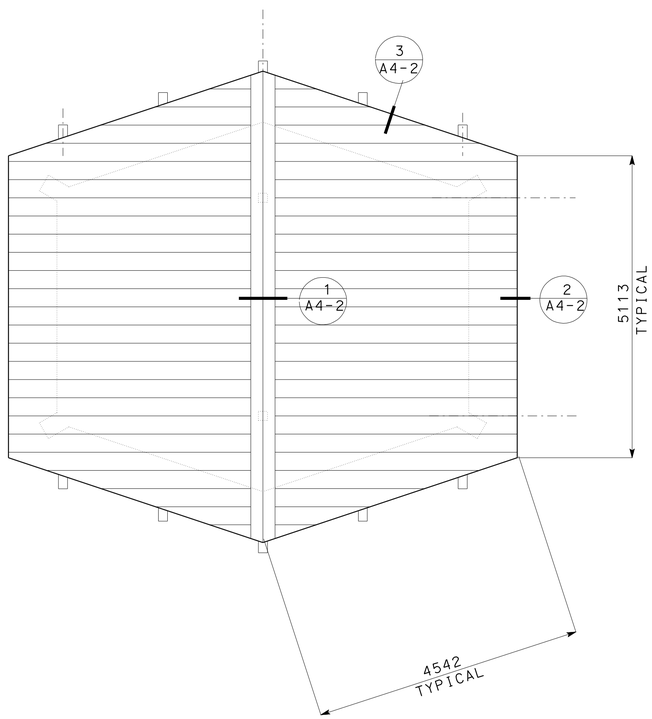

ROOF PLAN

SCALE 1:5

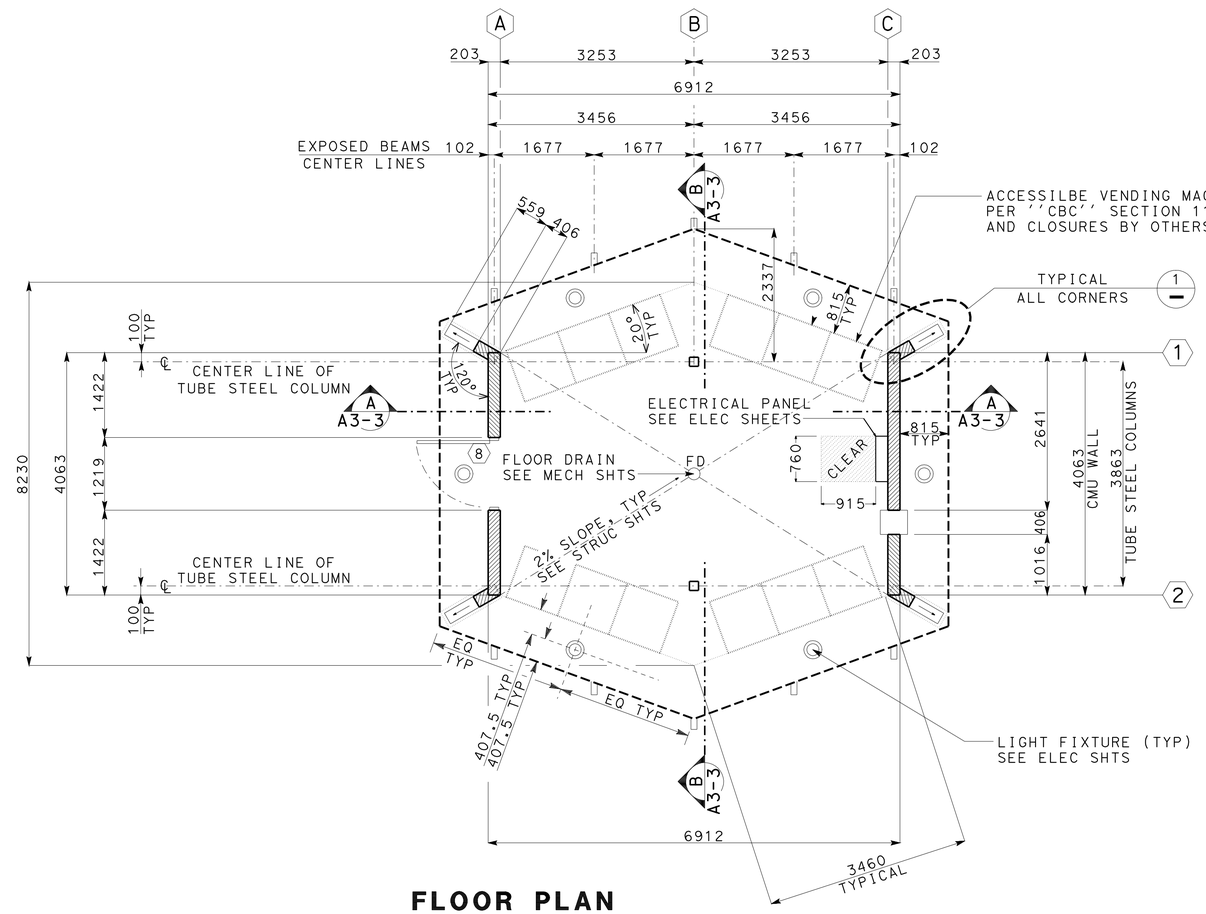

FLOOR PLAN

SCALE 1:5

DESIGN	BY MIKE AGHEKIAN	CHECKED	
DETAILS	BY MIKE AGHEKIAN	CHECKED	
QUANTITIES	BY	CHECKED	

STATE OF CALIFORNIA
DEPARTMENT OF TRANSPORTATION

DIVISION OF ENGINEERING SERVICES
ARCHITECTURAL AND STRUCTURAL DESIGN

BRIDGE NO. 06R0001
KM POST R69.4

LAKEHEAD SAFETY ROADSIDE REST AREA UPGRADE AND ADDITION
VENDING KIOSK
FLOOR PLAN, ROOF PLAN AND WALLS CONNECTION DETAIL

SHEET **A3-1**

A3-1.dgn
DS OSD metric Rev. 11/98 28-JUL-2009 14:40

SCALE: ALL DIMENSIONS ARE IN MILLIMETERS UNLESS OTHERWISE NOTED.

ORIGINAL SCALE IN MILLIMETERS FOR REDUCED PLANS 0 10 20 30 40 50 60 70 80 90 100

CU 02-305
EA 02-395801

DISREGARD PRINTS BEARING EARLIER REVISION DATES → 9-1-06 | 10-2-06 | 12-1-06 | 2-23-07 | 1-20-09 | 3-30-09

REVISION DATES (PRELIMINARY STAGE ONLY) | SHEET | OF

28-JUL-2009 14:40
A3-1.dgn

DIST.	COUNTY	ROUTE	KILOMETER POST TOTAL PROJECT	SHEET NO.	TOTAL SHEETS
02	Sha	5	R69.4	50	120

LICENSED ARCHITECT

LICENSED ARCHITECT
DONALD E. ALSEY
No. C-26676
EXP. 07-31-11
STATE OF CALIFORNIA

7-13-09
PLANS APPROVAL DATE

The State of California or its officers or agents shall not be responsible for the accuracy or completeness of electronic copies of this plan sheet.

CALIFORNIA STATE FIRE MARSHAL
APPROVED
Approval of this plan does not authorize or approve any omission or deviation from applicable regulations. Final approval is subject to field inspection. One set of approved plans shall be available on the project site at all times.
Reviewed by: MIKE TANAKA
Approval date: 4/9/2009
CSFM FILE NO. 01-45-11-0067

IDENTIFICATION STAMP
DIV. OF THE STATE ARCHITECT
SACRAMENTO REGIONAL OFFICE
02-108545
AC ANTONIO FLORENDO
ANTONIO FLORENDO
DATE 3-8-2007

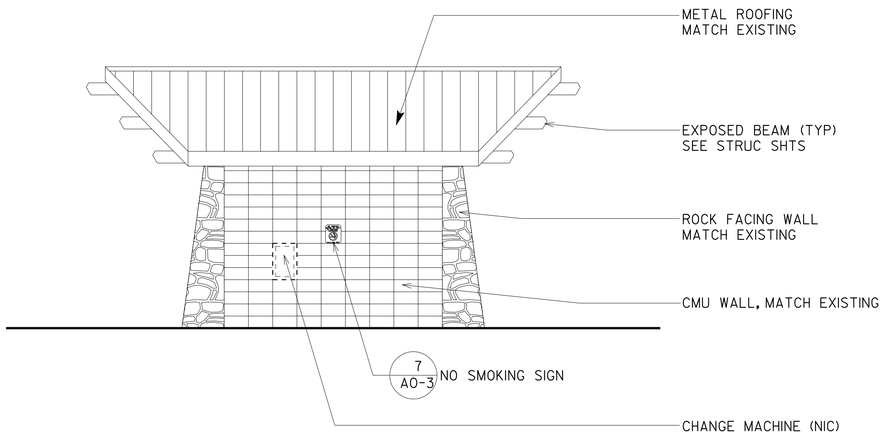

SIDE ELEVATION, CHANGE MACHINE

SCALE 1:50

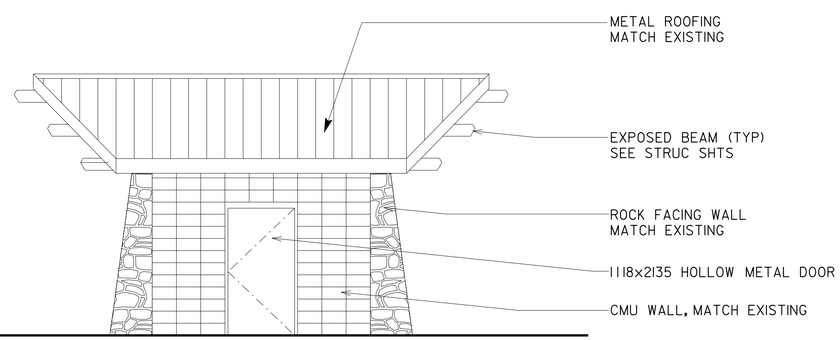

SIDE ELEVATION, DOOR

SCALE 1:50

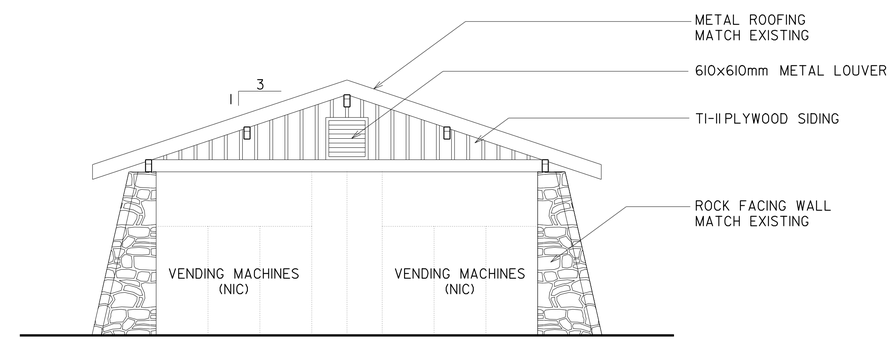

FRONT ELEVATION, VENDING MACHINES

OPPOSITE SIDE FRONT ELEVATION IS THE SAME

SCALE 1:50

DESIGN	BY MIKE AGHEKIAN	CHECKED	
DETAILS	BY MIKE AGHEKIAN	CHECKED	
QUANTITIES	BY	CHECKED	

STATE OF
CALIFORNIA
DEPARTMENT OF TRANSPORTATION

DIVISION OF ENGINEERING SERVICES
ARCHITECTURAL
AND
STRUCTURAL DESIGN

BRIDGE NO. 06R0001
KM POST R69.4

LAKEHEAD SAFETY ROADSIDE REST AREA UPGRADE AND ADDITION
VENDING KIOSK
EXTERIOR ELEVATIONS

SHEET **A3-2**

A3-2.dgn
DS OSD metric Rev. 11/98 28-JUL-2009 14:40

SCALE: ALL DIMENSIONS ARE IN MILLIMETERS UNLESS OTHERWISE NOTED.

ORIGINAL SCALE IN MILLIMETERS FOR REDUCED PLANS 0 10 20 30 40 50 60 70 80 90 100

CU 02-305
EA 02-395801

DISREGARD PRINTS BEARING EARLIER REVISION DATES →

REVISION DATES (PRELIMINARY STAGE ONLY): 9-1-06 | 10-2-06 | 12-1-06 | 2-23-07 | 1-20-09 | 3-30-09

SHEET OF

28-JUL-2009 14:40
A3-2.dgn

DIST.	COUNTY	ROUTE	KILOMETER POST TOTAL PROJECT	SHEET NO.	TOTAL SHEETS
02	Sha	5	R69.4	51	120

Donald E. Alsey
LICENSED ARCHITECT

LICENSED ARCHITECT
DONALD E. ALSEY
No. C-26676
EXP. 07-31-11
STATE OF CALIFORNIA

7-13-09
PLANS APPROVAL DATE

The State of California or its officers or agents shall not be responsible for the accuracy or completeness of electronic copies of this plan sheet.

CALIFORNIA STATE FIRE MARSHAL APPROVED
Approval of this plan does not authorize or approve any omission or deviation from applicable regulations. Final approval is subject to field inspection. One set of approved plans shall be available on the project site at all times.
Reviewed by: MIKE TANAKA
Approval date: 4/9/2009
CSFM FILE NO. 01-45-11-0067

IDENTIFICATION STAMP
DIV. OF THE STATE ARCHITECT
SACRAMENTO REGIONAL OFFICE
02-108545
AC Antonio Florendo
ANTONIO FLORENDO
DATE 3-8-2007

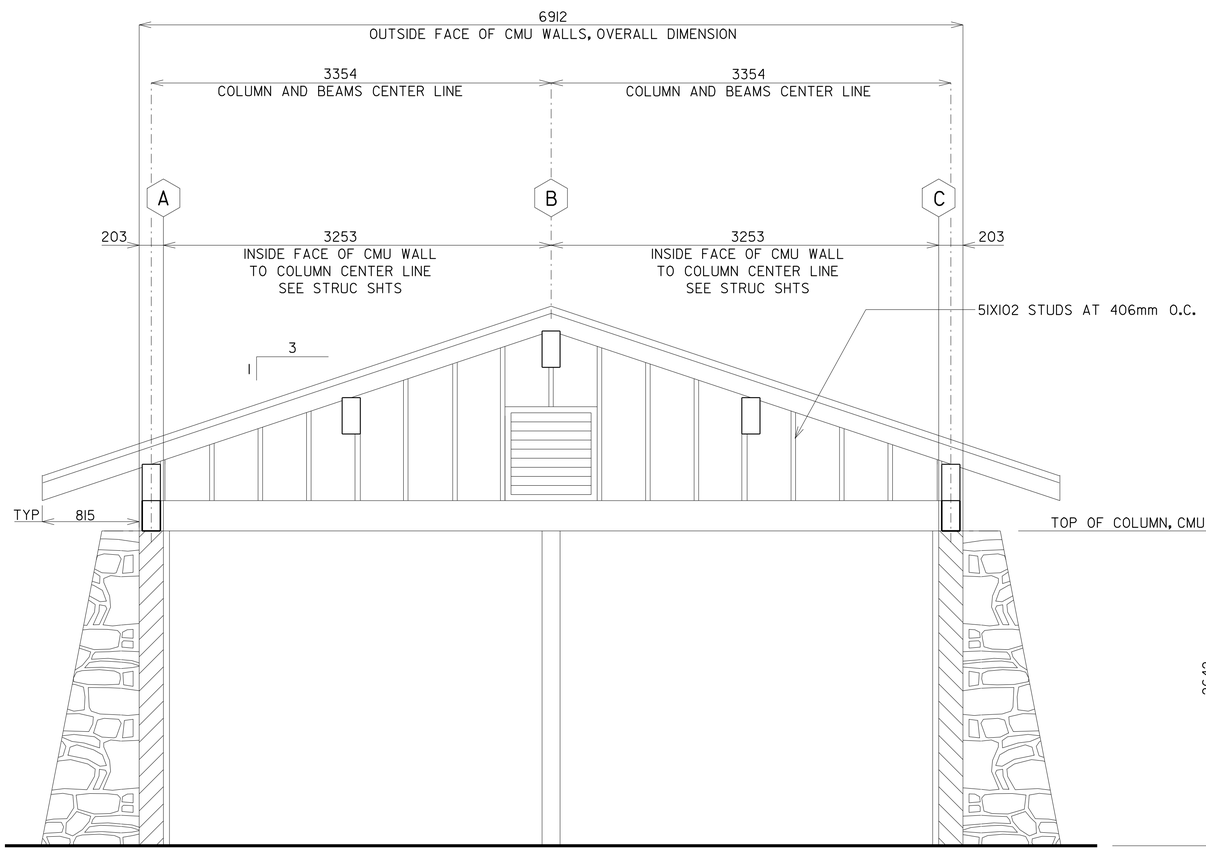

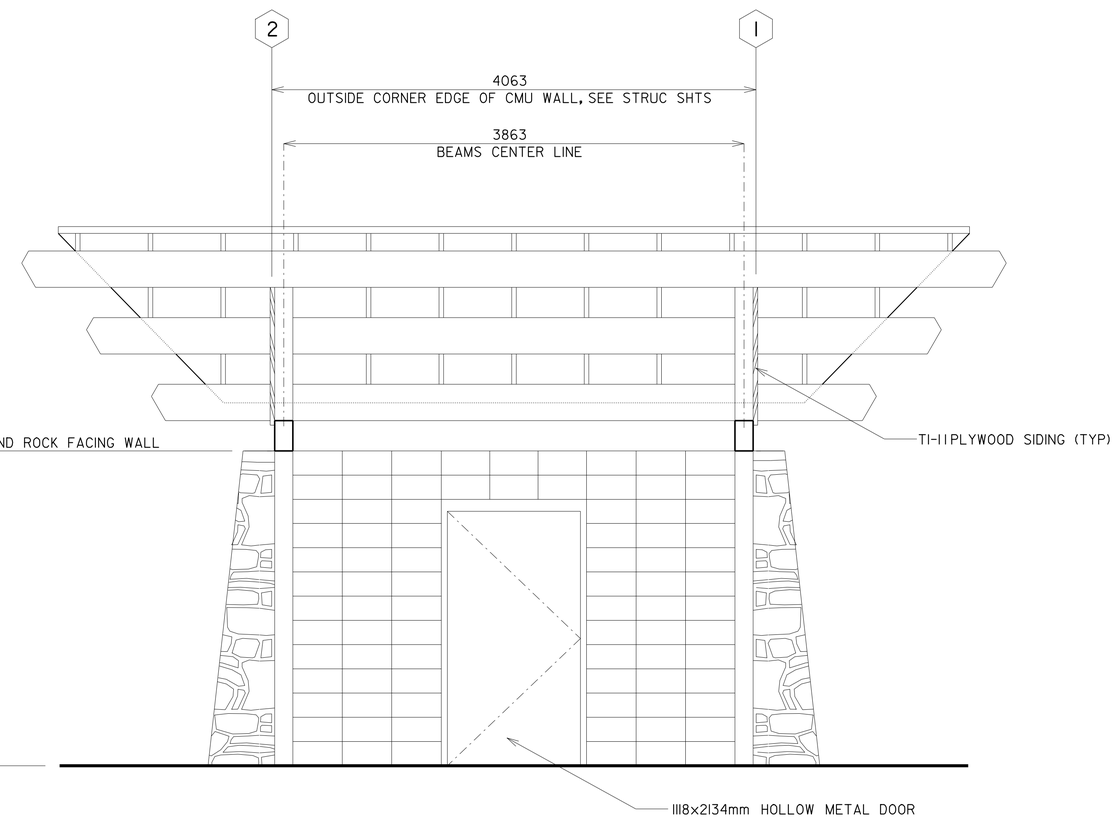

A BUILDING SECTION A-A

SCALE 1:25

B BUILDING SECTION B-B

SCALE 1:25

DESIGN	BY MIKE AGHEKIAN	CHECKED	
DETAILS	BY MIKE AGHEKIAN	CHECKED	
QUANTITIES	BY	CHECKED	

STATE OF CALIFORNIA
DEPARTMENT OF TRANSPORTATION

DIVISION OF ENGINEERING SERVICES
ARCHITECTURAL AND STRUCTURAL DESIGN

BRIDGE NO. 06R0001
KM POST R69.4

LAKEHEAD SAFETY ROADSIDE REST AREA UPGRADE AND ADDITION
VENDING KIOSK
BUILDING SECTIONS A-A AND B-B

SHEET **A3-3**

A3-3.dgn
DS OSD metric Rev. 11/98 28-JUL-2009 14:40

SCALE: ALL DIMENSIONS ARE IN MILLIMETERS UNLESS OTHERWISE NOTED.

ORIGINAL SCALE IN MILLIMETERS FOR REDUCED PLANS 0 10 20 30 40 50 60 70 80 90 100

CU 02-305
EA 02-395801

DISREGARD PRINTS BEARING EARLIER REVISION DATES →
REVISION DATES (PRELIMINARY STAGE ONLY) 9-1-06 10-2-06 12-1-06 2-23-07 1-20-09 3-30-09
SHEET OF

28-JUL-2009 14:40
A3-3.dgn

DIST.	COUNTY	ROUTE	KILOMETER POST TOTAL PROJECT	SHEET NO.	TOTAL SHEETS
02	Sha	5	R69.4	52	120

LICENSED ARCHITECT

LICENSED ARCHITECT DONALD E. ALSEY No. C-26676 EXP. 07-31-11 STATE OF CALIFORNIA

7-13-09
PLANS APPROVAL DATE

The State of California or its officers or agents shall not be responsible for the accuracy or completeness of electronic copies of this plan sheet.

CALIFORNIA STATE FIRE MARSHAL APPROVED
Approval of this plan does not authorize or approve any omission or deviation from applicable regulations. Final approval is subject to field inspection. One set of approved plans shall be available on the project site at all times.
Reviewed by: MIKE TANAKA
Approval date: 4/9/2009
CSFM FILE NO. 01-45-11-0067

IDENTIFICATION STAMP
DIV. OF THE STATE ARCHITECT
SACRAMENTO REGIONAL OFFICE
02-108545
AC ANTONIO FLORENDO
ANTONIO FLORENDO
DATE 3-8-2007

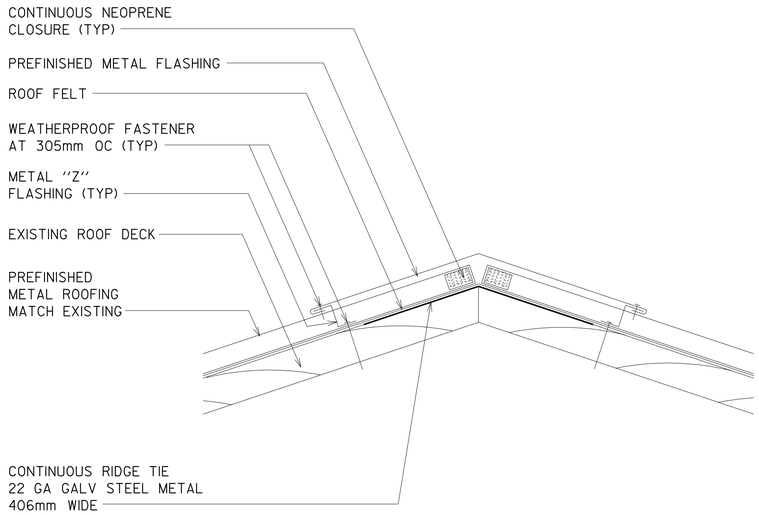

1 RIDGE AT COMFORT BUILDING

SCALE 1:5

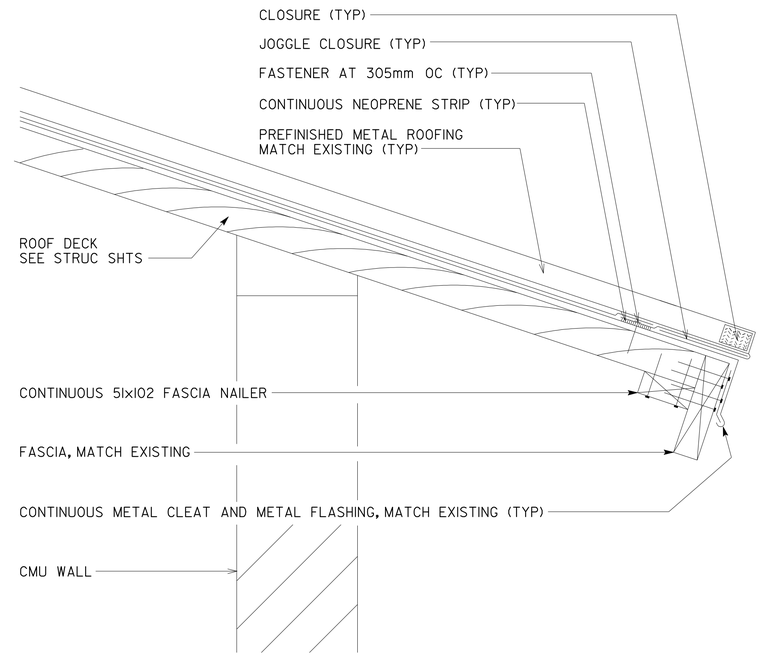

2 CONTINUOUS NEW EAVE, MATCH EXISTING

COMFORT BUILDING

SCALE 1:5

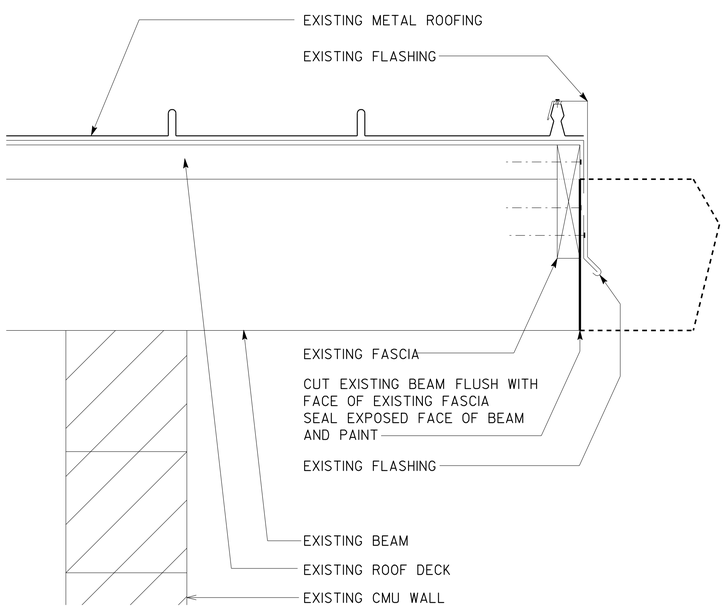

3 MODIFYED EXISTING ROOF RAKE

COMFORT BUILDING ROOF RAKE AT WEST ELEVATION

SCALE 1:5

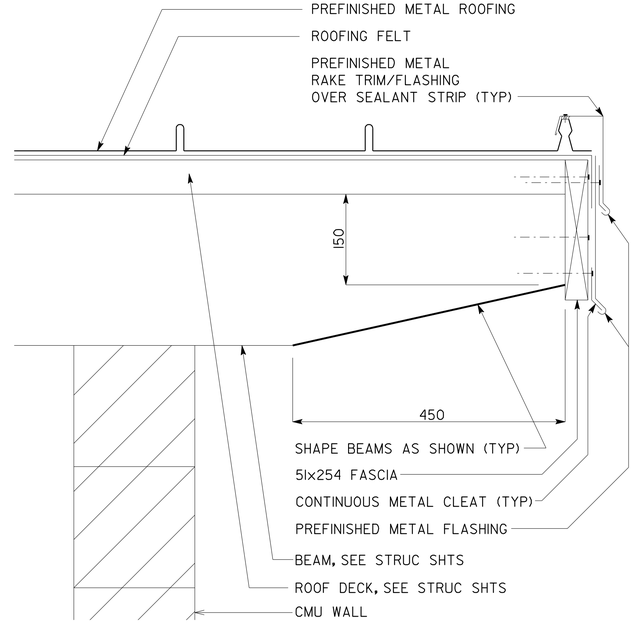

4 ROOF RAKE AT EAST ELEVATION

COMFORT BUILDING ADDITION

SCALE 1:5

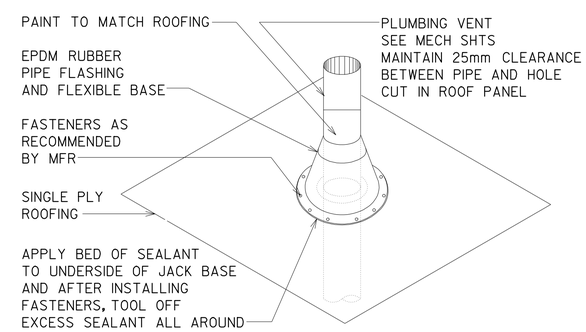

5 PLUMBING VENT, ROOF JACK

BREAK ROOM BUILDING

NTS

DESIGN	BY MIKE AGHEKIAN	CHECKED	
DETAILS	BY MIKE AGHEKIAN	CHECKED	
QUANTITIES	BY	CHECKED	

STATE OF CALIFORNIA
DEPARTMENT OF TRANSPORTATION

DIVISION OF ENGINEERING SERVICES
ARCHITECTURAL AND STRUCTURAL DESIGN

BRIDGE NO. 06R0001
KM POST R69.4

LAKEHEAD SAFETY ROADSIDE REST AREA UPGRADE AND ADDITION
COMFORT BUILDING | ROOF DETAILS

SHEET **A4-1**

A4-1.dgn
DS OSD metric Rev. 11/98 28-JUL-2009 14:40

SCALE: ALL DIMENSIONS ARE IN MILLIMETERS UNLESS OTHERWISE NOTED.

ORIGINAL SCALE IN MILLIMETERS FOR REDUCED PLANS 0 10 20 30 40 50 60 70 80 90 100

CU 02-305
EA 02-395801

DISREGARD PRINTS BEARING EARLIER REVISION DATES →
REVISION DATES (PRELIMINARY STAGE ONLY) 9-1-06 10-2-06 12-1-06 2-23-07 1-20-09 3-30-09
SHEET OF

28-JUL-2009 14:40
A4-1.dgn

DIST.	COUNTY	ROUTE	KILOMETER POST TOTAL PROJECT	SHEET NO.	TOTAL SHEETS
02	Sha	5	R69.4	53	120

Donald E. Alsey
LICENSED ARCHITECT

LICENSED ARCHITECT
DONALD E. ALSEY
No. C-26676
Exp. 07-31-11
STATE OF CALIFORNIA

7-13-09
PLANS APPROVAL DATE

The State of California or its officers or agents shall not be responsible for the accuracy or completeness of electronic copies of this plan sheet.

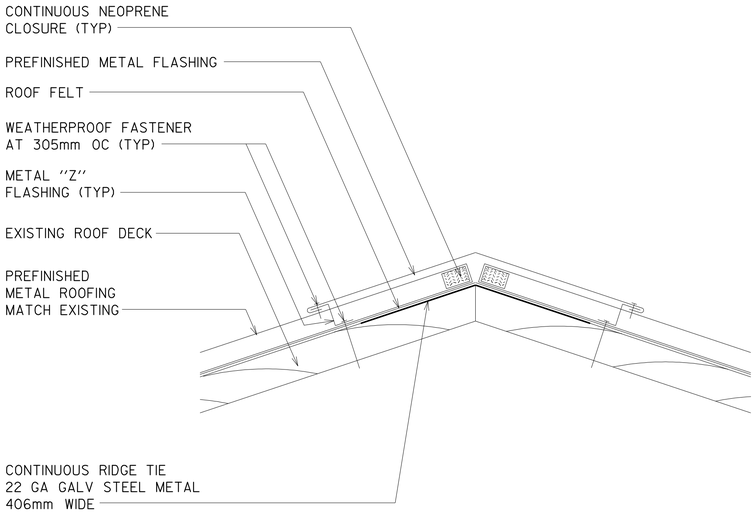

1 RADGE, AT VENDING KIOSK ROOF

SCALE 1:5

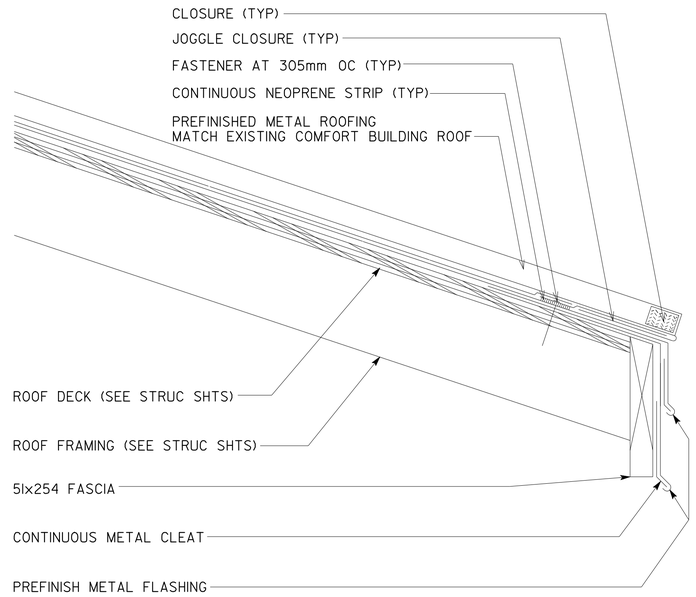

2 EAVE, AT VENDING KIOSK ROOF

SCALE 1:5

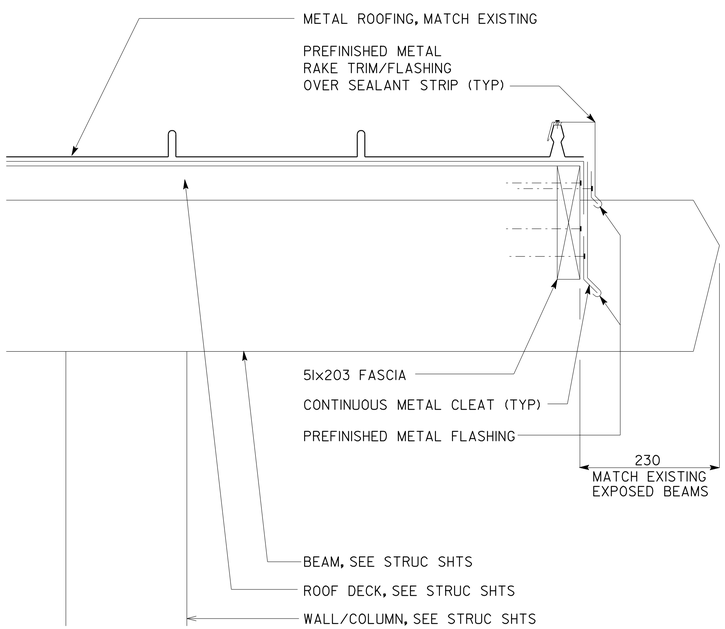

3 RAKE, AT VENDING KIOSK ROOF

SCALE 1:5

CALIFORNIA STATE FIRE MARSHAL APPROVED
Approval of this plan does not authorize or approve any omission or deviation from applicable regulations. Final approval is subject to field inspection. One set of approved plans shall be available on the project site at all times.
Reviewed by: MIKE TANAKA
Approval date: 4/9/2009
CSFM FILE NO. 01-45-11-0067

IDENTIFICATION STAMP
DIV. OF THE STATE ARCHITECT
SACRAMENTO REGIONAL OFFICE
02-108545
AC Antonio Florendo
ANTONIO FLORENDO
DATE 3-8-2007

DESIGN	BY MIKE AGHEKIAN	CHECKED	
DETAILS	BY MIKE AGHEKIAN	CHECKED	
QUANTITIES	BY	CHECKED	

STATE OF CALIFORNIA
DEPARTMENT OF TRANSPORTATION

DIVISION OF ENGINEERING SERVICES
ARCHITECTURAL AND STRUCTURAL DESIGN

BRIDGE NO. 06R0001
KM POST R69.4

LAKEHEAD SAFETY ROADSIDE REST AREA UPGRADE AND ADDITION
VENDING KIOSK | ROOF DETAILS

SHEET **A4-2**

A4-2.dgn
DS OSD metric Rev. 11/98 28-JUL-2009 14:40

SCALE: ALL DIMENSIONS ARE IN MILLIMETERS UNLESS OTHERWISE NOTED.

ORIGINAL SCALE IN MILLIMETERS FOR REDUCED PLANS 0 10 20 30 40 50 60 70 80 90 100

CU 02-305
EA 02-395801

DISREGARD PRINTS BEARING EARLIER REVISION DATES → 9-1-06 | 10-2-06 | 12-1-06 | 2-23-07 | 1-20-09 | 3-30-09

REVISION DATES (PRELIMINARY STAGE ONLY) | SHEET | OF

28-JUL-2009 14:40
A4-2.dgn

DIST.	COUNTY	ROUTE	KILOMETER POST TOTAL PROJECT	SHEET NO.	TOTAL SHEETS
02	Sha	5	R69.4	54	120

Donald E. Alsey
LICENSED ARCHITECT

LICENSED ARCHITECT
DONALD E. ALSEY
No. C-26676
EXP. 07-31-11
STATE OF CALIFORNIA

7-13-09
PLANS APPROVAL DATE

The State of California or its officers or agents shall not be responsible for the accuracy or completeness of electronic copies of this plan sheet.

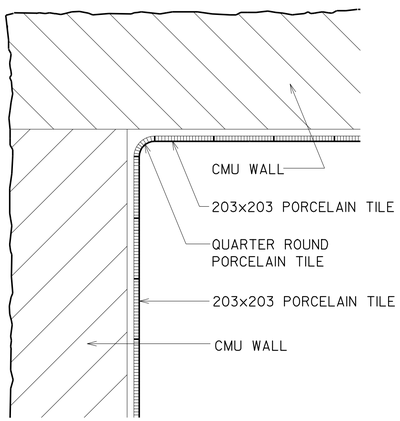

1 TILE AT CORNER OF WALLS
PLAN VIEW — SCALE 1:5

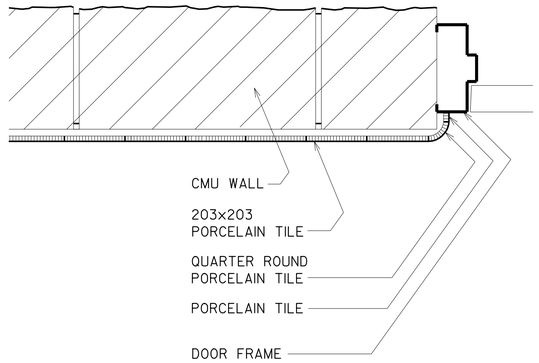

2 TILE AT DOOR JAMB/FRAME
PLAN VIEW — SCALE 1:5

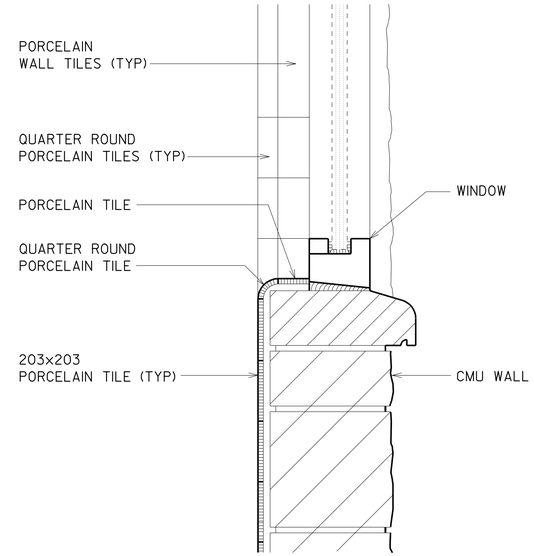

3 WALL TILE AT WINDOW SILL
SECTION VIEW — SCALE 1:5

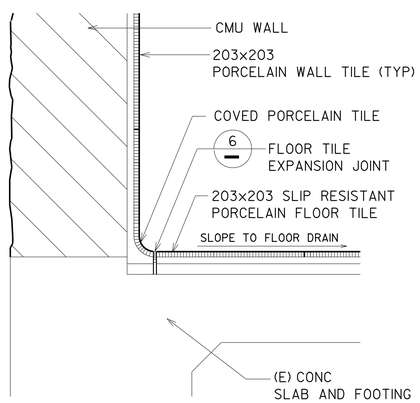

4 TILE AT WALL AND FLOOR
SECTION VIEW — SCALE 1:5

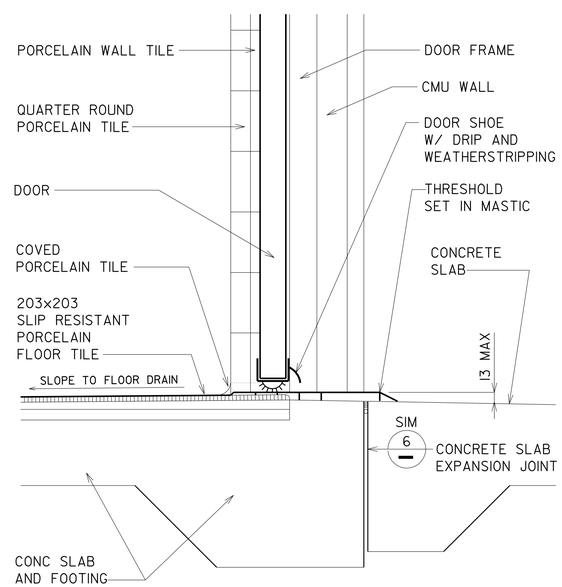

5 FLOOR TILE AT DOOR SILL
SECTION VIEW — SCALE 1:5

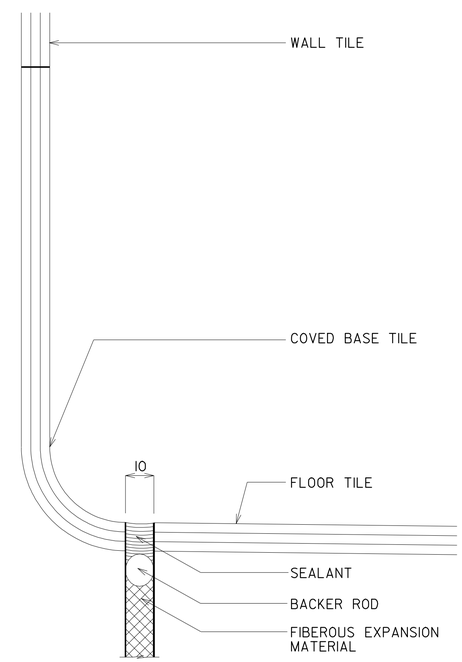

6 EXPANSION JOINT
COMFORT STATION AND AUXILIARY RESTROOMS — SCALE 1:1

CALIFORNIA STATE FIRE MARSHAL APPROVED
Approval of this plan does not authorize or approve any omission or deviation from applicable regulations. Final approval is subject to field inspection. One set of approved plans shall be available on the project site at all times.
Reviewed by: MIKE TANAKA
Approval date: 4/9/2009
CSFM FILE NO. 01-45-11-0067

IDENTIFICATION STAMP
DIV. OF THE STATE ARCHITECT
SACRAMENTO REGIONAL OFFICE
02-108545
AC Antonio Florendo
ANTONIO FLORENDO
DATE 3-8-2007

DESIGN	BY MIKE AGHEKIAN	CHECKED	
DETAILS	BY MIKE AGHEKIAN	CHECKED	
QUANTITIES	BY	CHECKED	

STATE OF CALIFORNIA
DEPARTMENT OF TRANSPORTATION

DIVISION OF ENGINEERING SERVICES
ARCHITECTURAL AND STRUCTURAL DESIGN

BRIDGE NO. 06R0001
KM POST R69.4

LAKEHEAD SAFETY ROADSIDE REST AREA UPGRADE AND ADDITION
COMFORT BUILDING
TILE INSTALLATION DETAILS

SHEET **A4-3**

A4-3.dgn
DS OSD metric Rev. 11/98 28-JUL-2009 14:40

SCALE: ALL DIMENSIONS ARE IN MILLIMETERS UNLESS OTHERWISE NOTED.

ORIGINAL SCALE IN MILLIMETERS FOR REDUCED PLANS 0 10 20 30 40 50 60 70 80 90 100

CU 02-305
EA 02-395801

DISREGARD PRINTS BEARING EARLIER REVISION DATES →
REVISION DATES (PRELIMINARY STAGE ONLY): 9-1-06 | 10-2-06 | 12-1-06 | 2-23-07 | 1-20-09 | 3-30-09

SHEET OF

28-JUL-2009 14:40
A4-3.dgn

DIST.	COUNTY	ROUTE	KILOMETER POST TOTAL PROJECT	SHEET NO.	TOTAL SHEETS
02	Sha	5	R69.4	55	120

LICENSED ARCHITECT

LICENSED ARCHITECT DONALD E. ALSEY No. C-26676 EXP. 07-31-11 STATE OF CALIFORNIA

7-13-09
PLANS APPROVAL DATE

The State of California or its officers or agents shall not be responsible for the accuracy or completeness of electronic copies of this plan sheet.

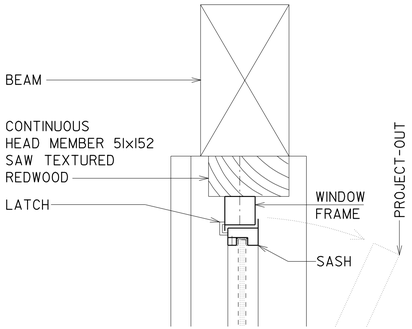

1 WINDOW HEAD
COMFORT BUILDING, MATCH EXISTING SCALE 1:5

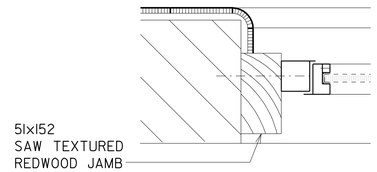

2 WINDOW JAMB
SEE SILL DETAIL FOR ADDITIONAL DETAILS

COMFORT BUILDING MATCH EXISTING SCALE 1:5

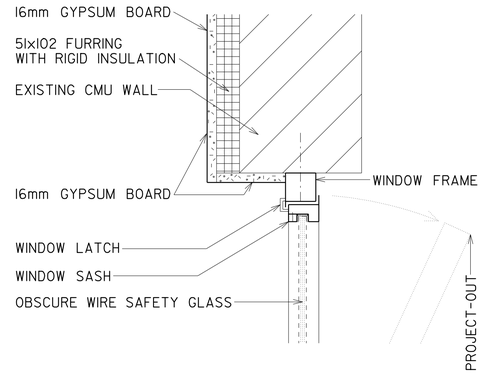

3 WINDOW HEAD
BREAK ROOM BUILDING SCALE 1:5

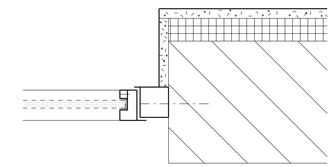

4 WINDOW JAMB
SEE HEAD DETAIL FOR ADDITIONAL DETAILS

BREAK ROOM BUILDING SCALE 1:5

CALIFORNIA STATE FIRE MARSHAL APPROVED
Approval of this plan does not authorize or approve any omission or deviation from applicable regulations. Final approval is subject to field inspection. One set of approved plans shall be available on the project site at all times.
Reviewed by: MIKE TANAKA
Approval date: 4/9/2009
CSFM FILE NO. 01-45-11-0067

IDENTIFICATION STAMP
DIV. OF THE STATE ARCHITECT
SACRAMENTO REGIONAL OFFICE
02-108545
AC ANTONIO FLORENDO
ANTONIO FLORENDO
DATE 3-8-2007

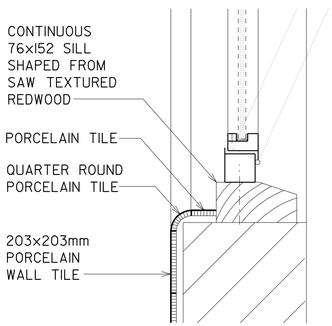

5 WINDOW SILL
COMFORT BUILDING MATCH EXISTING SCALE 1:5

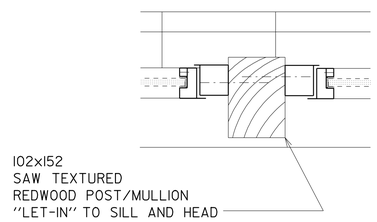

6 WINDOW MULLION
COMFORT BUILDING MATCH EXISTING SCALE 1:5

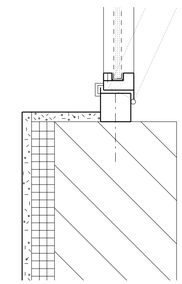

7 WINDOW SILL
SEE HEAD DETAIL FOR ADDITIONAL DETAILS

BREAK ROOM BUILDING SCALE 1:5

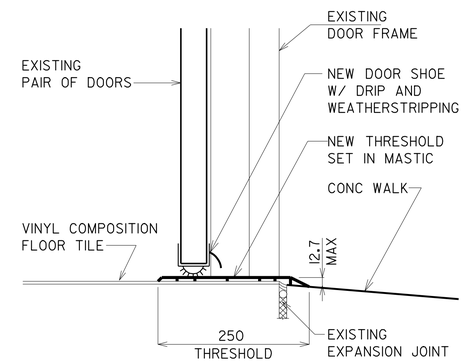

8 DOOR SILL AND THRESHOLD
BREAK ROOM, EXISTING PAIR OF DOOR WITH NEW COMPLETE LOCK SET SCALE 1:5

NOTE :

THE CONTRACTOR SHALL VERIFY ALL CONTROLLING FIELD DIMENSIONS AND CONDITIONS BEFORE ORDERING OR FABRICATING ANY MATERIAL.

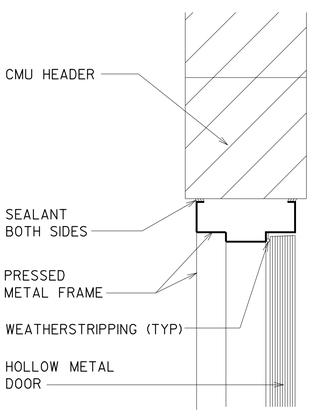

9 DOOR HEAD
SCALE 1:5

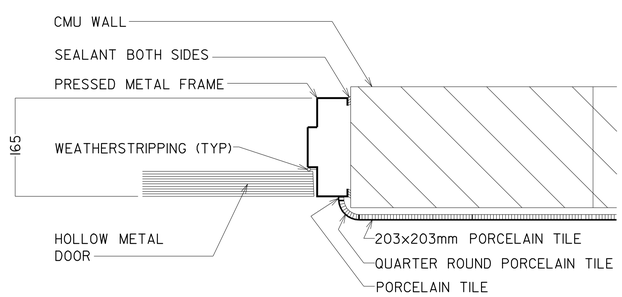

10 DOOR JAMB
SCALE 1:5

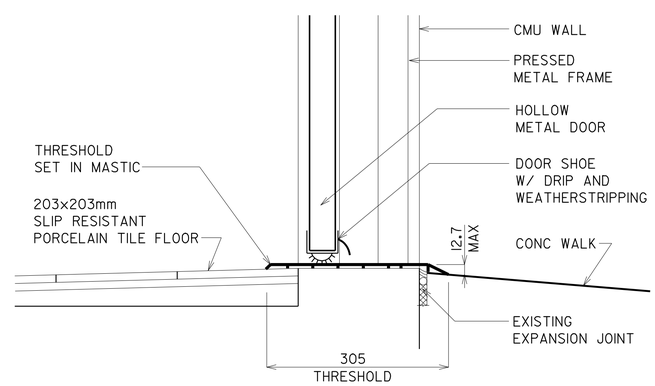

11 DOOR SILL AND THRESHOLD
RESTROOM DOORS SCALE 1:5

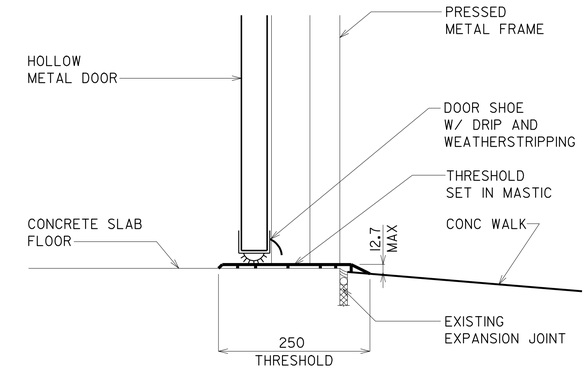

12 DOOR SILL AND THRESHOLD
UTILITY ROOM DOOR (VENDING KIOSK SIMILAR) SCALE 1:5

	BY	CHECKED
DESIGN	MIKE AGHEKIAN	
DETAILS	MIKE AGHEKIAN	
QUANTITIES		

STATE OF CALIFORNIA DEPARTMENT OF TRANSPORTATION

DIVISION OF ENGINEERING SERVICES ARCHITECTURAL AND STRUCTURAL DESIGN

BRIDGE NO. 06R0001
KM POST R69.4

LAKEHEAD SAFETY ROADSIDE REST AREA UPGRADE AND ADDITION

DOOR AND WINDOW DETAILS

SHEET A4-4

A4-4.dgn
DS OSD metric Rev. 11/98 28-JUL-2009 14:41

SCALE: ALL DIMENSIONS ARE IN MILLIMETERS UNLESS OTHERWISE NOTED.

ORIGINAL SCALE IN MILLIMETERS FOR REDUCED PLANS 0 10 20 30 40 50 60 70 80 90 100

CU 02-305
EA 02-395801

DISREGARD PRINTS BEARING EARLIER REVISION DATES

REVISION DATES (PRELIMINARY STAGE ONLY) 9-1-06 10-2-06 12-1-06 2-23-07 1-20-09 3-30-09

SHEET OF

28-JUL-2009 14:41
A4-4.dgn

DIST.	COUNTY	ROUTE	KILOMETER POST TOTAL PROJECT	SHEET NO.	TOTAL SHEETS
02	Sha	5	R69.4	56	120

Donald E. Alsey
LICENSED ARCHITECT

LICENSED ARCHITECT
DONALD E. ALSEY
No. C-26676
Exp. 07-31-11
STATE OF CALIFORNIA

7-13-09
PLANS APPROVAL DATE

The State of California or its officers or agents shall not be responsible for the accuracy or completeness of electronic copies of this plan sheet.

CALIFORNIA STATE FIRE MARSHAL APPROVED
Approval of this plan does not authorize or approve any omission or deviation from applicable regulations. Final approval is subject to field inspection. One set of approved plans shall be available on the project site at all times.
Reviewed by: MIKE TANAKA
Approval date: 4/9/2009
CSFM FILE NO. 01-45-11-0067

IDENTIFICATION STAMP
DIV. OF THE STATE ARCHITECT
SACRAMENTO REGIONAL OFFICE
02-108545
AC Antonio Florendo
ANTONIO FLORENDO
DATE 3-8-2007

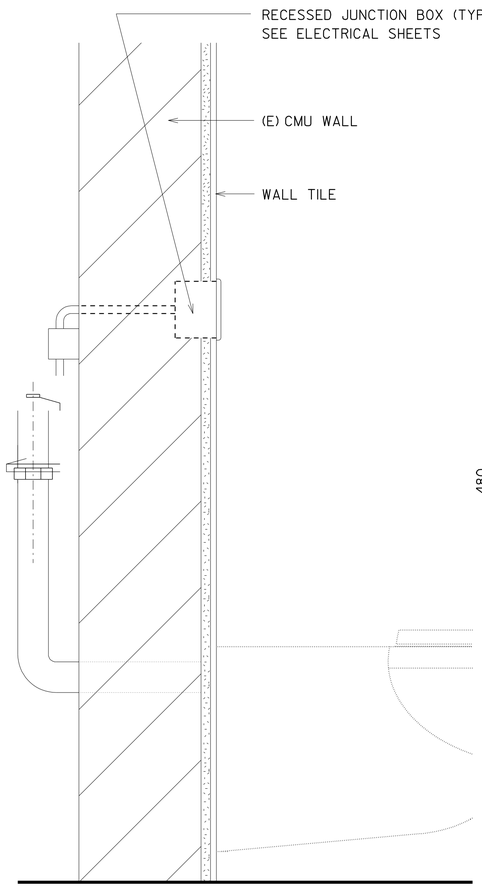

SECTION

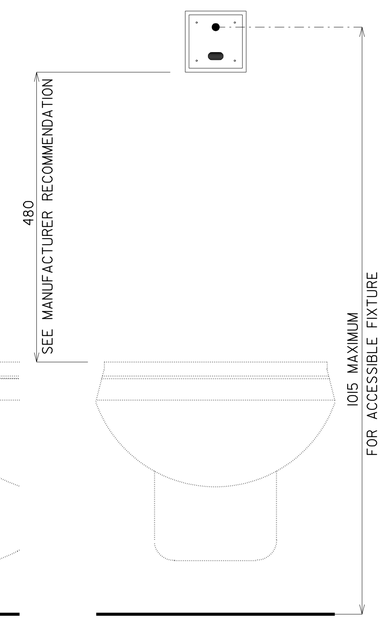

ELEVATION

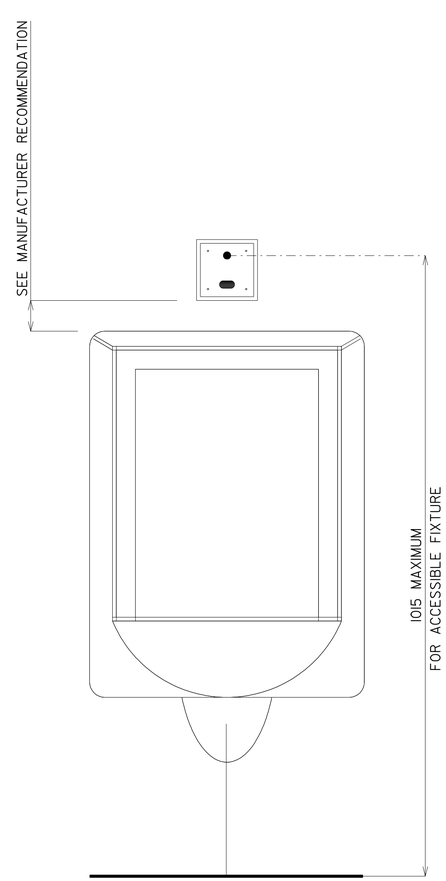

ELEVATION

FOR SECTION SEE 1/—

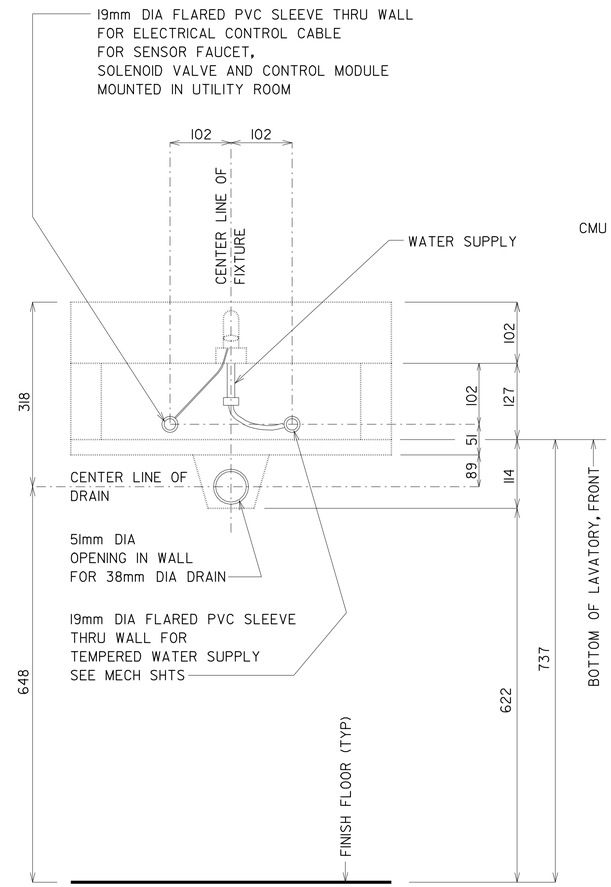

ELEVATION

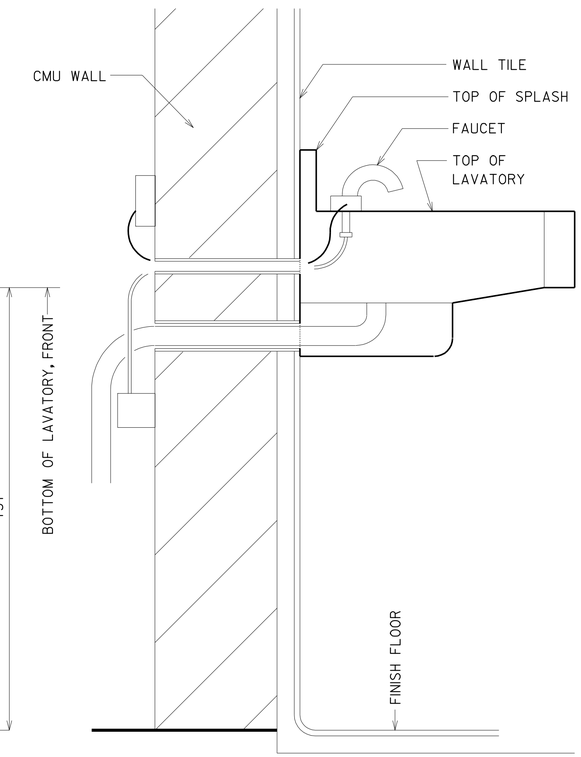

SECTION

1 WATER CLOSET

SCALE 1:5

2 URINAL

SCALE 1:5

3 LAVATORY SENSOR FAUCET DETAIL

SCALE 1:5

DESIGN	BY MIKE AGHEKIAN	CHECKED	
DETAILS	BY MIKE AGHEKIAN	CHECKED	
QUANTITIES	BY	CHECKED	

STATE OF CALIFORNIA
DEPARTMENT OF TRANSPORTATION

DIVISION OF ENGINEERING SERVICES
ARCHITECTURAL AND STRUCTURAL DESIGN

BRIDGE NO. 06R0001
KM POST R69.4

LAKEHEAD SAFETY ROADSIDE REST AREA UPGRADE AND ADDITION
WATER CLOSET, URINAL AND LAVATORY
INFRARED SENSOR ACTIVATED DETAILS

SHEET A4-5

A4-5.dgn
DS OSD metric Rev. 11/98 28-JUL-2009 14:41

SCALE: ALL DIMENSIONS ARE IN MILLIMETERS UNLESS OTHERWISE NOTED.

ORIGINAL SCALE IN MILLIMETERS FOR REDUCED PLANS 0 10 20 30 40 50 60 70 80 90 100

CU 02-305
EA 02-395801

DISREGARD PRINTS BEARING EARLIER REVISION DATES
REVISION DATES (PRELIMINARY STAGE ONLY) 9-1-06 10-2-06 12-1-06 2-23-07 1-20-09 3-30-09

SHEET OF

28-JUL-2009 14:41
A4-5.dgn

DIST.	COUNTY	ROUTE	KILOMETER POST TOTAL PROJECT	SHEET NO.	TOTAL SHEETS
02	Sha	5	R69.4	57	120

Donald E. Alsey
LICENSED ARCHITECT

LICENSED ARCHITECT
DONALD E. ALSEY
No. C-26676
Exp. 07-31-11
STATE OF CALIFORNIA

7-13-09
PLANS APPROVAL DATE

The State of California or its officers or agents shall not be responsible for the accuracy or completeness of electronic copies of this plan sheet.

CALIFORNIA STATE FIRE MARSHAL APPROVED
Approval of this plan does not authorize or approve any omission or deviation from applicable regulations. Final approval is subject to field inspection. One set of approved plans shall be available on the project site at all times.
Reviewed by: MIKE TANAKA
Approval date: 4/9/2009
CSFM FILE NO. 01-45-11-0067

IDENTIFICATION STAMP
DIV. OF THE STATE ARCHITECT
SACRAMENTO REGIONAL OFFICE
02-108545
AC Antonio Florendo
ANTONIO FLORENDO
DATE 3-8-2007

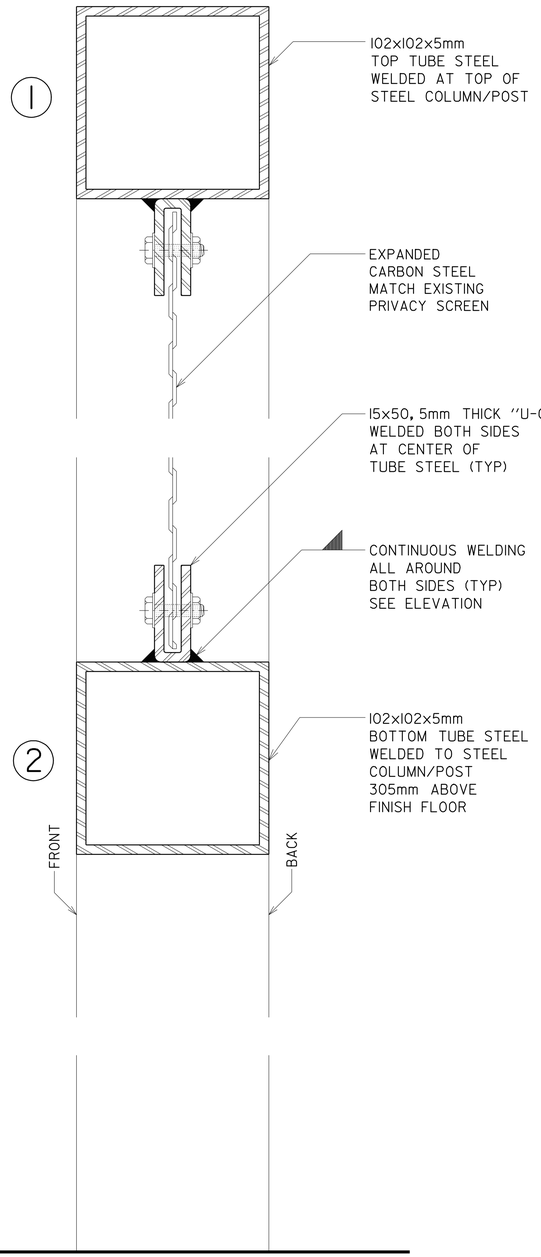

A VERTICAL SECTION/DETAILS
SCALE 1:5

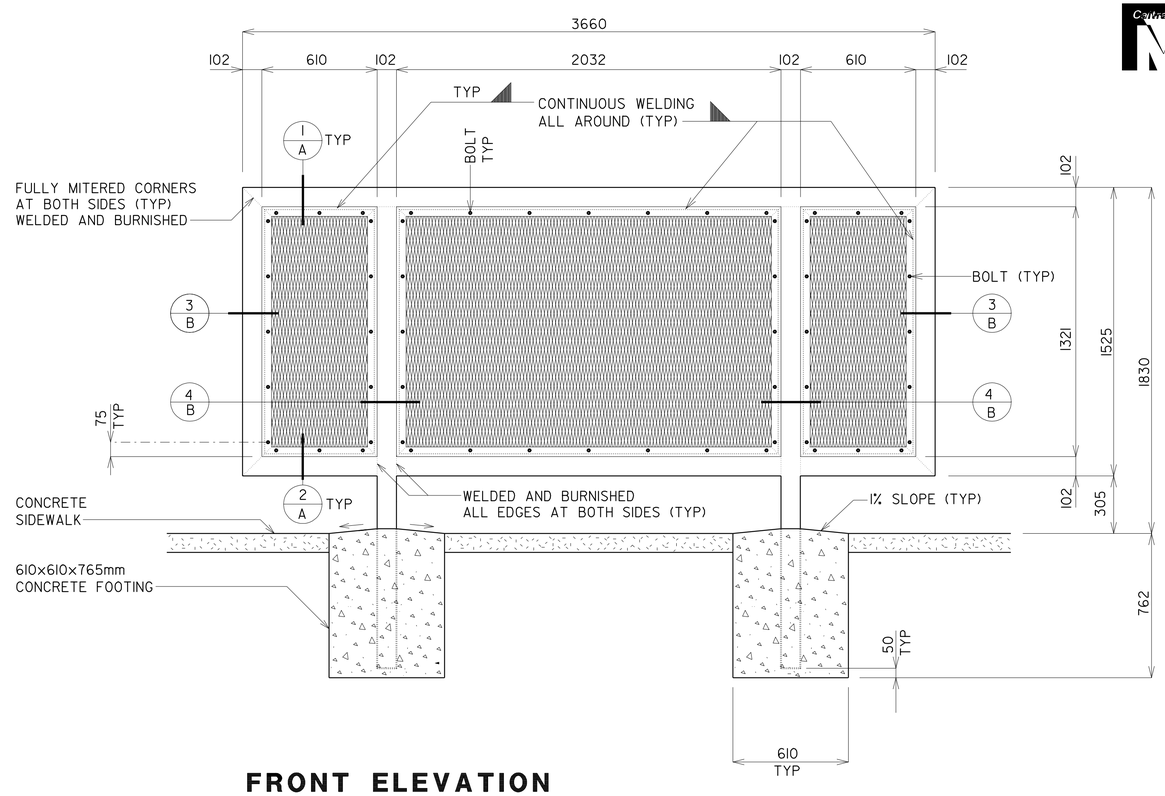

FRONT ELEVATION
SCALE 1:5

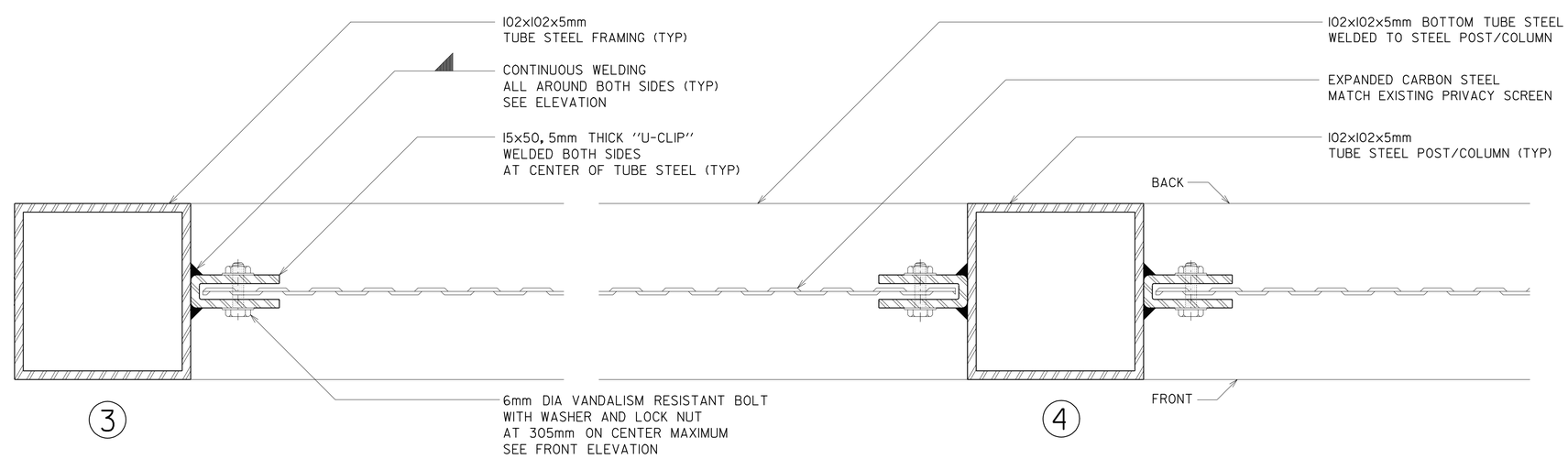

B HORIZONTAL SECTION/DETAILS
SCALE 1:5

DESIGN	BY MIKE AGHEKIAN	CHECKED	
DETAILS	BY MIKE AGHEKIAN	CHECKED	
QUANTITIES	BY	CHECKED	

STATE OF CALIFORNIA
DEPARTMENT OF TRANSPORTATION

DIVISION OF ENGINEERING SERVICES
ARCHITECTURAL AND STRUCTURAL DESIGN

BRIDGE NO. 06R0001
KM POST R69.4

LAKEHEAD SAFETY ROADSIDE REST AREA UPGRADE AND ADDITION
PRIVACY SCREEN DETAILS

SHEET A4-6

A4-6.dgn
DS OSD metric Rev. 11/98 28-JUL-2009 14:41

SCALE: ALL DIMENSIONS ARE IN MILLIMETERS UNLESS OTHERWISE NOTED.

ORIGINAL SCALE IN MILLIMETERS FOR REDUCED PLANS 0 10 20 30 40 50 60 70 80 90 100

CU 02-305
EA 02-395801

DISREGARD PRINTS BEARING EARLIER REVISION DATES → 9-1-06 10-2-06 12-1-06 1-20-09 3-30-09

REVISION DATES (PRELIMINARY STAGE ONLY) SHEET OF

28-JUL-2009 14:41
A4-6.dgn

DIST.	COUNTY	ROUTE	KILOMETER POST TOTAL PROJECT	SHEET NO.	TOTAL SHEETS
02	Sha	5	R69.4	58	120

Caltrans Metric

William Rocha Jr.
REGISTERED CIVIL ENGINEER

REGISTERED PROFESSIONAL ENGINEER
William Rocha, Jr.
No. 59791
Exp. 12-31-09
CIVIL
STATE OF CALIFORNIA

7-13-09
PLANS APPROVAL DATE

The State of California or its officers or agents shall not be responsible for the accuracy or completeness of electronic copies of this plan sheet.

ABBREVIATIONS

AAD	Adhesive Anchorage Device
AB	Anchor Bolt
AC	Asphalt Concrete
Alt	Alternate
APA	American Plywood Association
APC	Alternative Pipe Culvert
Bldg	Building
Blkg	Blocking
BN	Boundary Nailing
Btm	Bottom
CB	Carriage Bolt
CIDH	Cast In Drilled Hole
CJ	Control Joint
Clr	Clear
CMU	Concrete Masonry Unit
Conc	Concrete
Const	Construction
Cont	Continuous
CP	Complete Penetration Weld
Dbl	Double
DF	Douglas Fir
Dia	Diameter
DIP	Ductile Iron Pipe
DN	Diameter Nominal
do	Ditto
(E)	Existing
Ea	Each
EL	Elevation
Elec	Electrical
Embed	Embedment
EN	Edge Nail
Eq	Equal
Exp	Expansion
FDGM	Free Draining Granular Material
FG	Finish Grade
FL	Flow Line
Flr	Floor
FN	Face (Field) Nail
FOC	Face of Concrete
FOM	Face of Masonry
FOS	Face of Stud
Ftg	Footing
Ga	Gage
Galv	Galvanized
GLM	Glue Laminated Member
Gyp Bd	Gypsum Board
HD	Holdown
Hex	Hexagon
Horiz	Horizontal
HSB	High Strength Bolt
HSS	Hollow Structural Section
Jt	Joint
LOL	Layout Line
LVL	Laminated Veneer Lumber
m	Meter
Max	Maximum
MEA	Mechanical Expansion Anchor
Mech	Mechanical
Mfr	Manufacturer
mm	Millimeter
Min	Minimum
MIW	Malleable Iron Washer
OC	On Center
OG	Original Grade
OH	Opposite Hand
Opt	Optional
P	Pitch
PDF	Powder Driven Fastener
Plwd	Plywood
PT	Pressure Treated
PW	Puddle Weld
PWB	Prefabricated Wood I Beam
RCP	Reinforced Concrete Pipe
Reinf	Reinforced, Reinforcing
Req'd	Required
SDSTS	Self Drill, Self Tap Screw
Sim	Similar
SPS	Structural Plywood Sheathing
Sq	Square
Stagg	Staggered
Std	Standard
SW	Stud Weld
Sym	Symmetrical
T&G	Tongue-and-Groove
TN	Toe Nail
TS	Tube Steel
Typ	Typical
UON	Unless Otherwise Noted
Vert	Vertical

SYMBOLS

- Blocking In Section or Elevation
- Continuous Member In Section
- End of Member
- Bearing Wall
- Shear Wall
- X XXXX — Length; Shearwall Schedule Symbol; Reference
- Glue Laminated Member Section
- North Arrow
- X STX-X — Partial Section Cut
- X STX-X — Full Section Cut
- X — Revision Callout
- A — Grid Line Indicator
- ℄ — Center Line
- £ — Station Line
- ℙ — Steel Plate
- Ø — Diameter
- ◻ — Square
- CMU Wall on Plan Views
- Dropped Slab on Plan Views
- Reinforced Concrete
- Sand
- Structural Backfill
- Structural Excavation
- Original Ground
- Limits of Structural Backfill (shown on plan view)
- Free Draining Granular Material
- X — Bottom of Footing
- Elevation or Working Point
- Existing Features
- Holdown, Typ — Simpson / USP / Equal (Manufacturers are those noted in the order shown.)
- Frame Connector — Simpson / USP / Equal (Manufacturers are those noted in the order shown.)
- 3 5b ST-1 — Detail Number or Note Number; Additional Reference (if required); Sheet Number

NOTE: SPECIFIC DETAILS OR NOTES ON OTHER SHEETS SHALL PREVAIL OVER STANDARD DETAILS AND NOTES ON THIS SHEET

STANDARD DRAWING			
FILE NO. XS-25M-0	DESIGN BY Sean Samel	CHECKED	APPROVED R.E. Travis
DRAWING DATE 1-04	DETAILS BY George E. Rowe	CHECKED	DESIGN SUPERVISOR
	SUBMITTED BY Sean Samel, DESIGN ENGINEER		

DOES SD metric Rev. 9/02

SCALE: ALL DIMENSIONS ARE IN MILLIMETERS UNLESS OTHERWISE NOTED.

ORIGINAL SCALE IN MILLIMETERS FOR REDUCED PLANS 0 10 20 30 40 50 60 70 80 90 100

STATE OF CALIFORNIA DEPARTMENT OF TRANSPORTATION

DIVISION OF ENGINEERING SERVICES ARCHITECTURAL AND STRUCTURAL DESIGN

CU 02-305
EA 395801

BRIDGE NO. 06R0001
KM POST R69.4

LAKEHEAD SRRA UPGRADE AND ADDITION

LEGEND

SHEET **ST-1**

DISREGARD PRINTS BEARING EARLIER REVISION DATES → REVISION DATES (PRELIMINARY STAGE ONLY) 1-16-04 1-20-09 SHEET OF

st0_01.dgn 28-JUL-2009 14:41

A FRAMING NOTES

1. Dimensions are typically shown to face of stud for exterior walls, to centerline of stud at interior walls, and to centerline of openings. Vertical dimensions are typically shown from rough floor or slab to top of plate or to underside of lintels. Dimensions shown as ''clear'' are from surface to surface.
2. Bearing, shear and exterior walls shall be sheathed with 9.5 mm structural plywood sheathing.
3. All roofs shall be sheathed with 15.1 mm structural plywood sheathing.
4. Plywood for floors and roofs shall be placed face grain perpendicular to supports. Where possible, plywood shall be placed in full sheets and staggered one-half sheet length. Any partial plywood sheet shall not be less than 610 mm in length or width unless fully blocked. Plywood for wainscots, siding and wall sheathing may be placed parallel to framing and with the C-C plugged face exposed. See Detail 2, sheet ST-1B.
5. All wood members shall be Douglas Fir-Larch (DF) quality grade stamped. Grade stamps shall indicate compliance with the grading requirements of WWPA, WCLIB or other approved lumber inspection agency.
6. Structural plywood sheathing shall be APA grade stamped plywood conforming to Voluntary Product Standard PS1, Grade C-D, Exposure 1. Thickness and span rating shall be as shown on the plans.
7. Wood grades (unless otherwise noted):
   A. For horizontal members:
      - Joists & Rafters — Grade #2
      - Beams & Stringers — Grade #1
      - Ledgers — Grade #1
   B. For vertical members:
      - 51x102 Studs — Construction Grade
      - 51x152 & larger studs — Grade #2
      - Posts & Timbers — Grade #1
   C. Glue laminated beams:
      - Simple spans — 24F-V4 DF/DF
      - Cantilevers & Continuous — 24F-V8 DF/DF
8. Glue laminated members shall be engineered, stress rated and factory laminated with adhesive for wet use.
9. Exposed members shall be ''architectural appearance'' grade and non-exposed members shall be ''industrial appearance'' grade.
10. All wood in direct contact with concrete or masonry shall be pressure treated Douglas Fir-Larch.
11. Joists framed into the side of wood girders shall be supported by joist hangers.
12. Joists shall be supported laterally at the ends and at each support by solid blocking or other approved means except where the ends of joists are nailed to a header, band or rim joist or to an adjoining stud. Solid blocking shall not be less than 51x in thickness and the full depth of the joist.
13. Joists and roof rafters 305 mm or deeper shall have full depth 51x thick solid blocking at 2440 mm maximum spacing.
14. Provide 51x blocking to secure fixtures shown on the project plans.
15. Joists under and parallel to bearing walls shall be doubled.
16. When there are multiple holes and notches in one structural element or when there are holes and notches occurring in more than two consecutive structural elements, the Engineers approval is required, unless the details are shown on plans.
17. Notches or cuts in bearing or shear wall studs may be to a depth not exceeding 25% of its width. Wood studs in non-bearing and non-shear walls supporting only their weight may be notched or cut to a depth not greater than 40% (See note 16 above).
18. Bored hole diameters shall not exceed 40% of the stud width in bearing walls and 60% in non-bearing walls. The top plates may not be bored or cut, without the Engineer's approval. Neither bearing nor shear wall top plates may be bored greater than 40%, unless detailed on the plans. Holes shall not be closer than 15 mm to the edge of the stud. (See note 16 above)
19. When it is necessary to cut the sole plate, sill plate or wood stud for plumbing, heating or other pipes, a 1.47 mm thick x 38 mm wide galvanized metal stud shoe plate shall be fastened w/6-16d to the plate across the opening.
20. Equivalent metal bridging or ties may be submitted to the Engineer for approval.

B MINIMUM NAILING SCHEDULE

1. All structural nailing shall be common wire. Alternate fasteners may be substituted as approved by the Engineer.
2. For wood to wood joints, the spacing of nails shall not be less than the required nail penetration. Edge or end distances shall not be less than 1/2 the required nail penetration. Where pre-drilling is required to avoid splitting of the wood, the hole diameter shall not exceed three-fourths of the nail diameter.
3. Nailing not noted below or on the project plans shall be a minimum of 2 nails at each contact, 8d for 25x members and 16d for 51x members.
4. Joists or Rafters:

a. Bearing (sill, girder, top plate) Toe Nail	3-8d
b. Laps (parallel members over walls or beams) Face Nail	4-16d
For each additional 76 mm in member depth beyond 152 mm member add	2-16d
c. Rim joist to floor joist, End Nail	2-16d
For each additional 102 mm in member depth beyond 203 mm member add	1-16d
d. Rim joist to top plate, Toe Nail	8d @ 150 mm OC
e. Double joists under bearing walls, staggered Face Nail.	16d @ 300 mm OC

5. Studs:

a. Double studs, Face Nail	16d @ 600 mm OC
b. Top plate to stud, End Nail	2-16d
c. Stud to sole plate, Toe Nail	3-16d or 4-8d
d. Sole plate to stud, End Nail	2-16d
e. Stud to continous header, Toe Nail	3-16d or 4-8d
f. Built-up corner studs, Face Nail	16d @ 600 mm OC

6. Plates:

a. Top plate doubled, Face Nail	16d @ 400 mm OC
b. Top plate intersection, Face Nail	2-16d
c. Sole plate to rim joist or blocking, Face Nail	16d @ 400 mm OC
d. Sole plate to floor framing, Face Nail	16d @ 400 mm OC

7. Blocking:

a. To studs, joists or rafters, Toe Nail	3-16d or 4-8d
or End Nail	2-16d
For each additional 102 mm in member depth beyond 203 mm member add, Toe Nail	2-8d
or End Nail	1-16d
b. To plates, Toe Nail	16d @ 300 mm OC

8. 51 mm Subfloor to each joist or girder one blind and one Face Nail. — 2-16d
9. Structural Plywood Nailing:
   a. Spacing at subflooring, decking, roof and wall structural plywood sheathing to framing:

LOCATION	9.5 mm Plwd	11.9 mm - 25.4 mm Plwd
At supported edges (edge nailing) & over bearing (beams, girders, walls, etc.)	8d @ 150 mm OC	10d @ 150 mm OC
At intermediate supports (field nailing)	8d @ 150 mm OC	10d @ 300 mm OC
Where bearing is 1220 mm or greater (field nailing)	———	10d @ 150 mm OC

   b. Structural plywood edge nailing shall be staggered at supports, Detail 2, Sheet ST-1B; at double plates. Detail 3, Sheet ST-1B; and at double studs located at wall intersections and corners, Details 9A and 9B, Sheet ST-1B.
   c. Decking and Underlayment: Use deformed shank nail (see Sheet ST-1B for nail size and spacing)
   d. Panel siding to framing: Use zinc coated nail (see Sheet ST-1B for nail size and spacing)
10. Finish Plywood Nailing (non-structural):
    a. Finish plywood to framing where the thickness is 12.7 mm or less:
       1) Finish nail at supported edges (edge nailing) — 6d @ 150 mm OC
       2) Finish nail at intermediate supports (field nailing) — 6d @ 300 mm OC
11. Gypsum Sheathing (Structural):
    a. Wall structural gypsum board sheathing to framing where the thickness 15.9 mm or less:
       1) Cooler nail, parker nail or wallboard nail with a flat or concave head and diamond point at all edges and intermediate supports (field nailing) — 6d @ 100 mm OC

C MECHANICAL FASTENER NOTES

1. The clearance holes for lag screw shanks shall be the same diameter and depth as the unthreaded shank. The lead hole for the threaded portion shall be of a diameter equal to 60% of the shank diameter for screws up to 13 mm diameter, and 75% of the shank diameter for larger lag screws. The lead hole shall be at least the length of the threaded portion.
2. Lag screws shall be turned into pre-drilled holes and not be driven.
3. All bolts and lag screws shall be tightened and retightened before closing in, or at completion of job.
4. All bolts and lag screws shall be provided with metal washers under heads and nuts which bear on wood.

MINIMUM WASHER FOR BOLTS & LAG SCREWS

Size	Malleable Iron Washer	Steel Plate Washer
12 Ø	64 Ø x 8	51 x 51 x 6
16 Ø	70 Ø x 8	51 x 51 x 6
20 Ø	76 Ø x 11	51 x 51 x 6
22 Ø	84 Ø x 10	76 x 76 x 6
24 Ø	102 Ø x 13	76 x 76 x 6

Place under Bolt Heads & Nuts bearing on Wood

5. Fastener alternatives for non-bearing and non-shear walls: Two minimum per member and at 230 mm from ends.
   a. 3.2 mm Ø Powder driven anchor with 25 mm penetration @ 610 mm OC.
   b. 6.4 mm Ø expansion anchorage device embedded 35 mm minimum at 610 mm OC.
   c. 12 mm Ø anchor bolt with 65 mm embedment @ 1220 mm OC.
6. Equivalent mechanical fasteners may be submitted to the Engineer for approval.

Caltrans Metric

DIST.	COUNTY	ROUTE	KILOMETER POST TOTAL PROJECT	SHEET NO.	TOTAL SHEETS
02	Sha	5	R69.4	59	120

William Rocha Jr.
REGISTERED CIVIL ENGINEER

REGISTERED PROFESSIONAL ENGINEER — William Rocha, Jr. — No. 59791 — Exp. 12-31-09 — CIVIL — STATE OF CALIFORNIA

7-13-09
PLANS APPROVAL DATE

The State of California or its officers or agents shall not be responsible for the accuracy or completeness of electronic copies of this plan sheet.

NOTE: SPECIFIC DETAILS OR NOTES ON OTHER SHEETS SHALL PREVAIL OVER STANDARD DETAILS AND NOTES ON THIS SHEET

STANDARD DRAWING
FILE NO. XS-25M-5 | DESIGN BY Sean Sammel | CHECKED | APPROVED R.E. Travis, DESIGN SUPERVISOR
DRAWING DATE 1-04 | DETAILS BY Peter F. von Savoye, II | CHECKED
SUBMITTED BY Sean Sammel, DESIGN ENGINEER

STATE OF CALIFORNIA DEPARTMENT OF TRANSPORTATION
DIVISION OF ENGINEERING SERVICES ARCHITECTURAL AND STRUCTURAL DESIGN

BRIDGE NO. 06R0001
KM POST R69.4

LAKEHEAD SRRA UPGRADE AND ADDITION
WOOD FRAMING STANDARD - NOTES

SHEET ST-1A

DOES SD metric Rev. 9/02
SCALE: ALL DIMENSIONS ARE IN MILLIMETERS UNLESS OTHERWISE NOTED.
ORIGINAL SCALE IN MILLIMETERS FOR REDUCED PLANS 0 10 20 30 40 50 60 70 80 90 100
CU 02305
EA 395801
DISREGARD PRINTS BEARING EARLIER REVISION DATES → REVISION DATES (PRELIMINARY STAGE ONLY): 1-16-04, 1-20-09
SHEET OF

28-JUL-2009 14:41
st0_01a.dgn

DIST.	COUNTY	ROUTE	KILOMETER POST TOTAL PROJECT	SHEET NO.	TOTAL SHEETS
02	Sha	5	R69.4	60	120

Caltrans Metric

William Rocha Jr
REGISTERED CIVIL ENGINEER

REGISTERED PROFESSIONAL ENGINEER William Rocha, Jr. No. 59791 Exp. 12-31-09 CIVIL STATE OF CALIFORNIA

7-13-09
PLANS APPROVAL DATE

The State of California or its officers or agents shall not be responsible for the accuracy or completeness of electronic copies of this plan sheet.

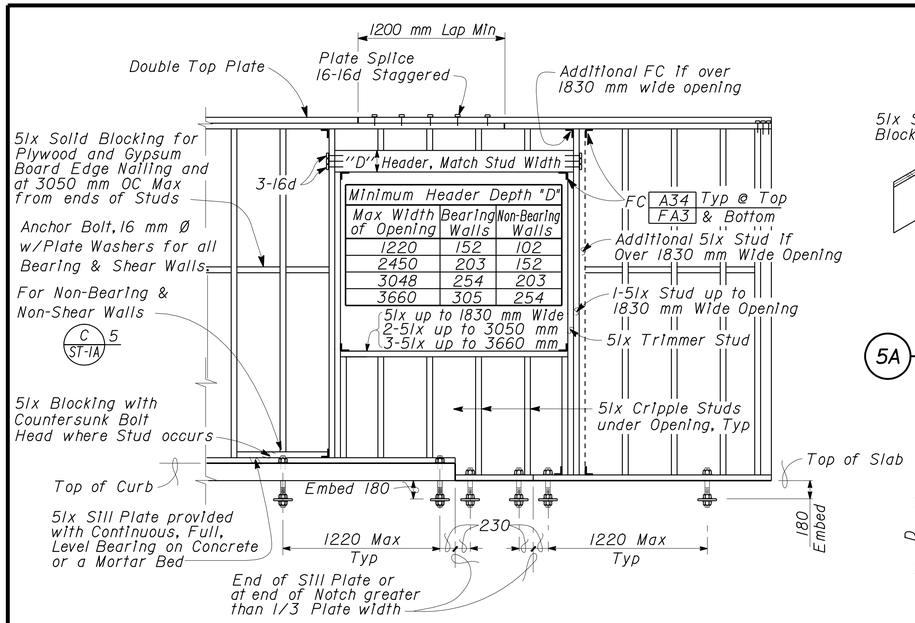

Minimum Header Depth "D"		
Max Width of Opening	Bearing Walls	Non-Bearing Walls
1220	152	102
2450	203	152
3048	254	203
3660	305	254

1 TYPICAL WALL AND OPENING FRAMING
No Scale

Notch Rafter if Slope Exceeds 1:15

Plate Size	"X"
51 x 102	50
51 x 152	75
51 x 203	100

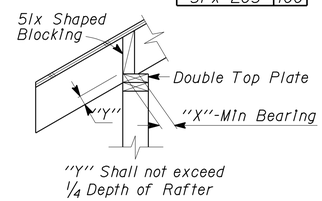

5A RAFTER BEARING

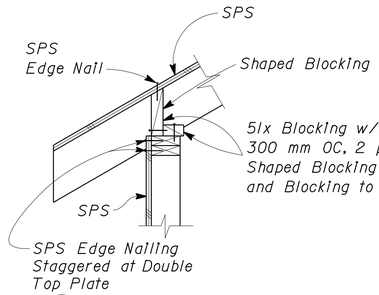

5B SHEAR TRANSFER

5 EXTERIOR WALL TOP PLATE DETAIL
No Scale

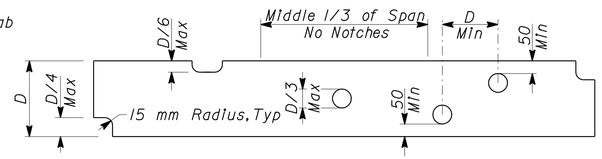

6 NOTCH LIMITS FOR JOISTS AND HEADERS
No Scale

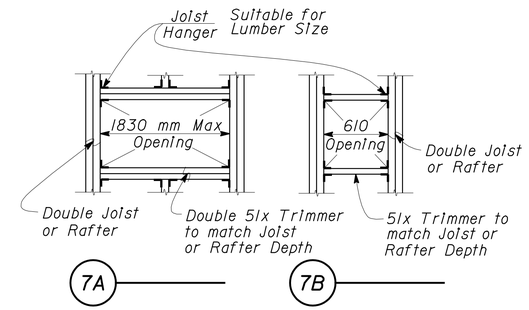

7A 7B

7 FRAMING AT OPENINGS
No Scale

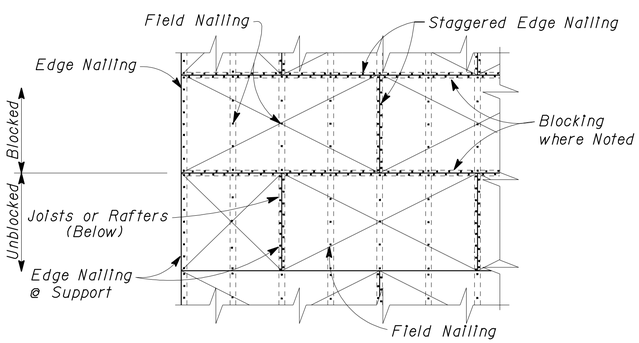

2 STRUCTURAL PLYWOOD LAYOUT
No Scale

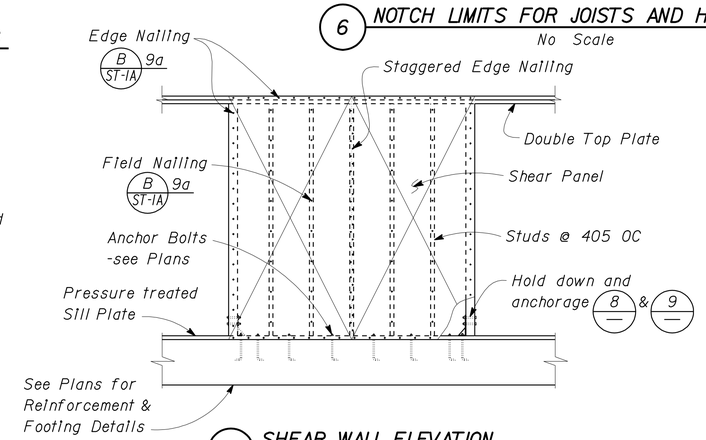

3 SHEAR WALL ELEVATION
No Scale

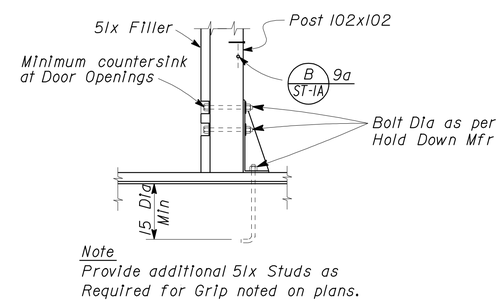

Note
Provide additional 51x Studs as Required for Grip noted on plans.

8 INTERIOR HOLD DOWN
No Scale

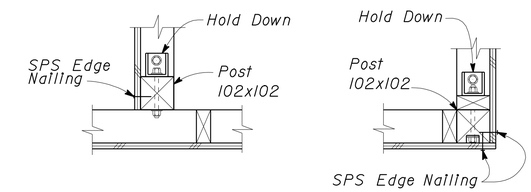

9A INTERSECTION 9B CORNER

Note
Interior Sheathing and attachment not shown for clarity.

9 INTERIOR AND CORNER WALL FRAMING DETAILS
No Scale

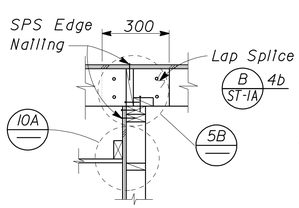

4A LAP SPLICE ACROSS JOISTS

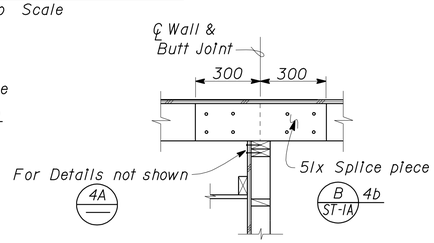

4B BUTT SPLICE ACROSS JOISTS

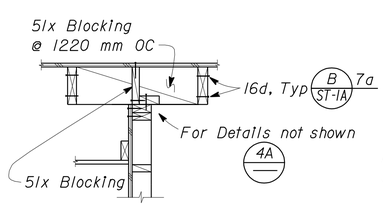

4C JOISTS PARALLEL TO WALL

4 JOIST LAYOUT AT TOP OF BEARING AND SHEAR WALL
No Scale

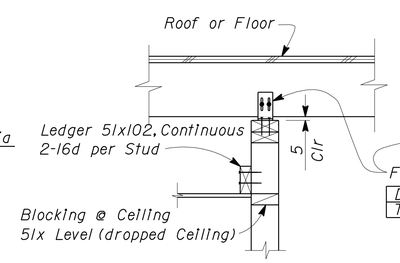

10A ACROSS JOISTS

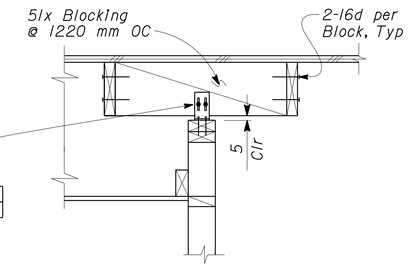

10B PARALLEL TO JOISTS

10 NON-BEARING WALL TOP PLATE CONNECTION
No Scale

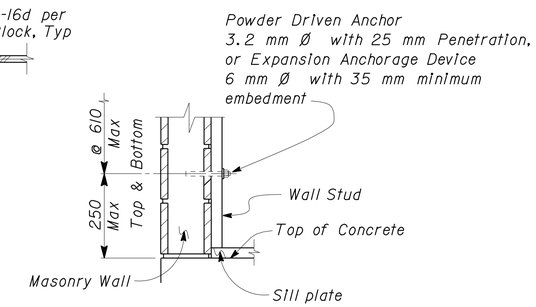

11 STUD ANCHORAGE TO MASONRY
No Scale

NOTE: SPECIFIC DETAILS OR NOTES ON OTHER SHEETS SHALL PREVAIL OVER STANDARD DETAILS AND NOTES ON THIS SHEET

STANDARD DRAWING

FILE NO. XS-25M-5.1	DESIGN	BY Sean Samuel	CHECKED Joe Carpenter
DRAWING DATE 1-04	DETAILS	BY Peter Fivon Savoye, III	CHECKED
	SUBMITTED BY Sean Samuel	, DESIGN ENGINEER	APPROVED R E Travis DESIGN SUPERVISOR

STATE OF CALIFORNIA DEPARTMENT OF TRANSPORTATION

DIVISION OF ENGINEERING SERVICES ARCHITECTURAL AND STRUCTURAL DESIGN

BRIDGE NO. 06R0001
KM POST R69.4

LAKEHEAD SRRA UPGRADE AND ADDITION

WOOD FRAMING STANDARD - DETAILS

SHEET **ST-1B**

DOES SD metric Rev. 9/02

SCALE: ALL DIMENSIONS ARE IN MILLIMETERS UNLESS OTHERWISE NOTED.

ORIGINAL SCALE IN MILLIMETERS FOR REDUCED PLANS 0 10 20 30 40 50 60 70 80 90 100

CU 02305
EA 395801

DISREGARD PRINTS BEARING EARLIER REVISION DATES → REVISION DATES (PRELIMINARY STAGE ONLY) 10-16-03 1-20-09 SHEET OF

28-JUL-2009 14:41

st0_01b.dgn

DIST.	COUNTY	ROUTE	KILOMETER POST TOTAL PROJECT	SHEET NO.	TOTAL SHEETS
02	Sha	5	R69.4	61	120

Caltrans Metric

William Rocha Jr.
REGISTERED CIVIL ENGINEER

REGISTERED PROFESSIONAL ENGINEER William Rocha, Jr. No. 59791 Exp. 12-31-09 CIVIL STATE OF CALIFORNIA

7-13-09
PLANS APPROVAL DATE

The State of California or its officers or agents shall not be responsible for the accuracy or completeness of electronic copies of this plan sheet.

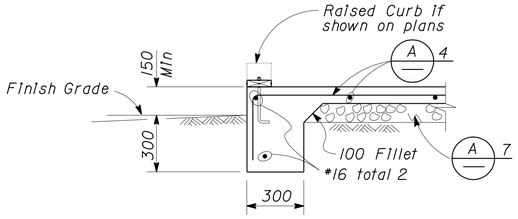

1 EXTERIOR FOOTING
No Scale

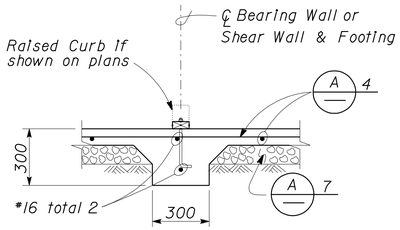

5 INTERIOR FOOTING
No Scale

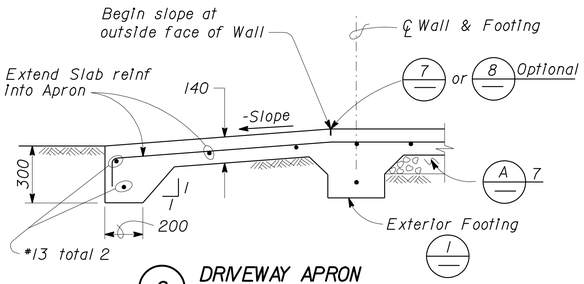

2 DRIVEWAY APRON
No Scale

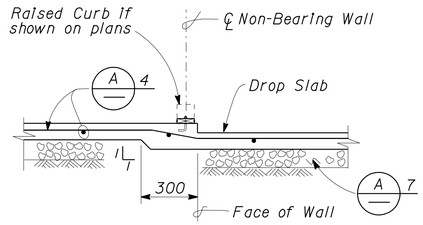

6 DROP SLAB AT NON-BEARING WALL
No Scale

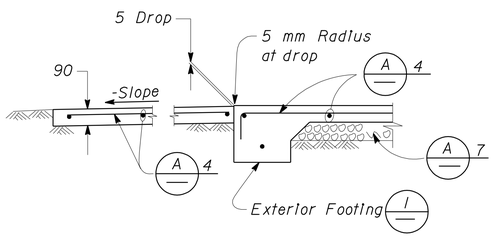

3 WALKWAY APRON
No Scale

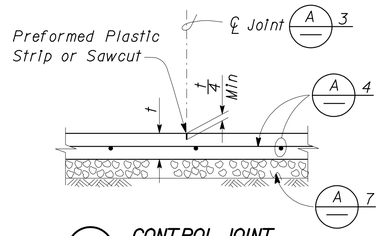

7 CONTROL JOINT
No Scale

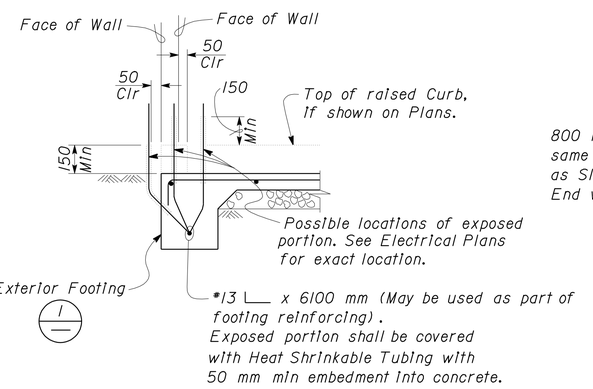

4 GROUND BAR DETAIL
No Scale

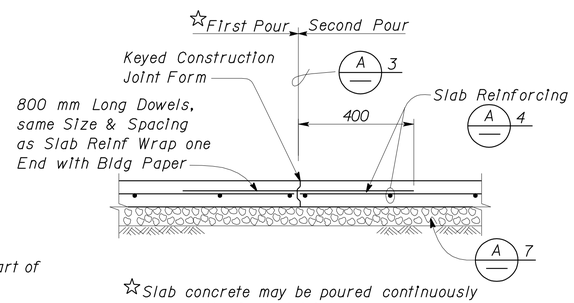

☆Slab concrete may be poured continuously across the Control Joint, to cover as large an area as practical.

8 CONTRACTION JOINT
No Scale

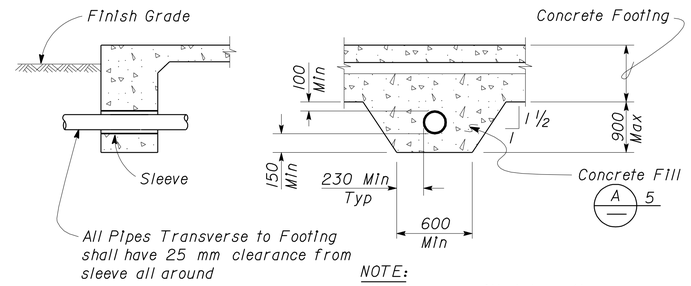

NOTE:
No pipes permitted beneath Interior or Exterior Isolated Footings

9 PIPE DETAILS THROUGH FOOTING
No Scale

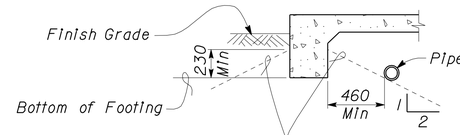

NOTE:
For Pipe Cover, see Specifications: Earthwork for Building Work

No digging for Pipe Trench parallel to Footing below these lines.

Exterior Footing shown, Interior or Exterior Isolated Footings are similar.

10 PIPE DETAILS PARALLEL TO FOOTING
No Scale

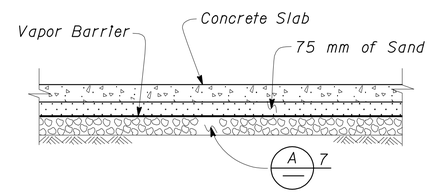

11 MOISTURE BARRIER
No Scale

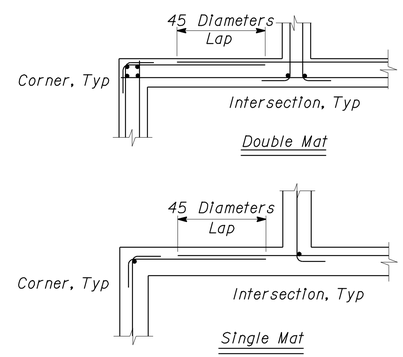

12 CORNER/INTERSECTION REINF SPLICE, TYPICAL
No Scale

A CONCRETE NOTES:

1. The following minimum concrete cover shall be provided for reinforcement.

	Minimum Cover
a. Concrete cast against and permanently exposed to earth	75 mm
b. Concrete exposed to earth or weather but cast in forms :	
#19 thru #57 bars	50 mm
#16 bar and smaller, MW200 Wire, and smaller	40 mm
c. Concrete not exposed to weather or in contact with ground : Slabs, Walls and Joists :	
#43 and #57 Bar	40 mm
#36 Bar and smaller	20 mm
Beams and Columns : Primary Reinforcement, Ties, Stirrups and Spirals	40 mm

2. Splices in continuous reinforcement as in Walls, Wall Footings, etc. #25 or smaller shall have a lap of 45 diameters and the splices in adjacent bars shall not be less than 1500 mm apart.

   Continuous Bars in spandrels, Wall Beams, etc. shall lap Top Bars at center of span and Bottom Bars at supports.

3. Contraction Joints and Control Joints shall divide slab into areas not exceeding 21 square meters without reentrant corners and with length to width ratios not exceeding 1.5 to 1. Joint spacing shall not exceed 4500 mm.

4.

Slab Thickness (t)	Reinforcement
90 mm	#10 @ 450 mm Each way, place in center of Slab
140 mm	#13 @ 450 mm Each way, place in center of Slab

5. Concrete fill is to be placed before Footing is poured. Make the same width as the Footing and the full width of the Pipe trench. Concrete fill not required for pipes less than 50 mm diameters for pipes more than 900 mm below bottom of footing.

6. See Mechanical and Architectural Plans for size and locations of pipe, vents, ducts and other similar openings. See Electrical Plans for conduits and outlet boxes in floors, walls, etc.

7. Place 100 mm of free draining granular material under slabs.

NOTE: SPECIFIC DETAILS OR NOTES ON OTHER SHEETS SHALL PREVAIL OVER STANDARD DETAILS AND NOTES ON THIS SHEET

STANDARD DRAWING				
FILE NO. XS-25M-1	DESIGN	BY Sean Samad	CHECKED Lee Cofenday	APPROVED R.E. Travis
DRAWING DATE 1-04	DETAILS	BY Peter F. von Sauger, II	CHECKED Lee Cofenday	DESIGN SUPERVISOR
	SUBMITTED BY Sean Samad, DESIGN ENGINEER			

STATE OF CALIFORNIA DEPARTMENT OF TRANSPORTATION

DIVISION OF ENGINEERING SERVICES ARCHITECTURAL AND STRUCTURAL DESIGN

BRIDGE NO. 06R0001
KM POST R69.4

LAKEHEAD SRRA UPGRADE AND ADDITION

CONCRETE STANDARD

SHEET ST-2

DOES SD metric Rev. 9/02

SCALE: ALL DIMENSIONS ARE IN MILLIMETERS UNLESS OTHERWISE NOTED.

ORIGINAL SCALE IN MILLIMETERS FOR REDUCED PLANS 0 10 20 30 40 50 60 70 80 90 100

CU 02-305
EA 395801

DISREGARD PRINTS BEARING EARLIER REVISION DATES → 1-16-04 1-20-09

REVISION DATES (PRELIMINARY STAGE ONLY) SHEET OF

28-JUL-2009 14:42

st0_02.dgn

DIST.	COUNTY	ROUTE	KILOMETER POST TOTAL PROJECT	SHEET NO.	TOTAL SHEETS
02	Sha	5	R69.4	62	120

Caltrans Metric

William Rocha Jr.
REGISTERED CIVIL ENGINEER

REGISTERED PROFESSIONAL ENGINEER William Rocha, Jr. No. 59791 Exp. 12-31-09 CIVIL STATE OF CALIFORNIA

7-13-09
PLANS APPROVAL DATE

The State of California or its officers or agents shall not be responsible for the accuracy or completeness of electronic copies of this plan sheet.

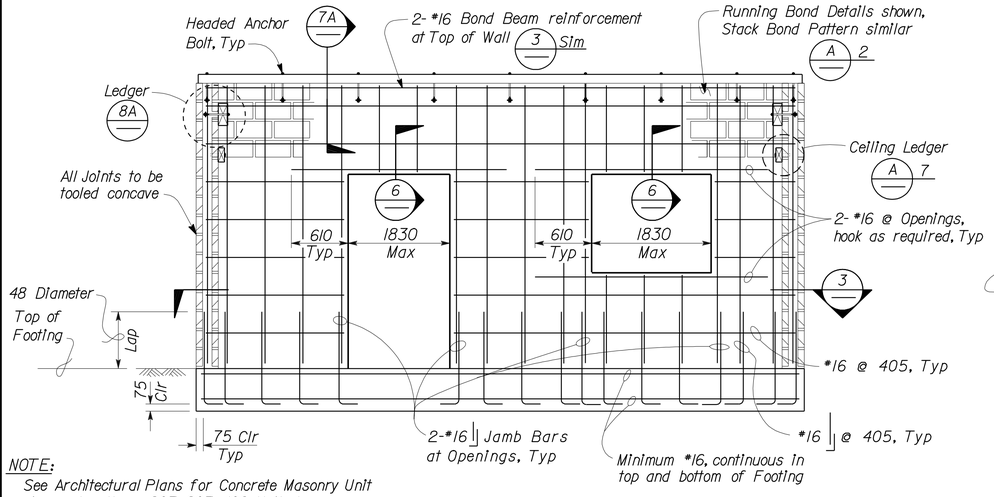

NOTE:
See Architectural Plans for Concrete Masonry Unit size and pattern, 203x203x406 Unit shown.

1 WALL ELEVATION
No Scale

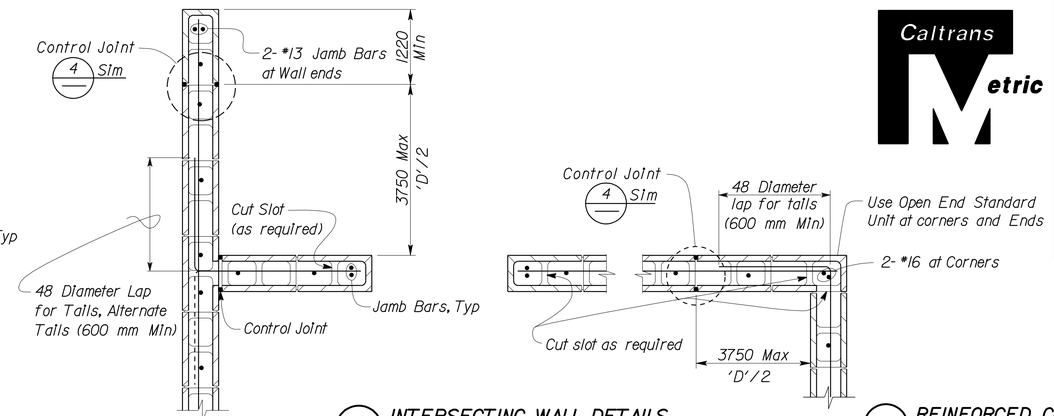

3 INTERSECTING WALL DETAILS
No Scale

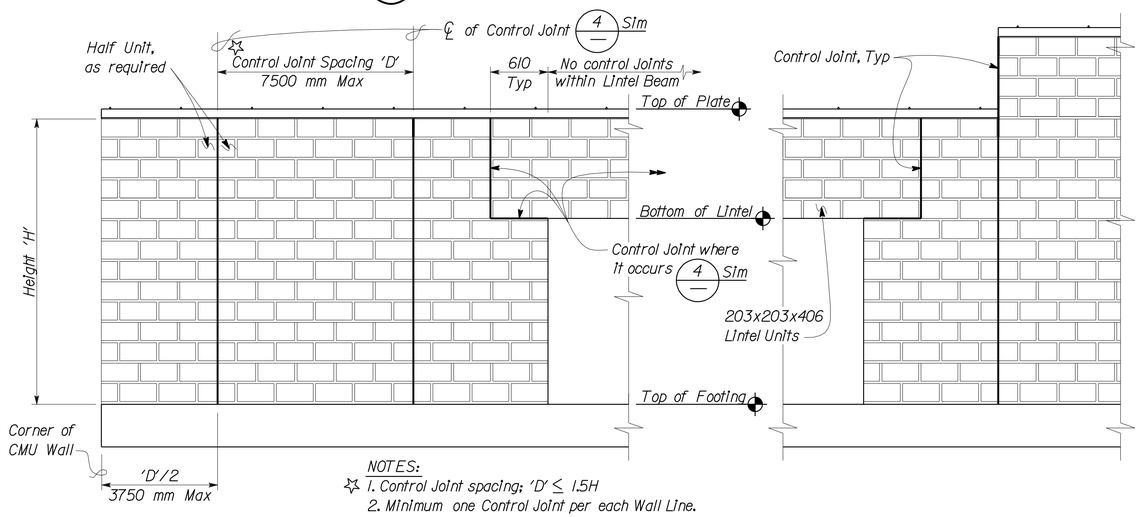

NOTES:
1. Control Joint spacing; 'D' ≤ 1.5H
2. Minimum one Control Joint per each Wall Line.
3. Location of the Control Joints to be approved by the Engineer.

2 WALL ELEVATION
No Scale

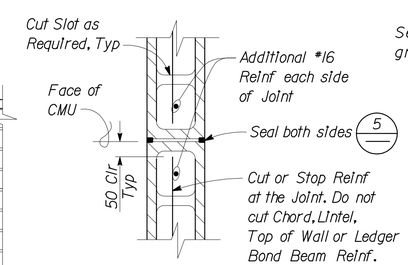

4 CONTROL JOINT DETAIL
Scale 1:10

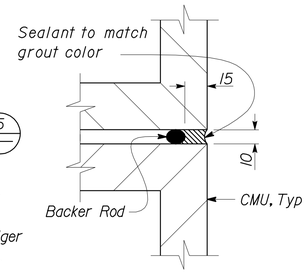

5 JOINT SEAL DETAIL
Scale 1:2

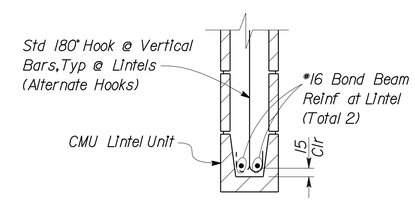

6 LINTEL DETAIL
Scale 1:10

A REINFORCED CONCRETE MASONRY UNIT NOTES:

1. All Walls shown on plans shall be solid grout, open end units, UON.
2. Stack Bond requires open end Bond Beam Units throughout.
3. All vertical reinforcement shall be centered in cell, UON. The minimum coverage of other reinforcement from the exposed surface of Concrete Masonry Unit shall be 50 mm.
4. Reinforcement splices shall be as follows:
   a. Length of lap splice for a #22 or smaller bar shall be 48 diameters.
   b. Lintel lap splices, if neccessary, shall be at midspan for top bars and beyond support for bottom bars.
5. There shall be a minimum 200 mm wall return at any Jamb adjacent to a corner.
6. Dowels shall be at least the same size and spacing as wall reinforcement.
7. Ceiling Ledger shall be anchored with 6.4 mm Ø Expansion Anchors installed at 810 mm OC maximum spacing. Expansion Anchors shall have 40 mm minimum distance to any edge of the masonry unit. Minimum embedment measured from the outside face of the unit shall be 50 mm.
8. Pipes shall not be embedded in any Masonry Wall except when shown on plans or as approved by the Engineer.
9. Electrical Conduit, Panels or Fixtures may be placed in cells with the following restrictions:
   a. The Conduits shall not interfere with or displace the reinforcing steel.
   b. Conduits shall not be placed in such a congested manner as to prevent the complete filling of the cells with grout.
   c. Horizontal run of 19 mm maximum size conduit may be placed in a bond beam unit course that does not have horizontal reinforcing steel.
   d. Recesses more than 25 mm deep for Electrical Panels or Fixtures shall be framed and have similar reinforcement as doors and windows.
10. Steel washers shall be provided for all anchor bolts, over-sized holes and high strength bolts.
11. See Architectural and Mechanical Plans for offsets, sizes and locations of ducts, wall openings, vents and other details not shown on Structural sheets.

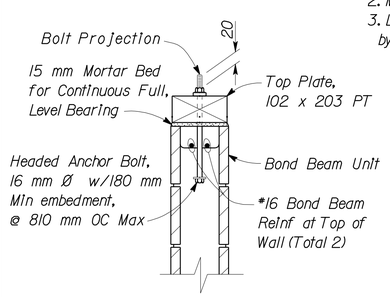

7A WOOD TOP PLATE DETAIL
Scale 1:10

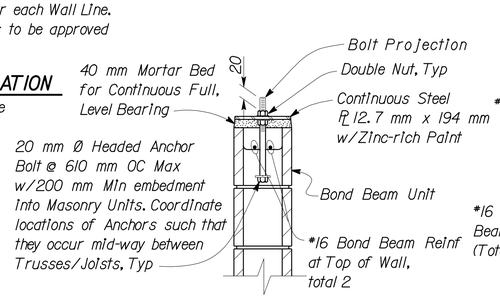

7B STEEL TOP PLATE DETAIL
Scale 1:10

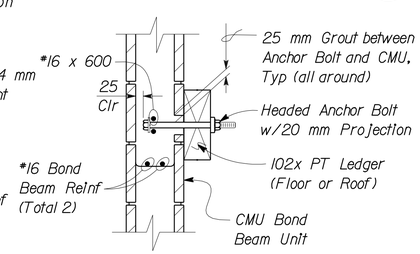

8A WOOD LEDGER DETAIL
Scale 1:10

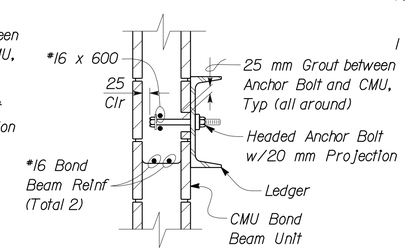

8B STEEL LEDGER DETAIL
Scale 1:10

203 mm CMU

NOTE: SPECIFIC DETAILS OR NOTES ON OTHER SHEETS SHALL PREVAIL OVER STANDARD DETAILS AND NOTES ON THIS SHEET

STANDARD DRAWING

FILE NO. XS-25M-2	DESIGN BY Jean Sonnel	CHECKED Joe Colombo	APPROVED R.E. Travis
DRAWING DATE 1-04	DETAILS BY Peter Fromhauser II	CHECKED Joe Colombo	DESIGN SUPERVISOR
	SUBMITTED BY Jean Sonnel, DESIGN ENGINEER		

STATE OF CALIFORNIA
DEPARTMENT OF TRANSPORTATION

DIVISION OF ENGINEERING SERVICES
ARCHITECTURAL AND STRUCTURAL DESIGN

BRIDGE NO. 06R0001
KM POST R69.4

LAKEHEAD SRRA UPGRADE AND ADDITION

CONCRETE MASONRY UNIT STANDARD

SHEET **ST-3**

DOES SD metric Rev. 9/02

SCALE: ALL DIMENSIONS ARE IN MILLIMETERS UNLESS OTHERWISE NOTED.

ORIGINAL SCALE IN MILLIMETERS FOR REDUCED PLANS 0 10 20 30 40 50 60 70 80 90 100

CU 02-305
EA 395801

DISREGARD PRINTS BEARING EARLIER REVISION DATES → 1-16-04 1-20-09

REVISION DATES (PRELIMINARY STAGE ONLY) SHEET OF

28-JUL-2009 14:42

st0_03.dgn

DIST	COUNTY	ROUTE	KILOMETER POST TOTAL PROJECT	SHEET NO.	TOTAL SHEETS
02	Sha	5	R69.4	63	120

Caltrans Metric

William Rocha Jr
REGISTERED CIVIL ENGINEER DATE

REGISTERED PROFESSIONAL ENGINEER William Rocha, Jr. No. 59791 Exp. 12-31-09 CIVIL STATE OF CALIFORNIA

7-13-09
PLANS APPROVAL DATE

The State of California or its officers or agents shall not be responsible for the accuracy or completeness of electronic copies of this plan sheet.

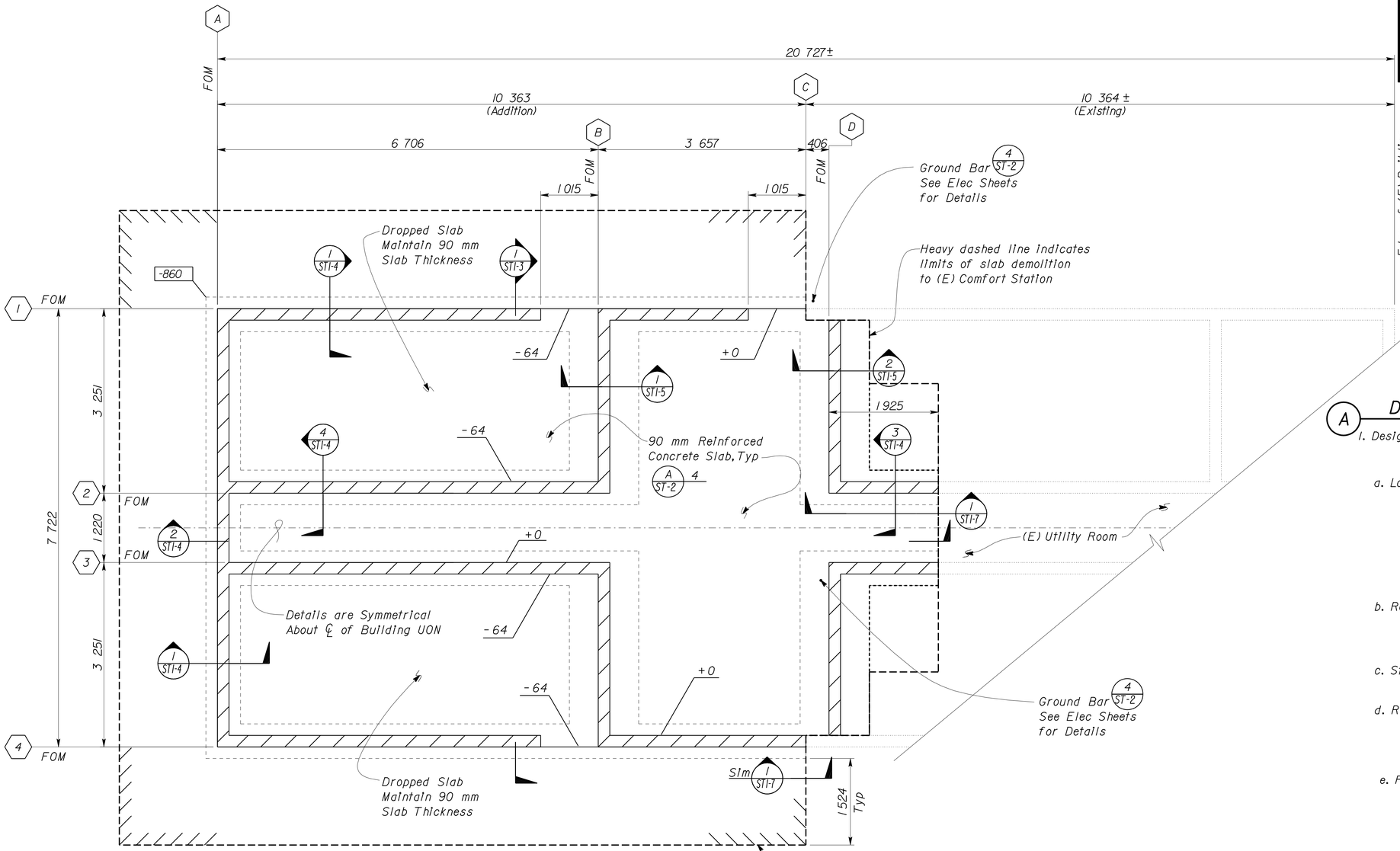

1 FOUNDATION PLAN

Scale 1:40

Elevation 381.22± meters = (E) Slab Elevation in (E) Utility Room = Datum 0 mm

NOTE:
The Contractor shall verify all controlling field dimensions before ordering or fabricating any material.

A DESIGN NOTES:

1. Design: The building work on this project has been designed to conform to the 2007 California Building Code.

   a. Loads :
   Live Loads Roof = 960 Pa
   Snow Load = 2400 Pa

   Wind Speed : 113 km/h , Exposure C
   Seismic Zone : 3

   b. Reinforced Concrete (Ultimate Strength Design) :
   $f'c$ = 21 MPa
   f_y = 420 MPa

   c. Structural Steel (Working Stress Design) :
   f_y = 250 MPa

   d. Reinforced Concrete Masonry Units (Allowable Stress Design) :
   $f'm$ = 10.3 MPa
   f_y = 420 MPa

   e. Foundation :
   Soils report dated: July 26, 2006
   Allowable Soil Pressure (DL + LL) : 72 kPa
   Remove soil to a Depth of 1500 mm measured from (E) Top of Slab Elevation of Comfort Station and Replace with Structure Backfill.

2. All Miscellaneous Metal to be hot-dip galvanized after fabrication.

3. Building dimensions are based on CMU block module of 203 mm x 203 mm x 406 mm

4. Mechanical Expansion Anchors shall be 16 mm Ø and have 100 mm minimum embedment, 915 mm max spacing and placed 150 mm maximum spacing from ends, two minimum per connection, unless otherwise shown.

DESIGN	BY Bill Rocha	CHECKED Gang Hong	
DETAILS	BY David Good	CHECKED Bill Rocha	
QUANTITIES	BY	CHECKED	

DESIGN ENGINEER

STATE OF CALIFORNIA
DEPARTMENT OF TRANSPORTATION

DIVISION OF ENGINEERING SERVICES
ARCHITECTURAL AND STRUCTURAL DESIGN

BRIDGE NO. 06R0001
KM POST R69.4

LAKEHEAD SRRA UPGRADE AND ADDITION

FOUNDATION PLAN

SHEET **ST1-1**

DOES SD metric Rev. 9/02

SCALE: ALL DIMENSIONS ARE IN MILLIMETERS UNLESS OTHERWISE NOTED.

ORIGINAL SCALE IN MILLIMETERS FOR REDUCED PLANS 0 10 20 30 40 50 60 70 80 90 100

CU 02-305
EA 395801

DISREGARD PRINTS BEARING EARLIER REVISION DATES → 02-23-06 04-10-06 08-28-06 1-20-09

REVISION DATES (PRELIMINARY STAGE ONLY) SHEET OF

28-JUL-2009 14:42

st1_01.dgn

DIST	COUNTY	ROUTE	KILOMETER POST TOTAL PROJECT	SHEET NO.	TOTAL SHEETS
02	Sha	5	R69.4	64	120

Caltrans Metric

William Rocha Jr.
REGISTERED CIVIL ENGINEER DATE

REGISTERED PROFESSIONAL ENGINEER William Rocha, Jr. No. 59791 Exp. 12-31-09 CIVIL STATE OF CALIFORNIA

7-13-09
PLANS APPROVAL DATE

The State of California or its officers or agents shall not be responsible for the accuracy or completeness of electronic copies of this plan sheet.

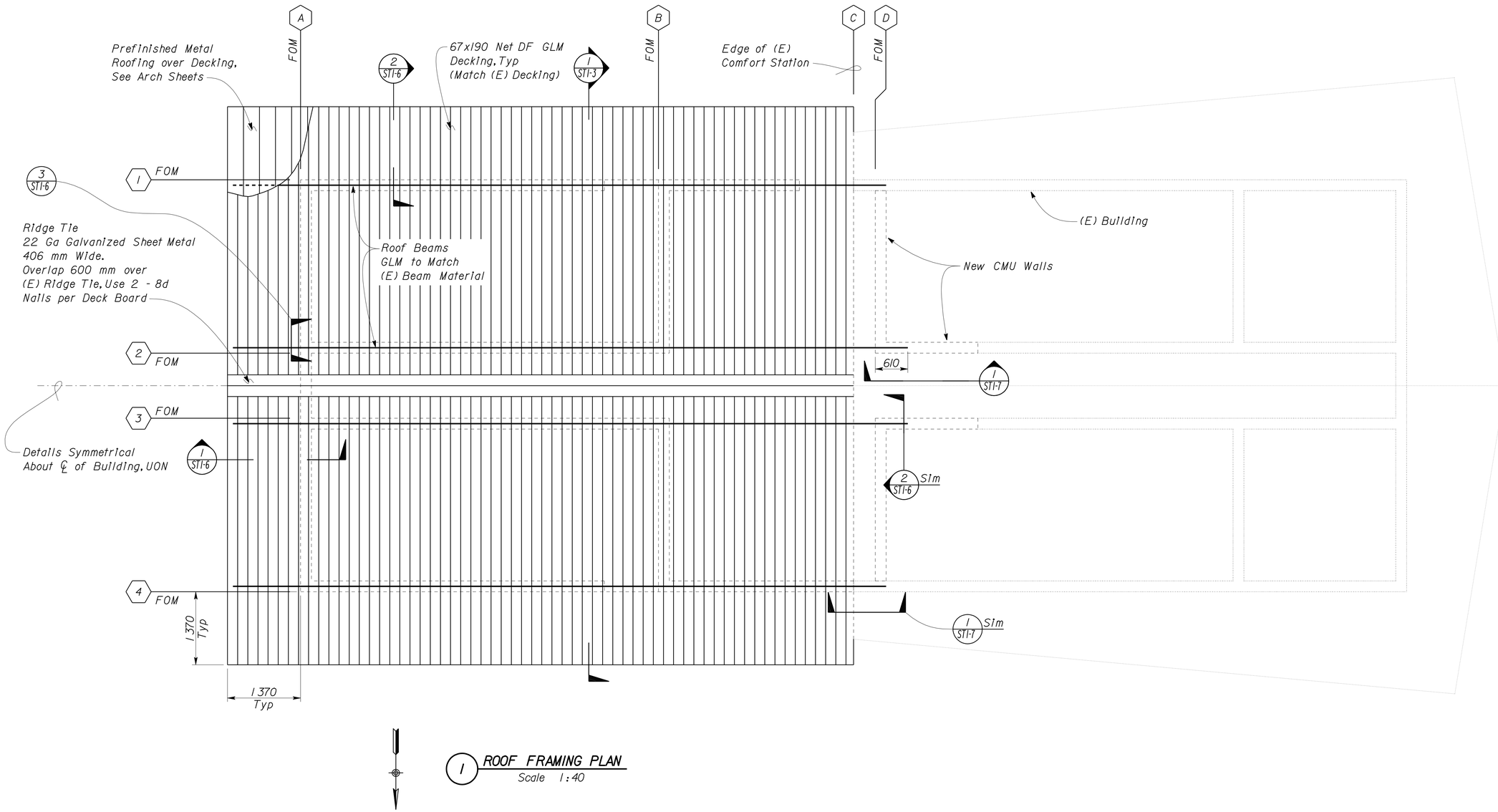

1 ROOF FRAMING PLAN
Scale 1:40

NOTE:
The Contractor shall verify all controlling field dimensions before ordering or fabricating any material.

DESIGN	BY Bill Rocha	CHECKED Gang Hong	
DETAILS	BY David Good	CHECKED Bill Rocha	
QUANTITIES	BY	CHECKED	

STATE OF CALIFORNIA
DEPARTMENT OF TRANSPORTATION

DIVISION OF ENGINEERING SERVICES
ARCHITECTURAL AND STRUCTURAL DESIGN

BRIDGE NO. 06R0001
KM POST R69.4

LAKEHEAD SRRA UPGRADE AND ADDITION

ROOF FRAMING PLAN

SHEET **ST1-2**

DOES SD metric Rev. 9/02

SCALE: ALL DIMENSIONS ARE IN MILLIMETERS UNLESS OTHERWISE NOTED.

ORIGINAL SCALE IN MILLIMETERS FOR REDUCED PLANS 0 10 20 30 40 50 60 70 80 90 100

CU 02-305
EA 395801

DISREGARD PRINTS BEARING EARLIER REVISION DATES

REVISION DATES (PRELIMINARY STAGE ONLY) 02-23-06 04-18-06 08-28-06 1-20-09

SHEET OF

st1_02.dgn

28-JUL-2009 14:42

DIST	COUNTY	ROUTE	KILOMETER POST TOTAL PROJECT	SHEET NO.	TOTAL SHEETS
02	Sha	5	R69.4	65	120

Caltrans Metric

William Rocha Jr
REGISTERED CIVIL ENGINEER DATE

REGISTERED PROFESSIONAL ENGINEER William Rocha, Jr. No. 59791 Exp. 12-31-09 CIVIL STATE OF CALIFORNIA

7-13-09
PLANS APPROVAL DATE

The State of California or its officers or agents shall not be responsible for the accuracy or completeness of electronic copies of this plan sheet.

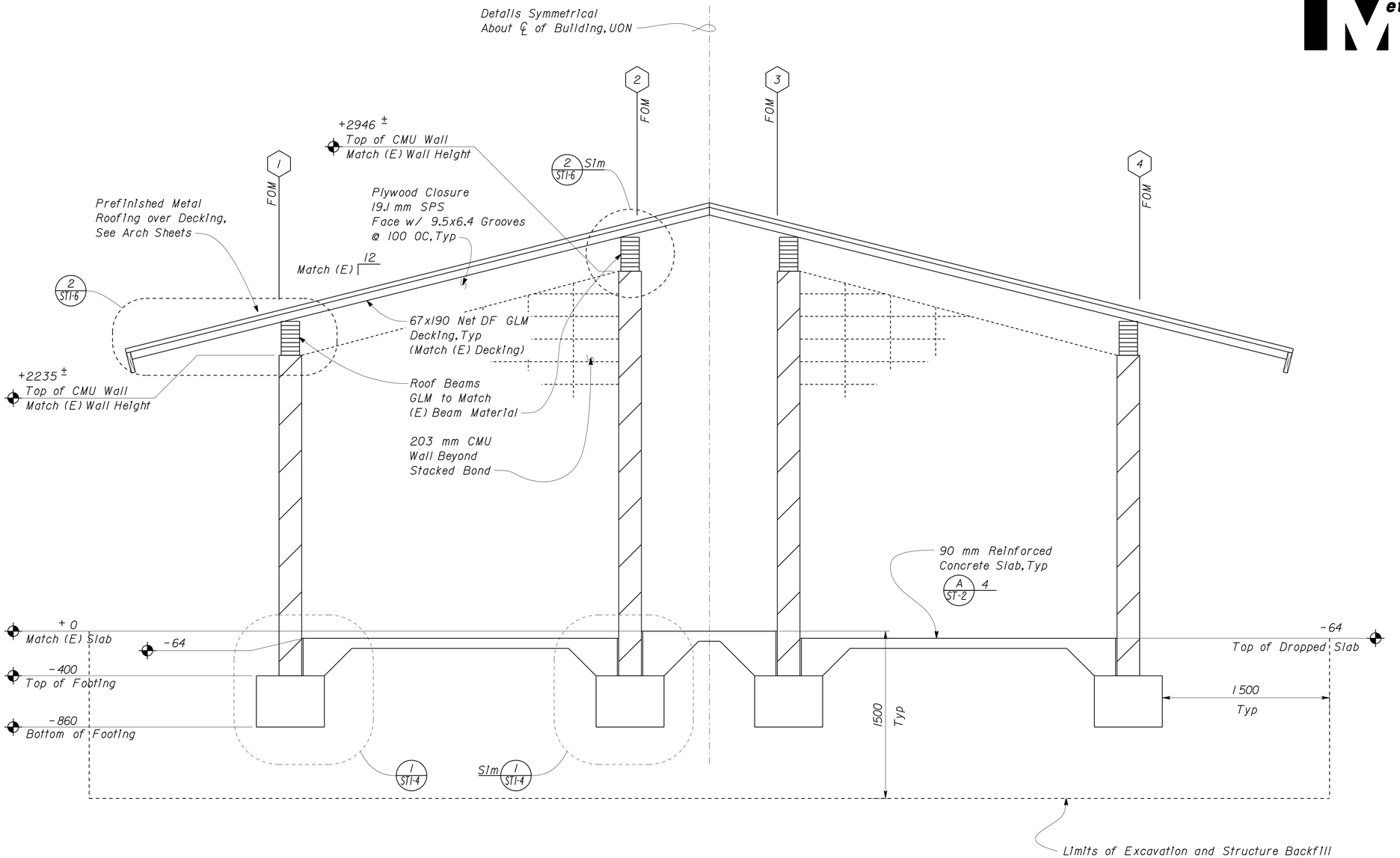

1 SECTION
Scale 1:20

NOTE: Concrete walkway around new Comfort Station not shown. See Arch sheets for Details.

NOTE:
The Contractor shall verify all controlling field dimensions before ordering or fabricating any material.

DESIGN	BY Bill Rocha	CHECKED Gang Hong	
DETAILS	BY David Good	CHECKED Bill Rocha	
QUANTITIES	BY	CHECKED	

STATE OF CALIFORNIA
DEPARTMENT OF TRANSPORTATION

DIVISION OF ENGINEERING SERVICES
ARCHITECTURAL AND STRUCTURAL DESIGN

BRIDGE NO. 06R0001
KM POST R69.4

LAKEHEAD SRRA UPGRADE AND ADDITION

BUILDING SECTION

SHEET **ST1-3**

DOES SD metric Rev. 9/02

SCALE: ALL DIMENSIONS ARE IN MILLIMETERS UNLESS OTHERWISE NOTED.

ORIGINAL SCALE IN MILLIMETERS FOR REDUCED PLANS 0 10 20 30 40 50 60 70 80 90 100

CU 02-305
EA 395801

DISREGARD PRINTS BEARING EARLIER REVISION DATES → REVISION DATES (PRELIMINARY STAGE ONLY) 02-23-06 04-18-06 08-28-06 03-26-07 1-20-09 SHEET OF

28-JUL-2009 14:42

st1_03.dgn

DIST	COUNTY	ROUTE	KILOMETER POST TOTAL PROJECT	SHEET NO.	TOTAL SHEETS
02	Sha	5	R69.4	66	120

Caltrans Metric

William Rocha Jr.
REGISTERED CIVIL ENGINEER DATE

REGISTERED PROFESSIONAL ENGINEER William Rocha, Jr. No. 59791 Exp. 12-31-09 CIVIL STATE OF CALIFORNIA

7-13-09
PLANS APPROVAL DATE

The State of California or its officers or agents shall not be responsible for the accuracy or completeness of electronic copies of this plan sheet.

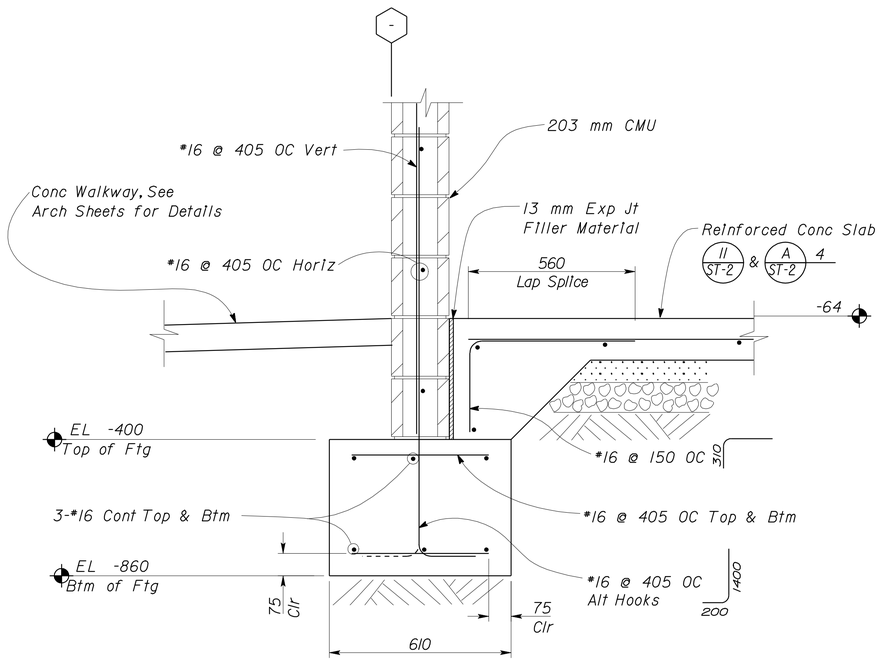

1 FOOTING
Scale 1:10

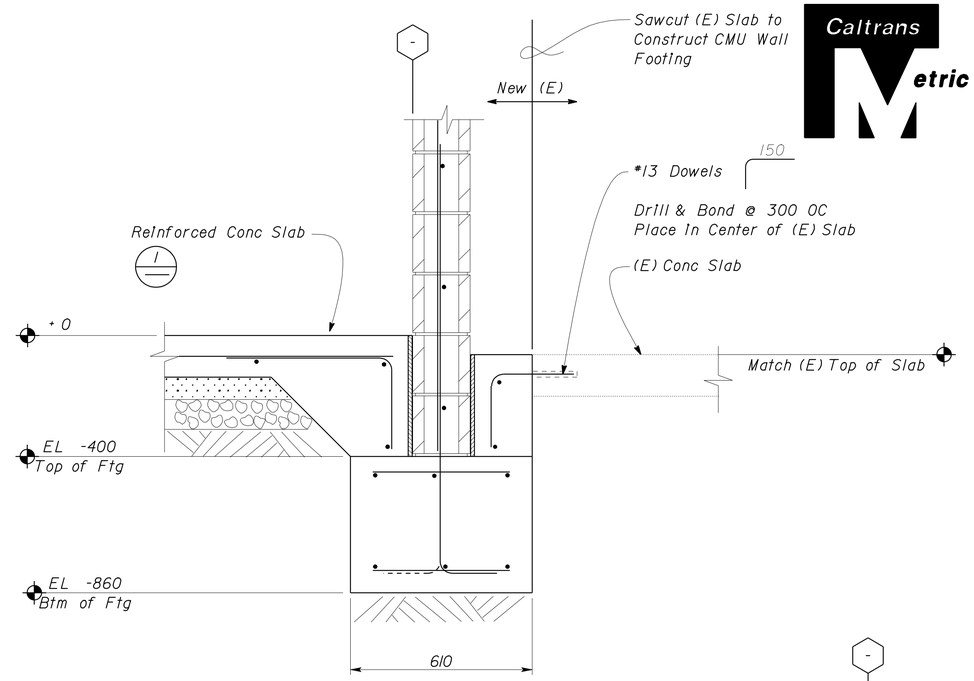

3 INTERIOR FOOTING
Scale 1:10

NOTE:
The Contractor shall verify all controlling field dimensions before ordering or fabricating any material.

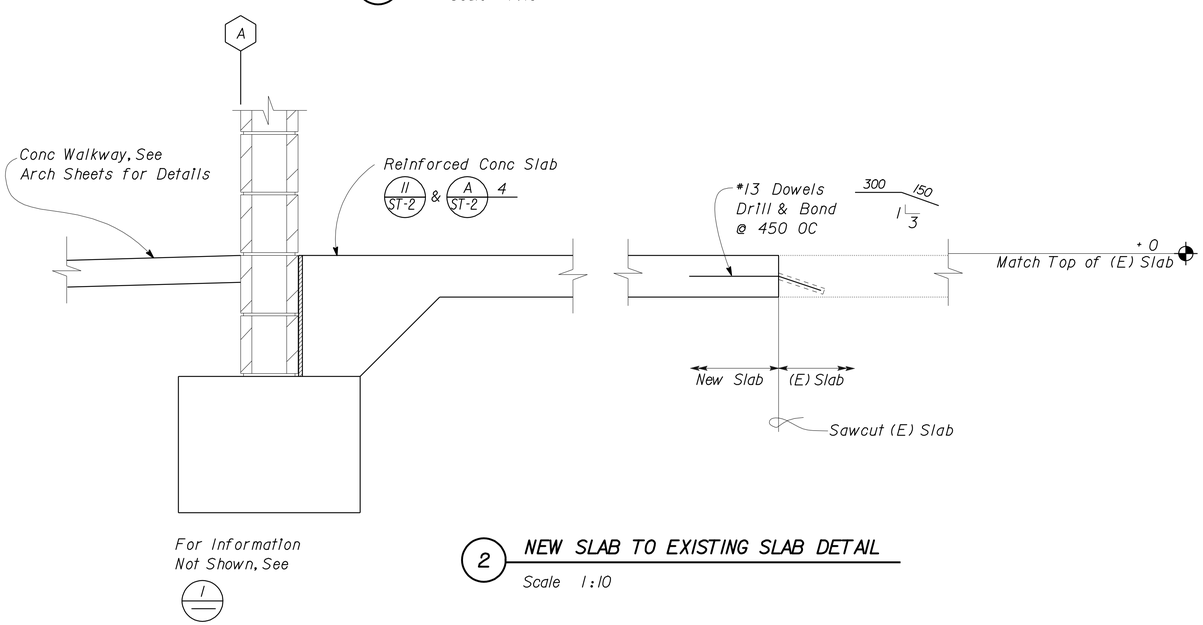

2 NEW SLAB TO EXISTING SLAB DETAIL
Scale 1:10

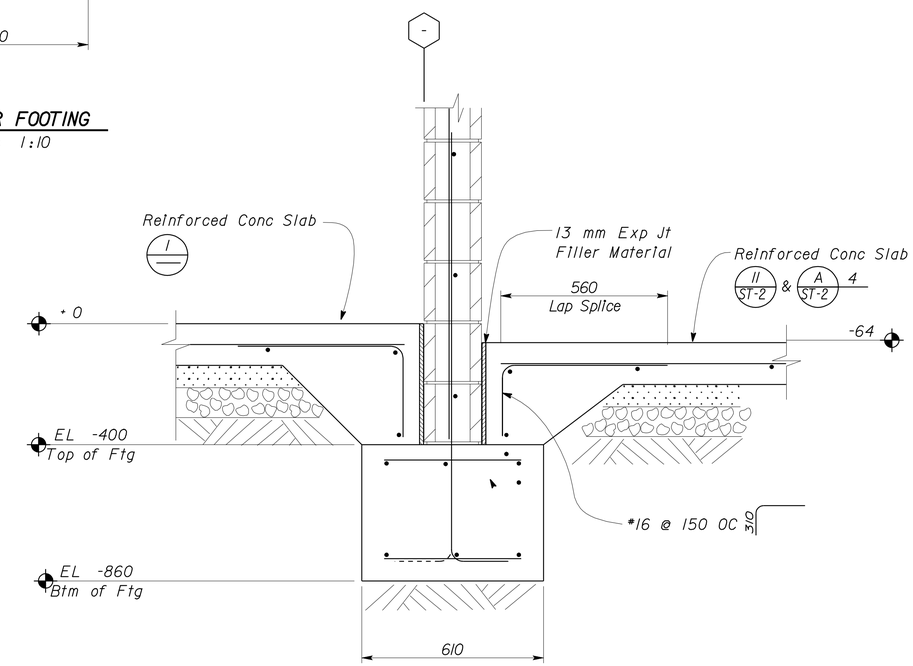

4 INTERIOR FOOTING
Scale 1:10

DESIGN	BY Bill Rocha	CHECKED Gang Hong	
DETAILS	BY David Good	CHECKED Bill Rocha	
QUANTITIES	BY	CHECKED	

STATE OF CALIFORNIA
DEPARTMENT OF TRANSPORTATION

DIVISION OF ENGINEERING SERVICES
ARCHITECTURAL AND STRUCTURAL DESIGN

BRIDGE NO. 06R0001
KM POST R69.4

LAKEHEAD SRRA
UPGRADE AND ADDITION
FOUNDATION DETAILS 1 of 2

SHEET ST1-4

DOES SD metric Rev. 9/02

SCALE: ALL DIMENSIONS ARE IN MILLIMETERS UNLESS OTHERWISE NOTED.

ORIGINAL SCALE IN MILLIMETERS FOR REDUCED PLANS 0 10 20 30 40 50 60 70 80 90 100

CU 02-305
EA 395801

DISREGARD PRINTS BEARING EARLIER REVISION DATES → 04-18-06 08-28-06 1-20-09

REVISION DATES (PRELIMINARY STAGE ONLY) SHEET OF

28-JUL-2009 14:42
st1_04.dgn

DIST	COUNTY	ROUTE	KILOMETER POST TOTAL PROJECT	SHEET NO.	TOTAL SHEETS
02	Sha	5	R69.4	67	120

NOTE:
The Contractor shall verify all controlling field dimensions before ordering or fabricating any material.

Caltrans Metric

William Rocha Jr
REGISTERED CIVIL ENGINEER DATE

REGISTERED PROFESSIONAL ENGINEER William Rocha, Jr. No. 59791 Exp. 12-31-09 CIVIL STATE OF CALIFORNIA

7-13-09
PLANS APPROVAL DATE

The State of California or its officers or agents shall not be responsible for the accuracy or completeness of electronic copies of this plan sheet.

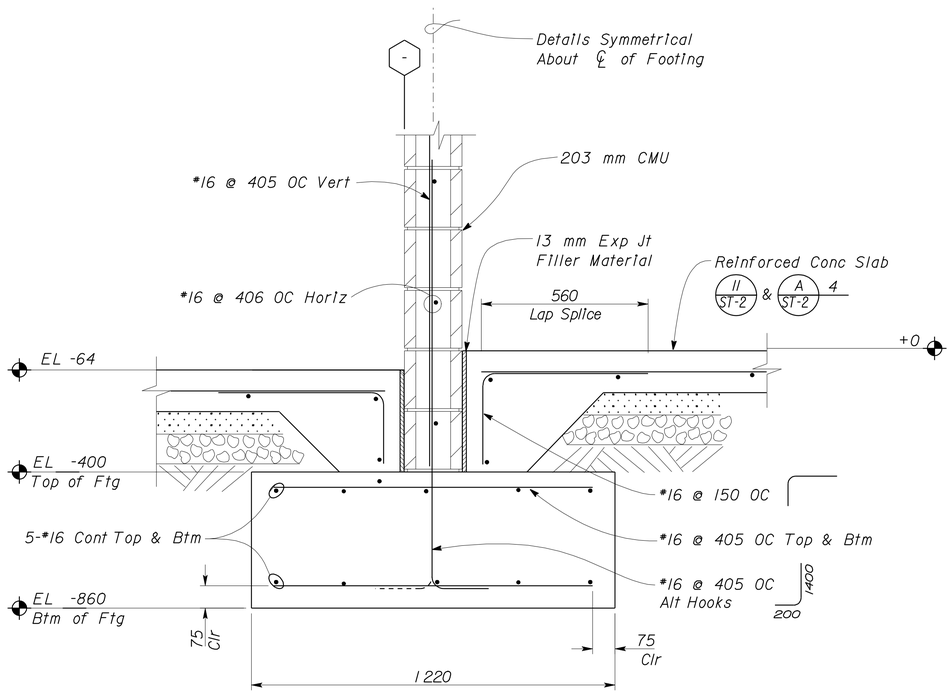

1 INTERIOR FOOTING
Scale 1:10

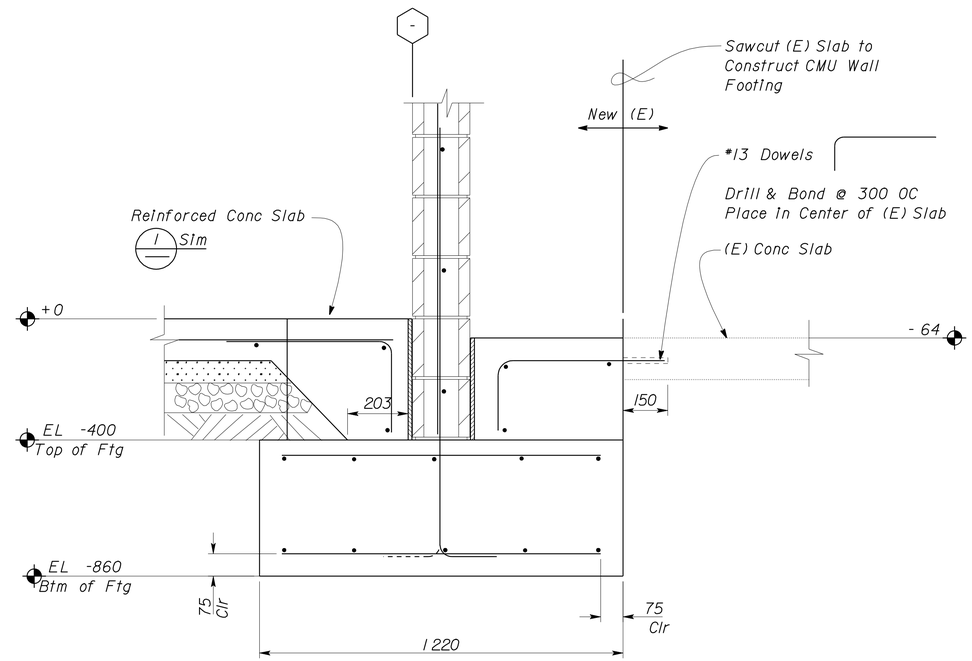

2 INTERIOR FOOTING
Scale 1:10

DESIGN	BY Bill Rocha	CHECKED Gang Hong	
DETAILS	BY David Good	CHECKED Bill Rocha	
QUANTITIES	BY	CHECKED	

STATE OF CALIFORNIA
DEPARTMENT OF TRANSPORTATION

DIVISION OF ENGINEERING SERVICES
ARCHITECTURAL AND STRUCTURAL DESIGN

BRIDGE NO. 06R0001
KM POST R69.4

LAKEHEAD SRRA
UPGRADE AND ADDITION
FOUNDATION DETAILS 2 of 2

SHEET ST1-5

DOES SD metric Rev. 9/02

SCALE: ALL DIMENSIONS ARE IN MILLIMETERS UNLESS OTHERWISE NOTED.

ORIGINAL SCALE IN MILLIMETERS FOR REDUCED PLANS 0 10 20 30 40 50 60 70 80 90 100

CU 02-305
EA 395801

DISREGARD PRINTS BEARING EARLIER REVISION DATES → REVISION DATES (PRELIMINARY STAGE ONLY) ~~01-18-06~~ 1-20-09

SHEET OF

28-JUL-2009 14:42
st1_05.dgn

DIST	COUNTY	ROUTE	KILOMETER POST TOTAL PROJECT	SHEET NO.	TOTAL SHEETS
02	Sha	5	R69.4	68	120

Caltrans Metric

William Rocha Jr
REGISTERED CIVIL ENGINEER DATE

REGISTERED PROFESSIONAL ENGINEER
William Rocha, Jr.
No. 59791
Exp. 12-31-09
CIVIL
STATE OF CALIFORNIA

7-13-09
PLANS APPROVAL DATE

The State of California or its officers or agents shall not be responsible for the accuracy or completeness of electronic copies of this plan sheet.

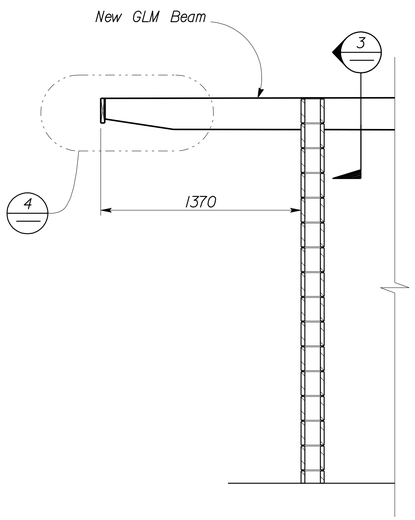

1 EXTERIOR RAKE
Scale 1:25

NOTE: Decking not shown
See Arch Sheets for Details

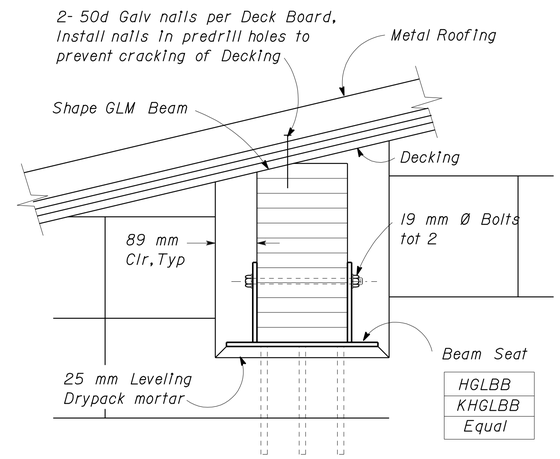

3 GLM BEAM POCKET
Scale 1:5

Note
The Contractor shall verify all controlling field dimensions before ordering or fabricating any material.

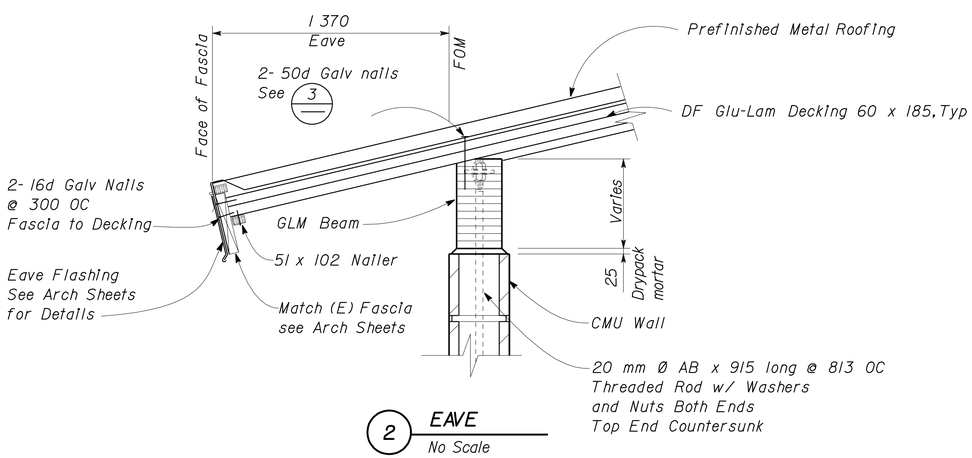

2 EAVE
No Scale

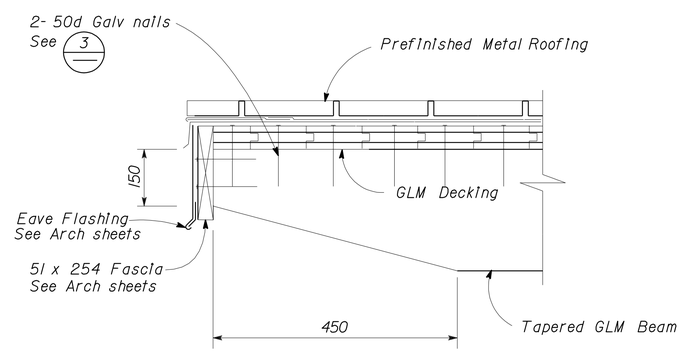

4 RAKE
No Scale

DESIGN	BY Bill Rocha	CHECKED Gang Hong	
DETAILS	BY David Good	CHECKED Bill Rocha	
QUANTITIES	BY	CHECKED	

STATE OF CALIFORNIA
DEPARTMENT OF TRANSPORTATION

DIVISION OF ENGINEERING SERVICES
ARCHITECTURAL AND STRUCTURAL DESIGN

BRIDGE NO. 06R0001
KM POST R69.4

LAKEHEAD SRRA
UPGRADE AND ADDITION
FRAMING DETAILS 1of 2

SHEET ST1-6

DOES SD metric Rev. 9/02

SCALE: ALL DIMENSIONS ARE IN MILLIMETERS UNLESS OTHERWISE NOTED.

ORIGINAL SCALE IN MILLIMETERS FOR REDUCED PLANS 0 10 20 30 40 50 60 70 80 90 100

CU 02-305
EA 395801

DISREGARD PRINTS BEARING EARLIER REVISION DATES → 04-10-06 08-28-06 1-20-09

REVISION DATES (PRELIMINARY STAGE ONLY) SHEET OF

28-JUL-2009 14:43
st1_06.dgn

DIST	COUNTY	ROUTE	KILOMETER POST TOTAL PROJECT	SHEET NO.	TOTAL SHEETS
02	Sha	5	R69.4	69	120

NOTE:
The Contractor shall verify all controlling field dimensions before ordering or fabricating any material.

Caltrans Metric

William Rocha Jr
REGISTERED CIVIL ENGINEER DATE

REGISTERED PROFESSIONAL ENGINEER William Rocha, Jr. No. 59791 Exp. 12-31-09 CIVIL STATE OF CALIFORNIA

7-13-09
PLANS APPROVAL DATE

The State of California or its officers or agents shall not be responsible for the accuracy or completeness of electronic copies of this plan sheet.

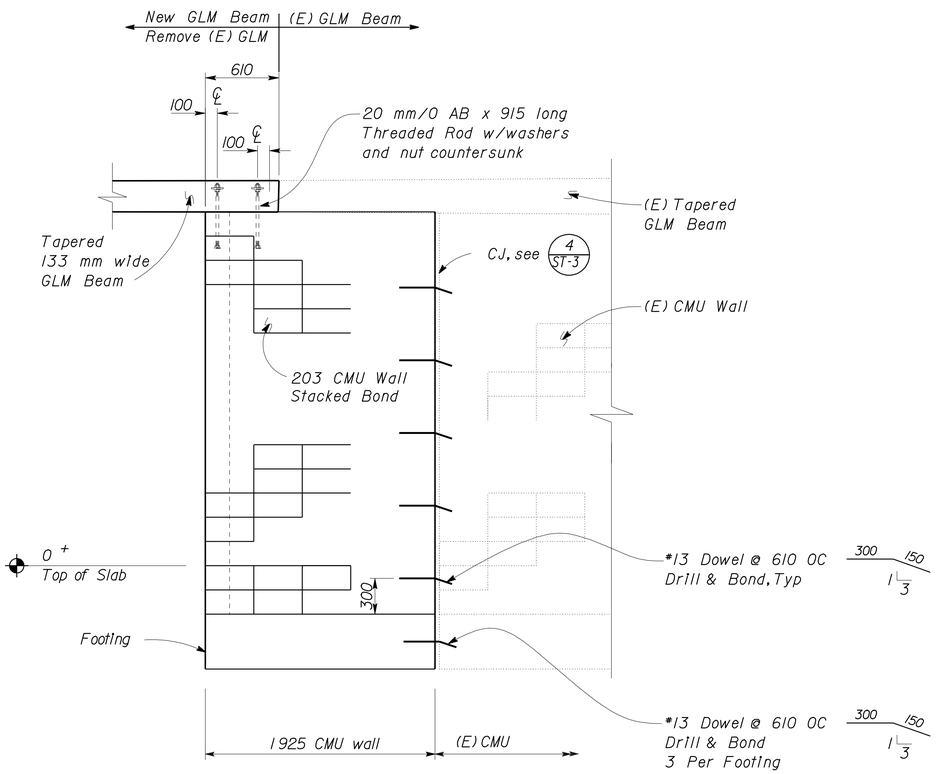

1 INTERIOR ELEVATION
Scale 1:25

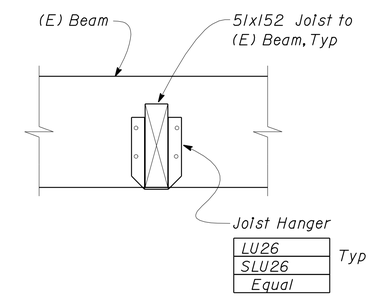

2 JOIST TO BEAM CONNECTION
Scale 1:5

SPECIAL DETAIL FOR
BREAK ROOM BUILDING
SEE DETAIL 1/A2-2

DESIGN	BY Bill Rocha	CHECKED Gang Hong	
DETAILS	BY David Good	CHECKED Bill Rocha	
QUANTITIES	BY	CHECKED	

STATE OF CALIFORNIA
DEPARTMENT OF TRANSPORTATION

DIVISION OF ENGINEERING SERVICES
ARCHITECTURAL AND STRUCTURAL DESIGN

BRIDGE NO. 06R0001
KM POST R69.4

LAKEHEAD SRRA
UPGRADE AND ADDITION
FRAMING DETAILS 2 of 2

SHEET ST1-7

DOES SD metric Rev. 9/02

SCALE: ALL DIMENSIONS ARE IN MILLIMETERS UNLESS OTHERWISE NOTED.

ORIGINAL SCALE IN MILLIMETERS FOR REDUCED PLANS 0 10 20 30 40 50 60 70 80 90 100

CU 02-305
EA 395801

DISREGARD PRINTS BEARING EARLIER REVISION DATES → 04-18-06 08-28-06 1-20-09

REVISION DATES (PRELIMINARY STAGE ONLY) SHEET OF

28-JUL-2009 14:43

st1_07.dgn

DIST	COUNTY	ROUTE	KILOMETER POST TOTAL PROJECT	SHEET NO.	TOTAL SHEETS
02	Sha	5	R69.4	70	120

Caltrans Metric

William Rocha Jr
REGISTERED CIVIL ENGINEER DATE

REGISTERED PROFESSIONAL ENGINEER William Rocha, Jr. No. 59791 Exp. 12-31-09 CIVIL STATE OF CALIFORNIA

7-13-09
PLANS APPROVAL DATE

The State of California or its officers or agents shall not be responsible for the accuracy or completeness of electronic copies of this plan sheet.

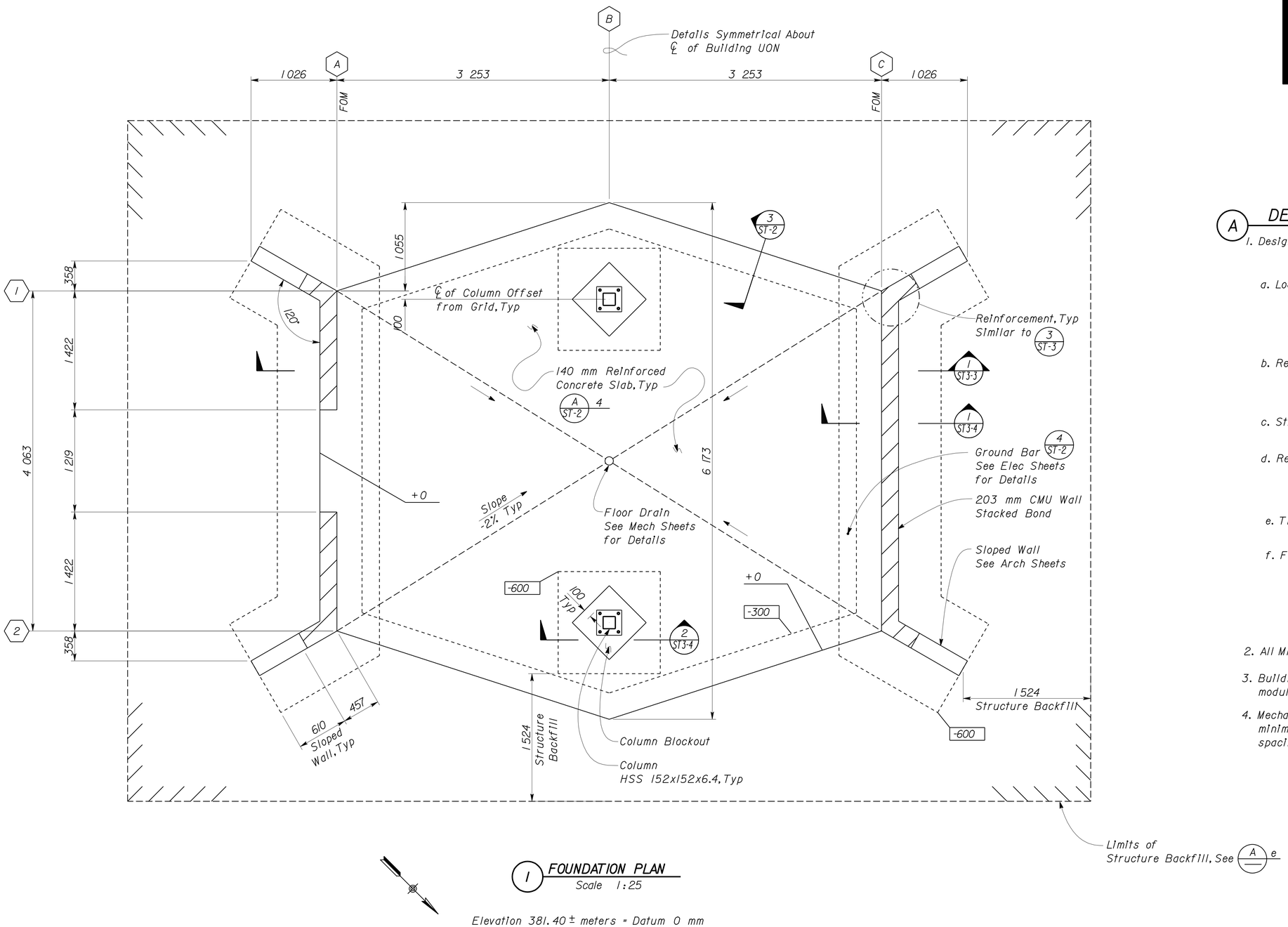

1 FOUNDATION PLAN

Scale 1:25

Elevation 381.40 ± meters = Datum 0 mm

A DESIGN NOTES:

1. Design: The building work on this project has been designed to conform to the 2001 California Building Code.

a. Loads :
Live Loads Roof = 2400 Pa (Snow)
Wind Speed : 113 km/h , Exposure C
Seismic Zone : 3

b. Reinforced Concrete (Ultimate Strength Design) :
$f'c$ = 21 MPa
f_y = 420 MPa

c. Structural Steel (Working Stress Design) :
f_y = 250 MPa

d. Reinforced Concrete Masonry Units (Allowable Stress Design) :
$f'm$ = 10.3 MPa
f_y = 420 MPa

e. Timber: Sawn Lumber Sheet ST-1A & ST-1B

f. Foundation :
Soils report dated: July 26, 2006
Allowable Soil Pressure (DL + LL) : 72kPa
Remove soil to a Depth of 1500 mm measured from Top of Slab Elevation of Kiosk and Replace with Structure Backfill.

2. All Miscellaneous Metal to be hot-dip galvanized after fabrication.

3. Building dimensions are based on CMU block module of 203 mm x 203 mm x 406 mm

4. Mechanical Expansion Anchors shall be 16 mm Ø and have 100 mm minimum embedment, 915 mm max spacing and placed 150 mm maximum spacing from ends, two minimum per connection, unless otherwise shown.

NOTE:
The Contractor shall verify all controlling field dimensions before ordering or fabricating any material.

DESIGN	BY Bill Rocha	CHECKED Gang Hong	
DETAILS	BY David Good	CHECKED Bill Rocha	
QUANTITIES	BY	CHECKED	

STATE OF CALIFORNIA DEPARTMENT OF TRANSPORTATION

DIVISION OF ENGINEERING SERVICES ARCHITECTURAL AND STRUCTURAL DESIGN

BRIDGE NO. 06R0001
KM POST R69.4

LAKEHEAD SRRA UPGRADE AND ADDITION
KIOSK
FOUNDATION PLAN

SHEET ST3-1

DOES SD metric Rev. 9/02

SCALE: ALL DIMENSIONS ARE IN MILLIMETERS UNLESS OTHERWISE NOTED.

ORIGINAL SCALE IN MILLIMETERS FOR REDUCED PLANS 0 10 20 30 40 50 60 70 80 90 100

CU 02-305
EA 395801

DISREGARD PRINTS BEARING EARLIER REVISION DATES → 04-12-06 05-25-06 08-28-06 09-13-06 1-20-09

REVISION DATES (PRELIMINARY STAGE ONLY) SHEET OF

28-JUL-2009 14:43
st3_01.dgn

DIST	COUNTY	ROUTE	KILOMETER POST TOTAL PROJECT	SHEET NO.	TOTAL SHEETS
02	Sha	5	R69.4	71	120

Caltrans Metric

William Rocha Jr
REGISTERED CIVIL ENGINEER DATE

REGISTERED PROFESSIONAL ENGINEER
William Rocha, Jr.
No. 59791
Exp. 12-31-09
CIVIL
STATE OF CALIFORNIA

7-13-09
PLANS APPROVAL DATE

The State of California or its officers or agents shall not be responsible for the accuracy or completeness of electronic copies of this plan sheet.

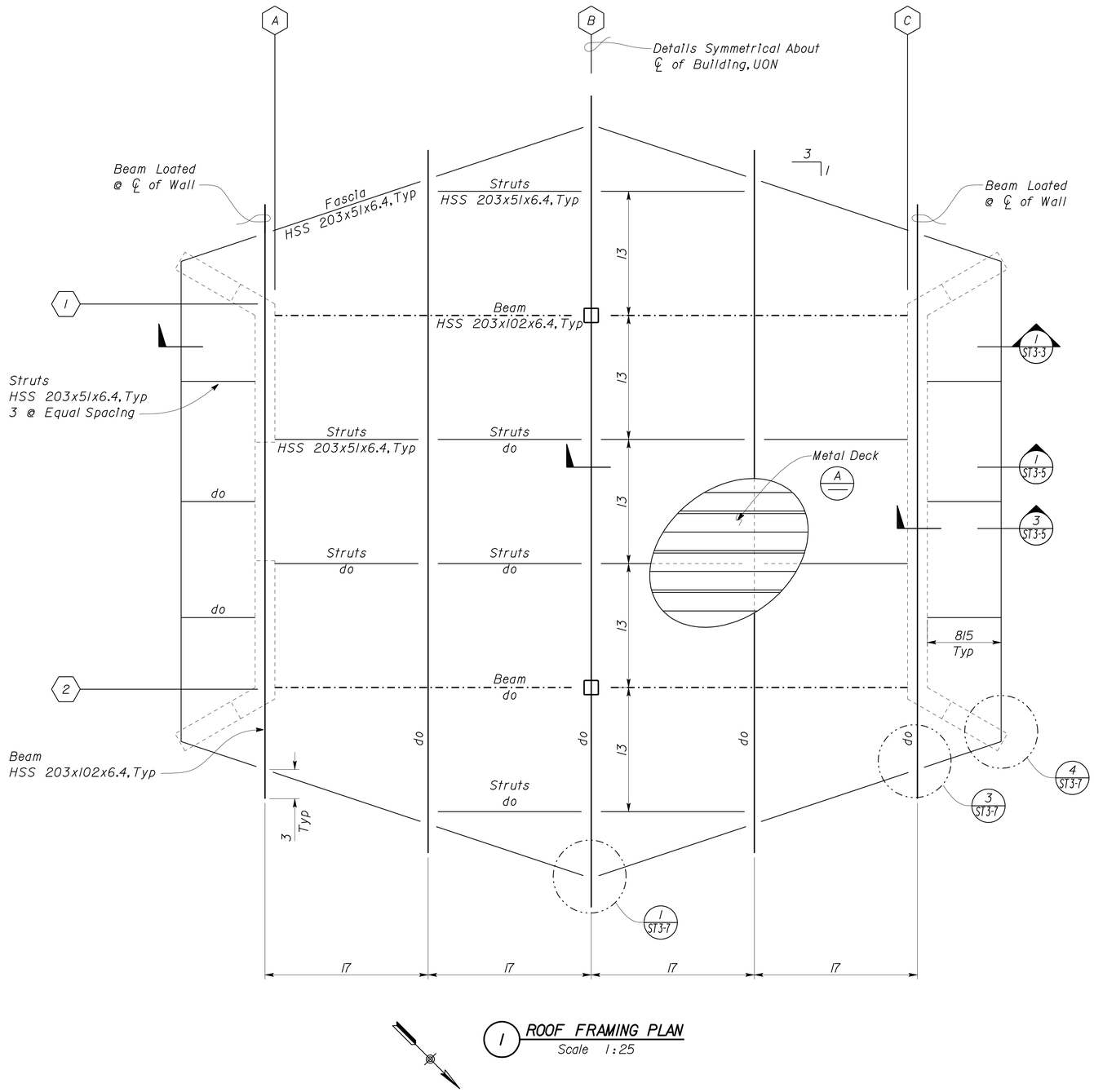

1 ROOF FRAMING PLAN
Scale 1:25

METAL DECK MINIMUM SECTION PROPERTIES

Deck Type	Depth & Gage	Moment of Inertia	Positive Section Modulus	Negative Section Modulus	Minimum Yield Strength
Metal Decking	38 mm x 20 Ga	300 000 mm^4/m	12 600 mm^3/m	13 200 mm^3/m	262 MPa

Note
Minimum 3 Span Condition

WELDING SCHEDULE and METAL DECK PROFILE

Metal Deck Profile	16 mm Diameter Puddle Weld		Button Punch	Diaphragm Shear Capacity
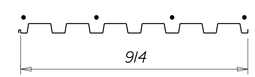	Perpendicular Supports and Panel Ends	Parallel Supports	Side Laps	
	7 - Puddle Welds Per Support	305 mm OC	305 mm OC	10 800 N/m

A METAL DECKING NOTES

Note
The Contractor shall verify all controlling field dimensions before ordering or fabricating any material.

DESIGN	BY Bill Rocha	CHECKED Gang Hong	
DETAILS	BY David Good	CHECKED Bill Rocha	
QUANTITIES	BY	CHECKED	

STATE OF CALIFORNIA
DEPARTMENT OF TRANSPORTATION

DIVISION OF ENGINEERING SERVICES
ARCHITECTURAL AND STRUCTURAL DESIGN

BRIDGE NO. 06R0001
KM POST R69.4

LAKEHEAD SRRA UPGRADE AND ADDITION
KIOSK
ROOF FRAMING PLAN

SHEET ST3-2

DOES SD metric Rev. 9/02

SCALE: ALL DIMENSIONS ARE IN MILLIMETERS UNLESS OTHERWISE NOTED.

ORIGINAL SCALE IN MILLIMETERS FOR REDUCED PLANS 0 10 20 30 40 50 60 70 80 90 100

CU 02-305
EA 395801

DISREGARD PRINTS BEARING EARLIER REVISION DATES

REVISION DATES (PRELIMINARY STAGE ONLY) 04-12-06 05-25-06 08-28-06 09-14-06 1-20-09

SHEET OF

28-JUL-2009 14:43

st3_02.dgn

DIST	COUNTY	ROUTE	KILOMETER POST TOTAL PROJECT	SHEET NO.	TOTAL SHEETS
02	Sha	5	R69.4	72	120

Caltrans Metric

William Rocha Jr
REGISTERED CIVIL ENGINEER DATE

REGISTERED PROFESSIONAL ENGINEER William Rocha, Jr. No. 59791 Exp. 12-31-09 CIVIL STATE OF CALIFORNIA

7-13-09
PLANS APPROVAL DATE

The State of California or its officers or agents shall not be responsible for the accuracy or completeness of electronic copies of this plan sheet.

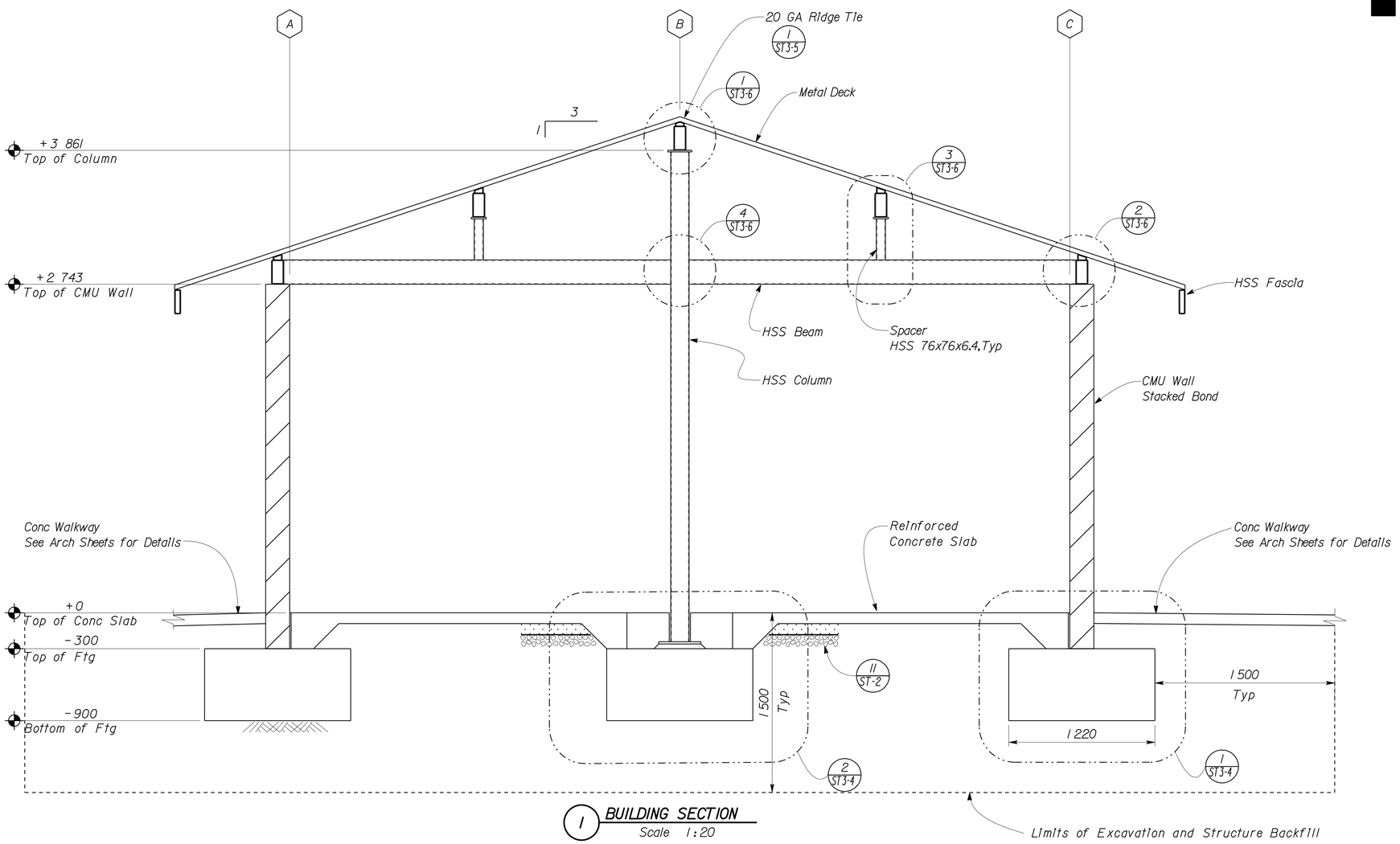

1 BUILDING SECTION
Scale 1:20

Note
The Contractor shall verify all controlling field dimensions before ordering or fabricating any material.

DESIGN	BY Bill Rocha	CHECKED Gang Hong	
DETAILS	BY David Good	CHECKED Bill Rocha	
QUANTITIES	BY	CHECKED	

STATE OF CALIFORNIA
DEPARTMENT OF TRANSPORTATION

DIVISION OF ENGINEERING SERVICES
ARCHITECTURAL AND STRUCTURAL DESIGN

BRIDGE NO. 06R0001
KM POST R69.4

LAKEHEAD SRRA
UPGRADE AND ADDITION

KIOSK

BUILDING SECTION

SHEET ST3-3

DOES SD metric Rev. 9/02

SCALE: ALL DIMENSIONS ARE IN MILLIMETERS UNLESS OTHERWISE NOTED.

ORIGINAL SCALE IN MILLIMETERS FOR REDUCED PLANS 0 10 20 30 40 50 60 70 80 90 100

CU 02-305
EA 395801

DISREGARD PRINTS BEARING EARLIER REVISION DATES

REVISION DATES (PRELIMINARY STAGE ONLY) 04-12-06 05-25-06 09-14-06 03-26-07 1-20-09

SHEET OF

28-JUL-2009 14:43

st3_03.dgn

DIST	COUNTY	ROUTE	KILOMETER POST TOTAL PROJECT	SHEET NO.	TOTAL SHEETS
02	Sha	5	R69.4	73	120

Caltrans Metric

William Rocha Jr
REGISTERED CIVIL ENGINEER DATE

REGISTERED PROFESSIONAL ENGINEER William Rocha, Jr. No. 59791 Exp. 12-31-09 CIVIL STATE OF CALIFORNIA

7-13-09
PLANS APPROVAL DATE

The State of California or its officers or agents shall not be responsible for the accuracy or completeness of electronic copies of this plan sheet.

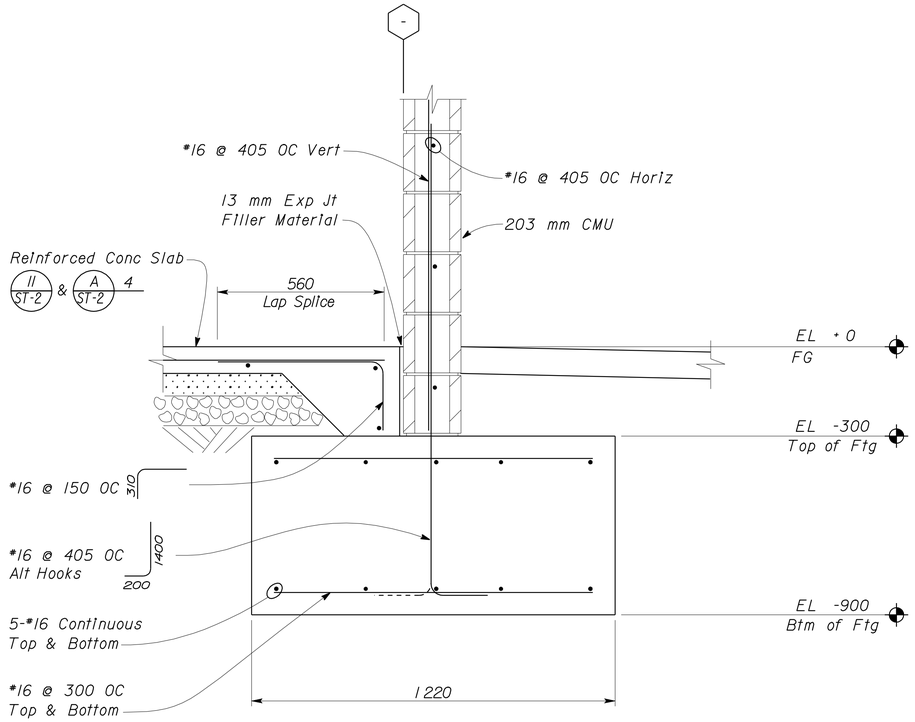

1 FOOTING
Scale 1:10

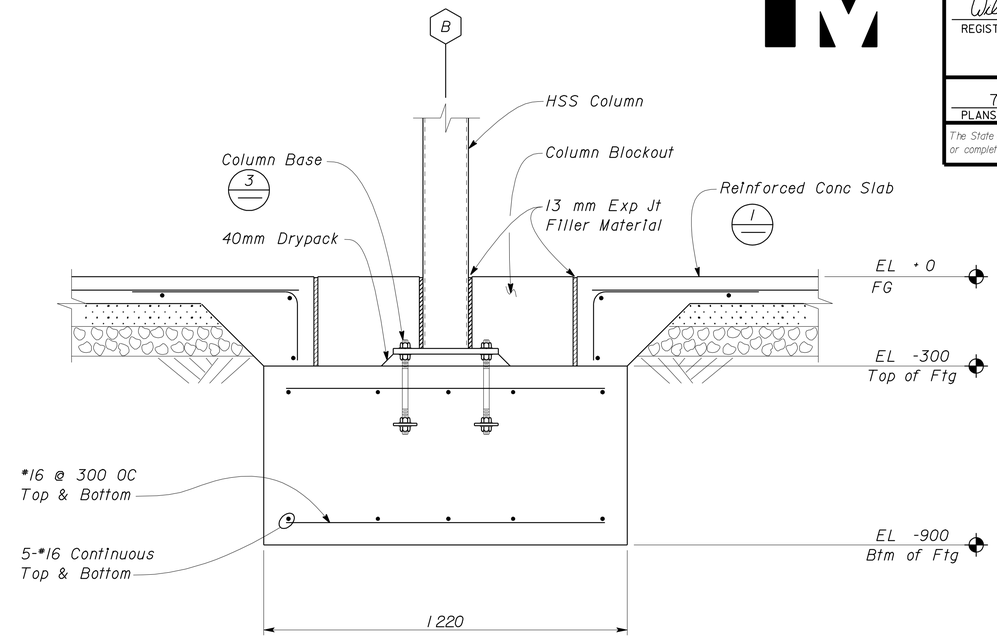

2 COLUMN FOOTING
Scale 1:10

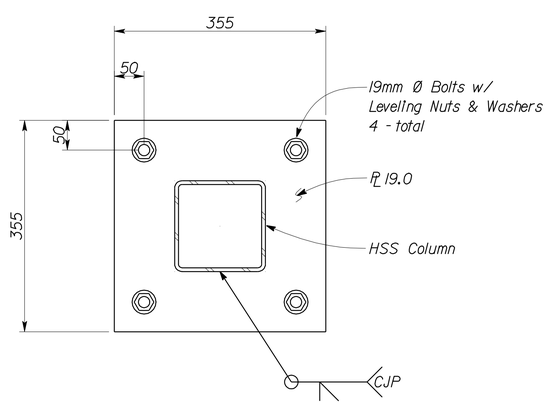

3 COLUMN BASE
Scale 1:5

Note
The Contractor shall verify all controlling field dimensions before ordering or fabricating any material.

DESIGN	BY Bill Rocha	CHECKED Gang Hong	
DETAILS	BY David Good	CHECKED Bill Rocha	
QUANTITIES	BY	CHECKED	

STATE OF CALIFORNIA
DEPARTMENT OF TRANSPORTATION

DIVISION OF ENGINEERING SERVICES
ARCHITECTURAL AND STRUCTURAL DESIGN

BRIDGE NO. 06R0001
KM POST R69.4

LAKEHEAD SRRA UPGRADE AND ADDITION

KIOSK — FOUNDATION DETAILS

SHEET **ST3-4**

DOES SD metric Rev. 9/02

SCALE: ALL DIMENSIONS ARE IN MILLIMETERS UNLESS OTHERWISE NOTED.

ORIGINAL SCALE IN MILLIMETERS FOR REDUCED PLANS 0 10 20 30 40 50 60 70 80 90 100

CU 02-305
EA 395801

DISREGARD PRINTS BEARING EARLIER REVISION DATES → 09-14-06 1-20-09

REVISION DATES (PRELIMINARY STAGE ONLY) SHEET OF

28-JUL-2009 14:43

st3_04.dgn

DIST	COUNTY	ROUTE	KILOMETER POST TOTAL PROJECT	SHEET NO.	TOTAL SHEETS
02	Sha	5	R69.4	74	120

Caltrans Metric

William Rocha Jr
REGISTERED CIVIL ENGINEER DATE

REGISTERED PROFESSIONAL ENGINEER William Rocha, Jr. No. 59791 Exp. 12-31-09 CIVIL STATE OF CALIFORNIA

7-13-09
PLANS APPROVAL DATE

The State of California or its officers or agents shall not be responsible for the accuracy or completeness of electronic copies of this plan sheet.

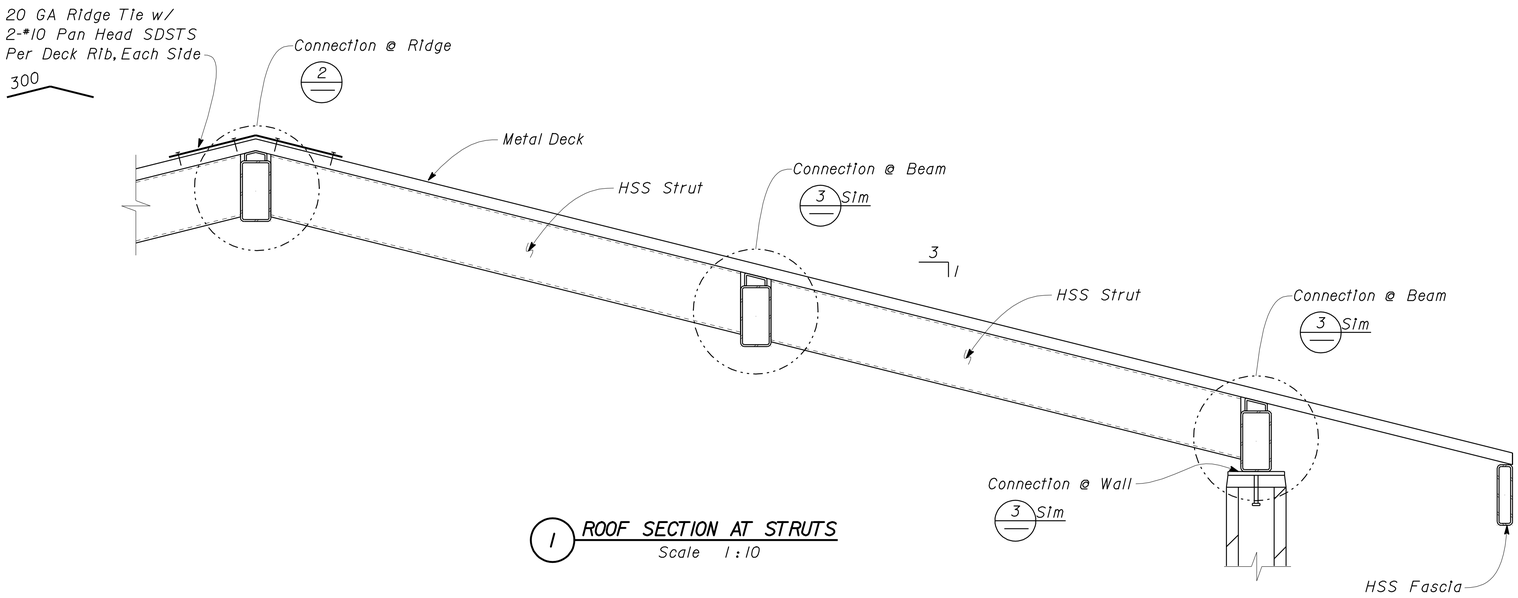

1 ROOF SECTION AT STRUTS
Scale 1:10

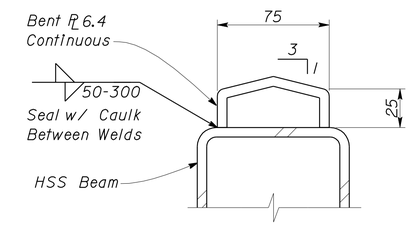

4 RIDGE PLATE
Scale 1:2

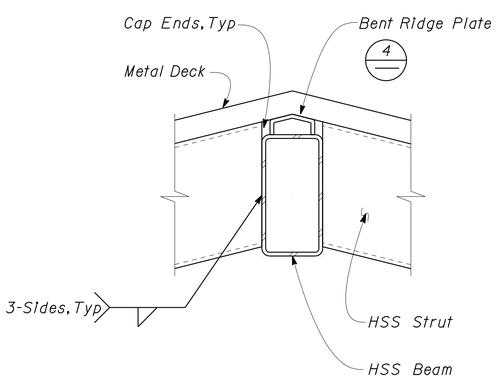

2 RIDGE CONNECTION
Scale 1:5

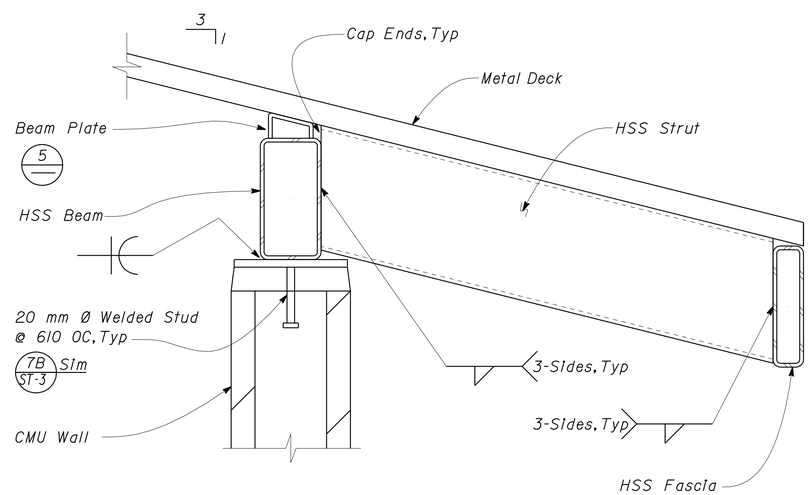

3 BEAM CONNECTION
Scale 1:5

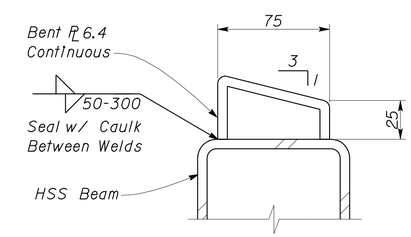

5 BEAM PLATE
Scale 1:2

Note
The Contractor shall verify all controlling field dimensions before ordering or fabricating any material.

DESIGN	BY Bill Rocha	CHECKED Gang Hong	
DETAILS	BY David Good	CHECKED Bill Rocha	
QUANTITIES	BY	CHECKED	

STATE OF CALIFORNIA
DEPARTMENT OF TRANSPORTATION

DIVISION OF ENGINEERING SERVICES
ARCHITECTURAL AND STRUCTURAL DESIGN

BRIDGE NO. 06R0001
KM POST R69.4

LAKEHEAD SRRA UPGRADE AND ADDITION

KIOSK — FRAMING DETAILS 1 OF 3

SHEET **ST3-5**

DOES SD metric Rev. 9/02

SCALE: ALL DIMENSIONS ARE IN MILLIMETERS UNLESS OTHERWISE NOTED.

ORIGINAL SCALE IN MILLIMETERS FOR REDUCED PLANS 0 10 20 30 40 50 60 70 80 90 100

CU 02-305
EA 395801

DISREGARD PRINTS BEARING EARLIER REVISION DATES → 09-14-06 1-20-09

REVISION DATES (PRELIMINARY STAGE ONLY) SHEET OF

28-JUL-2009 14:43

st3_05.dgn

DIST	COUNTY	ROUTE	KILOMETER POST TOTAL PROJECT	SHEET NO.	TOTAL SHEETS
02	Sha	5	R69.4	75	120

Caltrans Metric

William Rocha Jr
REGISTERED CIVIL ENGINEER DATE

REGISTERED PROFESSIONAL ENGINEER
William Rocha, Jr.
No. 59791
Exp. 12-31-09
CIVIL
STATE OF CALIFORNIA

7-13-09
PLANS APPROVAL DATE

The State of California or its officers or agents shall not be responsible for the accuracy or completeness of electronic copies of this plan sheet.

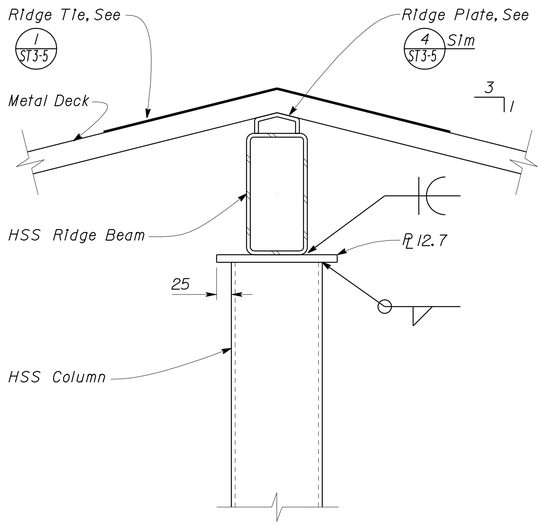

1 COLUMN TO BEAM
Scale 1:5

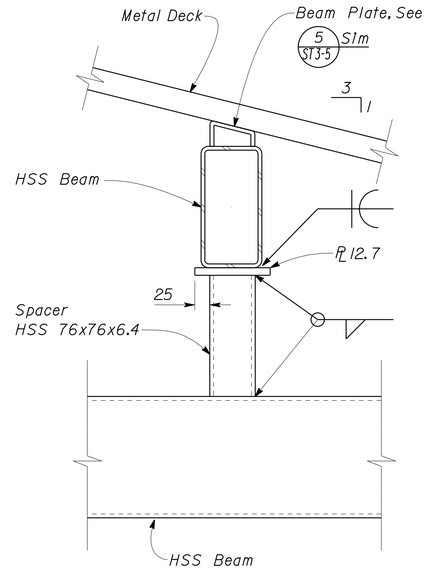

3 SPACER CONNECTION
Scale 1:5

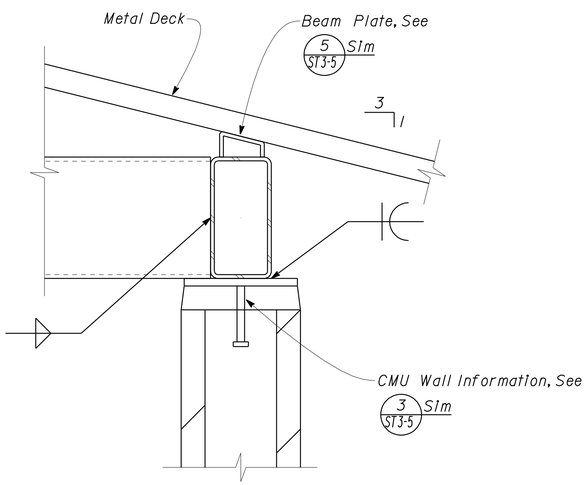

2 BEAM TO BEAM
Scale 1:5

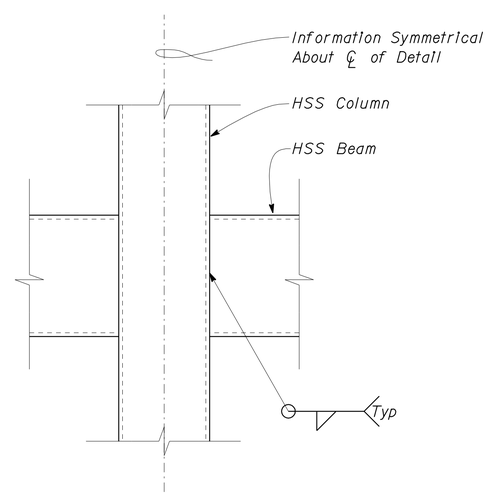

4 BEAM TO COLUMN
Scale 1:5

Note
The Contractor shall verify all controlling field dimensions before ordering or fabricating any material.

DESIGN	BY Bill Rocha	CHECKED Gang Hong	
DETAILS	BY David Good	CHECKED Bill Rocha	
QUANTITIES	BY	CHECKED	

STATE OF CALIFORNIA
DEPARTMENT OF TRANSPORTATION

DIVISION OF ENGINEERING SERVICES
ARCHITECTURAL AND STRUCTURAL DESIGN

BRIDGE NO. 06R0001
KM POST R69.4

KIOSK

LAKEHEAD SRRA UPGRADE AND ADDITION

FRAMING DETAILS 2 OF 3

SHEET **ST3-6**

DOES SD metric Rev. 9/02

SCALE: ALL DIMENSIONS ARE IN MILLIMETERS UNLESS OTHERWISE NOTED.

ORIGINAL SCALE IN MILLIMETERS FOR REDUCED PLANS 0 10 20 30 40 50 60 70 80 90 100

CU 02-305
EA 395801

DISREGARD PRINTS BEARING EARLIER REVISION DATES → 09-14-06 1-20-09

REVISION DATES (PRELIMINARY STAGE ONLY) SHEET OF

28-JUL-2009 14:43

st3_06.dgn

DIST	COUNTY	ROUTE	KILOMETER POST TOTAL PROJECT	SHEET NO.	TOTAL SHEETS
02	Sha	5	R69.4	76	120

Caltrans Metric

William Rocha Jr
REGISTERED CIVIL ENGINEER DATE

REGISTERED PROFESSIONAL ENGINEER William Rocha, Jr. No. 59791 Exp. 12-31-09 CIVIL STATE OF CALIFORNIA

7-13-09
PLANS APPROVAL DATE

The State of California or its officers or agents shall not be responsible for the accuracy or completeness of electronic copies of this plan sheet.

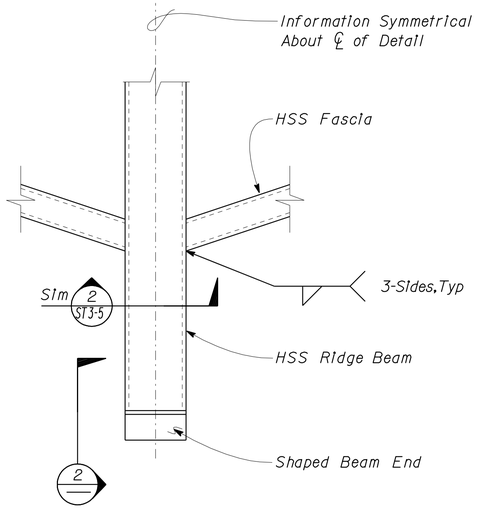

1 FASCIA TO BEAM
Scale 1:5

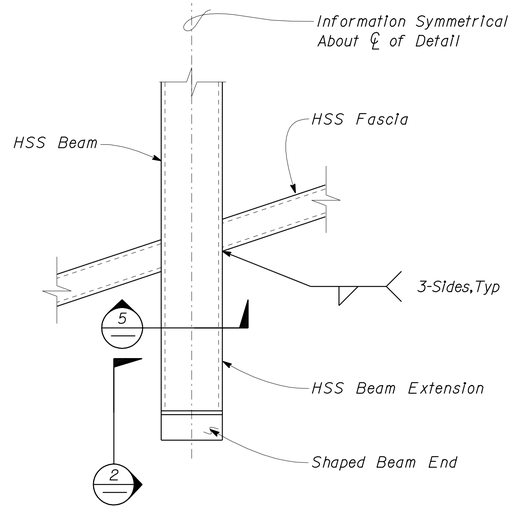

3 BEAM TO FASCIA
Scale 1:5

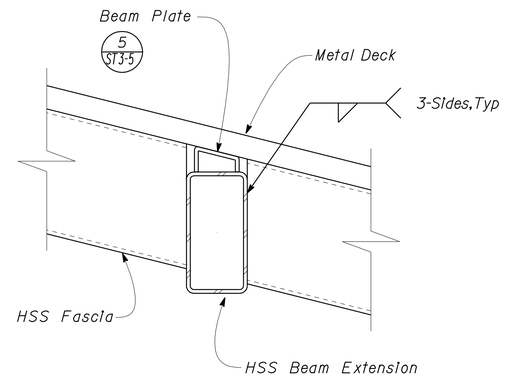

5 BEAM TO FASCIA
Scale 1:5

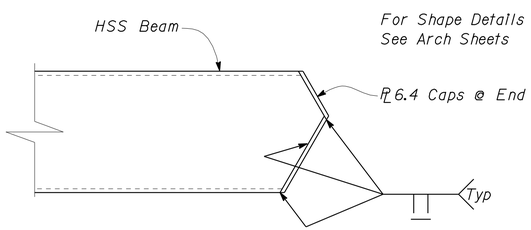

2 BEAM END TREATMENT
Scale 1:5

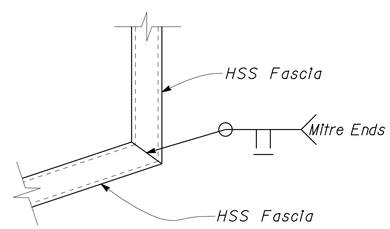

4 FASCIA CORNER
Scale 1:5

Note
The Contractor shall verify all controlling field dimensions before ordering or fabricating any material.

DESIGN	BY Bill Rocha	CHECKED Gang Hong	
DETAILS	BY David Good	CHECKED Bill Rocha	
QUANTITIES	BY	CHECKED	

STATE OF CALIFORNIA
DEPARTMENT OF TRANSPORTATION

DIVISION OF ENGINEERING SERVICES
ARCHITECTURAL AND STRUCTURAL DESIGN

BRIDGE NO. 06R0001
KM POST R69.4

LAKEHEAD SRRA
UPGRADE AND ADDITION
KIOSK
FRAMING DETAILS 3 OF 3

SHEET ST3-7

DOES SD metric Rev. 9/02

SCALE: ALL DIMENSIONS ARE IN MILLIMETERS UNLESS OTHERWISE NOTED.

ORIGINAL SCALE IN MILLIMETERS FOR REDUCED PLANS 0 10 20 30 40 50 60 70 80 90 100

CU 02-305
EA 395801

DISREGARD PRINTS BEARING EARLIER REVISION DATES → 09-14-06 1-20-09

REVISION DATES (PRELIMINARY STAGE ONLY) SHEET OF

28-JUL-2009 14:43

st3_07.dgn

CALIFORNIA STATE FIRE MARSHAL
APPROVED
Approval of this plan does not authorize or approve any omission or deviation from applicable regulations. Final approval is subject to field inspection. One set of approved plans shall be available on the project site at all times.
Reviewed by: MIKE TANAKA
Approval date: 4/9/2009
CSFM FILE NO. 01-45-11-0067

IDENTIFICATION STAMP
DIV. OF THE STATE ARCHITECT
SACRAMENTO REGIONAL OFFICE
02-108545
AC ANTONIO FLORENDO
ANTONIO FLORENDO
DATE 3-8-2007

Caltrans Metric

DIST.	COUNTY	ROUTE	KILOMETER POST TOTAL PROJECT	SHEET NO.	TOTAL SHEETS
02	Sha	5	R69.4	77	120

REGISTERED ENGINEER-MECHANICAL 4/14/09 DATE
7-13-09
PLANS APPROVAL DATE
REGISTERED PROFESSIONAL ENGINEER Jack Wheeler No. 21648 Exp. 6/30/11 MECH STATE OF CALIFORNIA

The State of California or its officers or agents shall not be responsible for the accuracy or completeness of electronic copies of this plan sheet.

PLUMBING

- Cold Water
- A — Compressed Air
- LPG — Liquefied Petroleum Gas
- D — Equipment Drain
- RD — Roof Drain
- OD — Overflow Drain
- RW — Non Potable Water
- FW — Fire Water
- Hot Water
- Hot Water Return
- R — Relief Valve Discharge Pipe
- S — Sewer Line
- Sanitary Sewer (above grade)
- Sanitary Sewer (below grade)
- Sanitary Sewer Vent

PIPE FITTINGS AND VALVES

- Cap, Threaded
- Elbow, Turned Down
- Elbow, Turned Up
- Reducer, Concentric
- Pressure Gauge (with gage cock and Snubber)
- Strainer
- Union
- Union, Insulating
- Valve, Ball
- Valve, Check
- Valve, Gas
- Valve, Gate
- Valve, Safety Relief
- Valve, Faucet Assembly
- Valve, Pressure/Temperature Relief
- Water Hammer Arrestor

HEATING, VENTILATING AND AIR CONDITIONING

- Balance Damper
- Flexible Duct
- EA — Exhaust Air
- RA — Return Air
- SA — Supply Air
- L/s — Exhaust Register
- or L/s — Return Register
- or L/s SIZE — Supply Diffuser
- T — Thermostat
- TS — Time Switch
- Anode Test Station
- Three Wire Test Station
- F — Exhaust Fan
- FE — Fire Extinguisher

MISCELLANEOUS

- L — Angle
- ℄ — Centerline
- Ø — Diameter
- RE — (E) Duct to be Removed
- Section / Elevation Letter
- Sheet Number
- Detail Number
- Sheet Number
- 300x300 mm — NECK SIZE
- 190 L/s — FLOW RATE

THIS SHEET ACCURATE FOR MECHANICAL WORK ONLY

MECHANICAL ABBREVIATIONS:

A/C	Air Conditioning	GA	Gauge	RA	Return Air
ABS	Acrylonitrile Butadiene Styrene	GALV	Galvanized	RCP	Reinforced Concrete Pipe
AC	Asphalt Concrete	GH	Ground Hydrant	RD	Roof Drain
AD	Air Drop	GLV	Globe Valve	RE	Refrigerator
AP	Alternative Pipe	GSP	Galvanized Steel Pipe	REG	Register
ATF	Automatic Transmission Fluid	GV	Gate Valve	REQ	Required
AWG	American Wire Gauge	GWH	Gas Water Heater	RH	Radiant Heater
		GYP	Gypsum	RV	Relief Valve
BFP	Backflow Preventer			RW	Raw Water
BH	Box Hydrant	H	Height	RWL	Rain Water Leader
BLDG	Building	HB	Hose Bibb		
BV	Balancing Valve	H/C	Hot Water, High Pressure Cleaner	S	Switch
		HF	Hose Faucet	S/S	Service Sink
°C	Celsius Temperature	HVAC	Heating, Ventilating and Air Conditioning	SA	Supply Air
C	Conduit	HW	Hot Water	SCH	Schedule
Cap.	Capacity	HZ	Hertz	SDS	Sanitary Dump Station
CD	Ceiling Diffuser			SF	Supply Fan
CI	Cast-Iron	ID	Inside Diameter	SHR	Shower
CO	Cleanout	IE	Invert Elevation	SP	Static Pressure
COTF	Cleanout Through Floor	IPS	International Pipe Standard	SS	Sanitary Sewer
COTG	Cleanout Through Grade			STA	Station
COTW	Cleanout To Wall	KS	Kitchen Sink	STD	Standard
CV	Check Valve	KW	Kilowatt		
CW	Cold Water			TCV	Temperature Control Valve
		LAV	Lavatory	TSPV	Trap Seal Primer Valve
D	Depth	L/s	Liters per Second	TPRV	Temp., Pressure, Relief Valve
DB	Dry Bulb			TS	Time Switch
DF	Drinking Fountain	m	Meter	Typ.	Typical
DH	Duct Heater	MAX	Maximum		
DI	Drain Inlet	MAN	Manhole	UH	Unit Heater
Dia	Diameter	MIN	Minimum	UR	Urinal
		mm	millimeter		
(E)	Existing	MS	Mop Sink	V	Vent
EA	Exhaust Air			VAC	Voltage, Alternating Current
EC	Evaporative Cooler	NIC	Not In Contract	VB	Valve Box
EEW	Emergency Eye Wash	No.	Number	VM	Vending Machine
EF	Exhaust Fan	NPS	Nominal Pipe Size	VR	Vent Riser
EL	Elevation	NPT	National Pipe Thread	VTR	Vent Thru Roof
Elect.	Electrical	NPW	Non-potable Water		
ES	Evaporative Cooler Switch	NST	National Standard Thread	W	Width
ESEW	Emergency Shower And Eye Wash			W/	With
ESP	External Static Pressure	OA	Outside Air	W/O	Without
EWC	Electric Water Cooler	OC	On Center	WB	Wet Bulb
EWH	Electric Water Heater	OD	Outside Diameter	WC	Water Closet
		OG	Original Ground	W.C.	Water Column
FC	Flexible Connection			WH	Water Heater
FD	Floor Drain	PBEF	Push-Button Exhaust Fan	W.H.	Wall Hydrant
FDC	Fire Department Connection	PCC	Portland Cement Concrete	WHA	Water Hammer Arrestor
FE	Fire Extinguisher	PH	Phase	WLS	Water Level Switch
FG	Finish Grade	PRV	Pressure Reducing Valve	WP	Weatherproof
FH	Fire Hydrant	PSI	Pounds Per Square Inch	WS	Wash Sink
FL	Flow Line	PVC	Polyvinyl Chloride	WSP	Welded Steel Pipe
FS	Floor Sink	PW	Potable Water		
FTR	Flue through roof				

ALL DIMENSIONS SHOWN IN MILLIMETERS, EXCEPT AS NOTED

	BY	CHECKED
DESIGN	Jesus E Ramirez	M. Slavensky
DETAILS	J.R. Stangl	Jesus E Ramirez
QUANTITIES	Jesus E Ramirez	M. Slavensky

STATE OF CALIFORNIA DEPARTMENT OF TRANSPORTATION

DIVISION OF ENGINEERING SERVICES
ELECTRICAL-MECHANICAL-WATER AND WASTEWATER DESIGN

BRIDGE NO. X
KM POST

LAKEHEAD, SAFETY ROADSIDE REST AREA UPGRADE AND ADDITION
ABBREVIATIONS AND LEGEND

SHEET **M1-0**

DOS ELEC (10/98)
FILE => m1_0.dgn
DATE PLOTTED => 28-JUL-2009 TIME PLOTTED => 14:43
ORIGINAL SCALE IN MILLIMETERS FOR REDUCED PLANS 0 10 20 30 40 50 60 70 80 90 100
CU 02 305
EA 395801
FILE => m1_0.dgn
DISREGARD PRINTS BEARING EARLIER REVISION DATES
REVISION DATES (PRELIMINARY STAGE ONLY) 05/25/04 02/28/06 06/08/06 09/06/06 10/06/06 12/06/06 3/28/07 7-29-09 4-14-09
SHEET OF

USERNAME => trlenard DATE PLOTTED => 28-JUL-2009 TIME PLOTTED => 14:43

VI=I

DIST.	COUNTY	ROUTE	KILOMETER POST TOTAL PROJECT	SHEET NO.	TOTAL SHEETS
02	Sha	5	R69.4	78	120

Caltrans Metric

REGISTERED ENGINEER-MECHANICAL 4/14/09 DATE

7-13-09
PLANS APPROVAL DATE

REGISTERED PROFESSIONAL ENGINEER Jack Wheeler No. 21648 Exp. 6/30/11 MECH STATE OF CALIFORNIA

The State of California or its officers or agents shall not be responsible for the accuracy or completeness of electronic copies of this plan sheet.

CALIFORNIA STATE FIRE MARSHAL APPROVED
Approval of this plan does not authorize or approve any omission or deviation from applicable regulations. Final approval is subject to field inspection. One set of approved plans shall be available on the project site at all times.
Reviewed by: MIKE TANAKA
Approval date: 4/9/2009
CSFM FILE NO. 01-45-11-0067

IDENTIFICATION STAMP
DIV. OF THE STATE ARCHITECT
SACRAMENTO REGIONAL OFFICE
02-108545
AC ANTONIO FLORENDO
ANTONIO FLORENDO
DATE 3-8-2007

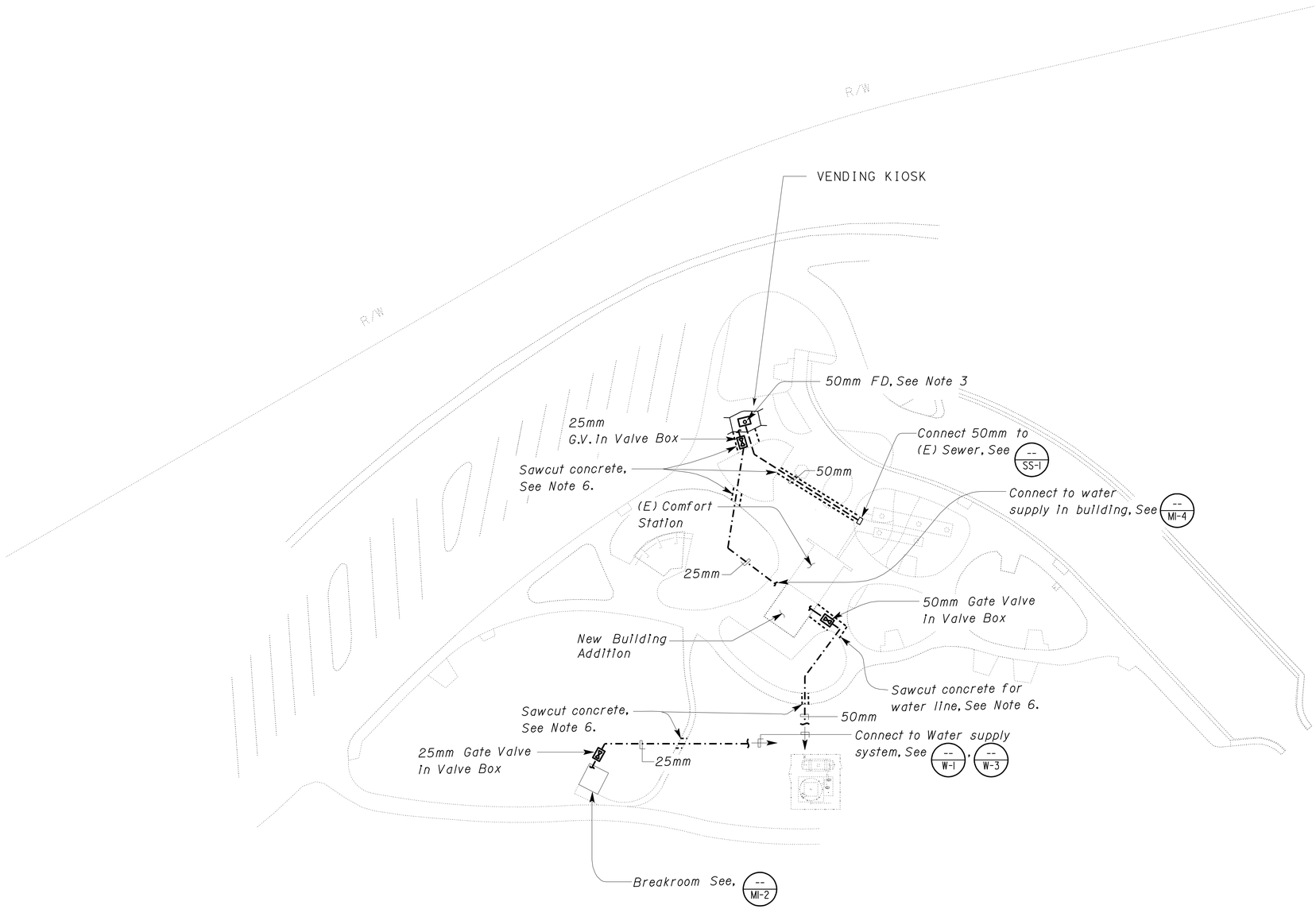

PLAN
1:500

NOTES:

1. For continuation of water and sewer lines into break room, See sheet MI-2
2. For continuation of water and sewer line into comfort station, See sheet MI-4 and MI-5 respectively.
3. Provide 50mm floor drain and pipe for future vending kiosk.
4. Prior to installing new pipes the contractor shall locate any existing piping and conduit that must be crossed by the new pipes. Installation shall be completed without disruption of any of the new or exisitng utilities.
5. Contractor shall field verify all controlling field dimensions and conditions before ordering and fabricating any materials.
6. Patch sawcut sidewalks to match existing.

THIS SHEET ACCURATE FOR MECHANICAL WORK ONLY

ALL DIMENSIONS SHOWN IN MILLIMETERS, EXCEPT AS NOTED

DESIGN SUPERVISOR
DESIGN ENGINEER

	BY	CHECKED
DESIGN	Jesus E Ramirez	M. Slavensky
DETAILS		Jesus E Ramirez
QUANTITIES	Jesus E Ramirez	M. Slavensky

STATE OF CALIFORNIA
DEPARTMENT OF TRANSPORTATION

DIVISION OF ENGINEERING SERVICES
ELECTRICAL-MECHANICAL-WATER AND WASTEWATER DESIGN

BRIDGE NO. X
KM POST

LAKEHEAD, SAFETY ROADSIDE REST AREA UPGRADE AND ADDITION
MECHANICAL SITE PLAN

SHEET **M1-1**

DOS ELEC (10/98)
FILE => m1_1.dgn
DATE PLOTTED => 28-JUL-2009 TIME PLOTTED => 14:44

ORIGINAL SCALE IN MILLIMETERS FOR REDUCED PLANS 0 10 20 30 40 50 60 70 80 90 100

CU 02 305
EA 395801

DISREGARD PRINTS BEARING EARLIER REVISION DATES

REVISION DATES (PRELIMINARY STAGE ONLY): 10/28/05 02/28/06 06/08/06 09/06/06 10/06/06 12/04/06 3/28/07 1-29-09 4-14-09

SHEET OF

FILE => m1_1.dgn

USERNAME => trlenard DATE PLOTTED => 28-JUL-2009 TIME PLOTTED => 14:44

VI=1

DIST.	COUNTY	ROUTE	KILOMETER POST TOTAL PROJECT	SHEET NO.	TOTAL SHEETS
02	Sha	5	R69.4	79	120

REGISTERED ENGINEER-MECHANICAL — DATE 4/14/09

7-13-09
PLANS APPROVAL DATE

REGISTERED PROFESSIONAL ENGINEER — Jack Wheeler — No. 21648 — Exp. 6/30/11 — MECH — STATE OF CALIFORNIA

The State of California or its officers or agents shall not be responsible for the accuracy or completeness of electronic copies of this plan sheet.

Caltrans Metric

NOTES:

1. Heat Pump shall be single zone ductless split-system type. Heat Pump shall supply 4.40 kW of cooling at a minimum of 35°C and shall supply 3.81 kW of heating at a minimum of -5°C. Indoor shall be 165 L/s. System shall be 230V-1Ph-60Hz. Outdoor unit shall be placed on a concrete slab and shall be covered in an enclosure to prevent vandalism. Install ductless split system per manufacturer's recommendations
2. Instant Electric Water Heater shall be 230V- 1 Ph- 60 Hz, 20 Amps, 7.78°C @ 1.0 Lpm. Install under kitchen sink.
3. Install water supply line between wall furring. Run water line through the ceiling to install water hammer arrestor.
4. Secure Refrigerant lines to CMU wall with pipe clamps.

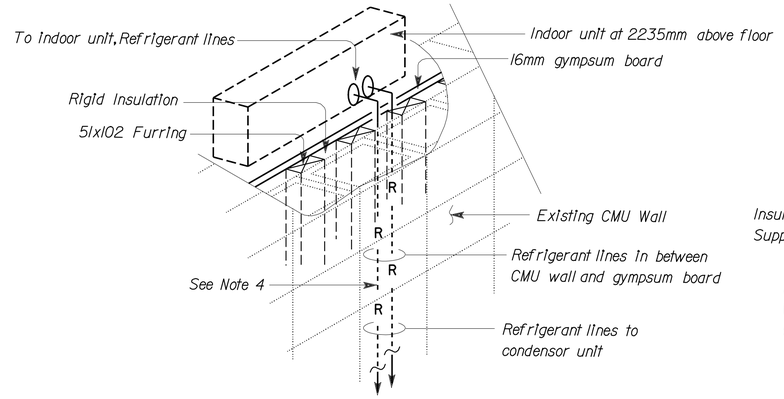

B REFRIGERANT PIPING ISOMETRIC
No Scale

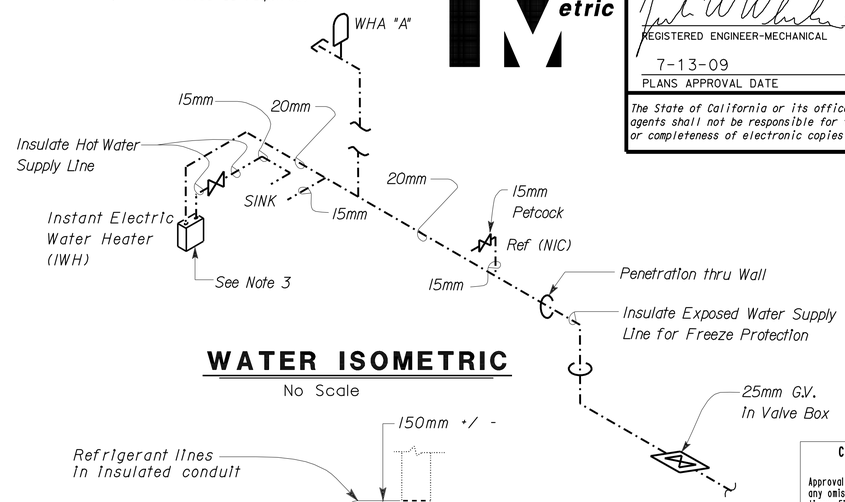

WATER ISOMETRIC
No Scale

IDENTIFICATION STAMP
DIV. OF THE STATE ARCHITECT
SACRAMENTO REGIONAL OFFICE
02-108545
AC ANTONIO FLORENDO
DATE 3-8-2007

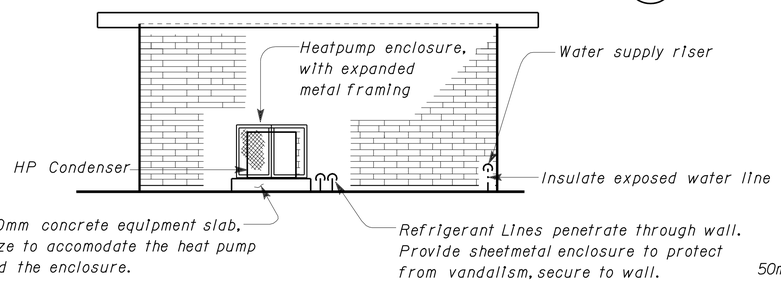

NORTH ELEVATION
1:50

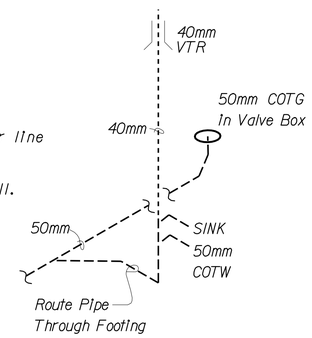

SEWER ISOMETRIC
No Scale

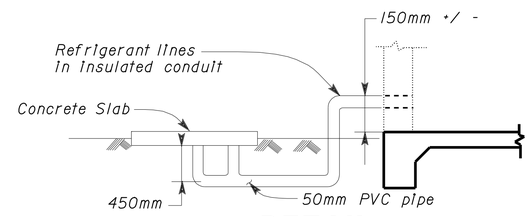

C DETAIL
No Scale

CALIFORNIA STATE FIRE MARSHAL
APPROVED
Approval of this plan does not authorize or approve any omission or deviation from applicable regulations. Final approval is subject to field inspection. One set of approved plans shall be available on the project site at all times.
Reviewed by: MIKE TANAKA
Approval date: 4/9/2009
CSFM FILE NO. 01-45-11-0067

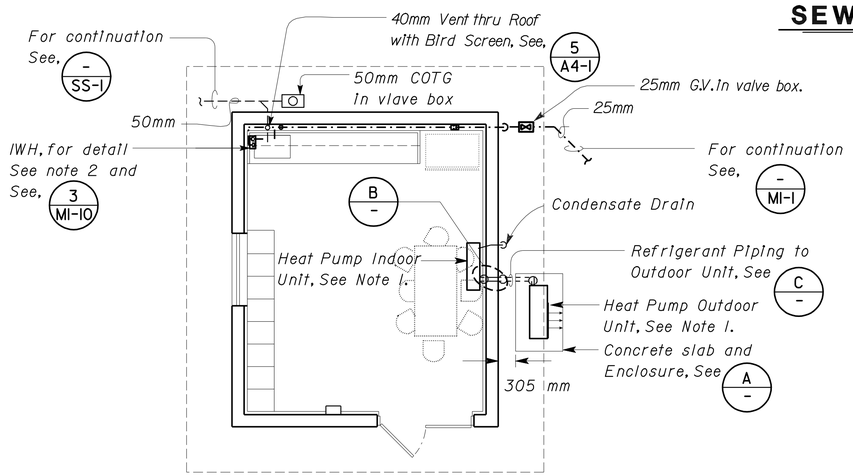

PLAN
1:50

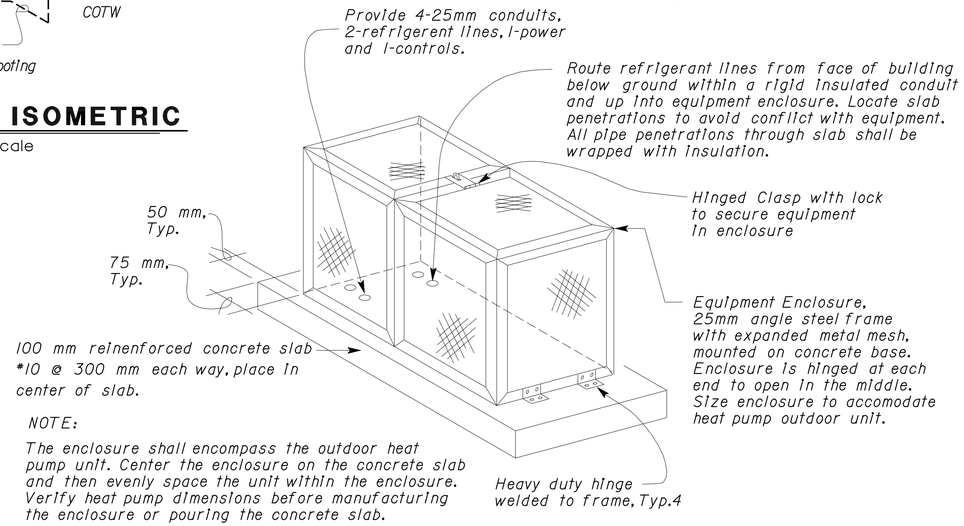

NOTE:
The enclosure shall encompass the outdoor heat pump unit. Center the enclosure on the concrete slab and then evenly space the unit within the enclosure. Verify heat pump dimensions before manufacturing the enclosure or pouring the concrete slab.

A EQUIPMENT ENCLOSURE DETAIL
No Scale

PLUMBING SCHEDULE

Fixture	Minimum Connection	
	Cold Water mm	Hot Water mm
Kitchen Sink	15	15
Refrigerator/Ice maker	15	15

PLUMBING SCHEDULE

Fixture	Drainage Rough-In	Trap mm	Vent mm
Lavatory	50 mm	32	32
Kitchen Sink	50 mm	40	40

THIS SHEET ACCURATE FOR MECHANICAL WORK ONLY

ALL DIMENSIONS SHOWN IN MILLIMETERS, EXCEPT AS NOTED

	BY	CHECKED
DESIGN	Jesus E Ramirez	M. Slavensky
DETAILS	M. Slavensky	Jesus E Ramirez
QUANTITIES	Jesus E Ramirez	M. Slavensky

STATE OF CALIFORNIA
DEPARTMENT OF TRANSPORTATION

DIVISION OF ENGINEERING SERVICES
ELECTRICAL-MECHANICAL-WATER AND WASTEWATER DESIGN

BRIDGE NO. X
KM POST

LAKEHEAD, SAFETY ROADSIDE REST AREA UPGRADE AND ADDITION
BREAK ROOM MECHANICAL DETAILS

SHEET **M1-2**

DOS ELEC (10/98) FILE => m1_2.dgn
DATE PLOTTED => 28-JUL-2009 TIME PLOTTED => 14:44

ORIGINAL SCALE IN MILLIMETERS FOR REDUCED PLANS 0 10 20 30 40 50 60 70 80 90 100

CU 02 305
EA 395801
FILE => m1_2.dgn

DISREGARD PRINTS BEARING EARLIER REVISION DATES
REVISION DATES (PRELIMINARY STAGE ONLY) 10/20/05 02/28/06 03/06/06 09/06/06 10/06/06 12/06/06 3/28/07 1-29-09 1-20-09
SHEET OF

USERNAME => trenard DATE PLOTTED => 28-JUL-2009 TIME PLOTTED => 14:44

V1=1

DIST.	COUNTY	ROUTE	KILOMETER POST TOTAL PROJECT	SHEET NO.	TOTAL SHEETS
02	Sha	5	R69.4	80	120

Jack W Wheeler 4/14/09
REGISTERED ENGINEER-MECHANICAL DATE

7-13-09
PLANS APPROVAL DATE

REGISTERED PROFESSIONAL ENGINEER Jack Wheeler No. 21648 Exp. 6/30/11 MECH STATE OF CALIFORNIA

The State of California or its officers or agents shall not be responsible for the accuracy or completeness of electronic copies of this plan sheet.

CALIFORNIA STATE FIRE MARSHAL APPROVED
Approval of this plan does not authorize or approve any omission or deviation from applicable regulations. Final approval is subject to field inspection. One set of approved plans shall be available on the project site at all times.
Reviewed by: MIKE TANAKA
Approval date: 4/9/2009
CSFM FILE NO. 01-45-11-0067

IDENTIFICATION STAMP
DIV. OF THE STATE ARCHITECT
SACRAMENTO REGIONAL OFFICE
02-108545
AC Antonio Florendo
ANTONIO FLORENDO
DATE 3-8-2007

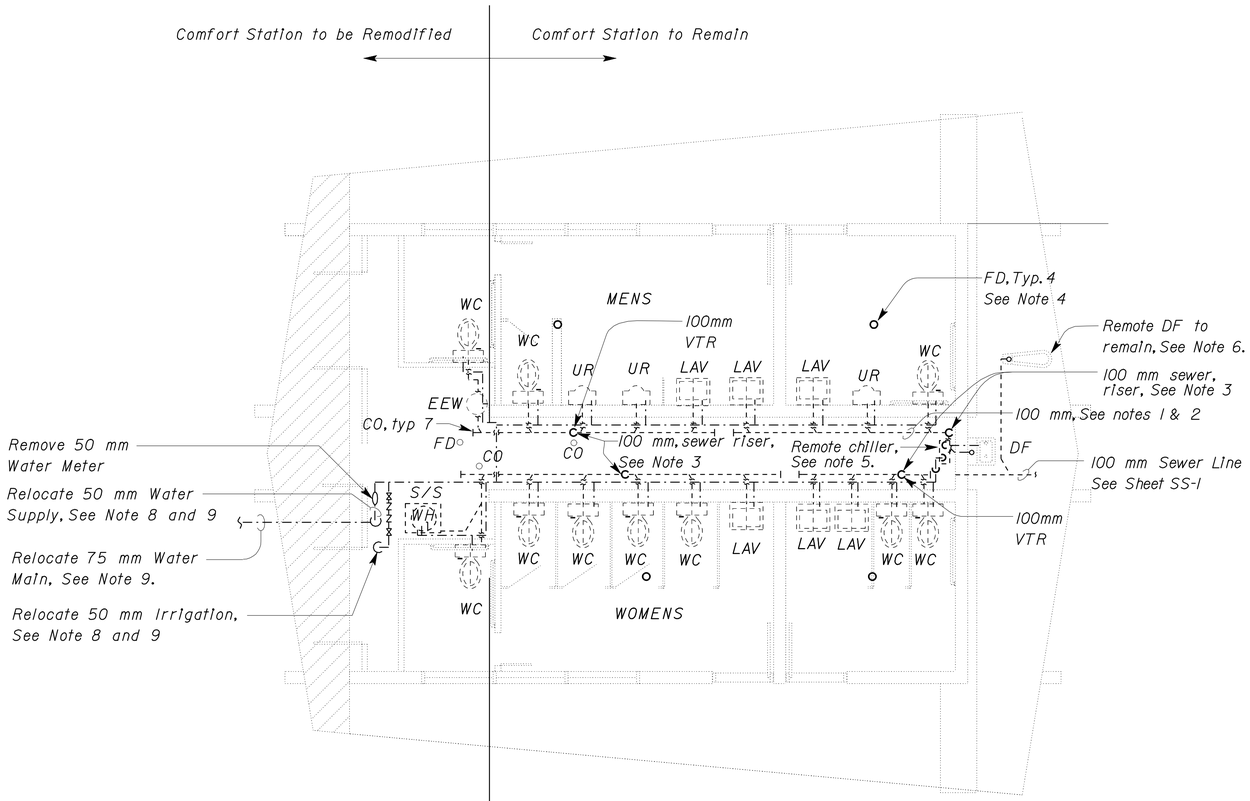

EXISTING FLOOR PLAN
1:50

NOTES:

1. Existing pipe chase sewer piping above slab, (typ)
2. Remove all sewer and vent piping in pipe chase and cap flush to concrete slab, except where shown.
3. Existing main sewer risers through floor to remain 150 mm above slab.
4. All floor drains to remain in place, floor drain vent piping shall remain, replace vent piping above slab and connect to new sewer line.
5. Remove remote chiller and salvage. Water supply to remote DF to remain, remove to 150 mm above slab in chase.
6. Remove all water supply piping in pipe chase including water meter and backflow preventer except where noted. Maintain water supply piping from 150 mm above slab in pipe chase to remote drinking fountain.
7. Remove all plumbing fixtures including emergency eyewash, service sink and electric waterheater and dispose.
8. Coordinate piping relocation with concrete removal per drawing ST1-1.
9. During concrete removal, all existing water piping shall be identified and removed to 1500 mm beyond the edge of the building and prepared for reconnection to new water piping. See M1-4 for new stub up location.

THIS SHEET ACCURATE FOR MECHANICAL WORK ONLY

ALL DIMENSIONS SHOWN IN MILLIMETERS, EXCEPT AS NOTED

	BY	CHECKED
DESIGN	Jesus E Ramirez	M. Slavensky
DETAILS	J.R. Stangl	Jesus E Ramirez
QUANTITIES	Jesus E Ramirez	M. Slavensky

STATE OF CALIFORNIA DEPARTMENT OF TRANSPORTATION

DIVISION OF ENGINEERING SERVICES
ELECTRICAL-MECHANICAL-WATER AND WASTEWATER DESIGN

BRIDGE NO. X
KM POST

LAKEHEAD, SAFETY ROADSIDE REST AREA UPGRADE AND ADDITION
EXISTING PLUMBING PLAN

SHEET **M1-3**

DOS ELEC (10/98)
FILE => m1_3.dgn
DATE PLOTTED => 28-JUL-2009 TIME PLOTTED => 14:44

ORIGINAL SCALE IN MILLIMETERS FOR REDUCED PLANS 0 10 20 30 40 50 60 70 80 90 100

CU 02 305
EA 395801

DISREGARD PRINTS BEARING EARLIER REVISION DATES

REVISION DATES (PRELIMINARY STAGE ONLY) 10/20/05 02/28/06 06/02/06 09/04/06 10/06/06 12/04/06 3/28/07 7-29-09 4-14-09

SHEET OF

FILE => m1_3.dgn

USERNAME => trlenord DATE PLOTTED => 28-JUL-2009 TIME PLOTTED => 14:44

V1=1

DIST.	COUNTY	ROUTE	KILOMETER POST TOTAL PROJECT	SHEET NO.	TOTAL SHEETS
02	Sha	5	R69.4	81	120

REGISTERED ENGINEER-MECHANICAL — DATE 4/14/09

7-13-09
PLANS APPROVAL DATE

REGISTERED PROFESSIONAL ENGINEER — Jack Wheeler — No. 21648 — Exp. 6/30/11 — MECH — STATE OF CALIFORNIA

The State of California or its officers or agents shall not be responsible for the accuracy or completeness of electronic copies of this plan sheet.

Caltrans Metric

CALIFORNIA STATE FIRE MARSHAL APPROVED
Approval of this plan does not authorize or approve any omission or deviation from applicable regulations. Final approval is subject to field inspection. One set of approved plans shall be available on the project site at all times.
Reviewed by: MIKE TANAKA
Approval date: 4/3/2009
CSFM FILE NO. 01-45-11-0067

IDENTIFICATION STAMP
DIV. OF THE STATE ARCHITECT
SACRAMENTO REGIONAL OFFICE
02-108545
AC ANTONIO FLORENDO
ANTONIO FLORENDO
DATE 3-8-2007

Notes:

1. *Contractor shall connect to water supply as shown and reconnect to (E) Irrigation and remote drinking founatin.*
2. *See Isometric drawings, sheet MI-6, for pipe sizes and connections to fittings.*
3. *Install all new fixtures and water piping in comfort station as shown.*
4. *Install new water meter and new backflow preventer. Connect supply line to irrigation and drinking fountain lines.*
5. *Remote chiller to be shelf mounted.*

Equipment Schedule:

EWH - Electric Water Heater, 22.7 liters, 120V- 1PH-60Hz, 1.5kW. Mounted above Service Sink.

EWC - Electric Water Chiller, 71.9 Liters, 0.375kW- 115V-1PH-60Hz.

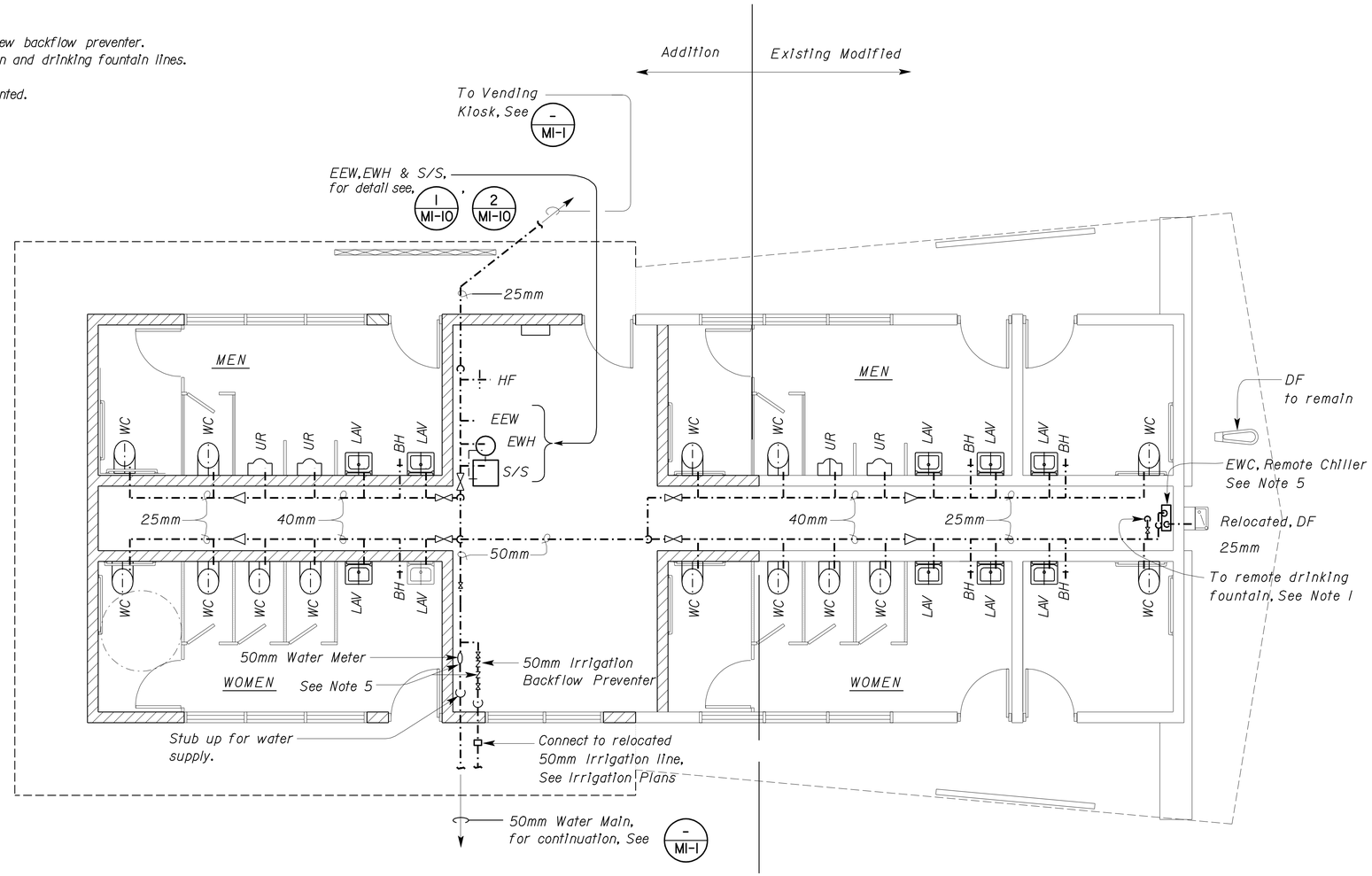

PLAN
1:50

THIS SHEET ACCURATE FOR MECHANICAL WORK ONLY

ALL DIMENSIONS SHOWN IN MILLIMETERS, EXCEPT AS NOTED

	BY	CHECKED
DESIGN	Jesus E Ramirez	M. Slavensky
DETAILS	M. Slavensky	Jesus E Ramirez
QUANTITIES	Jesus E Ramirez	M. Slavensky

STATE OF **CALIFORNIA** DEPARTMENT OF TRANSPORTATION

DIVISION OF ENGINEERING SERVICES
ELECTRICAL-MECHANICAL-WATER AND WASTEWATER DESIGN

BRIDGE NO. X
KM POST

LAKEHEAD, SAFETY ROADSIDE REST AREA UPGRADE AND ADDITION
MODIFIED WATER PLAN

SHEET **M1-4**

DOS ELEC (10/98) FILE => m1_4.dgn
DATE PLOTTED => 28-JUL-2009 TIME PLOTTED => 14:44

ORIGINAL SCALE IN MILLIMETERS FOR REDUCED PLANS 0 10 20 30 40 50 60 70 80 90 100

CU 02 305
EA 395801

DISREGARD PRINTS BEARING EARLIER REVISION DATES

REVISION DATES (PRELIMINARY STAGE ONLY) 10/20/05 02/23/06 03/08/06 08/09/06 08/22/06 10/06/06 12/04/06 3/28/07 1-29-09 4-14-09

SHEET OF

FILE => m1_4.dgn

USERNAME => trlenard DATE PLOTTED => 28-JUL-2009 TIME PLOTTED => 14:44

V1=1

DIST.	COUNTY	ROUTE	KILOMETER POST TOTAL PROJECT	SHEET NO.	TOTAL SHEETS
02	Sha	5	R69.4	82	120

REGISTERED ENGINEER-MECHANICAL — DATE 4/14/09

7-13-09
PLANS APPROVAL DATE

REGISTERED PROFESSIONAL ENGINEER — Jack Wheeler — No. 21648 — Exp. 6/30/11 — MECH — STATE OF CALIFORNIA

The State of California or its officers or agents shall not be responsible for the accuracy or completeness of electronic copies of this plan sheet.

NOTES:

1. Install all new fixtures and water piping in Comfort Station as shown.
2. Install all new sewer and vent piping to first hub above floor. Sewer piping shall be above slab.
3. Install new floor drain covers on existing floor drains to remain.
4. Saw cut floor, install new 100 mm sewer line and connect to existing floor drain sewer line, patch floor to match existing.
5. See isometric drawings, sheet M1-7 for pipe sizes and connections to fittings.

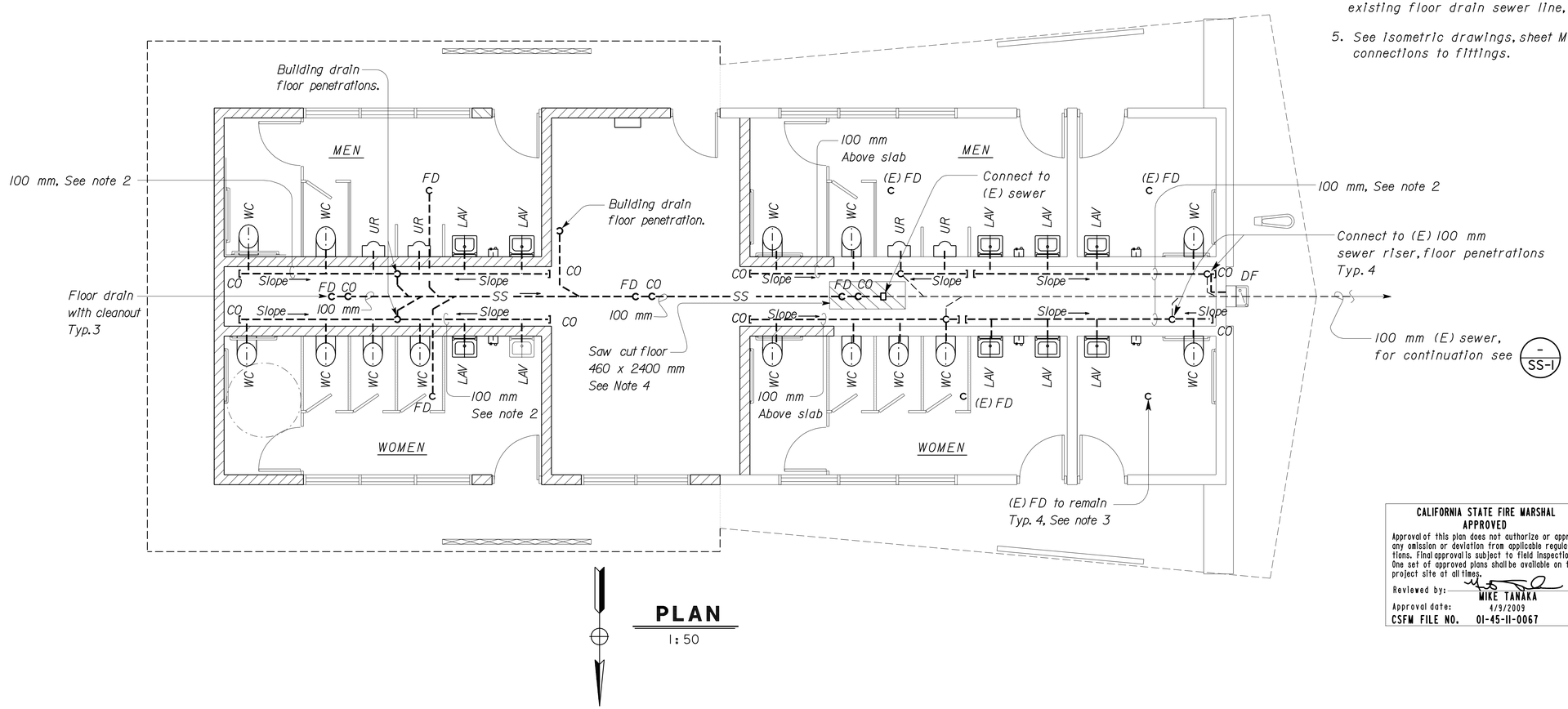

PLAN
1:50

CALIFORNIA STATE FIRE MARSHAL
APPROVED
Approval of this plan does not authorize or approve any omission or deviation from applicable regulations. Final approval is subject to field inspection. One set of approved plans shall be available on the project site at all times.
Reviewed by: MIKE TANAKA
Approval date: 4/9/2009
CSFM FILE NO. 01-45-11-0067

IDENTIFICATION STAMP
DIV. OF THE STATE ARCHITECT
SACRAMENTO REGIONAL OFFICE
02-108545
AC ANTONIO FLORENDO
DATE 3-8-2007

THIS SHEET ACCURATE FOR MECHANICAL WORK ONLY

ALL DIMENSIONS SHOWN IN MILLIMETERS, EXCEPT AS NOTED

	BY	CHECKED
DESIGN	Jesus E Ramirez	M. Slavensky
DETAILS	M. Slavensky	Jesus E Ramirez
QUANTITIES	Jesus E Ramirez	M. Slavensky

STATE OF CALIFORNIA
DEPARTMENT OF TRANSPORTATION

DIVISION OF ENGINEERING SERVICES
ELECTRICAL-MECHANICAL-WATER AND WASTEWATER DESIGN

BRIDGE NO. X
KM POST

LAKEHEAD, SAFETY ROADSIDE REST AREA UPGRADE AND ADDITION
MODIFIED SEWER PLAN

SHEET **M1-5**

DOS ELEC (10/98)
FILE => m1_5.dgn
DATE PLOTTED => 28-JUL-2009 TIME PLOTTED => 14:44

ORIGINAL SCALE IN MILLIMETERS FOR REDUCED PLANS 0 10 20 30 40 50 60 70 80 90 100

CU 02 305
EA 395801

DISREGARD PRINTS BEARING EARLIER REVISION DATES

REVISION DATES (PRELIMINARY STAGE ONLY): 10/20/05 10/28/06 03/08/06 09/06/06 10/06/06 12/06/06 3/28/07 7-29-09 4-14-09

SHEET OF

FILE => m1_5.dgn

USERNAME => trlenard DATE PLOTTED => 28-JUL-2009 TIME PLOTTED => 14:44

VI=1

DIST.	COUNTY	ROUTE	KILOMETER POST TOTAL PROJECT	SHEET NO.	TOTAL SHEETS
02	Sha	5	R69.4	83	120

REGISTERED ENGINEER-MECHANICAL — 4/14/09 DATE

7-13-09
PLANS APPROVAL DATE

REGISTERED PROFESSIONAL ENGINEER — Jack Wheeler — No. 21648 — Exp. 6/30/11 — MECH — STATE OF CALIFORNIA

The State of California or its officers or agents shall not be responsible for the accuracy or completeness of electronic copies of this plan sheet.

Caltrans Metric

PLUMBING SCHEDULE

Fixture	Minimum Connection	
	Cold Water mm	Hot Water mm
Lavatory	15	—
Urinal	25	—
Water Closet	25	—
Drinking Fountain	15	—
Service Sink	15	15
Water Heater	20	20
Hose Faucet	15	—
Chiller	15	—

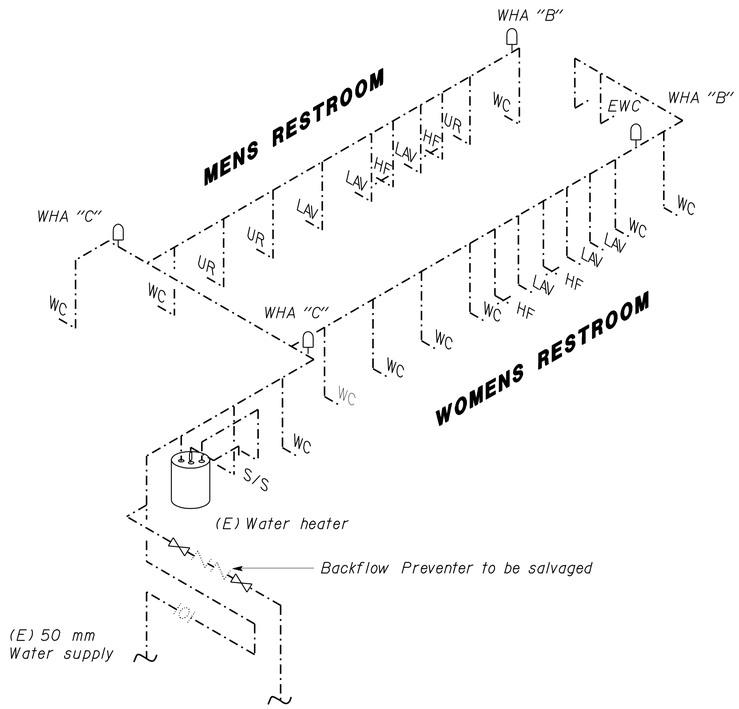

EXISTING DOMESTIC ISOMETRIC

No Scale

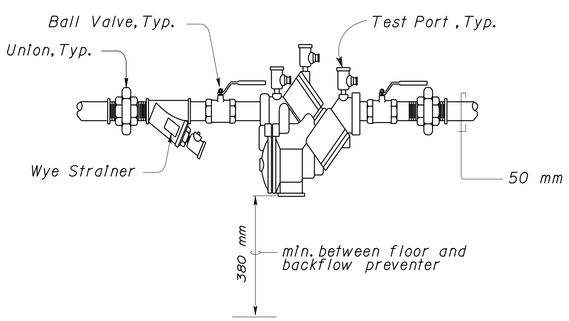

A 50 mm BACKFLOW PREVENTER DETAIL

NO SCALE

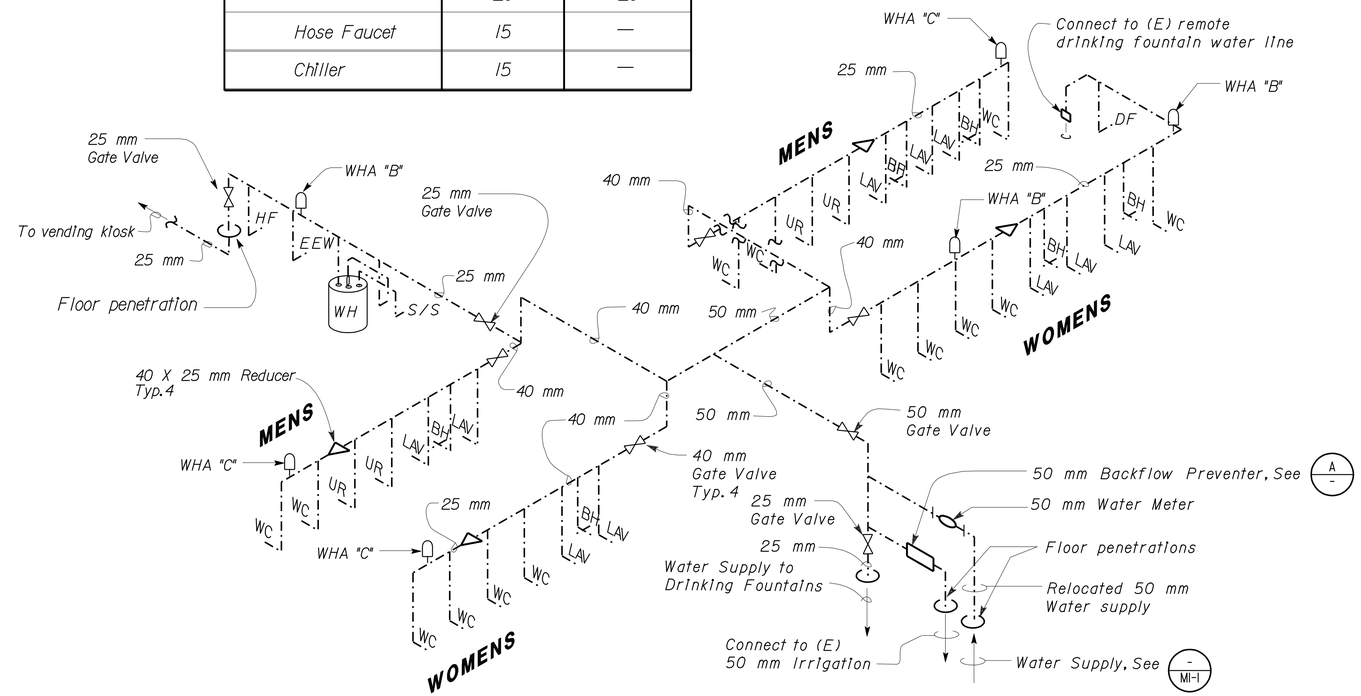

MODIFIED DOMESTIC ISOMETRIC

No Scale

CALIFORNIA STATE FIRE MARSHAL APPROVED

Approval of this plan does not authorize or approve any omission or deviation from applicable regulations. Final approval is subject to field inspection. One set of approved plans shall be available on the project site at all times.

Reviewed by: MIKE TANAKA
Approval date: 4/9/2009
CSFM FILE NO. 01-45-11-0067

IDENTIFICATION STAMP
DIV. OF THE STATE ARCHITECT
SACRAMENTO REGIONAL OFFICE
02-108545
AC Antonio Florendo
ANTONIO FLORENDO
DATE 3-8-2007

THIS SHEET ACCURATE FOR MECHANICAL WORK ONLY

ALL DIMENSIONS SHOWN IN MILLIMETERS, EXCEPT AS NOTED

	BY	CHECKED
DESIGN	Jesus E Ramirez	M. Slavensky
DETAILS	J.R. Stangl	Jesus E Ramirez
QUANTITIES	Jesus E Ramirez	M. Slavensky

STATE OF CALIFORNIA
DEPARTMENT OF TRANSPORTATION

DIVISION OF ENGINEERING SERVICES
ELECTRICAL-MECHANICAL-WATER AND WASTEWATER DESIGN

BRIDGE NO. X
KM POST

LAKEHEAD, SAFETY ROADSIDE REST AREA UPGRADE AND ADDITION

EXISTING AND MODIFIED WATER ISOMETRIC

SHEET **M1-6**

DOS ELEC (10/98) FILE => m1_6.dgn
DATE PLOTTED => 28-JUL-2009 TIME PLOTTED => 14:44

ORIGINAL SCALE IN MILLIMETERS FOR REDUCED PLANS 0 10 20 30 40 50 60 70 80 90 100

CU 02 305
EA 395801

DISREGARD PRINTS BEARING EARLIER REVISION DATES

REVISION DATES (PRELIMINARY STAGE ONLY): 10/20/05 02/28/06 06/02/06 09/06/06 10/02/06 12/04/06 3/28/07 7/29/09 4-14-09

SHEET OF

FILE => m1_6.dgn

USERNAME => trlenard DATE PLOTTED => 28-JUL-2009 TIME PLOTTED => 14:44

VI=I

DIST.	COUNTY	ROUTE	KILOMETER POST TOTAL PROJECT	SHEET NO.	TOTAL SHEETS
02	Sha	5	R69.4	84	120

Caltrans Metric

REGISTERED ENGINEER-MECHANICAL — 4/14/09 DATE

7-13-09
PLANS APPROVAL DATE

REGISTERED PROFESSIONAL ENGINEER — Jack Wheeler — No. 21648 — Exp. 6/30/11 — MECH — STATE OF CALIFORNIA

The State of California or its officers or agents shall not be responsible for the accuracy or completeness of electronic copies of this plan sheet.

PLUMBING SCHEDULE

Fixture	Drainage Rough-In mm	Trap mm	Vent mm
Lavatory	50	32	32
Drinking Fountain	50	32	32
Urinal	50	40	40
Water Closet	75	--	40
Floor Drain	50	50	40
Service Sink	75	75	40
Kitchen Sink	50	40	32

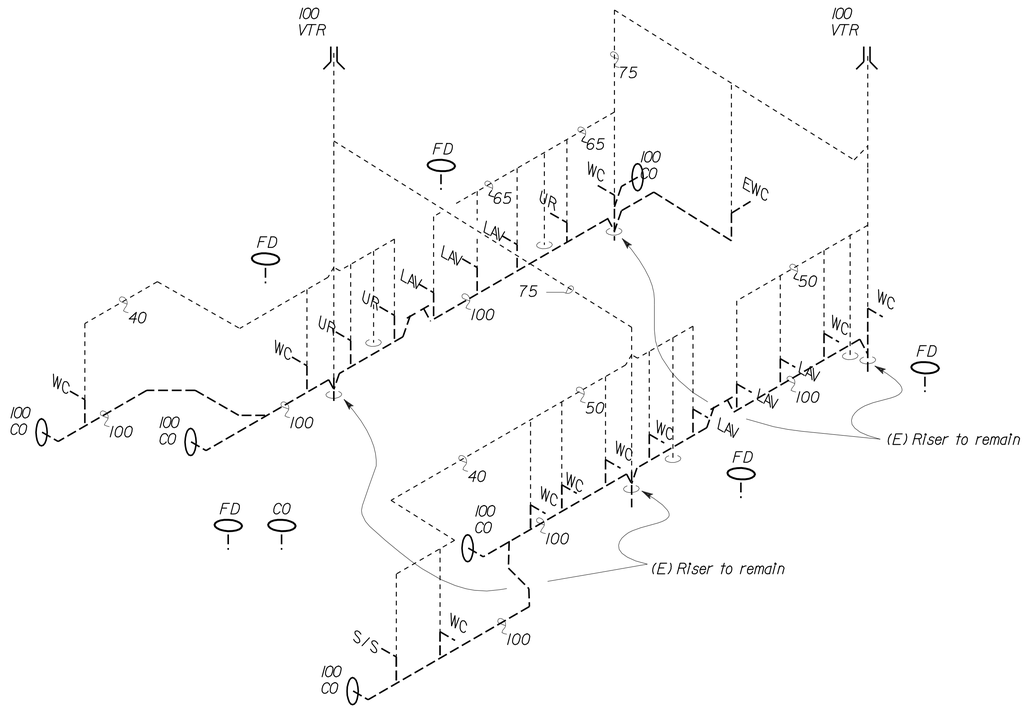

EXISTING SEWER ISOMETRIC

No Scale

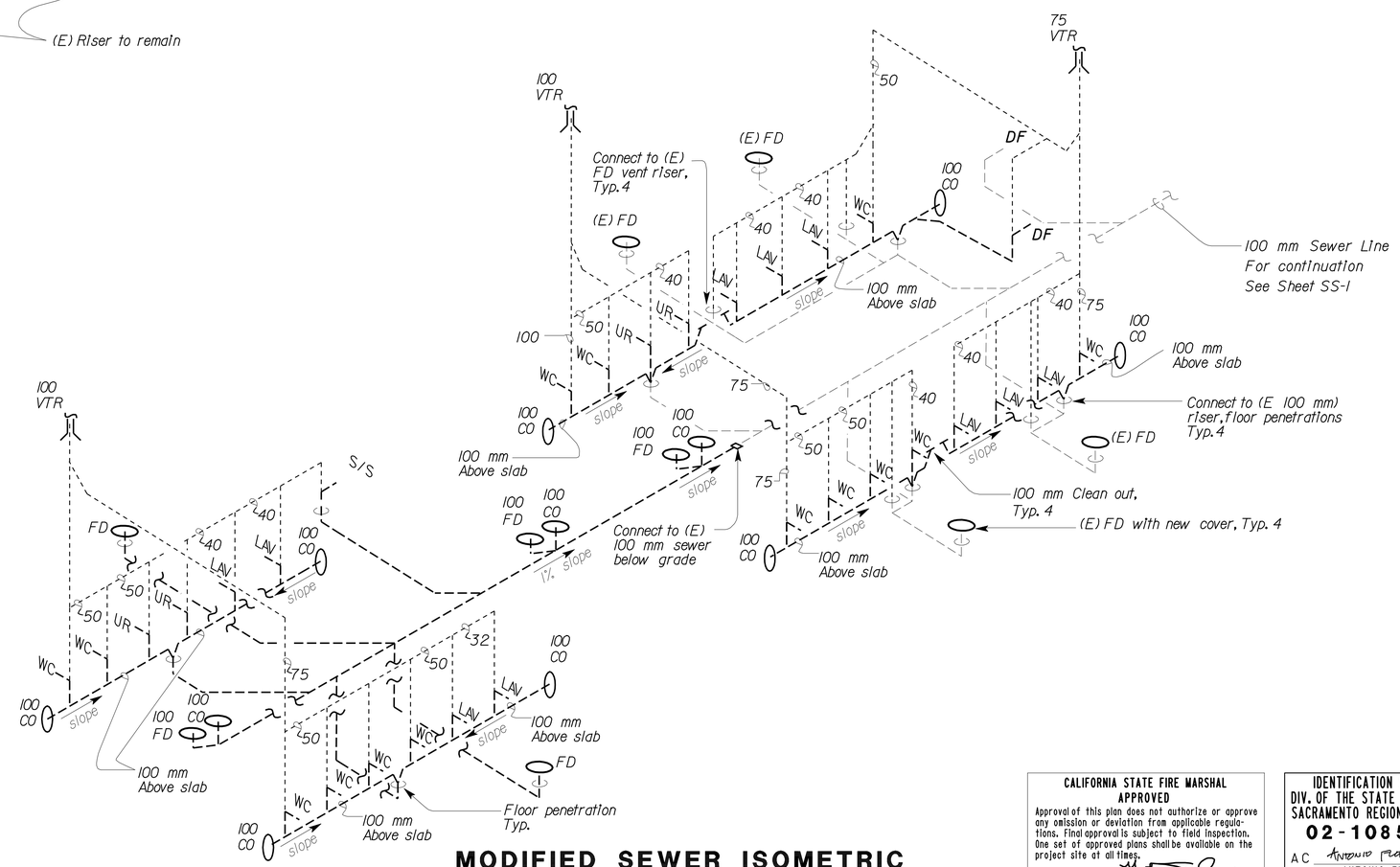

MODIFIED SEWER ISOMETRIC

No Scale

Notes:

1. *Remove all existing fixture, waste and vent piping down to the first pipe coupling above the slab.*
2. *Install all new waste and vent piping to accomodate the new plumbing fixtures. Connect new sewer piping above the slab to the new sewer line as shown.*
3. *Extend vents through existing vent pipe opening, flash and make weathertight.*
4. *Install new floor drain covers on all existing floor drains. All existing floor drains are to connect to the new sewer system.*
5. *Cap all existing sewer pipe penetration not used for new fixtures.*
6. *All new sewer piping shall be above slab, except where shown.*

CALIFORNIA STATE FIRE MARSHAL APPROVED
Approval of this plan does not authorize or approve any omission or deviation from applicable regulations. Final approval is subject to field inspection. One set of approved plans shall be available on the project site at all times.
Reviewed by: MIKE TANAKA
Approval date: 4/9/2009
CSFM FILE NO. 01-45-11-0067

IDENTIFICATION STAMP
DIV. OF THE STATE ARCHITECT
SACRAMENTO REGIONAL OFFICE
02-108545
AC Antonio Florendo
ANTONIO FLORENDO
DATE 3-8-2007

THIS SHEET ACCURATE FOR MECHANICAL WORK ONLY

ALL DIMENSIONS SHOWN IN MILLIMETERS, EXCEPT AS NOTED

	BY	CHECKED
DESIGN	Jesus E Ramirez	M. Slavensky
DETAILS	J.R. Stangl	Jesus E Ramirez
QUANTITIES	Jesus E Ramirez	M. Slavensky

STATE OF CALIFORNIA
DEPARTMENT OF TRANSPORTATION

DIVISION OF ENGINEERING SERVICES
ELECTRICAL-MECHANICAL-WATER AND WASTEWATER DESIGN

BRIDGE NO. X
KM POST

LAKEHEAD, SAFETY ROADSIDE REST AREA UPGRADE AND ADDITION

EXISTING AND MODIFIED SEWER ISOMETRIC

SHEET **M1-7**

DOS ELEC (10/98) FILE => m1_7.dgn
DATE PLOTTED => 28-JUL-2009 TIME PLOTTED => 14:45

ORIGINAL SCALE IN MILLIMETERS FOR REDUCED PLANS 0 10 20 30 40 50 60 70 80 90 100

CU 02 305
EA 395801

DISREGARD PRINTS BEARING EARLIER REVISION DATES

REVISION DATES (PRELIMINARY STAGE ONLY) 10/20/05 02/28/06 06/06/06 09/06/06 10/06/06 12/06/06 3/28/07 7-26-09 4-14-09

SHEET OF

FILE => m1_7.dgn

USERNAME => trlenard DATE PLOTTED => 28-JUL-2009 TIME PLOTTED => 14:45

V|=|

DIST.	COUNTY	ROUTE	KILOMETER POST TOTAL PROJECT	SHEET NO.	TOTAL SHEETS
02	Sha	5	R69.4	85	120

REGISTERED ENGINEER-MECHANICAL — DATE 4/14/09

7-13-09
PLANS APPROVAL DATE

REGISTERED PROFESSIONAL ENGINEER — Jack Wheeler — No. 21648 — Exp. 6/30/11 — MECH — STATE OF CALIFORNIA

The State of California or its officers or agents shall not be responsible for the accuracy or completeness of electronic copies of this plan sheet.

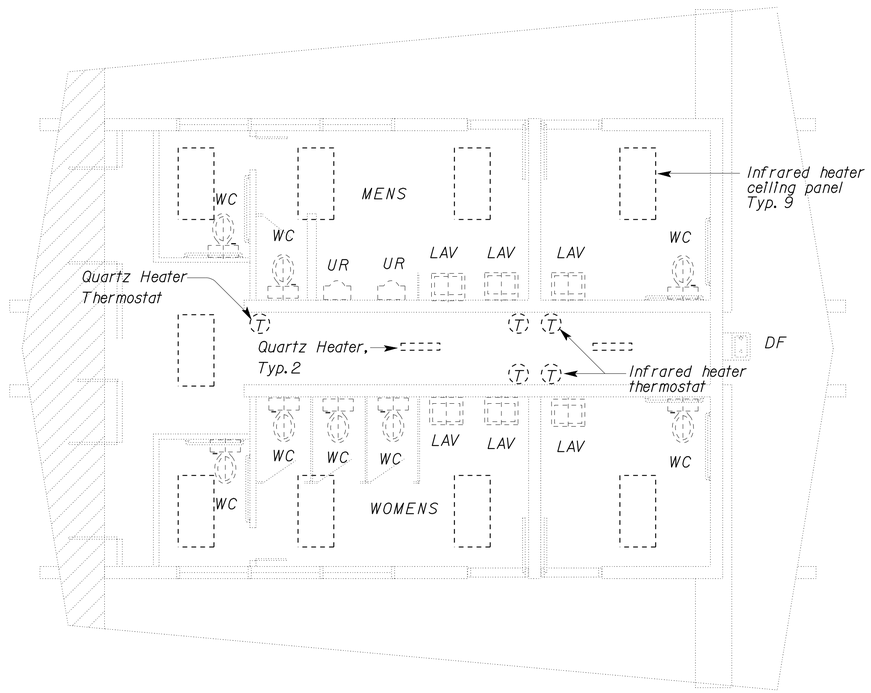

EXISTING FLOOR PLAN

1:50

NOTE:

1. Remove all existing quartz heaters, infrared heaters and the respective thermostats and dispose.

CALIFORNIA STATE FIRE MARSHAL APPROVED

Approval of this plan does not authorize or approve any omission or deviation from applicable regulations. Final approval is subject to field inspection. One set of approved plans shall be available on the project site at all times.

Reviewed by: MIKE TANAKA
Approval date: 4/9/2009
CSFM FILE NO. 01-45-11-0067

IDENTIFICATION STAMP
DIV. OF THE STATE ARCHITECT
SACRAMENTO REGIONAL OFFICE
02-108545
AC ANTONIO FLORENDO
ANTONIO FLORENDO
DATE 3-8-2007

THIS SHEET ACCURATE FOR MECHANICAL WORK ONLY

ALL DIMENSIONS SHOWN IN MILLIMETERS, EXCEPT AS NOTED

	BY	CHECKED
DESIGN	Jesus E Ramirez	M. Slavensky
DETAILS	J.R. Stangl	Jesus E Ramirez
QUANTITIES	Jesus E Ramirez	M. Slavensky

STATE OF CALIFORNIA
DEPARTMENT OF TRANSPORTATION

DIVISION OF ENGINEERING SERVICES
ELECTRICAL-MECHANICAL-WATER AND WASTEWATER DESIGN

BRIDGE NO. X
KM POST

LAKEHEAD, SAFETY ROADSIDE REST AREA UPGRADE AND ADDITION

EXISTING MECHANICAL PLAN

SHEET **M1-8**

DOS ELEC (10/98)
FILE => m1_8.dgn
DATE PLOTTED => 28-JUL-2009 TIME PLOTTED => 14:45

ORIGINAL SCALE IN MILLIMETERS FOR REDUCED PLANS 0 10 20 30 40 50 60 70 80 90 100

CU 02 305
EA 395801

DISREGARD PRINTS BEARING EARLIER REVISION DATES

REVISION DATES (PRELIMINARY STAGE ONLY): 10/20/05 02/28/06 06/08/06 09/06/06 10/06/06 12/04/06 3/28/07 7/29/09 4/14/09

SHEET OF

FILE => m1_8.dgn

USERNAME => trlenard DATE PLOTTED => 28-JUL-2009 TIME PLOTTED => 14:45

VI=I

DIST.	COUNTY	ROUTE	KILOMETER POST TOTAL PROJECT	SHEET NO.	TOTAL SHEETS
02	Sha	5	R69.4	86	120

Caltrans Metric

REGISTERED ENGINEER-MECHANICAL 4/14/09 DATE

7-13-09
PLANS APPROVAL DATE

REGISTERED PROFESSIONAL ENGINEER Jack Wheeler No. 21648 Exp. 6/30/11 MECH STATE OF CALIFORNIA

The State of California or its officers or agents shall not be responsible for the accuracy or completeness of electronic copies of this plan sheet.

NOTES:

1. The Infrared Heater Ceiling Panels shall be 500 watt, 240V-1 Ph-60Hz, 2.1 amp. Infrared heater ceiling panels shall be surface mounted and installed according to manufacturer's recommendations.

2. The electric quartz heaters shall be 1000 watt, 240 V-1 Ph-60Hz, 4.2 amp. Single thermostat control, locate in chase as shown. Mount thermostat 1525 mm above finished floor.

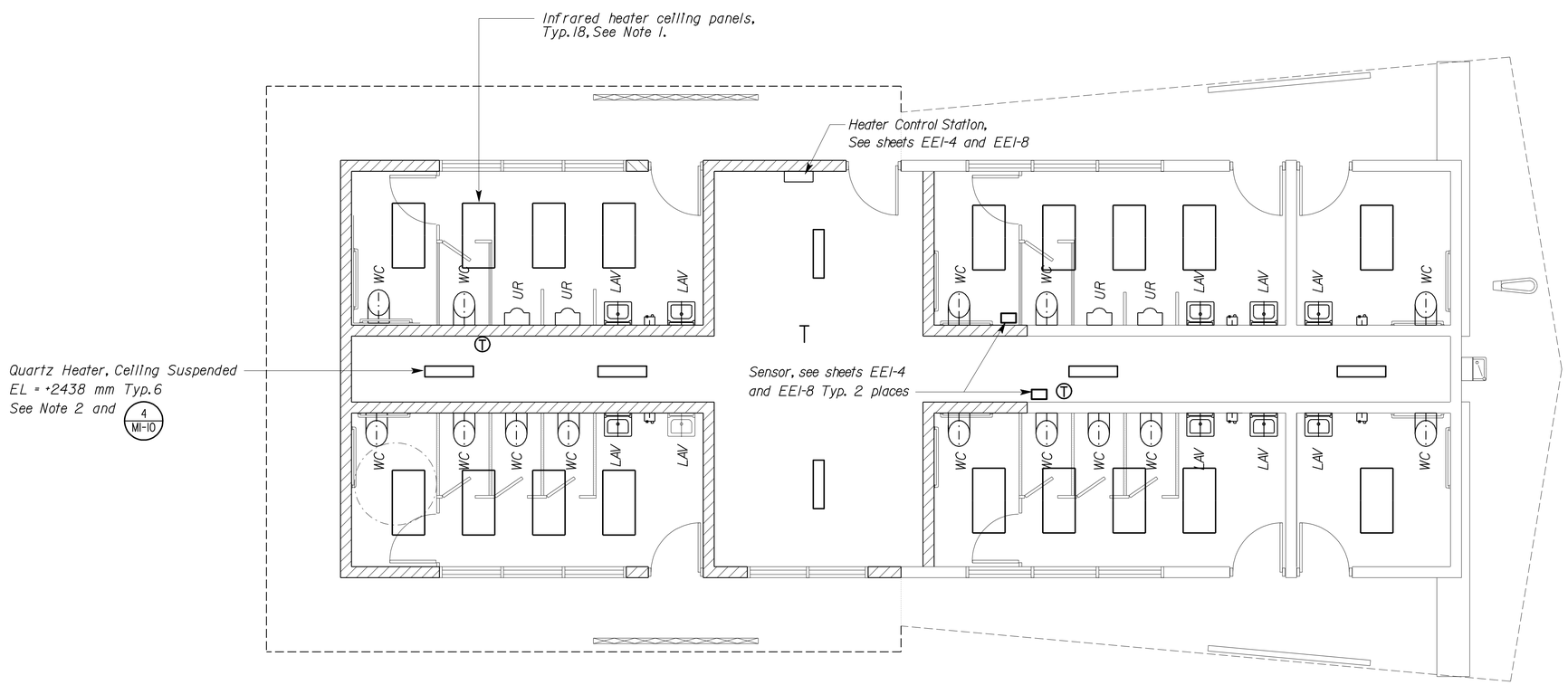

N

PLAN
1:50

CALIFORNIA STATE FIRE MARSHAL APPROVED
Approval of this plan does not authorize or approve any omission or deviation from applicable regulations. Final approval is subject to field inspection. One set of approved plans shall be available on the project site at all times.
Reviewed by: MIKE TANAKA
Approval date: 4/9/2009
CSFM FILE NO. 01-45-11-0067

IDENTIFICATION STAMP
DIV. OF THE STATE ARCHITECT
SACRAMENTO REGIONAL OFFICE
02-108545
AC ANTONIO FLORENDO
ANTONIO FLORENDO
DATE 3-8-2007

THIS SHEET ACCURATE FOR MECHANICAL WORK ONLY

ALL DIMENSIONS SHOWN IN MILLIMETERS, EXCEPT AS NOTED

	BY	CHECKED
DESIGN	Jesus E Ramirez	M. Slavensky
DETAILS	M. Slavensky	Jesus E Ramirez
QUANTITIES	Jesus E Ramirez	M. Slavensky

STATE OF CALIFORNIA DEPARTMENT OF TRANSPORTATION

DIVISION OF ENGINEERING SERVICES
ELECTRICAL-MECHANICAL-WATER AND WASTEWATER DESIGN

BRIDGE NO. X
KM POST

LAKEHEAD, SAFETY ROADSIDE REST AREA UPGRADE AND ADDITION

MODIFIED MECHANICAL PLAN

SHEET **M1-9**

DOS ELEC (10/98) FILE => m1_9.dgn DATE PLOTTED => 28-JUL-2009 TIME PLOTTED => 14:45

ORIGINAL SCALE IN MILLIMETERS FOR REDUCED PLANS 0 10 20 30 40 50 60 70 80 90 100

CU 02 305
EA 395801

FILE => m1_9.dgn

DISREGARD PRINTS BEARING EARLIER REVISION DATES

REVISION DATES (PRELIMINARY STAGE ONLY) 10/29/05 02/28/06 03/06/06 06/15/06 10/26/06 12/04/06 3/28/07 1-29-09 4-14-09

SHEET OF

USERNAME => trlenard DATE PLOTTED => 28-JUL-2009 TIME PLOTTED => 14:45

V1=1

DIST.	COUNTY	ROUTE	KILOMETER POST TOTAL PROJECT	SHEET NO.	TOTAL SHEETS
02	Sha	5	R69.4	87	120

Caltrans Metric

REGISTERED ENGINEER-MECHANICAL — 3/28/07 DATE

7-13-09
PLANS APPROVAL DATE

REGISTERED PROFESSIONAL ENGINEER — M. Slavensky — No. 28530 — Exp. 6/30/11 — MECH — STATE OF CALIFORNIA

The State of California or its officers or agents shall not be responsible for the accuracy or completeness of electronic copies of this plan sheet.

IDENTIFICATION STAMP
DIV. OF THE STATE ARCHITECT
SACRAMENTO REGIONAL OFFICE
02-108545
AC ANTONIO FLORENDO
ANTONIO FLORENDO
DATE 3-8-2007

CALIFORNIA STATE FIRE MARSHAL
APPROVED
Approval of this plan does not authorize or approve any omission or deviation from applicable regulations. Final approval is subject to field inspection. One set of approved plans shall be available on the project site at all times.
Reviewed by: MIKE TANAKA
Approval date: 4/3/2009
CSFM FILE NO. 01-45-11-0067

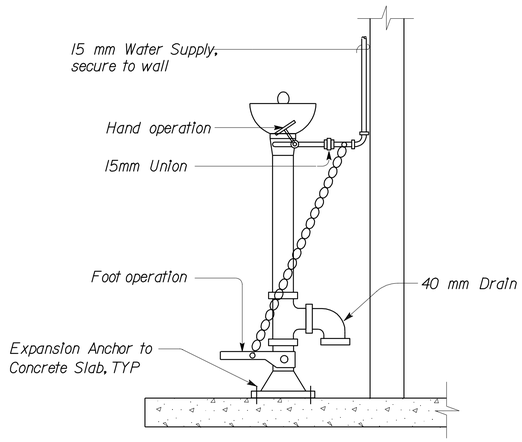

1 EMERGENCY EYE WASH
NO SCALE

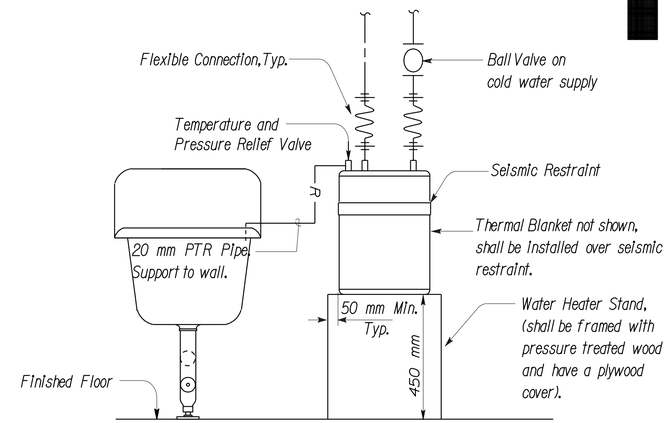

2 ELECTRIC WATER HEATER DETAIL
NO SCALE

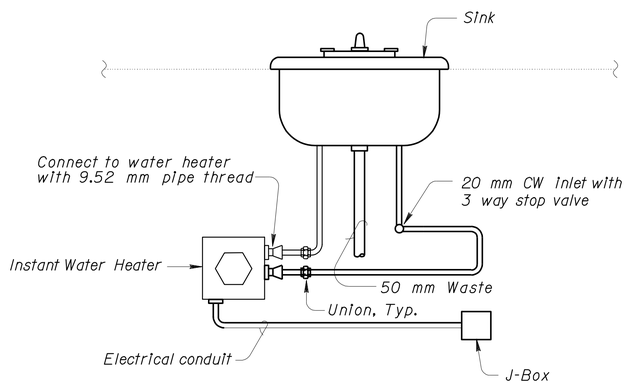

3 BREAK ROOM KITCHEN SINK
NO SCALE

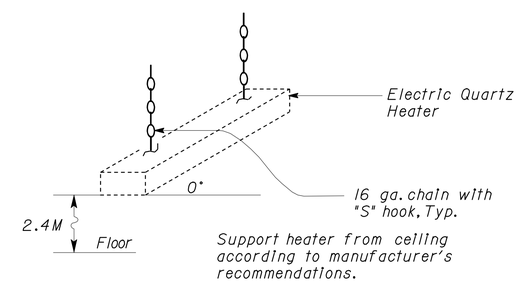

4 QUARTZ HEATER SUPPORT DETAIL
NO SCALE

THIS SHEET ACCURATE FOR MECHANICAL WORK ONLY

ALL DIMENSIONS SHOWN IN MILLIMETERS, EXCEPT AS NOTED

	BY	CHECKED
DESIGN	Jesus E Ramirez	M. Slavensky
DETAILS	J.R. Stangl	Jesus E Ramirez
QUANTITIES	Jesus E Ramirez	M. Slavensky

STATE OF CALIFORNIA
DEPARTMENT OF TRANSPORTATION

DIVISION OF ENGINEERING SERVICES
ELECTRICAL-MECHANICAL-WATER AND WASTEWATER DESIGN

BRIDGE NO. X
KM POST

LAKEHEAD, SAFETY ROADSIDE REST AREA UPGRADE AND ADDITION

MECHANICAL DETAILS

SHEET **M1-10**

DOS ELEC (10/98)
FILE => m1_10.dgn
DATE PLOTTED => 28-JUL-2009 TIME PLOTTED => 14:45

ORIGINAL SCALE IN MILLIMETERS FOR REDUCED PLANS 0 10 20 30 40 50 60 70 80 90 100

CU 02 305
EA 395801

DISREGARD PRINTS BEARING EARLIER REVISION DATES →

REVISION DATES (PRELIMINARY STAGE ONLY): 10/20/05 02/28/06 06/08/06 09/06/06 10/06/06 12/06/06 3/28/07 1-20-09

SHEET OF

FILE => m1_10.dgn

USERNAME => trlenard DATE PLOTTED => 28-JUL-2009 TIME PLOTTED => 14:45

VI=I

DIST.	COUNTY	ROUTE	KILOMETER POST TOTAL PROJECT	SHEET NO.	TOTAL SHEETS
02	Sha	5	R69.4	88	120

REGISTERED ENGINEER-MECHANICAL — 3/28/07 DATE

7-13-09
PLANS APPROVAL DATE

REGISTERED PROFESSIONAL ENGINEER — M. Slavensky — No. 28530 — Exp. 6/30/11 — MECH — STATE OF CALIFORNIA

The State of California or its officers or agents shall not be responsible for the accuracy or completeness of electronic copies of this plan sheet.

Caltrans Metric

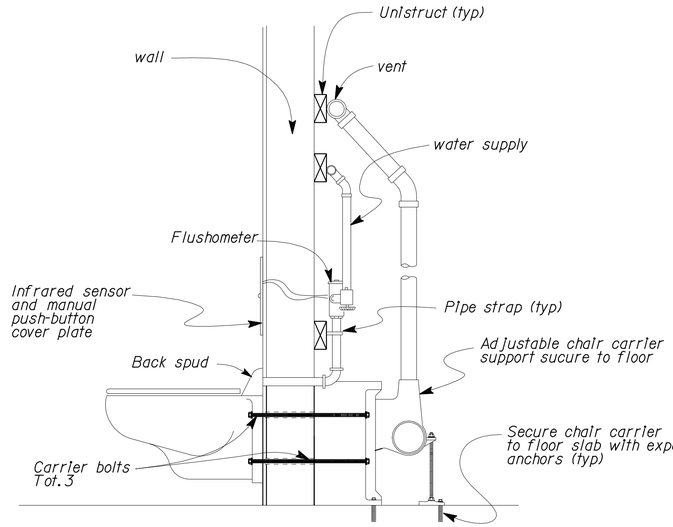

SIDE VIEW

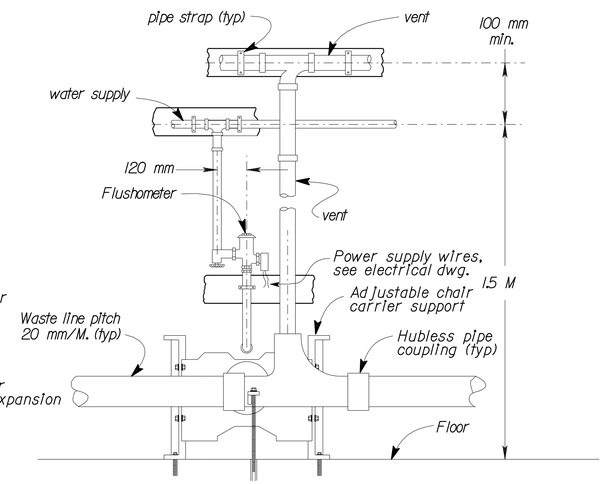

REAR VIEW

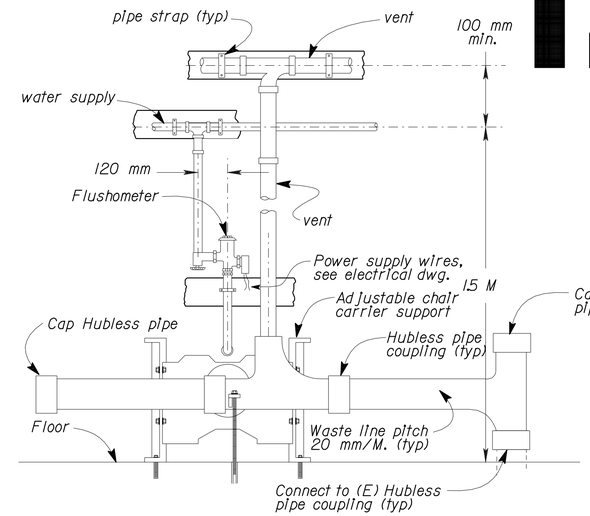

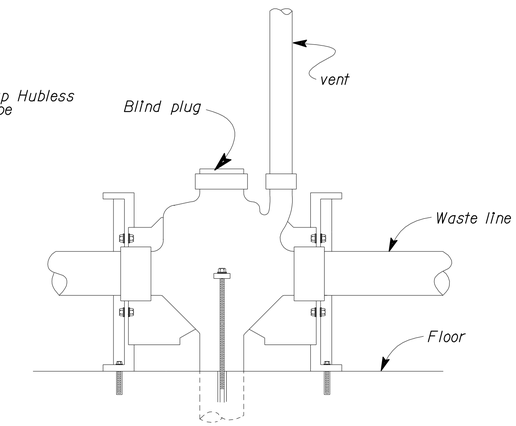

AT DROP THROUGH SLAB

1 **WATER CLOSET ROUGH-IN DETAIL**
No Scale

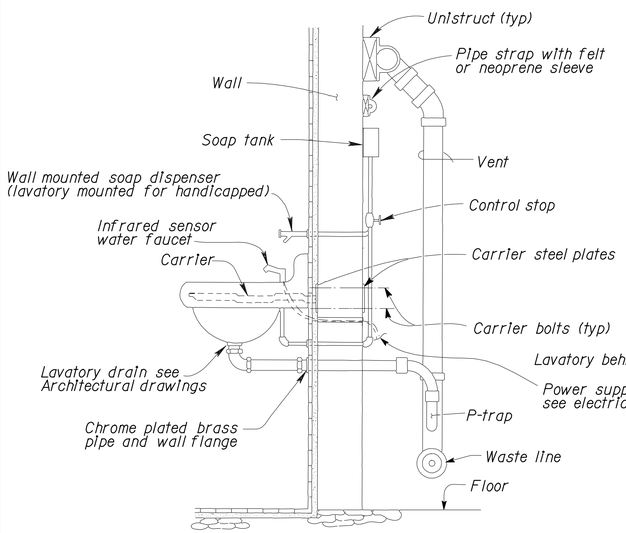

SIDE VIEW

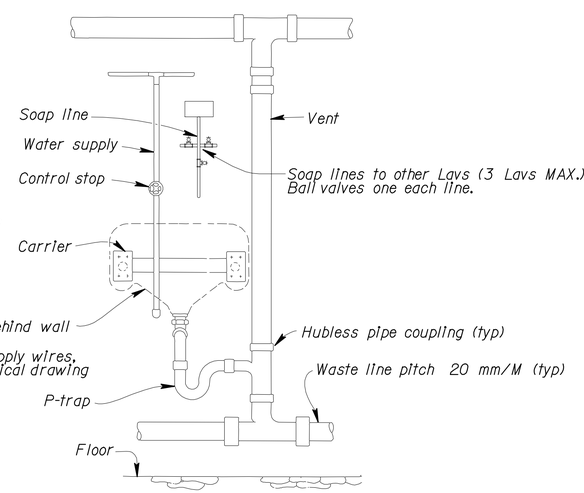

REAR VIEW

2 **LAVATORY ROUGH-IN DETAILS**
No Scale

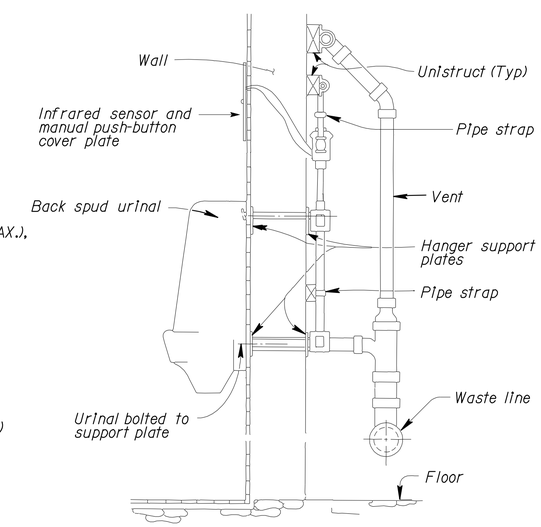

SIDE VIEW

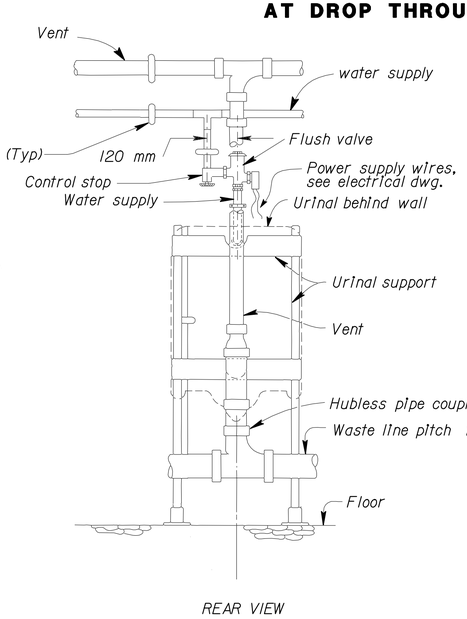

REAR VIEW

3 **URINAL ROUGH -IN DETAIL**
No Scale

IDENTIFICATION STAMP
DIV. OF THE STATE ARCHITECT
SACRAMENTO REGIONAL OFFICE
02-108545
AC — ANTONIO FLORENDO
DATE — 3-8-2007

CALIFORNIA STATE FIRE MARSHAL
APPROVED
Approval of this plan does not authorize or approve any omission or deviation from applicable regulations. Final approval is subject to field inspection. One set of approved plans shall be available on the project site at all times.
Reviewed by: MIKE TANAKA
Approval date: 4/9/2009
CSFM FILE NO. 01-45-11-0067

THIS SHEET ACCURATE FOR MECHANICAL WORK ONLY

ALL DIMENSIONS SHOWN IN MILLIMETERS, EXCEPT AS NOTED

	BY	CHECKED
DESIGN	Jesus E Ramirez	M. Slavensky
DETAILS	J.R. Stangl	Jesus E Ramirez
QUANTITIES	Jesus E Ramirez	M. Slavensky

STATE OF CALIFORNIA DEPARTMENT OF TRANSPORTATION

DIVISION OF ENGINEERING SERVICES
ELECTRICAL-MECHANICAL-WATER AND WASTEWATER DESIGN

BRIDGE NO. X
KM POST

LAKEHEAD, SAFETY ROADSIDE REST AREA UPGRADE AND ADDITION

COMFORT STATION/ROUGH-IN DETAILS

SHEET **M1-11**

DOS ELEC (10/98) FILE => m1_11.dgn
DATE PLOTTED => 28-JUL-2009 TIME PLOTTED => 14:45

ORIGINAL SCALE IN MILLIMETERS FOR REDUCED PLANS 0 10 20 30 40 50 60 70 80 90 100

CU 02 305
EA 395801

DISREGARD PRINTS BEARING EARLIER REVISION DATES

REVISION DATES (PRELIMINARY STAGE ONLY) 10/20/05 02/28/06 06/08/06 09/06/06 10/06/06 12/06/06 3/28/07 1-20-09

SHEET OF

FILE => m1_11.dgn

USERNAME => trlenard DATE PLOTTED => TIME PLOTTED => 14:45

VI=1

DIST.	COUNTY	ROUTE	KILOMETER POST TOTAL PROJECT	SHEET NO.	TOTAL SHEETS
02	Sha	5	R69.4	89	120

Jaswinder S Sandhu 4-14-09
REGISTERED ENGINEER-ELECTRICAL DATE

7-13-09
PLANS APPROVAL DATE

REGISTERED PROFESSIONAL ENGINEER J. S. SANDHU No. 11803 Exp. 9-30-10 ELEC STATE OF CALIFORNIA

The State of California or its officers or agents shall not be responsible for the accuracy or completeness of electronic copies of this plan sheet.

Caltrans Metric

GRAPHIC SYMBOLS FOR ELECTRICAL WIRING AND LAYOUT DIAGRAMS

SYMBOL CEILING	SYMBOL WALL	DESCRIPTION
S	S	SURFACE INCANDESCENT, METAL HALIDE OR SODIUM VAPOR FIXTURE
R	R	RECESSED INCANDESCENT, METAL HALIDE, OR SODIUM VAPOR FIXTURE
B	B	BLANK OUTLET
D		DROP CORD
J	J	JUNCTION BOX
X	X	EXIT LIGHT
		SURFACE OR PENDANT INDIVIDUAL FLUORESCENT FIXTURE
	R	RECESSED INDIVIDUAL FLUORESCENT FIXTURE
		SURFACE OR PENDANT CONTINUOUS ROW FLUORESCENT FIXTURES

NOTE: A LOWER CASE LETTER NEAR GRAPHIC LIGHTING FIXTURE SYMBOL DENOTES THAT FIXTURE IS CONTROLLED BY A SIMILARLY MARKED SWITCH, AN ALPHA-NUMERIC SYMBOL NEAR GRAPHIC LIGHTING FIXTURE SYMBOL DENOTES FIXTURE TYPE, (I=INCANDESCENT, F=FLUORESCENT, MH=METAL HALIDE, H=HIGH PRESSURE SODIUM VAPOR), DESIGN TYPE, NUMBER OF LAMPS AND WATTAGE.

EXAMPLE : (4) F 2 - 2 x 32
- 32 WATT LAMPS
- 2 LAMPS
- DESIGN TYPE
- FLUORESCENT
- NUMBER OF FIXTURES

	SINGLE RECEPTACLE OUTLET
	DUPLEX RECEPTACLE OUTLET
	FOURPLEX RECEPTACLE OUTLET
(GFCI) WP	DUPLEX RECEPTACLE OUTLET, WEATHERPROOF (WITH GFCI)
	SINGLE, SPECIAL PURPOSE RECEPTACLE OUTLET
	DUPLEX, SPECIAL PURPOSE RECEPTACLE OUTLET
R	RANGE OUTLET
C	CLOCK HANGER RECEPTACLE
F	FAN HANGER RECEPTACLE
	FLOOR SINGLE RECEPTACLE OUTLET
	FLOOR DUPLEX RECEPTACLE OUTLET
	FLOOR SPECIAL PURPOSE OUTLET
	FLOOR RADIO OUTLET
	FLOOR TELEPHONE OUTLET
	MULTI-FLOOR OUTLET, 2 OR MORE GANG
	MULTI-OUTLET ASSEMBLY
S	SINGLE POLE SWITCH
S_2	DOUBLE POLE SWITCH
S_3	THREE WAY SWITCH
S_4	FOUR WAY SWITCH
S_D	AUTOMATIC DOOR
S_K	KEY OPERATED SWITCH
S_P	SWITCH AND PILOT LIGHT
S_{MC}	MOMENTARY CONTACT SWITCH
S_{RC}	REMOTE CONTROL SWITCH
S_{WP}	WEATHERPROOF SWITCH
S_F	FAN SWITCH
S_L	LIGHT SWITCH
S_H	HEATER SWITCH
S_{VS}	VARIABLE SPEED MOTOR CONTROL SWITCH
S_{CHLF}	TWO SWITCHES, ONE SWITCH FOR LIGHT AND FAN AND TIMER SWITCH FOR HEAT LAMP
S_{BTS}	BYPASS TIMER SWITCH

SYMBOL	DESCRIPTION
S_M	MOTION SENSOR SWITCH
ST	MANUAL MOTOR STARTING SWITCH, THERMAL OVERLOAD TYPE
S_{HP}	MANUAL MOTOR STARTING SWITCH, WITHOUT OVERLOAD ELEMENT
Ts	TIMER SWITCH
S	SWITCH AND SINGLE RECEPTACLE
S	SWITCH AND DUPLEX RECEPTACLE
C	HAND DRYER NOZZLE
H	HAND DRYER
	RADIO OUTLET
	TELEPHONE OUTLET
	SOUND SYSTEM LOUD SPEAKER OUTLET
	PUSHBUTTON
L	PUSHBUTTON STATION, NC, WITH LOCKING DEVICE FOR OPEN
	PUSHBUTTON STATION MOTOR CONTROL
	BUZZER
	BELL
	COMBINATION BELL-BUZZER
T	THERMOSTAT
PS	PRESSURE SWITCH
R	CONTROL RELAY
FS	FLOW SWITCH
PEC	PHOTOELECTRIC CELL
R	RADIO OUTLET
TV	TELEVISION OUTLET
M	MICROPHONE OUTLET
	FLUSH-MOUNTED PANELBOARD AND CABINET
	SURFACE-MOUNTED PANELBOARD AND CABINET
	LIGHTING PANEL
	POWER PANEL
	COMBINATION LIGHTING AND POWER
MC	MOTOR CONTROLLER
	DISCONNECT SWITCH
	CONDUIT CONCEALED IN CEILING OR WALL
	CONDUIT CONCEALED IN FLOOR
	CONDUIT EXPOSED
	CROSS-LINES INDICATE NUMBER OF #12 AWG CONDUCTORS. NO CROSS-LINE INDICATES 2#12 WITH 1#12 (G) UNLESS OTHERWISE NOTED. ALL CONDUIT SHALL BE 16 C UNLESS OTHERWISE NOTED.
A1, A2	HOMERUN TO PANELBOARD, ARROWS INDICATE NUMBER OF CIRCUITS, LETTER DENOTES PANELBOARD, NUMERAL DENOTES CIRCUIT.
SM	SURFACE METAL RACEWAY
MC	CONDUIT, METALLIC UNDERGROUND
PVC	CONDUIT, POLYVINYL CHLORIDE, UNDERGROUND
	CONDUIT, FLEXIBLE
	CONDUIT, TURN UP
	CONDUIT, TURN DOWN
	CONDUIT SEAL, EXPLOSION-PROOF
X	CONDUIT, EXPANSION JOINT
	ADAPTER, ONE TYPE CONDUIT TO ANOTHER
	POLE
	POLE-TOP LUMINAIRE
	POLE-ARM LUMINAIRE

(2) 16C, PVC, 2#12
- CONDUCTOR INFORMATION (PER CONDUIT)
- CONDUIT TYPE
- CONDUIT SIZE
- NUMBER OF CONDUITS (NO NUMBER INDICATES ONE CONDUIT)

THIS PLAN IS ACCURATE FOR ELECTRICAL WORK ONLY.

SYMBOL	DESCRIPTION
H	HEAT DETECTOR
S	SMOKE DETECTOR
P	MANUAL PULL STATION
AV	AUDIO/VISUAL ALARM DEVICE
G	GLASS BREAK DISCRIMINATOR
C	MAGNETIC CONTACT SWITCH-PEDESTRIAN DOOR
C	MAGNETIC CONTACT SWITCH-VEHICLE DOOR
K	KEYPAD FOR ALARM SYSTEM
W	COMBINATION DETECTOR (MICROWAVE/PASSIVE INFRARED)
	PULL BOX-LETTER INDICATES TYPE OF PULL BOX (E-ELECTRICAL, T-TELEPHONE, R-RADIO)
(T)	PULL BOX (TRAFFIC RATED)-LETTER INDICATES TYPE OF PULL BOX (E-ELECTRICAL, T-TELEPHONE, R-RADIO)
CHLF	COMBINATION HEAT, LIGHT AND FAN UNIT
A / EE-2	— SECTION/ELEVATION LETTER — SHEET NUMBER
1 / EE-2	— DETAIL NUMBER — SHEET NUMBER

REMODEL WORK

SYMBOL	DESCRIPTION
	EXISTING FLUORESCENT FIXTURE-TO REMAIN
	EXISTING FLUORESCENT FIXTURE-REMOVE
	EXISTING INCANDESCENT FIXTURE-TO REMAIN
	EXISTING INCANDESCENT FIXTURE-REMOVE
	EXISTING OUTLET-TO REMAIN
	EXISTING RECEPTACLE OUTLET-TO REMAIN
	EXISTING RECEPTACLE OUTLET-REMOVE
-E-E-	EXISTING CONDUIT AND CONDUCTORS-TO REMAIN UNLESS OTHERWISE NOTED
	EXISTING CONDUIT AND CONDUCTORS-REMOVE
S	EXISTING SWITCH-TO REMAIN
	EXISTING SWITCH-REMOVE
J	EXISTING JUNCTION BOX-TO REMAIN
	EXISTING JUNCTION BOX-REMOVE

STANDARD NOTES

AB	ABANDON, IF APPLIED TO CONDUIT, REMOVE CONDUCTORS.
BC	INSTALL PULL BOX IN EXISTING CONDUIT RUN.
CB	INSTALL CONDUIT INTO EXISTING PULL BOX.
CC	CONNECT NEW AND EXISTING CONDUIT. REMOVE EXISTING CONDUCTORS AND INSTALL CONDUCTORS AS INDICATED.
CF	CONDUIT TO REMAIN FOR FUTURE USE. REMOVE CONDUCTORS, INSTALL PULL ROPE AND PLUG.
FA	REMOVE FOUNDATION ABOVE GRADE AND ABANDON FOUNDATION 152 mm BELOW GRADE.
RL	RELOCATE EQUIPMENT.
RLD	RELOCATED EQUIPMENT.
SC	SPLICE NEW TO EXISTING CONDUCTORS.
RE	REMOVE EQUIPMENT.

PROJECT NOTES

A. SEPARATE GROUNDED (NEUTRAL) CIRCUIT CONDUCTOR SHALL BE USED FOR EACH 120-VOLT CIRCUIT.

B. CONDUIT HOMERUNS TO PANELBOARD SHALL BE INSTALLED AS SHOWN ON THE PLANS UNLESS OTHERWISE APPROVED BY ENGINEER. CONDUIT HOMERUNS SHALL NOT BE COMBINED.

GRAPHIC SYMBOLS FOR ELECTRICAL DIAGRAMS

SYMBOL	DESCRIPTION
	CIRCUIT BREAKER, SINGLE POLE
	CIRCUIT BREAKER, DOUBLE POLE
	CIRCUIT BREAKER, THREE POLE
GFCI	CIRCUIT BREAKER, WITH GROUND FAULT CIRCUIT INTERRUPTER
	CONTACT, NORMALLY OPEN
	CONTACT, NORMALLY CLOSED
	CONTACT, NORMALLY CLOSED, TIME DELAY CLOSING ON DE-ENERGIZING
	CONTACT, NORMALLY OPEN, TIME DELAY OPENING ON DE-ENERGIZING
	CONTACT, NORMALLY OPEN, TIME DELAY CLOSING ON ENERGIZING
	CONTACT, NORMALLY CLOSED, TIME DELAY OPENING ON ENERGIZING
	CONTACT, SINGLE POLE DOUBLE-THROW
	OPERATING COIL
	LIQUID LEVEL ACTUATED SWITCH, NORMALLY CLOSED
	LIQUID LEVEL ACTUATED SWITCH, NORMALLY OPEN
	PRESSURE ACTUATED SWITCH, NORMALLY CLOSED
	PRESSURE ACTUATED SWITCH, NORMALLY OPEN
	FLOW ACTUATED SWITCH, NORMALLY CLOSED
	FLOW ACTUATED SWITCH, NORMALLY OPEN
	TEMPERATURE ACTUATED SWITCH, NORMALLY CLOSED
	TEMPERATURE ACTUATED SWITCH, NORMALLY OPEN
	LIMIT SWITCH, NORMALLY CLOSED
	LIMIT SWITCH, NORMALLY OPEN
	PUSHBUTTON SWITCH, NORMALLY CLOSED
	PUSHBUTTON SWITCH, NORMALLY OPEN
	SWITCH, SINGLE-POLE
	SWITCH, SINGLE-POLE, DOUBLE-THROW
	SWITCH, DOUBLE-POLE
	SWITCH, DOUBLE-POLE, DOUBLE-THROW
	SWITCH, SINGLE-POLE, 3-POSITION
	THERMAL OVERLOAD
	FUSE
	RESISTOR
	VARIABLE RESISTOR
	TRANSFORMER WINDING
	GROUNDING ELECTRODE
	ENCLOSURE BOND
A	PILOT LIGHT (A=AMBER, G=GREEN, R=RED)
G	GENERATOR
M	MOTOR
F	FAN MOTOR

CALIFORNIA STATE FIRE MARSHAL
APPROVED
Approval of this plan does not authorize or approve any omission or deviation from applicable regulations. Final approval is subject to field inspection. One set of approved plans shall be available on the project site at all times.
Reviewed by: MIKE TANAKA
Approval date: 4/9/2009
CSFM FILE NO. 01-45-11-0067

IDENTIFICATION STAMP
DIV. OF THE STATE ARCHITECT
SACRAMENTO REGIONAL OFFICE
02-108545
AC Antonio Florendo
ANTONIO FLORENDO
DATE 3-8-2007

ABBREVIATIONS

	AMPERES
A/C	AIR CONDITIONING UNIT
ACS	AIR COMPRESSOR STARTER
AI	ANALOG INPUT
AL	ALARM LIGHT
AO	ANALOG OUTPUT
AVC	AIR VOLUME CONTROLLER
AVCD	AIR VOLUME CONTROL DISCONNECT
BD	BUILDING DISCONNECT
BRK	BREAKER
C	CONDUIT
CD	CONTROL DISCONNECT
CB	CIRCUIT BREAKER
CCTV	CLOSED CIRCUIT TELEVISION
CKT	CIRCUIT
Co.	COMPANY
CR	CONTROL RELAY
CSW	CURRENT SWITCH
DI	DIGITAL INPUT
DLC	DETECTOR LOOP CONDUCTORS
DP	DUPLEX PLUG RECEPTACLE
DS	DOOR SWITCH
(E)	EXISTING
EF	EXHAUST FAN
F	FUSE
FL	FAILURE LIGHT
FLA	FLASHER
FLEX	FLEXIBLE CONDUIT
FLS	FLOW SWITCH
FR	FAILURE RESET
FS	FLOAT SWITCH
G	GROUND
GFCI	GROUND FAULT CIRCUIT INTERRUPTER
GRS	GALVANIZED RIGID STEEL
HD	HEAT TAPE DISCONNECT
IR	INDUCTION RELAY
JB	JUNCTION BOX
L	LIGHT
LC	LIGHTING CONTACTOR
LCP	LIGHTING CONTROL PANEL
LD	LIGHT DISCONNECT
LL	LIQUID LEVEL RELAY
LLC	LIQUID LEVEL CONTROLLER
LP	LIGHT PANEL
LS	LIGHT SWITCH
LT	LIGHT TRANSFORMER

ABBREVIATIONS Cont

MB	MAIN BREAKER
MC	METALLIC CONDUIT
MCP	MOTOR CIRCUIT PROTECTOR
MCC	MOTOR CONTROL CENTER
MH	MOUNTING HEIGHT
MSB	MAIN SWITCHBOARD
MT	EMPTY CONDUIT
(N)	NEW
N	NEUTRAL
NC	NORMALLY CLOSED
NO	NORMALLY OPEN
NSW	NEUTRAL SWITCHING BREAKER
OH	OVERHEAD
OL	OVERLOAD
P	POLE
PB	PULL BOX
PB	PUSHBUTTON
PD	PUMP DISCONNECT
PFR	PHASE FAILURE RELAY
PEC	PHOTOELECTRIC CELL
PL	PILOT LIGHT
PMB	PUMP MAIN BREAKER
PS	PRESSURE SWITCH
PTS	POWER TRANSFER SWITCH
PVC	POLYVINYL CHLORIDE
RD	RECEPTACLE DISCONNECT
RES	RESISTOR
RTB	RADIO TERMINAL BOARD
S	STARTER COIL
SD	SERVICE DISCONNECT
SFR	SEAL FAILURE RELAY
SL	SUMP LIGHT
SPR	STANDBY POWER RECEPTACLE
SS	SELECTOR SWITCH
ST	STARTER
SV	SOLENOID VALVE
T	TRANSFORMER
TB	TERMINAL BLOCK
TD	TANK HEATER DISCONNECT
TDR	TIME DELAY RELAY
TGLS	TOGGLE SWITCH
TM	TIME METER
TOT	TOTAL
TPC	TEMPERATURE PROCESS CONTROLLER
TS	TIMER SWITCH
TTB	TELEPHONE TERMINAL BOARD
TYP	TYPICAL
UPS	UNINTERRUPTIBLE POWER SUPPLY
WLS	WATER LEVEL SWITCH
WP	WEATHERPROOF

PROJECT NOTES (CONT.)

C. A SINGLE INSULATED EQUIPMENT GROUNDING CONDUCTOR (SIZED AS REQUIRED) SHALL BE INSTALLED IN EACH CONDUIT RUN.

D. MOUNTING HEIGHTS OF ELECTRICAL SYSTEM COMPONENTS SHALL BE PER SPECIFICATIONS UNLESS OTHERWISE SHOWN ON THE PLANS.

	BY	CHECKED
DESIGN	Tommy F. Lee	J. S. Sandhu
DETAILS	Dali Zhou/TFL	Tommy F. Lee
QUANTITIES	Tommy F. Lee	J. S. Sandhu

STATE OF CALIFORNIA
DEPARTMENT OF TRANSPORTATION

DIVISION OF ENGINEERING SERVICES
ELECTRICAL-MECHANICAL-WATER AND WASTEWATER DESIGN

BRIDGE NO. 06R0001
KM POST

LAKEHEAD SAFETY ROADSIDE REST AREA UPGRADE AND ADDITION

LEGEND

SHEET EE0-1

DOS ELEC (10/98)
FILE => ee0_1.dgn
DATE PLOTTED => 28-JUL-2009 TIME PLOTTED => 14:45

ORIGINAL SCALE IN MILLIMETERS FOR REDUCED PLANS 0 10 20 30 40 50 60 70 80 90 100

CU 02 305
EA 395801

DISREGARD PRINTS BEARING EARLIER REVISION DATES
REVISION DATES (PRELIMINARY STAGE ONLY) 11/28/05 5/28/06 9/28/06 1/28/07 3/28/07 4/14/09
SHEET OF

FILE => ee0_1.dgn

USERNAME => trlenard DATE PLOTTED => 28-JUL-2009 TIME PLOTTED => 14:45

VI=I

DIST.	COUNTY	ROUTE	KILOMETER POST TOTAL PROJECT	SHEET NO.	TOTAL SHEETS
02	Sha	5	R69.4	90	120

Jaswinder S Sandhu 4-14-09
REGISTERED ENGINEER-ELECTRICAL DATE

7-13-09
PLANS APPROVAL DATE

REGISTERED PROFESSIONAL ENGINEER J. S. SANDHU No. 11803 Exp. 9-30-10 ELEC STATE OF CALIFORNIA

The State of California or its officers or agents shall not be responsible for the accuracy or completeness of electronic copies of this plan sheet.

Caltrans Metric

CALIFORNIA STATE FIRE MARSHAL APPROVED

Approval of this plan does not authorize or approve any omission or deviation from applicable regulations. Final approval is subject to field inspection. One set of approved plans shall be available on the project site at all times.

Reviewed by: MIKE TANAKA
Approval date: 4/9/2009
CSFM FILE NO. 01-45-11-0067

IDENTIFICATION STAMP
DIV. OF THE STATE ARCHITECT
SACRAMENTO REGIONAL OFFICE
02-108545
AC ANTONIO FLORENDO
ANTONIO FLORENDO
DATE 3-8-2007

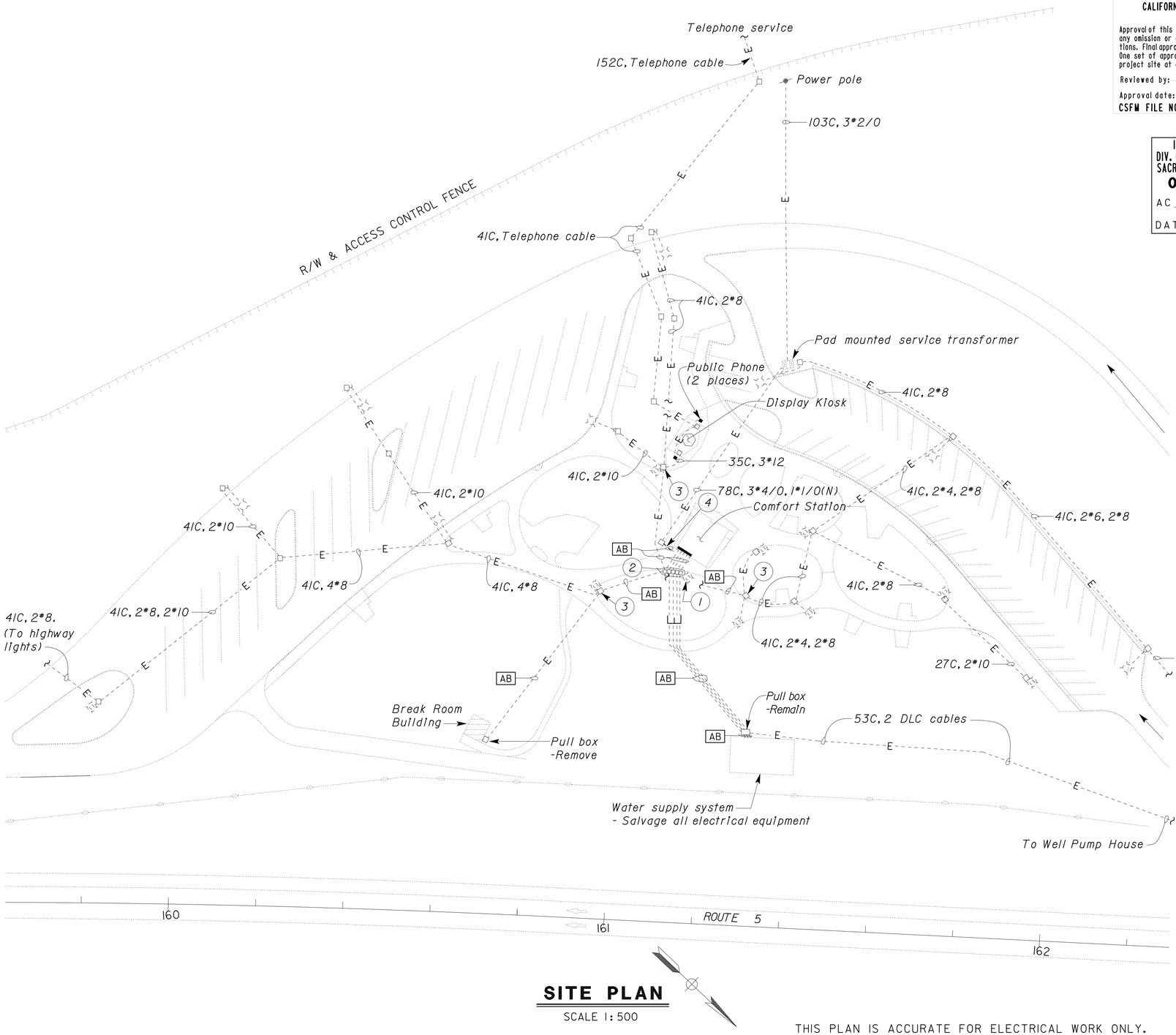

SITE PLAN

SCALE 1:500

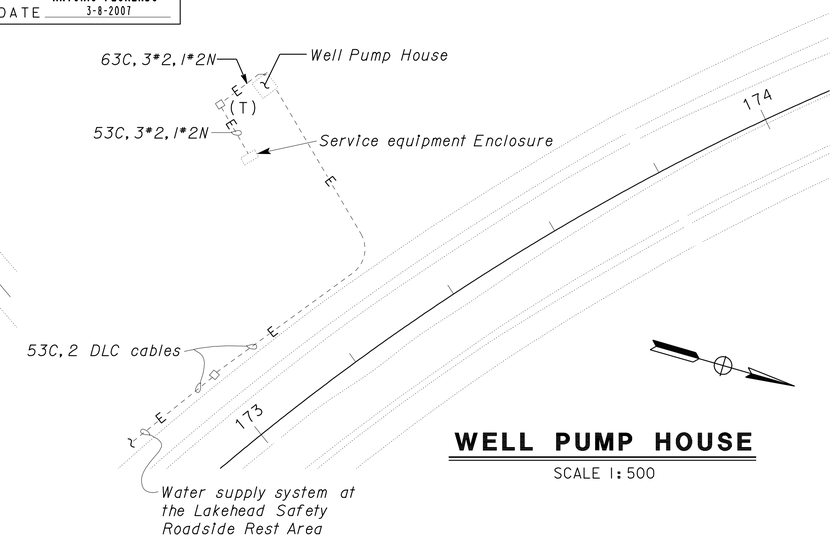

WELL PUMP HOUSE

SCALE 1:500

Notes:

1. Salvage luminaire and light pole. FA
2. Remove five pull boxes.
3. Prior to disconnect/removal, identify existing conductors inside the pull box.
4. Conduit and conductors to metering and service disconnect enclosure and the enclosure is to be relocated. For reference, see EE0-4, EE1-1, and EE1-2.

THIS PLAN IS ACCURATE FOR ELECTRICAL WORK ONLY.

ALL DIMENSIONS SHOWN IN METERS, EXCEPT AS NOTED

DESIGN SUPERVISOR
Jaswinder S Sandhu
DESIGN ENGINEER

	BY	CHECKED
DESIGN	Tommy F. Lee	J. S. Sandhu
DETAILS	Dall Zhou/TFL	Tommy F. Lee
QUANTITIES	Tommy F. Lee	J. S. Sandhu

STATE OF CALIFORNIA DEPARTMENT OF TRANSPORTATION

DIVISION OF ENGINEERING SERVICES
ELECTRICAL-MECHANICAL-WATER AND WASTEWATER DESIGN

BRIDGE NO. 06R0001
KM POST

LAKEHEAD SAFETY ROADSIDE REST AREA UPGRADE AND ADDITION

EXISTING SITE PLAN

SHEET **EE0-2**

DOS ELEC (10/98) FILE => ee0_2.dgn
DATE PLOTTED => 28-JUL-2009 TIME PLOTTED => 14:45

ORIGINAL SCALE IN MILLIMETERS FOR REDUCED PLANS 0 10 20 30 40 50 60 70 80 90 100

CU 02 305
EA 395801

DISREGARD PRINTS BEARING EARLIER REVISION DATES

REVISION DATES (PRELIMINARY STAGE ONLY) 11/28/05 5/28/06 8/28/06 11/28/06 3/28/07 4/14/09

SHEET OF

FILE => ee0_2.dgn

USERNAME => trlenord DATE PLOTTED => 28-JUL-2009 TIME PLOTTED => 14:45

VI=1

IDENTIFICATION STAMP
DIV. OF THE STATE ARCHITECT
SACRAMENTO REGIONAL OFFICE
02-108545
AC ANTONIO FLORENDO
DATE 3-8-2007

CALIFORNIA STATE FIRE MARSHAL
APPROVED
Approval of this plan does not authorize or approve any omission or deviation from applicable regulations. Final approval is subject to field inspection. One set of approved plans shall be available on the project site at all times.
Reviewed by: MIKE TANAKA
Approval date: 4/9/2009
CSFM FILE NO. 01-45-11-0067

Caltrans Metric

DIST.	COUNTY	ROUTE	KILOMETER POST TOTAL PROJECT	SHEET NO.	TOTAL SHEETS
02	Sha	5	R69.4	91	120

Jaswinder S Sandhu 4-14-09
REGISTERED ENGINEER-ELECTRICAL DATE
7-13-09
PLANS APPROVAL DATE
REGISTERED PROFESSIONAL ENGINEER J. S. SANDHU No. 11803 Exp. 9-30-10 ELEC STATE OF CALIFORNIA

The State of California or its officers or agents shall not be responsible for the accuracy or completeness of electronic copies of this plan sheet.

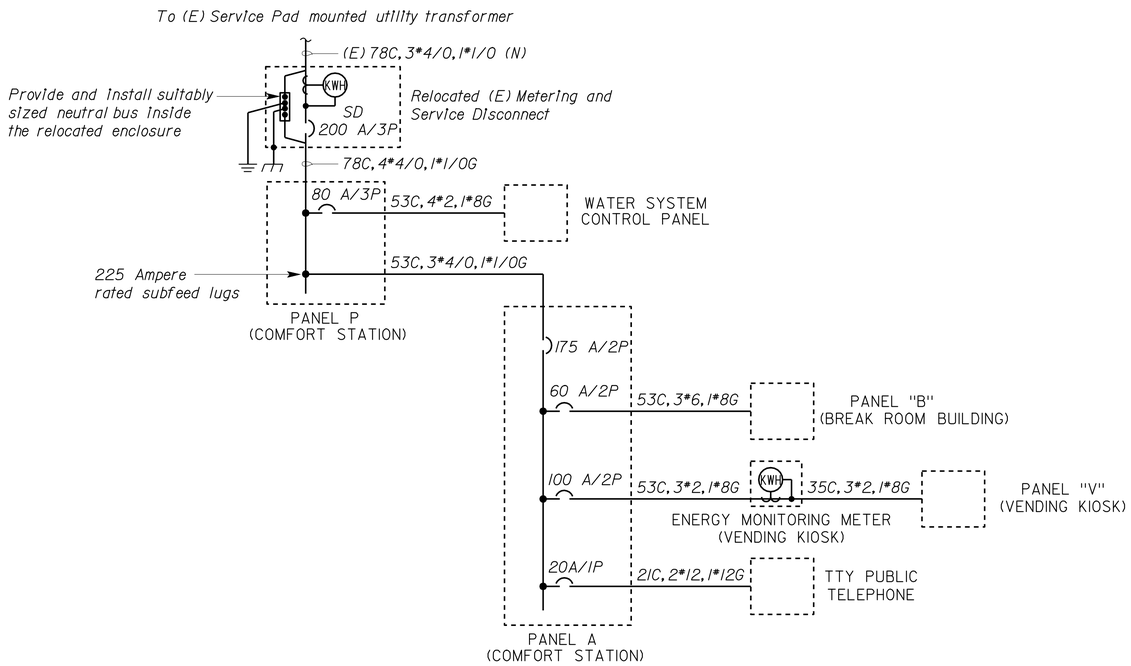

SINGLE LINE DIAGRAM

No Scale

General Note:

For Panel A and P schedules, see sheet EE1-10.

THIS PLAN IS ACCURATE FOR ELECTRICAL WORK ONLY.

DESIGN	BY Tommy F. Lee	CHECKED J. S. Sandhu
DETAILS	BY Dall Zhou/TFL	CHECKED Tommy F. Lee
QUANTITIES	BY Tommy F. Lee	CHECKED J. S. Sandhu

STATE OF CALIFORNIA
DEPARTMENT OF TRANSPORTATION

DIVISION OF ENGINEERING SERVICES
ELECTRICAL-MECHANICAL-WATER AND WASTEWATER DESIGN

BRIDGE NO. 06R0001
KM POST

LAKEHEAD SAFETY ROADSIDE REST AREA UPGRADE AND ADDITION

SINGLE LINE DIAGRAM

SHEET **EE0-3**

DOS ELEC (10/98)
FILE => ee0_3.dgn
DATE PLOTTED => 28-JUL-2009 TIME PLOTTED => 14:46
ORIGINAL SCALE IN MILLIMETERS FOR REDUCED PLANS 0 10 20 30 40 50 60 70 80 90 100
CU 02 305
EA 395801
FILE => ee0_3.dgn
DISREGARD PRINTS BEARING EARLIER REVISION DATES
REVISION DATES (PRELIMINARY STAGE ONLY) 1/27/06 8/28/06 5/28/06 11/28/06 3/28/07 4/14/09
SHEET OF

USERNAME => trlenard DATE PLOTTED => 28-JUL-2009 TIME PLOTTED => 14:46

V1=1

DIST.	COUNTY	ROUTE	KILOMETER POST TOTAL PROJECT	SHEET NO.	TOTAL SHEETS
02	Sha	5	R69.4	92	120

Caltrans Metric

Jaswinder S Sandhu 4-14-09
REGISTERED ENGINEER-ELECTRICAL DATE

7-13-09
PLANS APPROVAL DATE

REGISTERED PROFESSIONAL ENGINEER J. S. SANDHU No. 11803 Exp. 9-30-10 ELEC STATE OF CALIFORNIA

The State of California or its officers or agents shall not be responsible for the accuracy or completeness of electronic copies of this plan sheet.

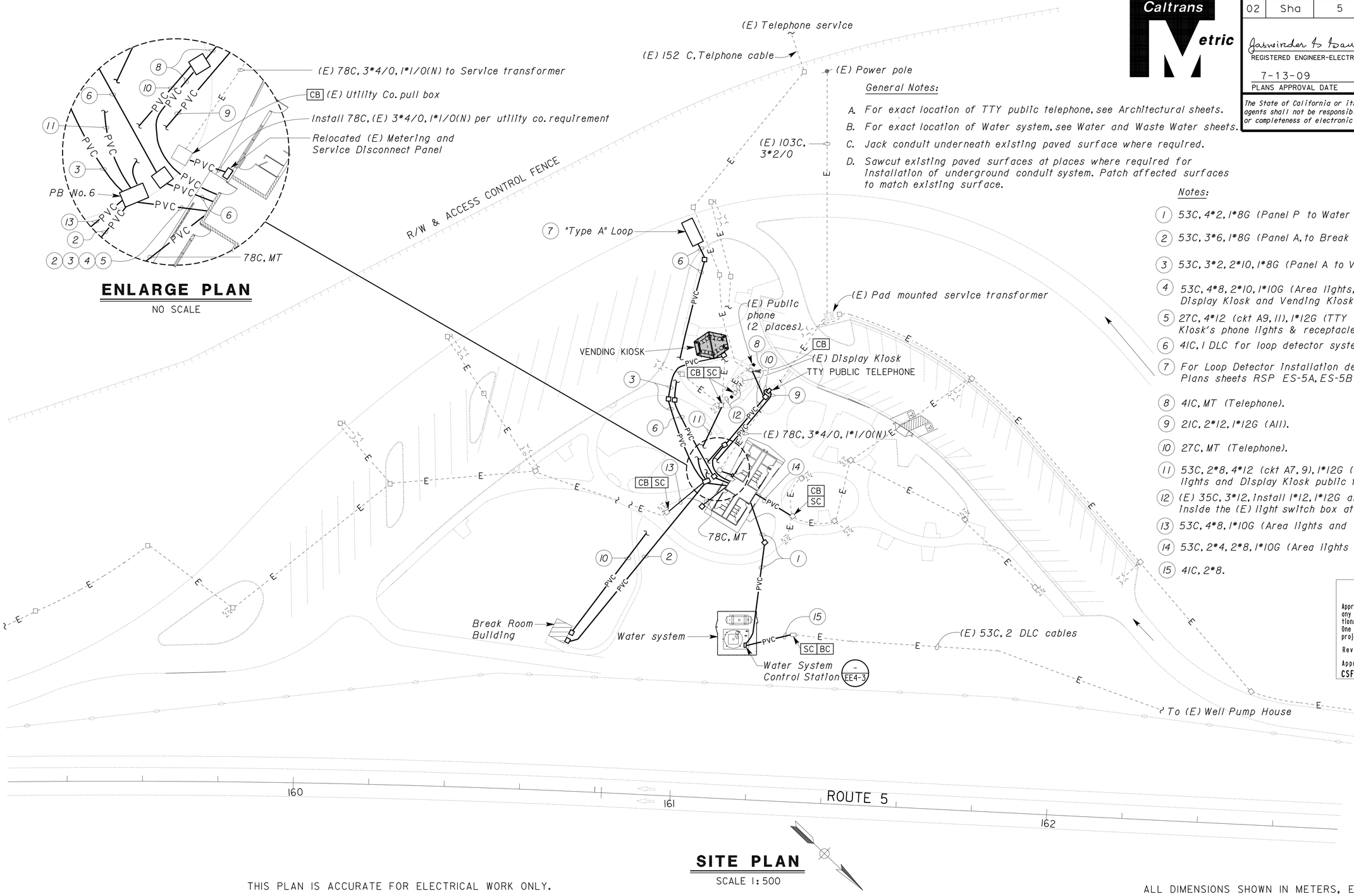

ENLARGE PLAN

NO SCALE

SITE PLAN

SCALE 1:500

THIS PLAN IS ACCURATE FOR ELECTRICAL WORK ONLY.

ALL DIMENSIONS SHOWN IN METERS, EXCEPT AS NOTED

General Notes:

A. For exact location of TTY public telephone, see Architectural sheets.
B. For exact location of Water system, see Water and Waste Water sheets.
C. Jack condult underneath existing paved surface where required.
D. Sawcut existing paved surfaces at places where required for installation of underground condult system. Patch affected surfaces to match existing surface.

Notes:

1. 53C, 4*2, 1*8G (Panel P to Water System Control Station).
2. 53C, 3*6, 1*8G (Panel A, to Break Room Building).
3. 53C, 3*2, 2*10, 1*8G (Panel A to Vending Kiosk).
4. 53C, 4*8, 2*10, 1*10G (Area lights, Highway lights and Display Kiosk and Vending Kiosk exterior lights).
5. 27C, 4*12 (ckt A9, 11), 1*12G (TTY Telephone and Display Kiosk's phone lights & receptacle).
6. 4IC, 1 DLC for loop detector system.
7. For Loop Detector Installation details, see Standard Plans sheets RSP ES-5A, ES-5B and RSP ES-5D.
8. 4IC, MT (Telephone).
9. 2IC, 2*12, 1*12G (All).
10. 27C, MT (Telephone).
11. 53C, 2*8, 4*12 (ckt A7, 9), 1*12G (Area lights, Display Kiosk lights and Display Kiosk public telephone lights & receptacle).
12. (E) 35C, 3*12, Install 1*12, 1*12G and splice conductors inside the (E) light switch box at the Display Kiosk.
13. 53C, 4*8, 1*10G (Area lights and Highway lights).
14. 53C, 2*4, 2*8, 1*10G (Area lights and Highway lights).
15. 4IC, 2*8.

CALIFORNIA STATE FIRE MARSHAL APPROVED

Approval of this plan does not authorize or approve any omission or deviation from applicable regulations. Final approval is subject to field inspection. One set of approved plans shall be available on the project site at all times.

Reviewed by: MIKE TANAKA
Approval date: 4/9/2009
CSFM FILE NO. 01-45-11-0067

IDENTIFICATION STAMP
DIV. OF THE STATE ARCHITECT
SACRAMENTO REGIONAL OFFICE
02-108545
AC Antonio Florendo
ANTONIO FLORENDO
DATE 3-8-2007

	BY	CHECKED
DESIGN	Tommy F. Lee	J. S. Sandhu
DETAILS	Dali Zhou/TFL	Tommy F. Lee
QUANTITIES	Tommy F. Lee	J. S. Sandhu

STATE OF CALIFORNIA
DEPARTMENT OF TRANSPORTATION

DIVISION OF ENGINEERING SERVICES
ELECTRICAL-MECHANICAL-WATER AND WASTEWATER DESIGN

BRIDGE NO. 06R0001
KM POST

LAKEHEAD SAFETY ROADSIDE REST AREA UPGRADE AND ADDITION

MODIFIED SITE PLAN

SHEET **EE0-4**

DOS ELEC (10/98)
FILE => ee0_4.dgn
DATE PLOTTED => 28-JUL-2009 TIME PLOTTED => 14:46

ORIGINAL SCALE IN MILLIMETERS FOR REDUCED PLANS 0 10 20 30 40 50 60 70 80 90 100

CU 02305
EA 395801

DISREGARD PRINTS BEARING EARLIER REVISION DATES

REVISION DATES (PRELIMINARY STAGE ONLY) 11/28/05 5/28/06 8/28/06 11/28/06 3/28/07 4/14/09

SHEET OF

FILE => ee0_4.dgn

USERNAME => trlenard DATE PLOTTED => 28-JUL-2009 TIME PLOTTED => 14:46

VI=1

DIST.	COUNTY	ROUTE	KILOMETER POST TOTAL PROJECT	SHEET NO.	TOTAL SHEETS
02	Sha	5	R69.4	93	120

Jaswinder S Sandhu 4-14-09
REGISTERED ENGINEER-ELECTRICAL DATE

7-13-09
PLANS APPROVAL DATE

REGISTERED PROFESSIONAL ENGINEER J. S. SANDHU No. 11803 Exp. 9-30-10 ELEC STATE OF CALIFORNIA

The State of California or its officers or agents shall not be responsible for the accuracy or completeness of electronic copies of this plan sheet.

Caltrans Metric

IDENTIFICATION STAMP
DIV. OF THE STATE ARCHITECT
SACRAMENTO REGIONAL OFFICE
02-108545
AC Antonio Florendo
ANTONIO FLORENDO
DATE 3-8-2007

CALIFORNIA STATE FIRE MARSHAL
APPROVED
Approval of this plan does not authorize or approve any omission or deviation from applicable regulations. Final approval is subject to field inspection. One set of approved plans shall be available on the project site at all times.
Reviewed by: MIKE TANAKA
Approval date: 4/9/2009
CSFM FILE NO. 01-45-11-0067

General Note:

Remove all electrical equipment and accessories, conduit and conductors.

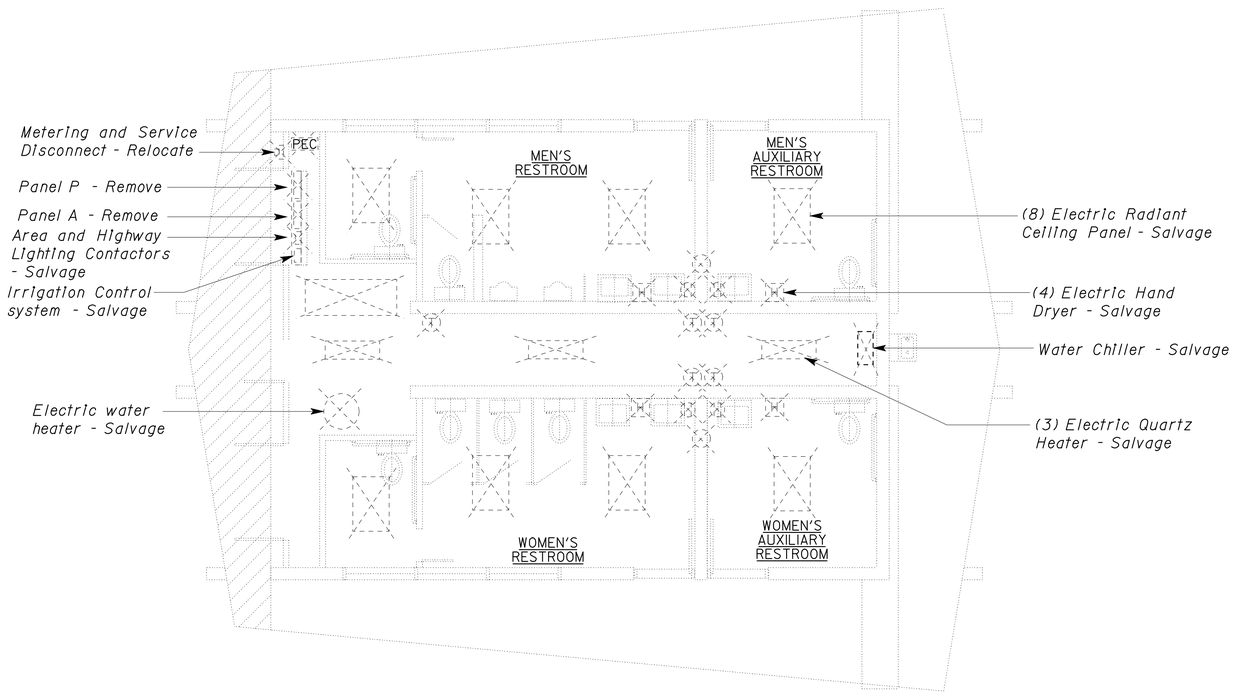

POWER

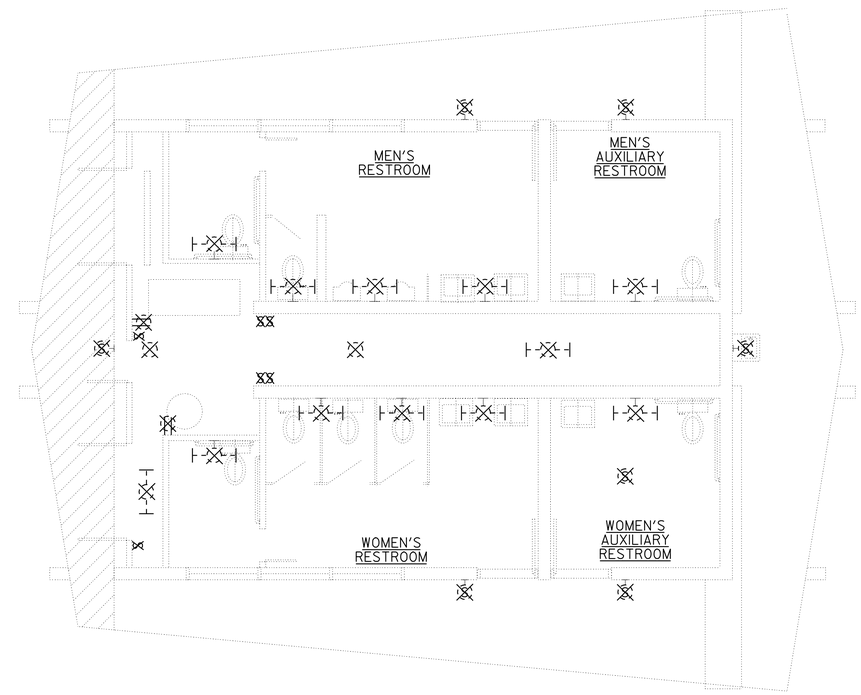

LIGHTING

PLAN
SCALE 1: 50

THIS PLAN IS ACCURATE FOR ELECTRICAL WORK ONLY.

ALL DIMENSIONS SHOWN IN MILLIMETERS, EXCEPT AS NOTED

	BY	CHECKED
DESIGN	Tommy F. Lee	J. S. Sandhu
DETAILS	Dall Zhou/TFL	Tommy F. Lee
QUANTITIES	Tommy F. Lee	J. S. Sandhu

STATE OF CALIFORNIA
DEPARTMENT OF TRANSPORTATION

DIVISION OF ENGINEERING SERVICES
ELECTRICAL-MECHANICAL-WATER AND WASTEWATER DESIGN

BRIDGE NO. 06R0001
KM POST

LAKEHEAD SAFETY ROADSIDE REST AREA UPGRADE AND ADDITION
COMFORT STATION
EXISTING POWER & LIGHTING PLAN

SHEET **EE1-1**

DOS ELEC (10/98)
FILE => ee1_01.dgn
DATE PLOTTED => 28-JUL-2009 TIME PLOTTED => 14:46

ORIGINAL SCALE IN MILLIMETERS FOR REDUCED PLANS 0 10 20 30 40 50 60 70 80 90 100

CU 02305
EA 395801

DISREGARD PRINTS BEARING EARLIER REVISION DATES

REVISION DATES (PRELIMINARY STAGE ONLY) 11/28/05 5/28/06 8/28/06 11/28/06 3/28/07 4/14/09

SHEET OF

FILE => ee1_01.dgn

USERNAME => trlenord DATE PLOTTED => 28-JUL-2009 TIME PLOTTED => 14:46

VI=1

DIST.	COUNTY	ROUTE	KILOMETER POST TOTAL PROJECT	SHEET NO.	TOTAL SHEETS
02	Sha	5	R69.4	94	120

IDENTIFICATION STAMP
DIV. OF THE STATE ARCHITECT
SACRAMENTO REGIONAL OFFICE
02-108545
AC ANTONIO FLORENDO
ANTONIO FLORENDO
DATE 3-8-2007

CALIFORNIA STATE FIRE MARSHAL
APPROVED
Approval of this plan does not authorize or approve any omission or deviation from applicable regulations. Final approval is subject to field inspection. One set of approved plans shall be available on the project site at all times.
Reviewed by: MIKE TANAKA
Approval date: 4/9/2009
CSFM FILE NO. 01-45-11-0067

Caltrans Metric

Jaswinder S Sandhu 4-14-09
REGISTERED ENGINEER-ELECTRICAL DATE
7-13-09
PLANS APPROVAL DATE

REGISTERED PROFESSIONAL ENGINEER
J. S. SANDHU
No. 11803
Exp. 9-30-10
ELEC
STATE OF CALIFORNIA

The State of California or its officers or agents shall not be responsible for the accuracy or completeness of electronic copies of this plan sheet.

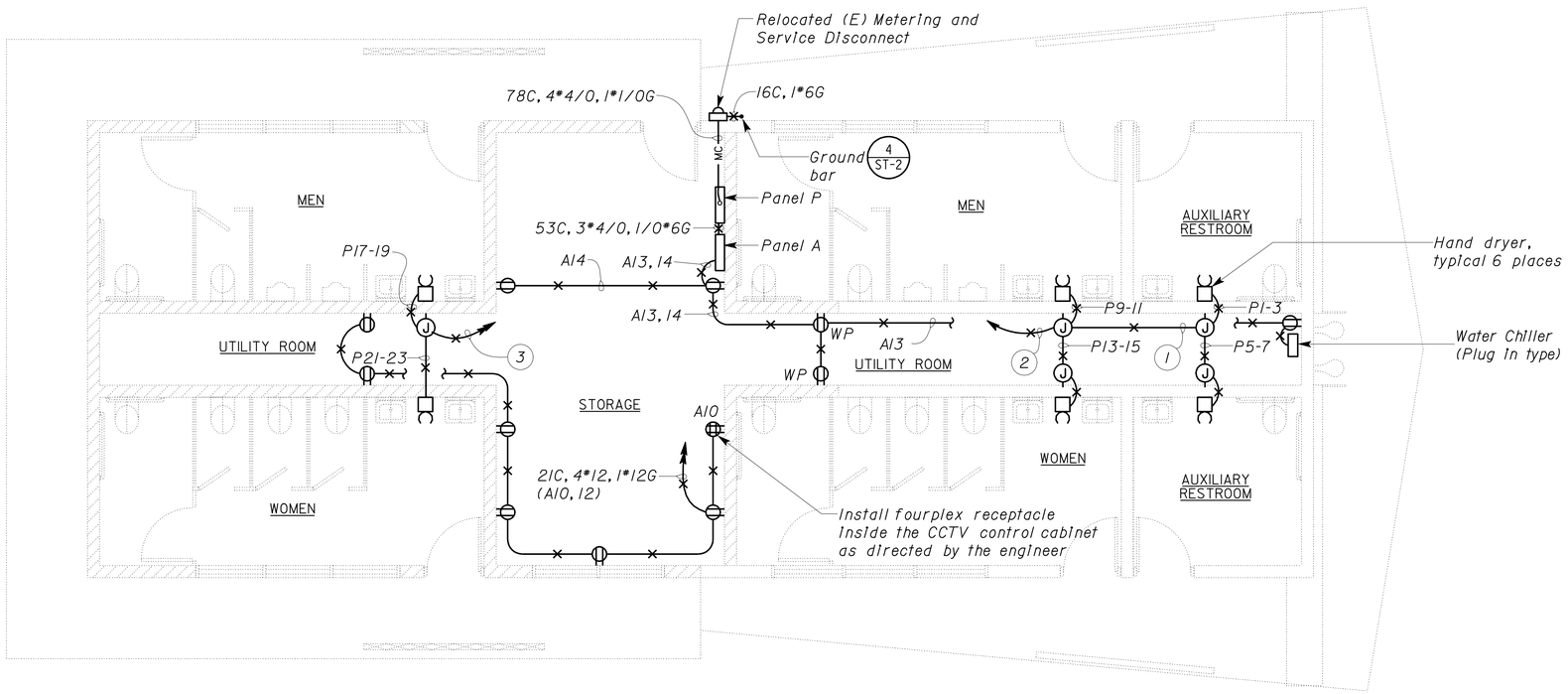

PLAN
Scale 1:50

Notes:

1. 2IC, 4*12, 1*12G (P1-3, 5-7).
2. 2IC, 8*12, 1*12G (P1-3, 5-7, 9-11, 13-15).
3. 2IC, 4*12, 1*12G (P17-19, 21-23).
4. For continuation, see sheet EE0-4.

THIS PLAN IS ACCURATE FOR ELECTRICAL WORK ONLY.

ALL DIMENSIONS SHOWN IN MILLIMETERS, EXCEPT AS NOTED

	BY	CHECKED
DESIGN	Tommy F. Lee	J. S. Sandhu
DETAILS	Dali Zhou/TFL	Tommy F. Lee
QUANTITIES	Tommy F. Lee	J. S. Sandhu

STATE OF CALIFORNIA
DEPARTMENT OF TRANSPORTATION

DIVISION OF ENGINEERING SERVICES
ELECTRICAL-MECHANICAL-WATER AND WASTEWATER DESIGN

BRIDGE NO. 06R0001
KM POST

LAKEHEAD SAFETY ROADSIDE REST AREA UPGRADE AND ADDITION
COMFORT STATION
MODIFIED POWER PLAN I

SHEET **EE1-2**

DOS ELEC (10/98)
FILE => ee1_02.dgn
DATE PLOTTED => 28-JUL-2009 TIME PLOTTED => 14:46
ORIGINAL SCALE IN MILLIMETERS FOR REDUCED PLANS 0 10 20 30 40 50 60 70 80 90 100
CU 02305
EA 395801
DISREGARD PRINTS BEARING EARLIER REVISION DATES
REVISION DATES (PRELIMINARY STAGE ONLY) 11/28/05 11/28/05 8/28/06 3/28/07 4/14/09
SHEET OF
FILE => ee1_02.dgn
USERNAME => trlenard DATE PLOTTED => 28-JUL-2009 TIME PLOTTED => 14:46
VI=1

DIST.	COUNTY	ROUTE	KILOMETER POST TOTAL PROJECT	SHEET NO.	TOTAL SHEETS
02	Sha	5	R69.4	95	120

IDENTIFICATION STAMP
DIV. OF THE STATE ARCHITECT
SACRAMENTO REGIONAL OFFICE
02-108545
AC Antonio Florendo
ANTONIO FLORENDO
DATE 3-8-2007

CALIFORNIA STATE FIRE MARSHAL
APPROVED
Approval of this plan does not authorize or approve any omission or deviation from applicable regulations. Final approval is subject to field inspection. One set of approved plans shall be available on the project site at all times.
Reviewed by: MIKE TANAKA
Approval date: 4/9/2009
CSFM FILE NO. 01-45-11-0067

Caltrans Metric

Jaswinder S Sandhu 4-14-09
REGISTERED ENGINEER-ELECTRICAL DATE
7-13-09
PLANS APPROVAL DATE

REGISTERED PROFESSIONAL ENGINEER
J. S. SANDHU
No. 11803
Exp. 9-30-10
ELEC
STATE OF CALIFORNIA

The State of California or its officers or agents shall not be responsible for the accuracy or completeness of electronic copies of this plan sheet.

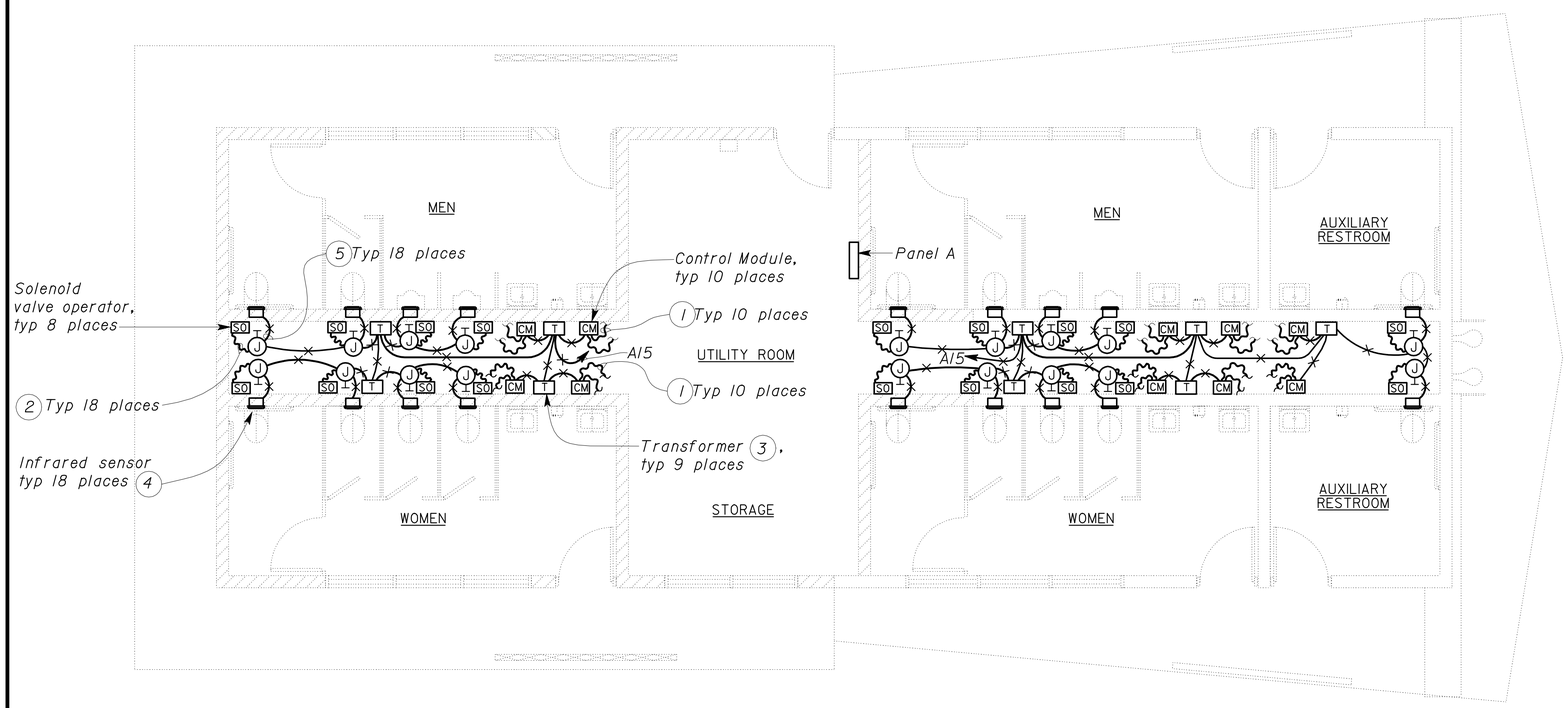

PLAN
Scale 1:50

General Notes:

A. Install and connect automatic flush system as recommended by manufacturer.

B. All devices and accessories for automatic flush system are supplied by water closet, urinal and faucet manufacturers.

C. Provide and install support systems for supporting armored cable as required.

D. Transformer supplied by the manufacturer shall be sized adequately to supply all units shown. (Example, 4 water closets powered by one transformer). Contractor has the option of installing one transformer per unit at no extra cost to the State.

E. Conduits and conductor system as shown is diagrammatic only. Exact system layout shall depend upon the particular automatic flush system installed.

F. Solenoid valve operators for the lavatory faucets and built-in infrared sensors at the lavatory faucets are not shown for clarity.

Notes:

1. Armored cable to infrared sensor at the faucet. Install armored cable through the PVC sleeve. For detail of PVC sleeve, see Architectural sheet, A4-5.
2. Armored cable to solenoid valve operator.
3. Provide and install all hardwares as required for the installation of the low voltage transformer as recommended by the manufacturer. Mount transformer in a surface mounted junction box.
4. Mount infrared sensor in a flush mounted junction box at a location recommended by the manufacturer. For details, see Architectural sheet, A4-5.
5. 16C, conductors as required for operation of infrared sensor and solenoid valve operator.

THIS PLAN IS ACCURATE FOR ELECTRICAL WORK ONLY.

ALL DIMENSIONS SHOWN IN MILLIMETERS, EXCEPT AS NOTED

	BY	CHECKED
DESIGN	Tommy F. Lee	J. S. Sandhu
DETAILS	Dali Zhou/TFL	Tommy F. Lee
QUANTITIES	Tommy F. Lee	J. S. Sandhu

STATE OF CALIFORNIA
DEPARTMENT OF TRANSPORTATION

DIVISION OF ENGINEERING SERVICES
ELECTRICAL-MECHANICAL-WATER AND WASTEWATER DESIGN

BRIDGE NO. 06R0001
KM POST

LAKEHEAD SAFETY ROADSIDE REST AREA UPGRADE AND ADDITION
COMFORT STATION
MODIFIED POWER PLAN 2

SHEET EE1-3

DOS ELEC (10/98)
FILE => ee1_03.dgn
DATE PLOTTED => 28-JUL-2009 TIME PLOTTED => 14:46
ORIGINAL SCALE IN MILLIMETERS FOR REDUCED PLANS 0 10 20 30 40 50 60 70 80 90 100
CU 02305
EA 395801
DISREGARD PRINTS BEARING EARLIER REVISION DATES
REVISION DATES (PRELIMINARY STAGE ONLY) 11/28/05 9/28/06 11/28/06 3/28/07 4/14/09
SHEET OF
FILE => ee1_03.dgn
USERNAME => trlenard DATE PLOTTED => 28-JUL-2009 TIME PLOTTED => 14:46
V1=1

DIST.	COUNTY	ROUTE	KILOMETER POST TOTAL PROJECT	SHEET NO.	TOTAL SHEETS
02	Sha	5	R69.4	96	120

Jaswinder S Sandhu 4-14-09
REGISTERED ENGINEER-ELECTRICAL DATE

7-13-09
PLANS APPROVAL DATE

REGISTERED PROFESSIONAL ENGINEER J. S. SANDHU No. 11803 Exp. 9-30-10 ELEC STATE OF CALIFORNIA

The State of California or its officers or agents shall not be responsible for the accuracy or completeness of electronic copies of this plan sheet.

Caltrans Metric

CALIFORNIA STATE FIRE MARSHAL
APPROVED
Approval of this plan does not authorize or approve any omission or deviation from applicable regulations. Final approval is subject to field inspection. One set of approved plans shall be available on the project site at all times.
Reviewed by: MIKE TANAKA
Approval date: 4/9/2009
CSFM FILE NO. 01-45-11-0067

Notes:

1. 150x150 mm sensor junction box with wire mesh cover for housing sensor. Secure sensor inside the box on insulator attached to the box. Solder #14 conductors or sensor cable conductors to sensor pigtails and provide heat shrinkable tubing over soldered splices. Mount the sensor 304 mm below the ceiling.
2. 2IC, 4#10, 1#10G, to P2-4, 6-8 via Heater Control Station.
3. 2IC, 2#10, 1#10G (P2-4 via Heater Control Station).
4. 2IC, 2#10, 1#10G (P6-8 via Heater Control Station).
5. 16C, 2#10, 1#10G (P18-20 via Heater Control Station).
6. 16C, 2#10, 1#10G (P22-24 via Heater Control Station).
7. 16C, temperature sensor and sensor conductors for Quartz Heaters.
8. 16C, temperature sensor and sensor conductors for Infrared Heater Ceiling Panels.
9. 16C, 4#10, 1#10G (P18-20, 22-24 via Heater Control Station).
10. 16C, two sensor cables to Heater Control Station.
11. 78C, MT. For continuation, see sheet EE0-4.
12. 2IC, MC, 4#10 (P2-4, 6-8), 2IC, MC, 4#10 (P18-20, 22-24), 16C, MC, 2#12, 1#12G (A6). Install junction box prior to splitting conduits to Panel A and P.

General Note:

A. For exact location of water heater, water chiller, Infrared Heater ceiling Panels and Quartz Heaters, see Mechanical sheets.

B. For Heater Control Station Schematic Diagram, see sheet EE1-8.

IDENTIFICATION STAMP
DIV. OF THE STATE ARCHITECT
SACRAMENTO REGIONAL OFFICE
02-108545
AC Antonio Florendo
ANTONIO FLORENDO
DATE 3-8-2007

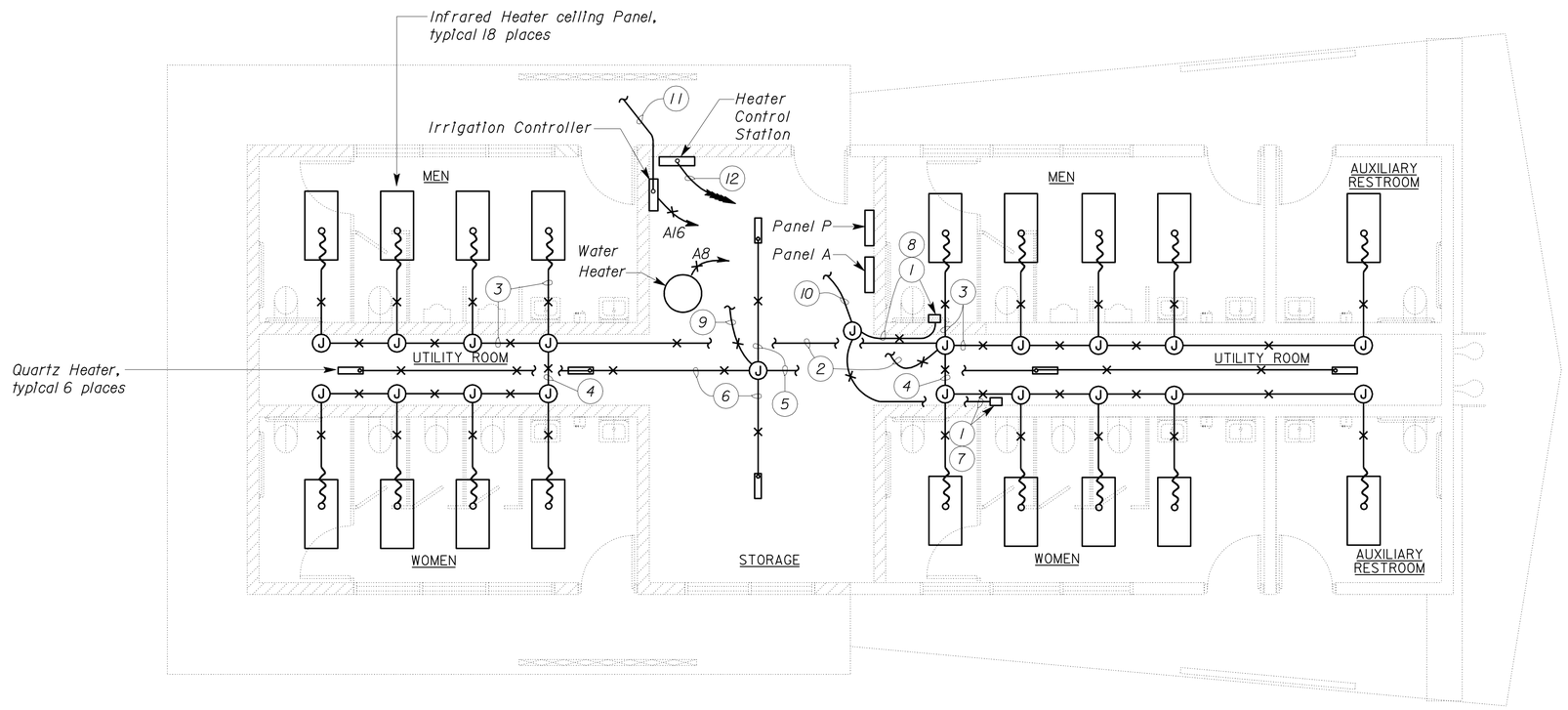

PLAN
Scale 1:50

THIS PLAN IS ACCURATE FOR ELECTRICAL WORK ONLY.

ALL DIMENSIONS SHOWN IN MILLIMETERS, EXCEPT AS NOTED

	BY	CHECKED
DESIGN	Tommy F. Lee	J. S. Sandhu
DETAILS	Dali Zhou/TFL	Tommy F. Lee
QUANTITIES	Tommy F. Lee	J. S. Sandhu

STATE OF CALIFORNIA
DEPARTMENT OF TRANSPORTATION

DIVISION OF ENGINEERING SERVICES
ELECTRICAL-MECHANICAL-WATER AND WASTEWATER DESIGN

BRIDGE NO. 06R0001
KM POST

LAKEHEAD SAFETY ROADSIDE REST AREA UPGRADE AND ADDITION
COMFORT STATION
MODIFIED POWER PLAN 3

SHEET EE1-4

DOS ELEC (10/98)
FILE => ee1_04.dgn
DATE PLOTTED => 28-JUL-2009 TIME PLOTTED => 14:46
ORIGINAL SCALE IN MILLIMETERS FOR REDUCED PLANS 0 10 20 30 40 50 60 70 80 90 100
CU 02305
EA 395801
FILE => ee1_04.dgn
DISREGARD PRINTS BEARING EARLIER REVISION DATES
REVISION DATES (PRELIMINARY STAGE ONLY) 11/28/05 5/28/06 9/28/06 11/28/06 3/28/07 4/14/09
SHEET OF

USERNAME => trlenard DATE PLOTTED => 28-JUL-2009 TIME PLOTTED => 14:46

VI=1

DIST.	COUNTY	ROUTE	KILOMETER POST TOTAL PROJECT	SHEET NO.	TOTAL SHEETS
02	Sha	5	R69.4	97	120

IDENTIFICATION STAMP
DIV. OF THE STATE ARCHITECT
SACRAMENTO REGIONAL OFFICE
02-108545
AC Antonio Florendo
ANTONIO FLORENDO
DATE 3-8-2007

CALIFORNIA STATE FIRE MARSHAL
APPROVED
Approval of this plan does not authorize or approve any omission or deviation from applicable regulations. Final approval is subject to field inspection. One set of approved plans shall be available on the project site at all times.
Reviewed by: MIKE TANAKA
Approval date: 4/9/2009
CSFM FILE NO. 01-45-11-0067

Caltrans Metric

Jaswinder S Sandhu 4-14-09
REGISTERED ENGINEER-ELECTRICAL DATE
7-13-09
PLANS APPROVAL DATE

REGISTERED PROFESSIONAL ENGINEER
J. S. SANDHU
No. 11803
Exp. 9-30-10
ELEC
STATE OF CALIFORNIA

The State of California or its officers or agents shall not be responsible for the accuracy or completeness of electronic copies of this plan sheet.

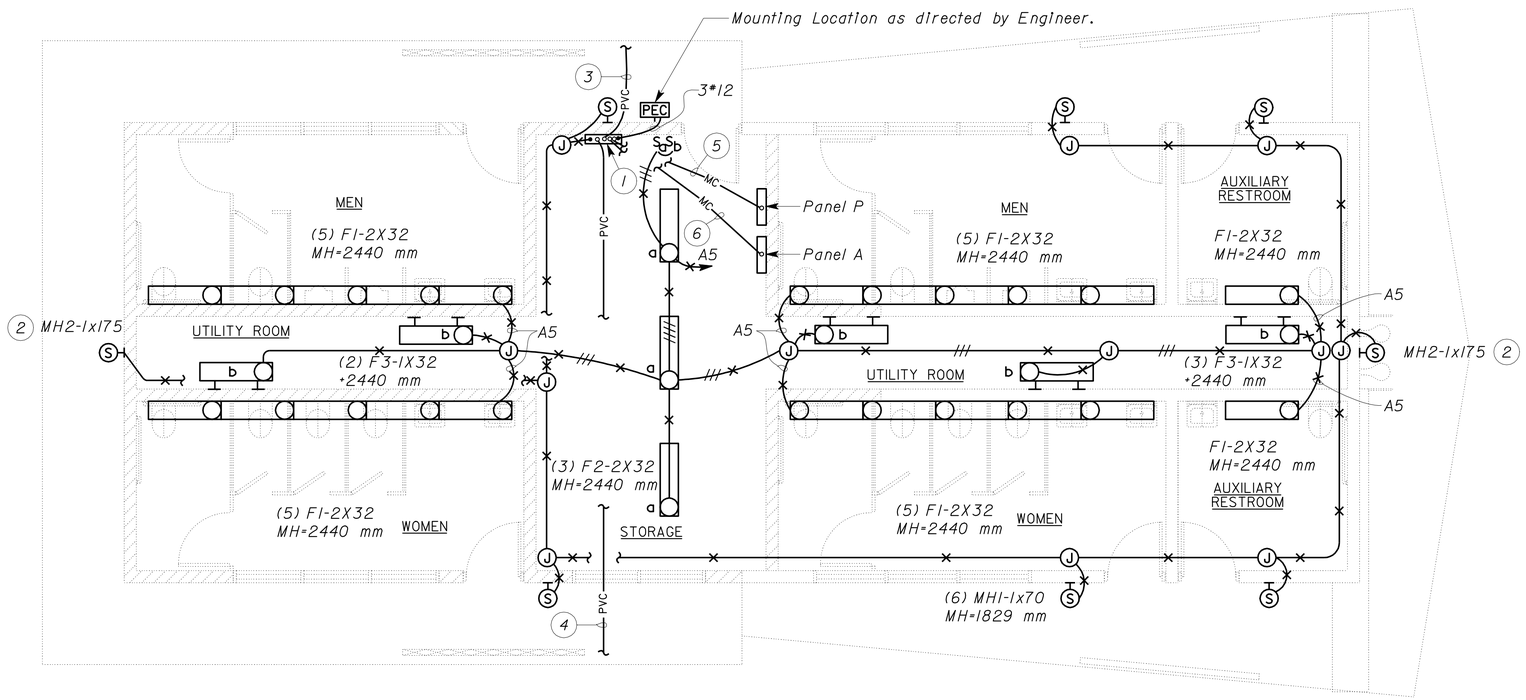

PLAN
Scale 1:50

Notes:

1. Lighting Control Station. For wiring, see sheet EE1-9.
2. See Architectural sheet for mounting height.
3. 53C, 4*8, 2*10, 1*10G (Area lights, Highway lights and Display Kiosk exterior lights). For continuation, see sheet EE0-4.
4. 53C, 2*4, 2*8, 1*10G (Area lights and Highway lights). For continuation, see sheet EE0-4.
5. 35C, 4*10, 2*12, 1*10G (P10-12, 14-16).
6. 16C, 2*12, 1*12G (A7).

THIS PLAN IS ACCURATE FOR ELECTRICAL WORK ONLY.

ALL DIMENSIONS SHOWN IN MILLIMETERS, EXCEPT AS NOTED

	BY	CHECKED
DESIGN	Tommy F. Lee	J. S. Sandhu
DETAILS	Dali Zhou/TFL	Tommy F. Lee
QUANTITIES	Tommy F. Lee	J. S. Sandhu

STATE OF CALIFORNIA
DEPARTMENT OF TRANSPORTATION

DIVISION OF ENGINEERING SERVICES
ELECTRICAL-MECHANICAL-WATER AND WASTEWATER DESIGN

BRIDGE NO. 06R0001
KM POST

LAKEHEAD SAFETY ROADSIDE REST AREA UPGRADE AND ADDITION
COMFORT STATION
MODIFIED LIGHTING PLAN

SHEET EE1-5

DOS ELEC (10/98)
FILE => ee1_05.dgn
DATE PLOTTED => 28-JUL-2009 TIME PLOTTED => 14:46
ORIGINAL SCALE IN MILLIMETERS FOR REDUCED PLANS 0 10 20 30 40 50 60 70 80 90 100
CU 02305
EA 395801
DISREGARD PRINTS BEARING EARLIER REVISION DATES
REVISION DATES (PRELIMINARY STAGE ONLY) 11/28/06 5/28/06 11/28/06 1/24/07 3/28/07 4/14/09
SHEET OF
FILE => ee1_05.dgn
USERNAME => trlenard DATE PLOTTED => 28-JUL-2009 TIME PLOTTED => 14:46
V1=1

DIST.	COUNTY	ROUTE	KILOMETER POST TOTAL PROJECT	SHEET NO.	TOTAL SHEETS
02	Sha	5	R69.4	98	120

Jaswinder S Sandhu 4-14-09
REGISTERED ENGINEER-ELECTRICAL DATE

7-13-09
PLANS APPROVAL DATE

REGISTERED PROFESSIONAL ENGINEER J. S. SANDHU No. 11803 Exp. 9-30-10 ELEC STATE OF CALIFORNIA

The State of California or its officers or agents shall not be responsible for the accuracy or completeness of electronic copies of this plan sheet.

IDENTIFICATION STAMP
DIV. OF THE STATE ARCHITECT
SACRAMENTO REGIONAL OFFICE
02-108545
AC Antonio Florendo
ANTONIO FLORENDO
DATE 3-8-2007

CALIFORNIA STATE FIRE MARSHAL
APPROVED
Approval of this plan does not authorize or approve any omission or deviation from applicable regulations. Final approval is subject to field inspection. One set of approved plans shall be available on the project site at all times.
Reviewed by: MIKE TANAKA
Approval date: 4/9/2009
CSFM FILE NO. 01-45-11-0067

Caltrans Metric

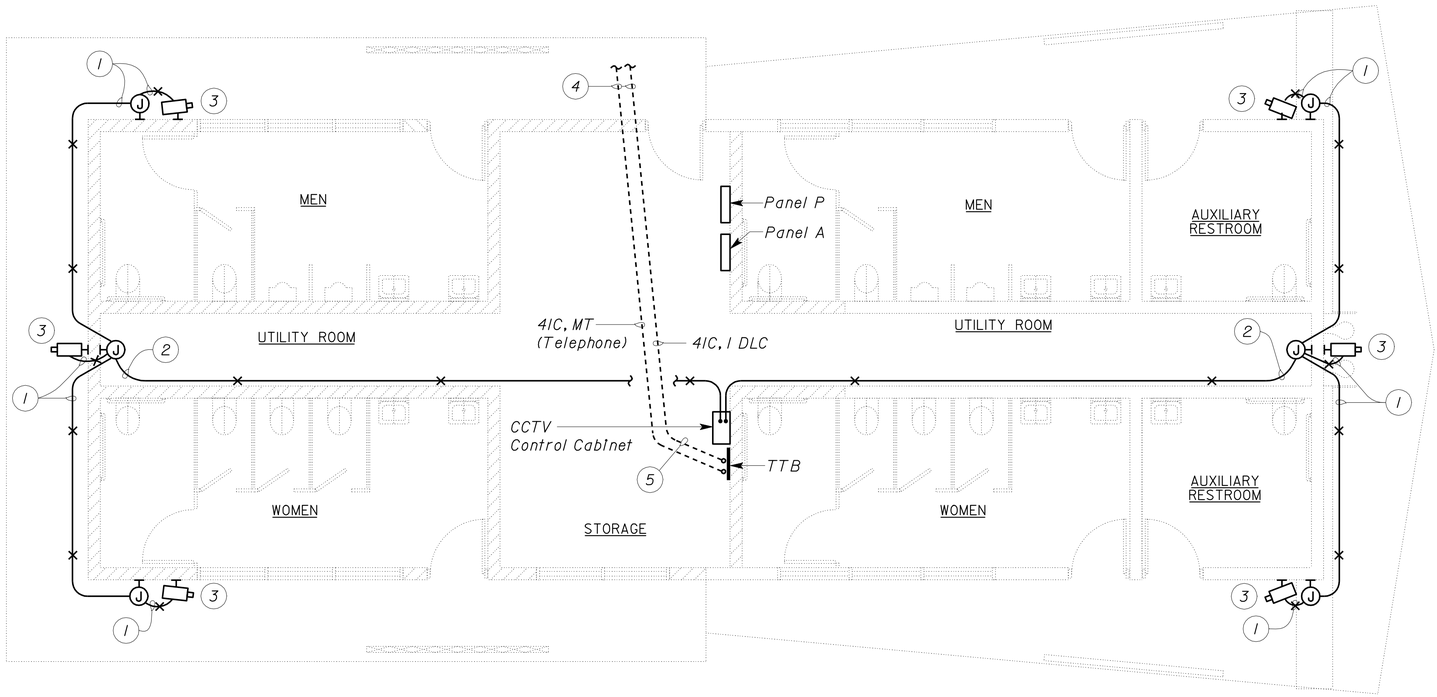

PLAN
Scale 1:50

General Notes:

A. *For interconnection of CCTV system, see sheet EE1-7.*
B. *For CCTV Control Cabinet, see Architect sheets.*

Notes:

1. *16C, 1 video cable, 2 power cables.*
2. *35C, 3 video cables and 6 power cables.*
3. *Mount camera per manufacturer's recommendations and as directed by the Engineer in the field.*
4. *For continuation, see sheet EE0-4.*
5. *Provide 1.5 meter of extra length of DLC cable and coil cable for future hook up.*

THIS PLAN IS ACCURATE FOR ELECTRICAL WORK ONLY.

ALL DIMENSIONS SHOWN IN MILLIMETERS, EXCEPT AS NOTED

	BY	CHECKED
DESIGN	Tommy F. Lee	J. S. Sandhu
DETAILS	Dali Zhou/TFL	Tommy F. Lee
QUANTITIES	Tommy F. Lee	J. S. Sandhu

STATE OF CALIFORNIA
DEPARTMENT OF TRANSPORTATION

DIVISION OF ENGINEERING SERVICES
ELECTRICAL-MECHANICAL-WATER AND WASTEWATER DESIGN

BRIDGE NO. 06R0001
KM POST

LAKEHEAD SAFETY ROADSIDE REST AREA UPGRADE AND ADDITION
COMFORT STATION
CCTV SYSTEM

SHEET **EE1-6**

DOS ELEC (10/98)
FILE => ee1_06.dgn
DATE PLOTTED => 28-JUL-2009 TIME PLOTTED => 14:47
ORIGINAL SCALE IN MILLIMETERS FOR REDUCED PLANS 0 10 20 30 40 50 60 70 80 90 100
CU 02305
EA 395801
FILE => ee1_06.dgn
DISREGARD PRINTS BEARING EARLIER REVISION DATES
REVISION DATES (PRELIMINARY STAGE ONLY) 1/22/06 5/22/06 8/28/06 9/28/06 11/22/06 3/28/07 4/14/09
SHEET OF

USERNAME => trlenard DATE PLOTTED => 28-JUL-2009 TIME PLOTTED => 14:47

V1=1

DIST.	COUNTY	ROUTE	KILOMETER POST TOTAL PROJECT	SHEET NO.	TOTAL SHEETS
02	Sha	5	R69.4	99	120

IDENTIFICATION STAMP
DIV. OF THE STATE ARCHITECT
SACRAMENTO REGIONAL OFFICE
02-108545
AC Antonio Florendo
ANTONIO FLORENDO
DATE 3-8-2007

CALIFORNIA STATE FIRE MARSHAL
APPROVED
Approval of this plan does not authorize or approve any omission or deviation from applicable regulations. Final approval is subject to field inspection. One set of approved plans shall be available on the project site at all times.
Reviewed by: MIKE TANAKA
Approval date: 4/9/2009
CSFM FILE NO. 01-45-11-0067

Caltrans Metric

Jaswinder S Sandhu 4-14-09
REGISTERED ENGINEER-ELECTRICAL DATE
7-13-09
PLANS APPROVAL DATE
REGISTERED PROFESSIONAL ENGINEER J. S. SANDHU No. 11803 Exp. 9-30-10 ELEC STATE OF CALIFORNIA

The State of California or its officers or agents shall not be responsible for the accuracy or completeness of electronic copies of this plan sheet.

General Notes:

A. DC power cable is for camera power.

B. AC power cable is for heater and fan for camera.

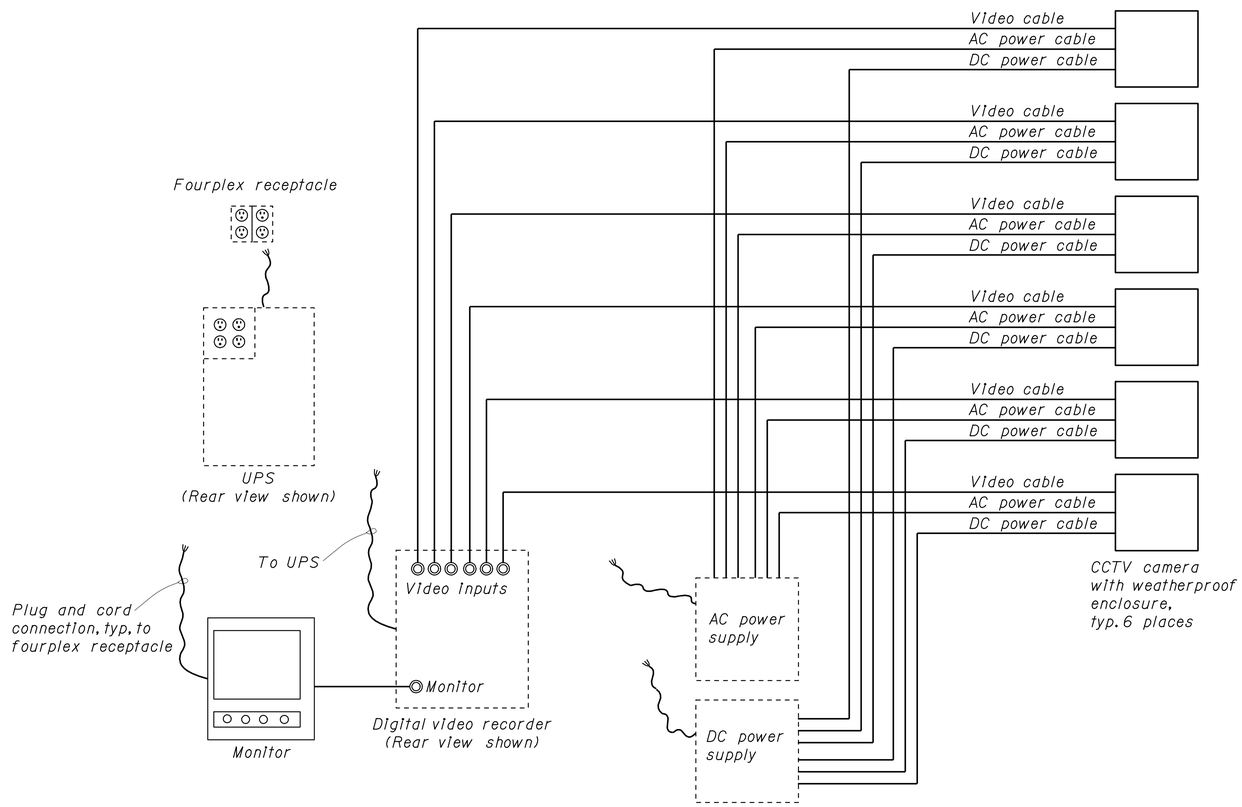

CCTV SYSTEM BLOCK DIAGRAM

No Scale

THIS PLAN IS ACCURATE FOR ELECTRICAL WORK ONLY.

	BY	CHECKED
DESIGN	Tommy F. Lee	J. S. Sandhu
DETAILS	Dali Zhou/TFL	Tommy F. Lee
QUANTITIES	Tommy F. Lee	J. S. Sandhu

STATE OF CALIFORNIA
DEPARTMENT OF TRANSPORTATION

DIVISION OF ENGINEERING SERVICES
ELECTRICAL-MECHANICAL-WATER AND WASTEWATER DESIGN

BRIDGE NO. 06R0001
KM POST

LAKEHEAD SAFETY ROADSIDE REST AREA UPGRADE AND ADDITION
COMFORT STATION
CCTV SYSTEM BLOCK DIAGRAM

SHEET **EE1-7**

DOS ELEC (10/98)
FILE => ee1_07.dgn
DATE PLOTTED => 28-JUL-2009 TIME PLOTTED => 14:47
ORIGINAL SCALE IN MILLIMETERS FOR REDUCED PLANS 0 10 20 30 40 50 60 70 80 90 100
CU 02305
EA 395801
DISREGARD PRINTS BEARING EARLIER REVISION DATES
REVISION DATES (PRELIMINARY STAGE ONLY) 1/23/06 5/28/06 3/28/07 4/14/09
SHEET OF
FILE => ee1_07.dgn

USERNAME => trlenord DATE PLOTTED => 28-JUL-2009 TIME PLOTTED => 14:47

VI=1

DIST.	COUNTY	ROUTE	KILOMETER POST TOTAL PROJECT	SHEET NO.	TOTAL SHEETS
02	Sha	5	R69.4	100	120

IDENTIFICATION STAMP
DIV. OF THE STATE ARCHITECT
SACRAMENTO REGIONAL OFFICE
02-108545
AC ANTONIO FLORENDO
ANTONIO FLORENDO
DATE 3-8-2007

CALIFORNIA STATE FIRE MARSHAL
APPROVED
Approval of this plan does not authorize or approve any omission or deviation from applicable regulations. Final approval is subject to field inspection. One set of approved plans shall be available on the project site at all times.
Reviewed by: MIKE TANAKA
Approval date: 4/9/2009
CSFM FILE NO. 01-45-11-0067

Caltrans Metric

Jaswinder S Sandhu 4-14-09
REGISTERED ENGINEER-ELECTRICAL DATE
7-13-09
PLANS APPROVAL DATE

REGISTERED PROFESSIONAL ENGINEER
J. S. SANDHU
No. 11803
Exp. 9-30-10
ELEC
STATE OF CALIFORNIA

The State of California or its officers or agents shall not be responsible for the accuracy or completeness of electronic copies of this plan sheet.

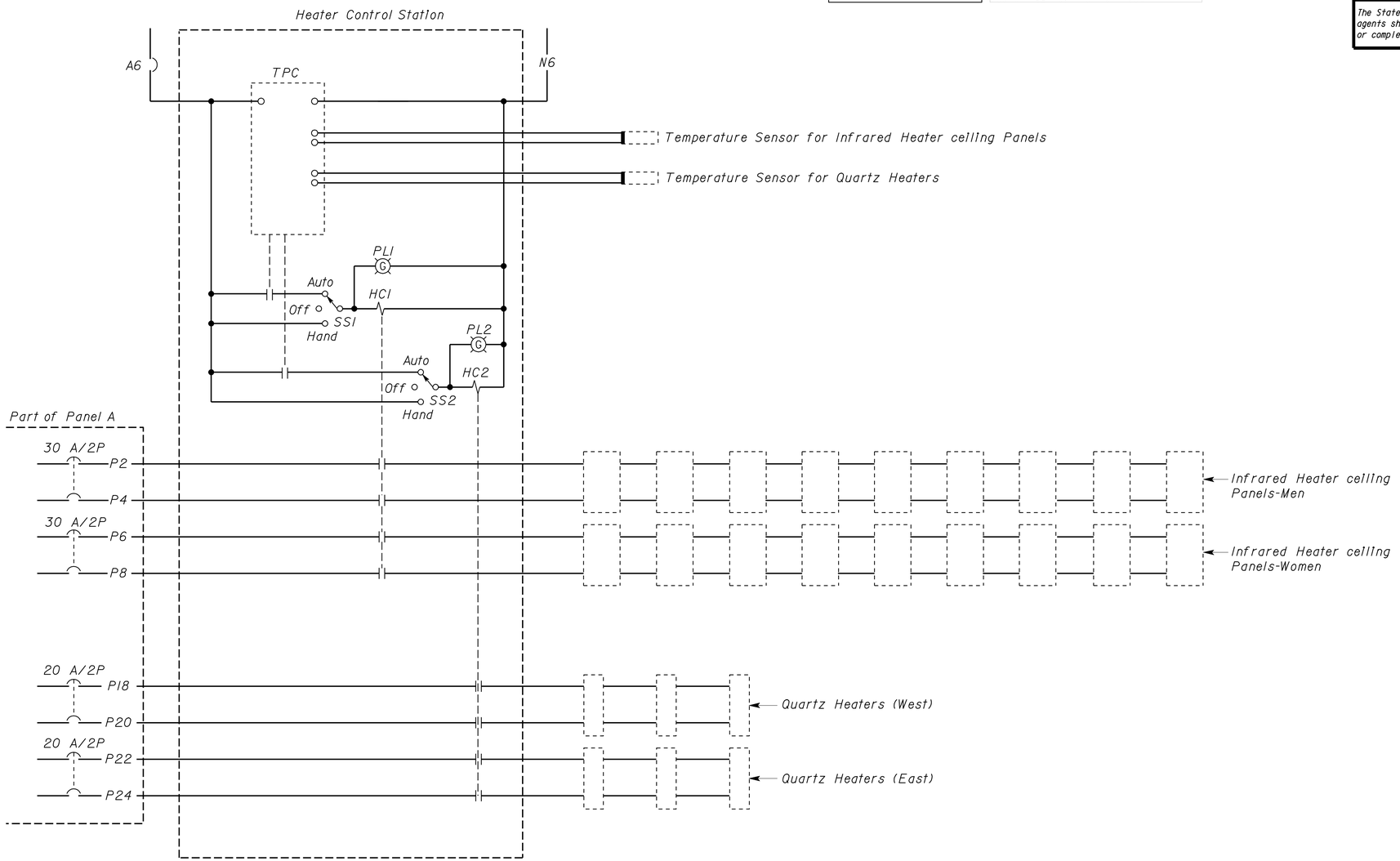

HEATER CONTROL STATION SCHEMATIC DIAGRAM

NO SCALE

Provide power distribution type terminal block for terminating all field conductors.
For size and number of field conductors, see modified site plan.

THIS PLAN IS ACCURATE FOR ELECTRICAL WORK ONLY.

	BY	CHECKED
DESIGN	Tommy F. Lee	J. S. Sandhu
DETAILS	Dali Zhou/TFL	Tommy F. Lee
QUANTITIES	Tommy F. Lee	J. S. Sandhu

STATE OF CALIFORNIA
DEPARTMENT OF TRANSPORTATION

DIVISION OF ENGINEERING SERVICES
ELECTRICAL-MECHANICAL-WATER AND WASTEWATER DESIGN

BRIDGE NO. 06R0001
KM POST

LAKEHEAD SAFETY ROADSIDE REST AREA UPGRADE AND ADDITION
HEATER CONTROL STATION SCHEMATIC DIAGRAM

SHEET **EE1-8**

DOS ELEC (10/98)
FILE => ee1_08.dgn
DATE PLOTTED => 28-JUL-2009 TIME PLOTTED => 14:47
ORIGINAL SCALE IN MILLIMETERS FOR REDUCED PLANS 0 10 20 30 40 50 60 70 80 90 100
CU 02305
EA 395801
DISREGARD PRINTS BEARING EARLIER REVISION DATES
REVISION DATES (PRELIMINARY STAGE ONLY) 1/23/06 8/28/06 11/28/06 3/28/07 4/14/09
SHEET OF
FILE => ee1_08.dgn
USERNAME => trlenard DATE PLOTTED => 28-JUL-2009 TIME PLOTTED => 14:47
VI=I

IDENTIFICATION STAMP
DIV. OF THE STATE ARCHITECT
SACRAMENTO REGIONAL OFFICE
02-108545
AC Antonio Florendo
ANTONIO FLORENDO
DATE 3-8-2007

CALIFORNIA STATE FIRE MARSHAL
APPROVED
Approval of this plan does not authorize or approve any omission or deviation from applicable regulations. Final approval is subject to field inspection. One set of approved plans shall be available on the project site at all times.
Reviewed by: MIKE TANAKA
Approval date: 4/9/2009
CSFM FILE NO. 01-45-11-0067

Caltrans Metric

DIST.	COUNTY	ROUTE	KILOMETER POST TOTAL PROJECT	SHEET NO.	TOTAL SHEETS
02	Sha	5	R69.4	101	120

Jaswinder S Sandhu 4-14-09
REGISTERED ENGINEER-ELECTRICAL DATE
7-13-09
PLANS APPROVAL DATE
REGISTERED PROFESSIONAL ENGINEER J. S. SANDHU No. 11803 Exp. 9-30-10 ELEC STATE OF CALIFORNIA

The State of California or its officers or agents shall not be responsible for the accuracy or completeness of electronic copies of this plan sheet.

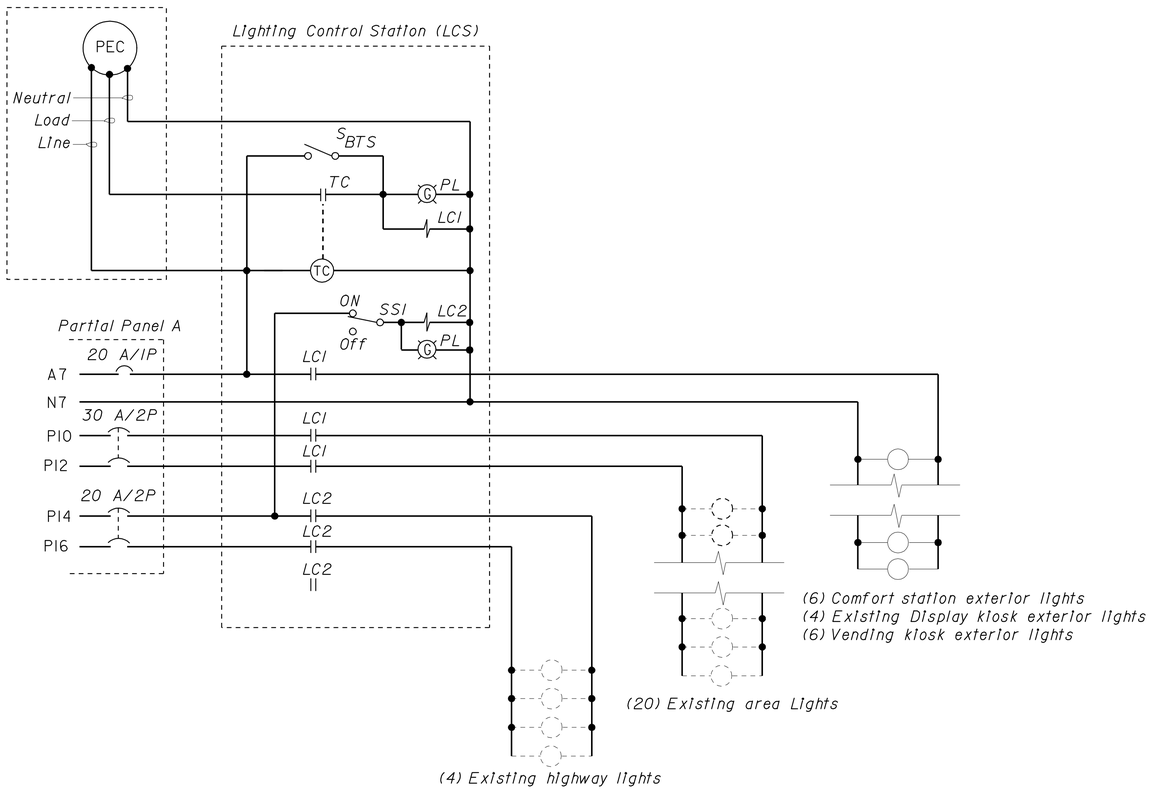

LIGHTING CONTROL STATION (LCS)

No Scale

Provide power distribution type terminal block for terminating all field conductors.
For size and number of field conductors, see modified site plan.

THIS PLAN IS ACCURATE FOR ELECTRICAL WORK ONLY.

	BY	CHECKED
DESIGN	Tommy F. Lee	J. S. Sandhu
DETAILS	Dali Zhou/TFL	Tommy F. Lee
QUANTITIES	Tommy F. Lee	J. S. Sandhu

STATE OF CALIFORNIA
DEPARTMENT OF TRANSPORTATION

DIVISION OF ENGINEERING SERVICES
ELECTRICAL-MECHANICAL-WATER AND WASTEWATER DESIGN

BRIDGE NO. 06R0001
KM POST

LAKEHEAD SAFETY ROADSIDE REST AREA UPGRADE AND ADDITION
LIGHTING CONTROL STATION
SCHEMATIC DIAGRAM

SHEET **EE1-9**

DOS ELEC (10/98)
FILE => ee1_09.dgn
DATE PLOTTED => 28-JUL-2009 TIME PLOTTED => 14:47
ORIGINAL SCALE IN MILLIMETERS FOR REDUCED PLANS 0 10 20 30 40 50 60 70 80 90 100
CU 02305
EA 395801
DISREGARD PRINTS BEARING EARLIER REVISION DATES
REVISION DATES (PRELIMINARY STAGE ONLY) 1/23/06 9/28/06 11/27/06 3/28/07 4/14/09
SHEET OF
FILE => ee1_09.dgn
USERNAME => trlenard DATE PLOTTED => 28-JUL-2009 TIME PLOTTED => 14:47
VI=1

DIST.	COUNTY	ROUTE	KILOMETER POST TOTAL PROJECT	SHEET NO.	TOTAL SHEETS
02	Sha	5	R69.4	102	120

IDENTIFICATION STAMP
DIV. OF THE STATE ARCHITECT
SACRAMENTO REGIONAL OFFICE
02-108545
AC ANTONIO FLORENDO
ANTONIO FLORENDO
DATE 3-8-2007

CALIFORNIA STATE FIRE MARSHAL
APPROVED
Approval of this plan does not authorize or approve any omission or deviation from applicable regulations. Final approval is subject to field inspection. One set of approved plans shall be available on the project site at all times.
Reviewed by: MIKE TANAKA
Approval date: 4/9/2009
CSFM FILE NO. 01-45-11-0067

Caltrans Metric

Jaswinder S Sandhu 4-14-09
REGISTERED ENGINEER-ELECTRICAL DATE
7-13-09
PLANS APPROVAL DATE

REGISTERED PROFESSIONAL ENGINEER
J. S. SANDHU
No. 11803
Exp. 9-30-10
ELEC
STATE OF CALIFORNIA

The State of California or its officers or agents shall not be responsible for the accuracy or completeness of electronic copies of this plan sheet.

MAIN LUGS: 225 A
VOLTS: 120/240V, THREE-PHASE, 4-WIRE

PANEL P

FEEDER SIZE: 4#4/0, 1#1/0G
LOCATION: COMFORT STATION

DESCRIPTION	AMPERES A	AMPERES B	AMPERES C	BRK	CKT	A B C	CKT	BRK	AMPERES A	AMPERES B	AMPERES C	DESCRIPTION
HAND DRIER - UNISEX SOUTH	8			15/2	1		2	30/2	14			INFRARED HEATER CEILING PANELS-MEN
		8			3		4			14		
HAND DRIER - UNISEX NORTH			8	15/2	5		6	30/2			14	INFRARED HEATER CEILING PANELS-WOMEN
	8				7		8		14			
HAND DRIER - MEN'S WEST		8		15/2	9		10	30/2		20		AREA LIGHTING
			8		11		12				20	
HAND DRIER - WOMEN'S WEST	8			15/2	13		14	20/2	4			HIGHWAY LIGHTING
		8			15		16			4		
HAND DRIER - MEN'S EAST			8	15/2	17		18	20/2			7	QUARTZ HEATERS (WEST)
	8				19		20		7			
HAND DRIER - WOMEN'S EAST		8		15/2	21		22	20/2		7		QUARTZ HEATERS (EAST)
			8		23		24				7	
WATER SYSTEM CONTROL STATION	50			80/3	25		26	20/3	-			
		50			27		28			-		SPARE
			50		29		30				-	
SPACE					31		32	20/2	-			SPARE
					33		34			-		
					35		36					SPACE

225 AMPERE SUB-FEED LUGS

A	B	C	
121	127	130	TOTAL CONNECTED LOAD (AMPERES PER PHASE)

MAIN: 175 A CB
VOLTS: 120/240 V, SINGLE-PHASE, THREE WIRE

PANEL A

FEEDER SIZE: 3#4/0, 1#1/0G
LOCATION: COMFORT STATION

DESCRIPTION	AMPERES A	AMPERES C	BRK	CKT	A C	CKT	BRK	AMPERES A	AMPERES C	DESCRIPTION
PANEL B	39		60/2	1		2	100/2	63		PANEL V
		38		3		4			60	
INTERIOR LIGHTS	13		20/1	5		6	20/1	5		HEATER CONTROL CABINET
EXT. LIGHTS-COMFORT,VENDING,DISPLAY KIOSK		15		7		8			13	ELECTRIC WATER
DISPLAY KIOSK'S TEL. LIGHTS & RECP.	2			9		10		6		CCTV CABINET
TTY PUBLIC TELEPHONE		3		11		12			9	RECEPTACLES (EAST)
CHILLER	9			13		14		6		RECEPTACLES (WEST)
LOW VOLTAGE TRANSFORMER		5		15		16			-	IRRIGATION CONTROLLER
SPACE				17		18				SPACE
				19		20				

A	C	
143	143	TOTAL CONNECTED LOAD (AMPERES PER PHASE)

THIS PLAN IS ACCURATE FOR ELECTRICAL WORK ONLY.

DESIGN	BY Tommy F. Lee	CHECKED J. S. Sandhu
DETAILS	BY Dall Zhou/TFL	CHECKED Tommy F. Lee
QUANTITIES	BY Tommy F. Lee	CHECKED J. S. Sandhu

STATE OF CALIFORNIA
DEPARTMENT OF TRANSPORTATION

DIVISION OF ENGINEERING SERVICES
ELECTRICAL-MECHANICAL-WATER AND WASTEWATER DESIGN

BRIDGE NO. 06R0001
KM POST

LAKEHEAD SAFETY ROADSIDE REST AREA UPGRADE AND ADDITION
PANEL SCHEDULES

SHEET EE1-10

DOS ELEC (10/98)
FILE => ee1_10.dgn
DATE PLOTTED => 28-JUL-2009 TIME PLOTTED => 14:47
ORIGINAL SCALE IN MILLIMETERS FOR REDUCED PLANS 0 10 20 30 40 50 60 70 80 90 100
CU 02305
EA 395801
DISREGARD PRINTS BEARING EARLIER REVISION DATES
REVISION DATES (PRELIMINARY STAGE ONLY) 1/27/06 8/28/06 3/28/07 4/14/09
SHEET OF
FILE => ee1_10.dgn
USERNAME => trlenard DATE PLOTTED => 28-JUL-2009 TIME PLOTTED => 14:47
V|=|

DIST.	COUNTY	ROUTE	KILOMETER POST TOTAL PROJECT	SHEET NO.	TOTAL SHEETS
02	Sha	5	R69.4	103	120

IDENTIFICATION STAMP
DIV. OF THE STATE ARCHITECT
SACRAMENTO REGIONAL OFFICE
02-108545
AC ANTONIO FLORENDO
ANTONIO FLORENDO
DATE 3-8-2007

CALIFORNIA STATE FIRE MARSHAL
APPROVED
Approval of this plan does not authorize or approve any omission or deviation from applicable regulations. Final approval is subject to field inspection. One set of approved plans shall be available on the project site at all times.
Reviewed by: MIKE TANAKA
Approval date: 4/9/2009
CSFM FILE NO. 01-45-11-0067

Caltrans Metric

Jaswinder S Sandhu 4-14-09
REGISTERED ENGINEER-ELECTRICAL DATE
7-13-09
PLANS APPROVAL DATE

REGISTERED PROFESSIONAL ENGINEER
J. S. SANDHU
No. 11803
Exp. 9-30-10
ELEC
STATE OF CALIFORNIA

The State of California or its officers or agents shall not be responsible for the accuracy or completeness of electronic copies of this plan sheet.

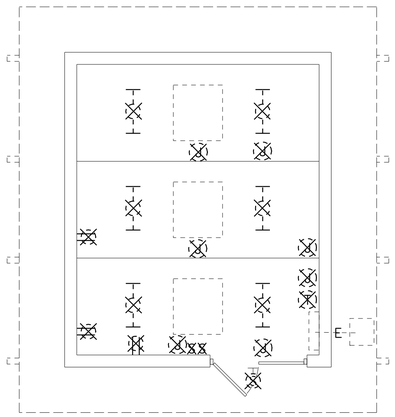

EXISTING

General Note:

A. Remove all existing electrical equipment and accessories, conduit and conductors.

B. For exact location of split ductless A/C and Heat pump system and wall heater, see Mechanical sheets.

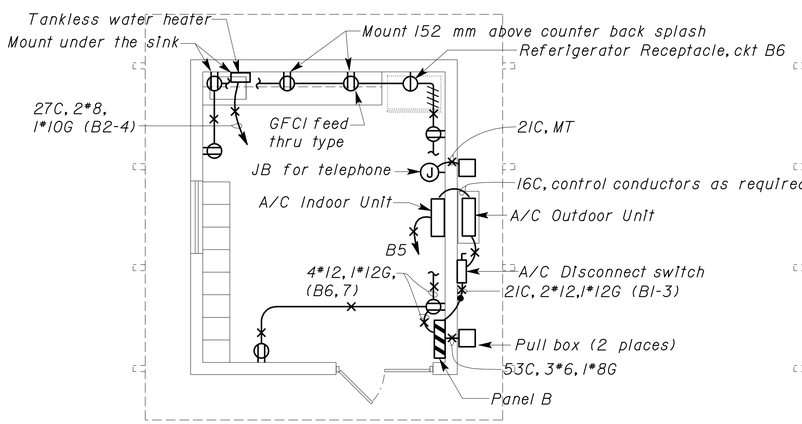

POWER

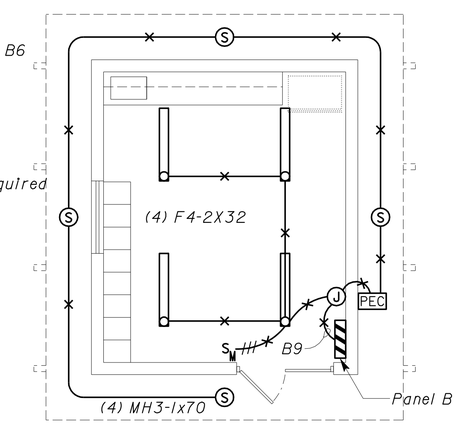

LIGHTING

MODIFIED

PLAN
Scale 1 : 50

MAIN: 60 A/2P CB
VOLTS: 120/240, SINGLE PHASE, 3-WIRE

PANEL B

FEEDER SIZE: 3*6, 1*8G
LOCATION: CREW BREAK ROOM

DESCRIPTION	AMPERES A	AMPERES C	BRK	CKT	A	C	CKT	BRK	AMPERES A	AMPERES C	DESCRIPTION
A/C OUTDOOR UNIT	9		20/2	1	●		2	40/2	20		TANKLESS WATER HEATER
		9		3		●	4			20	
A/C INDOOR UNIT	1		15/1	5	●		6	20/1	5		REFRIGERATOR
RECEPTACLES		9	20/1	7		●	8	20/1		-	SPARE
INDOOR/OUTDOOR LIGHTS	4		20/1	9	●		10				SPACE
SPARE		-	20/1	11		●	12				SPACE

A	C	
39	38	TOTAL CONNECTED LOAD (AMPERES PER PHASE)

THIS PLAN IS ACCURATE FOR ELECTRICAL WORK ONLY.

ALL DIMENSIONS SHOWN IN MILLIMETERS, EXCEPT AS NOTED

	BY	CHECKED
DESIGN	Tommy F. Lee	J. S. Sandhu
DETAILS	Dali Zhou/TFL	Tommy F. Lee
QUANTITIES	Tommy F. Lee	J. S. Sandhu

STATE OF CALIFORNIA
DEPARTMENT OF TRANSPORTATION

DIVISION OF ENGINEERING SERVICES
ELECTRICAL-MECHANICAL-WATER AND WASTEWATER DESIGN

BRIDGE NO. 06R0001
KM POST

LAKEHEAD SAFETY ROADSIDE REST AREA UPGRADE AND ADDITION
BREAK ROOM BUILDING
POWER AND LIGHTING PLAN

SHEET **EE2-1**

DISREGARD PRINTS BEARING EARLIER REVISION DATES →
REVISION DATES (PRELIMINARY STAGE ONLY): 1/23/06 5/23/06 8/23/06 9/23/06 11/22/06 3/28/07 4/14/09
SHEET OF

DOS ELEC (10/98)
FILE => ee2_1.dgn
DATE PLOTTED => 28-JUL-2009 TIME PLOTTED => 14:47
ORIGINAL SCALE IN MILLIMETERS FOR REDUCED PLANS 0 10 20 30 40 50 60 70 80 90 100
CU 02305
EA 395801
FILE => ee2_1.dgn

USERNAME => trlenard DATE PLOTTED => 28-JUL-2009 TIME PLOTTED => 14:47

VI=1

DIST.	COUNTY	ROUTE	KILOMETER POST TOTAL PROJECT	SHEET NO.	TOTAL SHEETS
02	Sha	5	R69.4	104	120

IDENTIFICATION STAMP
DIV. OF THE STATE ARCHITECT
SACRAMENTO REGIONAL OFFICE
02-108545
AC ANTONIO FLORENDO
ANTONIO FLORENDO
DATE 3-8-2007

CALIFORNIA STATE FIRE MARSHAL
APPROVED
Approval of this plan does not authorize or approve any omission or deviation from applicable regulations. Final approval is subject to field inspection. One set of approved plans shall be available on the project site at all times.
Reviewed by: MIKE TANAKA
Approval date: 4/9/2009
CSFM FILE NO. 01-45-11-0067

Caltrans Metric

Jaswinder S Sandhu 4-14-09
REGISTERED ENGINEER-ELECTRICAL DATE
7-13-09
PLANS APPROVAL DATE
REGISTERED PROFESSIONAL ENGINEER J. S. SANDHU No. 11803 Exp. 9-30-10 ELEC STATE OF CALIFORNIA

The State of California or its officers or agents shall not be responsible for the accuracy or completeness of electronic copies of this plan sheet.

MAIN: 100 A/2P CB
VOLTS: 120/240 V, SINGLE-PHASE, THREE WIRE

PANEL V

FEEDER SIZE: 3#2, 1#6G
LOCATION: VENDING KIOSK

DESCRIPTION	AMPERES A	AMPERES C	BRK	CKT	A C	CKT	BRK	AMPERES A	AMPERES C	DESCRIPTION
RECP - VENDING MACHINE #1	10		20/1	1		2	20/1	10		RECP - VENDING MACHINE #7
RECP - VENDING MACHINE #2		10		3		4			10	RECP - VENDING MACHINE #8
RECP - VENDING MACHINE #3	10			5		6		10		RECP - VENDING MACHINE #9
RECP - VENDING MACHINE #4		10		7		8			10	RECP - VENDING MACHINE #10
RECP - VENDING MACHINE #5	10			9		10		10		RECP - VENDING MACHINE #11
RECP - VENDING MACHINE #6		10		11		12			10	RECP - VENDING MACHINE #12
LIGHT - INTERIOR	1			13		14		2		RECP - CHANGE MACHINE
SPARE		-		15		16			-	SPARE
SPACE				17		18				SPACE
				19		20				

A	C	
63	60	TOTAL CONNECTED LOAD (AMPERES PER PHASE)

Notes:

1. *2IC, 4#12, 1#12G*
2. *53C, 3#2, 2#10, 1#8G. For continuation, see sheet EEO-4.*
3. *Mount receptacle on the structure column.*

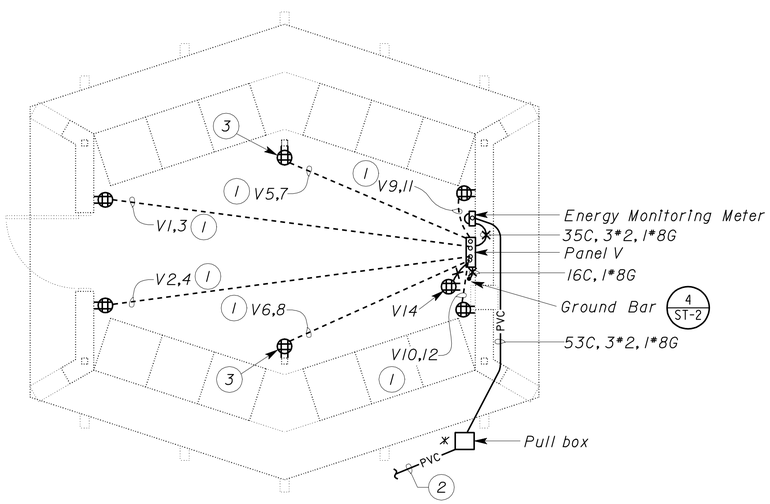

POWER

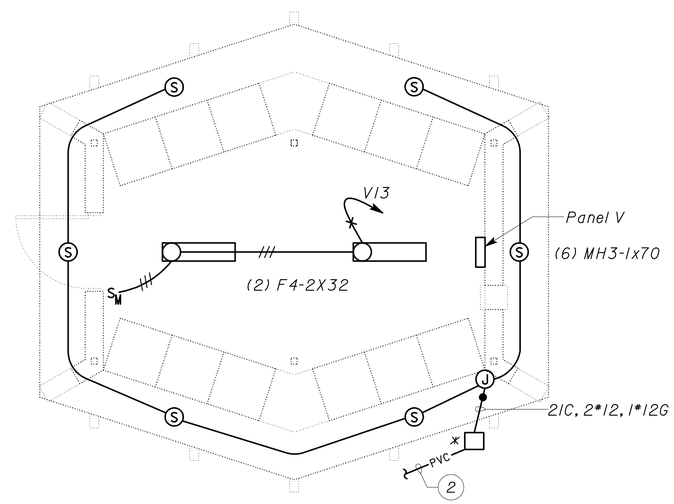

LIGHTING

PLAN
Scale 1:50

* *Same pull box shown twice in both Power and Lighting plans.*

THIS PLAN IS ACCURATE FOR ELECTRICAL WORK ONLY.

ALL DIMENSIONS SHOWN IN MILLIMETERS, EXCEPT AS NOTED

	BY	CHECKED
DESIGN	Tommy F. Lee	J. S. Sandhu
DETAILS	Dall Zhou/TFL	Tommy F. Lee
QUANTITIES	Tommy F. Lee	J. S. Sandhu

STATE OF CALIFORNIA
DEPARTMENT OF TRANSPORTATION

DIVISION OF ENGINEERING SERVICES
ELECTRICAL-MECHANICAL-WATER AND WASTEWATER DESIGN

BRIDGE NO. 06R0001
KM POST

LAKEHEAD SAFETY ROADSIDE REST AREA UPGRADE AND ADDITION
VENDING KIOSK
POWER AND LIGHTING PLAN

SHEET **EE3-1**

DOS ELEC (10/98)
FILE => ee3_1.dgn
DATE PLOTTED => 28-JUL-2009 TIME PLOTTED => 14:47

ORIGINAL SCALE IN MILLIMETERS FOR REDUCED PLANS 0 10 20 30 40 50 60 70 80 90 100

CU 02305
EA 395801

DISREGARD PRINTS BEARING EARLIER REVISION DATES

REVISION DATES (PRELIMINARY STAGE ONLY) 11/22/06 5/22/06 8/28/06 9/28/06 11/22/06 3/28/07 4/14/09 SHEET OF

FILE => ee3_1.dgn

USERNAME => trlenard DATE PLOTTED => 28-JUL-2009 TIME PLOTTED => 14:47

VI=1

DIST.	COUNTY	ROUTE	KILOMETER POST TOTAL PROJECT	SHEET NO.	TOTAL SHEETS
02	Sha	5	R69.4	105	120

Caltrans Metric

Jaswinder S Sandhu 4-14-09
REGISTERED ENGINEER-ELECTRICAL DATE

7-13-09
PLANS APPROVAL DATE

REGISTERED PROFESSIONAL ENGINEER J. S. SANDHU No. 11803 Exp. 9-30-10 ELEC STATE OF CALIFORNIA

The State of California or its officers or agents shall not be responsible for the accuracy or completeness of electronic copies of this plan sheet.

CALIFORNIA STATE FIRE MARSHAL
APPROVED
Approval of this plan does not authorize or approve any omission or deviation from applicable regulations. Final approval is subject to field inspection. One set of approved plans shall be available on the project site at all times.
Reviewed by: MIKE TANAKA
Approval date: 4/9/2009
CSFM FILE NO. 01-45-11-0067

General Notes:

A. For exact location of water system, see Water and Wastewater sheet.

B. For heat tape, see Water and Wastewater specification.

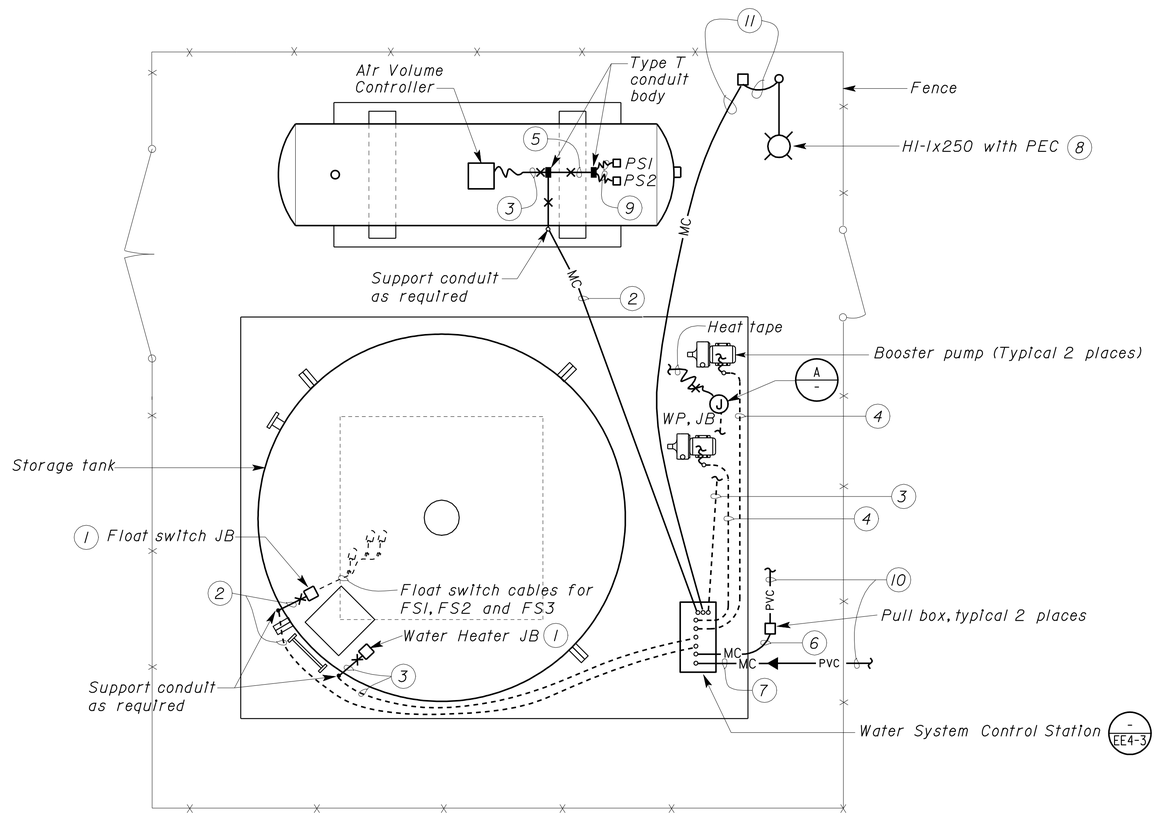

WATER SYSTEM PLAN

SCALE 1:50

Notes:

(1) Provide liquid tight, strain relief cable connectors for float switch/heater cables. Weatherproof junction box to accommodate 300 mm of extra length of each float switch/heater/conductors cable. Splice cables to conductors inside the JB. Seal around JB to provide water tight seal.

(2) 27C, 6*12, 1*12G

(3) 21C, 2*12, 1*12G

(4) 27C, 3*10, 1*10G

(5) 21C, 4*12, 1*12G

(6) 53C, 4*2, 1*8G

(7) 41C, 2*8

(8) Type 15 area lighting. For light pole and foundation details, see Standard Plans RSP ES-6A, RSP ES-7M and ES-7N.

(9) 16C, 2*12, 1*12G

(10) For continuation, see sheet EE0-4.

(11) 21C, 2*10, 1*10G

IDENTIFICATION STAMP
DIV. OF THE STATE ARCHITECT
SACRAMENTO REGIONAL OFFICE
02-108545
AC Antonio Florendo
ANTONIO FLORENDO
DATE 3-8-2007

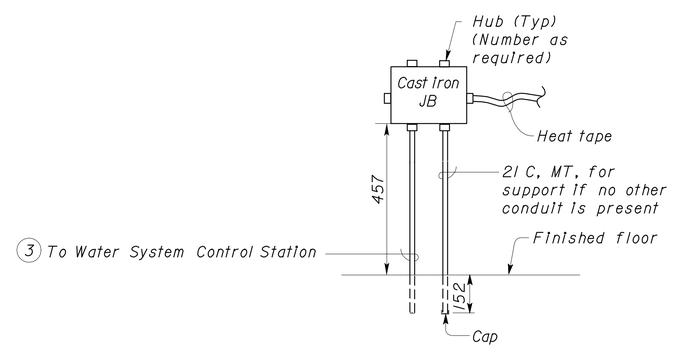

(A) ELEVATION

NO SCALE

THIS PLAN IS ACCURATE FOR ELECTRICAL WORK ONLY.

ALL DIMENSIONS SHOWN IN MILLIMETERS, EXCEPT AS NOTED

	BY	CHECKED
DESIGN	Tommy F. Lee	J. S. Sandhu
DETAILS	Dali Zhou/TFL	Tommy F. Lee
QUANTITIES	Tommy F. Lee	J. S. Sandhu

STATE OF CALIFORNIA DEPARTMENT OF TRANSPORTATION

DIVISION OF ENGINEERING SERVICES
ELECTRICAL-MECHANICAL-WATER AND WASTEWATER DESIGN

BRIDGE NO. 06R0001
KM POST

LAKEHEAD SAFETY ROADSIDE REST AREA UPGRADE AND ADDITION
WATER SYSTEM PLAN

SHEET **EE4-1**

DOS ELEC (10/98) FILE => ee4_1.dgn DATE PLOTTED => 28-JUL-2009 TIME PLOTTED => 14:47

ORIGINAL SCALE IN MILLIMETERS FOR REDUCED PLANS 0 10 20 30 40 50 60 70 80 90 100

CU 02305
EA 395801

DISREGARD PRINTS BEARING EARLIER REVISION DATES

REVISION DATES (PRELIMINARY STAGE ONLY) 9/25/06 9/28/06 11/28/06 3/28/07 4/14/09

SHEET OF

FILE => ee4_1.dgn

USERNAME => trlenard DATE PLOTTED => 28-JUL-2009 TIME PLOTTED => 14:47

VI=1

DIST.	COUNTY	ROUTE	KILOMETER POST TOTAL PROJECT	SHEET NO.	TOTAL SHEETS
02	Sha	5	R69.4	106	120

Caltrans Metric

Jaswinder S Sandhu 4-14-09
REGISTERED ENGINEER-ELECTRICAL DATE

7-13-09
PLANS APPROVAL DATE

REGISTERED PROFESSIONAL ENGINEER J. S. SANDHU No. 11803 Exp. 9-30-10 ELEC STATE OF CALIFORNIA

The State of California or its officers or agents shall not be responsible for the accuracy or completeness of electronic copies of this plan sheet.

IDENTIFICATION STAMP
DIV. OF THE STATE ARCHITECT
SACRAMENTO REGIONAL OFFICE
02-108545
AC Antonio Florendo
ANTONIO FLORENDO
DATE 3-8-2007

CALIFORNIA STATE FIRE MARSHAL
APPROVED
Approval of this plan does not authorize or approve any omission or deviation from applicable regulations. Final approval is subject to field inspection. One set of approved plans shall be available on the project site at all times.
Reviewed by: MIKE TANAKA
Approval date: 4/9/2009
CSFM FILE NO. 01-45-11-0067

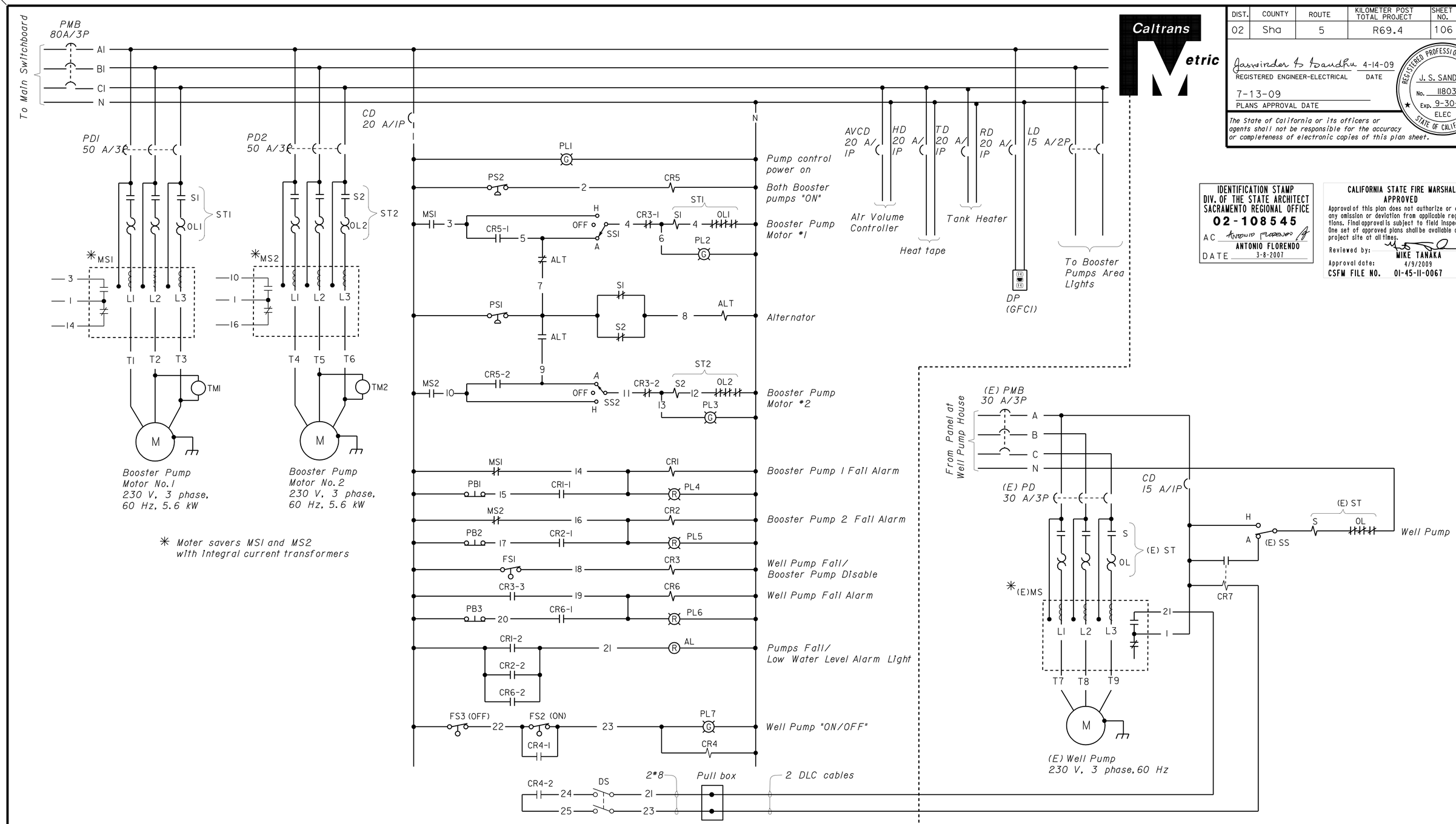

COMFORT STATION

WELL PUMP HOUSE

CONTROL SCHEMATIC DIAGRAM

THIS PLAN IS ACCURATE FOR ELECTRICAL WORK ONLY.

NO SCALE

	BY	CHECKED
DESIGN	Tommy F. Lee	J. S. Sandhu
DETAILS	Dall Zhou/TFL	Tommy F. Lee
QUANTITIES	Tommy F. Lee	J. S. Sandhu

STATE OF CALIFORNIA
DEPARTMENT OF TRANSPORTATION

DIVISION OF ENGINEERING SERVICES
ELECTRICAL-MECHANICAL-WATER AND WASTEWATER DESIGN

BRIDGE NO. 06R0001
KM POST

LAKEHEAD SAFETY ROADSIDE REST AREA UPGRADE AND ADDITION
WATER SYSTEM CONTROL SCHEMATIC DIAGRAM

SHEET **EE4-2**

DOS ELEC (10/98)
FILE => ee4_2.dgn
DATE PLOTTED => 29-JUL-2009 TIME PLOTTED => 08:25

ORIGINAL SCALE IN MILLIMETERS FOR REDUCED PLANS 0 10 20 30 40 50 60 70 80 90 100

CU 02305
EA 395801

DISREGARD PRINTS BEARING EARLIER REVISION DATES

REVISION DATES (PRELIMINARY STAGE ONLY) 11/28/06 5/28/06 8/28/06 9/28/06 11/28/06 3/28/07 4/14/09 SHEET OF

FILE => ee4_2.dgn

USERNAME => trmikesl DATE PLOTTED => 29-JUL-2009 TIME PLOTTED => 08:25

VI=I

DIST.	COUNTY	ROUTE	KILOMETER POST TOTAL PROJECT	SHEET NO.	TOTAL SHEETS
02	Sha	5	R69.4	107	120

Caltrans Metric

Jaswinder S Sandhu 4-14-09
REGISTERED ENGINEER-ELECTRICAL DATE

7-13-09
PLANS APPROVAL DATE

REGISTERED PROFESSIONAL ENGINEER J. S. SANDHU No. 11803 Exp. 9-30-10 ELEC STATE OF CALIFORNIA

The State of California or its officers or agents shall not be responsible for the accuracy or completeness of electronic copies of this plan sheet.

NAMEPLATE SCHEDULE

ITEM NO.	INSCRIPTION	LETTER SIZE (mm)	ITEM NO.	INSCRIPTION	LETTER SIZE (mm)	ITEM NO.	INSCRIPTION	LETTER SIZE (mm)
1	PMB	6	12	WELL PUMP CONTROL DISCONNECT (DS)	6	23	RUN TIME	6
2	PDI	6	13A, 13B	CR5, CR6	6	24	SS2	6
3	PD2	6	14	STI	6	25	ALARM RESET	6
4	CONTROL	6	15	ST2	6	26	BOOSTER PUMP#1	10
5	AVCD	6	16	MSI	6	27	BOOSTER PUMP#2	10
6	RD	6	17	MS2	6	28	REMOTE WELL PUMP	10
7	LD	6	18	CONTROL POWER	6	29	DP	6
8	CRI	6	19	RESET	6	30	ALT	6
9	CR2	6	20	RUN	6	31	WATER SYSTEM CONTROL STATION	10
10	CR3	6	21	FAIL	6	32	HD	6
11	CR4	6	22	SSI	6	33	TD	6

Nameplate #31 shall be mounted on the exterior door.

WARNING NAMEPLATE

ITEM NO.	INSCRIPTION	LETTER SIZE (mm)
34	WARNING: MOTOR DISCONNECT DOES NOT OPEN CONTROL CIRCUIT 120 V FROM WELL PUMP HOUSE IS PRESENT. TURN OFF SELECTOR SWITCH TO DE-ENERGIZE.	10

Nameplate #34 shall have white letters against a red background.

IDENTIFICATION STAMP
DIV. OF THE STATE ARCHITECT
SACRAMENTO REGIONAL OFFICE
02-108545
AC Antonio Florendo
ANTONIO FLORENDO
DATE 3-8-2007

CALIFORNIA STATE FIRE MARSHAL
APPROVED
Approval of this plan does not authorize or approve any omission or deviation from applicable regulations. Final approval is subject to field inspection. One set of approved plans shall be available on the project site at all times.
Reviewed by: MIKE TANAKA
Approval date: 4/9/2009
CSFM FILE NO. 01-45-11-0067

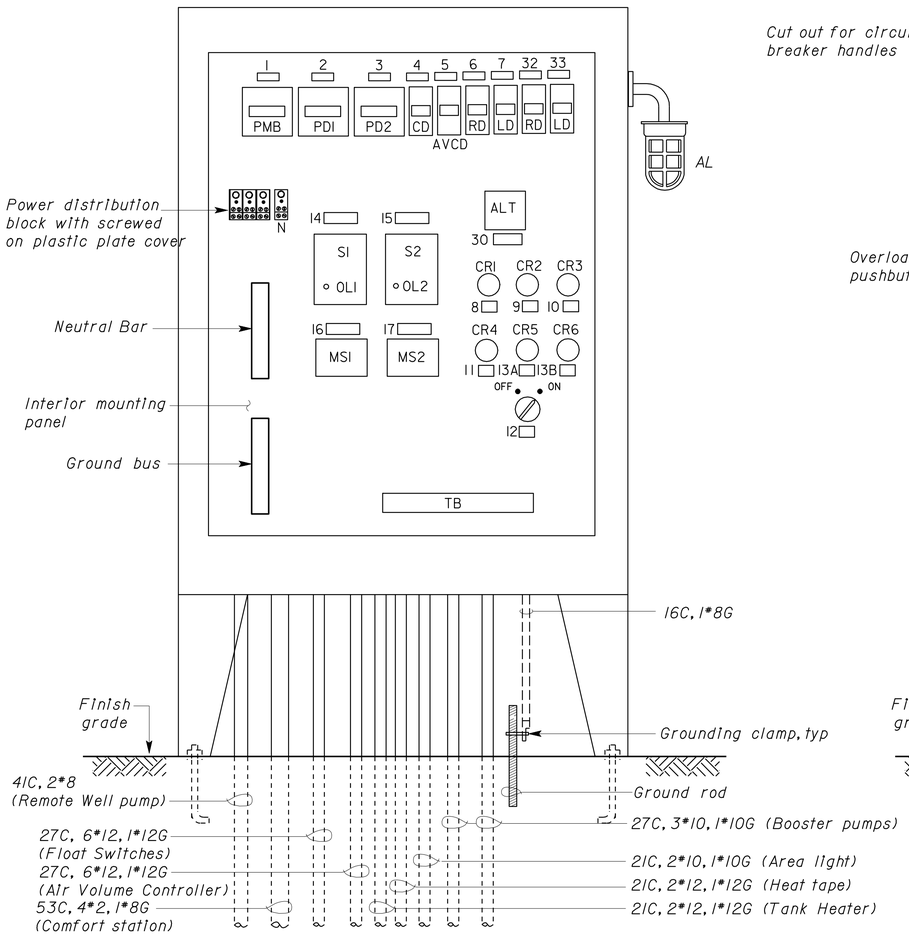

(CONTROL PANEL EXTERIOR DOOR AND INTERIOR HINGED PANEL NOT SHOWN)

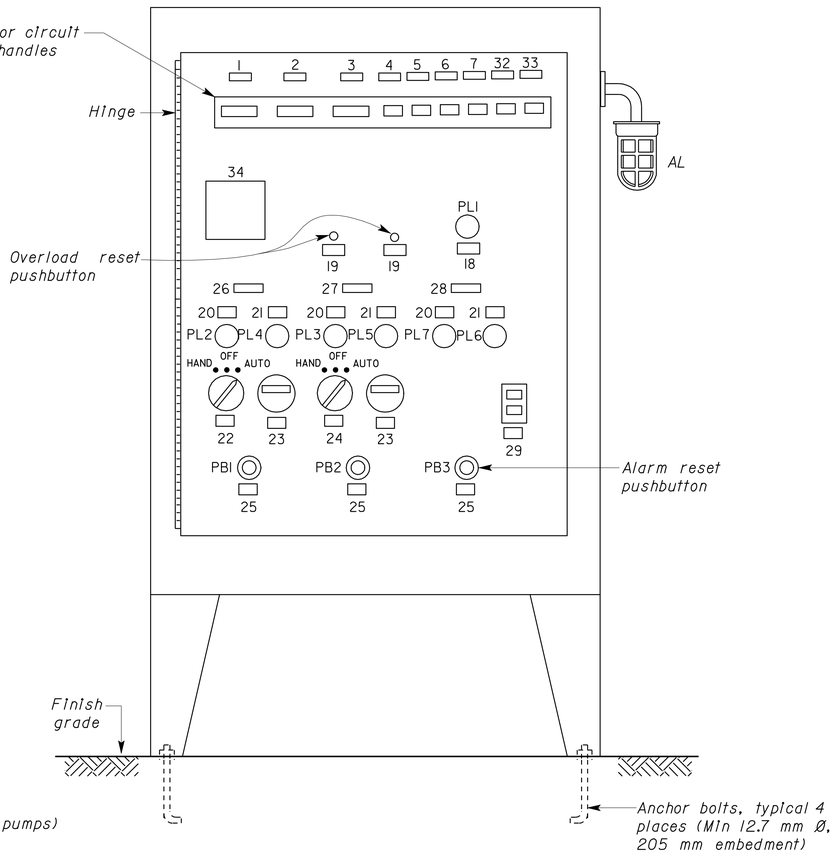

(CONTROL PANEL EXTERIOR DOOR NOT SHOWN, INTERIOR HINGED PANEL CLOSED)

ELEVATION

NO SCALE

THIS PLAN IS ACCURATE FOR ELECTRICAL WORK ONLY.

	BY	CHECKED
DESIGN	Tommy F. Lee	J. S. Sandhu
DETAILS	Dali Zhou/TFL	Tommy F. Lee
QUANTITIES	Tommy F. Lee	J. S. Sandhu

STATE OF CALIFORNIA
DEPARTMENT OF TRANSPORTATION

DIVISION OF ENGINEERING SERVICES
ELECTRICAL-MECHANICAL-WATER AND WASTEWATER DESIGN

BRIDGE NO. 06R0001
KM POST

LAKEHEAD SAFETY ROADSIDE REST AREA UPGRADE AND ADDITION

WATER SYSTEM CONTROL STATION

SHEET **EE4-3**

DOS ELEC (10/98)
FILE => ee4_3.dgn
DATE PLOTTED => 28-JUL-2009 TIME PLOTTED => 14:48

ORIGINAL SCALE IN MILLIMETERS FOR REDUCED PLANS 0 10 20 30 40 50 60 70 80 90 100

CU 02305
EA 395801

DISREGARD PRINTS BEARING EARLIER REVISION DATES

REVISION DATES (PRELIMINARY STAGE ONLY) 11/22/06 5/28/06 8/28/06 11/28/06 3/28/07 4/14/09

SHEET OF

FILE => ee4_3.dgn

USERNAME => trlenard DATE PLOTTED => 28-JUL-2009 TIME PLOTTED => 14:48

VI=1

DIST.	COUNTY	ROUTE	KILOMETER POST TOTAL PROJECT	SHEET NO.	TOTAL SHEETS
02	Sha	5	R69.4	108	120

Caltrans Metric

REGISTERED ENGINEER - CIVIL — DATE 04-14-09

7-13-09
PLANS APPROVAL DATE

REGISTERED PROFESSIONAL ENGINEER — J. MARCOTTE — No. C 36844 — Exp. 6-30-10 — CIVIL — STATE OF CALIFORNIA

The State of California or its officers or agents shall not be responsible for the accuracy or completeness of electronic copies of this plan sheet.

ABBREVIATIONS

AB	AGGREGATE BASE	m	METER (S)
ABS	ACRYLONITRILE BUTADIENE STYRENE (PIPE)	MAX	MAXIMUM
AC	ASPHALT CONCRETE	MFR	MANUFACTURER
AVC	AIR VOLUME CONTROLLER	MH	MANHOLE
B	BUNG	MIN	MINIMUM
BLDG	BUILDING	mm	MILLIMETER
C	CONDUIT	N	NORTH
C-C	CENTER TO CENTER	NIC	NOT IN CONTRACT
CI	CAST-IRON	NO	NUMBER
cm	CENTIMETERS	OC	ON CENTER
CMP	CORRUGATED METAL PIPE	OD	OUTSIDE DIAMETER
CONC	CONCRETE	OG	ORIGINAL GROUND
COTF	CLEANOUT TO FLOOR	O/W	OIL WATER SEPARATOR
COTG	CLEANOUT TO GRADE	P	PITCH
CW	COLD WATER PIPE	PCC	PORTLAND CEMENT CONCRETE
D	DRAIN	PH	PHASE
DI	DRAIN INLET	PRV	PRESSURE REDUCING VALVE
DIA	DIAMETER	PVC	POLYVINYL CHLORIDE (PIPE)
DP	DRAIN PIPE	PW	PRESSURE WASHER
E	ELECTRICAL	R	RADIUS
(E)	EXISTING	RCP	REINFORCED CONCRETE PIPE
EA	EACH	REQ	REQUIRED
EL	ELEVATION	RPM	REVOLUTIONS PER MINUTE
EP	EDGE OF PAVEMENT	RPU	RECYCLE PROCESS UNIT
FF	FINISH FLOOR	RT	RIGHT
FG	FINISH GRADE	RW	RETURN WATER
FL	FLOW LINE	R/W	RIGHT-OF-WAY
FM	FORCE MAIN	S	SEWER
FOC	FACE OF CONCRETE	SCH	SCHEDULE
GA	GAUGE	SD	STORM DRAIN
GAC	GRANULAR ACTIVATED CARBON	SP	SEWER PIPE
GSP	GALVANIZED STEEL PIPE	SQ	SQUARE
GV	GATE VALVE	STA	STATION
HF	HOSE FAUCET	STD	STANDARD
HP	HORSEPOWER	TBM	TEMPORARY BENCH MARK
HT	HEIGHT	TOC	TOP OF CURB OR CONCRETE
HZ	HERTZ	TOT	TOTAL
ID	INSIDE DIAMETER	TYP	TYPICAL
IE	INVERT ELEVATION	VP	VENT PIPE
Kg	KILOGRAMS	VCP	VITRIFIED CLAY PIPE
Kw	KILOWATT	W	WATER
L	LITER(S)	W/O	WITHOUT
LPM	LITERS PER MINUTE	WP	WATER PIPE
LT	LEFT	WSP	WELDED STEEL PIPE

LEGEND

S	SANITARY SEWER
D	DRAIN
RD	RETURN DRAIN
E	ELECTRICAL
W	WATER
FM	FORCE MAIN
G	GAS
A	AIR
V	VENT
T	TELEPHONE

7 / SS-5	DETAIL / SHEET NUMBER
99.00	NEW GRADE IN METERS
X (100.00)	EXISTING SPOT GRADE IN METERS
	SURFACE DRAINAGE
	ABANDON (E)
	BENCHMARK ELEVATION
℄	CENTERLINE
ø	DIAMETER
	SECTION / ELEVATION LETTER / SHEET NUMBER
	TREE

IDENTIFICATION STAMP
DIV. OF THE STATE ARCHITECT
SACRAMENTO REGIONAL OFFICE
02-108545
AC ANTONIO FLORENDO
ANTONIO FLORENDO
DATE 3-8-2007

CALIFORNIA STATE FIRE MARSHAL
APPROVED
Approval of this plan does not authorize or approve any omission or deviation from applicable regulations. Final approvals subject to field inspection. One set of approved plans shall be available on the project site at all times.
Reviewed by: MIKE TANAKA
Approval date: 4/9/2009
CSFM FILE NO. 01-45-11-0067

GENERAL WORK NOTES

The Contractor shall verify all controlling field dimensions and conditions before ordering or fabricating any materials.

The Contractor shall verify exact location of all underground facilities and utilities prior to start of construction.

REQUIRED THRUST BLOCK BEARING AREA- TOTAL SQUARE METERS

TYPE OF FITTING		90 BEND	45 BEND	11-1/4 BEND 22-1/2 BEND	TEE OR DEAD END
TYPICAL INSTALLATION		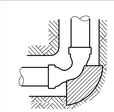	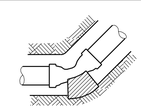	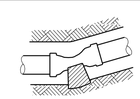	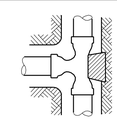
PIPE SIZE (mm)	≤100	0.2	0.1	0.1	0.2
	150	0.4	0.2	0.1	0.3
	200	0.7	0.4	0.2	0.5
	250	1.1	0.6	0.3	0.8

PIPE FITTINGS AND VALVES

- CAP, THREADED
- ELBOW, TURNED DOWN
- FLEXIBLE CONNECTOR
- REDUCER, CONCENTRIC
- REDUCER, ECCENTRIC
- PRESSURE GAUGE (WITH VALVE AND SNUBBER)
- UNION
- UNION, INSULATING
- VALVE, BALL
- VALVE, CHECK
- VALVE, GATE
- VALVE, SAFETY RELIEF
- VALVE, PRESSURE REDUCING

ALL DIMENSIONS SHOWN IN MILLIMETERS, EXCEPT AS NOTED

	BY	CHECKED
DESIGN	Amar Baldwan	David Wright
DETAILS	Amar Baldwan	Jerry Marcotte
QUANTITIES	Amar Baldwan	Jerry Marcotte

STATE OF CALIFORNIA
DEPARTMENT OF TRANSPORTATION

DIVISION OF ENGINEERING SERVICES
ELECTRICAL-MECHANICAL-WATER AND WASTEWATER DESIGN

BRIDGE NO. 06R0001
KM POST R69.4

LAKEHEAD SAFETY ROADSIDE REST AREA UPGRADE AND ADDITION

NOTES, LEGEND AND ABBREVIATIONS

SHEET **W-0**

DOS ELEC (10/98)
FILE => w_00.dgn
DATE PLOTTED => 28-JUL-2009 TIME PLOTTED => 14:48
ORIGINAL SCALE IN MILLIMETERS FOR REDUCED PLANS 0 10 20 30 40 50 60 70 80 90 100
CU 02 305
EA 395801
FILE => w_00.dgn

DISREGARD PRINTS BEARING EARLIER REVISION DATES → REVISION DATES (PRELIMINARY STAGE ONLY) 02-23-05 8-29-06 9-29-06 02-01-07 03-28-07 04/14/09 SHEET OF

USERNAME => trlenard DATE PLOTTED => 28-JUL-2009 TIME PLOTTED => 14:48

VI=1

DIST.	COUNTY	ROUTE	KILOMETER POST TOTAL PROJECT	SHEET NO.	TOTAL SHEETS
02	Sha	5	R69.4	109	120

Caltrans Metric

Jerome R. Marcotte 04-14-09
REGISTERED ENGINEER - CIVIL DATE

7-13-09
PLANS APPROVAL DATE

REGISTERED PROFESSIONAL ENGINEER
J. MARCOTTE
No. C 36844
Exp. 6-30-10
CIVIL
STATE OF CALIFORNIA

The State of California or its officers or agents shall not be responsible for the accuracy or completeness of electronic copies of this plan sheet.

IDENTIFICATION STAMP
DIV. OF THE STATE ARCHITECT
SACRAMENTO REGIONAL OFFICE
02-108545
AC Antonio Florendo
ANTONIO FLORENDO
DATE 3-8-2007

CALIFORNIA STATE FIRE MARSHAL
APPROVED
Approval of this plan does not authorize or approve any omission or deviation from applicable regulations. Final approval is subject to field inspection. One set of approved plans shall be available on the project site at all times.
Reviewed by: MIKE TANAKA
Approval date: 4/9/2009
CSFM FILE NO. 01-45-11-0067

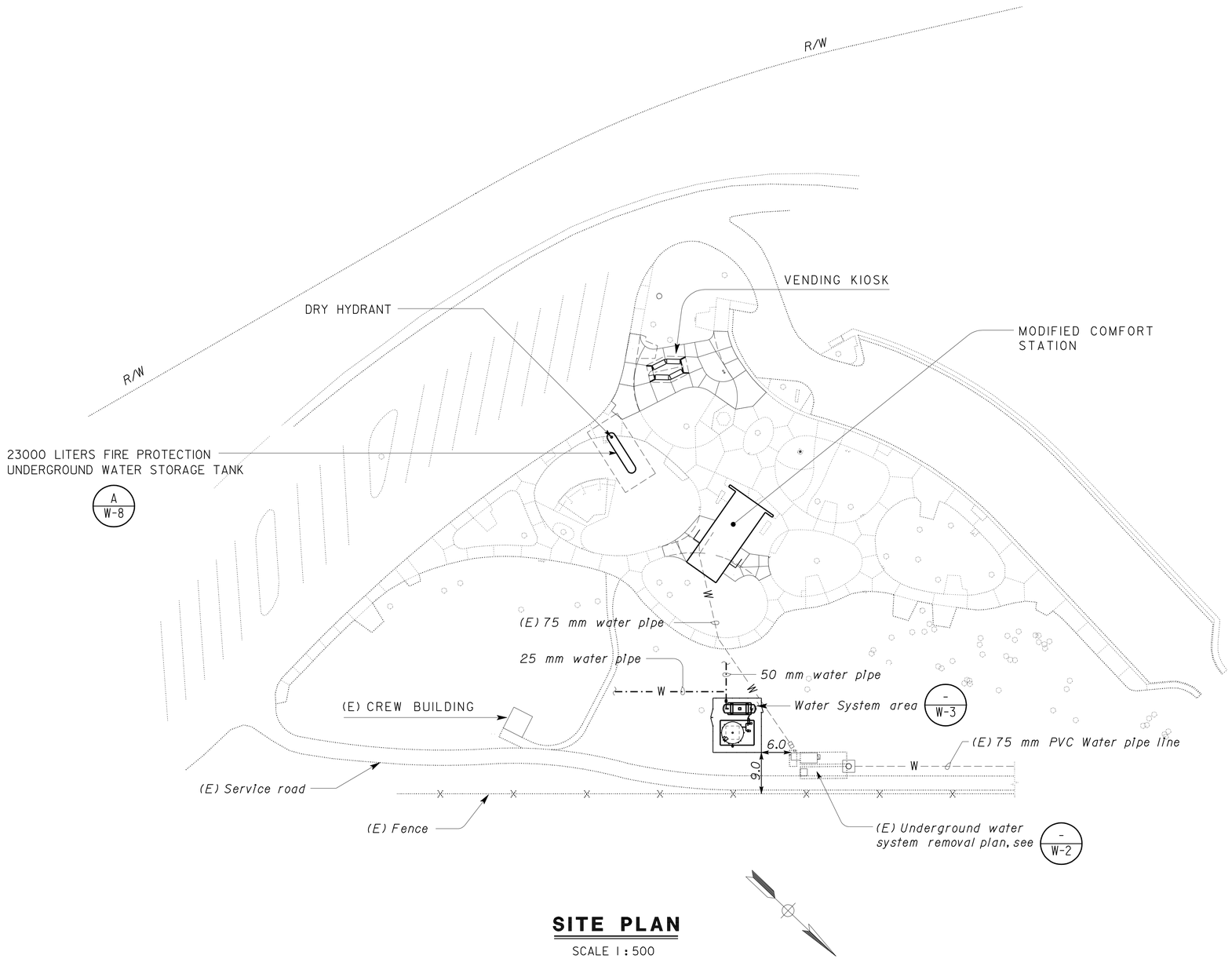

SITE PLAN

SCALE 1:500

ALL DIMENSIONS SHOWN IN METERS, EXCEPT AS NOTED

DESIGN SUPERVISOR
DESIGN ENGINEER

	BY	CHECKED
DESIGN	Amar Baldwan	Jerry Marcotte
DETAILS	Amar Baldwan	Andy Quan
QUANTITIES	Amar Baldwan	Jerry Marcotte

STATE OF CALIFORNIA
DEPARTMENT OF TRANSPORTATION

DIVISION OF ENGINEERING SERVICES
ELECTRICAL-MECHANICAL-WATER AND WASTEWATER DESIGN

BRIDGE NO. 06R0001
KM POST R69.4

LAKEHEAD SAFETY ROADSIDE REST AREA UPGRADE AND ADDITION

MODIFIED SITE PLAN

SHEET **W-1**

DOS ELEC (10/98)
FILE => w_01.dgn
DATE PLOTTED => 28-JUL-2009 TIME PLOTTED => 14:48

ORIGINAL SCALE IN MILLIMETERS FOR REDUCED PLANS 0 10 20 30 40 50 60 70 80 90 100

CU 02 305
EA 395801

DISREGARD PRINTS BEARING EARLIER REVISION DATES

REVISION DATES (PRELIMINARY STAGE ONLY) 02-23-05 8-29-06 9-29-06 02-01-07 03-28-07 04-14-09

SHEET OF

FILE => w_01.dgn

USERNAME => trlenord DATE PLOTTED => 28-JUL-2009 TIME PLOTTED => 14:48

V|=|

DIST.	COUNTY	ROUTE	KILOMETER POST TOTAL PROJECT	SHEET NO.	TOTAL SHEETS
02	Sha	5	R69.4	110	120

Caltrans Metric

Jerome R. Marcotte 04-14-09
REGISTERED ENGINEER - CIVIL DATE

7-13-09
PLANS APPROVAL DATE

REGISTERED PROFESSIONAL ENGINEER J. MARCOTTE No. C 36844 Exp. 6-30-10 CIVIL STATE OF CALIFORNIA

The State of California or its officers or agents shall not be responsible for the accuracy or completeness of electronic copies of this plan sheet.

IDENTIFICATION STAMP
DIV. OF THE STATE ARCHITECT
SACRAMENTO REGIONAL OFFICE
02-108545
AC Antonio Florendo
ANTONIO FLORENDO
DATE 3-8-2007

CALIFORNIA STATE FIRE MARSHAL
APPROVED
Approval of this plan does not authorize or approve any omission or deviation from applicable regulations. Final approval is subject to field inspection. One set of approved plans shall be available on the project site at all times.
Reviewed by: MIKE TANAKA
Approval date: 4/9/2009
CSFM FILE NO. 01-45-11-0067

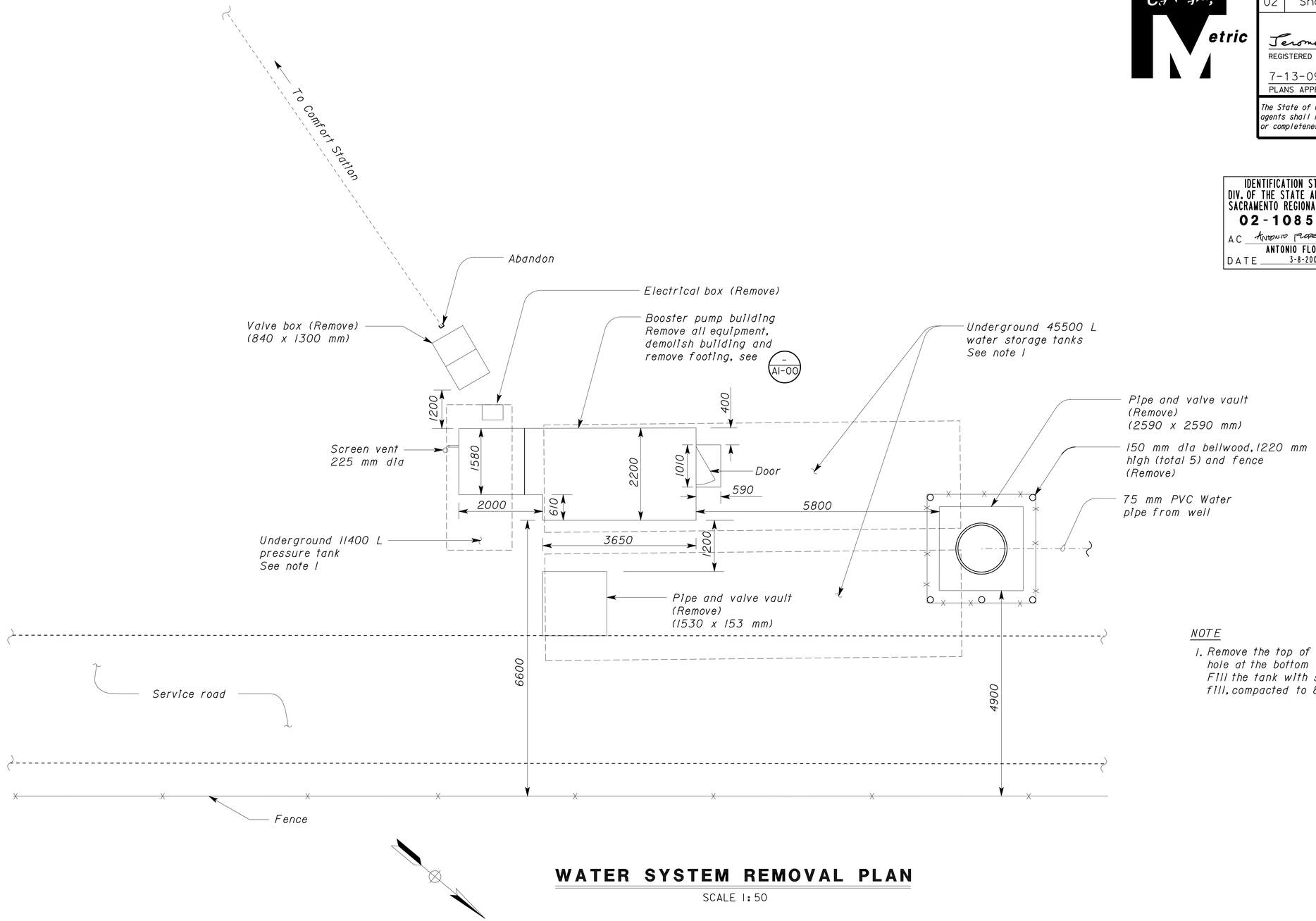

NOTE

1. Remove the top of tank, punch the hole at the bottom of the tank. Fill the tank with sand/structure fill, compacted to 85 %.

WATER SYSTEM REMOVAL PLAN

SCALE 1:50

ALL DIMENSIONS SHOWN IN MILLIMETERS, EXCEPT AS NOTED

	BY	CHECKED
DESIGN	Amar Baldwan	David Wright
DETAILS	Amar Baldwan	Jerry Marcotte
QUANTITIES	Amar Baldwan	Jerry Marcotte

STATE OF CALIFORNIA
DEPARTMENT OF TRANSPORTATION

DIVISION OF ENGINEERING SERVICES
ELECTRICAL-MECHANICAL-WATER AND WASTEWATER DESIGN

BRIDGE NO. 06R0001
KM POST R69.4

LAKEHEAD SAFETY ROADSIDE REST AREA UPGRADE AND ADDITION

WATER SYSTEM REMOVAL PLAN

SHEET W-2

DOS ELEC (10/98)
FILE => w_02.dgn
DATE PLOTTED => 28-JUL-2009 TIME PLOTTED => 14:48

ORIGINAL SCALE IN MILLIMETERS FOR REDUCED PLANS 0 10 20 30 40 50 60 70 80 90 100

CU 02 305
EA 395801

DISREGARD PRINTS BEARING EARLIER REVISION DATES

REVISION DATES (PRELIMINARY STAGE ONLY) 02-23-05 8-29-06 9-29-06 02-01-07 03-28-07 04/14/09

SHEET OF

FILE => w_02.dgn

USERNAME => trlenard DATE PLOTTED => 28-JUL-2009 TIME PLOTTED => 14:48

V1=1

DIST.	COUNTY	ROUTE	KILOMETER POST TOTAL PROJECT	SHEET NO.	TOTAL SHEETS
02	Sha	5	R69.4	111	120

Caltrans Metric

Jerome R. Marcotte 04-14-09
REGISTERED ENGINEER - CIVIL DATE

7-13-09
PLANS APPROVAL DATE

REGISTERED PROFESSIONAL ENGINEER J. MARCOTTE No. C 36844 Exp. 6-30-10 CIVIL STATE OF CALIFORNIA

The State of California or its officers or agents shall not be responsible for the accuracy or completeness of electronic copies of this plan sheet.

IDENTIFICATION STAMP
DIV. OF THE STATE ARCHITECT
SACRAMENTO REGIONAL OFFICE
02-108545
AC Antonio Florendo
ANTONIO FLORENDO
DATE 3-8-2007

CALIFORNIA STATE FIRE MARSHAL
APPROVED
Approval of this plan does not authorize or approve any omission or deviation from applicable regulations. Final approval is subject to field inspection. One set of approved plans shall be available on the project site at all times.
Reviewed by: MIKE TANAKA
Approval date: 4/9/2009
CSFM FILE NO. 01-45-11-0067

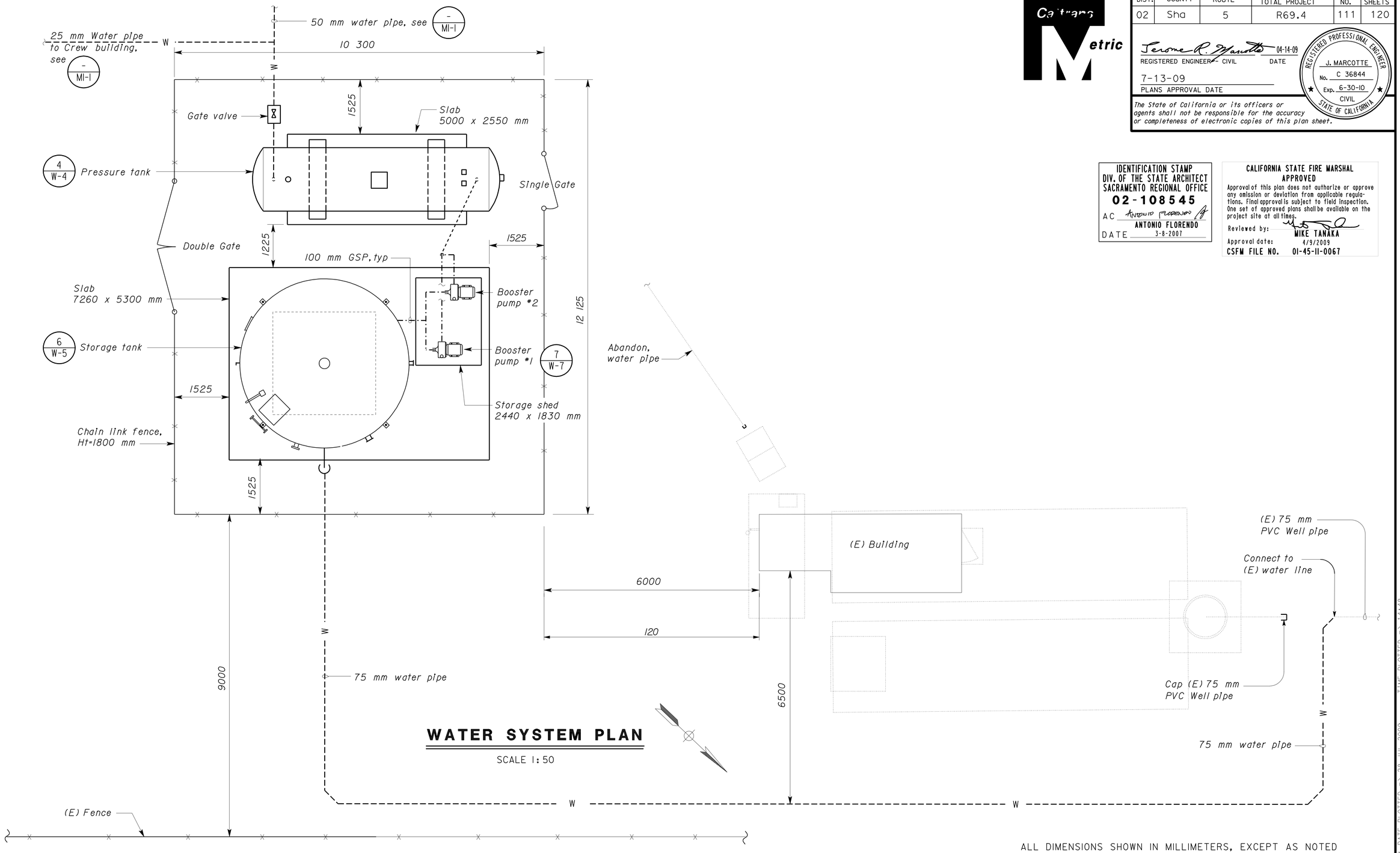

WATER SYSTEM PLAN

SCALE 1:50

ALL DIMENSIONS SHOWN IN MILLIMETERS, EXCEPT AS NOTED

	BY	CHECKED
DESIGN	Amar Baldwan	David Wright
DETAILS	Amar Baldwan	Jerry Marcotte
QUANTITIES	Amar Baldwan	Jerry Marcotte

STATE OF CALIFORNIA
DEPARTMENT OF TRANSPORTATION

DIVISION OF ENGINEERING SERVICES
ELECTRICAL-MECHANICAL-WATER AND WASTEWATER DESIGN

BRIDGE NO. 06R0001
KM POST R69.4

LAKEHEAD SAFETY ROADSIDE REST AREA UPGRADE AND ADDITION

WATER SYSTEM PLAN

SHEET **W-3**

DOS ELEC (10/98) FILE => w_03.dgn
DATE PLOTTED => 28-JUL-2009 TIME PLOTTED => 14:48

ORIGINAL SCALE IN MILLIMETERS FOR REDUCED PLANS 0 10 20 30 40 50 60 70 80 90 100

CU 02 305
EA 395801

DISREGARD PRINTS BEARING EARLIER REVISION DATES

REVISION DATES (PRELIMINARY STAGE ONLY) 02-23-05 8-29-06 9-29-06 02-01-07 03-28-07 04/14/09

SHEET OF

FILE => w_03.dgn

USERNAME => trlenard DATE PLOTTED => 28-JUL-2009 TIME PLOTTED => 14:48

VI=1

DIST.	COUNTY	ROUTE	KILOMETER POST TOTAL PROJECT	SHEET NO.	TOTAL SHEETS
02	Sha	5	R69.4	112	120

Caltrans Metric

Jerome R. Marcotte 04-14-09
REGISTERED ENGINEER - CIVIL DATE

7-13-09
PLANS APPROVAL DATE

REGISTERED PROFESSIONAL ENGINEER J. MARCOTTE No. C 36844 Exp. 6-30-10 CIVIL STATE OF CALIFORNIA

The State of California or its officers or agents shall not be responsible for the accuracy or completeness of electronic copies of this plan sheet.

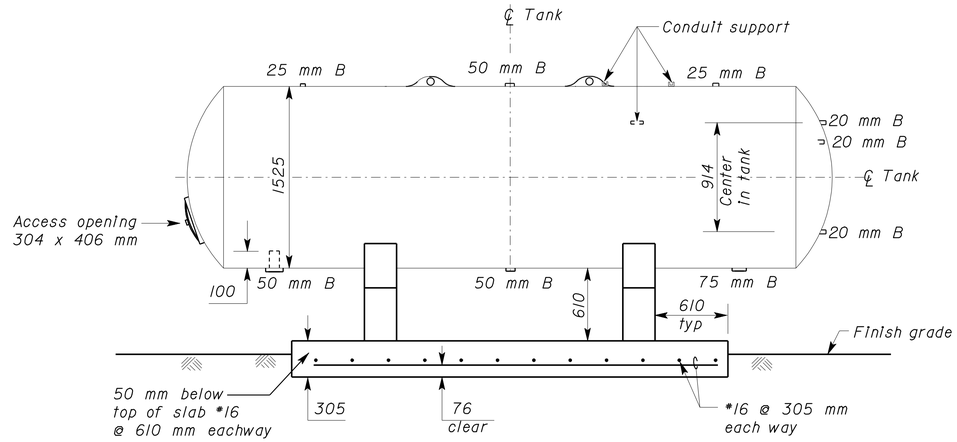

LONGITUDINAL SECTION

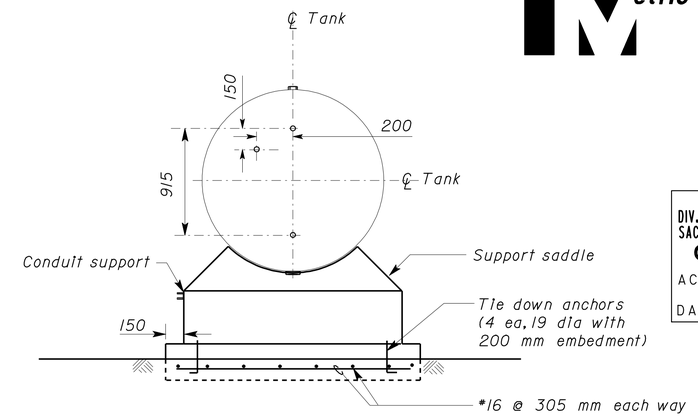

TRANSVERSE SECTION

IDENTIFICATION STAMP
DIV. OF THE STATE ARCHITECT
SACRAMENTO REGIONAL OFFICE
02-108545
AC ANTONIO FLORENDO
ANTONIO FLORENDO
DATE 3-8-2007

CALIFORNIA STATE FIRE MARSHAL
APPROVED
Approval of this plan does not authorize or approve any omission or deviation from applicable regulations. Final approval is subject to field inspection. One set of approved plans shall be available on the project site at all times.
Reviewed by: MIKE TANAKA
Approval date: 4/9/2009
CSFM FILE NO. 01-45-11-0067

TANK SUPPORT AND SHELL DETAILS

NO SCALE

Notes:

1. Tank color shall be medium tan.

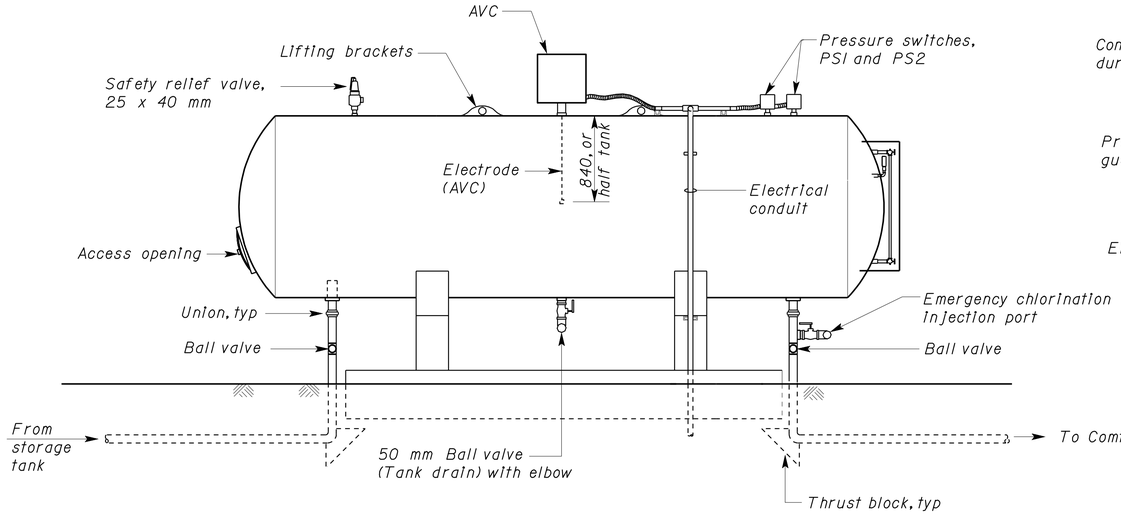

SIDE VIEW

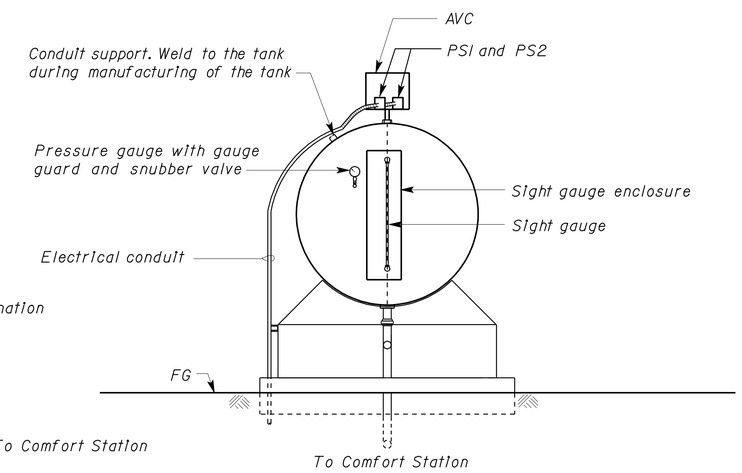

END VIEW

4 PRESSURE TANK, 5675 L (NOMINAL)

NO SCALE

ALL DIMENSIONS SHOWN IN MILLIMETERS, EXCEPT AS NOTED

	BY		CHECKED	
DESIGN	Amar Baldwan		David Wright	
DETAILS	Amar Baldwan		Jerry Marcotte	
QUANTITIES	Amar Baldwan		Jerry Marcotte	

STATE OF CALIFORNIA DEPARTMENT OF TRANSPORTATION

DIVISION OF ENGINEERING SERVICES
ELECTRICAL-MECHANICAL-WATER AND WASTEWATER DESIGN

BRIDGE NO. 06R0001
KM POST R69.4

LAKEHEAD SAFETY ROADSIDE REST AREA UPGRADE AND ADDITION

PRESSURE TANK DETAILS

SHEET **W-4**

DOS ELEC (10/98) FILE => w_04.dgn
DATE PLOTTED => 28-JUL-2009 TIME PLOTTED => 14:48

ORIGINAL SCALE IN MILLIMETERS FOR REDUCED PLANS 0 10 20 30 40 50 60 70 80 90 100

CU 02 305
EA 395801

DISREGARD PRINTS BEARING EARLIER REVISION DATES

REVISION DATES (PRELIMINARY STAGE ONLY): 02-23-05 | 8-29-06 | 9-29-06 | 02-01-07 | 03-28-07 | 04/14/09

SHEET OF

FILE => w_04.dgn

USERNAME => trlenard DATE PLOTTED => 28-JUL-2009 TIME PLOTTED => 14:48

VI=I

DIST.	COUNTY	ROUTE	KILOMETER POST TOTAL PROJECT	SHEET NO.	TOTAL SHEETS
02	Sha	5	R69.4	113	120

Caltrans Metric

Jerome R. Marcotte 04-14-09
REGISTERED ENGINEER - CIVIL DATE

7-13-09
PLANS APPROVAL DATE

REGISTERED PROFESSIONAL ENGINEER J. MARCOTTE No. C 36844 Exp. 6-30-10 CIVIL STATE OF CALIFORNIA

The State of California or its officers or agents shall not be responsible for the accuracy or completeness of electronic copies of this plan sheet.

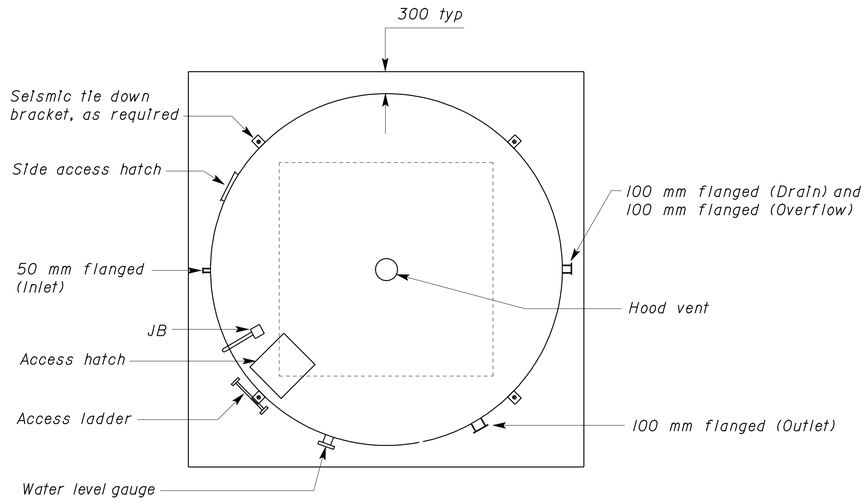

PLAN

SCALE 1:40

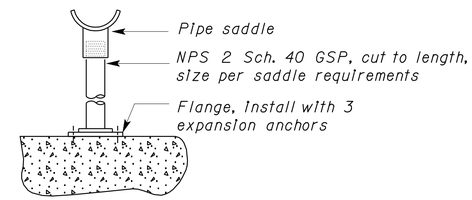

9 VALVE/PIPE SUPPORT

NO SCALE

IDENTIFICATION STAMP
DIV. OF THE STATE ARCHITECT
SACRAMENTO REGIONAL OFFICE
02-108545
AC Antonio Florendo
ANTONIO FLORENDO
DATE 3-8-2007

CALIFORNIA STATE FIRE MARSHAL
APPROVED
Approval of this plan does not authorize or approve any omission or deviation from applicable regulations. Final approval is subject to field inspection. One set of approved plans shall be available on the project site at all times.
Reviewed by: MIKE TANAKA
Approval date: 4/9/2009
CSFM FILE NO. 01-45-11-0067

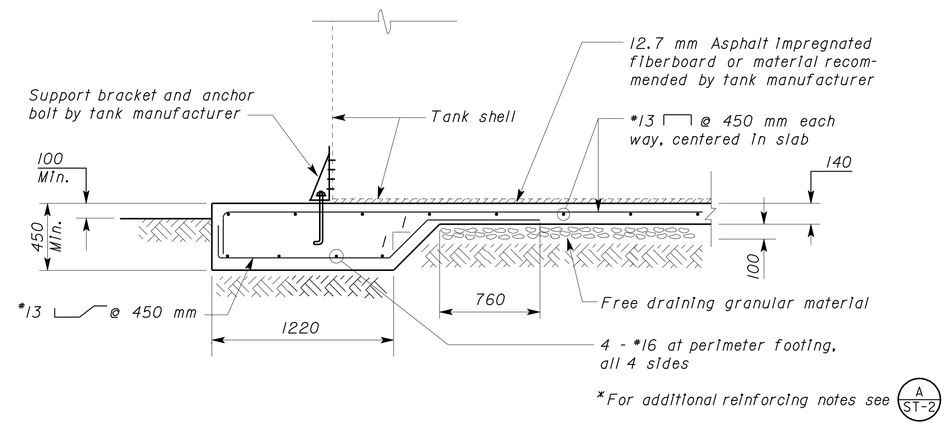

8 SECTION - FOUNDATION

SCALE 1:20

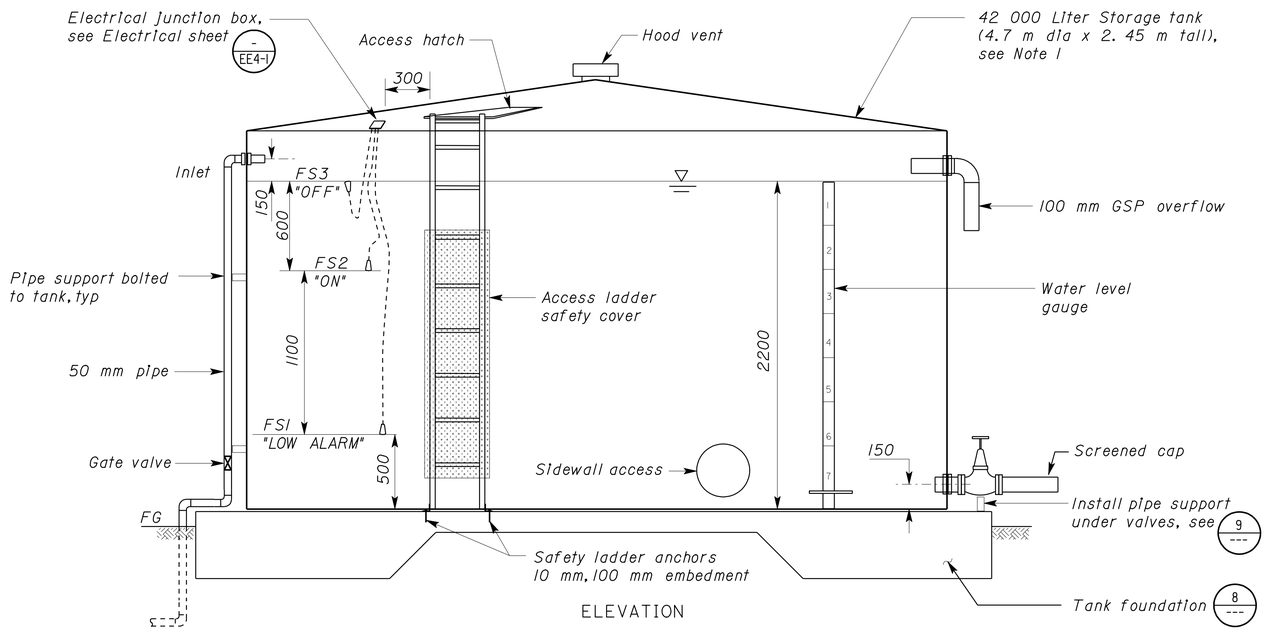

ELEVATION

6 STORAGE TANK

SCALE 1:20

Notes:

1. Tank diameter and height may vary slightly by tank manufacturer.

2. Pipe and equipment skewed for clarity. See "Storage Tank - Plan", this sheet, for proper orientation.

3. Tank shall be painted medium tan.

Tank Loading:

Seismic Zone	3
Live Load	950 Pa
Snow load	2400
Wind Speed	113 km/h
Exposure	C

ALL DIMENSIONS SHOWN IN MILLIMETERS, EXCEPT AS NOTED

	BY		CHECKED	
DESIGN	BY	Amar Baldwan	CHECKED	David Wright
DETAILS	BY	Amar Baldwan	CHECKED	Jerry Marcotte
QUANTITIES	BY	Amar Baldwan	CHECKED	Jerry Marcotte

STATE OF CALIFORNIA
DEPARTMENT OF TRANSPORTATION

DIVISION OF ENGINEERING SERVICES
ELECTRICAL-MECHANICAL-WATER AND WASTEWATER DESIGN

BRIDGE NO. 06R0001
KM POST R69.4

LAKEHEAD SAFETY ROADSIDE REST AREA UPGRADE AND ADDITION

STORAGE TANK DETAILS

SHEET **W-5**

DOS ELEC (10/98)
FILE => w_05.dgn
DATE PLOTTED => 28-JUL-2009 TIME PLOTTED => 14:48

ORIGINAL SCALE IN MILLIMETERS FOR REDUCED PLANS 0 10 20 30 40 50 60 70 80 90 100

CU 02 305
EA 395801

DISREGARD PRINTS BEARING EARLIER REVISION DATES

REVISION DATES (PRELIMINARY STAGE ONLY): 02-23-05 8-29-06 9-29-06 02-01-07 03-28-07 04/14/09

SHEET OF

FILE => w_05.dgn

USERNAME => trlenard DATE PLOTTED => 28-JUL-2009 TIME PLOTTED => 14:48

VI=1

DIST.	COUNTY	ROUTE	KILOMETER POST TOTAL PROJECT	SHEET NO.	TOTAL SHEETS
02	Sha	5	R69.4	114	120

Caltrans Metric

Jerome R. Marcotte 04-14-09
REGISTERED ENGINEER - CIVIL DATE

7-13-09
PLANS APPROVAL DATE

REGISTERED PROFESSIONAL ENGINEER
J. MARCOTTE
No. C 36844
Exp. 6-30-10
CIVIL
STATE OF CALIFORNIA

The State of California or its officers or agents shall not be responsible for the accuracy or completeness of electronic copies of this plan sheet.

IDENTIFICATION STAMP
DIV. OF THE STATE ARCHITECT
SACRAMENTO REGIONAL OFFICE
02-108545
AC Antonio Florendo
ANTONIO FLORENDO
DATE 3-8-2007

CALIFORNIA STATE FIRE MARSHAL
APPROVED
Approval of this plan does not authorize or approve any omission or deviation from applicable regulations. Final approval is subject to field inspection. One set of approved plans shall be available on the project site at all times.
Reviewed by: MIKE TANAKA
Approval date: 4/9/2009
CSFM FILE NO. 01-45-11-0067

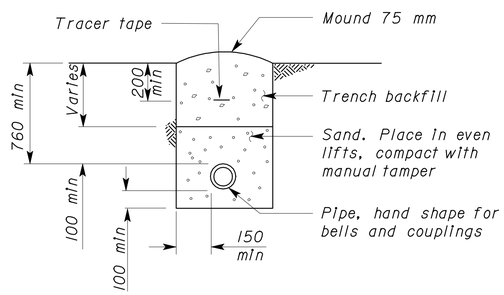

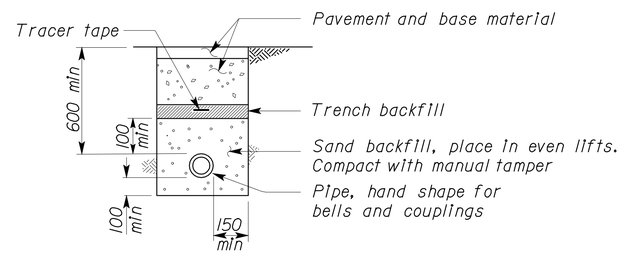

11 PIPE DETAILS

NO SCALE

ALL DIMENSIONS SHOWN IN MILLIMETERS, EXCEPT AS NOTED

	BY		CHECKED	
DESIGN	Amar Baldwan		David Wright	
DETAILS	Amar Baldwan		Jerry Marcotte	
QUANTITIES	Amar Baldwan		Jerry Marcotte	

STATE OF CALIFORNIA
DEPARTMENT OF TRANSPORTATION

DIVISION OF ENGINEERING SERVICES
ELECTRICAL-MECHANICAL-WATER AND WASTEWATER DESIGN

BRIDGE NO. 06R0001
KM POST R69.4

LAKEHEAD SAFETY ROADSIDE REST AREA UPGRADE AND ADDITION

DETAILS

SHEET **W-6**

DOS ELEC (10/98)
FILE => w_06.dgn
DATE PLOTTED => 28-JUL-2009 TIME PLOTTED => 14:49

ORIGINAL SCALE IN MILLIMETERS FOR REDUCED PLANS 0 10 20 30 40 50 60 70 80 90 100

CU 02 305
EA 395801

DISREGARD PRINTS BEARING EARLIER REVISION DATES →
REVISION DATES (PRELIMINARY STAGE ONLY): 02-23-05 | 8-29-06 | 9-29-06 | 02-01-07 | 03-28-07 | 04/14/09
SHEET OF

FILE => w_06.dgn

USERNAME => trlenard DATE PLOTTED => 28-JUL-2009 TIME PLOTTED => 14:49

VI=I

DIST.	COUNTY	ROUTE	KILOMETER POST TOTAL PROJECT	SHEET NO.	TOTAL SHEETS
02	Sha	5	R69.4	115	120

REGISTERED ENGINEER — CIVIL — DATE 04-14-09

7-13-09
PLANS APPROVAL DATE

REGISTERED PROFESSIONAL ENGINEER — J. MARCOTTE — No. C 36844 — Exp. 6-30-10 — CIVIL — STATE OF CALIFORNIA

The State of California or its officers or agents shall not be responsible for the accuracy or completeness of electronic copies of this plan sheet.

IDENTIFICATION STAMP
DIV. OF THE STATE ARCHITECT
SACRAMENTO REGIONAL OFFICE
02-108545
AC ANTONIO FLORENDO
ANTONIO FLORENDO
DATE 3-8-2007

CALIFORNIA STATE FIRE MARSHAL
APPROVED
Approval of this plan does not authorize or approve any omission or deviation from applicable regulations. Final approval is subject to field inspection. One set of approved plans shall be available on the project site at all times.
Reviewed by: MIKE TANAKA
Approval date: 4/9/2009
CSFM FILE NO. 01-45-11-0067

Caltrans Metric

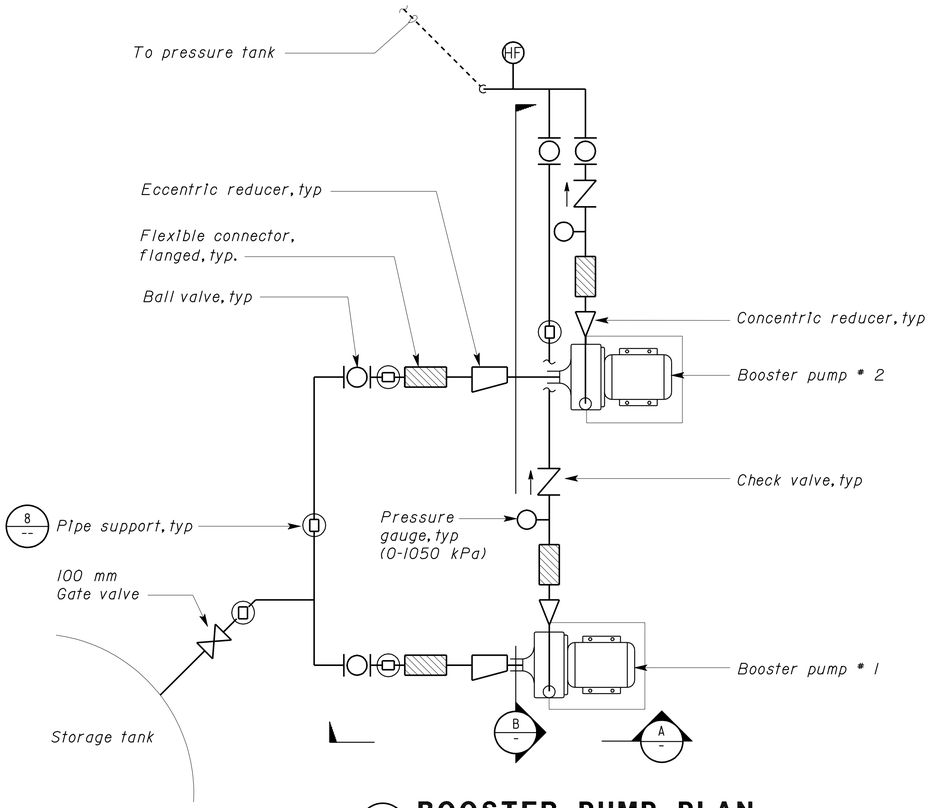

7 BOOSTER PUMP PLAN
NO SCALE

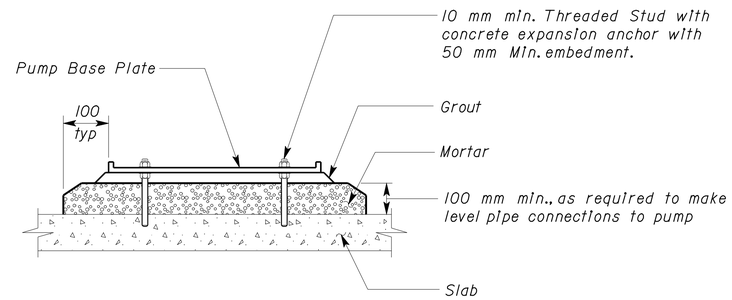

9 PUMP FOUNDATION
NO SCALE

EQUIPMENT SCHEDULE

EQUIPMENT	SPEED (RPM)	kW	VOLTS	PHASE	PUMPING RATE (LPM)	TOTAL DYNAMIC HEAD (m)
BOOSTER PUMP #1, #2	3500	5.5	230	1	265	61
					380	52
					455	40

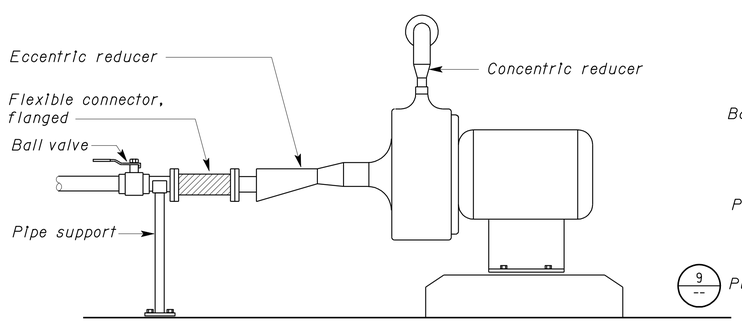

A ELEVATION
NO SCALE

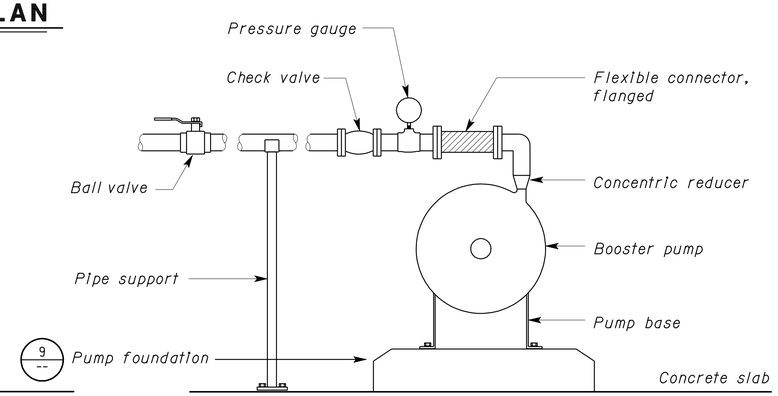

B SECTION
NO SCALE

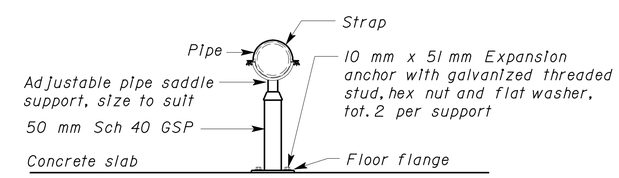

8 PIPE SUPPORT
NO SCALE

ALL DIMENSIONS SHOWN IN MILLIMETERS, EXCEPT AS NOTED

	BY		CHECKED	
DESIGN	BY	Amar Baldwan	CHECKED	David Wright
DETAILS	BY	Amar Baldwan	CHECKED	Jerry Marcotte
QUANTITIES	BY	Amar Baldwan	CHECKED	Jerry Marcotte

STATE OF CALIFORNIA
DEPARTMENT OF TRANSPORTATION

DIVISION OF ENGINEERING SERVICES
ELECTRICAL-MECHANICAL-WATER AND WASTEWATER DESIGN

BRIDGE NO. 06R0001
KM POST R69.4

LAKEHEAD SAFETY ROADSIDE REST AREA UPGRADE AND ADDITION

BOOSTER PUMP PLAN AND DETAILS

SHEET **W-7**

DOS ELEC (10/98)
FILE => w_07.dgn
DATE PLOTTED => 28-JUL-2009 TIME PLOTTED => 14:49
ORIGINAL SCALE IN MILLIMETERS FOR REDUCED PLANS 0 10 20 30 40 50 60 70 80 90 100
CU 02 305
EA 395801
FILE => w_07.dgn
DISREGARD PRINTS BEARING EARLIER REVISION DATES
REVISION DATES (PRELIMINARY STAGE ONLY) 02-23-05 8-29-06 9-29-06 02-01-07 03-28-07 04/14/09
SHEET OF

USERNAME => trlenard DATE PLOTTED => 28-JUL-2009 TIME PLOTTED => 14:49

VI=1

Notes:

1. Manway cover shall be taped with Tracer Tape before backfilling over.
2. Use pipe sleeves between concrete pad and pipe.

IDENTIFICATION STAMP
DIV. OF THE STATE ARCHITECT
SACRAMENTO REGIONAL OFFICE
02-108545
AC ANTONIO FLORENDO
ANTONIO FLORENDO
DATE 3-8-2007

CALIFORNIA STATE FIRE MARSHAL
APPROVED
Approval of this plan does not authorize or approve any omission or deviation from applicable regulations. Final approval is subject to field inspection. One set of approved plans shall be available on the project site at all times.
Reviewed by: MIKE TANAKA
Approval date: 4/9/2009
CSFM FILE NO. 01-45-11-0067

Caltrans Metric

DIST.	COUNTY	ROUTE	KILOMETER POST TOTAL PROJECT	SHEET NO.	TOTAL SHEETS
02	Sha	5	R69.4	116	120

REGISTERED ENGINEER - CIVIL Jerome R. Marcotte 04-14-09 DATE
7-13-09
PLANS APPROVAL DATE
REGISTERED PROFESSIONAL ENGINEER J. MARCOTTE No. C 36844 Exp. 6-30-10 CIVIL STATE OF CALIFORNIA

The State of California or its officers or agents shall not be responsible for the accuracy or completeness of electronic copies of this plan sheet.

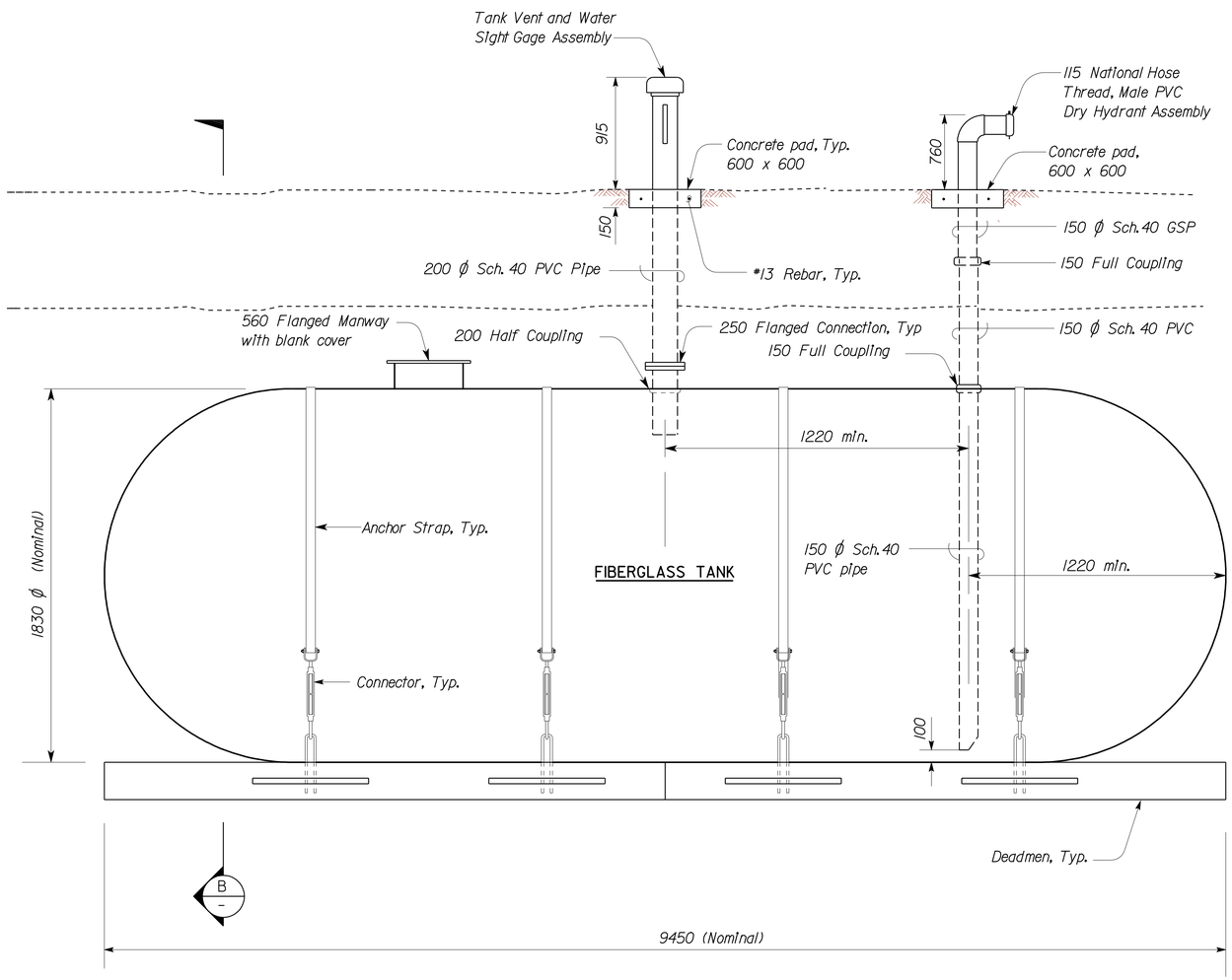

FIRE PROTECTION UNDERGROUND WATER STORAGE TANK-23,000 LITERS

A

NO SCALE

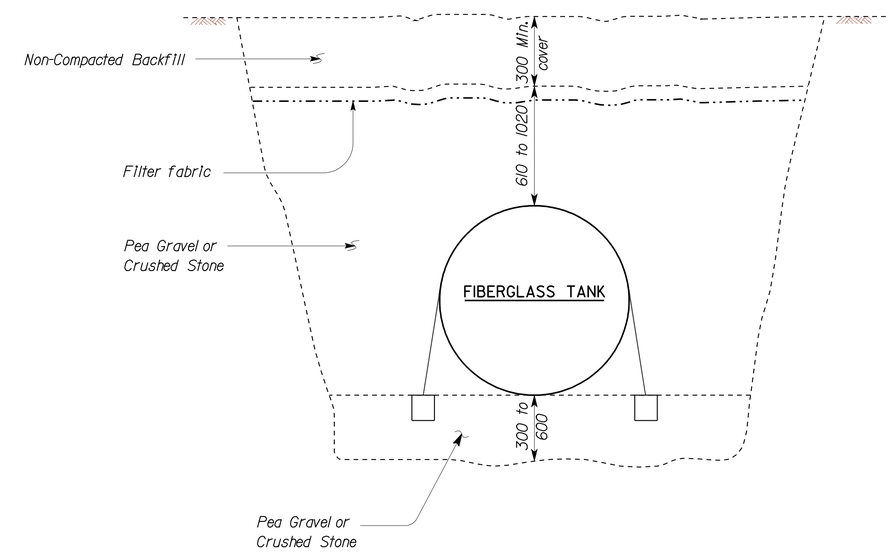

SECTION

B

NO SCALE

ALL DIMENSIONS SHOWN IN MILLIMETERS, EXCEPT AS NOTED

	BY		CHECKED
DESIGN	Amar Baldwan		Jerry Marcotte
DETAILS	Amar Baldwan		Jerry Marcotte
QUANTITIES	Amar Baldwan		Jerry Marcotte

STATE OF CALIFORNIA DEPARTMENT OF TRANSPORTATION

DIVISION OF ENGINEERING SERVICES
ELECTRICAL-MECHANICAL-WATER AND WASTEWATER DESIGN

BRIDGE NO. 06R0001
KM POST R69.4

LAKEHEAD SAFETY ROADSIDE REST AREA UPGRADE AND ADDITION
WATER STORAGE TANK

SHEET W-8

DOS ELEC (10/98)
FILE => w_08.dgn
DATE PLOTTED => 28-JUL-2009 TIME PLOTTED => 14:49

ORIGINAL SCALE IN MILLIMETERS FOR REDUCED PLANS 0 10 20 30 40 50 60 70 80 90 100

CU 02 305
EA 395801

DISREGARD PRINTS BEARING EARLIER REVISION DATES
REVISION DATES (PRELIMINARY STAGE ONLY) 02-23-05 8-29-06 9-29-06 02-01-07 03-28-07 04-14-09
SHEET OF

FILE => w_08.dgn

USERNAME => trlenard DATE PLOTTED => 28-JUL-2009 TIME PLOTTED => 14:49

VI=1

DIST.	COUNTY	ROUTE	KILOMETER POST TOTAL PROJECT	SHEET NO.	TOTAL SHEETS
02	Sha	5	R69.4	117	120

Caltrans Metric

Jerome R. Marcotte 04-14-09
REGISTERED ENGINEER - CIVIL DATE

7-13-09
PLANS APPROVAL DATE

REGISTERED PROFESSIONAL ENGINEER J. MARCOTTE No. C 36844 Exp. 6-30-10 CIVIL STATE OF CALIFORNIA

The State of California or its officers or agents shall not be responsible for the accuracy or completeness of electronic copies of this plan sheet.

ABBREVIATIONS

AB	AGGREGATE BASE	m	METER (S)
ABS	ACRYLONITRILE BUTADIENE STYRENE (PIPE)	MAX	MAXIMUM
AC	ASPHALT CONCRETE	MFR	MANUFACTURER
AVC	AIR VOLUME CONTROLLER	MH	MANHOLE
B	BUNG	MIN	MINIMUM
BLDG	BUILDING	mm	MILLIMETER
C	CONDUIT	N	NORTH
C-C	CENTER TO CENTER	NIC	NOT IN CONTRACT
CI	CAST-IRON	NO	NUMBER
cm	CENTIMETERS	OC	ON CENTER
CMP	CORRUGATED METAL PIPE	OD	OUTSIDE DIAMETER
CONC	CONCRETE	OG	ORIGINAL GROUND
COTF	CLEANOUT TO FLOOR	O/W	OIL WATER SEPARATOR
COTG	CLEANOUT TO GRADE	P	PITCH
CW	COLD WATER PIPE	PCC	PORTLAND CEMENT CONCRETE
D	DRAIN	PH	PHASE
DI	DRAIN INLET	PRV	PRESSURE REDUCING VALVE
DIA	DIAMETER	PVC	POLYVINYL CHLORIDE (PIPE)
DP	DRAIN PIPE	PW	PRESSURE WASHER
E	ELECTRICAL	R	RADIUS
(E)	EXISTING	RCP	REINFORCED CONCRETE PIPE
EA	EACH	REQ	REQUIRED
EL	ELEVATION	RPM	REVOLUTIONS PER MINUTE
EP	EDGE OF PAVEMENT	RPU	RECYCLE PROCESS UNIT
FF	FINISH FLOOR	RT	RIGHT
FG	FINISH GRADE	RW	RETURN WATER
FL	FLOW LINE	R/W	RIGHT-OF-WAY
FM	FORCE MAIN	S	SEWER
FOC	FACE OF CONCRETE	SCH	SCHEDULE
GA	GAUGE	SD	STORM DRAIN
GAC	GRANULAR ACTIVATED CARBON	SP	SEWER PIPE
GSP	GALVANIZED STEEL PIPE	SQ	SQUARE
GV	GATE VALVE	STA	STATION
HF	HOSE FAUCET	STD	STANDARD
HP	HORSEPOWER	TBM	TEMPORARY BENCH MARK
HT	HEIGHT	TOC	TOP OF CURB OR CONCRETE
HZ	HERTZ	TOT	TOTAL
ID	INSIDE DIAMETER	TYP	TYPICAL
IE	INVERT ELEVATION	VP	VENT PIPE
Kg	KILOGRAMS	VCP	VITRIFIED CLAY PIPE
Kw	KILOWATT	W	WATER
L	LITER(S)	W/O	WITHOUT
LPM	LITERS PER MINUTE	WP	WATER PIPE
LT	LEFT	WSP	WELDED STEEL PIPE

LEGEND

S	SANITARY SEWER
D	DRAIN
RD	RETURN DRAIN
E	ELECTRICAL
W	WATER
FM	FORCE MAIN
G	GAS
A	AIR
V	VENT
T	TELEPHONE

7 / SS-5	DETAIL / SHEET NUMBER
99.00	NEW GRADE IN METERS
X (100.00)	EXISTING SPOT GRADE IN METERS
	SURFACE DRAINAGE
	ABANDON (E)
	BENCHMARK ELEVATION
℄	CENTERLINE
Ø	DIAMETER
	SECTION / ELEVATION LETTER / SHEET NUMBER
	TREE

IDENTIFICATION STAMP
DIV. OF THE STATE ARCHITECT
SACRAMENTO REGIONAL OFFICE
02-108545
AC ANTONIO FLORENDO
ANTONIO FLORENDO
DATE 3-8-2007

CALIFORNIA STATE FIRE MARSHAL
APPROVED
Approval of this plan does not authorize or approve any omission or deviation from applicable regulations. Final approval is subject to field inspection. One set of approved plans shall be available on the project site at all times.
Reviewed by: MIKE TANAKA
Approval date: 4/9/2009
CSFM FILE NO. 01-45-11-0067

GENERAL WORK NOTES

The Contractor shall verify all controlling field dimensions and conditions before ordering or fabricating any materials.

The Contractor shall verify exact location of all underground facilities and utilities prior to start of construction.

No 90 degree bends allowed on drain or sewer pipe.

REQUIRED THRUST BLOCK BEARING AREA- TOTAL SQUARE METERS

TYPE OF FITTING		90 BEND	45 BEND	11-1/4 BEND 22-1/2 BEND	TEE OR DEAD END
TYPICAL INSTALLATION		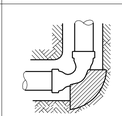	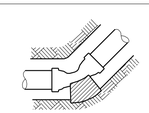	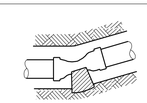	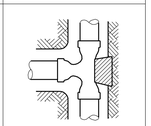
PIPE SIZE (mm)	≤100	0.2	0.1	0.1	0.2
	150	0.4	0.2	0.1	0.3
	200	0.7	0.4	0.2	0.5
	250	1.1	0.6	0.3	0.8

PIPE FITTINGS AND VALVES

- CAP, THREADED
- ELBOW, TURNED DOWN
- FLEXIBLE CONNECTOR
- REDUCER, CONCENTRIC
- REDUCER, ECCENTRIC
- PRESSURE GAUGE (WITH VALVE AND SNUBBER)
- UNION
- UNION, INSULATING
- VALVE, BALL
- VALVE, CHECK
- VALVE, GATE
- VALVE, SAFETY RELIEF
- VALVE, PRESSURE REDUCING

	BY	CHECKED
DESIGN	Amar Baldwan	David Wright
DETAILS	Amar Baldwan	Jerry Marcotte
QUANTITIES	Amar Baldwan	Jerry Marcotte

STATE OF CALIFORNIA
DEPARTMENT OF TRANSPORTATION

DIVISION OF ENGINEERING SERVICES
ELECTRICAL-MECHANICAL-WATER AND WASTEWATER DESIGN

BRIDGE NO. 06R0001
KM POST R69.4

LAKEHEAD SAFETY ROADSIDE REST AREA UPGRADE AND ADDITION

NOTES, LEGEND AND ABBREVIATIONS

SHEET **SS-0**

DOS ELEC (10/98) FILE => ss_00.dgn
DATE PLOTTED => 28-JUL-2009 TIME PLOTTED => 14:49

ORIGINAL SCALE IN MILLIMETERS FOR REDUCED PLANS 0 10 20 30 40 50 60 70 80 90 100

CU 02 305
EA 395801

DISREGARD PRINTS BEARING EARLIER REVISION DATES

REVISION DATES (PRELIMINARY STAGE ONLY) 02-23-05 8-29-06 9-29-06 02-01-07 03-28-07 04/14/09

SHEET OF

FILE => ss_00.dgn

USERNAME => trlenard DATE PLOTTED => 28-JUL-2009 TIME PLOTTED => 14:49

VI=1

DIST.	COUNTY	ROUTE	KILOMETER POST TOTAL PROJECT	SHEET NO.	TOTAL SHEETS
02	Sha	5	R69.4	118	120

Caltrans Metric

Jerome R. Marcotte 04-14-09
REGISTERED ENGINEER - CIVIL DATE

7-13-09
PLANS APPROVAL DATE

REGISTERED PROFESSIONAL ENGINEER J. MARCOTTE No. C 36844 Exp. 6-30-10 CIVIL STATE OF CALIFORNIA

The State of California or its officers or agents shall not be responsible for the accuracy or completeness of electronic copies of this plan sheet.

IDENTIFICATION STAMP
DIV. OF THE STATE ARCHITECT
SACRAMENTO REGIONAL OFFICE
02-108545
AC Antonio Florendo
ANTONIO FLORENDO
DATE 3-8-2007

CALIFORNIA STATE FIRE MARSHAL APPROVED
Approval of this plan does not authorize or approve any omission or deviation from applicable regulations. Final approval is subject to field inspection. One set of approved plans shall be available on the project site at all times.
Reviewed by: MIKE TANAKA
Approval date: 4/9/2009
CSFM FILE NO. 01-45-11-0067

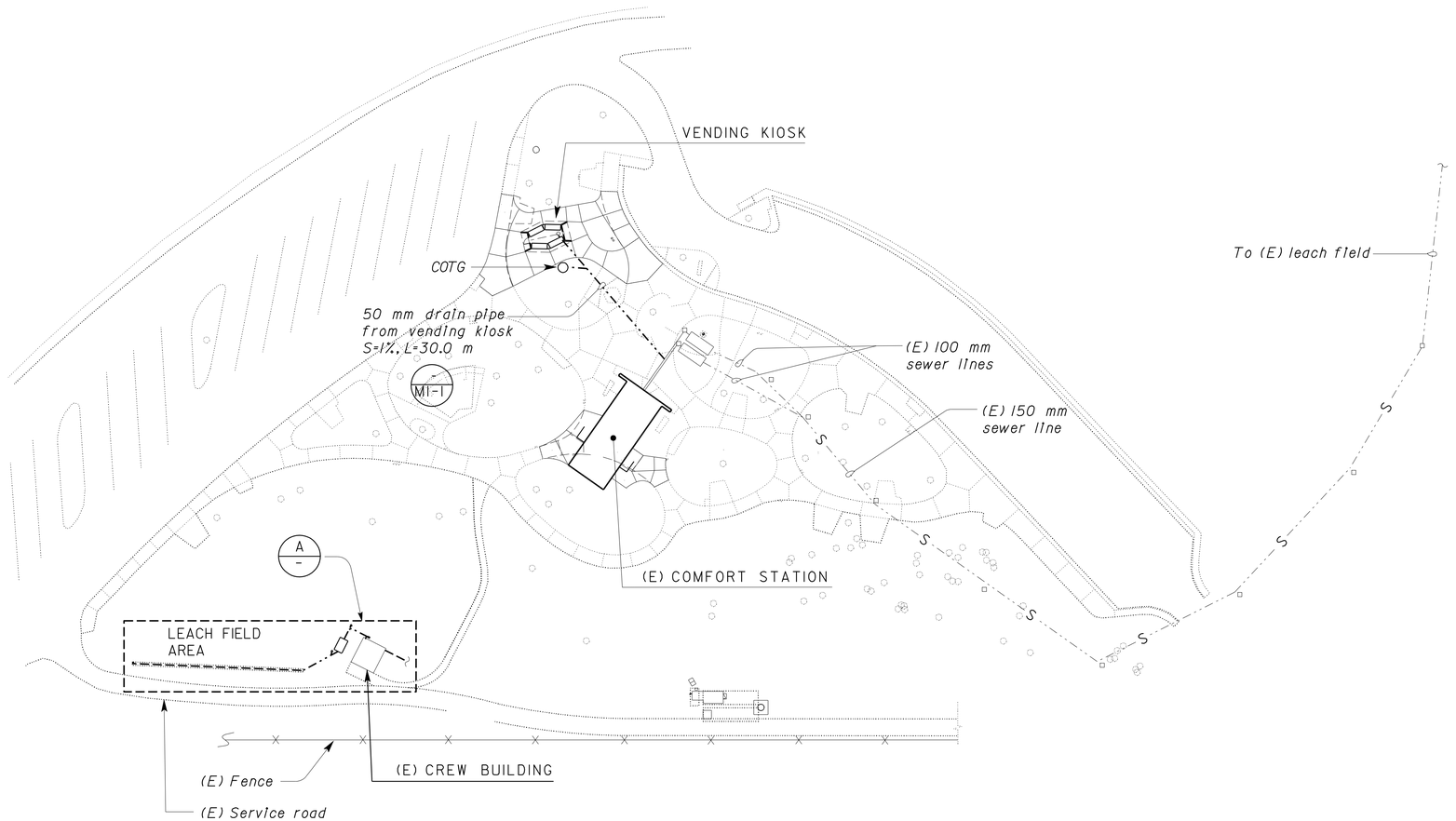

SITE PLAN
SCALE 1:500

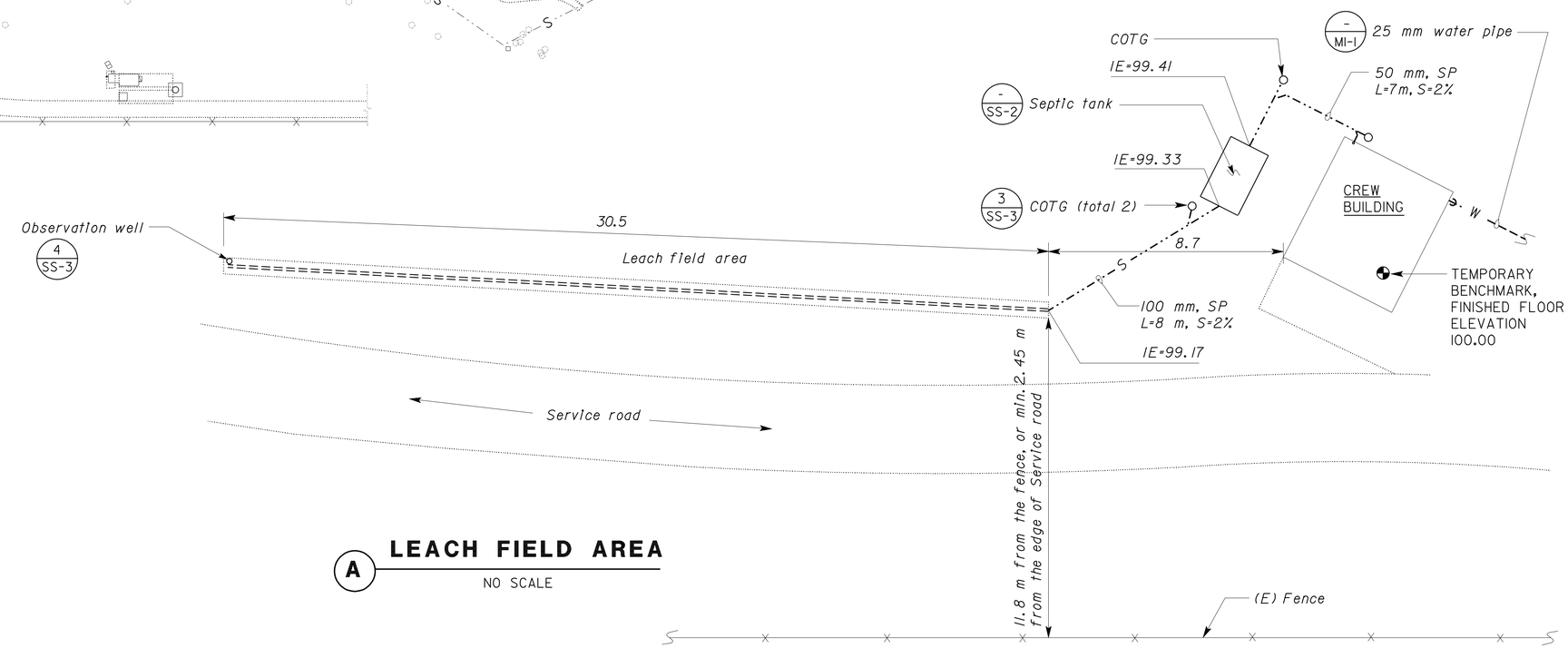

A LEACH FIELD AREA
NO SCALE

ALL DIMENSIONS SHOWN IN METERS, EXCEPT AS NOTED

DESIGN SUPERVISOR	DESIGN	BY Amar Baldwan	CHECKED David Wright
DESIGN ENGINEER	DETAILS	BY Amar Baldwan	CHECKED Jerry Marcotte
	QUANTITIES	BY Amar Baldwan	CHECKED Jerry Marcotte

STATE OF CALIFORNIA
DEPARTMENT OF TRANSPORTATION

DIVISION OF ENGINEERING SERVICES
ELECTRICAL-MECHANICAL-WATER AND WASTEWATER DESIGN

BRIDGE NO. 06R0001
KM POST R69.4

LAKEHEAD SAFETY ROADSIDE REST AREA UPGRADE AND ADDITION
MODIFIED SITE PLAN

SHEET **SS-1**

DOS ELEC (10/98) FILE => ss_01.dgn
DATE PLOTTED => 28-JUL-2009 TIME PLOTTED => 14:49

ORIGINAL SCALE IN MILLIMETERS FOR REDUCED PLANS 0 10 20 30 40 50 60 70 80 90 100

CU 02 305
EA 395801

DISREGARD PRINTS BEARING EARLIER REVISION DATES

REVISION DATES (PRELIMINARY STAGE ONLY) 02-23-05 8-29-06 9-29-06 02-01-07 03-28-07 04/14/09 SHEET OF

FILE => ss_01.dgn

USERNAME => trlenard DATE PLOTTED => 28-JUL-2009 TIME PLOTTED => 14:49

VI=1

DIST.	COUNTY	ROUTE	KILOMETER POST TOTAL PROJECT	SHEET NO.	TOTAL SHEETS
02	Sha	5	R69.4	119	120

Caltrans Metric

Jerome R. Marcotte 04-14-09
REGISTERED ENGINEER - CIVIL DATE

7-13-09
PLANS APPROVAL DATE

REGISTERED PROFESSIONAL ENGINEER
J. MARCOTTE
No. C 36844
Exp. 6-30-10
CIVIL
STATE OF CALIFORNIA

The State of California or its officers or agents shall not be responsible for the accuracy or completeness of electronic copies of this plan sheet.

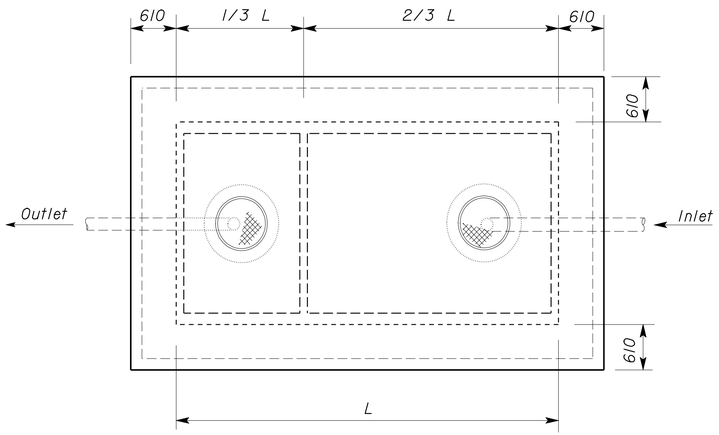

PLAN

NO SCALE

Note:

Epoxy mortar all joints, connections and penetrations, inside and outside of tank.

IDENTIFICATION STAMP
DIV. OF THE STATE ARCHITECT
SACRAMENTO REGIONAL OFFICE
02-108545
AC Antonio Florendo
ANTONIO FLORENDO
DATE 3-8-2007

CALIFORNIA STATE FIRE MARSHAL APPROVED

Approval of this plan does not authorize or approve any omission or deviation from applicable regulations. Final approval is subject to field inspection. One set of approved plans shall be available on the project site at all times.

Reviewed by: MIKE TANAKA
Approval date: 4/9/2009
CSFM FILE NO. 01-45-11-0067

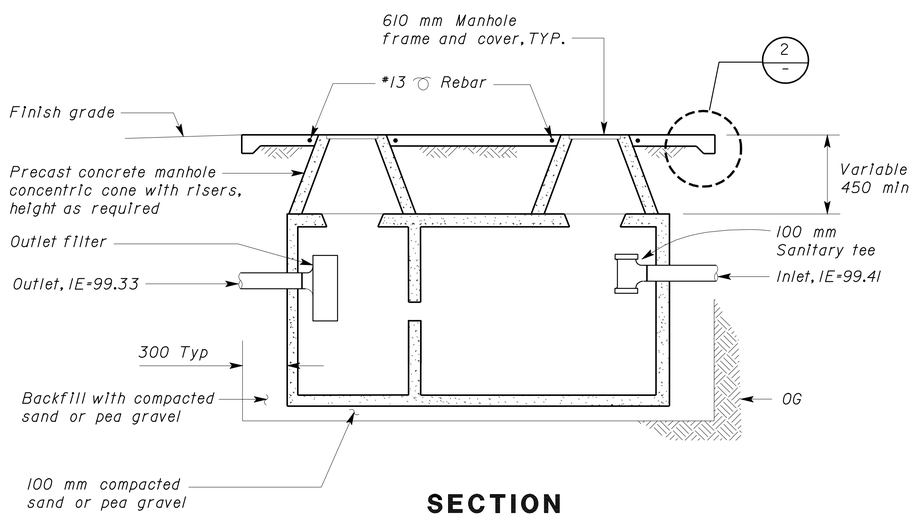

SECTION

NO SCALE

1 SEPTIC TANK 3800 LITERS

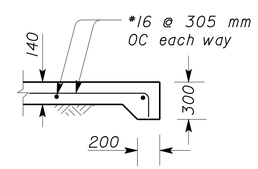

2 CONCRETE SLAB (EDGE)

NO SCALE

ALL DIMENSIONS SHOWN IN MILLIMETERS, EXCEPT AS NOTED

DESIGN	BY Amar Baldwan	CHECKED David Wright	
DETAILS	BY Amar Baldwan	CHECKED Jerry Marcotte	
QUANTITIES	BY Amar Baldwan	CHECKED Jerry Marcotte	

STATE OF CALIFORNIA
DEPARTMENT OF TRANSPORTATION

DIVISION OF ENGINEERING SERVICES
ELECTRICAL-MECHANICAL-WATER AND WASTEWATER DESIGN

BRIDGE NO. 06R0001
KM POST R69.4

LAKEHEAD SAFETY ROADSIDE REST AREA UPGRADE AND ADDITION

SEPTIC TANK

SHEET **SS-2**

DOS ELEC (10/98)
FILE => ss_02.dgn
DATE PLOTTED => 28-JUL-2009 TIME PLOTTED => 14:49

ORIGINAL SCALE IN MILLIMETERS FOR REDUCED PLANS 0 10 20 30 40 50 60 70 80 90 100

CU 02 305
EA 395801

DISREGARD PRINTS BEARING EARLIER REVISION DATES

REVISION DATES (PRELIMINARY STAGE ONLY) 02-23-05 8-29-06 9-29-06 02-01-07 03-28-07 04/14/09 SHEET OF

FILE => ss_02.dgn

USERNAME => trlenard DATE PLOTTED => 28-JUL-2009 TIME PLOTTED => 14:49

VI=1

DIST.	COUNTY	ROUTE	KILOMETER POST TOTAL PROJECT	SHEET NO.	TOTAL SHEETS
02	Sha	5	R69.4	120	120

Caltrans Metric

Jerome R. Marcotte (04-14-09)
REGISTERED ENGINEER - CIVIL DATE

7-13-09
PLANS APPROVAL DATE

REGISTERED PROFESSIONAL ENGINEER J. MARCOTTE No. C 36844 Exp. 6-30-10 CIVIL STATE OF CALIFORNIA

The State of California or its officers or agents shall not be responsible for the accuracy or completeness of electronic copies of this plan sheet.

IDENTIFICATION STAMP
DIV. OF THE STATE ARCHITECT
SACRAMENTO REGIONAL OFFICE
02-108545
AC Antonio Florendo
ANTONIO FLORENDO
DATE 3-8-2007

CALIFORNIA STATE FIRE MARSHAL
APPROVED
Approval of this plan does not authorize or approve any omission or deviation from applicable regulations. Final approval is subject to field inspection. One set of approved plans shall be available on the project site at all times.
Reviewed by: MIKE TANAKA
Approval date: 4/9/2009
CSFM FILE NO. 01-45-11-0067

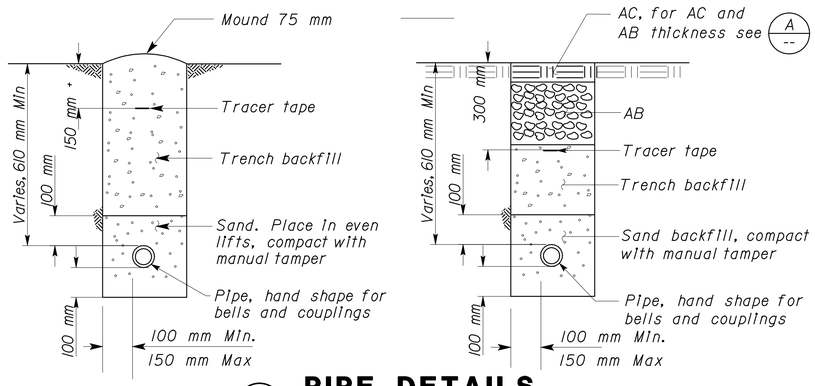

1 PIPE DETAILS
NO SCALE

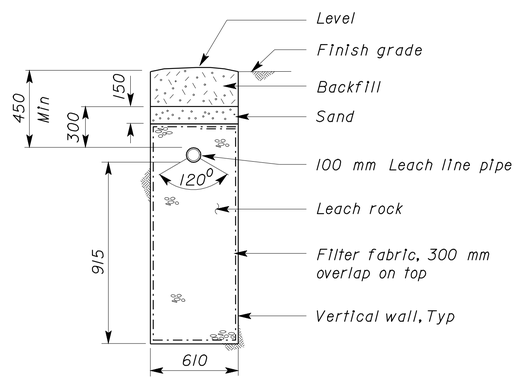

2 LEACH LINE
NO SCALE

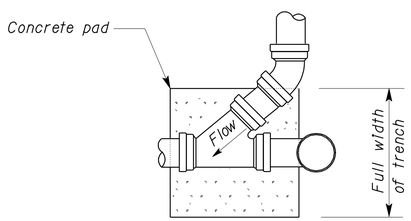

PLAN

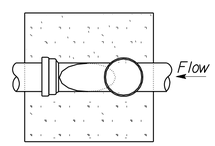

PLAN

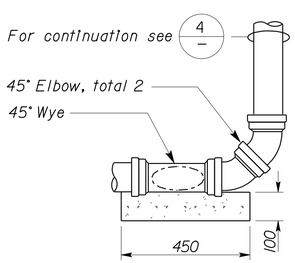

ELEVATION

CLEANOUT (AT BEND)

Concrete pad shown typical for all cleanouts

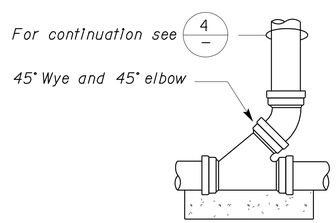

ELEVATION

CLEANOUT (STANDARD)

3 CLEANOUT TO GRADE - GRAVITY
NO SCALE

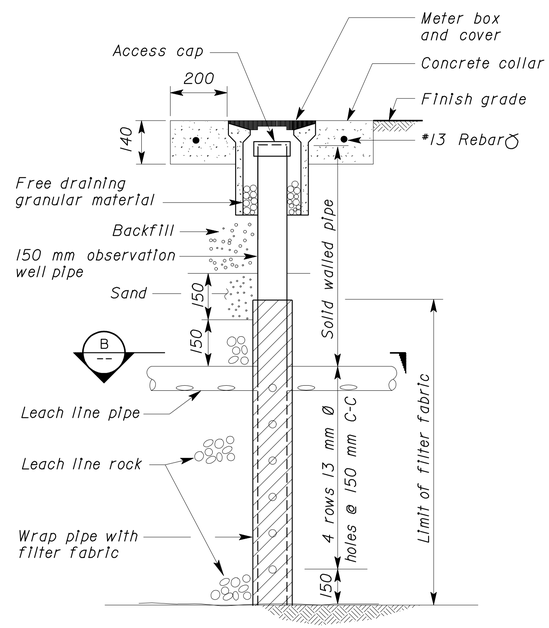

4 OBSERVATION WELL
NO SCALE

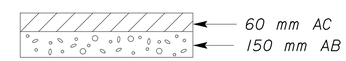

A AC PAVEMENT SECTION
NO SCALE

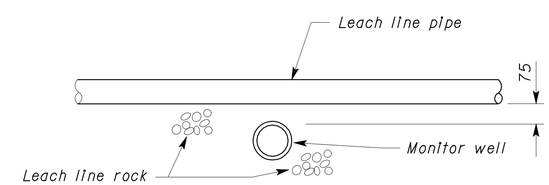

B SECTION - OBSERVATION WELL
NO SCALE

ALL DIMENSIONS SHOWN IN MILLIMETERS, EXCEPT AS NOTED

	BY	CHECKED
DESIGN	Amar Baldwan	David Wright
DETAILS	Amar Baldwan	Jerry Marcotte
QUANTITIES	Amar Baldwan	Jerry Marcotte

STATE OF CALIFORNIA
DEPARTMENT OF TRANSPORTATION

DIVISION OF ENGINEERING SERVICES
ELECTRICAL-MECHANICAL-WATER AND WASTEWATER DESIGN

BRIDGE NO. 06R0001
KM POST R69.4

LAKEHEAD SAFETY ROADSIDE REST AREA UPGRADE AND ADDITION

DETAILS

SHEET **SS-3**

DOS ELEC (10/98)
FILE => ss_03.dgn
DATE PLOTTED => 28-JUL-2009 TIME PLOTTED => 14:49

ORIGINAL SCALE IN MILLIMETERS FOR REDUCED PLANS 0 10 20 30 40 50 60 70 80 90 100

CU 02 305
EA 395801

DISREGARD PRINTS BEARING EARLIER REVISION DATES

REVISION DATES (PRELIMINARY STAGE ONLY): 02-23-05 | 8-29-06 | 9-29-06 | 02-01-07 | 03-28-07 | 04/14/09

SHEET OF

FILE => ss_03.dgn

USERNAME => trlenard DATE PLOTTED => 28-JUL-2009 TIME PLOTTED => 14:49

VI=I