| Dist | COUNTY | ROUTE | POST MILES TOTAL PROJECT | SHEET No. | TOTAL SHEETS |
|---|---|---|---|---|---|
| 02 | Sha | 299 | 30.3/40.7 | 301 | 366 |

Michael J. Mogen 04-22-13
REGISTERED CIVIL ENGINEER DATE

6-17-13
PLANS APPROVAL DATE

REGISTERED PROFESSIONAL ENGINEER MIKE MOGEN No. C67018 Exp. 9-30-14 CIVIL STATE OF CALIFORNIA

*THE STATE OF CALIFORNIA OR ITS OFFICERS OR AGENTS SHALL NOT BE RESPONSIBLE FOR THE ACCURACY OR COMPLETENESS OF SCANNED COPIES OF THIS PLAN SHEET.*

NOTES:

1. EXACT LOCATION AND POSITION OF ROADSIDE SIGN TO BE DETERMINED BY THE ENGINEER.
2. POST LENGTH GIVEN IS APPROXIMATE, POST LENGTH AND SIZE TO BE DETERMINED BY ENGINEER.
3. CALIFORNIA CODES ARE DESIGNATED BY (CA), OTHERWISE FEDERAL CODES ARE SHOWN.
4. (N) NOT A SEPARATE PAY ITEM, FOR INFORMATION ONLY.

## ROADSIDE SIGNS

| SIGN No. | SIGN CODE | PANEL SIZE In x In | REMOVE ROADSIDE SIGN | RESET ROADSIDE SIGN | RELOCATE ROADSIDE SIGN | ROADSIDE SIGN ONE POST | ROADSIDE SIGN TWO POST | ROADSIDE SIGN (WOOD POST) TWO POST | (N) POST SIZE AND LENGTH (LF) METAL POST 2½" x 2½" | (N) POST SIZE AND LENGTH (LF) WOOD POST 6" x 6" | COMMENTS |
|---|---|---|---|---|---|---|---|---|---|---|---|
| | | | EA | EA | EA | EA | EA | EA | | | |
| 3-1 | W2-1 | | | 1 | | | | | 12 | | |
| | W7-3A(3) | | | | | | | | | | |
| 4-1 | S32/S32A/S32-1 | | | 1 | | | | | 12 | | |
| 4-2 | W2-2 | 36" x 36" | 1 | | | | | | | | |
| 4-3 | W2-2 | 36" x 36" | | | | 1 | | | 12 | | |
| 5-1 | R2-1 (45) | | 1 | | | | | | | | |
| 5-2 | R2-1 (45) | | | | | 1 | | | 12 | | |
| 5-3 | R2-1 (55) | | 1 | | | | | | | | |
| 5-4 | R2-1 (55) | | | | | 1 | | | 12 | | |
| 5-5 | W2-1 | 36" x 36" | 1 | | | | | | | | |
| | W7-3a | | | | | | | | | | |
| 5-6 | W2-1 | 36" x 36" | | | | 1 | | | 12 | | |
| | W7-3a | | | | | | | | | | |
| 5-7 | G9-2(CA) | 66" x 24" | 1 | | | | | | | | |
| 5-8 | G9-2(CA) | 66" x 24" | | | | 1 | | | 12 | | |
| 5-9 | G8(CA) | 96" x 18" | 1 | | | | | | | | |
| | G8(CA) | 96" x 30" | | | | | | | | | |
| 5-10 | G8(CA) | 96" x 18" | | | | | 1 | | 12 | | |
| | G8(CA) | 96" x 30" | | | | | | | | | |
| 5-11 | R1-1 | | | 1 | | | | | 12 | | |
| 5-12 | G5(CA) | | 1 | | | | | | | | |
| | M3-4 | | | | | | | | | | |
| | G28(299)(CA) | | | | | | | | | | |
| 5-13 | G5(CA) | | | | | | 1 | | 12 | | |
| | M3-4 | | | | | | | | | | |
| | G28(299)(CA) | | | | | | | | | | |
| 6-1 | G11-4(CA) | | | 1 | | | | | 12 | | |
| 6-2 | G11-4(CA) | | | 1 | | | | | 12 | | |
| 6-3 | G8(CA) | 90" x 16" | 1 | | | | | | | | |
| | M3-2 | | | | | | | | | | |
| | G28(299)(CA) | | | | | | | | | | |
| | M6-3 | | | | | | | | | | |
| | RW-080 | 24" x 24" | | | | | | | | | |
| | RM-010 | 24" x 24" | | | | | | | | | |
| SUBTOTAL | | | 8 | 5 | | 5 | 2 | | | | |

## ROADSIDE SIGNS

| SIGN No. | SIGN CODE | PANEL SIZE In x In | REMOVE ROADSIDE SIGN | RESET ROADSIDE SIGN | RELOCATE ROADSIDE SIGN | ROADSIDE SIGN ONE POST | ROADSIDE SIGN TWO POST | ROADSIDE SIGN (WOOD POST) TWO POST | (N) POST SIZE AND LENGTH (LF) METAL POST 2½" x 2½" | (N) POST SIZE AND LENGTH (LF) WOOD POST 6" x 6" | COMMENTS |
|---|---|---|---|---|---|---|---|---|---|---|---|
| | | | EA | EA | EA | EA | EA | EA | | | |
| 6-4 | G8(CA) | 90" x 16" | | | | | 1 | | 12 | | |
| | M3-2 | | | | | | | | | | |
| | G28(299)(CA) | | | | | | | | | | |
| | M6-3 | | | | | | | | | | |
| | RW-080 | 24" x 24" | | | | | | | | | |
| | RM-010 | 24" x 24" | | | | | | | | | |
| 6-5 | R2-1 (45) | | 1 | | | | | | | | |
| 6-6 | R2-1 (45) | | | | | 1 | | | 12 | | |
| 6-7 | G1(CA) | 90" x 30" | 1 | | | | | | | | |
| | G8(CA) | 96" x 18" | | | | | | | | | |
| 6-8 | G1(CA) | 90" x 30" | | | | | 1 | | 12 | | |
| | G8(CA) | 96" x 18" | | | | | | | | | |
| 6-9 | R1-1 | | | | 1 | | | | 12 | | |
| 6-10 | G8(CA) | | 1 | | | | | | | | |
| | RW-080 | 24" x 24" | | | | | | | | | |
| | RM-010 | 24" x 24" | | | | | | | | | |
| 6-11 | G8(CA) | | | | | | 1 | | 12 | | |
| | RW-080 | 24" x 24" | | | | | | | | | |
| | RM-010 | 24" x 24" | | | | | | | | | |
| 6-12 | SPL | | 1 | | | | | | | | |
| 6-13 | W11-8 | | | | | 1 | | | 12 | | |
| 7-1 | R2-1 (45) | | 1 | | | | | | | | |
| 7-2 | R2-1 (45) | | | | | 1 | | | 12 | | |
| 7-3 | R2-1 (55) | | 1 | | | | | | | | |
| 7-4 | R2-1 (55) | | | | | 1 | | | 12 | | |
| 7-5 | G8(CA) | 102" x 18" | 1 | | | | | | | | |
| 7-6 | G8(CA) | 102" x 18" | | | | | 1 | | 12 | | |
| 7-7 | D3-1 | | | 1 | | | | | 12 | | KAWLINGA LANE |
| 7-8 | W11-8 | 36" x 36" | | | | 1 | | | 12 | | |
| 8-1 | D3-1 | | | 1 | | | | | 12 | | LAHONDA LANE |
| 8-2 | R1-1 | | | | 1 | | | | 12 | | |
| | D3-1 | | | | | | | | | | OLD ALTURAS ROAD |
| 8-3 | D3-1 | | | 1 | | | | | 12 | | GENUINE JOHNSON ROAD |
| 8-4 | R1-1 | | | | 1 | | | | 12 | | |
| SUBTOTAL | | | 7 | 3 | 3 | 5 | 4 | | | | |
| SHEET TOTAL | | | 15 | 8 | 3 | 10 | 6 | | | | |

# SIGN QUANTITIES
# SQ-1

REVISED BY | DATE REVISED
DANIEL FISHER | MIKE MOGEN
CALCULATED-DESIGNED BY | CHECKED BY
FUNCTIONAL SUPERVISOR
JULIE CASEY

STATE OF CALIFORNIA - DEPARTMENT OF TRANSPORTATION
Caltrans
DESIGN

P:\proj1\02\36070\design\Plan Sheets\236070od001.dgn

LAST REVISION 04-11-13 | DATE PLOTTED => 18-JUN-2013 | TIME PLOTTED => 15:42

| Dist | COUNTY | ROUTE | POST MILES TOTAL PROJECT | SHEET No. | TOTAL SHEETS |
|---|---|---|---|---|---|
| 02 | Sha | 299 | 30.3/40.7 | 302 | 366 |

Michael J. Mogen 04-22-13
REGISTERED CIVIL ENGINEER DATE

6-17-13
PLANS APPROVAL DATE

REGISTERED PROFESSIONAL ENGINEER
MIKE MOGEN
No. C67018
Exp. 9-30-14
CIVIL
STATE OF CALIFORNIA

*THE STATE OF CALIFORNIA OR ITS OFFICERS OR AGENTS SHALL NOT BE RESPONSIBLE FOR THE ACCURACY OR COMPLETENESS OF SCANNED COPIES OF THIS PLAN SHEET.*

NOTES:

1. EXACT LOCATION AND POSITION OF ROADSIDE SIGN TO BE DETERMINED BY THE ENGINEER.
2. POST SIZE AND LENGTH GIVEN ARE APPROXIMATE, POST LENGTH AND SIZE TO BE DETERMINED BY ENGINEER.
3. CALIFORNIA CODES ARE DESIGNATED BY (CA), OTHERWISE FEDERAL CODES ARE SHOWN.
4. (N) NOT A SEPARATE PAY ITEM, FOR INFORMATION ONLY.

## ROADSIDE SIGNS

| SIGN No. | SIGN CODE | PANEL SIZE In x In | REMOVE ROADSIDE SIGN | RESET ROADSIDE SIGN | RELOCATE ROADSIDE SIGN | ROADSIDE SIGN ONE POST | ROADSIDE SIGN TWO POST | ROADSIDE SIGN (WOOD POST) TWO POST | (N) POST SIZE AND LENGTH (LF) METAL POST 2½" x 2½" | (N) POST SIZE AND LENGTH (LF) WOOD POST 6" x 6" | COMMENTS |
|---|---|---|---|---|---|---|---|---|---|---|---|
| | | | EA | EA | EA | EA | EA | EA | | | |
| 8-5 | D3-1 | | | 1 | | | | | 12 | | OAK KNOLLS RD |
| 8-6 | G28(299)(CA) | | | 1 | | | | | 12 | | |
| 8-7 | G5(CA) | 108" x 42" | 1 | | | | | | | | |
| 8-8 | G5(CA) | 108" x 42" | | | | | 1 | | 12 | | |
| 8-9 | G8(CA) | 102" x 18" | 1 | | | | | | | | |
| 8-10 | G8(CA) | 102" x 18" | | | | | 1 | | 12 | | OLD ALTURAS RD |
| 8-11 | W2-1 | 36" x 36" | 1 | | | | | | | | |
| | W7-3a (1) | | | | | | | | | | |
| 8-12 | W2-1 | 36" x 36" | | | | 1 | | | 12 | | |
| | W7-3a (1) | | | | | | | | | | |
| 9-1 | G11(CA) | | | | | 1 | | | 12 | | |
| 9-2 | G11(CA) | | | | | 1 | | | 12 | | |
| 9-3 | R2-1 (65) | | | | | 1 | | | 12 | | |
| 9-4 | G9(CA) | 66" x 24" | 1 | | | | | | | | |
| 9-5 | G9(CA) | 66" x 24" | | | | | 1 | | 12 | | |
| 9-6 | R2-1 (55) | | | | | 1 | | | 12 | | |
| 9-7 | D3-1 | | | 1 | | | | | 12 | | OLD RANCH ROAD |
| 9-8 | R6-3(CA) | | | | | 1 | | | 12 | | |
| 9-9 | R6-4(CA) | | | | | 1 | | | 12 | | |
| 10-1 | R2-1 (65) | | 1 | | | | | | | | |
| 10-2 | R2-1 (55) | | 1 | | | | | | | | |
| 11-1 | R6-4(CA) | | 1 | | | | | | | | |
| 11-2 | R6-4(CA) | | | | | 1 | | | 12 | | |
| 11-3 | R6-3(CA) | | 1 | | | | | | | | |
| 11-4 | R6-4(CA) | | 1 | | | | | | | | |
| 11-5 | S32/S32A/S32-1 | | | 1 | | | | | 12 | | |
| 12-1 | S32/S32A/S32-1 | | | 1 | | | | | 12 | | |
| 13-1 | W11-3 | | 1 | | | | | | | | |
| | W7-3a (2) | | | | | | | | | | |
| 13-2 | W11-3 | | | | | 1 | | | 12 | | |
| | W7-3a (2) | | | | | | | | | | |
| 18-1 | D3-1 | | | 1 | | | | | 12 | | HAND SAW - BLUE SKY RD |
| 18-2 | G11-4(CA) | 44" x 18" | | 1 | | | | | 12 | | |
| 18-3 | G11-4(CA) | 44" x 18" | | 1 | | | | | 12 | | |
| 18-4 | D3-1 | | | 1 | | | | | 12 | | INDIAN OAKS DR |
| 18-5 | R1-1 | | | | 1 | | | | 12 | | |
| | | SUBTOTAL | 10 | 9 | 1 | 9 | 3 | | | | |

## ROADSIDE SIGNS

| SIGN No. | SIGN CODE | PANEL SIZE In x In | REMOVE ROADSIDE SIGN | RESET ROADSIDE SIGN | RELOCATE ROADSIDE SIGN | ROADSIDE SIGN ONE POST | ROADSIDE SIGN TWO POST | ROADSIDE SIGN (WOOD POST) TWO POST | (N) POST SIZE AND LENGTH (LF) METAL POST 2½" x 2½" | (N) POST SIZE AND LENGTH (LF) WOOD POST 6" x 6" | COMMENTS |
|---|---|---|---|---|---|---|---|---|---|---|---|
| | | | EA | EA | EA | EA | EA | EA | | | |
| 20-1 | W11-3 | | 1 | | | | | | | | |
| | W7-3a (2) | | | | | | | | | | |
| 20-2 | W11-3 | | | | | 1 | | | 12 | | |
| | W7-3a (2) | | | | | | | | | | |
| 20-3 | S32/S32A/32-1 | | 1 | | | | | | | | SAVE PANELS FOR REUSE ON SIGNS 20-4 & 20-5 |
| 20-4 | S32/S32A/32-1 | | | | | 1 | | | 12 | | REUSE SAVED PANELS FROM 20-3, FWBT |
| 20-5 | S32/S32A/32-1 | | | | | 1 | | | 12 | | REUSE SAVED PANELS FROM 20-3, FEBT |
| 21-1 | G69(2)(CA) | | | | | 1 | | | 12 | | |
| 24-1 | R47(CA) | | 1 | | | | | | | | |
| 27-1 | S32/S32A/S32-1 | | | 1 | | | | | 12 | | |
| 28-1 | D3-1 | | | 1 | | | | | 12 | | WOODMAN LANE |
| 28-2 | G69(CA) | | | | | 1 | | | 12 | | |
| 28-3 | W51 (CA) | 48" x 48" | 1 | | | | | | | | |
| 29-1 | R68 | | 1 | | | | | | | | |
| 29-2 | R4-3 | | | | 1 | | | | 12 | | |
| 30-1 | W9-1 | | | | | 1 | | | 12 | | |
| 30-2 | W4-2 | | 1 | | | | | | | | |
| 30-3 | W4-2 | | | | | 1 | | | 12 | | |
| 30-4 | W4-2 | | 1 | | | | | | | | |
| 30-5 | W4-2 | | | | | 1 | | | 12 | | |
| 30-6 | S32/S32A/S32-1 | | | | 1 | | | | 12 | | RELOCATE TO PM 37.0, FEBT |
| 30-7 | R4-1 | | 1 | | | | | | | | |
| 30-8 | R4-1 | | | | | 1 | | | 12 | | |
| 30-9 | R4-1 | | 1 | | | | | | | | |
| 30-10 | R4-1 | | | | | 1 | | | 12 | | |
| 34-1 | G17(1000)(CA) | | 1 | | | | | | | | |
| 34-2 | G17(1000)(CA) | | | | | 1 | | | 12 | | |
| 34-3 | G17(1000)(CA) | | | | | 1 | | | 12 | | |
| 38-1 | R6-4(CA) | | 1 | | | | | | | | |
| 38-2 | R6-4(CA) | | | | | 1 | | | 12 | | |
| 39-1 | R6-3(CA) | | 1 | | | | | | | | |
| 39-2 | R6-3(CA) | | | | | 1 | | | 12 | | |
| | | SUBTOTAL | 12 | 2 | 2 | 14 | | | | | |
| | | SHEET TOTAL | 22 | 11 | 3 | 23 | 3 | | | | |

# SIGN QUANTITIES
# SQ-2

REVISED BY | DATE REVISED
DANIEL FISHER | MIKE MOGEN
CALCULATED-DESIGNED BY | CHECKED BY
FUNCTIONAL SUPERVISOR: JULIE CASEY
STATE OF CALIFORNIA - DEPARTMENT OF TRANSPORTATION
Caltrans® DESIGN

P:\proj1\02\36070\design\Plan Sheets\236070od002.dgn

LAST REVISION 04-11-13 | DATE PLOTTED => 18-JUN-2013 | TIME PLOTTED => 15:42

| Dist | COUNTY | ROUTE | POST MILES TOTAL PROJECT | SHEET No. | TOTAL SHEETS |
|---|---|---|---|---|---|
| 02 | Sha | 299 | 30.3/40.7 | 303 | 366 |

Michael J. Mogen 04-22-13
REGISTERED CIVIL ENGINEER DATE

6-17-13
PLANS APPROVAL DATE

REGISTERED PROFESSIONAL ENGINEER
MIKE MOGEN
No. C67018
Exp. 9-30-14
CIVIL
STATE OF CALIFORNIA

*THE STATE OF CALIFORNIA OR ITS OFFICERS OR AGENTS SHALL NOT BE RESPONSIBLE FOR THE ACCURACY OR COMPLETENESS OF SCANNED COPIES OF THIS PLAN SHEET.*

# ROADSIDE SIGNS

| SIGN No. | SIGN CODE | PANEL SIZE In x In | REMOVE ROADSIDE SIGN | RESET ROADSIDE SIGN | RELOCATE ROADSIDE SIGN | ROADSIDE SIGN ONE POST | ROADSIDE SIGN TWO POST | ROADSIDE SIGN (WOOD POST) TWO POST | (N) POST SIZE AND LENGTH (LF) METAL POST 2½" x 2½" | (N) POST SIZE AND LENGTH (LF) WOOD POST 6" x 6" | COMMENTS |
|---|---|---|---|---|---|---|---|---|---|---|---|
| | | | EA | EA | EA | EA | EA | EA | | | |
| 39-3 | R2-4(55) | | 1 | | | | | | | | |
| 39-4 | R2-4(55) | | | | | 1 | | | 12 | | |
| 40-1 | W11-4 | 48" x 48" | 1 | | | | | | | | |
| | W7-3a(8) | | | | | | | | | | |
| 40-2 | R2-1(65) | | 1 | | | | | | | | |
| 40-3 | R2-1(65) | | | | | 1 | | | 12 | | |
| 40-4 | R2-1(55) | | 1 | | | | | | | | |
| 40-5 | R2-1(55) | | | | | 1 | | | 12 | | |
| 40-6 | W11-3 | | 1 | | | | | | | | |
| | W7-3a(4) | | | | | | | | | | |
| 40-7 | W11-3 | | | | | 1 | | | 12 | | |
| | W7-3a(4) | | | | | | | | | | |
| SUBTOTAL | | | 5 | | | 4 | | | | | |
| SHEET PDQ-1 TOTAL | | | 15 | 8 | 3 | 10 | 6 | | | | |
| SHEET PDQ-2 TOTAL | | | 22 | 11 | 3 | 23 | 3 | | | | |
| SHEET DE-4 TOTAL | | | | | 4 | | | | | | |
| GRAND TOTAL | | | 42 | 19 | 10 | 37 | 9 | | | | |

## SIGN QUANTITIES
## SQ-3

REVISED BY | DATE REVISED
DANIEL FISHER | MIKE MOGEN
CALCULATED-DESIGNED BY | CHECKED BY
FUNCTIONAL SUPERVISOR: JULIE CASEY

STATE OF CALIFORNIA - DEPARTMENT OF TRANSPORTATION
Caltrans® DESIGN

P:\proj\02\36070\design\Plan Sheets\236070od003.dgn

LAST REVISION 04-11-13 | DATE PLOTTED => 18-JUN-2013 | TIME PLOTTED => 15:42

| Dist | COUNTY | ROUTE | POST MILES TOTAL PROJECT | SHEET No. | TOTAL SHEETS |
|---|---|---|---|---|---|
| 02 | Sha | 299 | 30.3/40.7 | 304 | 366 |

Michael J. Mogen 04-22-13
REGISTERED CIVIL ENGINEER DATE

6-17-13
PLANS APPROVAL DATE

REGISTERED PROFESSIONAL ENGINEER
MIKE MOGEN
No. C67018
Exp. 9-30-14
CIVIL
STATE OF CALIFORNIA

*THE STATE OF CALIFORNIA OR ITS OFFICERS OR AGENTS SHALL NOT BE RESPONSIBLE FOR THE ACCURACY OR COMPLETENESS OF SCANNED COPIES OF THIS PLAN SHEET.*

# CONTRACTOR FURNISHED ROADSIDE SIGN PANELS

| No. | SIGN CODE | PANEL SIZE L x D (In x In) | SINGLE FACED | SIGN FACING MATERIAL | | | | PROTECTIVE FILM | | FURNISH SINGLE SHEET ALUMINUM (0.063"-UNFRAMED) (SQFT) | FURNISH SINGLE SHEET ALUMINUM (0.080"-UNFRAMED) (SQFT) | FURNISH SINGLE SHEET ALUMINUM (0.080"-FRAMED) (SQFT) | DESCRIPTION (REMARKS) |
|---|---|---|---|---|---|---|---|---|---|---|---|---|---|
| | | | | BACKGROUND | | LEGEND | | | | | | | |
| | | | | SHEETING COLOR | RETROREFLECTIVE ASTM TYPE | SHEETING COLOR | RETROREFLECTIVE ASTM TYPE | STANDARD | PREMIUM | | | | |
| 4-3 | W2-2(RT) | 36 x 36 | X | YELLOW | III | BLACK | II | | X | | 9 | | INTERSECTION SYMBOL |
| 5-2 | R2-1(45) | 48 x 60 | X | WHITE | III | BLACK | II | | X | | 20 | | SPEED LIMIT 45 |
| 5-4 | R2-1(55) | 48 x 60 | X | WHITE | III | BLACK | II | | X | | 20 | | SPEED LIMIT 55 |
| 5-6 | W2-7R | 36 x 36 | X | YELLOW | III | BLACK | II | | X | | 9 | | OFFSET INTERSECTION SYMBOL |
| 5-6 | W7-3A(1) | 24 x 18 | X | YELLOW | III | BLACK | II | | X | | 3 | | NEXT 1 MILE |
| 5-8 | G9-2(CA) | 66 x 24 | X | GREEN | III | WHITE | III | | X | | | 11 | BELLA VISTA, POP 4200 ELEV 540 |
| 5-10 | G8(CA) | 90 x 18 | X | GREEN | III | WHITE | III | | X | | | 11.3 | DESCHUTES RD 0° ARROW |
| 5-10 | G1-4(CA) | 90 x 30 | X | GREEN | III | WHITE | III | | X | | | 18.8 | PALO CEDRO 5, ANDERSON 18, 0° ARROW |
| 5-13 | G5(CA) | 60 X 18 | X | GREEN | III | WHITE | III | | X | | | 8.3 | REDDING 9 |
| 5-13 | M3-4 | 24 x 12 | X | GREEN | III | WHITE | III | | | 2 | | | WEST |
| 5-13 | G28(299)(CA) | 28 x 25 | X | GREEN | III | WHITE | III | | | 4.9 | | | ROUTE 299 SHIELD |
| 6-4 | G8(CA) | 90 x 18 | X | GREEN | III | WHITE | III | | X | | | 11.3 | 180° ARROW DRY CREEK RD |
| 6-4 | M3-2 | 24 x 12 | X | GREEN | III | WHITE | III | | | 2 | | | EAST |
| 6-4 | G28(299)(CA) | 28 x 25 | X | GREEN | III | WHITE | III | | | 4.9 | | | ROUTE 299 SHIELD |
| 6-4 | M6-3 | 21 x 15 | X | GREEN | III | WHITE | III | | | 2.2 | | | 90° ARROW |
| 6-4 | RW-080 | 24 x 24 | X | BROWN | III | WHITE | III | | | 4 | | | BOAT RAMP SYMBOL |
| 6-4 | RM-010 | 24 x 24 | X | BROWN | III | WHITE | III | | | 4 | | | TENT CAMPING SYMBOL |
| 6-6 | R2-1(45) | 48 x 60 | X | WHITE | III | BLACK | II | | X | | 20 | | SPEED LIMIT 45 |
| 6-8 | G1-4(CA) | 90 x 30 | X | GREEN | III | WHITE | III | | X | | | 18.8 | 180° ARROW, PALO CEDRO 5, ANDERSON 18 |
| 6-8 | G8(CA) | 90 x 18 | X | GREEN | III | WHITE | III | | X | | | 11.3 | 180° ARROW DESCHUTES RD |
| 6-11 | G8(CA) | 90 x 18 | X | GREEN | III | WHITE | III | | X | | | 11.3 | DRY CREEK RD 0° ARROW |
| 6-11 | RW-080 | 24 x 24 | X | BROWN | III | WHITE | III | | | 4 | | | BOAT RAMP SYMBOL |
| 6-11 | RM-010 | 24 x 24 | X | BROWN | III | WHITE | III | | | 4 | | | TENT CAMPING SYMBOL |
| 6-13 | W11-8 | 36 x 36 | X | YELLOW | III | BLACK | II | | X | | 9 | | EMERGENCY VEHICLE SYMBOL |
| 7-2 | R2-1(45) | 48 x 60 | X | WHITE | III | BLACK | II | | X | | 20 | | SPEED LIMIT 45 |
| 7-4 | R2-1(55) | 48 x 60 | X | WHITE | III | BLACK | II | | X | | 20 | | SPEED LIMIT 55 |
| 7-6 | G8(CA) | 96 x 18 | X | GREEN | III | WHITE | III | | X | | | 12 | OLD ALTURAS RD 0° ARROW |
| 7-8 | W11-8 | 36 x 36 | X | YELLOW | III | BLACK | III | | X | | 9 | | FIRE STATION SYMBOL |
| 8-8 | G5(CA) | 108 x 42 | X | GREEN | III | WHITE | III | | X | | | 31.5 | ROUND MOUNTAIN 21, BURNEY 42, ALTURAS 134 |
| 8-10 | G8(CA) | 96 x 18 | X | GREEN | III | WHITE | III | | X | | | 12 | 180° ARROW OLD ALTURAS RD |
| 8-12 | W2-7R | 36 x 36 | X | YELLOW | III | BLACK | II | | X | | 9 | | OFFSET INTERSECTION SYMBOL |
| 8-12 | W7-3A(1) | 24 x 18 | X | YELLOW | III | BLACK | II | | X | | 3 | | NEXT 1 MILE |
| | | | | | | | | | SHEET TOTAL (SQFT) | 32 | 151 | 157.6 | |

## SIGN QUANTITIES
## SQ-4

REVISED BY | DATE REVISED
DANIEL FISHER | MIKE MOGEN
CALCULATED-DESIGNED BY | CHECKED BY
FUNCTIONAL SUPERVISOR
JULIE CASEY

STATE OF CALIFORNIA - DEPARTMENT OF TRANSPORTATION
Caltrans
DESIGN

P:\proj\02\36070\design\Plan Sheets\236070od004.dgn

LAST REVISION 04-11-13 | DATE PLOTTED => 18-JUN-2013 | TIME PLOTTED => 15:42

| Dist | COUNTY | ROUTE | POST MILES TOTAL PROJECT | SHEET No. | TOTAL SHEETS |
|---|---|---|---|---|---|
| 02 | Sha | 299 | 30.3/40.7 | 305 | 366 |

REGISTERED CIVIL ENGINEER DATE 04-22-13

6-17-13
PLANS APPROVAL DATE

REGISTERED PROFESSIONAL ENGINEER MIKE MOGEN No. C67018 Exp. 9-30-14 CIVIL STATE OF CALIFORNIA

*THE STATE OF CALIFORNIA OR ITS OFFICERS OR AGENTS SHALL NOT BE RESPONSIBLE FOR THE ACCURACY OR COMPLETENESS OF SCANNED COPIES OF THIS PLAN SHEET.*

# CONTRACTOR FURNISHED ROADSIDE SIGN PANELS

| No. | SIGN CODE | PANEL SIZE L x D (In x In) | SINGLE FACED | SIGN FACING MATERIAL | | | | PROTECTIVE FILM | | FURNISH SINGLE SHEET ALUMINUM (0.063"-UNFRAMED) (SQFT) | FURNISH SINGLE SHEET ALUMINUM (0.080"-UNFRAMED) (SQFT) | FURNISH SINGLE SHEET ALUMINUM (0.080"-FRAMED) (SQFT) | DESCRIPTION (REMARKS) |
|---|---|---|---|---|---|---|---|---|---|---|---|---|---|
| | | | | BACKGROUND | | LEGEND | | | | | | | |
| | | | | SHEETING COLOR | RETROREFLECTIVE ASTM TYPE | SHEETING COLOR | RETROREFLECTIVE ASTM TYPE | STANDARD | PREMIUM | | | | |
| 9-1 | G11(CA) | 36 x 18 | X | WHITE | II | BLACK | II | | X | | 4.5 | | LEMM CREEK, BRIDGE 6-102, 299 SHA 32.25 |
| 9-2 | G11(CA) | 36 x 18 | X | WHITE | II | BLACK | II | | X | | 4.5 | | LEMM CREEK, BRIDGE 6-102, 299 SHA 32.25 |
| 9-4 | G9(CA) | 66 x 24 | X | GREEN | III | WHITE | III | | X | | | 11 | BELLA VISTA, POP 4200 ELEV 540 |
| 9-5 | R2-1(55) | 48 x 60 | X | WHITE | III | BLACK | II | | X | | 20 | | SPEED LIMIT 55 |
| 9-6 | R6-3(CA) | 48 x 60 | X | WHITE | III | BLACK | II | | X | | 20 | | TRUCKS 3 AXELS OR MORE 55 MAXIMUM |
| 9-7 | R6-4(CA) | 48 x 60 | X | WHITE | III | BLACK | II | | X | | 20 | | ALL VEHICLES WHEN TOWING 55 MAXIMUM |
| 10-1 | R2-1(65) | 48 x 60 | X | WHITE | III | BLACK | II | | X | | 20 | | SPEED LIMIT 65 |
| 11-2 | R6-4(CA) | 48 x 60 | X | WHITE | III | BLACK | II | | X | | 20 | | ALL VEHICLES WHEN TOWING 55 MAXIMUM |
| 13-2 | W11-3 | 36 x 36 | X | YELLOW | III | BLACK | II | | X | | 9 | | DEER SYMBOL |
| 13-2 | W7-3A(2) | 24 x 18 | X | YELLOW | III | BLACK | II | | X | | 3 | | NEXT 2 MILES |
| 20-2 | W11-3 | 36 x 36 | X | YELLOW | III | BLACK | II | | X | | 9 | | DEER SYMBOL |
| 20-2 | W7-3A(2) | 24 x 18 | X | YELLOW | III | BLACK | II | | X | | 3 | | NEXT 2 MILES |
| 21-1 | G69(2)(CA) | 48 x 36 | X | GREEN | III | WHITE | III | | X | | 12 | | PASSING LANE 2 MILES |
| 28-2 | G69(CA) | 48 x 36 | X | GREEN | III | WHITE | III | | X | | 12 | | PASSING LANE AHEAD |
| 30-1 | W9-1 | 36 x 36 | X | YELLOW | III | BLACK | II | | X | | 9 | | RIGHT LANE ENDS |
| 30-3 | W4-2 | 36 x 36 | X | YELLOW | III | BLACK | II | | X | | 9 | | LANE DROP SYMBOL |
| 30-5 | W4-2 | 36 x 36 | X | YELLOW | III | BLACK | II | | X | | 9 | | LANE DROP SYMBOL |
| 30-8 | R4-1 | 24 x 36 | X | WHITE | III | BLACK | II | | X | | 6 | | DO NOT PASS |
| 30-10 | R4-1 | 24 x 36 | X | WHITE | III | BLACK | II | | X | | 6 | | DO NOT PASS |
| 34-2 | G17(1000)(CA) | 36 x 18 | X | GREEN | III | WHITE | III | | X | | 4.5 | | ELEVATION 1000 FT |
| 34-3 | G17(1000)(CA) | 36 x 18 | X | GREEN | III | WHITE | III | | X | | 4.5 | | ELEVATION 1000 FT |
| 38-2 | R6-4(CA) | 48 x 60 | X | WHITE | III | BLACK | II | | X | | 20 | | ALL VEHICLES WHEN TOWING 55 MAXIMUM |
| 39-2 | R6-3(CA) | 48 x 60 | X | WHITE | III | BLACK | II | | X | | 20 | | TRUCKS 3 AXELS OR MORE 55 MAXIMUM |
| 39-4 | R2-4(55)(CA) | 36 x 45 | X | WHITE | III | BLACK | II | | X | | 11.3 | | 55 ZONE AHEAD |
| 40-3 | R2-1(65) | 48 x 60 | X | WHITE | III | BLACK | II | | X | | 20 | | SPEED LIMIT 65 |
| 40-5 | R2-1(55) | 48 x 60 | X | WHITE | III | BLACK | II | | X | | 20 | | SPEED LIMIT 55 |
| 40-7 | W11-3 | 36 x 36 | X | YELLOW | III | BLACK | II | | X | | 9 | | DEER SYMBOL |
| 40-7 | W7-3A(4) | 24 x 18 | X | YELLOW | III | BLACK | II | | X | | 3 | | NEXT 4 MILES |
| SHEET TOTAL (SQFT) | | | | | | | | | | | 308.3 | 11 | |
| SHEET SQ-4 TOTAL (SQFT) | | | | | | | | | | 32 | 151.0 | 157.6 | |
| GRAND TOTAL (SQFT) | | | | | | | | | | 32 | 459.3 | 168.6 | |

## SIGN QUANTITIES
## SQ-5

REVISED BY | DATE REVISED
DANIEL FISHER | MIKE MOGEN
CALCULATED-DESIGNED BY | CHECKED BY
FUNCTIONAL SUPERVISOR
JULIE CASEY
STATE OF CALIFORNIA - DEPARTMENT OF TRANSPORTATION
Caltrans
DESIGN

P:\proj\02\36070\design\Plan Sheets\236070od005.dgn

LAST REVISION 04-11-13 | DATE PLOTTED => 18-JUN-2013 | TIME PLOTTED => 15:42

| Dist | COUNTY | ROUTE | POST MILES TOTAL PROJECT | SHEET No. | TOTAL SHEETS |
|---|---|---|---|---|---|
| 02 | Sha | 299 | 30.3/40.7 | 306 | 366 |

Michael J Mogen 04-22-13
REGISTERED CIVIL ENGINEER DATE

6-17-13
PLANS APPROVAL DATE

REGISTERED PROFESSIONAL ENGINEER MIKE MOGEN No. C67018 Exp. 9-30-14 CIVIL STATE OF CALIFORNIA

*THE STATE OF CALIFORNIA OR ITS OFFICERS OR AGENTS SHALL NOT BE RESPONSIBLE FOR THE ACCURACY OR COMPLETENESS OF SCANNED COPIES OF THIS PLAN SHEET.*

# ROADWAY ITEMS

| LOCATION | Temp RAILING (TYPE K) | TEMP IN-LINE CRASH CUSHION | REMOVE RETAINING WALL | RELOCATE MAIL BOX | COLD PLANE ASPHALT CONCRETE PAVEMENT | REMOVE CONCRETE | ** ROADWAY EXCAVATION | (N) EMBANKMENT | SHOULDER BACKING | GEOSYNTHETIC REINFORCEMENT | CLASS 2 AGGREGATE BASE | HMA, SUPERPAVE (OPEN GRADED) | HMA, SUPERPAVE (TYPE A) | TACK COAT | CLASS 1 PERMEABLE MATERIAL (BLANKET) | GABION | DESCRIPTION |
|---|---|---|---|---|---|---|---|---|---|---|---|---|---|---|---|---|---|
| | LF | EA | LF | EA | SQYD | CY | CY | CY | TON | SQYD | CY | TON | TON | TON | CY | CY | |
| "CL1" 110+50.00 L+ TO 111+20.00 L+ | 60 | | | | | | | | | | | | | | | | SEE SHEET DE-1 FOR LAYOUT |
| "CL1" 115+30.00 R+ TO 115+75.00 L+ | 40 | | | | | | | | | | | | | | | | SEE SHEET DE-2 FOR LAYOUT |
| "CL1" 236+00.00 R+ TO 238+00.00 R+ | 280 | | | | | | | | | | | | | | | | SEE SHEET C-12 FOR LAYOUT |
| "CL1" 236+00.00 L+ TO 238+00.00 L+ | 280 | | | | | | | | | | | | | | | | SEE SHEET C-12 FOR LAYOUT |
| "CL1" 236+00.00 R+ & L+, 238+00.00 R+ & L+ | | 4 | | | | | | | | | | | | | | | SEE SHEET C-12 FOR LAYOUT |
| "CL1" 99+50.00 TO 100+00.00 R+ | | | 50 | | | | | | | | | | | | | | |
| "CL1" 389+30.00 TO 390+00.00 L+ | | | 70 | | | | | | | | | | | | | | |
| "CL1" 371+42.46 TO 371+55.90 R+ | | | | 2 | | 0.8 | | | | | | | | | | | |
| "CL1" 413+20.00 TO 413+56.00 R+ | | | | 10 | | 2.4 | | | | | | | | | | | |
| DRIVEWAY CONNECTIONS (SHEETS C-1 AND C-2) | | | | | 3907 | | | | | | | | | | | | |
| ROAD CONNECTION (SHEET C-3) | | | | | 3087 | | | | | | | | | | | | |
| FROM SHEET DQ-33 | | | | | | 21.6 | | | | | | | 22 | 0.15 | | | |
| "CL1" 114+70.72TO 115+00.31 R+ AND L+ | | | | | | 160 | | | | | | | | | | | LEMN CREEK TRIPLE BOX CULVERT |
| "CL1" 10+00.00 TO 560+50.00 R+ & L+ | | | | | | | 208,387 | 165,858 | 6740 | | 85,878 | 14,000 | 92,733 | 95 | | | MAINLINE |
| "D1" LINE * (SHEET DE-3) | | | | | | | 5565 | 4000 | | | 885 | | 1430 | 2 | | | LEMN CREEK DETOUR ("D1" LINE) |
| "CH1" LINE | | | | | | | 1110 | 1120 | | | | | | | | | LEMN CREEK CHANNEL ("CH1" LINE) |
| "KC1" LINE | | | | | | | 55 | 550 | | | 257 | | 275 | 0.4 | | | OLD ALTURAS ROAD |
| "DWY1" LINE | | | | | | | 95 | | | | 38 | | 40 | 0.15 | | | Dwy 26A |
| "DWY3" LINE | | | | | | | 12 | 42 | | | 27 | | 30 | 0.15 | | | Dwy 28 |
| "CL1" 10+00.00 TO 295+00.00 | | | | | | | | | | 139,392 | | | | | | | |
| FROM Q-3 (SUBGRADE TREATMENT) | | | | | | | | | | | | | | | 222.2 | | |
| "DWY2" LINE | | | | | | | | | | | 65 | | 70 | 0.15 | | | Dwy 34 |
| "CL1" 112+50.00 TO 113+50.00 R+ | | | | | | | | | | | 6.5 | | | | 3.5 | 102 | GABION LOCATION |
| "CL1" 121+50.00 TO 122+50.00 L+ | | | | | | | | | | | 6.5 | | | | 3.5 | 102 | GABION LOCATION |
| "CL1" 135+75.00 TO 137+75.00 L+ | | | | | | | | | | | 13 | | | | 7.0 | 204 | GABION LOCATION |
| "CL1" 353+00.00 TO 357+50.00 R+ | | | | | | | | | | | 30 | | | | 15.2 | 450 | GABION LOCATION |
| DRIVEWAY AND ROAD CONNECTION CONFORMS | | | | | | | | | | | | | 1400 | 2 | | | |
| MAINTENANCE VEHICLE PULLOUTS | | | | | | | | | | | 94 | | 100 | | | | HMA = 0.25', BASE = 0.5' |
| TOTAL | 660 | 4 | 120 | 12 | 6993 | 184.5 | 215,224 | 171,570 | 6740 | 139,392 | 87,300 | 14,000 | 96,100 | 100 | 251.4 | 858 | |

(N) - NOT A SEPARATE PAY ITEM, FOR INFORMATION ONLY
* - EMBANKMENT WILL BE PLACED BACK INTO "CL1" ALIGNMENT.
** - 38,700 CY OF TOTAL EXCAVATION ROADWAY QUANTITY IS EXISTING AC.

## SUMMARY OF QUANTITIES
## Q-1

REVISED BY | DATE REVISED
DANIEL FISHER | MIKE MOGEN
CALCULATED-DESIGNED BY | CHECKED BY
FUNCTIONAL SUPERVISOR: JULIE CASEY
STATE OF CALIFORNIA - DEPARTMENT OF TRANSPORTATION
Caltrans DESIGN
P:\proj1\02\36070\design\Plan Sheets\236070pa001.dgn

LAST REVISION 04-11-13 | DATE PLOTTED => 18-JUN-2013 | TIME PLOTTED => 15:42

| Dist | COUNTY | ROUTE | POST MILES TOTAL PROJECT | SHEET No. | TOTAL SHEETS |
|---|---|---|---|---|---|
| 02 | Sha | 299 | 30.3/40.7 | 307 | 366 |

Michael J. Mogen 04-22-13
REGISTERED CIVIL ENGINEER DATE

6-17-13
PLANS APPROVAL DATE

REGISTERED PROFESSIONAL ENGINEER
MIKE MOGEN
No. C67018
Exp. 9-30-14
CIVIL
STATE OF CALIFORNIA

*THE STATE OF CALIFORNIA OR ITS OFFICERS OR AGENTS SHALL NOT BE RESPONSIBLE FOR THE ACCURACY OR COMPLETENESS OF SCANNED COPIES OF THIS PLAN SHEET.*

## MINOR CONCRETE (Misc Const)

| LOCATION | MINOR CONCRETE (Misc Const) | COMMENTS |
|---|---|---|
| | CY | |
| "CL1" 71+82.00 TO 72.39.00 R+ | 2.8 | SW AND RAMP FOR ADA RAMP AT DESCHUTES Rd |
| "CL1" 71+82.00 TO 72.39.00 R+ | 3.8 | A2-6 CURB FOR ADA RAMP AT DESCHUTES Rd |
| "CL1" 71+82.00 TO 72.39.00 R+ | 0.5 | RETAINING CURB FOR ADA RAMP AT DESCHUTES Rd |
| "CL1" 371+42.46 TO 371+55.90 R+ | 0.8 | RESET MAILBOX Conc PAD |
| "CL1" 413+20.00 TO 413+56.00 R+ | 2.6 | RESET MAILBOX Conc PAD |
| TOTAL | 10.5 | |

## PLACE HMA Misc AREA

| LOCATION | PLACE HMA Misc AREA | COMMENTS |
|---|---|---|
| | SQYD | |
| FROM DRAINAGE | 122.1 | SHEET DQ-33 |
| "TBC1" 100+00 TO 100+61 | 16.2 | ADA RAMP SHEET C-10 |
| TOTAL | 138.3 | |

## WATER POLLUTION CONTROL

| LOCATION | Temp CHECK DAM | Temp DRAINAGE INLET PROTECTION | Temp FIBER ROLL |
|---|---|---|---|
| | LF | EA | LF |
| "CL1" 10+00.00 TO 560+00.00 | 500 | 10 | 2500 |
| TOTAL | 500 | 10 | 2500 |

## METAL BEAM GUARD RAILING

| LOCATION | WORK AREA DESCRIPTION | REMOVE METAL BEAM GUARD RAILING | MBGR (STEEL POST) | TRANSITION RAILING (TYPE WB) | ALTERNATIVE FLARED TERMINAL SYSTEM | NOTES |
|---|---|---|---|---|---|---|
| | | LF | LF | EA | EA | |
| DRY CREEK BRIDGE | | 248 | | | | TREATED WOOD WASTE |
| | EB APPROACH | | | 1 | 1 | |
| | EB DEPARTURE | | | 1 | 1 | |
| | WB APPROACH | | | 1 | 1 | |
| | WB DEPARTURE | | | 1 | 1 | |
| LEMN CREEK BRIDGE | | 198 | | | | TREATED WOOD WASTE |
| | EB APPROACH | | 37.5 | 1 | 1 | |
| | EB DEPARTURE | | | 1 | 1 | |
| | WB APPROACH | | 50 | 1 | 1 | |
| | WB DEPARTURE | | | 1 | 1 | |
| SALT CREEK BRIDGE | | 248 | | | | TREATED WOOD WASTE |
| | EB APPROACH | | 50 | 1 | 1 | |
| | EB DEPARTURE | | | 1 | 1 | |
| | WB APPROACH | | 37.5 | 1 | 1 | |
| | WB DEPARTURE | | | 1 | 1 | |
| "CL1" 385+83 TO "CL1" 393+12 | | 466 | 425 | | 2 | TREATED WOOD WASTE |
| TOTAL | | 1160 | 600 | 12 | 14 | |

## TUBULAR HANDRAILING

| LOCATION | TUBULAR HANDRAILING | COMMENTS |
|---|---|---|
| | LF | |
| DRY CREEK BRIDGE | 27 | TRANSITION ANCHOR BLOCKS |
| TOTAL | 27 | |

## DETECTABLE WARNING SURFACE

| LOCATION | DETECTABLE WARNING SURFACE | COMMENTS |
|---|---|---|
| | SQ FT | |
| "CL1" 71+82.00 TO 72.39.00 R+ | 61 | ADA RAMP AT DESCHUTES Rd |
| TOTAL | 61 | |

## TREATED WOOD WASTE

| LOCATION | TREATED WOOD WASTE | NOTES |
|---|---|---|
| | LB | |
| DRY CREEK BRIDGE | 4283 | FROM Exist MBGR |
| LEMN CREEK BRIDGE | 3460 | |
| SALT CREEK BRIDGE | 4283 | |
| "CL1" 385+83 TO "CL1" 393+12 | 7872 | |
| TOTAL | 19,898 | |

## HMA DIKE

| LOCATION | TYPE A | TYPE D | TYPE F |
|---|---|---|---|
| | LF | LF | LF |
| "CL1" 45+41.60, L+ | 4 | | |
| "CL1" 53+38.88, R+ | 4 | | |
| "CL1" 267+89.00, R+ | 4 | | |
| "CL1" 352+51.38 L+ | 4 | | |
| "CL1" 48+50 TO "CL1" 52+03 | | 360 | |
| "CL1" 113+39 TO "CL1" 113+64, L+ | | | 25 |
| "CL1" 113+76 TO "CL1" 114+01, R+ | | | 25 |
| "CL1" 236+37 TO "CL1" 236+59, L+ | | | 22 |
| "CL1" 236+37 TO "CL1" 236+29, R+ | | | 22 |
| TOTAL | 16 | 360 | 94 |

# SUMMARY OF QUANTITIES
# Q-2

| REVISED BY | DATE REVISED |
|---|---|
| DANIEL FISHER | MIKE MOGEN |
| CALCULATED-DESIGNED BY | CHECKED BY |
| FUNCTIONAL SUPERVISOR | JULIE CASEY |

STATE OF CALIFORNIA - DEPARTMENT OF TRANSPORTATION
Caltrans DESIGN

P:\proj1\02\36070\design\Plan Sheets\236070pa002.dgn

LAST REVISION 04-11-13 | DATE PLOTTED => 18-JUN-2013 | TIME PLOTTED => 15:42

| Dist | COUNTY | ROUTE | POST MILES TOTAL PROJECT | SHEET No. | TOTAL SHEETS |
|---|---|---|---|---|---|
| 02 | Sha | 299 | 30.3/40.7 | 308 | 366 |

Michael J. Mogen 04-22-13
REGISTERED CIVIL ENGINEER DATE

6-17-13
PLANS APPROVAL DATE

REGISTERED PROFESSIONAL ENGINEER
MIKE MOGEN
No. C67018
Exp. 9-30-14
CIVIL
STATE OF CALIFORNIA

*THE STATE OF CALIFORNIA OR ITS OFFICERS OR AGENTS SHALL NOT BE RESPONSIBLE FOR THE ACCURACY OR COMPLETENESS OF SCANNED COPIES OF THIS PLAN SHEET.*

## WATER SUPPLY LINE

| LOCATION | REMOVE WATERLINE | 4" WATERLINE CASING PIPE | 2" WATERLINE PIPE |
|---|---|---|---|
| | LF | LF | LF |
| "CL1" 272+68.80 R† & L† | 75 | 60 | 80 |
| TOTAL | 75 | 60 | 80 |

## SUBGRADE TREATMENT

| LOCATION | 6" PERFORATED PLASTIC PIPE UNDERDRAIN | 6" NON-PERFORATED PLASTIC PIPE UNDERDRAIN | CLASS 1 PERMEABLE MATERIAL (BLANKET) |
|---|---|---|---|
| | LF | LF | CY |
| "CL1" 195+80 TO 196+80 | 950 | 160 | 222 |
| TOTAL | 950 | 160 | 222 |

## CABLE RAILING

| LOCATION | CABLE RAILING | |
|---|---|---|
| | LF | |
| SEE SHEET DQ-34 | 398 | |
| "CL1" 112+50 TO 113+50 | 100 | GABION LOCATION |
| "CL1" 121+50 TO 122+50 | 100 | GABION LOCATION |
| "CL1" 135+75 TO 137+75 | 200 | GABION LOCATION |
| "CL1" 353+00 to 357+50 | 450 | GABION LOCATION |
| "CL1" 304+00 to 305+62 | 162 | RETAINING WALL |
| SEE STRUCTURES SHEETS | 209 | |
| TOTAL | 1619 | |

## NATIVE STREAMBED MATERIAL

| LOCATION | |
|---|---|
| | CY |
| LEMN CREEK CHANNEL | 730 |
| TOTAL | 730 |

## BAR REINFORCING STEEL

| LOCATION | BAR REINFORCING STEEL | COMMENTS |
|---|---|---|
| | LB | |
| "CL1" 304+00.00 TO 305+61.84 | 5200 | TYPE 1 RETAINING WALL |
| FROM SHEET DQ-33 | 8942 | |
| TOTAL | 14,142 | |

## FENCE

| LOCATION | OFFSET | REMOVE FENCE | FENCE (TYPE BW, METAL POST) | FENCE (TYPE WM, METAL POST) |
|---|---|---|---|---|
| | L†/R† | LF | LF | LF |
| "CL1" 230+74.31 TO 235+53.09 | L† | 454 | 450 | |
| "CL1" 236+06.21 TO 236+42.80 | L† | 85 | 40 | |
| "CL1" 247+73.90 TO 250+69.80 | L† | 318 | 110 | 184 |
| "CL1" 258+54.63 TO 260+13.06 | L† | 156 | 161 | |
| "CL1" 302+62.12 TO 305+52.91 | L† | 286 | | 300 |
| TOTAL | | 1299 | 761 | 484 |

## CONCETE BARRIER (TRANSITION ANCHOR BLOCK)

| LOCATION | DIRECTION | SIDE OF BRIDGE | LENGTH |
|---|---|---|---|
| | EB/WB | E/W | LF |
| DRY CREEK BRIDGE | EB | W | 3.5 |
| DRY CREEK BRIDGE | EB | E | 3.5 |
| DRY CREEK BRIDGE | WB | W | 3.5 |
| DRY CREEK BRIDGE | WB | E | 3.5 |
| TOTAL | | | 14 |

## TYPE 1 RETAINING WALL

| LOCATION | STRUCTURAL EXCAVATION (RETAINING WALL) | STRUCTURAL BACKFILL (RETAINING WALL) | STRUCTURAL CONCRETE RETAINING WALL | COMMENTS |
|---|---|---|---|---|
| | CY | CY | CY | |
| "CL1" 304+00.00 TO 305+61.84 | 90 | 50 | 75 | TYPE 1 RETAINING WALL |
| FROM SHEET STRUCTURES PLANS | 1052 | 814 | 238 | |
| TOTAL | 1142 | 864 | 313 | |

# SUMMARY OF QUANTITIES
# Q-3

REVISED BY | DATE REVISED
DANIEL FISHER | MIKE MOGEN
CALCULATED-DESIGNED BY | CHECKED BY
FUNCTIONAL SUPERVISOR: JULIE CASEY
STATE OF CALIFORNIA - DEPARTMENT OF TRANSPORTATION
Caltrans® DESIGN
P:\proj1\02\36070\design\Plan Sheets\236070pa003.dgn

LAST REVISION 04-11-13 | DATE PLOTTED => 18-JUN-2013 | TIME PLOTTED => 15:42

| Dist | COUNTY | ROUTE | POST MILES TOTAL PROJECT | SHEET No. | TOTAL SHEETS |
|---|---|---|---|---|---|
| 02 | Sha | 299 | 30.3/40.7 | 309 | 366 |

Michael J Mogen 04-22-13
REGISTERED CIVIL ENGINEER DATE

6-17-13
PLANS APPROVAL DATE

REGISTERED PROFESSIONAL ENGINEER
MIKE MOGEN
No. C67018
Exp. 9-30-14
CIVIL
STATE OF CALIFORNIA

*THE STATE OF CALIFORNIA OR ITS OFFICERS OR AGENTS SHALL NOT BE RESPONSIBLE FOR THE ACCURACY OR COMPLETENESS OF SCANNED COPIES OF THIS PLAN SHEET.*

NOTE:

(N) - NOT A SEPARATE PAY ITEM, FOR INFORMATION ONLY

# TEMPORARY FENCE (TYPE ESA) TABLE 1

| Sta | OFFSET | Sta | OFFSET | Sta | OFFSET | Sta | OFFSET | Sta | OFFSET | Sta | OFFSET | Sta | OFFSET | Sta | OFFSET | Sta | OFFSET | Rt/Lt | LENGTH (LF) |
|---|---|---|---|---|---|---|---|---|---|---|---|---|---|---|---|---|---|---|---|
| 10+96.19 | 50.08 | 10+96.19 | 24.24 | 12+55.73 | 27.25 | 13+98.68 | 26.09 | 14+35.09 | 40.10 | 14+35.09 | 50.07 | | | | | | | Lt | 377.35 |
| 11+40.00 | 49.91 | 11+40.00 | 38.91 | 11+50.00 | 38.91 | 11+50.00 | 49.91 | | | | | | | | | | | Rt | 32.00 |
| 15+50.98 | 49.92 | 15+50.98 | 43.41 | 16+75.21 | 43.41 | 16+75.21 | 49.92 | | | | | | | | | | | Rt | 137.25 |
| 15+97.95 | 50.07 | 15+97.95 | 36.14 | 16+19.94 | 27.15 | 16+91.31 | 26.48 | 17+00.13 | 33.76 | 17+79.95 | 33.86 | 17+85.17 | 36.96 | 17+85.17 | 50.06 | | | Lt | 219.49 |
| 18+38.15 | 50.06 | 18+55.90 | 35.59 | 19+14.29 | 32.22 | 19+84.68 | 28.95 | 20+28.07 | 28.68 | 21+12.26 | 29.40 | 21+33.65 | 30.61 | 21+40.80 | 34.45 | 21+40.80 | 50.05 | Lt | 324.58 |
| 18+50.00 | 49.93 | 18+50.00 | 30.29 | 18+67.97 | 32.41 | 18+70.57 | 33.51 | 18+70.57 | 49.93 | | | | | | | | | Rt | 56.98 |
| 18+78.18 | 49.93 | 18+78.18 | 33.83 | 18+87.05 | 33.19 | 19+04.24 | 33.84 | 19+04.24 | 49.93 | | | | | | | | | Rt | 58.29 |
| 19+64.00 | 49.93 | 19+64.00 | 32.89 | 20+48.40 | 32.00 | 20+48.40 | 49.94 | | | | | | | | | | | Rt | 119.38 |
| 18+45.92 | 50.07 | 18+55.91 | 36.60 | 19+84.69 | 28.00 | 21+33.65 | 30.61 | 21+40.80 | 34.45 | 21+40.80 | 50.05 | | | | | | | Lt | 318.54 |
| 21+73.34 | 50.06 | 21+73.34 | 35.65 | 21+88.22 | 31.51 | 25+01.33 | 31.51 | 25+01.33 | 50.04 | | | | | | | | | Lt | 371.79 |
| 29+00.00 | 47.03 | 29+38.21 | 49.86 | 29+58.07 | 49.83 | 29+80.76 | 50.03 | | | | | | | | | | | Lt | 80.87 |
| 29+05.01 | 46.96 | 29+44.61 | 49.11 | 29+68.95 | 49.44 | 30+00.15 | 49.46 | 30+08.21 | 49.96 | | | | | | | | | Rt | 103.28 |
| 41+28.10 | 50.00 | 41+49.63 | 49.94 | 41+49.63 | 68.90 | | | | | | | | | | | | | Rt | 40.49 |
| 45+69.33 | 75.23 | 45+69.33 | 54.80 | 46+78.75 | 65.23 | 46+78.75 | 78.71 | 45+69.33 | 75.23 | | | | | | | | | Rt | 259.82 |
| 47+16.82 | 84.94 | 47+16.82 | 99.96 | 47+95.86 | 82.72 | 47+95.86 | 99.87 | | | | | | | | | | | Rt | 113.07 |
| 48+24.66 | 99.32 | 48+39.39 | 100.12 | 48+50.00 | 105.10 | 49+00.00 | 100.80 | | | | | | | | | | | Rt | 76.66 |
| | | | | | | | | | | | | | | | | | | | |
| 51+78.49 | 99.90 | 52+24.94 | 71.84 | 52+24.94 | 100.11 | | | | | | | | | | | | | Lt | 82.54 |
| 52+58.11 | 99.50 | 52+77.94 | 99.75 | 52+95.74 | 113.44 | 53+49.71 | 129.86 | 54+21.97 | 99.64 | 54+48.15 | 99.70 | | | | | | | Rt | 203.20 |
| 54+38.72 | 97.56 | 54+38.72 | 88.60 | 54+50.00 | 97.50 | 55+03.11 | 84.91 | 55+03.11 | 97.79 | | | | | | | | | Lt | 90.79 |
| 57+67.94 | 100.18 | 57+95.80 | 99.78 | 58+27.64 | 118.90 | | | | | | | | | | | | | Rt | 65.00 |
| 57+89.92 | 98.80 | 57+89.92 | 77.17 | 58+20.93 | 82.33 | 58+43.14 | 64.38 | 59+12.48 | 63.10 | 59+12.48 | 99.25 | | | | | | | Lt | 187.12 |
| 61+50.00 | 99.70 | 61+50.00 | 31.00 | 62+00.00 | 44.96 | 63+94.98 | 70.36 | 64+00.00 | 54.59 | 64+73.53 | 51.12 | 65+00.00 | 49.69 | 65+12.81 | 47.66 | 65+50.00 | 41.81 | Lt | 484.53 |
| 65+50.00 | 41.81 | 65+83.61 | 29.64 | 66+73.37 | 29.52 | 66+73.37 | 100.11 | | | | | | | | | | | Lt | 201.02 |
| 62+03.01 | 48.58 | 62+50.00 | 28.94 | 63+00.00 | 40.71 | 63+50.00 | 57.40 | 62+91.65 | 68.84 | 62+03.01 | 48.58 | | | | | | | Rt | 305.39 |
| 68+11.08 | 99.82 | 67+55.24 | 57.85 | 65+95.18 | 57.85 | 65+95.17 | 34.28 | 66+91.26 | 38.58 | 68+42.40 | 63.23 | 68+42.40 | 99.60 | | | | | Rt | 538.00 |
| 72+88.30 | 62.90 | 72+93.36 | 59.33 | 74+34.76 | 55.86 | 74+52.51 | 49.30 | | | | | | | | | | | Lt | 166.56 |
| 73+29.27 | 99.58 | 73+24.43 | 77.34 | 73+51.07 | 45.52 | 74+59.20 | 35.11 | | | | | | | | | | | Rt | 172.89 |
| 75+86.76 | 44.79 | 76+51.81 | 99.40 | | | | | | | | | | | | | | | Rt | 84.93 |
| 75+86.05 | 50.07 | 75+91.67 | 86.85 | 77+32.61 | 73.88 | 77+83.04 | 48.19 | 78+25.87 | 40.84 | 78+25.87 | 53.00 | | | | | | | Lt | 290.95 |
| | | | | | | | | | | | | | | | | | | | |
| 96+50.00 | 41.00 | 97+93.50 | 41.00 | | | | | | | | | | | | | | | Rt | 143.5 |
| 99+01.01 | 59.80 | 99+01.01 | 46.23 | 99+29.72 | 48.53 | 99+29.72 | 59.80 | | | | | | | | | | | Lt | 53.64 |
| 100+00.00 | 68.71 | 100+00.00 | 61.64 | 100+41.21 | 57.03 | 100+44.42 | 61.06 | 100+50.00 | 58.03 | 100+54.05 | 59.71 | 101+13.45 | 59.68 | | | | | Rt | 123.82 |
| 101+48.00 | 48.30 | 102+00.00 | 38.31 | 104+50.00 | 38.67 | 105+61.50 | 55.70 | | | | | | | | | | | Lt | 415.74 |
| 106+33.74 | 61.70 | 106+33.74 | 46.50 | 108+40.55 | 43.54 | 108+40.55 | 61.71 | | | | | | | | | | | Rt | 240.20 |
| 108+16.92 | 59.30 | 108+16.92 | 54.68 | 108+45.47 | 58.52 | 109+65.24 | 66.03 | 109+65.24 | 73.52 | | | | | | | | | Lt | 160.92 |
| 110+82.10 | 79.24 | 111+60.83 | 141.60 | | | | | | | | | | | | | | | Rt | 100.40 |
| 115+81.27 | 143.42 | 115+81.27 | 135.25 | 116+47.43 | 135.32 | 116+95.73 | 110.00 | 117+01.73 | 116.52 | | | | | | | | | Lt | 142.22 |
| 120+92.18 | 44.71 | 122+36.66 | 44.48 | | | | | | | | | | | | | | | Rt | 144.5 |
| 122+76.14 | 44.12 | 122+76.14 | 32.13 | 122+88.82 | 34.87 | 122+88.82 | 43.94 | | | | | | | | | | | Rt | 34.03 |
| 124+00.00 | 36.00 | 124+80.00 | 36.50 | | | | | | | | | | | | | | | Lt | 80.0 |
| 129+24.50 | 56.70 | 130+78.19 | 56.70 | | | | | | | | | | | | | | | Lt | 153.70 |
| 131+90.65 | 56.67 | 161+82.83 | 41.03 | 132+00.00 | 36.57 | 132+12.16 | 56.67 | | | | | | | | | | | Lt | 57.68 |
| 131+71.91 | 42.78 | 131+71.91 | 40.48 | 131+82.39 | 44.83 | 131+82.39 | 46.74 | | | | | | | | | | | Rt | 15.56 |
| 133+29.56 | 53.00 | 133+55.55 | 46.90 | 133+91.03 | 51.94 | | | | | | | | | | | | | Rt | 62.53 |
| 133+60.43 | 57.20 | 133+59.75 | 37.63 | 133+83.17 | 37.45 | 133+83.45 | 57.30 | | | | | | | | | | | Lt | 62.85 |
| 135+50.93 | 67.68 | 135+76.37 | 41.07 | 136+49.84 | 44.84 | 137+00.00 | 39.54 | 137+54.06 | 41.99 | 138+00.00 | 39.62 | 138+00.00 | 66.30 | | | | | Lt | 283.23 |
| 136+45.39 | 47.39 | 136+45.39 | 40.18 | 138+17.70 | 40.87 | 138+86.52 | 41.00 | 138+86.52 | 48.31 | | | | | | | | | Rt | 255.65 |
| 142+85.95 | 57.04 | 142+85.95 | 43.10 | 143+00.00 | 46.80 | 143+00.00 | 57.1 | | | | | | | | | | | Lt | 38.77 |
| 145+18.62 | 42.50 | 145+18.62 | 27.74 | 145+95.39 | 33.98 | 145+95.39 | 43.1 | | | | | | | | | | | Rt | 100.90 |
| 147+73.55 | 55.59 | 147+73.55 | 40.72 | 148+00.00 | 43.04 | 148+00.00 | 57.56 | | | | | | | | | | | Lt | 55.94 |
| | | | | | | | | | | | | | | | | | | | |
| 153+70.72 | 49.88 | 153+70.72 | 46.53 | 153+75.75 | 46.94 | 153+75.75 | 49.92 | | | | | | | | | | | Rt | 11.37 |
| | | | | | | | | | | | | | | | | | | TABLE 1 TOTAL | 8299.91 |

# SUMMARY OF QUANTITIES
## Q-4

| REVISED BY | DATE REVISED |
|---|---|
| | |

DANIEL FISHER — MIKE MOGEN

CALCULATED-DESIGNED BY — CHECKED BY

FUNCTIONAL SUPERVISOR: JULIE CASEY

STATE OF CALIFORNIA - DEPARTMENT OF TRANSPORTATION — DESIGN

Caltrans

P:\proj1\02\36070\design\Plan Sheets\236070pa004.dgn

LAST REVISION 04-11-13 | DATE PLOTTED => 18-JUN-2013 | TIME PLOTTED => 15:42

| Dist | COUNTY | ROUTE | POST MILES TOTAL PROJECT | SHEET No. | TOTAL SHEETS |
|---|---|---|---|---|---|
| 02 | Sha | 299 | 30.3/40.7 | 310 | 366 |

Michael J. Mogen 04-22-13
REGISTERED CIVIL ENGINEER DATE

6-17-13
PLANS APPROVAL DATE

REGISTERED PROFESSIONAL ENGINEER MIKE MOGEN No. C67018 Exp. 9-30-14 CIVIL STATE OF CALIFORNIA

*THE STATE OF CALIFORNIA OR ITS OFFICERS OR AGENTS SHALL NOT BE RESPONSIBLE FOR THE ACCURACY OR COMPLETENESS OF SCANNED COPIES OF THIS PLAN SHEET.*

NOTE:

(N) - NOT A SEPARATE PAY ITEM, FOR INFORMATION ONLY

# TEMPORARY FENCE (TYPE ESA) TABLE 2

| Sta | OFFSET | Sta | OFFSET | Sta | OFFSET | Sta | OFFSET | Sta | OFFSET | Sta | OFFSET | Sta | OFFSET | Sta | OFFSET | Sta | OFFSET | Rt/Lt | LENGTH (LF) |
|---|---|---|---|---|---|---|---|---|---|---|---|---|---|---|---|---|---|---|---|
| 153+55.13 | 55.10 | 153+55.13 | 40.93 | 153+67.49 | 41.92 | 153+85.39 | 49.72 | 155+66.11 | 36.68 | 155+83.98 | 37.84 | 155+83.98 | 48.26 | | | | | Lt | 255.61 |
| 159+11.25 | 57.70 | 159+11.25 | 49.20 | 162+90.28 | 47.08 | 162+90.28 | 42.84 | 163+05.12 | 42.22 | 163+05.12 | 60.55 | | | | | | | Lt | 424.96 |
| 165+91.44 | 68.25 | 166+04.40 | 71.60 | | | | | | | | | | | | | | | Lt | 13.39 |
| 166+07.70 | 48.24 | 166+27.53 | 48.12 | 166+27.53 | 32.3 | 166+50.00 | 32.45 | 166+61.90 | 35.6 | 166+61.90 | 73.14 | | | | | | | Rt | 107.97 |
| 167+28.62 | 73.23 | 167+28.62 | 33.15 | 167+51.83 | 23.64 | 167+51.83 | 73.47 | | | | | | | | | | | Rt | 114.99 |
| 171+50.00 | 69.87 | 171+50.00 | 94.62 | 171+88.02 | 95.15 | | | | | | | | | | | | | Lt | 62.77 |
| 171+55.97 | 80.54 | 171+55.97 | 66.39 | 171+81.13 | 66.16 | 171+81.13 | 75.11 | | | | | | | | | | | Rt | 48.26 |
| 174+19.57 | 50.48 | 175+04.68 | 66.38 | 175+55.17 | 71.9 | | | | | | | | | | | | | Rt | 137.37 |
| 177+95.28 | 83.78 | 177+95.28 | 76.38 | 178+18.81 | 76.45 | 178+18.81 | 83.75 | | | | | | | | | | | Lt | 38.23 |
| 177+91.25 | 63.67 | 177+91.25 | 57.37 | 178+55.59 | 56.85 | 178+55.59 | 65.90 | | | | | | | | | | | Rt | 79.69 |
| 185+30.37 | 70.37 | 185+30.37 | 46.39 | 185+91.46 | 50.85 | 186+00.00 | 72.15 | 186+14.17 | 72.17 | 186+14.17 | 83.40 | | | | | | | Lt | 133.58 |
| 188+73.00 | 50.41 | 188+73.00 | 43.60 | 189+00.00 | 42.98 | 189+18.16 | 44.51 | 189+18.16 | 50.41 | | | | | | | | | Lt | 57.94 |
| 190+31.80 | 50.00 | 190+31.80 | 36.62 | 190+45.48 | 38.56 | 190+45.48 | 50.08 | | | | | | | | | | | Rt | 38.72 |
| 191+04.65 | 49.93 | 191+09.58 | 49.88 | 191+53.69 | 57.04 | 192+05.60 | 74.19 | | | | | | | | | | | Rt | 104.29 |
| 194+94.57 | 69.24 | 194+44.47 | 49.89 | | | | | | | | | | | | | | | Rt | 53.71 |
| 193+23.22 | 49.80 | 193+61.29 | 50.00 | | | | | | | | | | | | | | | Lt | 38.07 |
| 195+18.10 | 60.90 | 195+50.00 | 46.97 | 195+84.93 | 50.00 | 195+84.93 | 60.94 | | | | | | | | | | | Lt | 80.81 |
| 196+20.17 | 62.19 | 196+40.58 | 62.11 | | | | | | | | | | | | | | | Rt | 20.41 |
| 198+54.76 | 48.86 | 198+54.76 | 37.65 | 198+92.44 | 33.59 | 198+92.44 | 48.80 | | | | | | | | | | | Rt | 64.32 |
| 199+40.06 | 48.80 | 199+40.06 | 33.52 | 200+50.00 | 39.32 | 201+05.45 | 39.74 | 201+05.45 | 48.80 | | | | | | | | | Rt | 189.88 |
| 207+49.27 | 49.79 | 207+49.27 | 39.68 | 208+15.73 | 35.82 | 208+74.34 | 35.04 | 208+74.34 | 49.85 | | | | | | | | | Lt | 150.11 |
| 217+63.28 | 57.00 | 217+63.28 | 43.19 | 217+87.95 | 38.17 | 217+87.95 | 47.70 | | | | | | | | | | | Rt | 48.52 |
| 218+60.37 | 70.10 | 218+52.74 | 44.54 | 218+52.74 | 44.54 | 218+63.26 | 43.02 | 218+63.26 | 69.04 | | | | | | | | | Lt | 63.32 |
| 226+63.60 | 47.00 | 226+63.60 | 33.29 | 226+69.38 | 34.06 | 226+78.98 | 45.56 | 226+78.98 | 47.00 | | | | | | | | | Rt | 35.96 |
| 227+11.88 | 47.00 | 227+11.88 | 44.37 | 228+02.32 | 35.96 | 228+42.65 | 38.59 | 228+50.00 | 40.52 | 228+50.00 | 47.00 | | | | | | | Rt | 147.96 |
| 229+22.56 | 69.27 | 229+22.56 | 44.95 | 229+50.00 | 47.12 | 230+45.59 | 45.59 | 230+45.59 | 65.25 | | | | | | | | | Lt | 167.11 |
| 231+25.17 | 57.85 | 231+62.33 | 57.21 | 232+05.50 | 58.18 | | | | | | | | | | | | | Lt | 80.35 |
| 234+00.00 | 59.15 | 234+32.00 | 59.60 | 235+04.09 | 61.60 | | | | | | | | | | | | | Lt | 104.12 |
| 236+54.12 | 35.98 | 237+95.68 | 35.98 | | | | | | | | | | | | | | | Rt | 141.56 |
| 236+60.00 | 30.58 | 238+06.16 | 30.00 | | | | | | | | | | | | | | | Lt | 146.16 |
| 241+06.03 | 63.75 | 241+06.03 | 27.30 | 241+45.89 | 30.56 | 241+51.64 | 38.05 | 241+51.64 | 73.50 | DRIVEWAY | 26A | 241+93.89 | 30.74 | 242+38.00 | 30.00 | 242+38.00 | 78.30 | Lt | 194.31 |
| 254+47.55 | 57.70 | 254+47.55 | 45.82 | 254+56.75 | 45.82 | 254+56.75 | 57.62 | DRIVEWAY | 29 | 255+38.76 | 45.82 | 255+70.90 | 38.27 | 256+33.76 | 44.08 | 256+33.76 | 67.38 | Lt | 222.53 |
| 258+66.91 | 80.90 | 259+05.47 | 80.90 | | | | | | | | | | | | | | | Rt | 38.56 |
| 258+11.49 | 74.78 | 258+11.49 | 53.13 | 258+53.14 | 56.75 | 258+53.14 | 74.34 | | | | | | | | | | | Lt | 81.14 |
| 259+68.29 | 73.19 | 259+68.29 | 60.00 | 260+00.00 | 57.00 | 260+30.31 | 51.48 | 260+30.31 | 72.56 | | | | | | | | | Lt | 100.21 |
| 262+38.93 | 47.12 | 262+50.00 | 49.84 | 262+89.50 | 68.68 | | | | | | | | | | | | | Lt | 55.16 |
| 265+33.81 | 49.81 | 265+75.89 | 50.20 | | | | | | | | | | | | | | | Rt | 42.08 |
| 276+96.52 | 59.89 | 276+96.52 | 41.76 | 277+17.83 | 43.56 | 277+23.63 | 41.98 | 277+23.63 | 56.86 | | | | | | | | | Rt | 60.41 |
| 276+80.42 | 50.19 | 276+80.42 | 41.85 | 276+87.84 | 41.85 | 276+87.84 | 50.19 | | | | | | | | | | | Lt | 24.10 |
| 282+65.92 | 76.86 | 282+90.91 | 58.36 | 283+10.13 | 59.46 | | | | | | | | | | | | | Lt | 50.34 |
| 282+60.83 | 58.81 | 283+66.55 | 58.37 | 284+25.05 | 55.75 | 284+66.70 | 50.69 | 285+13.97 | 70.51 | 285+34.22 | 69.65 | 285+34.22 | 52.76 | 285+94.13 | 54.28 | 286+37.28 | 51.29 | Rt | 397.83 |
| 286+37.28 | 51.29 | 286+77.01 | 50.65 | 287+95.93 | 59.75 | 288+18.61 | 58.94 | 288+40.93 | 66.01 | | | | | | | | | Rt | 205.11 |
| 283+77.80 | 59.07 | 283+77.80 | 41.58 | 284+50.00 | 44.40 | 285+50.00 | 45.99 | 286+00.00 | 44.40 | 286+65.54 | 39.53 | 287+07.13 | 34.62 | 287+07.13 | 49.93 | | | Lt | 362.69 |
| 289+30.16 | 49.91 | 289+59.41 | 52.60 | 290+09.78 | 55.67 | | | | | | | | | | | | | Lt | 79.84 |
| 289+87.05 | 68.30 | 290+06.99 | 39.75 | 291+50.00 | 40.69 | 291+86.10 | 50.26 | 295+38.45 | 44.42 | 295+69.75 | 43.49 | 295+69.75 | 57.58 | | | | | Rt | 612.99 |
| 293+88.27 | 48.00 | 294+61.08 | 48.00 | 294+90.41 | 48.00 | 295+06.57 | 48.00 | | | | | | | | | | | Lt | 118.30 |
| 295+54.81 | 47.61 | 295+54.81 | 31.64 | 295+68.48 | 31.69 | 295+68.48 | 47.50 | | | | | | | | | | | Lt | 45.45 |
| 295+88.47 | 47.32 | 295+88.47 | 31.76 | 297+00.00 | 29.91 | 297+49.52 | 27.38 | 297+49.52 | 45.94 | | | | | | | | | Lt | 195.25 |
| 302+17.18 | 54.21 | 302+45.86 | 60.97 | 302+55.50 | 65.40 | 303+06.42 | 95.12 | | | | | | | | | | | Lt | 99.03 |
| 306+21.67 | 27.58 | 306+50.00 | 34.57 | 306+68.96 | 40.69 | 306+77.44 | 51.85 | | | | | | | | | | | Lt | 63.12 |
| 307+22.86 | 51.69 | 307+22.86 | 36.75 | 307+35.47 | 37.10 | 307+35.47 | 51.80 | | | | | | | | | | | Lt | 42.25 |
| 307+30.55 | 58.24 | 307+30.55 | 39.31 | 307+41.06 | 39.33 | 307+41.06 | 58.31 | | | | | | | | | | | Rt | 48.42 |
| | | | | | | | | | | | | | | | | | | TABLE 2 SUBTOTAL | 6289.26 |
| | | | | | | | | | | | | | | | | | | TABLE 1 TOTAL | 8299.91 |
| | | | | | | | | | | | | | | | | | | TABLE 2 TOTAL | 14,589.17 |

## SUMMARY OF QUANTITIES
## Q-5

REVISED BY | DATE REVISED
DANIEL FISHER | MIKE MOGEN
CALCULATED-DESIGNED BY | CHECKED BY
FUNCTIONAL SUPERVISOR: JULIE CASEY

STATE OF CALIFORNIA - DEPARTMENT OF TRANSPORTATION
Caltrans DESIGN

P:\proj1\02\36070\design\Plan Sheets\236070pa005.dgn

LAST REVISION 04-11-13 | DATE PLOTTED => 18-JUN-2013 | TIME PLOTTED => 15:42

| Dist | COUNTY | ROUTE | POST MILES TOTAL PROJECT | SHEET No. | TOTAL SHEETS |
|---|---|---|---|---|---|
| 02 | Sha | 299 | 30.3/40.7 | 311 | 366 |

REGISTERED CIVIL ENGINEER 04-22-13 DATE

6-17-13
PLANS APPROVAL DATE

REGISTERED PROFESSIONAL ENGINEER MIKE MOGEN No. C67018 Exp. 9-30-14 CIVIL STATE OF CALIFORNIA

*THE STATE OF CALIFORNIA OR ITS OFFICERS OR AGENTS SHALL NOT BE RESPONSIBLE FOR THE ACCURACY OR COMPLETENESS OF SCANNED COPIES OF THIS PLAN SHEET.*

NOTE:

(N) - NOT A SEPARATE PAY ITEM, FOR INFORMATION ONLY

# TEMPORARY FENCE (TYPE ESA) TABLE 3

| Sta | OFFSET | Sta | OFFSET | Sta | OFFSET | Sta | OFFSET | Sta | OFFSET | Sta | OFFSET | Sta | OFFSET | Sta | OFFSET | Sta | OFFSET | Rt/Lt | LENGTH (LF) |
|---|---|---|---|---|---|---|---|---|---|---|---|---|---|---|---|---|---|---|---|
| 309+15.19 | 49.73 | 309+50.97 | 51.71 | 310+08.11 | 51.94 | | | | | | | | | | | | | Lt | 92.98 |
| 313+18.16 | 39.76 | 313+18.16 | 42.80 | 313+50.00 | 40.85 | 313+96.04 | 35.93 | 314+14.45 | 39.92 | | | | | | | | | Lt | 100.08 |
| 312+23.17 | 107.25 | 312+57.99 | 78.66 | 313+43.79 | 64.45 | 313+97.54 | 71.22 | 316+40.19 | 42.16 | 317+85.48 | 36.23 | 320+09.91 | 49.45 | 321+02.41 | 112.31 | | | Rt | 912.65 |
| 312+81.19 | 74.58 | 312+81.19 | 33.97 | 312+94.27 | 37.89 | 312+94.27 | 72.00 | | | | | | | | | | | Rt | 88.37 |
| 317+05.21 | 48.08 | 317+05.21 | 44.16 | 317+50.00 | 45.00 | 317+58.60 | 43.75 | 317+58.60 | 51.44 | | | | | | | | | Lt | 65.10 |
| 318+83.67 | 49.40 | 318+83.67 | 41.52 | 319+36.29 | 47.50 | 319+36.29 | 50.90 | | | | | | | | | | | Lt | 64.24 |
| 322+35.33 | 59.63 | 323+05.71 | 88.23 | 323+59.40 | 80.00 | 324+08.81 | 62.52 | 324+58.76 | 49.74 | 324+31.08 | 46.76 | | | | | | | Lt | 262.10 |
| 326+75.20 | 41.63 | 326+75.20 | 38.30 | 326+90.05 | 38.30 | 326+90.05 | 41.74 | | | | | | | | | | | Lt | 21.62 |
| 326+67.00 | 98.00 | 326+67.00 | 47.63 | 326+89.95 | 47.63 | 326+89.95 | 98.00 | | | | | | | | | | | Rt | 123.69 |
| 330+14.30 | 85.00 | 330+14.30 | 53.18 | 330+81.94 | 53.18 | 330+81.94 | 83.00 | | | | | | | | | | | Rt | 129.28 |
| 331+29.22 | 45.00 | 331+29.22 | 41.81 | 331+55.87 | 44.03 | 331+55.87 | 45.20 | | | | | | | | | | | Lt | 31.10 |
| 331+82.56 | 45.39 | 331+82.56 | 33.99 | 332+00.00 | 35.76 | 332+50.00 | 33.10 | 333+00.00 | 33.73 | 333+37.34 | 35.61 | 333+37.34 | 46.54 | | | | | Lt | 177.85 |
| 334+44.67 | 47.34 | 334+44.67 | 41.78 | 334+58.05 | 41.29 | 334+58.05 | 47.44 | | | | | | | | | | | Rt | 25.10 |
| 334+51.94 | 69.73 | 334+51.94 | 62.33 | 334+76.37 | 62.33 | 334+76.37 | 68.50 | | | | | | | | | | | Rt | 38.00 |
| 336+11.95 | 63.85 | 336+50.00 | 42.00 | 338+26.00 | 43.50 | 338+26.00 | 62.20 | 338+39.30 | 62.20 | 338+39.30 | 43.6 | 338+50.00 | 43.50 | 339+03.38 | 67.68 | | | Rt | 339.79 |
| 338+41.33 | 50.28 | 338+41.33 | 36.73 | 338+59.84 | 34.71 | 338+59.84 | 50.42 | | | | | | | | | | | Lt | 47.88 |
| 339+73.29 | 50.50 | 339+73.29 | 41.69 | 339+81.33 | 41.70 | 339+81.33 | 50.41 | | | | | | | | | | | Lt | 25.56 |
| 340+01.95 | 57.88 | 340+01.95 | 44.28 | 340+13.27 | 43.71 | 340+13.27 | 57.36 | | | | | | | | | | | Rt | 38.58 |
| 343+05.06 | 50.12 | 343+05.06 | 37.80 | 344+10.97 | 39.20 | 344+10.97 | 50.22 | | | | | | | | | | | Lt | 129.26 |
| 344+37.70 | 50.12 | 344+37.70 | 42.10 | 344+70.97 | 42.26 | 344+70.97 | 50.00 | | | | | | | | | | | Lt | 49.03 |
| 347+39.53 | 50.00 | 347+39.53 | 43.26 | 347+50.00 | 45.85 | 347+50.00 | 50.00 | | | | | | | | | | | Lt | 21.68 |
| 349+40.74 | 48.96 | 349+40.74 | 40.16 | 349+50.00 | 42.72 | 349+52.35 | 42.40 | 349+52.35 | 48.96 | | | | | | | | | Rt | 27.34 |
| 350+09.73 | 50.00 | 350+09.73 | 43.10 | 350+25.00 | 42.71 | 350+25.00 | 48.68 | | | | | | | | | | | Lt | 28.14 |
| 351+77.97 | 53.67 | 352+64.22 | 52.57 | 353+45.11 | 44.37 | 355+00.00 | 45.95 | 355+50.00 | 43.06 | 356+00.00 | 43.27 | 356+50.00 | 48.84 | 358+29.07 | 61.48 | 358+29.07 | 109.9 | Rt | 700.79 |
| 362+25.75 | 68.84 | 362+68.85 | 77.20 | | | | | | | | | | | | | | | Lt | 43.90 |
| 364+00.00 | 65.50 | 364+50.00 | 71.94 | 365+00.00 | 75.74 | 365+50.00 | 78.14 | 366+00.00 | 76.01 | 366+50.00 | 75.7 | 366+87.00 | 73.2 | 367+50.00 | 60.85 | 368+05.70 | 66.92 | Rt | 407.97 |
| 368+05.70 | 66.92 | 368+58.20 | 67.30 | | | | | | | | | | | | | | | Rt | 52.50 |
| 368+65.46 | 49.80 | 369+29.67 | 49.80 | 369+56.11 | 49.80 | 370+24.28 | 49.80 | 370+62.45 | 49.80 | | | | | | | | | Lt | 196.99 |
| 372+86.80 | 68.80 | 373+03.92 | 70.80 | 373+55.63 | 90.67 | 374+08.12 | 78.12 | 374+56.15 | 72.05 | 375+07.14 | 80.26 | 375+89.34 | 50.51 | 376+00.00 | 53.78 | 376+35.90 | 55.39 | Rt | 361.17 |
| 376+35.90 | 55.39 | 376+35.90 | 99.64 | | | | | | | | | | | | | | | Rt | 44.25 |
| 378+72.81 | 97.00 | 378+72.81 | 62.24 | 378+97.94 | 54.22 | 379+84.72 | 46.23 | 379+94.14 | 46.58 | 379+94.14 | 99.20 | | | | | | | Rt | 210.33 |
| 389+38.33 | 121.79 | 389+38.33 | 99.58 | 389+84.23 | 106.33 | 389+84.23 | 131.35 | | | | | | | | | | | Lt | 93.62 |
| 396+86.99 | 50.79 | 397+28.66 | 50.73 | | | | | | | | | | | | | | | Rt | 41.67 |
| 427+14.75 | 49.43 | 427+77.03 | 49.37 | | | | | | | | | | | | | | | Rt | 62.28 |
| 431+86.22 | 49.28 | 431+86.22 | 31.80 | 432+00.00 | 28.68 | 432+09.57 | 31.15 | 432+09.57 | 49.28 | | | | | | | | | Rt | 59.62 |
| 431+00.00 | 50.69 | 431+00.00 | 36.67 | 431+50.00 | 29.89 | 432+00.00 | 25.90 | 432+14.23 | 27.61 | 43214.23 | 50.72 | | | | | | | Lt | 152.08 |
| 439+48.97 | 57.95 | 440+56.20 | 85.43 | 441+00.00 | 74.14 | 442+07.02 | 58.09 | 442+55.69 | 57.88 | 443+05.92 | 63.31 | 443+57.00 | 61.68 | | | | | Lt | 414.44 |
| 444+07.44 | 55.40 | 444+56.77 | 50.45 | | | | | | | | | | | | | | | Lt | 49.58 |
| 452+00.00 | 51.52 | 478+50.00 | 51.52 | | | | | | | | | | | | | | | Rt | 2650.00 |
| 452+00.00 | 48.47 | 472+50.00 | 48.50 | 472+50.00 | 60.00 | 477+23.80 | 60.00 | 477+23.80 | 48.25 | 478+50.00 | 48.00 | | | | | | | Lt | 2673.25 |
| 486+11.86 | 69.68 | 486+11.86 | 54.44 | 486+26.67 | 54.93 | 486+26.67 | 69.68 | | | | | | | | | | | Lt | 44.81 |
| 496+05.59 | 49.43 | 496+05.59 | 36.02 | 496+21.83 | 36.02 | 496+21.83 | 49.42 | | | | | | | | | | | Lt | 43.05 |
| 497+15.41 | 49.40 | 497+15.41 | 29.92 | 497+58.31 | 31.17 | 497+58.31 | 49.39 | | | | | | | | | | | Lt | 80.62 |
| 516+83.23 | 50.38 | 517+00.00 | 50.50 | 517+55.51 | 57.79 | | | | | | | | | | | | | Rt | 72.76 |
| 524+42.06 | 100.05 | 524+42.06 | 60.54 | 524+50.09 | 61.37 | 525+08.71 | 57.21 | 525+35.35 | 53.40 | 525+35.35 | 97.7 | | | | | | | Rt | 177.56 |
| 525+64.65 | 100.00 | 525+64.65 | 35.90 | 526+00.00 | 24.09 | 526+50.00 | 24.62 | 526+92.33 | 27.61 | 526+92.33 | 100.00 | | | | | | | Lt | 266.20 |
| 528+17.59 | 99.90 | 528+17.59 | 70.39 | 528+59.68 | 70.39 | 528+59.68 | 99.90 | | | | | | | | | | | Rt | 101.11 |
| 539+31.08 | 100.50 | 539+31.08 | 49.12 | 539+44.29 | 56.80 | 539+44.29 | 100.56 | | | | | | | | | | | Lt | 110.42 |
| 540+69.22 | 99.36 | 540+69.22 | 81.92 | 540+96.53 | 74.15 | 540+96.33 | 99.44 | | | | | | | | | | | Rt | 71.12 |
| 545+61.00 | 100.19 | 545+61.00 | 39.48 | 546+00.00 | 56.95 | 546+43.70 | 66.52 | 546+43.70 | 100.20 | | | | | | | | | Rt | 181.86 |
| 549+80.83 | 99.83 | 549+80.83 | 48.08 | 550+16.50 | 45.26 | 550+16.50 | 99.73 | | | | | | | | | | | Rt | 142.00 |
| 549+48.93 | 98.65 | 549+48.93 | 56.82 | 549+77.85 | 57.17 | 549+77.85 | 98.52 | | | | | | | | | | | Lt | 112.10 |
| 551+20.70 | 99.20 | 551+20.70 | 58.25 | 551+58.32 | 68.68 | 551+95.36 | 95.34 | 552+48.95 | 54.56 | 552+94.13 | 48.92 | 553+50.00 | 44.32 | 554+00.00 | 45.98 | 554+70.82 | 40.25 | Rt | 415.64 |
| 554+70.82 | 40.25 | 554+70.82 | 99.30 | | | | | | | | | | | | | | | Rt | 59.05 |
| 555+61.88 | 100.35 | 555+61.88 | 78.10 | 556+36.32 | 72.51 | 556+36.32 | 100.97 | | | | | | | | | | | Lt | 125.36 |
| | | | | | | | | | | | | | | | | | | TABLE 3 SUBTOTAL | 13,057.52 |
| | | | | | | | | | | | | | | | | | | TABLE 2 TOTAL | 14,589.17 |
| | | | | | | | | | | | | | | | | | | PROJECT TOTAL | 27,646.69 |

## SUMMARY OF QUANTITIES
## Q-6

| REVISED BY | DATE REVISED |
|---|---|
| | |

| CALCULATED-DESIGNED BY | CHECKED BY |
|---|---|
| DANIEL FISHER | MIKE MOGEN |

FUNCTIONAL SUPERVISOR: JULIE CASEY

STATE OF CALIFORNIA - DEPARTMENT OF TRANSPORTATION

Caltrans DESIGN

P:\proj1\02\36070\design\Plan Sheets\236070pa006.dgn

LAST REVISION 04-11-13 | DATE PLOTTED => 18-JUN-2013 | TIME PLOTTED => 15:43

| Dist | COUNTY | ROUTE | POST MILES TOTAL PROJECT | SHEET No. | TOTAL SHEETS |
|---|---|---|---|---|---|
| 02 | Sha | 299 | 30.3/40.7 | 312 | 366 |

ART 04-11-13
REGISTERED ELECTRICAL ENGINEER DATE

6-17-13
PLANS APPROVAL DATE

REGISTERED PROFESSIONAL ENGINEER A.P. ROBLES No. E15293 Exp. 3-31-15 ELECTRICAL STATE OF CALIFORNIA

*THE STATE OF CALIFORNIA OR ITS OFFICERS OR AGENTS SHALL NOT BE RESPONSIBLE FOR THE ACCURACY OR COMPLETENESS OF SCANNED COPIES OF THIS PLAN SHEET.*

## NOTES:

1. FOR ACCURATE RIGHT OF WAY DATA, CONTACT RIGHT OF WAY ENGINEERING AT THE DISTRICT OFFICE.
2. FOR OBJECT MARKER (TYPE PB) AND PULL BOX PAVING, SEE CONSTRUCTION DETAILS.

## LEGEND:

(PB) OBJECT MARKER (TYPE PB) AND PULL BOX PAVING

## LEGEND (THIS SHEET):

1. Exist 1½"C, 2#8, 1#8G, 1 dlc. REPLACE CONDUCTORS WITH 2#8, 1#8G, 1 DLC.
2. 1½"C, 2#8, 1#8G.
3. 2"C, 2#8, 1#8G.
4. AB Exist LOOP DETECTORS.
5. MAINTENANCE VEHICLE PULLOUT (SEE CONSTRUCTION DETAILS).

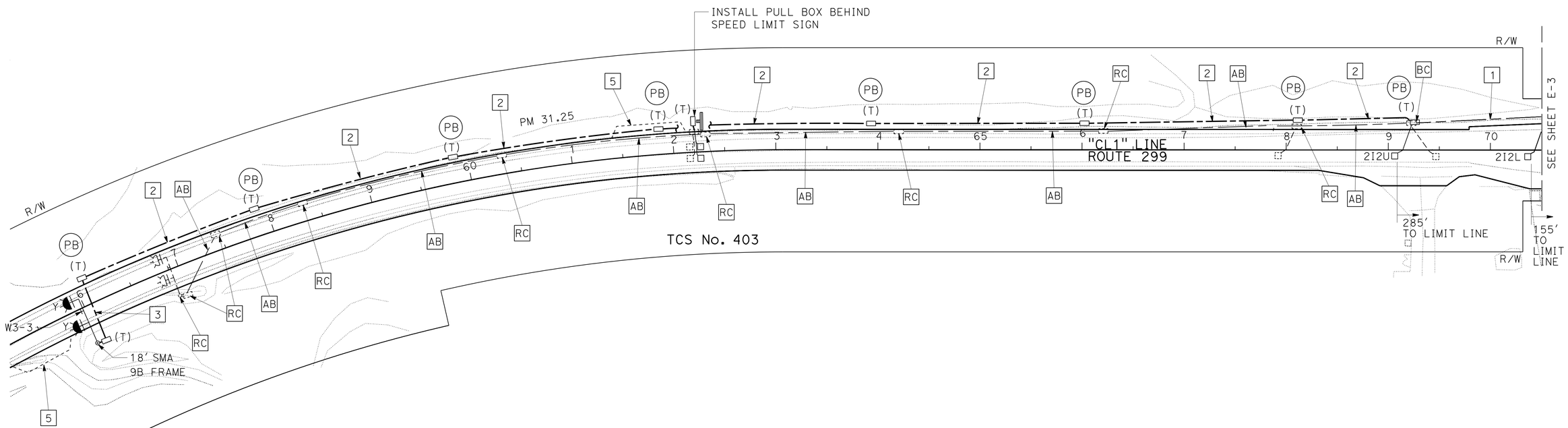


# FLASHING BEACON SYSTEM

SCALE: 1" = 50'

**E-1**

*APPROVED FOR ELECTRICAL WORK ONLY*

REVISED BY | DATE REVISED
ARTURO ROBLES | JIM HANNIGAN
CALCULATED-DESIGNED BY | CHECKED BY
FUNCTIONAL SUPERVISOR: ROB STINGER

STATE OF CALIFORNIA - DEPARTMENT OF TRANSPORTATION
Caltrans® ELECTRICAL DESIGN

P:\proj\02\36070\design\Plan Sheets\236070ua001.dgn

LAST REVISION 04-11-13 | DATE PLOTTED => 19-JUN-2013 | TIME PLOTTED => 08:19

BORDER LAST REVISED 7/2/2010 | USERNAME => s121614 | DGN FILE => 236070ua001.dgn | RELATIVE BORDER SCALE IS IN INCHES 0 1 2 3 | UNIT 0147 | PROJECT NUMBER & PHASE 02000002621

| Dist | COUNTY | ROUTE | POST MILES TOTAL PROJECT | SHEET No. | TOTAL SHEETS |
|---|---|---|---|---|---|
| 02 | Sha | 299 | 30.3/40.7 | 313 | 366 |

ART 04-11-13
REGISTERED ELECTRICAL ENGINEER DATE

6-17-13
PLANS APPROVAL DATE

REGISTERED PROFESSIONAL ENGINEER A.P. ROBLES No. E15293 Exp. 3-31-15 ELECTRICAL STATE OF CALIFORNIA

*THE STATE OF CALIFORNIA OR ITS OFFICERS OR AGENTS SHALL NOT BE RESPONSIBLE FOR THE ACCURACY OR COMPLETENESS OF SCANNED COPIES OF THIS PLAN SHEET.*

## NOTE:

1. FOR ACCURATE RIGHT OF WAY DATA, CONTACT RIGHT OF WAY ENGINEERING AT THE DISTRICT OFFICE.
2. FOR OBJECT MARKER (TYPE PB) AND PULL BOX PAVING, SEE CONSTRUCTION DETAILS.

## LEGEND (THIS SHEET):

1 1½"C, 2#8 (FB), 1#8G.

2 2"C, 2#8 (FB), 1#8G.

3 MAINTENANCE VEHICLE PULLOUT (SEE CONSTRUCTION DETAILS).

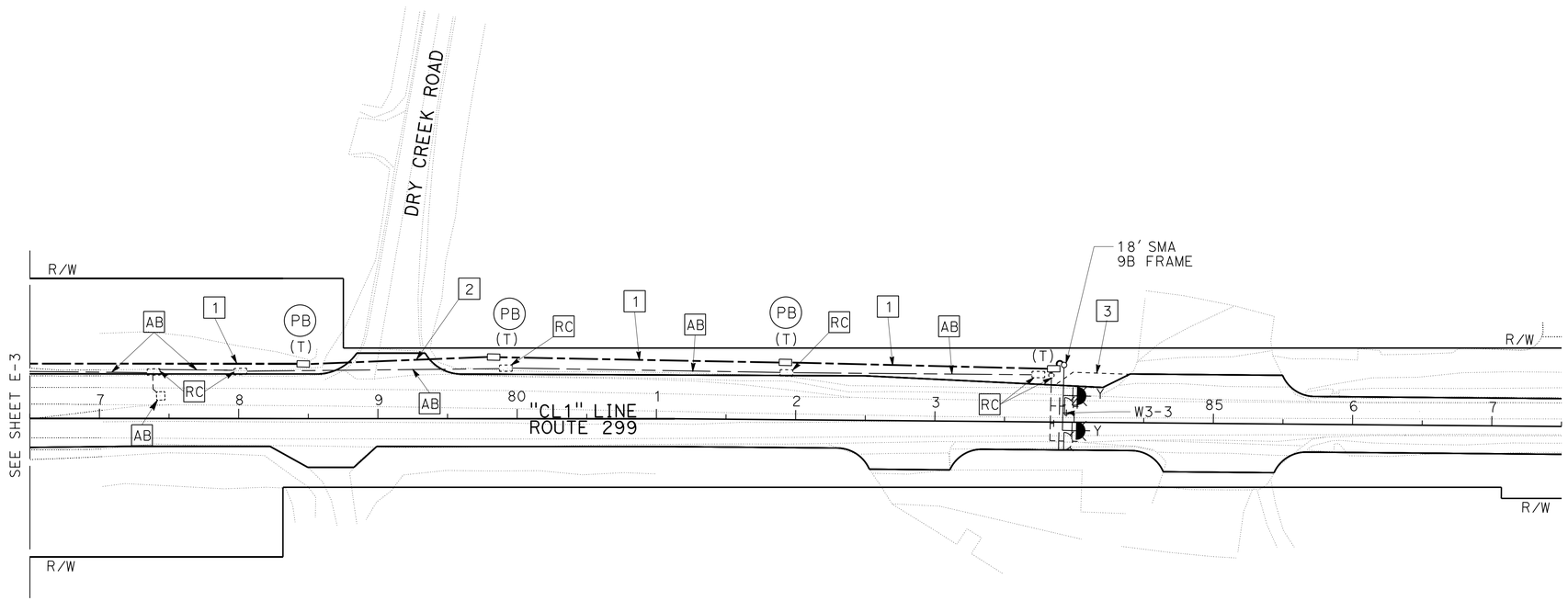


# FLASHING BEACON SYSTEM

SCALE: 1" = 50'

**E-2**

*APPROVED FOR ELECTRICAL WORK ONLY*

| | |
|---|---|
| REVISED BY | |
| DATE REVISED | |
| ARTURO ROBLES | |
| JIM HANNIGAN | |
| CALCULATED-DESIGNED BY | |
| CHECKED BY | |
| FUNCTIONAL SUPERVISOR | ROB STINGER |

STATE OF CALIFORNIA - DEPARTMENT OF TRANSPORTATION
Caltrans® **ELECTRICAL DESIGN**

P:\proj1\02\36070\design\Plan Sheets\236070ua002.dgn

LAST REVISION 04-11-13 | DATE PLOTTED => 18-JUN-2013 | TIME PLOTTED => 15:58

| Dist | COUNTY | ROUTE | POST MILES TOTAL PROJECT | SHEET No. | TOTAL SHEETS |
|---|---|---|---|---|---|
| 02 | Sha | 299 | 30.3/40.7 | 314 | 366 |

ART 04-11-13
REGISTERED ELECTRICAL ENGINEER DATE

6-17-13
PLANS APPROVAL DATE

REGISTERED PROFESSIONAL ENGINEER A.P. ROBLES No. E15293 Exp. 3-31-15 ELECTRICAL STATE OF CALIFORNIA

*THE STATE OF CALIFORNIA OR ITS OFFICERS OR AGENTS SHALL NOT BE RESPONSIBLE FOR THE ACCURACY OR COMPLETENESS OF SCANNED COPIES OF THIS PLAN SHEET.*

## NOTE:

1. FOR ACCURATE RIGHT OF WAY DATA, CONTACT RIGHT OF WAY ENGINEERING AT THE DISTRICT OFFICE.

## LEGEND:

(PB) OBJECT MARKER (TYPE PB) AND PULL BOX PAVING

## ABBREVIATIONS:

TCE TEMPORARY CONSTRUCTION EASEMENT

## LEGEND (THIS SHEET):

1. [AB] EXISTING LOOP DETECTORS.

[2] EXISTING 1½"C, 2#8 (FB), 1#8G, 2 dlc REPLACE 2 dlc WITH 2 DLC.

[3] REPLACE 4 dlc WITH 5 DLC.

[4] REPLACE 2 dlc WITH 3 DLC.

[5] EXISTING 1½"C, 2#8 (FB), 1#8G, 2 dlc REPLACE 2 dlc WITH 1 DLC.

[6] 1½"C, 2#8 (FB), 1#8G, 1 DLC.

[7] 1½"C, 2#8 (FB), 1#8G.

[8] INTERCEPT CONDUIT AND RELOCATE PPB POST TO BACK OF RETAINING CURB. REUSE 3CSC AND 1#8G.

[9] REPLACE 310 W HPS LUMINAIRE WITH ROADWAY 2 LED LUMINAIRE.

[10] REPLACE 200 W HPS LUMINAIRE WITH ROADWAY 1 LED LUMINAIRE.

11. FOR PULL BOX MARKER (TYPE PB) AND PULL BOX PAVING, SEE SHEET E-5.

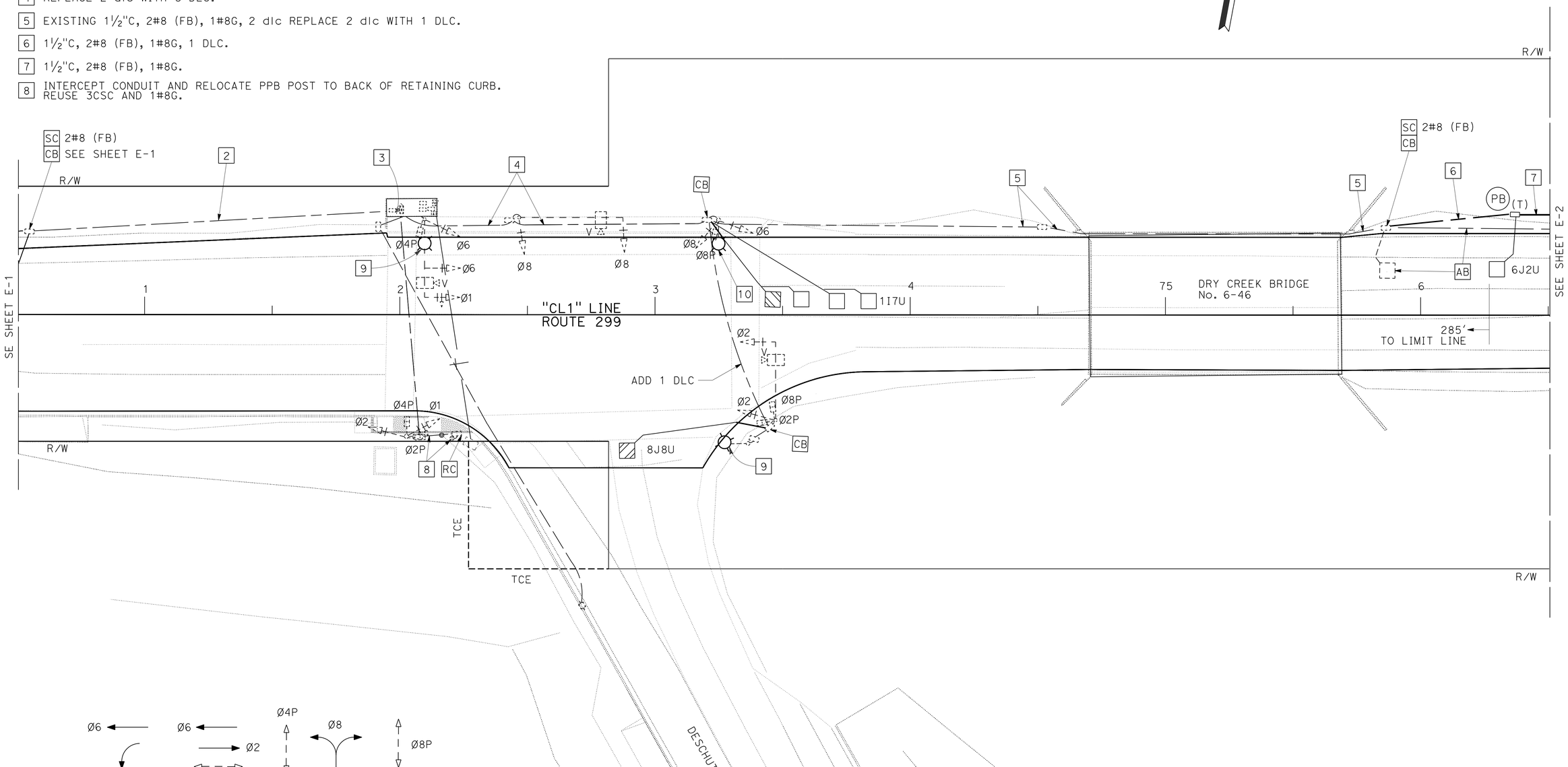





PHASE DIAGRAM

# MODIFY SIGNAL AND LIGHTING

SCALE: 1" = 20'

E-3

*APPROVED FOR ELECTRICAL WORK ONLY*

STATE OF CALIFORNIA - DEPARTMENT OF TRANSPORTATION
Caltrans ELECTRICAL DESIGN

ARTURO ROBLES | JIM HANNIGAN | ROB STINGER | REVISED BY | DATE REVISED | CALCULATED-DESIGNED BY | CHECKED BY | FUNCTIONAL SUPERVISOR

P:\proj1\02\36070\design\Plan Sheets\236070ua003.dgn

LAST REVISION 04-11-13 | DATE PLOTTED => 19-JUN-2013 | TIME PLOTTED => 14:37

BORDER LAST REVISED 7/2/2010 | USERNAME => s124496 | DGN FILE => 236070ua003.dgn | RELATIVE BORDER SCALE IS IN INCHES 0 1 2 3 | UNIT 0147 | PROJECT NUMBER & PHASE 02000002621

| Dist | COUNTY | ROUTE | POST MILES TOTAL PROJECT | SHEET No. | TOTAL SHEETS |
|---|---|---|---|---|---|
| 02 | Sha | 299 | 30.3/40.7 | 315 | 366 |

REGISTERED ELECTRICAL ENGINEER 04-11-13 DATE

6-17-13
PLANS APPROVAL DATE

REGISTERED PROFESSIONAL ENGINEER A.P. ROBLES No. E15293 Exp. 3-31-15 ELECTRICAL STATE OF CALIFORNIA

*THE STATE OF CALIFORNIA OR ITS OFFICERS OR AGENTS SHALL NOT BE RESPONSIBLE FOR THE ACCURACY OR COMPLETENESS OF SCANNED COPIES OF THIS PLAN SHEET.*

## NOTE:

1. FOR ACCURATE RIGHT OF WAY DATA, CONTACT RIGHT OF WAY ENGINEERING AT THE DISTRICT OFFICE.

## LEGEND (THIS SHEET):

1. AB EXISTING LOOPS AND AXLE SENSORS.

2. 2"C, 2 DLC, 4 STC.

3. REPLACE 2 dlc, 4 stc WITH 4 DLC AND 2 STC.

4. REPLACE 2#8 WITH 2#8, 1#8G.

5. RC EXISTING SERVICE EQUIPMENT ENCLOSURE. INSTALL TYPE III-AF SERVICE EQUIPMENT ENCLOSURE ON EXISTING FOUNDATION FOR METERED SERVICE. SEE SHEET E-5.

6. SERVICE CONDUCTORS BY PGE.

7. SEE TYPICAL AXLE SENSOR INSTALLATION DETAIL, SHEET E-5.

8. MAINTENANCE VEHICLE PULLOUT (SEE CONSTRUCTION DETAILS).

## LEGEND:

EXISTING LOOP/AXLE SENSOR ARRAY

LOOP/AXLE SENSOR ARRAY

## ABBREVIATION:

STC - SCREENED TRANSMISSION CABLE

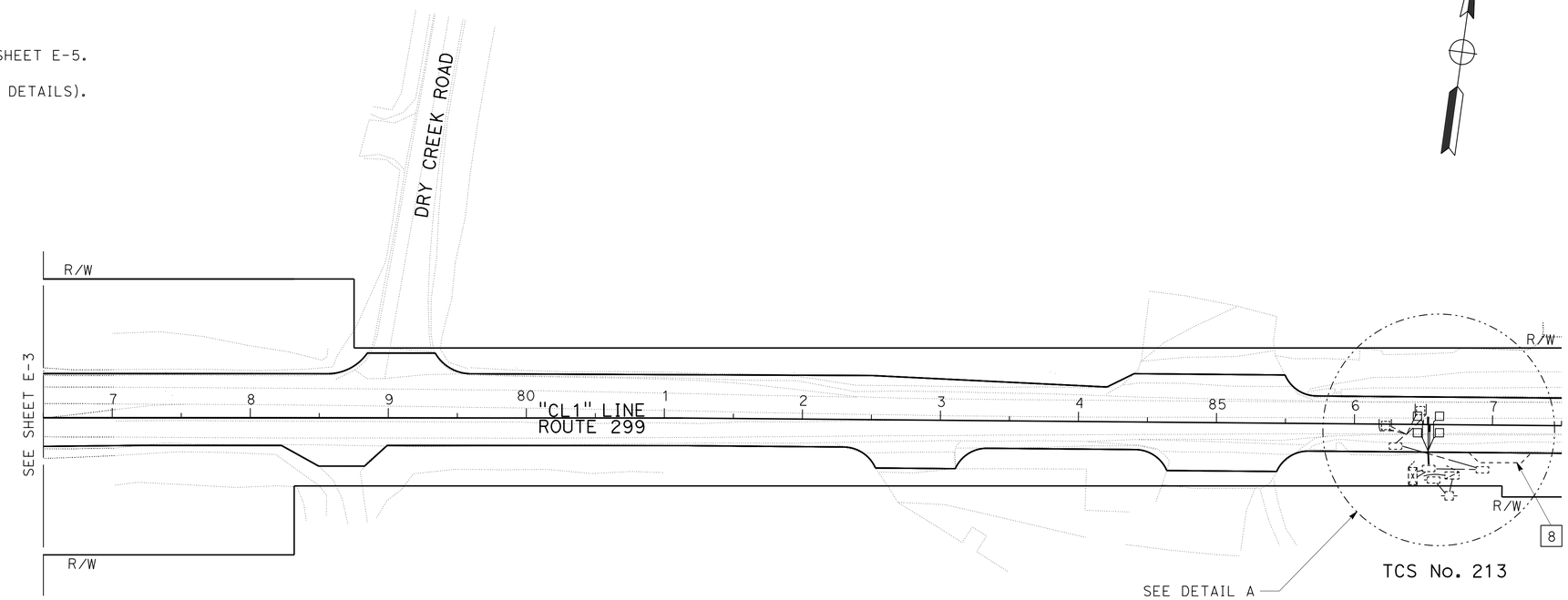


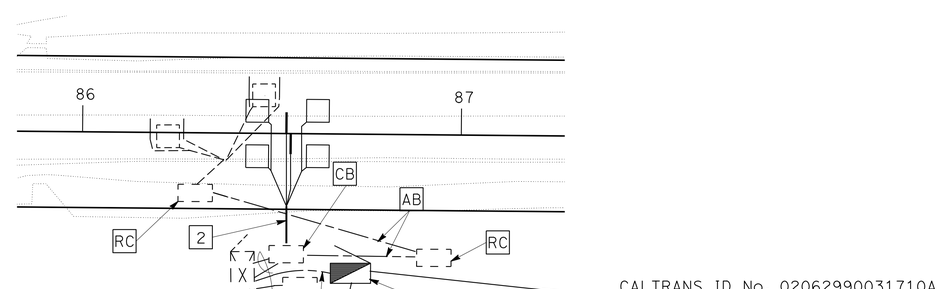


**DETAIL A**
NO SCALE

# TRAFFIC COUNT STATION

SCALE: 1" = 50'

**E-4**

*APPROVED FOR ELECTRICAL WORK ONLY*

STATE OF CALIFORNIA - DEPARTMENT OF TRANSPORTATION
Caltrans® **ELECTRICAL DESIGN**

FUNCTIONAL SUPERVISOR: ROB STINGER
CALCULATED-DESIGNED BY: ARTURO ROBLES
CHECKED BY: JIM HANNIGAN
REVISED BY / DATE REVISED

P:\proj1\02\36070\design\Plan Sheets\236070ua004.dgn

LAST REVISION 04-11-13 | DATE PLOTTED => 18-JUN-2013 | TIME PLOTTED => 16:03

BORDER LAST REVISED 7/2/2010 | USERNAME => s128843 | DGN FILE => 236070ua004.dgn | RELATIVE BORDER SCALE IS IN INCHES 0 1 2 3 | UNIT 0147 | PROJECT NUMBER & PHASE 02000002621

| Dist | COUNTY | ROUTE | POST MILES TOTAL PROJECT | SHEET No. | TOTAL SHEETS |
|---|---|---|---|---|---|
| 02 | Sha | 299 | 30.3/40.7 | 316 | 366 |

ART 04-11-13
REGISTERED ELECTRICAL ENGINEER DATE

6-17-13
PLANS APPROVAL DATE

REGISTERED PROFESSIONAL ENGINEER A.P. ROBLES No. E15293 Exp. 3-31-15 ELECTRICAL STATE OF CALIFORNIA

*THE STATE OF CALIFORNIA OR ITS OFFICERS OR AGENTS SHALL NOT BE RESPONSIBLE FOR THE ACCURACY OR COMPLETENESS OF SCANNED COPIES OF THIS PLAN SHEET.*

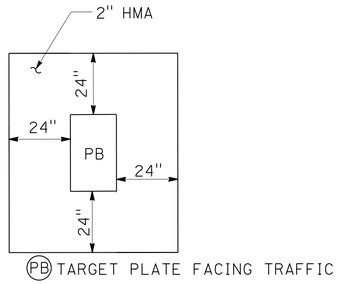


## PULL BOX PAVING

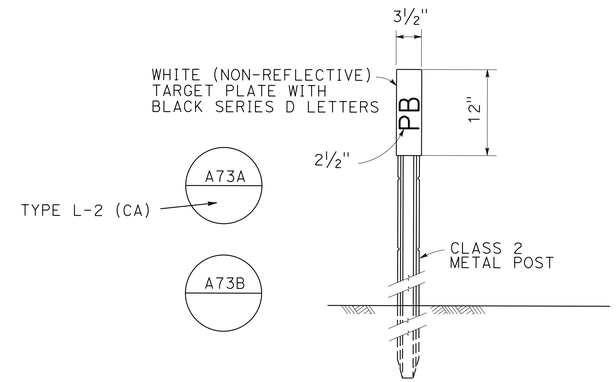


NOTE: PLACE MARKER 2" OUTSIDE PULL BOX PAVING ON SIDE FACING TRAFFIC. SEE PULL BOX PAVING DETAIL.

## OBJECT MARKER (TYPE PB)

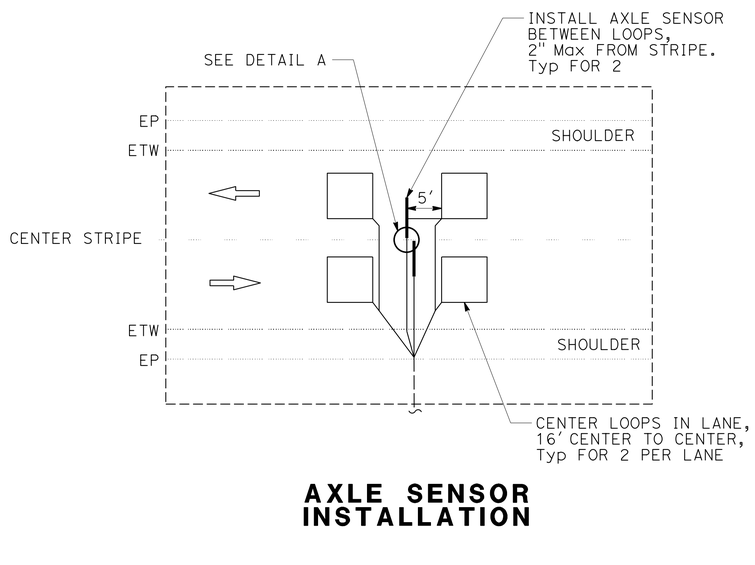


## AXLE SENSOR INSTALLATION

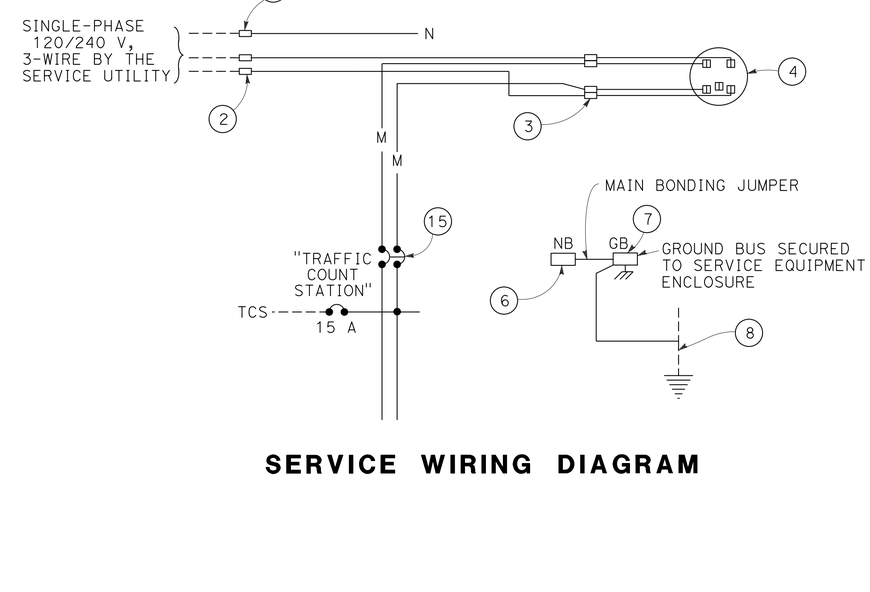


## SERVICE WIRING DIAGRAM

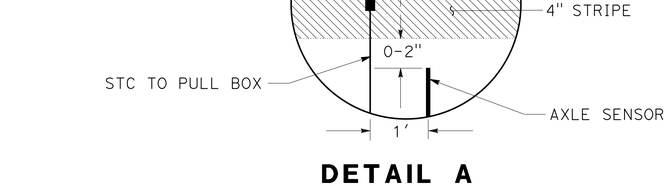


## DETAIL A

# ELECTRICAL DETAILS

NO SCALE

**E-5**

*APPROVED FOR ELECTRICAL WORK ONLY*

STATE OF CALIFORNIA - DEPARTMENT OF TRANSPORTATION
Caltrans® ELECTRICAL DESIGN

FUNCTIONAL SUPERVISOR: ROB STINGER
CALCULATED-DESIGNED BY: ARTURO ROBLES
CHECKED BY: JIM HANNIGAN
REVISED BY / DATE REVISED

P:\proj1\02\36070\design\Plan Sheets\236070ua005.dgn

LAST REVISION 04-11-13 | DATE PLOTTED => 18-JUN-2013 | TIME PLOTTED => 16:03

BORDER LAST REVISED 7/2/2010 | USERNAME => s128843 | DGN FILE => 236070ua005.dgn | RELATIVE BORDER SCALE IS IN INCHES 0 1 2 3 | UNIT 0147 | PROJECT NUMBER & PHASE 02000002621

| Dist | COUNTY | ROUTE | POST MILES TOTAL PROJECT | SHEET No. | TOTAL SHEETS |
|---|---|---|---|---|---|
| 02 | Sha | 299 | 30.3/40.7 | 317 | 366 |

ART 04-11-13
REGISTERED ELECTRICAL ENGINEER DATE

6-17-13
PLANS APPROVAL DATE

REGISTERED PROFESSIONAL ENGINEER A.P. ROBLES No. E15293 Exp. 3-31-15 ELECTRICAL STATE OF CALIFORNIA

*THE STATE OF CALIFORNIA OR ITS OFFICERS OR AGENTS SHALL NOT BE RESPONSIBLE FOR THE ACCURACY OR COMPLETENESS OF SCANNED COPIES OF THIS PLAN SHEET.*

**NOTE:**

(N) - NOT A SEPARATE PAY ITEM, FOR INFORMATION ONLY

## MODIFY SIGNAL AND LIGHTING

| SHEET No. | (N) DLC | (N) No. 8 WIRE | (N) BARE No. 8 WIRE | (N) TYPE A LOOP | (N) TYPE D LOOP | (N) ROADWAY 1 LED LUMINAIRE | (N) ROADWAY 2 LED LUMINAIRE | (N) No. 5(T) PULL BOX |
|---|---|---|---|---|---|---|---|---|
| | LF | LF | LF | EA | EA | EA | EA | EA |
| E-3 | 1000 | 200 | 100 | 4 | 2 | 1 | 2 | 1 |

## FLASHING BEACON SYSTEM

| SHEET No. | (N) 1½" PVC CONDUIT | (N) TERMINATE 1½" CONDUIT | (N) 2" PVC CONDUIT | (N) TERMINATE 2" CONDUIT | (N) No. 5(T) PULL BOX | (N) No. 8 WIRE | (N) BARE No. 8 WIRE | (N) WARNING TAPE | (N) TYPE A DETECTOR | (N) DLC | (N) FB TYPE 9, 18' SMA TYPE 9B SIGN FRAME | (N) FB TYPE 9 PCC FOUNDATION |
|---|---|---|---|---|---|---|---|---|---|---|---|---|
| | LF | EA | LF | EA | EA | LF | LF | LF | EA | LF | EA | CY |
| E-1 | 1325 | 15 | 60 | 2 | 10 | 3000 | 1500 | 1325 | 4 | 140 | 1 | 1.4 |
| E-2 | 600 | 5 | 140 | 2 | 4 | 1500 | 750 | 600 | | | 1 | 1.4 |
| TOTAL | 1925 | 20 | 200 | 4 | 14 | 3880 | 1940 | 1925 | 4 | 140 | 2 | 2.8 |

## TRAFFIC COUNT STATION

| SHEET No. | (N) DLC | (N) No. 8 WIRE | (N) BARE No. 8 WIRE | (N) TYPE A DETECTOR | (N) PIEZO-ELECTRIC AXLE SENSOR | (N) TYPE III-A SERVICE EQUIPMENT ENCLOSURE |
|---|---|---|---|---|---|---|
| | LF | LF | LF | EA | EA | EA |
| E-4 | 50 | 50 | 25 | 4 | 2 | 1 |

# ELECTRICAL QUANTITIES

**E-6**

*APPROVED FOR ELECTRICAL WORK ONLY*

REVISED BY | DATE REVISED
ARTURO ROBLES | JIM HANNIGAN
CALCULATED-DESIGNED BY | CHECKED BY
FUNCTIONAL SUPERVISOR: ROB STINGER

STATE OF CALIFORNIA - DEPARTMENT OF TRANSPORTATION
Caltrans® ELECTRICAL DESIGN

P:\proj1\02\36070\design\Plan Sheets\236070ua006.dgn

LAST REVISION 04-11-13 | DATE PLOTTED => 18-JUN-2013 | TIME PLOTTED => 16:03

| Dist | COUNTY | ROUTE | POST MILES TOTAL PROJECT | SHEET No. | TOTAL SHEETS |
|---|---|---|---|---|---|
| 02 | Sha | 299 | 30.3/40.7 | 318 | 366 |

REGISTERED CIVIL ENGINEER

April 20, 2012
PLANS APPROVAL DATE

REGISTERED PROFESSIONAL ENGINEER
Roberta L. McLaughlin
No. C40375
Exp. 3-31-13
CIVIL
STATE OF CALIFORNIA

*THE STATE OF CALIFORNIA OR ITS OFFICERS OR AGENTS SHALL NOT BE RESPONSIBLE FOR THE ACCURACY OR COMPLETENESS OF SCANNED COPIES OF THIS PLAN SHEET.*

TO ACCOMPANY PLANS DATED 6-17-13

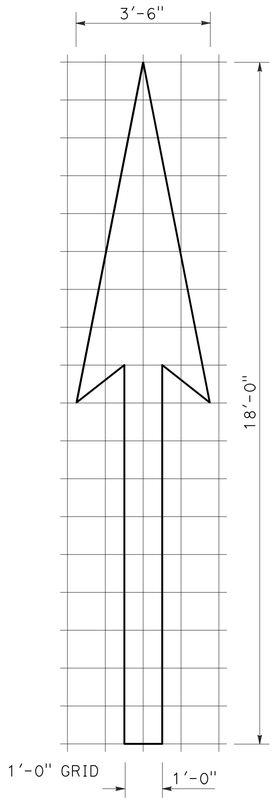


A=25 ft$^2$

TYPE I 18'-0" ARROW

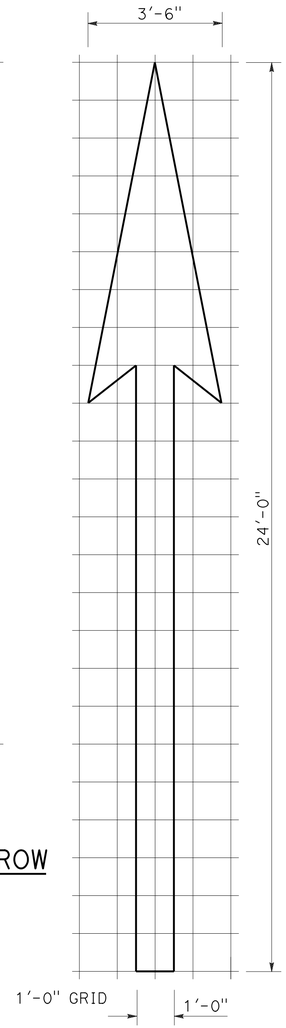


A=31 ft$^2$

TYPE I 24'-0" ARROW

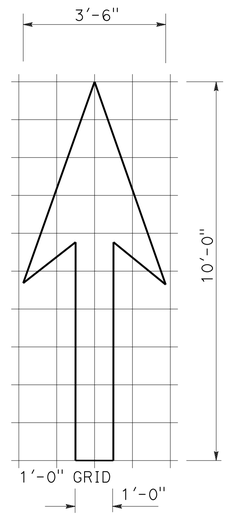


A=14 ft$^2$

TYPE I 10'-0" ARROW

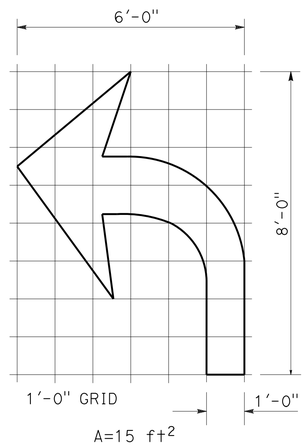


A=15 ft$^2$

TYPE IV (L) ARROW

(For Type IV (R) arrow, use mirror image)

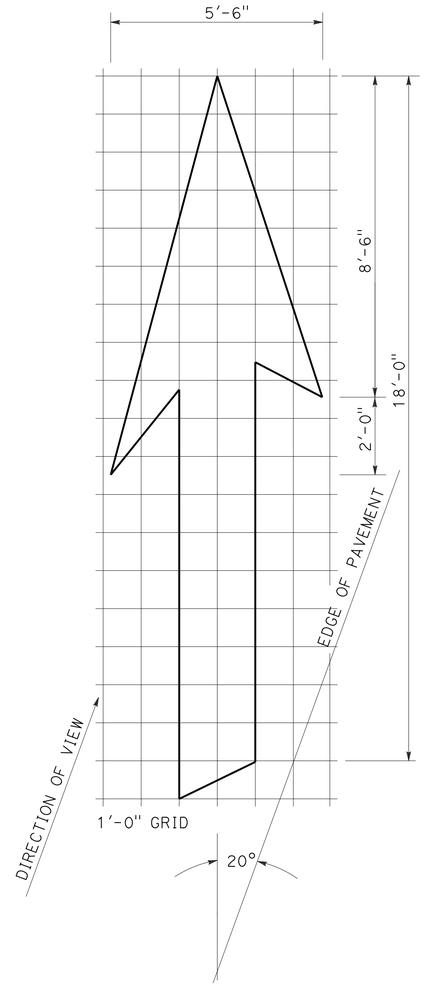


A=42 ft$^2$

TYPE VI ARROW

Right lane drop arrow
(For left lane, use mirror image)

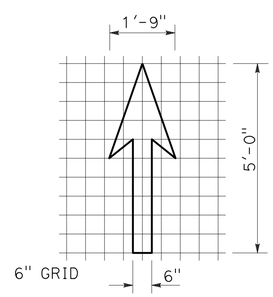


A=3.5 ft$^2$

BIKE LANE ARROW

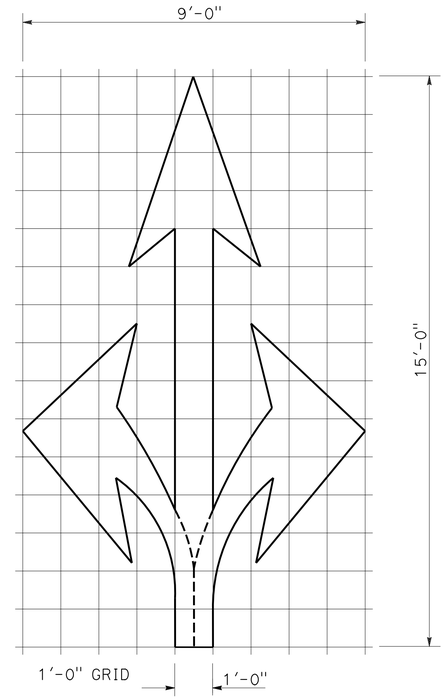


A=36 ft$^2$

TYPE VIII ARROW

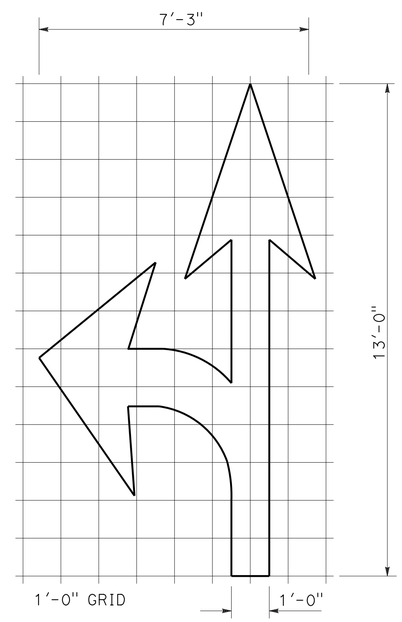


A=27 ft$^2$

TYPE VII (L) ARROW

(For Type VII (R) arrow, use mirror image)

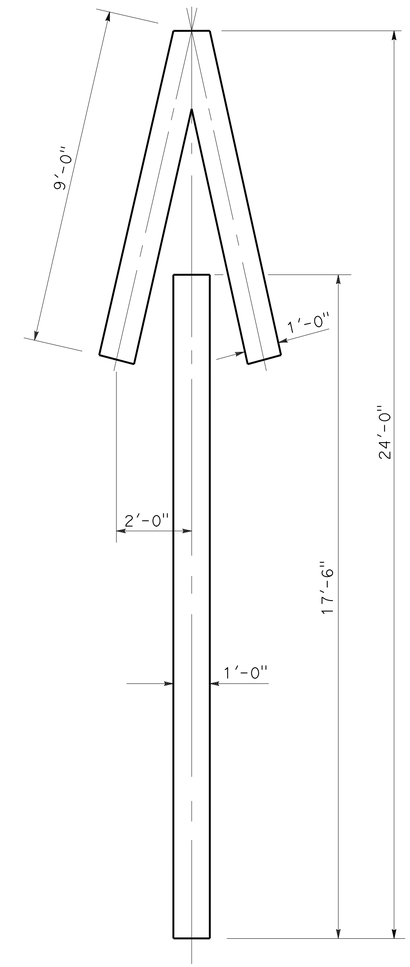


A=33 ft$^2$

TYPE V ARROW

NOTE:
Minor variations in dimensions may be accepted by the Engineer.

STATE OF CALIFORNIA
DEPARTMENT OF TRANSPORTATION

# PAVEMENT MARKINGS ARROWS

NO SCALE

RSP A24A DATED APRIL 20, 2012 SUPERSEDES STANDARD PLAN A24A DATED MAY 20, 2011 - PAGE 13 OF THE STANDARD PLANS BOOK DATED 2010.

**REVISED STANDARD PLAN RSP A24A**

**2010 REVISED STANDARD PLAN RSP A24A**

3-14-12

| Dist | COUNTY | ROUTE | POST MILES TOTAL PROJECT | SHEET No. | TOTAL SHEETS |
|---|---|---|---|---|---|
| 02 | Sha | 299 | 30.3/40.7 | 319 | 366 |

REGISTERED CIVIL ENGINEER

October 19, 2012
PLANS APPROVAL DATE

REGISTERED PROFESSIONAL ENGINEER
Roberta L. McLaughlin
No. C40375
Exp. 3-31-13
CIVIL
STATE OF CALIFORNIA

*THE STATE OF CALIFORNIA OR ITS OFFICERS OR AGENTS SHALL NOT BE RESPONSIBLE FOR THE ACCURACY OR COMPLETENESS OF SCANNED COPIES OF THIS PLAN SHEET.*

**NOTE:** TO ACCOMPANY PLANS DATED 6-17-13

Minor variations in dimensions may be accepted by the Engineer.

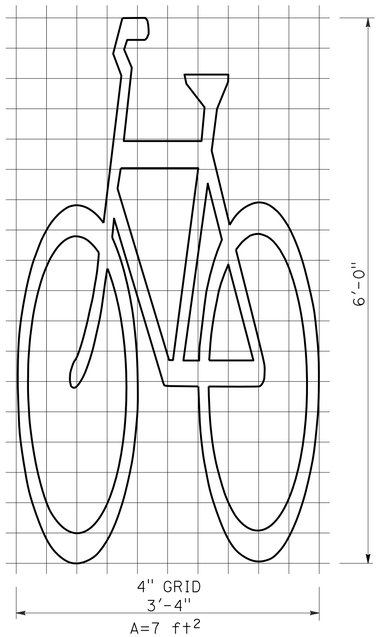


BIKE LANE SYMBOL WITHOUT PERSON

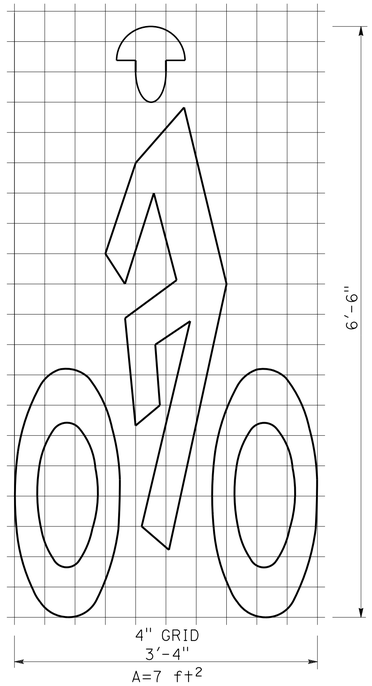


BIKE LANE SYMBOL WITH PERSON

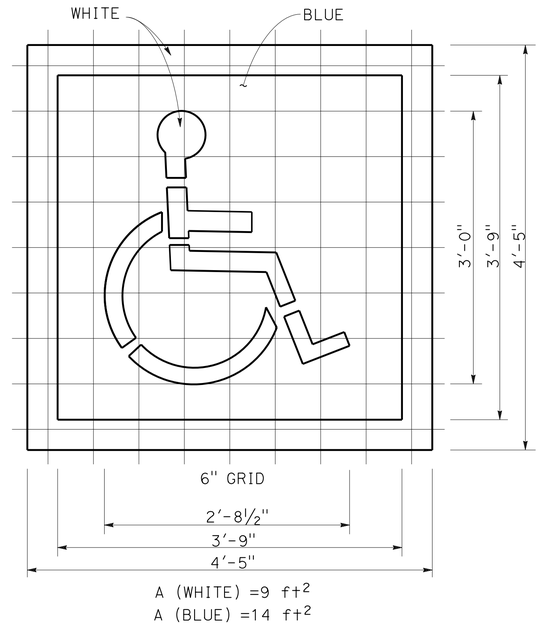


INTERNATIONAL SYMBOL OF ACCESSIBILITY (ISA) MARKING

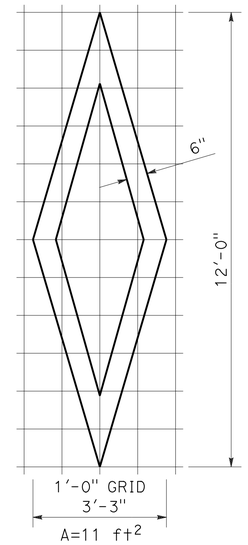


DIAMOND SYMBOL

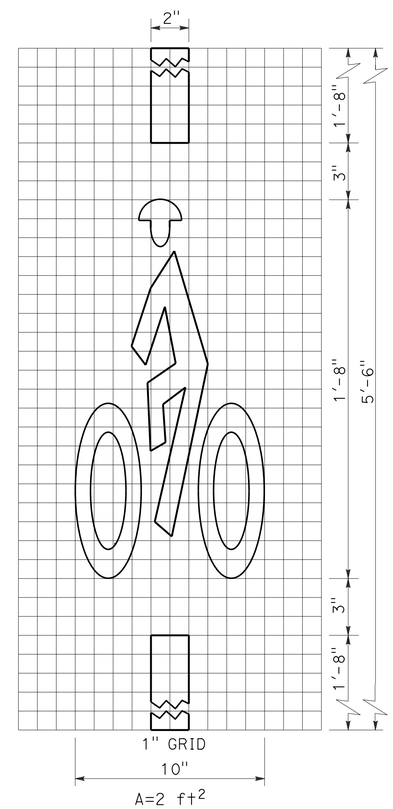


BICYCLE LOOP DETECTOR SYMBOL

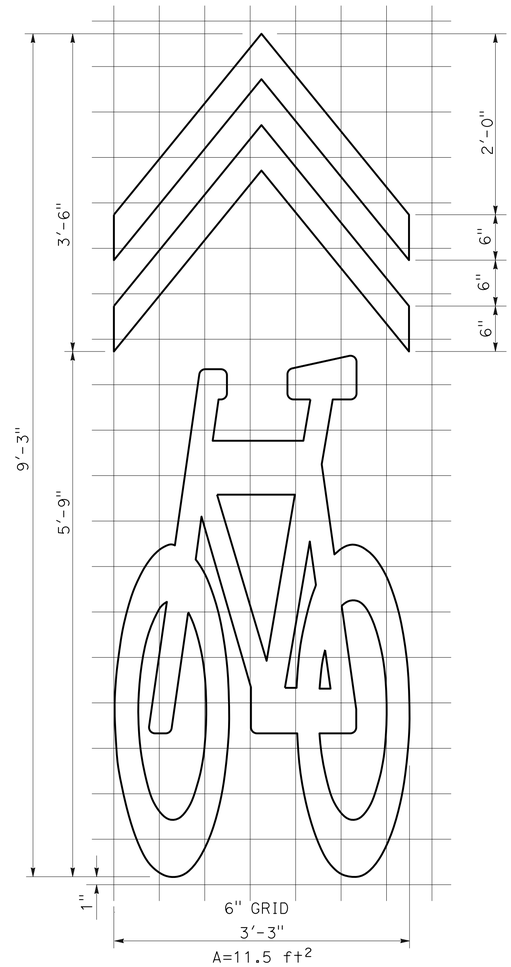


SHARED ROADWAY BICYCLE MARKING

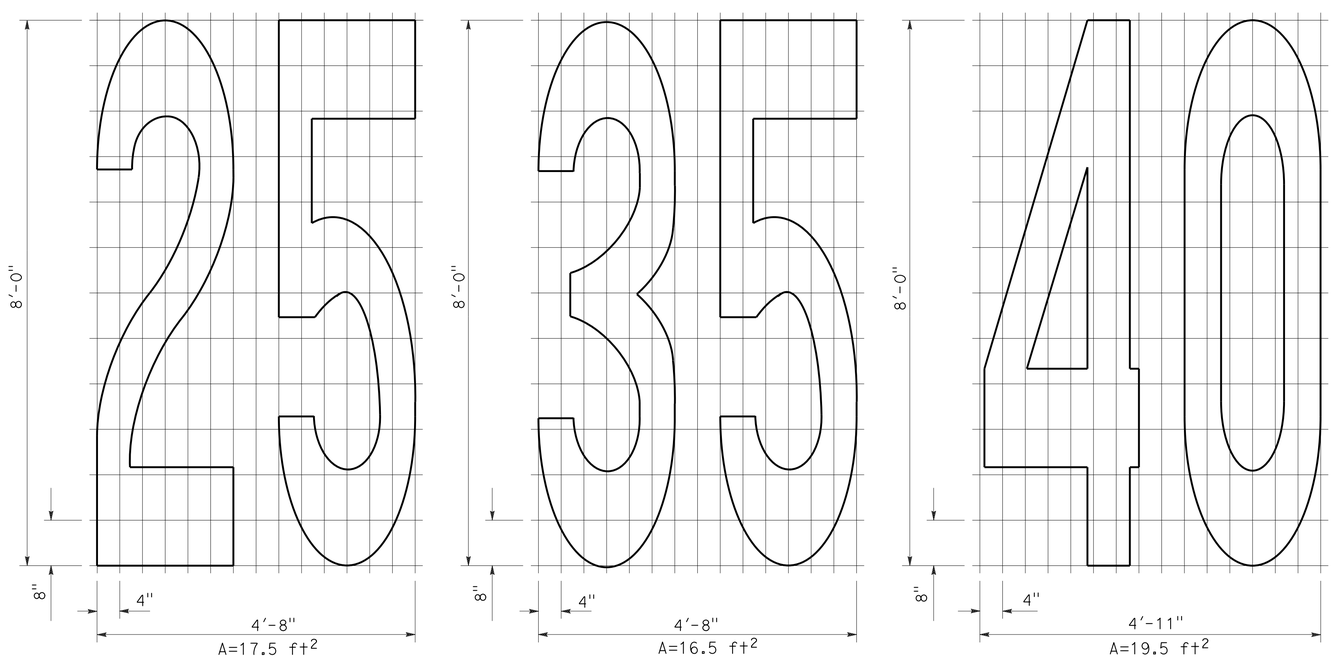


NUMERALS

STATE OF CALIFORNIA
DEPARTMENT OF TRANSPORTATION

# PAVEMENT MARKINGS SYMBOLS AND NUMERALS

NO SCALE

RSP A24C DATED OCTOBER 19, 2012 SUPERSEDES STANDARD PLAN A24C DATED MAY 20, 2011 - PAGE 15 OF THE STANDARD PLANS BOOK DATED 2010.

**REVISED STANDARD PLAN RSP A24C**

**2010 REVISED STANDARD PLAN RSP A24C**

6-28-12

| Dist | COUNTY | ROUTE | POST MILES TOTAL PROJECT | SHEET No. | TOTAL SHEETS |
|---|---|---|---|---|---|
| 02 | Sha | 299 | 30.3/40.7 | 320 | 366 |

REGISTERED CIVIL ENGINEER

July 20, 2012
PLANS APPROVAL DATE

REGISTERED PROFESSIONAL ENGINEER
Roberta L. McLaughlin
No. C40375
Exp. 3-31-13
CIVIL
STATE OF CALIFORNIA

*THE STATE OF CALIFORNIA OR ITS OFFICERS OR AGENTS SHALL NOT BE RESPONSIBLE FOR THE ACCURACY OR COMPLETENESS OF SCANNED COPIES OF THIS PLAN SHEET.*

TO ACCOMPANY PLANS DATED 6-17-13

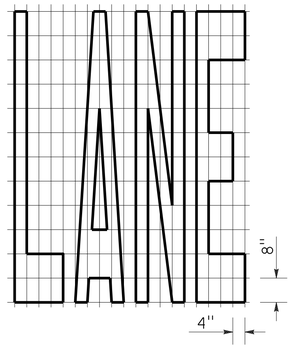


A=24 ft²

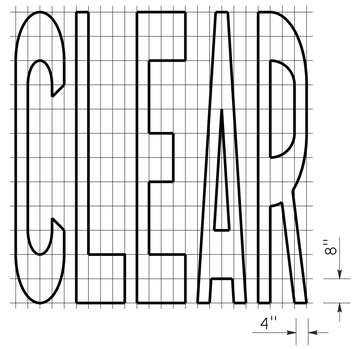


A=27 ft²

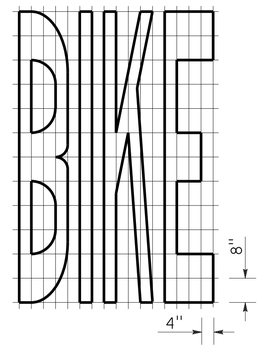


A=21 ft²

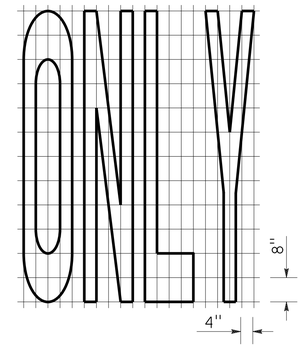


A=22 ft²

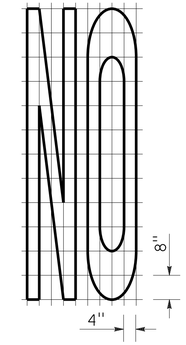


A=14 ft²

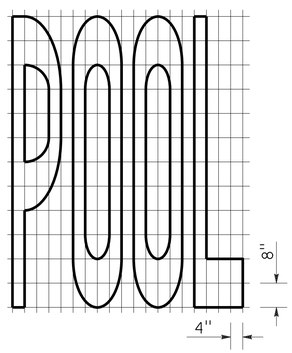


A=23 ft²

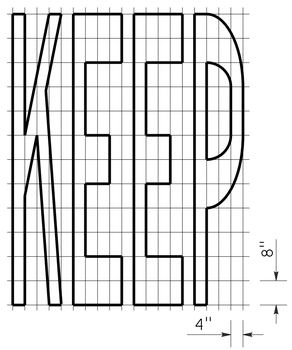


A=24 ft²

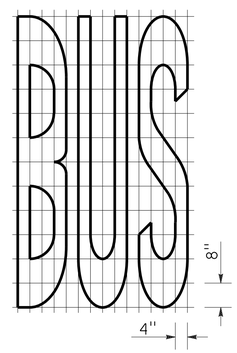


A=20 ft²

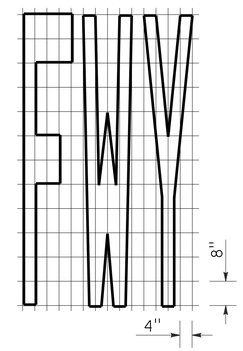


A=16 ft²

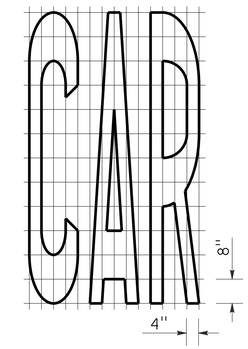


A=17 ft²

| WORD MARKINGS | | | |
|---|---|---|---|
| ITEM | ft² | ITEM | ft² |
| LANE | 24 | NO | 14 |
| POOL | 23 | BIKE | 21 |
| CAR | 17 | BUS | 20 |
| CLEAR | 27 | ONLY | 22 |
| KEEP | 24 | FWY | 16 |

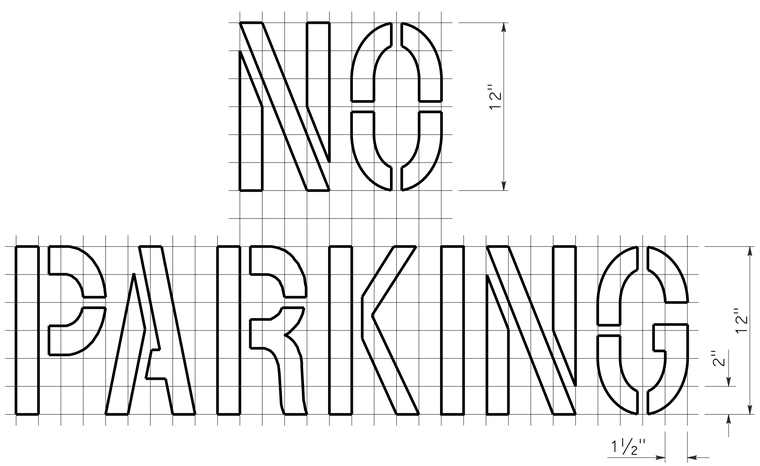


A=2 ft²

See Notes 6 and 7

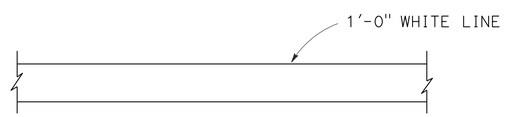


LIMIT LINE (STOP LINE)

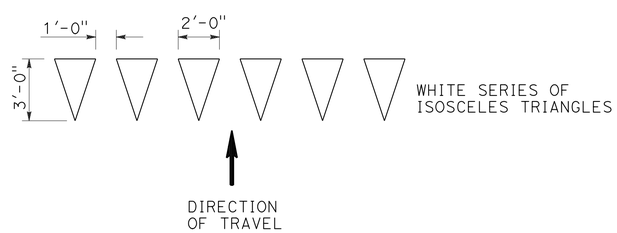


YIELD LINE

NOTES:

1. If a message consists of more than one word, it should read "UP", i.e., the first word should be nearest the driver.
2. The space between words should be at least four times the height of the characters for low speed roads, but not more than ten times the height of the characters. The space may be reduced appropriately where there is limited space because of local conditions.
3. Minor variations in dimensions may be accepted by the Engineer.
4. Portions of a letter, number or symbol may be separated by connecting segments not to exceed 2" in width.
5. The words "NO PARKING" pavement marking is to be used for parking facilities. For typical locations of markings, see Standard Plans A90A and A90B.
6. The words "NO PARKING", shall be painted in white letters no less than 1'-0" high on a contrasting background and located so that it is visible to traffic enforcement officials.

STATE OF CALIFORNIA
DEPARTMENT OF TRANSPORTATION

# PAVEMENT MARKINGS WORDS, LIMIT AND YIELD LINES

NO SCALE

RSP A24E DATED JULY 20, 2012 SUPERSEDES STANDARD PLAN A24E
DATED MAY 20, 2011 - PAGE 17 OF THE STANDARD PLANS BOOK DATED 2010.

**REVISED STANDARD PLAN RSP A24E**

**2010 REVISED STANDARD PLAN RSP A24E**

6-12-12

| Dist | COUNTY | ROUTE | POST MILES TOTAL PROJECT | SHEET No. | TOTAL SHEETS |
|---|---|---|---|---|---|
| 02 | Sha | 299 | 30.3/40.7 | 321 | 366 |

REGISTERED CIVIL ENGINEER

July 20, 2012
PLANS APPROVAL DATE

REGISTERED PROFESSIONAL ENGINEER
Roberta L. McLaughlin
No. C40375
Exp. 3-31-13
CIVIL
STATE OF CALIFORNIA

*THE STATE OF CALIFORNIA OR ITS OFFICERS OR AGENTS SHALL NOT BE RESPONSIBLE FOR THE ACCURACY OR COMPLETENESS OF SCANNED COPIES OF THIS PLAN SHEET.*

TO ACCOMPANY PLANS DATED 6-17-13

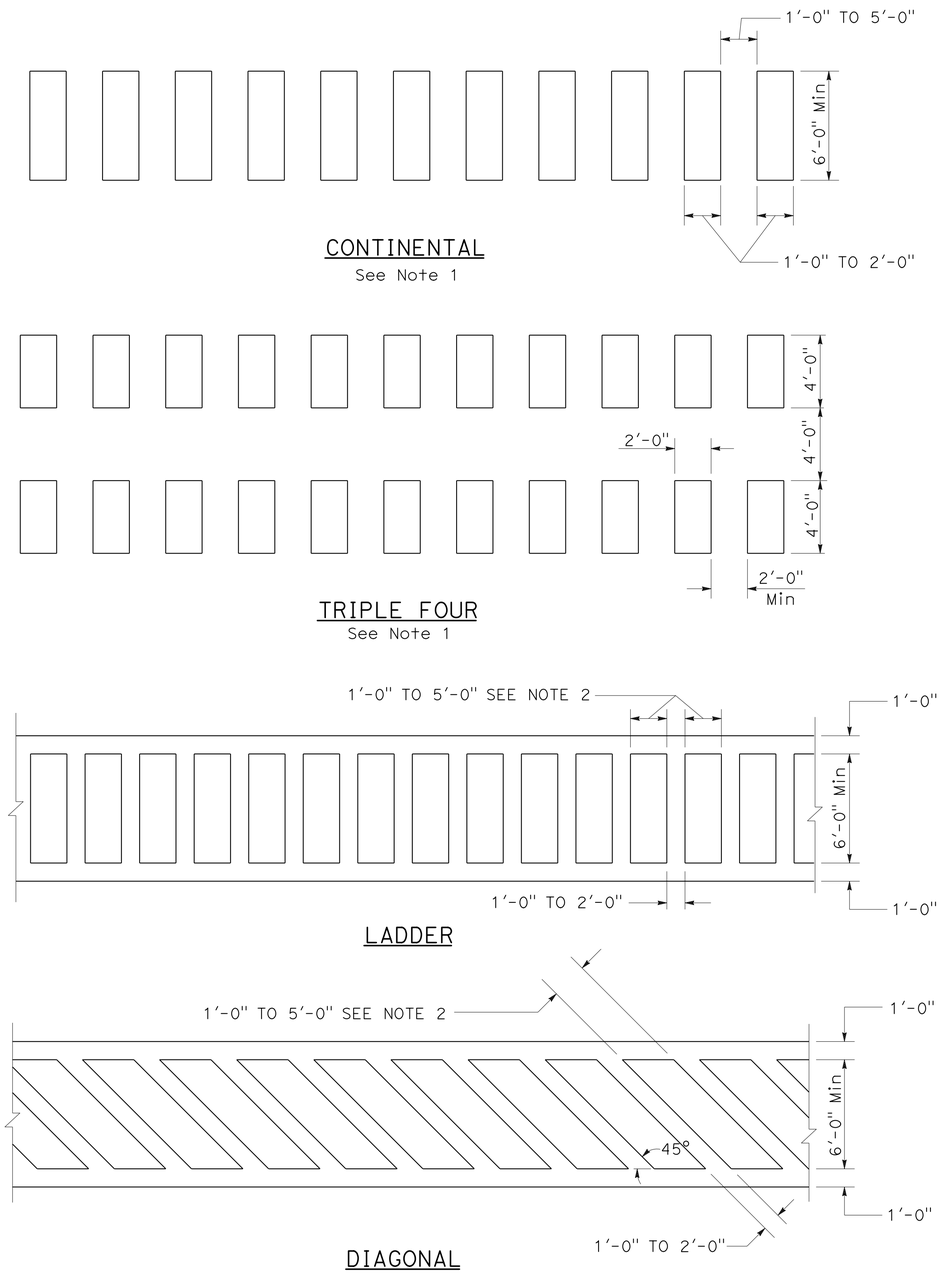


HIGHER VISIBILITY CROSSWALKS

## NOTES:

1. Spaces between markings should be placed in wheel tracks of each lane.
2. Spacings not to exceed 2.5 times width of longitudinal line.
3. All crosswalk markings must be white except for those near schools must be yellow.

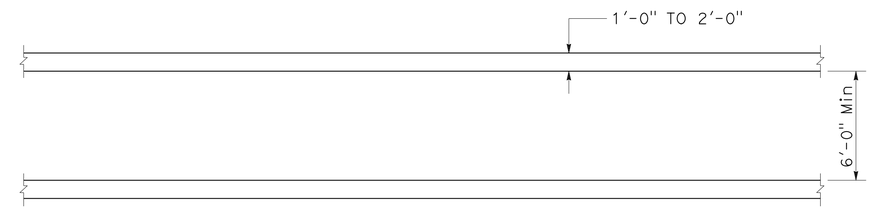


BASIC

STATE OF CALIFORNIA
DEPARTMENT OF TRANSPORTATION

# PAVEMENT MARKINGS CROSSWALKS

NO SCALE

RSP A24F DATED JULY 20, 2012 SUPPLEMENTS THE STANDARD PLANS BOOK DATED 2010.

**REVISED STANDARD PLAN RSP A24F**

**2010 REVISED STANDARD PLAN RSP A24F**

6-28-12

| DIST | COUNTY | ROUTE | POST MILES TOTAL PROJECT | SHEET No. | TOTAL SHEETS |
|---|---|---|---|---|---|
| 02 | Sha | 299 | 30.3/40.7 | 322 | 366 |

REGISTERED CIVIL ENGINEER

January 20, 2012
PLANS APPROVAL DATE

REGISTERED PROFESSIONAL ENGINEER
Cornelis M. Hakim
No. C55610
Exp. 12-31-12
CIVIL
STATE OF CALIFORNIA

*THE STATE OF CALIFORNIA OR ITS OFFICERS OR AGENTS SHALL NOT BE RESPONSIBLE FOR THE ACCURACY OR COMPLETENESS OF SCANNED COPIES OF THIS PLAN SHEET.*

TO ACCOMPANY PLANS DATED 6-17-13

## ABBREVIATIONS:

SE SAFETY EDGE

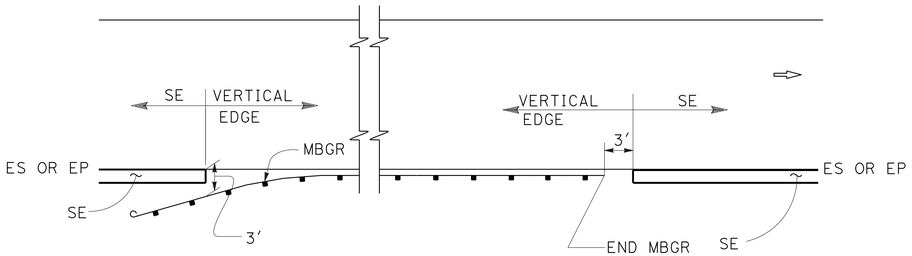


MBGR

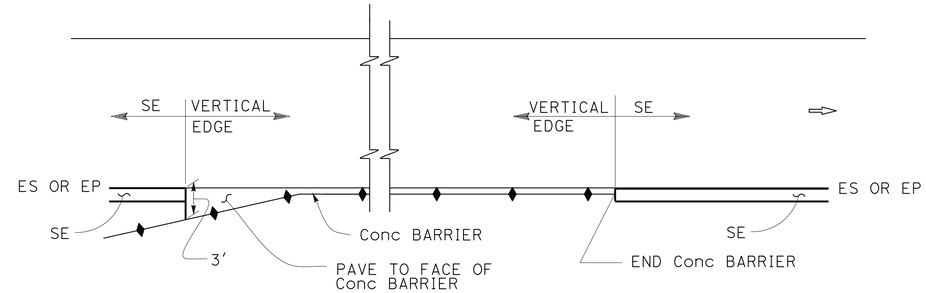


CONCRETE BARRIER

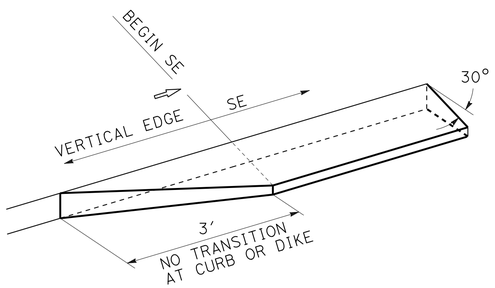


TRANSITION DETAIL FOR CONCRETE ONLY

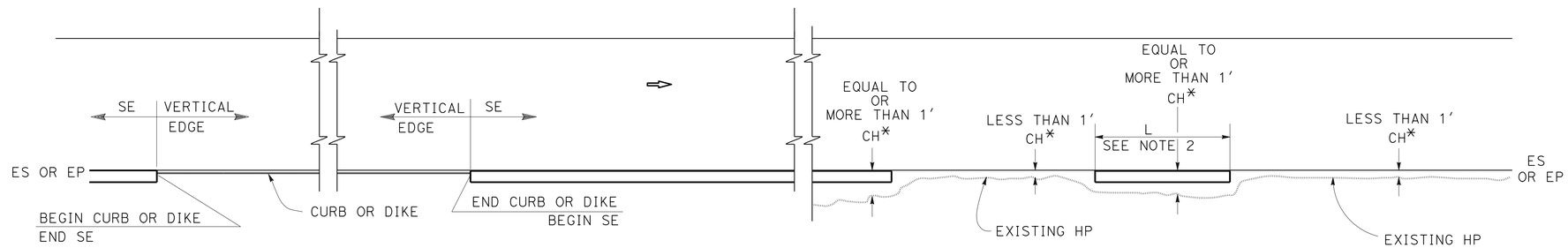


CURB OR DIKE

NARROW SIDE SLOPE

* CH = Distance from ES or EP to existing HP.

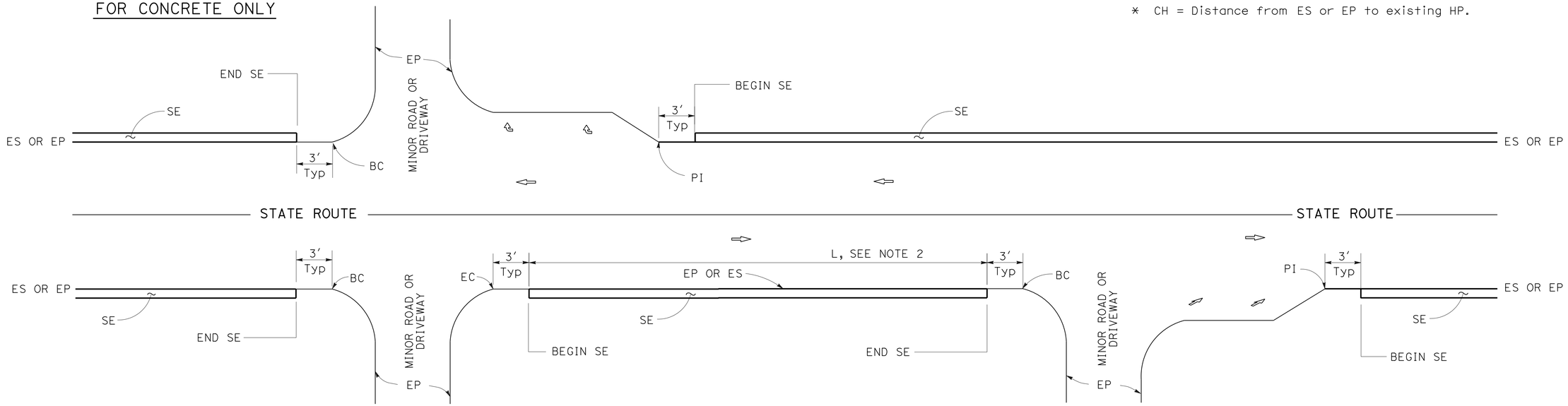


INTERSECTION

MINOR ROADWAY OR DRIVEWAY

DRIVEWAY AND INTERSECTION

## NOTES:

1. For details not shown, see Revised Standard Plans RSP P75 and RSP P76.
2. Safety edge is optional when L is less than 30′.

STATE OF CALIFORNIA
DEPARTMENT OF TRANSPORTATION

# PAVEMENT EDGE TREATMENTS

NO SCALE

RSP P74 DATED JANUARY 20, 2012 SUPPLEMENTS THE STANDARD PLANS BOOK DATED 2010.

**REVISED STANDARD PLAN RSP P74**

**2010 REVISED STANDARD PLAN RSP P74**

01-05-12

| DIST | COUNTY | ROUTE | POST MILES TOTAL PROJECT | SHEET No. | TOTAL SHEETS |
|---|---|---|---|---|---|
| 02 | Sha | 299 | 30.3/40.7 | 323 | 366 |

REGISTERED CIVIL ENGINEER

January 20, 2012
PLANS APPROVAL DATE

REGISTERED PROFESSIONAL ENGINEER
Cornelis M. Hakim
No. C55610
Exp. 12-31-12
CIVIL
STATE OF CALIFORNIA

*THE STATE OF CALIFORNIA OR ITS OFFICERS OR AGENTS SHALL NOT BE RESPONSIBLE FOR THE ACCURACY OR COMPLETENESS OF SCANNED COPIES OF THIS PLAN SHEET.*

TO ACCOMPANY PLANS DATED 6-17-13

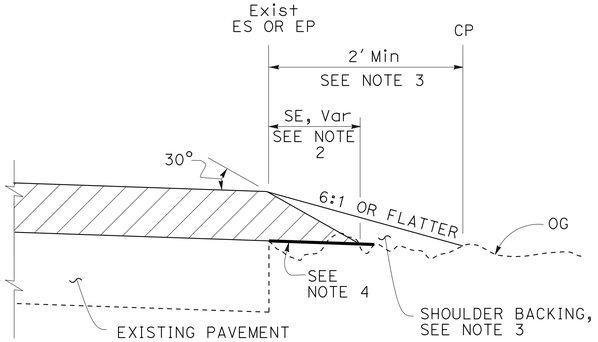


## CASE A
Safety Edge

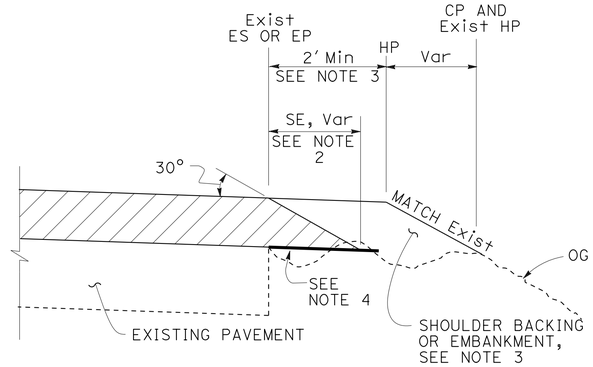


## CASE B
Safety Edge

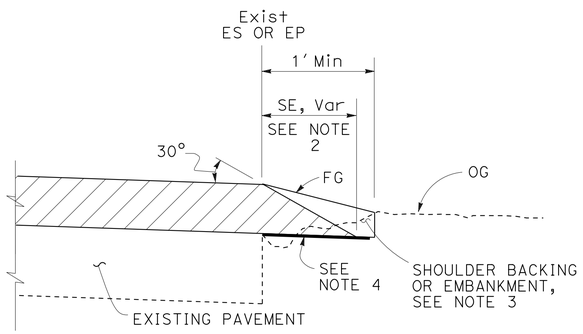


## CASE C
Safety Edge

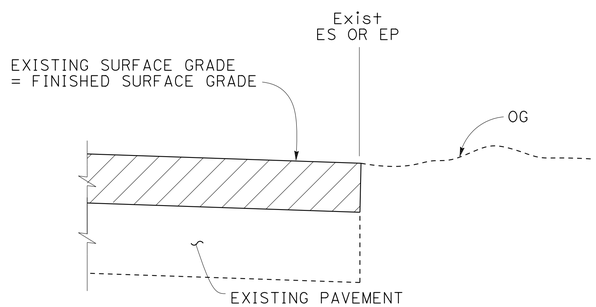


## CASE D
Vertical Edge

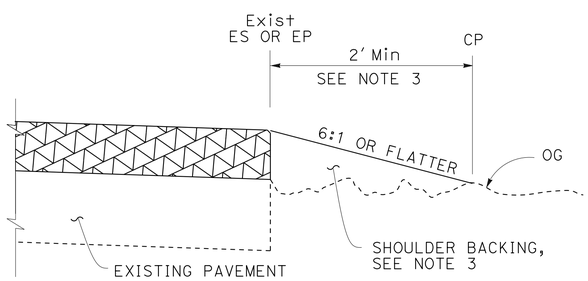


## CASE E
Vertical Edge

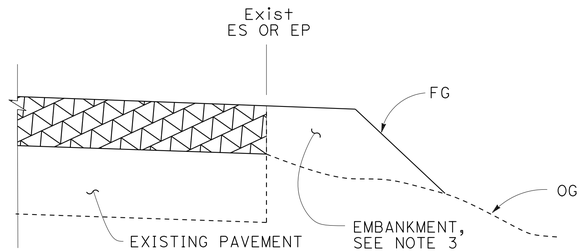


## CASE F
Vertical Edge
* See Table A and Revised Std Plan RSP P74

## LEGEND:

- HMA OVERLAY
- HMA OR CONCRETE OVERLAY
- CONCRETE OVERLAY

## ABBREVIATIONS:

SE SAFETY EDGE
TT TOTAL THICKNESS OF SE

## TABLE A
## EDGE TREATMENT FOR VARIOUS OVERLAY THICKNESS AND CONDITIONS

| | OVERLAY THICKNESS | |
|---|---|---|
| FIELD CONDITION | LESS THAN 0.15′ | 0.15′ OR MORE |
| Exist SLOPE 6:1 OR FLATTER | CASE E | CASE A |
| Exist SLOPE 3:1 TO 6:1 | CASE E | CASE B |
| Exist SLOPE STEEPER THAN 3:1 | CASE F | CASE F |
| CUT SECTION (REPLACE, COLD PLANE, MILL PAVEMENT) | CASE D | CASE C |

## ADDITIONAL HMA OR CONCRETE QUANTITIES FOR SE/SIDE/MILE

| TYPICAL CROSS SECTION | TT | TOTAL ADDITIONAL MATERIAL FOR SE/SIDE/MILE | | |
|---|---|---|---|---|
| | | HMA (TON) | CONCRETE (CY)* | CONCRETE (CY)** |
| TT | 0.15′ | NA | NA | NA |
| | 0.20′ | 13.7 | NA | NA |
| | 0.30′ | 30.9 | NA | NA |
| | 0.40′ | 54.9 | NA | NA |
| | 0.45′ | 69.4 | NA | NA |
| TT 0.43′ | 0.50′ | 84.2 | NA | NA |
| | 0.60′ | 113.9 | NA | NA |
| | 0.70′ | 143.6 | 70.9 | 94.2 |
| | 0.80′ | 173.3 | 85.6 | 112.2 |
| | 0.90′ | 203.0 | 100.3 | 130.2 |
| | 1.00′ | 232.7 | 114.9 | 148.2 |
| | 1.10′ | 262.4 | 129.6 | 166.2 |
| | 1.20′ | 292.1 | 144.3 | 184.2 |

* For Detail "A"
** For Optional Detail "A"

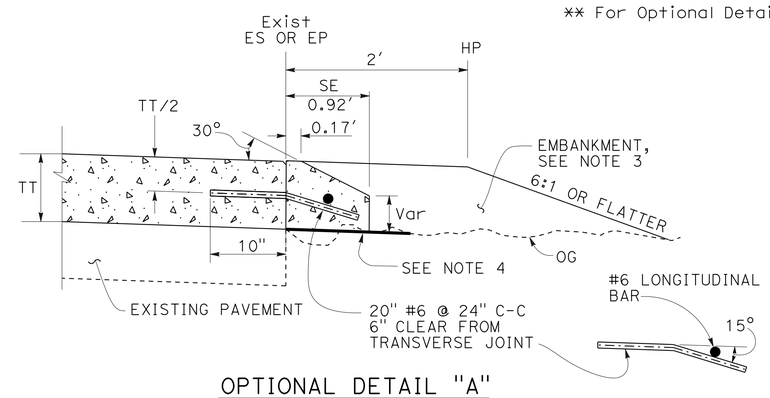


## OPTIONAL DETAIL "A"
For concrete overlay
See Note 5

## NOTES:

1. For limits of safety edge and vertical edge treatments, see Revised Standard Plan RSP P74.
2. Details shown for HMA overlay thickness less than 0.43′. See Detail "A" for HMA overlay thickness more than 0.43′ or concrete overlay.
3. For locations and limits of shoulder backing or embankment see project plans.
4. Grade existing ground to place safety edge. 1′ minimum width
5. Safety edge transverse joint must match overlay transverse joint. End of #6 longitudinal bar must be 2" ±½" clear from transverse joint.
6. Safety edge is not needed in the area of MBGR, barrier, right turn lane and acceleration lane. See Revised Standard Plan RSP P74.

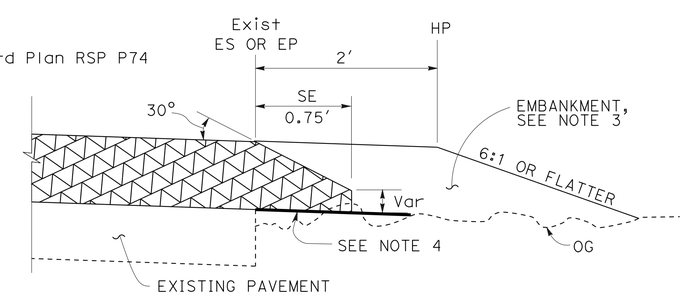


## DETAIL "A"
For HMA overlay thickness more than 0.43′ or concrete overlay

STATE OF CALIFORNIA
DEPARTMENT OF TRANSPORTATION

# PAVEMENT EDGE TREATMENTS-OVERLAYS

NO SCALE

RSP P75 DATED JANUARY 20, 2012 SUPPLEMENTS THE STANDARD PLANS BOOK DATED 2010.

**REVISED STANDARD PLAN RSP P75**

**2010 REVISED STANDARD PLAN RSP P75**

| Dist | COUNTY | ROUTE | POST MILES TOTAL PROJECT | SHEET No. | TOTAL SHEETS |
|---|---|---|---|---|---|
| 02 | Sha | 299 | 30.3/40.7 | 324 | 366 |

Raymond Don Tsztoo
REGISTERED CIVIL ENGINEER

April 19, 2013
PLANS APPROVAL DATE

REGISTERED PROFESSIONAL ENGINEER Raymond Don Tsztoo No. C37332 Exp. 6-30-14 CIVIL STATE OF CALIFORNIA

*THE STATE OF CALIFORNIA OR ITS OFFICERS OR AGENTS SHALL NOT BE RESPONSIBLE FOR THE ACCURACY OR COMPLETENESS OF SCANNED COPIES OF THIS PLAN SHEET.*

TO ACCOMPANY PLANS DATED 6-17-13

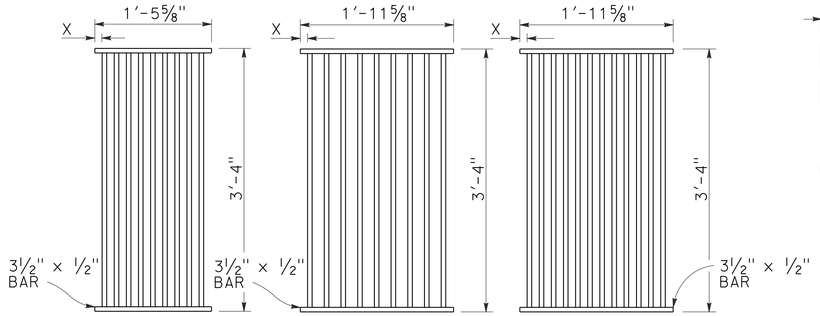


TYPE 18-9

1⅜" Clear spacing. Use within the roadbed on highways where bicycles and pedestrians are excluded.

TYPE 24-9

2" Clear spacing. Use in locations off the roadbed on all types of highways.

TYPE 24-12

1⅜" Clear spacing. Use within the roadbed on highways where bicycles and pedestrians are excluded.

## RECTANGULAR GRATE DETAILS

(See table below)

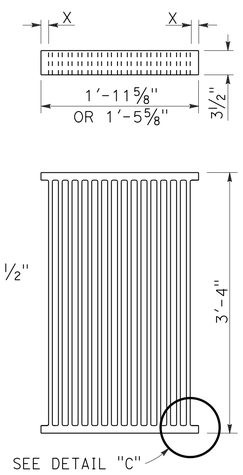


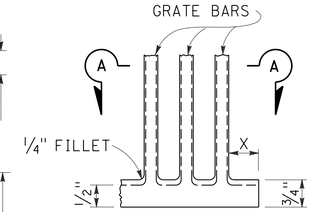


DETAIL "C"

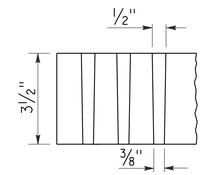


SECTION A-A

## ALTERNATIVE CAST DUCTILE IRON GRATE OR CAST CARBON STEEL GRATE

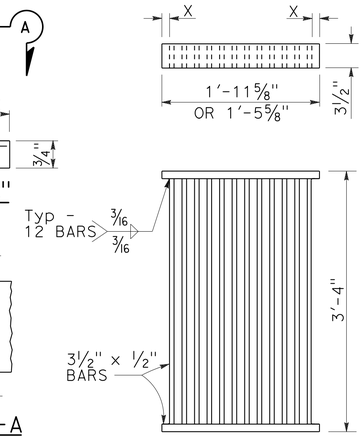


## ALTERNATIVE WELDED GRATE

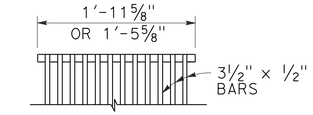


CAST END BLOCK

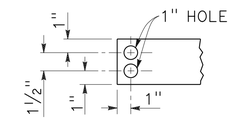


END OF BAR

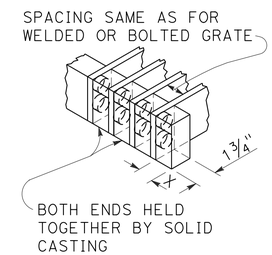


## ALTERNATIVE CAST DUCTILE IRON OR CAST CARBON STEEL END BLOCK GRATE

## NOTES:

1. Grate type numbers refer to approximate width of grate in inches and number of bars, respectively.
2. Contractor has the option of using cast ductile iron, cast carbon steel, welded, bolted, or cast end block grate.
3. Rounded top of bars optional on all grates.
4. Pipe inlets with a grate shall be placed so that bars parallel direction of principle surface flow.
5. Complete joint penetration butt welds may be substituted for the fillet welds on all anchors.
6. Standard square, hexagon, round or equivalent headed anchors may be substituted for the right angle hooks on the anchors shown on this plan.
7. Grate and frame weights are based on welded grates (weights of face angles, steps, protection bars, etc. are not included).
8. Connect chain to grate and frame only at locations shown on the plans. When chain is required, do not use cast ductile iron grates.

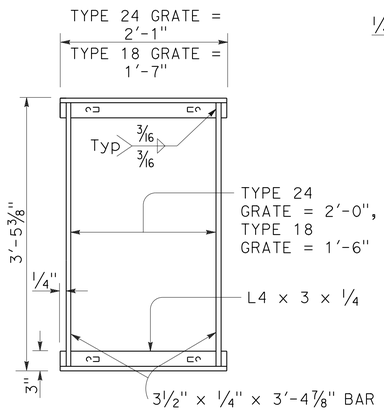


TYPICAL FRAME

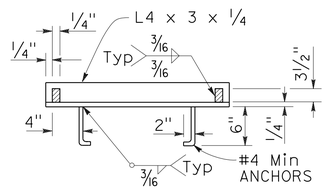


CROSS SECTION

(Thru frame)

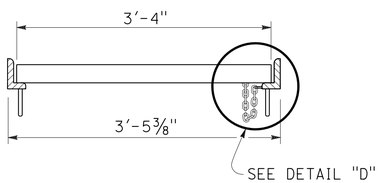


LONGITUDINAL SECTION

(Thru frame and grate)

## RECTANGULAR FRAME DETAILS

(For all rectangular grates)

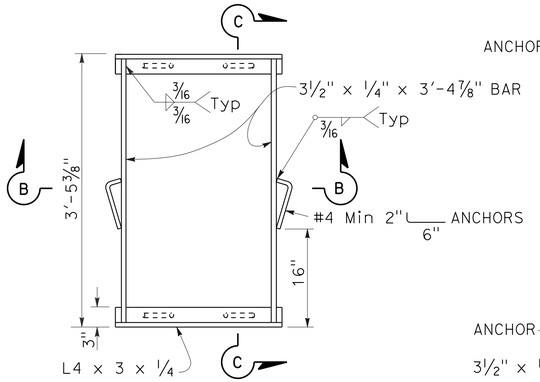


TYPICAL FRAME

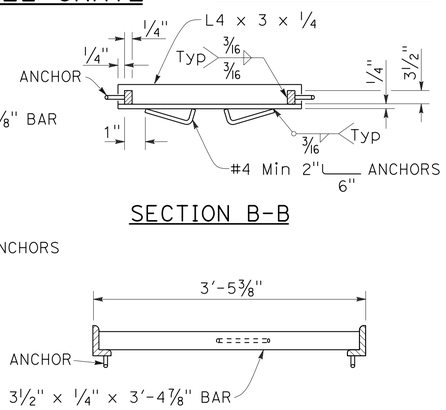


SECTION B-B

SECTION C-C

## ALTERNATIVE ANCHOR FOR RECTANGULAR FRAME

(For details not shown, See Rectangular Frame Details)

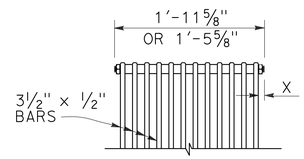


BOLTED END BLOCK

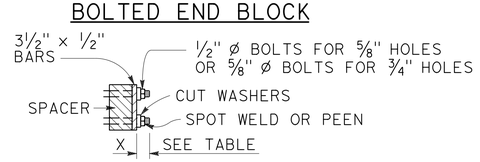


BOLTING DETAIL

## ALTERNATIVE BOLTED GRATE

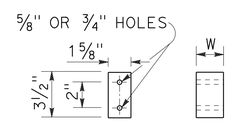


BAR SPACER

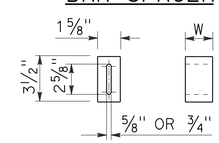


ALTERNATIVE SPACER

W = 1⅜" or 2"

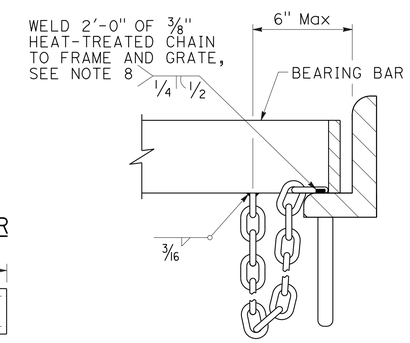


DETAIL "D"

(Steel grates only)

GRATE BAR SPACING TABLE

| TYPE | No. OF BARS | CLEAR BAR SPACING | X |
|---|---|---|---|
| 18-9 | 9 | 1⅜" | 1 1/16" |
| 24-9 | 9 | 2" | 1 9/16" |
| 24-12 | 12 | 1⅜" | 1¼" |

| INLET TYPE | COVER TYPE | WEIGHT LB |
|---|---|---|
| OS | PLATE | 174 |
| OL-7 | PLATE | 170 |
| OL-10 | PLATE | 170 |
| OL-14 | PLATE | 170 |
| OL-21 | PLATE | 170 |
| OCP | PLATE | 112 |
| OCPI | PLATE | 112 |
| OCPI | REDWOOD | 42 |
| OMP | PLATE | 177 |
| OMPI | PLATE | 177 |

| INLET TYPE | GRATE TYPE | No. OF GRATES | WEIGHT LB |
|---|---|---|---|
| GDO | 24-12 | 2 | 634 |
| | | | |
| GOL-7 | 24-12 | 1 | 326 |
| | | | |
| GOL-10 | 24-12 | 1 | 326 |
| | | | |
| GO,G1,G2,G3,G4 (TYPE 24) | 24-9 | 1 | 263 |
| | 24-12 | 1 | 326 |
| | | | |
| G4 (TYPE 18),G5,G6 | 18-9 | 1 | 249 |
| GT1 | 18-9 | 2 | 498 |
| GT2 | 18-9 | 2 | 498 |
| GT3 | 24-12 | 2 | 652 |
| | | | |
| GT4 | 24-12 | 2 | 652 |
| | | | |
| TRASH RACK | | | 22 |
| GRATE CHAIN | | | 3 |

## BASIS FOR Misc IRON & STEEL FINAL PAY WEIGHTS FOR DRAINAGE INLETS

(See Note 7)

STATE OF CALIFORNIA
DEPARTMENT OF TRANSPORTATION

# GRATE DETAILS No. 1

NO SCALE

RSP D77A DATED APRIL 19, 2013 SUPERSEDES RSP D77A DATED JULY 20, 2012 AND STANDARD PLAN D77A DATED MAY 20, 2011 - PAGE 164 OF THE STANDARD PLANS BOOK DATED 2010.

**REVISED STANDARD PLAN RSP D77A**

**2010 REVISED STANDARD PLAN RSP D77A**

4-4-13

| Dist | COUNTY | ROUTE | POST MILES TOTAL PROJECT | SHEET No. | TOTAL SHEETS |
|---|---|---|---|---|---|
| 02 | Sha | 299 | 30.3/40.7 | 325 | 366 |

Raymond Don Tsztoo
REGISTERED CIVIL ENGINEER

April 19, 2013
PLANS APPROVAL DATE

REGISTERED PROFESSIONAL ENGINEER Raymond Don Tsztoo No. C37332 Exp. 6-30-14 CIVIL STATE OF CALIFORNIA

*THE STATE OF CALIFORNIA OR ITS OFFICERS OR AGENTS SHALL NOT BE RESPONSIBLE FOR THE ACCURACY OR COMPLETENESS OF SCANNED COPIES OF THIS PLAN SHEET.*

TO ACCOMPANY PLANS DATED 6-17-13

**2010 REVISED STANDARD PLAN RSP D77B**

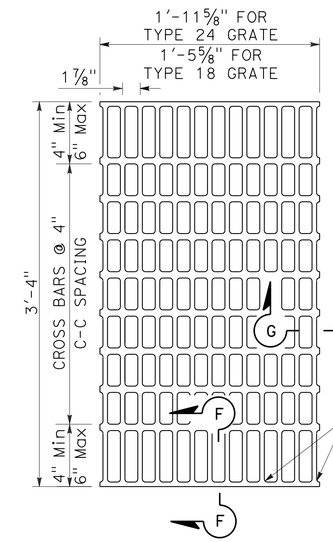


NOTES:

Bearing bars to be 3½" x ¼" bars on 1⅞" centers.

⅜"± ø Cross bars may be fillet welded, resistance welded or electroforged to bearing bars.

Weight of Type 24 grate = 141 LBS.

Weight of Type 18 grate = 107 LBS. (Type 24 grate shown).

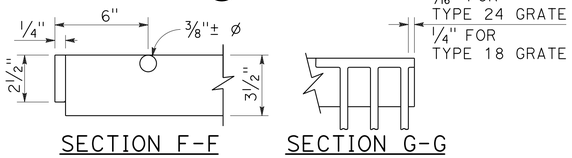


SECTION F-F SECTION G-G

## TYPE 18-10 AND 24-13 GRATE

(Welded Steel)

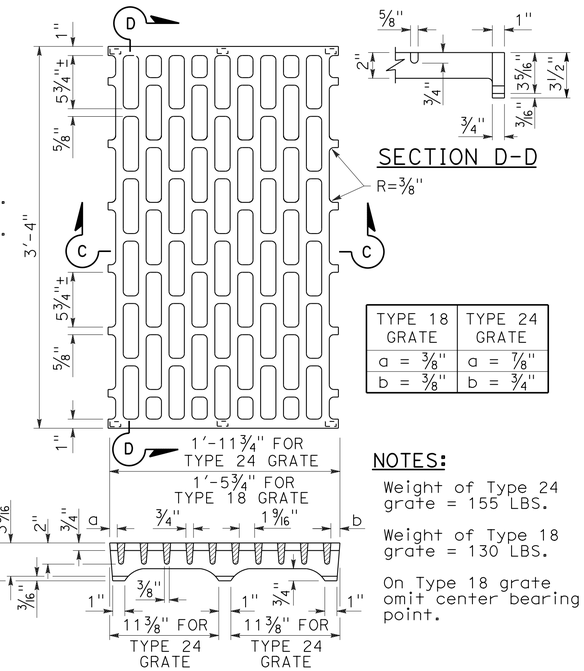


SECTION D-D

| TYPE 18 GRATE | TYPE 24 GRATE |
|---|---|
| a = ⅜" | a = ⅞" |
| b = ⅜" | b = ¾" |

NOTES:

Weight of Type 24 grate = 155 LBS.

Weight of Type 18 grate = 130 LBS.

On Type 18 grate omit center bearing point.

SECTION C-C

## TYPE 18-8C AND 24-10C GRATE

(Cast ductile iron)

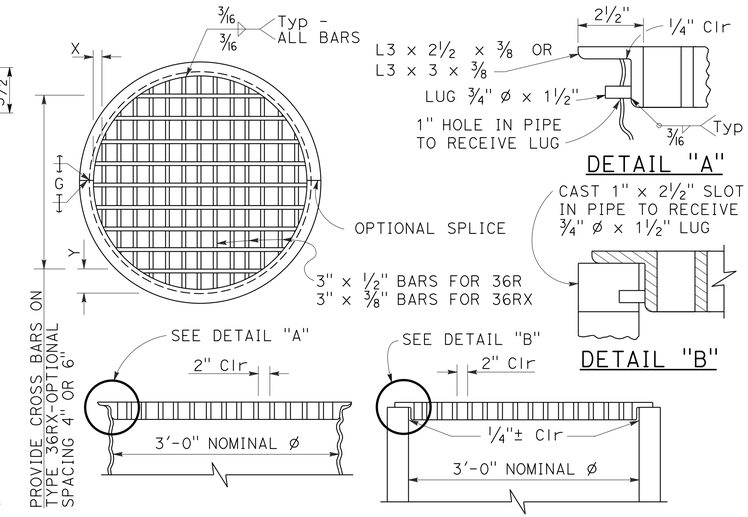


## TYPE 36R AND 36RX GRATE DETAILS

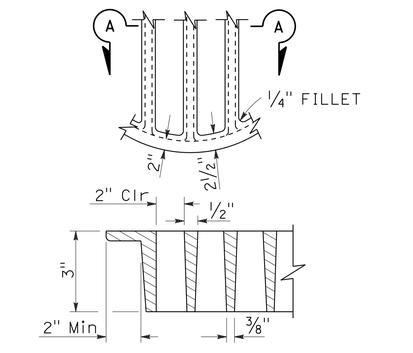


SECTION A-A

## ALTERNATIVE CAST DUCTILE IRON GRATE OR CAST CARBON STEEL GRATE TYPE 36R AND 36RX

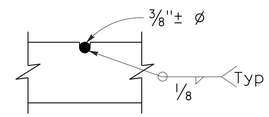


⅜"± ø Cross bars may be fillet welded, resistance welded or electroforged to bearing bars.

CROSS BAR DETAIL TYPE 36RX GRATE (WELDED STEEL)

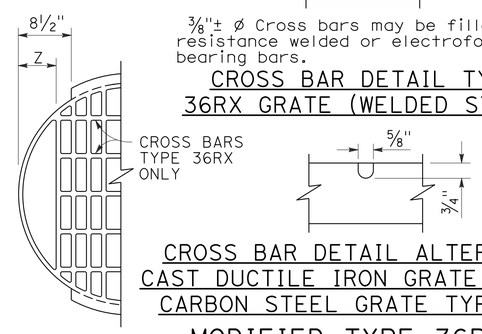


CROSS BAR DETAIL ALTERNATIVE CAST DUCTILE IRON GRATE OR CAST CARBON STEEL GRATE TYPE 36RX

## MODIFIED TYPE 36R AND 36RX GRATE FOR ODI INLET

BASIS FOR Misc IRON AND STEEL FINAL PAY WEIGHTS FOR DRAINAGE INLETS

| INLET TYPE | GRATE TYPE | No. OF GRATES | WEIGHT LB |
|---|---|---|---|
| GDO (SEE NOTE 4) | 24-10C | 2 | 391 |
| | 24-10S | 2 | 456 |
| | 24-12X | 2 | 473 |
| | 24-13 | 2 | 374 |
| GO,GOL,G1,G2, G3,G4 (TYPE 24) | 24-10C | 1 | 202 |
| | 24-10S | 1 | 229 |
| | 24-12X | 1 | 239 |
| | 24-13 | 1 | 188 |
| G4 (TYPE 18) G5,G6 | 18-8S | 1 | 187 |
| | 18-9X | 1 | 187 |
| | 18-10 | 1 | 149 |
| GT1,GT2 | 18-8S | 2 | 374 |
| | 18-9X | 2 | 374 |
| | 18-10 | 2 | 298 |
| GT3,GT4 | 24-10C | 2 | 404 |
| | 24-10S | 2 | 458 |
| | 24-12X | 2 | 478 |
| | 24-13 | 2 | 376 |
| ODI | 36RX (Mod) | 1 | 196 |
| GMP,GCP,GCPI | 36RX | 1 | 215 |
| ODI | 36R (Mod) | 1 | 220 |
| GMP,GCP,GCPI | 36R | 1 | 236 |
| TRASH RACK | | | 22 |
| GRATE CHAIN | | | 3 |

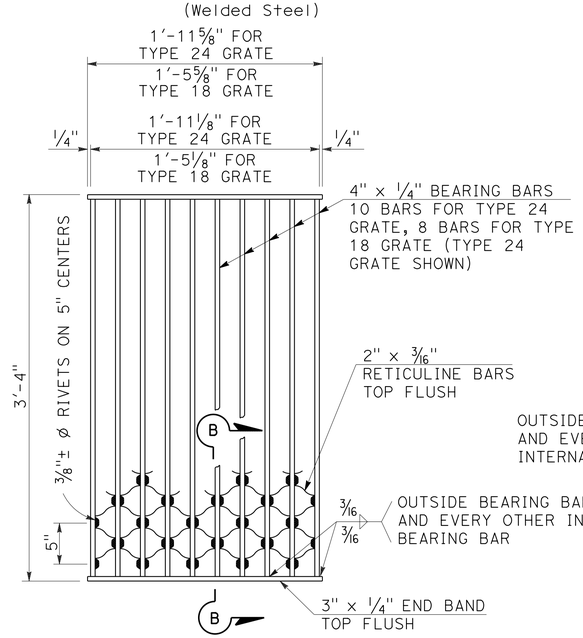


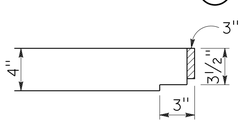


NOTES:

Weight of Type 24 grate = 182 LBS.
Weight of Type 18 grate = 145 LBS.

SECTION B-B

## TYPE 18-8S AND 24-10S GRATE

(Welded Steel) Reticuline type

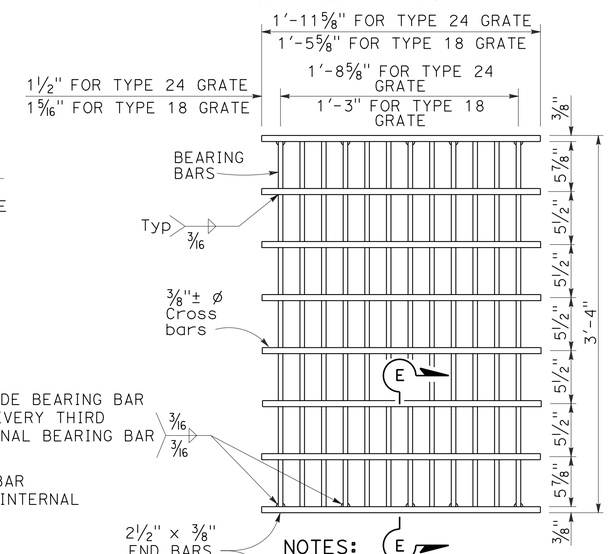


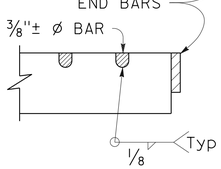


SECTION E-E

NOTES:

Bearing bars to be 3½" x ⅜" bars on 1⅞" centers.

12 Bars for Type 24 grate - 9 bars for Type 18 grates. (Type 24 grate shown).

Weight of Type 24 grate = 192 LBS.

Weight of Type 18 grate = 145 LBS.

⅜"± ø Cross bars may be fillet welded, resistance welded or electroforged to bearing bars.

## TYPE 18-9X AND 24-12X GRATE

(Welded Steel)

NOTES:

1. When alternative grates are allowed - Final pay based on alternative with the lesser weight.
2. Use frame shown on Standard Plan D74A, D74B or RSP D77A as appropriate.
3. When Type 24-10S, 24-12X or 24-13 grates are used with GDO Inlets, a ¼" x 3½" x 3'-4⅞" steel bar shall be welded across the center of inlet frame to separate the individual grates.
4. See Revised Standard Plan RSP D77A for connecting chain to welded grate and frame. When chain is required, do not use cast ductile iron grate.

GRATE BAR SPACING TABLE

| TYPE | No. OF BARS | CLEAR BAR SPACING | X | Y 4" SPACING | Y 6" SPACING | Z |
|---|---|---|---|---|---|---|
| 36R | 13 | 2" | 2⅛" | - | - | - |
| 36RX (STEEL) | 15 | 2" | 9/16" | 3¾" | 5¾" | - |
| 36RX (CAST) | 13 | 2" | 2⅛" | 3¾" | 5¾" | - |
| 36R Mod | 12 | 2" | 2⅛" | - | - | 5" |
| 36RX Mod (STEEL) | 13 | 2" | 9/16" | 3¾" | 5¾" | 5 11/16" |
| 36RX Mod (CAST) | 12 | 2" | 2⅛" | 3¾" | 5¾" | 5" |

STATE OF CALIFORNIA
DEPARTMENT OF TRANSPORTATION

# GRATE DETAILS No. 2

NO SCALE

RSP D77B DATED APRIL 19, 2013 SUPERSEDES RSP D77B DATED JULY 20, 2012 AND STANDARD PLAN D77B DATED MAY 20, 2011 - PAGE 165 OF THE STANDARD PLANS BOOK DATED 2010.

**REVISED STANDARD PLAN RSP D77B**

4-4-13

| Dist | COUNTY | ROUTE | POST MILES TOTAL PROJECT | SHEET No. | TOTAL SHEETS |
|---|---|---|---|---|---|
| 02 | Sha | 299 | 30.3/40.7 | 326 | 366 |

REGISTERED CIVIL ENGINEER

April 19, 2013
PLANS APPROVAL DATE

REGISTERED PROFESSIONAL ENGINEER
Gurinderpal Bhullar
No. C48815
Exp. 9-30-14
CIVIL
STATE OF CALIFORNIA

THE STATE OF CALIFORNIA OR ITS OFFICERS OR AGENTS SHALL NOT BE RESPONSIBLE FOR THE ACCURACY OR COMPLETENESS OF SCANNED COPIES OF THIS PLAN SHEET.

TO ACCOMPANY PLANS DATED 6-17-13

2010 REVISED STANDARD PLAN RSP T9

## TABLE 1

### TAPER LENGTH CRITERIA AND CHANNELIZING DEVICE SPACING

| SPEED (S) | MINIMUM TAPER LENGTH * FOR WIDTH OF OFFSET 12 FEET (W) | | | | MAXIMUM CHANNELIZING DEVICE SPACING | | |
|---|---|---|---|---|---|---|---|
| | | | | | X | Y | Z ** |
| | TANGENT 2L | MERGING L | SHIFTING L/2 | SHOULDER L/3 | TAPER | TANGENT | CONFLICT |
| mph | ft | ft | ft | ft | ft | ft | ft |
| 20 | 160 | 80 | 40 | 27 | 20 | 40 | 10 |
| 25 | 250 | 125 | 63 | 42 | 25 | 50 | 12 |
| 30 | 360 | 180 | 90 | 60 | 30 | 60 | 15 |
| 35 | 490 | 245 | 123 | 82 | 35 | 70 | 17 |
| 40 | 640 | 320 | 160 | 107 | 40 | 80 | 20 |
| 45 | 1080 | 540 | 270 | 180 | 45 | 90 | 22 |
| 50 | 1200 | 600 | 300 | 200 | 50 | 100 | 25 |
| 55 | 1320 | 660 | 330 | 220 | 55 | 110 | 27 |
| 60 | 1440 | 720 | 360 | 240 | 60 | 120 | 30 |
| 65 | 1560 | 780 | 390 | 260 | 65 | 130 | 32 |
| 70 | 1680 | 840 | 420 | 280 | 70 | 140 | 35 |

* - For other offsets, use the following merging taper length formula for L:
For speed of 40 mph or less, $L = WS^2/60$
For speed of 45 mph or more, $L = WS$

Where: L = Taper length in feet
W = Width of offset in feet
S = Posted speed limit, off-peak 85th-percentile speed prior to work starting, or the anticipated operating speed in mph

** - Use for taper and tangent sections where there are no pavement markings or where there is a conflict between existing pavement markings and channelizers (CA).

## TABLE 2

### LONGITUDINAL BUFFER SPACE AND FLAGGER STATION SPACING

| SPEED * | Min D ** | DOWNGRADE Min D *** | | |
|---|---|---|---|---|
| | | -3% | -6% | -9% |
| mph | ft | ft | ft | ft |
| 20 | 115 | 116 | 120 | 126 |
| 25 | 155 | 158 | 165 | 173 |
| 30 | 200 | 205 | 215 | 227 |
| 35 | 250 | 257 | 271 | 287 |
| 40 | 305 | 315 | 333 | 354 |
| 45 | 360 | 378 | 400 | 427 |
| 50 | 425 | 446 | 474 | 507 |
| 55 | 495 | 520 | 553 | 593 |
| 60 | 570 | 598 | 638 | 686 |
| 65 | 645 | 682 | 728 | 785 |
| 70 | 730 | 771 | 825 | 891 |

* - Speed is posted speed limit, off-peak 85th-percentile speed prior to work starting, or the anticipated operating speed in mph

** - Longitudinal buffer space or flagger station spacing

*** - Use on sustained downgrade steeper than -3 percent and longer than 1 mile.

## TABLE 3

### ADVANCE WARNING SIGN SPACING

| ROAD TYPE | DISTANCE BETWEEN SIGNS * | | |
|---|---|---|---|
| | A | B | C |
| | ft | ft | ft |
| URBAN - 25 mph OR LESS | 100 | 100 | 100 |
| URBAN - MORE THAN 25 mph TO 40 mph | 250 | 250 | 250 |
| URBAN - MORE THAN 40 mph | 350 | 350 | 350 |
| RURAL | 500 | 500 | 500 |
| EXPRESSWAY / FREEWAY | 1000 | 1500 | 2640 |

* - The distances are approximate, are intended for guidance purposes only, and should be applied with engineering judgment. These distances should be adjusted by the Engineer for field conditions, if necessary, by increasing or decreasing the recommmended distances.

STATE OF CALIFORNIA
DEPARTMENT OF TRANSPORTATION

# TRAFFIC CONTROL SYSTEM FOR LANE CLOSURE ON FREEWAYS AND EXPRESSWAYS

NO SCALE

RSP T9 DATED APRIL 19, 2013 SUPPLEMENTS THE STANDARD PLANS BOOK DATED 2010.

**REVISED STANDARD PLAN RSP T9**

1-23-13

| Dist | COUNTY | ROUTE | POST MILES TOTAL PROJECT | SHEET No. | TOTAL SHEETS |
|---|---|---|---|---|---|
| 02 | Sha | 299 | 30.3/40.7 | 327 | 366 |

REGISTERED CIVIL ENGINEER

April 19, 2013
PLANS APPROVAL DATE

REGISTERED PROFESSIONAL ENGINEER
Gurinderpal Bhullar
No. C48815
Exp. 9-30-14
CIVIL
STATE OF CALIFORNIA

THE STATE OF CALIFORNIA OR ITS OFFICERS OR AGENTS SHALL NOT BE RESPONSIBLE FOR THE ACCURACY OR COMPLETENESS OF SCANNED COPIES OF THIS PLAN SHEET.

TO ACCOMPANY PLANS DATED 6-17-13

## NOTES:

See Revised Standard Plan RSP T9 for tables.

Use cone spacing X for taper segment, Y for tangent segment or Z for conflict situations, as approriate, per Table 1, unless X, Y, or Z cone spacing is shown on this sheet.

Unless otherwise specified in the special provisions, all temporary warning signs shall have black legend on fluorescent orange background.

California codes are designated by (CA). Otherwise, Federal (MUTCD) codes are shown.

# TYPICAL LANE CLOSURE WITH REVERSIBLE CONTROL

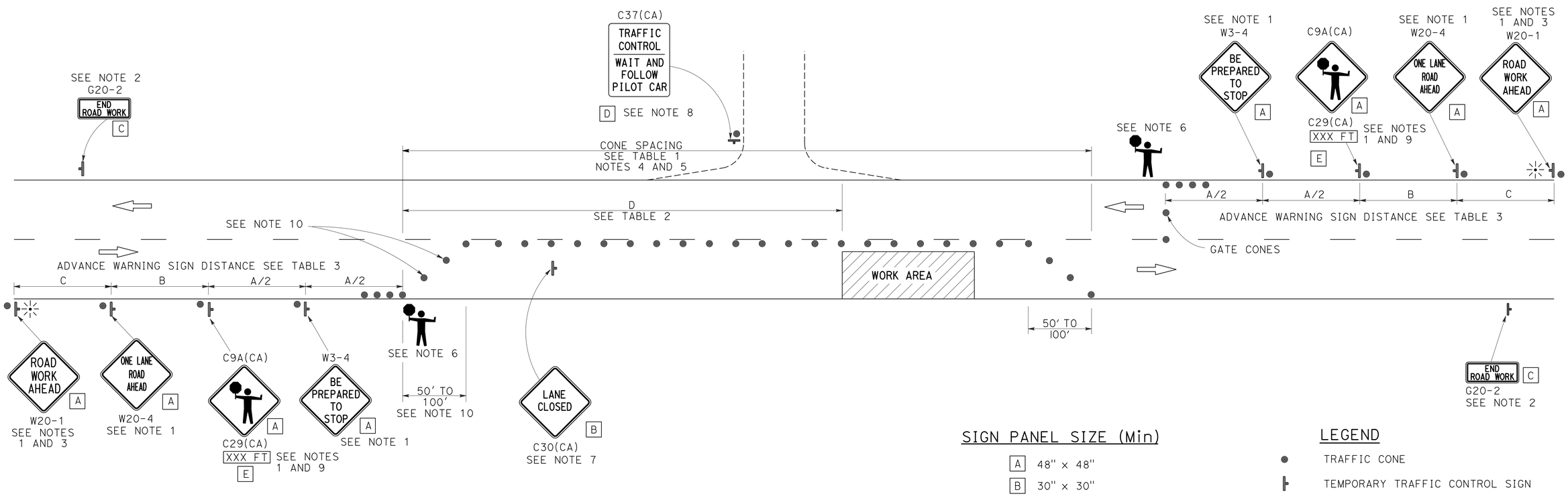


## SIGN PANEL SIZE (Min)

| | |
|---|---|
| A | 48" x 48" |
| B | 30" x 30" |
| C | 36" x 18" |
| D | 36" x 42" |
| E | 20" x 7" |

## LEGEND

- TRAFFIC CONE
- TEMPORARY TRAFFIC CONTROL SIGN
- PORTABLE FLASHING BEACON
- FLAGGER

## NOTES:

1. Each advance warning sign in each direction of travel shall be equipped with at least two flags for daytime closure. Each flag shall be at least 16" x 16" in size and shall be orange or fluorescent red-orange in color. Flashing beacons shall be placed at the locations indicated for lane closure during hours of darkness.
2. A G20-2 "END ROAD WORK" sign, as appropriate, shall be placed at the end of the lane control unless the end of work area is obvious, or ends within a larger project's limits.
3. If the W20-1 sign would follow within 2000' of a stationary W20-1 or G20-1 "ROAD WORK NEXT _____ MILES", use a W20-4 sign for the first advance warning sign.
4. All cones used for lane closures during the hours of darkness shall be fitted with retroreflective bands (or sleeves) as specified in the specifications.
5. Portable delineators, placed at one-half the spacing indicated for traffic cones, may be used instead of cones for daytime closures only.
6. Additional advance flaggers may be required. Flagger should stand in a conspicuous place, be visible to approaching traffic as well as approaching vehicles after the first vehicle has stopped. During the hours of darkness, the flagging-station and flagger shall be illuminated and clearly visible to approaching traffic. The illumination footprint of the lighting on the ground shall be at least 20' in diameter. Place a minimum of four cones at 50' intervals in advance of flagger station as shown.
7. Place C30(CA) "LANE CLOSED" sign at 500' to 1000' intervals throughout extended work areas. They are optional if the work area is visible from the flagger station.
8. When a pilot car is used, place a C37(CA) "TRAFFIC CONTROL-WAIT AND FOLLOW PILOT CAR" sign with black legend on white background at all intersections, driveways and alleys without a flagger within traffic control area. Signs shall be clean and visible at all times. Where traffic can not be effectively self-regulated, at least one flagger shall be used at each intersection within traffic control area.
9. An optional C29(CA) sign may be placed below the C9A(CA) sign.
10. Either traffic cones or barricades shall be placed on the taper. Barricades shall be Type I, II, or III.

STATE OF CALIFORNIA
DEPARTMENT OF TRANSPORTATION

# TRAFFIC CONTROL SYSTEM FOR LANE CLOSURE ON TWO LANE CONVENTIONAL HIGHWAYS

NO SCALE

RSP T13 DATED APRIL 19, 2013 SUPERSEDES STANDARD PLAN T13 DATED MAY 20, 2011 - PAGE 241 OF THE STANDARD PLANS BOOK DATED 2010.

**REVISED STANDARD PLAN RSP T13**

**2010 REVISED STANDARD PLAN RSP T13**

4-2-13

| Dist | COUNTY | ROUTE | POST MILES TOTAL PROJECT | SHEET No. | TOTAL SHEETS |
|---|---|---|---|---|---|
| 02 | Sha | 299 | 30.3/40.7 | 328 | 366 |

REGISTERED CIVIL ENGINEER

April 19, 2013
PLANS APPROVAL DATE

REGISTERED PROFESSIONAL ENGINEER Gurinderpal Bhullar No. C48815 Exp. 9-30-14 CIVIL STATE OF CALIFORNIA

*THE STATE OF CALIFORNIA OR ITS OFFICERS OR AGENTS SHALL NOT BE RESPONSIBLE FOR THE ACCURACY OR COMPLETENESS OF SCANNED COPIES OF THIS PLAN SHEET.*

TO ACCOMPANY PLANS DATED 6-17-13

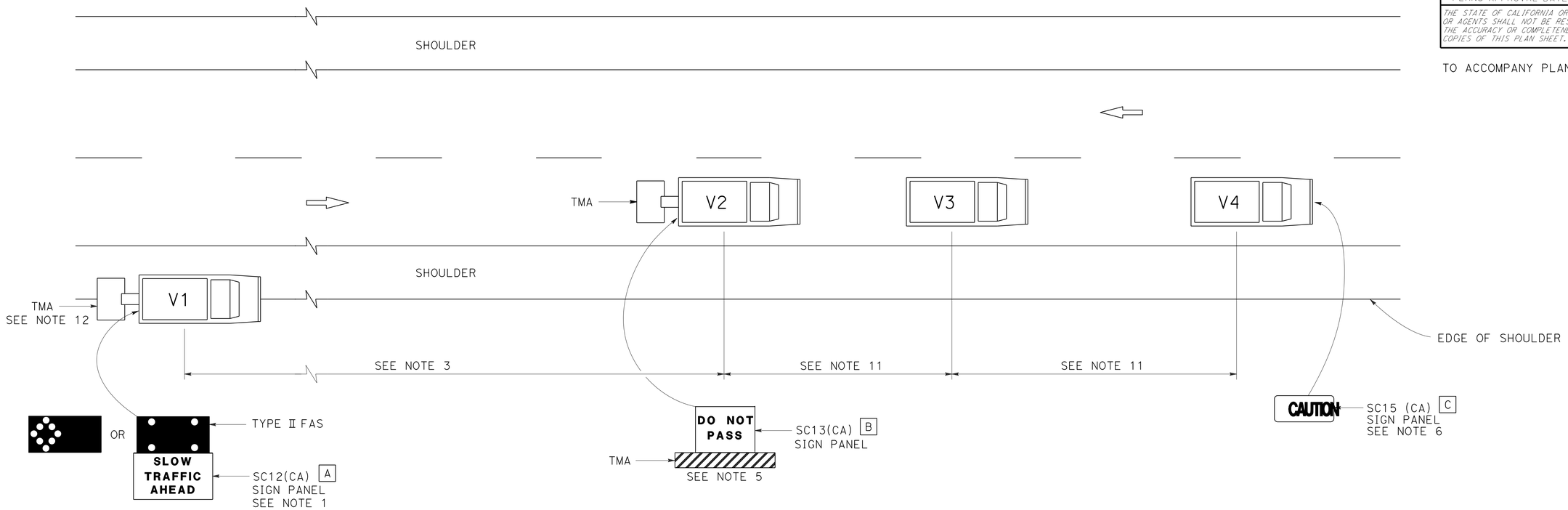


## LEGEND

| | |
|---|---|
| V1 | SIGN VEHICLE |
| V2 | SHADOW VEHICLE |
| V3 | WORK/APPLICATION VEHICLE |
| V4 | SIGN VEHICLE |
| TMA | TRUCK-MOUNTED ATTENUATOR |
| | FLASHING ARROW SIGN (FAS) IN FLASHING CAUTION MODE |
| | FLASHING ARROW SIGN (FAS) IN ALTERNATING DIAMOND CAUTION |

## SIGN PANEL SIZE (Min)

| | |
|---|---|
| A | 72" x 42" |
| B | 54" x 42" |
| C | 54" x 24" |

## NOTES:

1. Either a changeable message sign or a SC12(CA) "SLOW TRAFFIC AHEAD" sign shall be mounted on the rear of sign vehicle V1. The changeable message sign shall be sequenced to show the "CAUTION" message first, follow by the "SLOW TRAFFIC AHEAD" message. A Type II flashing arrow sign may be used with the SC12(CA) sign panel.
2. Sign vehicle V1 should be positioned where highly visible when shoulders are not available.
3. If traffic queues develop, sign vehicle V1 should be positioned upstream from the end of queue.
4. Vehicle-mounted sign panels shall have Type III or above retroreflective sheeting, black on white, or black on fluorescent orange, with 6" minimum series D letters per Caltrans sign specifications.
5. Shadow vehicle shall be equipped with a truck-mounted attenuator. The sign panel shown shall be mounted on the rear of shadow vehicle V2. The message "LANE CLOSED" may be used in place of the "DO NOT PASS" message.
6. The sign panel shown shall be mounted on the front of sign vehicle V4, facing opposing traffic.
7. All vehicles shall be equipped with flashing or rotating amber lights.
8. Sign vehicle V4 will not be required when the work and vehicles V2 and V3 are 2′ or more from the centerline of the highway during the work or application operations.
9. All vehicles used for lane closures shall be equipped with two-way radios and the vehicle operators shall maintain communication during the work or application operation.
10. This plan shall not be used where workers would be on foot in the work area. Use a stationary type lane closure (Revised Standard Plan T13) for this condition.
11. Minimize spacing between vehicles V2 and V3 and vehicles V3 and V4 to deter road users from driving in between them.
12. If sign vehicle V1 encroaches into the traffic lane due to insufficient shoulder width, sign vehicle V1 shall be equipped with a truck-mounted attenuator. Sign vehicle V1 shall stay as close to the edge of shoulder as practicable.

STATE OF CALIFORNIA
DEPARTMENT OF TRANSPORTATION

# TRAFFIC CONTROL SYSTEM FOR MOVING LANE CLOSURE ON TWO LANE HIGHWAYS

NO SCALE

RSP T17 DATED APRIL 19, 2013 SUPERSEDES STANDARD PLAN T17
DATED MAY 20, 2011 - PAGE 245 OF THE STANDARD PLANS BOOK DATED 2010.

**REVISED STANDARD PLAN RSP T17**

**2010 REVISED STANDARD PLAN RSP T17**

12-18-12

| Dist | COUNTY | ROUTE | POST MILES TOTAL PROJECT | SHEET No. | TOTAL SHEETS |
|---|---|---|---|---|---|
| 02 | Sha | 299 | 30.3/40.7 | 329 | 366 |

REGISTERED CIVIL ENGINEER

April 20, 2012
PLANS APPROVAL DATE

REGISTERED PROFESSIONAL ENGINEER Gary Wang No. C58298 Exp. 6-30-12 CIVIL STATE OF CALIFORNIA

*THE STATE OF CALIFORNIA OR ITS OFFICERS OR AGENTS SHALL NOT BE RESPONSIBLE FOR THE ACCURACY OR COMPLETENESS OF SCANNED COPIES OF THIS PLAN SHEET.*

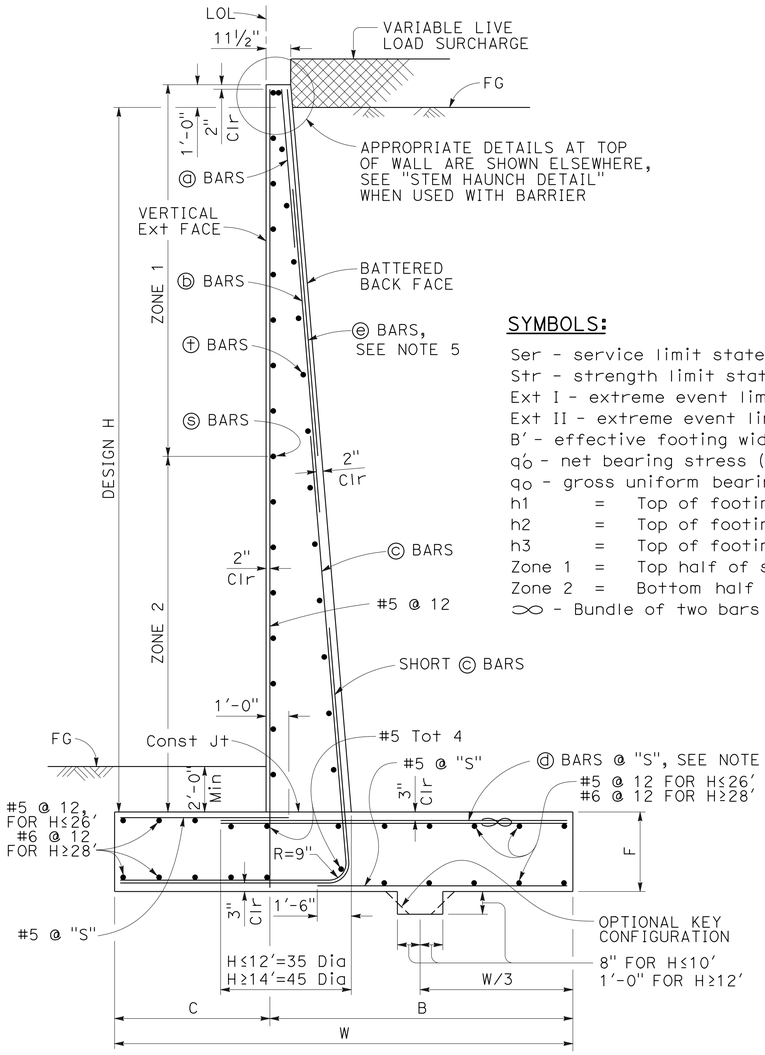


## TYPICAL SECTION

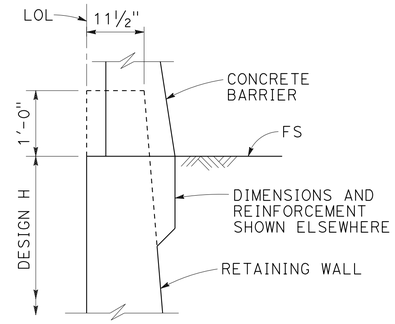


## STEM HAUNCH DETAIL

## SYMBOLS:

Ser - service limit state I
Str - strength limit state I
Ext I - extreme event limit state I
Ext II - extreme event limit state II
B' - effective footing width (ft)
$q_o'$ - net bearing stress (ksf), OG assumed to be FG at toe
$q_o$ - gross uniform bearing stress (ksf)
h1 = Top of footing to top of short ⓒ bar
h2 = Top of footing to top of ⓒ bar
h3 = Top of footing to top of ⓑ bar
Zone 1 = Top half of stem height
Zone 2 = Bottom half of stem height
∞ - Bundle of two bars

## DESIGN CONDITIONS:

Design H may be exceeded by 6" before going to the next size. Special footing design is required where foundation material is incapable of supporting bearing stress listed in the table.

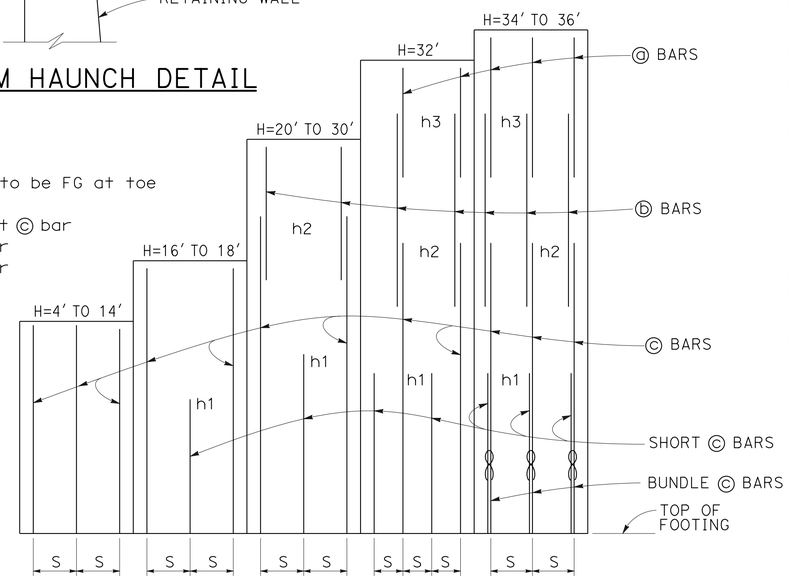


## ELEVATION

## DESIGN NOTES:

TO ACCOMPANY PLANS DATED 6-17-13

DESIGN: AASHTO LRFD Bridge Design Specifications, 4th Edition with California Amendments

LS: Varied surcharge on level ground surface

DC: Stem Architectural Treatment of thickness up to 6" of concrete (75 psf) considered

CT: 54 kip transverse force applied at He = 32", distributed over 10 feet at the top of wall and 1 : 1 distribution down and outward. Distribution below footing taken no less than 40'.

SEISMIC: $k_h = 0.2$, $k_v = 0.0$

SOIL: $\phi = 34°$, $\gamma = 120$ pcf

REINFORCED CONCRETE: f'c = 3,600 psi
fy = 60,000 psi

LOAD COMBINATIONS AND LIMIT STATES:

| | |
|---|---|
| Service I | Q = 1.00DC+1.00EV+1.00EH+1.00LS |
| Strength I | Q = αDC+β̂EV+ηEH+1.75LS |
| Extreme I | Q = 1.00DC+1.00EV+1.00EH+1.00EQD+1.00EQE |
| Extreme II | Q = 1.00DC+1.00EV+1.00EH+1.00CT |

Where:

| | |
|---|---|
| Q: | Force Effects |
| α: | 1.25 or 0.90, Whichever Controls Design |
| β̂: | 1.35 or 1.00, Whichever Controls Design |
| η: | 1.50 or 0.90, Whichever Controls Design |
| DC: | Dead Load of Structure Components |
| EH: | Horizontal Earth Fill Pressure |
| EV: | Vertical Earth Pressure from Earth Fill Weight |
| LS: | Live Load Surcharge |
| EQE: | Seismic Earth Pressure |
| EQD: | Soil and Structural and Nonstructural Components Inertia |
| CT: | Vehicular Collision Force |

## TABLE OF REINFORCING STEEL, DIMENSIONS AND DATA

| DESIGN H | 4' | 6' | 8' | 10' | 12' | 14' | 16' | 18' | 20' | 22' | 24' | 26' | 28' | 30' | 32' | 34' | 36' |
|---|---|---|---|---|---|---|---|---|---|---|---|---|---|---|---|---|---|
| W | 6'-10" | 7'-0" | 7'-3" | 7'-7" | 8'-4" | 9'-7" | 10'-9" | 12'-0" | 13'-3" | 14'-6" | 15'-9" | 17'-1" | 18'-5" | 19'-10" | 21'-2" | 22'-7" | 24'-0" |
| C | 2'-2" | 2'-3" | 2'-3" | 2'-4" | 2'-6" | 3'-0" | 3'-6" | 4'-0" | 4'-6" | 5'-0" | 5'-5" | 6'-0" | 6'-6" | 7'-2" | 7'-8" | 8'-2" | 9'-0" |
| B | 4'-8" | 4'-9" | 5'-0" | 5'-3" | 5'-10" | 6'-7" | 7'-3" | 8'-0" | 8'-9" | 9'-6" | 10'-4" | 11'-1" | 11'-11" | 12'-8" | 13'-6" | 14'-5" | 15'-0" |
| F | 1'-4" | 1'-4" | 1'-4" | 1'-4" | 1'-6" | 1'-8" | 1'-8" | 1'-9" | 1'-9" | 1'-11" | 2'-2" | 2'-5" | 2'-10" | 3'-3" | 3'-6" | 4'-0" | 4'-3" |
| BATTER | ½: 12 | ½: 12 | ½: 12 | ½: 12 | ½: 12 | ½: 12 | ½: 12 | ½: 12 | ½: 12 | ½: 12 | ⅝: 12 | ⅝: 12 | ¾: 12 | ⅞: 12 | 1 : 12 | 1 : 12 | 1 : 12 |
| SPACING "S" | 9" | 9" | 9" | 9" | 9" | 7" | 6" | 5" | 6" | 6" | 6" | 6" | 6" | 6" | 6" | 10" | 8" |
| ⓐ BARS | - | - | - | - | - | - | - | - | - | - | - | - | - | - | #7 | #7 | #6 |
| ⓑ BARS | - | - | - | - | - | - | - | - | #7 | #7 | #7 | #7 | #7 | #7 | #9 | #9 | #8 |
| ⓒ BARS | #6 | #6 | #6 | #6 | #6 | #6 | #7 | #7 | #8 | #9 | #9 | #10 | #10 | #10 | #11 | #11 | #11 |
| ⓓ BARS | #5 | #5 | #6 | #6 | #6 | #6 | #9 | #8 | #8 | #9 | #9 | #10 | #10 | #10 | #11 | #11 | #11 |
| h1 | - | - | - | - | - | - | 5'-9" | 5'-10" | 8'-0" | 9'-0" | 10'-1" | 11'-0" | 12'-1" | 13'-0" | 13'-0" | 12'-7" | 11'-6" |
| h2 | - | - | - | - | - | - | - | - | 10'-5" | 13'-0" | 14'-7" | 17'-6" | 19'-0" | 20'-5" | 19'-0" | 18'-0" | 20'-2" |
| h3 | - | - | - | - | - | - | - | - | - | - | - | - | - | - | 21'-2" | 21'-10" | 24'-0" |
| ZONE 1 ⓢ BARS | #5 @ 18 | #5 @ 18 | #5 @ 18 | #5 @ 18 | #5 @ 18 | #5 @ 18 | #5 @ 18 | #5 @ 18 | #5 @ 18 | #5 @ 18 | #5 @ 12 | #5 @ 12 | #5 @ 12 | #5 @ 12 | #5 @ 12 | #5 @ 12 | #5 @ 12 |
| ZONE 2 ⓢ BARS | #5 @ 18 | #5 @ 18 | #5 @ 18 | #5 @ 18 | #5 @ 18 | #5 @ 18 | #5 @ 12 | #5 @ 12 | #5 @ 12 | #5 @ 12 | #5 @ 12 | #5 @ 12 | #6 @ 12 | #6 @ 12 | #6 @ 12 | #7 @ 12 | #7 @ 12 |
| ZONE 1 ⓣ BARS | #4 @ 18 | #4 @ 18 | #4 @ 18 | #4 @ 18 | #4 @ 18 | #4 @ 18 | #4 @ 18 | #4 @ 18 | #4 @ 18 | #4 @ 18 | #4 @ 12 | #4 @ 12 | #4 @ 18 | #4 @ 12 | #4 @ 12 | #4 @ 12 | #4 @ 12 |
| ZONE 2 ⓣ BARS | #4 @ 18 | #4 @ 18 | #4 @ 18 | #4 @ 18 | #4 @ 18 | #4 @ 18 | #4 @ 18 | #4 @ 18 | #4 @ 18 | #4 @ 18 | #4 @ 12 | #4 @ 12 | #4 @ 12 | #4 @ 12 | #5 @ 12 | #5 @ 12 | #5 @ 12 |
| Ser: B', $q_o'$ | 6.8, 0.7 | 6.5, 1.0 | 6.2, 1.3 | 6.0, 1.6 | 6.3, 2.0 | 7.5, 2.1 | 8.6, 2.2 | 9.8, 2.3 | 11.0, 2.4 | 12.1, 2.5 | 13.2, 2.8 | 14.4, 2.9 | 15.5, 3.1 | 16.8, 3.3 | 18.0, 3.5 | 19.2, 3.7 | 20.6, 3.7 |
| Str: B', $q_o$ | 6.6, 1.6 | 5.0, 1.8 | 3.6, 2.3 | 3.0, 3.3 | 3.2, 4.0 | 4.3, 3.8 | 5.3, 3.7 | 6.4, 3.7 | 7.4, 3.8 | 8.2, 4.1 | 9.0, 4.4 | 9.9, 4.6 | 10.7, 4.9 | 11.7, 5.2 | 12.6, 5.4 | 13.6, 5.8 | 14.6, 5.9 |
| Ext I: B', $q_o$ | 5.2, 1.1 | 4.7, 1.5 | 3.9, 2.2 | 3.1, 3.4 | 2.8, 4.8 | 3.2, 5.3 | 3.6, 5.7 | 4.1, 6.1 | 4.6, 6.4 | 5.0, 6.9 | 5.3, 7.6 | 5.8, 8.1 | 6.1, 8.9 | 6.7, 9.4 | 7.1, 10.0 | 7.5, 10.7 | 8.2, 10.9 |
| Ext II: B', $q_o$ | 2.6, 2.2 | 2.7, 2.6 | 2.8, 3.1 | 2.9, 3.6 | 3.7, 3.6 | 5.2, 3.3 | 6.7, 3.1 | 8.3, 3.0 | 9.8, 3.0 | 11.2, 3.1 | 12.5, 3.2 | 13.9, 3.4 | 15.2, 3.6 | 16.7, 3.8 | 18.0, 4.0 | 19.3, 4.2 | 20.8, 4.3 |

## NOTES:

1. For details not shown and drainage notes see RSP B3-5
2. For wall stem joint details see B0-3 3-3 and B0-3 3-4
3. At ⓒ bars:
   H ≤ 6', no splices are allowed within 1'-8" above the top of footing.
   H > 6', no splices are allowed within H/4 above the top of footing.
4. Bundle ⓓ bars for H = 34' & 36'.
5. Provide #6 @ 10" x 15'-0" ⓔ bars over a distance of 8'-0" measured from all expansion joints, begin wall and end wall locations. For H ≤ 14', hook ⓔ bar into footing and reduce bar length as needed to maintain Min Clr cover.

STATE OF CALIFORNIA
DEPARTMENT OF TRANSPORTATION

# RETAINING WALL TYPE 1 (CASE 1)

NO SCALE

RSP B3-1A DATED APRIL 20, 2012 SUPPLEMENTS THE STANDARD PLANS BOOK DATED 2010.

**REVISED STANDARD PLAN RSP B3-1A**

**2010 REVISED STANDARD PLAN RSP B3-1A**

2-22-12

| Dist | COUNTY | ROUTE | POST MILES TOTAL PROJECT | SHEET No. | TOTAL SHEETS |
|---|---|---|---|---|---|
| 02 | Sha | 299 | 30.3/40.7 | 330 | 366 |

REGISTERED CIVIL ENGINEER

October 21, 2011
PLANS APPROVAL DATE

REGISTERED PROFESSIONAL ENGINEER
Tillat Satter
No. C42892
Exp. 3-31-12
CIVIL
STATE OF CALIFORNIA

*THE STATE OF CALIFORNIA OR ITS OFFICERS OR AGENTS SHALL NOT BE RESPONSIBLE FOR THE ACCURACY OR COMPLETENESS OF SCANNED COPIES OF THIS PLAN SHEET.*

TO ACCOMPANY PLANS DATED 6-17-13

**2010 REVISED STANDARD PLAN RSP B11-47**

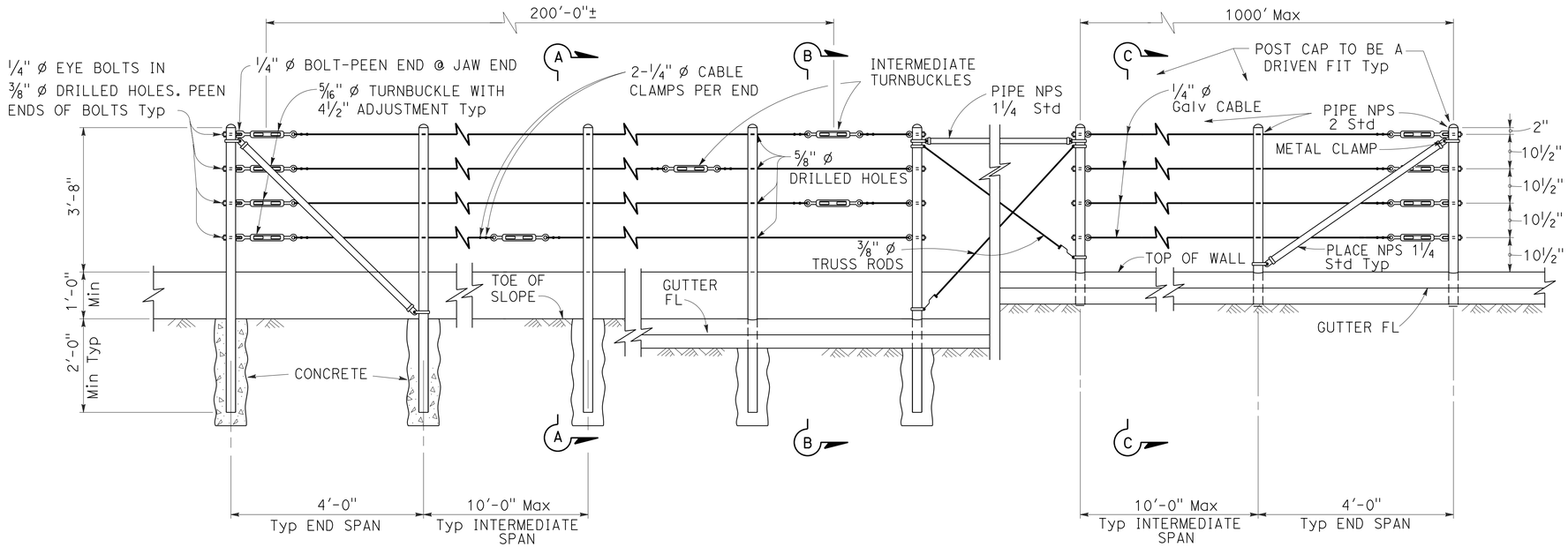


EXISTING WALL (WITHOUT GUTTER)
Existing

RETAINING WALL (WITH GUTTER)
Existing

RETAINING WALL (WITH GUTTER)
New construction

## ELEVATION

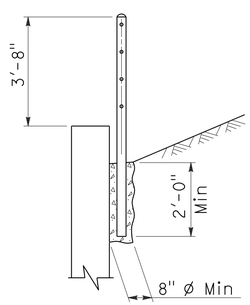


SECTION A-A
Existing

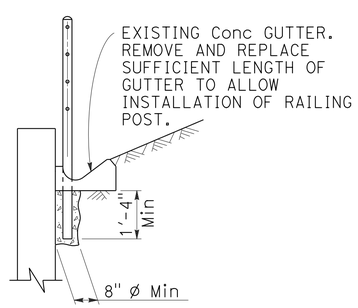


SECTION B-B
Existing

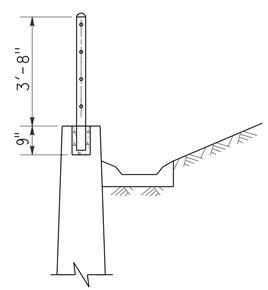


SECTION C-C
New construction

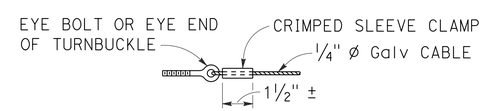


ALTERNATIVE CABLE CONNECTION

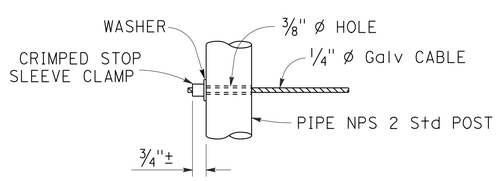


ALTERNATIVE DEAD END ANCHORAGE

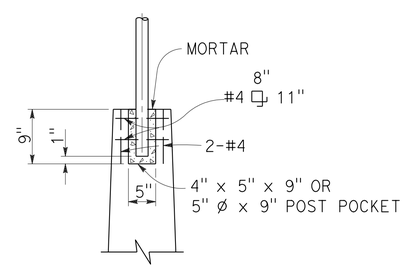


POST POCKET

## NOTES:

1. Maximum distance between turnbuckles shall be 200'-0"±.
2. Intermediate turnbuckles to be placed in adjacent spans.
3. Cable shall not be spliced between intermediate turnbuckles and end posts.
4. Posts to be vertical.
5. Alignment of holes in posts may vary to conform to slope of top of retaining wall.
6. The Contractor shall verify all dependent dimensions in the field before ordering or fabricating any material.
7. Line posts shall be braced horizontally and trussed diagonally in both directions at intervals not to exceed 1000'.
8. Post pockets to be centered in top of wall.
9. Typical end spans, braced in both directions, shall be constructed at changes in line where the angle of deflection is 15° or more.
10. Provide thimbles at all cable loops.

STATE OF CALIFORNIA
DEPARTMENT OF TRANSPORTATION

# CABLE RAILING

NO SCALE

RSP B11-47 DATED OCTOBER 21, 2011 SUPERSEDES STANDARD PLAN B11-47 DATED MAY 20, 2011 - PAGE 293 OF THE STANDARD PLANS BOOK DATED 2010.

**REVISED STANDARD PLAN RSP B11-47**

| Dist | COUNTY | ROUTE | POST MILES TOTAL PROJECT | SHEET No. | TOTAL SHEETS |
|---|---|---|---|---|---|
| 02 | Sha | 299 | 30.3/40.7 | 331 | 366 |

REGISTERED CIVIL ENGINEER

April 20, 2012
PLANS APPROVAL DATE

REGISTERED PROFESSIONAL ENGINEER
Tillat Satter
No. C42892
Exp. 3-31-14
CIVIL
STATE OF CALIFORNIA

*THE STATE OF CALIFORNIA OR ITS OFFICERS OR AGENTS SHALL NOT BE RESPONSIBLE FOR THE ACCURACY OR COMPLETENESS OF SCANNED COPIES OF THIS PLAN SHEET.*

TO ACCOMPANY PLANS DATED 6-17-13

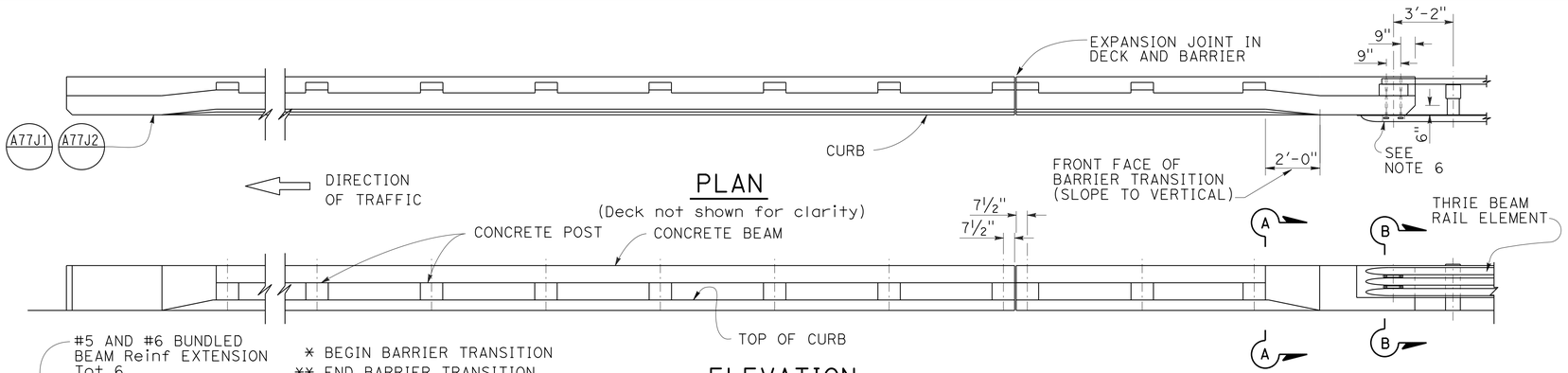


## PLAN

(Deck not shown for clarity)

## ELEVATION

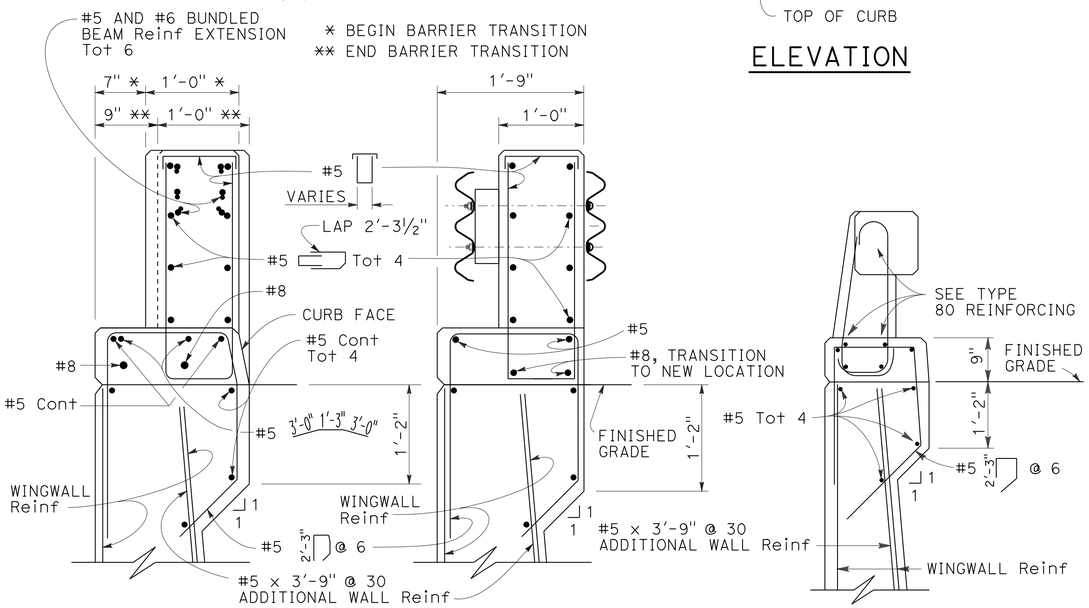


SECTION A-A

SECTION B-B

TYPE 80A

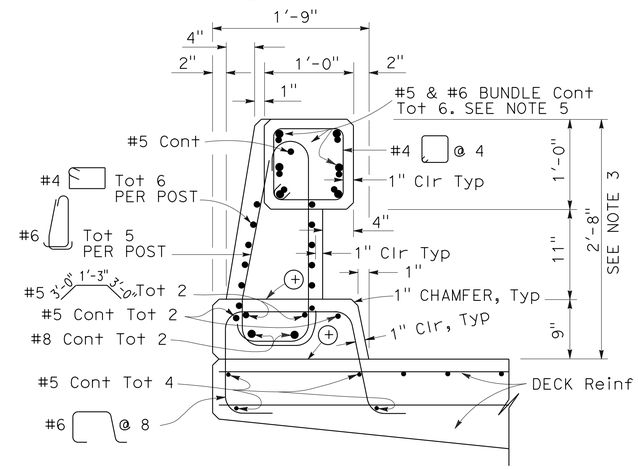


TYPE 80

⊕ Construction joint

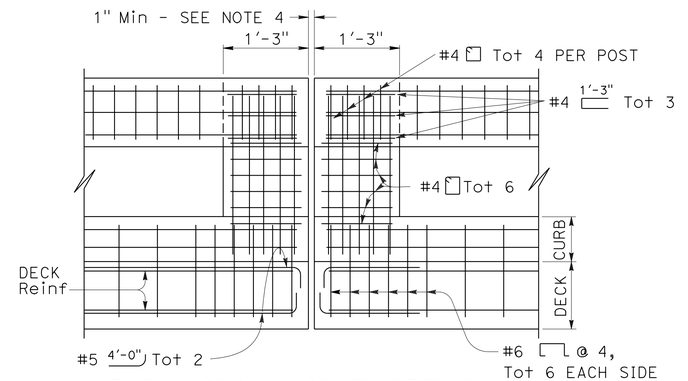


## EXPANSION JOINT DETAIL

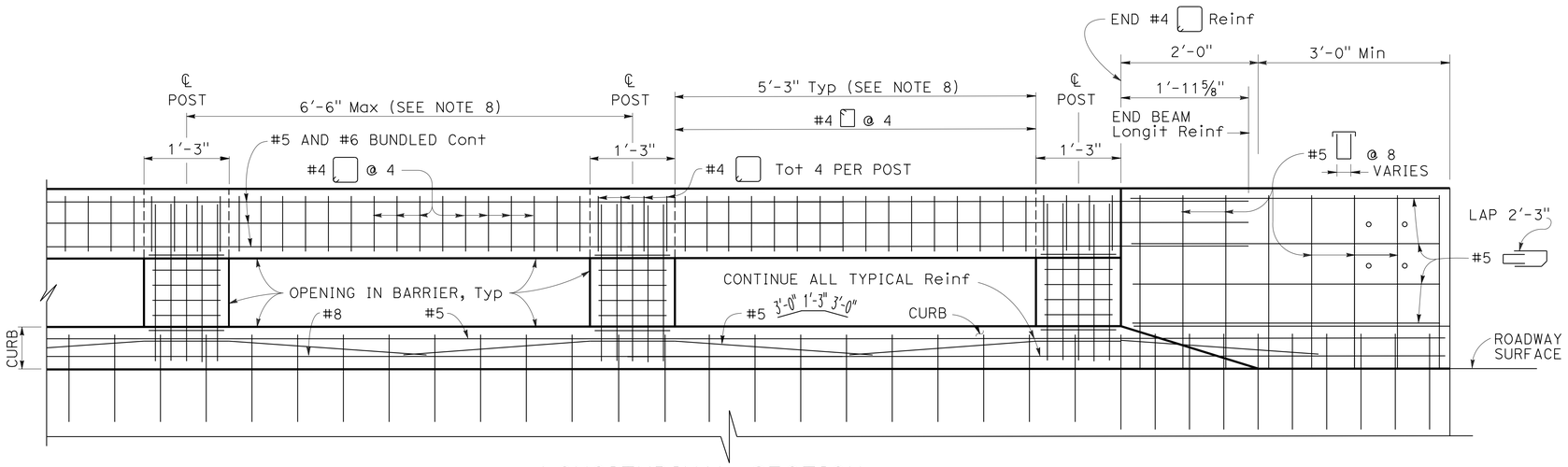


## LONGITUDINAL SECTION

(Deck or wingwall reinforcing not shown)

**NOTES:**

1. Walls are to be backfilled before the barrier is placed.
2. Longitudinal reinforcing steel to stop at all expansion joints.
3. The front face dimensions are to be constant above the finish roadway profile, but the overall height will vary with certain thicknesses of surfacing and roadway slopes.
4. Expansion joint to match deck joint.
5. No lap splicing allowed on the longitudinal rail reinforcing. Splicing shall be staggered.
6. For typical metal railing connection details not shown, see Standard Plans A77J1 and A77J2.
7. Chain link railing is not allowed on Type 80 Barriers.
8. Post to be spaced equally, typically 6'-6" spacing. Post spacing may be reduced where location of hinges or expansion joints or the length of wingwalls will not accommodate the 6'-6" spacing. Maximum see-through availability is to be strived for, where 6'-6" post spacing can not be achieved.

STATE OF CALIFORNIA
DEPARTMENT OF TRANSPORTATION

# CONCRETE BARRIER TYPE 80 (SHEET 1 OF 2)

NO SCALE

RSP B11-60 DATED APRIL 20, 2012 SUPERSEDES STANDARD PLAN B11-60 DATED MAY 20, 2011 - PAGE 300 OF THE STANDARD PLANS BOOK DATED 2010.

**REVISED STANDARD PLAN RSP B11-60**

**2010 REVISED STANDARD PLAN RSP B11-60**

4-5-12

| DIST | COUNTY | ROUTE | POST MILES TOTAL PROJECT | SHEET NO. | TOTAL SHEETS |
|---|---|---|---|---|---|
| 02 | Sha | 299 | 30.3/40.7 | 332 | 366 |

REGISTERED ELECTRICAL ENGINEER

January 20, 2012
PLANS APPROVAL DATE

REGISTERED PROFESSIONAL ENGINEER
Jeffery G. McRae
No. E14512
Exp. 6-30-12
ELECTRICAL
STATE OF CALIFORNIA

*THE STATE OF CALIFORNIA OR ITS OFFICERS OR AGENTS SHALL NOT BE RESPONSIBLE FOR THE ACCURACY OR COMPLETENESS OF SCANNED COPIES OF THIS PLAN SHEET.*

TO ACCOMPANY PLANS DATED 6-17-13

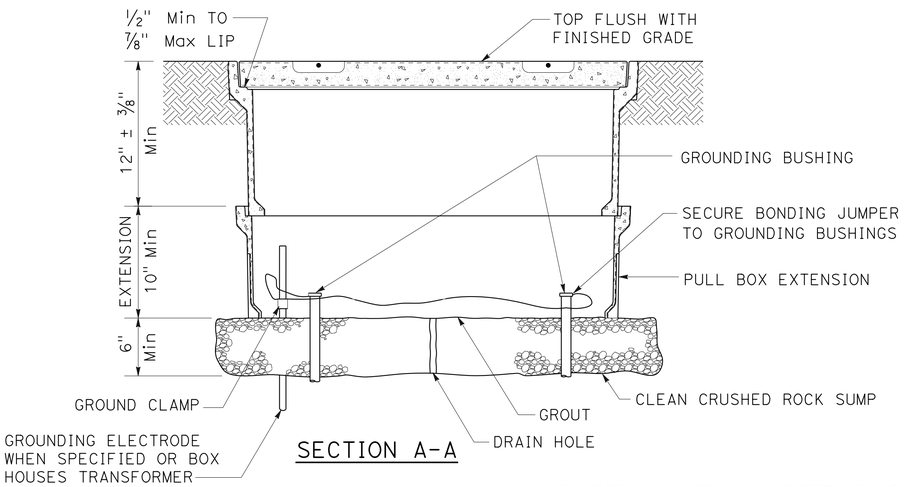


SECTION A-A

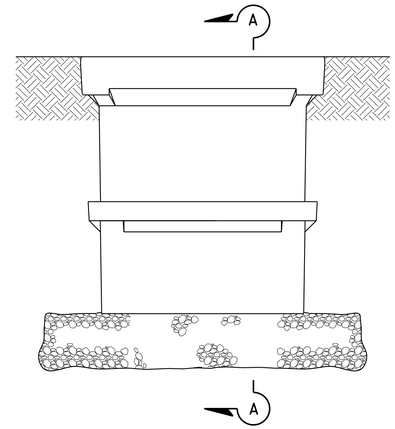


SIDE VIEW

# INSTALLATION DETAILS

## DETAIL A

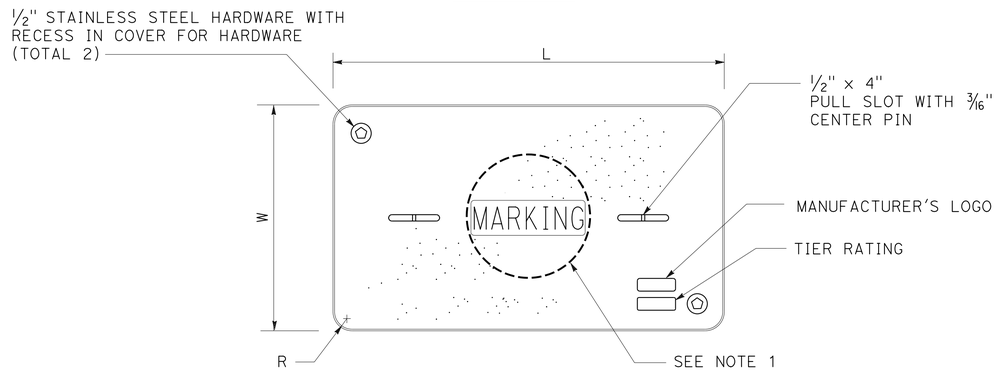


COVER TOP VIEW

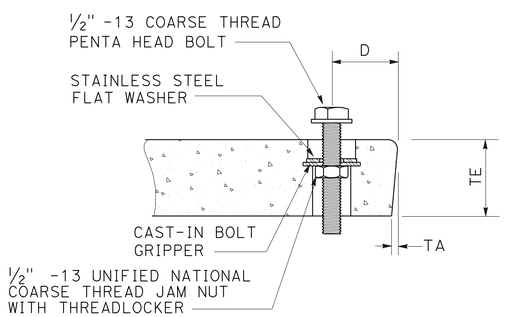


TYPICAL COVER CAPTIVE BOLT

OR SIMILAR

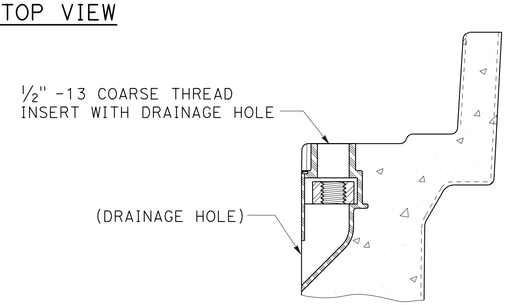


TYPICAL THREADED INSERT

OR SIMILAR

## NOTES ON PULL BOXES:

1. Pull box covers must be marked as follows: "SERVICE" Service circuits between service point and service disconnect; "SPRINKLER-CONTROL" sprinkler control circuits, 50 V or less; "CALTRANS" on all pull boxes, except pull boxes marked "SPRINKLER-CONTROL"; and "TELEPHONE" Telephone service;

   A) No. 3½ pull box.
      1) "SIGNAL" - Traffic signal circuits with or without street or sign lighting circuits.
      2) "ST LIGHTING" - Street or sign lighting circuits where voltage is under 600 V.

   B) No. 5, 6, 9 or 9A pull box.
      1) "TRAFFIC SIGNAL" - Traffic signal circuits with or without street or sign lighting circuits.
      2) "STREET LIGHTING" - Street or sign lighting circuits where voltage is under 600 V.
      3) "STREET LIGHTING-HIGH VOLTAGE" - Street or sign lighting circuits where voltage is above 600 V.
      4) "IRRIGATION" - Circuits to irrigation controller 120 V or more.
      5) "RAMP METER" - Ramp meter circuits.
      6) "COUNT STATION" - Count or speed monitor circuits.
      7) "COMMUNICATIONS" - Communication circuits.
      8) "TOS COMMUNICATIONS" - TOS communication line.
      9) "TOS POWER" - TOS power.
      10) "TDC POWER" - Telephone demarcation cabinet power.
      11) "CCTV" - Closed circuit television circuits.
      12) "TMS" - Traffic monitoring station circuits.
      13) "CMS" - Changeable message sign circuits.
      14) "HAR" - Highway advisory radio circuits.

2. The nominal dimensions of the opening in which the cover sets must be the same as the cover dimensions (L and W) plus ⅛" or greater.

3. Covers and boxes must be interchangeable with California Standard. When interchanged with a standard, the top surfaces must be flush within ⅛". Top outside radius of covers and pull boxes must have a ⅛" radius.

4. Pull box extension may be another pull box as long as the bottom edge of the pull box can fit into the cover opening.

## DIMENSION TABLE

| PULL BOX | PULL BOX | | | COVER | | | | | | |
|---|---|---|---|---|---|---|---|---|---|---|
| | MINIMUM DEPTH BOX | MINIMUM DEPTH EXTENSION | MAXIMUM WEIGHT | L | W | R | TE | TA | D | MAXIMUM WEIGHT |
| No. 3½ | 12" | N/A | 40 lb | 1' - 3⅜" | 10⅛" | 1⅜" | 2" | ⅛" | 1¾" | 30 lb |
| No. 5 | 12" | 10" | 55 lb | 1' - 11¼" | 1' - 1¾" | 1⅜" | 2" | ⅛" | 1¾" | 60 lb |
| No. 6 | 12" | 10" | 70 lb | 2' - 6½" | 1' - 5½" | 1⅜" | 2" | ⅛" | 2" | 85 lb |

STATE OF CALIFORNIA
DEPARTMENT OF TRANSPORTATION

# ELECTRICAL SYSTEMS (PULL BOX)

NO SCALE

RSP ES-8A DATED JANUARY 20, 2012 SUPPLEMENTS THE STANDARD PLANS BOOK DATED 2010.

**REVISED STANDARD PLAN RSP ES-8A**

**2010 REVISED STANDARD PLAN RSP ES-8A**

| DIST | COUNTY | ROUTE | POST MILES TOTAL PROJECT | SHEET NO. | TOTAL SHEETS |
|---|---|---|---|---|---|
| 02 | Sha | 299 | 30.3/40.7 | 333 | 366 |

REGISTERED ELECTRICAL ENGINEER

January 20, 2012
PLANS APPROVAL DATE

REGISTERED PROFESSIONAL ENGINEER
Jeffery G. McRae
No. E14512
Exp. 6-30-12
ELECTRICAL
STATE OF CALIFORNIA

*THE STATE OF CALIFORNIA OR ITS OFFICERS OR AGENTS SHALL NOT BE RESPONSIBLE FOR THE ACCURACY OR COMPLETENESS OF SCANNED COPIES OF THIS PLAN SHEET.*

TO ACCOMPANY PLANS DATED 6-17-13

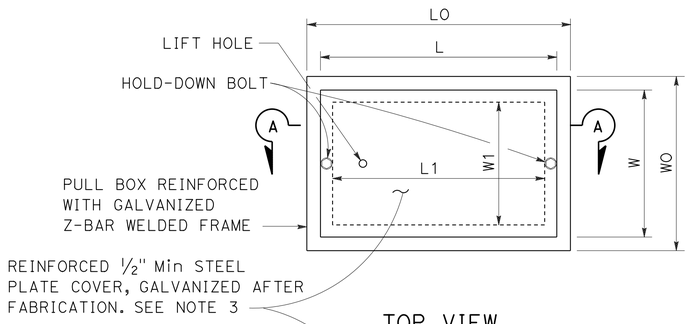


TOP VIEW

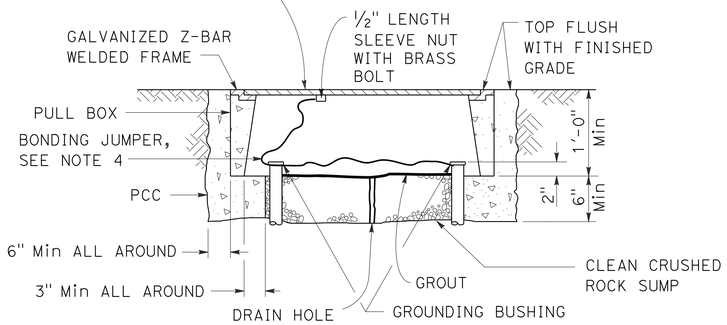


SECTION A-A

## No. 3½(T), No. 5(T) AND No. 6(T) TRAFFIC PULL BOX

## NOTES ON PULL BOXES:

1. Traffic pull box shall be provided with steel cover and special concrete footing. Steel cover shall have embossed non-skid pattern.
2. Steel reinforcing shall be as regularly used in the standard products of the respective manufacturer.
3. Pull box covers must be marked as follows: "SERVICE" Service circuits between service point and service disconnect; "SPRINKLER-CONTROL" Sprinkler control circuits, 50 V or less; "CALTRANS" On all pull boxes, except pull boxes marked "SPRINKLER-CONTROL"; and "TELEPHONE" Telephone service.
   A) No. 3½(T) pull box.
      1) "SIGNAL" - Traffic signal circuits with or without street or sign lighting circuits.
      2) "ST LIGHTING" - Street or sign lighting circuits where voltage is under 600 V.
   B) No. 5(T) or 6(T) pull box.
      1) "TRAFFIC SIGNAL" - Traffic signal circuits with or without street or sign lighting circuits.
      2) "STREET LIGHTING" - Street or sign lighting circuits where voltage is under 600 V.
      3) "STREET LIGHTING-HIGH VOLTAGE" - Street or sign lighting circuits where voltage is above 600 V.
      4) "IRRIGATION" - Circuits to irrigation controller 120 V or more.
      5) "RAMP METER" - Ramp meter circuits.
      6) "COUNT STATION" - Count or speed monitor circuits.
      7) "COMMUNICATION" - Communication circuits.
      8) "TOS COMMUNICATIONS" - TOS communications line.
      9) "TOS POWER" - TOS power.
      10) "TDC POWER" - Telephone demarcation cabinet power.
      11) "CCTV" - Closed circuit television circuits.
      12) "TMS" - Traffic monitoring station circuits.
      13) "CMS" - Changeable message sign circuits.
      14) "HAR" - Highway advisory radio circuits.
4. Bonding jumper for metal covers shall be 3' long, minimum.
5. The nominal dimensions of the opening in which the cover sets must be the same as the cover dimensions except the length and width dimensions shall be ⅛" greater.
6. Covers and boxes must be interchangeable with California standard male and female gages. When interchanged with a standard male or female gage, the top surfaces must be flush within ⅛".

### DIMENSION TABLE

| PULL BOX | BOX | | | | | | COVER | | | | |
|---|---|---|---|---|---|---|---|---|---|---|---|
| | MINIMUM * THICKNESS | MINIMUM DEPTH BOX AND EXTENSION | WO | LO | L1 | W1 | L ** | W ** | R | EDGE THICKNESS | EDGE TAPER |
| No. 3½(T) | 1½" | 1'-0" | 1'-5"± 1" | 1'-8⅞"± | 1'-2½"± | 10⅝"± 1" | 1'-8"± | 1'-1¾"± | 0" | ½" | NONE |
| No. 5(T) | 1¾" | 1'-0" | 1'-11½"± 1" | 2'-5½"± | 1'-7"± | 1'-1"± 1" | 2'-3"± | 1'-4"± | 0" | ½" | NONE |
| No. 6(T) | 2" | 1'-0" | 2'-6"± 1" | 2'-11½"± | 1'-11½"± | 1'-5"± 1" | 2'-9"± | 1'-8"± | 0" | ½" | NONE |

* EXCLUDING CONDUIT WEB ** TOP DIMENSION

STATE OF CALIFORNIA
DEPARTMENT OF TRANSPORTATION

# ELECTRICAL SYSTEMS (TRAFFIC RATED PULL BOX)

NO SCALE

RSP ES-8B DATED JANUARY 20, 2012 SUPPLEMENTS THE STANDARD PLANS BOOK DATED 2010.

**REVISED STANDARD PLAN RSP ES-8B**

**2010 REVISED STANDARD PLAN RSP ES-8B**

| Dist | COUNTY | ROUTE | POST MILES TOTAL PROJECT | SHEET No. | TOTAL SHEETS |
|---|---|---|---|---|---|
| 02 | Sha | 299 | 30.3/40.7 | 334 | 366 |

REGISTERED ELECTRICAL ENGINEER

July 20, 2012
PLANS APPROVAL DATE

REGISTERED PROFESSIONAL ENGINEER
Jeffery G. McRae
No. E14512
Exp. 6-30-14
ELECTRICAL
STATE OF CALIFORNIA

*THE STATE OF CALIFORNIA OR ITS OFFICERS OR AGENTS SHALL NOT BE RESPONSIBLE FOR THE ACCURACY OR COMPLETENESS OF SCANNED COPIES OF THIS PLAN SHEET.*

TO ACCOMPANY PLANS DATED 6-17-13

## ISOFOOTCANDLE CURVE - MINIMUM

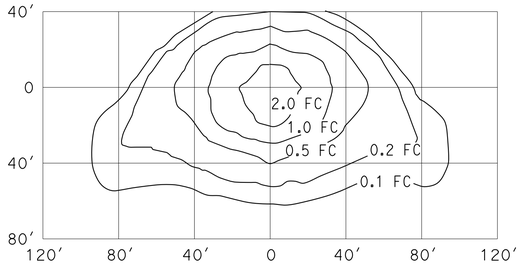


### TYPE III MEDIUM CUTOFF

Cutoff Luminaire
34′ Mounting Height
Lamp operated at 22,000 lm
200-W high pressure sodium lamp
ANSI Designation S66

## ISOFOOTCANDLE CURVE - MINIMUM

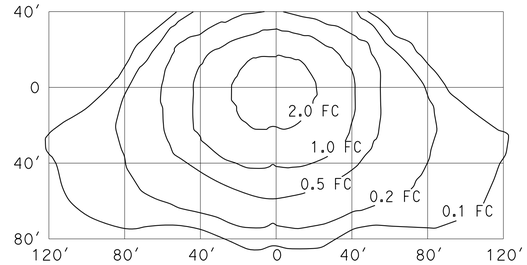


### TYPE III MEDIUM CUTOFF

Cutoff Luminaire
40′ Mounting Height
Lamp operated at 37,000 lm
310-W high pressure sodium lamp
ANSI Designation S67

## ISOFOOTCANDLE CURVE - MINIMUM

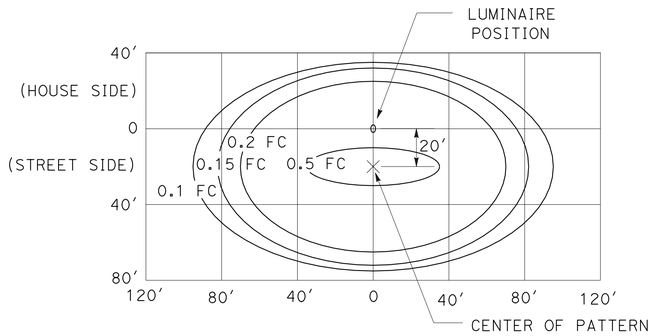


### LED LUMINAIRE ROADWAY 1

200-W HPS Equivalent at 34′ Mounting Height

## ISOFOOTCANDLE CURVE - MINIMUM

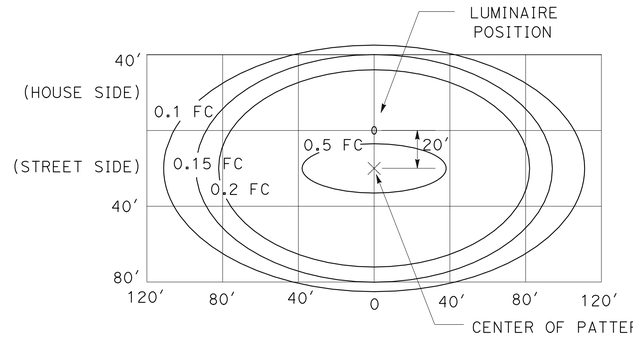


### LED LUMINAIRE ROADWAY 2

310-W HPS Equivalent at 40′ Mounting Height

## ISOFOOTCANDLE CURVE - MINIMUM

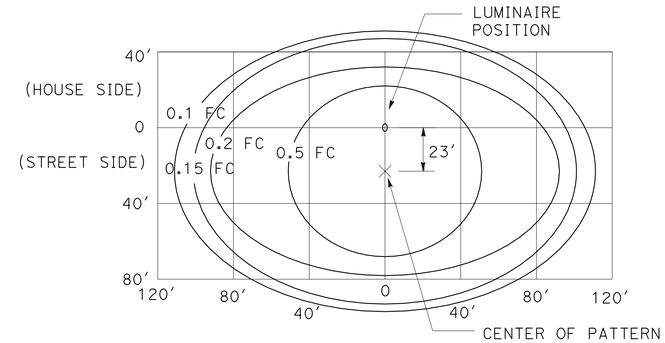


### LED LUMINAIRE ROADWAY 4

400-W HPS Equivalent at 40′ Mounting Height

## ISOFOOTCANDLE CURVE - MINIMUM

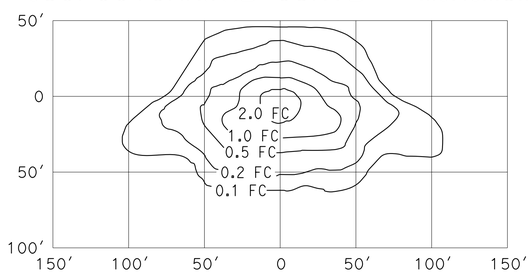


### TYPE III MEDIUM CUTOFF

Cutoff Luminaire
30′ Mounting Height
Lamp operated at 16,000 lm
150-W high pressure sodium lamp
ANSI Designation S55

## ISOFOOTCANDLE CURVE - MINIMUM

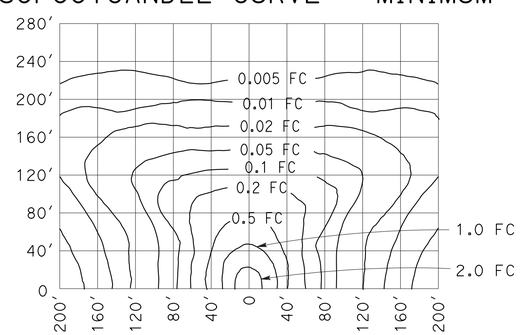


### LOW PRESSURE SODIUM LUMINAIRE

40′ Mounting Height
Lamp operated at 33,000 lm
180-W low pressure sodium lamp

STATE OF CALIFORNIA
DEPARTMENT OF TRANSPORTATION

# ELECTRICAL SYSTEMS (ISOFOOTCANDLE DIAGRAMS)

NO SCALE

RSP ES-10A DATED JULY 20, 2012 SUPPLEMENTS THE STANDARD PLANS BOOK DATED 2010.

**REVISED STANDARD PLAN RSP ES-10A**

**2010 REVISED STANDARD PLAN RSP ES-10A**

2-16-12

| DIST | COUNTY | ROUTE | POST MILES TOTAL PROJECT | SHEET No. | TOTAL SHEETS |
|---|---|---|---|---|---|
| 02 | Sha | 299 | 30.3/40.7 | 335 | 366 |

REGISTERED CIVIL ENGINEER 2-14-13 DATE

6-17-13
PLANS APPROVAL DATE

REGISTERED PROFESSIONAL ENGINEER LEWIS L SHEN No. 56921 Exp. 6-30-13 CIVIL STATE OF CALIFORNIA

*The State of California or its officers or agents shall not be responsible for the accuracy or completeness of scanned copies of this plan sheet.*

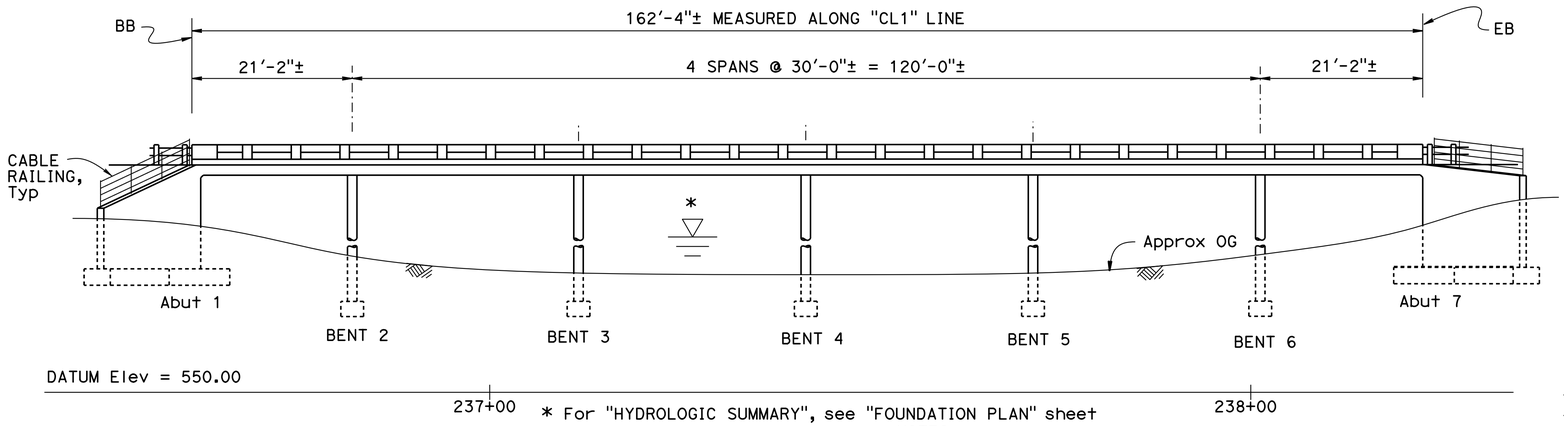


* For "HYDROLOGIC SUMMARY", see "FOUNDATION PLAN" sheet

## ELEVATION

1" = 10'

NOTES:

For "GENERAL NOTES" and "INDEX TO PLANS", see "INDEX TO PLANS" sheet

(A) Paint "SALT CREEK BRIDGE"
(B) Paint "BR NO. 06-0049"
(C) Concrete Barrier Type 80 (Mod)
(D) Existing Concrete Barrier to be removed
(E) Temporary Railing (Type K), see "ROAD PLANS"
(F) 1" Polyester Concrete Overlay
(G) Remove existing 2" concrete overlay, and replace with 1" polyester concrete overlay
(H) MBGR, see "ROAD PLANS"

LEGEND:

Indicates Existing Structure
Indicates New Structure
Indicates Bridge Removal (Portion)

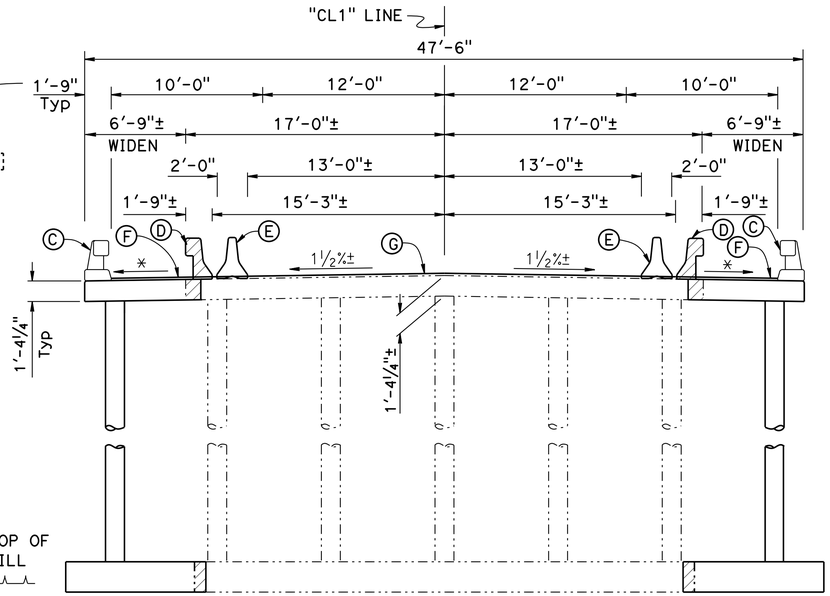


## TYPICAL SECTION

1" = 5'

LEDGEND:

* Match Existing Slope

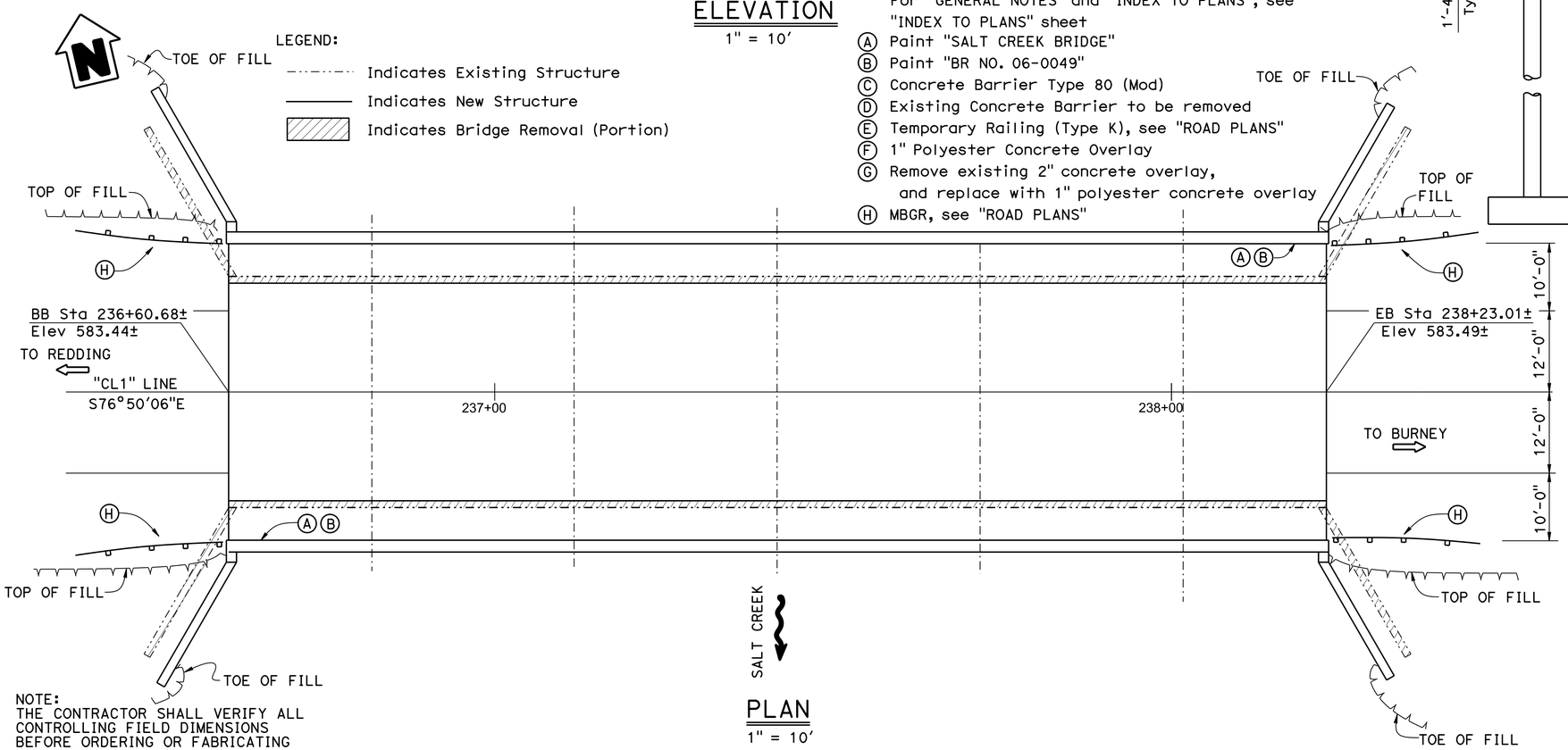


## PLAN

1" = 10'

NOTE:
THE CONTRACTOR SHALL VERIFY ALL CONTROLLING FIELD DIMENSIONS BEFORE ORDERING OR FABRICATING ANY MATERIAL.

QUANTITIES

| | | |
|---|---|---|
| RAPID SETTING CONCRETE (PATCH) | 69 | CF |
| REMOVE CONCRETE DECK SURFACE | 5,530 | SQFT |
| REMOVE UNSOUND CONCRETE | 69 | CF |
| PREPARE CONCRETE BRIDGE DECK SURFACE | 7,140 | SQFT |
| FURNISH POLYESTER CONCRETE OVERLAY | 714 | CF |
| PLACE POLYESTER CONCRETE OVERLAY | 7,140 | SQFT |
| BRIDGE REMOVAL (PORTION) | LUMP | SUM |
| STRUCTURE EXCAVATION (TYPE D) | 701 | CY |
| STRUCTURE BACKFILL (BRIDGE) | 341 | CY |
| STRUCTURAL CONCRETE, BRIDGE FOOTING | 92 | CY |
| STRUCTURAL CONCRETE, BRIDGE | 209 | CY |
| DRILL AND BOND DOWEL | 40 | LF |
| BAR REINFORCING STEEL (BRIDGE) | 38,615 | LB |
| BAR REINFORCING STEEL (EPOXY COATED) (BRIDGE) | 39,565 | LB |
| MINOR CONCRETE (GUTTER) (LF) | 85 | LF |
| CABLE RAILING | 85 | LF |
| CONCRETE BARRIER (TYPE 80)(MODIFIED) | 326 | LF |

Joseph E Downing
DESIGN ENGINEER

| | BY | CHECKED |
|---|---|---|
| DESIGN | Quangh H Nguyen | Art Herrera |
| DETAILS | Janie Chlubna | Art Herrera |
| QUANTITIES | Sharon Yen | Lewis Shen |

LOAD FACTOR DESIGN — LIVE LOADING: HS20-44 AND ALTERNATIVE; VEHICLE

| | BY | CHECKED |
|---|---|---|
| LAYOUT | Quang H Nguyen | Art Herrera |
| SPECIFICATIONS | Dave Klein | PLANS AND SPECS COMPARED Dave Klein |

STATE OF CALIFORNIA
DEPARTMENT OF TRANSPORTATION

DIVISION OF ENGINEERING SERVICES
STRUCTURE DESIGN
DESIGN BRANCH 3

BRIDGE NO. 06-0049
POST MILE 34.56

# SALT CREEK BRIDGE (WIDEN)
# GENERAL PLAN

ORIGINAL SCALE IN INCHES FOR REDUCED PLANS 0 1 2 3

UNIT: 3578
PROJECT NUMBER & PHASE: 02000002621
CONTRACT NO.: 02-360701

DISREGARD PRINTS BEARING EARLIER REVISION DATES

REVISION DATES: 7-18-11 10-14-12 10-17-12 2-14-13

SHEET 1 OF 16

USERNAME => s124496 DATE PLOTTED => 18-JUN-2013 TIME PLOTTED => 12:53

STRUCTURES DESIGN GENERAL PLAN SHEET (ENGLISH) (REV.09-01-10)

FILE => 06-0049-a-gp.dgn

| DIST | COUNTY | ROUTE | POST MILES TOTAL PROJECT | SHEET No. | TOTAL SHEETS |
|---|---|---|---|---|---|
| 02 | Sha | 299 | 30.3/40.7 | 336 | 366 |

REGISTERED CIVIL ENGINEER 2-14-13 DATE

6-17-13
PLANS APPROVAL DATE

REGISTERED PROFESSIONAL ENGINEER
LEWIS L SHEN
No. 56921
Exp. 6-30-13
CIVIL
STATE OF CALIFORNIA

*The State of California or its officers or agents shall not be responsible for the accuracy or completeness of scanned copies of this plan sheet.*

## GENERAL NOTES
## LOAD FACTOR DESIGN

**DESIGN:**
CALTRANS BRIDGE DESIGN SPECIFICATIONS - April 2000 (LFD)
1996 AASHTO with Interims and Revisions by CALTRANS)

**DEAD LOAD:**
Includes 35 psf for future wearing surface.

**LIVE LOADING:**
HS20-44 and Alternative

**SEISMIC DESIGN:**
CALTRANS SEISMIC DESIGN CRITERIA (SDC),
Version 1.6, February 2006

**SEISMIC LOADING:**
See "SITE SPECIFIC ARS CURVE" data

**REINFORCED CONCRETE:**
fy = 60 ksi
$f'_c$ = 3.6 ksi (EXCEPT AS SHOWN IN CONCRETE STRENGTH & TYPE LIMITS)
n = 8

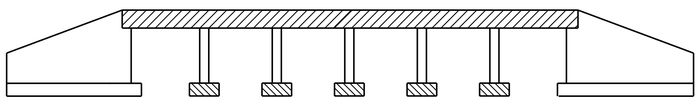

Structural Concrete, Bridge
Structural Concrete, Bridge Footing
Structural Concrete, Bridge (4.0 ksi at 28 days)

## CONCRETE STRENGTH AND TYPE LIMITS
No Scale

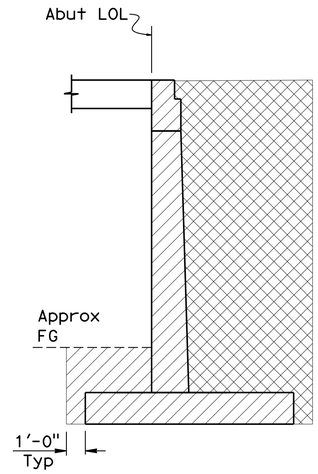


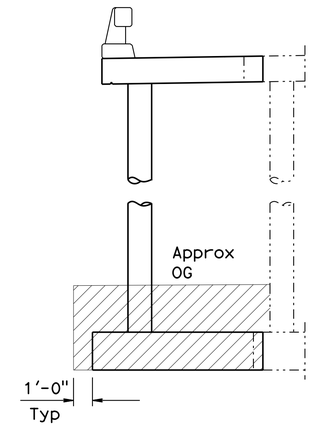


STRUCTURE EXCAVATION (TYPE D)
STRUCTURE BACKFILL

## LIMITS OF ABUTMENT AND WINGWALL EXCAVATION & BACKFILL
NO SCALE

## LIMITS OF BENT EXCAVATION & BACKFILL
NO SCALE

## INDEX TO PLANS


| SHEET NO. | TITLE |
|---|---|
| 1 | GENERAL PLAN |
| 2 | INDEX TO PLANS |
| 3 | FOUNDATION PLAN |
| 4 | ABUTMENT 1 LAYOUT |
| 5 | ABUTMENT 7 LAYOUT |
| 6 | ABUTMENT DETAILS NO. 1 |
| 7 | ABUTMENT DETAILS NO. 2 |
| 8 | ABUTMENT DETAILS NO. 3 |
| 9 | SLAB & BENT DETAILS NO. 1 |
| 10 | SLAB & BENT DETAILS NO. 2 |
| 11 | SLAB & BENT DETAILS NO. 3 |
| 12 | SLAB & BENT DETAILS NO. 4 |
| 13 | LOG OF TEST BORINGS 1 OF 4 |
| 14 | LOG OF TEST BORINGS 2 OF 4 |
| 15 | LOG OF TEST BORINGS 3 OF 4 |
| 16 | LOG OF TEST BORINGS 4 OF 4 |


### STANDARD PLANS DATED 2010


| | | |
|---|---|---|
| | A10A | ABBREVIATIONS (SHEET 1 OF 2) |
| | A10B | ABBREVIATIONS (SHEET 2 OF 2) |
| | A10C | LINES AND SYMBOLS (SHEET 1 OF 3) |
| | A10D | LINES AND SYMBOLS (SHEET 2 OF 3) |
| | A10E | LINES AND SYMBOLS (SHEET 3 OF 3) |
| | A10F | LEGEND - SOIL (SHEET 1 OF 2) |
| | A10G | LEGEND - SOIL (SHEET 2 OF 2) |
| | A10H | LEGEND - ROCK |
| | A62C | LIMITS OF PAYMENT FOR EXCAVATION AND BACKFILL BRIDGE |
| | B0-3 | BRIDGE DETAILS |
| | B3-6 | RETAINING WALL DETAILS No. 2 |
| RSP | B11-47 | CABLE RAILING |
| RSP | B11-60 | CONCRETE BARRIER TYPE 80 (SHEET 1 OF 2) |


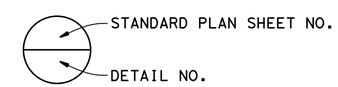


## SITE SPECIFIC ARS CURVE

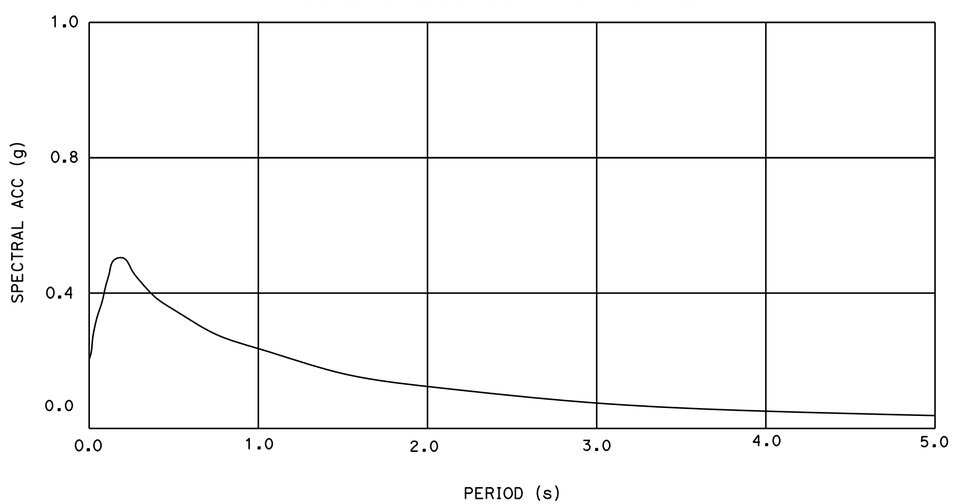


## SPREAD FOOTING DATA TABLE

| LOCATION | ALLOWABLE BEARING CAPACITY $q_{all}$ (ksf) | NOMINAL BEARING RESISTANCE $q_n$ (ksf) |
|---|---|---|
| Abut 1 | 10 | N/A |
| BENT 2, 3, 4, 5 & 6 | N/A | 30 |
| Abut 7 | 10 | N/A |

NOTE:
THE CONTRACTOR SHALL VERIFY ALL CONTROLLING FIELD DIMENSIONS BEFORE ORDERING OR FABRICATING ANY MATERIAL.

| | BY | CHECKED |
|---|---|---|
| DESIGN | Quang H Nguyen | Art Herrera |
| DETAILS | Janie Chlubna | Art Herrera |
| QUANTITIES | Sharon Yen | Lewis Shen |

STATE OF CALIFORNIA
DEPARTMENT OF TRANSPORTATION

DIVISION OF ENGINEERING SERVICES
STRUCTURE DESIGN
DESIGN BRANCH 3

BRIDGE NO. 06-0049
POST MILE 34.56

# SALT CREEK BRIDGE (WIDEN)
# INDEX TO PLANS

STRUCTURES DESIGN DETAIL SHEET (ENGLISH) (REV. 09-01-10)

ORIGINAL SCALE IN INCHES FOR REDUCED PLANS 0 1 2 3

UNIT: 3578
PROJECT NUMBER & PHASE: 02000002621
CONTRACT NO.: 02-360701

DISREGARD PRINTS BEARING EARLIER REVISION DATES

REVISION DATES: 2-2-12 10-17-12 9-3-12 2-14-13

SHEET 2 OF 16

FILE => 06-0049-b-index.dgn

USERNAME => s124496 DATE PLOTTED => 18-JUN-2013 TIME PLOTTED => 12:53

| DIST | COUNTY | ROUTE | POST MILES TOTAL PROJECT | SHEET No. | TOTAL SHEETS |
|---|---|---|---|---|---|
| 02 | Sha | 299 | 30.3/40.7 | 337 | 366 |

REGISTERED CIVIL ENGINEER 2-14-13 DATE

6-17-13
PLANS APPROVAL DATE

REGISTERED PROFESSIONAL ENGINEER LEWIS L SHEN No. 56921 Exp. 6-30-13 CIVIL STATE OF CALIFORNIA

*The State of California or its officers or agents shall not be responsible for the accuracy or completeness of electronic copies of this plan sheet.*

## CURVE DATA

| No. | R | Δ | T | L |
|---|---|---|---|---|
| Ⓐ | 1625.00 | 46°11'33" | 693.00 | 1310.09 |

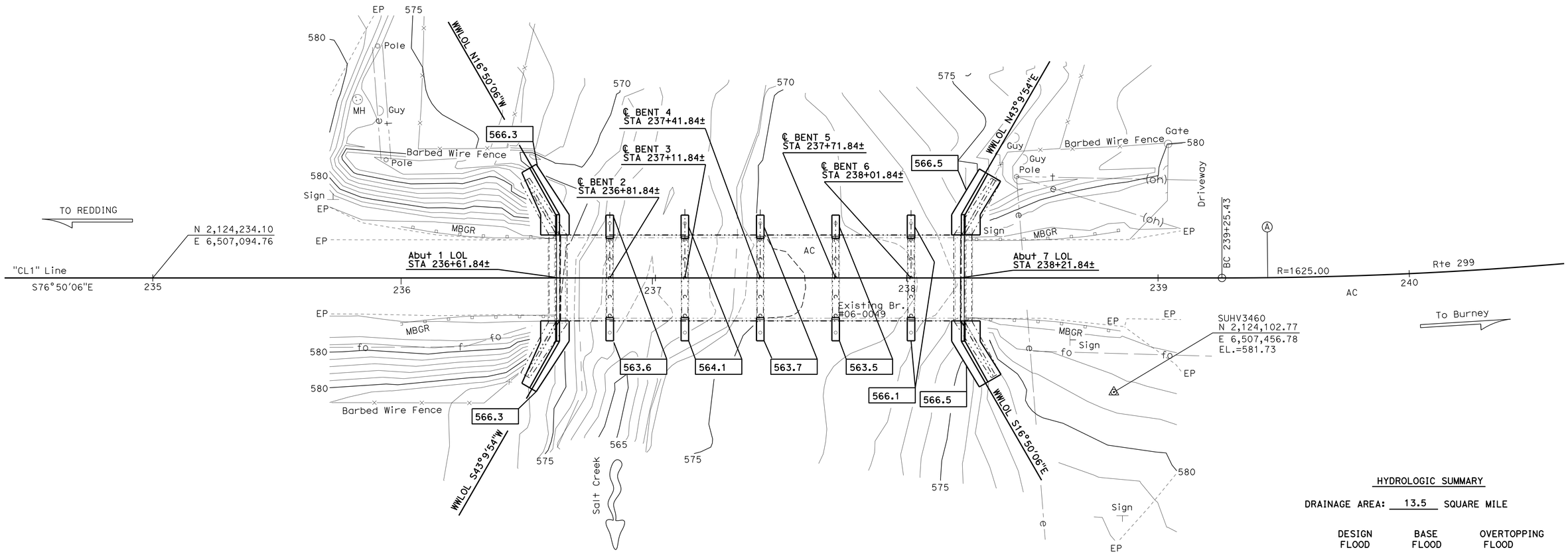


LEGEND:

Indicates Bottom of Footing Elevation

SURVEY CONTROL

SUHV3434 (Not Shown)
Fnd Rebar/Cap
43.93' Lt. "CL1" Line, Rte 299
Sta. 224+80.08
N 2,124,480.81
E 6,506,100.77
EL.=597.36

SUHV3460
Fnd 3" Brass Disc in Concrete
45.42' Rt. "CL1" Line, Rte 299
Sta. 238+82.42
N 2,124,102.77
E 6,507,456.78
EL.=581.73

HYDROLOGIC SUMMARY

DRAINAGE AREA: 13.5 SQUARE MILE

| | DESIGN FLOOD | BASE FLOOD | OVERTOPPING FLOOD |
|---|---|---|---|
| FREQUENCY (YEARS) | 50 | 100 | N/A |
| DISCHARGE (CUBIC FEET PER SECOND) | 4650 | 5800 | N/A |
| WATER SURFACE ELEV. AT BRIDGE (FEET) | 574.7 | 575.7 | N/A |

THE FLOOD PLAIN DATA ARE BASED UPON INFORMATION AVAILABLE WHEN THE PLANS WERE PREPARED AND ARE SHOWN TO MEET FEDERAL REQUIREMENTS. THE ACCURACY OF SAID INFORMATION IS NOT WARRANTED BY THE STATE AND INTERESTED OR AFFECTED PARTIES SHOULD MAKE THEIR OWN INVESTIGATIONS.

NOTES:

1. Approximate Dimensions of Abut. Footing are calculated from As-Built sheet 3 of 9 dated on 2/13/1969.
2. Elec. Line, Fiber Optic Line, and Tele. Line Per Dist. Utility Map.

PRELIMINARY INVESTIGATION SECTION

| SCALE | VERT.DATUM NAVD 88 | PHOTOGRAMMETRY AS OF: X | | | |
|---|---|---|---|---|---|
| 1"=20' | HORZ.DATUM NAD83 (92) | SURVEYED | BY District | CHECKED | BY Don Ivy 11/2011 |
| ALIGNMENT TIES Dist. Traverse Sheet | | DRAFTED | BY Sharon Zheng 11/2011 | CHECKED | BY Lawrence Lew 11/2011 |

| | | |
|---|---|---|
| DESIGN | BY Quang H Nguyen | CHECKED Art Herrera |
| DETAILS | BY Janie Chlubna | CHECKED Art Herrera |
| QUANTITIES | BY Sharon Yen | CHECKED Lewis Shen |

STATE OF CALIFORNIA
DEPARTMENT OF TRANSPORTATION

DIVISION OF ENGINEERING SERVICES
STRUCTURE DESIGN
DESIGN BRANCH 3

BRIDGE NO. 06-0049
POST MILE 34.56

# SALT CREEK BRIDGE (WIDEN)
# FOUNDATION PLAN

STRUCTURES FOUNDATION PLAN SHEET (ENGLISH) (REV. 09-01-10)

ORIGINAL SCALE IN INCHES FOR REDUCED PLANS 0 1 2 3

UNIT: 3646
PROJECT NUMBER & PHASE: 02000002621
CONTRACT NO.: 02-360701

DISREGARD PRINTS BEARING EARLIER REVISION DATES

REVISION DATES 11-29-11 9-7-12 7-26-12 1-15-13

SHEET 3 OF 16

FILE => 06-0049-d-fp.dgn

| DIST | COUNTY | ROUTE | POST MILES TOTAL PROJECT | SHEET No. | TOTAL SHEETS |
|---|---|---|---|---|---|
| 02 | Sha | 299 | 30.3/40.7 | 338 | 366 |

REGISTERED CIVIL ENGINEER 2-14-13 DATE

6-17-13
PLANS APPROVAL DATE

REGISTERED PROFESSIONAL ENGINEER LEWIS L SHEN No. 56921 Exp. 6-30-13 CIVIL STATE OF CALIFORNIA

*The State of California or its officers or agents shall not be responsible for the accuracy or completeness of scanned copies of this plan sheet.*

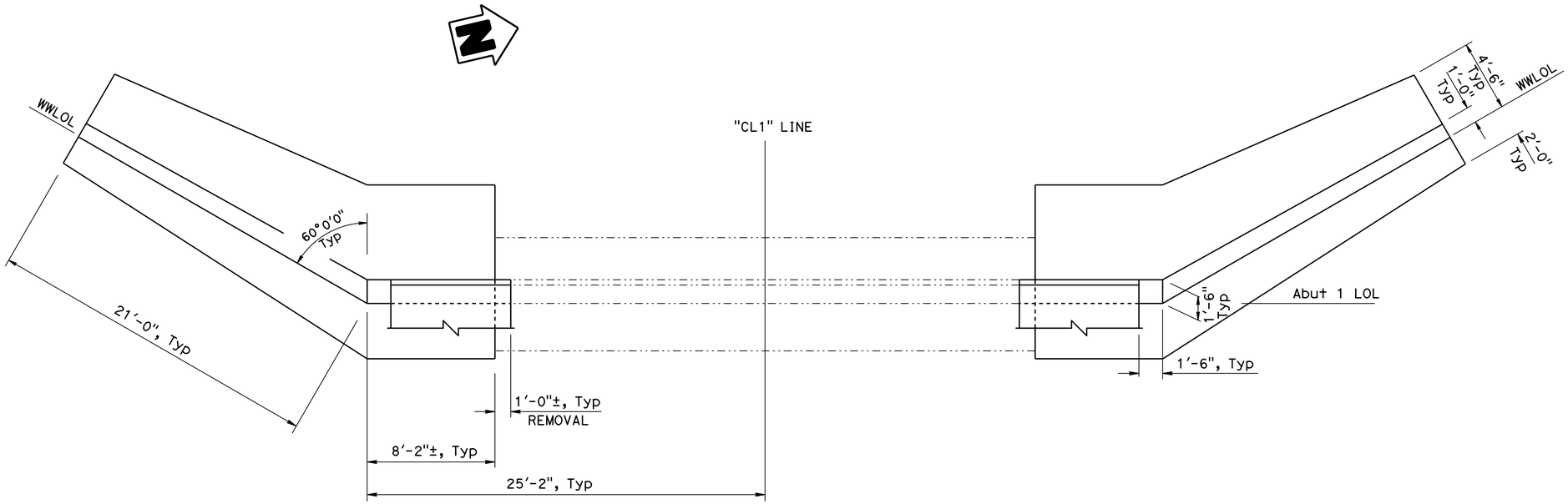


LEGEND:

——— Indicates New Structure

-·-·-·- Indicates Existing Structure

## PLAN

1/4" = 1'-0"

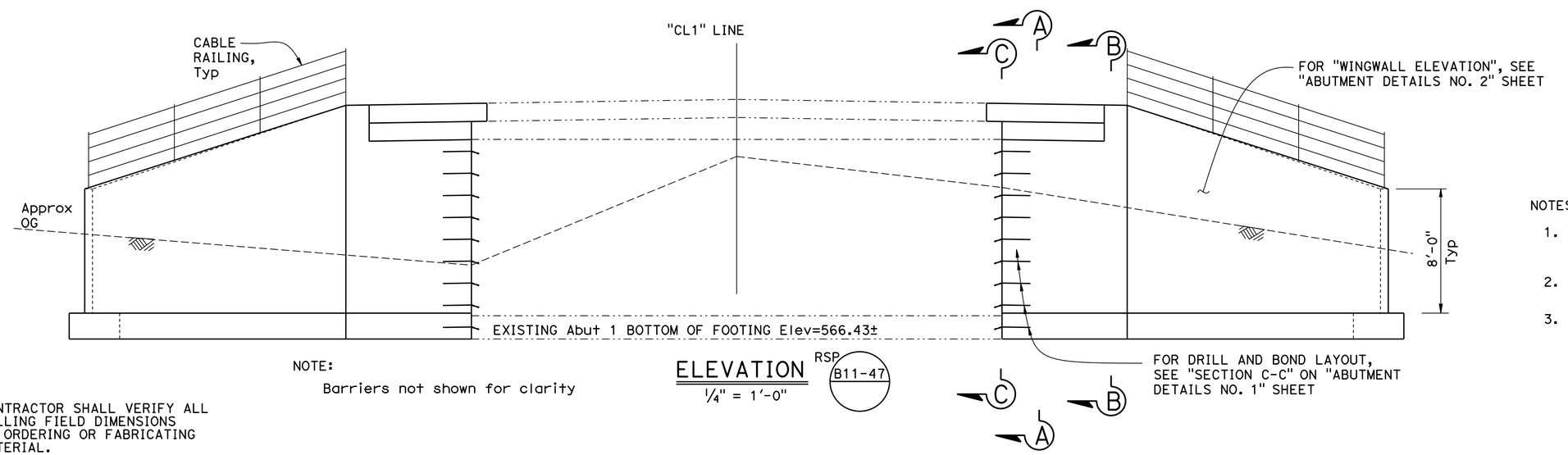


NOTE:

Barriers not shown for clarity

## ELEVATION

1/4" = 1'-0"

RSP B11-47

NOTES:

1. For "SECTION A-A", "SECTION B-B" and "SECTION C-C", see "ABUTMENT DETAILS NO. 1" sheet
2. For existing structure removal, see "ABUTMENT DETAILS NO. 3" sheet
3. For "FINISH GRADE" see, "ROAD PLANS"

NOTE:
THE CONTRACTOR SHALL VERIFY ALL CONTROLLING FIELD DIMENSIONS BEFORE ORDERING OR FABRICATING ANY MATERIAL.

| | BY | CHECKED |
|---|---|---|
| DESIGN | Quang H Nguyen | Art Herrera |
| DETAILS | Janie Chlubna | Art Herrera |
| QUANTITIES | Sharon Yen | Lewis Shen |

STATE OF CALIFORNIA
DEPARTMENT OF TRANSPORTATION

DIVISION OF ENGINEERING SERVICES
STRUCTURE DESIGN
DESIGN BRANCH 3

BRIDGE NO. 06-0049
POST MILE 34.56

# SALT CREEK BRIDGE (WIDEN)
# ABUTMENT 1 LAYOUT

STRUCTURES DESIGN DETAIL SHEET (ENGLISH) (REV. 09-01-10)

ORIGINAL SCALE IN INCHES FOR REDUCED PLANS 0 1 2 3

UNIT: 3578
PROJECT NUMBER & PHASE: 02000002621
CONTRACT NO.: 02-360701

DISREGARD PRINTS BEARING EARLIER REVISION DATES

REVISION DATES: 2-2-12 10-17-12 9-5-12 2-14-13

SHEET 4 OF 16

FILE => 06-0049-e-abut01-1o.dgn

USERNAME => s124496 DATE PLOTTED => 18-JUN-2013 TIME PLOTTED => 12:53

| DIST | COUNTY | ROUTE | POST MILES TOTAL PROJECT | SHEET No. | TOTAL SHEETS |
|---|---|---|---|---|---|
| 02 | Sha | 299 | 30.3/40.7 | 339 | 366 |

REGISTERED CIVIL ENGINEER 2-14-13 DATE

6-17-13
PLANS APPROVAL DATE

REGISTERED PROFESSIONAL ENGINEER LEWIS L SHEN No. 56921 Exp. 6-30-13 CIVIL STATE OF CALIFORNIA

*The State of California or its officers or agents shall not be responsible for the accuracy or completeness of scanned copies of this plan sheet.*

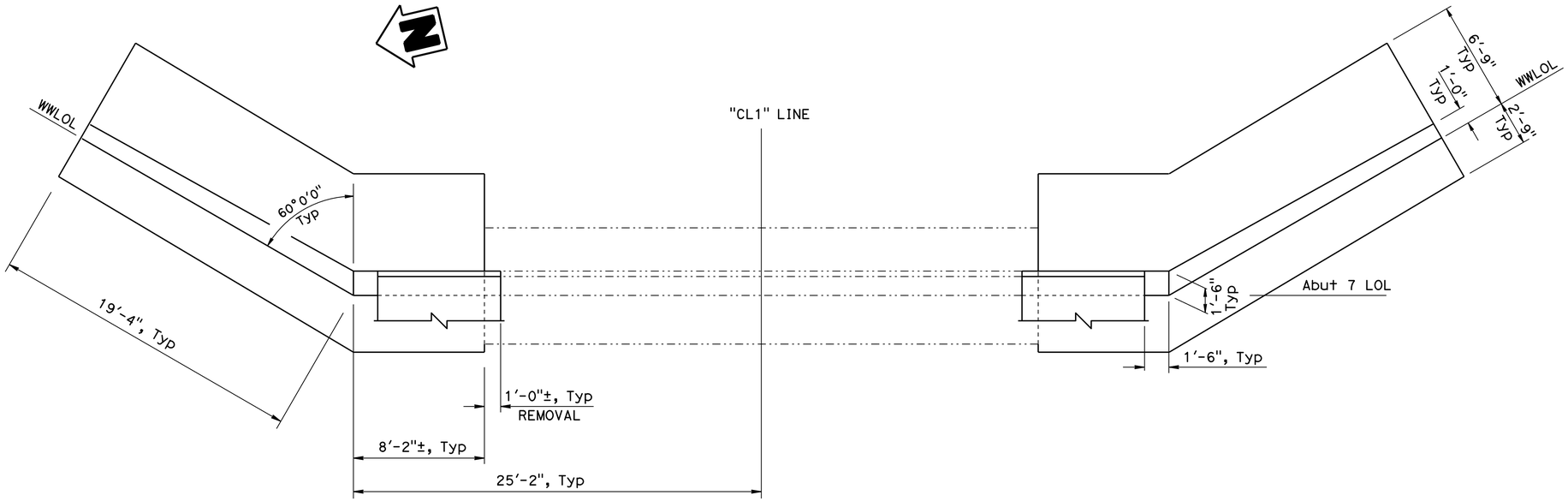


LEGEND:

Indicates New Structure

Indicates Existing Structure

## PLAN

1/4" = 1'-0"

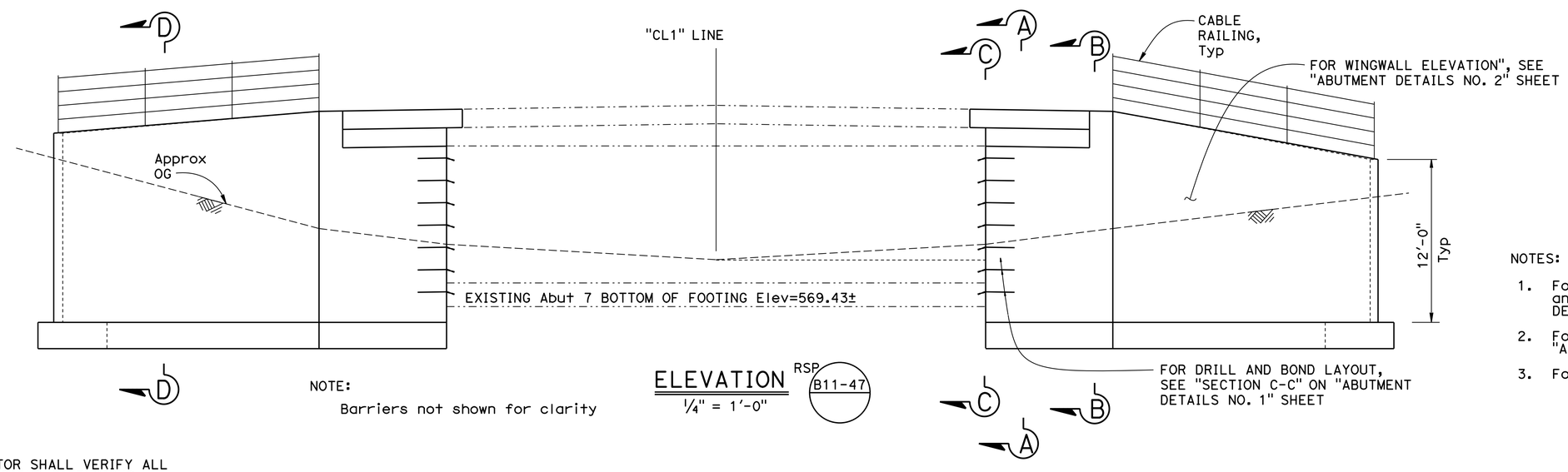


NOTE:
Barriers not shown for clarity

## ELEVATION

1/4" = 1'-0"

RSP B11-47

NOTES:

1. For "SECTION A-A", "SECTION B-B" and "SECTION C-C", see "ABUTMENT DETAILS NO. 1" sheet
2. For existing structure removal, see "ABUTMENT DETAILS NO. 3" sheet
3. For "FINISH GRADE" see, "ROAD PLANS"

NOTE:
THE CONTRACTOR SHALL VERIFY ALL CONTROLLING FIELD DIMENSIONS BEFORE ORDERING OR FABRICATING ANY MATERIAL.

| | BY | CHECKED |
|---|---|---|
| DESIGN | Quang H Nguyen | Art Herrera |
| DETAILS | Janie Chlubna | Art Herrera |
| QUANTITIES | Sharon Yen | Lewis Shen |

STATE OF CALIFORNIA
DEPARTMENT OF TRANSPORTATION

DIVISION OF ENGINEERING SERVICES
STRUCTURE DESIGN
DESIGN BRANCH 3

BRIDGE NO. 06-0049
POST MILE 34.56

# SALT CREEK BRIDGE (WIDEN)
# ABUTMENT 7 LAYOUT

STRUCTURES DESIGN DETAIL SHEET (ENGLISH) (REV. 09-01-10)

ORIGINAL SCALE IN INCHES FOR REDUCED PLANS 0 1 2 3

UNIT: 3578
PROJECT NUMBER & PHASE: 02000002621
CONTRACT NO.: 02-360701

DISREGARD PRINTS BEARING EARLIER REVISION DATES

REVISION DATES: 2-2-12 10-17-12 9-5-12 2-14-13

SHEET 5 OF 16

FILE => 06-0049-e-abut07-1o.dgn

USERNAME => s124496 DATE PLOTTED => 18-JUN-2013 TIME PLOTTED => 12:53

| DIST | COUNTY | ROUTE | POST MILES TOTAL PROJECT | SHEET No. | TOTAL SHEETS |
|---|---|---|---|---|---|
| 02 | Sha | 299 | 30.3/40.7 | 340 | 366 |

REGISTERED CIVIL ENGINEER 2-14-13 DATE

6-17-13
PLANS APPROVAL DATE

REGISTERED PROFESSIONAL ENGINEER LEWIS L SHEN No. 56921 Exp. 6-30-13 CIVIL STATE OF CALIFORNIA

*The State of California or its officers or agents shall not be responsible for the accuracy or completeness of scanned copies of this plan sheet.*

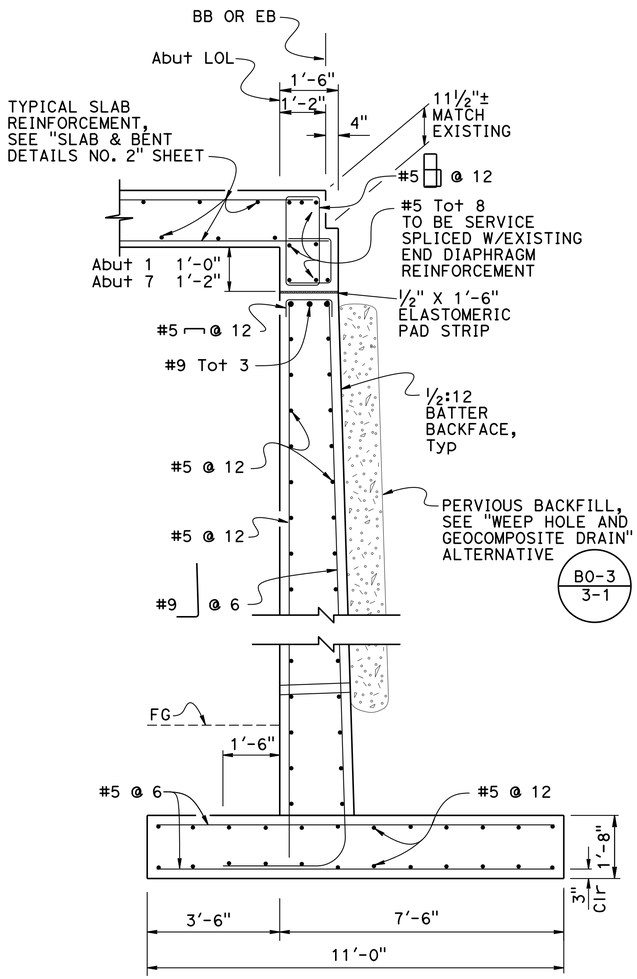


## SECTION A-A

½" = 1'-0"

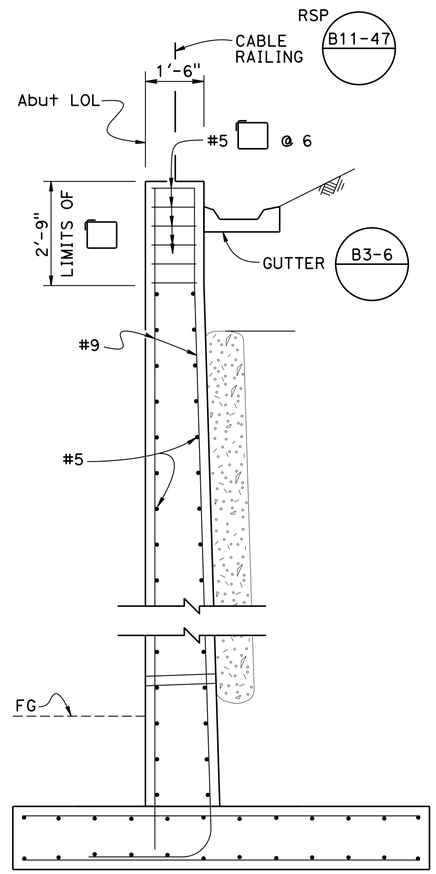


NOTE:
For details not shown, see "SECTION A-A"

## SECTION B-B

½" = 1'-0"

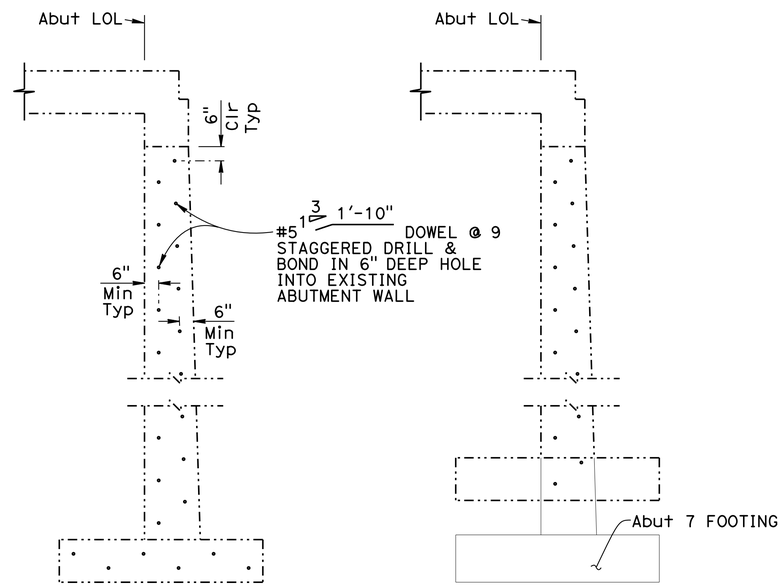


ABUTMENT 1

ABUTMENT 7

## SECTION C-C

⅜" = 1'-0"

NOTE:
THE CONTRACTOR SHALL VERIFY ALL CONTROLLING FIELD DIMENSIONS BEFORE ORDERING OR FABRICATING ANY MATERIAL.

| | BY | CHECKED |
|---|---|---|
| DESIGN | Quang H Nguyen | Art Herrera |
| DETAILS | Janie Chlubna | Art Herrera |
| QUANTITIES | Sharon Yen | Lewis Shen |

STATE OF CALIFORNIA
DEPARTMENT OF TRANSPORTATION

DIVISION OF ENGINEERING SERVICES
STRUCTURE DESIGN
DESIGN BRANCH 3

BRIDGE NO. 06-0049
POST MILE 34.56

# SALT CREEK BRIDGE (WIDEN)
# ABUTMENT DETAILS NO. 1

STRUCTURES DESIGN DETAIL SHEET (ENGLISH) (REV. 09-01-10)

ORIGINAL SCALE IN INCHES FOR REDUCED PLANS 0 1 2 3

UNIT: 3578
PROJECT NUMBER & PHASE: 02000002621
CONTRACT NO.: 02-360701

DISREGARD PRINTS BEARING EARLIER REVISION DATES

REVISION DATES: 2-2-12 10-17-12 9-5-13 2-14-13

SHEET 6 OF 16

FILE => 06-0049-e-abut-det-01.dgn

USERNAME => s123496 DATE PLOTTED => 18-JUN-2013 TIME PLOTTED => 12:53

| DIST | COUNTY | ROUTE | POST MILES TOTAL PROJECT | SHEET No. | TOTAL SHEETS |
|---|---|---|---|---|---|
| 02 | Sha | 299 | 30.3/40.7 | 341 | 366 |

REGISTERED CIVIL ENGINEER 2-14-13 DATE

6-17-13
PLANS APPROVAL DATE

REGISTERED PROFESSIONAL ENGINEER LEWIS L SHEN No. 56921 Exp. 6-30-13 CIVIL STATE OF CALIFORNIA

*The State of California or its officers or agents shall not be responsible for the accuracy or completeness of scanned copies of this plan sheet.*

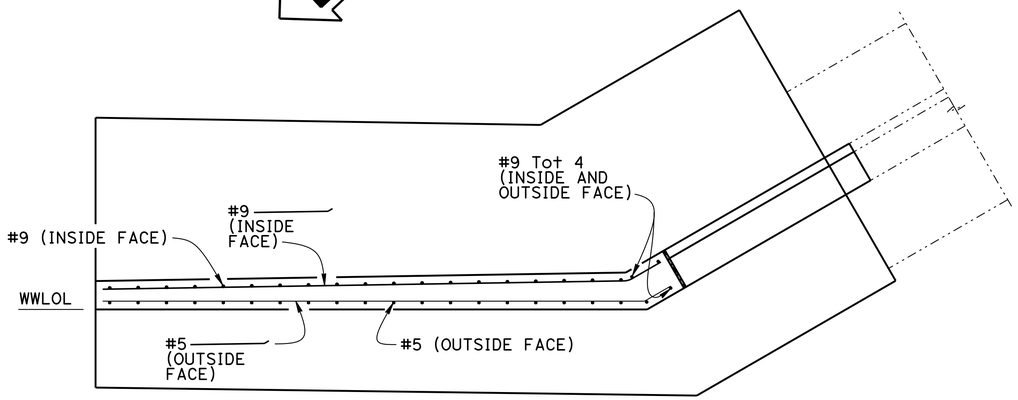


## WINGWALL PLAN

3/8" = 1'-0"

NOTE:
Abutment 7 shown,
Abutment 1 similar

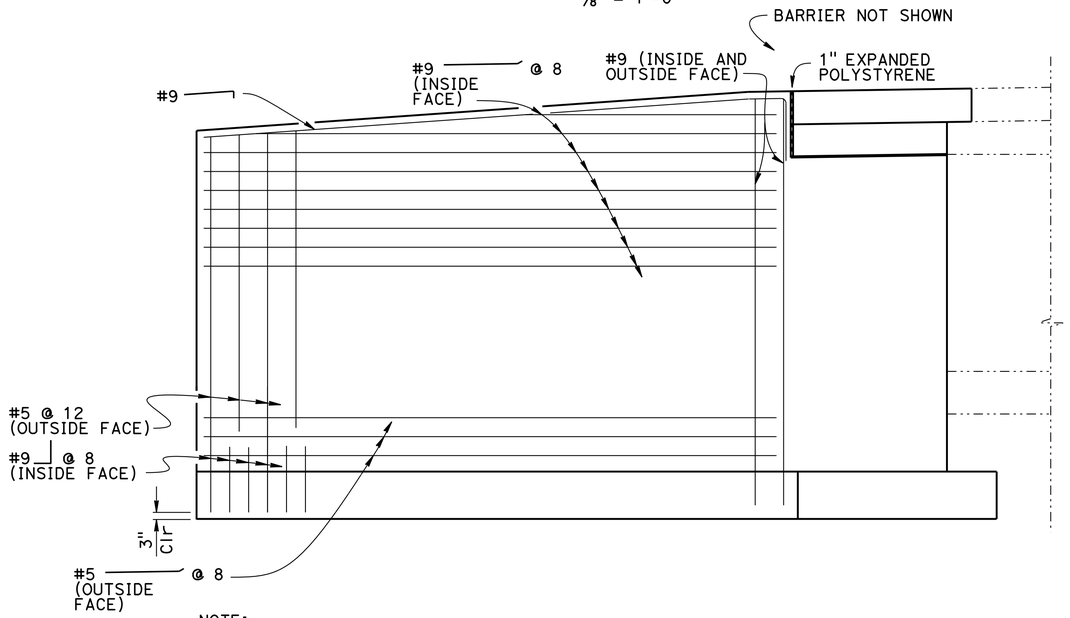


NOTE:
Cable Railing not shown

## WINGWALL ELEVATION

3/8" = 1'-0"

NOTE:
THE CONTRACTOR SHALL VERIFY ALL CONTROLLING FIELD DIMENSIONS BEFORE ORDERING OR FABRICATING ANY MATERIAL.

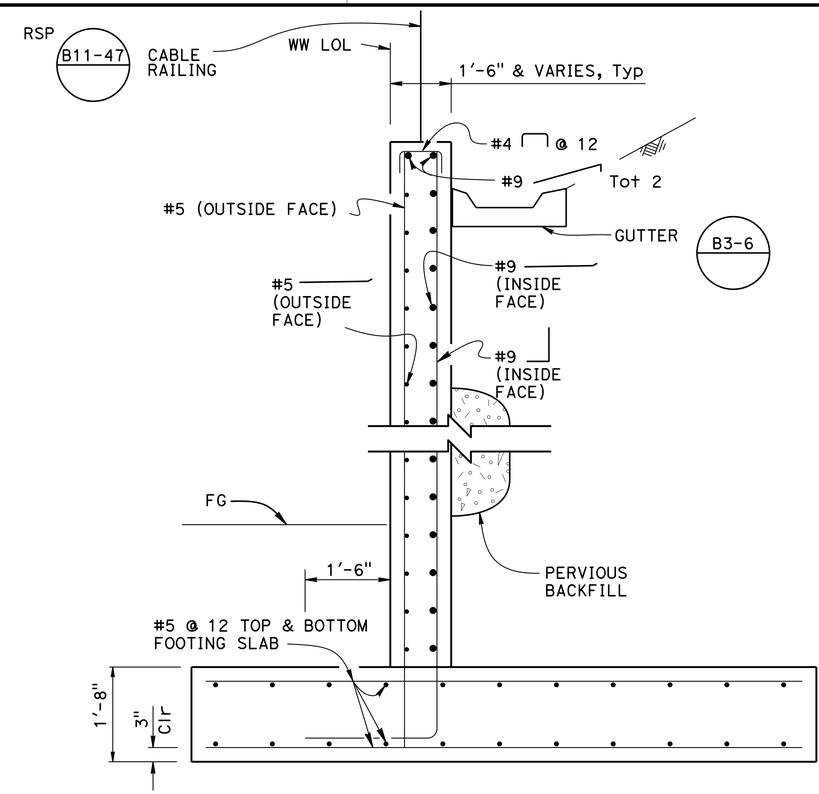


## SECTION D-D

3/4" = 1'-0"

LEGEND:

Indicates New Structure

Indicates Existing Structure

NOTE:
For dimensions not shown see, "ABUTMENT 1 LAYOUT" and "ABUTMENT 7 LAYOUT" sheets

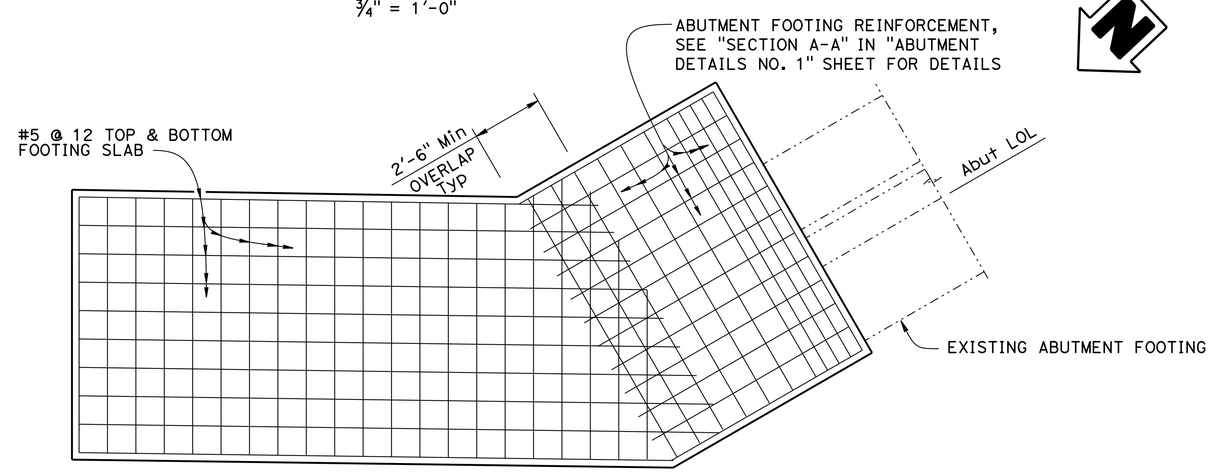


NOTE:
Abutment 7 shown,
Abutment 1 similar

## WINGWALL FOOTING PLAN

3/8" = 1'-0"

| | BY | CHECKED |
|---|---|---|
| DESIGN | Quang H Nguyen | Art Herrera |
| DETAILS | Janie Chlubna | Art Herrera |
| QUANTITIES | Sharon Yen | Lewis Shen |

STATE OF CALIFORNIA
DEPARTMENT OF TRANSPORTATION

DIVISION OF ENGINEERING SERVICES
STRUCTURE DESIGN
DESIGN BRANCH 3

BRIDGE NO. 06-0049
POST MILE 34.56

# SALT CREEK BRIDGE (WIDEN)
# ABUTMENT DETAILS NO. 2

STRUCTURES DESIGN DETAIL SHEET (ENGLISH) (REV. 09-01-10)

ORIGINAL SCALE IN INCHES FOR REDUCED PLANS 0 1 2 3

UNIT: 3578
PROJECT NUMBER & PHASE: 02000002621
CONTRACT NO.: 02-360701

DISREGARD PRINTS BEARING EARLIER REVISION DATES

REVISION DATES: 2-2-12 10-17-12 9-5-12 2-14-13

SHEET 7 OF 16

FILE => 06-0049-e-abut-det-02.dgn

USERNAME => s124496 DATE PLOTTED => 18-JUN-2013 TIME PLOTTED => 12:53

| DIST | COUNTY | ROUTE | POST MILES TOTAL PROJECT | SHEET No. | TOTAL SHEETS |
|---|---|---|---|---|---|
| 02 | Sha | 299 | 30.3/40.7 | 342 | 366 |

REGISTERED CIVIL ENGINEER 2-14-13 DATE

6-17-13
PLANS APPROVAL DATE

REGISTERED PROFESSIONAL ENGINEER LEWIS L SHEN No. 56921 Exp. 6-30-13 CIVIL STATE OF CALIFORNIA

*The State of California or its officers or agents shall not be responsible for the accuracy or completeness of scanned copies of this plan sheet.*

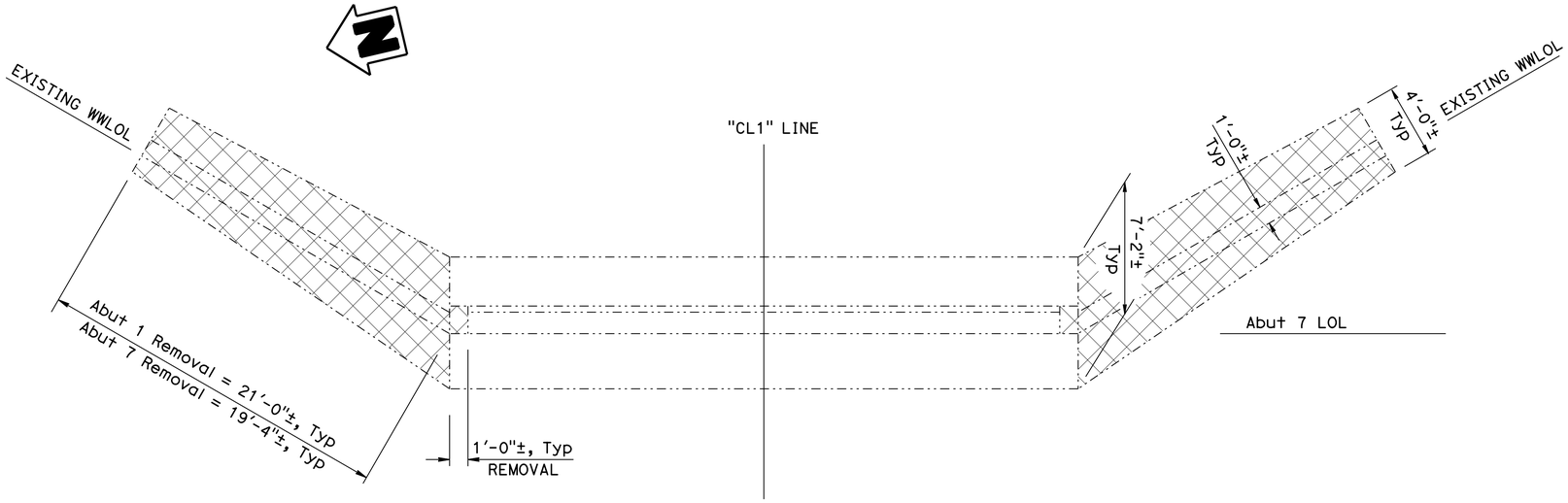


## PLAN
1/4" = 1'-0"

NOTE:
Abutment 7 shown,
Abutment 1 similar

LEGEND:

-·-·- Indicates Existing Structure

Indicates Bridge Removal (Portion)

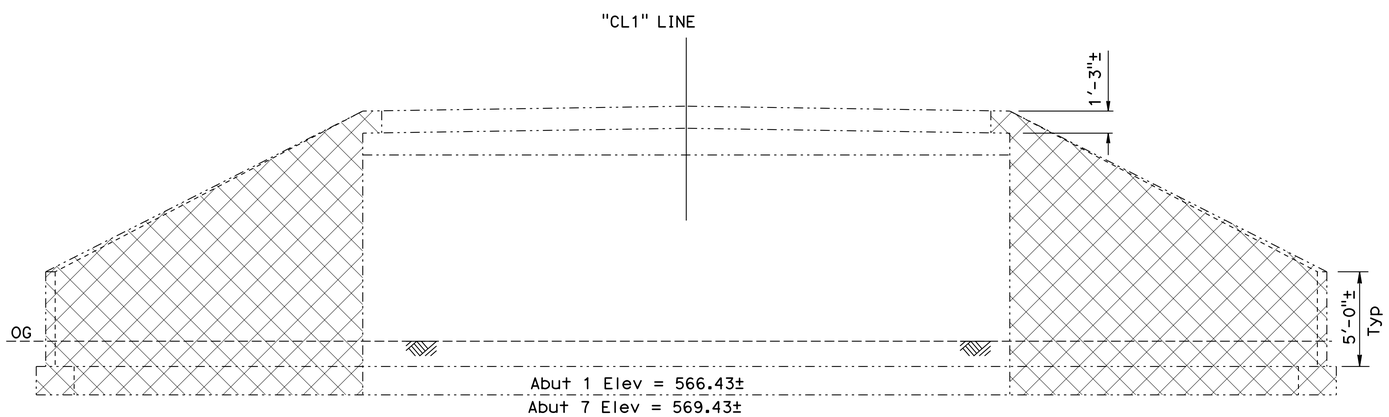


## ELEVATION
1/4" = 1'-0"

NOTE:
THE CONTRACTOR SHALL VERIFY ALL CONTROLLING FIELD DIMENSIONS BEFORE ORDERING OR FABRICATING ANY MATERIAL.

| | BY | CHECKED |
|---|---|---|
| DESIGN | Quang H Nguyen | Art Herrera |
| DETAILS | Janie Chlubna | Art Herrera |
| QUANTITIES | Sharon Yen | Lewis Shen |

STATE OF CALIFORNIA
DEPARTMENT OF TRANSPORTATION

DIVISION OF ENGINEERING SERVICES
STRUCTURE DESIGN
DESIGN BRANCH 3

BRIDGE NO. 06-0049
POST MILE 34.56

# SALT CREEK BRIDGE (WIDEN)
# ABUTMENT DETAILS NO. 3

STRUCTURES DESIGN DETAIL SHEET (ENGLISH) (REV. 09-01-10)

ORIGINAL SCALE IN INCHES FOR REDUCED PLANS 0 1 2 3

UNIT: 3578
PROJECT NUMBER & PHASE: 02000002621
CONTRACT NO.: 02-360701

DISREGARD PRINTS BEARING EARLIER REVISION DATES

REVISION DATES: 2-2-12 10-17-12 9-3-12 2-14-13

SHEET 8 OF 16

FILE => 06-0049-e-abut-det-03.dgn

USERNAME => s124496 DATE PLOTTED => 18-JUN-2013 TIME PLOTTED => 12:53

| DIST | COUNTY | ROUTE | POST MILES TOTAL PROJECT | SHEET No. | TOTAL SHEETS |
|---|---|---|---|---|---|
| 02 | Sha | 299 | 30.3/40.7 | 343 | 366 |

REGISTERED CIVIL ENGINEER 2-14-13 DATE

6-17-13
PLANS APPROVAL DATE

REGISTERED PROFESSIONAL ENGINEER LEWIS L SHEN No. 56921 Exp. 6-30-13 CIVIL STATE OF CALIFORNIA

*The State of California or its officers or agents shall not be responsible for the accuracy or completeness of scanned copies of this plan sheet.*

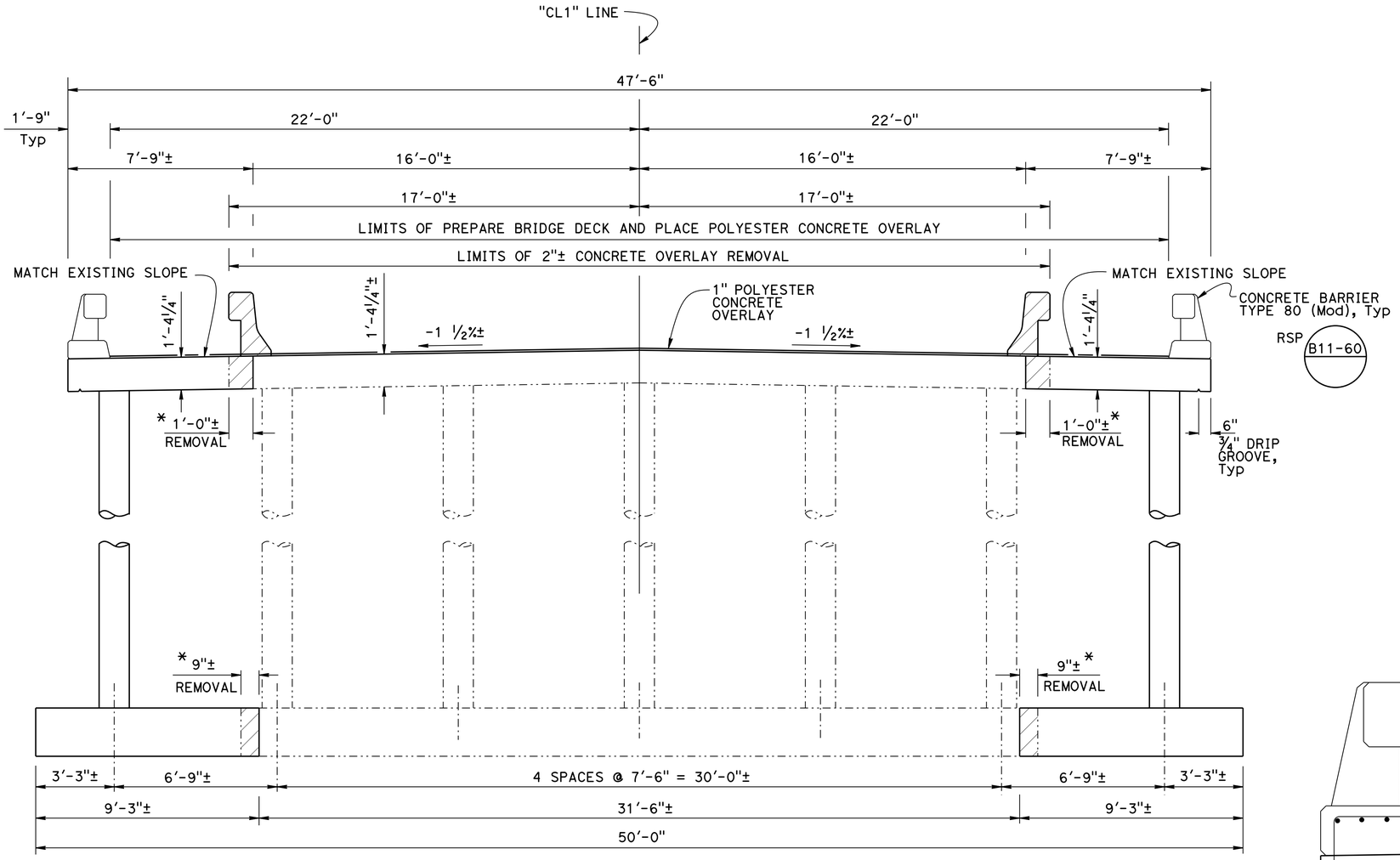


## TYPICAL SECTION

3/8" = 1'-0"

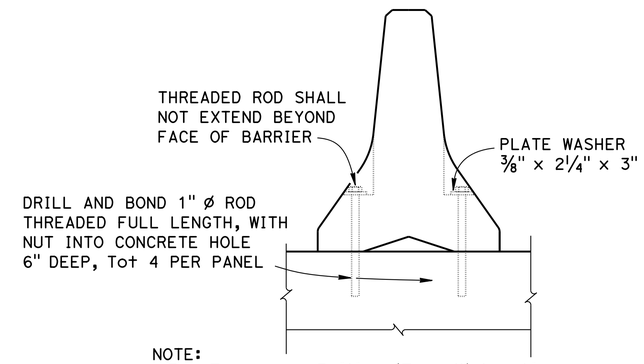


NOTE:
For Temporary Railing (Type K) location see "ROAD PLANS"

## TYPE K RAILING ATTACHMENT

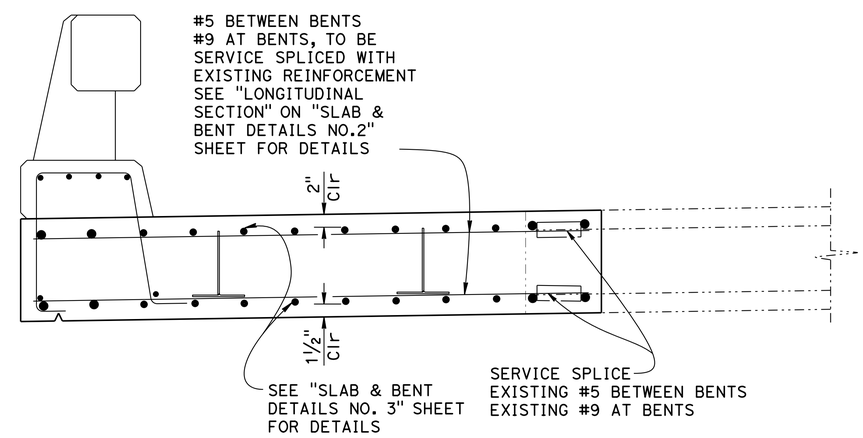


NOTE:
All Reinforcement within barrier and superstructure concrete to be Epoxy Coated. Column Reinforcement excluded

## PART TYPICAL SECTION

1" = 1'-0"

LEGEND:

- Indicates New Structure
- Indicates Existing Structure
- Indicates Bridge Removal (Portion)
- * Existing Reinforcement to Remain

NOTES:

1. For Footing and Column details, see "SLAB & BENT DETAILS NO. 4" sheet
2. For "LONGITUDINAL SECTION", see "SLAB & BENT DETAILS NO. 2" sheet

NOTE:
THE CONTRACTOR SHALL VERIFY ALL CONTROLLING FIELD DIMENSIONS BEFORE ORDERING OR FABRICATING ANY MATERIAL.

| | BY | CHECKED |
|---|---|---|
| DESIGN | Quang H Nguyen | Art Herrera |
| DETAILS | Janie Chlubna | Art Herrera |
| QUANTITIES | Sharon Yen | Lewis Shen |

STATE OF CALIFORNIA
DEPARTMENT OF TRANSPORTATION

DIVISION OF ENGINEERING SERVICES
STRUCTURE DESIGN
DESIGN BRANCH 3

BRIDGE NO. 06-0049
POST MILE 34.56

# SALT CREEK BRIDGE (WIDEN)
# SLAB & BENT DETAILS NO. 1

STRUCTURES DESIGN DETAIL SHEET (ENGLISH) (REV. 09-01-10)

ORIGINAL SCALE IN INCHES FOR REDUCED PLANS 0 1 2 3

UNIT: 3578
PROJECT NUMBER & PHASE: 02000002621
CONTRACT NO.: 02-360701

DISREGARD PRINTS BEARING EARLIER REVISION DATES

REVISION DATES: 2-2-12 10-17-12 9-3-12 2-14-13

SHEET 9 OF 16

FILE => 06-0049-f-slab-bent-01.dgn

USERNAME => s124496 DATE PLOTTED => 18-JUN-2013 TIME PLOTTED => 12:53

| DIST | COUNTY | ROUTE | POST MILES TOTAL PROJECT | SHEET No. | TOTAL SHEETS |
|---|---|---|---|---|---|
| 02 | Sha | 299 | 30.3/40.7 | 344 | 366 |

REGISTERED CIVIL ENGINEER 2-14-13 DATE

6-17-13
PLANS APPROVAL DATE

REGISTERED PROFESSIONAL ENGINEER
LEWIS L SHEN
No. 56921
Exp. 6-30-13
CIVIL
STATE OF CALIFORNIA

*The State of California or its officers or agents shall not be responsible for the accuracy or completeness of scanned copies of this plan sheet.*

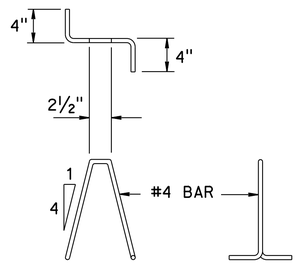


BAR CHAIR DETAIL

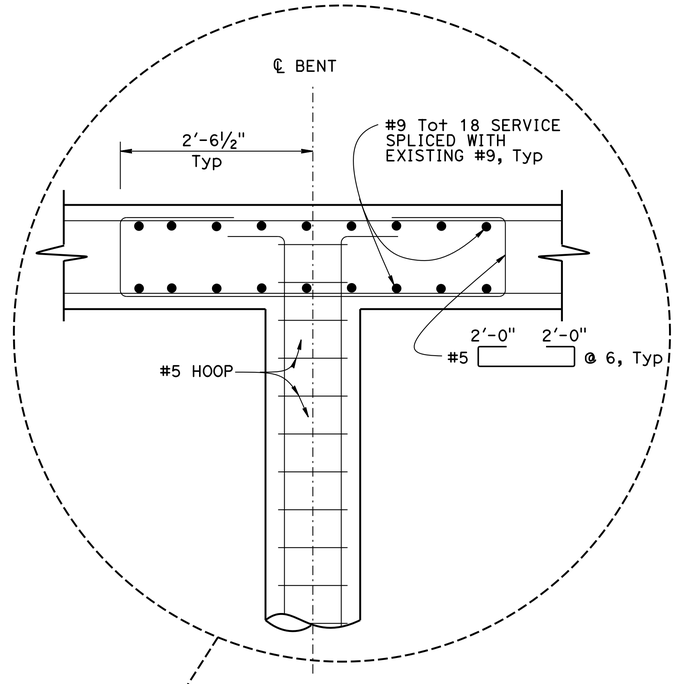


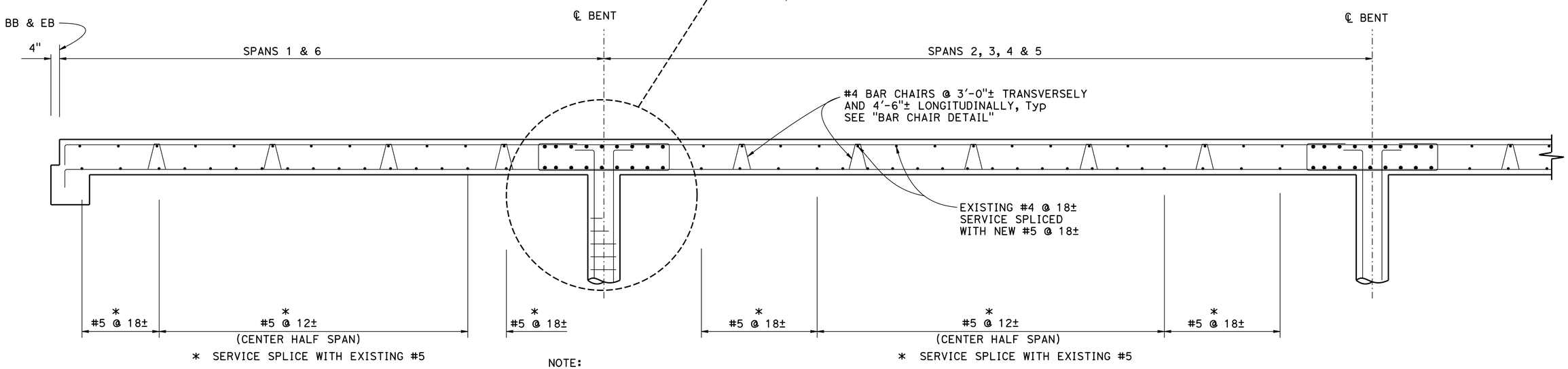


NOTE:

All Reinforcement in the superstructure concrete to be Epoxy Coated

LONGITUDINAL SECTION

½" = 1'-0"

NOTE:
THE CONTRACTOR SHALL VERIFY ALL CONTROLLING FIELD DIMENSIONS BEFORE ORDERING OR FABRICATING ANY MATERIAL.

| | BY | CHECKED |
|---|---|---|
| DESIGN | Quang H Nguyen | Art Herrera |
| DETAILS | Janie Chlubna | Art Herrera |
| QUANTITIES | Sharon Yen | Lewis Shen |

STATE OF CALIFORNIA
DEPARTMENT OF TRANSPORTATION

DIVISION OF ENGINEERING SERVICES
STRUCTURE DESIGN
DESIGN BRANCH 3

BRIDGE NO. 06-0049
POST MILE 34.56

# SALT CREEK BRIDGE (WIDEN)
# SLAB & BENT DETAILS NO. 2

STRUCTURES DESIGN DETAIL SHEET (ENGLISH) (REV. 09-01-10)

ORIGINAL SCALE IN INCHES FOR REDUCED PLANS 0 1 2 3

UNIT: 3578
PROJECT NUMBER & PHASE: 02000002621
CONTRACT NO.: 02-360701

DISREGARD PRINTS BEARING EARLIER REVISION DATES

REVISION DATES: 2-2-12 10-19-12 9-3-12 2-14-13

SHEET 10 OF 16

FILE => 06-0049-f-slab-bent-02.dgn

USERNAME => s124496 DATE PLOTTED => 18-JUN-2013 TIME PLOTTED => 12:53

| DIST | COUNTY | ROUTE | POST MILES TOTAL PROJECT | SHEET No. | TOTAL SHEETS |
|---|---|---|---|---|---|
| 02 | Sha | 299 | 30.3/40.7 | 345 | 366 |

REGISTERED CIVIL ENGINEER 2-14-13 DATE

6-17-13
PLANS APPROVAL DATE

REGISTERED PROFESSIONAL ENGINEER
LEWIS L SHEN
No. 56921
Exp. 6-30-13
CIVIL
STATE OF CALIFORNIA

*The State of California or its officers or agents shall not be responsible for the accuracy or completeness of scanned copies of this plan sheet.*

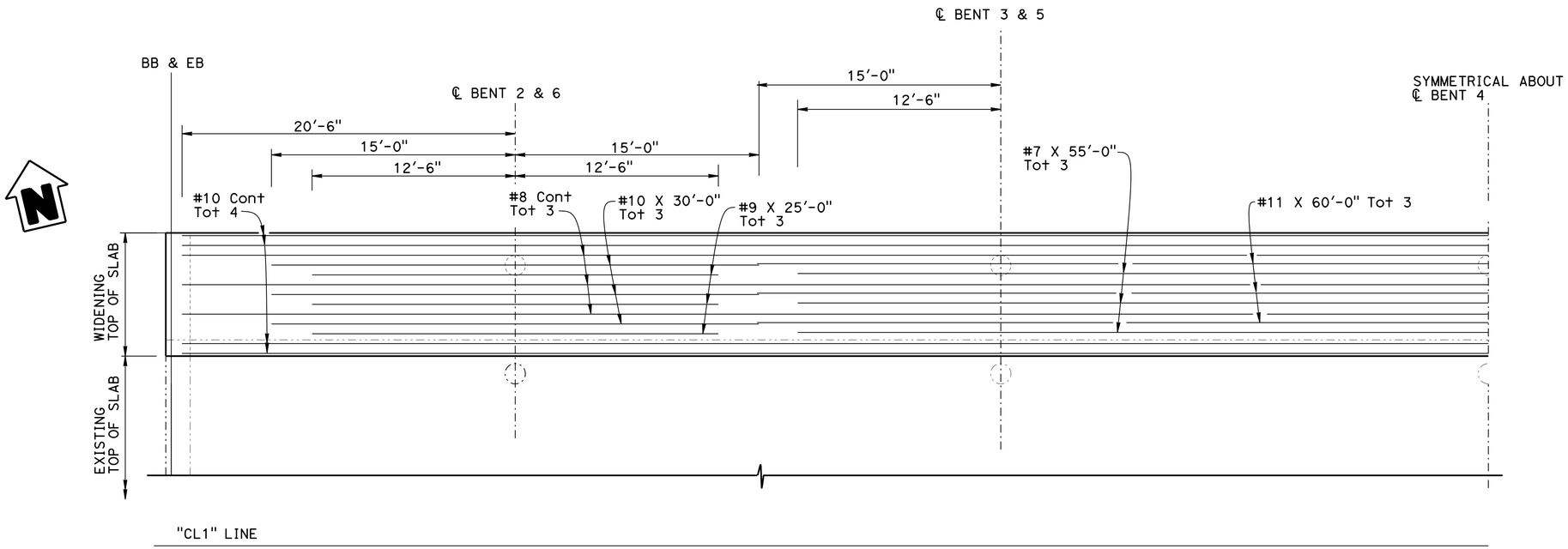


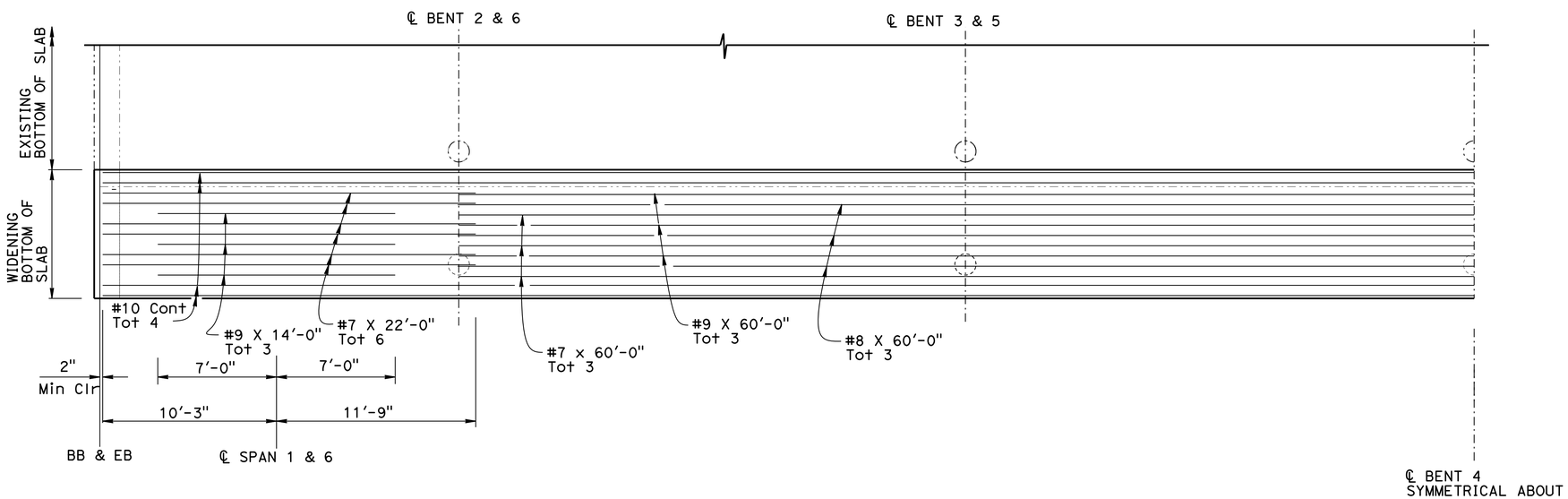


NOTE:
THE CONTRACTOR SHALL VERIFY ALL CONTROLLING FIELD DIMENSIONS BEFORE ORDERING OR FABRICATING ANY MATERIAL.

## REINFORCEMENT - TOP AND BOTTOM SLAB

1/4" = 1'-0"

| | BY | CHECKED |
|---|---|---|
| DESIGN | Quang H Nguyen | Art Herrera |
| DETAILS | Janie Chlubna | Art Herrera |
| QUANTITIES | Sharon Yen | Lewis Shen |

STATE OF CALIFORNIA
DEPARTMENT OF TRANSPORTATION

DIVISION OF ENGINEERING SERVICES
STRUCTURE DESIGN
DESIGN BRANCH 3

BRIDGE NO. 06-0049
POST MILE 34.56

# SALT CREEK BRIDGE (WIDEN)
# SLAB & BENT DETAILS NO. 3

STRUCTURES DESIGN DETAIL SHEET (ENGLISH) (REV. 09-01-10)

ORIGINAL SCALE IN INCHES FOR REDUCED PLANS 0 1 2 3

UNIT: 3578
PROJECT NUMBER & PHASE: 02000002621
CONTRACT NO.: 02-360701

DISREGARD PRINTS BEARING EARLIER REVISION DATES

REVISION DATES: 2-2-12 10-17-12 9-5-12 2-14-13

SHEET 11 OF 16

FILE => 06-0049-f-slab-bent-03.dgn

USERNAME => s124496 DATE PLOTTED => 18-JUN-2013 TIME PLOTTED => 12:53

| DIST | COUNTY | ROUTE | POST MILES TOTAL PROJECT | SHEET No. | TOTAL SHEETS |
|---|---|---|---|---|---|
| 02 | Sha | 299 | 30.3/40.7 | 346 | 366 |

REGISTERED CIVIL ENGINEER 2-14-13 DATE

6-17-13
PLANS APPROVAL DATE

REGISTERED PROFESSIONAL ENGINEER LEWIS L SHEN No. 56921 Exp. 6-30-13 CIVIL STATE OF CALIFORNIA

*The State of California or its officers or agents shall not be responsible for the accuracy or completeness of scanned copies of this plan sheet.*

LEGEND:
* No splices allowed in main column reinforcment

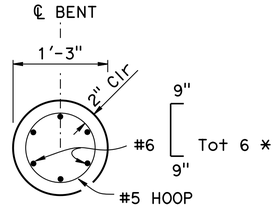


## SECTION E-E

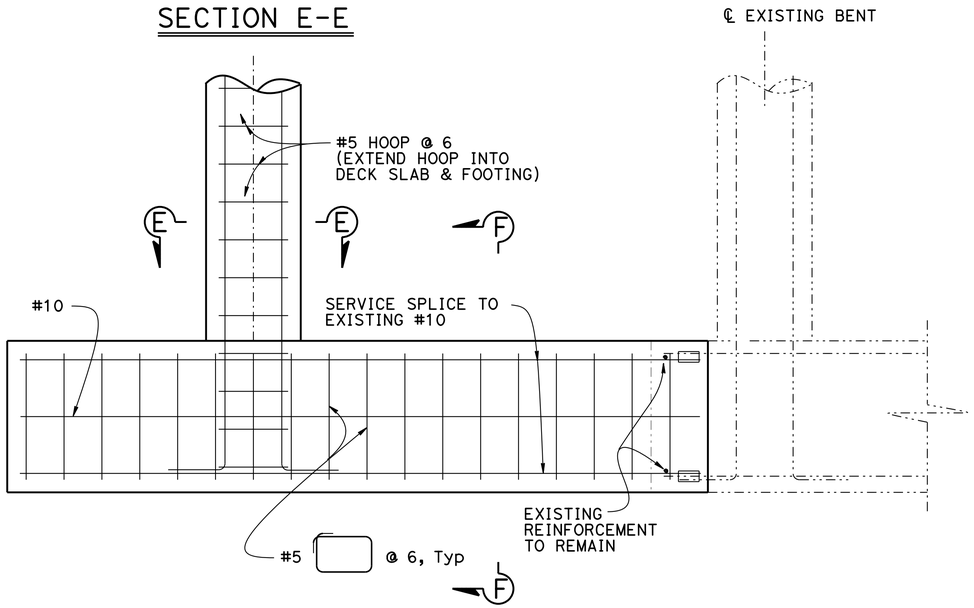


## FOOTING ELEVATION

1" = 1'-0"

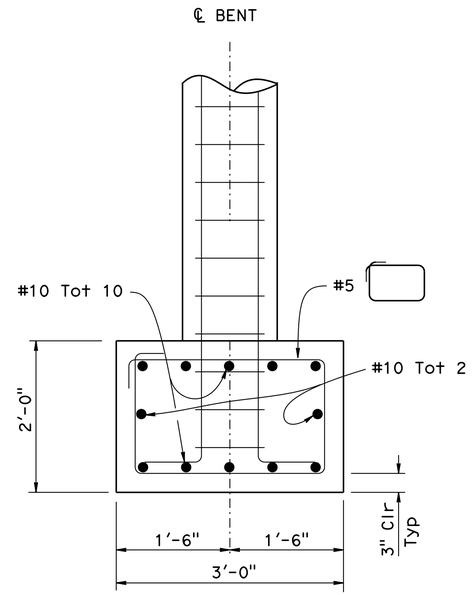


## SECTION F-F

1" = 1'-0"

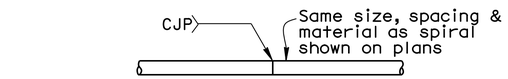


Individual hoops, made continuous with 100% penetration welds, may be substituted for spirals.

## BUTT WELDED CONTINUOUS HOOP

| DECK REPAIR | | | | |
|---|---|---|---|---|
| TOTAL DECK AREA (sq ft) | APPROXIMATE AREA DAMAGED (%) | APPROXIMATE DEPTH (in) | REMOVE UNSOUND CONCRETE ($ft^3$) | RAPID SETTING CONCRETE (PATCH) ($ft^3$) |
| 5520 | 5 | 3.0 | 69.0 | 69.0 |

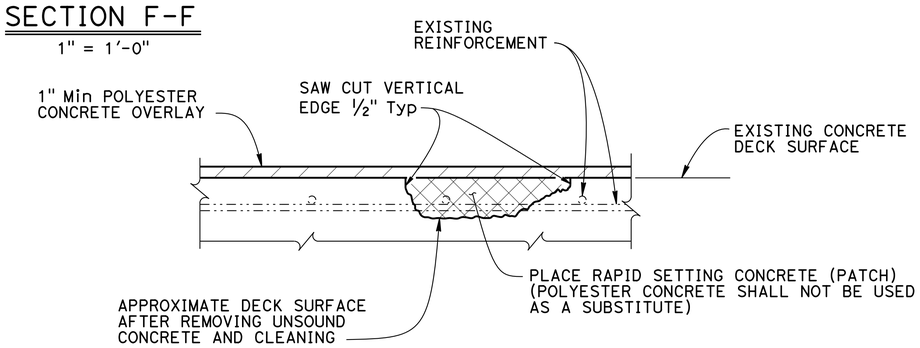


NOTES:

1. Remove unsound concrete and place rapid setting concrete (patch) prior to preparing bridge deck.
2. Locations to be determined by the Engineer. Reinforcement may be encountered during deck concrete removal.

## DECK REPAIR DETAIL

No Scale

NOTE:
THE CONTRACTOR SHALL VERIFY ALL CONTROLLING FIELD DIMENSIONS BEFORE ORDERING OR FABRICATING ANY MATERIAL.

| | BY | CHECKED |
|---|---|---|
| DESIGN | Quang H Nguyen | Art Herrera |
| DETAILS | Janie Chlubna | Art Herrera |
| QUANTITIES | Sharon Yen | Lewis Shen |

STATE OF CALIFORNIA
DEPARTMENT OF TRANSPORTATION

DIVISION OF ENGINEERING SERVICES
STRUCTURE DESIGN
DESIGN BRANCH 3

BRIDGE NO. 06-0049
POST MILE 34.56

# SALT CREEK BRIDGE (WIDEN)
# SLAB & BENT DETAILS NO. 4

STRUCTURES DESIGN DETAIL SHEET (ENGLISH) (REV. 09-01-10)

ORIGINAL SCALE IN INCHES FOR REDUCED PLANS 0 1 2 3

UNIT: 3578
PROJECT NUMBER & PHASE: 02000002621
CONTRACT NO.: 02-360701

DISREGARD PRINTS BEARING EARLIER REVISION DATES

REVISION DATES: 2-2-12 10-17-12 9-5-13 2-14-13

SHEET 12 OF 16

FILE => 06-0049-f-slab-bent-04.dgn

USERNAME => s124496 DATE PLOTTED => 18-JUN-2013 TIME PLOTTED => 12:54

| DIST | COUNTY | ROUTE | POST MILES TOTAL PROJECT | SHEET No. | TOTAL SHEETS |
|---|---|---|---|---|---|
| 02 | Sha | 299 | 30.3/40.7 | 347 | 366 |

PROFESSIONAL GEOLOGIST — DATE 9-24-12

6-17-13
PLANS APPROVAL DATE

PROFESSIONAL GEOLOGIST — Joseph Kaump — No. 7873 — Exp. 1-31-13 — STATE OF CALIFORNIA

*The State of California or its officers or agents shall not be responsible for the accuracy or completeness of electronic copies of this plan sheet.*

This LOTB sheet was prepared in accordance with the Caltrans Soil & Rock Logging, Classification, & Presentation Manual (2010 Edition).

See 2010 Standard Plans A10F and A10G for Soil Legend, and A10H for Rock Legend.

## BENCH MARK

CP 3450
Fnd Rebar/Cap
25.192' Rt Sta 238+11.656
"CL1" Line
Elev 573.27'
NAVD88

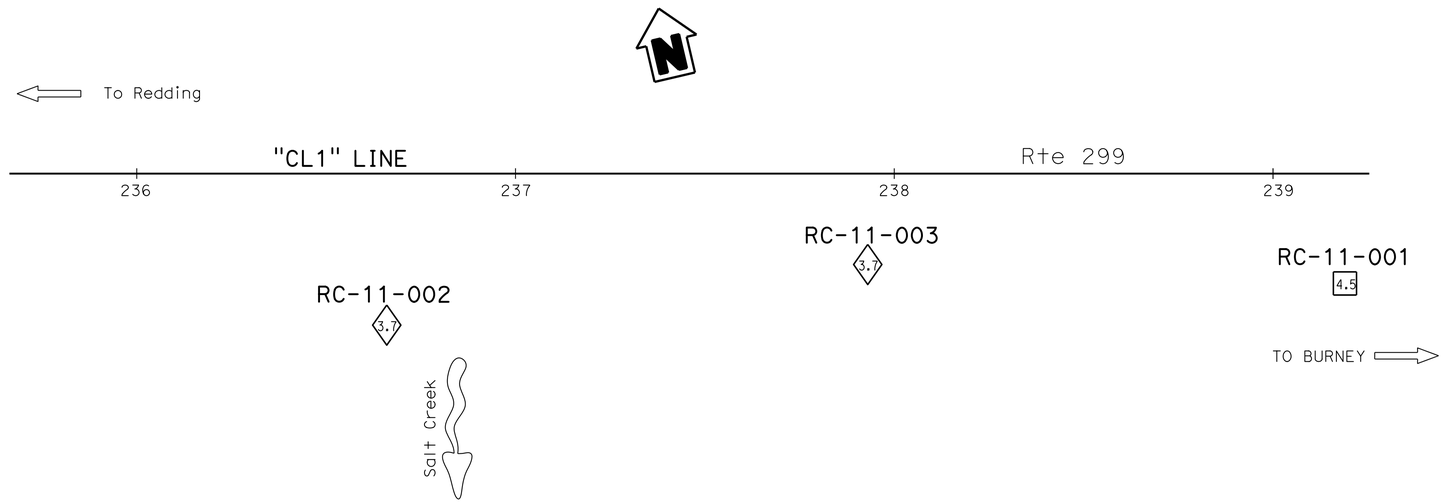


PLAN
1" = 20'

Note:
1. Groundwater present but not measured in Borings RC-11-002 and RC-11-003.
2. At time of subsurface investigation, groundwater encountered at rock/soil boundary.

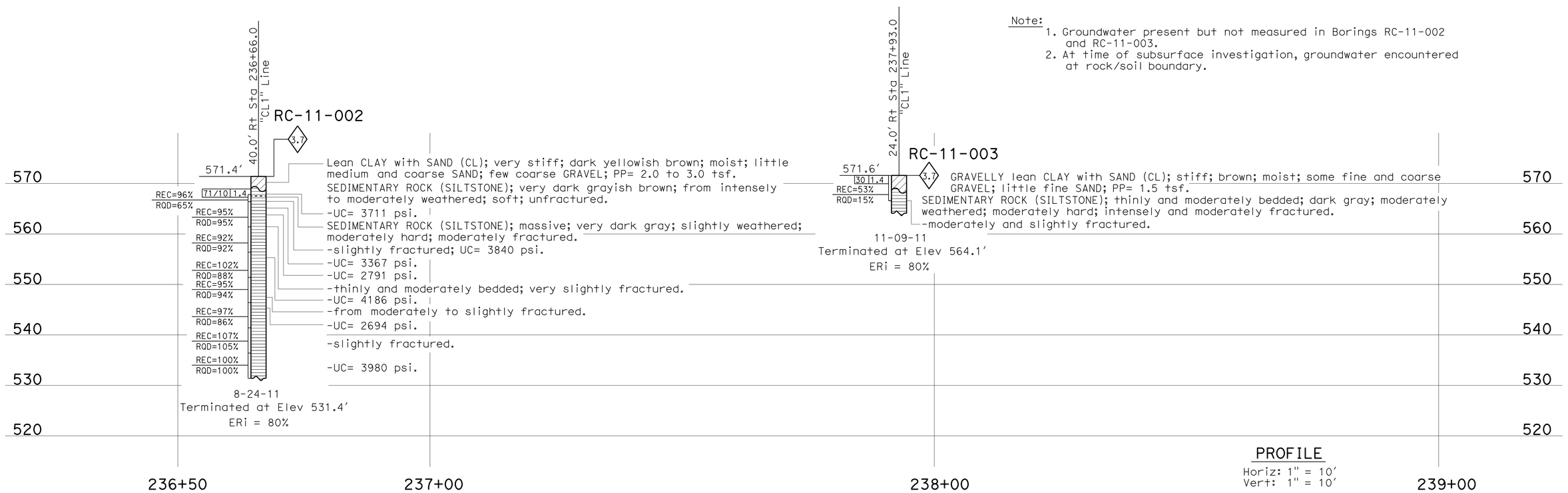


PROFILE
Horiz: 1" = 10'
Vert: 1" = 10'

| ENGINEERING SERVICES | MATERIALS AND GEOTECHNICAL SERVICES | STATE OF CALIFORNIA DEPARTMENT OF TRANSPORTATION | DIVISION OF ENGINEERING SERVICES STRUCTURE DESIGN DESIGN BRANCH 3 | BRIDGE NO. 06-0049 POST MILE 34.5 | SALT CREEK BRIDGE (WIDEN) LOG OF TEST BORINGS 1 OF 4 |
|---|---|---|---|---|---|
| FUNCTIONAL SUPERVISOR NAME: R. Buell | DRAWN BY: F. Nguyen CHECKED BY: X. Zheng | FIELD INVESTIGATION BY: J. Kaump | | | |

OGS CIVIL LOG OF TEST BORINGS SHEET

ORIGINAL SCALE IN INCHES FOR REDUCED PLANS 0 1 2 3

UNIT: 3643
PROJECT NUMBER & PHASE: 02000002621 CONTRACT NO.: 02-360701

DISREGARD PRINTS BEARING EARLIER REVISION DATES

REVISION DATES: 03-14-13 09-20-12 09-24-12 — SHEET 13 OF 16

FILE => 06-0049-z-1tb-1of4.dgn

USERNAME => s124496 DATE PLOTTED => 18-JUN-2013 TIME PLOTTED => 12:54

| DIST | COUNTY | ROUTE | POST MILES TOTAL PROJECT | SHEET No. | TOTAL SHEETS |
|---|---|---|---|---|---|
| 02 | Sha | 299 | 30.3/40.7 | 348 | 366 |

PROFESSIONAL GEOLOGIST — DATE 9-24-12

PROFESSIONAL GEOLOGIST — Joseph kaump — No. 7873 — Exp. 01-31-13 — STATE OF CALIFORNIA

6-17-13
PLANS APPROVAL DATE

*The State of California or its officers or agents shall not be responsible for the accuracy or completeness of electronic copies of this plan sheet.*

This LOTB sheet was prepared in accordance with the Caltrans Soil & Rock Logging, Classification, & Presentation Manual (2010 Edition).

See 2010 Standard Plans A10F and A10G for Soil Legend, and A10H for Rock Legend.

FOR PLAN VIEW, SEE
"LOG OF TEST BORINGS 1 OF 4"

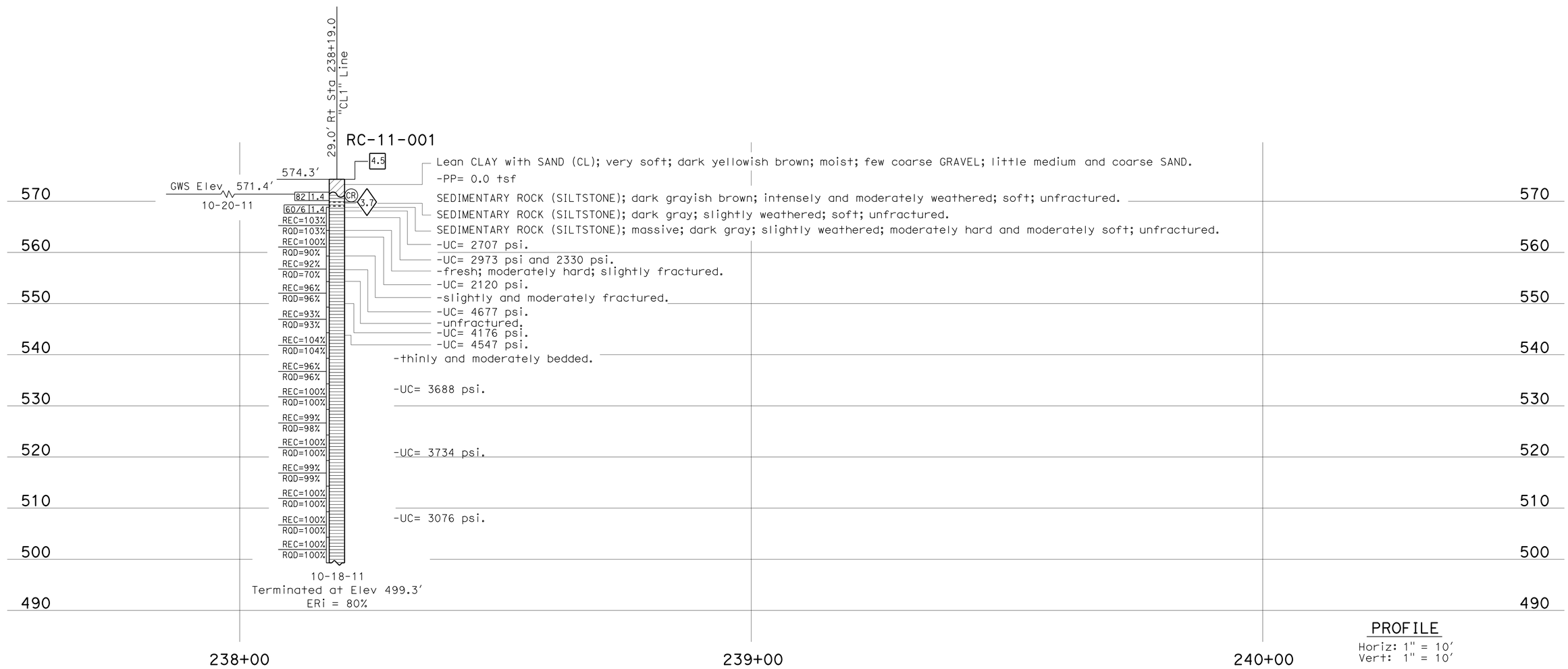


| ENGINEERING SERVICES | MATERIALS AND GEOTECHNICAL SERVICES | STATE OF CALIFORNIA DEPARTMENT OF TRANSPORTATION | DIVISION OF ENGINEERING SERVICES STRUCTURE DESIGN DESIGN BRANCH 3 | BRIDGE NO. 06-0049 POST MILE 34.5 | SALT CREEK BRIDGE (WIDEN) LOG OF TEST BORINGS 2 OF 4 |
|---|---|---|---|---|---|
| FUNCTIONAL SUPERVISOR NAME: R. Buell | DRAWN BY: F. Nguyen CHECKED BY: X. Zheng | FIELD INVESTIGATION BY: J. Kaump | | | |

OGS CIVIL LOG OF TEST BORINGS SHEET

ORIGINAL SCALE IN INCHES FOR REDUCED PLANS 0 1 2 3

UNIT: 3643
PROJECT NUMBER & PHASE: 02000002621 CONTRACT NO.: 02-360701

DISREGARD PRINTS BEARING EARLIER REVISION DATES → REVISION DATES 03-14-12 09-20-12 09-24-12 SHEET 14 OF 16

FILE => 06-0049-z-lltb-2of4.dgn

USERNAME => s124496 DATE PLOTTED => 18-JUN-2013 TIME PLOTTED => 12:54

| DIST. | COUNTY | ROUTE | POST MILES—TOTAL PROJECT | SHEET No. | TOTAL SHEETS |
|---|---|---|---|---|---|
| 02 | Sha | 299 | 31.3/31.6,34.4/35.0 | 28 | 28 |

BRIDGE ENGINEER — REGISTERED CIVIL ENGINEER NO. 9585

DATE APPROVED February 13, 1968

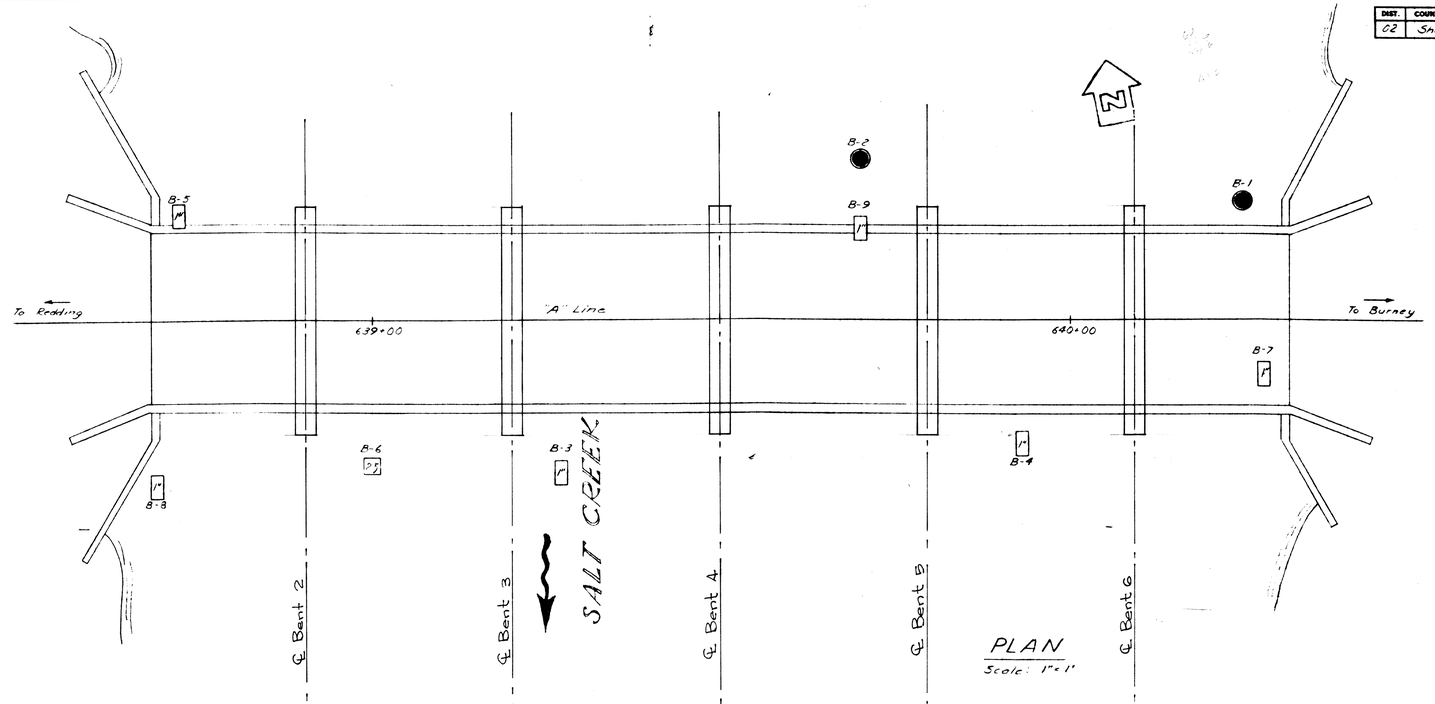


PLAN
Scale: 1"=1'

BM "T"
T bar in fence line 53' Rt
P639+82
Elev 572.51

BM "A"
Chis "O" tag Lt side Abut #1
upstr & Ft. Abut. & WW
Elev 579.92

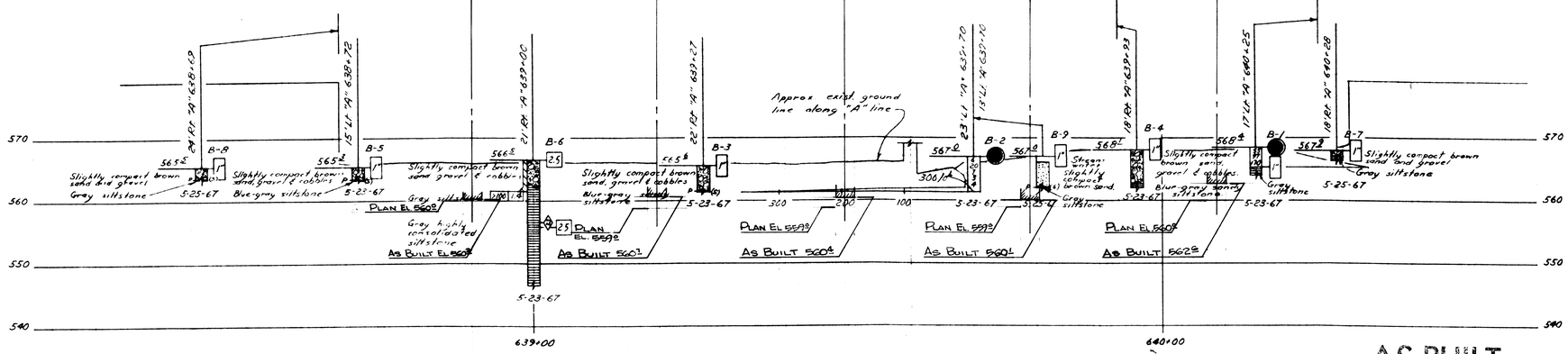


PROFILE
Scale: 1"=10'

NO GROUND WATER ENCOUNTERED DURING THIS INVESTIGATION BY BRIDGE DEPT. GEOLOGY SECTION
DATE 5/67

TO ACCOMPANY PLANS DATED 6-17-13

DIVISION OF ENGINEERING SERVICES - MATERIALS AND GEOTECHNICAL SERVICES

As-Built Log of Test Borings sheet is considered an informational document only. As such, the State of California registration seal with signature, license number and registration certificate expiration date confirm that this is a true and accurate copy of the original document. It does not attest to the accuracy or validity of the information contained in the original document. This drawing is available and presented only for the convenience of any bidder, contractor or other interested party.

| DIST. | COUNTY | ROUTE | POST MILE-TOTAL PROJECT | Sheet No. | Total Sheets |
|---|---|---|---|---|---|
| 02 | Sha | 299 | 30.3/40.7 | 349 | 366 |

PROFESSIONAL GEOLOGIST — DATE 9/20/12

PROFESSIONAL GEOLOGIST — Joseph Kaump — No. 7837 — Exp. 1-31-13 — STATE OF CALIFORNIA

**SALT CREEK BRIDGE (WIDENING)**

**LOG OF TEST BORINGS 3 OF 4**

| UNIT: 3643 | CONTRACT No. | BRIDGE No. |
|---|---|---|
| PROJ. No. & PHASE: 02000002621 | 02-360701 | 06-0049 |

AS-BUILT VERT DATUM: MSL CONVERSION: + 3.4 feet — Sheet 15 of 16

NOTE: A COPY OF THIS LOG OF TEST BORINGS IS AVAILABLE AT OFFICE OF STRUCTURE MAINTENANCE AND INVESTIGATIONS, SACRAMENTO, CALIFORNIA

AS BUILT
CORRECTIONS BY B. Statton
CONTRACT NO. 14-067104
DATE Oct. 31, 1968

STATE OF CALIFORNIA
TRANSPORTATION AGENCY
DEPARTMENT OF PUBLIC WORKS
DIVISION OF HIGHWAYS

SALT CREEK

**LOG OF TEST BORINGS**

| BRIDGE NO. | POST MILE | DRAWING NO. | SHEET | OF |
|---|---|---|---|---|
| 6-49 | 34.6 | 0649-8 | 9 | 9 |

REVISION DATES (PRELIMINARY STAGE ONLY)

LEGEND OF BORING OPERATIONS

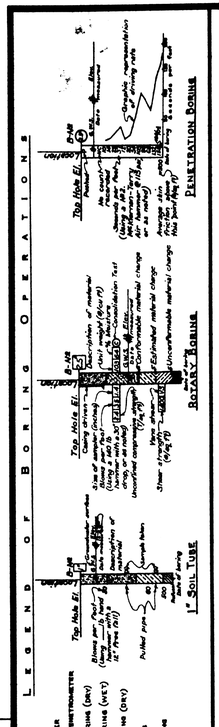


PENETROMETER
24" CORE PENETROMETER
SAMPLER BORING (DRY)
ROTARY BORING (WET)
AUGER BORING (DRY)
JET BORING
CORE BORING
TEST PIT

LEGEND OF EARTH MATERIALS

GRAVEL — SAND — SILT — CLAY — SANDY CLAY OR CLAYEY SAND — SANDY SILT OR SILTY SAND — SILTY CLAY OR CLAYEY SILT — PEAT AND ORGANIC MATTER — FILL MATERIAL — IGNEOUS ROCK — SEDIMENTARY ROCK — METAMORPHIC ROCK

CLASSIFICATION OF MATERIAL BASED ON STANDARD GRADE SIZE LIMITS

DIAGRAM SHOWING THE BASIS FOR ESTIMATES OF GRADE SIZE DISTRIBUTION USED IN DETERMINATION OF CLASS NAMES.
IT IS ALSO ACCEPTABLE AND APPROPRIATE TO ADD TO THE CLASS NAME, VIZ. "GRAVELLY" OR "SANDY" OR "SILTY" OR "CLAYEY", AMOUNTS THE TERMS "GRAVELLY" MAY BE ADDED TO THE CLASS NAME, VIZ. "COARSE", "MEDIUM", AND "FINE" WHEN USED TO DESCRIBE SAND, THE LARGEST SIEVE TO BE USED TO STANDARD GRADE SIZE LIMITS.

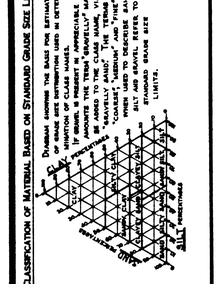


NOTE: Classification of earth material as shown on this sheet is based upon field inspection and is not to be construed to imply mechanical analysis.

| | | |
|---|---|---|
| FIELD STUDY | by Hoper | 5/67 |
| DRAWN | by Keller | 7/1/67 |
| CHECKED | by Hoper | 7/1/67 |

Approval Recommended by Robert D. Bryant Bridge Geologist

BRIDGE DEPARTMENT
ENGINEERING GEOLOGY SECTION

28

06-0049-z-1tb-3of4.tif

WO 067101
CU 02207

Disregard prints bearing earlier revision dates PR-649-2

| Dist. | County | Route | Section | Sheet No. | Total Sheets |
|---|---|---|---|---|---|
| II | Sha | 28 | A | 2 | 3 |

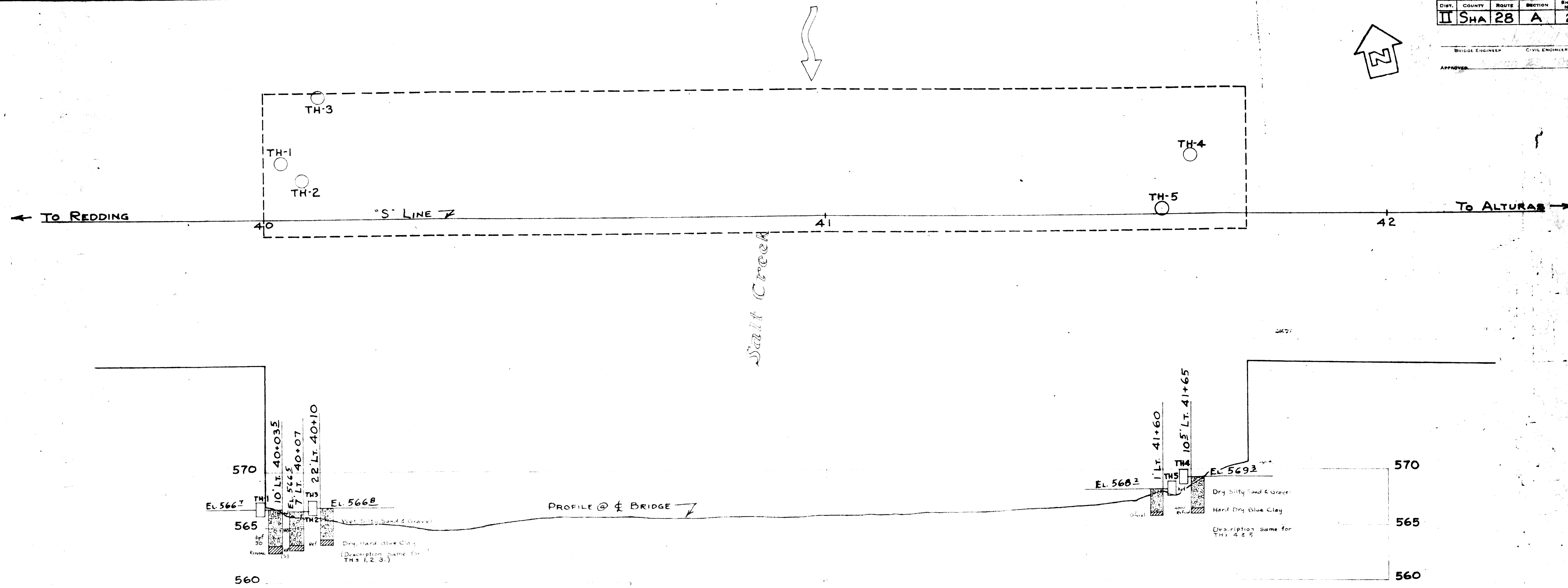


B.M.
Top Conc. Deck
℄ Bridge, E. End
Elev. 579.50
(Assumed)

TO ACCOMPANY, PLANS DATED 6-17-13

**DIVISION OF ENGINEERING SERVICES - MATERIALS AND GEOTECHNICAL SERVICES**

As-Built Log of Test Borings sheet is considered an informational document only. As such, the State of California registration seal with signature, license number and registration certificate expiration date confirm that this is a true and accurate copy of the original document. It does not attest to the accuracy or validity of the information contained in the original document. This drawing is available and presented only for the convenience of any bidder, contractor or other interested party.

| DIST. | COUNTY | ROUTE | POST MILE-TOTAL PROJECT | Sheet No. | Total Sheets |
|---|---|---|---|---|---|
| 02 | Sha | 299 | 30.3/40.7 | 350 | 366 |

Professional Geologist Joseph Kaump No. 7837 Exp. 1-31-13 State of California

PROFESSIONAL GEOLOGIST — DATE 9/20/12

**SALT CREEK BRIDGE (WIDENING)**

**LOG OF TEST BORINGS 4 OF 4**

UNIT: 3643
PROJ. No. & PHASE: 02000002621
CONTRACT No.: 02-360701
BRIDGE No.: 06-0049

AS-BUILT VERT DATUM: N/A CONVERSION: N/A — Sheet 16 of 16

NOTE: A COPY OF THIS LOG OF TEST BORINGS IS AVAILABLE AT OFFICE OF STRUCTURE MAINTENANCE AND INVESTIGATIONS, SACRAMENTO, CALIFORNIA

## Classification of Material Based on Standard Grade Size Limits

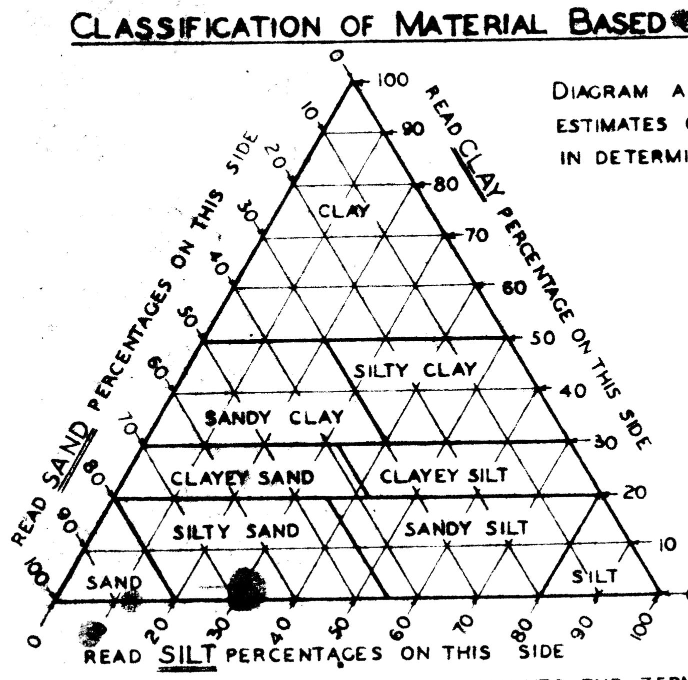


Diagram and table showing the basis for estimates of grade size distribution used in determination of class names.

| Class Name | Percentage of Sizes Present: Sand | Silt | Clay |
|---|---|---|---|
| Sand | 80-100 | 0-20 | 0-20 |
| Silty Sand | 45-80 | 0-55 | 0-20 |
| Sandy Silt | 0-45 | 35-80 | 0-20 |
| Silt | 0-20 | 80-100 | 0-20 |
| Clayey Sand | 38-80 | 0-42 | 20-30 |
| Clayey Silt | 0-38 | 32-80 | 20-30 |
| Sandy Clay | 30-70 | 0-40 | 30-50 |
| Silty Clay | 0-30 | 20-70 | 30-50 |
| Clay | 0-50 | 0-50 | 50-100 |

Table title: Grouping Used in Triangular Classification

If gravel is present in appreciable amounts the term "Gravelly" may be added to the class name, vis. "Gravelly sand." The terms "Coarse," "Medium" and "Fine" when used to describe Gravel, Sand and Silt refer to Standard Grade Size limits.

## Legend of Boring Operations

- Plan of any boring
- 1" Sampler boring
- Rotary wash boring
- 1" Closed sampler driven
- Core boring
- 2½" Penetrometer driven
- 1⅜" Sampler boring
- 2" to 5" Auger boring
- 6" to 20" Auger boring
- Casing driven
- Jet boring
- (S) Sample taken
- 1⅝" A-Rod driven
- 2¼" Cone Penetrometer

The appropriate boring symbols designating the method of operation are shown at the upper right-hand corner of the respective boring. Where tool changes were made during the boring operation symbols are shown at the point of change.

## Legend of Earth Materials

- Gravel—G
- Sand—S
- Silt—Si
- Clay—C
- Silty Sand—S S
- Clayey Sand—C S
- Sandy Silt—S Si
- Clayey Silt—C Si
- Sandy Clay—SC
- Silty Clay—Si C
- Peat 80% Organic Clay—O
- Sandstone—SS
- Shale—Sh
- Broken Rock (Fragments)—Br
- Rock—R
- Fill Material

## Abbreviations

| | |
|---|---|
| El. 69.4 | Elevation of ground at test hole |
| bpf | Blows per foot—(see note above) |
| P | Pulled pipe |
| M | Moisture as % dry weight |
| El. 64.3 6-12-49 | Elevation of ground water and date |

MICROFILMED

## Notes

The contractor's attention is directed to Section 2, Article (c) of the Standard Specifications and to the Special Provisions accompanying this set of plans.

Classification of earth material as shown on this sheet is based upon field inspection and is not to be construed to imply mechanical analysis.

**BRIDGE ACROSS SALT CREEK**

**LOG OF TEST BORINGS**

SCALE: Horz. 1" = 10', Vert. 1" = 5'
FILE No.
BRIDGE No. 6-49
DRAWING No.

PREL. DRAWING NO. P 568 16

06-0049-z-ltb-4of4.tif

| DIST | COUNTY | ROUTE | POST MILES TOTAL PROJECT | SHEET No. | TOTAL SHEETS |
|---|---|---|---|---|---|
| 02 | Sha | 299 | 30.3/40.7 | 351 | 366 |

REGISTERED CIVIL ENGINEER 2-14-13 DATE

6-17-13
PLANS APPROVAL DATE

REGISTERED PROFESSIONAL ENGINEER
Lewis L Shen
No. 56921
Exp. 6-30-13
CIVIL
STATE OF CALIFORNIA

*The State of California or its officers or agents shall not be responsible for the accuracy or completeness of electronic copies of this plan sheet.*

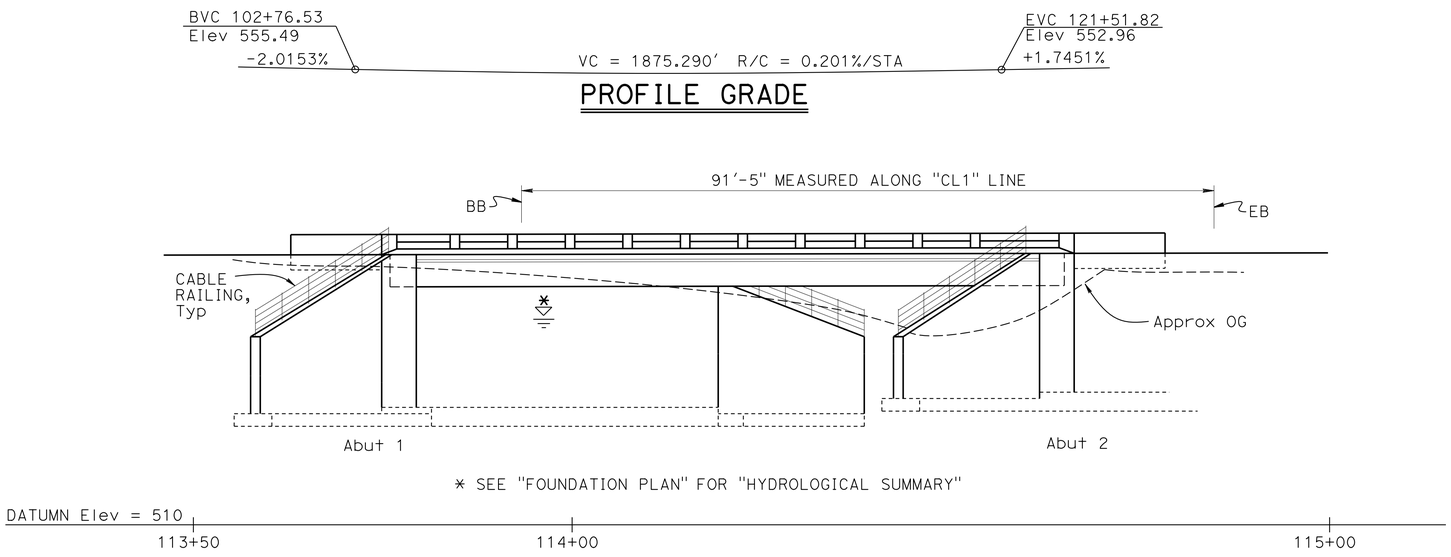


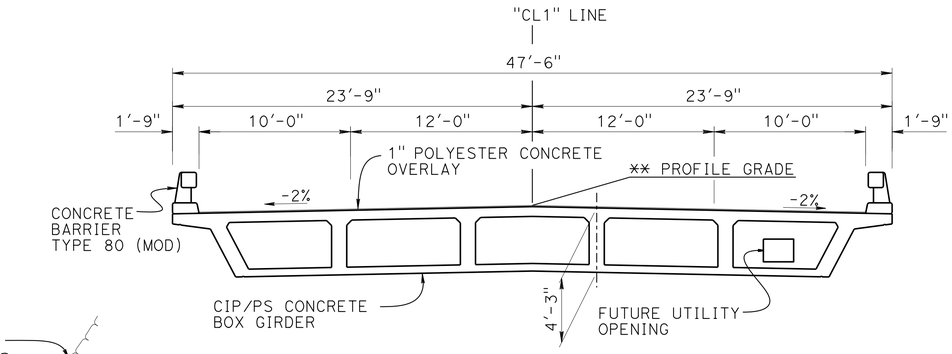


## TYPICAL SECTION

1" = 5'

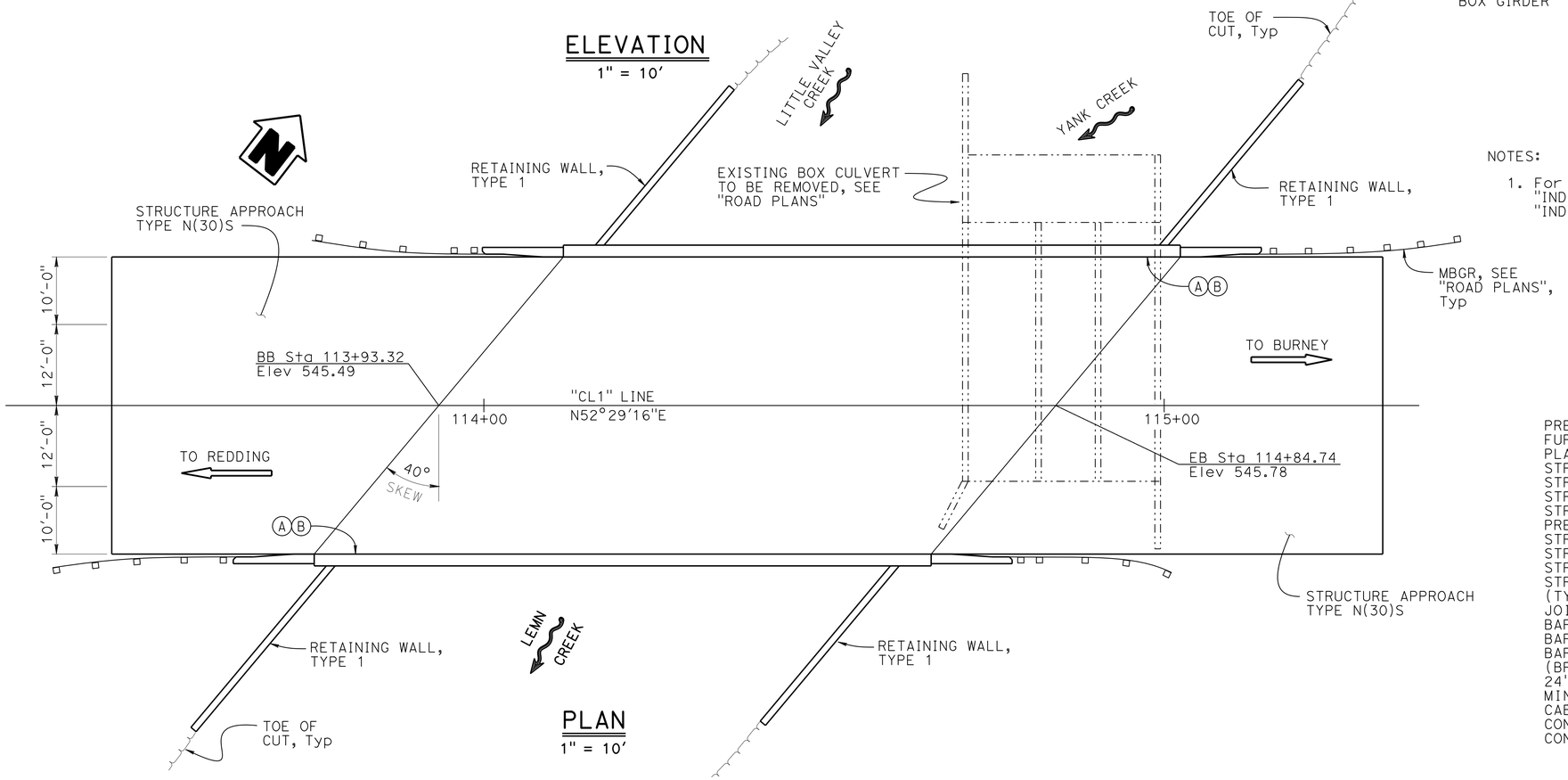


NOTES:

1. For "GENERAL NOTES" and "INDEX TO PLANS" see "INDEX TO PLANS" sheet

NOTES:

(A) Paint "BRIDGE NO. 06-0211"
(B) Paint "LEMN CREEK BRIDGE"

LEGEND:

-·-·- Indicates Existing Structure
——— Indicates New Structure
** Top of polyester overlay shall match the profile grade

QUANTITIES

| | | |
|---|---|---|
| PREPARE CONCRETE BRIDGE DECK SURFACE | 4,024 | SQFT |
| FURNISH POLYESTER CONCRETE OVERLAY | 336 | CF |
| PLACE POLYESTER CONCRETE OVERLAY | 4,024 | SQFT |
| STRUCTURE EXCAVATION (TYPE D) | 1,275 | CY |
| STRUCTURE EXCAVATION (RETAINING WALL) | 1,052 | CY |
| STRUCTURE BACKFILL (BRIDGE) | 655 | CY |
| STRUCTURE BACKFILL (RETAINING WALL) | 814 | CY |
| PRESTRESSING CAST-IN-PLACE CONCRETE | LUMP | SUM |
| STRUCTURAL CONCRETE, BRIDGE FOOTING | 124 | CY |
| STRUCTURAL CONCRETE, BRIDGE | 535 | CY |
| STRUCTURAL CONCRETE, RETAINING WALL | 238 | CY |
| STRUCTURAL CONCRETE, APPROACH SLAB (TYPE N) | 158 | CY |
| JOINT SEAL (MR 1") | 117 | LF |
| BAR REINFORCING STEEL (BRIDGE) | 67,015 | LB |
| BAR REINFORCING STEEL (RETAINING WALL) | 41,620 | LB |
| BAR REINFORCING STEEL (EPOXY COATED) (BRIDGE) | 39,675 | LB |
| 24" WELDED STEEL PIPE CASING (BRIDGE) | 107 | LF |
| MINOR CONCRETE (GUTTER) (LF) | 124 | LF |
| CABLE RAILING | 124 | LF |
| CONCRETE BARRIER (TYPE 80)(MODIFIED) | 256 | LF |
| CONCRETE BARRIER (TYPE 732B)(MODIFIED) | 48 | LF |

Joseph E Downing
DESIGN ENGINEER

| | BY | CHECKED |
|---|---|---|
| DESIGN | Sharon Yen | Quang Nguyen |
| DETAILS | Jay Reid | Quang Nguyen |
| QUANTITIES | Quang Nguyen | Pyo Hong |

LOAD & RESISTANCE FACTOR DESIGN — LIVE LOADING: HL93 W/"LOW-BOY": PERMIT DESIGN VEHICLE

| | BY | CHECKED |
|---|---|---|
| LAYOUT | Sharon Yen | Quang Nguyen |
| SPECIFICATIONS | Dave Klein | PLANS AND SPECS COMPARED Dave Klein |

ORIGINAL SCALE IN INCHES FOR REDUCED PLANS 0 1 2 3

STATE OF CALIFORNIA
DEPARTMENT OF TRANSPORTATION

DIVISION OF ENGINEERING SERVICES
STRUCTURE DESIGN
DESIGN BRANCH 3

BRIDGE NO. 06-0211
POST MILE 32.3

# LEMN CREEK BRIDGE
# GENERAL PLAN

UNIT: 3578
PROJECT NUMBER & PHASE: 02000002621
CONTRACT NO.: 02-360701

DISREGARD PRINTS BEARING EARLIER REVISION DATES

REVISION DATES: 1-13-12 1-30-12 7-24-12 2-14-13

SHEET 1 OF 16

STRUCTURES DESIGN GENERAL PLAN SHEET (ENGLISH) (REV.09-01-10)

FILE => 06-0211-a-gp01.dgn

USERNAME => s124436 DATE PLOTTED => 18-JUN-2013 TIME PLOTTED => 13:15

| DIST | COUNTY | ROUTE | POST MILES TOTAL PROJECT | SHEET No. | TOTAL SHEETS |
|---|---|---|---|---|---|
| 02 | Sha | 299 | 30.3/40.7 | 352 | 366 |

REGISTERED CIVIL ENGINEER 2-14-13 DATE

6-17-13
PLANS APPROVAL DATE

REGISTERED PROFESSIONAL ENGINEER Lewis L Shen No. 56921 Exp. 6-30-13 CIVIL STATE OF CALIFORNIA

*The State of California or its officers or agents shall not be responsible for the accuracy or completeness of electronic copies of this plan sheet.*

Structural Concrete, Bridge
Structural Concrete, Bridge Footing
Structural Concrete, Retaining Wall
Structural Concrete, Bridge (4.0 ksi at 28 days)

## CONCRETE STRENGTH AND TYPE LIMITS

No Scale

## GENERAL NOTES

### LOAD AND RESISTANCE FACTOR DESIGN

**DESIGN:**
AASHTO LRFD Bridge Design Specifications, 4th Edition with California Amendments

**SEISMIC DESIGN:**
Caltrans Seismic Design Criteria (SDC), Version 1.6 dated June 2006

**LIVE LOADING:**
HL93 and permit design load

**SEISMIC LOADING:**
See "SITE SPECIFIC ARS CURVE"

**REINFORCED CONCRETE:**
fy = 60 ksi
f'c = 3.6 ksi
n = 8
See prestressing notes.

## ACCELERATION RESPONSE SPECTRUM

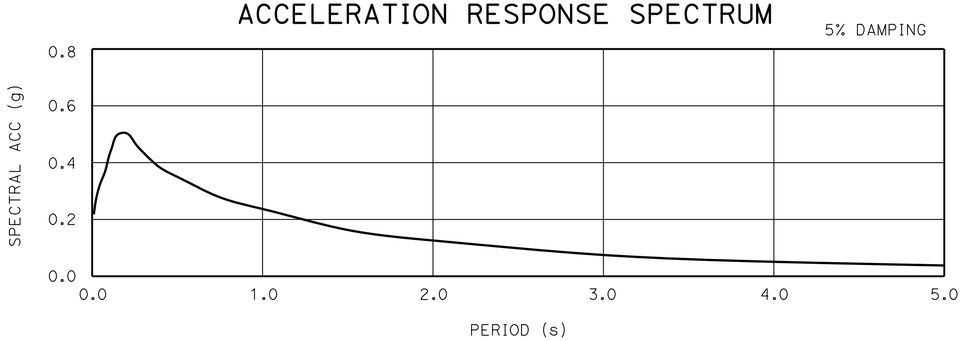


## SITE SPECIFIC ARS CURVE

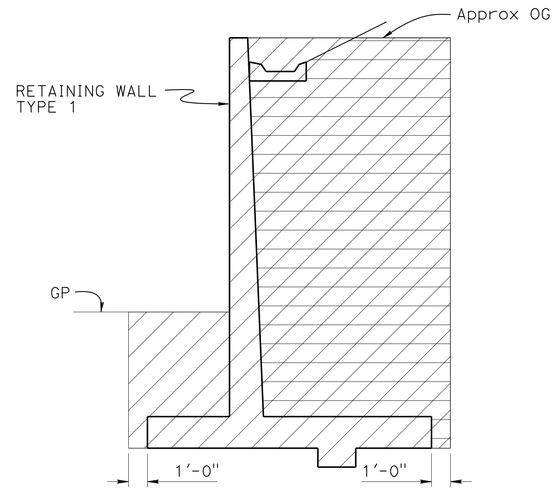


NOTES:
1. TYPE 1 RETAINING WALL SHOWN, ABUTMENT SIMILAR

INDICATES STRUCTURE EXCAVATION (TYPE D)

INDICATES STRUCTURE BACKFILL

## EXCAVATION & BACKFILL

NO SCALE

## SPREAD FOOTING DATA

| SUPPORT LOCATION | WORKING STRESS DESIGN (WSD) | |
|---|---|---|
| | PERMISSIBLE GROSS CONTACT STRESS (SETTLEMENT) (ksf) | ALLOWABLE GROSS BEARING CAPACITY (ksf) |
| Abut 1 | 10 | 10 |
| Abut 2 | 10 | 10 |

## INDEX TO PLANS


| SHEET NO. | TITLE |
|---|---|
| 1 | GENERAL PLAN |
| 2 | INDEX TO PLANS |
| 3 | DECK CONTOURS |
| 4 | FOUNDATION PLAN |
| 5 | ABUTMENT DETAILS NO. 1 |
| 6 | ABUTMENT DETAILS NO. 2 |
| 7 | ABUTMENT DETAILS NO. 3 |
| 8 | ABUTMENT DETAILS NO. 4 |
| 9 | ABUTMENT DETAILS NO. 5 |
| 10 | TYPICAL SECTION |
| 11 | GIRDER LAYOUT |
| 12 | GIRDER DETAILS |
| 13 | MISCELLANEOUS DETAILS |
| 14 | STRUCTURE APPROACH TYPE N(30S) |
| 15 | STRUCTURE APPROACH DRAINAGE DETAILS |
| 16 | LOG OF TEST BORINGS |


## STANDARD PLANS DATED 2010


| | |
|---|---|
| A10A | ABBREVIATIONS (SHEET 1 OF 2) |
| A10B | ABBREVIATIONS (SHEET 2 OF 2) |
| A10C | LINES AND SYMBOLS (SHEET 1 OF 3) |
| A10D | LINES AND SYMBOLS (SHEET 2 OF 3) |
| A10E | LINES AND SYMBOLS (SHEET 3 OF 3) |
| A10F | LEDGEND - SOIL (SHEET 1 OF 2) |
| A10G | LEDGEND - SOIL (SHEET 2 OF 2) |
| A10H | LEDGEND - ROCK |
| A62C | LIMITS OF PAYMENT FOR EXCAVATION AND BACKFILL BRIDGE |
| B0-1 | BRIDGE DETAILS |
| B0-3 | BRIDGE DETAILS |
| B0-5 | BRIDGE DETAILS |
| B0-13 | BRIDGE DETAILS |
| RSP B3-1A | RETAINING WALL TYPE 1 (CASE 1) |
| B3-6 | RETAINING WALL DETAILS No. 2 |
| B6-21 | JOINT SEALS (MAXIMUM MOVEMENT RATING = 2") |
| B7-1 | BOX GIRDER DETAILS |
| B7-10 | UTILITY OPENING BOX GIRDER |
| B8-5 | CAST -IN-PLACE PRESTRESSED GIRDER DETAILS |
| RSP B11-47 | CABLE RAILING |
| B11-55 | CONCRETE BARRIER TYPE 732 |
| RSP B11-60 | CONCRETE BARRIER TYPE 80 (1 OF 2) |


STANDARD PLAN SHEET NO.
DETAIL NO.

| | BY | CHECKED |
|---|---|---|
| DESIGN | Sharon Yen | Quang Nguyen |
| DETAILS | Jay Reid | Quang Nguyen |
| QUANTITIES | Quang Nguyen | Pyo Hong |

STATE OF CALIFORNIA
DEPARTMENT OF TRANSPORTATION

DIVISION OF ENGINEERING SERVICES
STRUCTURE DESIGN
DESIGN BRANCH 3

BRIDGE NO. 06-0211
POST MILE 32.3

# LEMN CREEK BRIDGE
# INDEX TO PLANS

STRUCTURES DESIGN DETAIL SHEET (ENGLISH) (REV. 09-01-10)

ORIGINAL SCALE IN INCHES FOR REDUCED PLANS 0 1 2 3

UNIT: 3578
PROJECT NUMBER & PHASE: 02000002621
CONTRACT NO.: 02-360701

DISREGARD PRINTS BEARING EARLIER REVISION DATES

REVISION DATES: 1-19-12 2-1-12 7-24-12 2-14-13

SHEET 2 OF 16

FILE => 06-0211-a-itp.dgn

USERNAME => s124496 DATE PLOTTED => 18-JUN-2013 TIME PLOTTED => 13:15

| DIST | COUNTY | ROUTE | POST MILES TOTAL PROJECT | SHEET No. | TOTAL SHEETS |
|---|---|---|---|---|---|
| 02 | Sha | 299 | 30.3/40.7 | 353 | 366 |

REGISTERED CIVIL ENGINEER 2-14-13 DATE

6-17-13
PLANS APPROVAL DATE

REGISTERED PROFESSIONAL ENGINEER
Lewis L Shen
No. 56921
Exp. 6-30-13
CIVIL
STATE OF CALIFORNIA

*The State of California or its officers or agents shall not be responsible for the accuracy or completeness of electronic copies of this plan sheet.*

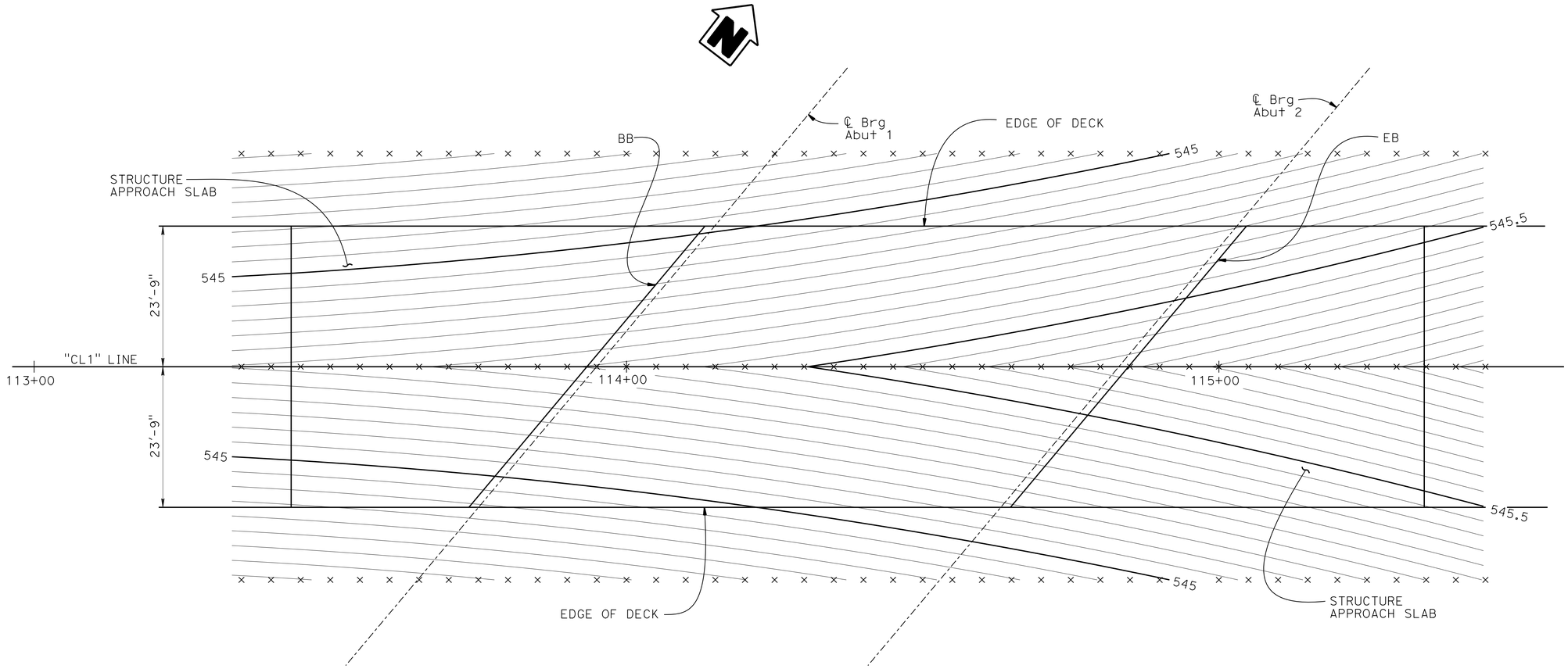


## DECK CONTOURS

1" = 10'

NOTES:

1. TOP OF POLYESTER CONCRETE OVERLAY SHALL MATCH THE PROFILE GRADE. THE CONTOURS SHOWN ARE FOR TOP OF CONCRETE DECK AND HAVE BEEN ADJUSTED BY LOWERING 1" FROM THE PROFILE GRADE
2. ADD 1" TO APPROACH SLAB ELEVATION TO MATCH PROFILE GRADE

LEGEND:

× = 5' INTERVALS ALONG STATION LINE
CONTOURS DO NOT INCLUDE CAMBER

| | BY | CHECKED |
|---|---|---|
| DESIGN | Sharon Yen | Quang Nguyen |
| DETAILS | Jay Reid | Quang Nguyen |
| QUANTITIES | Quang Nguyen | Pyo Hong |

STATE OF CALIFORNIA
DEPARTMENT OF TRANSPORTATION

DIVISION OF ENGINEERING SERVICES
STRUCTURE DESIGN
DESIGN BRANCH 3

BRIDGE NO. 06-0211
POST MILE 32.3

# LEMN CREEK BRIDGE
# DECK CONTOURS

STRUCTURES DESIGN DETAIL SHEET (ENGLISH) (REV. 09-01-10)

ORIGINAL SCALE IN INCHES FOR REDUCED PLANS 0 1 2 3

UNIT: 3578
PROJECT NUMBER & PHASE: 02000002621
CONTRACT NO.: 02-360701

DISREGARD PRINTS BEARING EARLIER REVISION DATES

REVISION DATES: 1-19-12 2-1-12 7-24-12 2-14-13

SHEET 3 OF 16

FILE => 06-0211-d-dc01.dgn

USERNAME => s124496 DATE PLOTTED => 18-JUN-2013 TIME PLOTTED => 13:15

| DIST | COUNTY | ROUTE | POST MILES TOTAL PROJECT | SHEET No. | TOTAL SHEETS |
|---|---|---|---|---|---|
| 02 | Sha | 299 | 30.3/40.7 | 354 | 366 |

REGISTERED CIVIL ENGINEER 2-14-13 DATE

6-17-13
PLANS APPROVAL DATE

REGISTERED PROFESSIONAL ENGINEER Lewis Shen No. 56921 Exp. 6-30-13 CIVIL STATE OF CALIFORNIA

*The State of California or its officers or agents shall not be responsible for the accuracy or completeness of electronic copies of this plan sheet.*

## CURVE DATA

| No. | R | Δ | T | L |
|---|---|---|---|---|
| (A) | 6000.00 | 07°32'03" | 395.06 | 788.98 |

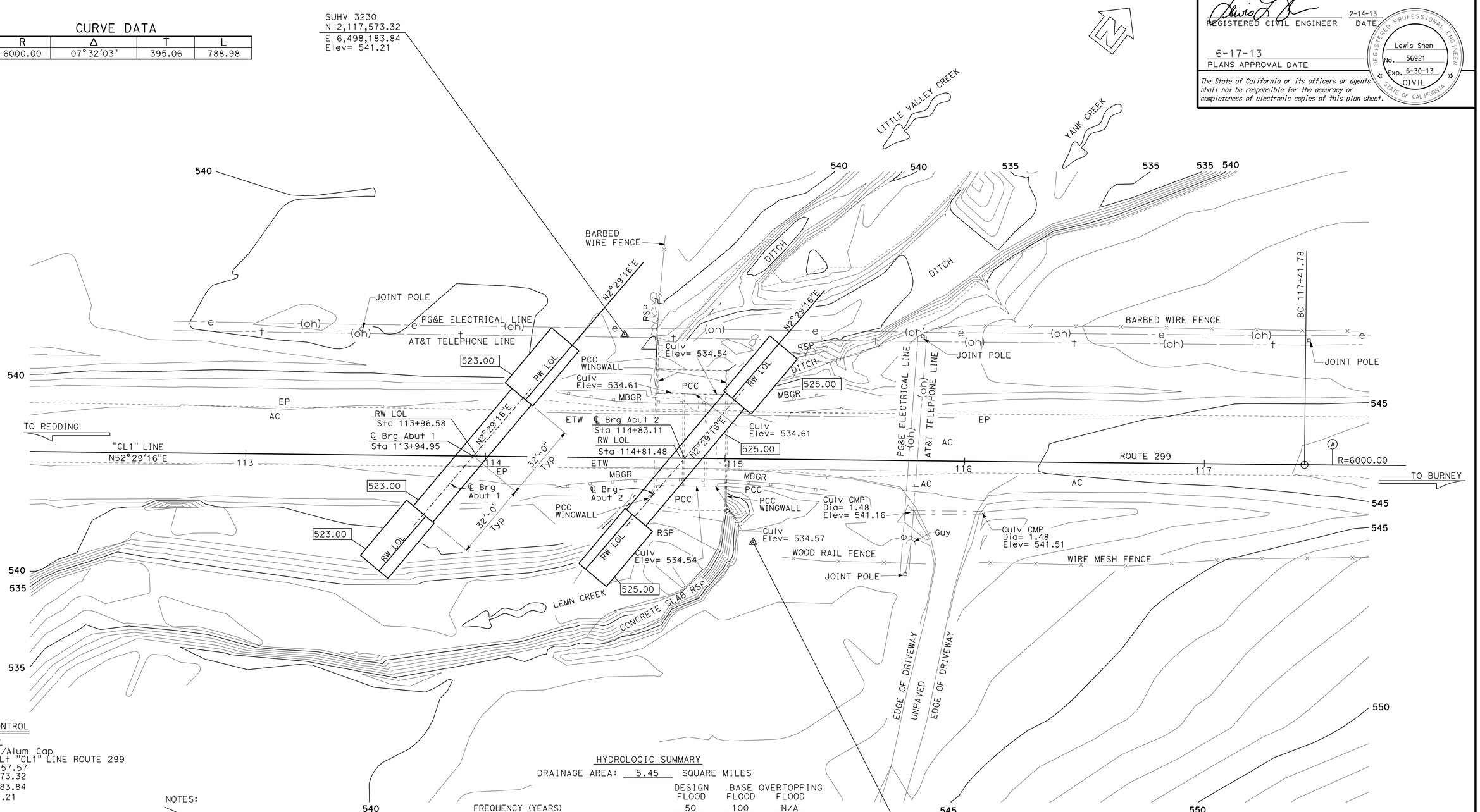


SURVEY CONTROL

SUHV 3230
Rebar & w/Alum Cap
51.39 Ft Lt "CL1" LINE ROUTE 299
Sta= 114+57.57
N 2,117,573.32
E 6,498,183.84
Elev= 541.21

PRHV 3225
Rebar & w/Alum Cap
34.79 Ft Rt "CL1" LINE ROUTE 299
Sta= 115+12.12
N 2,117,538.18
E 6,498,279.58
Elev= 542.53

NOTES:

▭ Denotes bottom of footing elevation

HYDROLOGIC SUMMARY

DRAINAGE AREA: 5.45 SQUARE MILES

| | DESIGN FLOOD | BASE FLOOD | OVERTOPPING FLOOD |
|---|---|---|---|
| FREQUENCY (YEARS) | 50 | 100 | N/A |
| DISCHARGE (CUBIC FEET PER SECOND) | 2150 | 2700 | N/A |
| WATER SURFACE ELEV. AT BRIDGE (FEET) | 538.7 | 539.5 | N/A |

FLOOD PLAIN DATA ARE BASED UPON INFORMATION AVAILABLE WHEN THE PLANS WERE PREPARED AND ARE SHOWN TO MEET FEDERAL REQUIREMENTS. THE ACCURACY OF SAID INFORMATION IS NOT WARRANTED BY THE STATE AND INTERESTED OR AFFECTED PARTIES SHOULD MAKE THEIR OWN INVESTIGATIONS.

PRELIMINARY INVESTIGATION SECTION

| SCALE | VERT.DATUM NAVD88 | PHOTOGRAMMETRY AS OF: X | | | |
|---|---|---|---|---|---|
| 1"=20' | HORZ.DATUM NAD83(92)(1991.35) | SURVEYED | BY DISTRICT | CHECKED | BY L. Lew 09/30/11 |
| ALIGNMENT TIES Dist. Traverse Sheet | | DRAFTED | BY J. Zhou 09/29/11 | CHECKED | BY T. Zolnikov 09/30/11 |

| | | |
|---|---|---|
| DESIGN | BY Sharon Yen | CHECKED Quang Nguyen |
| DETAILS | BY Jay Reid | CHECKED Quang Nguyen |
| QUANTITIES | BY Quang Nguyen | CHECKED Pyo Hong |

STATE OF CALIFORNIA
DEPARTMENT OF TRANSPORTATION

DIVISION OF ENGINEERING SERVICES
STRUCTURE DESIGN
DESIGN BRANCH 3

BRIDGE NO. 06-0211
POST MILE 32.3

# LEMN CREEK BRIDGE
# FOUNDATION PLAN

STRUCTURES FOUNDATION PLAN SHEET (ENGLISH) (REV. 09-01-10)

ORIGINAL SCALE IN INCHES FOR REDUCED PLANS 0 1 2 3

UNIT: 3578
PROJECT NUMBER & PHASE: 02000002620
CONTRACT NO.: 02-360701

DISREGARD PRINTS BEARING EARLIER REVISION DATES

REVISION DATES: 2-2-12 2-16-12 6-6-12 1-15-13

SHEET 4 OF 16

FILE => 06-0211-e-fp101.dgn

| DIST | COUNTY | ROUTE | POST MILES TOTAL PROJECT | SHEET No. | TOTAL SHEETS |
|---|---|---|---|---|---|
| 02 | Sha | 299 | 30.3/40.7 | 355 | 366 |

REGISTERED CIVIL ENGINEER 2-14-13 DATE

6-17-13
PLANS APPROVAL DATE

REGISTERED PROFESSIONAL ENGINEER Lewis L Shen No. 56921 Exp. 6-30-13 CIVIL STATE OF CALIFORNIA

*The State of California or its officers or agents shall not be responsible for the accuracy or completeness of electronic copies of this plan sheet.*

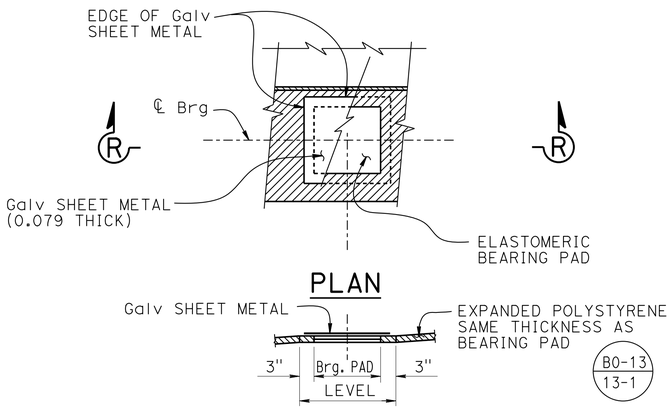


## SECTION R-R
## BEARING PAD DETAIL

NO SCALE
DETAILS TYPICAL AT ALL BEARING PADS

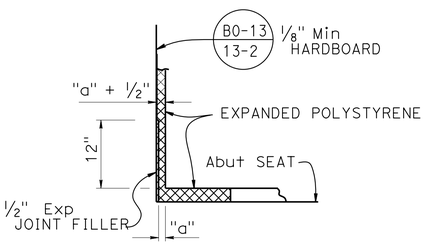


## DETAIL B

NO SCALE

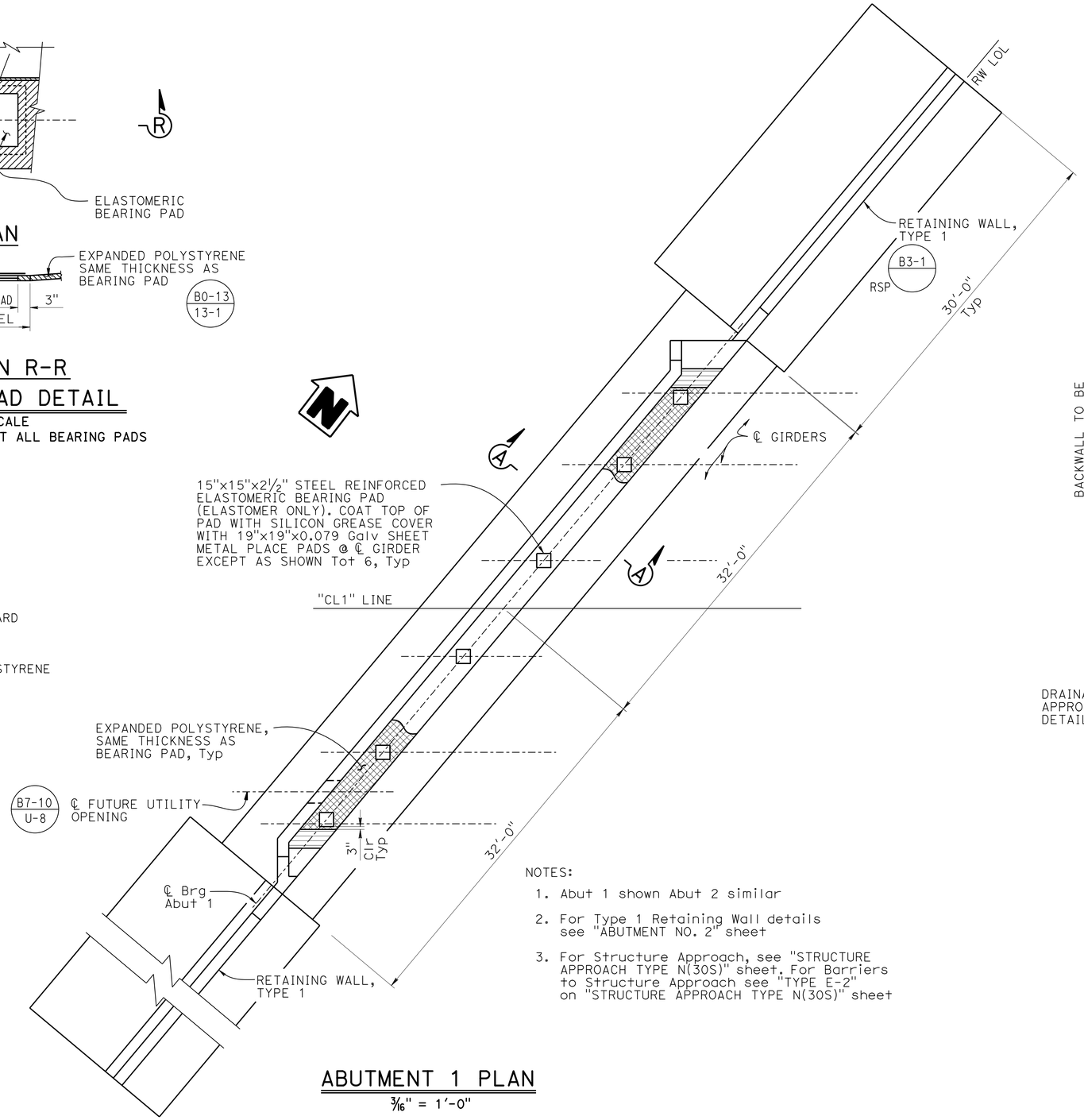


NOTES:

1. Abut 1 shown Abut 2 similar
2. For Type 1 Retaining Wall details see "ABUTMENT NO. 2" sheet
3. For Structure Approach, see "STRUCTURE APPROACH TYPE N(30S)" sheet. For Barriers to Structure Approach see "TYPE E-2" on "STRUCTURE APPROACH TYPE N(30S)" sheet

## ABUTMENT 1 PLAN

3/16" = 1'-0"

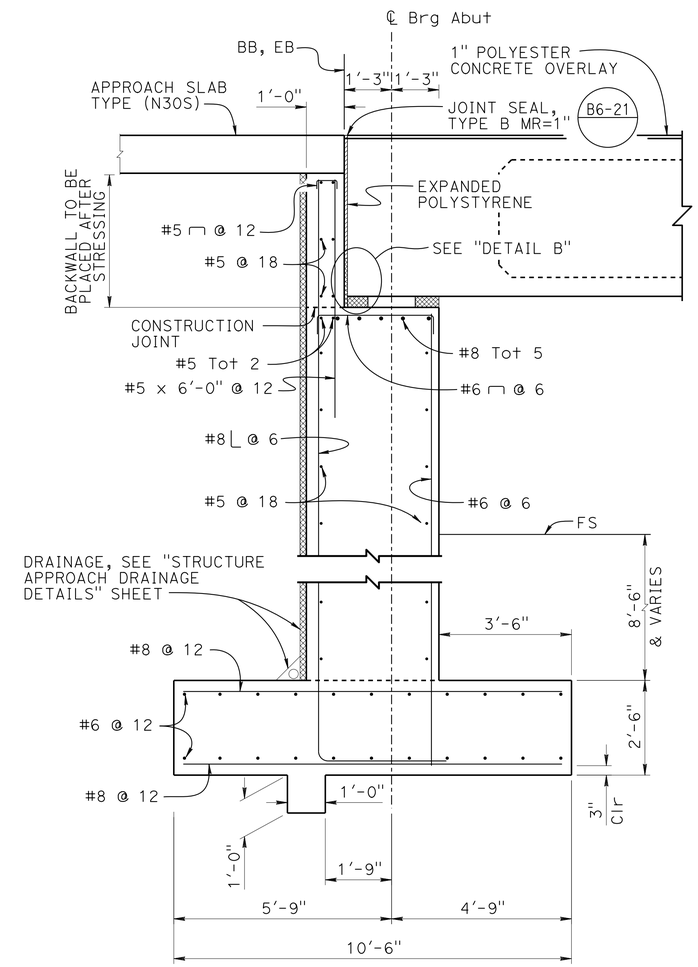


## SECTION A-A

½" = 1'-0"

| | | | |
|---|---|---|---|
| DESIGN | BY Sharon Yen | CHECKED Quang Nguyen | |
| DETAILS | BY Jay Reid | CHECKED Quang Nguyen | |
| QUANTITIES | BY Quang Nguyen | CHECKED Pyo Hong | |

STATE OF CALIFORNIA
DEPARTMENT OF TRANSPORTATION

DIVISION OF ENGINEERING SERVICES
STRUCTURE DESIGN
DESIGN BRANCH 3

BRIDGE NO. 06-0211
POST MILE 32.3

# LEMN CREEK BRIDGE
# ABUTMENT DETAILS NO. 1

STRUCTURES DESIGN DETAIL SHEET (ENGLISH) (REV. 09-01-10)

ORIGINAL SCALE IN INCHES FOR REDUCED PLANS 0 1 2 3

UNIT: 3578
PROJECT NUMBER & PHASE: 02000002621
CONTRACT NO.: 02-360701

DISREGARD PRINTS BEARING EARLIER REVISION DATES

REVISION DATES 1-19-12 2-1-12 7-24-12 2-14-13

SHEET 5 OF 16

FILE => 06-0211-f-a01dt01.dgn

USERNAME => s124496 DATE PLOTTED => 18-JUN-2013 TIME PLOTTED => 13:15

| DIST | COUNTY | ROUTE | POST MILES TOTAL PROJECT | SHEET No. | TOTAL SHEETS |
|---|---|---|---|---|---|
| 02 | Sha | 299 | 30.3/40.7 | 356 | 366 |

REGISTERED CIVIL ENGINEER 2-14-13 DATE

6-17-13
PLANS APPROVAL DATE

REGISTERED PROFESSIONAL ENGINEER
Lewis L Shen
No. 56921
Exp. 6-30-13
CIVIL
STATE OF CALIFORNIA

*The State of California or its officers or agents shall not be responsible for the accuracy or completeness of electronic copies of this plan sheet.*

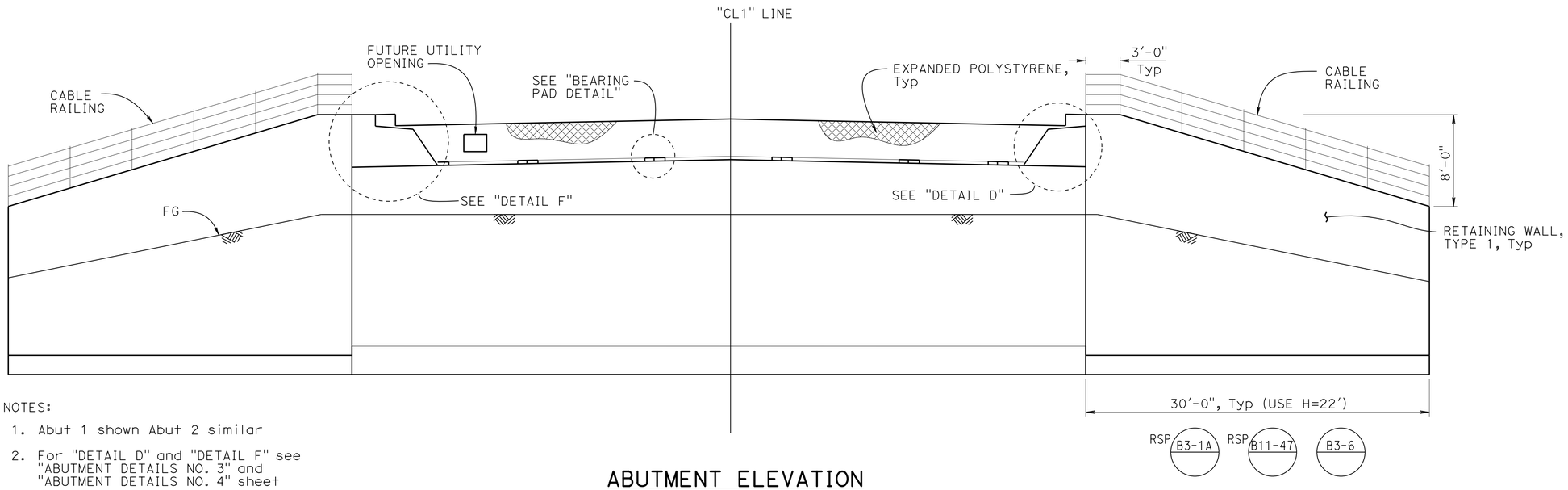


NOTES:

1. Abut 1 shown Abut 2 similar
2. For "DETAIL D" and "DETAIL F" see "ABUTMENT DETAILS NO. 3" and "ABUTMENT DETAILS NO. 4" sheet
3. For Type 1 Retaining Wall Details, use "TABLE OF REINFORCEMENT STEEL DIMENSIONS AND DATA" DESIGN H = 22' RSP B3-1A
4. For Type 1 Retaining Wall drainage, See "WEEP HOLE AND GEOCOMPOSITE DRAIN" detail on "ABUTMENT DETAILS NO. 5" sheet
5. Geocompisite Drainage for Abut continuous to RETAINING WALL TYPE 1
6. For "BEARING PAD DETAIL" see "ABUTMENT DETAILS NO. 1" sheet

## ABUTMENT ELEVATION

3/16" = 1'-0"

| | BY | CHECKED |
|---|---|---|
| DESIGN | Sharon Yen | Quang Nguyen |
| DETAILS | Jay Reid | Quang Nguyen |
| QUANTITIES | Quang Nguyen | Pyo Hong |

STATE OF CALIFORNIA
DEPARTMENT OF TRANSPORTATION

DIVISION OF ENGINEERING SERVICES
STRUCTURE DESIGN
DESIGN BRANCH 3

BRIDGE NO. 06-0211
POST MILE 32.3

# LEMN CREEK BRIDGE
# ABUTMENT DETAILS NO. 2

STRUCTURES DESIGN DETAIL SHEET (ENGLISH) (REV. 09-01-10)

ORIGINAL SCALE IN INCHES FOR REDUCED PLANS 0 1 2 3

UNIT: 3578
PROJECT NUMBER & PHASE: 02000002621
CONTRACT NO.: 02-360701

DISREGARD PRINTS BEARING EARLIER REVISION DATES

REVISION DATES: 1-19-12 2-1-12 7-24-12 2-14-13

SHEET 6 OF 16

FILE => 06-0211-f-a01d02.dgn

USERNAME => s124496 DATE PLOTTED => 18-JUN-2013 TIME PLOTTED => 13:15

| DIST | COUNTY | ROUTE | POST MILES TOTAL PROJECT | SHEET No. | TOTAL SHEETS |
|---|---|---|---|---|---|
| 02 | Sha | 299 | 30.3/40.7 | 357 | 366 |

REGISTERED CIVIL ENGINEER 2-14-13 DATE

6-17-13
PLANS APPROVAL DATE

REGISTERED PROFESSIONAL ENGINEER
Lewis L Shen
No. 56921
Exp. 6-30-13
CIVIL
STATE OF CALIFORNIA

*The State of California or its officers or agents shall not be responsible for the accuracy or completeness of electronic copies of this plan sheet.*

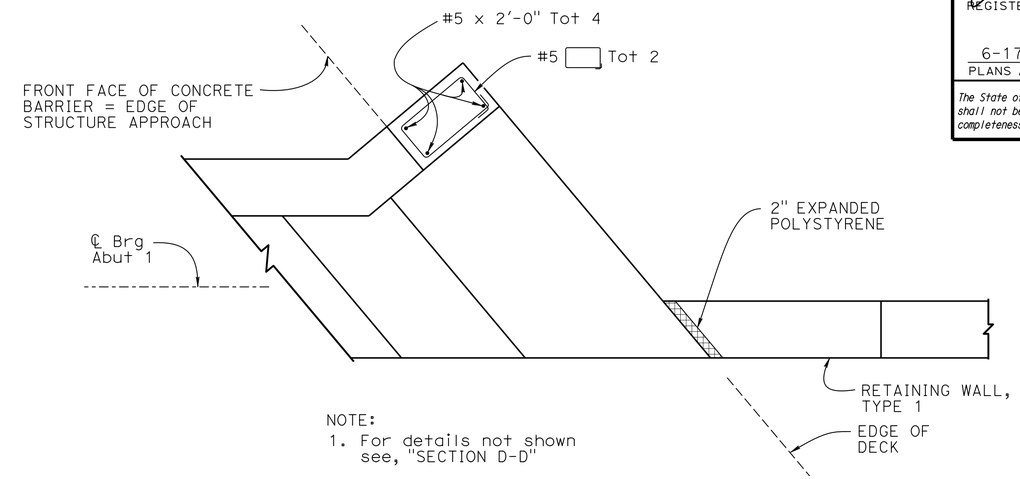


NOTE:
1. For details not shown see, "SECTION D-D"

## SECTION E-E
¾" = 1'-0"

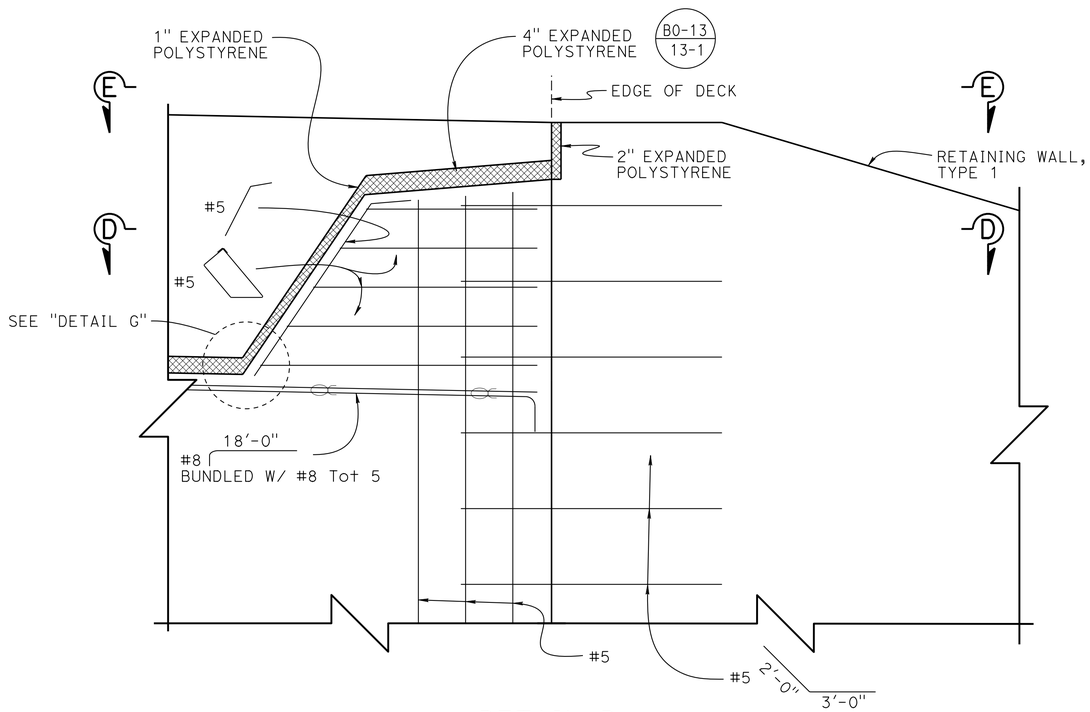


## DETAIL D
¾" = 1'-0"

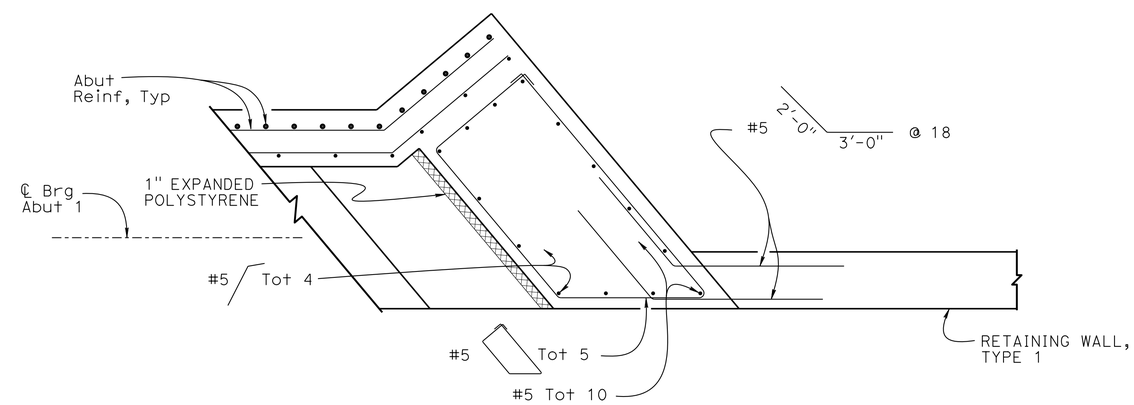


NOTES:

1. For location of "DETAIL D", see "ABUTMENT DETAILS NO. 2" sheet
2. For "DETAIL G" see " ABUTMENT DETAILS NO. 5" sheet
3. Type 1 Retaining Wall Reinforcement Not Shown
4. Cable Railing not shown

## SECTION D-D
¾" = 1'-0"

| | BY | CHECKED |
|---|---|---|
| DESIGN | Sharon Yen | Quang Nguyen |
| DETAILS | Jay Reid | Quang Nguyen |
| QUANTITIES | Quang Nguyen | Pyo Hong |

STATE OF CALIFORNIA
DEPARTMENT OF TRANSPORTATION

DIVISION OF ENGINEERING SERVICES
STRUCTURE DESIGN
DESIGN BRANCH 3

BRIDGE NO. 06-0211
POST MILE 32.3

# LEMN CREEK BRIDGE
# ABUTMENT DETAILS NO. 3

STRUCTURES DESIGN DETAIL SHEET (ENGLISH) (REV. 09-01-10)

ORIGINAL SCALE IN INCHES FOR REDUCED PLANS 0 1 2 3

UNIT: 3578
PROJECT NUMBER & PHASE: 02000002621
CONTRACT NO.: 02-360701

DISREGARD PRINTS BEARING EARLIER REVISION DATES

REVISION DATES: 1-18-12 2-1-12 7-24-12 2-14-13

SHEET 7 OF 16

FILE => 06-0211-f-a01dt03.dgn

USERNAME => s124496 DATE PLOTTED => 18-JUN-2013 TIME PLOTTED => 13:15

| DIST | COUNTY | ROUTE | POST MILES TOTAL PROJECT | SHEET No. | TOTAL SHEETS |
|---|---|---|---|---|---|
| 02 | Sha | 299 | 30.3/40.7 | 358 | 366 |

REGISTERED CIVIL ENGINEER 2-14-13 DATE

6-17-13
PLANS APPROVAL DATE

REGISTERED PROFESSIONAL ENGINEER Lewis L Shen No. 56921 Exp. 6-30-13 CIVIL STATE OF CALIFORNIA

*The State of California or its officers or agents shall not be responsible for the accuracy or completeness of electronic copies of this plan sheet.*

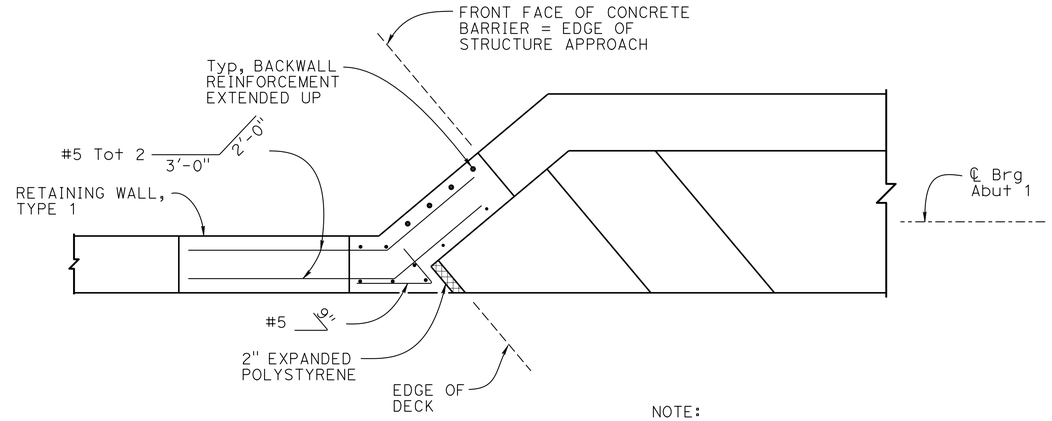


NOTE:
1. For details not shown see, "SECTION F-F"

## SECTION G-G
3/4" = 1'-0"

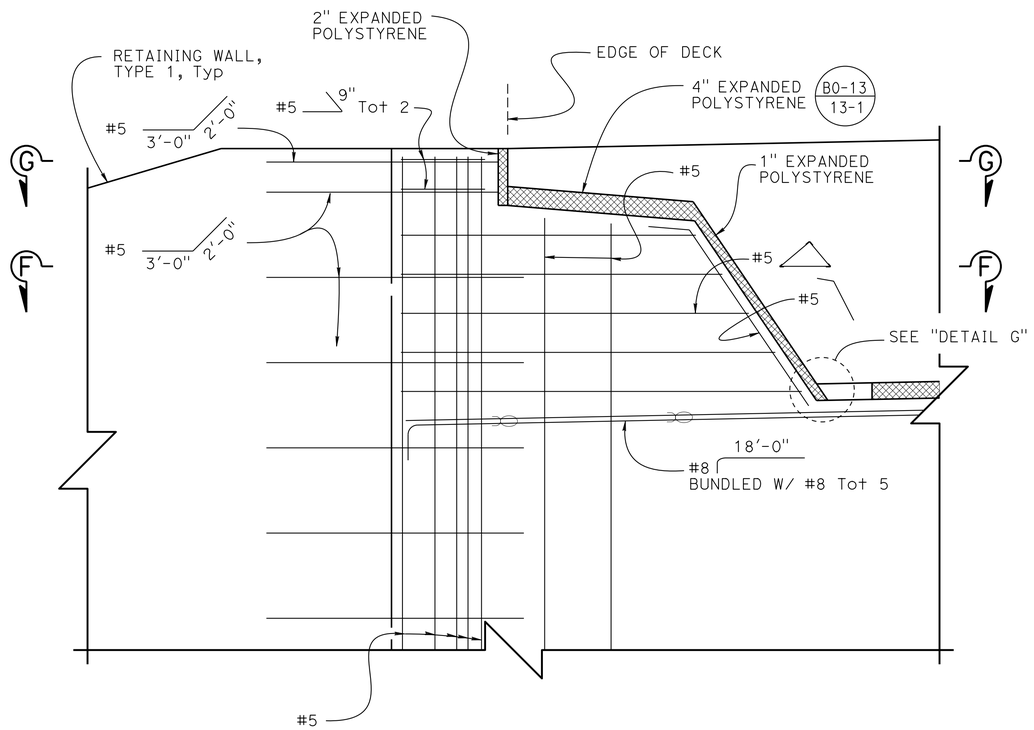


## DETAIL F
3/4" = 1'-0"

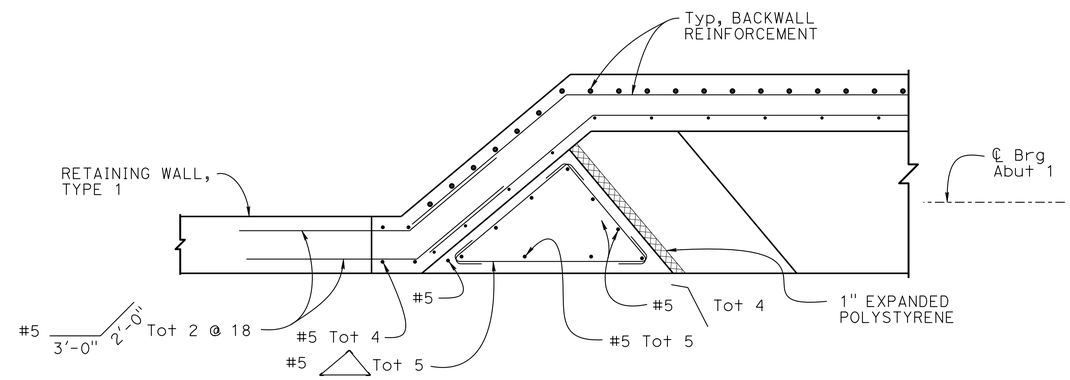


NOTES:
1. For location of "DETAIL F", see "ABUTMENT DETAILS NO. 2" sheet
2. For "DETAIL G" see "ABUTMENT DETAILS NO. 5" sheet
3. Type 1 Retaining Wall Reinforcement Not Shown
4. Cable Railing not shown

## SECTION F-F
3/4" = 1'-0"

| | BY | CHECKED |
|---|---|---|
| DESIGN | Sharon Yen | Quang Nguyen |
| DETAILS | Jay Reid | Quang Nguyen |
| QUANTITIES | Quang Nguyen | Pyo Hong |

STATE OF CALIFORNIA
DEPARTMENT OF TRANSPORTATION

DIVISION OF ENGINEERING SERVICES
STRUCTURE DESIGN
DESIGN BRANCH 3

BRIDGE NO. 06-0211
POST MILE 32.3

# LEMN CREEK BRIDGE
# ABUTMENT DETAILS NO. 4

STRUCTURES DESIGN DETAIL SHEET (ENGLISH) (REV. 09-01-10)

ORIGINAL SCALE IN INCHES FOR REDUCED PLANS 0 1 2 3

UNIT: 3578
PROJECT NUMBER & PHASE: 02000002621
CONTRACT NO.: 02-360701

DISREGARD PRINTS BEARING EARLIER REVISION DATES

REVISION DATES: 1-19-12 2-1-12 7-24-12 2-14-13

SHEET 8 OF 16

FILE => 06-0211-f-a01d+04.dgn

USERNAME => s124496 DATE PLOTTED => 18-JUN-2013 TIME PLOTTED => 13:15

| DIST | COUNTY | ROUTE | POST MILES TOTAL PROJECT | SHEET No. | TOTAL SHEETS |
|---|---|---|---|---|---|
| 02 | Sha | 299 | 30.3/40.7 | 359 | 366 |

REGISTERED CIVIL ENGINEER 2-14-13 DATE

6-17-13
PLANS APPROVAL DATE

REGISTERED PROFESSIONAL ENGINEER Lewis L Shen No. 56921 Exp. 6-30-13 CIVIL STATE OF CALIFORNIA

*The State of California or its officers or agents shall not be responsible for the accuracy or completeness of electronic copies of this plan sheet.*

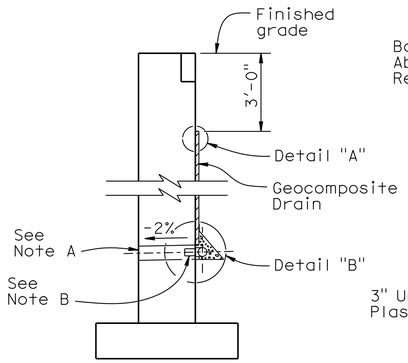


WALL SECTION

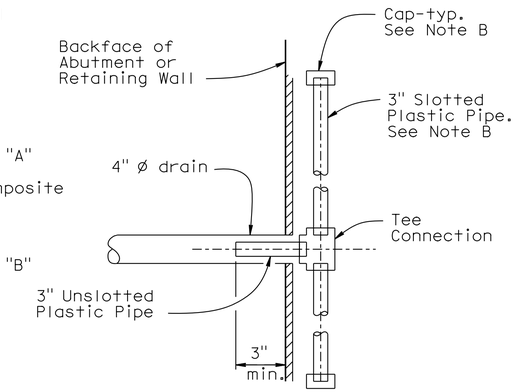


SECTION A-A

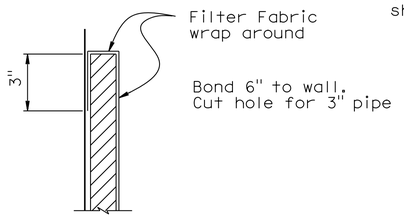


DETAIL "A"

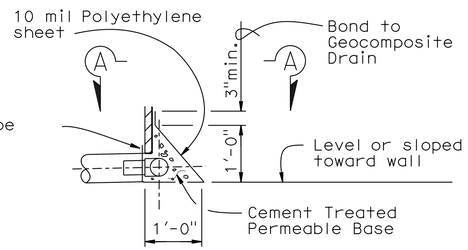


DETAIL "B"

WEEP HOLE AND GEOCOMPOSITE DRAIN

Notes:

A. 4" ø drains at intermediate sag points and at 25' max center to center (9' c-c for Type 3 and 9'-3" c-c for Type 4 retaining walls).
For walls adjacent to sidewalks or curbs, provide 4" cast iron or asbestos cement pipe under the sidewalk to discharge through curb face.
Exposed wall drains shall be located 3"± above finished grade.

B. Geocomposite drain, cement treated permeable base, and 3"ø slotted plastic pipe continuous behind retaining wall or abutment. Cap ends of pipe. Provide "Tee" connection at each 4" ø drain.

C. Connect the low end of plastic pipe to the main outlet pipe as applicable.

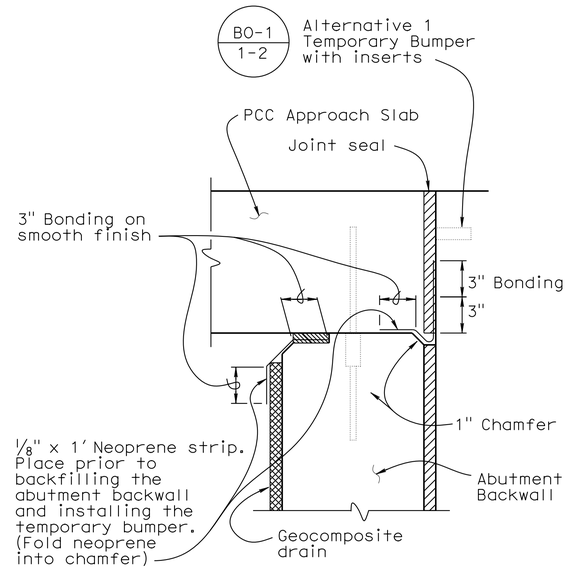


JOINT PROTECTION DETAIL

No Scale

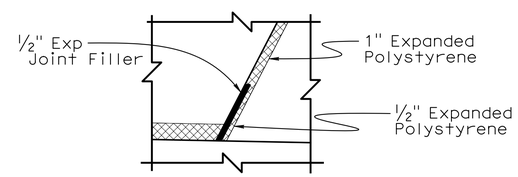


DETAIL G

3/4" = 1'-0"

| | | | |
|---|---|---|---|
| DESIGN | BY Sharon Yen | CHECKED Quang Nguyen | |
| DETAILS | BY Jay Reid | CHECKED Quang Nguyen | |
| QUANTITIES | BY Quang Nguyen | CHECKED Pyo Hong | |

STATE OF CALIFORNIA
DEPARTMENT OF TRANSPORTATION

DIVISION OF ENGINEERING SERVICES
STRUCTURE DESIGN
DESIGN BRANCH 3

BRIDGE NO. 06-0211
POST MILE 32.3

# LEMN CREEK BRIDGE
# ABUTMENT DETAILS NO. 5

STRUCTURES DESIGN DETAIL SHEET (ENGLISH) (REV. 09-01-10)

ORIGINAL SCALE IN INCHES FOR REDUCED PLANS 0 1 2 3

UNIT: 3578
PROJECT NUMBER & PHASE: 02000002621
CONTRACT NO.: 02-360701

DISREGARD PRINTS BEARING EARLIER REVISION DATES

REVISION DATES 1-19-12 2-1-12 7-24-12 2-14-13

SHEET 9 OF 16

FILE => 06-0211-f-a01dt05.dgn

USERNAME => s124496 DATE PLOTTED => 18-JUN-2013 TIME PLOTTED => 13:15

| DIST | COUNTY | ROUTE | POST MILES TOTAL PROJECT | SHEET No. | TOTAL SHEETS |
|---|---|---|---|---|---|
| 02 | Sha | 299 | 30.3/40.7 | 360 | 366 |

REGISTERED CIVIL ENGINEER 2-14-13 DATE

6-17-13
PLANS APPROVAL DATE

REGISTERED PROFESSIONAL ENGINEER Lewis L Shen No. 56921 Exp. 6-30-13 CIVIL STATE OF CALIFORNIA

*The State of California or its officers or agents shall not be responsible for the accuracy or completeness of electronic copies of this plan sheet.*

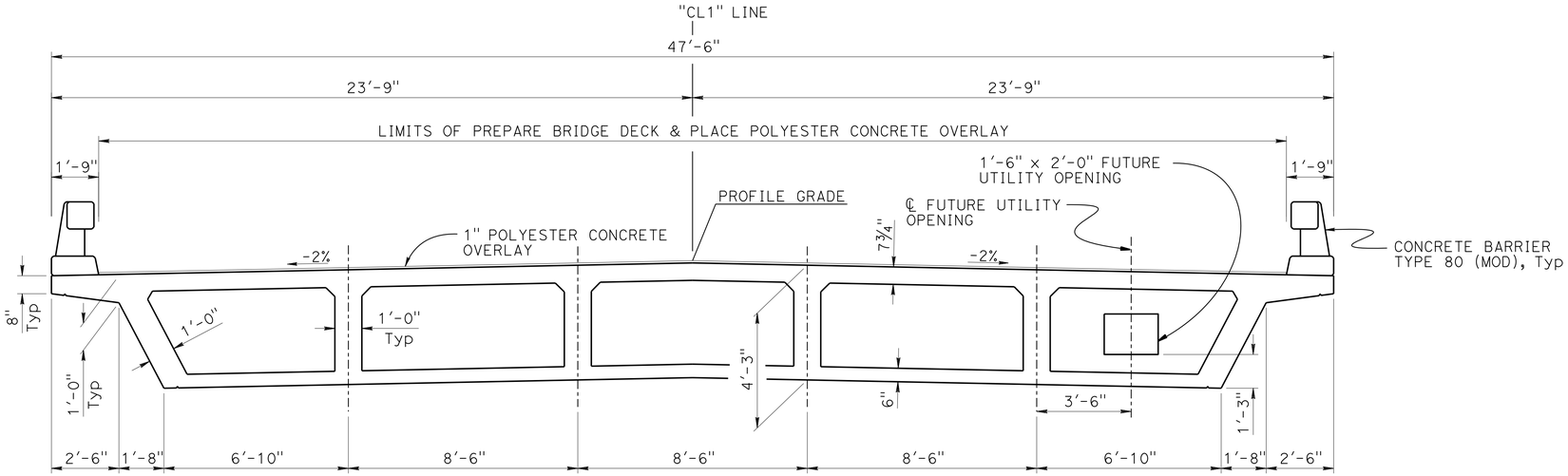


## TYPICAL SECTION

3/8" = 1'-0"

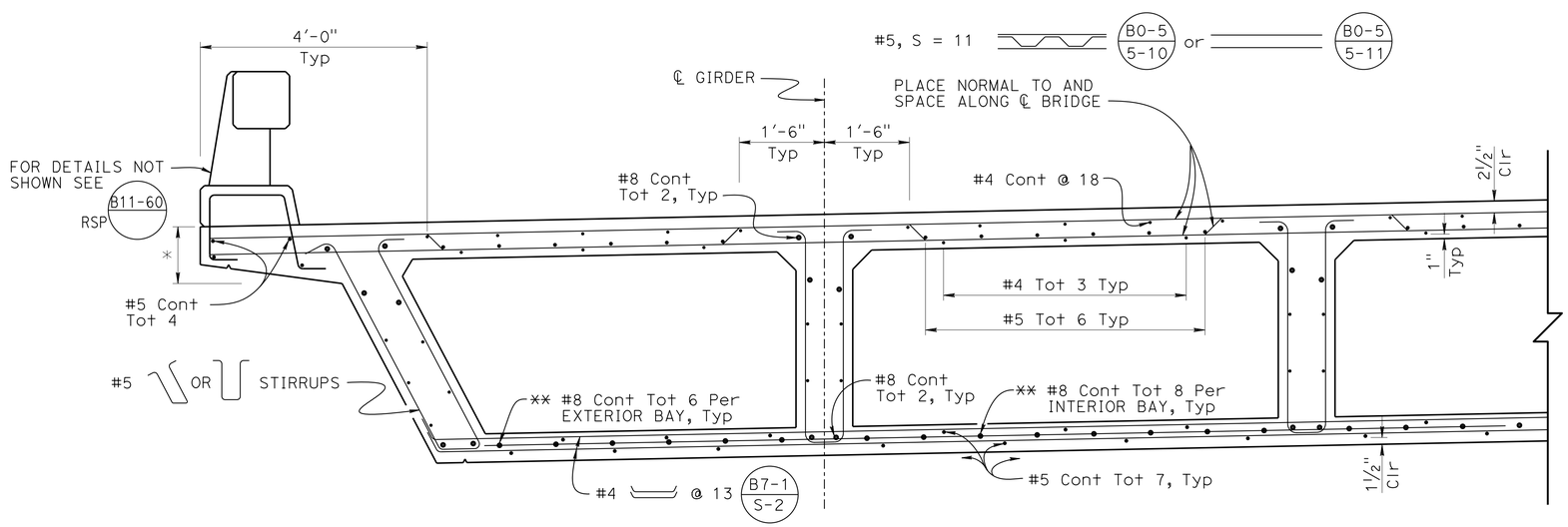


LEDGEND:

* All Reinf in or extended into the top 1'-0" of superstructure concrete to be epoxy coated

** No splice allowed within 30' from ℄ span. Service splice allowed elsewhere

NOTE:

Barrier Reinforcing to be Epoxy Coated

## PART TYPICAL SECTION

B0-5 B7-1 B8-5

3/4" = 1'-0"

| | | | |
|---|---|---|---|
| DESIGN | BY Sharon Yen | CHECKED Quang Nguyen | |
| DETAILS | BY Jay Reid | CHECKED Quang Nguyen | |
| QUANTITIES | BY Quang Nguyen | CHECKED Pyo Hong | |

STATE OF CALIFORNIA
DEPARTMENT OF TRANSPORTATION

DIVISION OF ENGINEERING SERVICES
STRUCTURE DESIGN
DESIGN BRANCH 3

BRIDGE NO. 06-0211
POST MILE 32.3

# LEMN CREEK BRIDGE
# TYPICAL SECTION

STRUCTURES DESIGN DETAIL SHEET (ENGLISH) (REV. 09-01-10)

ORIGINAL SCALE IN INCHES FOR REDUCED PLANS 0 1 2 3

UNIT: 3578
PROJECT NUMBER & PHASE: 02000002621
CONTRACT NO.: 02-360701

DISREGARD PRINTS BEARING EARLIER REVISION DATES

REVISION DATES 1-19-12 2-1-12 7-24-12 2-14-13

SHEET 10 OF 16

FILE => 06-0211-k-ts01.dgn

USERNAME => s124496 DATE PLOTTED => 18-JUN-2013 TIME PLOTTED => 13:15

| DIST | COUNTY | ROUTE | POST MILES TOTAL PROJECT | SHEET No. | TOTAL SHEETS |
|---|---|---|---|---|---|
| 02 | Sha | 299 | 30.3/40.7 | 361 | 366 |

REGISTERED CIVIL ENGINEER 2-14-13 DATE

6-17-13
PLANS APPROVAL DATE

REGISTERED PROFESSIONAL ENGINEER Lewis L Shen No. 56921 Exp. 6-30-13 CIVIL STATE OF CALIFORNIA

*The State of California or its officers or agents shall not be responsible for the accuracy or completeness of electronic copies of this plan sheet.*

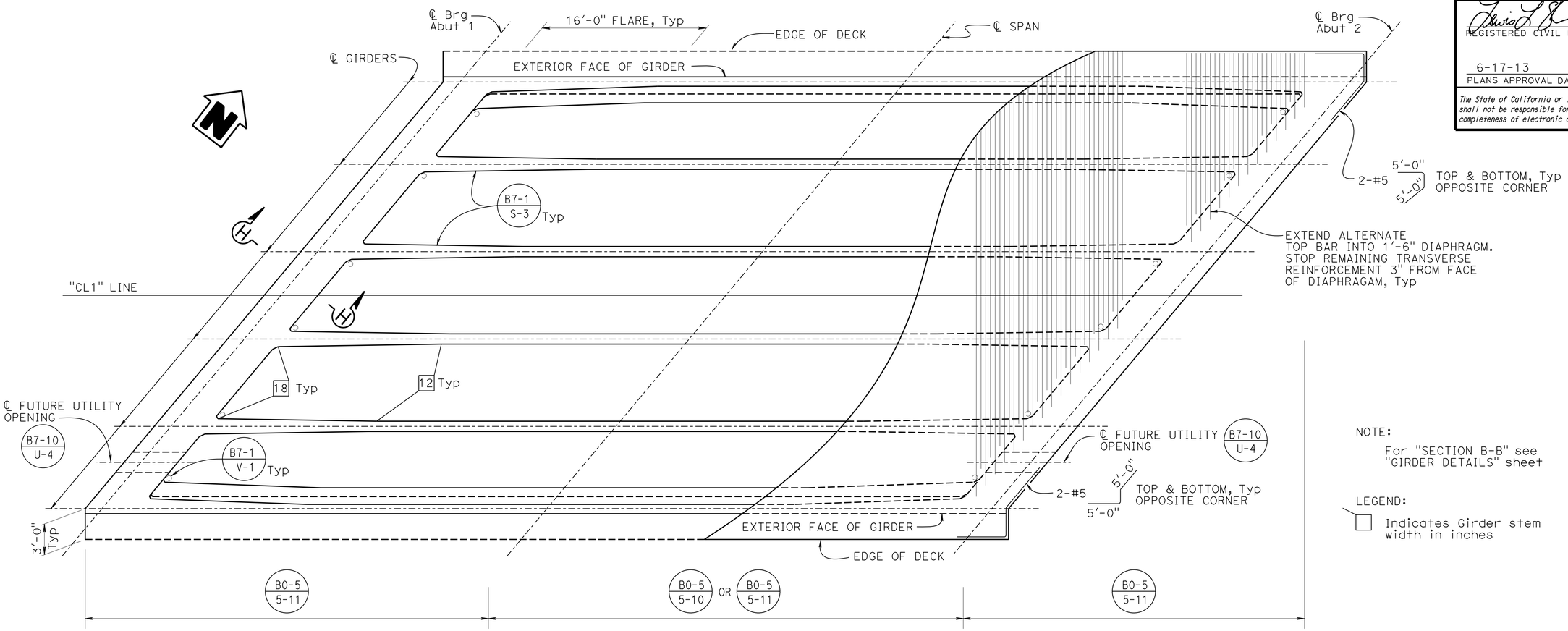


## GIRDER LAYOUT B8-5

3/16" = 1'-0"

NOTE:

For "SECTION B-B" see "GIRDER DETAILS" sheet

LEGEND:

☐ Indicates Girder stem width in inches

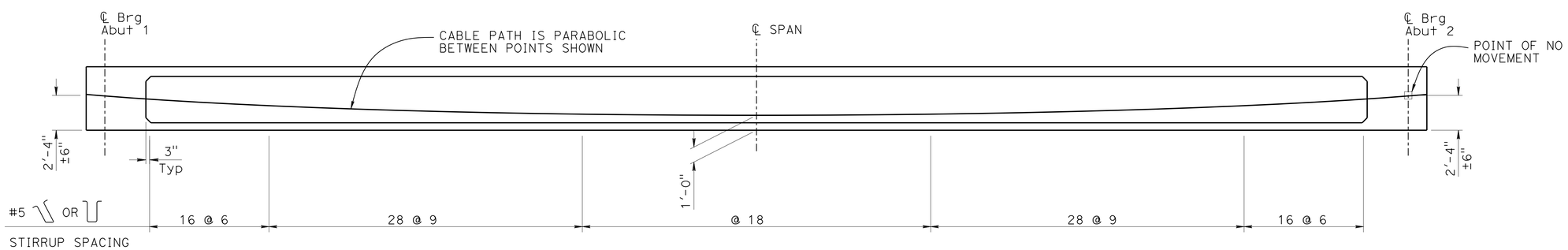


## LONGITUDINAL SECTION

1/4" = 1'-0"

| | | | |
|---|---|---|---|
| DESIGN | BY Sharon Yen | CHECKED Quang Nguyen | |
| DETAILS | BY Jay Reid | CHECKED Quang Nguyen | |
| QUANTITIES | BY Quang Nguyen | CHECKED Pyo Hong | |

STATE OF CALIFORNIA DEPARTMENT OF TRANSPORTATION

DIVISION OF ENGINEERING SERVICES STRUCTURE DESIGN DESIGN BRANCH 3

BRIDGE NO. 06-0211
POST MILE 32.3

# LEMN CREEK BRIDGE
# GIRDER LAYOUT

STRUCTURES DESIGN DETAIL SHEET (ENGLISH) (REV. 09-01-10)

ORIGINAL SCALE IN INCHES FOR REDUCED PLANS 0 1 2 3

UNIT: 3578
PROJECT NUMBER & PHASE: 02000002621
CONTRACT NO.: 02-360701

DISREGARD PRINTS BEARING EARLIER REVISION DATES

REVISION DATES 1-18-12 2-1-12 7-24-12 2-14-13

SHEET 11 OF 16

FILE => 06-0211-1-g_lo01.dgn

USERNAME => s124496 DATE PLOTTED => 18-JUN-2013 TIME PLOTTED => 13:15

| DIST | COUNTY | ROUTE | POST MILES TOTAL PROJECT | SHEET No. | TOTAL SHEETS |
|---|---|---|---|---|---|
| 02 | Sha | 299 | 30.3/40.7 | 362 | 366 |

REGISTERED CIVIL ENGINEER 2-14-13 DATE

6-17-13
PLANS APPROVAL DATE

REGISTERED PROFESSIONAL ENGINEER
Lewis L Shen
No. 56921
Exp. 6-30-13
CIVIL
STATE OF CALIFORNIA

*The State of California or its officers or agents shall not be responsible for the accuracy or completeness of electronic copies of this plan sheet.*

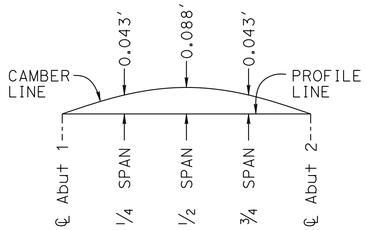


## CAMBER DIAGRAM

(DOES NOT INCLUDE ALLOWANCE FOR FALSEWORK SETTLEMENT)

## PRESTRESSING NOTES

270 KSI Low Relaxation Strand:

$P_{jack}$ = 9700 kips

Anchor Set = 3/8 in

Total Number of Girders = 6

Friction curvature coefficient $\mu = 15 \times 10^{-2}$ (1/rad)
Friction wobble coefficient K = 0.0002 (1/ft)

Distribution of prestress force (Pjack) between girders shall not exceed the ratio of 3:2.

Maximum final force variation between girders shall not exceed 725 kips.

Concrete: $f'_c$ = 4.0 ksi @ 28 days

$f'_{ci}$ = 3.5 ksi @ time of stressing

Contractor shall submit elongation calculations based on initial stress at

⊠ = 0.950 times jacking stress.

One end stressing shall be performed from either end

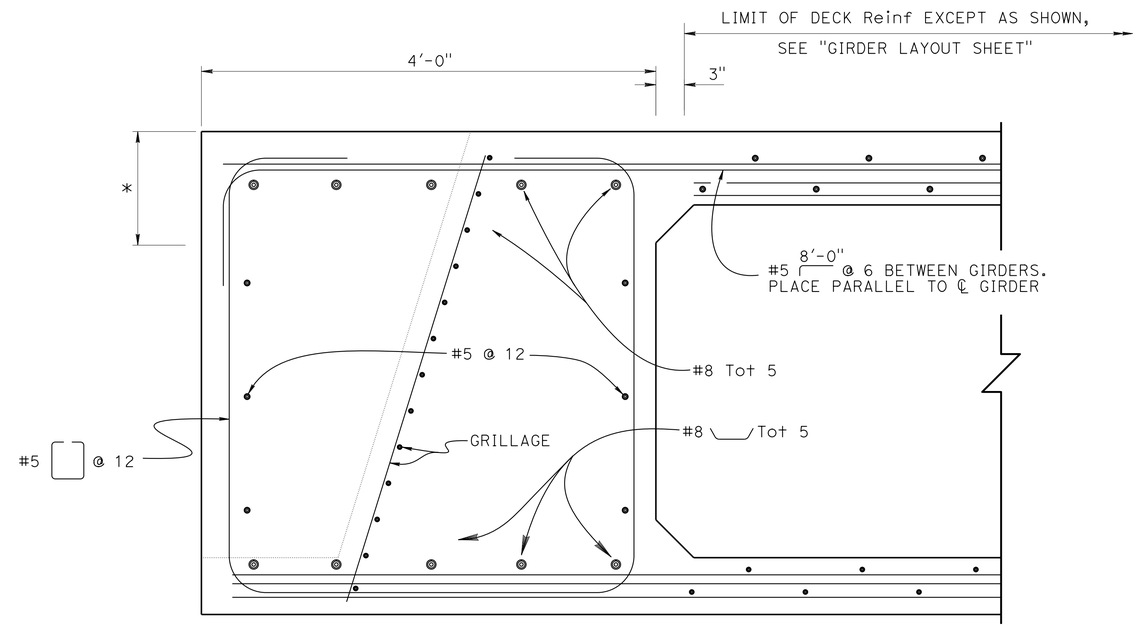


NOTE:

For location of "SECTION H-H" see "GIRDER LAYOUT" sheet

LEGEND:

* All Reinf in, or extending into the top 1'-0" of superstructure concrete to be epoxy coated

## SECTION H-H

1½" = 1'-0"

B8-5

| | | | |
|---|---|---|---|
| DESIGN | BY Sharon Yen | CHECKED Quang Nguyen | |
| DETAILS | BY Jay Reid | CHECKED Quang Nguyen | |
| QUANTITIES | BY Quang Nguyen | CHECKED Pyo Hong | |

STATE OF CALIFORNIA
DEPARTMENT OF TRANSPORTATION

DIVISION OF ENGINEERING SERVICES
STRUCTURE DESIGN
DESIGN BRANCH 3

BRIDGE NO. 06-0211
POST MILE 32.3

# LEMN CREEK BRIDGE
# GIRDER DETAILS

STRUCTURES DESIGN DETAIL SHEET (ENGLISH) (REV. 09-01-10)

ORIGINAL SCALE IN INCHES FOR REDUCED PLANS 0 1 2 3

UNIT: 3578
PROJECT NUMBER & PHASE: 02000002621
CONTRACT NO.: 02-360701

DISREGARD PRINTS BEARING EARLIER REVISION DATES

REVISION DATES: 1-19-12 2-1-12 7-24-12 2-14-13

SHEET 12 OF 16

FILE => 06-0211-l-gd01.dgn

USERNAME => s124496 DATE PLOTTED => 18-JUN-2013 TIME PLOTTED => 13:15

| DIST | COUNTY | ROUTE | POST MILES TOTAL PROJECT | SHEET No. | TOTAL SHEETS |
|---|---|---|---|---|---|
| 02 | Sha | 299 | 30.3/40.7 | 363 | 366 |

REGISTERED CIVIL ENGINEER 2-14-13 DATE

6-17-13
PLANS APPROVAL DATE

REGISTERED PROFESSIONAL ENGINEER
Lewis L Shen
No. 56921
Exp. 6-30-13
CIVIL
STATE OF CALIFORNIA

*The State of California or its officers or agents shall not be responsible for the accuracy or completeness of electronic copies of this plan sheet.*

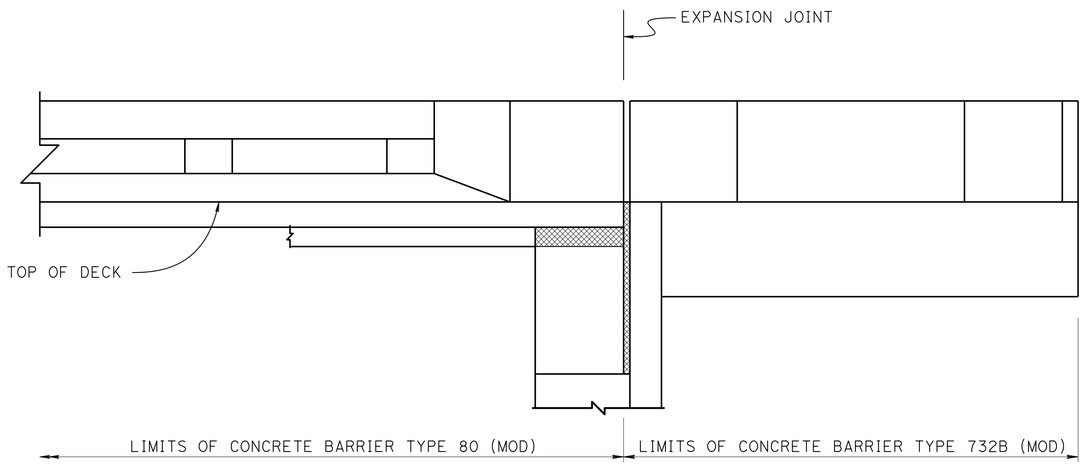


## CONCRETE BARRIER LAYOUT (ELEVATION)

B11-55 B11-60

½" = 1'-0"

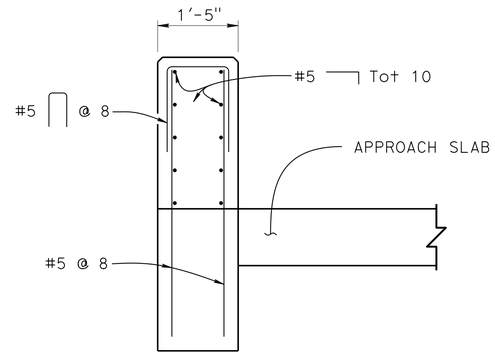


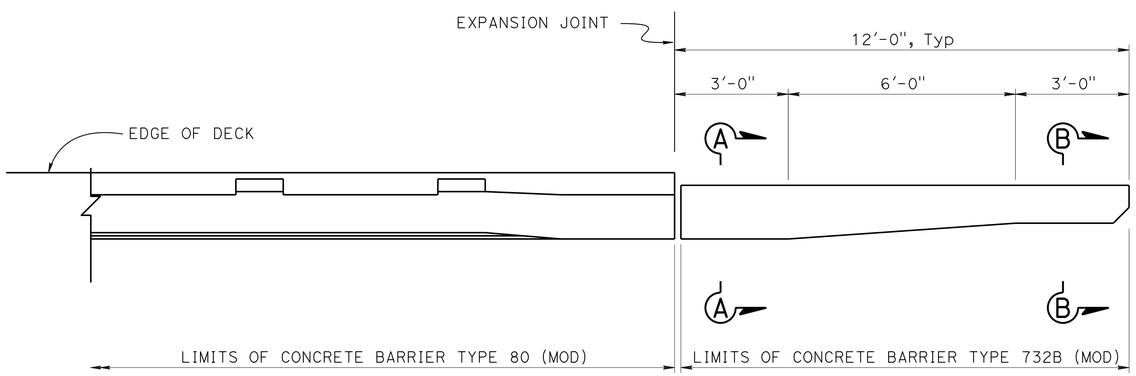


## CONCRETE BARRIER LAYOUT (PLAN)

B11-55 B11-60

½" = 1'-0"

## SECTION A-A

B11-55

¾" = 1'-0"

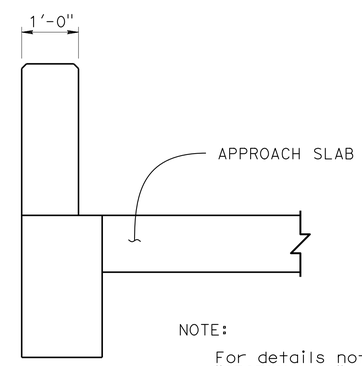


NOTE:

For details not shown see, "SECTION A-A"

## SECTION B-B

B11-55 E-E

¾" = 1'-0"

NOTES:

1. For Reinforcment, see Barrier Type 732B in "STANDARD PLANS"
2. For Approach Slab Details not shown, see "STRUCTURE APPROACH TYPE N(30S) sheet For Barriers to Structure Approach see "TYPE E-2" on "STRUCTURE APPROACH TYPE N(30S)" sheet

| | BY | CHECKED |
|---|---|---|
| DESIGN | Sharon Yen | Quang Nguyen |
| DETAILS | Jay Reid | Quang Nguyen |
| QUANTITIES | Quang Nguyen | Pyo Hong |

STATE OF CALIFORNIA
DEPARTMENT OF TRANSPORTATION

DIVISION OF ENGINEERING SERVICES
STRUCTURE DESIGN
DESIGN BRANCH 3

BRIDGE NO. 06-0211
POST MILE 32.3

# LEMN CREEK BRIDGE
# MISCELLANEOUS DETAILS

STRUCTURES DESIGN DETAIL SHEET (ENGLISH) (REV. 09-01-10)

ORIGINAL SCALE IN INCHES FOR REDUCED PLANS 0 1 2 3

UNIT: 3578
PROJECT NUMBER & PHASE: 02000002621
CONTRACT NO.: 02-360701

DISREGARD PRINTS BEARING EARLIER REVISION DATES

REVISION DATES: 1-19-12 2-1-12 1-24-12 2-14-13

SHEET 13 OF 16

FILE => 06-0211-m-miscdt.dgn

USERNAME => s124496 DATE PLOTTED => 18-JUN-2013 TIME PLOTTED => 13:16

| DIST | COUNTY | ROUTE | POST MILES TOTAL PROJECT | SHEET No. | TOTAL SHEETS |
|---|---|---|---|---|---|
| 02 | Sha | 299 | 30.3/40.7 | 364 | 366 |

REGISTERED CIVIL ENGINEER — DATE 1-31-13

6-17-13
PLANS APPROVAL DATE

REGISTERED PROFESSIONAL ENGINEER — C. J. SIMS — No. C46471 — Exp. 6-30-13 — CIVIL — STATE OF CALIFORNIA

*The State of California or its officers or agents shall not be responsible for the accuracy or completeness of electronic copies of this plan sheet.*

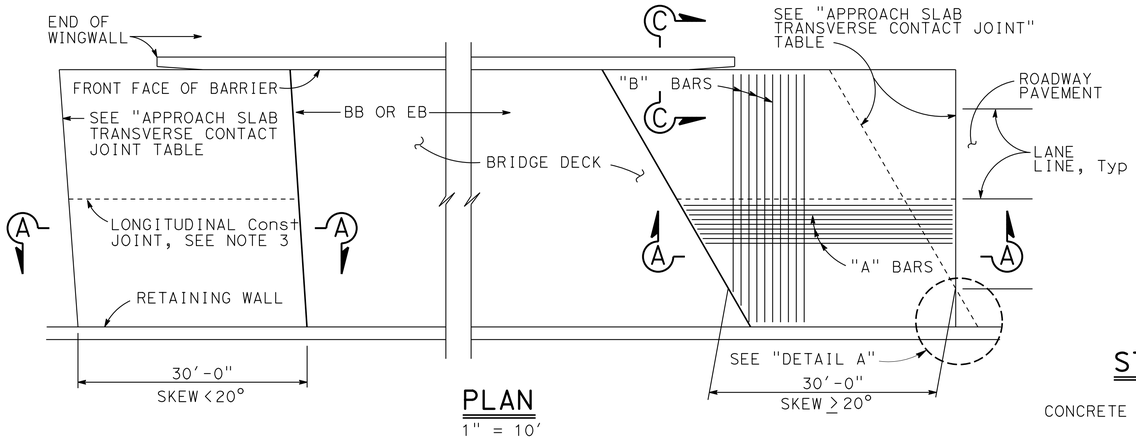


## PLAN
1" = 10'

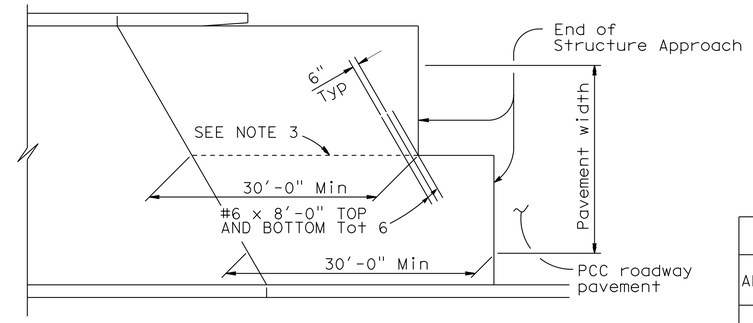


## STRUCTURE APPROACH - END STAGGER DETAIL
No Scale

| APPROACH SLAB TRANSVERSE CONTACT JOINT | | |
|---|---|---|
| APPROACH SKEW | WITH AC ROADWAY PAVEMENT | WITH PCC ROADWAY PAVEMENT |
| < 20° | PARALLEL TO FACE OF PN | PARALLEL TO FACE OF PN |
| 20° - 45° | PARALLEL TO FACE OF PN USE "DETAIL A" | STAGGER LINES 24' TO 36' APART |
| > 45° | PARALLEL TO FACE OF PN USE "DETAIL A" | STAGGER AT EACH LANE LINE |

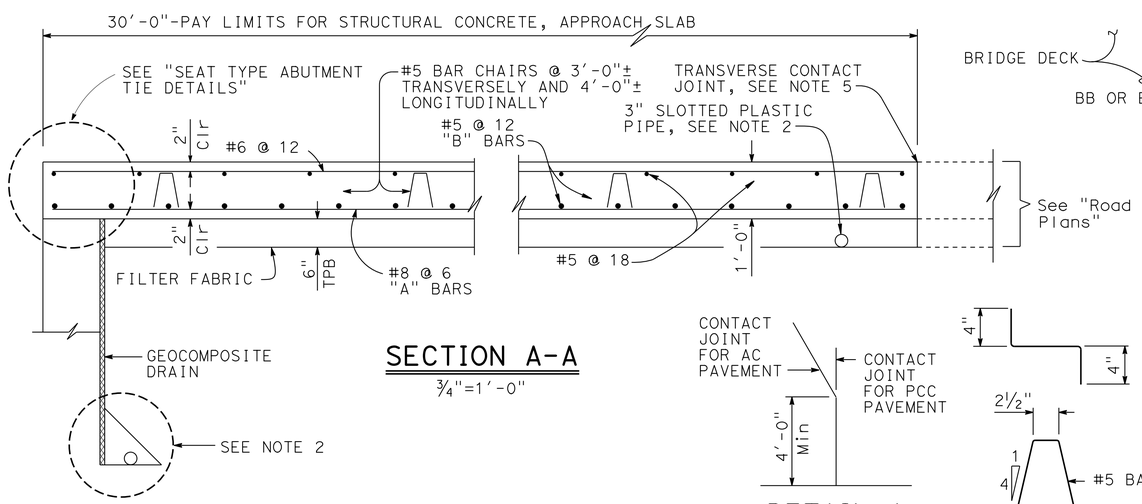


## SECTION A-A
¾"=1'-0"

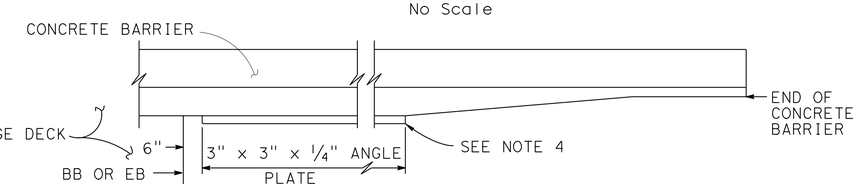


## EDGE ANGLE DETAIL
½"=1'-0"

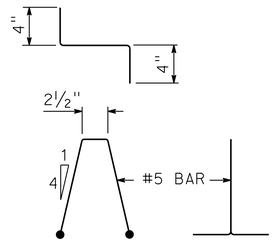


## DETAIL A
No Scale

## BAR CHAIR DETAIL
1½"=1'-0"

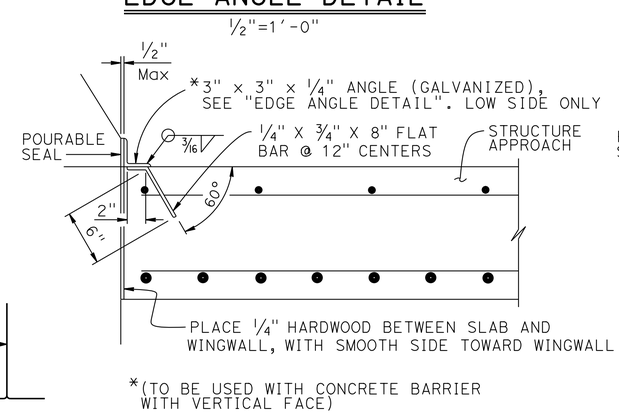


*(TO BE USED WITH CONCRETE BARRIER WITH VERTICAL FACE)

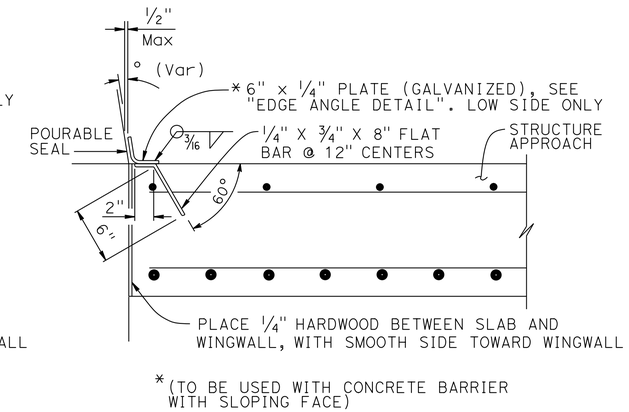


*(TO BE USED WITH CONCRETE BARRIER WITH SLOPING FACE)

## DETAIL B
1½" = 1'-0"

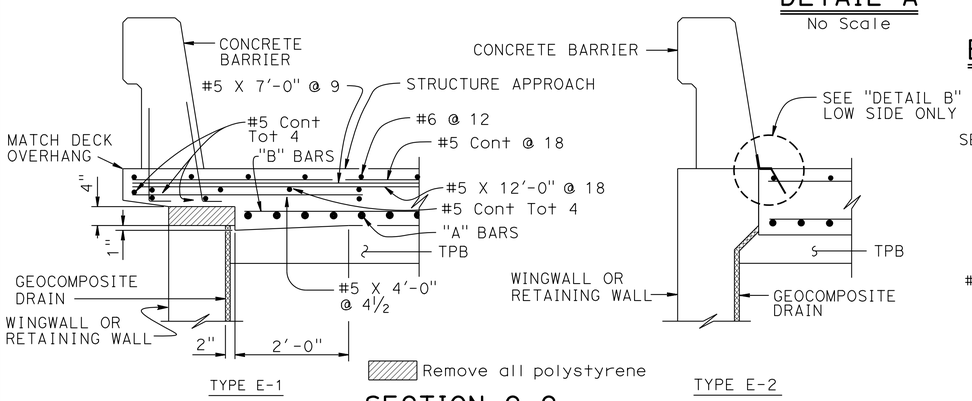


## SECTION C-C
¾"=1'-0"

(Type E-1 to be used, unless otherwise shown on plans)

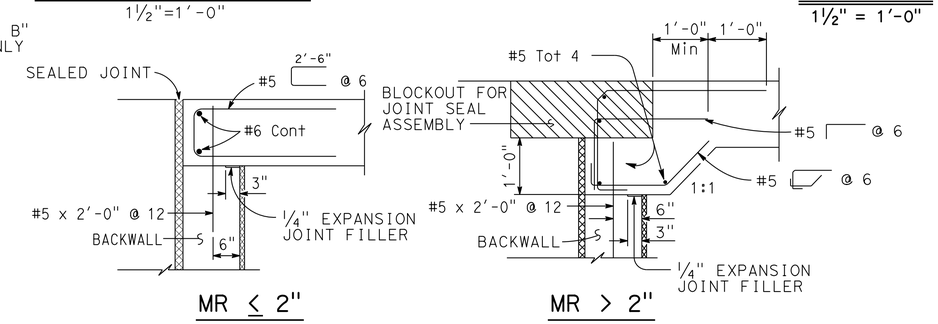


## SEAT TYPE ABUTMENT TIE DETAILS (SEE NOTE 1)
¾"=1'-0"

NOTES:

1. For details not shown, see Structure Plans. For MR ≤ 2", adjust bar reinforcement to clear a sawcut for sealed joint, when required
2. For drainage details, see "STRUCTURE APPROACH DRAINAGE DETAILS" sheet
3. Longitudinal construction joints, when permitted by the Engineer, shall be located on lane lines
4. End angle or plate at beginning of barrier transition, end of wingwall or end of structure approach as applicable
5. For transverse contact joint with new PCC paving, refer to Standard Plan P10
6. At the Contractor's option, approach slab transverse reinforcement may be placed parallel to paving notch. Spacing of transverse reinforcement is measured along ℄ roadway

STANDARD DRAWING
FILE NO. xs3-120
APPROVAL DATE July 2011

STATE OF CALIFORNIA
DEPARTMENT OF TRANSPORTATION

DIVISION OF ENGINEERING SERVICES

BRIDGE NO. 06-0211
POST MILE 32.3

# LEMN CREEK BRIDGE
# STRUCTURE APPROACH TYPE N(30S)

DS OSD 2147A (ENGLISH STANDARD DRAWING "XS" BORDER REV. (02-02-11))

ORIGINAL SCALE IN INCHES FOR REDUCED PLANS 0 1 2 3

UNIT: 3578
PROJECT NUMBER & PHASE: 02000002621
CONTRACT NO.: 02-360701

DISREGARD PRINTS BEARING EARLIER REVISION DATES

REVISION DATES: 6-6-12 9-6-12

SHEET 14 OF 16

FILE => 06-0211-x-sadd.dgn

USERNAME => s124496 DATE PLOTTED => 18-JUN-2013 TIME PLOTTED => 13:16

| DIST | COUNTY | ROUTE | POST MILES TOTAL PROJECT | SHEET No. | TOTAL SHEETS |
|---|---|---|---|---|---|
| 02 | Sha | 299 | 30.3/40.7 | 365 | 366 |

REGISTERED CIVIL ENGINEER 1-31-13 DATE

6-17-13
PLANS APPROVAL DATE

REGISTERED PROFESSIONAL ENGINEER C. J. SIMS No. C46471 Exp. 6-30-13 CIVIL STATE OF CALIFORNIA

*The State of California or its officers or agents shall not be responsible for the accuracy or completeness of electronic copies of this plan sheet.*

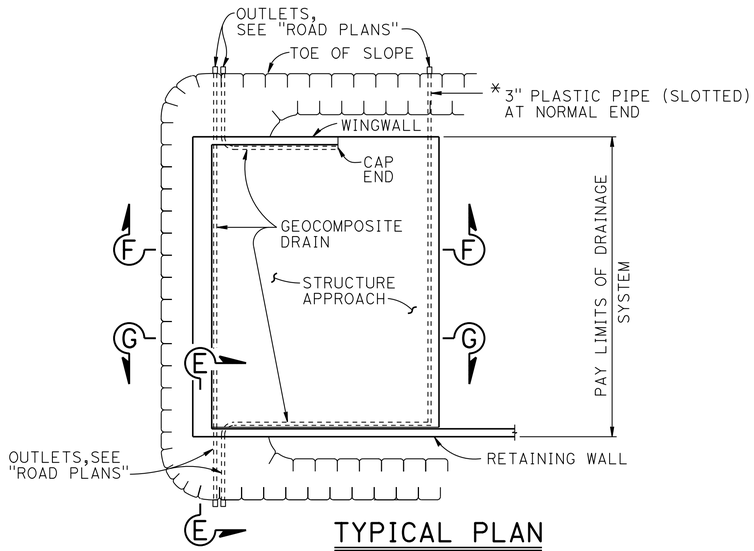


## TYPICAL PLAN

1" = 10'

* FOR PIPE LAYOUT AT STAGGERED END, SEE "DETAIL B"

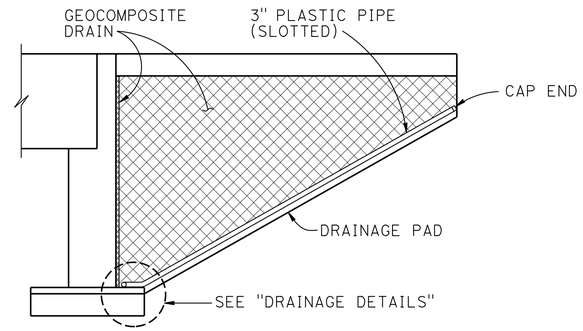


## CANTILEVER WINGWALL

## SECTION F-F

1/4" = 1'-0"

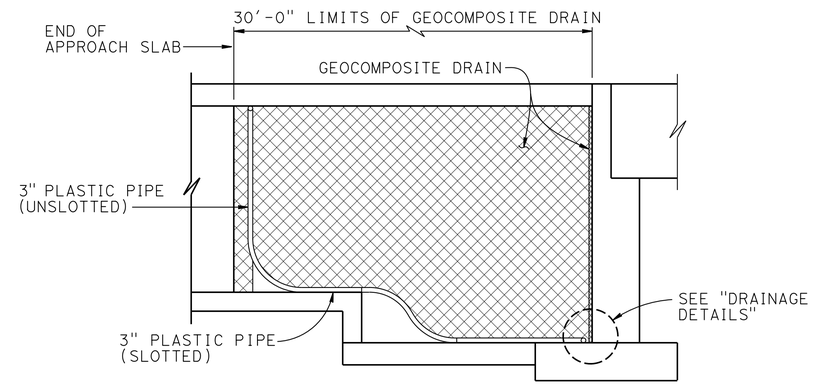


## RETAINING WALL WINGWALL DRAINAGE DETAILS

## SECTION G-G

1/4" = 1'-0"

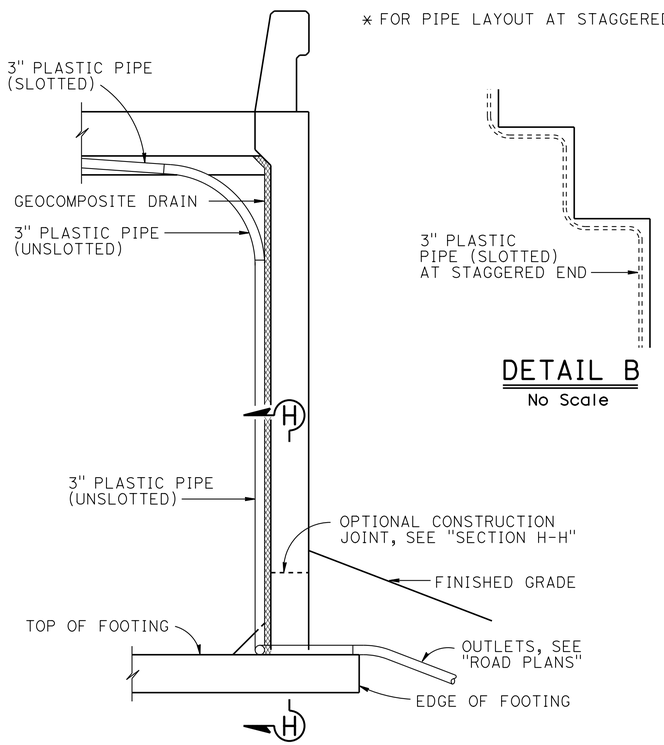


## DETAIL B

No Scale

## SECTION E-E

1/2" = 1'-0"

NOTE: Bends and junctions in 3" plastic pipe are 30" radius Min

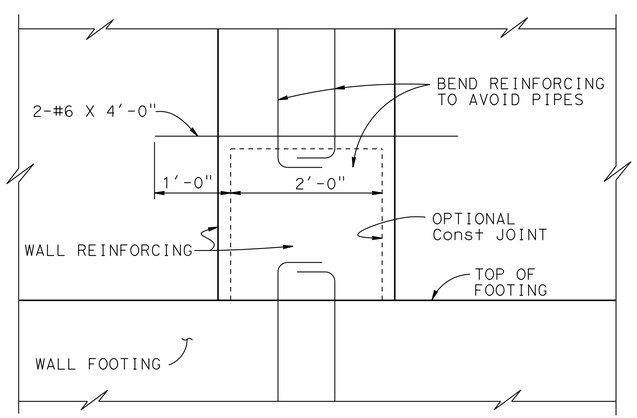


## SECTION H-H

1" = 1'-0"

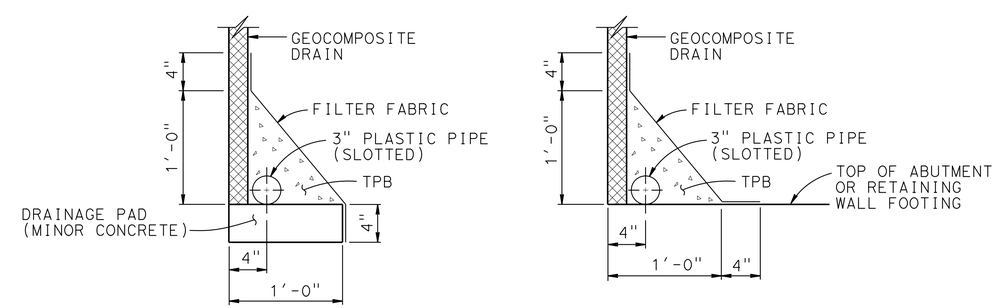


WITHOUT FOOTING

WITH FOOTING

## DRAINAGE DETAILS

1 1/2" = 1'-0"

STANDARD DRAWING

FILE NO. xs3-110

APPROVAL DATE July 2011

STATE OF CALIFORNIA DEPARTMENT OF TRANSPORTATION

DIVISION OF ENGINEERING SERVICES

BRIDGE NO. 06-0211

POST MILE 32.3

# LEMN CREEK BRIDGE

## STRUCTURE APPROACH DRAINAGE DETAILS

DS OSD 2147A (ENGLISH STANDARD DRAWING "XS" BORDER REV. (02-02-11)

ORIGINAL SCALE IN INCHES FOR REDUCED PLANS 0 1 2 3

UNIT: 3578
PROJECT NUMBER & PHASE: 02000002621
CONTRACT NO.: 02-360701

DISREGARD PRINTS BEARING EARLIER REVISION DATES

REVISION DATES 9-6-12

SHEET 15 OF 16

FILE => 06-0211-x-sadd02.dgn

USERNAME => s124496 DATE PLOTTED => 18-JUN-2013 TIME PLOTTED => 13:16

| DIST | COUNTY | ROUTE | POST MILES TOTAL PROJECT | SHEET No. | TOTAL SHEETS |
|---|---|---|---|---|---|
| 02 | Sha | 299 | 30.3/40.7 | 366 | 366 |

Joseph M Kaump 9-24-12
PROFESSIONAL GEOLOGIST DATE

6-17-13
PLANS APPROVAL DATE

PROFESSIONAL GEOLOGIST Joseph Kaump No. 7873 Exp. 01-31-13 STATE OF CALIFORNIA

*The State of California or its officers or agents shall not be responsible for the accuracy or completeness of electronic copies of this plan sheet.*

This LOTB sheet was prepared in accordance with the Caltrans Soil & Rock Logging, Classification, & Presentation Manual (2010 Edition).

See 2010 Standard Plans A10F and A10G for Soil Legend, and A10H for Rock Legend.

## BENCH MARK

SUHV 3232
Fd Rebar with Alum Cap
21.847' Rt Sta 118+44.835
"CL1" Line
Elev 547.71'
NAVD88

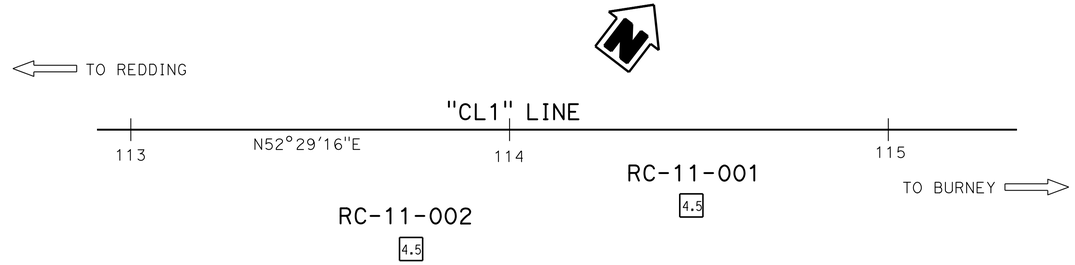

## PLAN

1" = 20'

## PROFILE

Horiz: 1" = 5'
Vert: 1" = 10'

### RC-11-002

31.5' Rt Sta 113+74.0 "CL1" Line

540.5' — 4.5

SANDY lean CLAY (CL); stiff; brown; moist; few fine and coarse GRAVEL; little fine and medium SAND; PP= 1.5 tsf.

17 | 1.4

GWS Elev 532.5' — 11-09-11

14 | 1.4

GRAVELLY lean CLAY with SAND (CL); medium stiff; yellowish brown; moist; some fine and coarse GRAVEL; little medium and coarse SAND; PP= 0.75 tsf.

50/1 | 1.4

3.7

SEDIMENTARY ROCK (SILTSTONE); gray, moderately weathered; soft; unfractured; UC= 1175 psi.

REC=78% RQD=36%

SEDIMENTARY ROCK (SILTSTONE); thinly and moderately bedded; slightly weathered; from moderately hard to hard; moderately fractured; UC= 574.0 psi.

REC=100% RQD=70%

SEDIMENTARY ROCK (SANDSTONE); medium grained; moderately bedded; gray; moderately weathered; moderately hard; from intensely to moderately fractured.

REC=84% RQD=50%

SEDIMENTARY ROCK (SANDSTONE); medium and coarse grained; very thickly bedded; gray; fresh; very hard; unfractured.

REC=98% RQD=93%

SEDIMENTARY ROCK (CONGLOMERATE); coarse to fine GRAVEL CONGLOMERATE; thinly and moderately bedded; dark gray; moderately weathered; moderately hard; moderately fractured; UC= 3230.0 psi.

REC=93% RQD=85%

SEDIMENTARY ROCK (SILTSTONE); thinly and moderately bedded; gray; from moderately to slightly weathered; hard; moderately fractured.

-from moderately to slightly fractured.

-UC= 1938 psi.

11-09-11
Terminated at Elev 500.5'
ERi = 80%

### RC-11-001

20.0' Rt Sta 114+48.0 "CL1" Line

541.9' — 4.5

SANDY lean CLAY with GRAVEL (CL); very soft; dark yellowish brown; wet; some fine SAND; little fine and coarse GRAVEL.

14 | 1.4

-PP= 0.0 tsf.

CR GWS Elev 531.3' — 11-08-11

83/8 | 1.4

Lean CLAY (CL); hard; dark grayish brown; moist; PP> 4.5 tsf.

REF | 1.4

3.7

SEDIMENTARY ROCK (SILTSTONE); variably gray and dark gray; moderately weathered; from very soft to soft; unfractured; UC = 86 and 1457 psi.

REC=93% RQD=81%

SEDIMENTARY ROCK (SILTSTONE); thinly and moderately bedded; dark gray; from slightly weathered to fresh; moderately hard; moderately fractured; UC= 1221, 1216, and 1292.0 psi.

REC=91% RQD=61%

-fresh; from hard to very hard.

REC=98% RQD=59%

SEDIMENTARY ROCK (SANDSTONE); fine and medium grained; thinly and moderately bedded; gray; from moderately to slightly weathered; moderately hard; unfractured.

REC=91% RQD=69%

SEDIMENTARY ROCK (SANDSTONE); fine, medium, and coarse grained; massive; gray; from moderately to slightly weathered; moderately hard.

REC=107% RQD=71%

-from hard to very hard.

REC=112% RQD=82%

SEDIMENTARY ROCK (SILTSTONE); massive; dark gray; slightly weathered; moderately hard; moderately fractured; UC = 3111.0 psi.

REC=96% RQD=88%

SEDIMENTARY ROCK (SILTSTONE); thinly and moderately bedded; dark gray; fresh; from moderately hard to hard; moderately fractured.

REC=89% RQD=83%

-UC = 1400.0 psi.

REC=101% RQD=64%

-UC = 1914.0 psi.

REC=95% RQD=95%

-from intensely to moderately fractured.

REC=105% RQD=74%

-from moderately to slightly fractured.

REC=97% RQD=96%

-from intensely to moderately fractured.

REC=101% RQD=101%

-from moderately to slightly fractured.

-unfractured.

REC=100% RQD=93%

-from moderately to slightly fractured.

11-02-11
Terminated at Elev 461.9'
ERi = 80%

540 530 520 510 500 490 480 470 460

113+70 114+00 114+50 115+00

| ENGINEERING SERVICES | MATERIALS AND GEOTECHNICAL SERVICES | STATE OF CALIFORNIA DEPARTMENT OF TRANSPORTATION | DIVISION OF ENGINEERING SERVICES STRUCTURE DESIGN DESIGN BRANCH 3 | BRIDGE NO. 06-0211 POST MILE 32.2 | LEMN CREEK BRIDGE REPLACEMENT LOG OF TEST BORINGS |
|---|---|---|---|---|---|
| FUNCTIONAL SUPERVISOR NAME: R. Buell | DRAWN BY: F. Nguyen CHECKED BY: X. Zheng | FIELD INVESTIGATION BY: J. Kaump | | | |

OGS CIVIL LOG OF TEST BORINGS SHEET

ORIGINAL SCALE IN INCHES FOR REDUCED PLANS 0 1 2 3

UNIT: 3643
PROJECT NUMBER & PHASE: 02000002621 CONTRACT NO.: 02-360701

DISREGARD PRINTS BEARING EARLIER REVISION DATES

REVISION DATES: 03-13-12 09-24-12 09-20-12

SHEET 16 OF 16

FILE => 06-0211-z-lotb01.dgn

USERNAME => s124496 DATE PLOTTED => 18-JUN-2013 TIME PLOTTED => 13:16