Dist	COUNTY	ROUTE	POST MILES TOTAL PROJECT	SHEET No.	TOTAL SHEETS
02	Las,Sha	44,299	65.3/71.4, 4.7/12.3	1	15

INDEX OF PLANS

SHEET No.	DESCRIPTION
1	TITLE
2-3	TYPICAL CROSS SECTIONS
4	CONSTRUCTION DETAILS
5	CONSTRUCTION AREA SIGNS
6	PAVEMENT DELINEATION DETAILS
7-8	SUMMARY OF QUANTITIES
9-15	REVISED STANDARD PLANS

STATE OF CALIFORNIA

DEPARTMENT OF TRANSPORTATION

PROJECT PLANS FOR CONSTRUCTION ON

STATE HIGHWAY

IN SHASTA AND LASSEN COUNTIES ON ROUTE 44 FROM 0.1 MILE WEST OF PLUM VALLEY ROAD TO LASSEN COUNTY LINE AND ON ROUTE 299 FROM 0.8 MILE EAST OF COUNTY ROAD 407 TO PIT RIVER OVERFLOW BRIDGE 07-0002

TO BE SUPPLEMENTED BY STANDARD PLANS DATED MAY 2006

LOCATION MAP

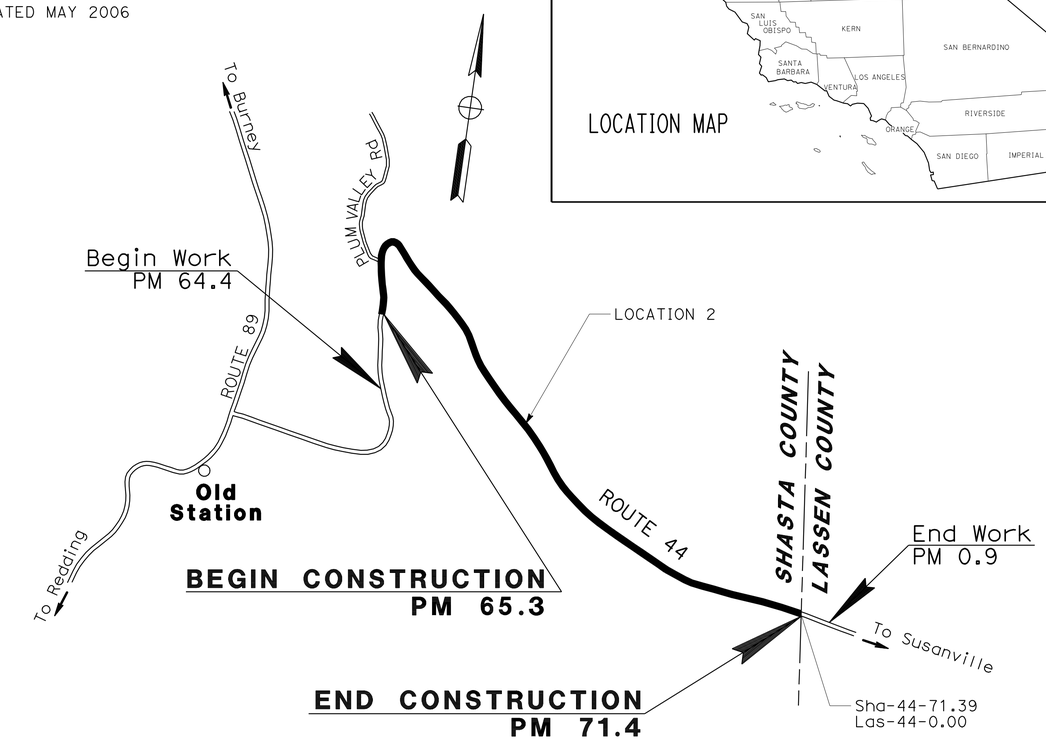

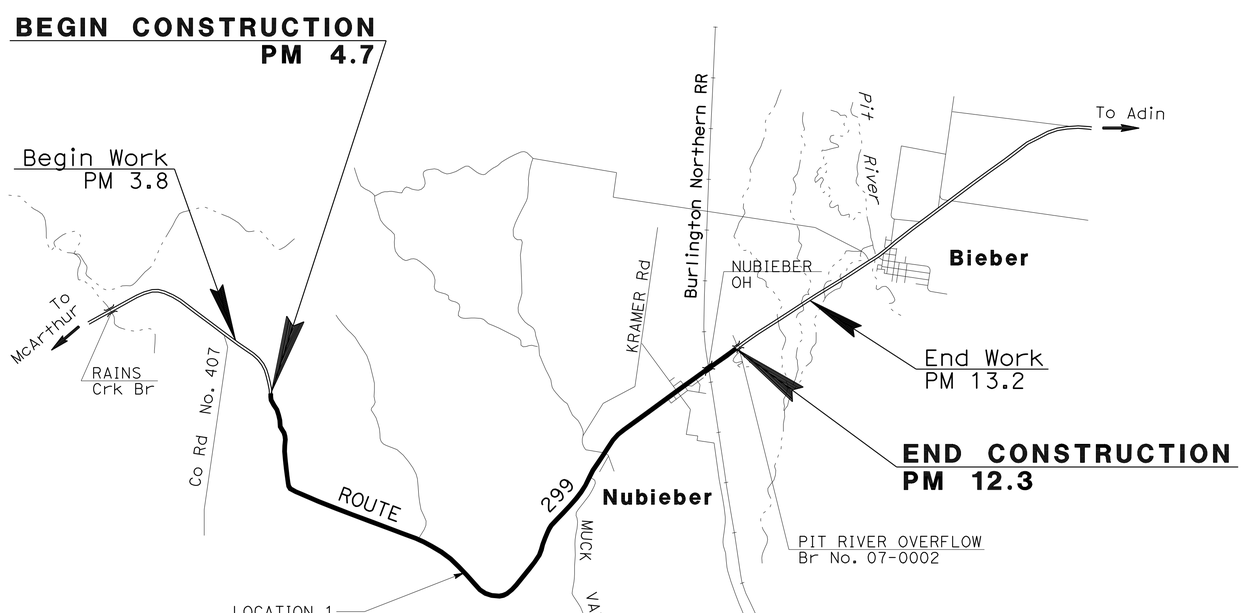

THE CONTRACTOR SHALL POSSESS THE CLASS (OR CLASSES) OF LICENSE AS SPECIFIED IN THE "NOTICE TO BIDDERS."

NO SCALE

PROJECT ENGINEER — 12-01-10 DATE
REGISTERED CIVIL ENGINEER

December 1, 2010
PLANS APPROVAL DATE

REGISTERED PROFESSIONAL ENGINEER — MICHAEL A. CONNER — No. C73123 — Exp. 12-31-12 — CIVIL — STATE OF CALIFORNIA

THE STATE OF CALIFORNIA OR ITS OFFICERS OR AGENTS SHALL NOT BE RESPONSIBLE FOR THE ACCURACY OR COMPLETENESS OF SCANNED COPIES OF THIS PLAN SHEET.

CONTRACT No.	02-2E6604
PROJECT ID	0200000592

PROJECT MANAGER: LANCE BROWN
DESIGN ENGINEER: LANCE BROWN

P:\proj2\02\2E660_plans\pse\22E660ab001.dgn

LAST REVISION 11-29-10 | DATE PLOTTED => 07-DEC-2010 | TIME PLOTTED => 11:48

Dist	COUNTY	ROUTE	POST MILES TOTAL PROJECT	SHEET No.	TOTAL SHEETS
02	Las,Sha	44,299	65.3/71.4, 4.7/12.3	2	15

REGISTERED CIVIL ENGINEER 12-01-10 DATE

12-01-10
PLANS APPROVAL DATE

REGISTERED PROFESSIONAL ENGINEER MICHAEL A. CONNER No. C73123 Exp. 12-31-12 CIVIL STATE OF CALIFORNIA

THE STATE OF CALIFORNIA OR ITS OFFICERS OR AGENTS SHALL NOT BE RESPONSIBLE FOR THE ACCURACY OR COMPLETENESS OF SCANNED COPIES OF THIS PLAN SHEET.

NOTES:

1. DIMENSIONS OF THE PAVEMENT STRUCTURES (STRUCTURAL SECTIONS) ARE SUBJECT TO TOLERANCES SPECIFIED IN THE STANDARD SPECIFICATIONS.
2. SUPERELEVATIONS AS SHOWN OR AS DIRECTED BY THE ENGINEER.
3. EXISTING UTILITY FACILITIES HAVE NOT BEEN POSITIVELY LOCATED, AND HAVE NOT BEEN PLOTTED ON PORTIONS OF THESE PLANS.

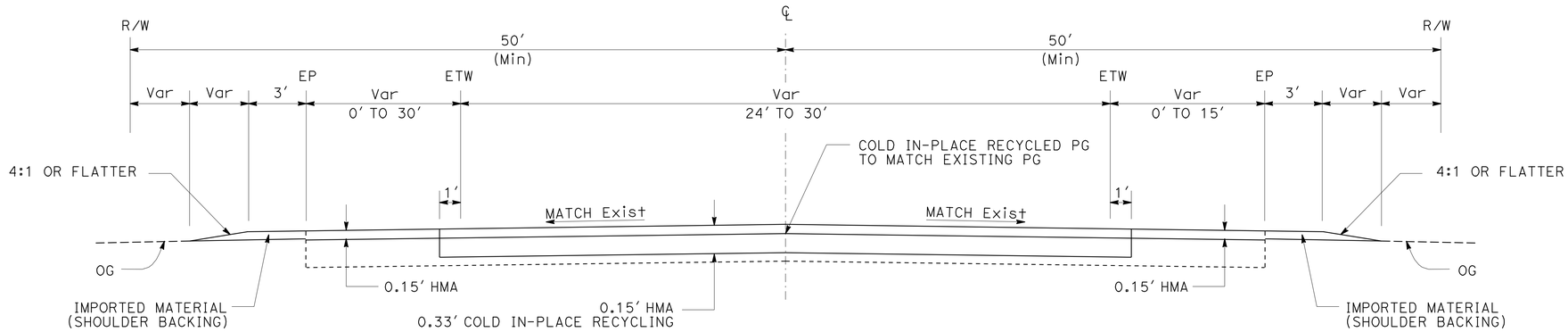

LOCATION 1
Las-299-11.31/11.73

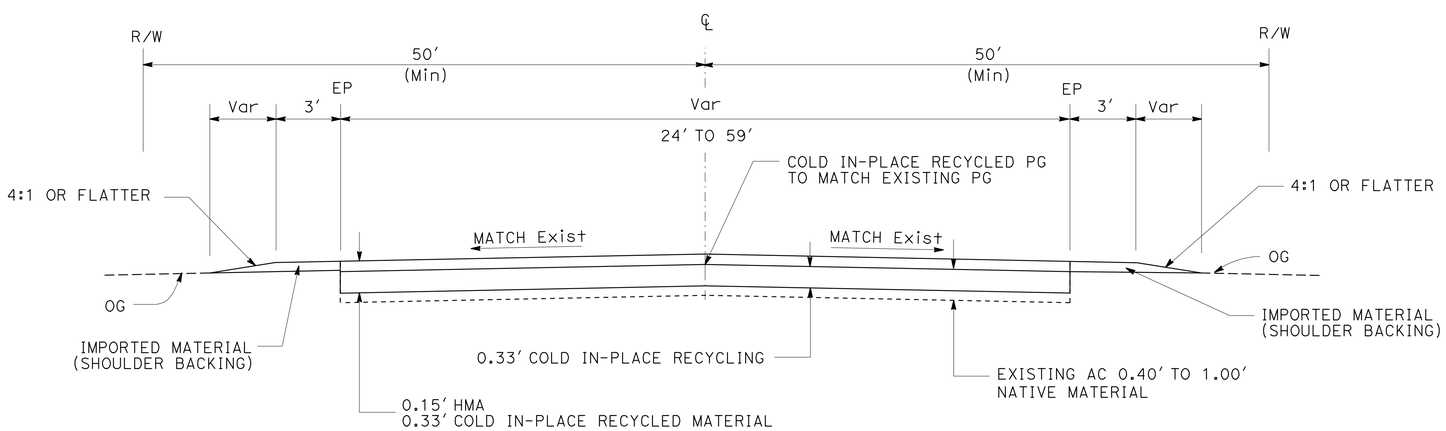

TYPICAL CROSS SECTION

LOCATION 1	LOCATION 2
Las-299-4.70/5.85	Sha-44-65.30/66.24
Las-299-6.85/10.00	Sha-44-66.94/68.96
Las-299-11.00/11.31	Sha-44-69.85/71.38
Las-299-11.73/12.27	

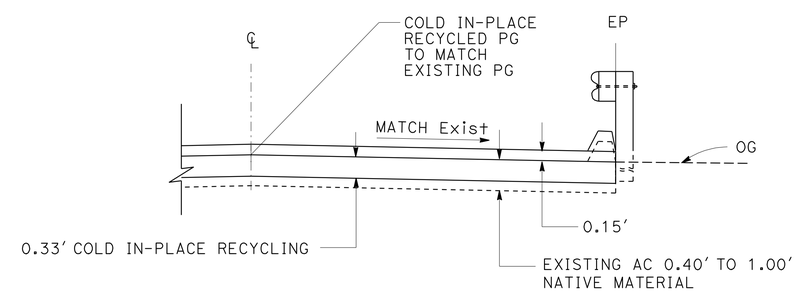

MBGR AND AC DIKE LOCATION

TYPICAL BOTH SIDES

TYPICAL CROSS SECTIONS

NO SCALE

X-1

REVISED BY | DATE REVISED
MICHAEL CONNER | KARLIE SMITH
CALCULATED-DESIGNED BY | CHECKED BY
FUNCTIONAL SUPERVISOR | LANCE BROWN

STATE OF CALIFORNIA - DEPARTMENT OF TRANSPORTATION
Caltrans® MAINTENANCE

P:\proj2\02\2E660_plans\pse\22E660ca001.dgn

LAST REVISION | DATE PLOTTED => 07-DEC-2010 | TIME PLOTTED => 11:48
11-29-10

Dist	COUNTY	ROUTE	POST MILES TOTAL PROJECT	SHEET No.	TOTAL SHEETS
02	Las,Sha	44,299	65.3/71.4, 4.7/12.3	3	15

REGISTERED CIVIL ENGINEER DATE 12-01-10

PLANS APPROVAL DATE 12-01-10

REGISTERED PROFESSIONAL ENGINEER MICHAEL A. CONNER No. C73123 Exp. 12-31-12 CIVIL STATE OF CALIFORNIA

THE STATE OF CALIFORNIA OR ITS OFFICERS OR AGENTS SHALL NOT BE RESPONSIBLE FOR THE ACCURACY OR COMPLETENESS OF SCANNED COPIES OF THIS PLAN SHEET.

NOTE:

1. EXISTING UTILITY FACILITIES HAVE NOT BEEN POSITIVELY LOCATED, AND HAVE NOT BEEN PLOTTED ON PORTIONS OF THESE PLANS.

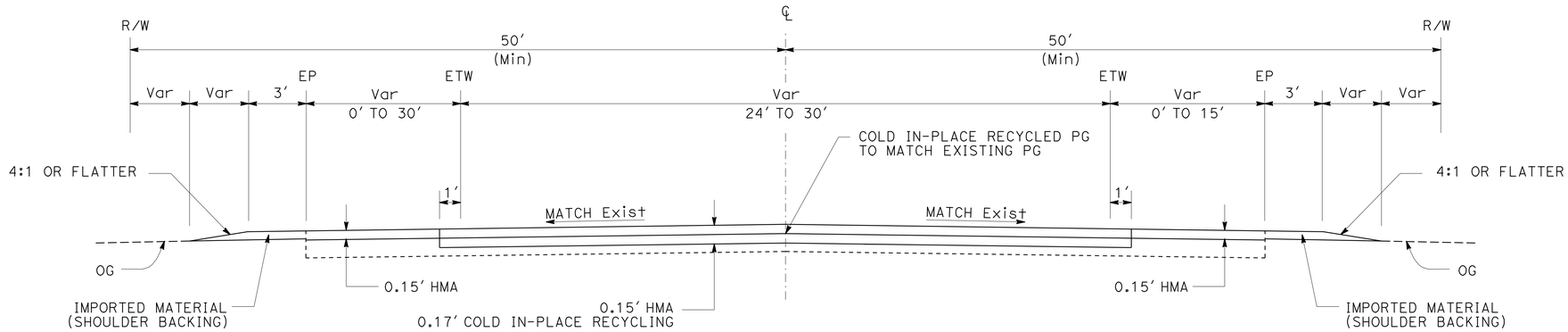

LOCATION 1
Las-299-6.00/6.10
Las-299-10.85/10.90

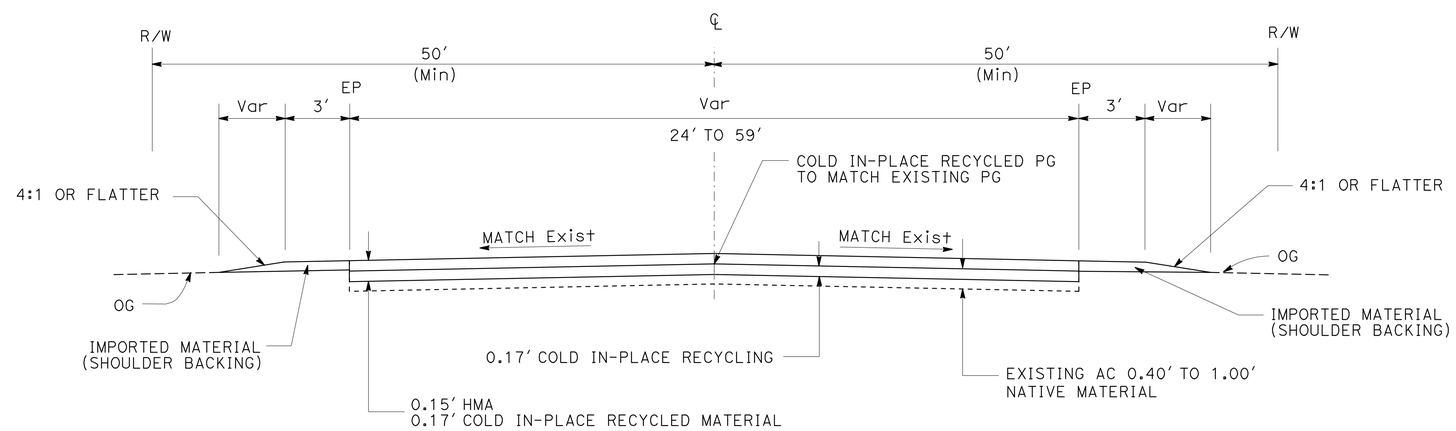

TYPICAL CROSS SECTION

LOCATION 1
Las-299-5.85/6.00
Las-299-6.10/6.85
Las-299-10.00/10.85
Las-299-10.90/11.00

TYPICAL CROSS SECTIONS

NO SCALE

X-2

REVISED BY | DATE REVISED
MICHAEL CONNER | KARLIE SMITH
CALCULATED-DESIGNED BY | CHECKED BY
FUNCTIONAL SUPERVISOR: LANCE BROWN
STATE OF CALIFORNIA - DEPARTMENT OF TRANSPORTATION
Caltrans MAINTENANCE

P:\proj2\02\2E660_plans\pse\22E660ca002.dgn

LAST REVISION | DATE PLOTTED => 07-DEC-2010 | TIME PLOTTED => 11:48
11-29-10

BORDER LAST REVISED 7/2/2010 | USERNAME => s123119 | DGN FILE => 22E660ca002.dgn | RELATIVE BORDER SCALE IS IN INCHES 0 1 2 3 | UNIT 0156 | PROJECT NUMBER & PHASE 02000005921

Dist	COUNTY	ROUTE	POST MILES TOTAL PROJECT	SHEET No.	TOTAL SHEETS
02	Las,Sha	44,299	65.3/71.4, 4.7/12.3	4	15

REGISTERED CIVIL ENGINEER 12-01-10 DATE

12-01-10
PLANS APPROVAL DATE

REGISTERED PROFESSIONAL ENGINEER MICHAEL A. CONNER No. C73123 Exp.12-31-12 CIVIL STATE OF CALIFORNIA

THE STATE OF CALIFORNIA OR ITS OFFICERS OR AGENTS SHALL NOT BE RESPONSIBLE FOR THE ACCURACY OR COMPLETENESS OF SCANNED COPIES OF THIS PLAN SHEET.

LEGEND

COLD PLANE AC PAVEMENT

HMA CONFORM TAPER

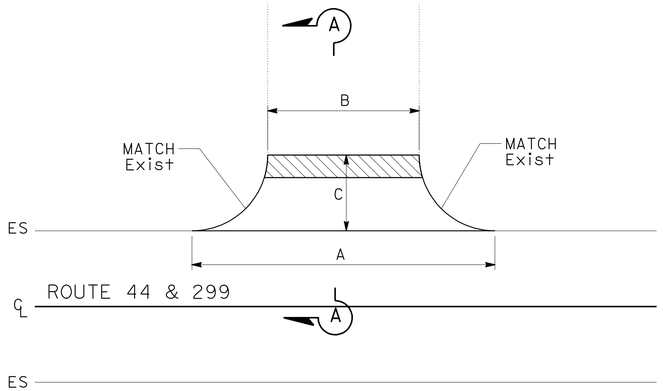

PAVED ROAD CONNECTIONS

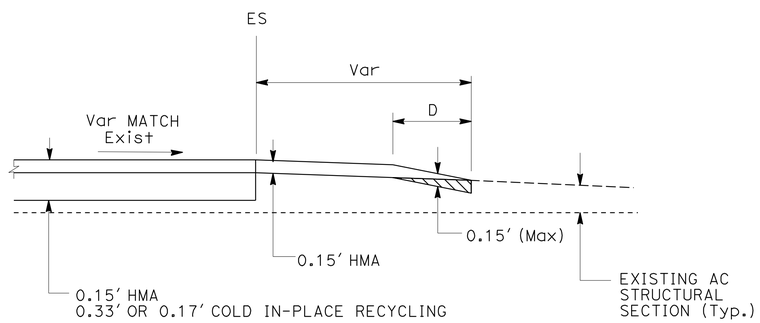

SECTION A-A

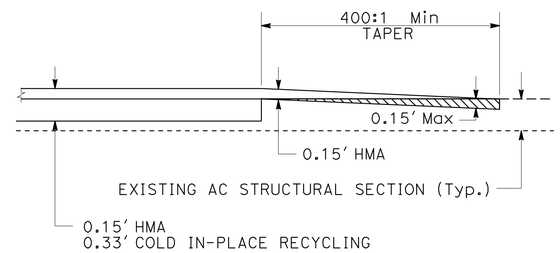

MAINLINE CONFORM TAPER

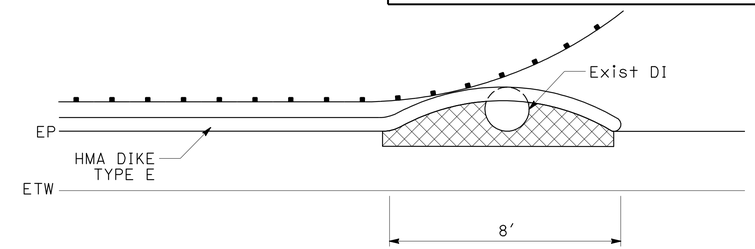

PLAN

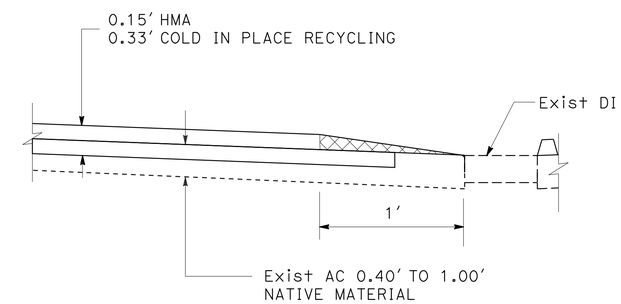

ELEVATION

CONFORM TAPER AT DRAINAGE INLETS

PM 11.75 NB & SB
PM 12.08 NB & SB

ROAD CONNECTIONS

LOCATION	Co-Rte	ROAD CONNECTION	POST MILE	DIMENSIONS A	B	C	D
				LF			
1	Las-299	ROAD CONNECTION - Lt	7.31	87	55	10	4
		MUCK VALLEY Rd - Rt	8.79	121	46	20	4
		CEMETERY Rd - Rt	10.41	285	32	47	20
		CEMETERY Rd - Lt	10.41	280	32	38	20
		KRAMER Rd - Rt	11.46	155	38	40	20
		KRAMER Rd - Lt	11.46	125	32	40	20
		FOURTH St - Rt & ROOSEVELT Ave - Rt	11.57 & 11.59	256	27-37	40	20
		FOURTH St - Lt	11.57	80	21	40	20
		ADAMS Ave - Rt	11.72	82	24	35	20
		PAVED Rd - Rt	12.11	42	37	40	20
		PAVED Rd - Rt	12.15	163		21	4
2	Sha-44	PLUM VALLEY Rd - Lt	65.45	164	75	20	4
		PAVED Rd - Lt	68.91	190	74	10	4
		USFS Rd 33N29 - Lt	70.50	167	70	10	4

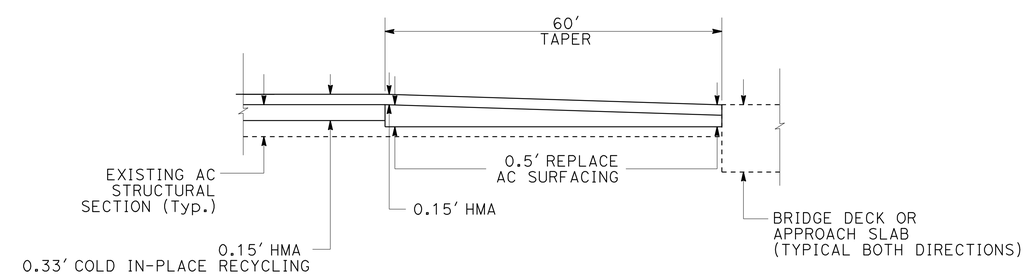

CONFORM TAPER AT BRIDGE

CONSTRUCTION DETAILS

NO SCALE

C-1

REVISED BY | DATE REVISED
MICHAEL CONNER | KARLIE SMITH
CALCULATED-DESIGNED BY | CHECKED BY
FUNCTIONAL SUPERVISOR | LANCE BROWN
STATE OF CALIFORNIA - DEPARTMENT OF TRANSPORTATION
Caltrans® MAINTENANCE

P:\proj2\02\2E660_plans\pse\22E660ga001.dgn

LAST REVISION 11-29-10 | DATE PLOTTED => 07-DEC-2010 | TIME PLOTTED => 11:48

Dist	COUNTY	ROUTE	POST MILES TOTAL PROJECT	SHEET No.	TOTAL SHEETS
02	Las,Sha	44,299	65.3/71.4, 4.7/12.3	5	15

REGISTERED CIVIL ENGINEER 12-01-10 DATE

12-01-10
PLANS APPROVAL DATE

REGISTERED PROFESSIONAL ENGINEER MICHAEL A. CONNER No. C73123 Exp. 12-31-12 CIVIL STATE OF CALIFORNIA

THE STATE OF CALIFORNIA OR ITS OFFICERS OR AGENTS SHALL NOT BE RESPONSIBLE FOR THE ACCURACY OR COMPLETENESS OF SCANNED COPIES OF THIS PLAN SHEET.

NOTES:

1. EXACT LOCATION OF ALL SIGNS TO BE DETERMINED BY THE ENGINEER.
3. CALIFORNIA CODES ARE DESIGNATED BY (CA), OTHERWISE FEDERAL CODES ARE SHOWN.
4. INTERMEDIATE G20-1 SIGNS SHOULD BE PLACED EVERY 3 TO 5 MILES AS NECESSARY.

LEGEND

ONE POST STATIONARY MOUNTED SIGN

DIRECTION OF TRAFFIC

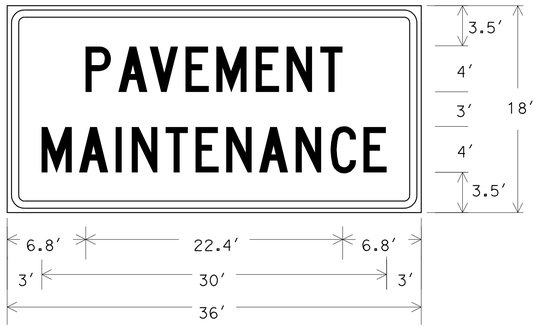

1.5" Radius, 0.6" Border, 0.4" Indent, Black on Orange;
[PAVEMENT] C;
[MAINTENANCE] C;

C23B(CA) SIGN PANEL DETAIL

ROAD CONNECTIONS

LOCATION	PM	LOCATION
1	8.79	MUCK VALLEY Rd - Rt
	10.41	CEMETERY Rd - Rt & Lt
	11.46	KRAMER Rd - Rt & Lt
	11.57	FOURTH St - Rt & Lt
	11.59	ROOSEVELT Ave - Rt
	11.72	ADAMS Ave - Rt
	12.11	PAVED Rd - Rt
	12.15	PAVED Rd - Rt
2	65.45	PLUM VALLEY Rd - Lt
	66.90	USFS Rd 34N16 - Lt
	68.91	PAVED Rd - Lt
	70.50	USFS Rd 33N29 - Rt & Lt

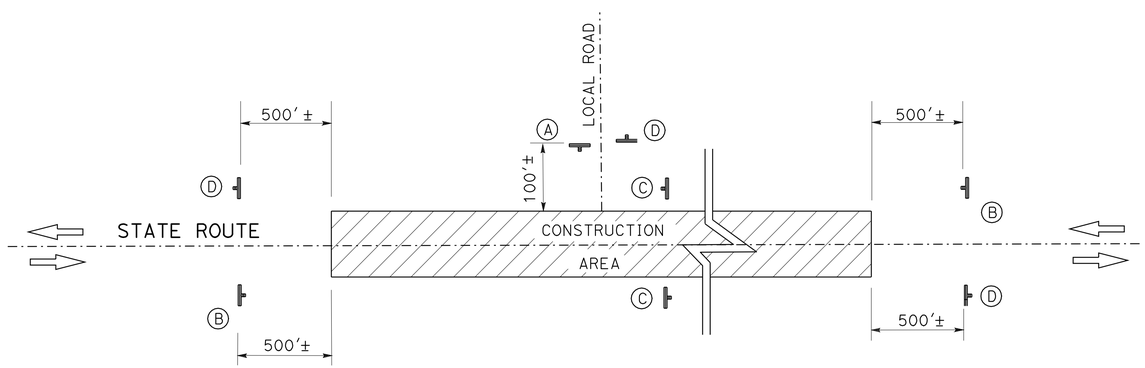

CONSTRUCTION AREA SIGNS (STATIONARY MOUNTED)

CONSTRUCTION AREA SIGNS (STATIONARY MOUNTED)

TYPE	CODE	PANEL SIZE	SIGN MESSAGE	NUMBER AND SIZE OF POST	No. OF SIGNS
A	W20-1 C23B(CA)	48" x 48" 36" x 18"	ROAD WORK AHEAD PAVEMENT MAINTENANCE	1-4" x 6"	16
B	G20-1 C23B(CA)	36" x 18" 36" x 18"	ROAD WORK NEXT XX MILES PAVEMENT MAINTENANCE	1-4" x 6"	4
C	G20-1	36" x 18"	ROAD WORK NEXT XX MILES	1-4" x 4"	4
D	G20-2	36" x 18"	END ROAD WORK	1-4" x 4"	18

CONSTRUCTION AREA SIGNS

NO SCALE

CS-1

REVISED BY | DATE REVISED
MICHAEL CONNER | KARLIE SMITH
CALCULATED-DESIGNED BY | CHECKED BY
FUNCTIONAL SUPERVISOR: LANCE BROWN

STATE OF CALIFORNIA - DEPARTMENT OF TRANSPORTATION
Caltrans® MAINTENANCE

P:\proj2\02\2E660_plans\pse\22E6601a001.dgn

LAST REVISION | DATE PLOTTED => 07-DEC-2010 | TIME PLOTTED => 11:48
11-29-10

Dist	COUNTY	ROUTE	POST MILES TOTAL PROJECT	SHEET No.	TOTAL SHEETS
02	Las,Sha	44,299	65.3/71.4, 4.7/12.3	6	15

REGISTERED CIVIL ENGINEER 12-01-10 DATE

12-01-10
PLANS APPROVAL DATE

REGISTERED PROFESSIONAL ENGINEER MICHAEL A. CONNER No. C73123 Exp. 12-31-12 CIVIL STATE OF CALIFORNIA

THE STATE OF CALIFORNIA OR ITS OFFICERS OR AGENTS SHALL NOT BE RESPONSIBLE FOR THE ACCURACY OR COMPLETENESS OF SCANNED COPIES OF THIS PLAN SHEET.

LEGEND

⇦ Dir OF TRAFFIC

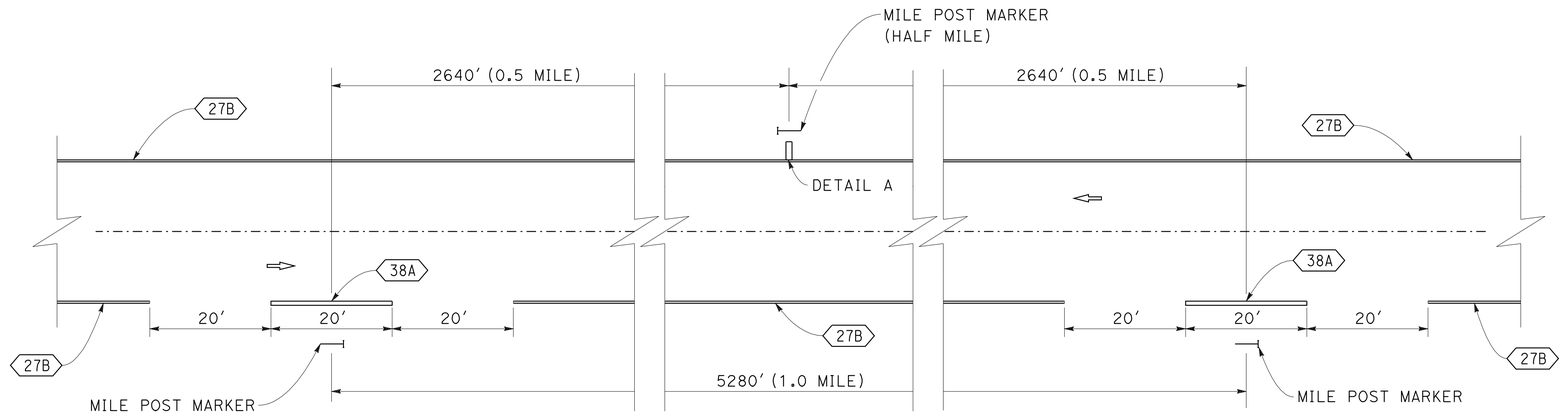

TYPICAL HALF MILE AND MILE POST STRIPE (CONVENTIONAL ROADWAY)

NO HALF MILE STRIPE WITHIN AN EQUATION

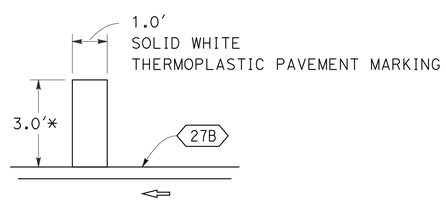

DETAIL A

* ACTUAL LENGTH MAY VARY DUE TO PAVEMENT WIDTH

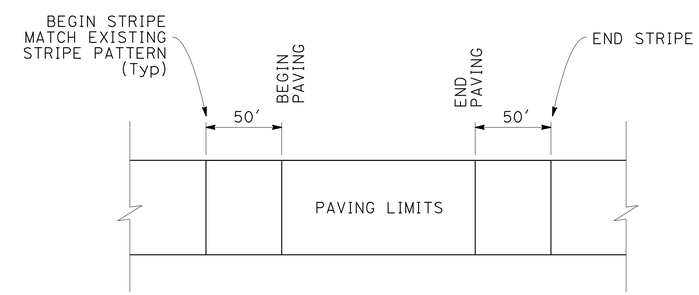

TRAFFIC STRIPE MATCH DETAIL

PAVEMENT DELINEATION DETAILS

NO SCALE

PDD-1

STATE OF CALIFORNIA - DEPARTMENT OF TRANSPORTATION
Caltrans® MAINTENANCE

FUNCTIONAL SUPERVISOR: LANCE BROWN
CALCULATED-DESIGNED BY: MICHAEL CONNER
CHECKED BY: KARLIE SMITH
REVISED BY
DATE REVISED

P:\proj2\02\2E660_plans\pse\22E660nb001.dgn

LAST REVISION | DATE PLOTTED => 07-DEC-2010 | TIME PLOTTED => 11:48
11-29-10

Dist	COUNTY	ROUTE	POST MILES TOTAL PROJECT	SHEET No.	TOTAL SHEETS
02	Las,Sha	44,299	65.3/71.4, 4.7/12.3	7	15

REGISTERED CIVIL ENGINEER 12-01-10 DATE

12-01-10
PLANS APPROVAL DATE

REGISTERED PROFESSIONAL ENGINEER MICHAEL A. CONNER No. C73123 Exp. 12-31-12 CIVIL STATE OF CALIFORNIA

THE STATE OF CALIFORNIA OR ITS OFFICERS OR AGENTS SHALL NOT BE RESPONSIBLE FOR THE ACCURACY OR COMPLETENESS OF SCANNED COPIES OF THIS PLAN SHEET.

THERMOPLASTIC PAVEMENT MARKING

LOCATION	Co-Rte	PM	Lt	Rt	EA	SQFT	REMARKS
1	Las-299	MAINLINE	X		7	21.0	DETAIL A
		8.79		X	1	26.0	ROAD CONNECTION LIMIT LINE
		8.79		X	1	22.0	STOP
		10.41	X	X	2	66.0	ROAD CONNECTION LIMIT LINE
		10.41	X	X	2	44.0	STOP
		11.46	X	X	2	86.0	ROAD CONNECTION LIMIT LINE
		11.46	X	X	2	44.0	STOP
		11.57	X	X	2	60.0	ROAD CONNECTION LIMIT LINE
		11.57	X	X	2	44.0	STOP
		11.59		X	1	42.0	ROAD CONNECTION LIMIT LINE
		11.59		X	1	22.0	STOP
		11.72		X	1	23.0	ROAD CONNECTION LIMIT LINE
		11.72		X	1	22.0	STOP
		12.11		X	1	13.0	ROAD CONNECTION LIMIT LINE
		12.11		X	1	22.0	STOP
		12.15		X	1	11.0	ROAD CONNECTION LIMIT LINE
		12.15		X	1	24.0	YIELD
2	Sha-44	MAINLINE	X		6	18.0	DETAIL A
		65.45		X	1	42.0	TYPE III (L) ARROW
		65.45	X		1	28.0	ROAD CONNECTION LIMIT LINE
		65.45	X		1	22.0	STOP
		65.47	X		1	42.0	TYPE III (R) ARROW
		65.55	X		1	42.0	TYPE III (R) ARROW
		65.05		X	1	42.0	TYPE VI ARROW
		66.09		X	1	42.0	TYPE VI ARROW
		66.13		X	1	42.0	TYPE VI ARROW
		68.92	X		1	31.0	ROAD CONNECTION LIMIT LINE
		70.47	X		1	29.0	ROAD CONNECTION LIMIT LINE
TOTAL						972.0	

REMOVE THERMOPLASTIC PAVEMENT MARKING

LOCATION	Co-Rte	PM	Lt	Rt	EA	SQFT	REMARKS
1	Las-299	8.79		X	1	26.0	ROAD CONNECTION LIMIT LINE
		8.79		X	1	22.0	STOP
		10.41	X	X	2	66.0	ROAD CONNECTION LIMIT LINE
		10.41	X	X	2	44.0	STOP
		11.46	X	X	2	86.0	ROAD CONNECTION LIMIT LINE
		11.46	X	X	2	44.0	STOP
		11.57	X	X	2	60.0	ROAD CONNECTION LIMIT LINE
		11.57	X	X	2	44.0	STOP
		11.59		X	1	42.0	ROAD CONNECTION LIMIT LINE
		11.59		X	1	22.0	STOP
		11.72		X	1	23.0	ROAD CONNECTION LIMIT LINE
		11.72		X	1	22.0	STOP
		12.11		X	1	13.0	ROAD CONNECTION LIMIT LINE
		12.11		X	1	22.0	STOP
		12.15		X	1	11.0	ROAD CONNECTION LIMIT LINE
		12.15		X	1	24.0	YIELD
2	Sha-44	65.45	X		1	28.0	ROAD CONNECTION LIMIT LINE
		65.45	X		1	22.0	STOP
		68.92	X		1	31.0	ROAD CONNECTION LIMIT LINE
		70.20	X	X	1	130.5	CATTLEGUARD
		70.47	X		1	29.0	ROAD CONNECTION LIMIT LINE
TOTAL						811.5	

PAVEMENT MARKER (RETROREFLECTIVE-RECESSED)

LOCATION	Co-Rte	PM-PM	TYPE D	TYPE G	TYPE H
			EA	EA	EA
2	Sha-44	65.30-71.38	1912	102	281
TOTAL			2295		

THERMOPLASTIC TRAFFIC STRIPE (RECESSED)

LOCATION	Co-Rte	PM	Lt	Rt	EA	LF	REMARKS
2	Sha-44	70.20	X	X	1	261.0	CATTLEGUARD
TOTAL						261.0	

COLD PLANE ASPHALT CONCRETE PAVEMENT

LOCATION	Co-Rte	PM	LENGTH	WIDTH	AREA	REMARKS
			LF	LF	SQYD	
1	Las-299	4.70	60	27	180	MAINLINE CONFORM TAPER AT BEGINNING OF LOCATION 1
		7.31	55	4	24	ROAD CONNECTION CONFORM - Lt
		8.79	46	4	20	ROAD CONNECTION CONFORM - Rt
		10.41	32	20	71	ROAD CONNECTION CONFORM - Rt
		10.41	32	20	71	ROAD CONNECTION CONFORM - Lt
		11.46	38	20	85	ROAD CONNECTION CONFORM - Rt
		11.46	32	20	71	ROAD CONNECTION CONFORM - Lt
		11.57	27	20	60	ROAD CONNECTION CONFORM - Rt
		11.57	21	20	47	ROAD CONNECTION CONFORM - Lt
		11.59	37	20	82	ROAD CONNECTION CONFORM - Rt
		11.72	24	20	53	ROAD CONNECTION CONFORM - Rt
		12.11	37	20	82	ROAD CONNECTION CONFORM - Rt
		12.15	21	4	9	ROAD CONNECTION CONFORM - Rt
2	Sha-44	65.30	60	30	200	MAINLINE CONFORM TAPER AT BEGINNING OF LOCATION 2
		65.45	75	4	33	ROAD CONNECTION CONFORM - Lt
		68.91	75	4	33	ROAD CONNECTION CONFORM - Lt
		70.50	70	4	31	ROAD CONNECTION CONFORM - Lt
		71.38	60	27	180	MAINLINE CONFORM TAPER AT END OF LOCATION 2
TOTAL					1332	

THERMOPLASTIC TRAFFIC STRIPE (SPRAYABLE)

LOCATION	Co-Rte	PM-PM	DETAIL 5	DETAIL 6	DETAIL 12	DETAIL 18	DETAIL 19	DETAIL 21	DETAIL 22	DETAIL 27B	DETAIL 27C	DETAIL 29	DETAIL 38	DETAIL 38A
			LF	LF	LF	LF	LF	LF	LF	LF	LF	LF	LF	LF
1	Las-299	4.70-12.27	13,464			8924		17,583		78,245	1695			160
2	Sha-44	65.30-71.38		3221	3485		6706		19,642	63,217	988	740	634	120
SUBTOTAL			13,464	3221	3485	8924	6706	17,583	19,642	141,462	2683	740	634	280
TOTAL			218,824											

METAL BEAM GUARD RAILING

LOCATION	Co-Rte	PM-PM	SIDE	RECONSTRUCT MBGR	RECONSTRUCT THRIE MBGR	ALTERNATIVE FLARED TERMINAL SYSTEM	TRANSITION RAILING (TYPE WB)	GUARD RAILING DELINEATOR	REMARKS
				LF	LF	EA	EA	EA	
1	Las-299	4.80-5.93	Rt	5966		1		13	DELINEATOR Approx 500' SPACING
		11.75-11.90	Rt	792		1	1	3	DELINEATOR Approx 396' SPACING
		11.75-11.90	Lt	792		1	1	3	DELINEATOR Approx 396' SPACING
		11.93-12.08	Rt	792		1	1	3	DELINEATOR Approx 396' SPACING
		11.93-12.08	Lt	792		1	1	3	DELINEATOR Approx 396' SPACING
2	Sha-44	65.71-66.05	Lt		1795	2		5	DELINEATOR Approx 450' SPACING
TOTAL				9134	1795	7	4	30	

SUMMARY OF QUANTITIES

Q-1

REVISED BY | DATE REVISED

MICHAEL CONNER | KARLIE SMITH

CALCULATED-DESIGNED BY | CHECKED BY

FUNCTIONAL SUPERVISOR: LANCE BROWN

STATE OF CALIFORNIA - DEPARTMENT OF TRANSPORTATION

Caltrans® MAINTENANCE

P:\proj2\02\2E660_plans\pse\22E660pa001.dgn

LAST REVISION 11-29-10 | DATE PLOTTED => 07-DEC-2010 | TIME PLOTTED => 11:48

Dist	COUNTY	ROUTE	POST MILES TOTAL PROJECT	SHEET No.	TOTAL SHEETS
02	Las,Sha	44,299	65.3/71.4, 4.7/12.3	8	15

REGISTERED CIVIL ENGINEER 12-01-10 DATE

12-01-10
PLANS APPROVAL DATE

REGISTERED PROFESSIONAL ENGINEER MICHAEL A. CONNER No. C73123 Exp. 12-31-12 CIVIL STATE OF CALIFORNIA

THE STATE OF CALIFORNIA OR ITS OFFICERS OR AGENTS SHALL NOT BE RESPONSIBLE FOR THE ACCURACY OR COMPLETENESS OF SCANNED COPIES OF THIS PLAN SHEET.

NOTE:

1. (N) NOT A SEPARATE PAY ITEM, FOR INFORMATION ONLY

ROADWAY QUANTITIES

LOCATION	Co-Rte	PM-PM	(N) LENGTH	(N) WIDTH	HMA	IMPORTED MATERIAL (SHOULDER BACKING)	COLD IN-PLACE RECYCLING	EMULSIFIED RECYCLING AGENT	ASPHALTIC EMULSION (FOG SEAL COAT)	SAND COVER	TACK COAT
			LF	LF	TON	TON	SQYD	TON	TON	TON	TON
1	Las-299	4.70-5.20	2640	27-26	12,089	6523	115,576	757	39	116	35
		5.20-5.98	4118	26-25							
		5.98-6.00	106	25-45							
		6.00-6.03	158	45-54							
		6.03-6.06	158	54-42							
		6.06-6.10	211	42							
		6.10-6.14	211	42-25							
		6.14-6.50	1901	25							
		6.50-7.00	2640	25-24							
		7.00-8.00	5280	24							
		8.00-8.50	2640	24-25							
		8.50-9.00	2640	25-26							
		9.00-9.50	2640	26							
		9.50-10.00	2640	26-28							
		10.00-10.50	2640	28-29							
		10.50-10.82	1690	29							
		10.82-10.85	158	29-38							
		10.85-10.90	264	38							
		10.90-10.92	106	38-29							
		10.92-11.00	422	29-24							
		11.00-11.30	1584	24							
		11.30-11.31	53	24-54							
		11.31-11.34	158	54-59							
		11.34-11.35	53	59							
		11.35-11.36	53	59-29							
		11.36-11.56	1056	29							
		11.56-11.61	264	29-30							
		11.61-11.73	634	30							
		11.73-11.89	845	30-32							
		11.91-12.11	1056	32							
		12.11-12.25	739	32-25							
		12.25-12.27	106	40							
		HMA DIKE			43						
		ROAD CONNECTIONS			395	39					1
2	Sha-44	65.30-65.44	739	30-49	8487	3869	83,821	632	28	84	25
		65.44-65.47	158	49-59							
		65.47-65.48	53	59-57							
		65.48-65.55	370	57							
		65.55-66.05	2640	57-50							
		66.05-66.09	211	50							
		66.09-66.13	211	50-48							
		66.13-66.15	106	48-46							
		66.15-66.24	475	46-32							
		66.94-67.00	317	27							
		67.00-67.50	2640	27							
		67.50-68.00	2640	27-26							
		68.00-68.50	2640	26							
		68.50-68.92	2218	26-27							
		68.92-68.96	211	27							
		69.85-70.50	3432	27-29							
		70.50-71.00	2640	29-27							
		71.00-71.38	2006	27							
		ROAD CONNECTIONS			55	4					1
TOTALS					21,069	10,435	199,397	1389	67	200	62

REMOVE ASPHALT CONCRETE DIKE

LOCATION	Co-Rte	PM-PM	SIDE	LENGTH
				LF
1	Las-299	11.75-11.90	Rt	792
		11.75-11.90	Lt	792
		11.93-12.08	Rt	792
		11.93-12.08	Lt	792
TOTAL				3168

PLACE HOT MIX ASPHALT DIKE (TYPE F)

LOCATION	Co-Rte	PM-PM	SIDE	LENGTH
				LF
1	Las-299	11.75-11.90	Rt	792
		11.75-11.90	Lt	792
		11.93-12.08	Rt	792
		11.93-12.08	Lt	792
TOTAL				3168

REPLACE ASPHALT CONCRETE SURFACING

LOCATION	Co-Rte	PM-PM	LENGTH	WIDTH	DEPTH	CY
			LF	LF	LF	
1	Las-299	11.89-11.90	60	39	0.50	44
		11.93-11.94	60	39	0.50	44
		12.26-12.27	77	44	0.50	63
TOTAL						151

SUMMARY OF QUANTITIES

Q-2

REVISED BY | DATE REVISED
MICHAEL CONNER | KARLIE SMITH
CALCULATED-DESIGNED BY | CHECKED BY
FUNCTIONAL SUPERVISOR: LANCE BROWN

STATE OF CALIFORNIA - DEPARTMENT OF TRANSPORTATION
Caltrans MAINTENANCE

P:\proj2\02\2E660_plans\pse\22E660pa002.dgn

LAST REVISION 11-29-10 | DATE PLOTTED => 07-DEC-2010 | TIME PLOTTED => 11:48

DIST	COUNTY	ROUTE	POST MILES TOTAL PROJECT	SHEET NO.	TOTAL SHEETS
02	Las,Sha	44,299	65.3/71.4, 4.7/12.3	9	15

Randell D. Hiatt
REGISTERED CIVIL ENGINEER

June 6, 2008
PLANS APPROVAL DATE

REGISTERED PROFESSIONAL ENGINEER
Randell D. Hiatt
No. C50200
Exp. 6-30-09
CIVIL
STATE OF CALIFORNIA

The State of California or its officers or agents shall not be responsible for the accuracy or completeness of electronic copies of this plan sheet.

To accompany plans dated 12-01-10

NOTES:

1. When necessary to place dike in front of face of guard railing, only Type C dike may be used. For dike details, see Standard Plan A87B.
2. For standard railing post embedment, see Standard Plans A77C3.
3. Guard railing delineation to be used where shown on the Project Plans.
4. When dike or curb is placed under guard railing, the maximum height of the dike or curb shall be 4". Mountable dike should not be used. For dike and curb details, see Revised Standard Plans RSP A87A and Standard Plan A87B.
5. For details of typical distance between the face of rail and hinge point, see Standard Plan A77C3.

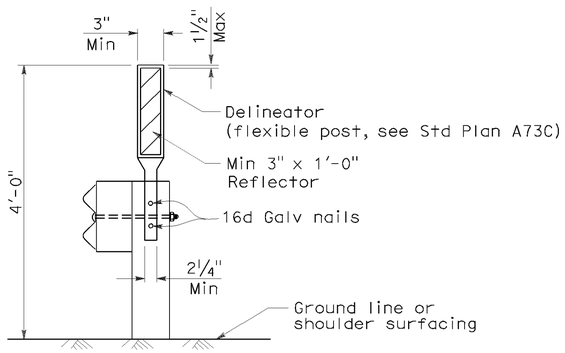

GUARD RAILING DELINEATION

See Note 3

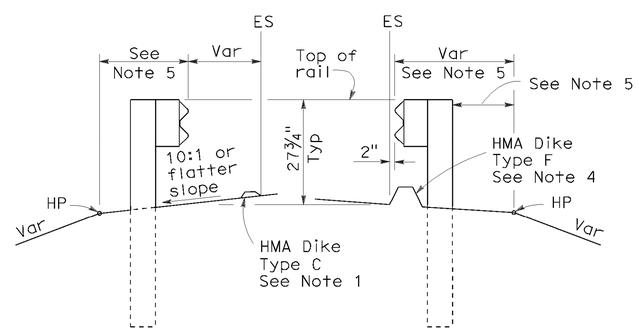

DIKE POSITIONING

See Note 1

STATE OF CALIFORNIA
DEPARTMENT OF TRANSPORTATION

METAL BEAM GUARD RAILING TYPICAL RAILING DELINEATION AND DIKE POSITIONING DETAILS

NO SCALE

RSP A77C4 DATED JUNE 6, 2008 SUPERSEDES STANDARD PLAN A77C4
DATED MAY 1, 2006 - PAGE 47 OF THE STANDARD PLANS BOOK DATED MAY 2006.

REVISED STANDARD PLAN RSP A77C4

2006 REVISED STANDARD PLAN RSP A77C4

P:\proj2\02\2E660_plans\pse\22E660va001.dgn

12-10-07

DIST	COUNTY	ROUTE	POST MILES TOTAL PROJECT	SHEET NO.	TOTAL SHEETS
02	Las,Sha	44,299	65.3/71.4, 4.7/12.3	10	15

Randell D. Hiatt
REGISTERED CIVIL ENGINEER

June 5, 2009
PLANS APPROVAL DATE

REGISTERED PROFESSIONAL ENGINEER Randell D. Hiatt No. C50200 Exp. 6-30-09 CIVIL STATE OF CALIFORNIA

The State of California or its officers or agents shall not be responsible for the accuracy or completeness of electronic copies of this plan sheet.

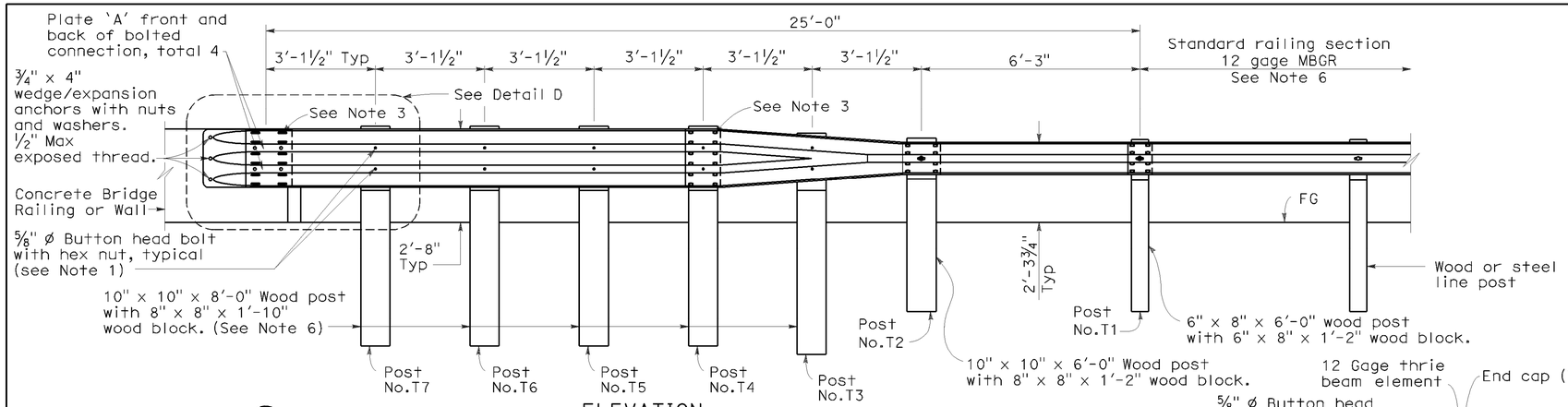

ELEVATION

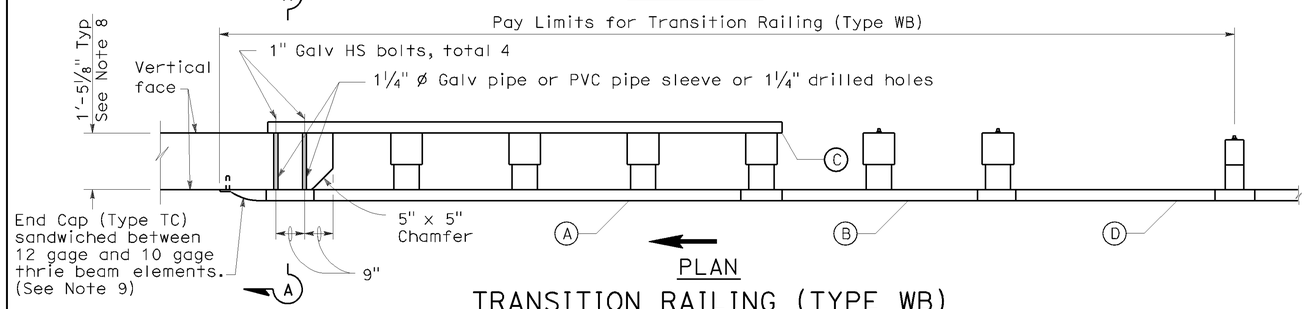

PLAN

TRANSITION RAILING (TYPE WB)

(No Blockout Attachment)

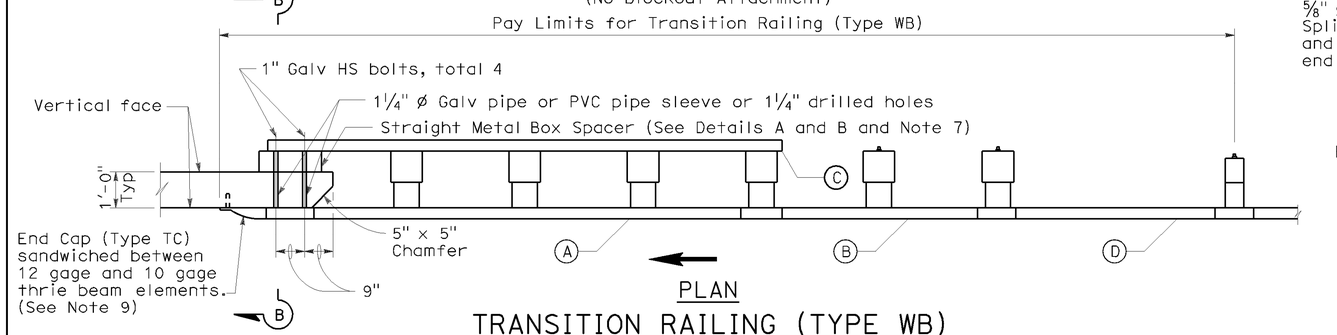

PLAN

TRANSITION RAILING (TYPE WB)

(Blockout Attachment)

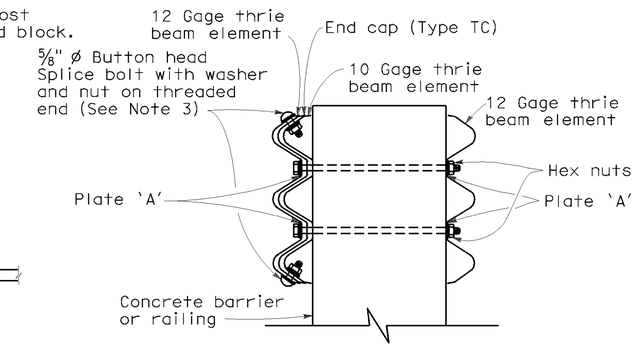

SECTION A-A

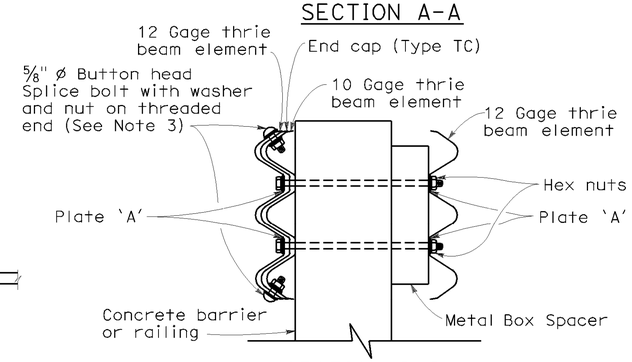

SECTION B-B

NOTES:

To accompany plans dated 12-01-10

1. Use 5/8 " ø Button head bolts and hex nuts for connections to posts. No washer on rail face for bolted connections to post.
2. The nested rail elements, end cap, and 'W' beam to thrie beam element may be spliced together prior to bolting the elements to the wood post and concrete barrier or railing.
3. Exterior splice bolt holes for rail element splices at Post No.T4 and the connection to the concrete barrier or railing shall be the standard 29/32 " x 1 1/8 " slot size. Interior splice bolt holes at these locations may be increased up to 1 1/4 " ø. Only the top 2 and the bottom 2 splice bolts with washers and nuts are required for rail splices at Post No.T4 and the connection to the concrete barrier or railing.
4. Direction of adjacent traffic indicated by →.
5. The top elevation of Post Nos.T2 through T7 shall not project more than 1" above the top elevation of the rail element.
6. Typically, the railing connected to Transition Railing (Type WB) will be either standard railing section of metal beam guard railing or an approved Caltrans end treatment attached to Post No.T1.
7. The depth of the metal box spacer varies from the 5 1/8 " to 1 1/2 " and is dependent on the width of the concrete railing or wall. The combined dimension for the depth of the metal box spacer plus the width of railing or wall is typically 17 1/8 ". Where the space between the backside of the concrete railing or wall and the rear thrie beam element is less than 1 1/2 ", metal plates similar to Plate 'A' are to be used as spacers.
8. Where the width of the concrete railing or wall is greater than 17 1/8 ", wood blocks are to be used to fill the space created between the backside of Posts No.4 through No.7 and the rear thrie beam element. These wood blocks shall be 8" in width and 1'-2" in length. The dimension between the front thrie beam element and the rear thrie beam element is to match the width of the concrete railing or wall.
9. End cap may be installed over 12 gage and 10 gage thrie beam elements where transition railing is installed on the departure end of bridge railing.

LEGEND

- (A) Nested thrie beam elements (one 12 gage element nested over one 10 gage element).
- (B) One 10 gage "W" beam to thrie beam element.
- (C) One 12 gage thrie beam element.
- (D) One 10 gage "W" beam rail element (7'-3½" length)

10 gage = 0.135" thick

12 gage = 0.108" thick

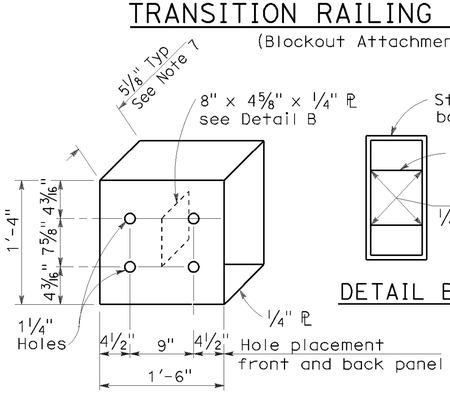

DETAIL A

STRAIGHT METAL BOX SPACER

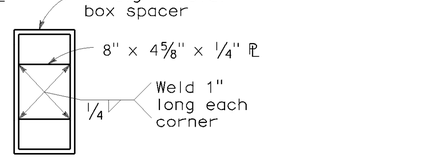

DETAIL B

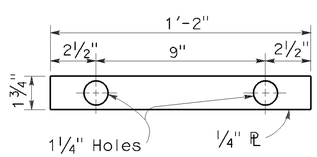

DETAIL C

PLATE 'A'

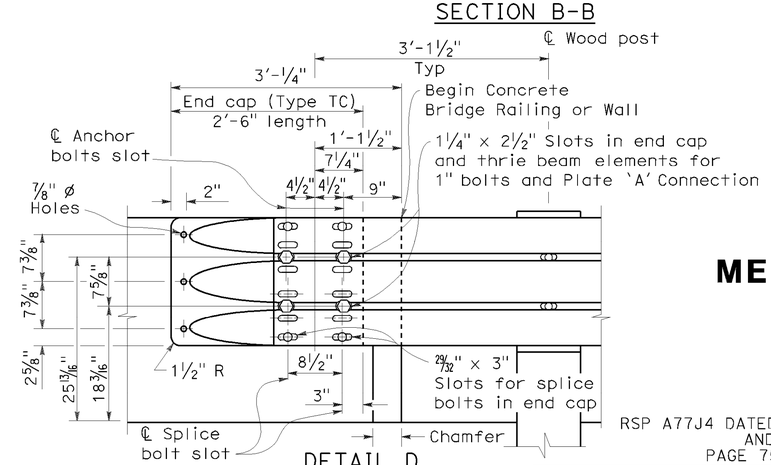

DETAIL D

STATE OF CALIFORNIA
DEPARTMENT OF TRANSPORTATION

METAL BEAM GUARD RAILING TRANSITION RAILING (TYPE WB)

NO SCALE

RSP A77J4 DATED JUNE 5, 2009 SUPERSEDES RSP A77J4 DATED JUNE 6, 2008 AND STANDARD PLAN A77J4 DATED MAY 1, 2006 – PAGE 75 OF THE STANDARD PLANS BOOK DATED MAY 2006.

REVISED STANDARD PLAN RSP A77J4

2006 REVISED STANDARD PLAN RSP A77J4

P:\proj2\02\2E660_plans\pse\22E660va002.dgn

5-14-09

DIST	COUNTY	ROUTE	POST MILES TOTAL PROJECT	SHEET No.	TOTAL SHEETS
02	Las,Sha	44,299	65.3/71.4, 4.7/12.3	11	15

Randell D. Hiatt
REGISTERED CIVIL ENGINEER

June 6, 2008
PLANS APPROVAL DATE

REGISTERED PROFESSIONAL ENGINEER
Randell D. Hiatt
No. C50200
Exp. 6-30-09
CIVIL
STATE OF CALIFORNIA

The State of California or its officers or agents shall not be responsible for the accuracy or completeness of electronic copies of this plan sheet.

To accompany plans dated 12-01-10

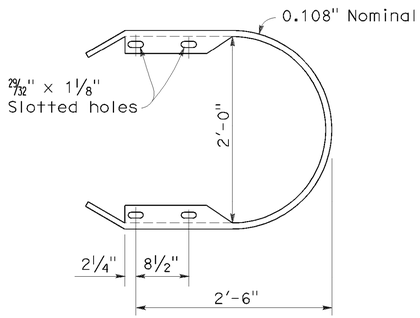

RETURN CAP
(TYPE TA)

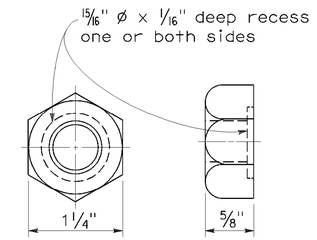

5/8" ø RECESS NUT

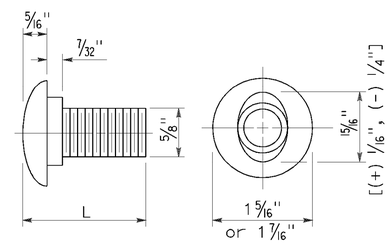

5/8" ø BUTTON HEAD BOLT

L	THREAD LENGTH
1 1/4"	full thread length
2"	full thread length
9 1/2"	4" Min thread length
18"	4" Min thread length

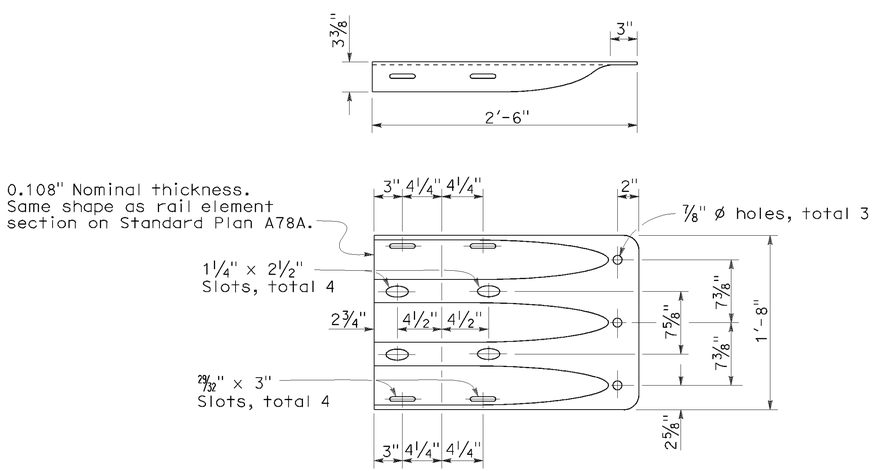

END CAP
(TYPE TC)

STATE OF CALIFORNIA
DEPARTMENT OF TRANSPORTATION

THRIE BEAM BARRIER STANDARD HARDWARE DETAILS

NO SCALE

RSP A78C1 DATED JUNE 6, 2008 SUPERSEDES STANDARD PLAN A78C1
DATED MAY 1, 2006 - PAGE 85 OF THE STANDARD PLANS BOOK DATED MAY 2006.

REVISED STANDARD PLAN RSP A78C1

2006 REVISED STANDARD PLAN RSP A78C1

P:\proj2\02\2E660_plans\pse\22E660va003.dgn

4-21-08

DIST	COUNTY	ROUTE	POST MILES TOTAL PROJECT	SHEET NO.	TOTAL SHEETS
02	Las,Sha	44,299	65.3/71.4, 4.7/12.3	12	15

Randell D. Hiatt
REGISTERED CIVIL ENGINEER

June 6, 2008
PLANS APPROVAL DATE

REGISTERED PROFESSIONAL ENGINEER Randell D. Hiatt No. C50200 Exp. 6-30-09 CIVIL STATE OF CALIFORNIA

The State of California or its officers or agents shall not be responsible for the accuracy or completeness of electronic copies of this plan sheet.

To accompany plans dated 12-01-10

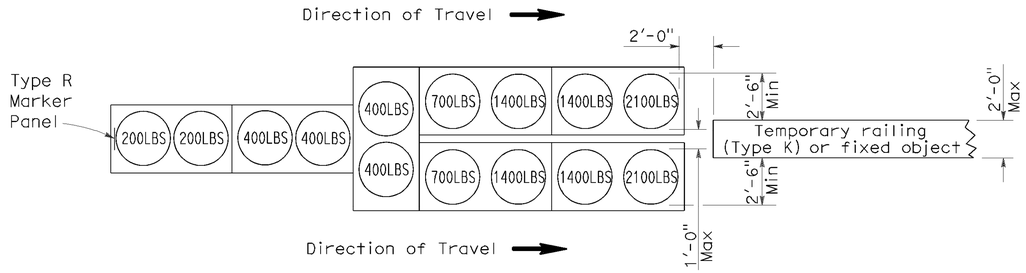

ARRAY 'TU14'

Approach speed 45 mph or more

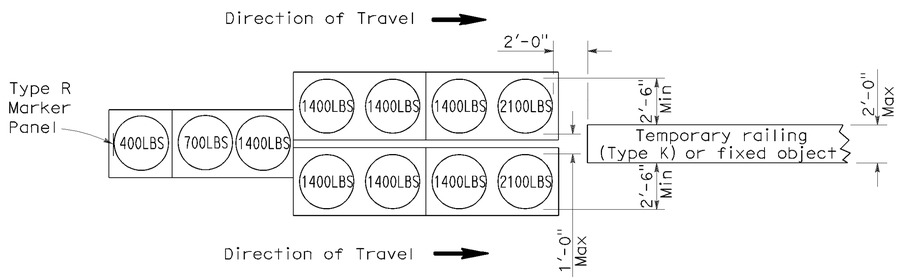

ARRAY 'TU11'

Approach speed less than 45 mph

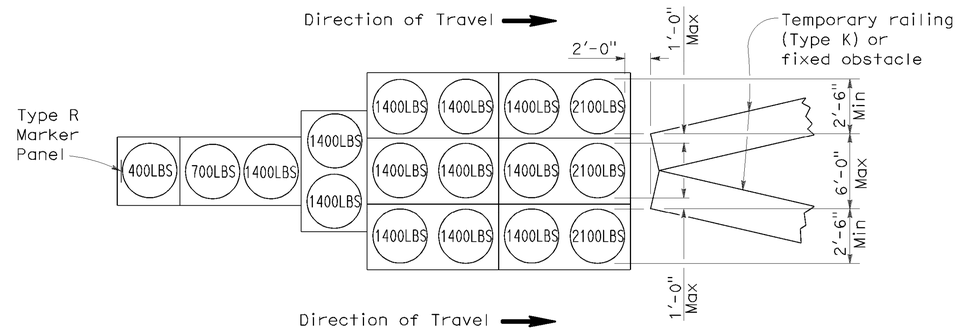

ARRAY 'TU17'

Approach speed less than 45 mph

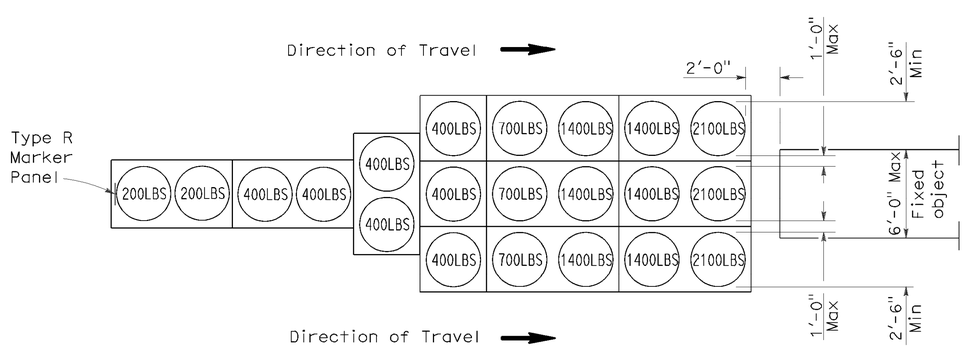

ARRAY 'TU21'

Approach speed 45 mph or more

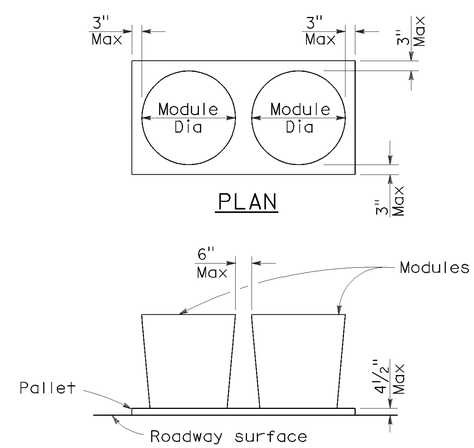

ELEVATION

CRASH CUSHION PALLET DETAIL

See Note 7

NOTES:

1. (XXX) Indicates sand filled module location and weight of sand in pounds for each module. Module spacing is based on the greater diameter of the module.
2. All sand weights are nominal.
3. Temporary crash cushion arrays shall not encroach on the traveled way.
4. Place the top of Type R marker panel 1" below the module lid.
5. Refer to Standard Plan A73B for marker details.
6. Approach speeds indicated conform to NCHRP 350 Report criteria.
7. Use of pallets is optional.

STATE OF CALIFORNIA
DEPARTMENT OF TRANSPORTATION

TEMPORARY CRASH CUSHION, SAND FILLED (UNIDIRECTIONAL)

NO SCALE

RSP T1A DATED JUNE 6, 2008 SUPERSEDES STANDARD PLAN T1A
DATED MAY 1, 2006 - PAGE 211 OF THE STANDARD PLANS BOOK DATED MAY 2006.

REVISED STANDARD PLAN RSP T1A

2006 REVISED STANDARD PLAN RSP T1A

P:\proj2\02\2E660_plans\pse\22E660va004.dgn

5-15-08

DIST	COUNTY	ROUTE	POST MILES TOTAL PROJECT	SHEET NO.	TOTAL SHEETS
02	Las,Sha	44,299	65.3/71.4, 4.7/12.3	13	15

Randell D. Hiatt
REGISTERED CIVIL ENGINEER

June 6, 2008
PLANS APPROVAL DATE

REGISTERED PROFESSIONAL ENGINEER
Randell D. Hiatt
No. C50200
Exp. 6-30-09
CIVIL
STATE OF CALIFORNIA

The State of California or its officers or agents shall not be responsible for the accuracy or completeness of electronic copies of this plan sheet.

To accompany plans dated 12-01-10

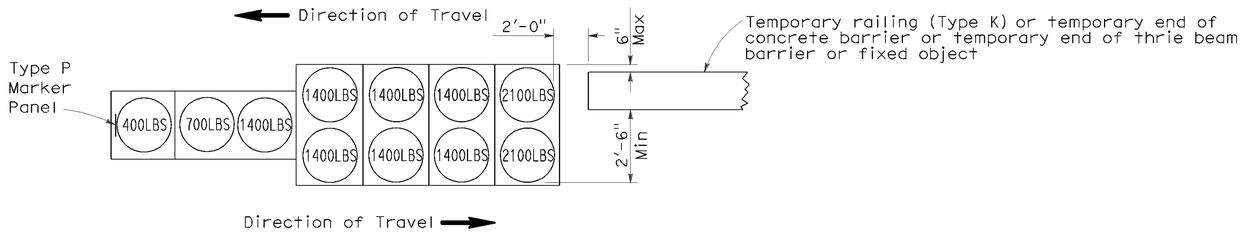

ARRAY 'TB11'

Approach speed less than 45 mph

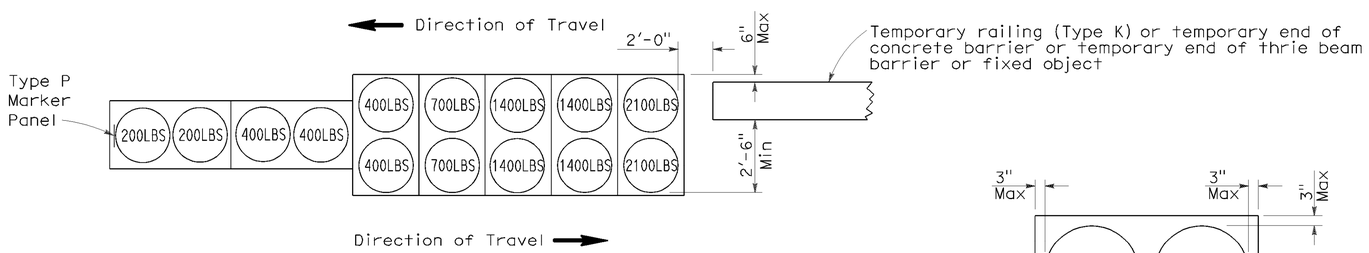

ARRAY 'TB14'

Approach speed 45 mph or more

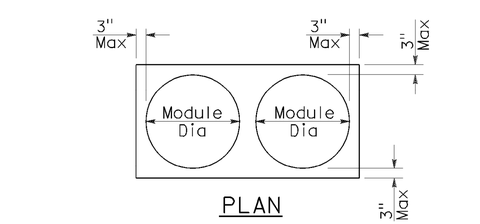

PLAN

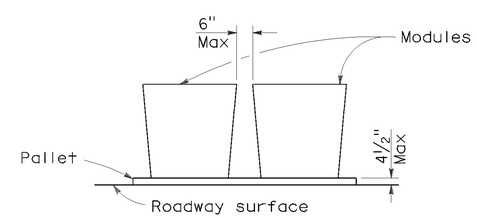

ELEVATION

CRASH CUSHION PALLET DETAIL

See Note 7

NOTES:

1. (XXX) Indicates sand filled module location and weight of sand in pounds for each module. Module spacing is based on the greater diameter of the module.
2. All sand weights are nominal.
3. Temporary crash cushion arrays shall not encroach on the traveled way.
4. Place the Type P marker panel so that the bottom of the panel rests upon the pallet.
5. Refer to Standard Plan A73B for marker details.
6. Approach speeds indicated conform to NCHRP 350 Report criteria.
7. Use of pallets is optional.

STATE OF CALIFORNIA
DEPARTMENT OF TRANSPORTATION

TEMPORARY CRASH CUSHION, SAND FILLED (BIDIRECTIONAL)

NO SCALE

RSP T1B DATED JUNE 6, 2008 SUPERSEDES STANDARD PLAN T1B
DATED MAY 1, 2006 - PAGE 212 OF THE STANDARD PLANS BOOK DATED MAY 2006.

REVISED STANDARD PLAN RSP T1B

2006 REVISED STANDARD PLAN RSP T1B

P:\proj2\02\2E660_plans\pse\22E660va005.dgn

5-15-08

DIST	COUNTY	ROUTE	POST MILES TOTAL PROJECT	SHEET NO.	TOTAL SHEETS
02	Las,Sha	44,299	65.3/71.4, 4.7/12.3	14	15

Randell D. Hiatt
REGISTERED CIVIL ENGINEER

June 6, 2008
PLANS APPROVAL DATE

REGISTERED PROFESSIONAL ENGINEER
Randell D. Hiatt
No. C50200
Exp. 6-30-09
CIVIL
STATE OF CALIFORNIA

The State of California or its officers or agents shall not be responsible for the accuracy or completeness of electronic copies of this plan sheet.

To accompany plans dated 12-01-10

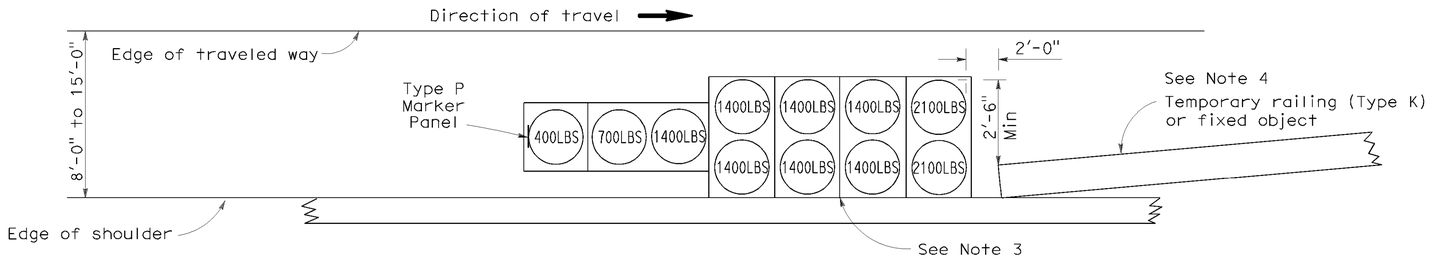

ARRAY 'TS11'

Approach speed less than 45 mph
See Note 9

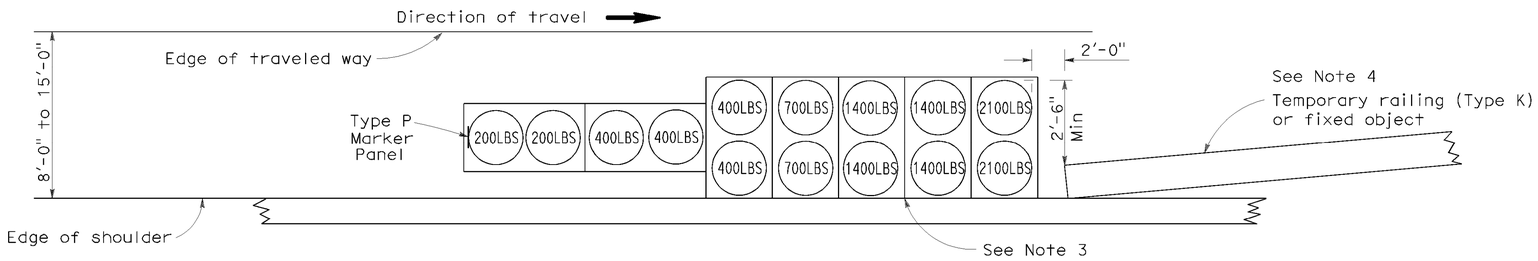

ARRAY 'TS14'

Approach speed 45 mph or more
See Note 9

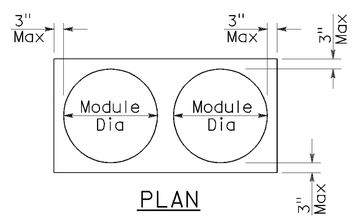

PLAN

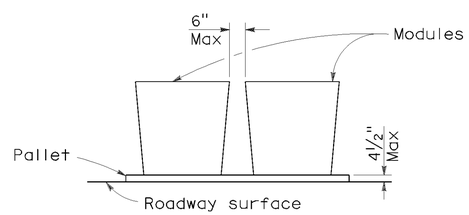

ELEVATION

CRASH CUSHION PALLET DETAIL

See Note 11

NOTES:

1. (XXX) Indicates sand filled module location and weight of sand in pounds for each module. Module spacing is based on the greater diameter of the module.
2. All sand weights are nominal.
3. The temporary crash cushion arrays shown on this plan shall be used only in locations where there will be traffic on one side of the temporary crash cushion array.
4. If the fixed object or approach end of the temporary railing is less than 15'-0" from the edge of traveled way, a temporary crash cushion is required in a construction or work zone.
5. Temporary crash cushion arrays shall not encroach on the traveled way.
6. Arrays for median shoulders shall conform to details shown on this plan for outside shoulders.
7. Place the Type P marker panel so that the bottom of the panel rests upon the pallet and faces traffic.
8. Refer to Standard Plan A73B for marker details.
9. For shoulder widths less than 8'-0", appropriate approved crash cushion protection, other than sand filled modules, shall be provided at fixed objects and at approach ends of temporary railing. The specific type of crash cushion shall be as shown on the project plans or as specified in the Special Provisions, or if not shown on the project plans or specified in the Special Provisions, shall be as approved by the Engineer.
10. Approach speeds indicated conform to NCHRP 350 Report criteria.
11. Use of pallets is optional.

STATE OF CALIFORNIA
DEPARTMENT OF TRANSPORTATION

TEMPORARY CRASH CUSHION, SAND FILLED (SHOULDER INSTALLATIONS)

NO SCALE

RSP T2 DATED JUNE 6, 2008 SUPERSEDES STANDARD PLAN T2
DATED MAY 1, 2006 - PAGE 213 OF THE STANDARD PLANS BOOK DATED MAY 2006.

REVISED STANDARD PLAN RSP T2

2006 REVISED STANDARD PLAN RSP T2

P:\proj2\02\2E660_plans\pse\22E660va006.dgn

5-15-08

DIST	COUNTY	ROUTE	POST MILES TOTAL PROJECT	SHEET NO.	TOTAL SHEETS
02	Las,Sha	44,299	65.3/71.4, 4.7/12.3	15	15

REGISTERED CIVIL ENGINEER

November 17, 2006
PLANS APPROVAL DATE

REGISTERED PROFESSIONAL ENGINEER — Greg W. Edwards — No. C36386 — Exp. 6-30-08 — CIVIL — STATE OF CALIFORNIA

The State of California or its officers or agents shall not be responsible for the accuracy or completeness of electronic copies of this plan sheet.

To accompany plans dated 12-01-10

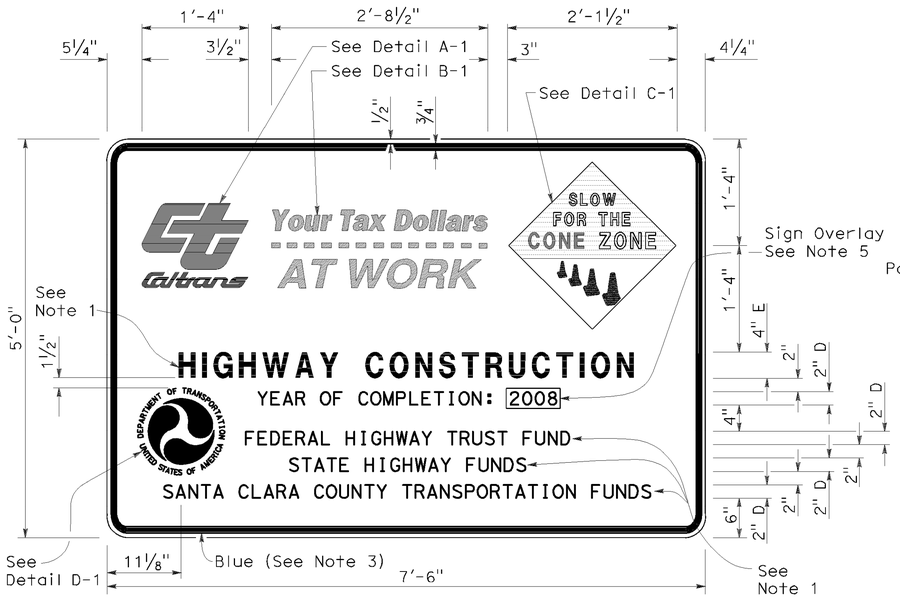

TYPE 1

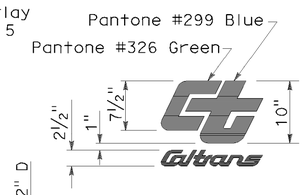

DETAIL A-1

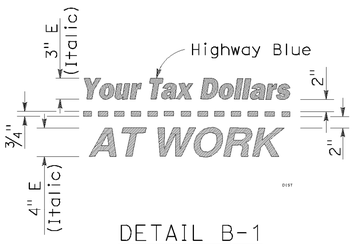

DETAIL B-1
(See Note 3)

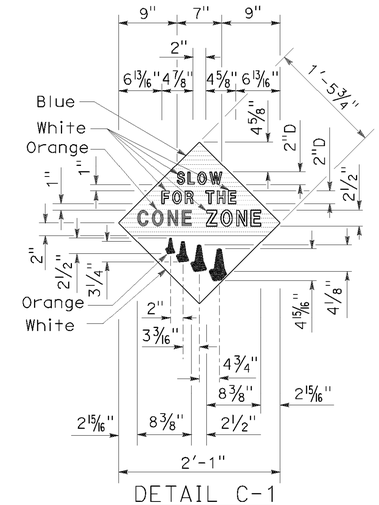

DETAIL C-1
(See Note 4)

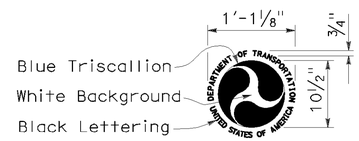

DETAIL D-1
(See Note 6)

NOTES:

1. The sign messages shown for type of project and fund types are examples only. See the Special Provisions for the applicable type of project and fund type messages to be used.
2. Except as otherwise shown, the legend of sign shall be black on a white background (non-reflective).
3. The border of the signs and details "B-1" and "B-2" shall be blue (non-reflective).
4. The diamond in details "C-1" and "C-2" shall be blue for the background of message, " SLOW FOR THE CONE ZONE", and white background for the orange cones. The color and type of font for the "SLOW FOR THE CONE ZONE" message shall be: "SLOW" white D; "FOR THE" white D; "CONE" orange Arial font; "ZONE" white Arial font.
5. Year of completion of project construction shown on the overlay is an example only. See the Special Provisions.
6. Use when the Project involves Federal Highway Trust Fund.

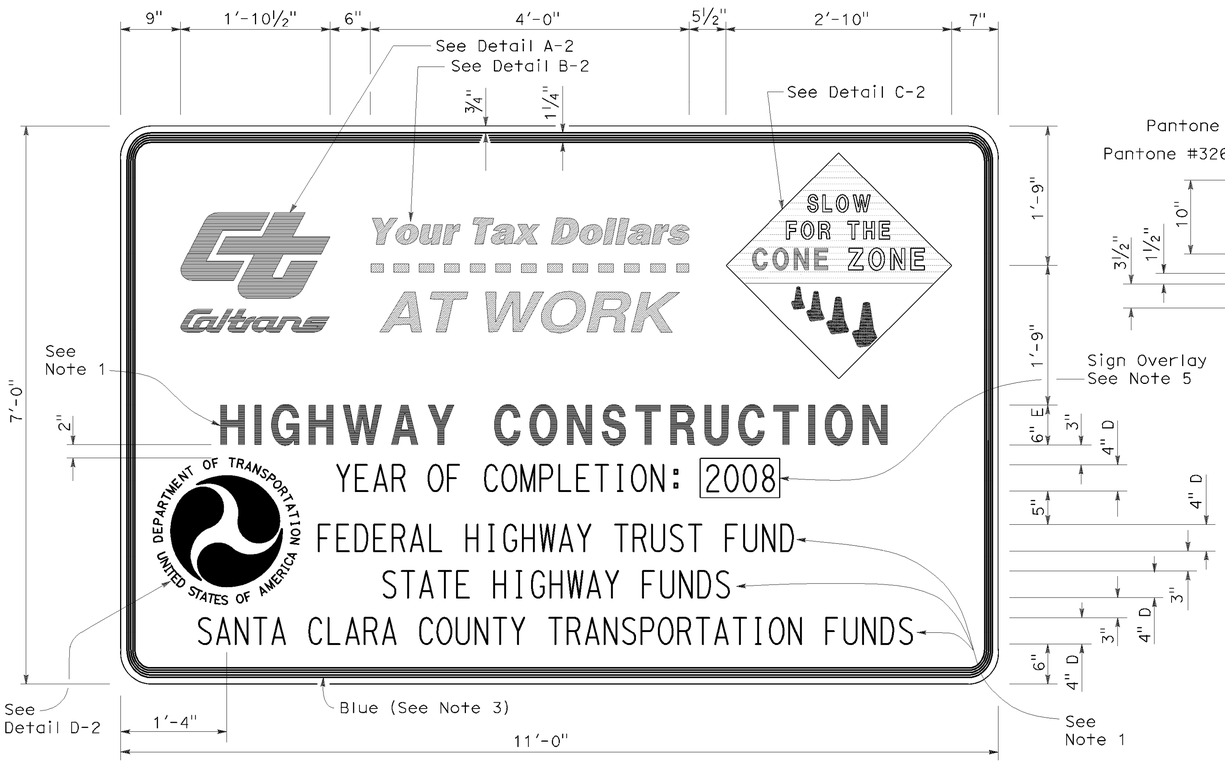

TYPE 2

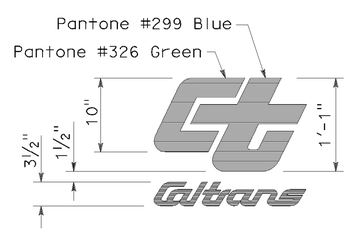

DETAIL A-2

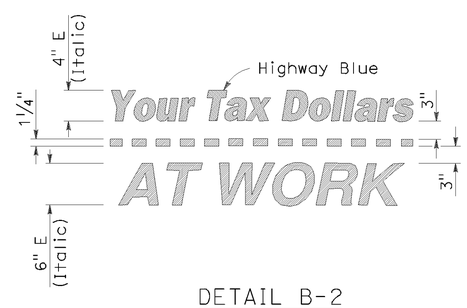

DETAIL B-2
(See Note 3)

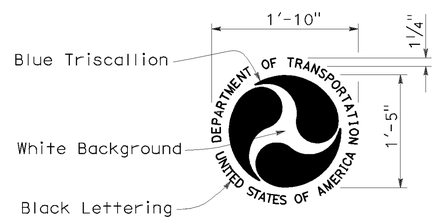

DETAIL D-2
(See Note 6)

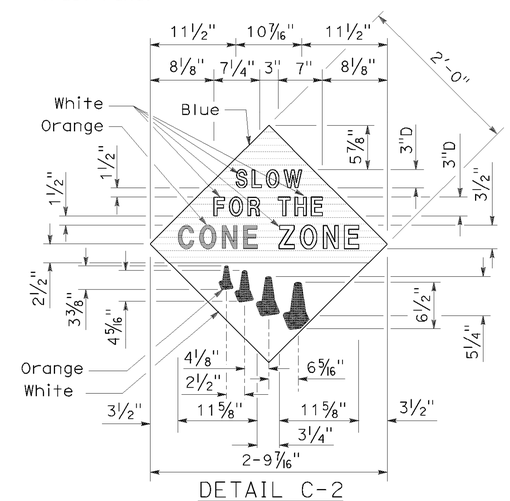

DETAIL C-2
(See Note 4)

STATE OF CALIFORNIA
DEPARTMENT OF TRANSPORTATION

CONSTRUCTION PROJECT FUNDING IDENTIFICATION SIGNS

NO SCALE

RSP T7 DATED NOVEMBER 17, 2006 SUPERSEDES STANDARD PLAN T7
DATED MAY 1, 2006 - PAGE 217 OF THE STANDARD PLANS BOOK DATED MAY 2006.

REVISED STANDARD PLAN RSP T7

2006 REVISED STANDARD PLAN RSP T7

P:\proj2\02\2E660_plans\pse\22E660va007.dgn

9-7-06