Dist	COUNTY	ROUTE	POST MILES TOTAL PROJECT	SHEET No.	TOTAL SHEETS
02	Las,Sha	44,299	65.3/71.4, 4.7/12.3	4	15

REGISTERED CIVIL ENGINEER 12-01-10 DATE

12-01-10
PLANS APPROVAL DATE

REGISTERED PROFESSIONAL ENGINEER MICHAEL A. CONNER No. C73123 Exp. 12-31-12 CIVIL STATE OF CALIFORNIA

THE STATE OF CALIFORNIA OR ITS OFFICERS OR AGENTS SHALL NOT BE RESPONSIBLE FOR THE ACCURACY OR COMPLETENESS OF SCANNED COPIES OF THIS PLAN SHEET.

LEGEND

- COLD PLANE AC PAVEMENT
- HMA CONFORM TAPER

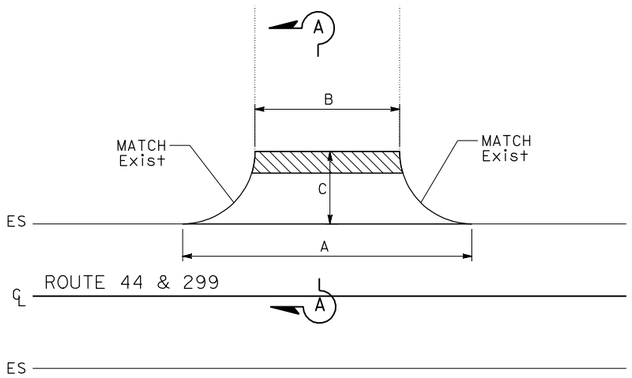

PAVED ROAD CONNECTIONS

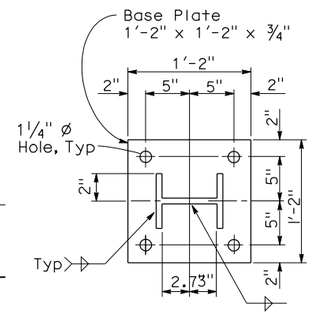

CIDH POST

BASE PLATE PLAN

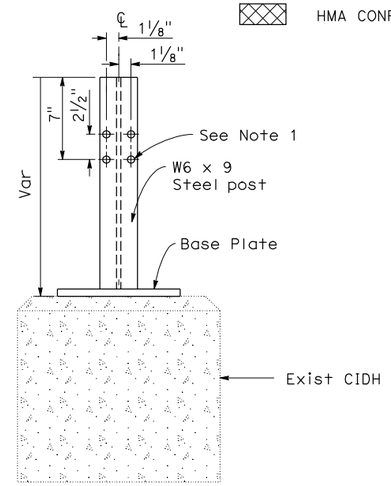

CIDH

POST DETAILS

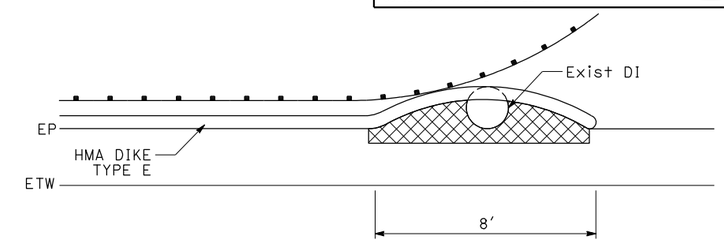

PLAN

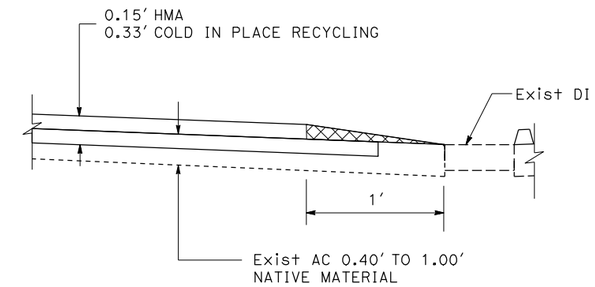

ELEVATION

CONFORM TAPER AT DRAINAGE INLETS

PM 11.75 NB & SB
PM 12.08 NB & SB

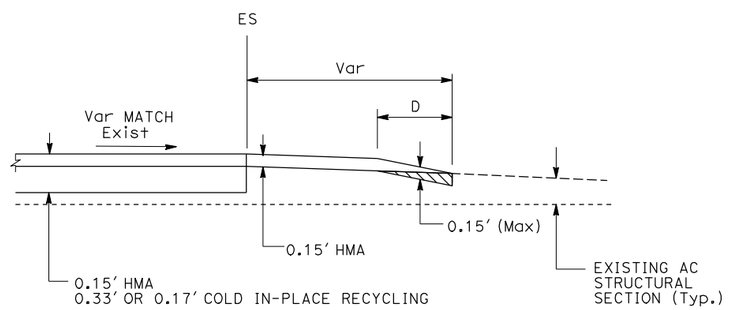

SECTION A-A

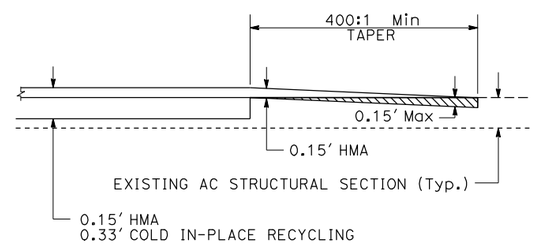

MAINLINE CONFORM TAPER

ROAD CONNECTIONS

LOCATION	Co-Rte	ROAD CONNECTION	POST MILE	DIMENSIONS A	B	C	D
				LF			
1	Las-299	ROAD CONNECTION - Lt	7.31	87	55	10	4
		MUCK VALLEY Rd - Rt	8.79	121	46	20	4
		CEMETERY Rd - Rt	10.41	285	32	47	20
		CEMETERY Rd - Lt	10.41	280	32	38	20
		KRAMER Rd - Rt	11.46	155	38	40	20
		KRAMER Rd - Lt	11.46	125	32	40	20
		FOURTH St - Rt & ROOSEVELT Ave - Rt	11.57 & 11.59	256	27-37	40	20
		FOURTH St - Lt	11.57	80	21	40	20
		ADAMS Ave - Rt	11.72	82	24	35	20
		PAVED Rd - Rt	12.11	42	37	40	20
		PAVED Rd - Rt	12.15	163		21	4
2	Sha-44	PLUM VALLEY Rd - Lt	65.45	164	75	20	4
		PAVED Rd - Lt	68.91	190	74	10	4
		USFS Rd 33N29 - Lt	70.50	167	70	10	4

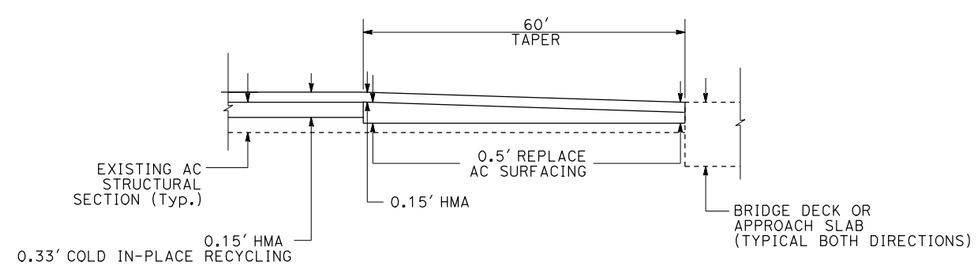

CONFORM TAPER AT BRIDGE

1 REVISED PER ADDENDA NO. 1 DATED FEBRUARY 2, 2011

CONSTRUCTION DETAILS

NO SCALE

C-1

REVISED BY | DATE REVISED
MICHAEL CONNER | KARLIE SMITH
CALCULATED-DESIGNED BY | CHECKED BY
FUNCTIONAL SUPERVISOR | LANCE BROWN

STATE OF CALIFORNIA - DEPARTMENT OF TRANSPORTATION
Caltrans MAINTENANCE

P:\proj2\02\2E660\maint\Plans\22E660Ad1.dgn

LAST REVISION 11-29-10 | DATE PLOTTED => 02-FEB-2011 | TIME PLOTTED => 08:41