STATE OF CALIFORNIA

DEPARTMENT OF TRANSPORTATION

ACBHSTP-P096(051)E

Dist	COUNTY	ROUTE	POST MILES TOTAL PROJECT	SHEET No.	TOTAL SHEETS
02	Sis	96	R0.0/77.3	1	58

PROJECT PLANS FOR CONSTRUCTION ON

STATE HIGHWAY

IN SISKIYOU COUNTY AT VARIOUS LOCATIONS FROM HUMBOLDT COUNTY LINE TO 0.2 MILE NORTH OF KLAMATH RIVER BRIDGE No. 02-0117

TO BE SUPPLEMENTED BY STANDARD PLANS DATED MAY 2006

INDEX OF PLANS

SHEET No.	DESCRIPTION
1	TITLE SHEET
2-4	LAYOUT
5-11	CONSTRUCTION DETAILS
12-13	UTILITY PLAN
14	CONSTRUCTION AREA SIGNS
15-17	STAGE CONSTRUCTION AND TRAFFIC HANDLING PLANS
18	STAGE CONSTRUCTION QUANTITIES
19	PAVEMENT DELINEATION DETAILS AND QUANTITIES
20	SUMMARY OF QUANTITIES
21-22	ELECTRICAL/STRUCTURE PLANS
23-46	REVISED STANDARD PLANS
47-58	STRUCTURE PLANS

THE STANDARD PLANS LIST APPLICABLE TO THIS CONTRACT IS INCLUDED IN THE NOTICE TO BIDDERS AND SPECIAL PROVISIONS BOOK.

LOCATIONS OF CONSTRUCTION

SYMBOL	BRIDGE NAME	BRIDGE NUMBER	LOCATION
1	SALMON RIVER	02-0177	PM R0.04
2	KLAMATH RIVER	02-0156	PM R5.08
3	KLAMATH RIVER	02-0157	PM R5.75
4	DILLON CREEK	02-0035	PM R16.13
5	SWILLUP CREEK	02-0070	PM 23.25
6	KLAMATH RIVER	02-0117	PM 77.15

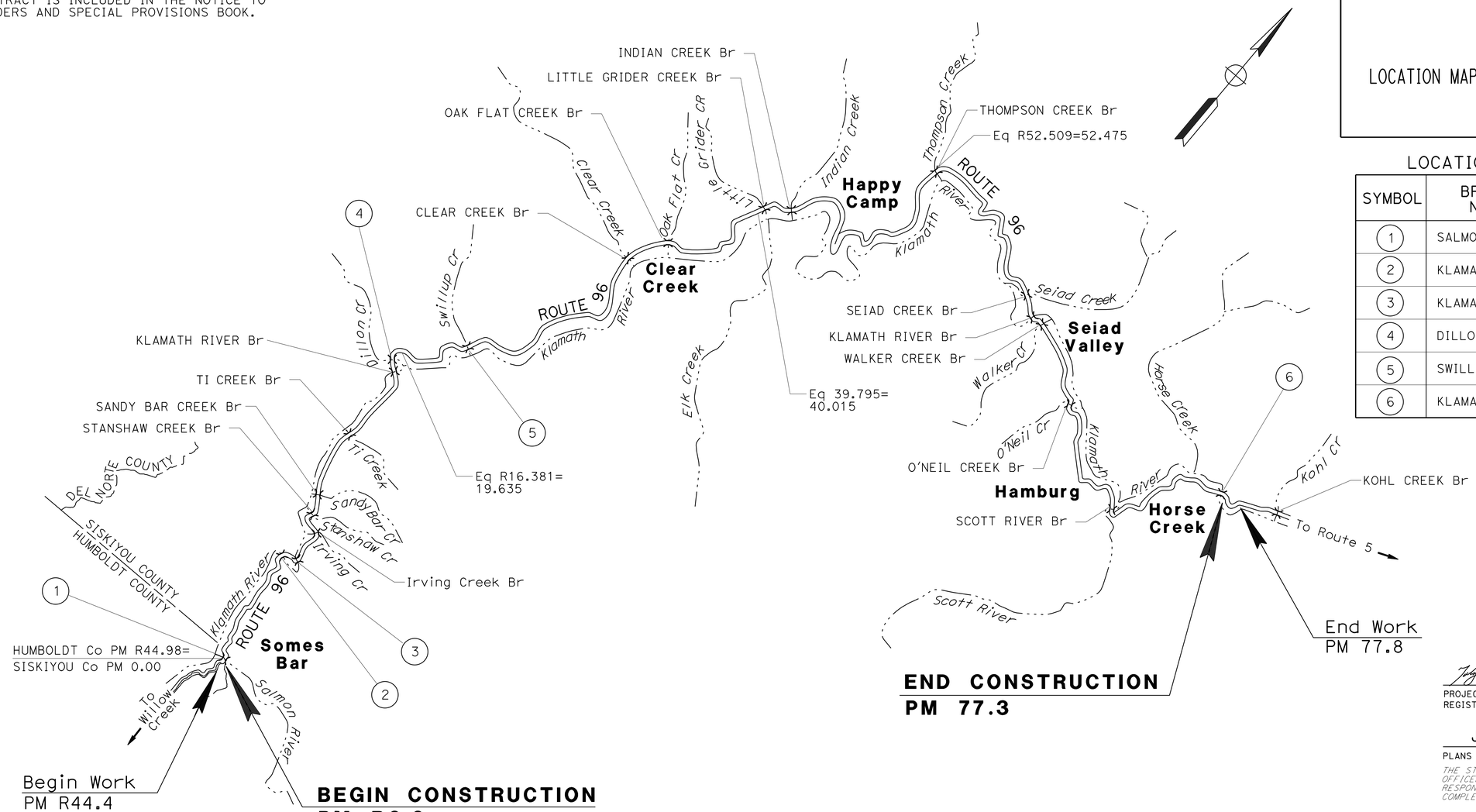

THE CONTRACTOR SHALL POSSESS THE CLASS (OR CLASSES) OF LICENSE AS SPECIFIED IN THE "NOTICE TO BIDDERS."

NO SCALE

PROJECT ENGINEER / REGISTERED CIVIL ENGINEER — DATE: 07-09-12

July 9, 2012
PLANS APPROVAL DATE

REGISTERED PROFESSIONAL ENGINEER — TOBY J. CRAWFORD — No. C71138 — Exp. 6-30-13 — CIVIL — STATE OF CALIFORNIA

THE STATE OF CALIFORNIA OR ITS OFFICERS OR AGENTS SHALL NOT BE RESPONSIBLE FOR THE ACCURACY OR COMPLETENESS OF SCANNED COPIES OF THIS PLAN SHEET.

CONTRACT No.	02-2E2914
PROJECT ID	0212000081

PROJECT MANAGER: DEREK WILLIS
DESIGN ENGINEER: STEVE TOPAL

P:\proj2\02\2E291_plans\pse\22e291ab001.dgn

LAST REVISION 07-09-12 — DATE PLOTTED => 05-SEP-2012 — TIME PLOTTED => 07:47

Dist	COUNTY	ROUTE	POST MILES TOTAL PROJECT	SHEET No.	TOTAL SHEETS
02	Sis	96	R0.0/77.3	2	58

REGISTERED CIVIL ENGINEER 07-09-12 DATE

07-09-12
PLANS APPROVAL DATE

REGISTERED PROFESSIONAL ENGINEER TOBY J. CRAWFORD No. C71138 Exp. 6-30-13 CIVIL STATE OF CALIFORNIA

THE STATE OF CALIFORNIA OR ITS OFFICERS OR AGENTS SHALL NOT BE RESPONSIBLE FOR THE ACCURACY OR COMPLETENESS OF SCANNED COPIES OF THIS PLAN SHEET.

NOTES:

1. FOR COMPLETE RIGHT OF WAY ACCESS DATA, SEE RIGHT OF WAY RECORD MAPS AT DISTRICT OFFICE.
2. SEE GENERAL PLANS FOR BRIDGE WORK.
3. SEE CONSTRUCTION DETAILS.
4. LENGTHEN ANCHOR BLOCK AS NECESSARY, SUCH THAT MBGR POSTS DO NOT CONFLICT WITH EXISTING UTILITIES.
5. PLACE TEMPORARY FENCE (TYPE ESA) AS DIRECTED BY THE ENGINEER.
6. SEE UTILITY SHEETS.
7. SEE STANDARD PLANS FOR MBGR LAYOUT TYPES.

LEGEND:

BRIDGE APPROACH CONFORM

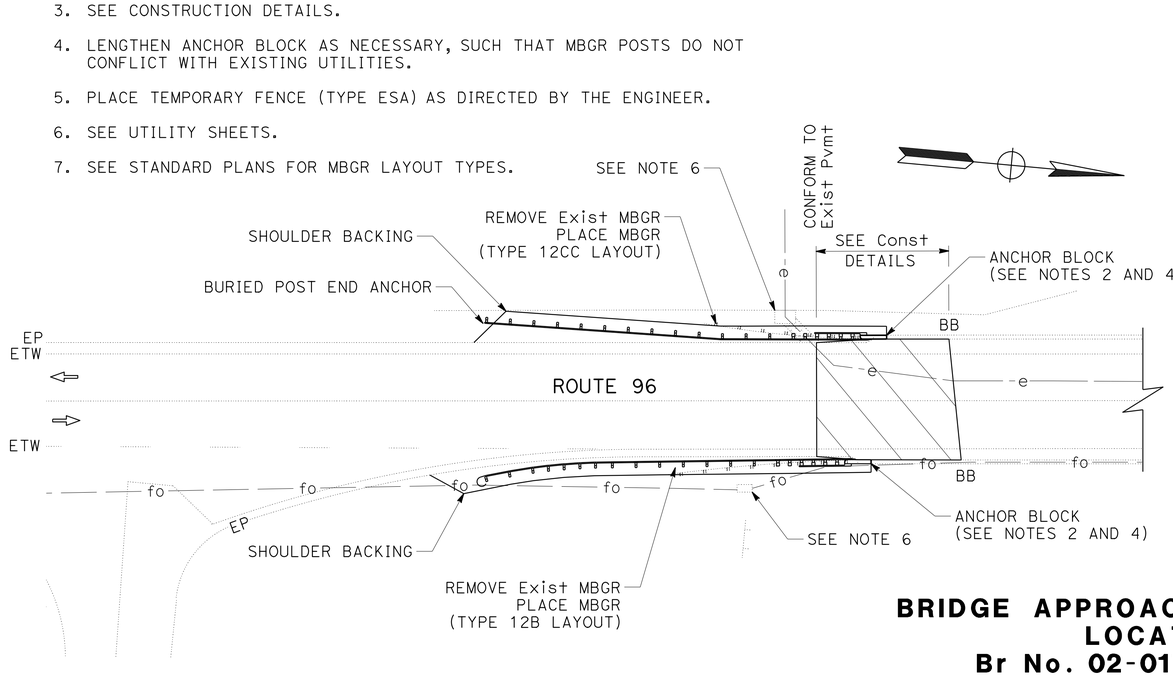

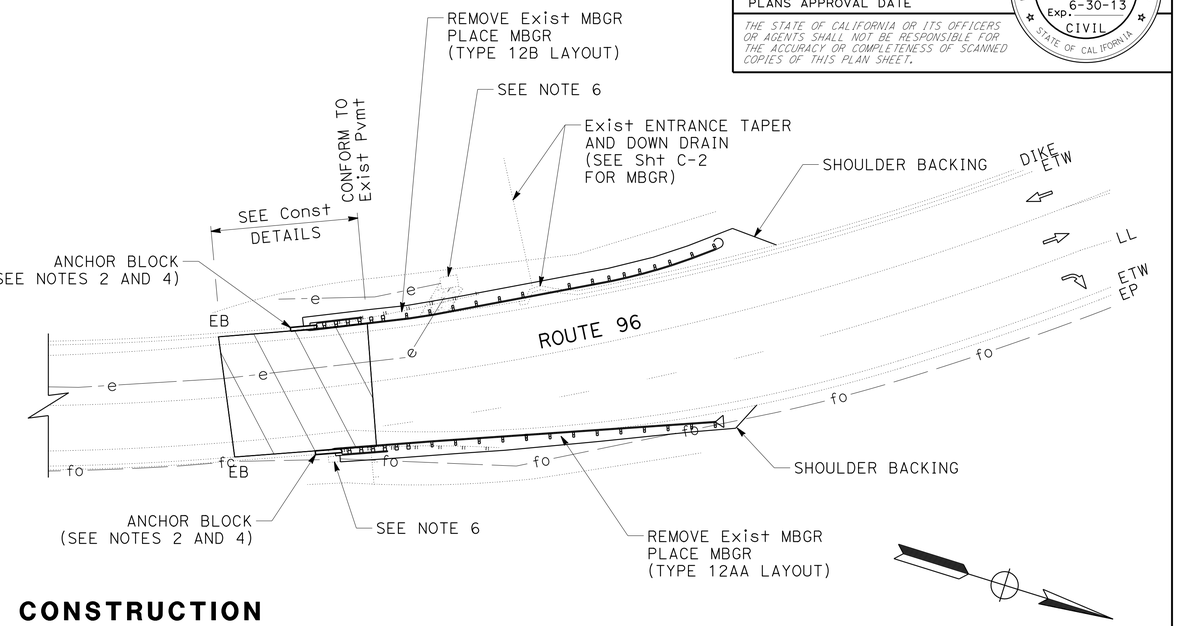

BRIDGE APPROACH CONSTRUCTION
LOCATION 1
Br No. 02-0177, PM R0.04

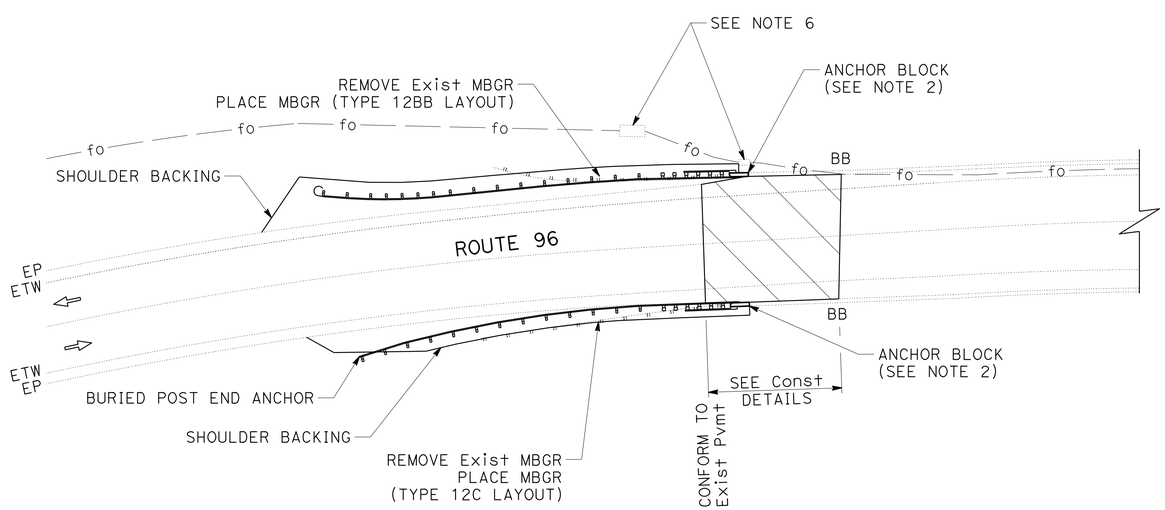

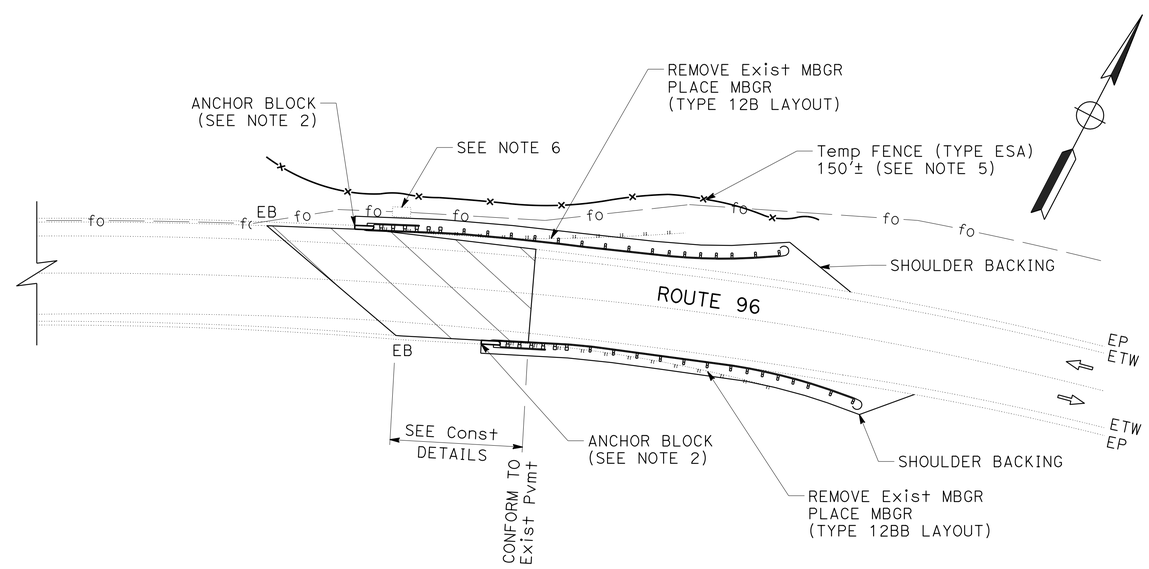

BRIDGE APPROACH CONSTRUCTION
LOCATION 2
Br No. 02-0156, PM R5.08

LAYOUT

SCALE: 1" = 50'

L-1

REVISED BY	DATE REVISED

VIRGINIA SEIBERT — TOBY CRAWFORD

CALCULATED-DESIGNED BY — CHECKED BY

FUNCTIONAL SUPERVISOR: STEVE TOPAL

STATE OF CALIFORNIA - DEPARTMENT OF TRANSPORTATION — DESIGN

Caltrans

P:\proj2\02\2E291_plans\pse\22e291ea001.dgn

LAST REVISION — DATE PLOTTED => 11-JUL-2012 — TIME PLOTTED => 12:17

07-09-12

BORDER LAST REVISED 7/2/2010 | USERNAME => s115152 | DGN FILE => 22e291ea001.dgn | RELATIVE BORDER SCALE IS IN INCHES 0 1 2 3 | UNIT 0319 | PROJECT NUMBER & PHASE 02120000811

Dist	COUNTY	ROUTE	POST MILES TOTAL PROJECT	SHEET No.	TOTAL SHEETS
02	Sis	96	R0.0/77.3	3	58

REGISTERED CIVIL ENGINEER 07-09-12 DATE

07-09-12
PLANS APPROVAL DATE

REGISTERED PROFESSIONAL ENGINEER TOBY J. CRAWFORD No. C71138 Exp. 6-30-13 CIVIL STATE OF CALIFORNIA

THE STATE OF CALIFORNIA OR ITS OFFICERS OR AGENTS SHALL NOT BE RESPONSIBLE FOR THE ACCURACY OR COMPLETENESS OF SCANNED COPIES OF THIS PLAN SHEET.

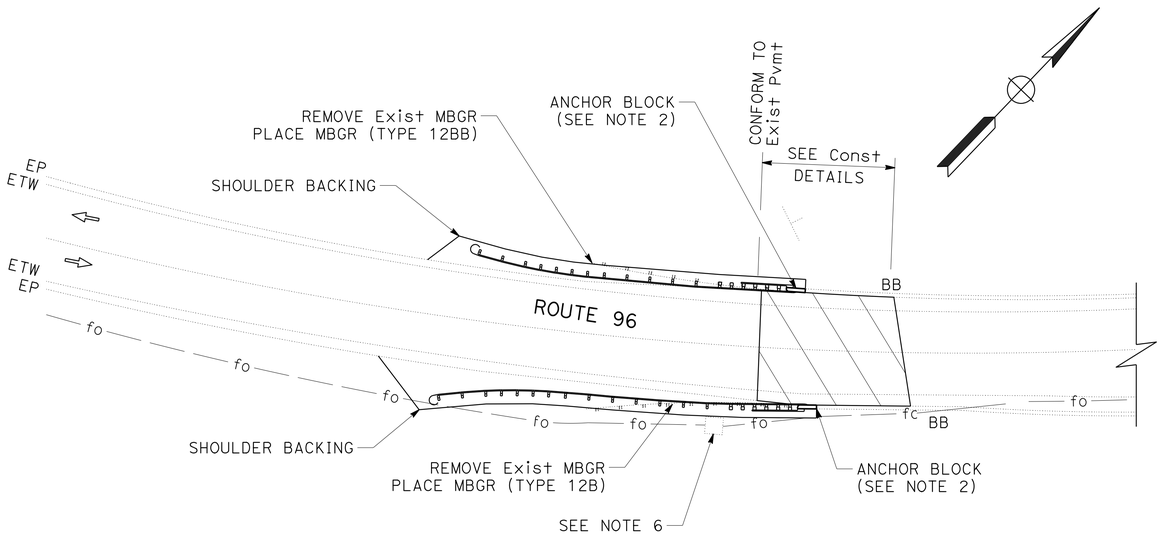

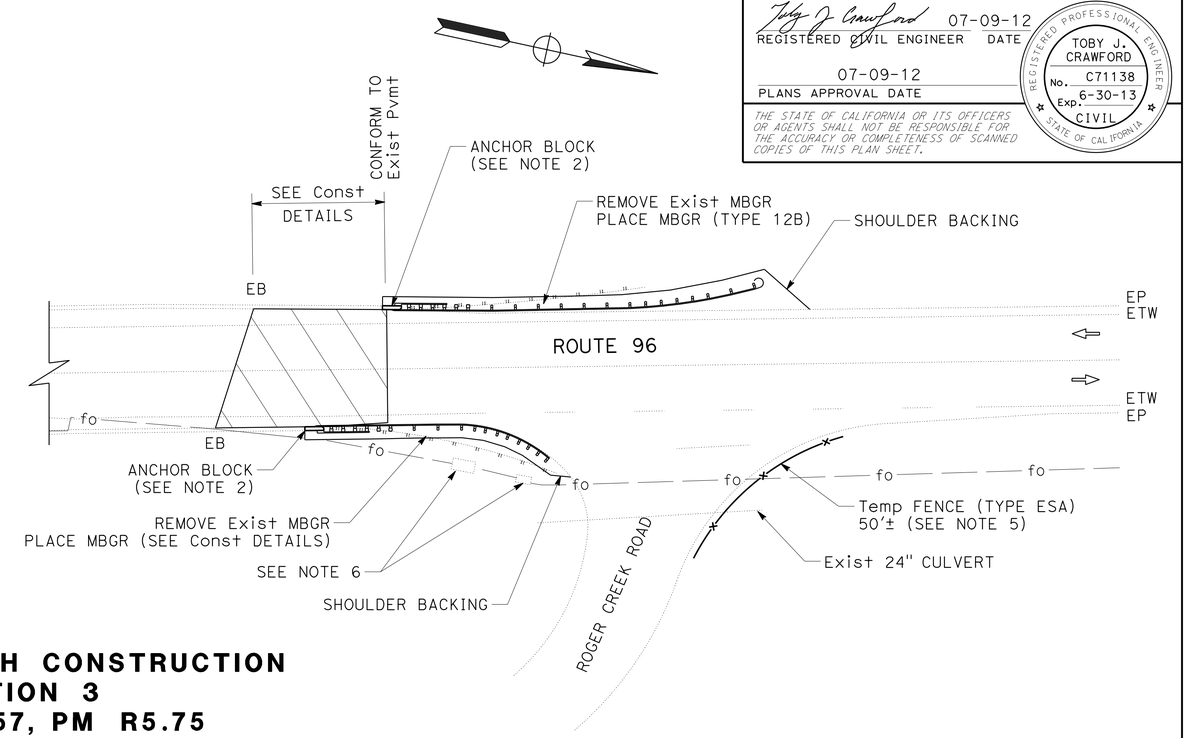

BRIDGE APPROACH CONSTRUCTION
LOCATION 3
Br No. 02-0157, PM R5.75

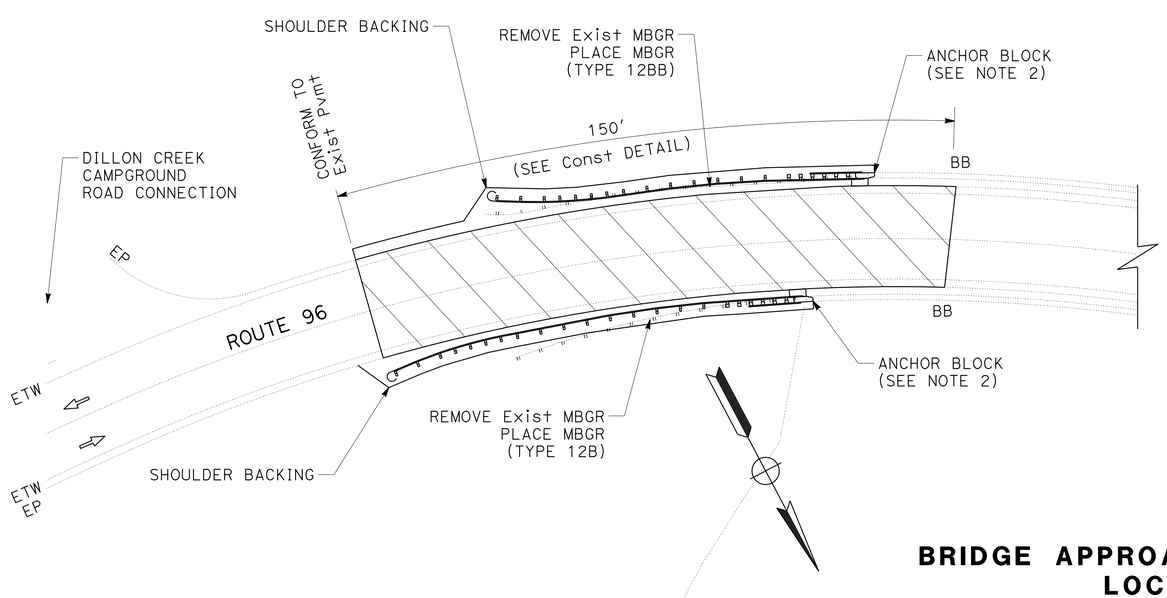

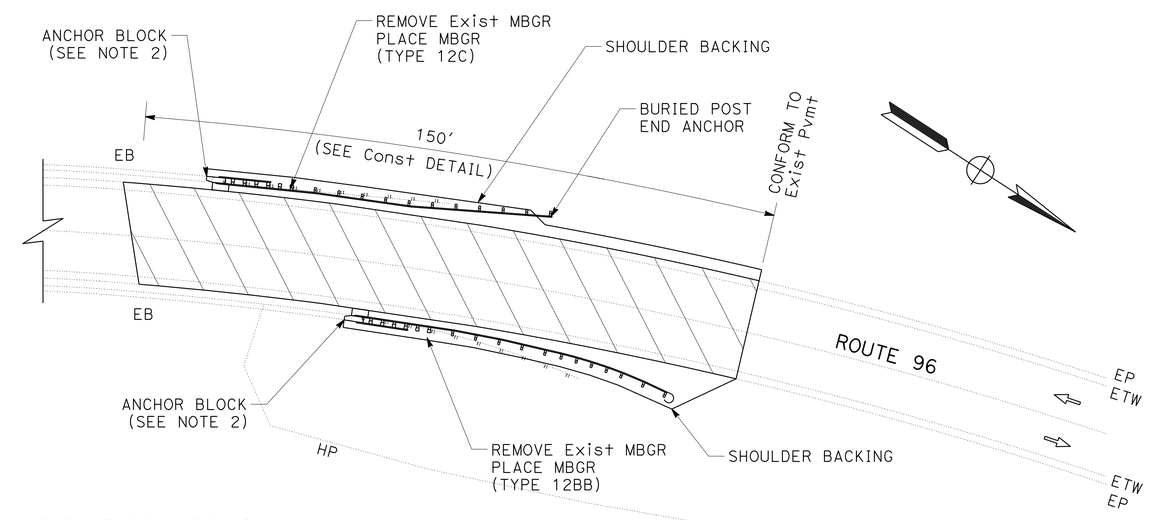

BRIDGE APPROACH CONSTRUCTION
LOCATION 4
Br No. 02-0035, PM R16.13

LAYOUT
SCALE: 1" = 50'

L-2

REVISED BY | DATE REVISED
VIRGINIA SEIBERT | TOBY CRAWFORD
CALCULATED-DESIGNED BY | CHECKED BY
FUNCTIONAL SUPERVISOR: STEVE TOPAL

STATE OF CALIFORNIA - DEPARTMENT OF TRANSPORTATION
Caltrans
DESIGN

P:\proj2\02\2E291_plans\pse\22e291ea002.dgn

LAST REVISION | DATE PLOTTED => 11-JUL-2012 | TIME PLOTTED => 12:17
07-09-12

BORDER LAST REVISED 7/2/2010 | USERNAME => s115152 | DGN FILE => 22e291ea002.dgn | RELATIVE BORDER SCALE IS IN INCHES 0 1 2 3 | UNIT 0319 | PROJECT NUMBER & PHASE 02120000811

Dist	COUNTY	ROUTE	POST MILES TOTAL PROJECT	SHEET No.	TOTAL SHEETS
02	Sis	96	R0.0/77.3	4	58

REGISTERED CIVIL ENGINEER 07-09-12 DATE

07-09-12
PLANS APPROVAL DATE

REGISTERED PROFESSIONAL ENGINEER TOBY J. CRAWFORD No. C71138 Exp. 6-30-13 CIVIL STATE OF CALIFORNIA

THE STATE OF CALIFORNIA OR ITS OFFICERS OR AGENTS SHALL NOT BE RESPONSIBLE FOR THE ACCURACY OR COMPLETENESS OF SCANNED COPIES OF THIS PLAN SHEET.

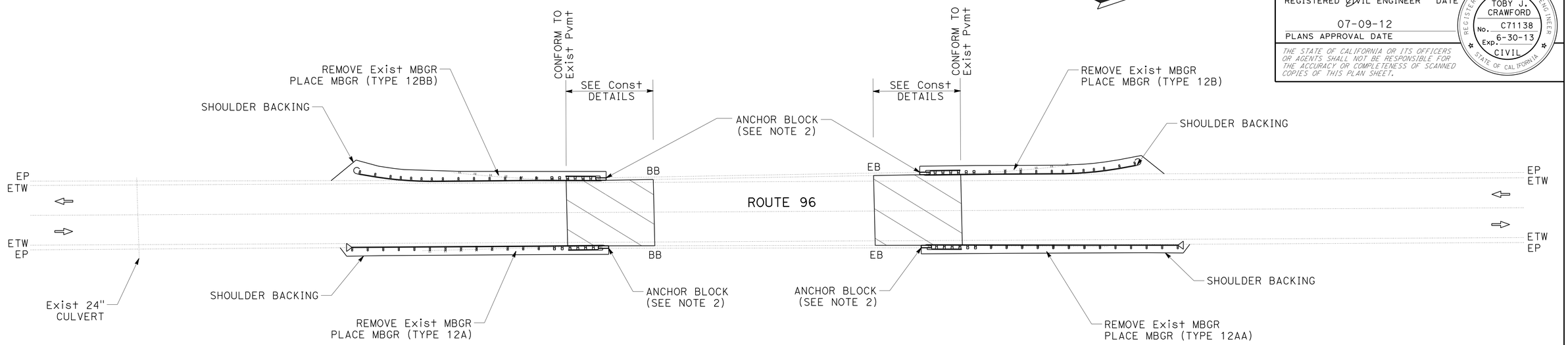

BRIDGE APPROACH CONSTRUCTION
LOCATION 5
Br No. 02-0070, PM 23.25

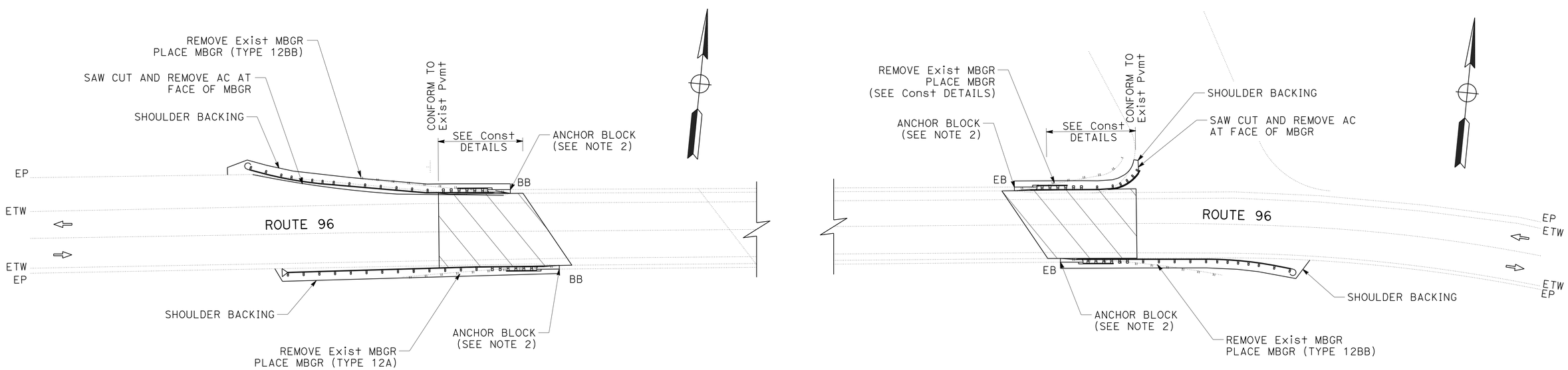

BRIDGE APPROACH CONSTRUCTION
LOCATION 6
Br No. 02-0117, PM 77.15

LAYOUT
SCALE: 1" = 50'

L-3

REVISED BY | DATE REVISED
VIRGINIA SEIBERT | TOBY CRAWFORD
CALCULATED-DESIGNED BY | CHECKED BY
FUNCTIONAL SUPERVISOR: STEVE TOPAL

STATE OF CALIFORNIA - DEPARTMENT OF TRANSPORTATION
Caltrans® DESIGN

P:\proj2\02\2E291_plans\pse\22e291ea003.dgn

LAST REVISION 01-25-11 | DATE PLOTTED => 11-JUL-2012 TIME PLOTTED => 12:17

Dist	COUNTY	ROUTE	POST MILES TOTAL PROJECT	SHEET No.	TOTAL SHEETS
02	Sis	96	R0.0/77.3	5	58

REGISTERED CIVIL ENGINEER 07-09-12 DATE

07-09-12
PLANS APPROVAL DATE

REGISTERED PROFESSIONAL ENGINEER TOBY J. CRAWFORD No. C71138 Exp. 6-30-13 CIVIL STATE OF CALIFORNIA

THE STATE OF CALIFORNIA OR ITS OFFICERS OR AGENTS SHALL NOT BE RESPONSIBLE FOR THE ACCURACY OR COMPLETENESS OF SCANNED COPIES OF THIS PLAN SHEET.

NOTES:

1. SEE GENERAL PLANS FOR BRIDGE WORK.
2. DIMENSIONS OF THE PAVEMENT STRUCTURES (STRUCTURAL SECTIONS) ARE SUBJECT TO TOLERANCES SPECIFIED IN THE STANDARD SPECIFICATIONS.
3. WIDTH OF SHOULDER BACKING NOT TO EXCEED 3′ FROM FACE OF MBGR.
4. CONFORM WIDTH IS FROM EXISTING EP TO EXISTING EP.

LEGEND:

HMA (TYPE A)

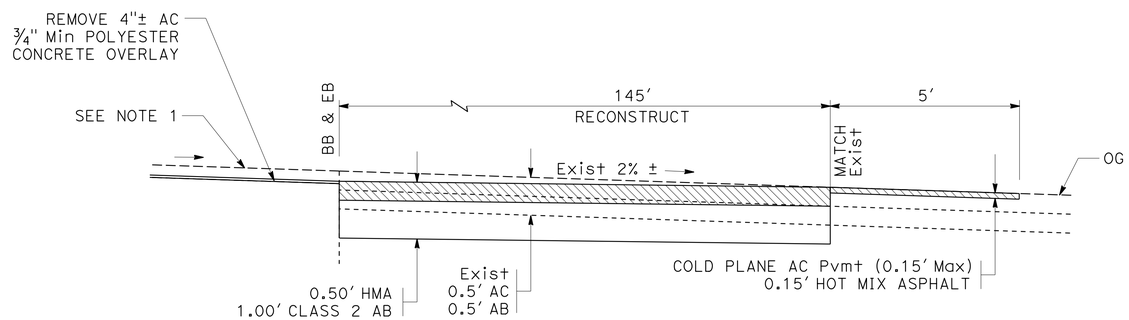

CONFORM PROFILE
Loc 4, Br No. 02-0035

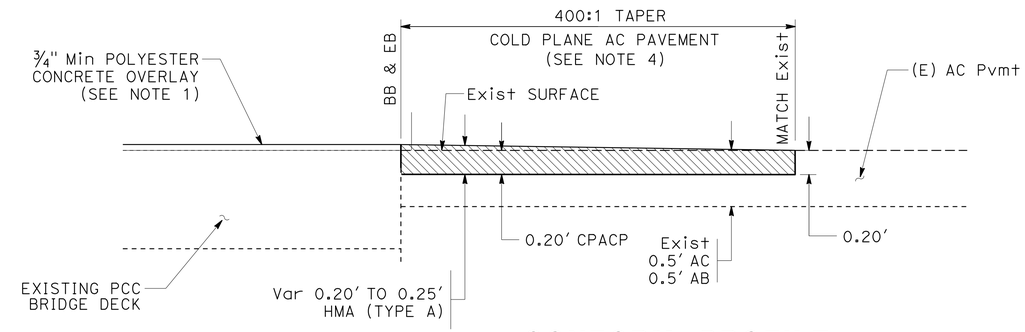

CONFORM PROFILE
Loc 1, Br No. 02-0177
Loc 2, Br No. 02-0156
Loc 3, Br No. 02-0157
Loc 5, Br No. 02-0070
Loc 6, Br No. 02-0117

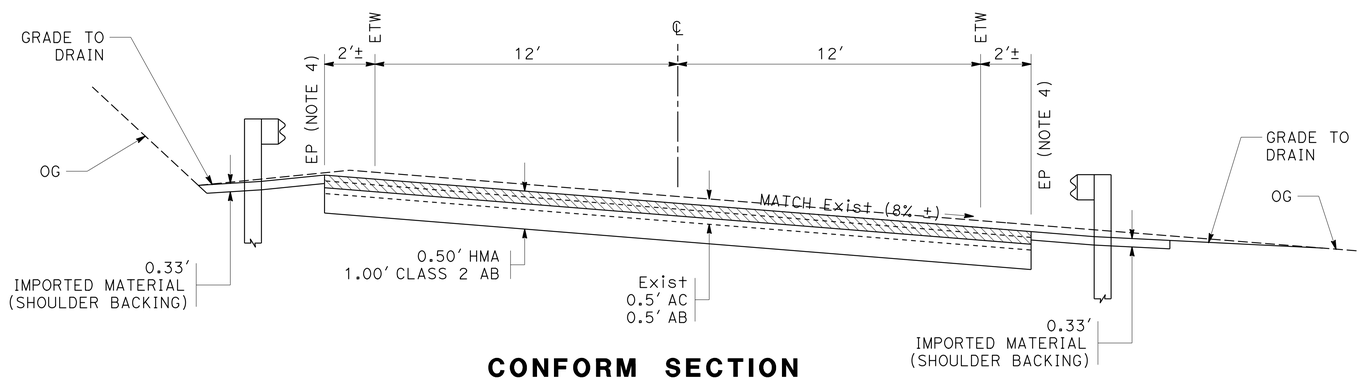

CONFORM SECTION
Loc 4, Br No. 02-0035

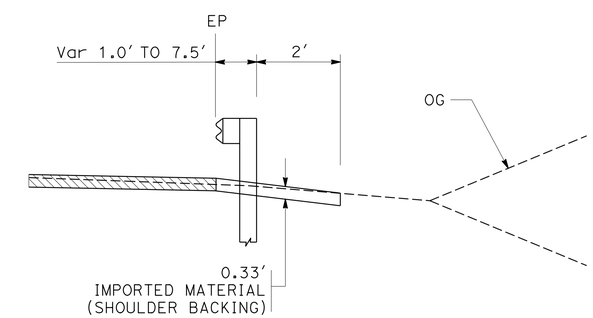

TYPICAL SHOULDER BACKING DETAIL AT MBGR

CONSTRUCTION DETAILS
NO SCALE

C-1

REVISED BY	DATE REVISED

CALCULATED-DESIGNED BY	CHECKED BY
VIRGINIA SEIBERT	TOBY CRAWFORD

FUNCTIONAL SUPERVISOR: STEVE TOPAL

STATE OF CALIFORNIA - DEPARTMENT OF TRANSPORTATION
Caltrans
DESIGN

P:\proj2\02\2E291_plans\pse\22e291ga001.dgn

LAST REVISION 01-31-11 | DATE PLOTTED => 11-JUL-2012 | TIME PLOTTED => 12:17

Dist	COUNTY	ROUTE	POST MILES TOTAL PROJECT	SHEET No.	TOTAL SHEETS
02	Sis	96	R0.0/77.3	6	58

REGISTERED CIVIL ENGINEER 07-09-12 DATE

07-09-12
PLANS APPROVAL DATE

REGISTERED PROFESSIONAL ENGINEER TOBY J. CRAWFORD No. C71138 Exp. 6-30-13 CIVIL STATE OF CALIFORNIA

THE STATE OF CALIFORNIA OR ITS OFFICERS OR AGENTS SHALL NOT BE RESPONSIBLE FOR THE ACCURACY OR COMPLETENESS OF SCANNED COPIES OF THIS PLAN SHEET.

NOTE:

1. CONTRACTOR TO FIELD VERIFY RADIUS OF SHOP BENT RAIL PRIOR TO FABRICATION.

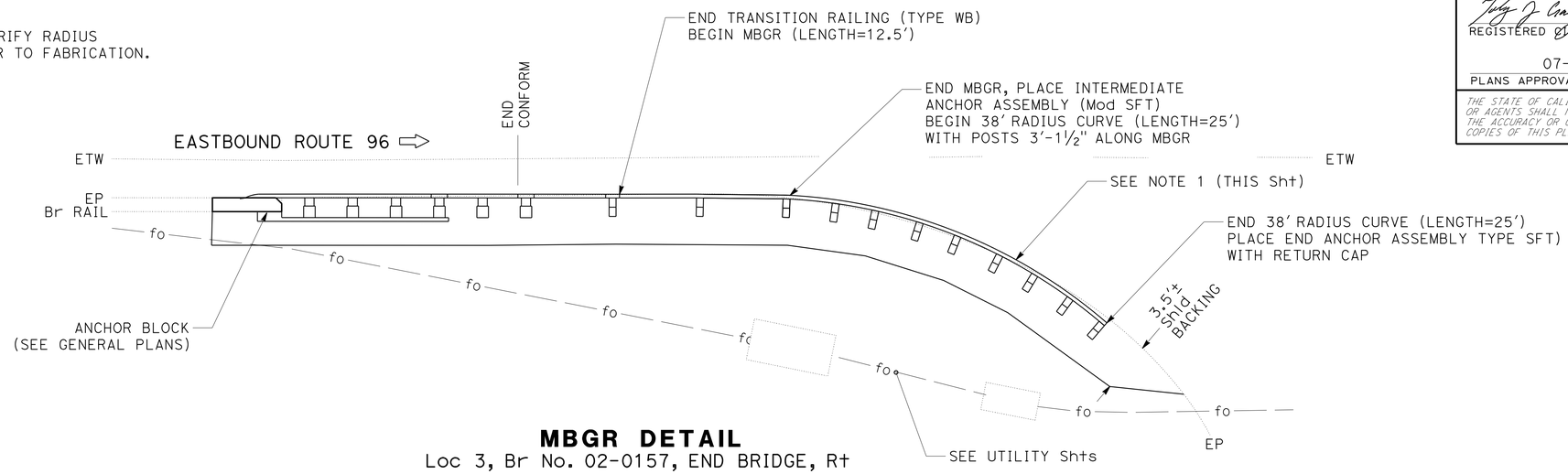

MBGR DETAIL

Loc 3, Br No. 02-0157, END BRIDGE, Rt

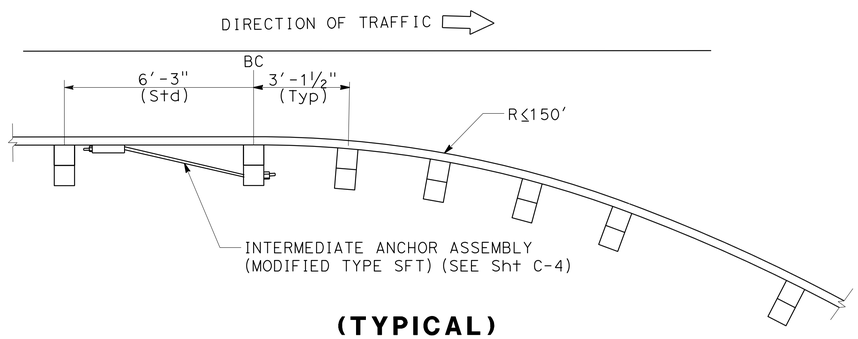

(TYPICAL) GUARD RAIL POST (HALF SPACING)

FOR RADII 150' AND LESS
(WHEN PLACING SHOP BENT RAIL)
Loc 3 AND 6

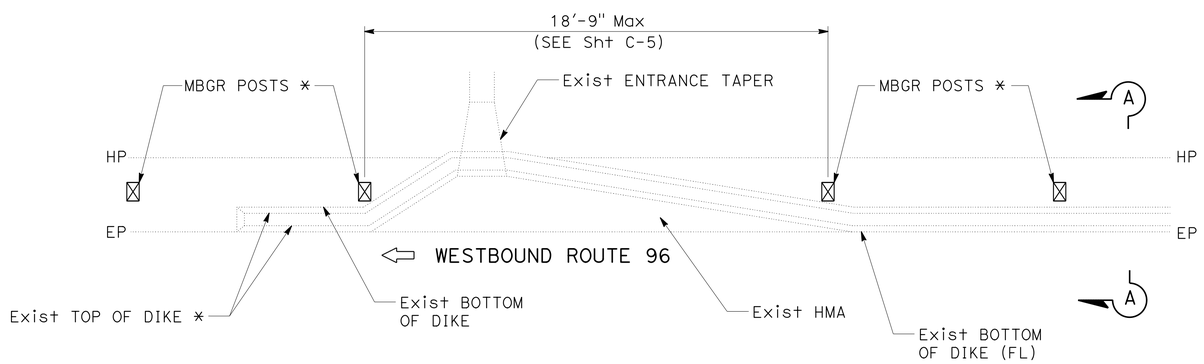

METAL BEAM GUARD RAIL OVER EXISTING ENTRANCE TAPER

Loc 1, Br No. 02-0177, END BRIDGE, Lt

* POSITION METAL BEAM GUARD RAIL POSTS TO MINIMIZE IMPACTS TO THE PAVED GUTTER FLARE AND DIKE.

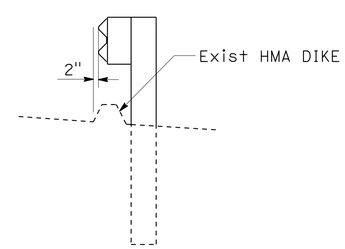

DETAIL A-A

CONSTRUCTION DETAILS

NO SCALE

C-2

REVISED BY	DATE REVISED

CALCULATED-DESIGNED BY	VIRGINIA SEIBERT
CHECKED BY	TOBY CRAWFORD
FUNCTIONAL SUPERVISOR	STEVE TOPAL

STATE OF CALIFORNIA - DEPARTMENT OF TRANSPORTATION
Caltrans®
DESIGN

P:\proj2\02\2E291_plans\pse\22e291ga002.dgn

LAST REVISION 01-31-11 | DATE PLOTTED => 11-JUL-2012 | TIME PLOTTED => 12:17

Dist	COUNTY	ROUTE	POST MILES TOTAL PROJECT	SHEET No.	TOTAL SHEETS
02	Sis	96	R0.0/77.3	7	58

REGISTERED CIVIL ENGINEER 07-09-12 DATE

07-09-12
PLANS APPROVAL DATE

REGISTERED PROFESSIONAL ENGINEER TOBY J. CRAWFORD No. C71138 Exp. 6-30-13 CIVIL STATE OF CALIFORNIA

THE STATE OF CALIFORNIA OR ITS OFFICERS OR AGENTS SHALL NOT BE RESPONSIBLE FOR THE ACCURACY OR COMPLETENESS OF SCANNED COPIES OF THIS PLAN SHEET.

NOTE:

1. CONTRACTOR TO FIELD VERIFY RADIUS OF SHOP BENT RAIL PRIOR TO FABRICATION.

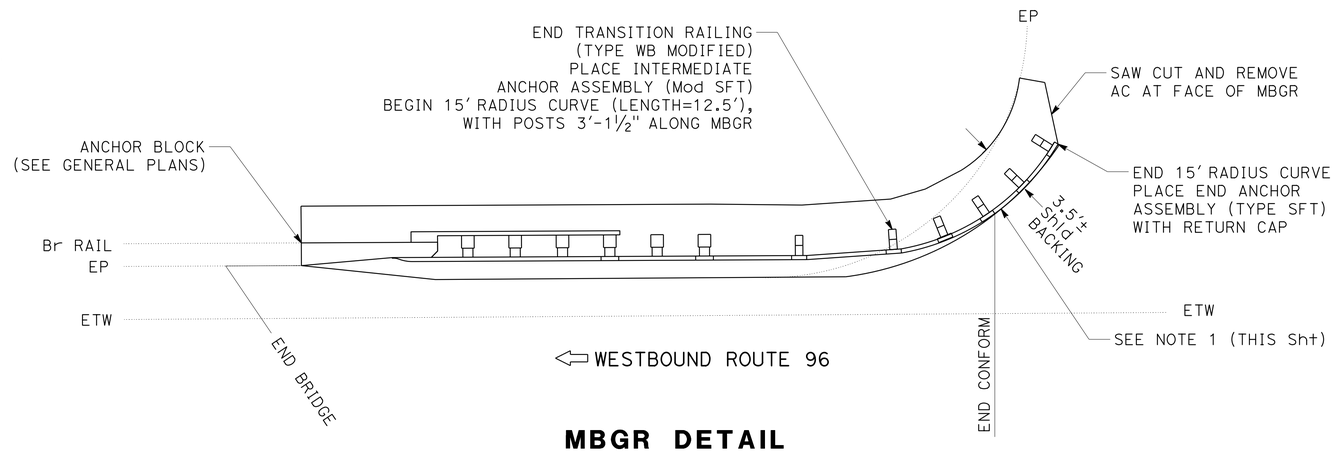

MBGR DETAIL

Loc 6, Br No. 02-0117, END BRIDGE, Lt

LEGEND

(A) ONE 10 GAGE "W" BEAM RAIL ELEMENT (13'-6½" LENGTH)

10 GAGE = 0.135" THICK

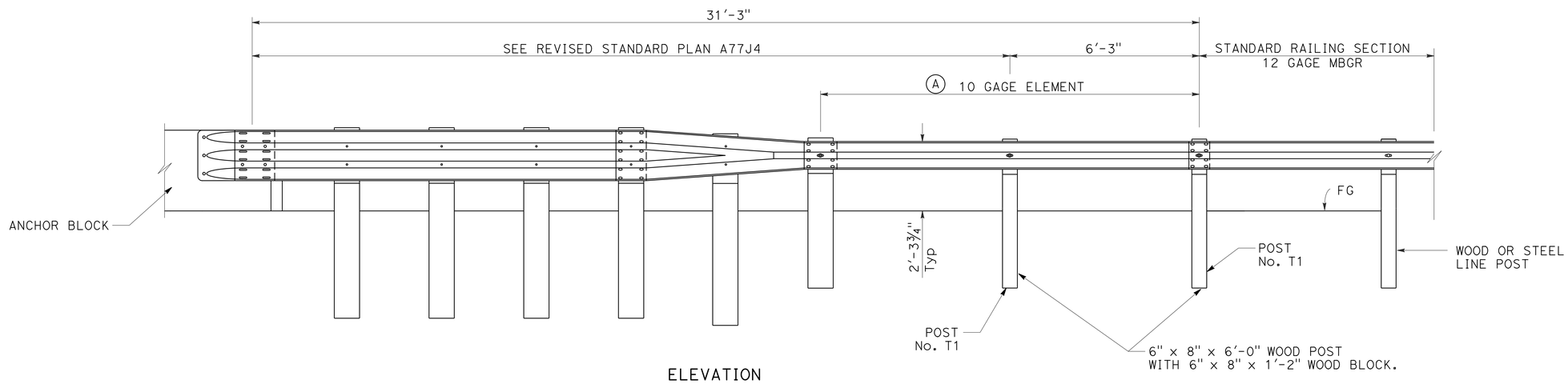

ELEVATION

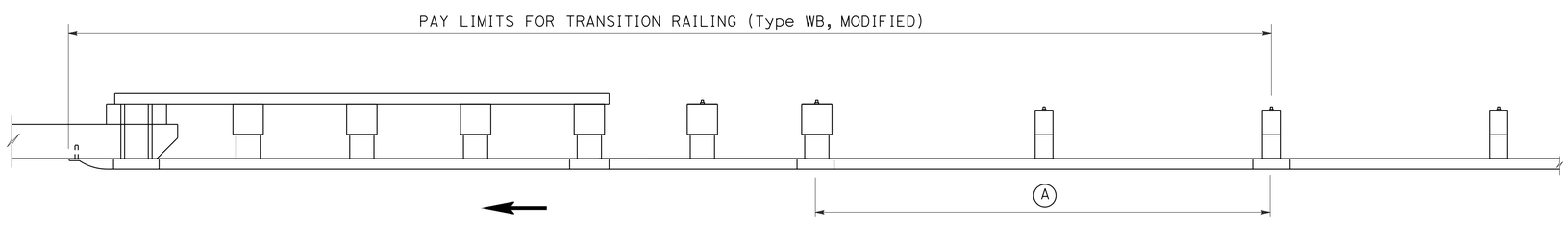

PLAN

TRANSITION RAILING (TYPE WB, MODIFIED)

CONSTRUCTION DETAILS

NO SCALE

C-3

REVISED BY	DATE REVISED

VIRGINIA SEIBERT — TOBY CRAWFORD

CALCULATED-DESIGNED BY — CHECKED BY

FUNCTIONAL SUPERVISOR — STEVE TOPAL

STATE OF CALIFORNIA - DEPARTMENT OF TRANSPORTATION

DESIGN

Caltrans

P:\proj2\02\2E291_plans\pse\22e291ga003.dgn

LAST REVISION 01-31-11 | DATE PLOTTED => 12-JUL-2012 TIME PLOTTED => 11:28

Dist	COUNTY	ROUTE	POST MILES TOTAL PROJECT	SHEET No.	TOTAL SHEETS
02	Sis	96	R0.0/77.3	8	58

REGISTERED CIVIL ENGINEER 07-09-12 DATE

07-09-12
PLANS APPROVAL DATE

REGISTERED PROFESSIONAL ENGINEER TOBY J. CRAWFORD No. C71138 Exp. 6-30-13 CIVIL STATE OF CALIFORNIA

THE STATE OF CALIFORNIA OR ITS OFFICERS OR AGENTS SHALL NOT BE RESPONSIBLE FOR THE ACCURACY OR COMPLETENESS OF SCANNED COPIES OF THIS PLAN SHEET.

NOTES:

1. A 6'-0" LENGTH STEEL FOUNDATION TUBE, TS 8 x 16 x 3/16, WITHOUT A SOIL PLATE, MAY BE FURNISHED AND INSTALLED IN PLACE OF THE 4'-6" LENGTH STEEL FOUNDATION TUBE AND SOIL PLATE SHOWN. MINIMUM EMBEDMENT OF THE 6'-0" LENGTH TUBE SHALL BE 5'-9". A 5/8" DIA HEX HEAD BOLT AND NUT SHALL BE INSTALLED IN THE HOLE IN THE 6'-0" LENGTH TUBE TO KEEP THE WOOD POST FROM DROPPING INTO THE TUBE.
2. FOR DETAILS NOT SHOWN, SEE STANDARD PLAN A77H1.

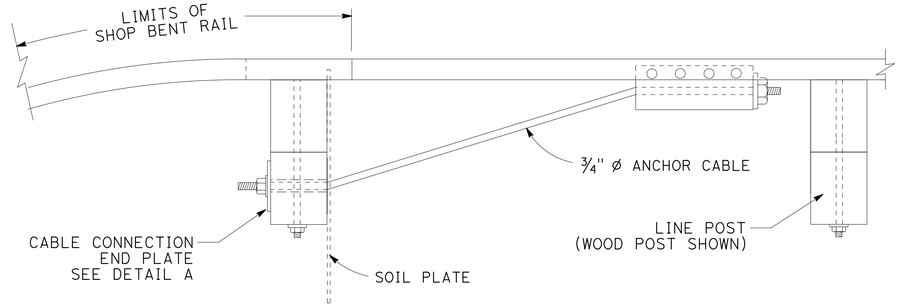

PLAN

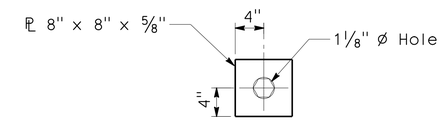

DETAIL A
CABLE CONNECTION END PLATE

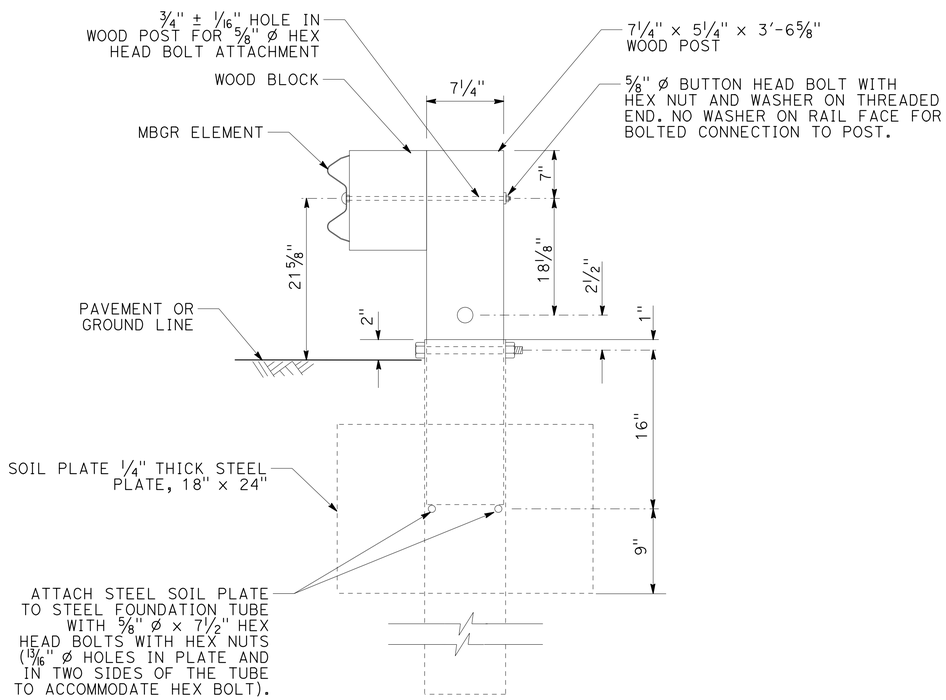

SECTION A-A

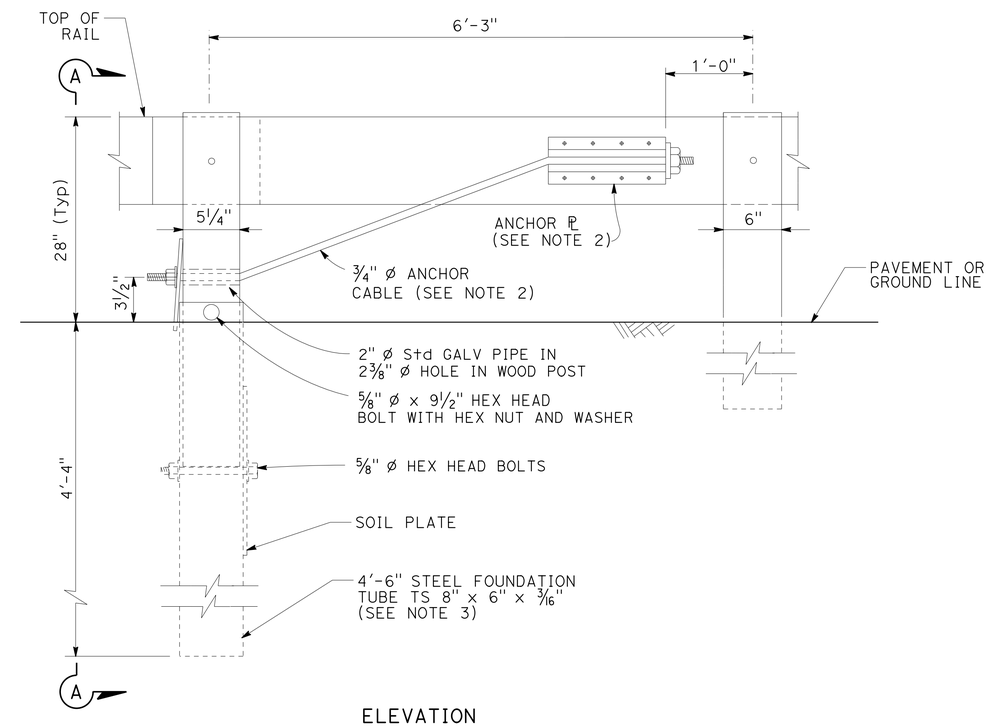

ELEVATION

INTERMEDIATE ANCHOR ASSEMBLY (MODIFIED TYPE SFT)

CONSTRUCTION DETAILS
NO SCALE

C-4

REVISED BY	DATE REVISED

CALCULATED-DESIGNED BY	CHECKED BY
VIRGINIA SEIBERT	TOBY CRAWFORD

FUNCTIONAL SUPERVISOR: STEVE TOPAL

STATE OF CALIFORNIA - DEPARTMENT OF TRANSPORTATION
Caltrans® DESIGN

P:\proj2\02\2E291\plans\pse\22e291ga004.dgn

LAST REVISION 12-15-10 | DATE PLOTTED => 11-JUL-2012 TIME PLOTTED => 12:17

Dist	COUNTY	ROUTE	POST MILES TOTAL PROJECT	SHEET No.	TOTAL SHEETS
02	Sis	96	R0.0/77.3	9	58

REGISTERED CIVIL ENGINEER 07-09-12 DATE

07-09-12
PLANS APPROVAL DATE

REGISTERED PROFESSIONAL ENGINEER TOBY J. CRAWFORD No. C71138 Exp. 6-30-13 CIVIL STATE OF CALIFORNIA

THE STATE OF CALIFORNIA OR ITS OFFICERS OR AGENTS SHALL NOT BE RESPONSIBLE FOR THE ACCURACY OR COMPLETENESS OF SCANNED COPIES OF THIS PLAN SHEET.

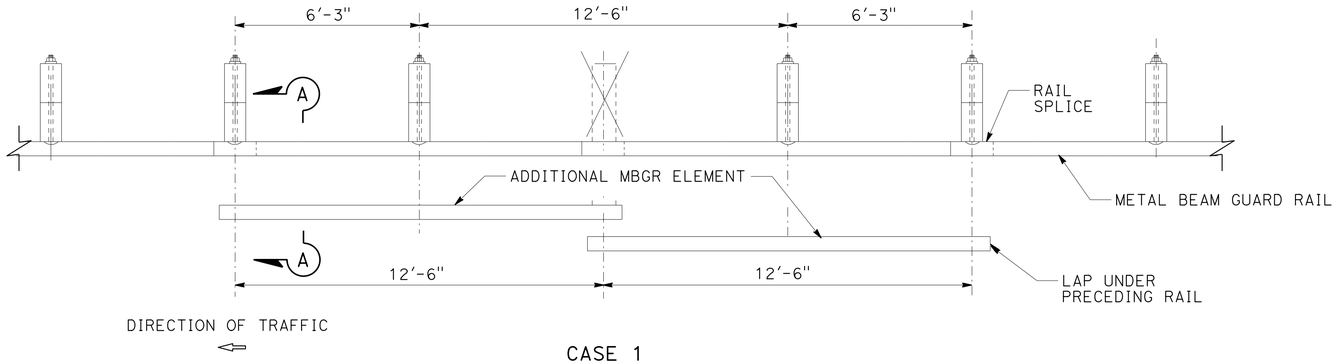

CASE 1

(ONE POST OMITTED AT JUNCTION OF TWO ELEMENTS)

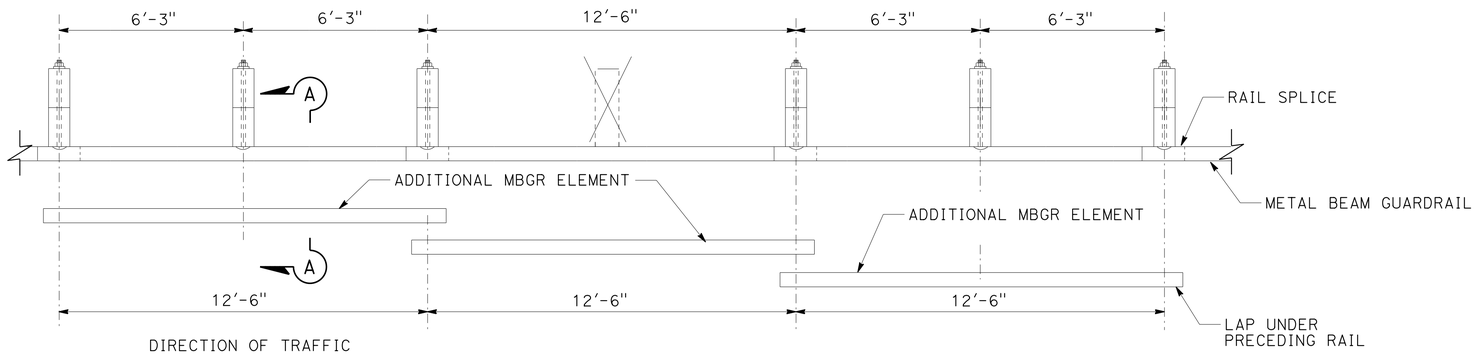

CASE 2

(ONE POST OMITTED AT CENTER OF OF ELEMENT)

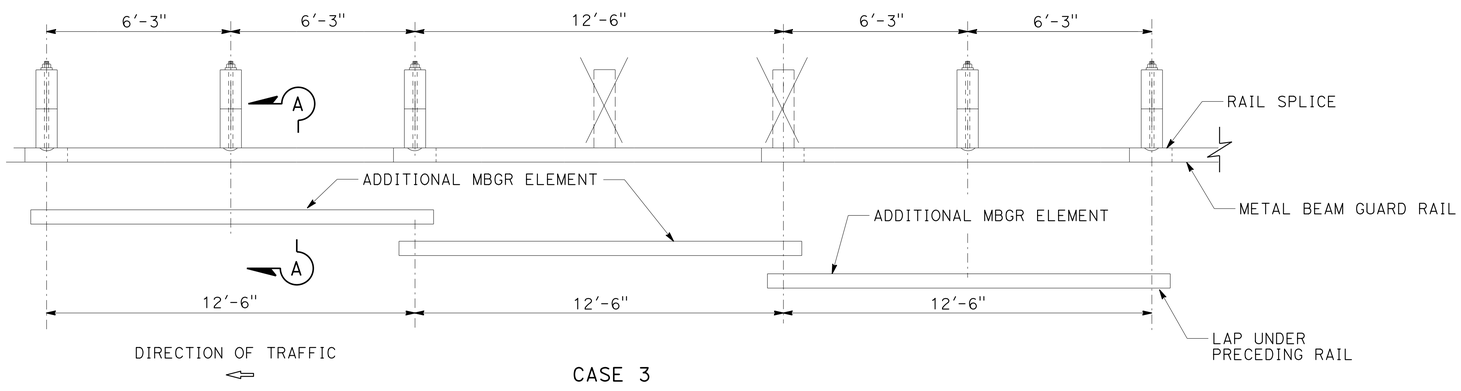

CASE 3

(TWO POSTS OMITTED)

LONG SPAN NESTED GUARD RAILING

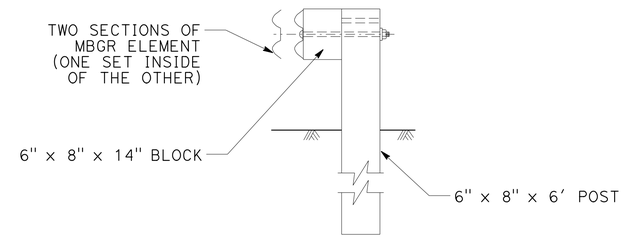

SECTION A-A

TYPICAL RAILING OVERLAP INSTALLATION AT POST

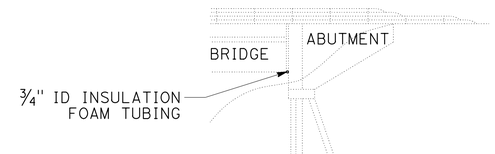

SECTION B-B

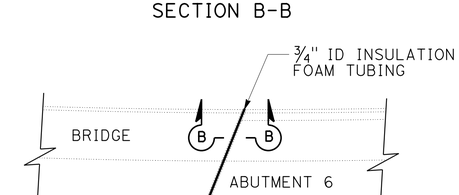

PLAN

INSULATION FOAM DETAIL

LOCATION 3
Br No. 02-0157, PM R5.75

CONSTRUCTION DETAILS

NO SCALE

C-5

REVISED BY	DATE REVISED

CALCULATED-DESIGNED BY	CHECKED BY
VIRGINIA SEIBERT	TOBY CRAWFORD

FUNCTIONAL SUPERVISOR: STEVE TOPAL

STATE OF CALIFORNIA - DEPARTMENT OF TRANSPORTATION
Caltrans
DESIGN

P:\proj2\02\2E291_plans\pse\22e291ga005.dgn

LAST REVISION 01-07-11 | DATE PLOTTED => 11-JUL-2012 | TIME PLOTTED => 12:17

Dist	COUNTY	ROUTE	POST MILES TOTAL PROJECT	SHEET No.	TOTAL SHEETS
02	Sis	96	R0.0/77.3	10	58

REGISTERED CIVIL ENGINEER 07-09-12 DATE

07-09-12
PLANS APPROVAL DATE

REGISTERED PROFESSIONAL ENGINEER TOBY J. CRAWFORD No. C71138 Exp. 6-30-13 CIVIL STATE OF CALIFORNIA

THE STATE OF CALIFORNIA OR ITS OFFICERS OR AGENTS SHALL NOT BE RESPONSIBLE FOR THE ACCURACY OR COMPLETENESS OF SCANNED COPIES OF THIS PLAN SHEET.

NOTE:

1. FOR COMPLETE RIGHT OF WAY ACCESS DATA, SEE RIGHT OF WAY RECORD MAPS AT DISTRICT OFFICE.

LEGEND:

- - - - TEMPORARY CONSTRUCTION EASEMENT

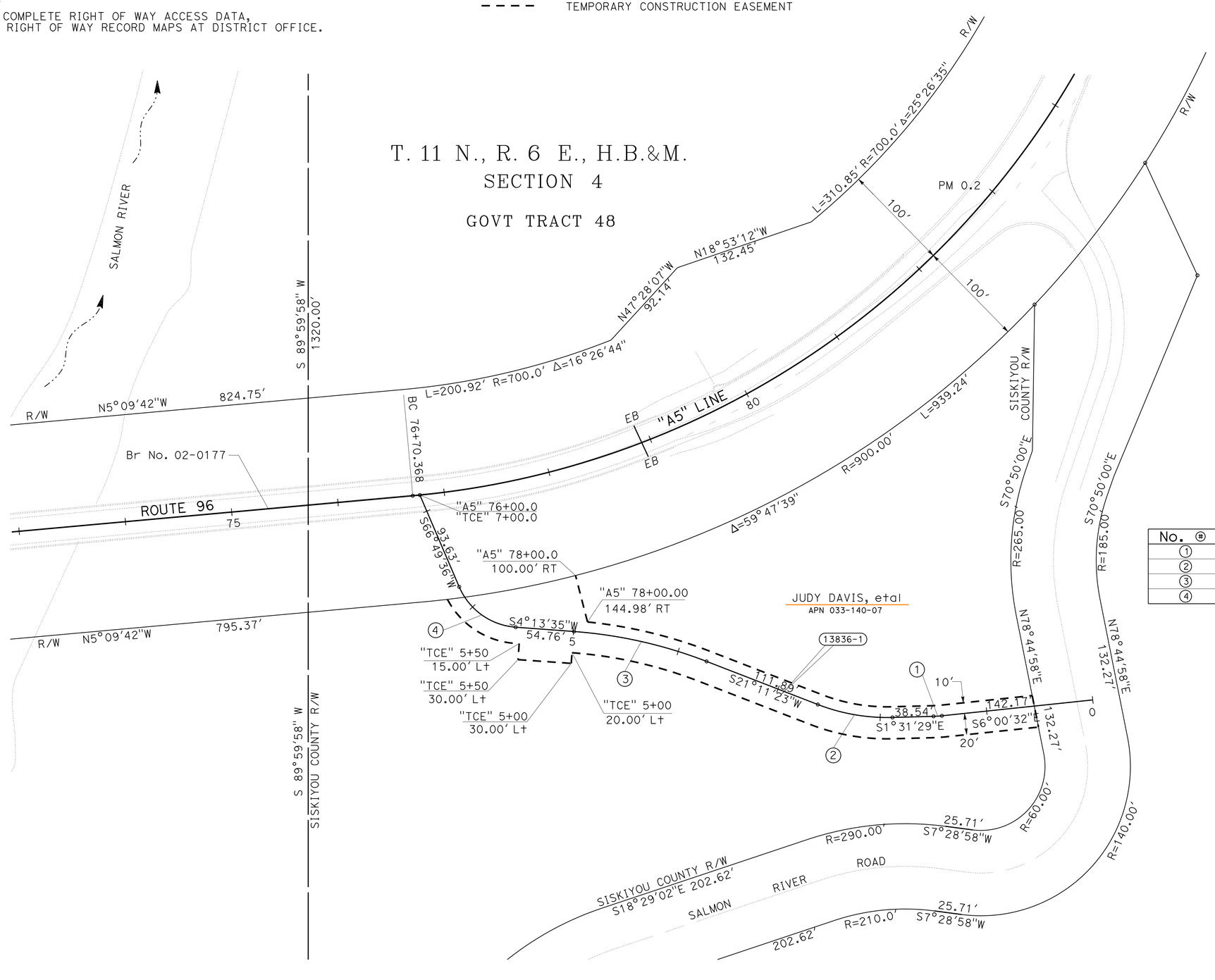

CURVE DATA

No. ⊕	R	Δ	T	L
1	100.00'	4°29'02"	3.92'	7.83'
2	180.10'	22°42'52"	36.17'	71.40'
3	431.75'	16°57'48"	64.38'	127.82'
4	62.60'	62°36'01"	38.06'	68.39'

TEMPORARY CONSTRUCTION EASEMENT
LOCATION 1, Br No. 02-0177

CONSTRUCTION DETAILS
NO SCALE

C-6

STATE OF CALIFORNIA - DEPARTMENT OF TRANSPORTATION
Caltrans® **DESIGN**

FUNCTIONAL SUPERVISOR: STEVE TOPAL
CALCULATED-DESIGNED BY: VIRGINIA SEIBERT
CHECKED BY: TOBY CRAWFORD
REVISED BY / DATE REVISED

P:\proj2\02\2E291_plans\pse\22e291ga006.dgn

LAST REVISION 05-07-11
DATE PLOTTED => 11-JUL-2012
TIME PLOTTED => 12:17

BORDER LAST REVISED 7/2/2010
USERNAME => s115152
DGN FILE => 22e291ga006.dgn
RELATIVE BORDER SCALE IS IN INCHES 0 1 2 3
UNIT 0319
PROJECT NUMBER & PHASE 02120000811

Dist	COUNTY	ROUTE	POST MILES TOTAL PROJECT	SHEET No.	TOTAL SHEETS
02	Sis	96	R0.0/77.3	11	58

REGISTERED CIVIL ENGINEER 07-09-12 DATE

07-09-12
PLANS APPROVAL DATE

REGISTERED PROFESSIONAL ENGINEER TOBY J. CRAWFORD No. C71138 Exp. 6-30-13 CIVIL STATE OF CALIFORNIA

THE STATE OF CALIFORNIA OR ITS OFFICERS OR AGENTS SHALL NOT BE RESPONSIBLE FOR THE ACCURACY OR COMPLETENESS OF SCANNED COPIES OF THIS PLAN SHEET.

NOTE:

1. FOR COMPLETE RIGHT OF WAY ACCESS DATA, SEE RIGHT OF WAY RECORD MAPS AT DISTRICT OFFICE.

LEGEND:

- - - - TEMPORARY CONSTRUCTION EASEMENT

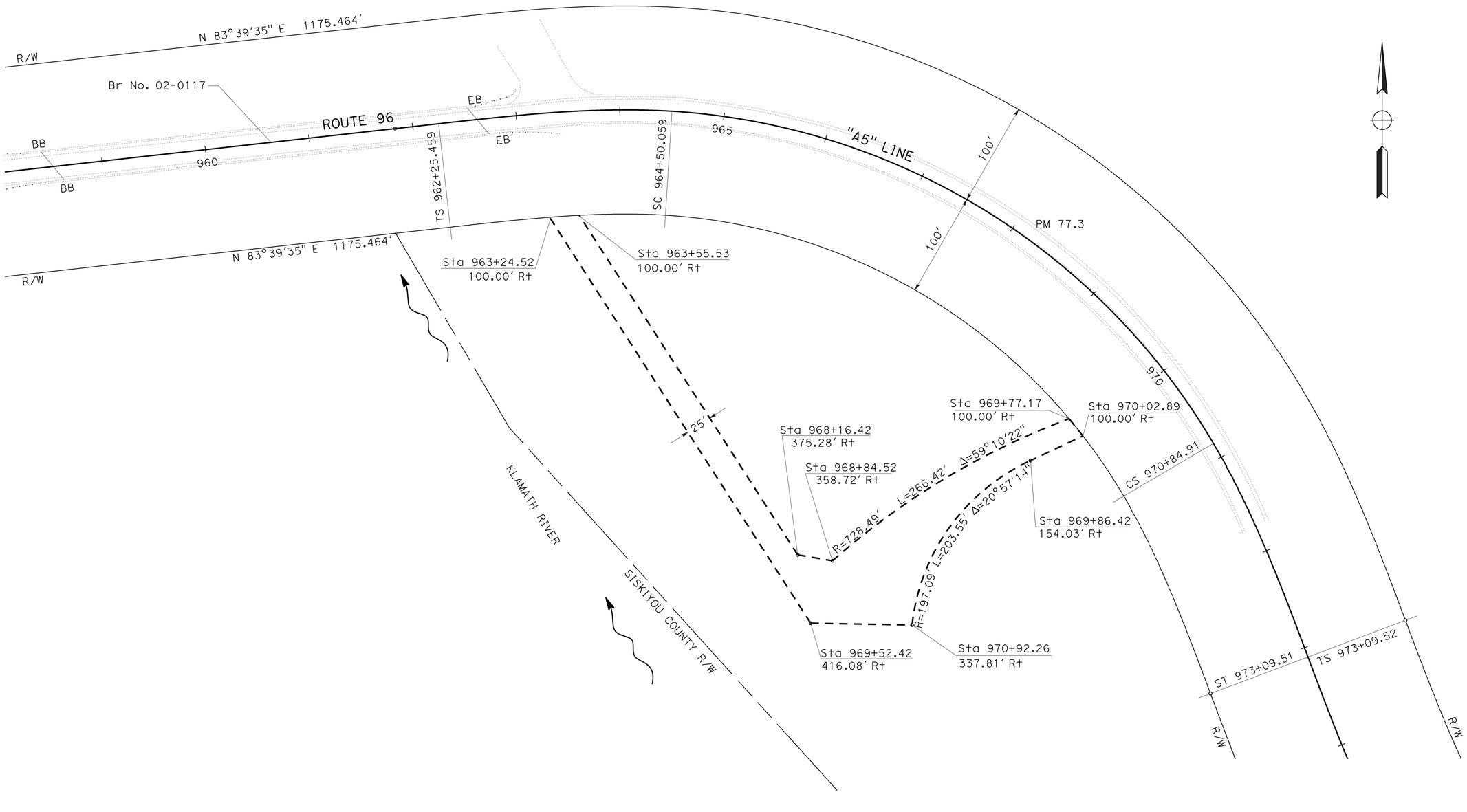

TEMPORARY CONSTRUCTION EASEMENT
LOCATION 6, Br No. 02-0117

CONSTRUCTION DETAILS
NO SCALE
C-7

REVISED BY | DATE REVISED
VIRGINIA SEIBERT | TOBY CRAWFORD
CALCULATED-DESIGNED BY | CHECKED BY
FUNCTIONAL SUPERVISOR: STEVE TOPAL
STATE OF CALIFORNIA - DEPARTMENT OF TRANSPORTATION
Caltrans® DESIGN
P:\proj2\02\2E291_plans\pse\22e291ga007.dgn

LAST REVISION 05-07-11 | DATE PLOTTED => 11-JUL-2012 | TIME PLOTTED => 12:17

Dist	COUNTY	ROUTE	POST MILES TOTAL PROJECT	SHEET No.	TOTAL SHEETS
02	Sis	96	R0.0/77.3	12	58

REGISTERED CIVIL ENGINEER 07-09-12 DATE

07-09-12
PLANS APPROVAL DATE

REGISTERED PROFESSIONAL ENGINEER TOBY J. CRAWFORD No. C71138 Exp. 6-30-13 CIVIL STATE OF CALIFORNIA

THE STATE OF CALIFORNIA OR ITS OFFICERS OR AGENTS SHALL NOT BE RESPONSIBLE FOR THE ACCURACY OR COMPLETENESS OF SCANNED COPIES OF THIS PLAN SHEET.

LEGEND

⊙ REFERENCE POINT (NAIL ON Exist ETW STRIPE)

⊠ POT HOLE LOCATION

NOTE:

1. UNLESS OTHERWISE NOTED, DISTANCES MEASURED FROM BEGINNING AND ENDING BRIDGE JOINTS ALONG EXISTING STRIPE.
2. DEPTH MEASURED FROM EXISTING GROUND TO TOP OF CONDUIT.

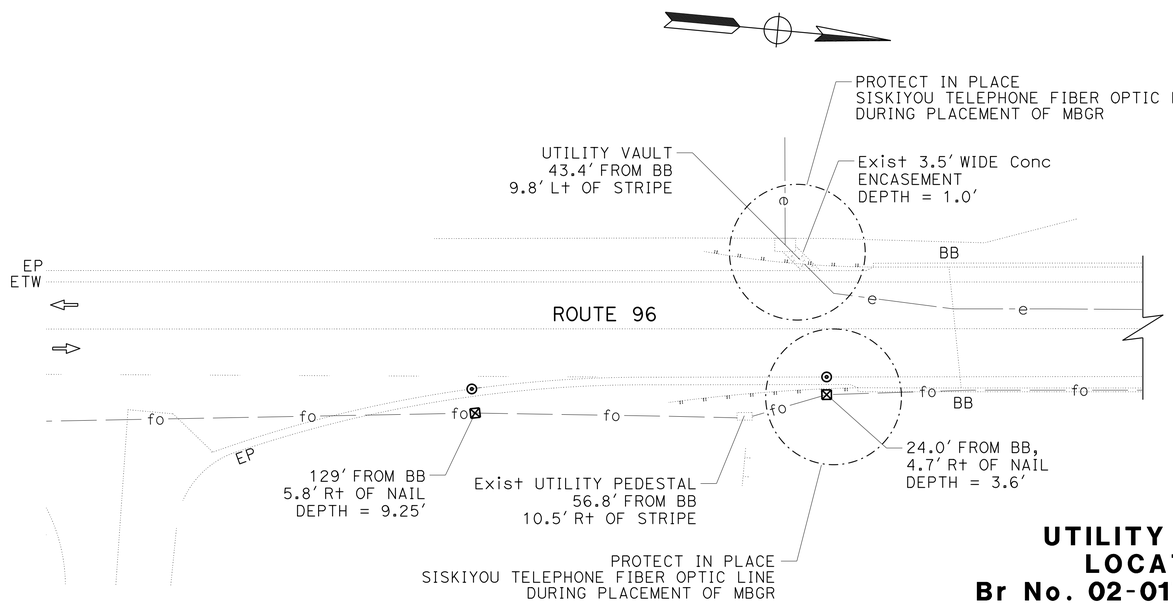

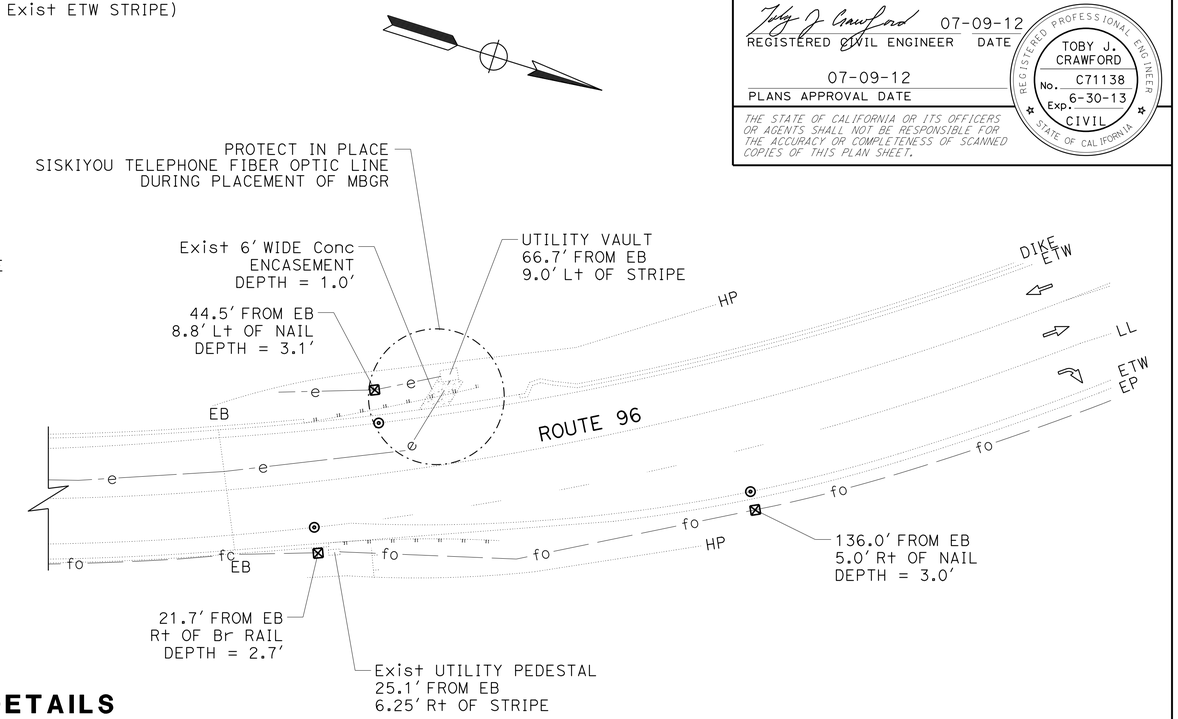

UTILITY DETAILS
LOCATION 1
Br No. 02-0177, PM R0.04

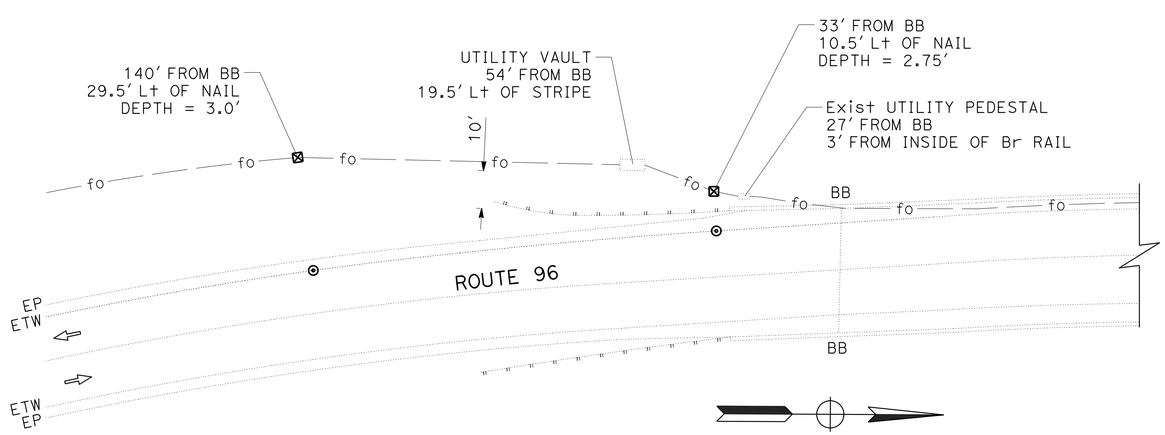

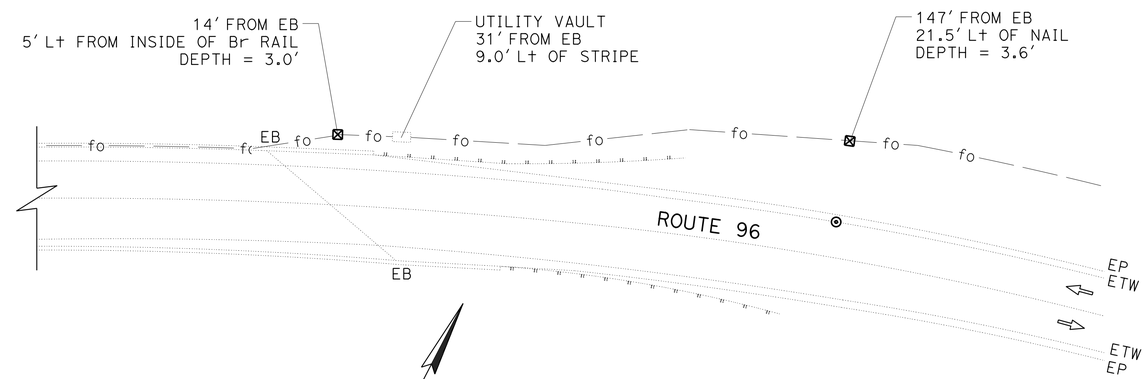

UTILITY DETAILS
LOCATION 2
Br No. 02-0156, PM R5.08

THIS PLAN ACCURATE FOR UTILITY WORK ONLY

UTILITY PLAN

SCALE: 1" = 50'

U-1

STATE OF CALIFORNIA - DEPARTMENT OF TRANSPORTATION
Caltrans
DESIGN

FUNCTIONAL SUPERVISOR: STEVE TOPAL
CALCULATED-DESIGNED BY: VIRGINIA SEIBERT
CHECKED BY: TOBY CRAWFORD
REVISED BY
DATE REVISED

P:\proj2\02\2E291_plans\pse\22e291ka001.dgn

LAST REVISION 01-31-11
DATE PLOTTED => 11-JUL-2012
TIME PLOTTED => 12:17

Dist	COUNTY	ROUTE	POST MILES TOTAL PROJECT	SHEET No.	TOTAL SHEETS
02	Sis	96	R0.0/77.3	13	58

REGISTERED CIVIL ENGINEER 07-09-12 DATE

07-09-12
PLANS APPROVAL DATE

REGISTERED PROFESSIONAL ENGINEER
TOBY J. CRAWFORD
No. C71138
Exp. 6-30-13
CIVIL
STATE OF CALIFORNIA

THE STATE OF CALIFORNIA OR ITS OFFICERS OR AGENTS SHALL NOT BE RESPONSIBLE FOR THE ACCURACY OR COMPLETENESS OF SCANNED COPIES OF THIS PLAN SHEET.

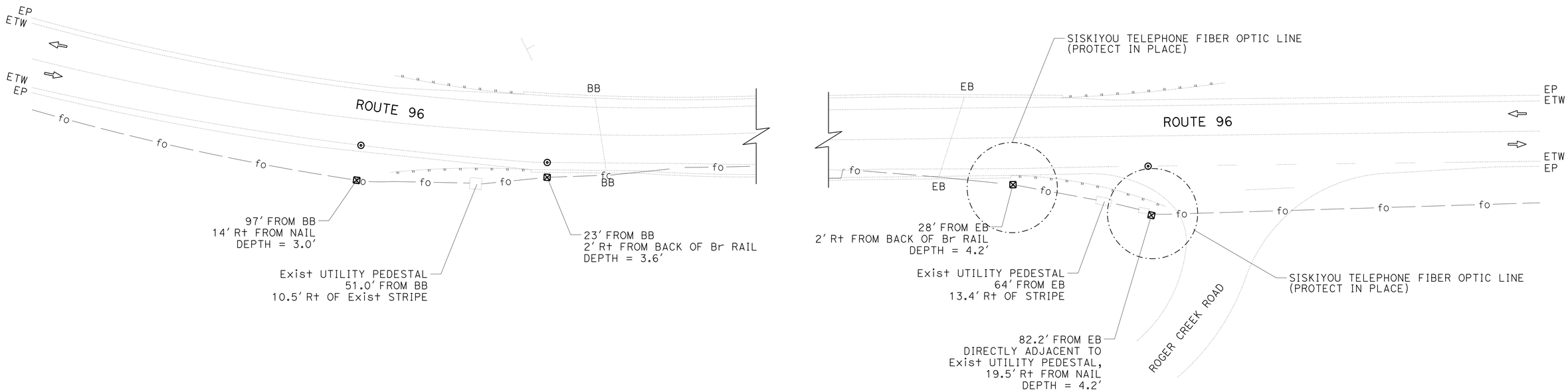

UTILITY DETAILS
LOCATION 3
Br No. 02-0157, PM R5.75

THIS PLAN ACCURATE FOR UTILITY WORK ONLY

UTILITY PLAN
SCALE: 1" = 20'

U-2

REVISED BY	DATE REVISED

CALCULATED-DESIGNED BY	CHECKED BY
TOBY CRAWFORD	VIRGINIA SEIBERT

FUNCTIONAL SUPERVISOR: STEVE TOPAL

STATE OF CALIFORNIA - DEPARTMENT OF TRANSPORTATION
Caltrans®
DESIGN

P:\proj2\02\2E291_plans\pse\22e291ka002.dgn

LAST REVISION 01-31-11
DATE PLOTTED => 11-JUL-2012
TIME PLOTTED => 12:17

Dist	COUNTY	ROUTE	POST MILES TOTAL PROJECT	SHEET No.	TOTAL SHEETS
02	Sis	96	R0.0/77.3	14	58

Toby J. Crawford 07-09-12
REGISTERED CIVIL ENGINEER DATE

07-09-12
PLANS APPROVAL DATE

REGISTERED PROFESSIONAL ENGINEER TOBY J. CRAWFORD No. C71138 Exp. 6-30-13 CIVIL STATE OF CALIFORNIA

THE STATE OF CALIFORNIA OR ITS OFFICERS OR AGENTS SHALL NOT BE RESPONSIBLE FOR THE ACCURACY OR COMPLETENESS OF SCANNED COPIES OF THIS PLAN SHEET.

NOTES:

1. EXACT SIGN LOCATIONS TO BE DETERMINED BY THE ENGINEER.
2. SIGNS SHOWN WITH (CA) INDICATE CALIFORNIA SIGN CODE, OTHERWISE FEDERAL SIGN CODES ARE SHOWN.
3. EXISTING UTILITIES HAVE NOT BEEN PLOTTED ON THESE PLANS.

LEGEND:

CONSTRUCTION AREAS

CONSTRUCTION AREA SIGNS (STATIONARY MOUNTED)

SYMBOL	SIGN CODE	PANEL SIZE	SIGN MESSAGE	NUMBER AND SIZE OF POST	No. OF SIGNS
A	W20-1 C23B(CA)	48" x 48" 36" x 18"	ROAD WORK AHEAD BRIDGE MAINTENANCE	1 - 4" x 6"	4
B	W20-1	36" x 36"	ROAD WORK AHEAD	1 - 4" x 6"	1
C	G20-2	36" x 18"	END ROAD WORK	1 - 4" x 4"	4
D	G20-1	36" x 18"	ROAD WORK NEXT XX MILES	1 - 4" x 4"	6

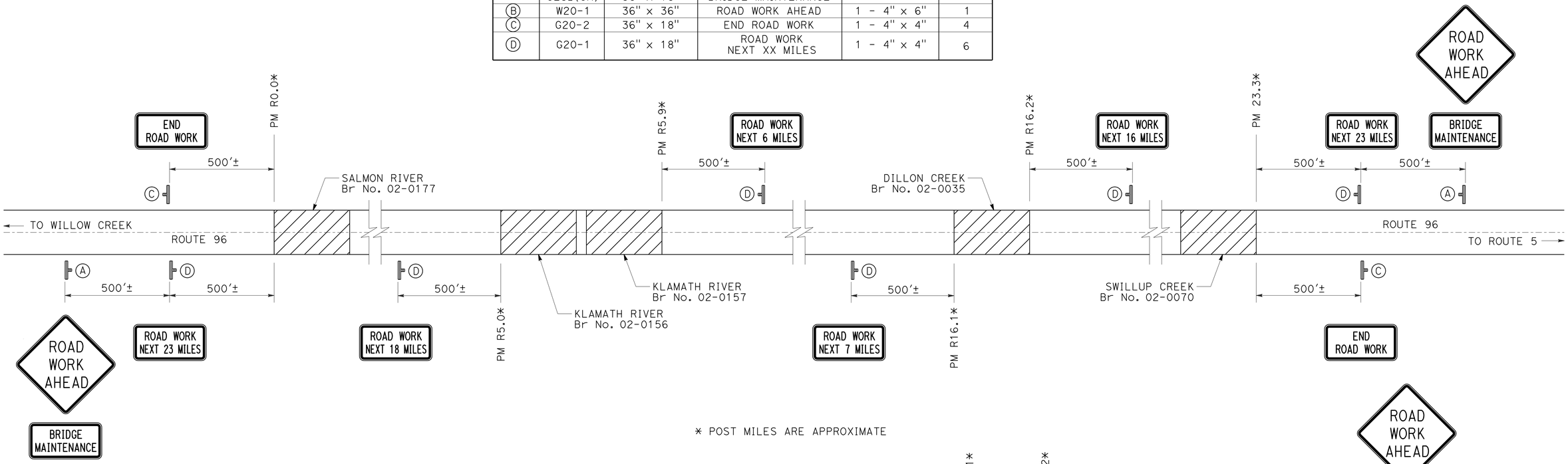

* POST MILES ARE APPROXIMATE

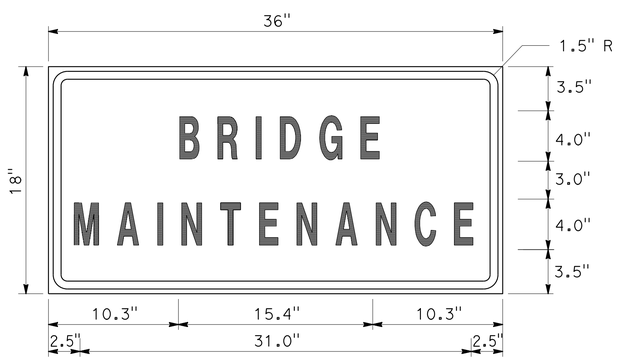

C23B(CA) SIGN PANEL DETAIL

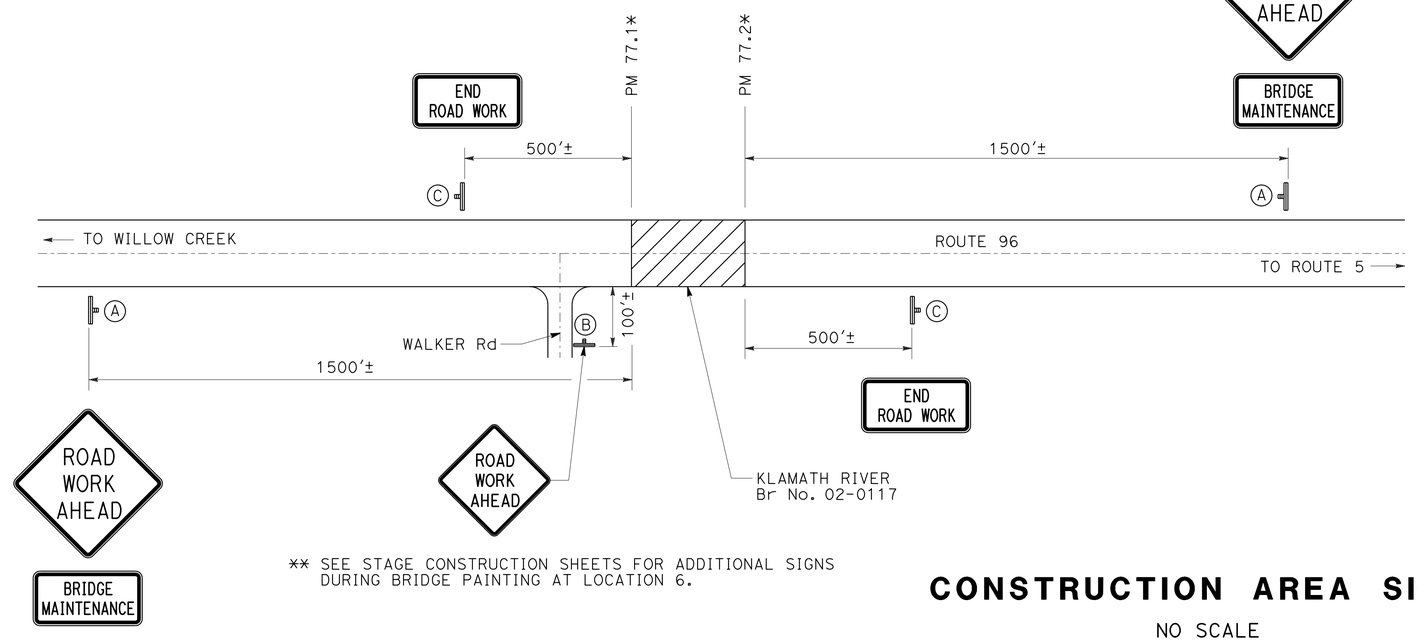

** SEE STAGE CONSTRUCTION SHEETS FOR ADDITIONAL SIGNS DURING BRIDGE PAINTING AT LOCATION 6.

CONSTRUCTION AREA SIGNS

NO SCALE

CS-1

REVISED BY	DATE REVISED

CALCULATED-DESIGNED BY: TOBY CRAWFORD
CHECKED BY: VIRGINIA SEIBERT
FUNCTIONAL SUPERVISOR: STEVE TOPAL

STATE OF CALIFORNIA - DEPARTMENT OF TRANSPORTATION
Caltrans
DESIGN

P:\proj2\02\2E291_plans\pse\22e291a001.dgn

LAST REVISION 01-31-11
DATE PLOTTED => 11-JUL-2012
TIME PLOTTED => 12:17

Dist	COUNTY	ROUTE	POST MILES TOTAL PROJECT	SHEET No.	TOTAL SHEETS
02	Sis	96	R0.0/77.3	15	58

REGISTERED CIVIL ENGINEER 07-09-12 DATE

07-09-12
PLANS APPROVAL DATE

REGISTERED PROFESSIONAL ENGINEER TOBY J. CRAWFORD No. C71138 Exp. 6-30-13 CIVIL STATE OF CALIFORNIA

THE STATE OF CALIFORNIA OR ITS OFFICERS OR AGENTS SHALL NOT BE RESPONSIBLE FOR THE ACCURACY OR COMPLETENESS OF SCANNED COPIES OF THIS PLAN SHEET.

NOTES:

1. STAGE CONSTRUCTION FOR BRIDGE PAINTING PURPOSES ONLY.
2. EXISTING UTILITIES HAVE NOT BEEN PLOTTED ON THESE PLANS.

CONSTRUCTION AREA SIGNS (STATIONARY MOUNTED)

SYMBOL	SIGN CODE	PANEL SIZE	SIGN MESSAGE	NUMBER AND SIZE OF POST	No. OF SIGNS
(A)	SEE SHEET CS-1 FOR SIGN DETAILS AND LOCATIONS				
(B)	SEE SHEET CS-1 FOR SIGN DETAILS AND LOCATIONS				
(C)	SEE SHEET CS-1 FOR SIGN DETAILS AND LOCATIONS				
(E)*	W20-4	48" x 48"	ONE LANE ROAD AHEAD	1 - 4" x 6"	2
(F)	W3-4	48" x 48"	BE PREPARED TO STOP	1 - 4" x 6"	2
(G)*	R1-1 SPECIAL	36" x 36" 20" x 15"	STOP AFTER STOP PROCEED WHEN CLEAR	1 - 4" x 6"	2

* SEE SHEETS SC-2, SC-3, AND E-1 FOR ADDITIONAL DETAILS.

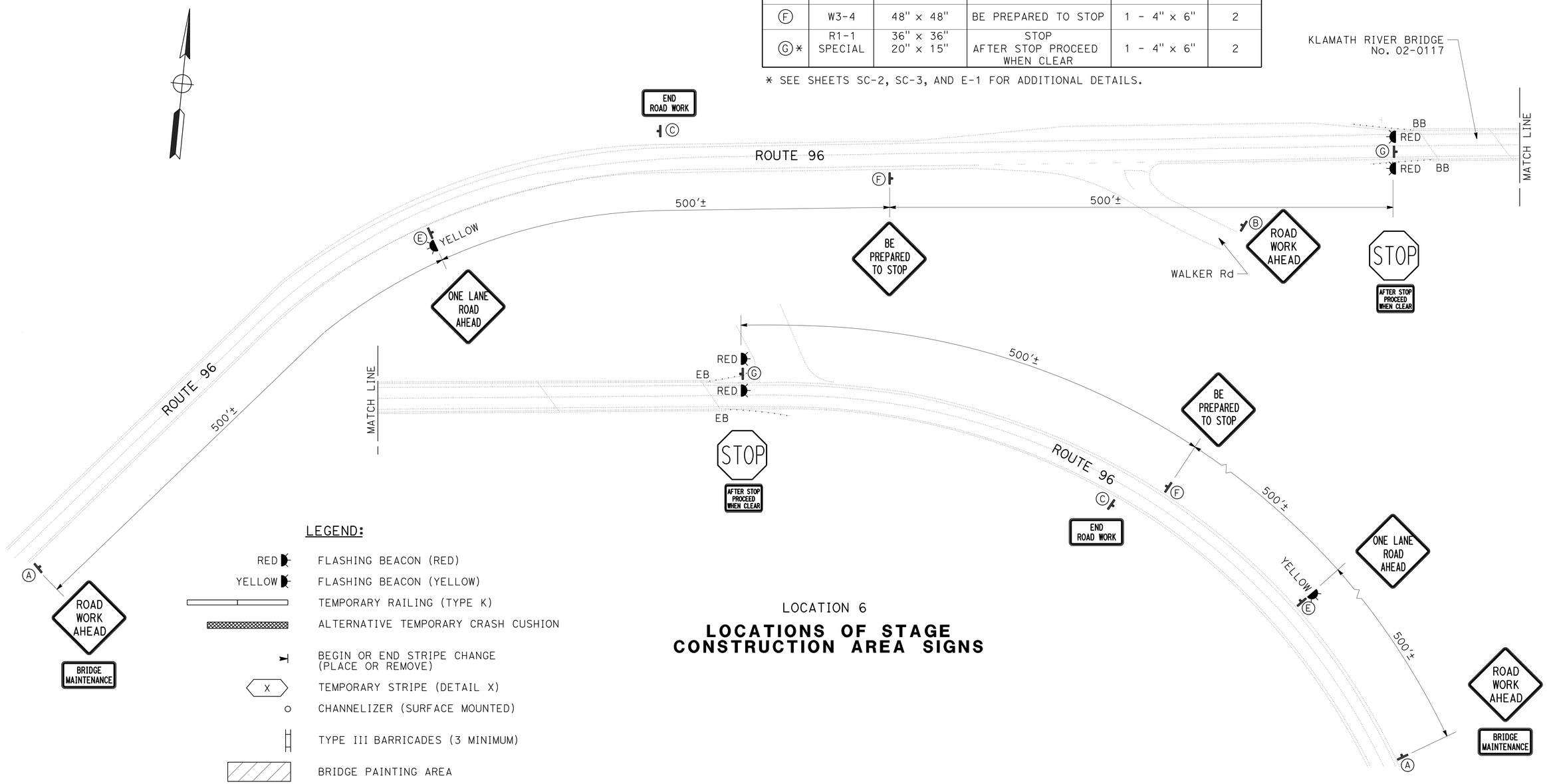

LEGEND:

- RED — FLASHING BEACON (RED)
- YELLOW — FLASHING BEACON (YELLOW)
- TEMPORARY RAILING (TYPE K)
- ALTERNATIVE TEMPORARY CRASH CUSHION
- BEGIN OR END STRIPE CHANGE (PLACE OR REMOVE)
- X — TEMPORARY STRIPE (DETAIL X)
- CHANNELIZER (SURFACE MOUNTED)
- TYPE III BARRICADES (3 MINIMUM)
- BRIDGE PAINTING AREA
- CONSTRUCTION AREA SIGN (STATIONARY MOUNTED)
- DIRECTION OF TRAFFIC

LOCATION 6

LOCATIONS OF STAGE CONSTRUCTION AREA SIGNS

THIS PLAN ACCURATE FOR STAGE CONSTRUCTION WORK ONLY.

STAGE CONSTRUCTION AND TRAFFIC HANDLING PLAN

NO SCALE

SC-1

REVISED BY | DATE REVISED

TOBY CRAWFORD | VIRGINIA SEIBERT

CALCULATED-DESIGNED BY | CHECKED BY

FUNCTIONAL SUPERVISOR: STEVE TOPAL

STATE OF CALIFORNIA - DEPARTMENT OF TRANSPORTATION

Caltrans® DESIGN

P:\proj2\02\2E291_plans\pse\22e291ma001.dgn

LAST REVISION 02-01-11 | DATE PLOTTED => 11-JUL-2012 | TIME PLOTTED => 12:17

Dist	COUNTY	ROUTE	POST MILES TOTAL PROJECT	SHEET No.	TOTAL SHEETS
02	Sis	96	R0.0/77.3	16	58

REGISTERED CIVIL ENGINEER 07-09-12 DATE

07-09-12
PLANS APPROVAL DATE

REGISTERED PROFESSIONAL ENGINEER TOBY J. CRAWFORD No. C71138 Exp. 6-30-13 CIVIL STATE OF CALIFORNIA

THE STATE OF CALIFORNIA OR ITS OFFICERS OR AGENTS SHALL NOT BE RESPONSIBLE FOR THE ACCURACY OR COMPLETENESS OF SCANNED COPIES OF THIS PLAN SHEET.

NOTE:

1. SEE SHEETS CS-1, SC-1 AND E-1 FOR ADDITIONAL SIGN DETAILS.

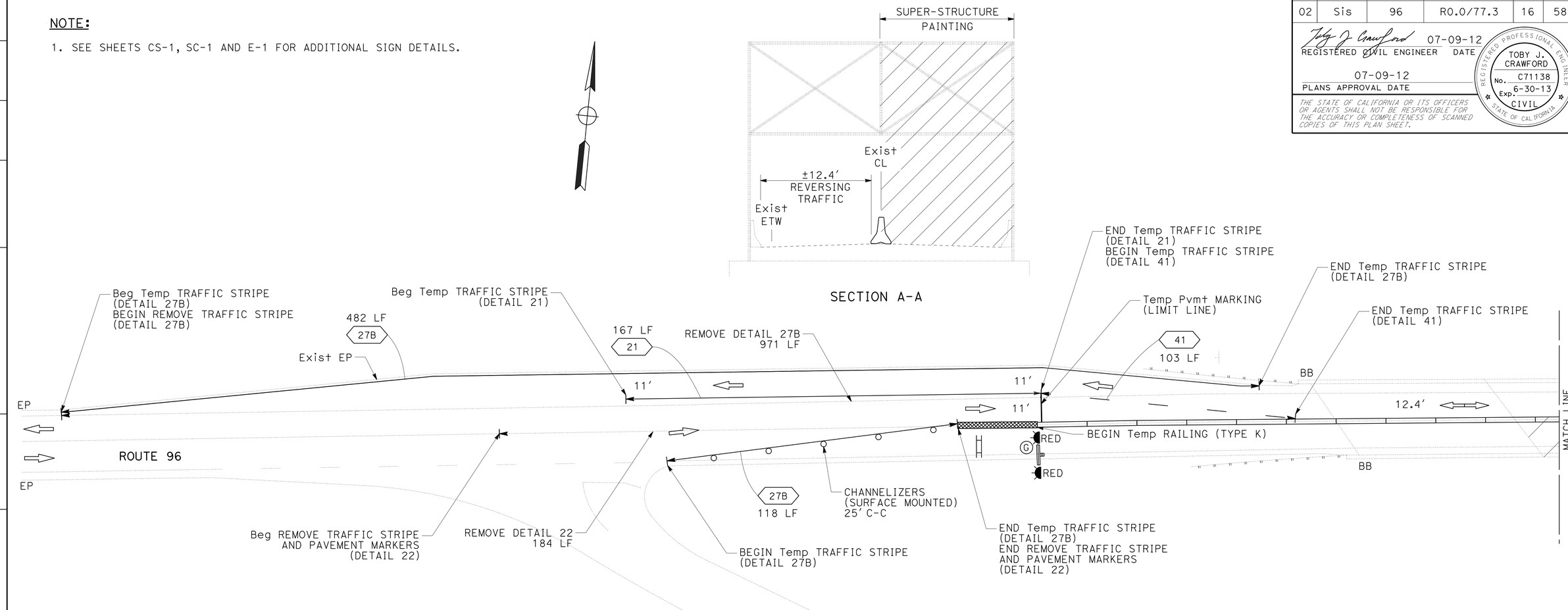

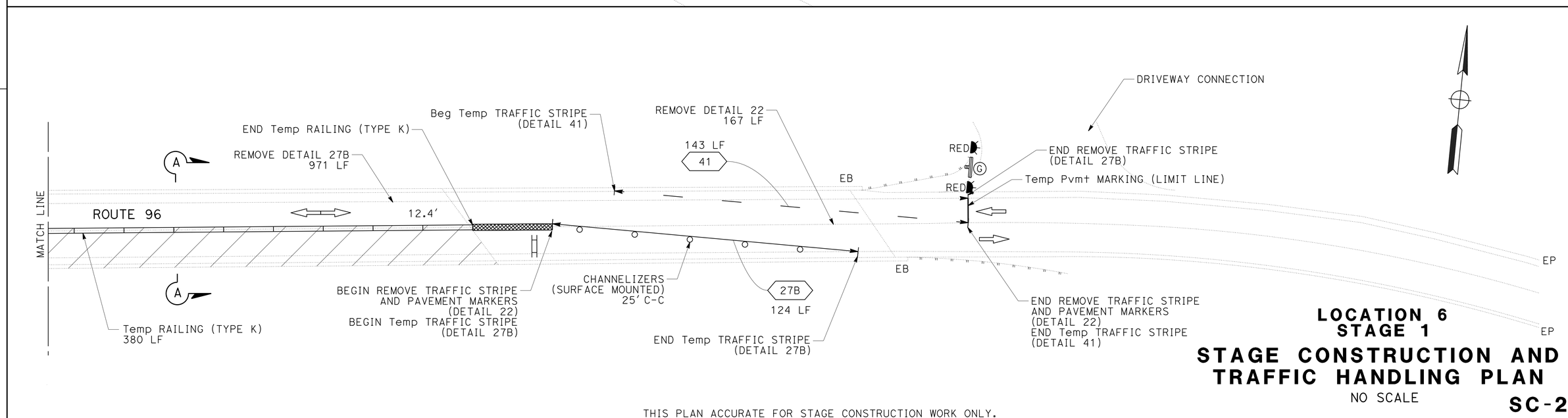

THIS PLAN ACCURATE FOR STAGE CONSTRUCTION WORK ONLY.

LOCATION 6
STAGE 1

STAGE CONSTRUCTION AND TRAFFIC HANDLING PLAN

NO SCALE

SC-2

REVISED BY | DATE REVISED
TOBY CRAWFORD | VIRGINIA SEIBERT
CALCULATED-DESIGNED BY | CHECKED BY
FUNCTIONAL SUPERVISOR: STEVE TOPAL

STATE OF CALIFORNIA - DEPARTMENT OF TRANSPORTATION
Caltrans® DESIGN

P:\proj2\02\2E291_plans\pse\22e291ma002.dgn

LAST REVISION | DATE PLOTTED => 11-JUL-2012 | TIME PLOTTED => 12:17

BORDER LAST REVISED 7/2/2010 | USERNAME => s115152 | DGN FILE => 22e291ma002.dgn | RELATIVE BORDER SCALE IS IN INCHES 0 1 2 3 | UNIT 0319 | PROJECT NUMBER & PHASE 02120000811

Dist	COUNTY	ROUTE	POST MILES TOTAL PROJECT	SHEET No.	TOTAL SHEETS
02	Sis	96	R0.0/77.3	17	58

REGISTERED CIVIL ENGINEER 07-09-12 DATE

07-09-12
PLANS APPROVAL DATE

REGISTERED PROFESSIONAL ENGINEER TOBY J. CRAWFORD No. C71138 Exp. 6-30-13 CIVIL STATE OF CALIFORNIA

THE STATE OF CALIFORNIA OR ITS OFFICERS OR AGENTS SHALL NOT BE RESPONSIBLE FOR THE ACCURACY OR COMPLETENESS OF SCANNED COPIES OF THIS PLAN SHEET.

NOTE:

1. SEE SHEETS CS-1, SC-1 AND E-1 FOR ADDITIONAL SIGN DETAILS.
2. 180′ OF STAGE 1 TEMPORARY RAILING (TYPE K) TO BE REMOVED FROM WEST END. REMAINING 200′ OF TEMPORARY RAILING (TYPE K) TO REMAIN IN PLACE DURING STAGE 2.

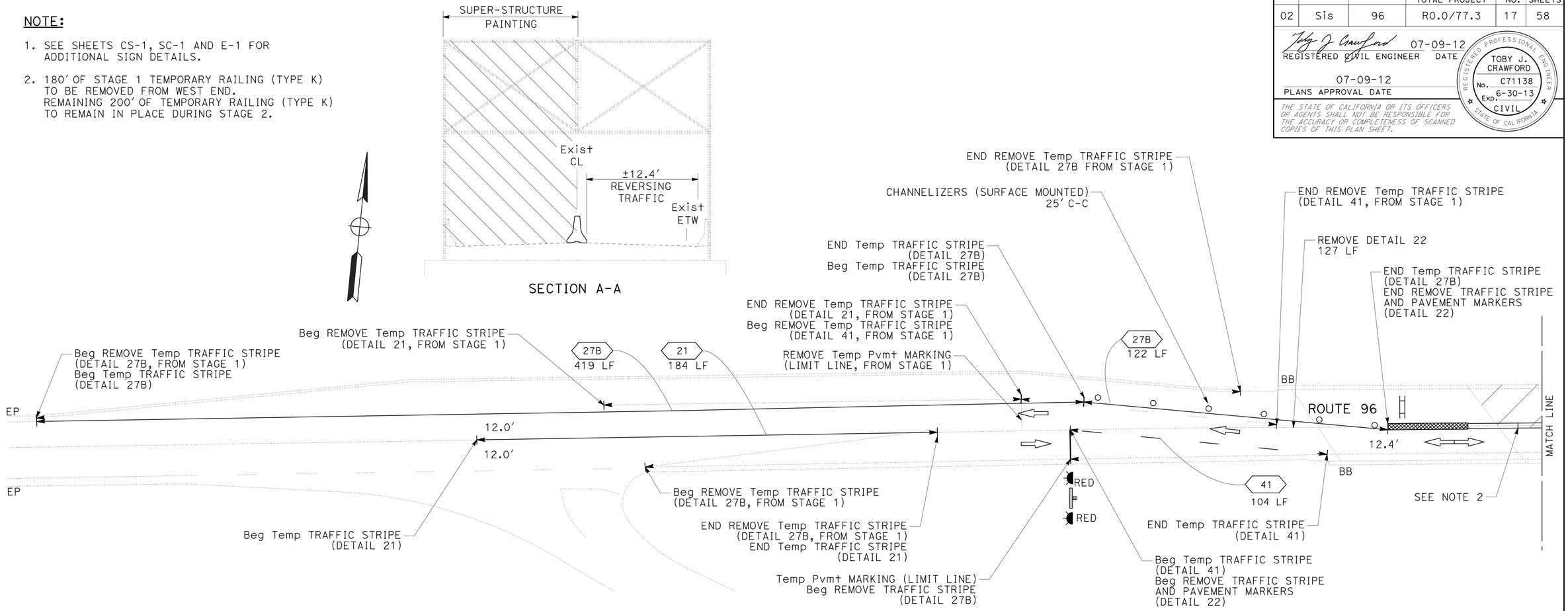

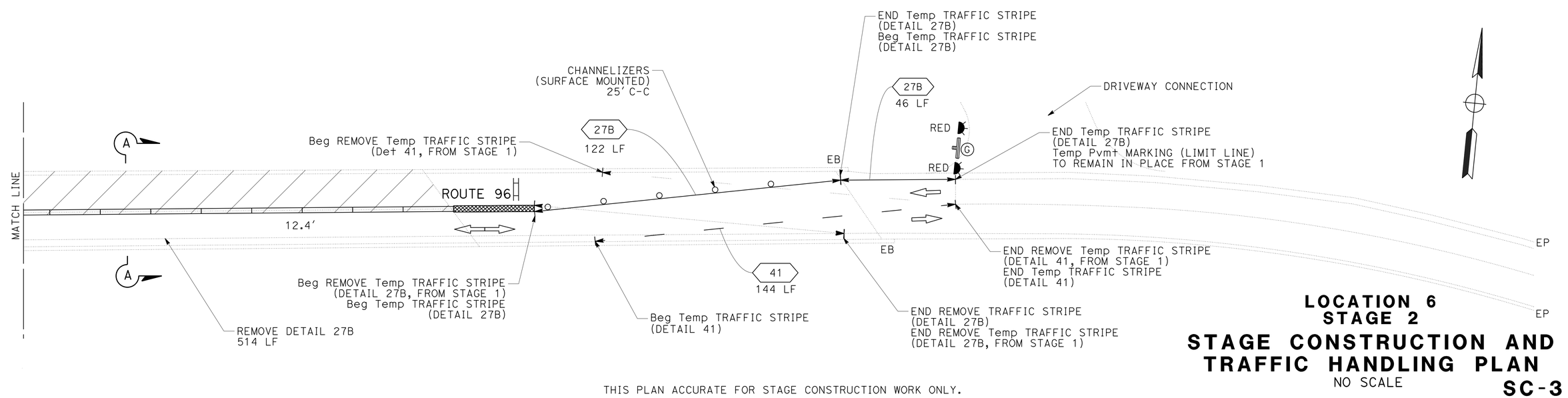

THIS PLAN ACCURATE FOR STAGE CONSTRUCTION WORK ONLY.

LOCATION 6
STAGE 2

STAGE CONSTRUCTION AND TRAFFIC HANDLING PLAN

NO SCALE

SC-3

REVISED BY	DATE REVISED
TOBY CRAWFORD	VIRGINIA SEIBERT
CALCULATED-DESIGNED BY	CHECKED BY
FUNCTIONAL SUPERVISOR	STEVE TOPAL

STATE OF CALIFORNIA - DEPARTMENT OF TRANSPORTATION
Caltrans® DESIGN

P:\proj2\02\2E291_plans\pse\22e291ma003.dgn

LAST REVISION 02-07-11 | DATE PLOTTED => 11-JUL-2012 TIME PLOTTED => 12:17

Dist	COUNTY	ROUTE	POST MILES TOTAL PROJECT	SHEET No.	TOTAL SHEETS
02	Sis	96	R0.0/77.3	18	58

REGISTERED CIVIL ENGINEER 07-09-12 DATE

07-09-12
PLANS APPROVAL DATE

REGISTERED PROFESSIONAL ENGINEER TOBY J. CRAWFORD No. C71138 Exp. 6-30-13 CIVIL STATE OF CALIFORNIA

THE STATE OF CALIFORNIA OR ITS OFFICERS OR AGENTS SHALL NOT BE RESPONSIBLE FOR THE ACCURACY OR COMPLETENESS OF SCANNED COPIES OF THIS PLAN SHEET.

NOTE:

1. (N) - NOT A SEPARATE PAY ITEM, FOR INFORMATION ONLY

TEMPORARY TRAFFIC STRIPE (TAPE)

STAGE No.	SHEET No.	YELLOW 4"	WHITE 4"	WHITE 4" (BROKEN)
		DETAIL 21	DETAIL 27B	DETAIL 41
		LF	LF	LF
1	SC-2	167	724	246
2	SC-3	184	709	248
SUBTOTAL		351	1433	494
TOTAL		2278		

TEMPORARY PAVEMENT MARKING (TAPE)

STAGE No.	SHEET No.	LIMIT LINE
		SQFT
1	SC-2	23
2	SC-3	12
TOTAL		35

REMOVE TRAFFIC STRIPE AND PAVEMENT MARKERS

STAGE No.	SHEET No.	REMOVE YELLOW TRAFFIC STRIPE (HAZARDOUS) DETAIL 22	REMOVE TRAFFIC STRIPE DETAIL 27B	REMOVE PAVEMENT MARKER
		LF	LF	EA
1	SC-2	702	971	30
2	SC-3	254	514	12
TOTAL		956	1485	42

TEMPORARY TRAFFIC CONTROL DEVICES

STAGE No.	CHANNELIZER (SURFACE MOUNTED)	TYPE III BARRICADE	TEMPORARY RAILING (TYPE K)	ALTERNATIVE TEMPORARY CRASH CUSHION
	EA	EA	LF	EA
1	12	6	380	2
2	12	6		1
TOTAL	24	12	380	3

STAGE CONSTRUCTION QUANTITIES
SCQ-1

REVISED BY | DATE REVISED
TOBY CRAWFORD | VIRGINIA SEIBERT
CALCULATED-DESIGNED BY | CHECKED BY
FUNCTIONAL SUPERVISOR: STEVE TOPAL
STATE OF CALIFORNIA - DEPARTMENT OF TRANSPORTATION
Caltrans DESIGN
P:\proj2\02\2E291\plans\pse\22e291mc001.dgn

LAST REVISION 01-31-11 | DATE PLOTTED => 11-JUL-2012 TIME PLOTTED => 12:17

Dist	COUNTY	ROUTE	POST MILES TOTAL PROJECT	SHEET No.	TOTAL SHEETS
02	Sis	96	R0.0/77.3	19	58

REGISTERED CIVIL ENGINEER 07-09-12 DATE

07-09-12
PLANS APPROVAL DATE

REGISTERED PROFESSIONAL ENGINEER TOBY J. CRAWFORD No. C71138 Exp. 6-30-13 CIVIL STATE OF CALIFORNIA

THE STATE OF CALIFORNIA OR ITS OFFICERS OR AGENTS SHALL NOT BE RESPONSIBLE FOR THE ACCURACY OR COMPLETENESS OF SCANNED COPIES OF THIS PLAN SHEET.

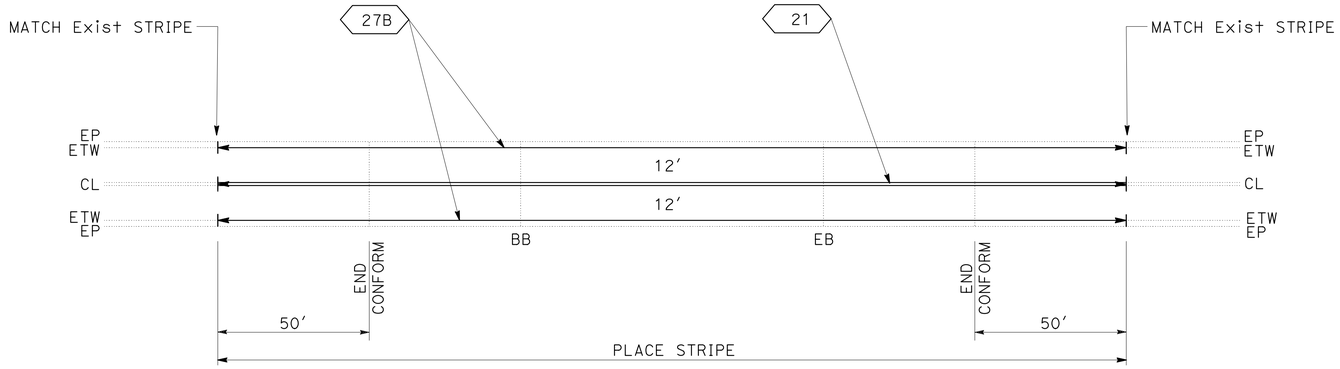

TYPICAL PAVEMENT DELINEATION

LOCATIONS 1, 2, 4, 5

THERMOPLASTIC TRAFFIC STRIPE (SPRAYABLE)

LOCATION	Br No.	YELLOW 4"		WHITE 4"	WHITE 4" (BROKEN)
		DETAIL 18	DETAIL 21	DETAIL 27B	DETAIL 27C
		LF	LF	LF	LF
1	02-0177		1030	2006	56
2	02-0156		1048	2096	
3	02-0157	29	1030	2064	29
4	02-0035		650	1300	
5	02-0070		239	478	
6	02-0117		1055	1817	
SUBTOTAL		29	5052	9761	85
TOTAL		14,927			

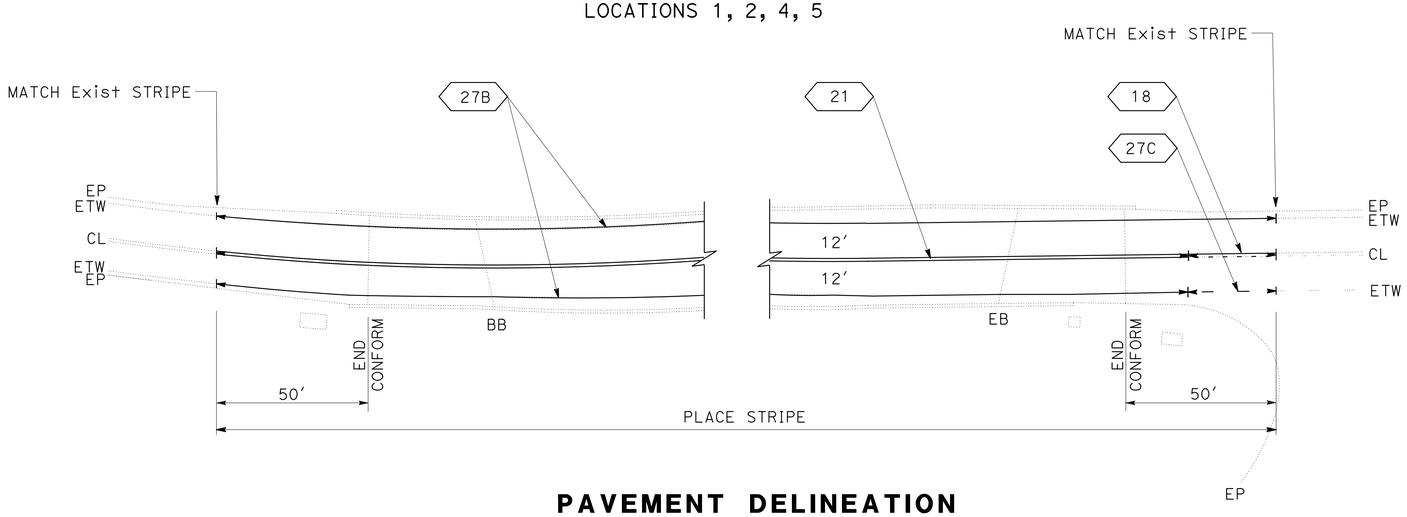

PAVEMENT DELINEATION

LOCATION 3

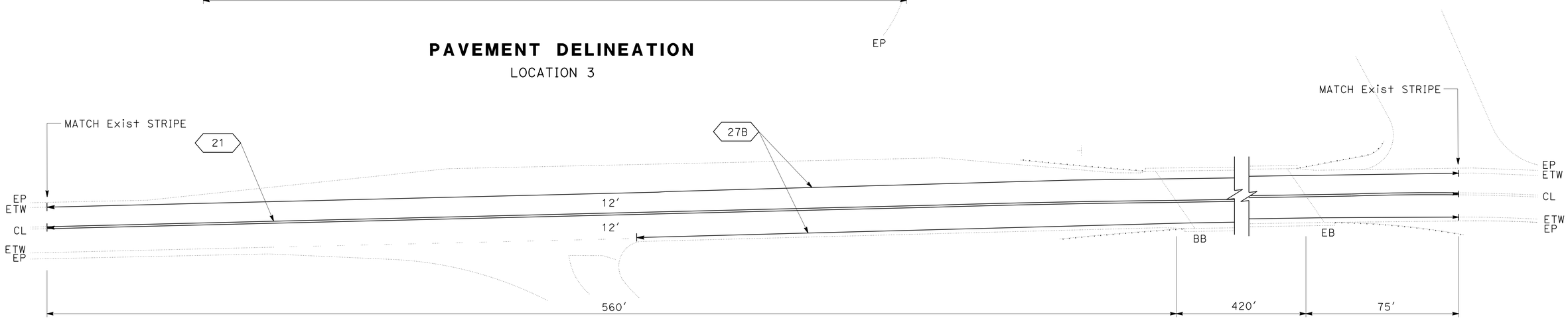

PAVEMENT DELINEATION

LOCATION 6

PAVEMENT DELINEATION DETAILS AND QUANTITIES

NO SCALE

PDQ-1

REVISED BY | DATE REVISED
TOBY CRAWFORD | VIRGINIA SEIBERT
CALCULATED-DESIGNED BY | CHECKED BY
FUNCTIONAL SUPERVISOR | STEVE TOPAL
STATE OF CALIFORNIA - DEPARTMENT OF TRANSPORTATION
Caltrans
DESIGN
P:\proj\02\2E291_plans\pse\22e291nc001.dgn

LAST REVISION 07-09-12 | DATE PLOTTED => 11-JUL-2012 | TIME PLOTTED => 12:17

BORDER LAST REVISED 7/2/2010 | USERNAME => s115152 | DGN FILE => 22e291nc001.dgn | RELATIVE BORDER SCALE IS IN INCHES 0 1 2 3 | UNIT 0319 | PROJECT NUMBER & PHASE 02120000811

Dist	COUNTY	ROUTE	POST MILES TOTAL PROJECT	SHEET No.	TOTAL SHEETS
02	Sis	96	R0.0/77.3	20	58

REGISTERED CIVIL ENGINEER 07-09-12 DATE

07-09-12
PLANS APPROVAL DATE

REGISTERED PROFESSIONAL ENGINEER TOBY J. CRAWFORD No. C71138 Exp. 6-30-13 CIVIL STATE OF CALIFORNIA

THE STATE OF CALIFORNIA OR ITS OFFICERS OR AGENTS SHALL NOT BE RESPONSIBLE FOR THE ACCURACY OR COMPLETENESS OF SCANNED COPIES OF THIS PLAN SHEET.

NOTES:

1. (N) - NOT A SEPARATE PAY ITEM, FOR INFORMATION ONLY
2. SEE CONSTRUCTION DETAILS FOR MBGR SHOP BEND AND LONG SPAN NESTED GUARD RAILING.

TEMPORARY FENCE (TYPE ESA)

SHEET	LOCATION	Temp FENCE (TYPE ESA)
		LF
L-1	Br No. 02-0156 (EB L+)	150
L-2	Br No. 02-0157 (EB R+)	50
	TOTAL	200

INSULATION FOAM

LOCATION	LF
Br No. 02-157	40
TOTAL	40

METAL BEAM GUARD RAILING

SHEET No.	LOCATION No.	LOCATION	RIGHT	LEFT	REMOVE METAL BEAM GUARD RAILING	ROADWAY EXCAVATION (FOR SHOULDER BACKING) *	SHOULDER BACKING	METAL BEAM GUARD RAILING	TRANSITION RAILING (TYPE WB)	TRANSITION RAILING (TYPE WB, MODIFIED)	INTERMEDIATE ANCHOR ASSEMBLY (MODIFIED TYPE SFT)	END ANCHOR ASSEMBLY (TYPE SFT)	ALTERNATIVE IN-LINE TERMINAL SYSTEM	ALTERNATIVE FLARED TERMINAL SYSTEM	OBJECT MARKER (TYPE L-1)	REMOVE MARKER	RESET ROADSIDE SIGN	DESCRIPTION
					LF	CY	TON	LF	EA	EA	EA	EA	EA	EA	EA	EA	EA	
L-1	1	SALMON RIVER Br 02-0177, R0.04																
		BEGIN BRIDGE	X		50.0	6.6	10.6	37.5	1					1	1	1		TYPE 12B LAYOUT
		BEGIN BRIDGE		X	50.0	7.0	11.3	75.0	1									TYPE 12CC LAYOUT
		END BRIDGE	X		50.0	4.7	7.6	25.0	1				1					TYPE 12AA LAYOUT
		END BRIDGE		X	50.0	6.3	10.1	87.5	1					1	1	1		TYPE 12B LAYOUT, NOTE 2
L-1	2	KLAMATH RIVER Br 02-0156, R5.08																
		BEGIN BRIDGE	X		75.0	6.9	11.2	75.0	1								1	TYPE 12C LAYOUT
		BEGIN BRIDGE		X	75.0	11.9	19.3	50.0	1					1				TYPE 12BB LAYOUT
		END BRIDGE	X		75.0	5.5	8.9	37.5	1					1				TYPE 12BB LAYOUT
		END BRIDGE		X	75.0	9.1	14.8	50.0	1					1	1		1	TYPE 12B LAYOUT
L-2	3	KLAMATH RIVER Br 02-0157, R5.75																
		BEGIN BRIDGE	X		62.5	9.3	15.1	37.5	1					1	1			TYPE 12B LAYOUT
		BEGIN BRIDGE		X	62.5	5.4	8.8	25.0	1					1				TYPE 12BB LAYOUT
		END BRIDGE	X		62.5	3.0	4.9	37.5	1		1	1				1		SHOP BEND, NOTE 2
		END BRIDGE		X	62.5	7.0	11.4	37.5	1					1	1			TYPE 12B LAYOUT
L-2	4	DILLON CREEK Br 02-0035, R16.13																
		BEGIN BRIDGE	X		75.0	8.3	13.4	50.0	1					1	1			TYPE 12B LAYOUT
		BEGIN BRIDGE		X	100.0	9.5	15.4	37.5	1					1				TYPE 12BB LAYOUT
		END BRIDGE	X		62.5	8.4	13.5	25.0	1					1				TYPE 12BB LAYOUT
		END BRIDGE		X	62.5	8.2	13.3	62.5	1									TYPE 12C LAYOUT
L-3	5	SWILLUP CREEK Br 02-0070, 23.25																
		BEGIN BRIDGE	X		62.5	4.4	7.1	25.0	1				1				1	TYPE 12A LAYOUT
		BEGIN BRIDGE		X	75.0	5.6	9.0	37.5	1					1				TYPE 12BB LAYOUT
		END BRIDGE	X		62.5	4.3	7.0	25.0	1				1					TYPE 12AA LAYOUT
		END BRIDGE		X	75.0	4.9	7.9	25.0	1					1	1		1	TYPE 12B LAYOUT
L-3	6	KLAMATH RIVER Br 02-0117, 77.15																
		BEGIN BRIDGE	X		62.5	6.2	10.0	25.0	1				1				1	TYPE 12A LAYOUT
		BEGIN BRIDGE		X	62.5	6.4	10.3	37.5	1					1				TYPE 12BB LAYOUT
		END BRIDGE	X		62.5	5.4	8.7	25.0	1					1				TYPE 12BB LAYOUT
		END BRIDGE		X	50.0	2.1	3.3	12.5		1	1	1					1	SHOP BEND, NOTE 2
		TOTALS			1475.0	156.4	239.6	962.5	23	1	2	2	4	15	7	3	6	

* INCLUDED IN ROADWAY QUANTITIES TABLE (THIS SHEET)

ROADWAY QUANTITIES

LOCATION No.	LOCATION BRIDGE No., PM	COLD PLANE AC Pvmt	ROADWAY EXCAVATION	CLASS 2 AGGREGATE BASE	HOT MIX ASPHALT (TYPE A)	TACK COAT
		SQYD	CY	CY	TON	TON
1	SALMON RIVER Br 02-0177, R0.04					
	BEGIN BRIDGE	128.4			18.5	0.04
	END BRIDGE	137.7			19.8	0.04
2	KLAMATH RIVER Br 02-0156, R5.08					
	BEGIN BRIDGE	131.7			19.0	0.04
	END BRIDGE	156.5			22.5	0.05
3	KLAMATH RIVER Br 02-0157, R5.75					
	BEGIN BRIDGE	122.8			17.7	0.04
	END BRIDGE	138.5			19.9	0.04
4	DILLON CREEK Br 02-0035, R16.13					
	BEGIN BRIDGE	15.0	248.7	148.9	163.0	0.01
	END BRIDGE	14.8	263.2	157.6	172.3	0.01
5	SWILLUP CREEK Br 02-0070, 23.25					
	BEGIN BRIDGE	102.9			14.8	0.03
	END BRIDGE	110.1			15.9	0.03
6	KLAMATH RIVER Br 02-0117, 77.15					
	BEGIN BRIDGE	139.9			20.1	0.04
	END BRIDGE	134.8			19.4	0.04
	EXCAVATION ON SHOULDERS (SEE MBGR TABLE)		156.4			
TOTALS		1333.1	668.3	306.5	522.5	0.41

WATER POLLUTION CONTROL

TEMPORARY MULCH	TEMPORARY FIBER ROLL
SQYD	LF
1460	300

EROSION CONTROL

EROSION CONTROL (HYDROSEED) *
ACRE
0.9

* EROSION CONTROL TO BE PLACED ON ALL DISTURBED SOIL AREAS

SUMMARY OF QUANTITIES
Q-1

TOBY CRAWFORD | REVISED BY
VIRGINIA SEIBERT | DATE REVISED
CALCULATED-DESIGNED BY
CHECKED BY
FUNCTIONAL SUPERVISOR
STEVE TOPAL
STATE OF CALIFORNIA - DEPARTMENT OF TRANSPORTATION
Caltrans
DESIGN
P:\proj2\02\2E291\plans\pse\22e291pa001.dgn

LAST REVISION | DATE PLOTTED => 11-JUL-2012
07-09-12 | TIME PLOTTED => 12:17

Dist	COUNTY	ROUTE	POST MILES TOTAL PROJECT	SHEET No.	TOTAL SHEETS
02	Sis	96	R0.0/77.3	21	58

ART 07-09-12
REGISTERED ELECTRICAL ENGINEER DATE

07-09-12
PLANS APPROVAL DATE

REGISTERED PROFESSIONAL ENGINEER A.P. ROBLES No. E15293 Exp. 3-31-13 ELECTRICAL STATE OF CALIFORNIA

THE STATE OF CALIFORNIA OR ITS OFFICERS OR AGENTS SHALL NOT BE RESPONSIBLE FOR THE ACCURACY OR COMPLETENESS OF SCANNED COPIES OF THIS PLAN SHEET.

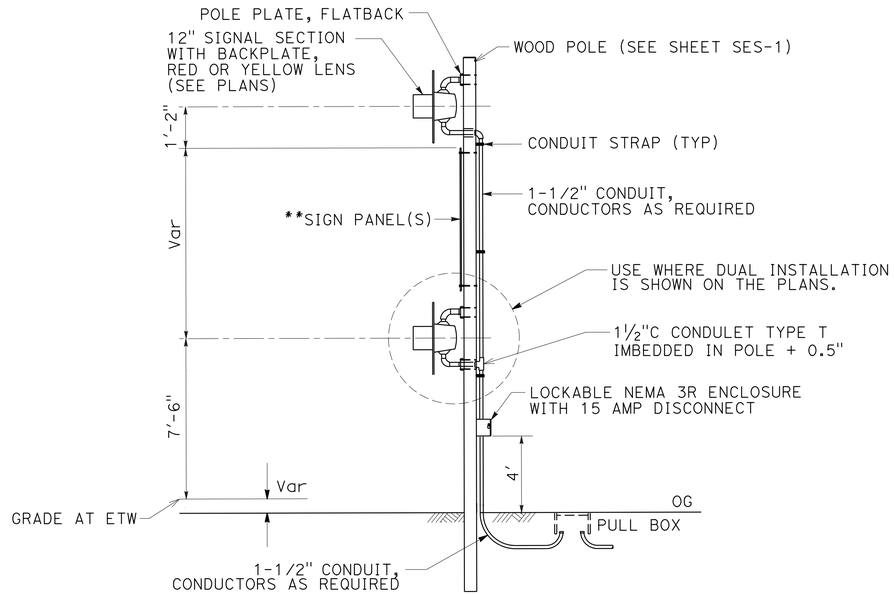

TEMPORARY FLASHING BEACON INSTALLATION

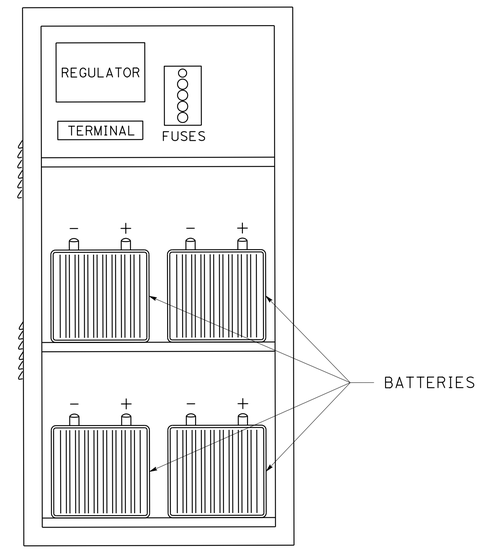

NEMA 4 BATTERY AND CONTROL ENCLOSURE

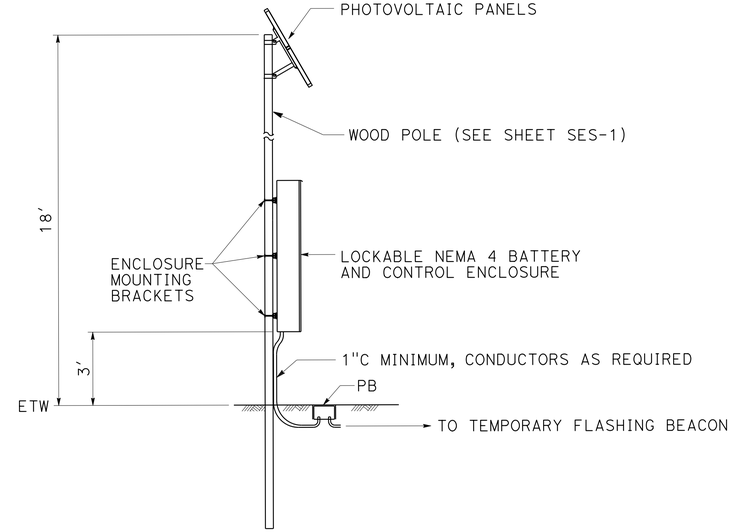

TEMPORARY SOLAR POWER SOURCE

NOTE: POLE SHALL BE LOCATED 15' FROM ETW OR PROVIDE ATTENUATION.

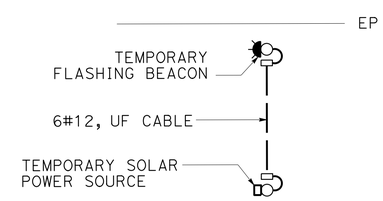

TYPICAL SOLAR INSTALLATION

APPROVED FOR ELECTRICAL WORK ONLY

TEMPORARY FLASHING BEACON (SOLAR POWERED)

NO SCALE

E-1

REVISED BY	DATE REVISED

CALCULATED-DESIGNED BY	ARTURO ROBLES
CHECKED BY	JIM HANNIGAN
FUNCTIONAL SUPERVISOR	ROB STINGER

STATE OF CALIFORNIA - DEPARTMENT OF TRANSPORTATION
Caltrans® ELECTRICAL DESIGN

P:\proj2\02\2E291_plans\pse\22e291ua001.dgn

LAST REVISION 07-09-12 | DATE PLOTTED => 11-JUL-2012 | TIME PLOTTED => 12:17

DIST	COUNTY	ROUTE	POST MILES TOTAL PROJECT	SHEET No	TOTAL SHEETS
02	Sis	96	R0.0/77.3	22	58

REGISTERED CIVIL ENGINEER 5-24-11 DATE

7-9-12
PLANS APPROVAL DATE

REGISTERED PROFESSIONAL ENGINEER TIMARA S. MARCHENKO No. C76837 Exp. 12/31/12 CIVIL STATE OF CALIFORNIA

The State of California or its officers or agents shall not be responsible for the accuracy or completeness of scanned copies of this plan sheet.

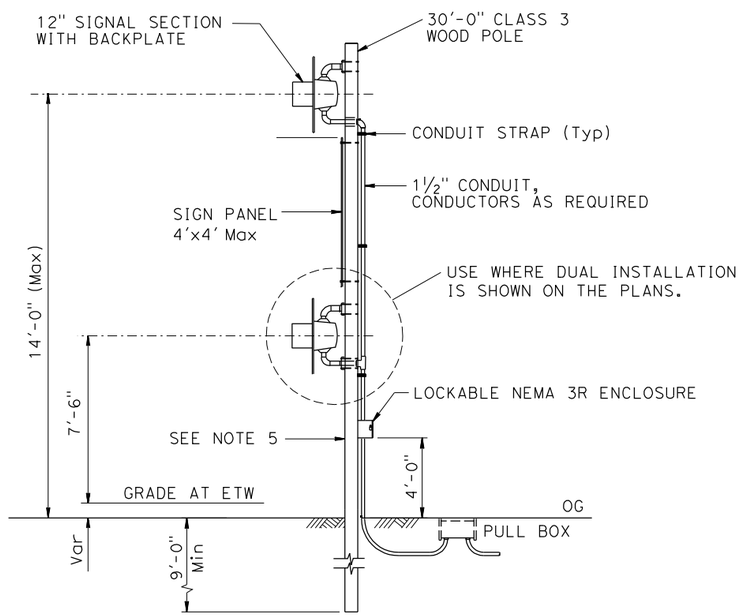

TEMPORARY FLASHING BEACON INSTALLATION

PROVIDE ATTENUATION.

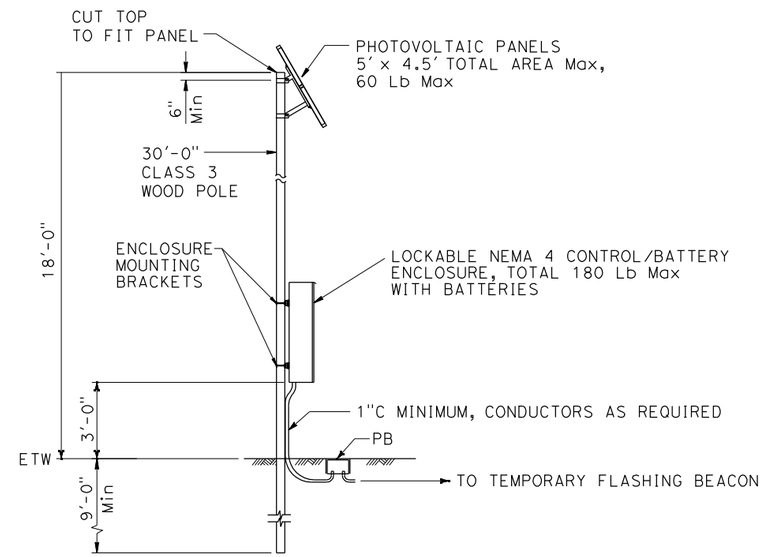

TEMPORARY SOLAR POWER SOURCE

POLE SHALL BE LOCATED 15' FROM ETW OR PROVIDE ATTENUATION.

GENERAL NOTES:

SPECIFICATIONS

Design: AASHTO Standard Specifications for Structural Supports for Highway Signs, Luminaires and Traffic Signals dated 2001.

LOADING

Wind Loadings: 100 MPH

UNIT STRESSES

Timber Poles: Fb = 1850 Tapered treated round pole
Fv = 110 psi ASTM D2899 Standard
E = 1500 x 10^3 psi

TREATMENT

To conform with Section 86 Standard Specifications

SPECIFICATIONS

Caltrans Standard Specifications May 2006
ANSI Wood Poles

NOTES:

1. All attachments shall be mounted with stainless steel straps or other manufacturers methods without drilling holes in pole. except as shown. Drilling through pole will require Engineer's approval.

2. Foundation design is based on AASHTO 2001 article 13.6 Broms' approximate procedure assuming a cohessionless material. The angle of Internal friction used is 30° and unit weight of soil used is 120 lb/ft^3. Contractor to verify actual soil condition.

3. If pole is located on a steep slope (more than 3H:1V for cohesionless soil and 2H:1V for cohesion soil) add 2 feet extra for embedment.

4. For details not shown, see "2006 STANDARD PLANS" and "2006 REVISED STANDARD PLANS"

5. Wood poles shall be shielded from traffic by means according to California Department of Transportation Highway Design Manual Requirements. See Roadway Plans.

NOTE:
THE CONTRACTOR SHALL VERIFY ALL CONTROLLING FIELD DIMENSIONS BEFORE ORDERING OR FABRICATING ANY MATERIAL.

NO SCALE

BRANCH CHIEF JAMES SAGAR

	BY	CHECKED
DESIGN	T MARCHENKO	N KANEPATHIPILLAI
DETAILS	D W JUSTICE Jr	T MARCHENKO
QUANTITIES		

STATE OF CALIFORNIA DEPARTMENT OF TRANSPORTATION

DIVISION OF ENGINEERING SERVICES DESIGN AND TECHNICAL SERVICES SPECIAL DESIGNS BRANCH B

BRIDGE NO. N/A
POST MILE Varies

TEMPORARY FLASHING BEACON
TEMPORARY WOOD POLE

SES-1

(ENGLISH) SPECIAL DESIGNS BRANCH BORDER SHEET (REV. 7-1-09)

ORIGINAL SCALE IN INCHES FOR REDUCED PLANS 0 1 2 3

UNIT: 3619
PROJECT NUMBER & PHASE: 0212000081-1 CONTRACT NO.: 02-2E2914

DISREGARD PRINTS BEARING EARLIER REVISION DATES

REVISION DATES: 7-9-12 5-18-11 5-24-11 5-26-11

SHEET 1 OF 1

FILE => spec_des_br_prj/2011sd/02-0e2901/$REQUEST

USERNAME => $USER DATE PLOTTED => $DATE TIME PLOTTED => $TIME

DIST	COUNTY	ROUTE	POST MILES TOTAL PROJECT	SHEET NO.	TOTAL SHEETS
02	Sis	96	R0.0/77.3	23	58

Randell D. Hiatt
REGISTERED CIVIL ENGINEER

June 6, 2008
PLANS APPROVAL DATE

REGISTERED PROFESSIONAL ENGINEER
Randell D. Hiatt
No. C50200
Exp. 6-30-09
CIVIL
STATE OF CALIFORNIA

The State of California or its officers or agents shall not be responsible for the accuracy or completeness of electronic copies of this plan sheet.

To accompany plans dated 07-09-12

NOTES:

1. When necessary to place dike in front of face of guard railing, only Type C dike may be used. For dike details, see Standard Plan A87B.
2. For standard railing post embedment, see Standard Plans A77C3.
3. Guard railing delineation to be used where shown on the Project Plans.
4. When dike or curb is placed under guard railing, the maximum height of the dike or curb shall be 4". Mountable dike should not be used. For dike and curb details, see Revised Standard Plans RSP A87A and Standard Plan A87B.
5. For details of typical distance between the face of rail and hinge point, see Standard Plan A77C3.

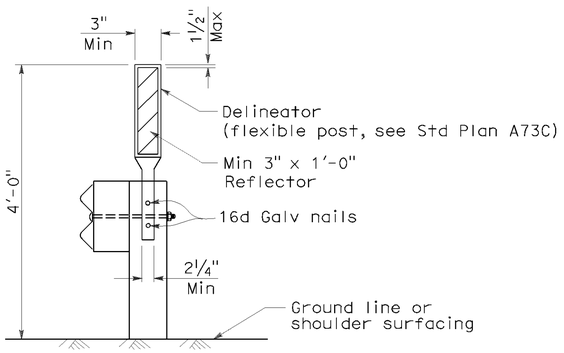

GUARD RAILING DELINEATION

See Note 3

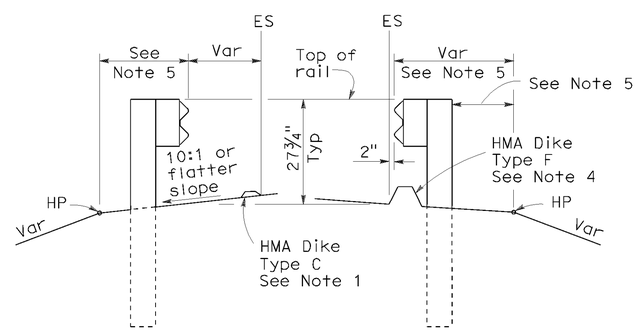

DIKE POSITIONING

See Note 1

STATE OF CALIFORNIA
DEPARTMENT OF TRANSPORTATION

METAL BEAM GUARD RAILING TYPICAL RAILING DELINEATION AND DIKE POSITIONING DETAILS

NO SCALE

RSP A77C4 DATED JUNE 6, 2008 SUPERSEDES STANDARD PLAN A77C4
DATED MAY 1, 2006 - PAGE 47 OF THE STANDARD PLANS BOOK DATED MAY 2006.

REVISED STANDARD PLAN RSP A77C4

2006 REVISED STANDARD PLAN RSP A77C4

P:\proj2\02\2E291_plans\pse\22e291va001.dgn

12-10-07

DIST	COUNTY	ROUTE	POST MILES TOTAL PROJECT	SHEET NO.	TOTAL SHEETS
02	Sis	96	R0.0/77.3	24	58

Randell D. Hiatt
REGISTERED CIVIL ENGINEER

June 6, 2008
PLANS APPROVAL DATE

REGISTERED PROFESSIONAL ENGINEER
Randell D. Hiatt
No. C50200
Exp. 6-30-09
CIVIL
STATE OF CALIFORNIA

The State of California or its officers or agents shall not be responsible for the accuracy or completeness of electronic copies of this plan sheet.

To accompany plans dated 07-09-12

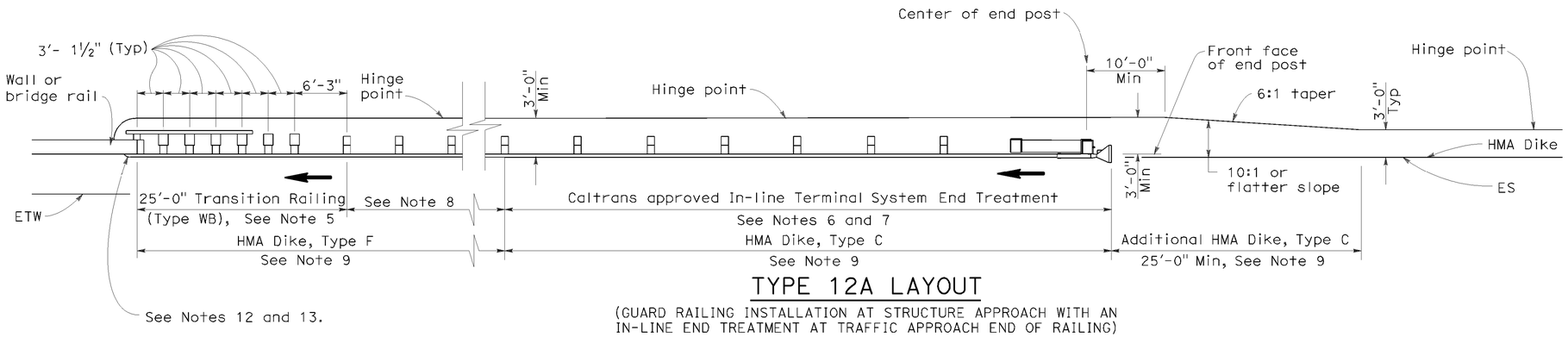

TYPE 12A LAYOUT

(GUARD RAILING INSTALLATION AT STRUCTURE APPROACH WITH AN IN-LINE END TREATMENT AT TRAFFIC APPROACH END OF RAILING)
See Notes 10

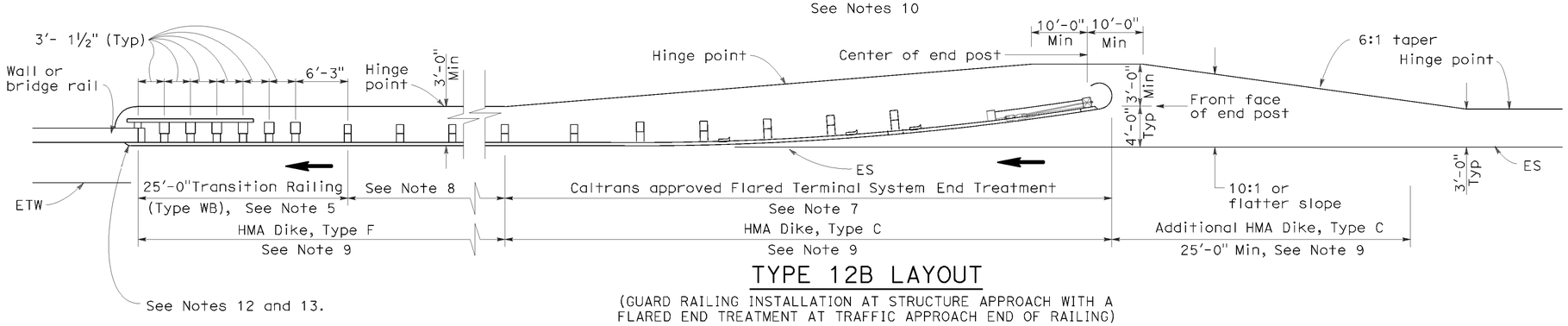

TYPE 12B LAYOUT

(GUARD RAILING INSTALLATION AT STRUCTURE APPROACH WITH A FLARED END TREATMENT AT TRAFFIC APPROACH END OF RAILING)
See Notes 10

NOTES:

1. Line post, blocks and hardware to be used are shown on Standard Plans A77A1, A77A2, A77B1, A77C1 and A77C2.
2. Guard rail post spacing to be 6'-3" center to center, except as otherwise noted.
3. Except as noted, line posts are 6" x 8" x 6'-0" wood with 6" x 8" x 1'-2" wood blocks. W6 x 9 steel posts, 6'-0" in length, with 6" x 8" x 1'-2" notched wood blocks or plastic blocks may be used for 6" x 8" x 6'-0" wood posts with 6" x 8" x 1'-2" wood blocks where applicable and when specified.
4. Direction of adjacent traffic indicated by ➡.
5. For Transition Railing (Type WB) details for Types 12A and 12B Layouts, see Standard Plan A77J4.
6. In-line Terminal System End Treatments are used where site conditions will not accommodate a flared end treatment.
7. The type of terminal system end treatment to be used will be shown on the Project Plans.
8. Dependent on site conditions (embankment height, side slopes, or other fixed objects), it may be advisable to construct additional guard railing (a length equal to multiples of 12'-6" with 6'-3" post spacing) between the transition railing and end treatment.
9. Where placement of dike is required with guard railing installations, see Revised Standard Plan RSP A77C4 for dike positioning details.
10. Type 12A or Type 12B Layouts are typically used:
    a. To the right of approaching traffic, at the end of a structure, on two-lane conventional highway where the roadbed width across the structure is less than 40 feet.
    b. To the left of approaching traffic, at the end of a structure, on two-lane conventional highway where the roadbed width across the structure is less than 40 feet.
    c. To the right of approaching traffic at the end of each structure on multilane freeways or expressways with separate adjacent or parallel bridges.
    d. To the right of approaching traffic at the end of the structure on multilane freeways or expressways with decked median on the bridge.
11. See Revised Standard Plan RSP A77F3 for typical layout used left of approaching traffic at the ends of each structure on multilane freeways or expressways with separate adjacent or parallel bridges.
12. For additional details of typical connections to bridge rail, see Connection Detail AA on Revised Standard Plans RSP A77J1 and RSP A77J2 and Connection Detail FF on Standard Plans A77K1 and A77K2.
13. For additional details of a typical connection to walls or abutments, see Standard Plan A77J3.

STATE OF CALIFORNIA
DEPARTMENT OF TRANSPORTATION

METAL BEAM GUARD RAILING TYPICAL LAYOUTS FOR STRUCTURE APPROACH

NO SCALE

RSP A77F1 DATED JUNE 6, 2008 SUPERSEDES STANDARD PLAN A77F1
DATED MAY 1, 2006 - PAGE 54 OF THE STANDARD PLANS BOOK DATED MAY 2006.

REVISED STANDARD PLAN RSP A77F1

2006 REVISED STANDARD PLAN RSP A77F1

P:\proj2\02\2E291_plans\pse\22e291va002.dgn

12-10-07

DIST	COUNTY	ROUTE	POST MILES TOTAL PROJECT	SHEET NO.	TOTAL SHEETS
02	Sis	96	R0.0/77.3	25	58

Randell D. Hiatt
REGISTERED CIVIL ENGINEER

June 6, 2008
PLANS APPROVAL DATE

REGISTERED PROFESSIONAL ENGINEER
Randell D. Hiatt
No. C50200
Exp. 6-30-09
CIVIL
STATE OF CALIFORNIA

The State of California or its officers or agents shall not be responsible for the accuracy or completeness of electronic copies of this plan sheet.

To accompany plans dated 07-09-12

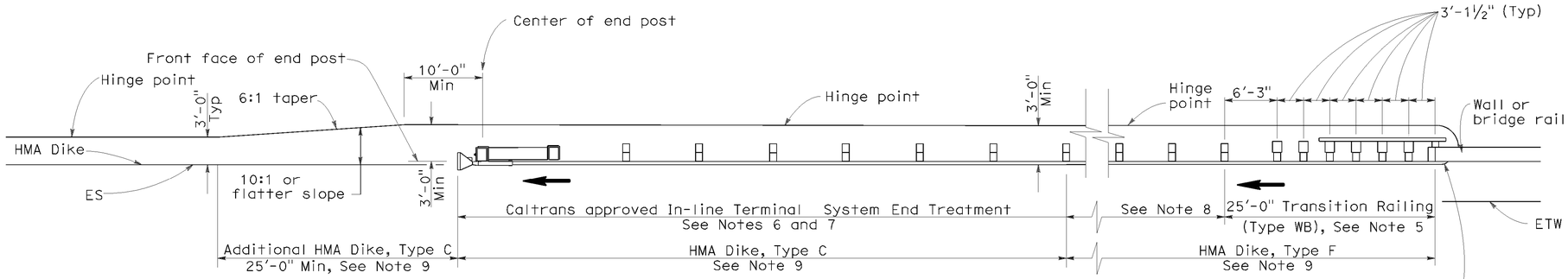

TYPE 12AA LAYOUT

(GUARD RAILING INSTALLATION AT STRUCTURE DEPARTURE WITH AN IN-LINE END TREATMENT AT TRAILING END OF RAILING)
See Notes 9 and 10

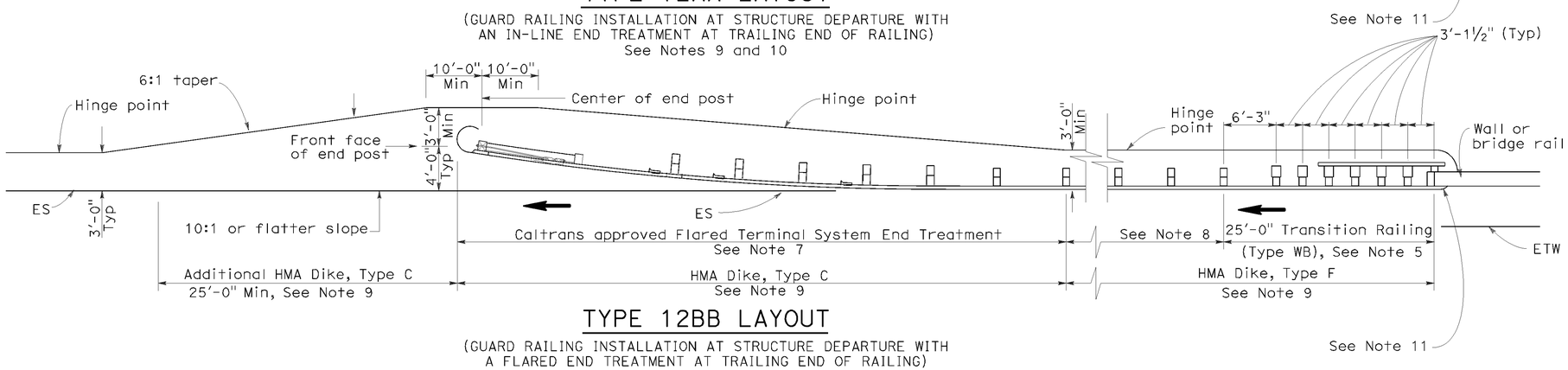

TYPE 12BB LAYOUT

(GUARD RAILING INSTALLATION AT STRUCTURE DEPARTURE WITH A FLARED END TREATMENT AT TRAILING END OF RAILING)
See Notes 9 and 10

NOTES:

1. Line post, blocks and hardware to be used are shown on Standard Plans A77A1, A77A2, A77B1, A77C1 and A77C2.
2. Guard rail post spacing to be 6'-3" center to center, except as otherwise noted.
3. Except as noted, line posts are 6" x 8" x 6'-0" wood with 6" x 8" x 1'-2" wood blocks. W6 x 9 steel posts, 6'-0" in length, with 6" x 8" x 1-2" notched wood blocks or notched recycled plastic blocks may be used for 6" x 8" x 6'-0" wood posts with 6" x 8" x 1'-2" wood blocks where applicable and when specified.
4. Direction of adjacent traffic indicated by ⟶.
5. For Transition Railing (Type WB) details for Types 12AA and 12BB Layouts, see Standard Plan A77J4.
6. In-line Terminal System Treatments are used where site conditions will not accommodate a flared end treatment.
7. The type of terminal system to be used will be shown on the Project Plans.
8. Dependent on site conditions (embankment height, side slopes, other fixed objects), it may be advisable to construct additional guard railing (a length equal to multiples of 12'-6" with 6'-3" post spacing) between the transition railing and end treatments.
9. Where placement of dike is required with guard railing installations, see Revised Standard Plan RSP A77C4 for dike positioning details.
10. Type 12AA or Type 12BB Layouts are typically used to the right of traffic departing a structure on two-way conventional highways where the roadbed width across the structure is less than 40 feet.
11. For additional details of typical connections to bridge rail, see Connection Detail CC on Revised Standard Plan RSP A77J2 and Connection Detail HH on Standard Plans A77k2.

STATE OF CALIFORNIA
DEPARTMENT OF TRANSPORTATION

METAL BEAM GUARD RAILING TYPICAL LAYOUTS FOR STRUCTURE DEPARTURE

NO SCALE

RSP A77F4 DATED JUNE 6, 2008 SUPERSEDES STANDARD PLAN A77F4
DATED MAY 1, 2006 - PAGE 57 OF THE STANDARD PLANS BOOK DATED MAY 2006.

REVISED STANDARD PLAN RSP A77F4

2006 REVISED STANDARD PLAN RSP A77F4

P:\proj2\02\2E291_plans\pse\22e291va003.dgn

12-10-07

DIST	COUNTY	ROUTE	POST MILES TOTAL PROJECT	SHEET NO.	TOTAL SHEETS
02	Sis	96	R0.0/77.3	26	58

Randell D. Hiatt
REGISTERED CIVIL ENGINEER

June 6, 2008
PLANS APPROVAL DATE

REGISTERED PROFESSIONAL ENGINEER Randell D. Hiatt No. C50200 Exp. 6-30-09 CIVIL STATE OF CALIFORNIA

The State of California or its officers or agents shall not be responsible for the accuracy or completeness of electronic copies of this plan sheet.

To accompany plans dated 07-09-12

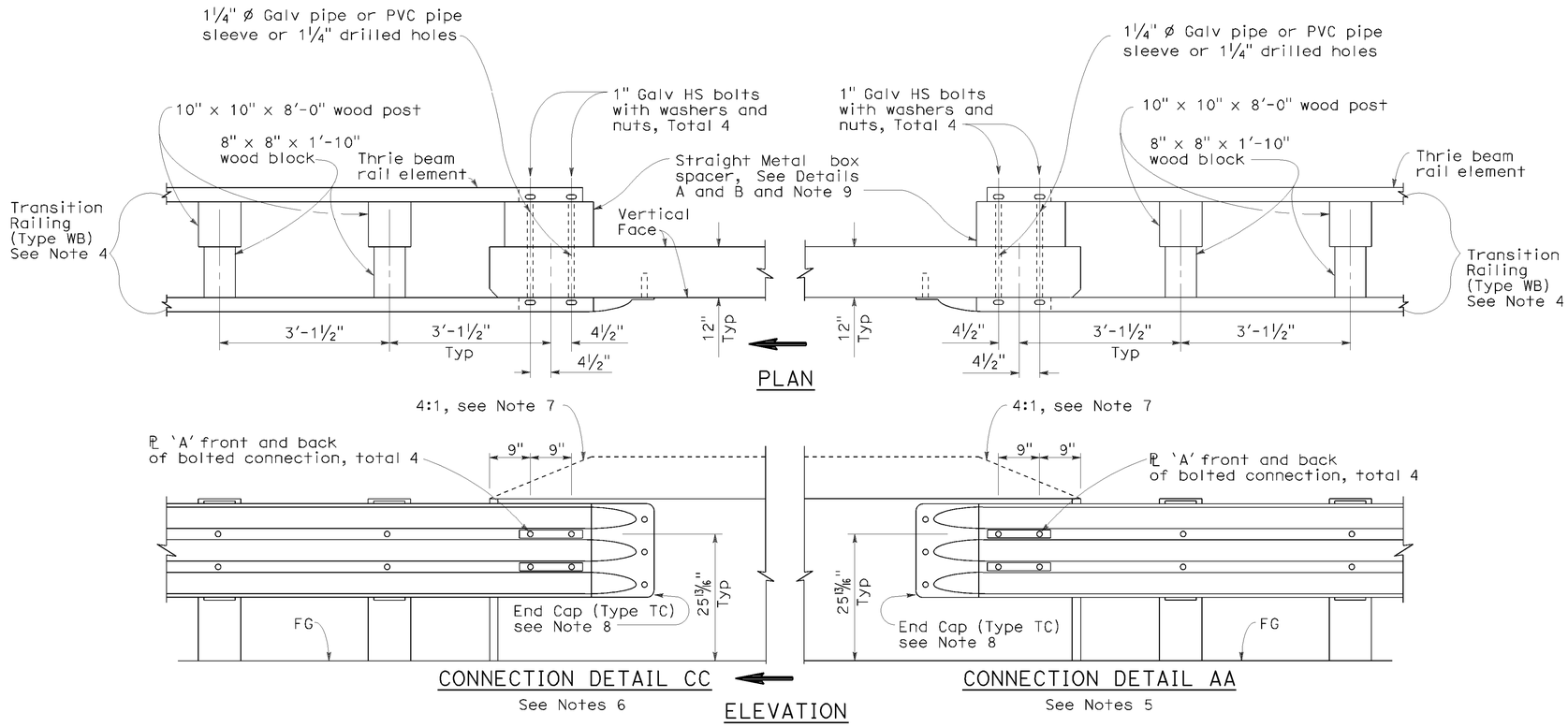

GUARD RAILING CONNECTION TO BRIDGE RAILING WITHOUT SIDEWALK

NOTES:

1. See Revised Standard Plan RSP A77J1 for additional connection details to bridges without sidewalks.
2. Additional details of posts, blocks and hardware are shown on Standard Plan A77B1, A77C1 and A77C2.
3. Direction of adjacent traffic indicated by ⟹.
4. For additional details of Transition Railing (Type WB), see Standard Plan A77J4. Transition Railing (Type WB) transitions the 12 gage w-beam standard railing section of guard railing to a heavier gage nested thrie beam railing section which is connected to the concrete bridge railing.
5. For typical use of Connection Detail AA, see Layout Types 12A and 12B on Revised Standard Plan RSP A77F1, Layout Types 12C and 12D on Standard Plan A77F2, and Layout Type 12E on Revised Standard Plan RSP A77F3.
6. For typical use of Connection Detail CC, see Layout Types 12AA and 12BB on Standard Plan A77F4 and Layout Type 12CC on Standard Plan A77F5.
7. Where the height of the bridge railing exceeds the height of the thrie beam railing by more than 1" at Connection Detail AA and connection Detail CC, taper the top of the end of the bridge railing at 4:1 to match the top elevation of the thrie beam railing.
8. For details of End Cap (Type TC), see Standard Plans A77J4.
9. See Standard Plans A77J4 for additional details regarding depth dimension for straight metal box spacer.

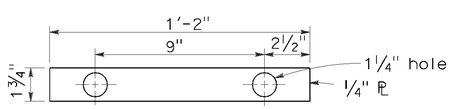

PLATE 'A'

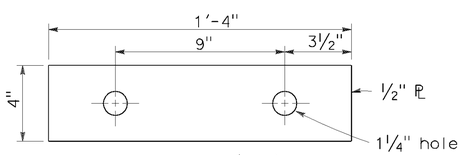

PLATE 'B'
(For backside of connection BB)

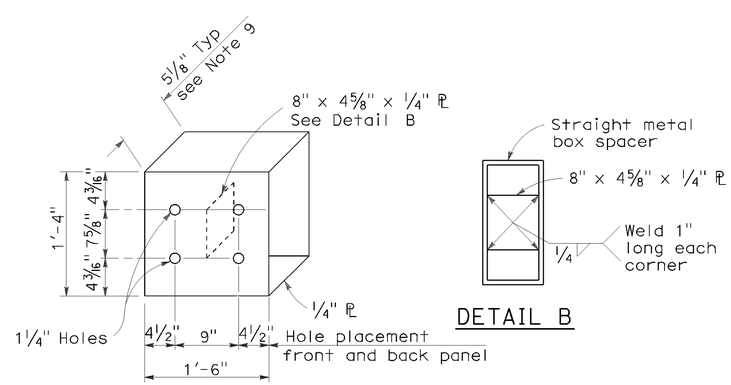

DETAIL A

DETAIL B

STRAIGHT METAL BOX SPACER

STATE OF CALIFORNIA
DEPARTMENT OF TRANSPORTATION

METAL BEAM GUARD RAILING CONNECTIONS TO BRIDGE RAILINGS WITHOUT SIDEWALKS DETAILS No.2

NO SCALE

RSP A77J2 DATED JUNE 6, 2008 SUPERSEDES STANDARD PLAN A77J2 DATED MAY 1, 2006 - PAGE 73 OF THE STANDARD PLANS BOOK DATED MAY 2006.

REVISED STANDARD PLAN RSP A77J2

2006 REVISED STANDARD PLAN RSP A77J2

P:\proj2\02\2E291_plans\pse\22e291va004.dgn

12-10-07

DIST	COUNTY	ROUTE	POST MILES TOTAL PROJECT	SHEET NO.	TOTAL SHEETS
02	Sis	96	R0.0/77.3	27	58

Randell D. Hiatt
REGISTERED CIVIL ENGINEER

June 5, 2009
PLANS APPROVAL DATE

REGISTERED PROFESSIONAL ENGINEER Randell D. Hiatt No. C50200 Exp. 6-30-09 CIVIL STATE OF CALIFORNIA

The State of California or its officers or agents shall not be responsible for the accuracy or completeness of electronic copies of this plan sheet.

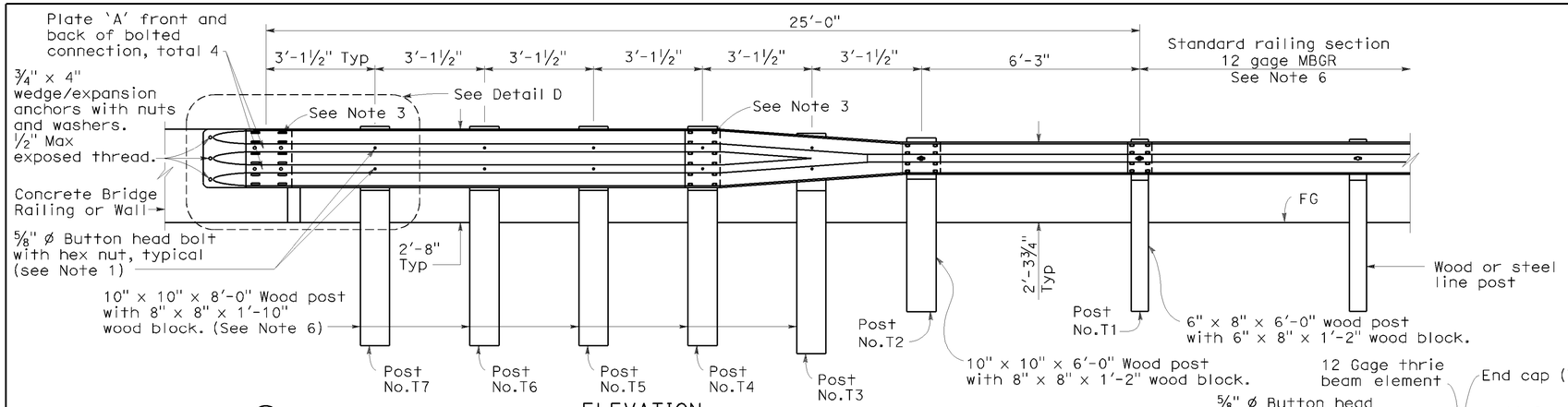

ELEVATION

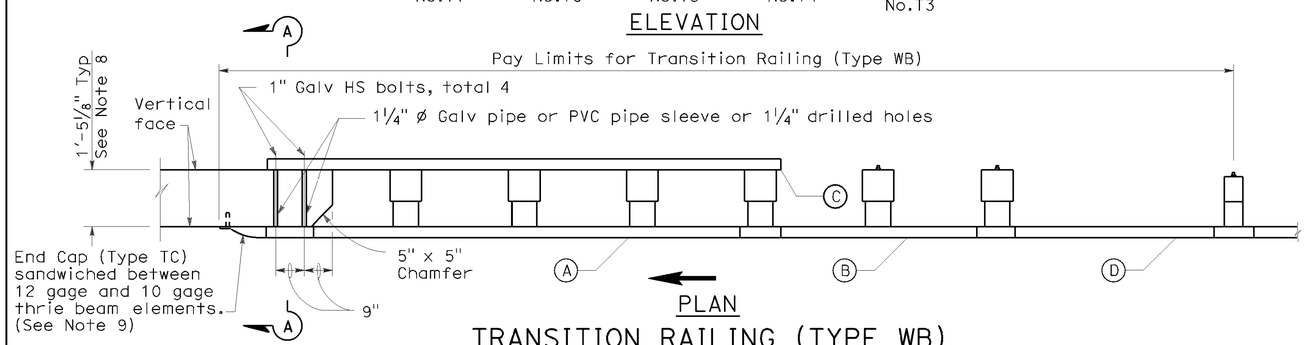

PLAN

TRANSITION RAILING (TYPE WB)

(No Blockout Attachment)

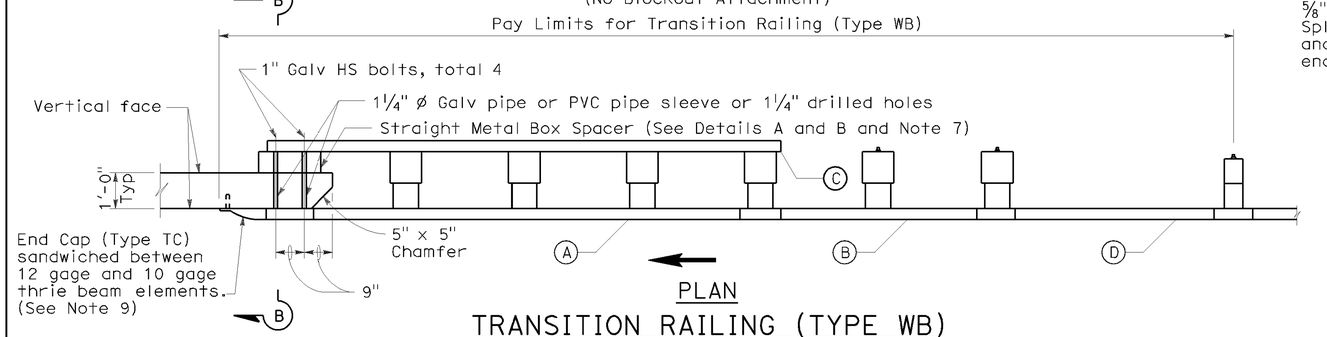

PLAN

TRANSITION RAILING (TYPE WB)

(Blockout Attachment)

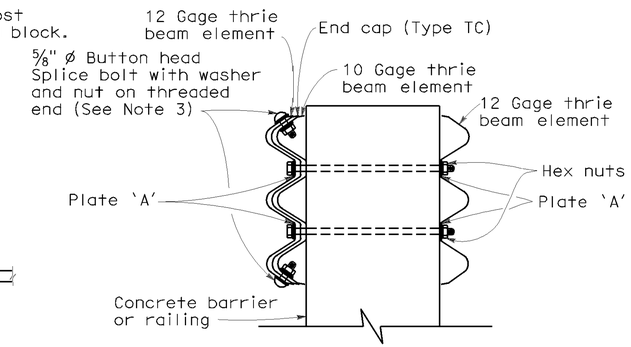

SECTION A-A

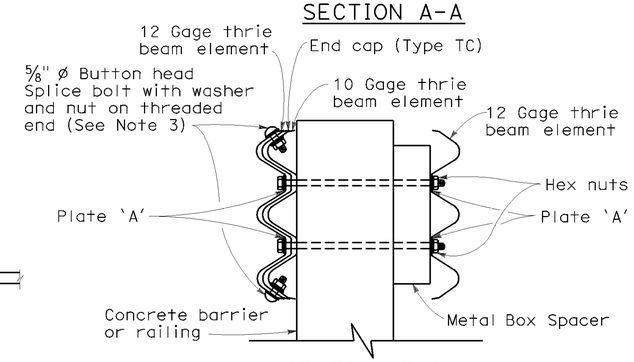

SECTION B-B

NOTES:

To accompany plans dated 07-09-12

1. Use 5/8 " ø Button head bolts and hex nuts for connections to posts. No washer on rail face for bolted connections to post.
2. The nested rail elements, end cap, and 'W' beam to thrie beam element may be spliced together prior to bolting the elements to the wood post and concrete barrier or railing.
3. Exterior splice bolt holes for rail element splices at Post No.T4 and the connection to the concrete barrier or railing shall be the standard 29/32 " x 1 1/8 " slot size. Interior splice bolt holes at these locations may be increased up to 1 1/4 " ø. Only the top 2 and the bottom 2 splice bolts with washers and nuts are required for rail splices at Post No.T4 and the connection to the concrete barrier or railing.
4. Direction of adjacent traffic indicated by ⟵.
5. The top elevation of Post Nos.T2 through T7 shall not project more than 1" above the top elevation of the rail element.
6. Typically, the railing connected to Transition Railing (Type WB) will be either standard railing section of metal beam guard railing or an approved Caltrans end treatment attached to Post No.T1.
7. The depth of the metal box spacer varies from the 5 1/8 " to 1 1/2 " and is dependent on the width of the concrete railing or wall. The combined dimension for the depth of the metal box spacer plus the width of railing or wall is typically 17 1/8 ". Where the space between the backside of the concrete railing or wall and the rear thrie beam element is less than 1 1/2 ", metal plates similar to Plate 'A' are to be used as spacers.
8. Where the width of the concrete railing or wall is greater than 17 1/8 ", wood blocks are to be used to fill the space created between the backside of Posts No.4 through No.7 and the rear thrie beam element. These wood blocks shall be 8" in width and 1'-2" in length. The dimension between the front thrie beam element and the rear thrie beam element is to match the width of the concrete railing or wall.
9. End cap may be installed over 12 gage and 10 gage thrie beam elements where transition railing is installed on the departure end of bridge railing.

LEGEND

- (A) Nested thrie beam elements (one 12 gage element nested over one 10 gage element).
- (B) One 10 gage "W" beam to thrie beam element.
- (C) One 12 gage thrie beam element.
- (D) One 10 gage "W" beam rail element (7'-3½" length)

10 gage = 0.135" thick

12 gage = 0.108" thick

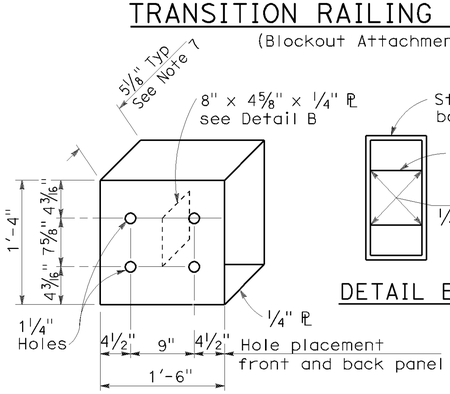

DETAIL A

STRAIGHT METAL BOX SPACER

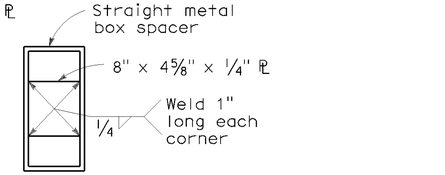

DETAIL B

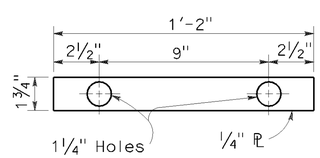

DETAIL C

PLATE 'A'

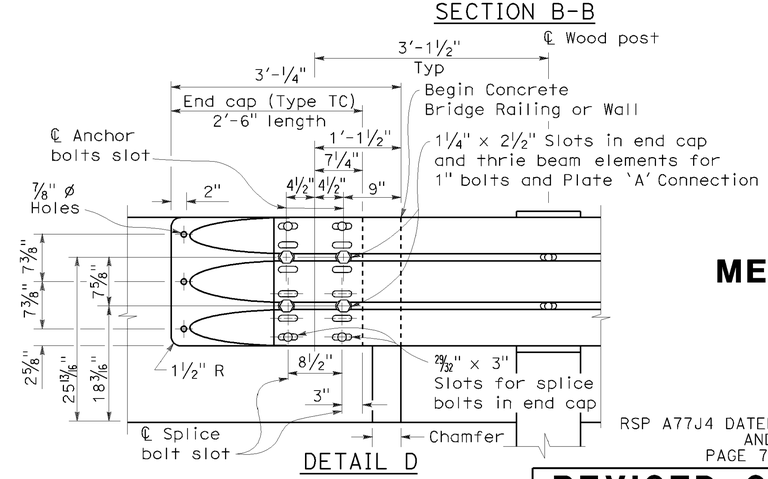

DETAIL D

STATE OF CALIFORNIA
DEPARTMENT OF TRANSPORTATION

METAL BEAM GUARD RAILING TRANSITION RAILING (TYPE WB)

NO SCALE

RSP A77J4 DATED JUNE 5, 2009 SUPERSEDES RSP A77J4 DATED JUNE 6, 2008 AND STANDARD PLAN A77J4 DATED MAY 1, 2006 - PAGE 75 OF THE STANDARD PLANS BOOK DATED MAY 2006.

REVISED STANDARD PLAN RSP A77J4

2006 REVISED STANDARD PLAN RSP A77J4

P:\proj2\02\2E291_plans\pse\22e291va005.dgn

5-14-09

DIST	COUNTY	ROUTE	POST MILES TOTAL PROJECT	SHEET NO.	TOTAL SHEETS
02	Sis	96	R0.0/77.3	28	58

Randell D. Hiatt
REGISTERED CIVIL ENGINEER

June 6, 2008
PLANS APPROVAL DATE

REGISTERED PROFESSIONAL ENGINEER
Randell D. Hiatt
No. C50200
Exp. 6-30-09
CIVIL
STATE OF CALIFORNIA

The State of California or its officers or agents shall not be responsible for the accuracy or completeness of electronic copies of this plan sheet.

To accompany plans dated 07-09-12

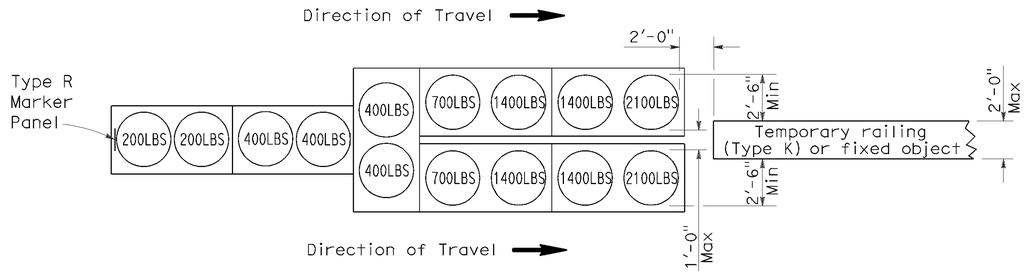

ARRAY 'TU14'

Approach speed 45 mph or more

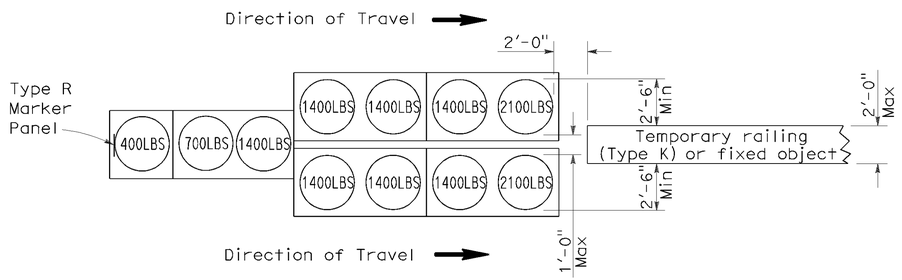

ARRAY 'TU11'

Approach speed less than 45 mph

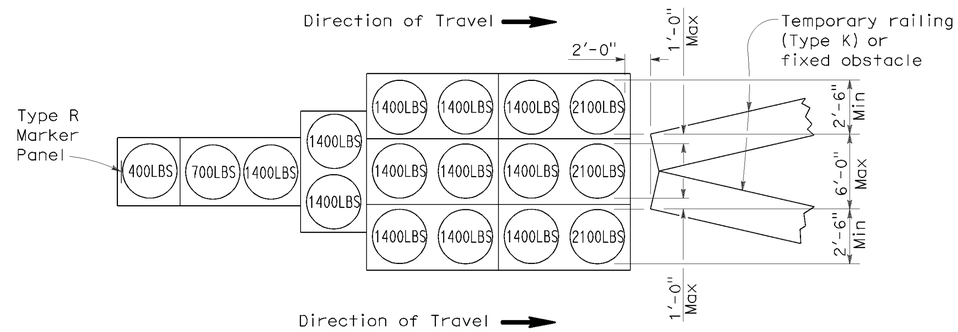

ARRAY 'TU17'

Approach speed less than 45 mph

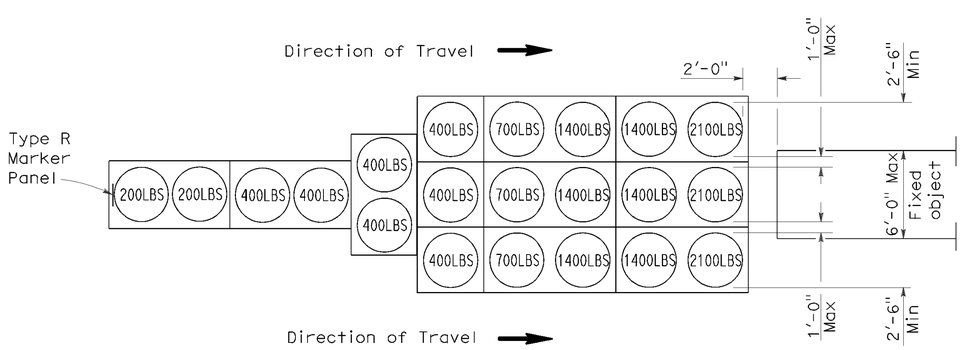

ARRAY 'TU21'

Approach speed 45 mph or more

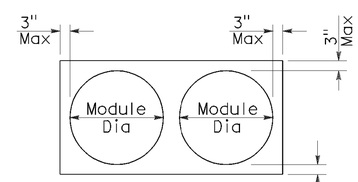

PLAN

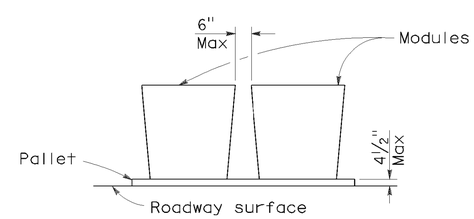

ELEVATION

CRASH CUSHION PALLET DETAIL

See Note 7

NOTES:

1. (XXX) Indicates sand filled module location and weight of sand in pounds for each module. Module spacing is based on the greater diameter of the module.
2. All sand weights are nominal.
3. Temporary crash cushion arrays shall not encroach on the traveled way.
4. Place the top of Type R marker panel 1" below the module lid.
5. Refer to Standard Plan A73B for marker details.
6. Approach speeds indicated conform to NCHRP 350 Report criteria.
7. Use of pallets is optional.

STATE OF CALIFORNIA
DEPARTMENT OF TRANSPORTATION

TEMPORARY CRASH CUSHION, SAND FILLED (UNIDIRECTIONAL)

NO SCALE

RSP T1A DATED JUNE 6, 2008 SUPERSEDES STANDARD PLAN T1A
DATED MAY 1, 2006 - PAGE 211 OF THE STANDARD PLANS BOOK DATED MAY 2006.

REVISED STANDARD PLAN RSP T1A

2006 REVISED STANDARD PLAN RSP T1A

P:\proj2\02\2E291_plans\pse\22e291va006.dgn

5-15-08

DIST	COUNTY	ROUTE	POST MILES TOTAL PROJECT	SHEET NO.	TOTAL SHEETS
02	Sis	96	R0.0/77.3	29	58

Randell D. Hiatt
REGISTERED CIVIL ENGINEER

June 6, 2008
PLANS APPROVAL DATE

REGISTERED PROFESSIONAL ENGINEER
Randell D. Hiatt
No. C50200
Exp. 6-30-09
CIVIL
STATE OF CALIFORNIA

The State of California or its officers or agents shall not be responsible for the accuracy or completeness of electronic copies of this plan sheet.

To accompany plans dated 07-09-12

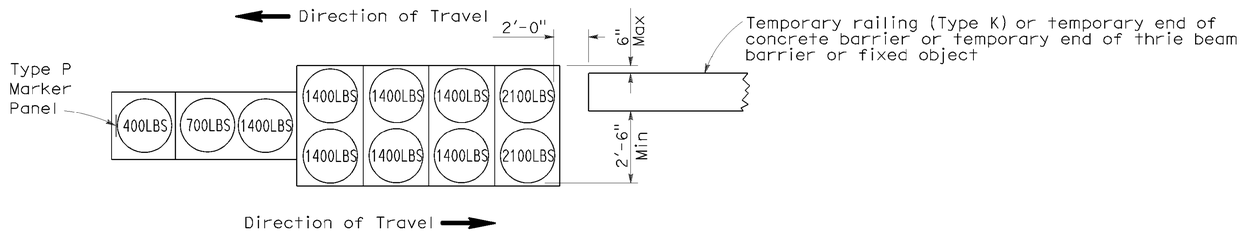

ARRAY 'TB11'

Approach speed less than 45 mph

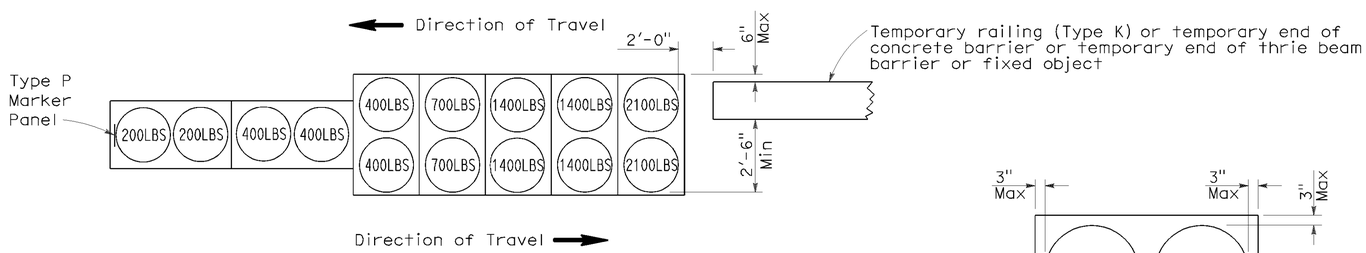

ARRAY 'TB14'

Approach speed 45 mph or more

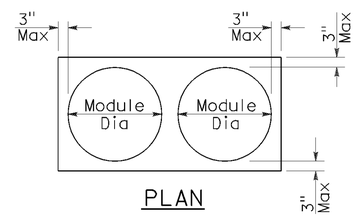

PLAN

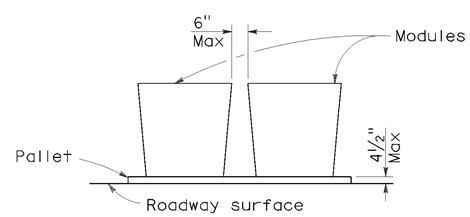

ELEVATION

CRASH CUSHION PALLET DETAIL

See Note 7

NOTES:

1. (XXX) Indicates sand filled module location and weight of sand in pounds for each module. Module spacing is based on the greater diameter of the module.
2. All sand weights are nominal.
3. Temporary crash cushion arrays shall not encroach on the traveled way.
4. Place the Type P marker panel so that the bottom of the panel rests upon the pallet.
5. Refer to Standard Plan A73B for marker details.
6. Approach speeds indicated conform to NCHRP 350 Report criteria.
7. Use of pallets is optional.

STATE OF CALIFORNIA
DEPARTMENT OF TRANSPORTATION

TEMPORARY CRASH CUSHION, SAND FILLED (BIDIRECTIONAL)

NO SCALE

RSP T1B DATED JUNE 6, 2008 SUPERSEDES STANDARD PLAN T1B
DATED MAY 1, 2006 - PAGE 212 OF THE STANDARD PLANS BOOK DATED MAY 2006.

REVISED STANDARD PLAN RSP T1B

2006 REVISED STANDARD PLAN RSP T1B

P:\proj2\02\2E291_plans\pse\22e291va007.dgn

5-15-08

DIST	COUNTY	ROUTE	POST MILES TOTAL PROJECT	SHEET NO.	TOTAL SHEETS
02	Sis	96	R0.0/77.3	30	58

Randell D. Hiatt
REGISTERED CIVIL ENGINEER

June 6, 2008
PLANS APPROVAL DATE

REGISTERED PROFESSIONAL ENGINEER
Randell D. Hiatt
No. C50200
Exp. 6-30-09
CIVIL
STATE OF CALIFORNIA

The State of California or its officers or agents shall not be responsible for the accuracy or completeness of electronic copies of this plan sheet.

To accompany plans dated 07-09-12

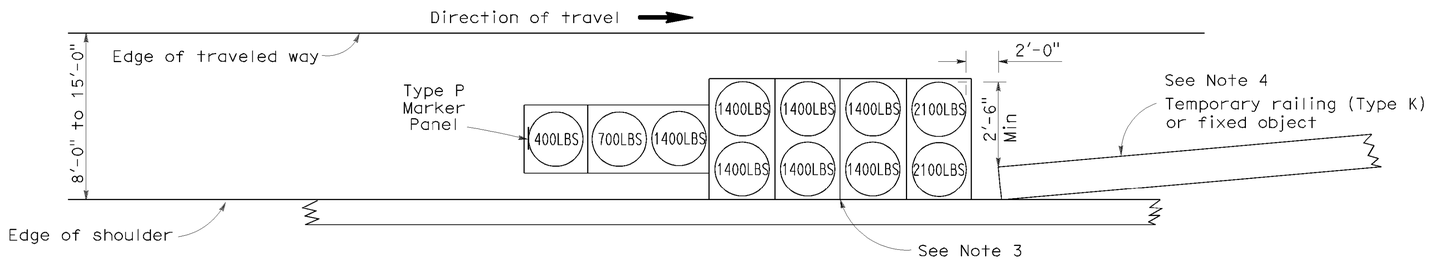

ARRAY 'TS11'

Approach speed less than 45 mph
See Note 9

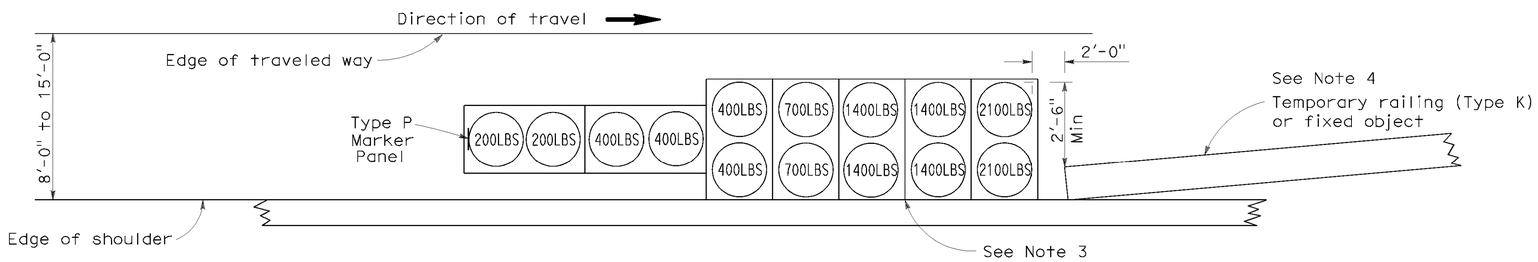

ARRAY 'TS14'

Approach speed 45 mph or more
See Note 9

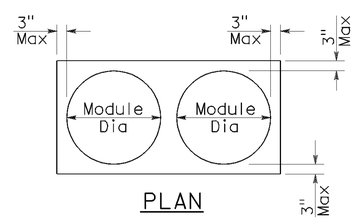

PLAN

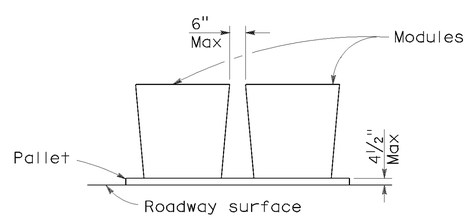

ELEVATION

CRASH CUSHION PALLET DETAIL

See Note 11

NOTES:

1. (XXX) Indicates sand filled module location and weight of sand in pounds for each module. Module spacing is based on the greater diameter of the module.
2. All sand weights are nominal.
3. The temporary crash cushion arrays shown on this plan shall be used only in locations where there will be traffic on one side of the temporary crash cushion array.
4. If the fixed object or approach end of the temporary railing is less than 15'-0" from the edge of traveled way, a temporary crash cushion is required in a construction or work zone.
5. Temporary crash cushion arrays shall not encroach on the traveled way.
6. Arrays for median shoulders shall conform to details shown on this plan for outside shoulders.
7. Place the Type P marker panel so that the bottom of the panel rests upon the pallet and faces traffic.
8. Refer to Standard Plan A73B for marker details.
9. For shoulder widths less than 8'-0", appropriate approved crash cushion protection, other than sand filled modules, shall be provided at fixed objects and at approach ends of temporary railing. The specific type of crash cushion shall be as shown on the project plans or as specified in the Special Provisions, or if not shown on the project plans or specified in the Special Provisions, shall be as approved by the Engineer.
10. Approach speeds indicated conform to NCHRP 350 Report criteria.
11. Use of pallets is optional.

STATE OF CALIFORNIA
DEPARTMENT OF TRANSPORTATION

TEMPORARY CRASH CUSHION, SAND FILLED (SHOULDER INSTALLATIONS)

NO SCALE

RSP T2 DATED JUNE 6, 2008 SUPERSEDES STANDARD PLAN T2
DATED MAY 1, 2006 - PAGE 213 OF THE STANDARD PLANS BOOK DATED MAY 2006.

REVISED STANDARD PLAN RSP T2

2006 REVISED STANDARD PLAN RSP T2

P:\proj2\02\2E291_plans\pse\22e291va008.dgn

5-15-08

DIST	COUNTY	ROUTE	POST MILES TOTAL PROJECT	SHEET NO.	TOTAL SHEETS
02	Sis	96	R0.0/77.3	31	58

Robert B Schott
LICENSED LANDSCAPE ARCHITECT

April 3, 2009
PLANS APPROVAL DATE

The State of California or its officers or agents shall not be responsible for the accuracy or completeness of electronic copies of this plan sheet.

LICENSED LANDSCAPE ARCHITECT — Robert B. Schott 3655 — Signature — 11-30-10 Renewal Date — 2-25-09 Date — STATE OF CALIFORNIA

To accompany plans dated 07-09-12

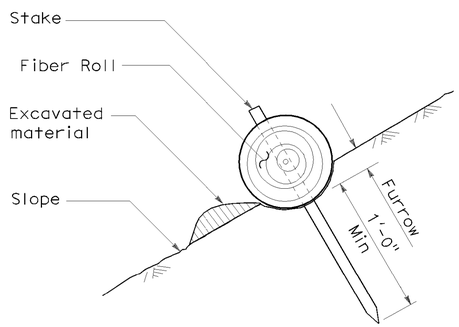

SECTION

TEMPORARY FIBER ROLL (TYPE 1)

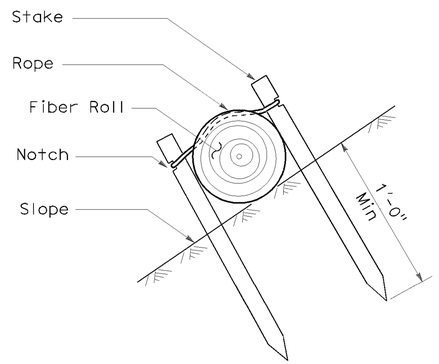

SECTION

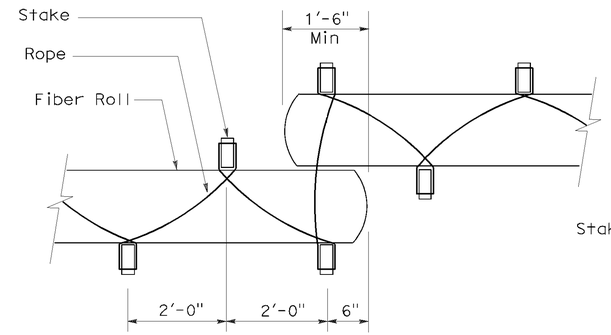

PLAN

TEMPORARY FIBER ROLL (TYPE 2)

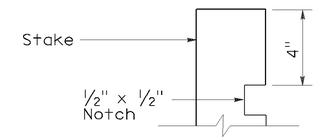

ELEVATION

STAKE NOTCH DETAIL

NOTES:

1. Temporary fiber roll spacing varies depending upon slope inclination.
2. Installations shown in the perspectives are for slope inclination of 10:1 and steeper.

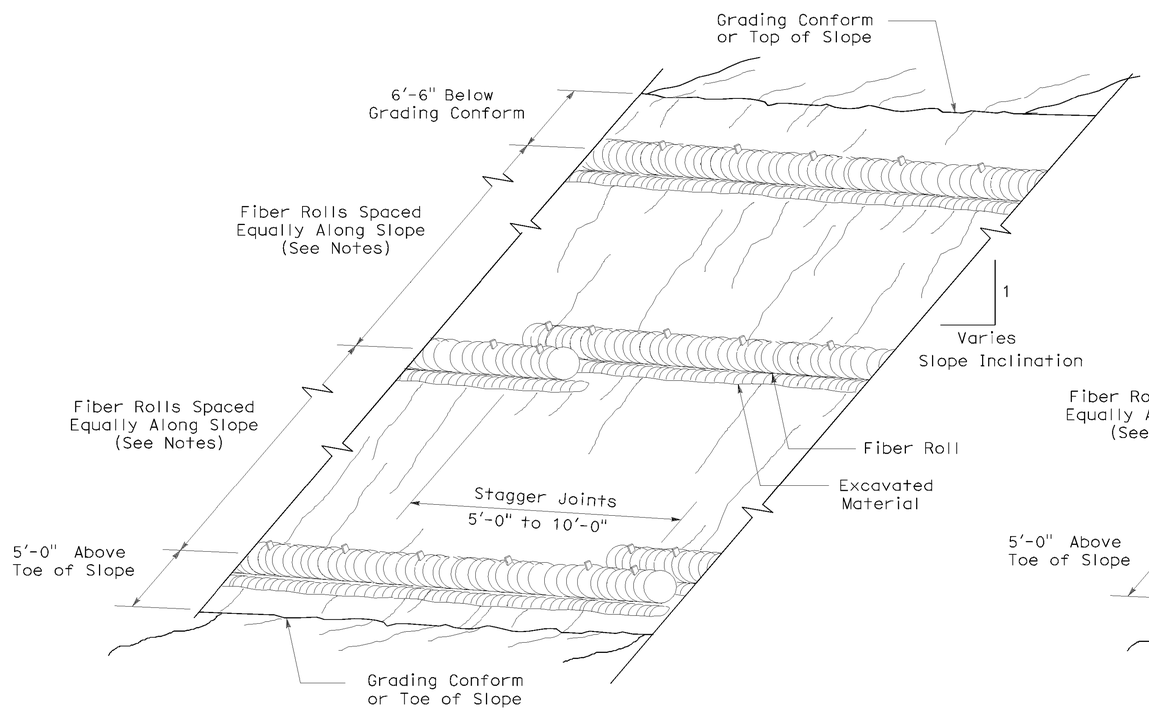

PERSPECTIVE

TEMPORARY FIBER ROLL (TYPE 1)

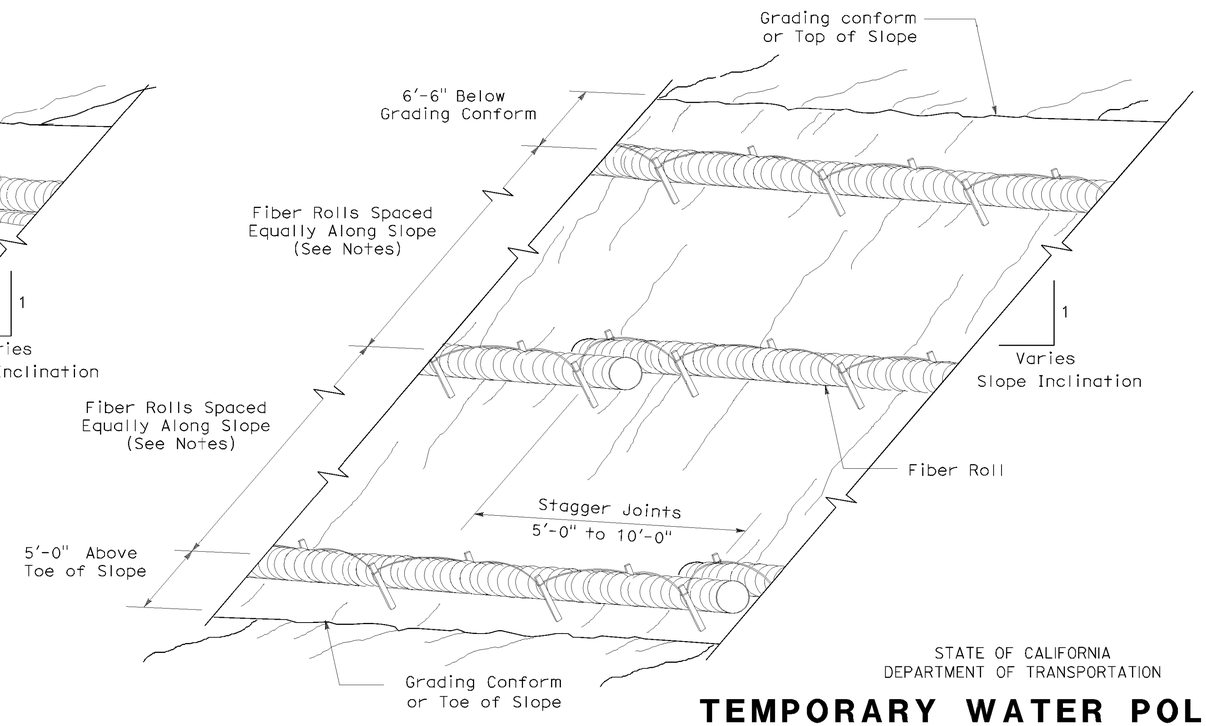

PERSPECTIVE

TEMPORARY FIBER ROLL (TYPE 2)

STATE OF CALIFORNIA
DEPARTMENT OF TRANSPORTATION

TEMPORARY WATER POLLUTION CONTROL DETAILS (TEMPORARY FIBER ROLL)

NO SCALE

RSP T56 DATED APRIL 3, 2009 SUPERSEDES STANDARD PLAN T56
DATED MAY 1, 2006 - PAGE 232 OF THE STANDARD PLANS BOOK DATED MAY 2006.

REVISED STANDARD PLAN RSP T56

2006 REVISED STANDARD PLAN RSP T56

P:\proj2\02\2E291_plans\pse\22e291va009.dgn

2-23-09

DIST	COUNTY	ROUTE	POST MILES TOTAL PROJECT	SHEET NO.	TOTAL SHEETS
02	Sis	96	R0.0/77.3	32	58

LICENSED LANDSCAPE ARCHITECT

April 3, 2009
PLANS APPROVAL DATE

LICENSED LANDSCAPE ARCHITECT Robert B. Schott 3855 Signature 11-30-10 Renewal Date 2-25-09 Date STATE OF CALIFORNIA

The State of California or its officers or agents shall not be responsible for the accuracy or completeness of electronic copies of this plan sheet.

To accompany plans dated 07-09-12

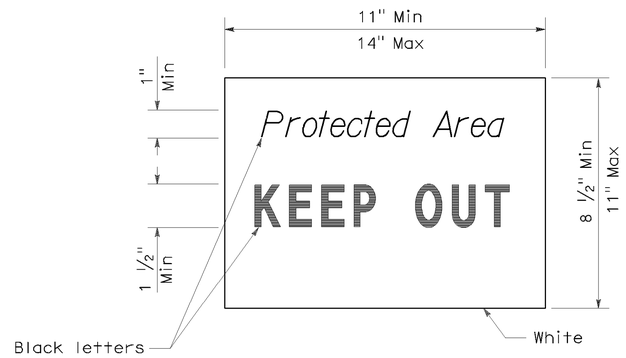

SIGN DETAIL

NOTE:

1. Temporary silt fence and temporary straw bale barrier shown for reference purposes only.

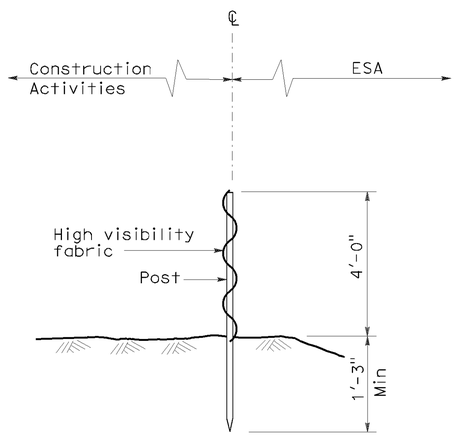

SECTION
TEMPORARY FENCE (TYPE ESA)

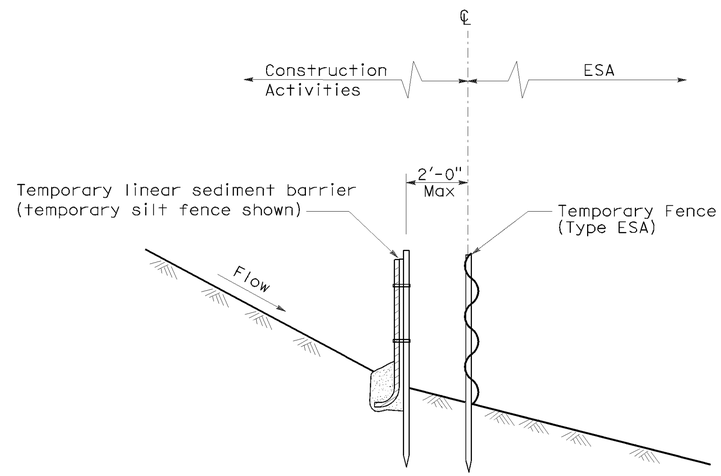

SECTION
PLACEMENT DETAIL
FOR TEMPORARY LINEAR SEDIMENT BARRIER
USED WITH TEMPORARY
FENCE (TYPE ESA)
(See Note 1)

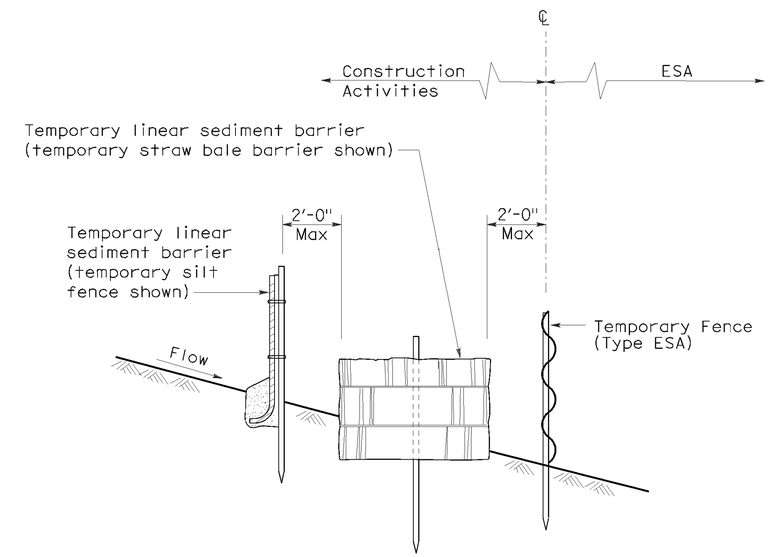

SECTION
PLACEMENT DETAIL
FOR TEMPORARY SILT FENCE
AND TEMPORARY STRAW BALE BARRIER
USED WITH TEMPORARY FENCE (TYPE ESA)
(See Note 1)

STATE OF CALIFORNIA
DEPARTMENT OF TRANSPORTATION

TEMPORARY WATER POLLUTION CONTROL DETAILS [TEMPORARY FENCE (TYPE ESA)]

NO SCALE

NSP T65 DATED APRIL 3, 2009 SUPPLEMENTS
THE STANDARD PLANS BOOK DATED MAY 2006.

NEW STANDARD PLAN NSP T65

2006 NEW STANDARD PLAN NSP T65

P:\proj2\02\2E291_plans\pse\22e291va010.dgn

1-7-09

DIST	COUNTY	ROUTE	POST MILES TOTAL PROJECT	SHEET NO.	TOTAL SHEETS
02	Sis	96	R0.0/77.3	33	58

REGISTERED CIVIL ENGINEER

October 5, 2007
PLANS APPROVAL DATE

REGISTERED PROFESSIONAL ENGINEER Efthymios Delis No. C51434 Exp. 6-30-08 CIVIL STATE OF CALIFORNIA

The State of California or its officers or agents shall not be responsible for the accuracy or completeness of electronic copies of this plan sheet.

To accompany plans dated 07-09-12

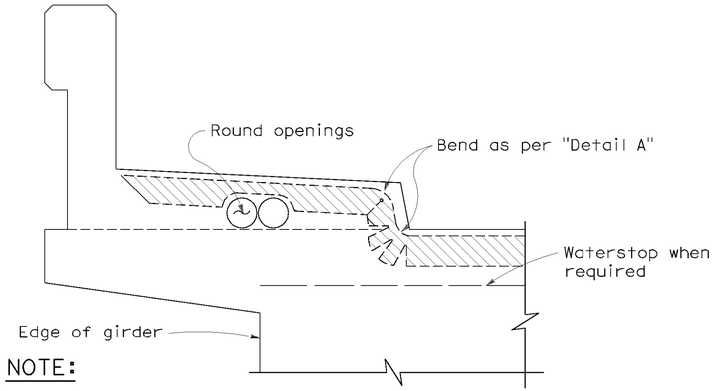

NOTE:

Type "B" seal shown. Type "A" seals to comform to the general path of seal shown, cuts for bending not required. Bend Type "A" seals 3" up into curb or barrier rail on only the low end of the seal.

CONCRETE BARRIER AND SIDEWALK

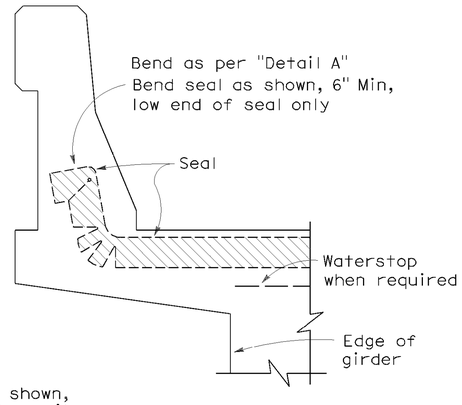

CONCRETE BARRIER

JOINT SEALS DETAILS

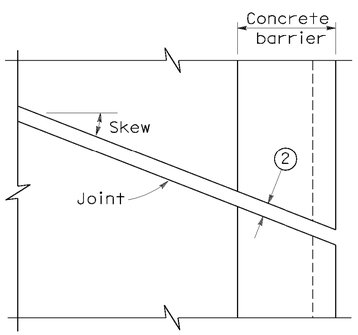

PLAN OF JOINT (SKEW ≤ 20°)

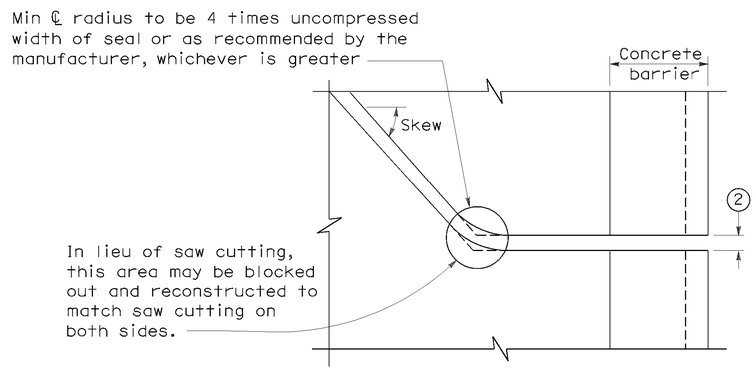

PLAN OF JOINT (SKEW > 20°)

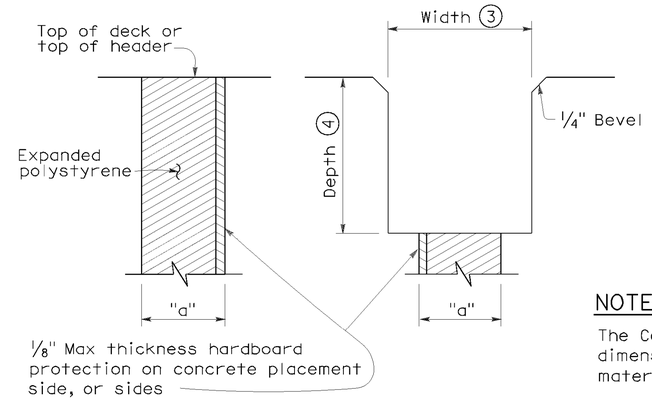

FORMING DETAIL SAWCUT DETAIL

NOTE:

The Contractor shall verify all controlling field dimensions before ordering or fabricatiing any material.

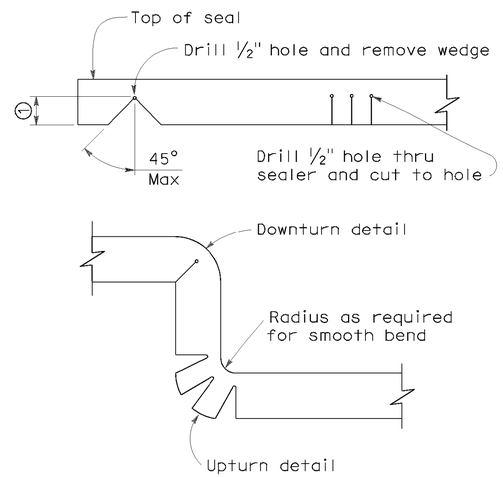

DETAIL A

NOTES:

1. Make smooth cuts from the bottom of seal to 1½" clear of top leaving at least one complete cell between the top of the cut and top of the seal. When necessary cut back of seal to clear conduit and round openings.
2. Opening in barrier to match width of sawn deck joint.
3. Sawcut groove widths shall be as ordered by the Engineer.
4. Depth of sawcut: Type A - Depth to be 2" minimum.
   Type B - Depth to be equal to or greater than the depth of seal measured along the contact surface, when compressed to minimum width position (W_2) plus dimensions shown.
5. MR (movement rating) as shown on other plan sheets.
6. Other depths must be approved by the Engineer.

DIMENSIONS "a" OF JOINT REQUIRED

Movement Rating (MR) 5	Bridge Type	"a" Dimension Deck Concrete Placed		
		Winter	Fall-Spring	Summer
2"	All except CIP/PS	1½"	1¼"	¾"
	CIP/PS	1¼"	1"	½"
1½"	All except CIP/PS	1¼"	1"	½"
	CIP/PS	1"	¾"	½"
1"	All except CIP/PS	1"	¾"	½"
	CIP/PS	¾"	½"	½"
½"	All except CIP/PS	¾"	¾"	½"
	CIP/PS	½"	½"	½"

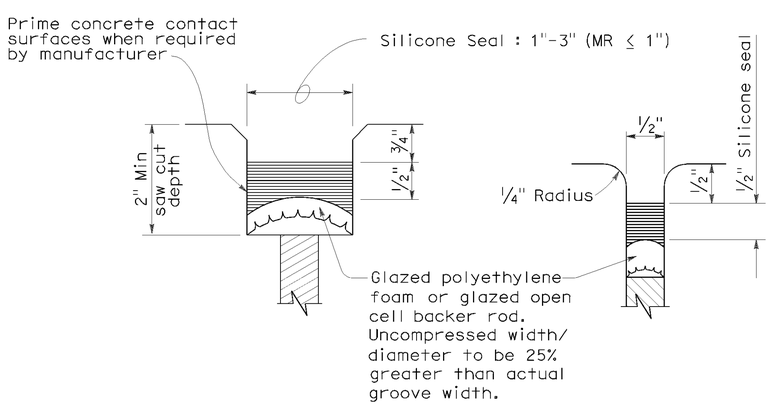

TYPE A SEAL

Movement rating : Silicone = 1" Max

TYPE AL SEAL

Longitudinal joints only

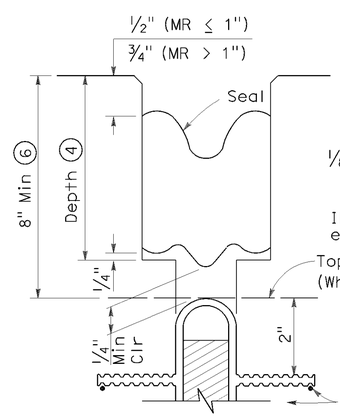

TYPE B JOINT SEAL
IN MINIMUM WIDTH POSITION (W_2)

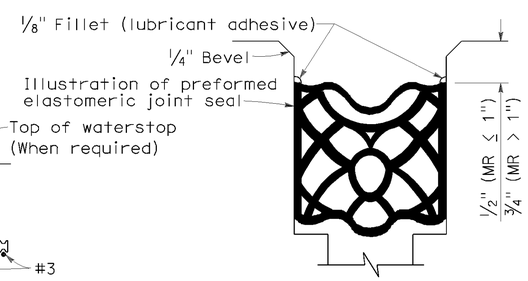

TYPE B SEAL

Movement Rating ≤ 2"

STATE OF CALIFORNIA
DEPARTMENT OF TRANSPORTATION

JOINT SEALS (MAXIMUM MOVEMENT RATING = 2")

NO SCALE

RSP B6-21 DATED OCTOBER 5, 2007 SUPERSEDES STANDARD PLAN B6-21 DATED MAY 1, 2006 - PAGE 258 OF THE STANDARD PLANS BOOK DATED MAY 2006.

REVISED STANDARD PLAN RSP B6-21

2006 REVISED STANDARD PLAN RSP B6-21

P:\proj2\02\2E291_plans\pse\22e291va011.dgn

5-8-07

DIST	COUNTY	ROUTE	POST MILES TOTAL PROJECT	SHEET NO.	TOTAL SHEETS
02	Sis	96	R0.0/77.3	34	58

REGISTERED ELECTRICAL ENGINEER

October 5, 2007
PLANS APPROVAL DATE

REGISTERED PROFESSIONAL ENGINEER Jeffery G. McRae No. E14512 Exp. 6-30-08 ELECTRICAL STATE OF CALIFORNIA

The State of California or its officers or agents shall not be responsible for the accuracy or completeness of electronic copies of this plan sheet.

To accompany plans dated 07-09-12

ELECTROLIERS

STANDARD TYPES
15, 15D
15 STRUCTURE
21, 21D STRUCTURE
30
31
32
35
36-20A

High mast light pole

Double Arm lighting standard

Existing electrolier

Electrolier foundation (Future installation)

NOTES:

1. Luminaires shall be 310 W HPS when installed on Type 21, 21D, 30, 31, 32, 35 and 36-20A Standards, unless otherwise specified. Luminaires shall be 200 W HPS when installed on other type standards or poles, unless otherwise specified.
2. Luminaires shall be the cutoff type, ANSI Type III medium cutoff lighting distribution, unless otherwise specified.
3. Variations noted adjacent to symbol on project plans.

Electrolier (see project notes or project plans)

Luminaire on wood pole

STANDARD NOTES:

- AB — Abandon. If applied to conduit, remove conductors.
- BC — Install pull box in existing conduit run.
- BP — Pedestrian barricade, type as indicated on plan.
- CB — Install conduit into existing pull box.
- CC — Connect new and existing conduit. Remove existing conductors and install conductors as indicated.
- CF — Conduit to remain for future use. Remove conductors. Install pull wire or rope.
- DH — Detector handhole.
- FA — Foundation to be abandoned.
- IS — Install sign on signal mast arm.
- NS — No slip base on standard.
- PEC — Photoelectric control.
- PEU — Photoelectric unit.
- RC — Equipment or material to be removed and become the property of the Contractor.
- RE — Remove electrolier, fuses and ballast. Tape ends of conductors.
- RL — Relocate equipment.
- RR — Remove and reuse equipment.
- RS — Remove and salvage equipment.
- SC — Splice new to existing conductors.
- SD — Service disconnect.
- SF — Standard to remain for future use. Remove luminaire, pole conductors, fuses and ballast.
- TSP — Telephone service point.

ABBREVIATIONS AND EQUIPMENT DESIGNATIONS

PROPOSED	EXISTING	
BBS	bbs	Battery backup system
BC	bc	Bolt circle
C	C	Conduit
CCTV	cctv	Closed circuit television
CKT	ckt	Circuit
CMS	cms	Changeable message sign
DLC	dlc	Loop detector lead-in cable
EMS	ems	Extinguishable message sign
EVC	evc	Emergency vehicle cable
EVD	evd	Emergency vehicle detector
FB	fb	Flashing beacon
FBCA	fbca	Flashing beacon control assembly
FBS	fbs	Flashing beacon with slip base
FO	fo	Fiber optic
G	G	Ground (Equipment Grounding Conductor)
GFCI	GFCI	Ground fault circuit interrupt
HAR	har	Highway advisory radio
HEX	hex	Hexagonal
HPS	hps	High pressure sodium
IISNS	iisns	Internally illuminated street name sign
ISL	isl	Induction sign lighting
LED	led	Light emitting diode
LMA	lma	Luminaire mast arm
LPS	lps	Low pressure sodium
LTG	ltg	Lighting
LUM	lum	Luminaire
MAT	mat	Mast arm mounting vehicle signal faces, top attachment
MAS	mas	Mast arm mounting vehicle signal faces, side attachment
MAS-4A	mas-4A	Mast arm mounting vehicle signal faces, side attachment - 4 signal section
MAS-4B	mas-4B	
MAS-4C	mas-4C	
MAS-5A	mas-5A	Mast arm mounting vehicle signal faces, side attachment - 5 signal section
MAS-5B	mas-5B	
MC	mc	Mercury contactor
M/M	m/m	Multiple to multiple transformer
MT	mt	Conduit with pull wire or rope only
MTG	mtg	Mounting
	mv	Mercury vapor lighting fixture
N	N	Neutral (Grounded Conductor)
NC	NC	Normally closed
NO	NO	Normally open
PB	pb	Pull box
PEC	pec	Photoelectric control (Type I, II, III, IV or V as shown)
PED	ped	Pedestrian
PEU	peu	Photoelectric unit
PPB	ppb	Pedestrian push button
RL		Relocated equipment
RM	rm	Ramp metering
SB	sb	Slip base
SIC	sic	Signal interconnect cable
SIG	sig	Signal
SMA	sma	Signal mast arm
SNS	sns	Street name sign
SP	sp	Service point
TDC	tdc	Telephone demarcation cabinet
TMS	tms	Traffic monitoring station
TOS	tos	Traffic Operations System
VEH	veh	Vehicle
XFMR	xfmr	Transformer
COMM	comm	Communication
RWIS	rwis	Roadway weather information system

SOFFIT AND WALL MOUNTED LUMINAIRES

Pendant, 70 W HPS unless otherwise specified.

Flush, 70 W HPS unless otherwise specified.

Wall surface, 70 W HPS unless otherwise specified.

Existing soffit or wall luminaire to remain unmodified.

Existing soffit or wall luminaire to be modified as specified.

NOTE:

Arrow indicates "street side" of luminaire.

STATE OF CALIFORNIA
DEPARTMENT OF TRANSPORTATION

ELECTRICAL SYSTEMS (SYMBOLS AND ABBREVIATIONS)

NO SCALE

RSP ES-1A DATED OCTOBER 5, 2007 SUPERSEDES STANDARD PLAN ES-1A DATED MAY 1, 2006 - PAGE 400 OF THE STANDARD PLANS BOOK DATED MAY 2006.

REVISED STANDARD PLAN RSP ES-1A

2006 REVISED STANDARD PLAN RSP ES-1A

P:\proj2\02\2E291_plans\pse\22e291va012.dgn

7-10-07

DIST	COUNTY	ROUTE	POST MILES TOTAL PROJECT	SHEET NO.	TOTAL SHEETS
02	Sis	96	R0.0/77.3	35	58

REGISTERED ELECTRICAL ENGINEER

October 5, 2007
PLANS APPROVAL DATE

REGISTERED PROFESSIONAL ENGINEER Jeffery G. McRae No. E14512 Exp. 6-30-08 ELECTRICAL STATE OF CALIFORNIA

The State of California or its officers or agents shall not be responsible for the accuracy or completeness of electronic copies of this plan sheet.

To accompany plans dated 07-09-12

CONDUIT

PROPOSED	EXISTING	
		Lighting Conduit, unless otherwise indicated or noted
		Traffic signal conduit
C	c	Communication conduit
T	t	Telephone conduit
F	f	Fire alarm conduit
FO	fo	Fiber optic conduit
		Conduit termination (RSP ES-9A C)
R	r	Conduit riser in/on structure or service pole

SERVICE EQUIPMENT

PROPOSED	EXISTING	
OH	oh	Overhead lines
U	U	Wood pole "U" indicates utility owned
		Pole guy with anchor
		Utility transformer - ground mounted
III		Service equipment enclosure type
		Service equipment enclosure door indicates front of enclosure
T	t	Telephone demarcation cabinet

POLE-MOUNTED SERVICE DESIGNATION

Type of installation

TYPE H SERVICE - 28'-10" ← Pole height above grade

ILLUMINATED OVERHEAD SIGN

PROPOSED	EXISTING	
		Overhead sign - Single post
		Overhead sign - Two post
		Overhead sign - Mounted on structure
		Overhead sign with electrolier

SIGNAL EQUIPMENT

PROPOSED	EXISTING	
		Pedestrian signal face
		Pedestrian push button post
		Pedestrian barricade
		Vehicle signal face (with backplate, 3-Section: red, yellow and green)
		Vehicle signal face with angle visors
PV	PV	Modifications of basic symbols: "L" indicates all non-arrow sections louvered "LG" indicates louvered green section only "PV" indicates 12" programmed visibility sections "8" indicates all 8" sections (only when specified)
		Type 15TS and Vehicle signal face
		Vehicle signal face with red, yellow and green left arrow sections
		Vehicle signal face with red and yellow sections and up green arrow
		Vehicle signal face (5 Section) with red, yellow and green sections and yellow and green right arrows
		Type 1 Standard and attached vehicle signal faces
		Standard with signal mast arm only and attached vehicle signal faces and internally illuminated street name sign
		Type 33 Standard, Left-turn vehicle signal face and sign
		Standard with luminaire and signal mast arms and attached vehicle signal faces
		Cantilever flashing beacon Type 9 Frame, with a sign unless otherwise specified or indicated
		Type 15-FBS Standard with two vehicle signal face sections with lens, backplate and visor with a sign
R	Y	Flashing beacon. One vehicle signal face section with lens, backplate and visor. "R" indicates red indication, "Y" indicates yellow indication
		Controller assembly. Door indicates front of cabinet

SIGNAL EQUIPMENT Cont

PROPOSED	EXISTING	
		Guard post
		Type 1 Standard with "Meter On" sign
		Emergency Vehicle detector

NOTES:

1. All signal sections shall be 12" unless shown otherwise.
2. Signal heads shall be provided with backplates unless shown otherwise.
3. Signal indication shall be LED.

STATE OF CALIFORNIA
DEPARTMENT OF TRANSPORTATION

ELECTRICAL SYSTEMS (SYMBOLS AND ABBREVIATIONS)

NO SCALE

RSP ES-1B DATED OCTOBER 5, 2007 SUPERCEDES STANDARD PLAN ES-1B DATED MAY 1, 2006 - PAGE 401 OF THE STANDARD PLANS BOOK DATED MAY 2006.

REVISED STANDARD PLAN RSP ES-1B

2006 REVISED STANDARD PLAN RSP ES-1B

P:\proj2\02\2E291_plans\pse\22e291va013.dgn

7-10-07

DIST	COUNTY	ROUTE	POST MILES TOTAL PROJECT	SHEET NO.	TOTAL SHEETS
02	Sis	96	R0.0/77.3	36	58

REGISTERED ELECTRICAL ENGINEER

October 5, 2007
PLANS APPROVAL DATE

REGISTERED PROFESSIONAL ENGINEER Jeffery G. McRae No. E14512 Exp. 6-30-08 ELECTRICAL STATE OF CALIFORNIA

The State of California or its officers or agents shall not be responsible for the accuracy or completeness of electronic copies of this plan sheet.

To accompany plans dated 07-09-12

EQUIPMENT IDENTIFICATION

ILLUMINATED SIGN IDENTIFICATION NUMBER:

Sign No. 12345

- Sign number - Place on post or structure

10 ISL SCI 1.0

- Transformer rating (kVA)
- Lighting control type
- Number and type of fixtures

Do NOT place on standard or structure

ELECTROLIER OR EQUIPMENT IDENTIFICATION NUMBER:

12345 - 15'-0"

- Mast arm length, if shown. Do not place on standard or structure.
- Equipment number - Place on standard or structure. Existing equipment numbers are shown in parenthesis

CONDUIT AND CONDUCTOR IDENTIFICATION:

1½"C, 2#10, 15#14, 2 DLC

- Number and size of conductors and cables
- Size of conduit in inches

Ø1, Ø2, Ø2P, etc.	Traffic phase identification for signal faces, detectors and phase diagrams
1 2 3	Project note numbers
A B C	Equipment description, installation or item numbers
1 2 3	Conduit run numbers

SIGNAL AND LIGHTING STANDARD (TYPICAL DESIGNATION):

19A - 3 - 100

- Wind velocity = 100 mph
- Case 3 arm loading
- Standard type
- Standard Plan sheet number
- Detail number or letter

MISCELLANEOUS EQUIPMENT

PROPOSED	EXISTING	
CMS	cms	Changeable message sign
		Closed circuit television camera
		Highway advisory radio pole and antenna
EMS	ems	Extinguishable message sign
M V	m v	Detection device M = Microwave sensor V = Video image sensor

WIRING DIAGRAM LEGEND

P	Pole
CB	Circuit breaker
A	Ampere
V	Volt
M	Metered
UM	Unmetered
NB	Neutral bus
GB	Ground bus
G	Equipment grounding conductor
N	Grounded conductor (Neutral)

- External conductor
- Conductor or bus
- Tie point
- Contactor coil
- Contactor, Contact NO
- Terminal blocks
- Contactor, Contact NC
- Enclosure bond
- Grounding electrode
- Circuit breaker
- Receptacle

PULL BOXES

PROPOSED	EXISTING	
		Pull box-No. 5 unless otherwise indicated or noted.
3	9A(21)	Pull box-Additional designations or descriptions

3 = No. 3½ pull box
5 = No. 5 pull box
6 = No. 6 pull box
7 = No. 7 (Ceiling pull box)
8 = No. 8 (Pendant soffit pull box)
9 = No. 9 pull box
9A = No. 9A pull box

(C) = Communications pull box
(E) = Pull box with extension
(S) = Sprinkler control pull box
(21) = Anchor bolts and conduit for future installation of Type 21 Standard
(T) = Traffic pull box

VEHICLE DETECTORS

5 J 9 U

- Vehicle detector designation
- U = Upper
  L = Lower
- Slot number in input file
- Input file (I or J)
- Phase

PROPOSED	EXISTING	
		Type A detector loop. Outline of sawcut shown.
		Type B detector loop. Outline of sawcut shown.
		Type C detector loop. Outline of sawcut shown.
		Type D detector loop. Outline of sawcut shown.
		Type E detector loop. Outline of sawcut shown.
		Type Q detector loop. Outline of sawcut shown.
		Magnetic detector
DH	dh	Detector handhole
		Microwave or video detection zone

STATE OF CALIFORNIA
DEPARTMENT OF TRANSPORTATION

ELECTRICAL SYSTEMS (SYMBOLS AND ABBREVIATIONS)

NO SCALE

RSP ES-1C DATED OCTOBER 5, 2007 SUPERCEDES STANDARD PLAN ES-1C DATED MAY 1, 2006 - PAGE 402 OF THE STANDARD PLANS BOOK DATED MAY 2006.

REVISED STANDARD PLAN RSP ES-1C

2006 REVISED STANDARD PLAN RSP ES-1C

P:\proj2\02\2E291_plans\pse\22e291va014.dgn

7-10-07

DIST	COUNTY	ROUTE	POST MILES TOTAL PROJECT	SHEET NO.	TOTAL SHEETS
02	Sis	96	R0.0/77.3	37	58

REGISTERED ELECTRICAL ENGINEER

June 6, 2008
PLANS APPROVAL DATE

REGISTERED PROFESSIONAL ENGINEER
Jeffery G. McRae
No. E14512
Exp. 6-30-10
ELECTRICAL
STATE OF CALIFORNIA

The State of California or its officers or agents shall not be responsible for the accuracy or completeness of electronic copies of this plan sheet.

To accompany plans dated 07-09-12

2006 REVISED STANDARD PLAN RSP ES-4C

VISORS

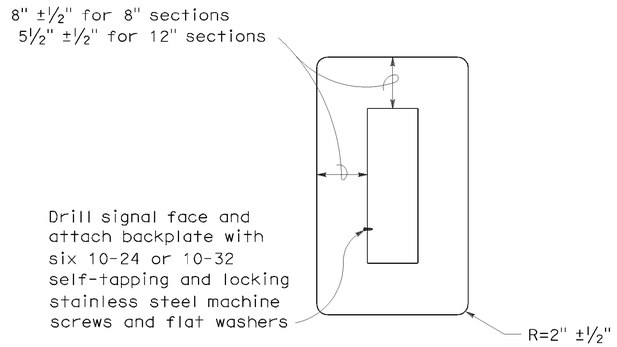

8" AND 12" SECTIONS

BACKPLATE

1/16" minimum thickness
3001-14 aluminum, or plastic when specified

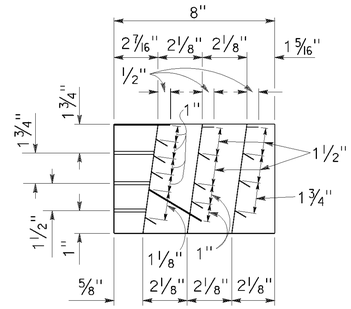

SECTION A-A

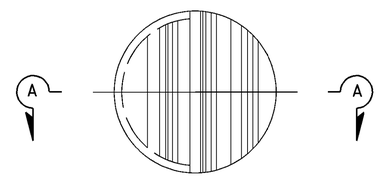

FRONT VIEW

DIRECTIONAL LOUVER

Directional louvers shall be oriented as directed by the Engineer and secured in place with one plated brass machine screw and nut.

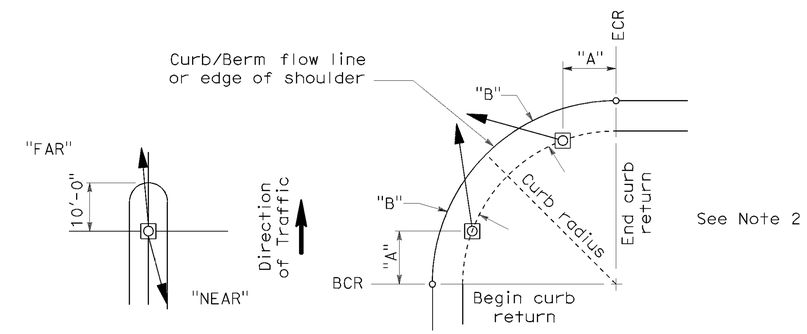

NOTES:

1. Typical signal pole placement unless dimensioned on plans.
2. For "A" and "B" dimensions, see Pole Schedule, or as directed by the Engineer.

SIGNAL STANDARD PLACEMENT DIMENSIONS AND EQUIPMENT LOCATIONS

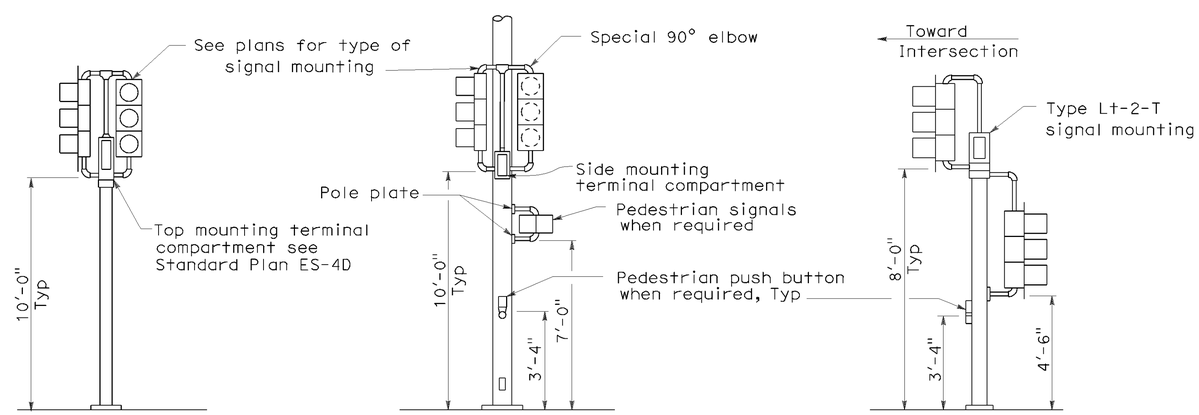

TOP MOUNTED SIGNALS (TV)

Type 1-A, 1-B, 1-C and 1-D standard as indicated on the plans

SIDE MOUNTED SIGNALS (SV AND SP)

Normally used on standards with luminaire or signal mast arm

LEFT TURN LANE SIGNAL

Type 1-A, 1-B, 1-C and 1-D standard as indicated on plans

TYPICAL SIGNAL INSTALLATIONS

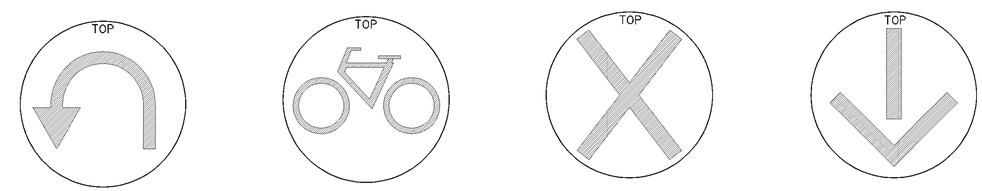

U-TURN SIGNAL FACE | BICYCLE SIGNAL FACE | LANE CONTROL SIGNAL FACE | LANE CONTROL SIGNAL FACE

STATE OF CALIFORNIA
DEPARTMENT OF TRANSPORTATION

ELECTRICAL SYSTEMS (SIGNAL HEADS AND MOUNTINGS)

NO SCALE

RSP ES-4C DATED JUNE 6, 2008 SUPERSEDES STANDARD PLAN ES-4C DATED MAY 1, 2006 - PAGE 420 OF THE STANDARD PLANS BOOK DATED MAY 2006.

REVISED STANDARD PLAN RSP ES-4C

P:\proj2\02\2E291_plans\pse\22e291va015.dgn

5-19-08

DIST	COUNTY	ROUTE	POST MILES TOTAL PROJECT	SHEET No.	TOTAL SHEETS
02	Sis	96	R0.0/77.3	38	58

Randell D. Hiatt
REGISTERED CIVIL ENGINEER

June 6, 2008
PLANS APPROVAL DATE

REGISTERED PROFESSIONAL ENGINEER
Randell D. Hiatt
No. C50200
Exp. 6-30-09
CIVIL
STATE OF CALIFORNIA

The State of California or its officers or agents shall not be responsible for the accuracy or completeness of electronic copies of this plan sheet.

To accompany plans dated 07-09-12

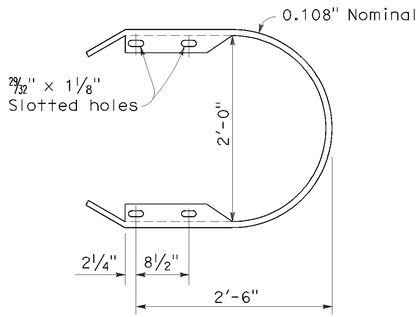

RETURN CAP
(TYPE TA)

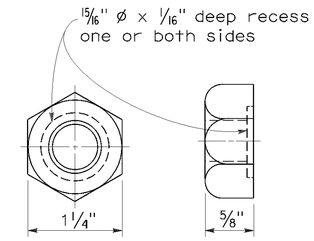

5/8" ø RECESS NUT

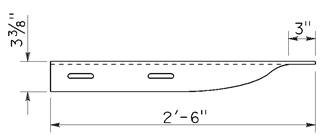

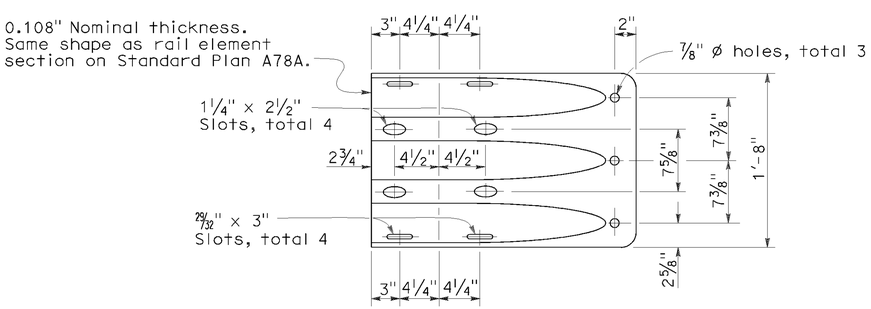

END CAP
(TYPE TC)

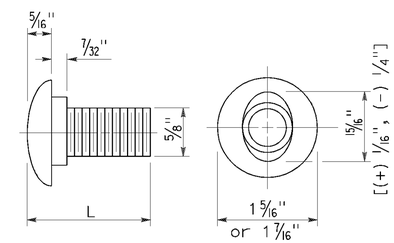

5/8" ø BUTTON HEAD BOLT

L	THREAD LENGTH
1 1/4"	full thread length
2"	full thread length
9 1/2"	4" Min thread length
18"	4" Min thread length

STATE OF CALIFORNIA
DEPARTMENT OF TRANSPORTATION

THRIE BEAM BARRIER STANDARD HARDWARE DETAILS

NO SCALE

RSP A78C1 DATED JUNE 6, 2008 SUPERSEDES STANDARD PLAN A78C1
DATED MAY 1, 2006 - PAGE 85 OF THE STANDARD PLANS BOOK DATED MAY 2006.

REVISED STANDARD PLAN RSP A78C1

2006 REVISED STANDARD PLAN RSP A78C1

P:\proj2\02\2E291_plans\pse\22e291va016.dgn

4-21-08

Dist	COUNTY	ROUTE	POST MILES TOTAL PROJECT	SHEET No.	TOTAL SHEETS
02	Sis	96	R0.0/77.3	39	58

Randell D. Hiatt
REGISTERED CIVIL ENGINEER

May 20, 2011
PLANS APPROVAL DATE

REGISTERED PROFESSIONAL ENGINEER
Randell D. Hiatt
No. C50200
Exp. 6-30-11
CIVIL
STATE OF CALIFORNIA

The State of California or its officers or agents shall not be responsible for the accuracy or completeness of electronic copies of this plan sheet.

To accompany plans dated 07-09-12

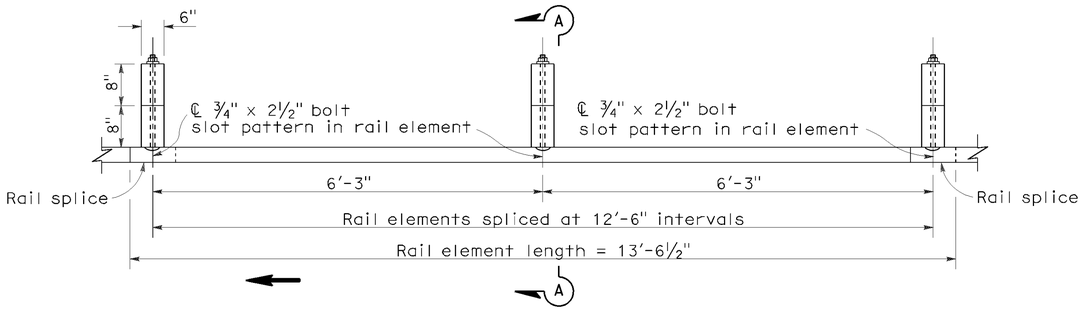

PLAN

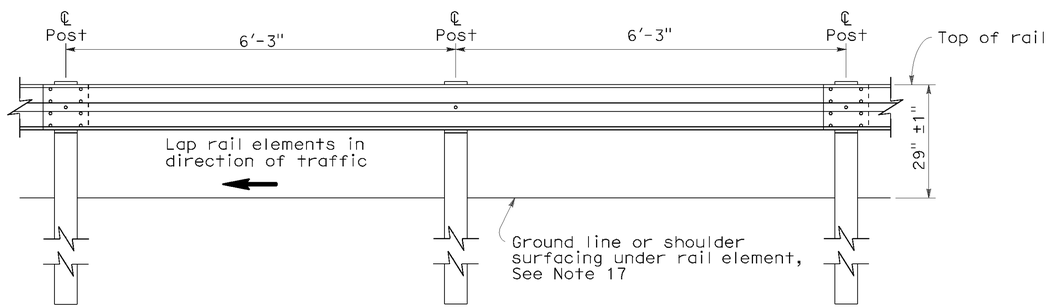

ELEVATION

METAL BEAM GUARD RAILING WITH WOOD POST AND BLOCKS

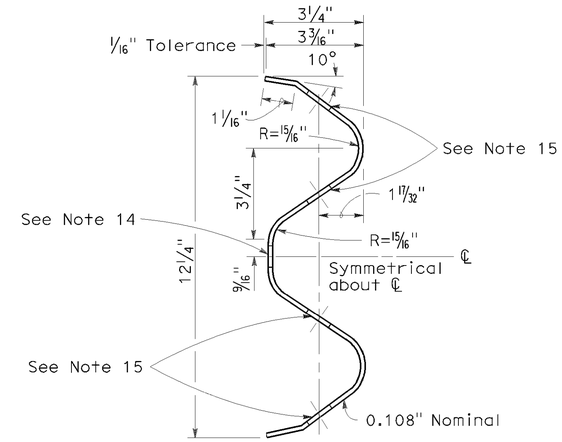

SECTION THRU RAIL ELEMENT

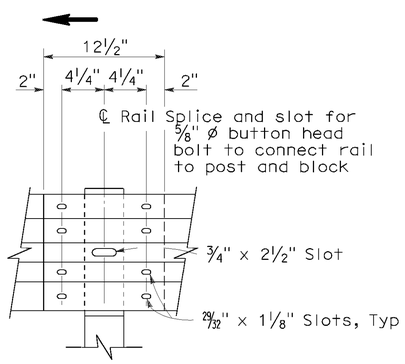

ELEVATION

RAIL ELEMENT SPLICE DETAIL

a) Connect the over lapped end of the rail elements with ⅝" ø x 1⅜" button head oval shoulder splice bolts inserted into the 29⁄32" x 1⅛" slots and bolted together with ⅝" ø recessed hex nuts. Recess of hex nut points toward rail element. A total of 8 bolts and nuts are to be used at each rail splice connection.

b) The ends of the rail elements are to be overlapped in the direction of traffic (see details).

c) Where end cap is to be attached to the end of a rail element, a total of 4 of the above described splice bolts and nuts are to be used.

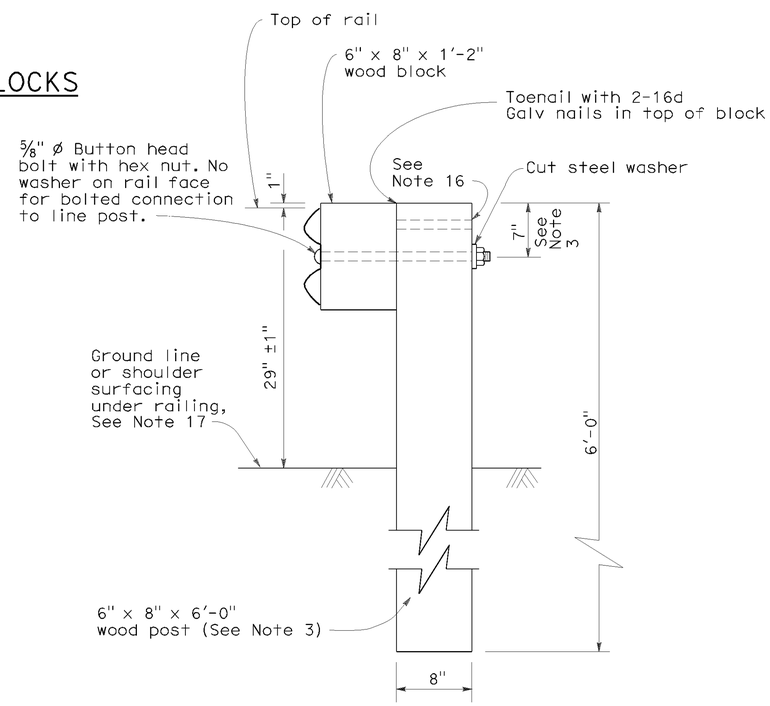

SECTION A-A

TYPICAL WOOD LINE POST INSTALLATION

See Note 4

NOTES:

1. For details of steel post installations, see Standard Plan A77A2.
2. For details of standard hardware used to construct guard railing, see Standard Plan A77B1.
3. For details of wood posts and wood blocks used to construct guard railing, see Standard Plan A77C1.
4. For additional installation details, see Standard Plan A77C3.
5. Guard railing post spacing to be 6'-3" center to center, except as otherwise noted.
6. For guard railing typical layouts, see the A77E, A77F and A77G Series of Standard Plans.
7. For terminal system end treatment details, see the A77L Series of Standard Plans. To connect railing to terminal system end treatment, transition the top of railing height at a ratio of 120:1 to terminal system end treatment height plus one 12'-6" standard railing section at the transitioned height for a horizontal connection to the end treatment.
8. For guard railing end anchor details, see Standard Plans A77H1 and A77I2.
9. For details of guard railing transition to bridge railing, see Standard Plan A77J4.
10. For additional details of guard railing connection to bridge railings, see Standard Plans A77J1, A77J2 and A77K1.
11. For guard railing connection details to abutments and walls, see Standard Plan A77J3.
12. Direction of adjacent traffic indicated by →.
13. For typical guard railing delineation and dike positioning details, see Standard Plan A77C4.
14. Slotted hole for bolted connection of rail element to block and post. See "Section Thru Rail Element".
15. Slotted holes for splice bolts to overlap ends of rail element. See "Section Thru Rail Element".
16. Additional hole in uppermost portion of line post is for potential future adjustments of railing height. See Standard Plan A77C1.
17. Install posts in soil.

STATE OF CALIFORNIA
DEPARTMENT OF TRANSPORTATION

METAL BEAM GUARD RAILING STANDARD RAILING SECTION (WOOD POST WITH WOOD BLOCK)

NO SCALE

RSP A77A1 DATED MAY 20, 2011 SUPERSEDES STANDARD PLAN A77A1 DATED MAY 1, 2006 - PAGE 41 OF THE STANDARD PLANS BOOK DATED MAY 2006.

REVISED STANDARD PLAN RSP A77A1

2006 REVISED STANDARD PLAN RSP A77A1

P:\proj2\02\2E291_plans\pse\22e291va017.dgn

3-10-11

To accompany plans dated 07-09-12

Dist	COUNTY	ROUTE	POST MILES TOTAL PROJECT	SHEET No.	TOTAL SHEETS
02	Sis	96	R0.0/77.3	40	58

Randell D. Hiatt
REGISTERED CIVIL ENGINEER

May 20, 2011
PLANS APPROVAL DATE

REGISTERED PROFESSIONAL ENGINEER
Randell D. Hiatt
No. C50200
Exp. 6-30-11
CIVIL
STATE OF CALIFORNIA

The State of California or its officers or agents shall not be responsible for the accuracy or completeness of electronic copies of this plan sheet.

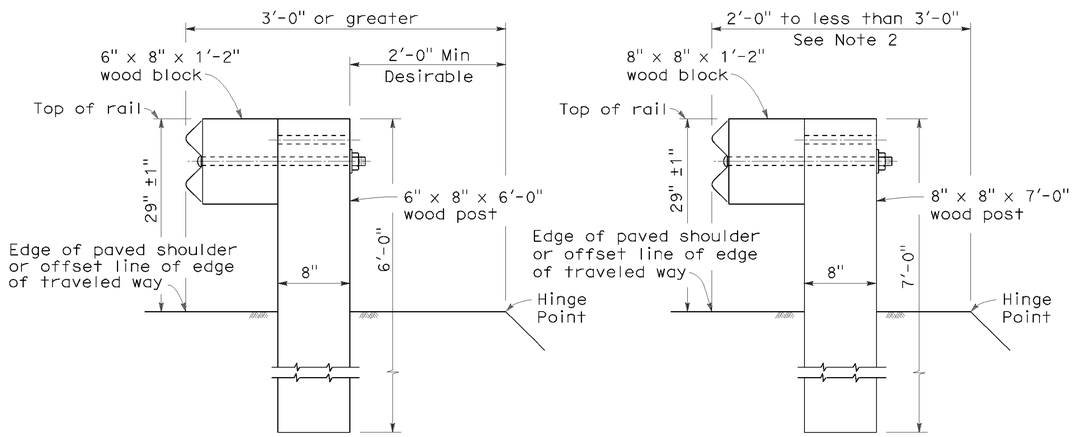

DETAIL A
TYPICAL ROADWAY INSTALLATION
See Note 1

DETAIL B
NARROW ROADWAY INSTALLATION
See Note 1

POST EMBEDMENT

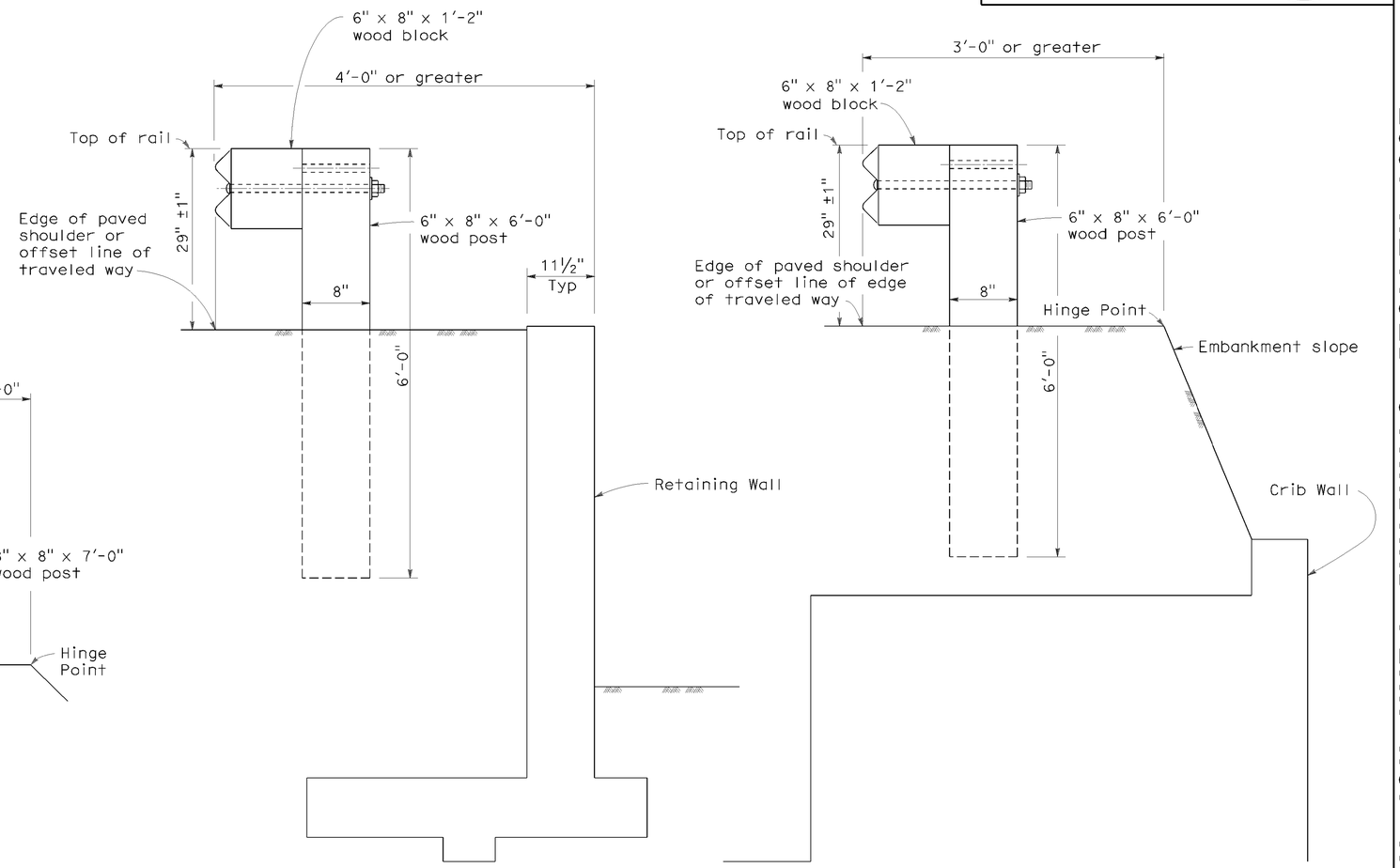

DETAIL C

DETAIL D

INSTALLATION AT EARTH RETAINING WALLS

NOTES:

1. These installation details also applicable to steel line post installations. For Detail A, C, and D, where steel line post installations are constructed, W6 x 9 steel post, 6'-0" in length, with 6" x 8" x 1'-2" notched wood blocks or notched recycled plastic blocks are to be used in place of the size of wood post and wood block shown. For Detail B, where steel line post installations are constructed, W6 x 9 steel post, 7'-0" in length, with 6" x 8" x 1'-2" notched wood blocks or notched recycled plastic blocks are to be used in place of the size of wood post and wood block shown. For additional installation details, see Standard Plans A77A1 and A77A2.

2. Where the distance between the face of the rail and the hinge point is less than 2'-0", see the Project Plans for special details.

3. For dike positioning with guard railing installations, see Standard Plan A77C4.

STATE OF CALIFORNIA
DEPARTMENT OF TRANSPORTATION

METAL BEAM GUARD RAILING TYPICAL LINE POST EMBEDMENT AND HINGE POINT OFFSET DETAILS

NO SCALE

RSP A77C3 DATED MAY 20, 2011 SUPERSEDES STANDARD PLAN A77C3
DATED MAY 1, 2006 - PAGE 46 OF THE STANDARD PLANS BOOK DATED MAY 2006.

REVISED STANDARD PLAN RSP A77C3

2006 REVISED STANDARD PLAN RSP A77C3

P:\proj2\02\2E291_plans\pse\22e291va018.dgn

3-10-11

Dist	COUNTY	ROUTE	POST MILES TOTAL PROJECT	SHEET No.	TOTAL SHEETS
02	Sis	96	R0.0/77.3	41	58

Randell D. Hiatt
REGISTERED CIVIL ENGINEER

May 20, 2011
PLANS APPROVAL DATE

REGISTERED PROFESSIONAL ENGINEER
Randell D. Hiatt
No. C50200
Exp. 6-30-11
CIVIL
STATE OF CALIFORNIA

The State of California or its officers or agents shall not be responsible for the accuracy or completeness of electronic copies of this plan sheet.

To accompany plans dated 07-09-12

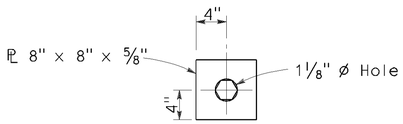

DETAIL A
CABLE CONNECTION
END PLATE

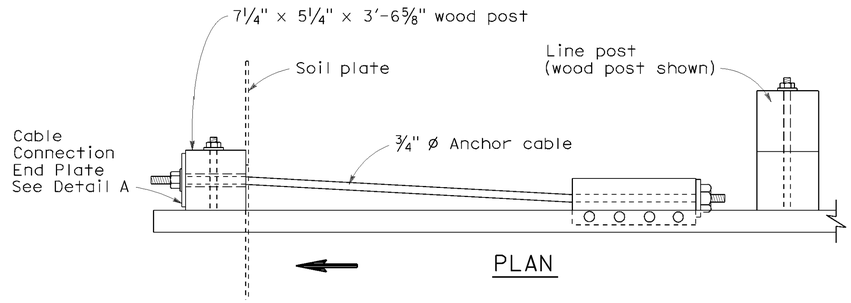

PLAN

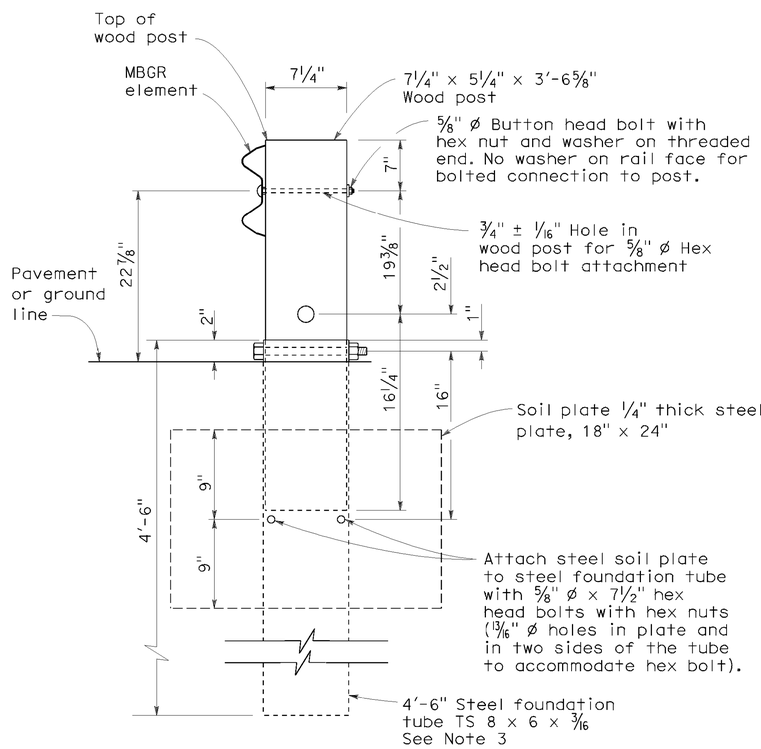

SECTION A-A

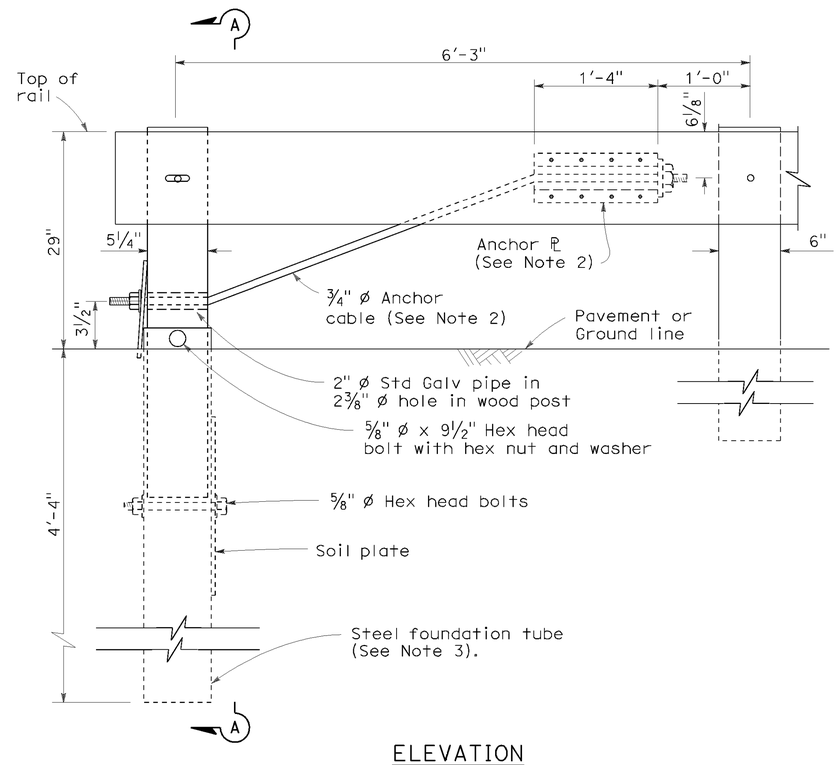

ELEVATION
END ANCHOR
ASSEMBLY (TYPE SFT)
See Note 1

NOTES:

1. See the A77E, A77F and A77G series of Standard Plans for typical use of End Anchor Assembly (Type SFT).
2. For details of the anchor plate and 3/4" cable, see Standard Plan A77H3.
3. A 6'-0" length steel foundation tube, TS 8 x 6 x 3/16, without a soil plate, may be furnished and installed in place of the 4'-6" length steel foundation tube and soil plate shown. Minimum embedment of the 6'-0" length tube shall be 5'-9". A 5/8" Ø hex head bolt and nut shall be installed in the hole in the 6'-0" length tube to keep the wood post from dropping into the tube.
4. Direction of traffic indicated by ⟹.
5. Install line post, steel foundation tube and soil plate in soil.

STATE OF CALIFORNIA
DEPARTMENT OF TRANSPORTATION

METAL RAILING END ANCHOR ASSEMBLY (TYPE SFT)

NO SCALE

RSP A77H1 DATED MAY 20, 2011 SUPERSEDES STANDARD PLAN A77H1
DATED MAY 1, 2006 - PAGE 67 OF THE STANDARD PLANS BOOK DATED MAY 2006.

REVISED STANDARD PLAN RSP A77H1

2006 REVISED STANDARD PLAN RSP A77H1

P:\proj2\02\2E291_plans\pse\22e291va019.dgn

2-10-07

Dist	COUNTY	ROUTE	POST MILES TOTAL PROJECT	SHEET No.	TOTAL SHEETS
02	Sis	96	R0.0/77.3	42	58

Randell D. Hiatt
REGISTERED CIVIL ENGINEER

May 20, 2011
PLANS APPROVAL DATE

REGISTERED PROFESSIONAL ENGINEER
Randell D. Hiatt
No. C50200
Exp. 6-30-11
CIVIL
STATE OF CALIFORNIA

The State of California or its officers or agents shall not be responsible for the accuracy or completeness of electronic copies of this plan sheet.

To accompany plans dated 07-09-12

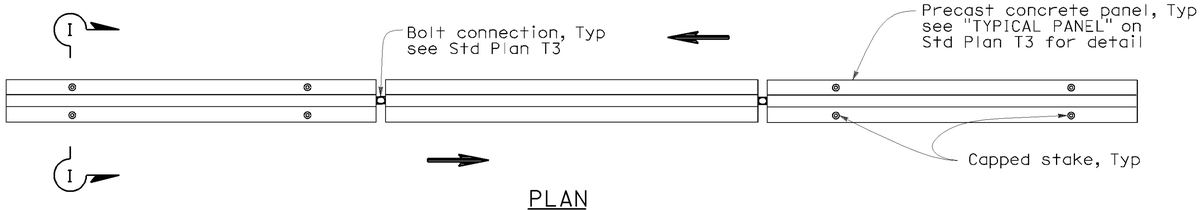

PLAN

RAILING STAKING CONFIGURATION FOR TWO-WAY TRAFFIC

See Note 1

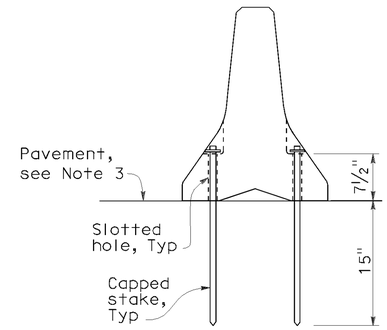

SECTION I-I

NOTES:

1. Where Type K Temporary Railing is placed as a temporary or long term barrier in two-way traffic on highways with less than 24" from the edge of traveled way, use four capped stakes per every other panel with end panels staked.
2. Where Type K Temporary Railing is placed 3" to 24" from the edge of an excavation on highways, use two capped stakes per panel along the traffic side.
3. Staked Type K Temporary Railing must be supported by at least 4" thick concrete, hot mix asphalt or existing asphalt concrete pavement.
4. The minimum yield strength for the washer must be 60,000 psi.
5. Direction of adjacent traffic indicated by ⟹.

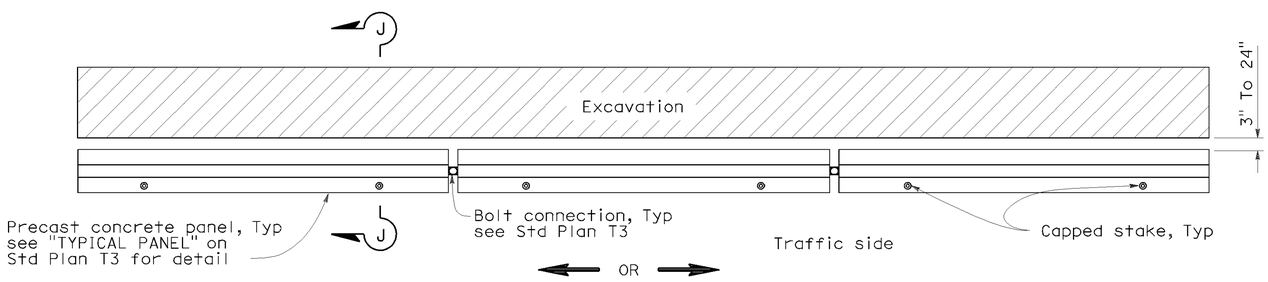

PLAN

RAILING STAKING CONFIGURATION ADJACENT TO AN EXCAVATION

See Note 2

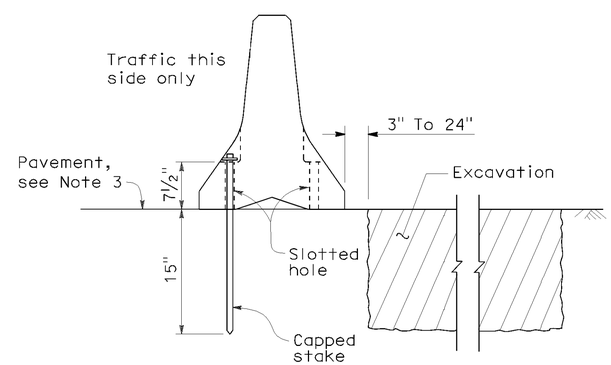

SECTION J-J

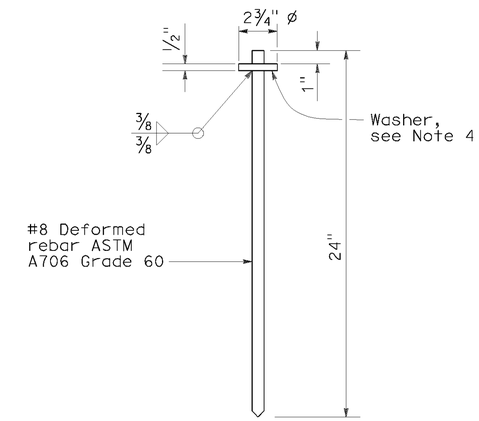

CAPPED STAKE DETAIL

STATE OF CALIFORNIA
DEPARTMENT OF TRANSPORTATION

TEMPORARY RAILING (TYPE K)

NO SCALE

NSP T3A DATED MAY 20, 2011 SUPPLEMENTS
THE STANDARD PLANS BOOK DATED MAY 2006.

NEW STANDARD PLAN NSP T3A

2006 NEW STANDARD PLAN NSP T3A

P:\proj2\02\2E291_plans\pse\22e291va020.dgn

8-31-10

DIST	COUNTY	ROUTE	POST MILES TOTAL PROJECT	SHEET NO.	TOTAL SHEETS
02	Sis	96	R0.0/77.3	43	58

REGISTERED ELECTRICAL ENGINEER

January 20, 2012
PLANS APPROVAL DATE

REGISTERED PROFESSIONAL ENGINEER Jeffery G. McRae No. E14512 Exp. 6-30-12 ELECTRICAL STATE OF CALIFORNIA

The State of California or its officers or agents shall not be responsible for the accuracy or completeness of electronic copies of this plan sheet.

To accompany plans dated 07-09-12

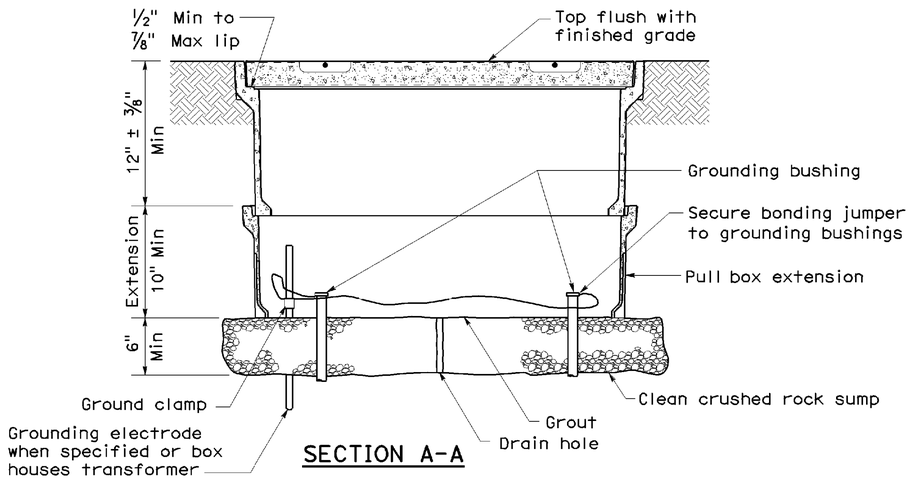

SECTION A-A

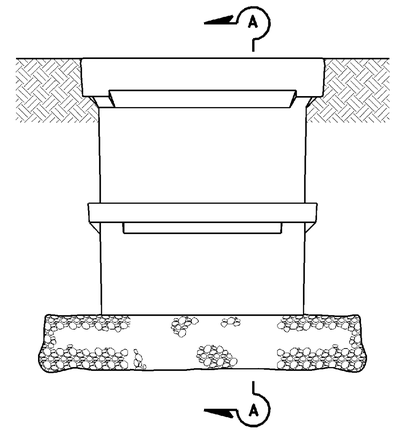

SIDE VIEW

INSTALLATION DETAILS

DETAIL A

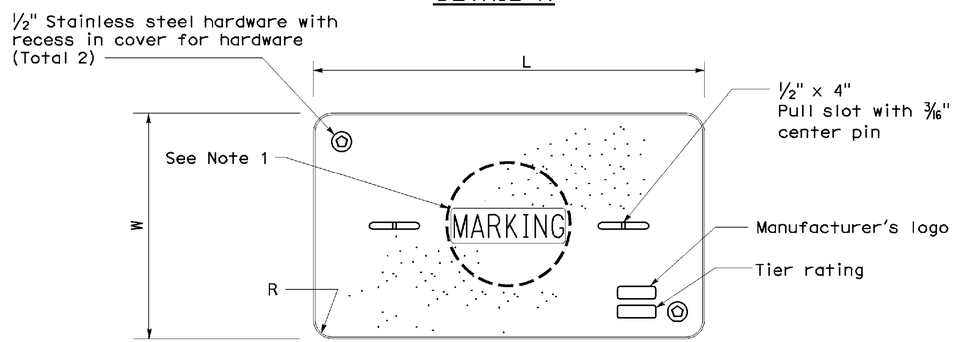

COVER TOP VIEW

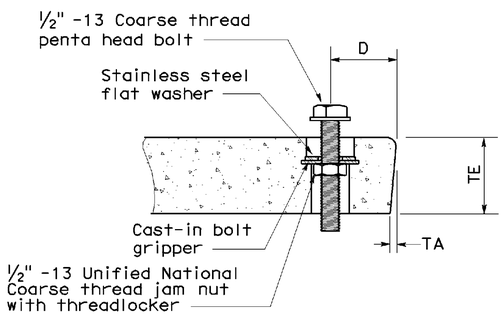

TYPICAL COVER CAPTIVE BOLT
(Or similar)

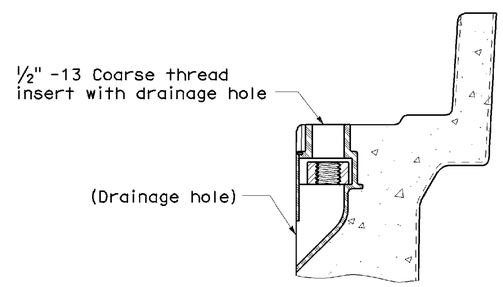

TYPICAL THREADED INSERT
(Or similar)

DIMENSION TABLE

PULL BOX	PULL BOX: Minimum Depth Box	PULL BOX: Minimum Depth Extension	PULL BOX: Maximum Weight	COVER: L	COVER: W	COVER: R	COVER: TE	COVER: TA	COVER: D	COVER: Maximum Weight
No. 3½	12"	N/A	40 lb	1′ - 3⅜"	10⅛"	1⅜"	2"	⅛"	1¾"	30 lb
No. 5	12"	10"	55 lb	1′ - 11¼"	1′ - 1¾"	1⅜"	2"	⅛"	1¾"	60 lb
No. 6	12"	10"	70 lb	2′ - 6½"	1′ - 5½"	1⅜"	2"	⅛"	2"	85 lb

NOTES ON PULL BOXES:

1. Pull box covers must be marked as follows: "SERVICE" Service circuits between service point and service disconnect; "SPRINKLER-CONTROL" sprinkler control circuits, 50 V or less; "CALTRANS" on all pull boxes, except pull boxes marked "SPRINKLER-CONTROL"; and "TELEPHONE" Telephone service;

   A) No. 3½ pull box.
      1) "SIGNAL" - Traffic signal circuits with or without street or sign lighting circuits.
      2) "ST LIGHTING" - Street or sign lighting circuits where voltage is under 600 V.

   B) No. 5, 6, 9 or 9A pull box.
      1) "TRAFFIC SIGNAL" - Traffic signal circuits with or without street or sign lighting circuits.
      2) "STREET LIGHTING" - Street or sign lighting circuits where voltage is under 600 V.
      3) "STREET LIGHTING-HIGH VOLTAGE" - Street or sign lighting circuits where voltage is above 600 V.
      4) "IRRIGATION" - Circuits to irrigation controller 120 V or more.
      5) "RAMP METER" - Ramp meter circuits.
      6) "COUNT STATION" - Count or speed monitor circuits.
      7) "COMMUNICATIONS" - Communication circuits.
      8) "TOS COMMUNICATIONS" - TOS communication line.
      9) "TOS POWER" -TOS power.
      10) "TDC POWER" - Telephone demarcation cabinet power.
      11) "CCTV" - Closed circuit television circuits.
      12) "TMS" - Traffic monitoring station circuits.
      13) "CMS" - Changeable message sign circuits.
      14) "HAR" - Highway advisory radio circuits.

2. The nominal dimensions of the opening in which the cover sets must be the same as the cover dimensions (L and W) plus ⅛" or greater.
3. Covers and boxes must be interchangeable with California Standard. When interchanged with a standard, the top surfaces must be flush within ⅛". Top outside radius of covers and pull boxes must have a ⅛" radius.
4. Pull box extension may be another pull box as long as the bottom edge of the pull box can fit into the cover opening.

STATE OF CALIFORNIA
DEPARTMENT OF TRANSPORTATION

ELECTRICAL SYSTEMS (PULL BOX)

NO SCALE

NSP ES-8A DATED JANUARY 20, 2012 SUPPLEMENTS THE STANDARD PLANS BOOK DATED MAY 2006.

NEW STANDARD PLAN NSP ES-8A

2006 NEW STANDARD PLAN NSP ES-8A

P:\proj2\02\2E291_plans\pse\22e291va021.dgn

9-28-11

DIST	COUNTY	ROUTE	POST MILES TOTAL PROJECT	SHEET NO.	TOTAL SHEETS
02	Sis	96	R0.0/77.3	44	58

Randell D. Hiatt
REGISTERED CIVIL ENGINEER

June 6, 2008
PLANS APPROVAL DATE

REGISTERED PROFESSIONAL ENGINEER
Randell D. Hiatt
No. C50200
Exp. 6-30-09
CIVIL
STATE OF CALIFORNIA

The State of California or its officers or agents shall not be responsible for the accuracy or completeness of electronic copies of this plan sheet.

To accompany plans dated 07-09-12

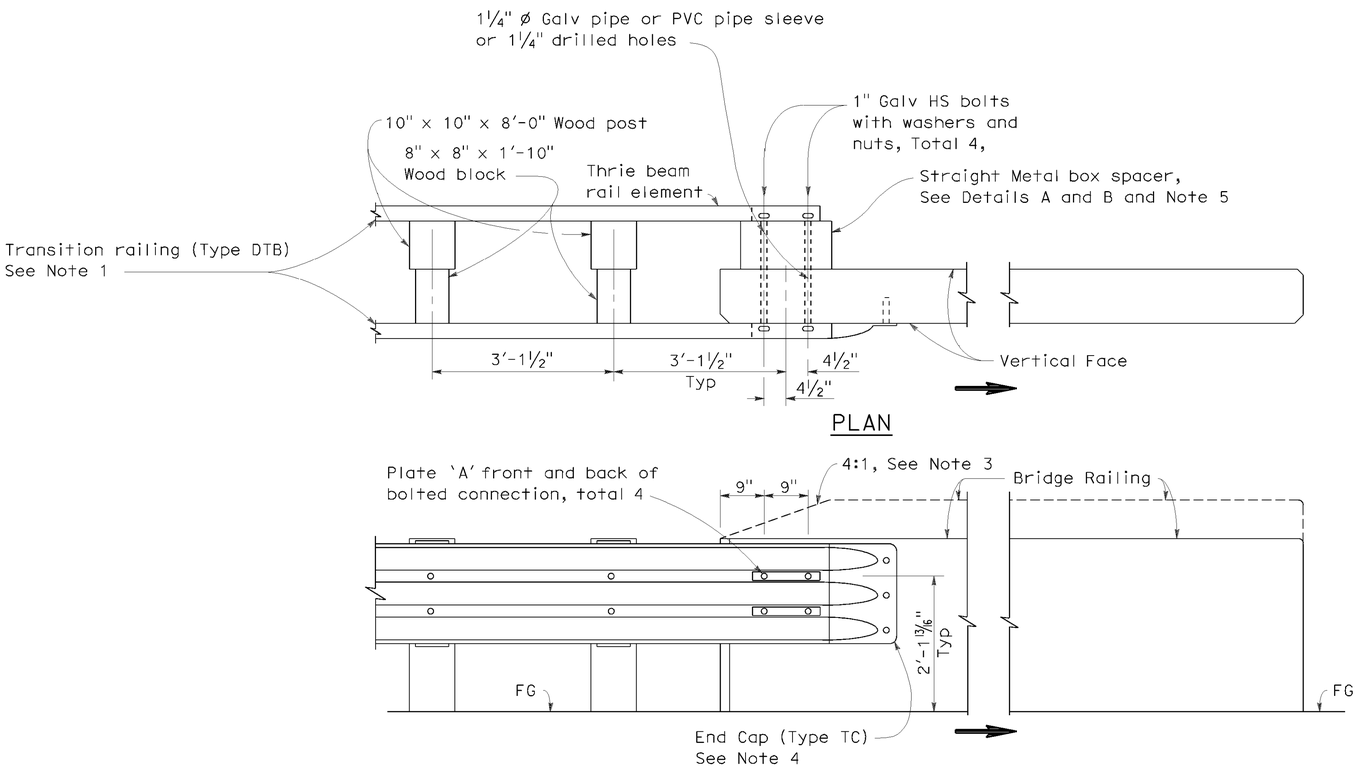

CONNECTION DETAIL 1A
See Note 2

DOUBLE THRIE BEAM BARRIER CONNECTION TO BRIDGE RAILING WITHOUT SIDEWALK

NOTES:

1. For additional details of Transition Railing (Type DTB), see Standard Plans A78K. Transition Railing (Type DTB) transitions the standard 12 gage double thrie beam barrier to a heavier gage double thrie beam railing section then to a heavier gage nested double thrie beam barrier section which then is connected to the concrete bridge railing.
2. For typical use of Connection Detail 1A, see Type 25A Connection Layout on Revised Standard Plan RSP A78H.
3. Where the height of the bridge railing exceeds the height of the thrie beam railing by more than 1" at Connection Detail 1A, taper the top of the end of the bridge railing at 4:1 to match the top elevation of the thrie beam railing.
4. For details of End Cap (Type TC), see Standard Plan A78C1.
5. See Standard Plan A78K for additional details regarding depth dimension for straight metal box spacer.
6. Direction of adjacent traffic indicated by ⟹.

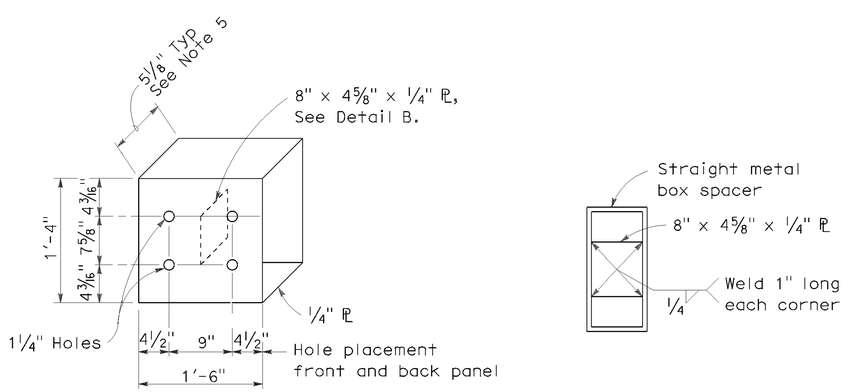

STRAIGHT METAL BOX SPACER

PLATE 'A'

STATE OF CALIFORNIA
DEPARTMENT OF TRANSPORTATION

DOUBLE THRIE BEAM BARRIER CONNECTION TO BRIDGE RAILINGS WITHOUT SIDEWALKS

NO SCALE

RSP A78F1 DATED JUNE 6, 2008 SUPERSEDES STANDARD PLAN A78F1 DATED MAY 1, 2006 - PAGE 92 OF THE STANDARD PLANS BOOK DATED MAY 2006.

REVISED STANDARD PLAN RSP A78F1

2006 REVISED STANDARD PLAN RSP A78F1

P:\proj2\02\2E291_plans\pse\22e291va022.dgn

12-10-07

DIST	COUNTY	ROUTE	POST MILES TOTAL PROJECT	SHEET NO.	TOTAL SHEETS
02	Sis	96	R0.0/77.3	45	58

Randell D. Hiatt
REGISTERED CIVIL ENGINEER

June 6, 2008
PLANS APPROVAL DATE

REGISTERED PROFESSIONAL ENGINEER
Randell D. Hiatt
No. C50200
Exp. 6-30-09
CIVIL
STATE OF CALIFORNIA

The State of California or its officers or agents shall not be responsible for the accuracy or completeness of electronic copies of this plan sheet.

To accompany plans dated 07-09-12

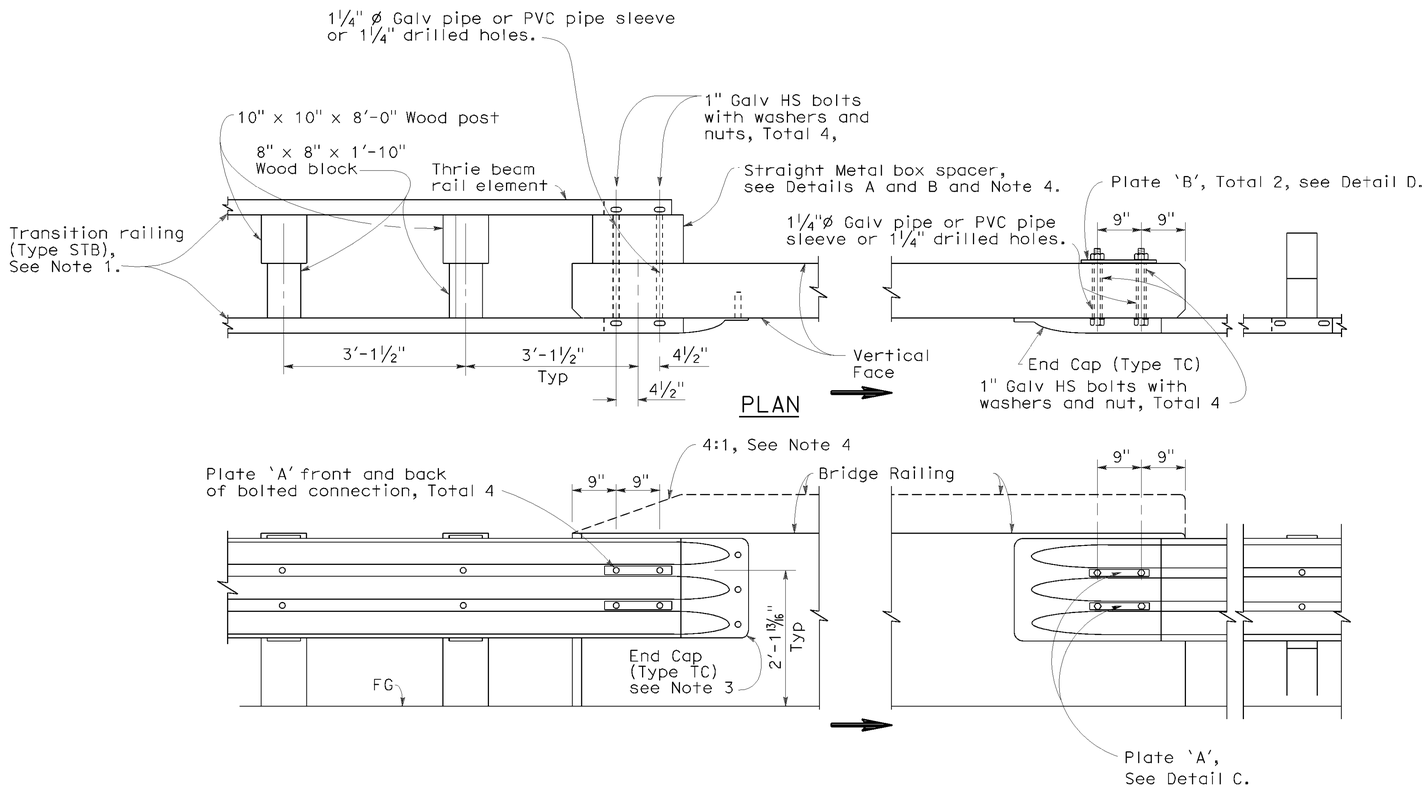

ELEVATION

SINGLE THRIE BEAM BARRIER CONNECTION TO BRIDGE RAILING WITHOUT SIDEWALK

NOTES:

1. For additional details of Transition Railing (Type STB), see Standard Plans A78J. Transition Railing (Type STB) transitions the standard 12 gage single thrie beam barrier to a heavier gage single thrie beam railing section then to a heavier gage nested double thrie beam barrier section which then is connected to the concrete bridge railing.
2. Where the height of the bridge railing exceeds the height of the thrie beam railing by more than 1" at Connection Detail 2A, taper the top of the end of the bridge railing at 4:1 to match the top elevation of the thrie beam railing.
3. For details of End Cap (Type TC), see Standard Plan A78C1.
4. See Standard Plan A78J for additional details regarding depth dimension for straight metal box spacer.
5. Direction of adjacent traffic indicated by ⟹.

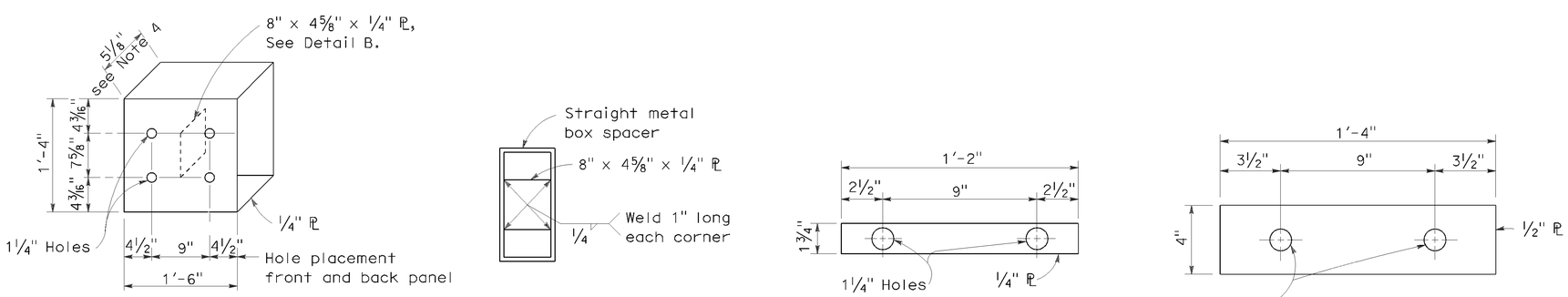

DETAIL A

DETAIL B

DETAIL C

DETAIL D

STRAIGHT METAL BOX SPACER

PLATE 'A'

PLATE 'B'

STATE OF CALIFORNIA
DEPARTMENT OF TRANSPORTATION

SINGLE THRIE BEAM BARRIER CONNECTIONS TO BRIDGE RAILINGS WITHOUT SIDEWALKS

NO SCALE

RSP A78F2 DATED JUNE 6, 2008 SUPERSEDES STANDARD PLAN A78F2 DATED MAY 1, 2006 - PAGE 93 OF THE STANDARD PLANS BOOK DATED MAY 2006.

REVISED STANDARD PLAN RSP A78F2

2006 REVISED STANDARD PLAN RSP A78F2

P:\proj2\02\2E291_plans\pse\22e291va023.dgn

12-10-07

Dist	COUNTY	ROUTE	POST MILES TOTAL PROJECT	SHEET No.	TOTAL SHEETS
02	Sis	96	R0.0/77.3	46	58

Randell D. Hiatt
REGISTERED CIVIL ENGINEER

May 20, 2011
PLANS APPROVAL DATE

REGISTERED PROFESSIONAL ENGINEER Randell D. Hiatt No. C50200 Exp. 6-30-11 CIVIL STATE OF CALIFORNIA

The State of California or its officers or agents shall not be responsible for the accuracy or completeness of electronic copies of this plan sheet.

To accompany plans dated 07-09-12

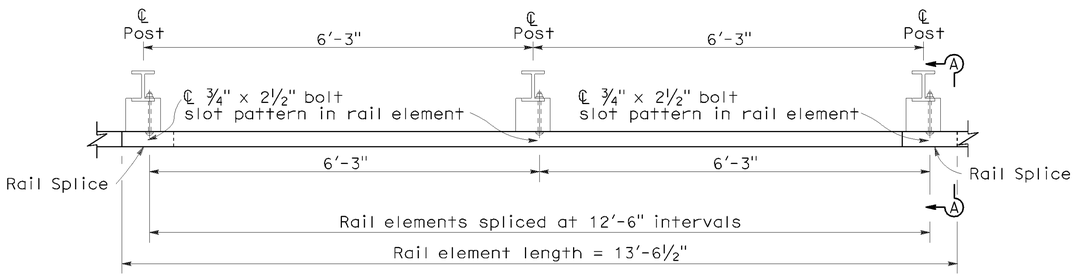

PLAN

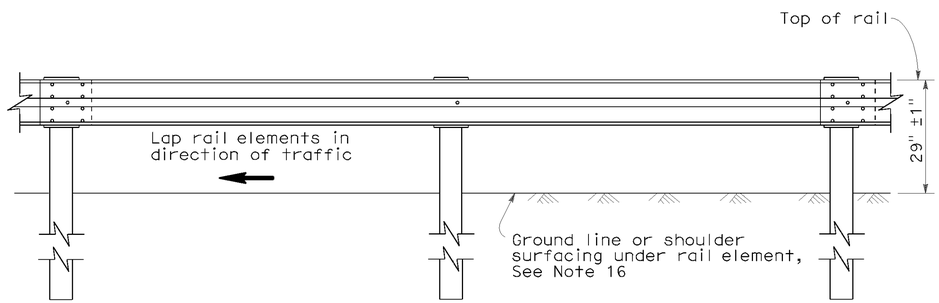

ELEVATION

METAL BEAM GUARD RAILING WITH STEEL POSTS AND NOTCHED WOOD OR NOTCHED RECYCLED PLASTIC BLOCKS

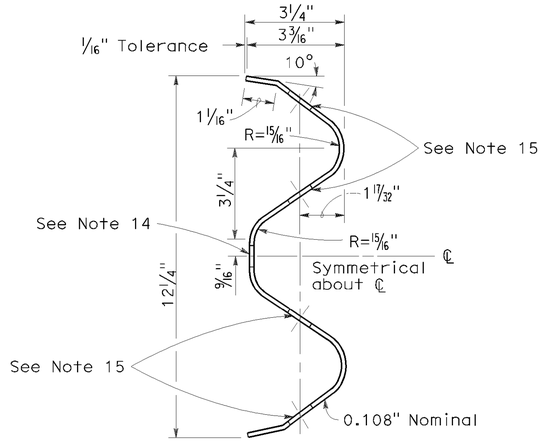

SECTION THRU RAIL ELEMENT

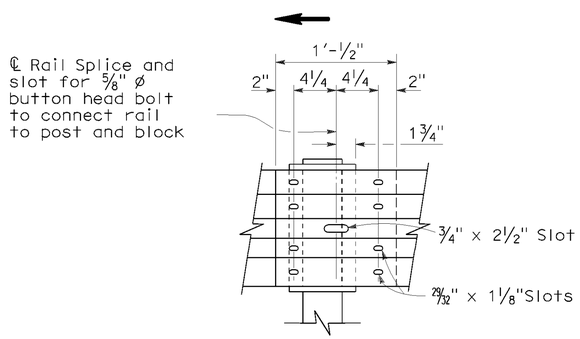

ELEVATION

RAIL ELEMENT SPLICE DETAIL

a) Connect the over lapped end of the rail elements with ⅝" ø x 1⅜" button head oval shoulder splice bolts inserted into the 29/32" x 1⅛" slots and bolted together with ⅝" ø recessed hex nuts. Recess of hex nut points toward rail element. A total of 8 bolts and nuts are to be used at each rail splice connection.

b) The ends of the rail elements are to be overlapped in the direction of traffic (see details).

c) Where end cap is to be attached to the end of a rail element, a total of 4 of the above described splice bolts and nuts are to be used.

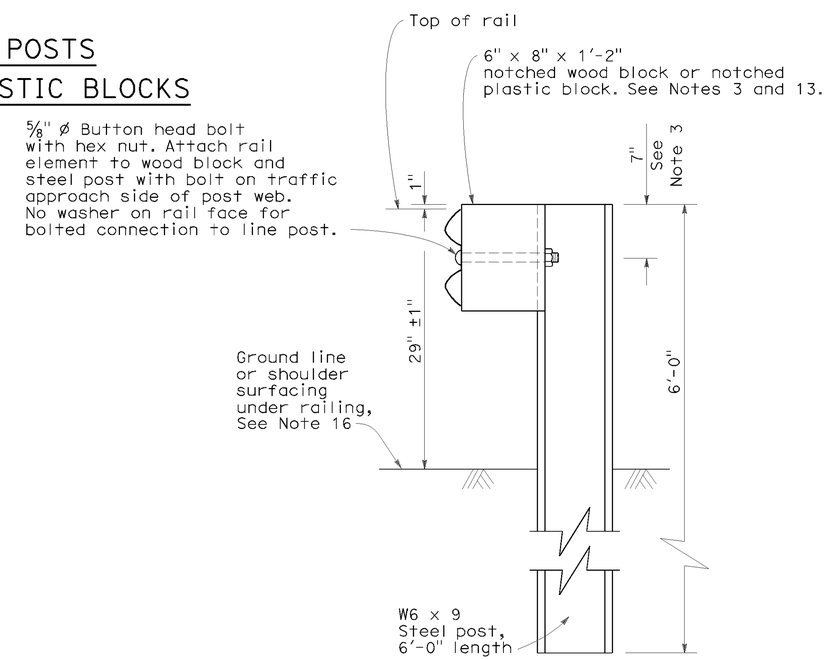

SECTION A-A

TYPICAL STEEL LINE POST INSTALLATION

See Note 4

NOTES:

1. For details of wood post installations, see Standard Plan A77A1.
2. For details of standard hardware used to construct guard railing, see Standard Plan A77B1.
3. For details of steel posts and notched wood blocks used to construct guard railing, see Standard Plan A77C2.
4. For additional installation details, see Standard Plan A77C3.
5. Guard railing post spacing to be 6'-3" center to center, except as otherwise noted.
6. For guard railing typical layouts, see the A77E, A77F and A77G Series of Standard Plans.
7. For terminal system end treatment details, see the A77L Series of Standard Plans. To connect railing to terminal system end treatment, transition the top of railing height at a ratio of 120:1 to terminal system end treatment height plus one 12'-6" standard railing section at the transitioned height for a horizontal connection to the end treatment.
8. For guard railing end anchor details, see Standard Plans A77H1 and A77I2.
9. For details of guard railing transition to bridge railing, see Standard Plan A77J4.
10. For additional details of guard railing connection to bridge railings, see Standard Plans A77J1, A77J2 and A77K1.
11. For dike positioning and guard railing delineation details, see Standard Plan A77C4.
12. Direction of adjacent traffic indicated by → .
13. Notched face of block faces steel post.
14. Slotted hole for bolted connection of rail element to block and post. See "Section Thru Rail Element".
15. Slotted holes for splice bolts to overlap ends of rail element. See "Section Thru Rail Element".
16. Install posts in soil.

STATE OF CALIFORNIA
DEPARTMENT OF TRANSPORTATION

METAL BEAM GUARD RAILING STANDARD RAILING SECTION (STEEL POST WITH NOTCHED WOOD OR NOTCHED RECYCLED PLASTIC BLOCK)

NO SCALE

RSP A77A2 DATED MAY 20, 2011 SUPERSEDES STANDARD PLAN A77A2 DATED MAY 1, 2006 - PAGE 42 OF THE STANDARD PLANS BOOK DATED MAY 2006.

REVISED STANDARD PLAN RSP A77A2

2006 REVISED STANDARD PLAN RSP A77A2

P:\proj2\02\2E291_plans\pse\22e291va024.dgn

5-4-11

DIST	COUNTY	ROUTE	POST MILES TOTAL PROJECT	SHEET NO.	TOTAL SHEETS
02	Sis	96	R0.0/77.3	47	58

T J Powell 6-1-12
REGISTERED CIVIL ENGINEER DATE

7-9-2012
PLANS APPROVAL DATE

REGISTERED PROFESSIONAL ENGINEER TIMOTHY J. POWELL No. C 61037 Exp. 12-31-12 CIVIL STATE OF CALIFORNIA

THE STATE OF CALIFORNIA OR ITS OFFICERS OR AGENTS SHALL NOT BE RESPONSIBLE FOR THE ACCURACY OR COMPLETENESS OF ELECTRONIC COPIES OF THIS PLAN SHEET.

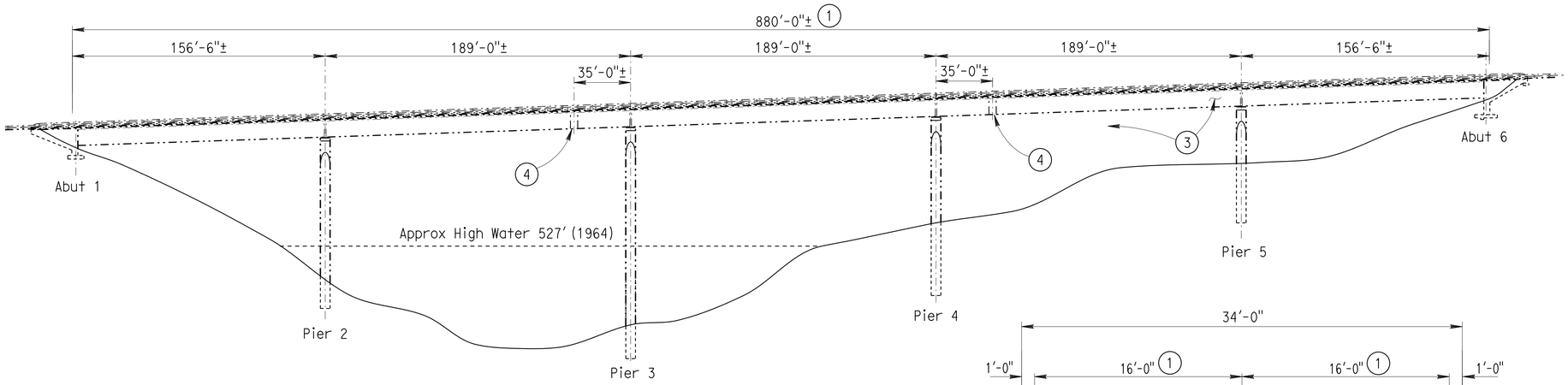

ELEVATION

1" = 40'

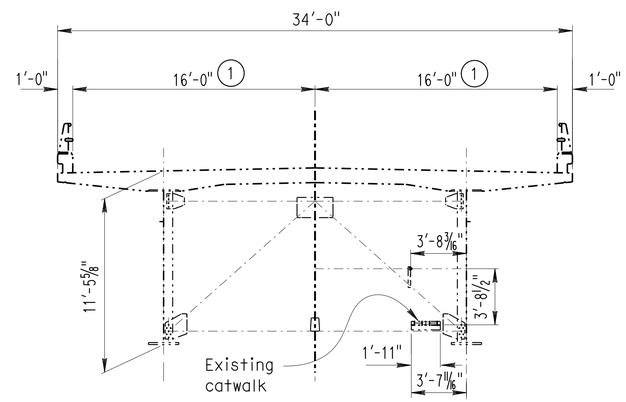

TYPICAL SECTION

1" = 5'

SALMON RIVER	BRIDGE NO 02-0177
QUANTITIES	
REMOVE UNSOUND CONCRETE	141 CF
PREPARE CONCRETE BRIDGE DECK SURFACE	28,160 SQFT
BRIDGE REMOVAL (PORTION), LOCATION 1	LUMP SUM
CONCRETE BARRIER END BLOCK	26 LF
CLEAN EXPANSION JOINT	66 LF
RAPID SETTING CONCRETE (PATCH)	141 CF
FURNISH POLYESTER CONCRETE OVERLAY	2,112 CF
PLACE POLYESTER CONCRETE OVERLAY	28,160 SQFT
JOINT SEAL (MR 1½")	66 LF
CLEAN STRUCTURAL STEEL (EXISTING BRIDGE)	LUMP SUM
PAINT STRUCTURAL STEEL (EXISTING BRIDGE)	LUMP SUM
SPOT BLAST CLEAN AND PAINT UNDERCOAT	6,300 SQFT
WORK AREA MONITORING	LUMP SUM
MISCELLANEOUS METAL (BRIDGE)	3,070 LB

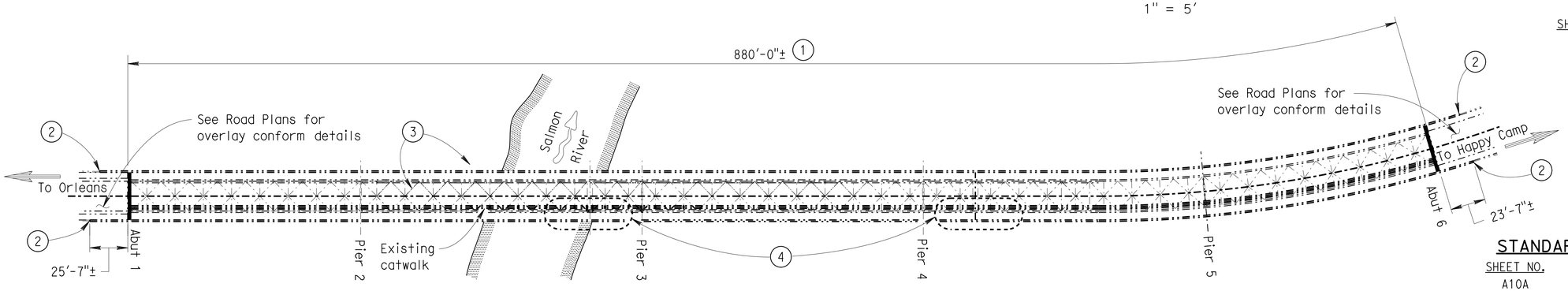

SALMON RIVER

BR NO. 02-0177, Sis, ROUTE 96, PM R0.04
1" = 40'

NOTES: (APPLY TO ALL SHEETS)
Indicates existing.

THE CONTRACTOR SHALL VERIFY ALL CONTROLLING FIELD DIMENSIONS BEFORE ORDERING OR FABRICATING ANY MATERIAL.

STANDARD PLAN SHEET NUMBER
DETAIL NUMBER

NOTES: (APPLY TO THIS SHEET ONLY)

Indicates location of remove existing joint seal and replace with new joint seal. See JOINT SEAL AND DECK REPAIR DETAILS sheet.

(1) Indicates location of prepare bridge deck and place ¾" minimum thick polyester concrete overlay.

(2) Indicates location of construct barrier end blocks. See "End Block Thrie Beam Connection Details" on THRIE BEAM CONNECTION DETAILS NO. 1 sheet

(3) Indicates location of spot blast clean portions of failed paint system and paint undercoat, area = 6300 ft^2 and as directed by the Engineer. Repaint the entire steel portions of the bridge, total area = 63,000 ft^2.

(4) Indicates location of remove existing timber planks and replace with deck grating. See "Deck Grate Details" on MISCELLANEOUS DETAILS NO. 1 sheet.

INDEX TO PLANS

SHEET NO.	TITLE
1	GENERAL PLAN NO. 1
2	GENERAL PLAN NO. 2
3	GENERAL PLAN NO. 3
4	GENERAL PLAN NO. 4
5	GENERAL PLAN NO. 5
6	MISCELLANEOUS DETAILS NO. 1
7	MISCELLANEOUS DETAILS NO. 2
8	THRIE BEAM CONNECTION DETAILS NO. 1
9	THRIE BEAM CONNECTION DETAILS NO. 2
10	THRIE BEAM CONNECTION DETAILS NO. 3
11	THRIE BEAM CONNECTION DETAILS NO. 4
12	JOINT SEAL AND DECK REPAIR DETAILS

STANDARD PLANS DATED MAY 2006

SHEET NO.	TITLE
A10A	ACRONYMS AND ABBREVIATIONS (SHEET 1 OF 2)
A10B	ACRONYMS AND ABBREVIATIONS (SHEET 2 OF 2)
RSP B6-21	JOINT SEALS (MAXIMUM MOVEMENT RATING = 2")
RSP A77J2	METAL BEAM GUARD RAILING CONNECTIONS TO BRIDGE RAILINGS WITHOUT SIDEWALKS DETAILS NO. 2
RSP A77J4	METAL BEAM GUARD RAILING TRANSITION RAILING (TYPE WB)
A77K2	METAL BEAM GUARD RAILING CONNECTIONS TO BRIDGE RAILINGS WITH SIDEWALKS DETAILS NO.2

Michael J. Lee 3-22-11
DESIGN ENGINEER

DESIGN	BY Tim Powell	CHECKED Hossein Moazami	LAYOUT	BY Hallstrom/Bidwell	CHECKED Hossein Moazami
DETAILS	BY Hallstrom/Bidwell	CHECKED Hossein Moazami	SPECIFICATIONS	BY Todd Geerts	PLANS AND SPECIFICATIONS COMPARED Tim Powell
QUANTITIES	BY Tim Powell	CHECKED Hossein Moazami			

STATE OF CALIFORNIA
DEPARTMENT OF TRANSPORTATION

DIVISION OF MAINTENANCE
STRUCTURE MAINTENANCE DESIGN

BRIDGE NO. VARIOUS
POST MILE VARIES

ROUTE 96 BRIDGES
GENERAL PLAN NO. 1

STRUCTURES MAINTENANCE GENERAL PLAN & DETAIL SHEET (ENGLISH) (REV. 10/17/07)

ORIGINAL SCALE IN INCHES FOR REDUCED PLANS 0 1 2 3

UNIT: 3488
PROJECT NUMBER & PHASE: 02120000811

DISREGARD PRINTS BEARING EARLIER REVISION DATES 3-22-11

REVISION DATES

SHEET 1 OF 12

CONTRACT NO.: 02-2E2914 PROJECT ID: X

FILE => 02-2e2914_01gp1.dgn

USERNAME => s115152 DATE PLOTTED => 11-JUL-2012 TIME PLOTTED => 12:19

DIST	COUNTY	ROUTE	POST MILES TOTAL PROJECT	SHEET NO.	TOTAL SHEETS
02	Sis	96	R0.0/77.3	48	58

T J Powell 6-1-12
REGISTERED CIVIL ENGINEER DATE

7-9-2012
PLANS APPROVAL DATE

REGISTERED PROFESSIONAL ENGINEER TIMOTHY J. POWELL No. C 61037 Exp. 12-31-12 CIVIL STATE OF CALIFORNIA

THE STATE OF CALIFORNIA OR ITS OFFICERS OR AGENTS SHALL NOT BE RESPONSIBLE FOR THE ACCURACY OR COMPLETENESS OF ELECTRONIC COPIES OF THIS PLAN SHEET.

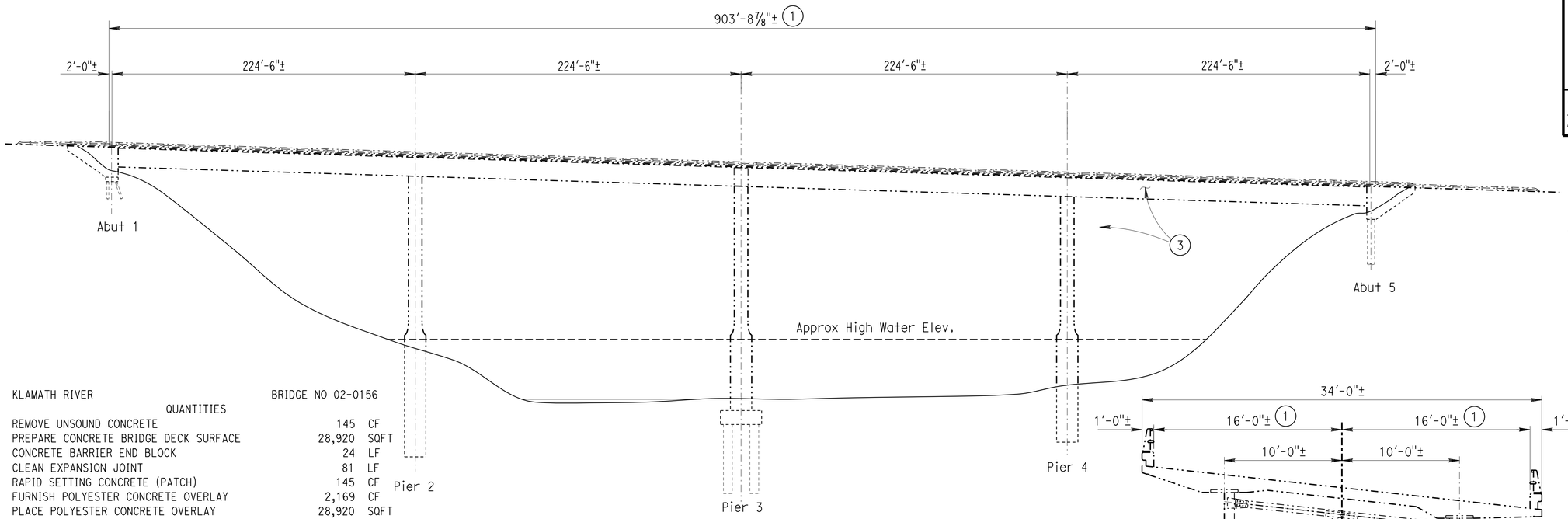

ELEVATION

1" = 40'

KLAMATH RIVER BRIDGE NO 02-0156

QUANTITIES

REMOVE UNSOUND CONCRETE	145	CF
PREPARE CONCRETE BRIDGE DECK SURFACE	28,920	SQFT
CONCRETE BARRIER END BLOCK	24	LF
CLEAN EXPANSION JOINT	81	LF
RAPID SETTING CONCRETE (PATCH)	145	CF
FURNISH POLYESTER CONCRETE OVERLAY	2,169	CF
PLACE POLYESTER CONCRETE OVERLAY	28,920	SQFT
BONDED JOINT SEAL (MR 2")	81	LF
CLEAN STRUCTURAL STEEL (EXISTING BRIDGE)	LUMP	SUM
PAINT STRUCTURAL STEEL (EXISTING BRIDGE)	LUMP	SUM
SPOT BLAST CLEAN AND PAINT UNDERCOAT	9,100	SQFT
WORK AREA MONITORING	LUMP	SUM

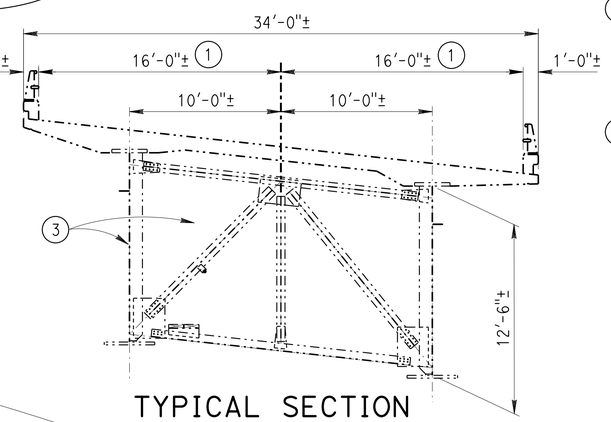

TYPICAL SECTION

1" = 5'

NOTES: (APPLY TO THIS SHEET ONLY)

Indicates location of remove existing joint seal and replace with new bonded joint seal. See JOINT SEAL DETAILS sheet.

(1) Indicates location of prepare bridge deck and place ¾" minimum thick polyester concrete overlay.

(2) Indicates location of construct barrier end blocks. See "End Block Thrie Beam Connection Details" on THRIE BEAM CONNECTION DETAILS NO. 1 sheet

(3) Indicates location of spot blast clean portions of failed paint system and paint undercoat, area = 9100 ft² and as directed by the Engineer. Repaint the entire steel portions of the bridge, total area = 91,175 ft².

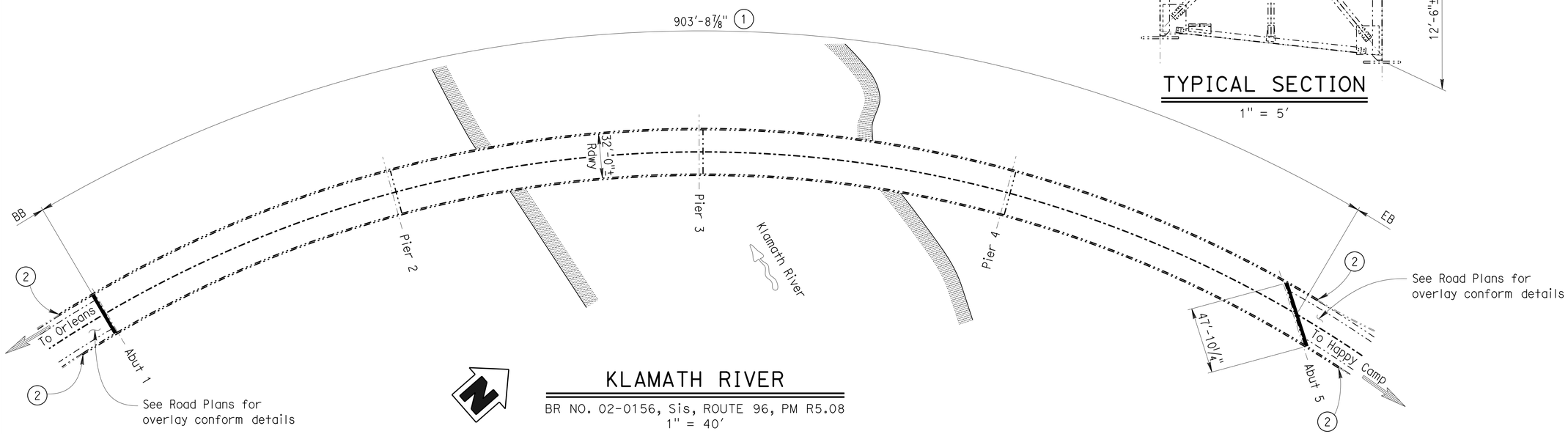

KLAMATH RIVER

BR NO. 02-0156, Sis, ROUTE 96, PM R5.08
1" = 40'

Michael J. Lee 3-22-11 DESIGN ENGINEER	DESIGN	BY Tim Powell	CHECKED Hossein Moazami	LAYOUT	BY Hallstrom/Bidwell	CHECKED Hossein Moazami	STATE OF CALIFORNIA DEPARTMENT OF TRANSPORTATION	DIVISION OF MAINTENANCE STRUCTURE MAINTENANCE DESIGN	BRIDGE NO. VARIOUS
	DETAILS	BY Hallstrom/Bidwell	CHECKED Hossein Moazami	SPECIFICATIONS	BY Todd Geerts	PLANS AND SPECIFICATIONS COMPARED Tim Powell			POST MILE VARIES
	QUANTITIES	BY Tim Powell	CHECKED Hossein Moazami						

ROUTE 96 BRIDGES

GENERAL PLAN NO. 2

STRUCTURES MAINTENANCE GENERAL PLAN & DETAIL SHEET (ENGLISH) (REV. 10/17/07)

ORIGINAL SCALE IN INCHES FOR REDUCED PLANS 0 1 2 3

UNIT: 3488
PROJECT NUMBER & PHASE: 02120000811

DISREGARD PRINTS BEARING EARLIER REVISION DATES 3-22-11

REVISION DATES

SHEET 2 OF 12

FILE => 02-2e2914_02gp2.dgn

CONTRACT NO.: 02-2E2914 PROJECT ID: X

USERNAME => s115152 DATE PLOTTED => 11-JUL-2012 TIME PLOTTED => 12:19

DIST	COUNTY	ROUTE	POST MILES TOTAL PROJECT	SHEET NO.	TOTAL SHEETS
02	Sis	96	R0.0/77.3	49	58

T J Powell 6-1-12
REGISTERED CIVIL ENGINEER DATE

7-9-2012
PLANS APPROVAL DATE

REGISTERED PROFESSIONAL ENGINEER TIMOTHY J. POWELL No. C 61037 Exp. 12-31-12 CIVIL STATE OF CALIFORNIA

THE STATE OF CALIFORNIA OR ITS OFFICERS OR AGENTS SHALL NOT BE RESPONSIBLE FOR THE ACCURACY OR COMPLETENESS OF ELECTRONIC COPIES OF THIS PLAN SHEET.

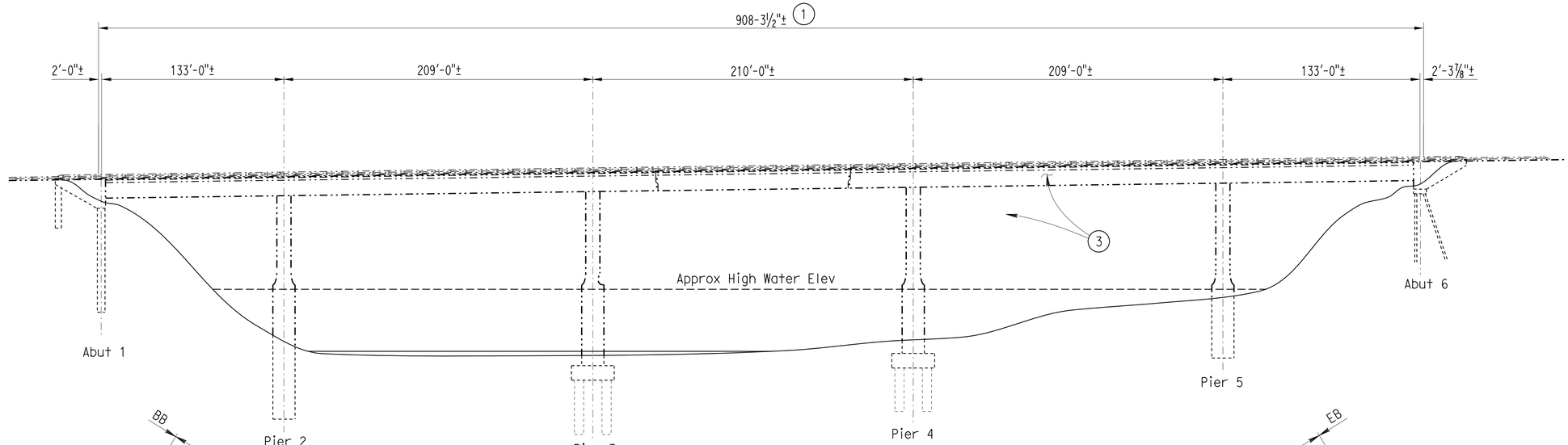

ELEVATION

1" = 40'

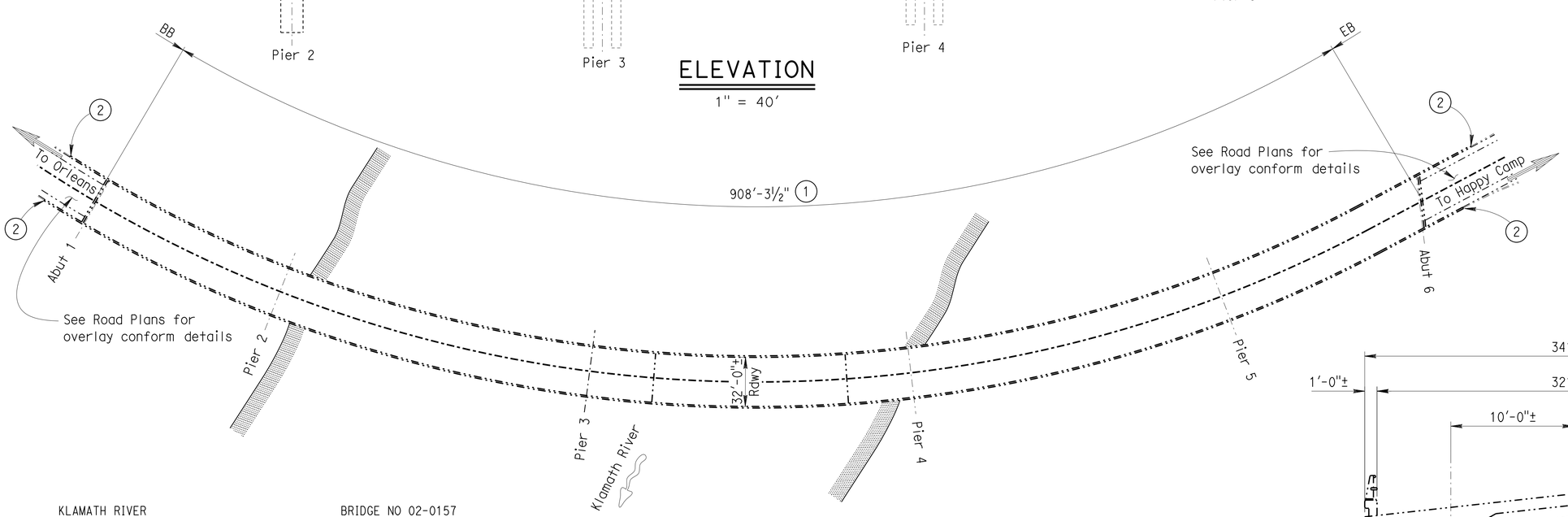

KLAMATH RIVER

BR NO. 02-0157, Sis, ROUTE 96, PM R5.75
1" = 40'

KLAMATH RIVER BRIDGE NO 02-0157

QUANTITIES

REMOVE UNSOUND CONCRETE	145	CF
PREPARE CONCRETE BRIDGE DECK SURFACE	29,064	SQFT
REMOVE CHIP SEAL	29,064	SQFT
CONCRETE BARRIER END BLOCK	24	LF
RAPID SETTING CONCRETE (PATCH)	145	CF
FURNISH POLYESTER CONCRETE OVERLAY	2,180	CF
PLACE POLYESTER CONCRETE OVERLAY	29,064	SQFT
CLEAN STRUCTURAL STEEL (EXISTING BRIDGE)	LUMP	SUM
PAINT STRUCTURAL STEEL (EXISTING BRIDGE)	LUMP	SUM
SPOT BLAST CLEAN AND PAINT UNDERCOAT	7,300	SQFT
WORK AREA MONITORING	LUMP	SUM

NOTES: (APPLY TO THIS SHEET ONLY)

(1) Indicates location of remove chip seal from deck and prepare bridge deck and place ¾" minimum thick polyester concrete overlay.

(2) Indicates location of construct barrier end blocks. See "End Block Thrie Beam Connection Details" on THRIE BEAM CONNECTION DETAILS NO. 1 sheet

(3) Indicates location of spot blast clean portions of failed paint system and paint undercoat, area = 7300 ft^2 and as directed by the Engineer. Repaint the entire steel portions of the bridge, total area = 73,400 ft^2.

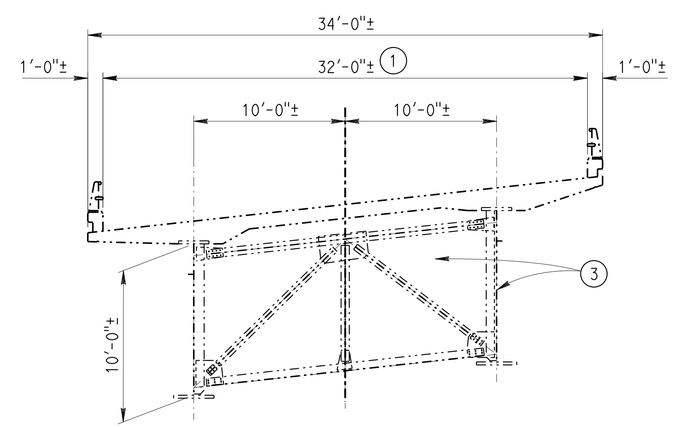

TYPICAL SECTION

1" = 5'

Michael J. Lee 3-22-11
DESIGN ENGINEER

DESIGN	BY Tim Powell	CHECKED Hossein Moazami	LAYOUT	BY Hallstrom/Bidwell	CHECKED Hossein Moazami
DETAILS	BY Hallstrom/Bidwell	CHECKED Hossein Moazami	SPECIFICATIONS	BY Todd Geerts	PLANS AND SPECIFICATIONS COMPARED Tim Powell
QUANTITIES	BY Tim Powell	CHECKED Hossein Moazami			

STATE OF CALIFORNIA
DEPARTMENT OF TRANSPORTATION

DIVISION OF MAINTENANCE
STRUCTURE MAINTENANCE DESIGN

BRIDGE NO. VARIOUS
POST MILE VARIES

ROUTE 96 BRIDGES
GENERAL PLAN NO. 3

STRUCTURES MAINTENANCE GENERAL PLAN & DETAIL SHEET (ENGLISH) (REV. 10/17/07)

ORIGINAL SCALE IN INCHES FOR REDUCED PLANS 0 1 2 3

UNIT: 3488
PROJECT NUMBER & PHASE: 02120000811

DISREGARD PRINTS BEARING EARLIER REVISION DATES 3-22-11

REVISION DATES

SHEET 3 OF 12

FILE => 02-2e2914_03gp3.dgn

CONTRACT NO.: 02-2E2914 PROJECT ID: X

USERNAME => s115152 DATE PLOTTED => 11-JUL-2012 TIME PLOTTED => 12:19

DIST	COUNTY	ROUTE	POST MILES TOTAL PROJECT	SHEET NO.	TOTAL SHEETS
02	Sis	96	R0.0/77.3	50	58

REGISTERED CIVIL ENGINEER 6-1-12 DATE

7-9-2012
PLANS APPROVAL DATE

REGISTERED PROFESSIONAL ENGINEER TIMOTHY J. POWELL No. C 61037 Exp. 12-31-12 CIVIL STATE OF CALIFORNIA

THE STATE OF CALIFORNIA OR ITS OFFICERS OR AGENTS SHALL NOT BE RESPONSIBLE FOR THE ACCURACY OR COMPLETENESS OF ELECTRONIC COPIES OF THIS PLAN SHEET.

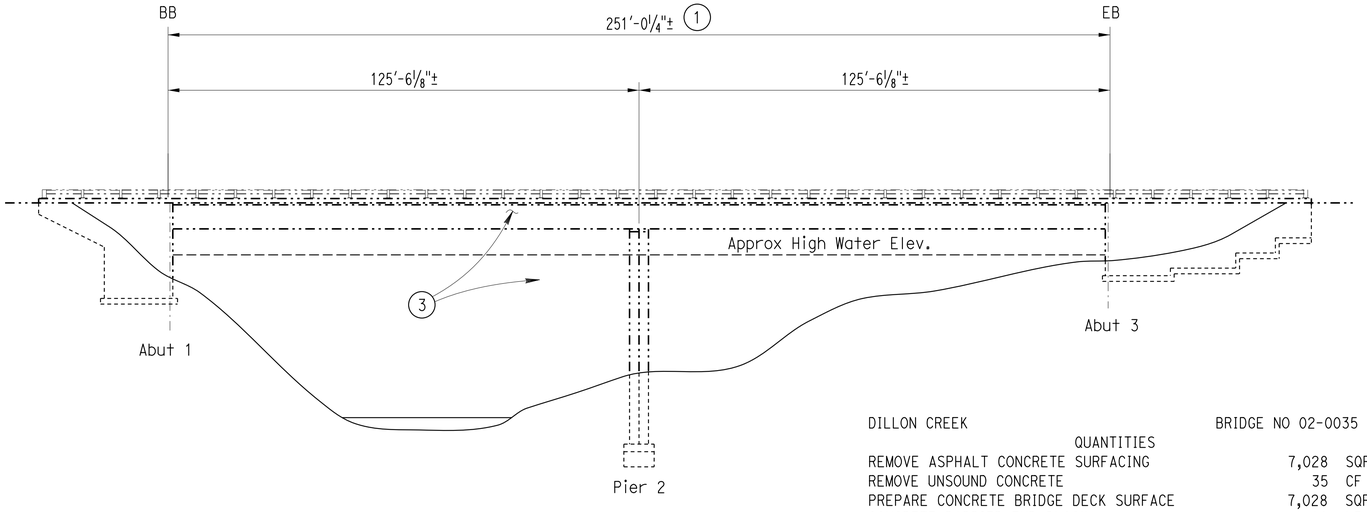

ELEVATION

1" = 20'

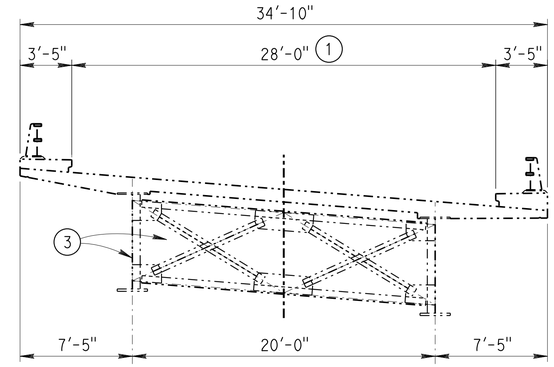

TYPICAL SECTION

BR NO. 02-0035
1" = 5'

DILLON CREEK BRIDGE NO 02-0035

QUANTITIES		
REMOVE ASPHALT CONCRETE SURFACING	7,028	SQFT
REMOVE UNSOUND CONCRETE	35	CF
PREPARE CONCRETE BRIDGE DECK SURFACE	7,028	SQFT
CONCRETE BARRIER END BLOCK	20	LF
RAPID SETTING CONCRETE (PATCH)	35	CF
FURNISH POLYESTER CONCRETE OVERLAY	527	CF
PLACE POLYESTER CONCRETE OVERLAY	7,028	SQFT
CLEAN STRUCTURAL STEEL (EXISTING BRIDGE)	LUMP	SUM
PAINT STRUCTURAL STEEL (EXISTING BRIDGE)	LUMP	SUM
SPOT BLAST CLEAN AND PAINT UNDERCOAT	1,300	SQFT
WORK AREA MONITORING	LUMP	SUM

NOTES: (APPLY TO THIS SHEET ONLY)

(1) Indicates location of remove ±4" AC from bridge deck, prepare bridge deck and place ¾" minimum thick polyester concrete overlay.

(2) Indicates location of construct barrier end blocks. See "End Block Thrie Beam Connection Details" on THRIE BEAM CONNECTION DETAILS NO. 3 sheet

(2a) Indicates location of construct barrier end blocks. See "End Block Thrie Beam Connection Details" on THRIE BEAM CONNECTION DETAILS NO. 2 sheet

(3) Indicates location of spot blast clean portions of failed paint system and paint undercoat, area = 1300 ft^2 and as directed by the Engineer. Repaint the entire steel portions of the bridge, total area = 13,750 ft^2.

(4) Indicates location of prepare bridge deck and place ¾" minimum thick polyester concrete overlay.

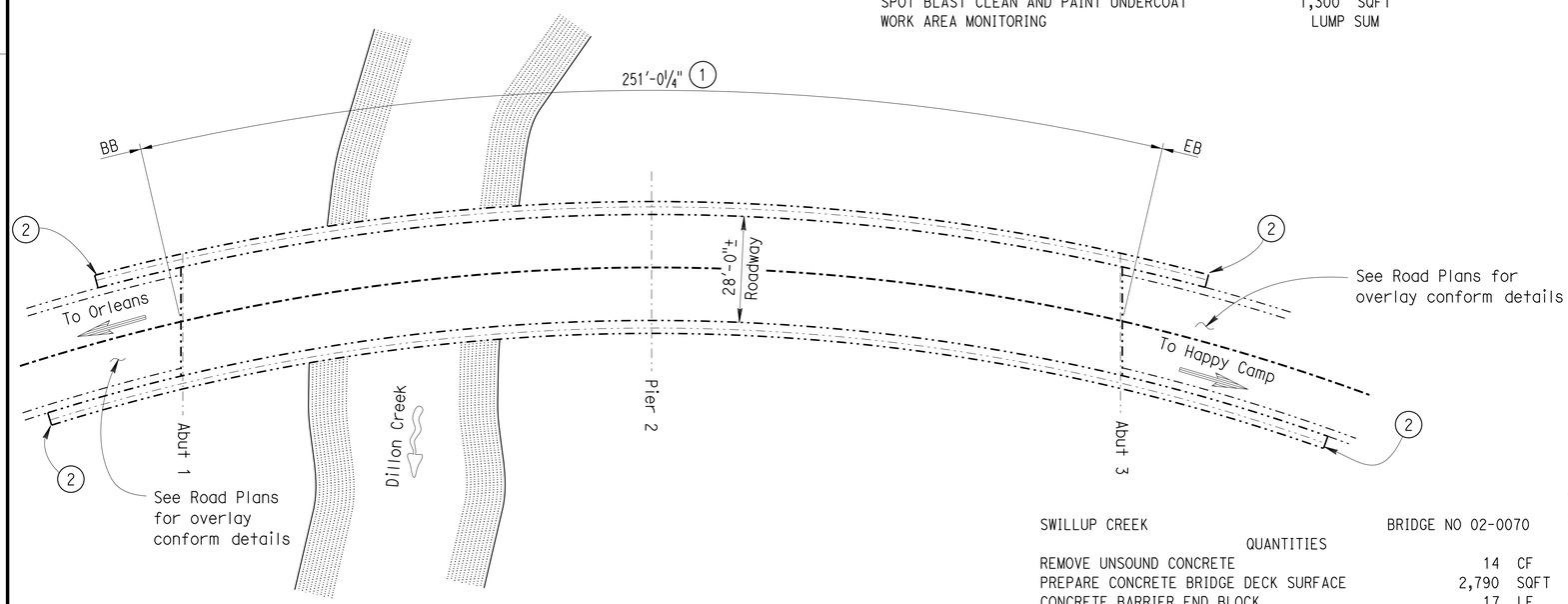

DILLON CREEK

BR NO. 02-0035, Sis, ROUTE 96, PM R16.13
1" = 20'

SWILLUP CREEK BRIDGE NO 02-0070

QUANTITIES		
REMOVE UNSOUND CONCRETE	14	CF
PREPARE CONCRETE BRIDGE DECK SURFACE	2,790	SQFT
CONCRETE BARRIER END BLOCK	17	LF
RAPID SETTING CONCRETE (PATCH)	14	CF
FURNISH POLYESTER CONCRETE OVERLAY	209	CF
PLACE POLYESTER CONCRETE OVERLAY	2,790	SQFT

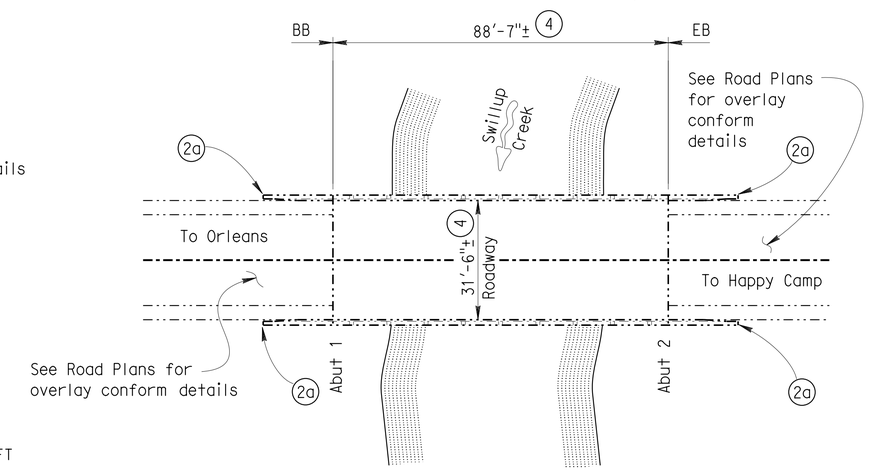

SWILLUP CREEK

BR NO. 02-0070, Sis, ROUTE 96, PM 23.25
1" = 20'

Michael J. Lee 3-22-11
DESIGN ENGINEER

DESIGN	BY Tim Powell	CHECKED Hossein Moazami	LAYOUT	BY Hallstrom/Bidwell	CHECKED Hossein Moazami
DETAILS	BY Hallstrom/Bidwell	CHECKED Hossein Moazami	SPECIFICATIONS	BY Todd Geerts	PLANS AND SPECIFICATIONS COMPARED Tim Powell
QUANTITIES	BY Tim Powell	CHECKED Hossein Moazami			

STATE OF CALIFORNIA
DEPARTMENT OF TRANSPORTATION

DIVISION OF MAINTENANCE
STRUCTURE MAINTENANCE DESIGN

BRIDGE NO. VARIOUS
POST MILE VARIES

ROUTE 96 BRIDGES
GENERAL PLAN NO. 4

STRUCTURES MAINTENANCE GENERAL PLAN & DETAIL SHEET (ENGLISH) (REV. 10/17/07)

ORIGINAL SCALE IN INCHES FOR REDUCED PLANS 0 1 2 3

UNIT: 3488
PROJECT NUMBER & PHASE: 02120000811

DISREGARD PRINTS BEARING EARLIER REVISION DATES 3-22-11

REVISION DATES

SHEET 4 OF 12

FILE => 02-2e2914_04gp4.dgn

CONTRACT NO.: 02-2E2914 PROJECT ID: X

USERNAME => s115152 DATE PLOTTED => 11-JUL-2012 TIME PLOTTED => 12:19

DIST	COUNTY	ROUTE	POST MILES TOTAL PROJECT	SHEET NO.	TOTAL SHEETS
02	Sis	96	R0.0/77.3	51	58

TJ Powell 6-1-12
REGISTERED CIVIL ENGINEER DATE

7-9-2012
PLANS APPROVAL DATE

REGISTERED PROFESSIONAL ENGINEER TIMOTHY J. POWELL No. C 61037 Exp. 12-31-12 CIVIL STATE OF CALIFORNIA

THE STATE OF CALIFORNIA OR ITS OFFICERS OR AGENTS SHALL NOT BE RESPONSIBLE FOR THE ACCURACY OR COMPLETENESS OF ELECTRONIC COPIES OF THIS PLAN SHEET.

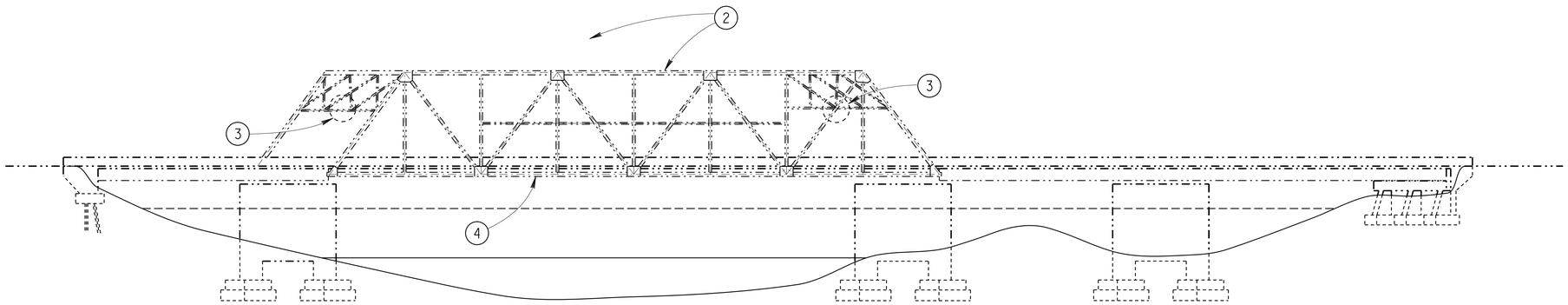

KLAMATH RIVER BRIDGE NO 02-0117

QUANTITIES

BRIDGE REMOVAL (PORTION), LOCATION 6	LUMP SUM
CONCRETE BARRIER END BLOCK	36 LF
REPAIR SPALLED SURFACE AREA	4 SQFT
STRUCTURAL STEEL (BRIDGE)	177 LB
CLEAN STRUCTURAL STEEL (EXISTING BRIDGE)	LUMP SUM
PAINT STRUCTURAL STEEL (EXISTING BRIDGE)	LUMP SUM
CLEAN AND PAINT STRUCTURAL STEEL	LUMP SUM
SPOT BLAST CLEAN AND PAINT UNDERCOAT	5,250 SQFT
WORK AREA MONITORING	LUMP SUM

ELEVATION

1" = 20'

NOTES: (APPLY TO THIS SHEET ONLY)

1. Indicates location of construct barrier end blocks. See "End Block Thrie Beam Connection Details" on THRIE BEAM CONNECTION DETAILS NO. 4 sheet
2. Indicates location of spot blast clean portions of failed paint system and paint undercoat, area = 5250 ft^2 and as directed by the Engineer. Repaint the entire steel portions of the bridge, total area = 35,600 ft^2.
3. Indicates location of replace portion of damaged end portal bracing. For details see "Portal Bracing Repair" on MISCELLANEOUS DETAILS NO. 2 sheet.
4. Indicates location of clean and patch soffit spall, approx area = 4 ft^2.

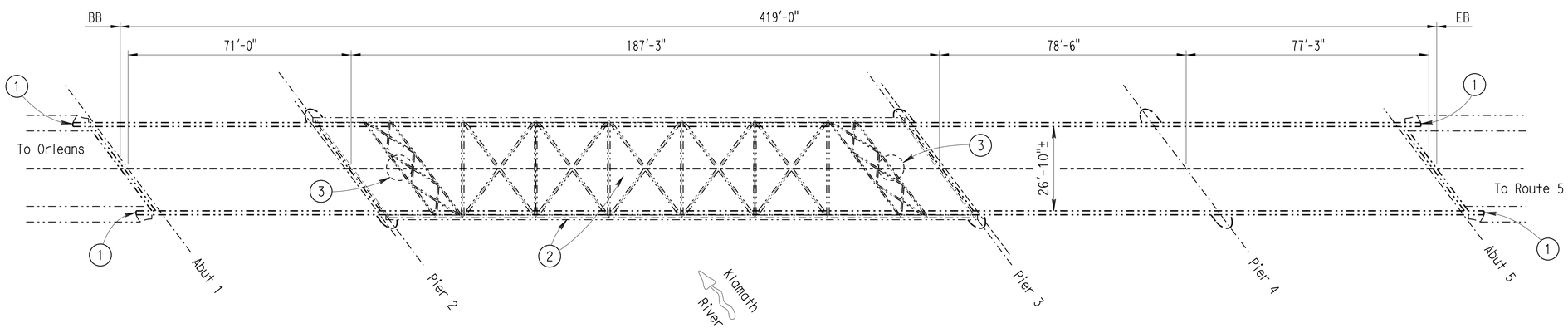

KLAMATH RIVER

BR NO. 02-0117, Sis, ROUTE 96, PM 77.15
1" = 20'

Michael J. Lee 3-22-11 DESIGN ENGINEER	DESIGN	BY Tim Powell	CHECKED Hossein Moazami	LAYOUT	BY Hallstrom/Bidwell	CHECKED Hossein Moazami	STATE OF CALIFORNIA DEPARTMENT OF TRANSPORTATION
	DETAILS	BY Hallstrom/Bidwell	CHECKED Hossein Moazami	SPECIFICATIONS	BY Todd Geerts	PLANS AND SPECIFICATIONS COMPARED Tim Powell	
	QUANTITIES	BY Tim Powell	CHECKED Hossein Moazami				

STRUCTURES MAINTENANCE GENERAL PLAN & DETAIL SHEET (ENGLISH) (REV. 10/17/07)

ORIGINAL SCALE IN INCHES FOR REDUCED PLANS 0 1 2 3

DIVISION OF MAINTENANCE
STRUCTURE MAINTENANCE DESIGN

UNIT: 3488
PROJECT NUMBER & PHASE: 02120000811

BRIDGE NO. VARIOUS
POST MILE VARIES

DISREGARD PRINTS BEARING EARLIER REVISION DATES 3-22-11

REVISION DATES

ROUTE 96 BRIDGES

GENERAL PLAN NO. 5

SHEET 5 OF 12

FILE => 02-2e2914_05gp5.dgn

CONTRACT NO.: 02-2E2914 PROJECT ID: X

USERNAME => s115152 DATE PLOTTED => 11-JUL-2012 TIME PLOTTED => 12:19

DIST	COUNTY	ROUTE	POST MILES TOTAL PROJECT	SHEET NO.	TOTAL SHEETS
02	Sis	96	R0.0/77.3	52	58

TJ Powell 6-1-12
REGISTERED CIVIL ENGINEER DATE

7-9-2012
PLANS APPROVAL DATE

REGISTERED PROFESSIONAL ENGINEER TIMOTHY J. POWELL No. C 61037 Exp. 12-31-12 CIVIL STATE OF CALIFORNIA

THE STATE OF CALIFORNIA OR ITS OFFICERS OR AGENTS SHALL NOT BE RESPONSIBLE FOR THE ACCURACY OR COMPLETENESS OF ELECTRONIC COPIES OF THIS PLAN SHEET.

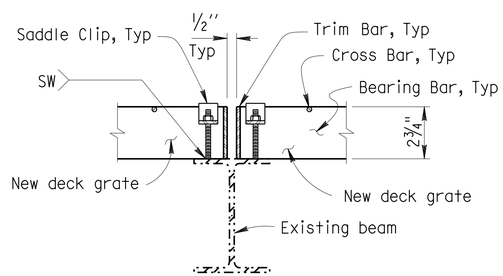

SECTION A-A

3" = 1'-0"

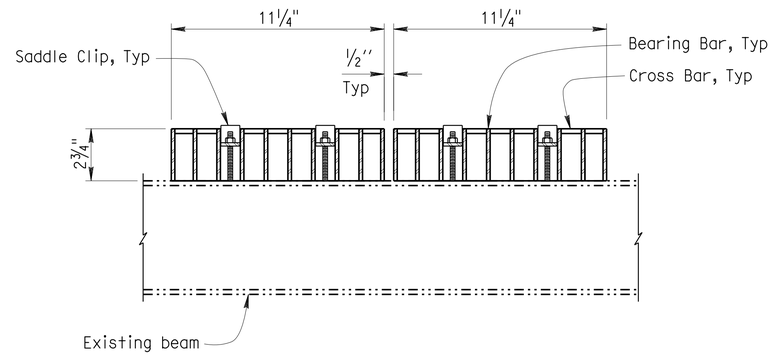

SECTION B-B

3" = 1'-0"

1. Metal Work Notes :
   a. All metal work shall be hot dip galvanized after fabrication.
   b. All lock washers shall be helical spring lock washers.
   c. Welded Steel Grate : Unless otherwise noted
      Bearing Bars 2 3/4'' x 3/16'' @ 1 3/16'' C-C
      Cross Bars @ 4'' C-C
      Trim Bars 1 1/4'' x 3/16'' fillet welded to ends of Bearing Bars

   Grate shall be anchored to supports with 1/4'' Ø threaded stud and ''Saddle Clip'' type fastener as reccomended by the manufacturer. Fasteners shall be installed at 3'-0'' C-C maximum 6'' from ends with 3 minimum per fixed grate.

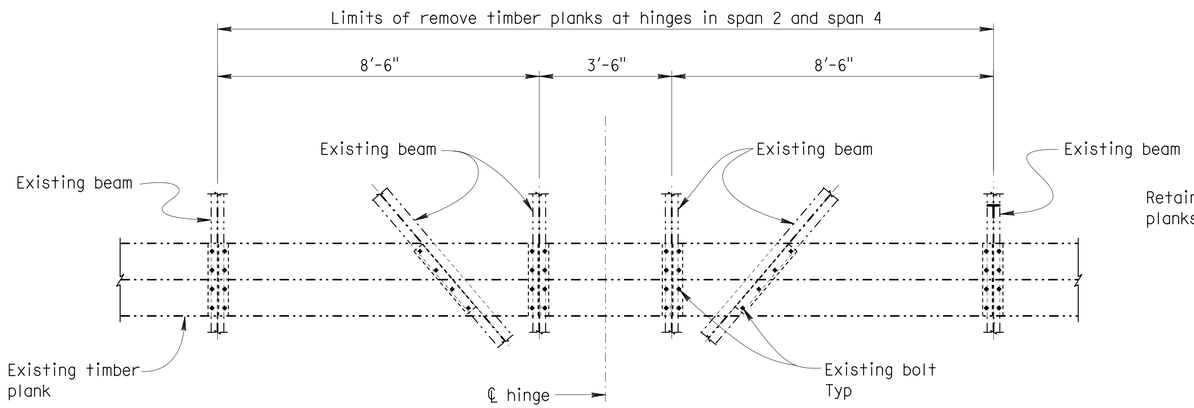

EXISTING CATWALK (PORTION)

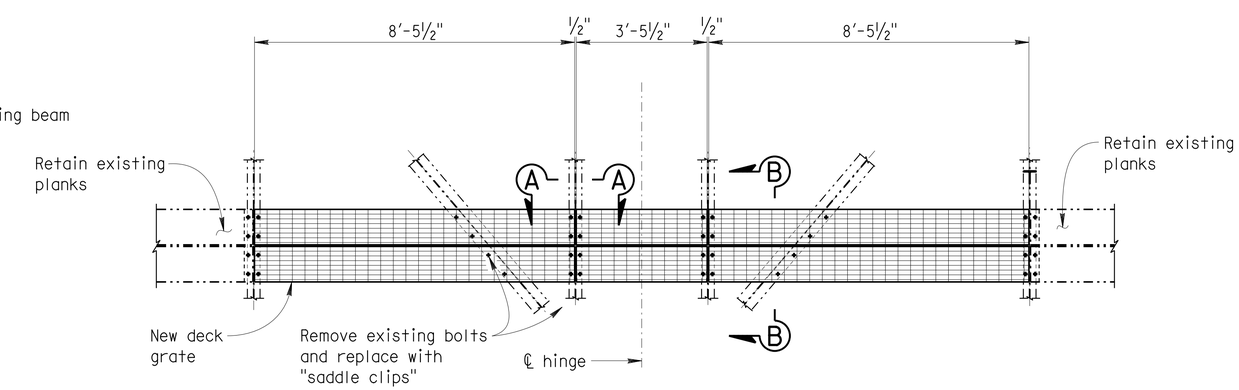

RECONSTRUCTION CATWALK (PORTION)

DECK GRATE DETAILS

1/2" = 1'-0"

BR. NO. 02-0177

DESIGN	BY Tim Powell	CHECKED Hossein Moazami	
DETAILS	BY Hallstrom/Bidwell	CHECKED Hossein Moazami	
QUANTITIES	BY Tim Powell	CHECKED Hossein Moazami	

STATE OF CALIFORNIA DEPARTMENT OF TRANSPORTATION

DIVISION OF MAINTENANCE STRUCTURE MAINTENANCE DESIGN

BRIDGE NO. VARIOUS
POST MILE VARIES

ROUTE 96 BRIDGES

MISCELLANEOUS DETAILS NO. 1

STRUCTURES MAINTENANCE GENERAL PLAN & DETAIL SHEET (ENGLISH) (REV. 10/17/07)

ORIGINAL SCALE IN INCHES FOR REDUCED PLANS 0 1 2 3

UNIT: 3488
PROJECT NUMBER & PHASE: 02120000811

DISREGARD PRINTS BEARING EARLIER REVISION DATES 3-22-11

REVISION DATES

SHEET 6 OF 12

FILE => 02-2e2914_06misc_dets1.dgn

CONTRACT NO.: 02-2E2914 PROJECT ID: X

USERNAME => s115152 DATE PLOTTED => 11-JUL-2012 TIME PLOTTED => 12:20

DIST	COUNTY	ROUTE	POST MILES TOTAL PROJECT	SHEET NO.	TOTAL SHEETS
02	Sis	96	R0.0/77.3	53	58

REGISTERED CIVIL ENGINEER 6-1-12 DATE

7-9-2012
PLANS APPROVAL DATE

REGISTERED PROFESSIONAL ENGINEER TIMOTHY J. POWELL No. C 61037 Exp. 12-31-12 CIVIL STATE OF CALIFORNIA

THE STATE OF CALIFORNIA OR ITS OFFICERS OR AGENTS SHALL NOT BE RESPONSIBLE FOR THE ACCURACY OR COMPLETENESS OF ELECTRONIC COPIES OF THIS PLAN SHEET.

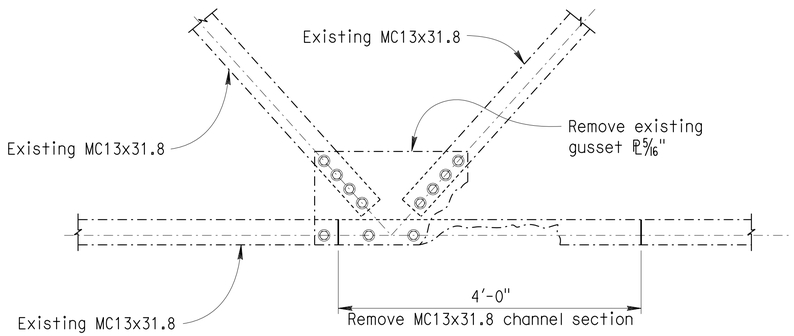

EXISTING

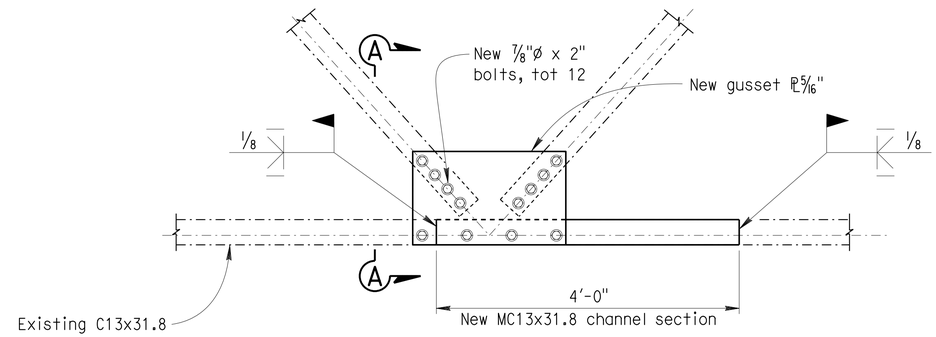

RECONSTRUCTION

DETAIL 1

1" = 1'-0"

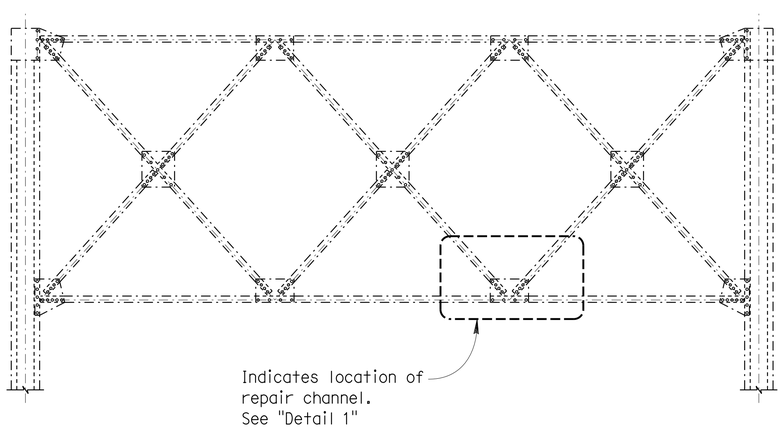

PORTAL BRACING REPAIR

BR. NO. 02-0117
1/4" = 1'-0"

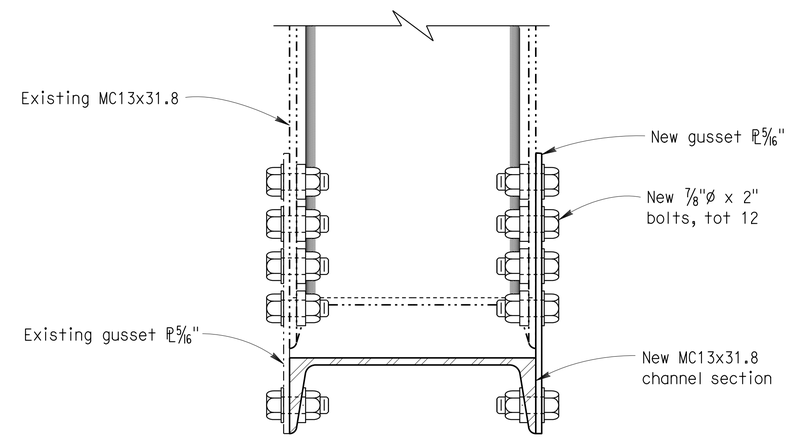

SECTION A-A

3" = 1'-0"

DESIGN	BY Tim Powell	CHECKED Hossein Moazami	
DETAILS	BY Hallstrom/Bidwell	CHECKED Hossein Moazami	
QUANTITIES	BY Tim Powell	CHECKED Hossein Moazami	

STATE OF CALIFORNIA
DEPARTMENT OF TRANSPORTATION

DIVISION OF MAINTENANCE
STRUCTURE MAINTENANCE DESIGN

BRIDGE NO. VARIOUS
POST MILE VARIES

ROUTE 96 BRIDGES
MISCELLANEOUS DETAILS NO. 2

STRUCTURES MAINTENANCE GENERAL PLAN & DETAIL SHEET (ENGLISH) (REV. 10/17/07)

ORIGINAL SCALE IN INCHES FOR REDUCED PLANS 0 1 2 3

UNIT: 3488
PROJECT NUMBER & PHASE: 02120000811

DISREGARD PRINTS BEARING EARLIER REVISION DATES 3-22-11

REVISION DATES

SHEET 7 OF 12

FILE => 02-2e2914_07misc_dets2.dgn

CONTRACT NO.: 02-2E2914 PROJECT ID: X

USERNAME => s115152 DATE PLOTTED => 11-JUL-2012 TIME PLOTTED => 12:20

DIST	COUNTY	ROUTE	POST MILES TOTAL PROJECT	SHEET NO.	TOTAL SHEETS
02	Sis	96	R0.0/77.3	54	58

TJ Powell 6-1-12
REGISTERED CIVIL ENGINEER DATE

7-9-2012
PLANS APPROVAL DATE

REGISTERED PROFESSIONAL ENGINEER TIMOTHY J. POWELL No. C 61037 Exp. 12-31-12 CIVIL STATE OF CALIFORNIA

THE STATE OF CALIFORNIA OR ITS OFFICERS OR AGENTS SHALL NOT BE RESPONSIBLE FOR THE ACCURACY OR COMPLETENESS OF ELECTRONIC COPIES OF THIS PLAN SHEET.

NOTES: (APPLY TO THIS SHEET ONLY)

Indicates limits of remove existing concrete.

For additional information see "Notes" on THRIE BEAM CONNECTION DETAILS NO. 2 sheet.

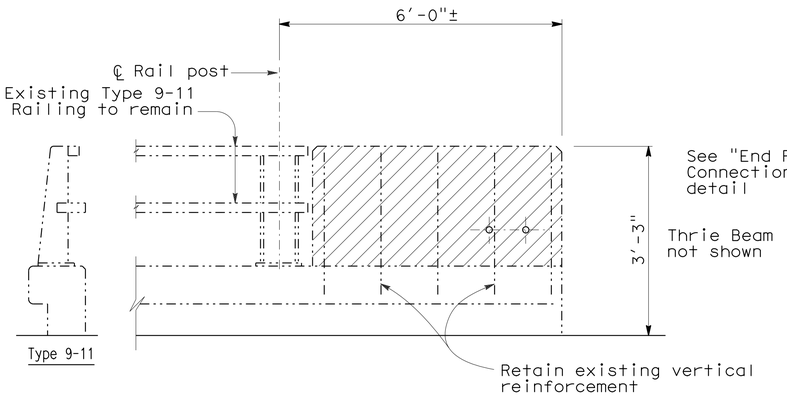

EXISTING

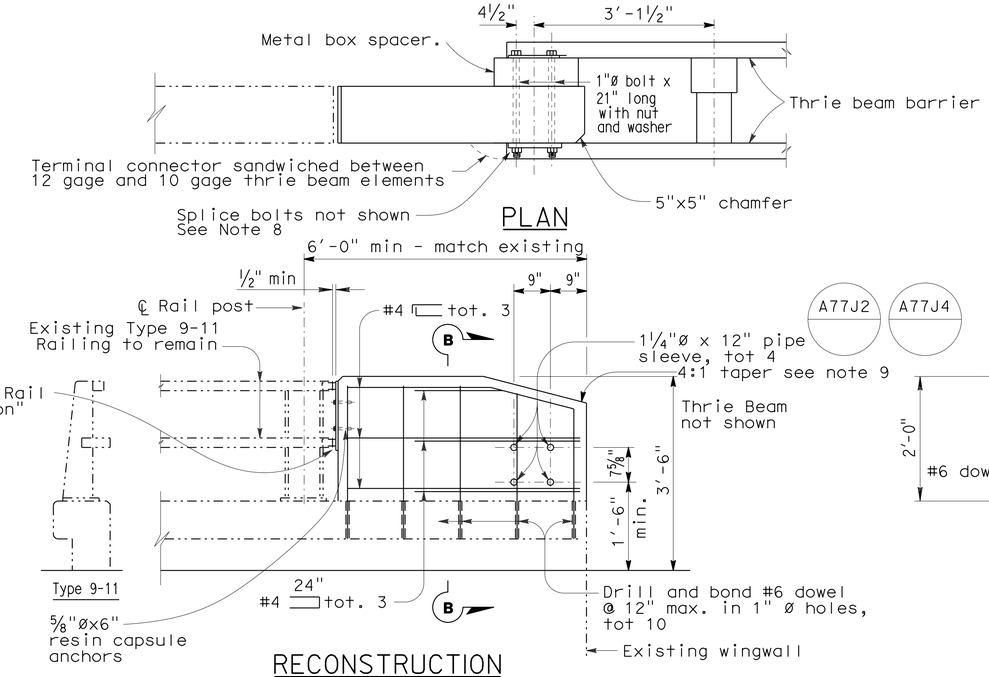

RECONSTRUCTION

ELEVATION
NO SCALE
BR. NO. 02-0156 and BR. NO. 02-0157

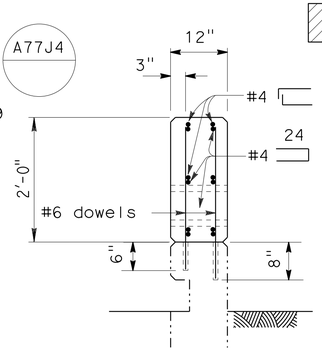

SECTION B-B

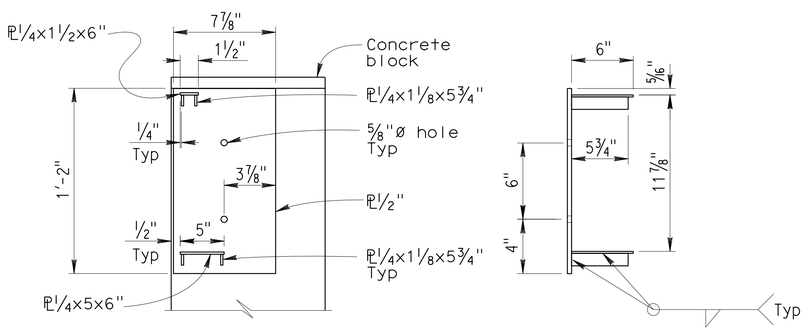

END RAIL CONNECTION DETAILS
NO SCALE

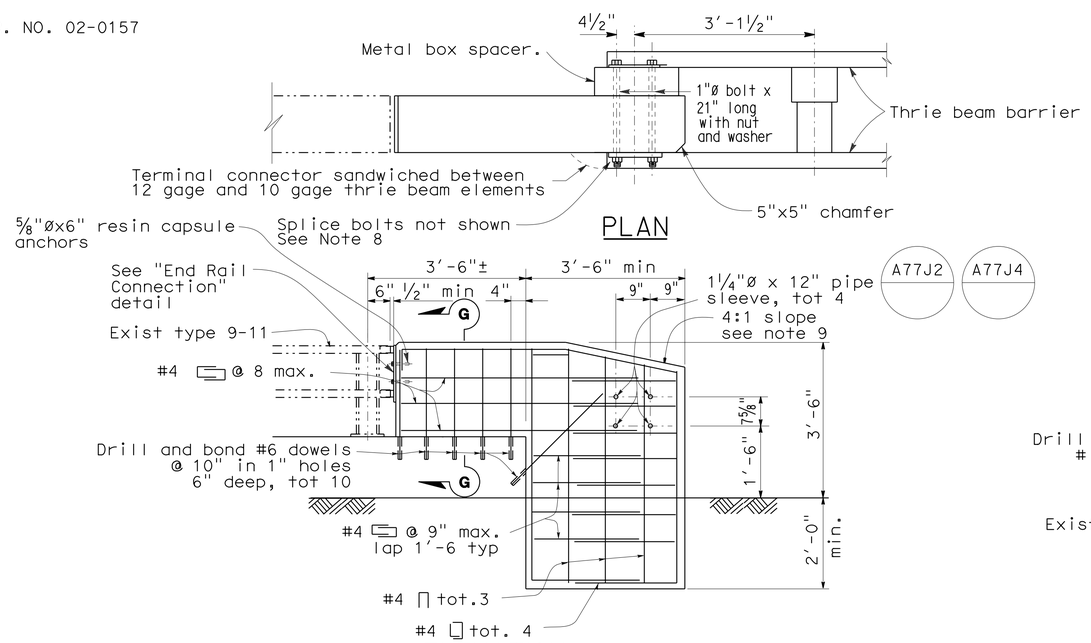

ELEVATION
NO SCALE
BR. NO. 02-0177

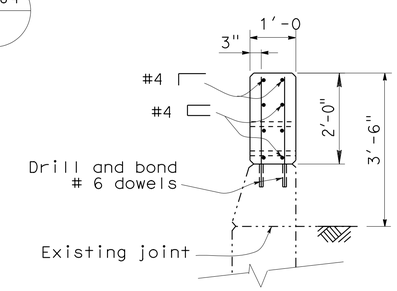

SECTION G-G

DESIGN	BY Tim Powell	CHECKED Hossein Moazami	
DETAILS	BY Hallstrom/Bidwell	CHECKED Hossein Moazami	
QUANTITIES	BY Tim Powell	CHECKED Hossein Moazami	

STATE OF CALIFORNIA
DEPARTMENT OF TRANSPORTATION

DIVISION OF MAINTENANCE
STRUCTURE MAINTENANCE DESIGN

BRIDGE NO. VARIOUS
POST MILE VARIES

ROUTE 96 BRIDGES
THRIE BEAM CONNECTION DETAILS NO. 1

STRUCTURES MAINTENANCE GENERAL PLAN & DETAIL SHEET (ENGLISH) (REV. 10/17/07)

ORIGINAL SCALE IN INCHES FOR REDUCED PLANS 0 1 2 3

UNIT: 3488
PROJECT NUMBER & PHASE: 02120000811

DISREGARD PRINTS BEARING EARLIER REVISION DATES 3-22-11

REVISION DATES

SHEET 8 OF 12

FILE => 02-2e2914_08thrie_bm_conn_dets1.dgn

CONTRACT NO.: 02-2E2914 PROJECT ID: X

USERNAME => s115152 DATE PLOTTED => 11-JUL-2012 TIME PLOTTED => 12:20

DIST	COUNTY	ROUTE	POST MILES TOTAL PROJECT	SHEET NO.	TOTAL SHEETS
02	Sis	96	R0.0/77.3	55	58

TJ Powell 6-1-12
REGISTERED CIVIL ENGINEER DATE

7-9-2012
PLANS APPROVAL DATE

REGISTERED PROFESSIONAL ENGINEER TIMOTHY J. POWELL No. C 61037 Exp. 12-31-12 CIVIL STATE OF CALIFORNIA

THE STATE OF CALIFORNIA OR ITS OFFICERS OR AGENTS SHALL NOT BE RESPONSIBLE FOR THE ACCURACY OR COMPLETENESS OF ELECTRONIC COPIES OF THIS PLAN SHEET.

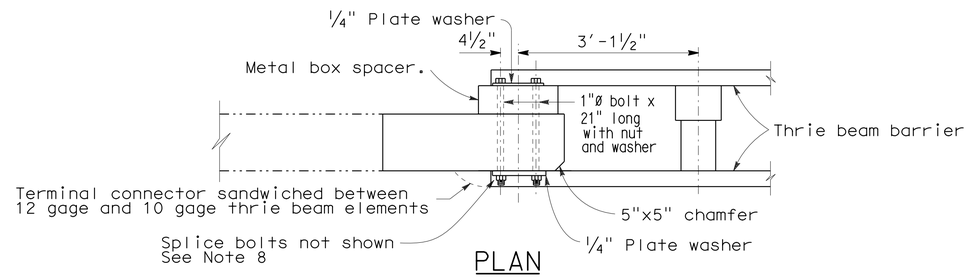

PLAN

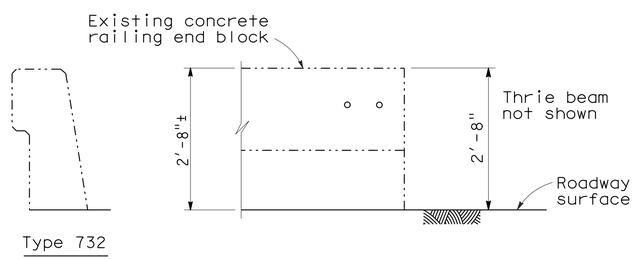

EXISTING

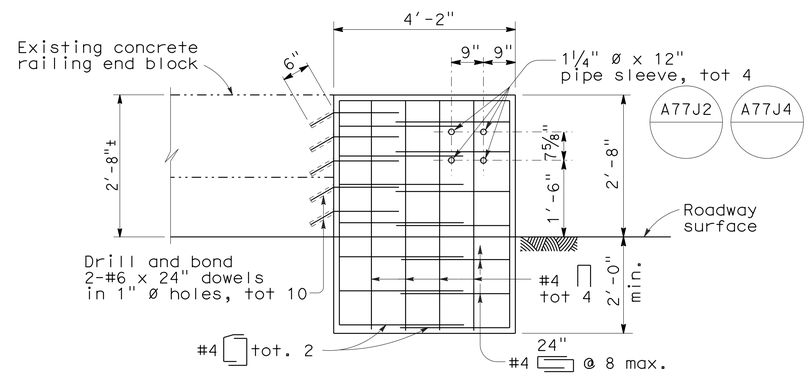

RECONSTRUCTION

ELEVATION
NO SCALE
BR. NO. 02-0070

NOTES:

1. For details not shown, see Standard Plans.
2. Dependent dimensions will be verified in the field before fabricating any end connection to conform with existing paved conditions.
3. When end section is called for, modify typical terminal section to fit. See detail E sheet 2.
4. For Thrie Beam connection, see Standard Plans "Thrie beam barrier connections to Bridge Railing".
5. All plates and bolts are galvanized.
6. Cut and remove that portion of Type 9, 9-11 and BAGR as required.
7. If rail is not continuous over 2 posts, use splice at expansion joint.
8. Exterior splice bolt holes shall be the standard 7/8" x 1 1/8" slot size for rail splices at Post # T4 and the connection to the concrete barrier or railing. Interior splice bolt holes may be increased up to 1 1/8" dia. Washers shall be used with splice bolts on back side of rail element at Post # T4 and connection to the concrete barrier or railing.
9. Taper the top of the end of the bridge railing at 4:1 to match the top elevation of the thrie beam rail element.

DESIGN	BY Tim Powell	CHECKED Hossein Moazami	
DETAILS	BY Hallstrom/Bidwell	CHECKED Hossein Moazami	
QUANTITIES	BY Tim Powell	CHECKED Hossein Moazami	

STATE OF CALIFORNIA
DEPARTMENT OF TRANSPORTATION

DIVISION OF MAINTENANCE
STRUCTURE MAINTENANCE DESIGN

BRIDGE NO. VARIOUS
POST MILE VARIES

ROUTE 96 BRIDGES
THRIE BEAM CONNECTION DETAILS NO. 2

STRUCTURES MAINTENANCE GENERAL PLAN & DETAIL SHEET (ENGLISH) (REV. 10/17/07)

ORIGINAL SCALE IN INCHES FOR REDUCED PLANS 0 1 2 3

UNIT: 3488
PROJECT NUMBER & PHASE: 02120000811

DISREGARD PRINTS BEARING EARLIER REVISION DATES 3-22-11

REVISION DATES

SHEET 9 OF 12

FILE => 02-2e2914_09thrie_bm_conn_dets2.dgn

CONTRACT NO.: 02-2E2914 PROJECT ID: X

USERNAME => s115152 DATE PLOTTED => 11-JUL-2012 TIME PLOTTED => 12:20

DIST	COUNTY	ROUTE	POST MILES TOTAL PROJECT	SHEET NO.	TOTAL SHEETS
02	Sis	96	R0.0/77.3	56	58

REGISTERED CIVIL ENGINEER 6-1-12 DATE

7-9-2012
PLANS APPROVAL DATE

REGISTERED PROFESSIONAL ENGINEER TIMOTHY J. POWELL No. C 61037 Exp. 12-31-12 CIVIL STATE OF CALIFORNIA

THE STATE OF CALIFORNIA OR ITS OFFICERS OR AGENTS SHALL NOT BE RESPONSIBLE FOR THE ACCURACY OR COMPLETENESS OF ELECTRONIC COPIES OF THIS PLAN SHEET.

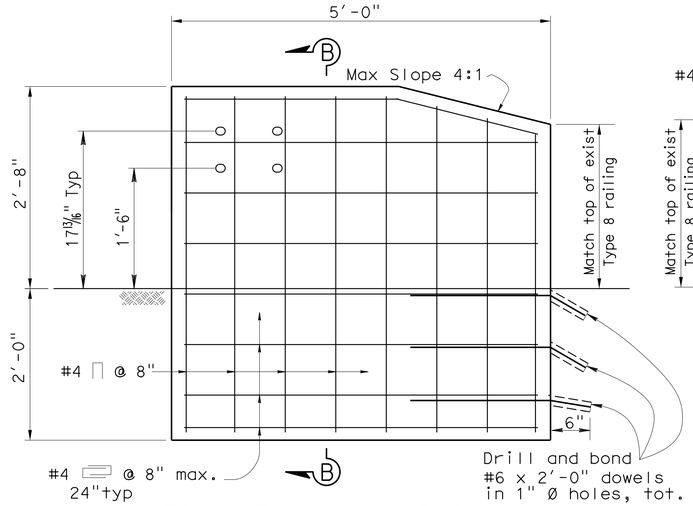

TRANSITION ANCHOR BLOCK REINFORCEMENT ELEVATION

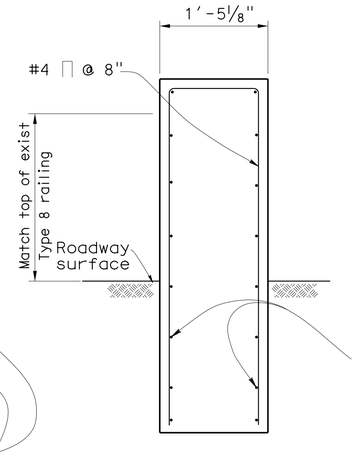

SECTION B-B

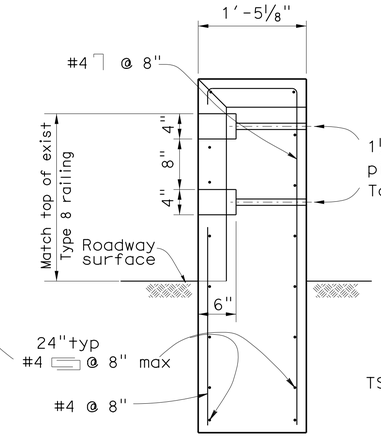

SECTION C-C

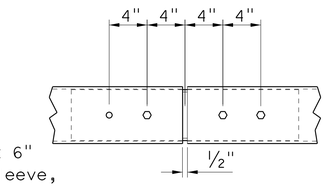

BOTTOM VIEW

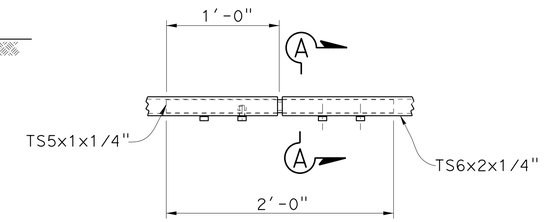

ELEVATION

RAIL SPLICE CONNECTION DETAILS

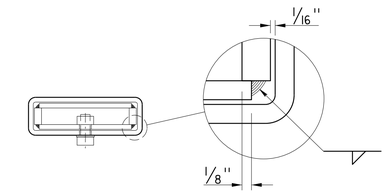

SECTION A-A

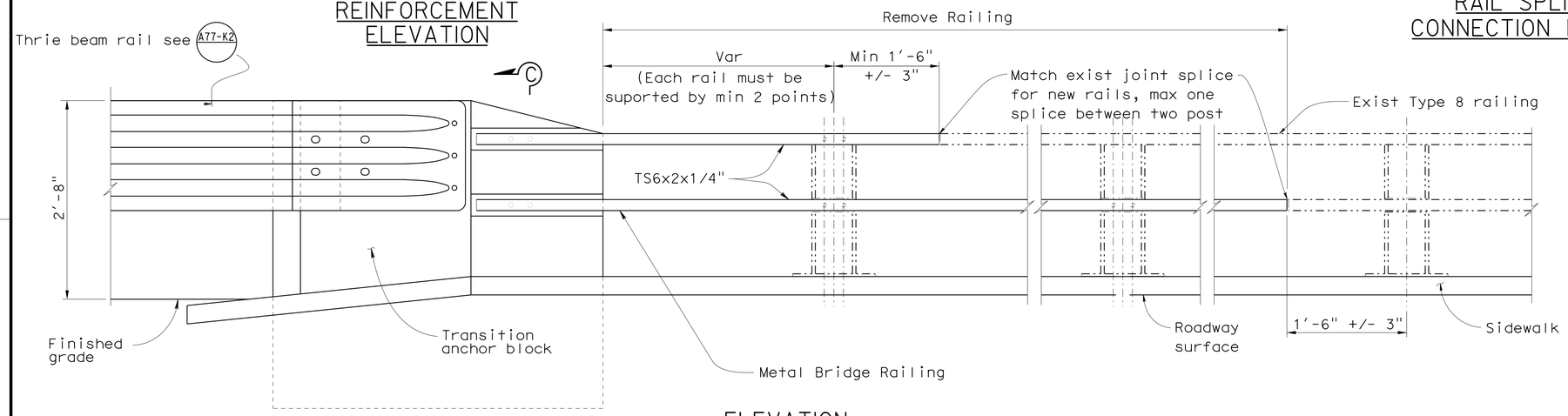

ELEVATION
NO SCALE
BR. NO. 02-0035

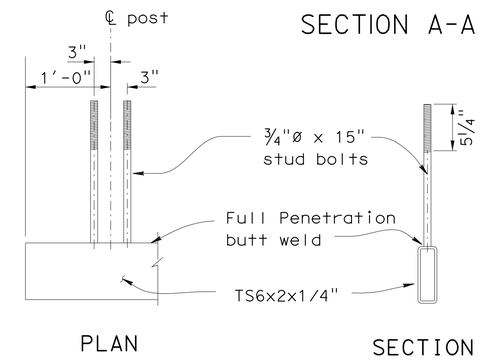

RAIL ANCHOR STUD BOLT DETAIL

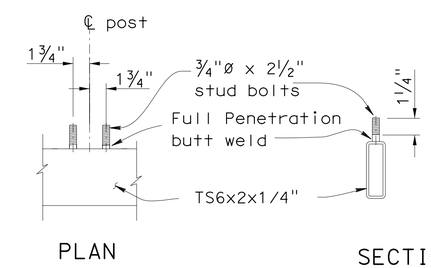

STUD BOLT DETAILS

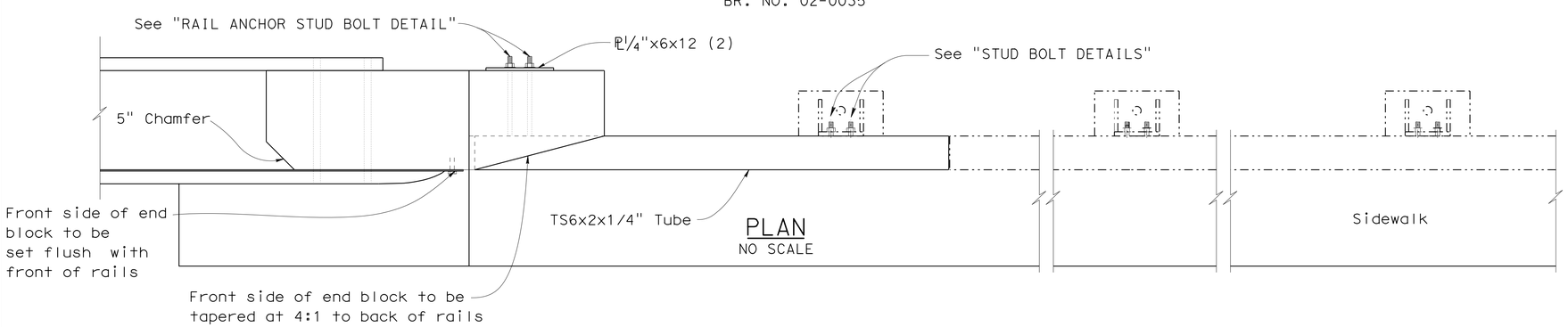

PLAN
NO SCALE

Note:
All steel railing components are galvanized.

DESIGN	BY Tim Powell	CHECKED Hossein Moazami	
DETAILS	BY Hallstrom/Bidwell	CHECKED Hossein Moazami	
QUANTITIES	BY Tim Powell	CHECKED Hossein Moazami	

STATE OF CALIFORNIA
DEPARTMENT OF TRANSPORTATION

DIVISION OF MAINTENANCE
STRUCTURE MAINTENANCE DESIGN

BRIDGE NO. VARIOUS
POST MILE VARIES

ROUTE 96 BRIDGES
THRIE BEAM CONNECTION DETAILS NO. 3

STRUCTURES MAINTENANCE GENERAL PLAN & DETAIL SHEET (ENGLISH) (REV. 10/17/07)

ORIGINAL SCALE IN INCHES FOR REDUCED PLANS 0 1 2 3

UNIT: 3488
PROJECT NUMBER & PHASE: 02120000811

DISREGARD PRINTS BEARING EARLIER REVISION DATES 3-22-11

REVISION DATES

SHEET 10 OF 12

FILE => 02-2e2914_10thrie_bm_conn_dets3.dgn

CONTRACT NO.: 02-2E2914 PROJECT ID: X

USERNAME => s115152 DATE PLOTTED => 11-JUL-2012 TIME PLOTTED => 12:20

DIST	COUNTY	ROUTE	POST MILES TOTAL PROJECT	SHEET NO.	TOTAL SHEETS
02	Sis	96	R0.0/77.3	57	58

REGISTERED CIVIL ENGINEER 6-1-12 DATE

7-9-2012
PLANS APPROVAL DATE

REGISTERED PROFESSIONAL ENGINEER TIMOTHY J. POWELL No. C 61037 Exp. 12-31-11 CIVIL STATE OF CALIFORNIA

THE STATE OF CALIFORNIA OR ITS OFFICERS OR AGENTS SHALL NOT BE RESPONSIBLE FOR THE ACCURACY OR COMPLETENESS OF ELECTRONIC COPIES OF THIS PLAN SHEET.

Note:
All plates and bolts are galvanized.

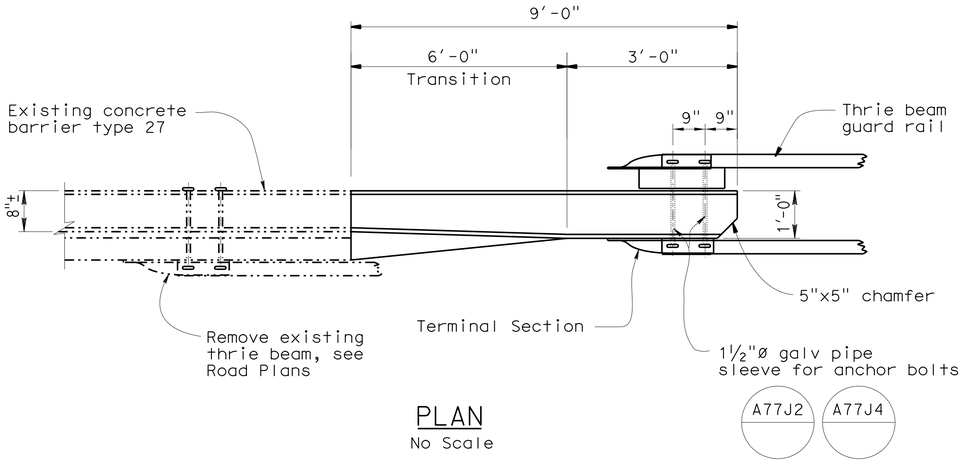

PLAN
No Scale

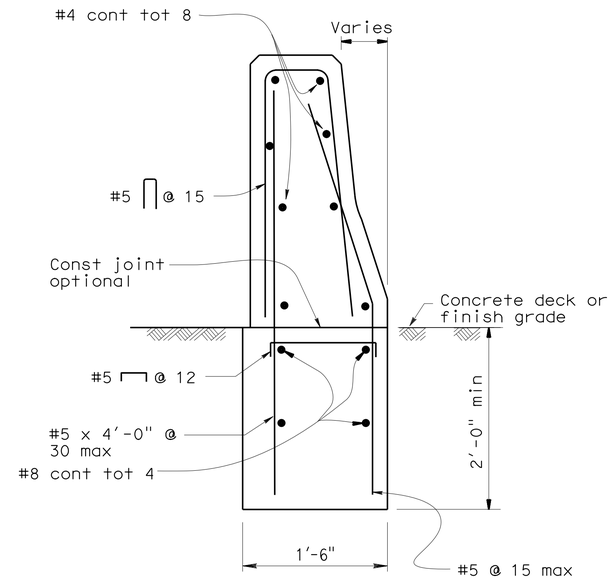

SECTION B-B
No Scale

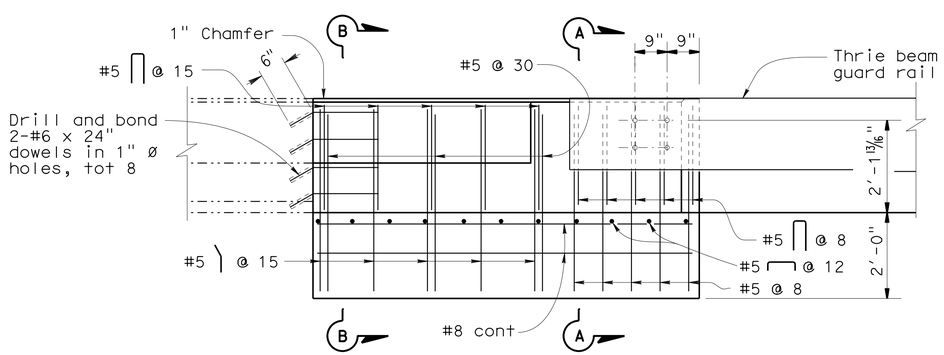

ELEVATION
BR. NO. 02-0117
No Scale

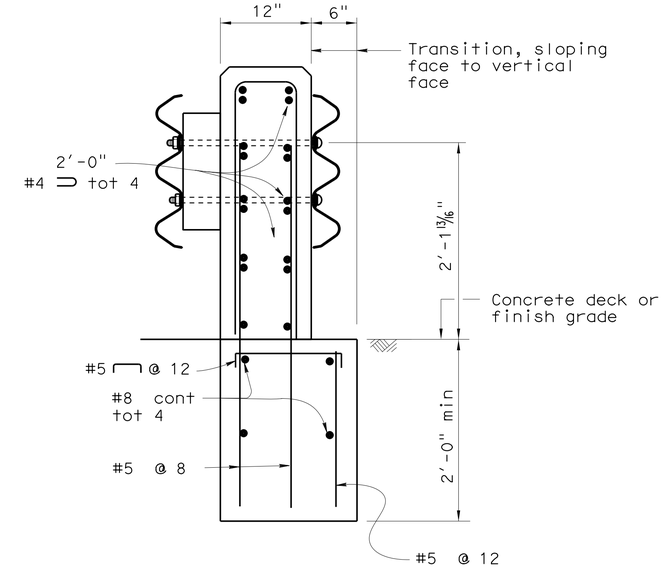

SECTION A-A
No Scale

DESIGN	BY Tim Powell	CHECKED Hossein Moazami	
DETAILS	BY Hallstrom/Bidwell	CHECKED Hossein Moazami	
QUANTITIES	BY Tim Powell	CHECKED Hossein Moazami	

STATE OF CALIFORNIA
DEPARTMENT OF TRANSPORTATION

DIVISION OF MAINTENANCE
STRUCTURE MAINTENANCE DESIGN

BRIDGE NO. VARIOUS
POST MILE VARIES

ROUTE 96 BRIDGES
THRIE BEAM CONNECTION DETAILS NO. 4

STRUCTURES MAINTENANCE GENERAL PLAN & DETAIL SHEET (ENGLISH) (REV. 10/17/07)

ORIGINAL SCALE IN INCHES FOR REDUCED PLANS 0 1 2 3

UNIT: 3488
PROJECT NUMBER & PHASE: 02120000811

DISREGARD PRINTS BEARING EARLIER REVISION DATES 3-22-11

REVISION DATES

SHEET 11 OF 12

FILE => 02-2e2914_11thrie_bm_conn_dets4.dgn
CONTRACT NO.: 02-2E2914 PROJECT ID: X

USERNAME => s115152 DATE PLOTTED => 11-JUL-2012 TIME PLOTTED => 12:20

DIST	COUNTY	ROUTE	POST MILES TOTAL PROJECT	SHEET NO.	TOTAL SHEETS
02	Sis	96	R0.0/77.3	58	58

TJ Powell 6-1-12
REGISTERED CIVIL ENGINEER DATE

7-9-2012
PLANS APPROVAL DATE

REGISTERED PROFESSIONAL ENGINEER TIMOTHY J. POWELL No. C 61037 Exp. 12-31-12 CIVIL STATE OF CALIFORNIA

THE STATE OF CALIFORNIA OR ITS OFFICERS OR AGENTS SHALL NOT BE RESPONSIBLE FOR THE ACCURACY OR COMPLETENESS OF ELECTRONIC COPIES OF THIS PLAN SHEET.

JOINT SEAL TABLE

BRIDGE NAME	BRIDGE NUMBER	LOCATION		MINIMUM "MR" (inches)	APPROXIMATE LENGTH (feet)	EXISTING WATERSTOP	APPROXIMATE DEPTH TO CLEAN EXPANSION JOINT (inches)	APPROXIMATE DEPTH OF JOINT SPALLS (inches)*	APPROXIMATE WIDTH OF JOINT SPALLS (inches)*	APPROXIMATE LENGTH OF JOINT SPALLS (FEET)*
SALMON RIVER	02-0177	Abut 1	BW	1½ ☆	33.0	No	16.0	3.0	6.0	2.0
		Abut 6	BW	1½ ☆	33.0	No	16.0	3.0	6.0	2.0
KLAMATH RIVER	02-0156	Abut 1	BW	2 *	33.0	Yes	8.0	3.0	6.0	2.0
		Abut 5	BW	2 *	48.0	Yes	8.0	3.0	6.0	2.0

LEGEND:
BW = Backwall
☆ = Use Type B joint seal only
* = Use bonded joint seal only

CONCRETE SPALL/DECK REPAIR TABLE

REMOVE UNSOUND CONCRETE
AND PATCH WITH RAPID SETTING CONCRETE

BRIDGE NAME	BRIDGE NUMBER	APPROXIMATE AREA DAMAGED (PERCENT)	APPROXIMATE DEPTH (INCHES)
SALMON RIVER	02-0177	2	3
KLAMATH RIVER	02-0156	2	3
KLAMATH RIVER	02-0157	2	3
DILLON CREEK	02-0035	2	3
SWILLUP CREEK	02-0070	2	3

Locations to be determined by the Engineer.
For details see "DECK & JOINT REPAIR DETAIL".

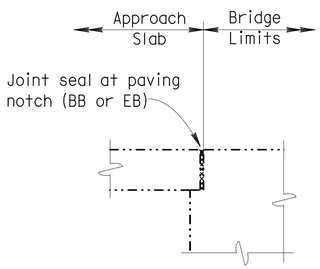

DIAPHRAGM ABUTMENT

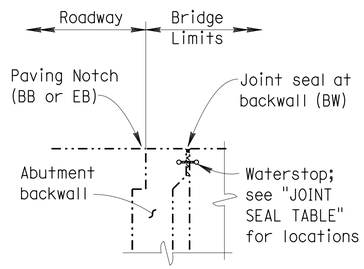

ABUTMENT BACKWALL

JOINT SEAL LOCATION

NO SCALE

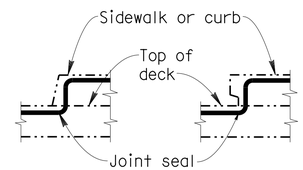

SIDEWALK OR CURB

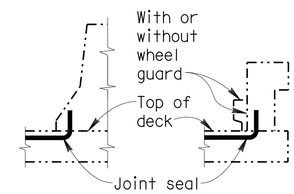

BARRIER RAIL

JOINT SEAL AT LOW SIDE OF DECK

Details shown for illustration purposes only. For use only where deck joint matches the barrier rail joint.
NO SCALE

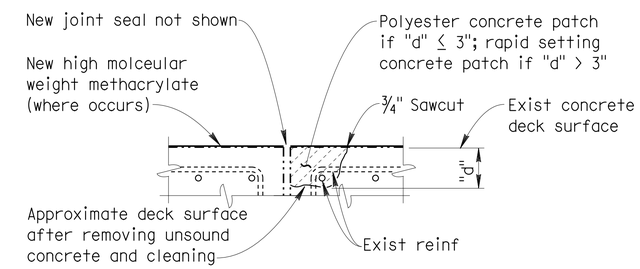

JOINT REPAIR

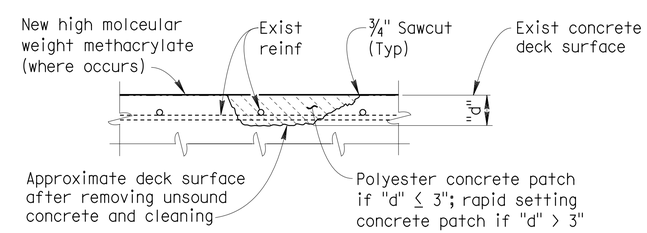

DECK REPAIR

DECK & JOINT REPAIR DETAIL

Reinforcement may be encountered during deck concrete removal and is to remain undamaged.
NO SCALE

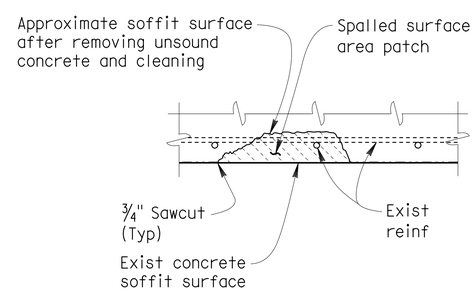

SOFFIT REPAIR DETAIL

BR. NO. 02-0117
NO SCALE

DESIGN	BY Tim Powell	CHECKED Hossein Moazami	STATE OF CALIFORNIA DEPARTMENT OF TRANSPORTATION
DETAILS	BY Hallstrom/Bidwell	CHECKED Hossein Moazami	
QUANTITIES	BY Tim Powell	CHECKED Hossein Moazami	

DIVISION OF MAINTENANCE
STRUCTURE MAINTENANCE DESIGN

BRIDGE NO. VARIOUS
POST MILE VARIES

ROUTE 96 BRIDGES
JOINT SEAL AND DECK REPAIR DETAILS

STRUCTURES MAINTENANCE GENERAL PLAN & DETAIL SHEET (ENGLISH) (REV. 10/17/07)

ORIGINAL SCALE IN INCHES FOR REDUCED PLANS 0 1 2 3

UNIT: 3488
PROJECT NUMBER & PHASE: 02120000811

DISREGARD PRINTS BEARING EARLIER REVISION DATES 3-22-11

REVISION DATES

SHEET 12 OF 12

FILE => 02-2e2914_12joint_deck_dets.dgn

CONTRACT NO.: 02-2E2914 PROJECT ID: X

USERNAME => s115152 DATE PLOTTED => 11-JUL-2012 TIME PLOTTED => 12:20