ACHSSTP-P036(088)E

Dist	COUNTY	ROUTE	POST MILES TOTAL PROJECT	SHEET No.	TOTAL SHEETS
02	Tri	36	36.7/37.1	1	47

STATE OF CALIFORNIA
DEPARTMENT OF TRANSPORTATION

PROJECT PLANS FOR CONSTRUCTION ON
STATE HIGHWAY
IN TRINITY COUNTY
ABOUT 18 MILES EAST OF FOREST GLEN
FROM 1.3 MILES TO 0.9 MILE WEST OF WILD MAD ROAD

TO BE SUPPLEMENTED BY STANDARD PLANS DATED MAY 2006

INDEX OF SHEETS

SHEET No.	DESCRIPTION
1	TITLE AND LOCATION MAP
2-4	TYPICAL CROSS SECTIONS
5-6	LAYOUTS
7-9	PROFILES AND SUPERELEVATION DIAGRAMS
10	CONSTRUCTION DETAILS
11-21	DRAINAGE PLANS, DETAILS AND QUANTITIES
22	CONSTRUCTION AREA SIGNS
23-26	PAVEMENT DELINEATION PLANS, DETAILS AND QUANTITIES
27	SUMMARY OF QUANTITIES
28	ELECTRICAL PLANS
29-47	REVISED AND NEW STANDARD PLANS

THE STANDARD PLANS LIST APPLICABLE TO THIS CONTRACT IS INCLUDED IN THE NOTICE TO BIDDERS AND SPECIAL PROVISIONS BOOK.

LOCATION MAP

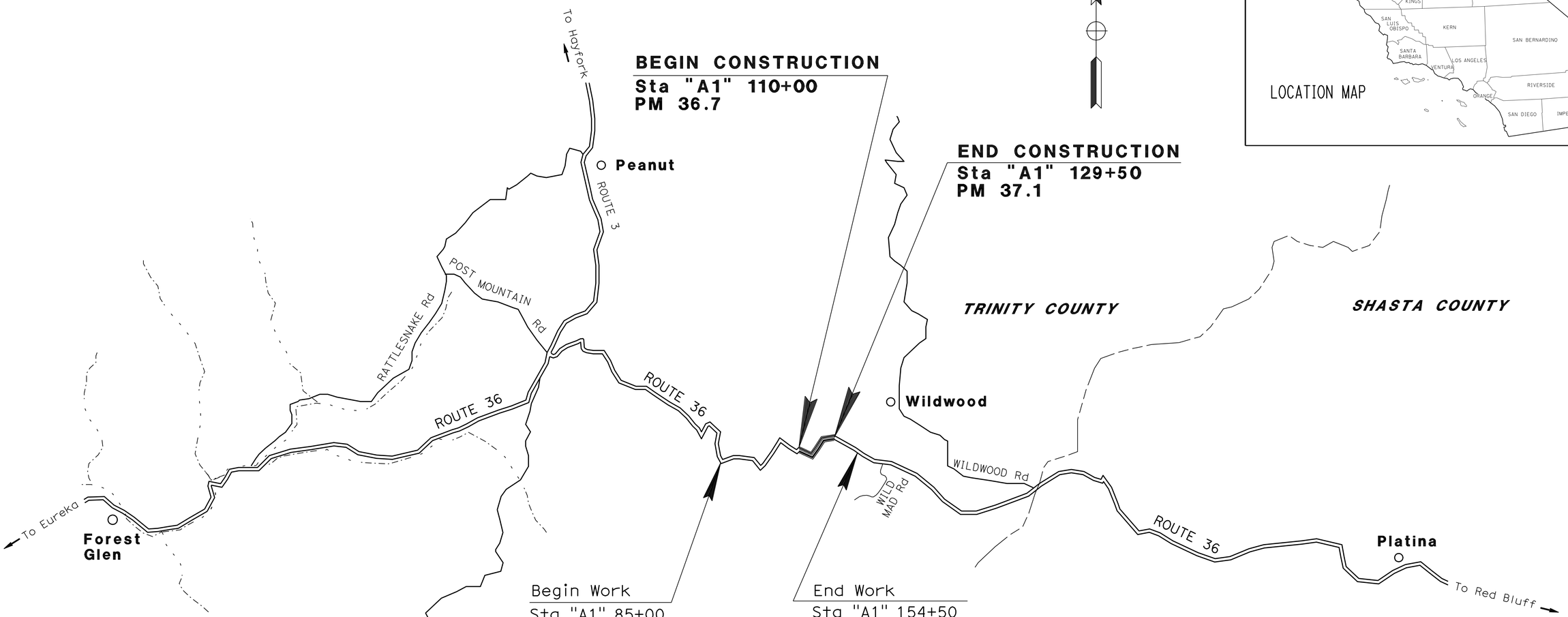

KEN HALLIS 03-01-10
PROJECT ENGINEER DATE
REGISTERED CIVIL ENGINEER

March 22, 2010
PLANS APPROVAL DATE

REGISTERED PROFESSIONAL ENGINEER
KEN HALLIS
No. C38203
Exp. 3-31-11
CIVIL
STATE OF CALIFORNIA

THE STATE OF CALIFORNIA OR ITS OFFICERS OR AGENTS SHALL NOT BE RESPONSIBLE FOR THE ACCURACY OR COMPLETENESS OF ELECTRONIC COPIES OF THIS PLAN SHEET.

THE CONTRACTOR SHALL POSSESS THE CLASS (OR CLASSES) OF LICENSE AS SPECIFIED IN THE "NOTICE TO BIDDERS."

NO SCALE

PROJECT MANAGER: CHRIS HARVEY
DESIGN ENGINEER: AL TRUJILLO

P:\proj2\02\2E060_plans\pse\22e060ab001.dgn

LAST REVISION 03-01-10
DATE PLOTTED => 18-MAY-2010
TIME PLOTTED => 10:00

CONTRACT No. 02-2E0604

Dist	COUNTY	ROUTE	POST MILES TOTAL PROJECT	SHEET No.	TOTAL SHEETS
02	Tri	36	36.7/37.1	2	47

REGISTERED CIVIL ENGINEER — DATE 03-01-10

3-22-10
PLANS APPROVAL DATE

REGISTERED PROFESSIONAL ENGINEER — KEN HALLIS — No. C38203 — Exp. 3-31-11 — CIVIL — STATE OF CALIFORNIA

THE STATE OF CALIFORNIA OR ITS OFFICERS OR AGENTS SHALL NOT BE RESPONSIBLE FOR THE ACCURACY OR COMPLETENESS OF SCANNED COPIES OF THIS PLAN SHEET.

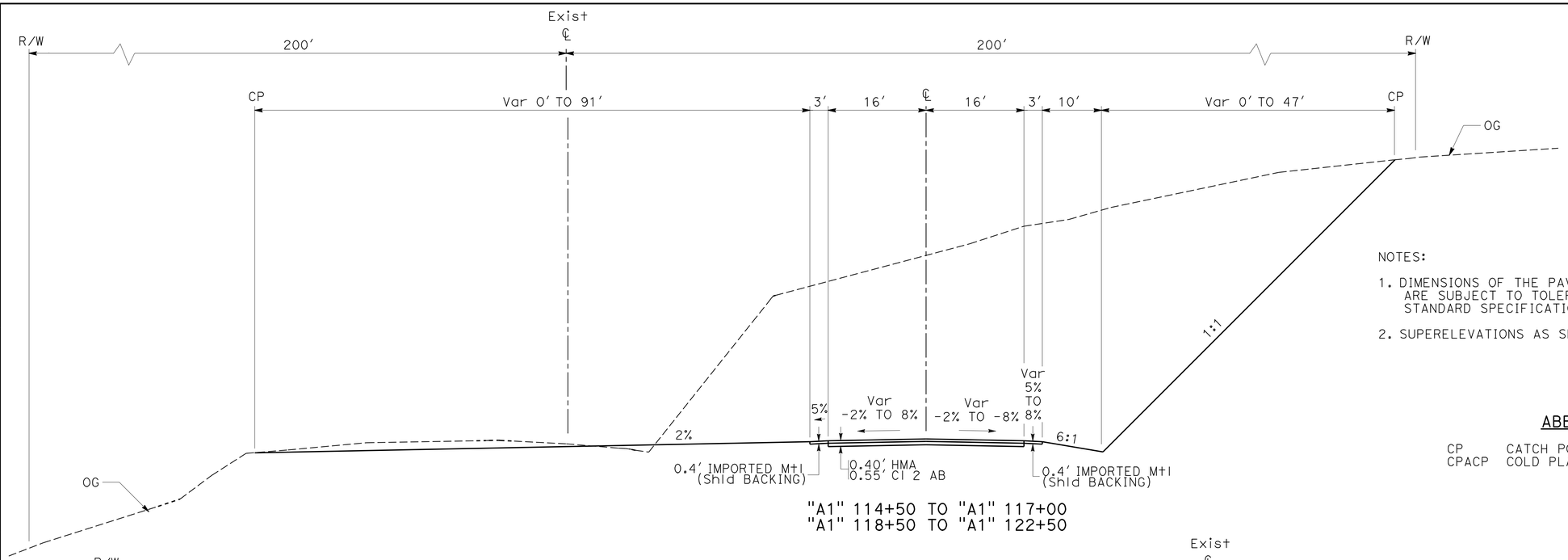

"A1" 114+50 TO "A1" 117+00
"A1" 118+50 TO "A1" 122+50

NOTES:

1. DIMENSIONS OF THE PAVEMENT STRUCTURES (STRUCTURAL SECTIONS) ARE SUBJECT TO TOLERANCES SPECIFIED IN THE STANDARD SPECIFICATIONS.

2. SUPERELEVATIONS AS SHOWN OR AS DETERMINED BY THE ENGINEER.

ABBREVIATIONS

CP CATCH POINT
CPACP COLD PLANE ASPHALT CONCRETE PAVEMENT

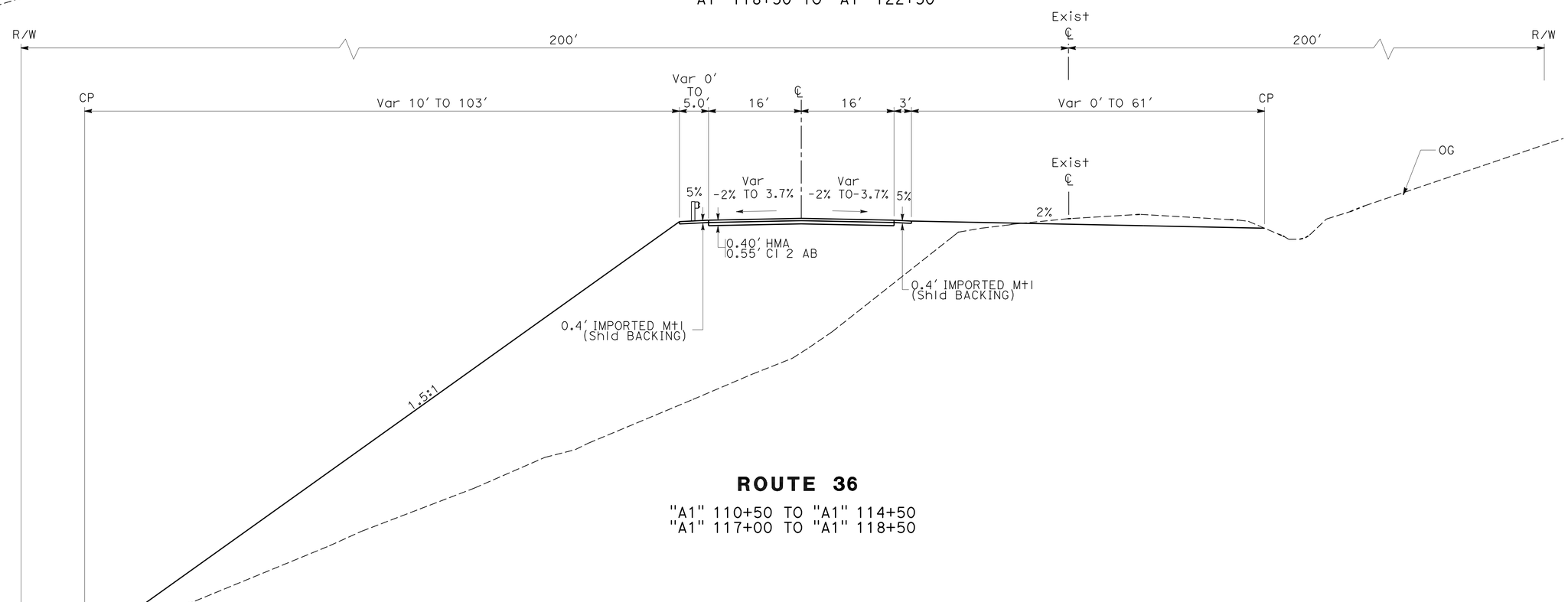

ROUTE 36

"A1" 110+50 TO "A1" 114+50
"A1" 117+00 TO "A1" 118+50

TYPICAL CROSS SECTIONS

SCALE: 1" = 10' Horiz
1" = 10' Vert

X-1

REVISED BY | DATE REVISED
RYAN PRINS | KEN HALLIS
CALCULATED-DESIGNED BY | CHECKED BY
FUNCTIONAL SUPERVISOR
AL TRUJILLO

STATE OF CALIFORNIA - DEPARTMENT OF TRANSPORTATION
Caltrans
DESIGN

P:\proj2\02\2E060_plans\pse\22e060ca001.dgn

LAST REVISION 03-01-10 | DATE PLOTTED => 24-MAR-2010 | TIME PLOTTED => 13:43

Dist	COUNTY	ROUTE	POST MILES TOTAL PROJECT	SHEET No.	TOTAL SHEETS
02	Tri	36	36.7/37.1	3	47

REGISTERED CIVIL ENGINEER — DATE: 03-01-10

3-22-10
PLANS APPROVAL DATE

REGISTERED PROFESSIONAL ENGINEER — KEN HALLIS — No. C38203 — Exp. 3-31-11 — CIVIL — STATE OF CALIFORNIA

THE STATE OF CALIFORNIA OR ITS OFFICERS OR AGENTS SHALL NOT BE RESPONSIBLE FOR THE ACCURACY OR COMPLETENESS OF SCANNED COPIES OF THIS PLAN SHEET.

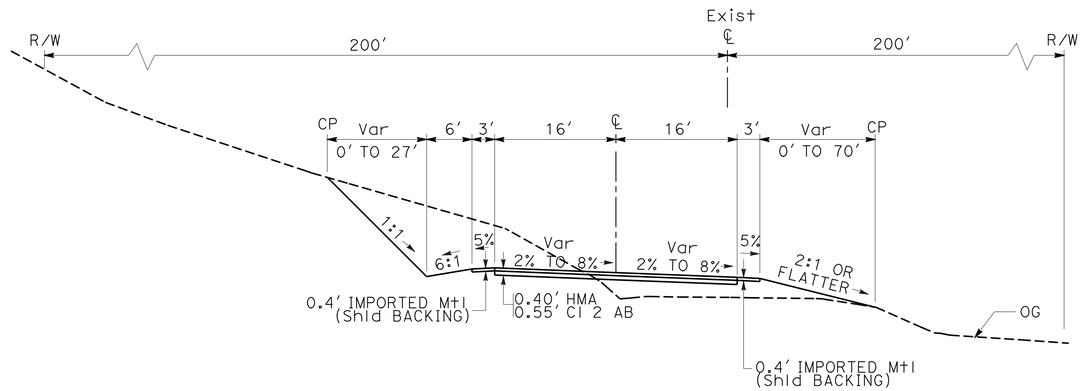

"A1" 125+00 TO 129+00

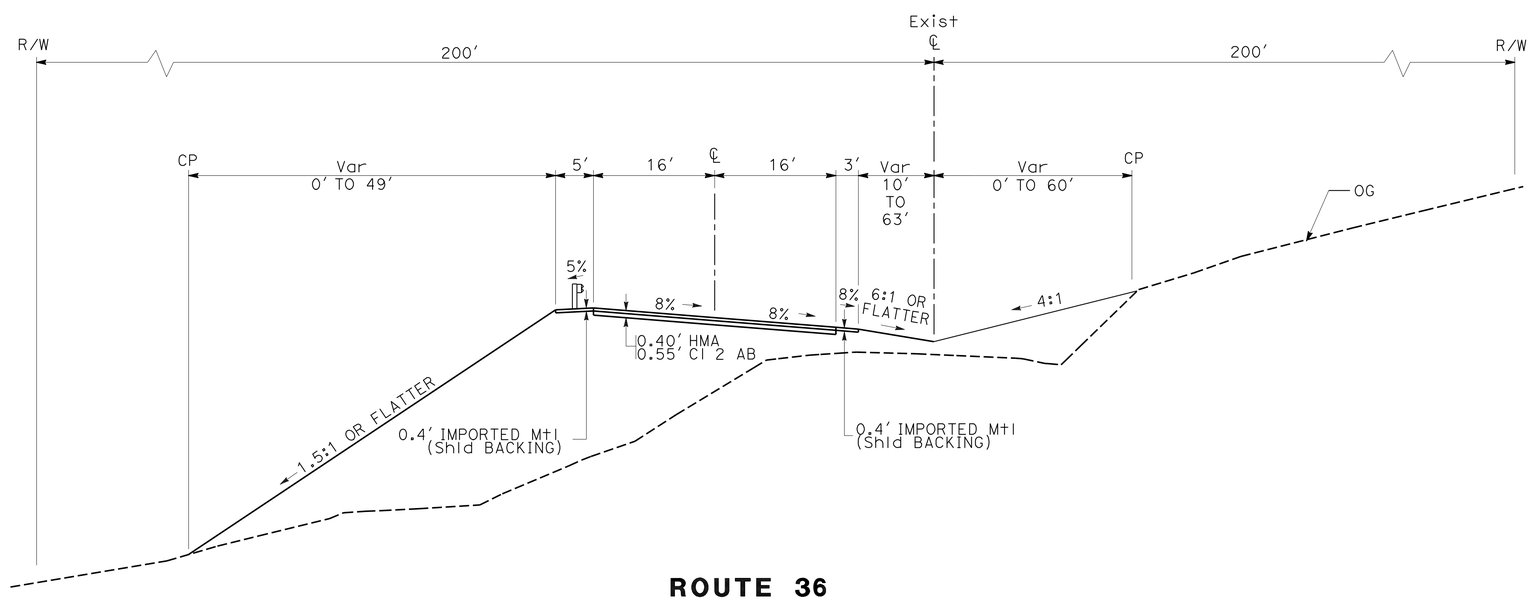

ROUTE 36

"A1" 122+50 TO 125+00

TYPICAL CROSS SECTIONS

SCALE: 1" = 10′ Horiz
1" = 10′ Vert

X-2

REVISED BY | DATE REVISED
RYAN PRINS | KEN HALLIS
CALCULATED-DESIGNED BY | CHECKED BY
FUNCTIONAL SUPERVISOR: AL TRUJILLO

STATE OF CALIFORNIA - DEPARTMENT OF TRANSPORTATION
Caltrans® DESIGN

P:\proj2\02\2E060_plans\pse\22e060ca002.dgn

LAST REVISION 03-01-10 | DATE PLOTTED => 24-MAR-2010 | TIME PLOTTED => 12:20

Dist	COUNTY	ROUTE	POST MILES TOTAL PROJECT	SHEET No.	TOTAL SHEETS
02	Tri	36	36.7/37.1	4	47

REGISTERED CIVIL ENGINEER — DATE: 03-01-10

3-22-10
PLANS APPROVAL DATE

REGISTERED PROFESSIONAL ENGINEER — KEN HALLIS — No. C38203 — Exp. 3-31-11 — CIVIL — STATE OF CALIFORNIA

THE STATE OF CALIFORNIA OR ITS OFFICERS OR AGENTS SHALL NOT BE RESPONSIBLE FOR THE ACCURACY OR COMPLETENESS OF SCANNED COPIES OF THIS PLAN SHEET.

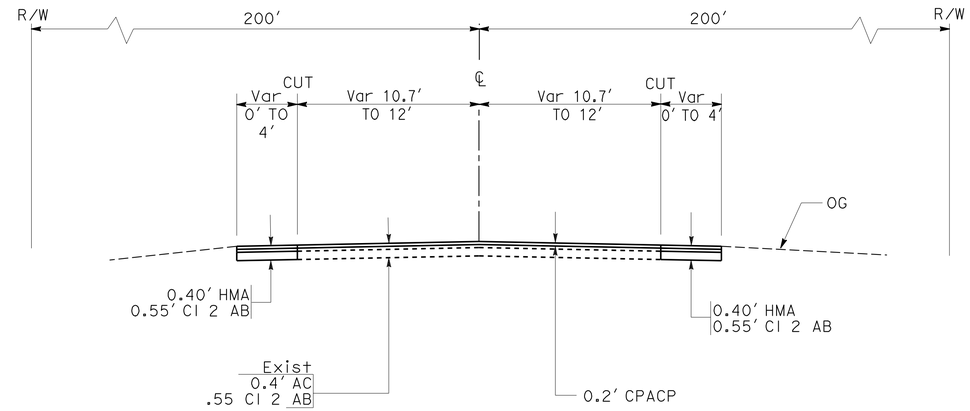

"A1" 110+00 TO "A1" 110+50
"A1" 129+00 TO "A1" 129+50

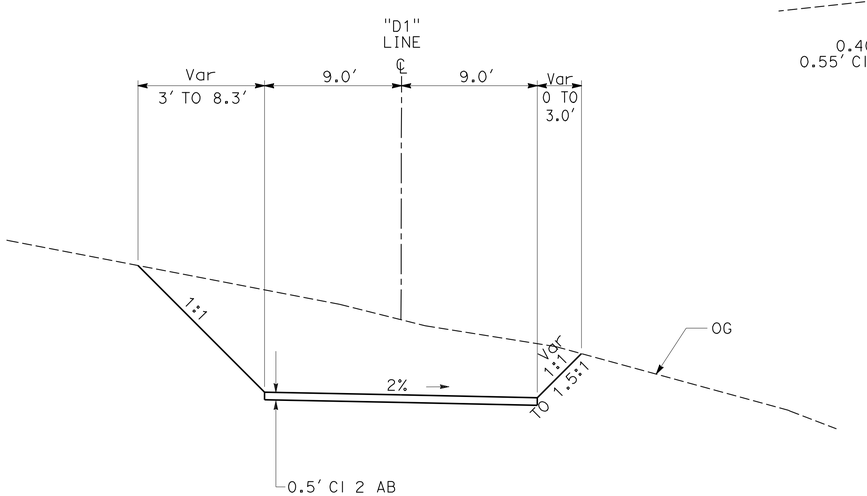

"D1" 0+12.7 TO 1+50

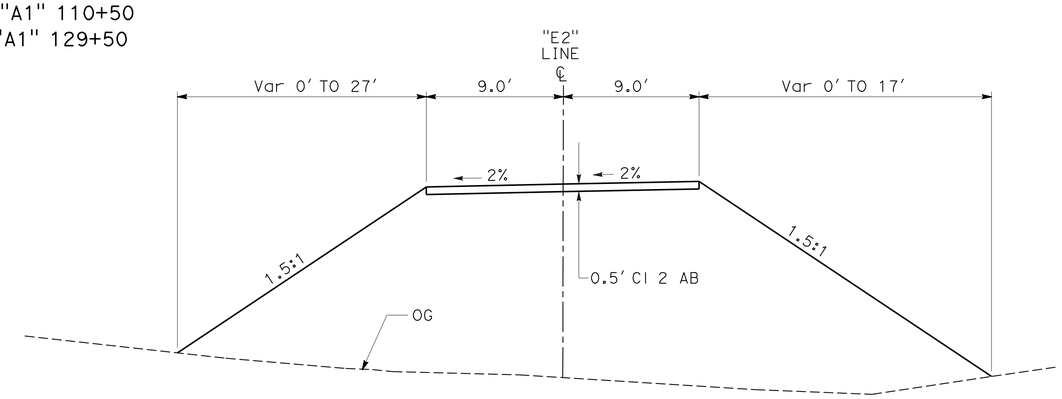

"E2" 1+00 TO 3+09.24

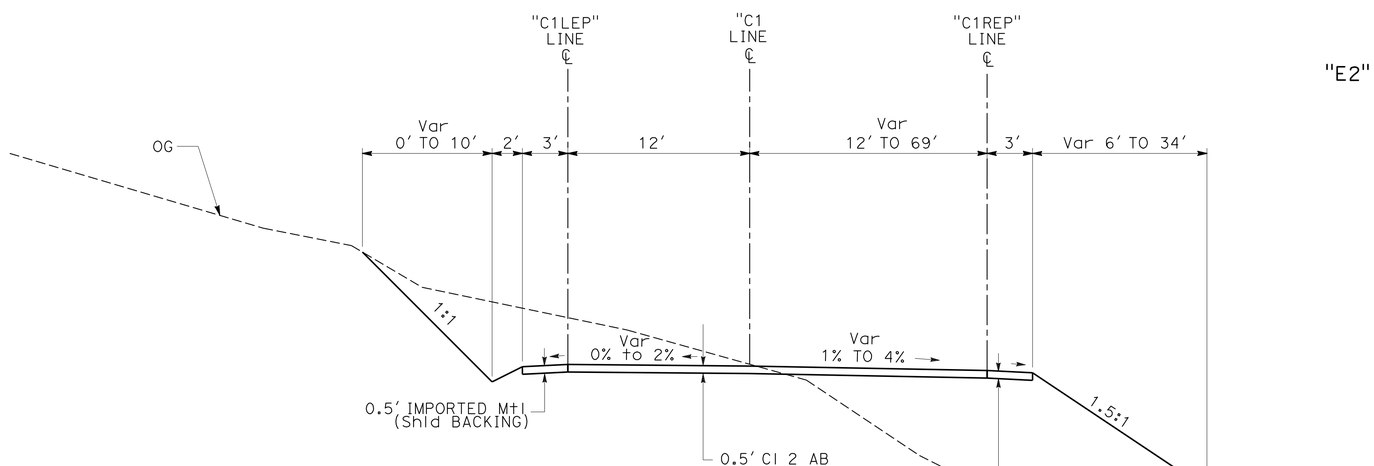

"C1" 1+84 TO 3+75

TYPICAL CROSS SECTIONS

SCALE: 1" = 5′ Horiz
1" = 5′ Vert

X-3

REVISED BY	DATE REVISED
RYAN PRINS	KEN HALLIS
CALCULATED-DESIGNED BY	CHECKED BY
FUNCTIONAL SUPERVISOR	AL TRUJILLO

STATE OF CALIFORNIA - DEPARTMENT OF TRANSPORTATION
Caltrans
DESIGN

P:\proj2\02\2E060_plans\pse\22e060ca003.dgn

LAST REVISION 03-01-10 | DATE PLOTTED => 24-MAR-2010 | TIME PLOTTED => 12:20

Dist	COUNTY	ROUTE	POST MILES TOTAL PROJECT	SHEET No.	TOTAL SHEETS
02	Tri	36	36.7/37.1	5	47

REGISTERED CIVIL ENGINEER — DATE: 03-01-10

3-22-10
PLANS APPROVAL DATE

REGISTERED PROFESSIONAL ENGINEER — KEN HALLIS — No. C38203 — Exp. 3-31-11 — CIVIL — STATE OF CALIFORNIA

THE STATE OF CALIFORNIA OR ITS OFFICERS OR AGENTS SHALL NOT BE RESPONSIBLE FOR THE ACCURACY OR COMPLETENESS OF SCANNED COPIES OF THIS PLAN SHEET.

NOTE:

FOR COMPLETE RIGHT OF WAY DATA, SEE RIGHT OF WAY RECORD MAPS AT DISTRICT OFFICE.

LEGEND

COLD PLANE ASPHALT CONCRETE PAVEMENT

ABBREVIATIONS

CPACP	COLD PLANE ASPHALT CONCRETE PAVEMENT
USFS	UNITED STATES FOREST SERVICE

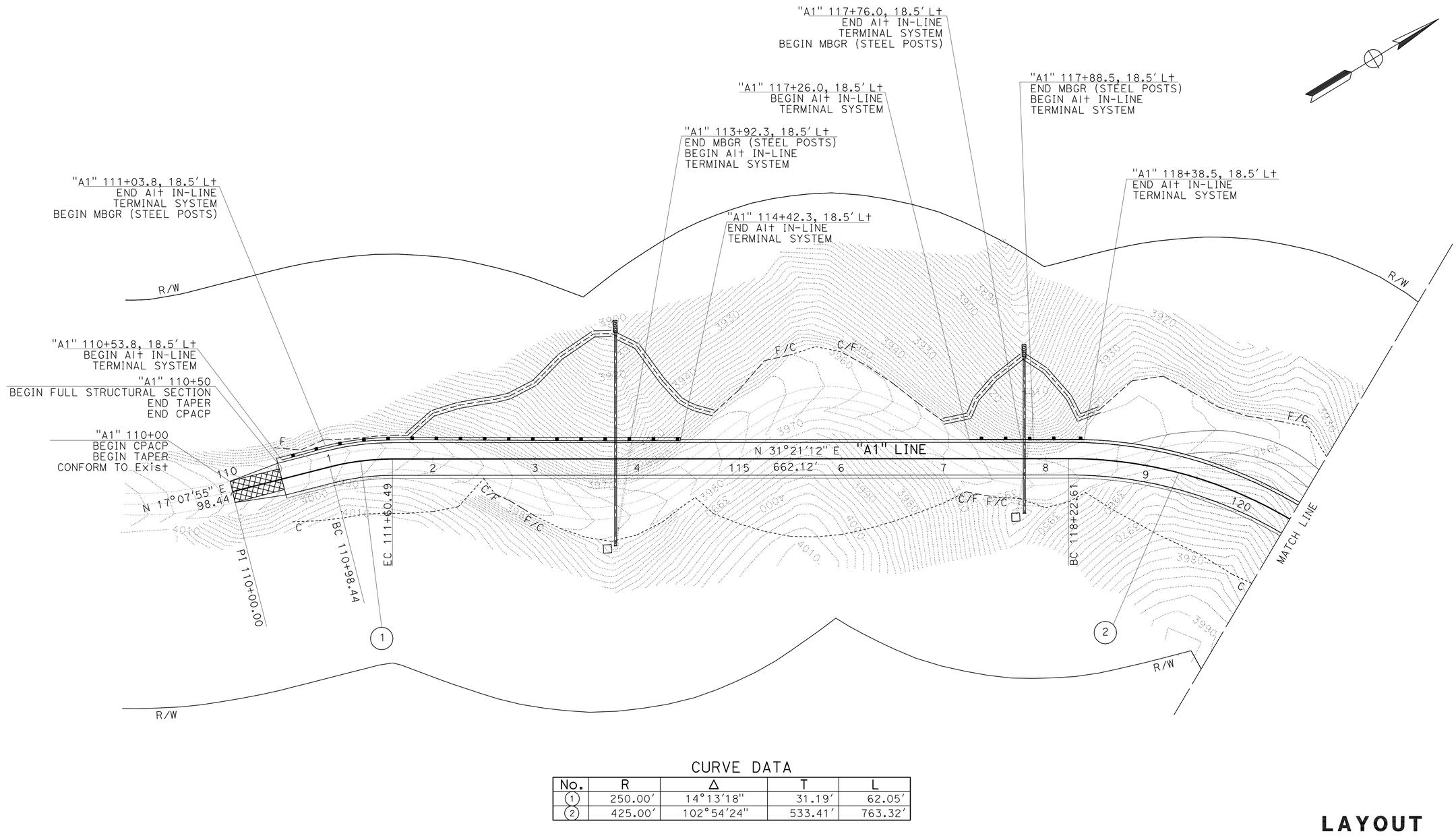

CURVE DATA

No.	R	Δ	T	L
1	250.00'	14°13'18"	31.19'	62.05'
2	425.00'	102°54'24"	533.41'	763.32'

LAYOUT

SCALE: 1" = 50'

L-1

REVISED BY | DATE REVISED
RYAN PRINS | KEN HALLIS
CALCULATED-DESIGNED BY | CHECKED BY
FUNCTIONAL SUPERVISOR: AL TRUJILLO

STATE OF CALIFORNIA - DEPARTMENT OF TRANSPORTATION
Caltrans
DESIGN

P:\proj2\02\2E060_plans\pse\22e060ea001.dgn

LAST REVISION 03-01-10 | DATE PLOTTED => 24-MAR-2010 | TIME PLOTTED => 12:20

BORDER LAST REVISED 4/11/2008 | RELATIVE BORDER SCALE IS IN INCHES 0 1 2 3 | USERNAME => trmnguye | DGN FILE => 22e060ea001.dgn | CU 03 242 | EA 2E0601

Dist	COUNTY	ROUTE	POST MILES TOTAL PROJECT	SHEET No.	TOTAL SHEETS
02	Tri	36	36.7/37.1	6	47

REGISTERED CIVIL ENGINEER — DATE: 03-01-10

PLANS APPROVAL DATE: 3-22-10

REGISTERED PROFESSIONAL ENGINEER — KEN HALLIS — No. C38203 — Exp. 3-31-11 — CIVIL — STATE OF CALIFORNIA

THE STATE OF CALIFORNIA OR ITS OFFICERS OR AGENTS SHALL NOT BE RESPONSIBLE FOR THE ACCURACY OR COMPLETENESS OF SCANNED COPIES OF THIS PLAN SHEET.

NOTE:

FOR COMPLETE RIGHT OF WAY DATA, SEE RIGHT OF WAY RECORD MAPS AT DISTRICT OFFICE.

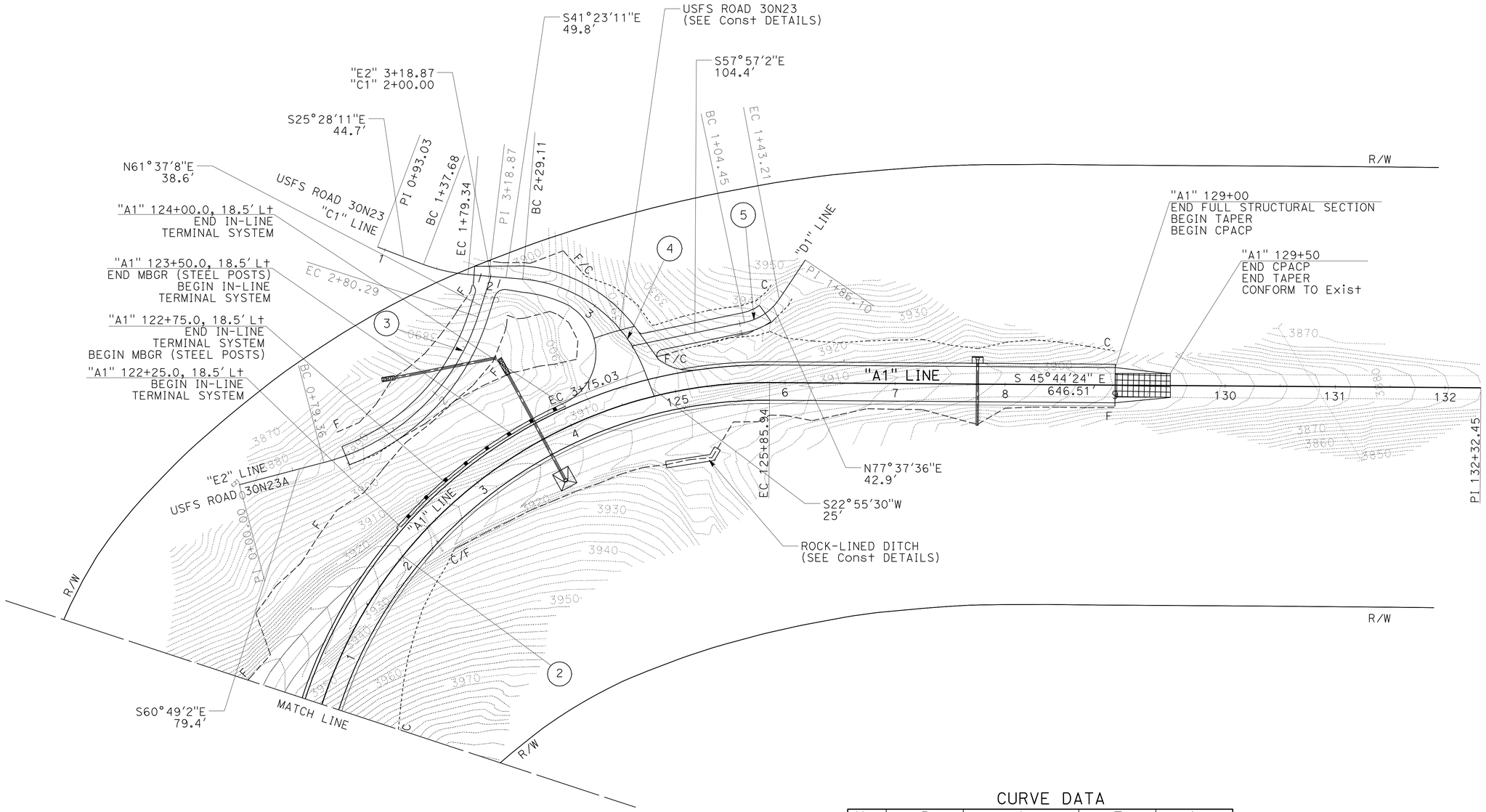

CURVE DATA

No.	R	Δ	T	L
2	425.00'	102°54'24"	533.41'	763.32'
3	200.00'	57°33'50"	109.87'	200.94'
4	130.00'	64°18'41"	81.73'	145.92'
5	50.00'	44°25'23"	20.42'	38.77'

LAYOUT

SCALE: 1" = 50'

L-2

REVISED BY | DATE REVISED | RYAN PRINS | KEN HALLIS | CALCULATED-DESIGNED BY | CHECKED BY | FUNCTIONAL SUPERVISOR | AL TRUJILLO

STATE OF CALIFORNIA - DEPARTMENT OF TRANSPORTATION

Caltrans® DESIGN

P:\proj2\02\2E060_plans\pse\22e060ea002.dgn

LAST REVISION | DATE PLOTTED => 24-MAR-2010 | 03-01-10 | TIME PLOTTED => 12:21

BORDER LAST REVISED 4/11/2008 | RELATIVE BORDER SCALE IS IN INCHES 0 1 2 3 | USERNAME => trmnguye | DGN FILE => 22e060ea002.dgn | CU 03 242 | EA 2E0601

Dist	COUNTY	ROUTE	POST MILES TOTAL PROJECT	SHEET No.	TOTAL SHEETS
02	Tri	36	36.7/37.1	7	47

REGISTERED CIVIL ENGINEER — DATE 03-01-10

3-22-10
PLANS APPROVAL DATE

REGISTERED PROFESSIONAL ENGINEER — KEN HALLIS — No. C38203 — Exp. 3-31-11 — CIVIL — STATE OF CALIFORNIA

THE STATE OF CALIFORNIA OR ITS OFFICERS OR AGENTS SHALL NOT BE RESPONSIBLE FOR THE ACCURACY OR COMPLETENESS OF SCANNED COPIES OF THIS PLAN SHEET.

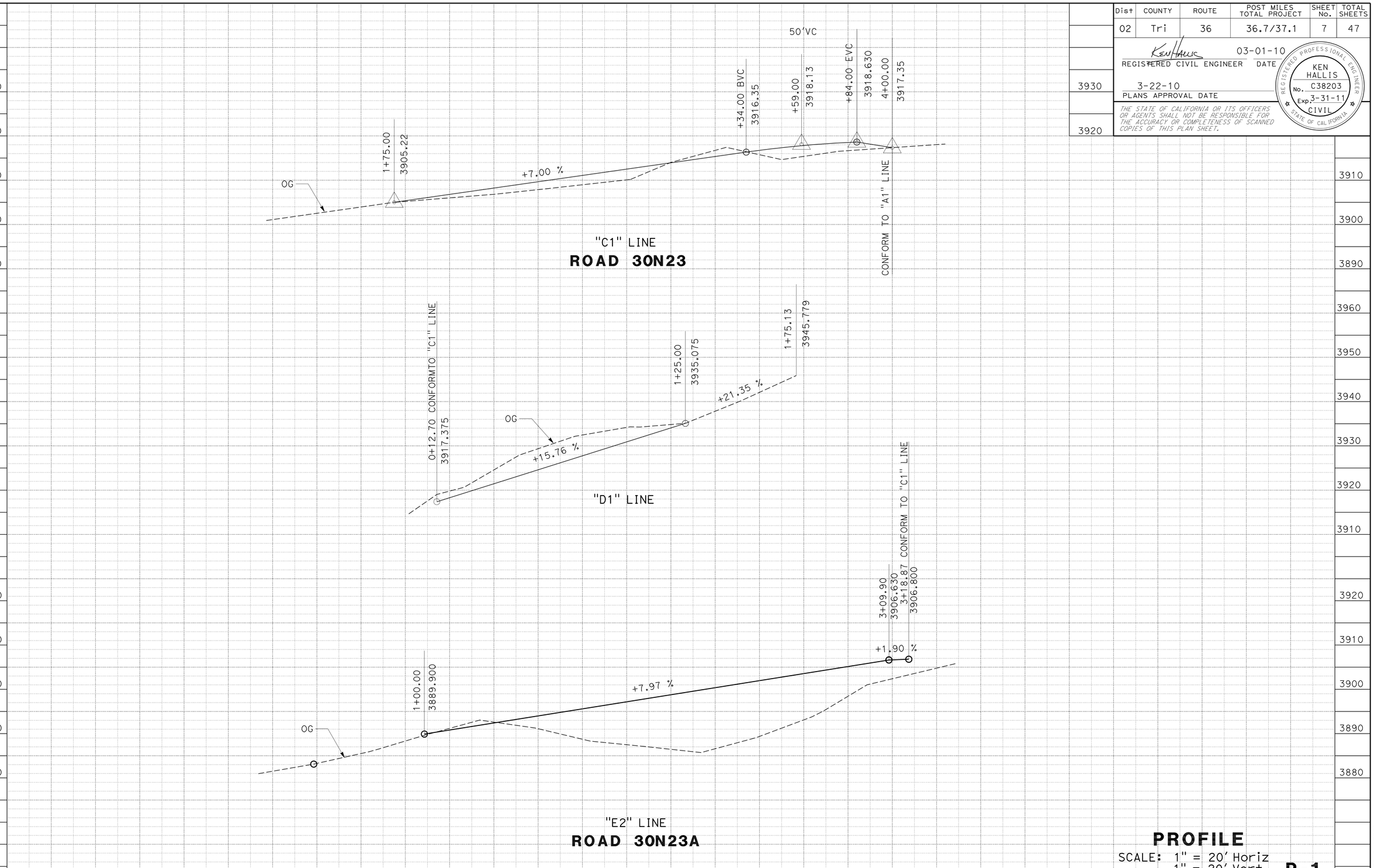

PROFILE

SCALE: 1" = 20' Horiz
1" = 20' Vert

P-1

STATION		TOTAL
CY	Exc	
	Emb	

REVISED BY | DATE REVISED

RYAN PRINS | KEN HALLIS

CALCULATED-DESIGNED BY | CHECKED BY

FUNCTIONAL SUPERVISOR: AL TRUJILLO

STATE OF CALIFORNIA - DEPARTMENT OF TRANSPORTATION

Caltrans

DESIGN

P:\proj2\02\2E060_plans\pse\22e060fa001.dgn

LAST REVISION 03-01-10 | DATE PLOTTED => 24-MAR-2010 | TIME PLOTTED => 12:21

Dist	COUNTY	ROUTE	POST MILES TOTAL PROJECT	SHEET No.	TOTAL SHEETS
02	Tri	36	36.7/37.1	8	47

REGISTERED CIVIL ENGINEER — DATE: 03-01-10

3-22-10
PLANS APPROVAL DATE

REGISTERED PROFESSIONAL ENGINEER — KEN HALLIS — No. C38203 — Exp. 3-31-11 — CIVIL — STATE OF CALIFORNIA

THE STATE OF CALIFORNIA OR ITS OFFICERS OR AGENTS SHALL NOT BE RESPONSIBLE FOR THE ACCURACY OR COMPLETENESS OF SCANNED COPIES OF THIS PLAN SHEET.

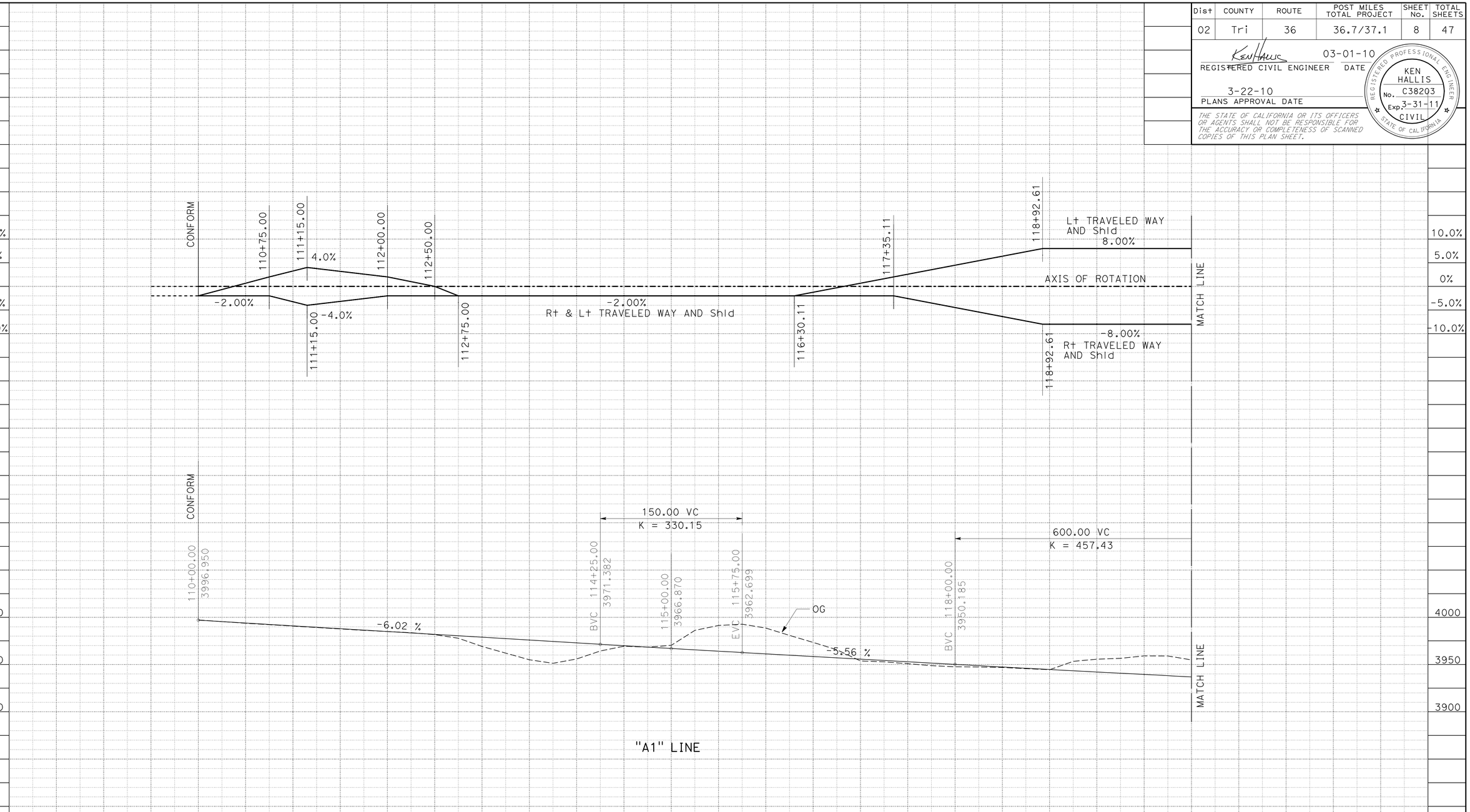

PROFILE AND SUPERELEVATION DIAGRAM

SCALE: Horiz 1" = 50'
Vert 1" = 50'

PS-1

STATION		110	111	112	113	114	115	116	117	118	119	120	SHEET TOTAL
CY	Exc	446	924	476	119	280	6327	7063	576	326	3752		20289
	Emb	12	7	576	4305	3426	54	60	1132	1721	289		11582

REVISED BY | DATE REVISED
RYAN PRINS | KEN HALLIS
CALCULATED-DESIGNED BY | CHECKED BY
FUNCTIONAL SUPERVISOR: AL TRUJILLO

STATE OF CALIFORNIA - DEPARTMENT OF TRANSPORTATION
Caltrans®
DESIGN

P:\proj2\02\2E060_plans\pse\22e060fb001.dgn

LAST REVISION | DATE PLOTTED => 24-MAR-2010
03-01-10 | TIME PLOTTED => 12:43

Dist	COUNTY	ROUTE	POST MILES TOTAL PROJECT	SHEET No.	TOTAL SHEETS
02	Tri	36	36.7/37.1	9	47

REGISTERED CIVIL ENGINEER — DATE 03-01-10

3-22-10
PLANS APPROVAL DATE

REGISTERED PROFESSIONAL ENGINEER — KEN HALLIS — No. C38203 — Exp. 3-31-11 — CIVIL — STATE OF CALIFORNIA

THE STATE OF CALIFORNIA OR ITS OFFICERS OR AGENTS SHALL NOT BE RESPONSIBLE FOR THE ACCURACY OR COMPLETENESS OF SCANNED COPIES OF THIS PLAN SHEET.

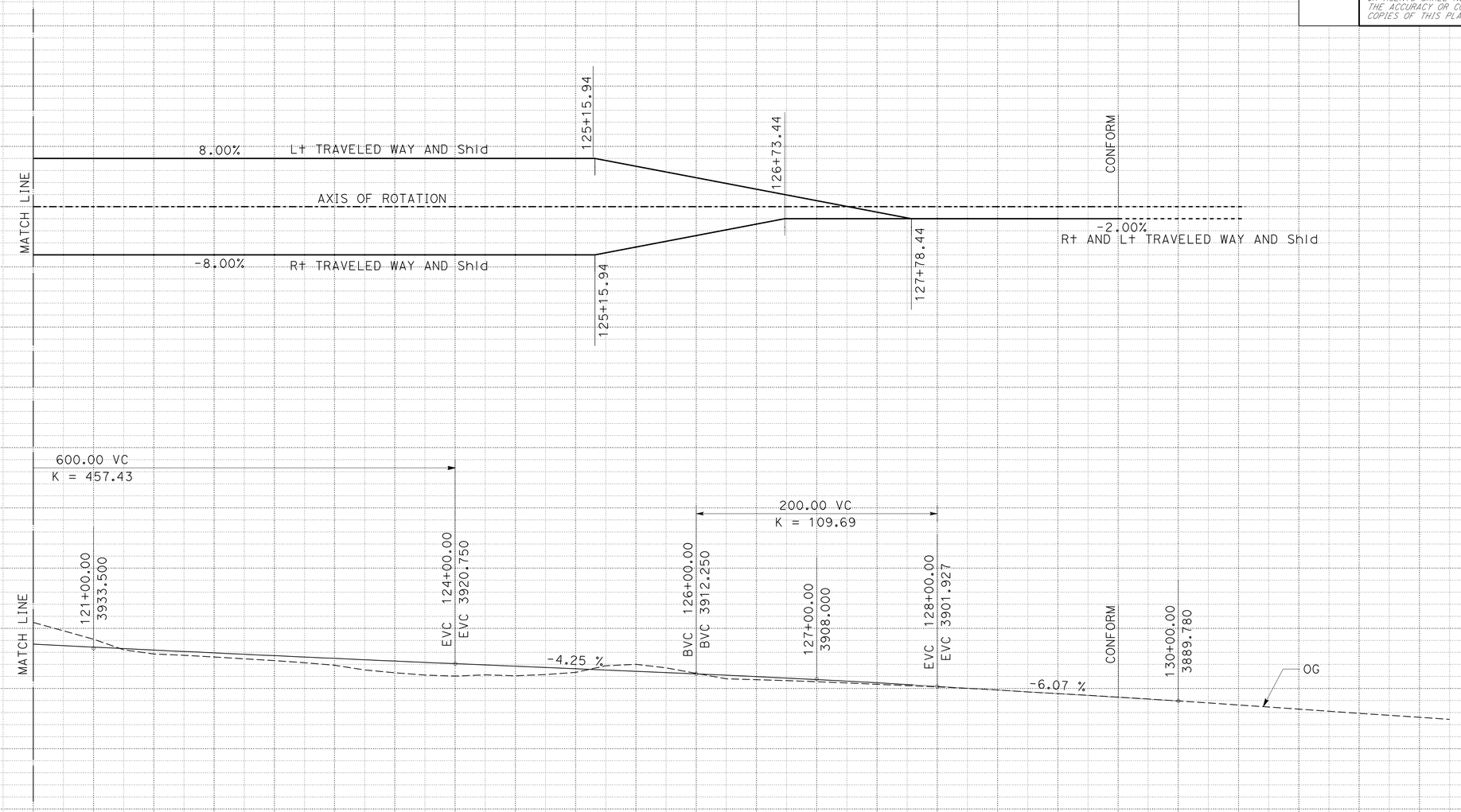

PROFILE AND SUPERELEVATION DIAGRAM

SCALE: Horiz 1" = 50'
Vert 1" = 50'

PS-2

STATION		120	121	122	123	124	125	126	127	128	129	130	131	132	SHEET TOTAL	TOTAL
CY	Exc	6548	2183	139	0	3	898	609	317	339	98				11134	31423
	Emb	110	833	1796	3530	2290	497	166	116	26	2				9366	20948

REVISED BY | DATE REVISED
RYAN PRINS | KEN HALLIS
CALCULATED-DESIGNED BY | CHECKED BY
FUNCTIONAL SUPERVISOR: AL TRUJILLO

STATE OF CALIFORNIA - DEPARTMENT OF TRANSPORTATION
Caltrans® DESIGN

P:\proj2\02\2E060_plans\pse\22e060fb002.dgn

LAST REVISION DATE PLOTTED => 24-MAR-2010
03-01-10 TIME PLOTTED => 12:44

Dist	COUNTY	ROUTE	POST MILES TOTAL PROJECT	SHEET No.	TOTAL SHEETS
02	Tri	36	36.7/37.1	10	47

REGISTERED CIVIL ENGINEER — DATE: 03-01-10

3-22-10
PLANS APPROVAL DATE

REGISTERED PROFESSIONAL ENGINEER — KEN HALLIS — No. C38203 — Exp. 3-31-11 — CIVIL — STATE OF CALIFORNIA

THE STATE OF CALIFORNIA OR ITS OFFICERS OR AGENTS SHALL NOT BE RESPONSIBLE FOR THE ACCURACY OR COMPLETENESS OF SCANNED COPIES OF THIS PLAN SHEET.

LEGEND

HMA AREA

ABBREVIATIONS

USFS UNITED STATES FOREST SERVICE

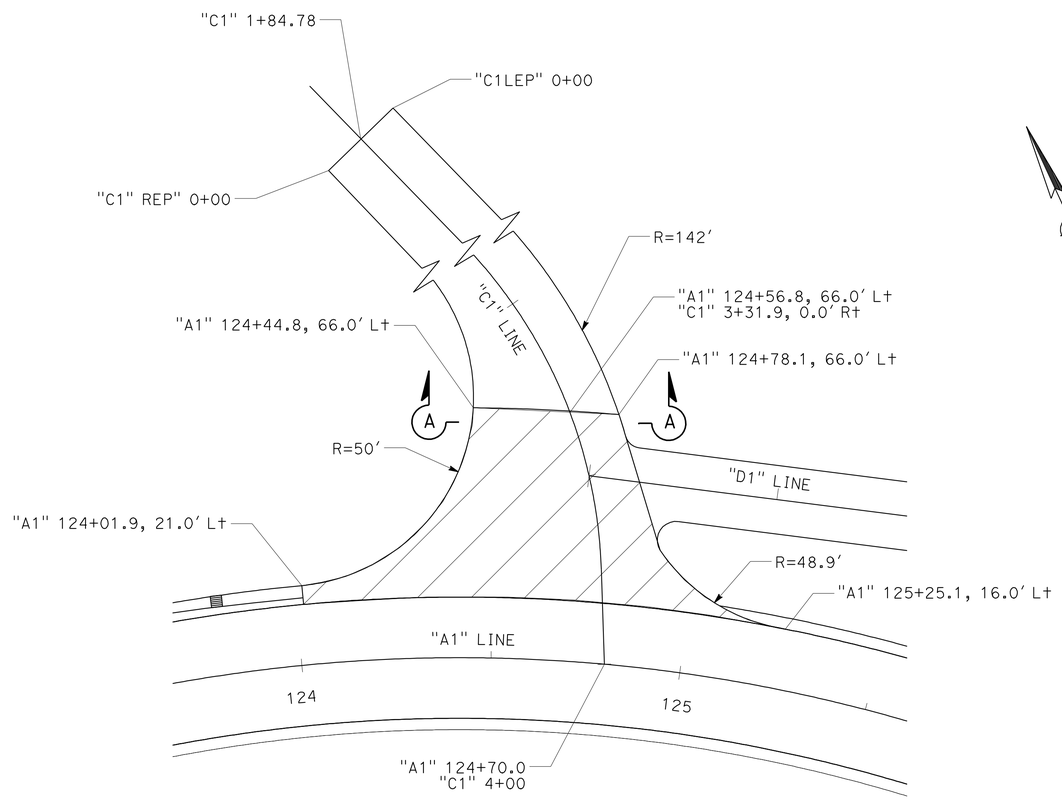

USFS ROAD No. 30N23 CONNECTION

SCALE: 1" = 20'

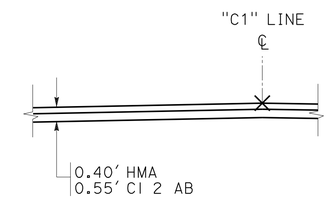

SECTION A-A
NO SCALE

CONSTRUCTION DETAILS

SCALE: AS SHOWN

C-1

REVISED BY	DATE REVISED

CALCULATED-DESIGNED BY: RYAN PRINS
CHECKED BY: KEN HALLIS
FUNCTIONAL SUPERVISOR: AL TRUJILLO

STATE OF CALIFORNIA - DEPARTMENT OF TRANSPORTATION
Caltrans®
DESIGN

P:\proj2\02\2E060_plans\pse\22e060ga001.dgn

LAST REVISION 03-01-10 | DATE PLOTTED => 24-MAR-2010 | TIME PLOTTED => 12:44

Dist	COUNTY	ROUTE	POST MILES TOTAL PROJECT	SHEET No.	TOTAL SHEETS
02	Tri	36	36.7/37.1	11	47

REGISTERED CIVIL ENGINEER — DATE: 03-01-10

PLANS APPROVAL DATE: 3-22-10

REGISTERED PROFESSIONAL ENGINEER — KEN HALLIS — No. C38203 — Exp. 3-31-11 — CIVIL — STATE OF CALIFORNIA

THE STATE OF CALIFORNIA OR ITS OFFICERS OR AGENTS SHALL NOT BE RESPONSIBLE FOR THE ACCURACY OR COMPLETENESS OF SCANNED COPIES OF THIS PLAN SHEET.

NOTE:

FOR COMPLETE RIGHT OF WAY DATA, SEE RIGHT OF WAY RECORD MAPS AT DISTRICT OFFICE.

LEGEND

- DRAINAGE SYSTEM No.
- DRAINAGE UNIT
- FLOW DIRECTION

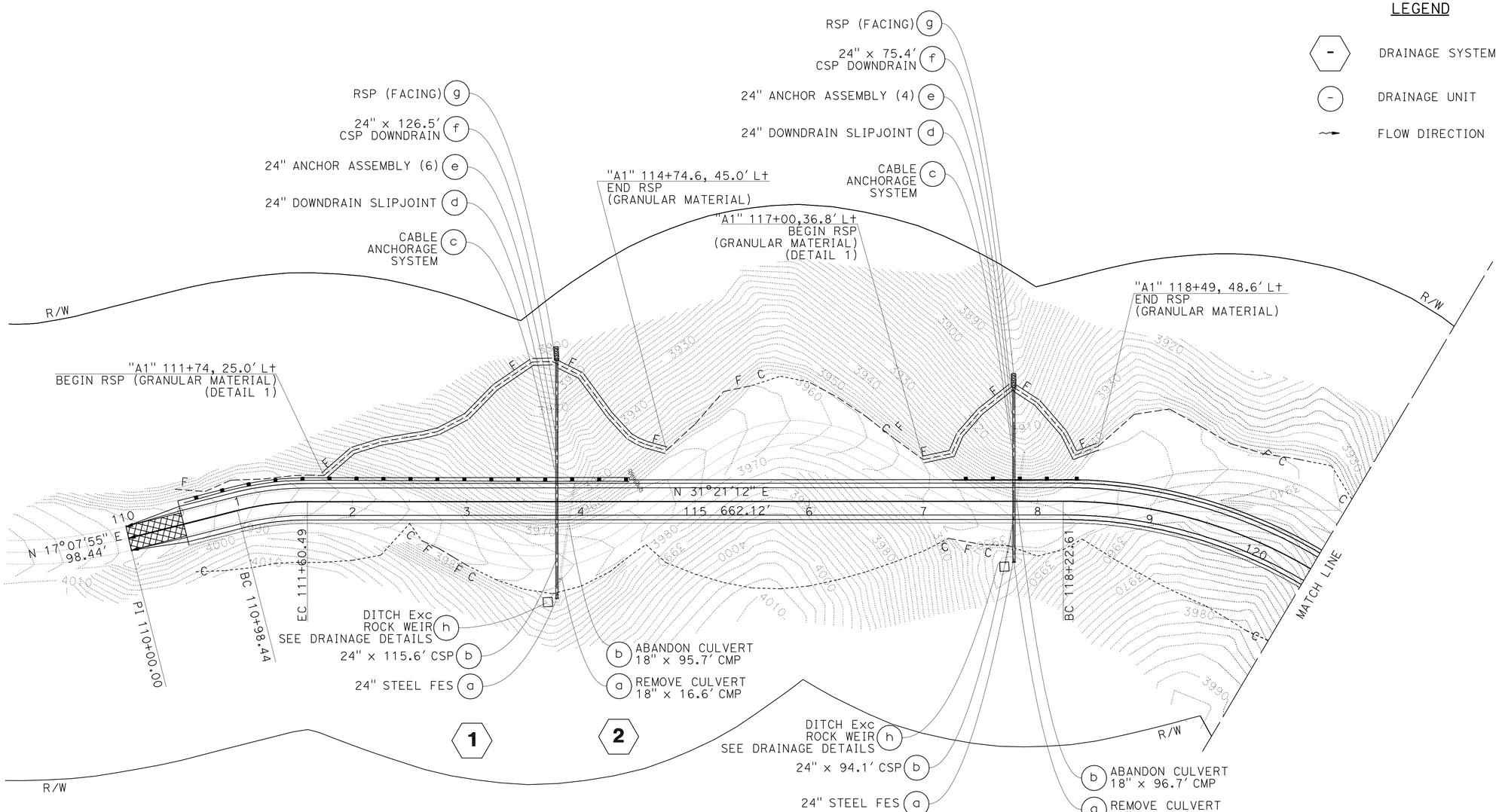

DRAINAGE PLAN

SCALE: 1" = 50'

D-1

THIS PLAN ACCURATE FOR DRAINAGE WORK ONLY

REVISED BY	DATE REVISED
RYAN PRINS	KEN HALLIS

CALCULATED-DESIGNED BY — CHECKED BY

FUNCTIONAL SUPERVISOR: AL TRUJILLO

STATE OF CALIFORNIA - DEPARTMENT OF TRANSPORTATION — DESIGN

P:\proj2\02\2E060_plans\pse\22e060ia001.dgn

LAST REVISION 03-01-10 — DATE PLOTTED => 24-MAR-2010 — TIME PLOTTED => 12:44

Dist	COUNTY	ROUTE	POST MILES TOTAL PROJECT	SHEET No.	TOTAL SHEETS
02	Tri	36	36.7/37.1	12	47

REGISTERED CIVIL ENGINEER — DATE: 03-01-10

3-22-10
PLANS APPROVAL DATE

REGISTERED PROFESSIONAL ENGINEER — KEN HALLIS — No. C38203 — Exp. 3-31-11 — CIVIL — STATE OF CALIFORNIA

THE STATE OF CALIFORNIA OR ITS OFFICERS OR AGENTS SHALL NOT BE RESPONSIBLE FOR THE ACCURACY OR COMPLETENESS OF SCANNED COPIES OF THIS PLAN SHEET.

NOTE:

FOR COMPLETE RIGHT OF WAY DATA, SEE RIGHT OF WAY RECORD MAPS AT DISTRICT OFFICE.

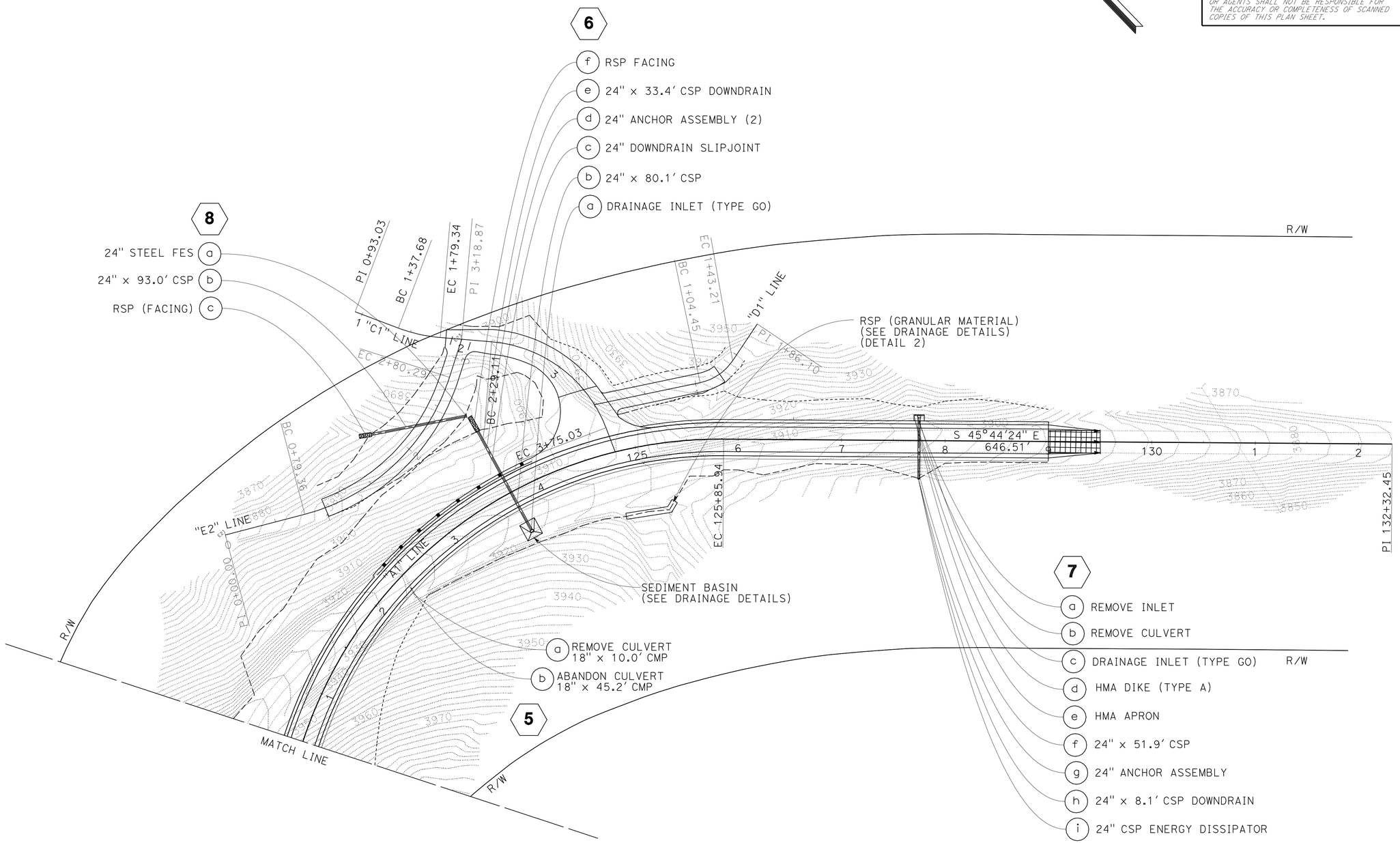

DRAINAGE PLAN

SCALE: 1" = 50'

D-2

THIS PLAN ACCURATE FOR DRAINAGE WORK ONLY

STATE OF CALIFORNIA - DEPARTMENT OF TRANSPORTATION

DESIGN

Caltrans

FUNCTIONAL SUPERVISOR: AL TRUJILLO

CALCULATED-DESIGNED BY: RYAN PRINS

CHECKED BY: KEN HALLIS

REVISED BY / DATE REVISED

LAST REVISION 03-01-10

DATE PLOTTED => 24-MAR-2010
TIME PLOTTED => 12:44

P:\proj2\02\2E060_plans\pse\22e0601a002.dgn

Dist	COUNTY	ROUTE	POST MILES TOTAL PROJECT	SHEET No.	TOTAL SHEETS
02	Tri	36	36.7/37.1	13	47

REGISTERED CIVIL ENGINEER — DATE: 03-01-10

3-22-10
PLANS APPROVAL DATE

REGISTERED PROFESSIONAL ENGINEER — KEN HALLIS — No. C38203 — Exp. 3-31-11 — CIVIL — STATE OF CALIFORNIA

THE STATE OF CALIFORNIA OR ITS OFFICERS OR AGENTS SHALL NOT BE RESPONSIBLE FOR THE ACCURACY OR COMPLETENESS OF SCANNED COPIES OF THIS PLAN SHEET.

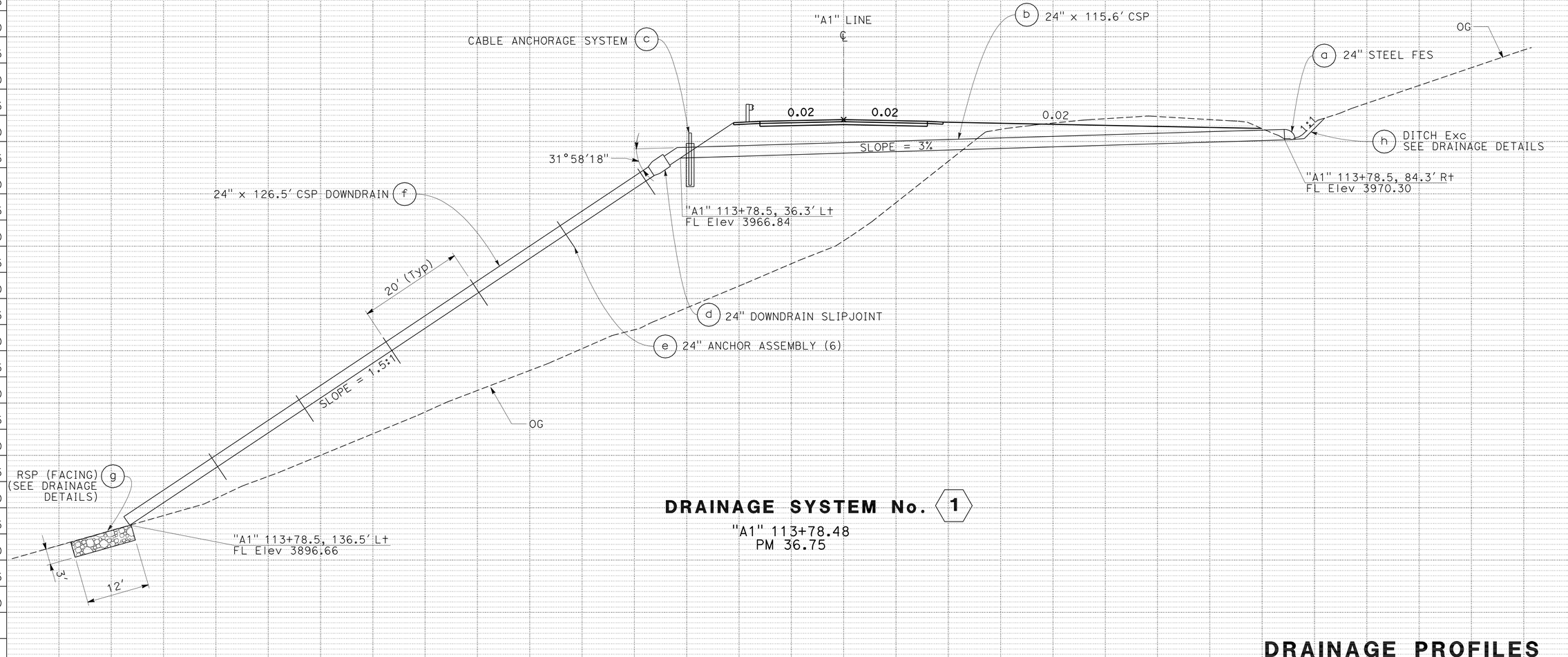

DRAINAGE SYSTEM No. 1

"A1" 113+78.48
PM 36.75

DRAINAGE PROFILES

SCALE: 1" = 10' Horiz
1" = 10' Vert

DP-1

REVISED BY: RYAN PRINS — DATE REVISED
CALCULATED-DESIGNED BY: KEN HALLIS — CHECKED BY
FUNCTIONAL SUPERVISOR: AL TRUJILLO

STATE OF CALIFORNIA - DEPARTMENT OF TRANSPORTATION
Caltrans
DESIGN

P:\proj2\02\2E060_plans\pse\22e0601b001.dgn

LAST REVISION 03-01-10 | DATE PLOTTED => 24-MAR-2010 | TIME PLOTTED => 12:32

BORDER LAST REVISED 4/11/2008 | RELATIVE BORDER SCALE IS IN INCHES 0 1 2 3 | USERNAME => s135318 | DGN FILE => 22e0601b001.dgn | CU 03 242 | EA 2E0601

Dist	COUNTY	ROUTE	POST MILES TOTAL PROJECT	SHEET No.	TOTAL SHEETS
02	Tri	36	36.7/37.1	14	47

REGISTERED CIVIL ENGINEER — DATE: 03-01-10

3-22-10
PLANS APPROVAL DATE

REGISTERED PROFESSIONAL ENGINEER — KEN HALLIS — No. C38203 — Exp. 3-31-11 — CIVIL — STATE OF CALIFORNIA

THE STATE OF CALIFORNIA OR ITS OFFICERS OR AGENTS SHALL NOT BE RESPONSIBLE FOR THE ACCURACY OR COMPLETENESS OF SCANNED COPIES OF THIS PLAN SHEET.

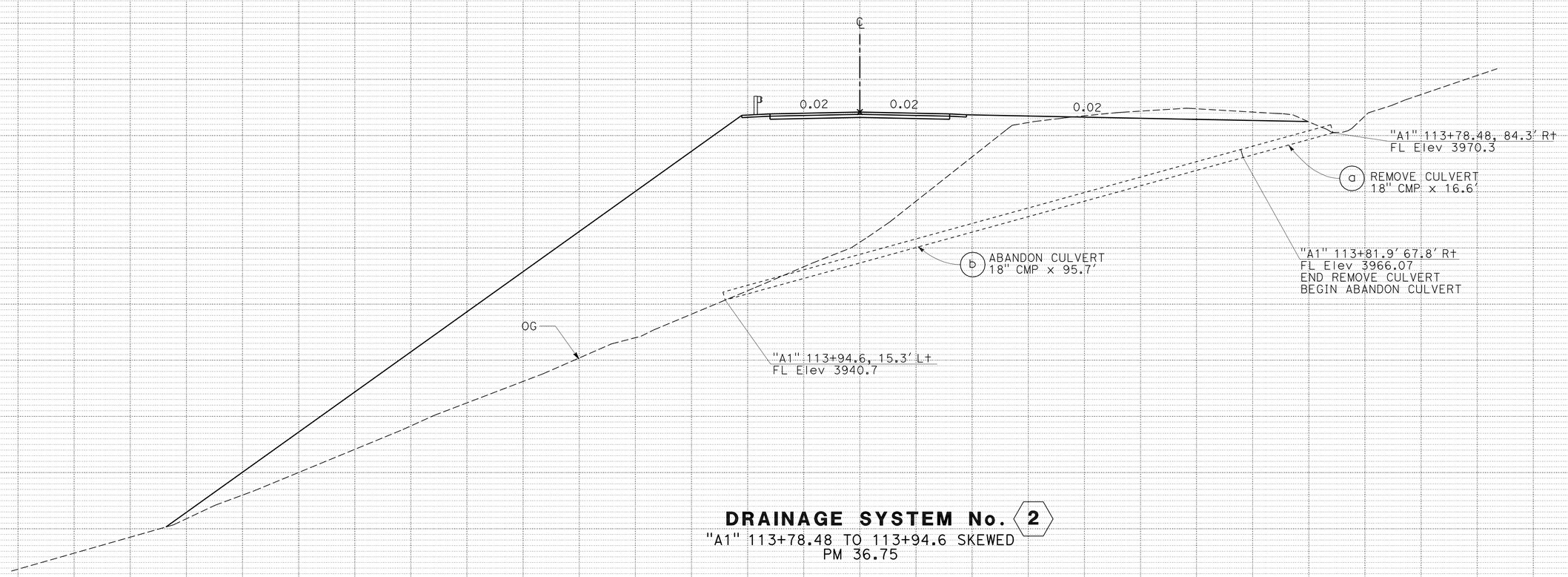

DRAINAGE SYSTEM No. 2
"A1" 113+78.48 TO 113+94.6 SKEWED
PM 36.75

DRAINAGE PROFILES

SCALE: 1" = 10' Horiz
1" = 10' Vert

DP-2

REVISED BY | DATE REVISED
RYAN PRINS | KEN HALLIS
CALCULATED-DESIGNED BY | CHECKED BY
FUNCTIONAL SUPERVISOR: AL TRUJILLO
STATE OF CALIFORNIA - DEPARTMENT OF TRANSPORTATION
Caltrans
DESIGN

P:\proj2\02\2E060_plans\pse\22e0601b002.dgn

LAST REVISION 03-01-10 | DATE PLOTTED => 24-MAR-2010 | TIME PLOTTED => 12:33

BORDER LAST REVISED 4/11/2008 | RELATIVE BORDER SCALE IS IN INCHES 0 1 2 3 | USERNAME => s135318 | DGN FILE => 22e0601b002.dgn | CU 03 242 | EA 2E0601

Dist	COUNTY	ROUTE	POST MILES TOTAL PROJECT	SHEET No.	TOTAL SHEETS
02	Tri	36	36.7/37.1	15	47

REGISTERED CIVIL ENGINEER — DATE 03-01-10

3-22-10
PLANS APPROVAL DATE

REGISTERED PROFESSIONAL ENGINEER — KEN HALLIS — No. C38203 — Exp. 3-31-11 — CIVIL — STATE OF CALIFORNIA

THE STATE OF CALIFORNIA OR ITS OFFICERS OR AGENTS SHALL NOT BE RESPONSIBLE FOR THE ACCURACY OR COMPLETENESS OF SCANNED COPIES OF THIS PLAN SHEET.

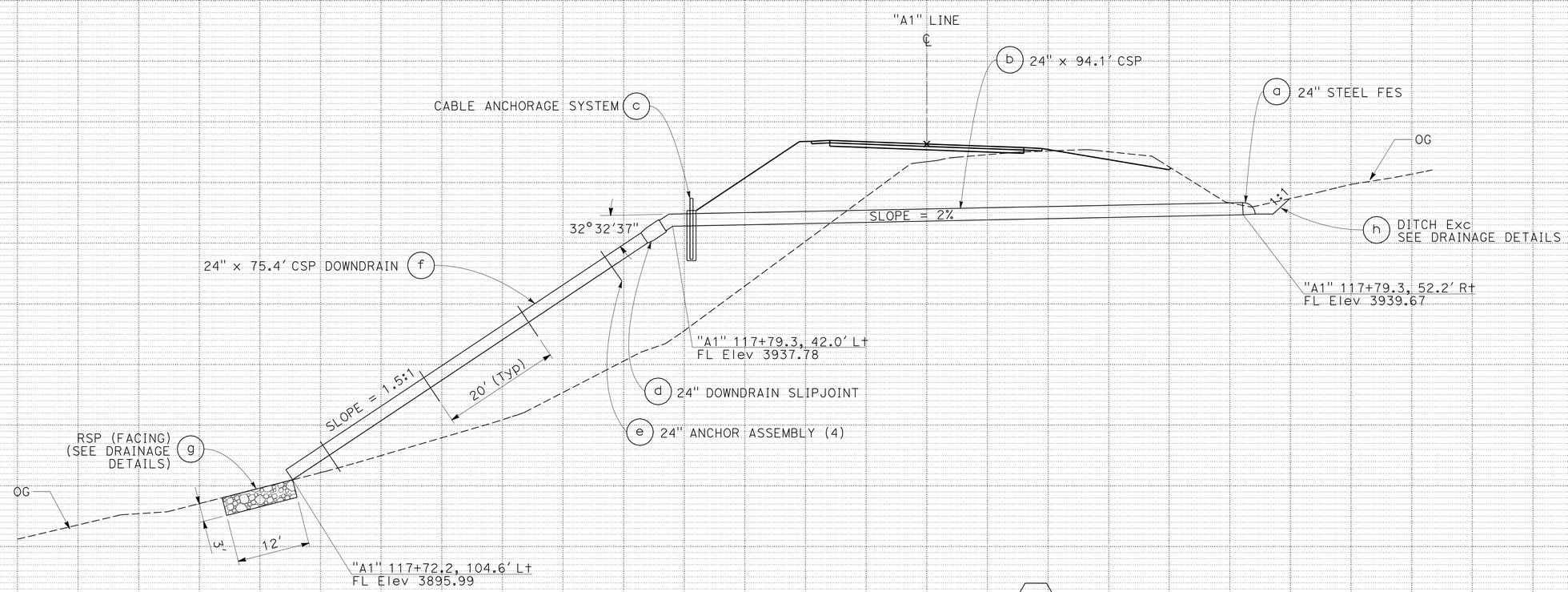

DRAINAGE SYSTEM No. 3

"A1" 117+79.29
PM 36.82

DRAINAGE PROFILES

SCALE: 1" = 10' Horiz
1" = 10' Vert

DP-3

REVISED BY — DATE REVISED
RYAN PRINS — KEN HALLIS
CALCULATED-DESIGNED BY — CHECKED BY
FUNCTIONAL SUPERVISOR: AL TRUJILLO

STATE OF CALIFORNIA - DEPARTMENT OF TRANSPORTATION
Caltrans
DESIGN

P:\proj2\02\2E060_plans\pse\22e0601b003.dgn

LAST REVISION 03-01-10 — DATE PLOTTED => 24-MAR-2010 — TIME PLOTTED => 12:33

Dist	COUNTY	ROUTE	POST MILES TOTAL PROJECT	SHEET No.	TOTAL SHEETS
02	Tri	36	36.7/37.1	16	47

REGISTERED CIVIL ENGINEER — DATE: 03-01-10

3-22-10
PLANS APPROVAL DATE

REGISTERED PROFESSIONAL ENGINEER — KEN HALLIS — No. C38203 — Exp. 3-31-11 — CIVIL — STATE OF CALIFORNIA

THE STATE OF CALIFORNIA OR ITS OFFICERS OR AGENTS SHALL NOT BE RESPONSIBLE FOR THE ACCURACY OR COMPLETENESS OF SCANNED COPIES OF THIS PLAN SHEET.

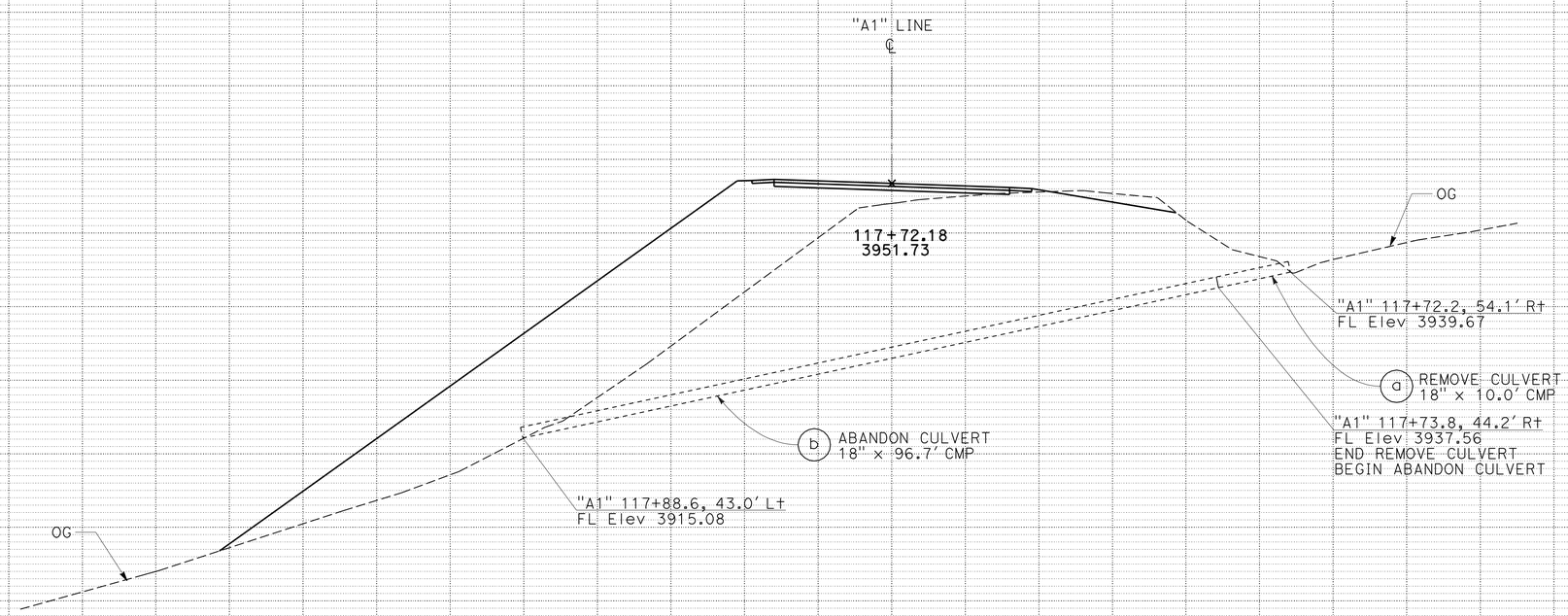

DRAINAGE SYSTEM No. 4

"A1" 117+79.29
PM 36.82

DRAINAGE PROFILES

SCALE: 1" = 10' Horiz
1" = 10' Vert

DP-4

REVISED BY | DATE REVISED
RYAN PRINS | KEN HALLIS
CALCULATED-DESIGNED BY | CHECKED BY
FUNCTIONAL SUPERVISOR
AL TRUJILLO

STATE OF CALIFORNIA - DEPARTMENT OF TRANSPORTATION
Caltrans
DESIGN

P:\proj2\02\2E060_plans\pse\22e0601b004.dgn

LAST REVISION 03-01-10 | DATE PLOTTED => 24-MAR-2010 | TIME PLOTTED => 12:33

Dist	COUNTY	ROUTE	POST MILES TOTAL PROJECT	SHEET No.	TOTAL SHEETS
02	Tri	36	36.7/37.1	17	47

REGISTERED CIVIL ENGINEER — DATE 03-01-10

3-22-10
PLANS APPROVAL DATE

REGISTERED PROFESSIONAL ENGINEER — KEN HALLIS — No. C38203 — Exp. 3-31-11 — CIVIL — STATE OF CALIFORNIA

THE STATE OF CALIFORNIA OR ITS OFFICERS OR AGENTS SHALL NOT BE RESPONSIBLE FOR THE ACCURACY OR COMPLETENESS OF SCANNED COPIES OF THIS PLAN SHEET.

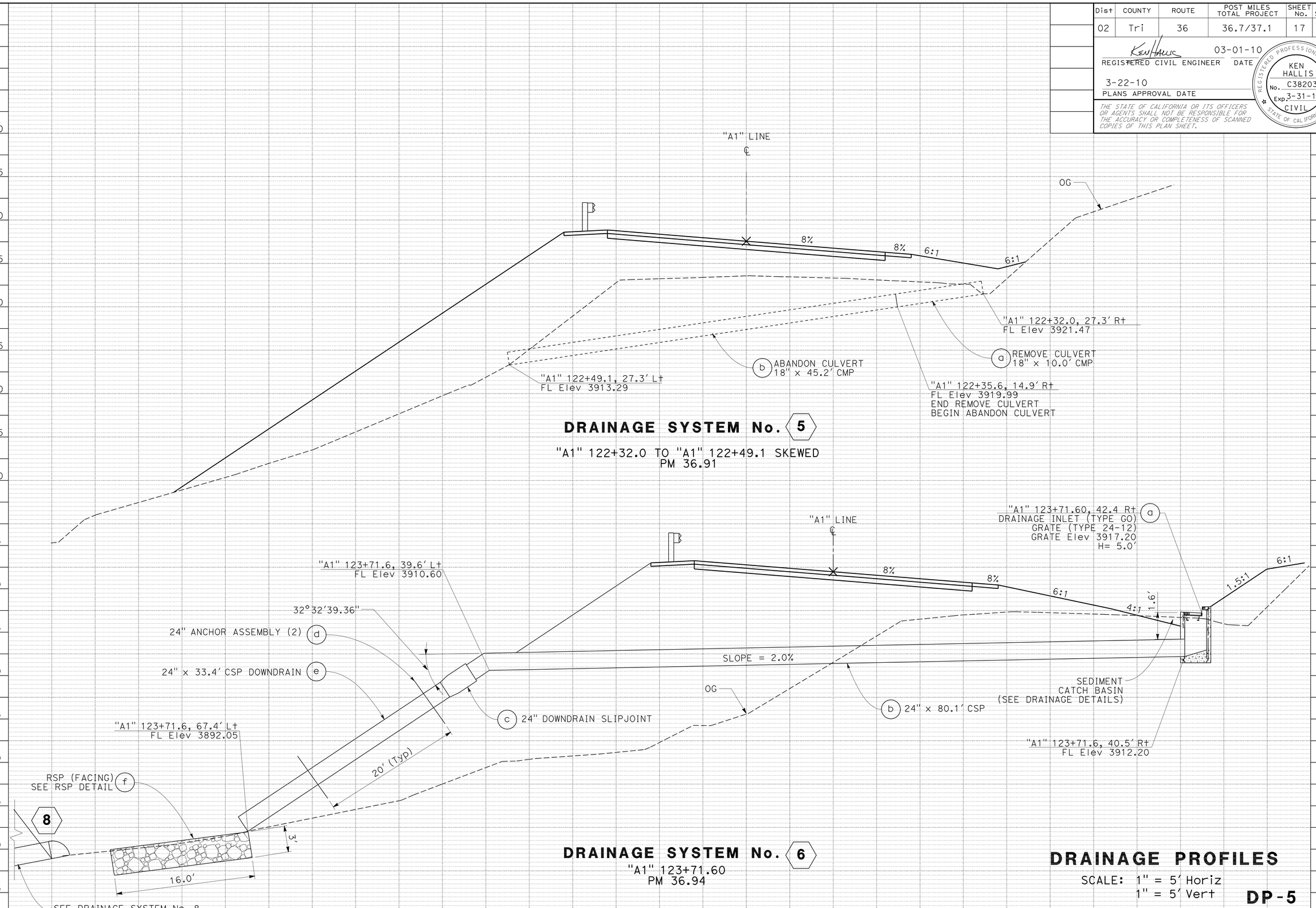

DRAINAGE PROFILES

SCALE: 1" = 5′ Horiz
1" = 5′ Vert

DP-5

REVISED BY | DATE REVISED
RYAN PRINS | KEN HALLIS
CALCULATED-DESIGNED BY | CHECKED BY
FUNCTIONAL SUPERVISOR: AL TRUJILLO

STATE OF CALIFORNIA - DEPARTMENT OF TRANSPORTATION
Caltrans
DESIGN

P:\proj2\02\2E060_plans\pse\22e0601b005.dgn

LAST REVISION 03-01-10 | DATE PLOTTED => 24-MAR-2010 | TIME PLOTTED => 12:33

Dist	COUNTY	ROUTE	POST MILES TOTAL PROJECT	SHEET No.	TOTAL SHEETS
02	Tri	36	36.7/37.1	18	47

REGISTERED CIVIL ENGINEER — DATE: 03-01-10

3-22-10
PLANS APPROVAL DATE

REGISTERED PROFESSIONAL ENGINEER — KEN HALLIS — No. C38203 — Exp. 3-31-11 — CIVIL — STATE OF CALIFORNIA

THE STATE OF CALIFORNIA OR ITS OFFICERS OR AGENTS SHALL NOT BE RESPONSIBLE FOR THE ACCURACY OR COMPLETENESS OF SCANNED COPIES OF THIS PLAN SHEET.

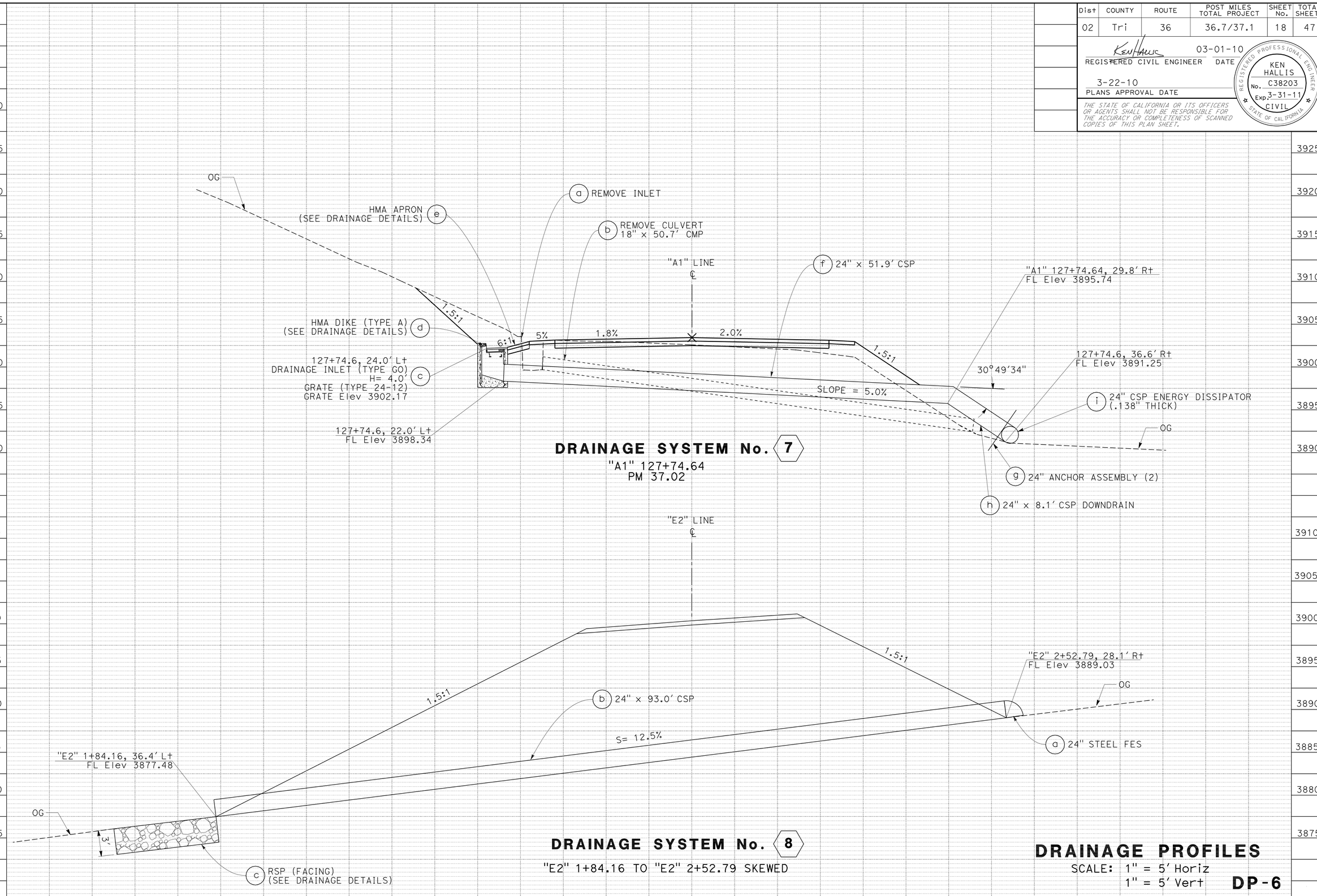

DRAINAGE PROFILES

SCALE: 1" = 5' Horiz
1" = 5' Vert

DP-6

REVISED BY | DATE REVISED
RYAN PRINS | KEN HALLIS
CALCULATED-DESIGNED BY | CHECKED BY
FUNCTIONAL SUPERVISOR: AL TRUJILLO

STATE OF CALIFORNIA - DEPARTMENT OF TRANSPORTATION
Caltrans
DESIGN

P:\proj2\02\2E060_plans\pse\22e060ib006.dgn

LAST REVISION | DATE PLOTTED => 24-MAR-2010 | TIME PLOTTED => 12:46
03-01-10

BORDER LAST REVISED 4/11/2008 | RELATIVE BORDER SCALE IS IN INCHES 0 1 2 3 | USERNAME => trstrk | DGN FILE => 22e060ib006.dgn | CU 03 242 | EA 2E0601

Dist	COUNTY	ROUTE	POST MILES TOTAL PROJECT	SHEET No.	TOTAL SHEETS
02	Tri	36	36.7/37.1	19	47

REGISTERED CIVIL ENGINEER — DATE: 03-01-10

3-22-10
PLANS APPROVAL DATE

REGISTERED PROFESSIONAL ENGINEER — KEN HALLIS — No. C38203 — Exp. 3-31-11 — CIVIL — STATE OF CALIFORNIA

THE STATE OF CALIFORNIA OR ITS OFFICERS OR AGENTS SHALL NOT BE RESPONSIBLE FOR THE ACCURACY OR COMPLETENESS OF SCANNED COPIES OF THIS PLAN SHEET.

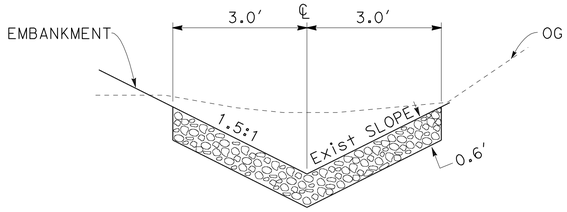

DETAIL 1
ROCK SLOPE PROTECTION (GRANULAR MATERIAL)

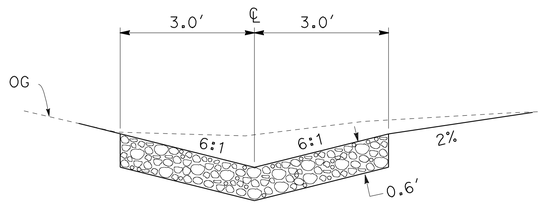

DETAIL 2
ROCK SLOPE PROTECTION (GRANULAR MATERIAL)

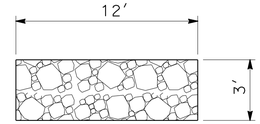

PLAN

RSP DETAIL
DRAINAGE SYSTEM No. 1 g 3 g 8 c

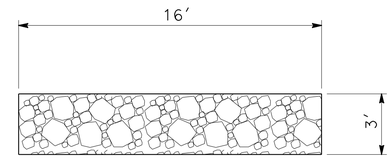

PLAN

RSP DETAIL
DRAINAGE SYSTEM No. 6 f

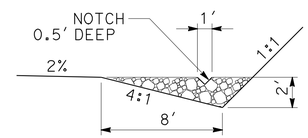

SECTION C-C

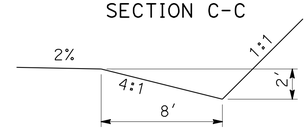

SECTION B-B

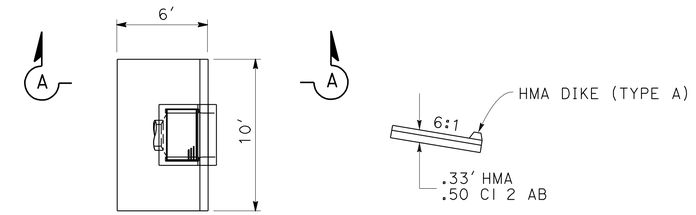

PLAN — SECTION A-A

HMA APRON DETAIL
DRAINAGE SYSTEM No. 7 e

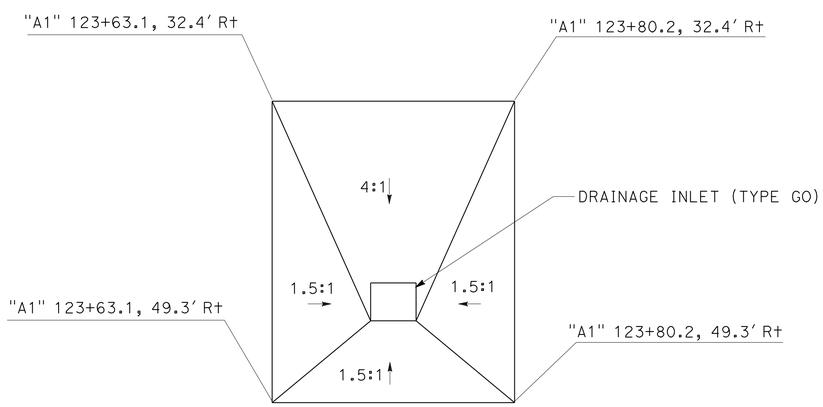

SEDIMENT CATCH BASIN DETAIL
DRAINAGE SYSTEM No. 6 a

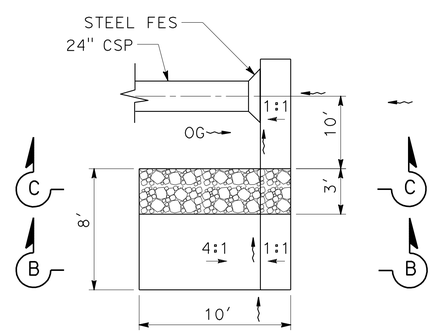

PLAN

DITCH EXCAVATION ROCK WEIR DETAIL
DRAINAGE SYSTEM No. 1 h 3 h

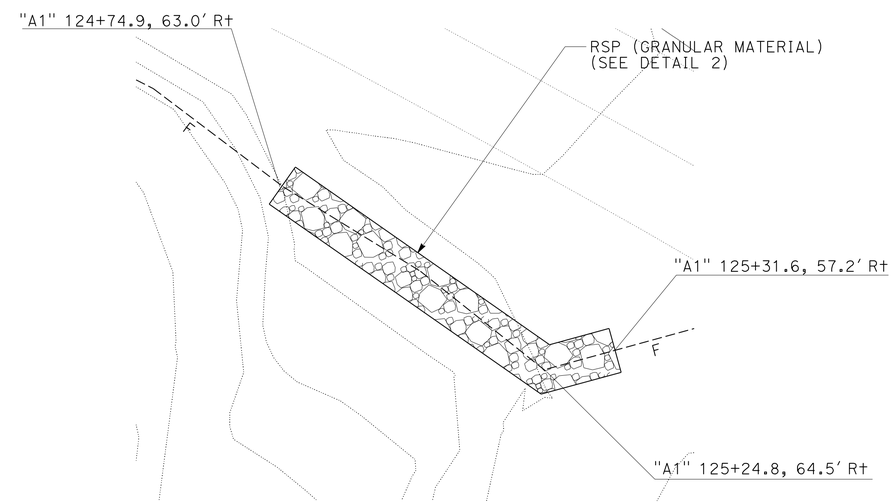

ROCK LINED DITCH DETAIL

DRAINAGE DETAILS
NO SCALE

DD-1

REVISED BY	DATE REVISED
RYAN PRINS	KEN HALLIS
CALCULATED-DESIGNED BY	CHECKED BY
FUNCTIONAL SUPERVISOR	AL TRUJILLO

STATE OF CALIFORNIA - DEPARTMENT OF TRANSPORTATION — DESIGN — Caltrans

P:\proj2\02\2E060_plans\pse\22e060ic001.dgn

LAST REVISION 03-01-10 — DATE PLOTTED => 24-MAR-2010 — TIME PLOTTED => 12:46

Dist	COUNTY	ROUTE	POST MILES TOTAL PROJECT	SHEET No.	TOTAL SHEETS
02	Tri	36	36.7/37.1	20	47

REGISTERED CIVIL ENGINEER 03-01-10 DATE

3-22-10
PLANS APPROVAL DATE

REGISTERED PROFESSIONAL ENGINEER KEN HALLIS No. C38203 Exp. 3-31-11 CIVIL STATE OF CALIFORNIA

THE STATE OF CALIFORNIA OR ITS OFFICERS OR AGENTS SHALL NOT BE RESPONSIBLE FOR THE ACCURACY OR COMPLETENESS OF SCANNED COPIES OF THIS PLAN SHEET.

NOTE:

(N) - NOT A SEPARATE PAY ITEM, FOR INFORMATION ONLY

DRAINAGE QUANTITIES

SHEET No.	DRAINAGE SYSTEM No. ⬡	DRAINAGE UNIT No. ◯	24" CORRUGATED STEEL PIPE (.138" THICK)	24" CORRUGATED STEEL PIPE DOWNDRAIN (.138" THICK)	24" CORRUGATED STEEL PIPE ENERGY DISSAPATOR (.064" THICK)	24" DOWNDRAIN SLIPJOINT	24" ANCHOR ASSEMBLY	(N) CABLE ANCHORING SYSTEM	MINOR Conc (MINOR STRUCTURE)	Misc IRON AND STEEL	24" STEEL FES	RSP (FACING)	RSP (BACKING No.2, METHOD B)	PLACE HMA (Misc AREA)	CLASS 2 AGGREGATE BASE	HMA DIKE (TYPE A)	REMOVE INLET	REMOVE CULVERT	ABANDON CULVERT	SAND BACKFILL	(N) HIEGHT	DITCH Exc	STATION	DESCRIPTION	DRAINAGE UNIT No. ◯	DRAINAGE SYSTEM No. ⬡	SHEET No.
			LF	LF	EA	EA	EA	EA	CY	LB	EA	CY	CY	SQYD	CY	LF	EA	LF	LF	CY	LF	CY					
D-1	1	a									1												"A1" 113+78.48	FES	a	1	D-1
		b	115.6																					24"CSP	b		
		c						1																CABLE ANCHORING SYSTEM	c		
		d				1																		24" DOWNDRAIN SLIPJOINT	d		
		e					6																	24" ANCHOR ASSEMBLY	e		
		f		126.5																				24" CSP DOWNDRAIN	f		
		g										5.3												RSP (FACING)	g		
		h											2									2.8		DIRT DITCH WITH ROCK WEIR	h		
D-1	2	a																16.6					"A1" 113+78.48	REMOVE CULVERT	a	2	D-1
		b																	95.7	6.3				ABANDON CULVERT	b		
D-1	3	a									1												"A1" 117+79.29	FES	a	3	D-1
		b	94.1																					24"CSP	b		
		c						1																CABLE ANCHORING SYSTEM	c		
		d				1																		24" DOWNDRAIN SLIPJOINT	d		
		e					4																	24" ANCHOR ASSEMBLY	e		
		f		75.4																				24" CSP DOWNDRAIN	f		
		g										5.3												RSP (FACING)	g		
		h											2									2.8		DIRT DITCH WITH ROCK WEIR	h		
D-1	4	a																10.0					"A1" 117+79.29	REMOVE CULVERT	a	4	D-1
		b																	96.7	6.3				ABANDON CULVERT	b		
D-2	5	a																10.0					"A1" 122+32.0	REMOVE CULVERT	a	5	D-2
		b																	45.2	3				ABANDON CULVERT			
D-2	6	a							1.75	326											5.0		"A1" 123+71.6	INLET (TYPE GO)	a	6	D-2
		b	80.1																					24"CSP	b		
		c				1																		24" DOWNDRAIN SLIPJOINT	c		
		d					2																	24" ANCHOR ASSEMBLY	d		
		e		33.4																				24" CSP DOWNDRAIN	e		
		f										7.1												RSP (FACING)	f		
TOTAL THIS SHEET			289.8	235.3		3	12		1.75	326	2	17.7	4					36.6	237.6	15.6		5.6		CONTINUED ON DQ-2			

* TOTALS ALSO SHOWN ON SUMMARY OF QUANTITES SHEET

DRAINAGE QUANTITIES
DQ-1

REVISED BY | DATE REVISED
RYAN PRINS | KEN HALLIS
CALCULATED-DESIGNED BY | CHECKED BY
FUNCTIONAL SUPERVISOR
AL TRUJILLO

STATE OF CALIFORNIA - DEPARTMENT OF TRANSPORTATION
Caltrans® DESIGN

P:\proj2\02\2E060_plans\pse\22e060id001.dgn

LAST REVISION 03-01-10 | DATE PLOTTED => 24-MAR-2010 | TIME PLOTTED => 12:46

Dist	COUNTY	ROUTE	POST MILES TOTAL PROJECT	SHEET No.	TOTAL SHEETS
02	Tri	36	36.7/37.1	21	47

REGISTERED CIVIL ENGINEER 03-01-10 DATE

3-22-10
PLANS APPROVAL DATE

REGISTERED PROFESSIONAL ENGINEER KEN HALLIS No. C38203 Exp. 3-31-11 CIVIL STATE OF CALIFORNIA

THE STATE OF CALIFORNIA OR ITS OFFICERS OR AGENTS SHALL NOT BE RESPONSIBLE FOR THE ACCURACY OR COMPLETENESS OF SCANNED COPIES OF THIS PLAN SHEET.

NOTE:

(N) - NOT A SEPARATE PAY ITEM, FOR INFORMATION ONLY

DRAINAGE QUANTITIES

SHEET No.	DRAINAGE SYSTEM No. ⬡	DRAINAGE UNIT No. ◯	24" CORRUGATED STEEL PIPE (.138" THICK)	24" CORRUGATED STEEL PIPE DOWNDRAIN (.138" THICK)	24" CORRUGATED STEEL PIPE ENERGY DISSAPATOR (.064" THICK)	24" DOWNDRAIN SLIPJOINT	24" ANCHOR ASSEMBLY	(N) CABLE ANCHORING SYSTEM	MINOR Conc (MINOR STRUCTURE)	Misc IRON AND STEEL	24" STEEL FES	RSP (FACING)	RSP (BACKING No.2, METHOD B)	PLACE HMA (Misc AREA)	CLASS 2 AGGREGATE BASE	HMA DIKE (TYPE A)	REMOVE INLET	REMOVE CULVERT	ABANDON CULVERT	SAND BACKFILL	(N) HIEGHT	DITCH Exc	STATION	DESCRIPTION	DRAINAGE UNIT No. ◯	DRAINAGE SYSTEM No. ⬡	SHEET No.
			LF	LF	EA	EA	EA	EA	CY	LB	EA	CY	CY	SQYD	CY	LF	EA	LF	LF	CY	LF	CY					
D-2	7	a															1						"A1" 127+74.6		a	7	D-2
		b																50.7						REMOVE CULVERT	b		
		c							1.5	326											4.0			INLET (TYPE GO)	c		
		d														10								HMA DIKE (TYPE A)	d		
		e												6	1.0									HMA APRON	e		
		f	51.9																					24"CSP	f		
		g					2																	24" ANCHOR ASSEMBLY	g		
		h		8.1																				24" CSP DOWNDRAIN	h		
		i			1																			24" CSP ENERGY DISSAPATOR	i		
D-2	8	a									1												"E2" 1+84	FES	a	8	D-2
		b	93.0																					24"CSP	b		
		c										5.3												RSP (FACING)	c		
TOTAL THIS SHEET			144.9	8.1	1		2		1.5	326	1	5.3		6	1.0	10	1	50.7									
D-1 SHEET TOAL			289.8	235.3		3	12		1.75	326	2	17.7	4					36.6	237.6	62.2		5.6					
GRAND TOTAL			434.7	243.4	1	3	14		3.25	652	3	*23.0	*4	6	*1.0	10	1	87.3	237.6	62.2		5.6					

* TOTALS ALSO SHOWN ON SUMMARY OF QUANTITES SHEET

DRAINAGE QUANTITIES
DQ-2

CALCULATED-DESIGNED BY RYAN PRINS
CHECKED BY KEN HALLIS
REVISED BY
DATE REVISED
FUNCTIONAL SUPERVISOR AL TRUJILLO

STATE OF CALIFORNIA - DEPARTMENT OF TRANSPORTATION
Caltrans DESIGN

P:\proj2\02\2E060_plans\pse\22e0601d002.dgn

LAST REVISION 03-01-10 | DATE PLOTTED => 24-MAR-2010 | TIME PLOTTED => 12:41

Dist	COUNTY	ROUTE	POST MILES TOTAL PROJECT	SHEET No.	TOTAL SHEETS
02	Tri	36	36.7/37.1	22	47

REGISTERED CIVIL ENGINEER — DATE 03-01-10

3-22-10
PLANS APPROVAL DATE

REGISTERED PROFESSIONAL ENGINEER — KEN HALLIS — No. C38203 — Exp. 3-31-11 — CIVIL — STATE OF CALIFORNIA

THE STATE OF CALIFORNIA OR ITS OFFICERS OR AGENTS SHALL NOT BE RESPONSIBLE FOR THE ACCURACY OR COMPLETENESS OF SCANNED COPIES OF THIS PLAN SHEET.

NOTES:

1. PORTABLE CHANGEABLE MESSAGE SIGN IS REQUIRED WHEN TRAFFIC CONTROL IS NOT IN PLACE AND UNPAVED CONDITIONS EXIST.
2. EXACT SIGN LOCATIONS TO BE DETERMINED BY ENGINEER.

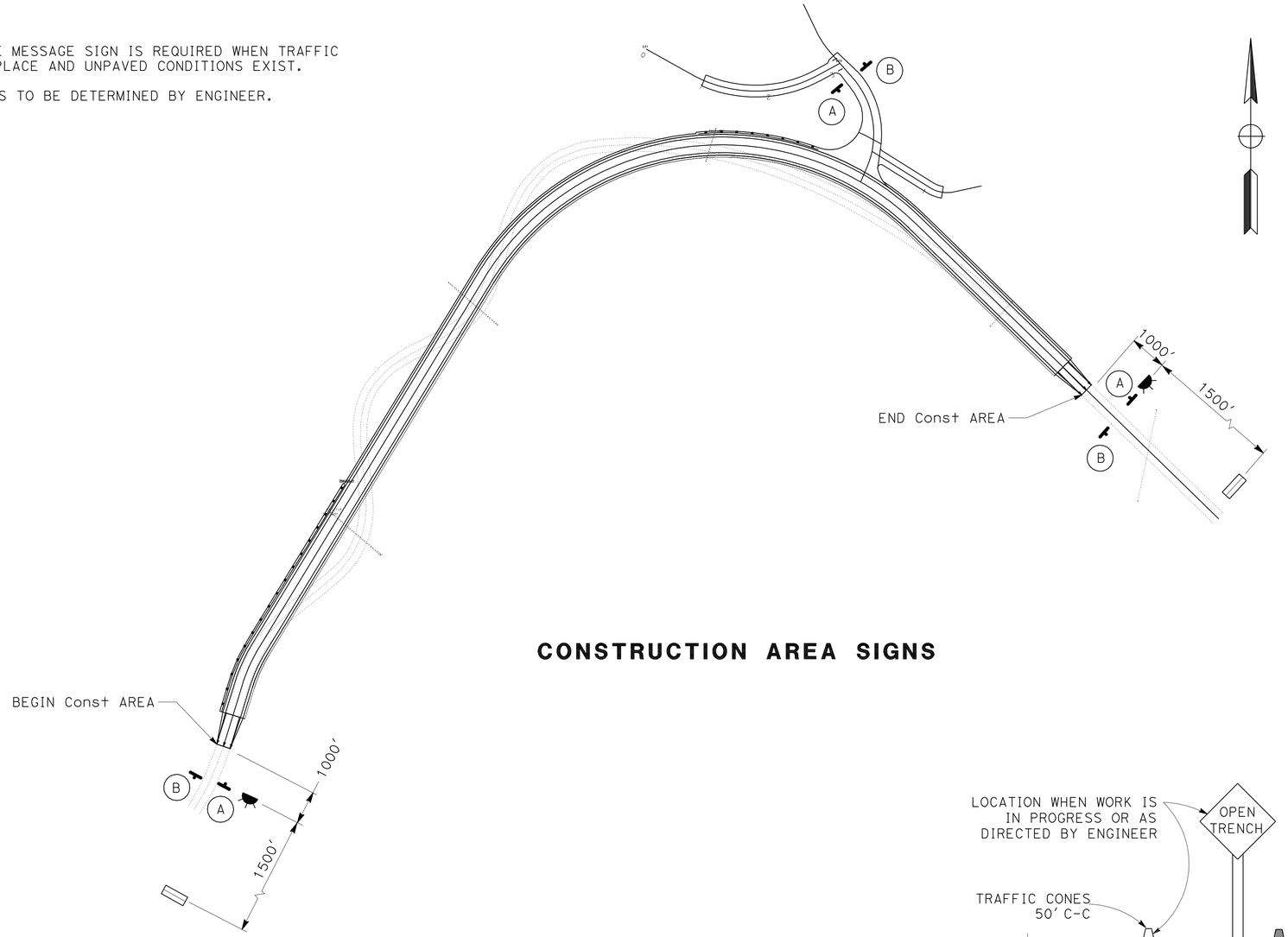

CONSTRUCTION AREA SIGNS

LEGEND

- PORTABLE CHANGEABLE MESSAGE SIGN
- SIGN ON WOOD POST
- Temp FLASHING BEACON

ABBREVIATIONS

PCMS PORTABLE CHANGEABLE MESSAGE SIGN

PCMS MESSAGE

FRAME 1	FRAME 2
REDUCE SPEED	UNPAVED ROAD AHEAD

CONSTRUCTION AREA SIGNS (STATIONARY MOUNTED)

SIGN No.	SIGN CODE	PANEL SIZE	SIGN MESSAGE	SIZE OF POSTS	No. OF SIGNS	No. OF POSTS
A	W20-1	48" x 48"	ROAD WORK AHEAD	4" x 6"	3	1
B	G20-2	36" x 18"	END ROAD WORK	4" x 6"	3	1

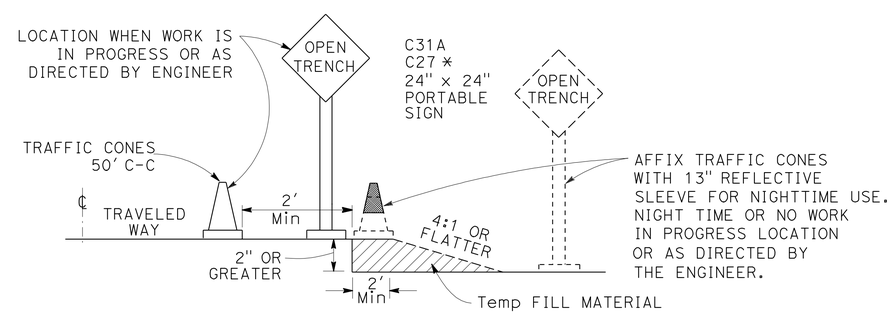

OPEN TRENCH SIGNING AND MARKING

* PLACE AT 250' INTERVALS THROUGH THE OPEN TRENCH AREA ALTERNATE C27 (OPEN TRENCH) AND C31A (NO SHOULDER) SIGNS

CONSTRUCTION AREA SIGNS

NO SCALE

CS-1

REVISED BY | DATE REVISED
RYAN PRINS | KEN HALLIS
CALCULATED-DESIGNED BY | CHECKED BY
FUNCTIONAL SUPERVISOR: AL TRUJILLO

STATE OF CALIFORNIA - DEPARTMENT OF TRANSPORTATION
Caltrans® DESIGN

P:\proj2\02\2E060_plans\pse\22e0601a001.dgn

LAST REVISION 03-01-10 | DATE PLOTTED => 24-MAR-2010 | TIME PLOTTED => 12:41

Dist	COUNTY	ROUTE	POST MILES TOTAL PROJECT	SHEET No.	TOTAL SHEETS
02	Tri	36	36.7/37.1	23	47

REGISTERED CIVIL ENGINEER — DATE: 03-01-10

3-22-10
PLANS APPROVAL DATE

REGISTERED PROFESSIONAL ENGINEER — KEN HALLIS — No. C38203 — Exp. 3-31-11 — CIVIL — STATE OF CALIFORNIA

THE STATE OF CALIFORNIA OR ITS OFFICERS OR AGENTS SHALL NOT BE RESPONSIBLE FOR THE ACCURACY OR COMPLETENESS OF SCANNED COPIES OF THIS PLAN SHEET.

NOTE:

FOR COMPLETE RIGHT OF WAY DATA, SEE RIGHT OF WAY RECORD MAPS AT DISTRICT OFFICE.

LEGEND

- SINGLE STRIPE MARKER
- DELINEATOR (TYPE E)
- MARKER (CULVERT)
- MILEPOST MARKER
- REMOVE ROADSIDE SIGN
- ROADSIDE SIGN (1 POST)
- #-# ROADSIDE SIGN

ABBREVIATIONS

S SPACING

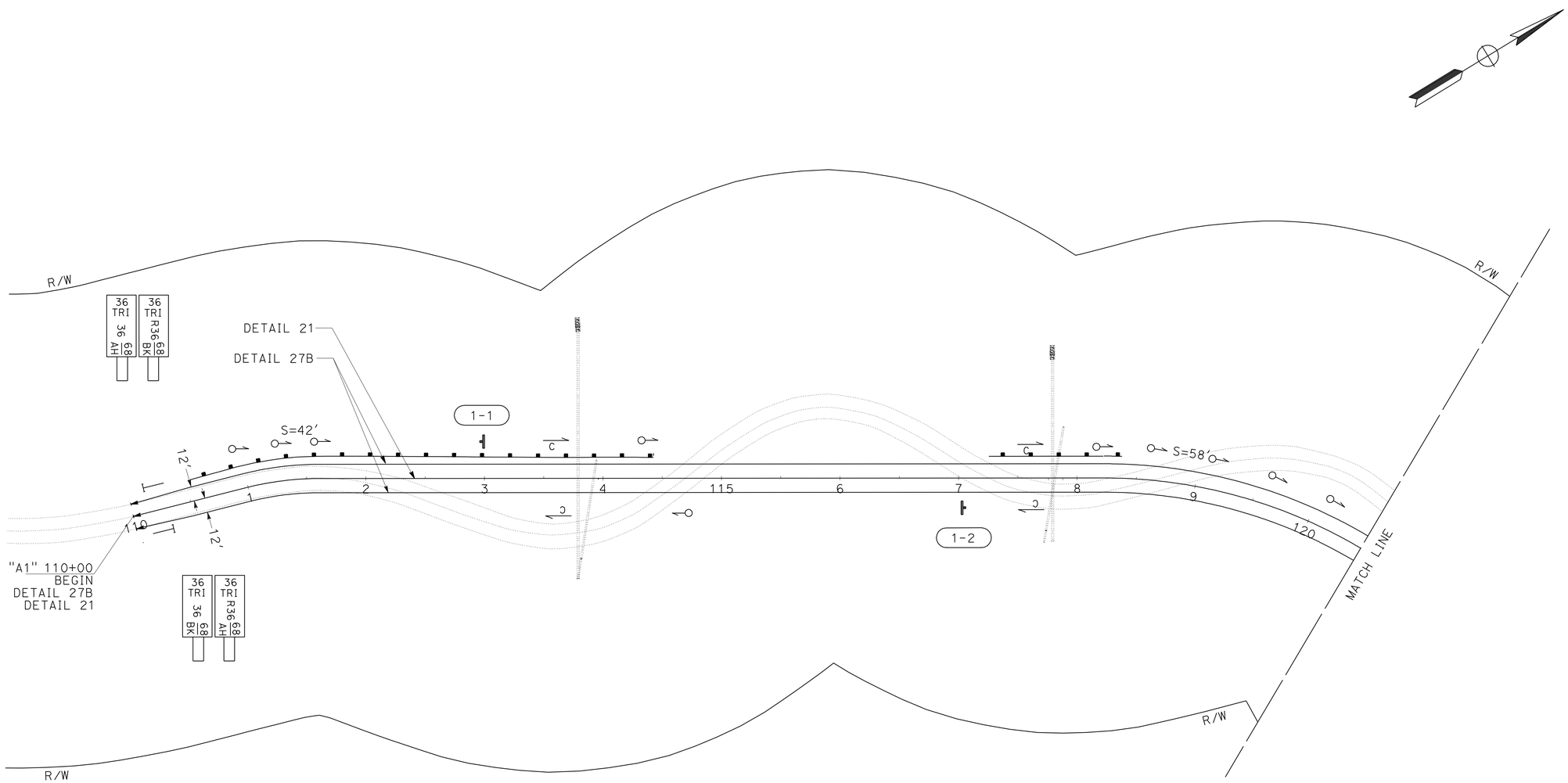

PAVEMENT DELINEATION AND SIGN PLAN

SCALE: 1" = 50'

PD-1

THIS PLAN ACCURATE FOR PAVEMENT DELINEATION AND SIGN WORK ONLY

STATE OF CALIFORNIA - DEPARTMENT OF TRANSPORTATION

Caltrans® **DESIGN**

FUNCTIONAL SUPERVISOR: AL TRUJILLO

CALCULATED-DESIGNED BY: RYAN PRINS

CHECKED BY: KEN HALLIS

REVISED BY / DATE REVISED

P:\proj\02\2E060_plans\pse\22e060na001.dgn

LAST REVISION 03-01-10 — DATE PLOTTED => 24-MAR-2010 — TIME PLOTTED => 12:41

BORDER LAST REVISED 4/11/2008 — RELATIVE BORDER SCALE IS IN INCHES 0 1 2 3 — USERNAME => trmnguye — DGN FILE => 22e060na001.dgn — CU 03 242 — EA 2E0601

Dist	COUNTY	ROUTE	POST MILES TOTAL PROJECT	SHEET No.	TOTAL SHEETS
02	Tri	36	36.7/37.1	24	47

REGISTERED CIVIL ENGINEER — DATE: 03-01-10

3-22-10
PLANS APPROVAL DATE

REGISTERED PROFESSIONAL ENGINEER — KEN HALLIS — No. C38203 — Exp. 3-31-11 — CIVIL — STATE OF CALIFORNIA

THE STATE OF CALIFORNIA OR ITS OFFICERS OR AGENTS SHALL NOT BE RESPONSIBLE FOR THE ACCURACY OR COMPLETENESS OF SCANNED COPIES OF THIS PLAN SHEET.

NOTE:

FOR COMPLETE RIGHT OF WAY DATA, SEE RIGHT OF WAY RECORD MAPS AT DISTRICT OFFICE.

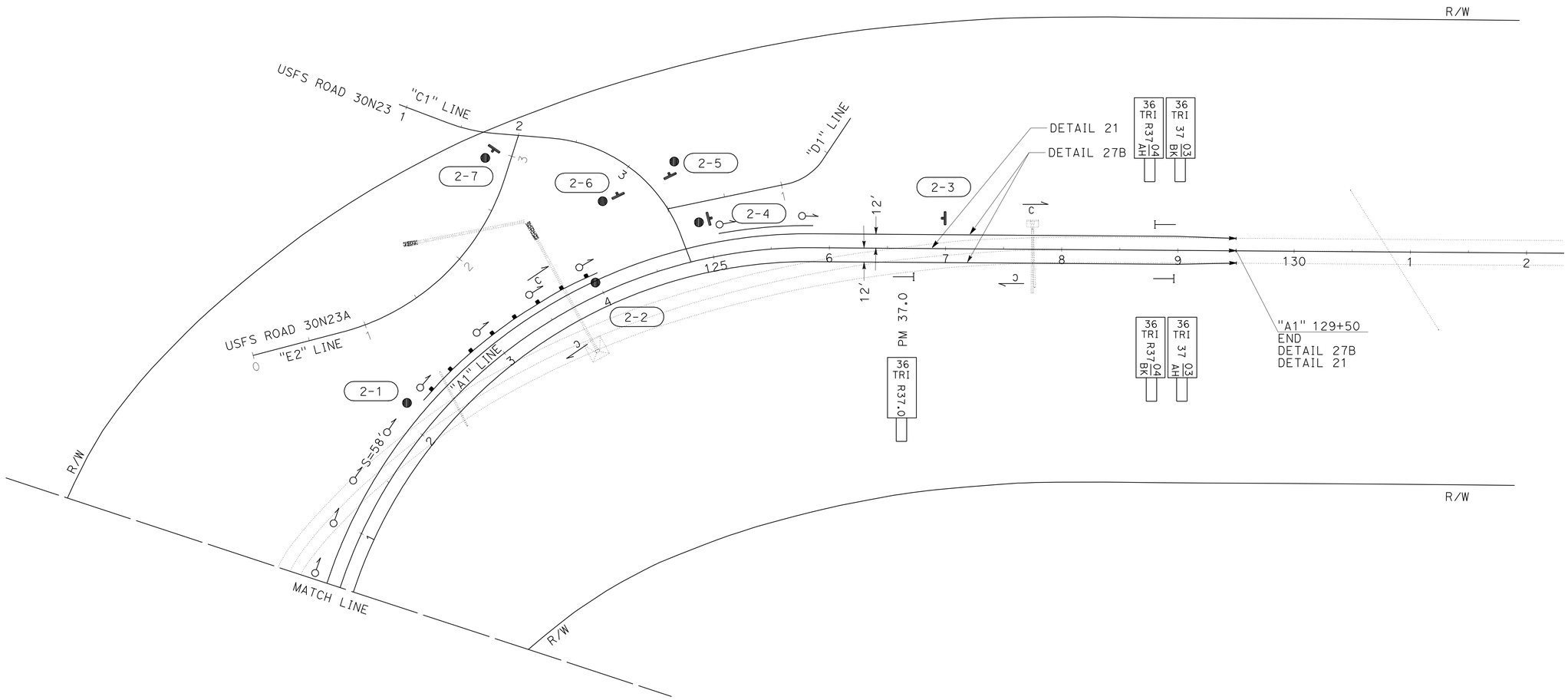

PAVEMENT DELINEATION AND SIGN PLAN

SCALE: 1" = 50'

PD-2

THIS PLAN ACCURATE FOR PAVEMENT DELINEATION AND SIGN WORK ONLY

REVISED BY	DATE REVISED
RYAN PRINS	KEN HALLIS
CALCULATED-DESIGNED BY	CHECKED BY
FUNCTIONAL SUPERVISOR	AL TRUJILLO

STATE OF CALIFORNIA - DEPARTMENT OF TRANSPORTATION — Caltrans — DESIGN

P:\proj2\02\2E060_plans\pse\22e060na002.dgn

LAST REVISION 03-01-10 — DATE PLOTTED => 24-MAR-2010 — TIME PLOTTED => 12:41

BORDER LAST REVISED 4/11/2008 — RELATIVE BORDER SCALE IS IN INCHES 0 1 2 3 — USERNAME => trmnguye — DGN FILE => 22e060na002.dgn — CU 03 242 — EA 2E0601

Dist	COUNTY	ROUTE	POST MILES TOTAL PROJECT	SHEET No.	TOTAL SHEETS
02	Tri	36	36.7/37.1	25	47

REGISTERED CIVIL ENGINEER 03-01-10 DATE

3-22-10
PLANS APPROVAL DATE

REGISTERED PROFESSIONAL ENGINEER KEN HALLIS No. C38203 Exp. 3-31-11 CIVIL STATE OF CALIFORNIA

THE STATE OF CALIFORNIA OR ITS OFFICERS OR AGENTS SHALL NOT BE RESPONSIBLE FOR THE ACCURACY OR COMPLETENESS OF SCANNED COPIES OF THIS PLAN SHEET.

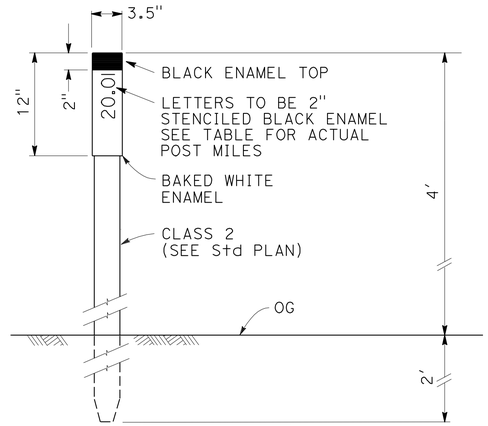

MARKER (CULVERT)

NOTE:

PLACE MARKER 2' FROM HP AT EACH CULVERT LOCATION.

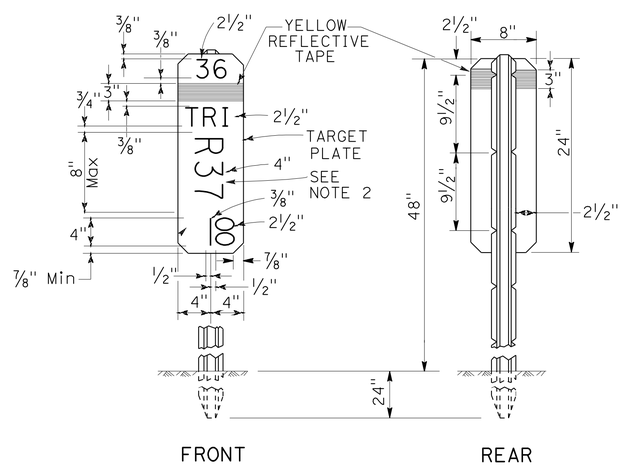

NOTES:

1. THE MARKER SHALL BE WHITE (NON-REFLECTIVE) TARGET PLATE WITH BLACK SERIES D NUMERALS AND LETTERS.
2. A POST MILE PREFIX, SUCH AS "R", SHALL APPLY ONLY WHEN DIRECTED BY THE ENGINEER.
3. "BK" (BACK), "AH" (AHEAD), OR A BLANK SPACE SHALL APPLY AS DIRECTED BY THE ENGINEER.
4. ALL INFORMATION SHALL BE IN ENGLISH UNITS (MILES).

POST MILE MARKER DETAIL

"A1" 126+69

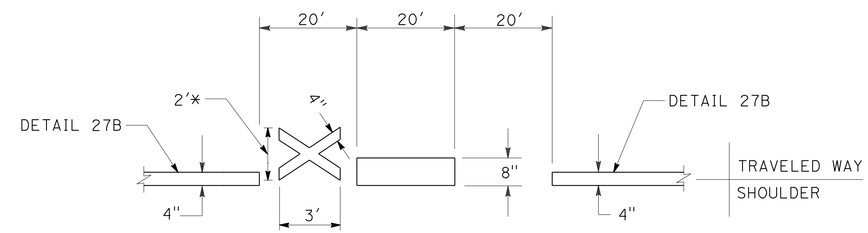

TYPICAL MILE POST STRIPE

NOTES:

1. ON RIGHT EDGELINE AT EACH WHOLE POST MILE
2. * 4" SOLID WHITE "X" TO BE PLACED ONLY AT BOTH ENDS OF A FRACTIONAL MILE.

PAVEMENT DELINEATION DETAILS AND SIGN DETAILS

NO SCALE

PDD-1

REVISED BY	DATE REVISED

CALCULATED-DESIGNED BY	RYAN PRINS
CHECKED BY	KEN HALLIS
FUNCTIONAL SUPERVISOR	AL TRUJILLO

STATE OF CALIFORNIA - DEPARTMENT OF TRANSPORTATION
Caltrans DESIGN

V:\Project\Plans\PSEWorking\d2\02-2e0601-rdw\22e060nb001.dgn

LAST REVISION 03-01-10 | DATE PLOTTED => 24-MAR-2010 | TIME PLOTTED => 13:28

Dist	COUNTY	ROUTE	POST MILES TOTAL PROJECT	SHEET No.	TOTAL SHEETS
02	Tri	36	36.7/37.1	26	47

REGISTERED CIVIL ENGINEER 03-01-10 DATE

3-22-10
PLANS APPROVAL DATE

REGISTERED PROFESSIONAL ENGINEER KEN HALLIS No. C38203 Exp. 3-31-11 CIVIL STATE OF CALIFORNIA

THE STATE OF CALIFORNIA OR ITS OFFICERS OR AGENTS SHALL NOT BE RESPONSIBLE FOR THE ACCURACY OR COMPLETENESS OF SCANNED COPIES OF THIS PLAN SHEET.

NOTES:

1. CALIFORNIA SIGN CODES ARE DESIGNATED BY (CA), OTHERWISE FEDERAL SIGN CODES ARE SHOWN.
2. (N) - NOT A SEPARATE PAY ITEM, FOR INFORMATION ONLY.

CULVERT MARKER POSTMILE

Sta	PM
"A1" 113+78.48	36.75
"A1" 117+79.29	36.82
"A1" 123+71.60	36.94
"A1" 127+74.64	37.02

PAVEMENT DELINEATION QUANTITIES

STATION	THERMOPLASTIC TRAFFIC STRIPE (SPRAYABLE)	
	DETAIL 21	DETAIL 27B
	LF	LF
	1950	3900
TOTAL	5850	

MATERIAL SUMMARY CONTRACTOR FURNISHED SIGNS

SIGN No.	SIGN CODE	(N) SIGN SIZE (L x D) (SQFT)	SINGLE FACED	DOUBLE FACED	BACKGROUND SHEETING COLOR	BACKGROUND RETROREFLECTIVE ASTM TYPE	LEGEND LEGEND COLOR	LEGEND RETROREFLECTIVE ASTM TYPE	FURNISH SINGLE-SHEET UNFRAMED ALUMINUM 0.063" THICK	DESCRIPTION (REMARKS)
1-1	W1-5 (L)	9	X		YELLOW	III	BLACK	N/A	X	CURVY ROAD (L)
	W13-1	6.25	X		YELLOW	III	BLACK	N/A	X	25 MPH
1-2	W1-2A (R)	9	X		YELLOW	III	BLACK	N/A	X	35 MPH (R)
2-3	W1-2A (L)	9	X		YELLOW	III	BLACK	N/A	X	35 MPH (L)

MARKERS AND DELINEATORS

STATION	DELINEATOR (CLASS 2) TYPE E	MARKER (CULVERT)	MILEPOST MARKER	COMMENTS
	EA	EA	EA	
	22	8	8	
"A1" 126+69			1	PM 37.0
TOTAL	22	8	9	

ROADSIDE SIGNS

SHEET No.	STATION	SIGN No. (#-#)	SIGN CODE	(N) PANEL SIZE	FURNISH SINGLE SHEET ALUMINUM SIGN (0.063"-UNFRAMED)	(N) POST LENGTH	(N) POST SIZE	ROADSIDE SIGN ONE POST	ROADSIDE SIGN TWO POST	REMOVE ROADSIDE SIGN	RELOCATE ROADSIDE SIGN	REMARKS
					SQFT	Ft		EA	EA	EA	EA	
PD-1	"A1" 113+00 Lt	1-1	W1-5 W13-1	36" x 36" 30" x 30"	9 6.25	18'	4" x 6"	1				CURVY ROAD 25 MPH
PD-1	"A1" 117+00 Rt	1-2	W1-2A (R)	36" x 36"	9	16'	4" x 4"	1				35 MPH (R)
PD-2	"A1" 122+10 Lt	2-1	W1-1A							1		CURVE LEFT 20 MPH
PD-2	"A1" 124+00 Lt	2-2	W1-2 W13-1							1		CURVE LEFT 20 MPH
PD-2	"A1" 127+00 Lt	2-3	W1-2A (L)	36" x 36"	9	16'	4" x 4"	1				35 MPH (L)
PD-2	"C1" 3+71 Lt	2-4	USFS			10'	4" x 4"			1	1	RELOCATE ROADSIDE SIGN-ONE POST
PD-2	"C1" 3+23 Lt	2-5	USFS			10'	4" x 4"			1	1	RELOCATE ROADSIDE SIGN-ONE POST
PD-2	"C1" 3+23 Rt	2-6	USFS			6'	4" x 4"			1	1	RELOCATE ROADSIDE SIGN-ONE POST
PD-2	"C1" 1+82 Rt	2-7	USFS			6'	4" x 4"			1	1	RELOCATE ROADSIDE SIGN-ONE POST
			TOTAL		33.25			3		6	4	

PAVEMENT DELINEATION AND SIGN QUANTITIES

PDQ-1

REVISED BY | DATE REVISED
RYAN PRINS | KEN HALLIS
CALCULATED-DESIGNED BY | CHECKED BY
FUNCTIONAL SUPERVISOR
AL TRUJILLO

STATE OF CALIFORNIA - DEPARTMENT OF TRANSPORTATION
Caltrans® DESIGN

P:\proj2\02\2E060_plans\pse\22e060nc001.dgn

LAST REVISION 03-01-10 | DATE PLOTTED => 24-MAR-2010 | TIME PLOTTED => 13:28

Dist	COUNTY	ROUTE	POST MILES TOTAL PROJECT	SHEET No.	TOTAL SHEETS
02	Tri	36	36.7/37.1	27	47

REGISTERED CIVIL ENGINEER — DATE 03-01-10

3-22-10
PLANS APPROVAL DATE

REGISTERED PROFESSIONAL ENGINEER — KEN HALLIS — No. C38203 — Exp. 3-31-11 — CIVIL — STATE OF CALIFORNIA

THE STATE OF CALIFORNIA OR ITS OFFICERS OR AGENTS SHALL NOT BE RESPONSIBLE FOR THE ACCURACY OR COMPLETENESS OF SCANNED COPIES OF THIS PLAN SHEET.

NOTE:

(N) - NOT A SEPARATE PAY ITEM, FOR INFORMATION ONLY

ABBREVIATIONS

USFS UNITED STATES FOREST SERVICE

BMP BEST MANAGEMENT PRACTICE

TEMPORARY WATER POLLUTION CONTROL

DESCRIPTION	Temp DRAINAGE INLET PROTECTION	Temp CHECK DAM	Temp FIBER ROLL	Temp EROSION CONTROL BLANKET
	EA	LF	LF	SQYD
STORMWATER BMP ITEMS	4	200	8500	
EROSION CONTROL ESTABLISHMENT WORK	2	100	2000	500
TOTAL	6	300	10500	500

EROSION CONTROL (HYDROSEED)

STATION	(N) STABILIZING EMULSION (EROSION CONTROL)	(N) SEED (EROSION CONTROL)	(N) FIBER (EROSION CONTROL)	(N) COMMERICAL FERTILIZER (EROSION CONTROL)	EROSION CONTROL (HYDROSEED)
	LB	LB	LB	LB	ACRE
	520	221	8450	780	2.6
TOTAL	520	221	8450	780	2.6

ROADWAY QUANTITIES

STATION RANGE	ROADWAY EXCAVATION	(N) EMBANKMENT	CLASS 2 AGGREGATE BASE	COLD PLANE ASPHALT CONCRETE PAVEMENT	METAL BEAM GUARD RAILING (STEEL POST)	Alt IN-LINE TERMINAL SYSTEM	RSP (FACING, METHOD B)	RSP (BACKING No.2, METHOD B)	RSP (GRANULAR MATERIAL)	IMPORTED Matl (Shld BACKING)	TACK COAT	HMA (TYPE A)
	CY	CY	CY	SQYD	LF	EA	CY	CY	CY	TON	TON	TON
"A1" 110+00 TO 129+50	32,107	27,290	1230	177	372	6			80	378.7	1	1842
"C1"1+84 TO 4+00			125							46.6		93
"D1" 0+00 TO 1+86			52									
"E2" 1+00 TO3+18.87			75									
QUANTIFIED FROM DRAINAGE SHEET			2.8				23	4				3.7
TOTAL	32,107		1484.8	177	372	6	23	4	80	425.3	1	1938.7

SUMMARY OF QUANTITIES
Q-1

REVISED BY | DATE REVISED

RYAN PRINS | KEN HALLIS

CALCULATED-DESIGNED BY | CHECKED BY

FUNCTIONAL SUPERVISOR: AL TRUJILLO

STATE OF CALIFORNIA - DEPARTMENT OF TRANSPORTATION

Caltrans® DESIGN

P:\proj2\02\2E060_plans\pse\22e060pa001.dgn

LAST REVISION 03-01-10 | DATE PLOTTED => 26-MAR-2010 | TIME PLOTTED => 10:57

Dist	COUNTY	ROUTE	POST MILES TOTAL PROJECT	SHEET No.	TOTAL SHEETS
02	Tri	36	36.7/37.1	28	47

J. Hannigan 03-01-10
REGISTERED ELECTRICAL ENGINEER

3-22-10
PLANS APPROVAL DATE

REGISTERED PROFESSIONAL ENGINEER J.M. HANNIGAN No. E13665 Exp. 6-30-11 ELECTRICAL STATE OF CALIFORNIA

THE STATE OF CALIFORNIA OR ITS OFFICERS OR AGENTS SHALL NOT BE RESPONSIBLE FOR THE ACCURACY OR COMPLETENESS OF ELECTRONIC COPIES OF THIS PLAN SHEET.

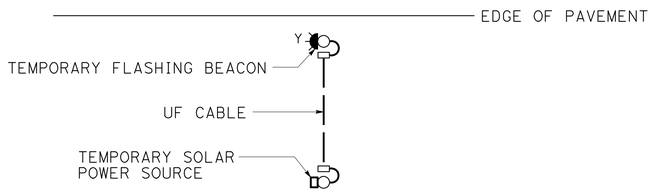

TYPICAL SOLAR INSTALLATION

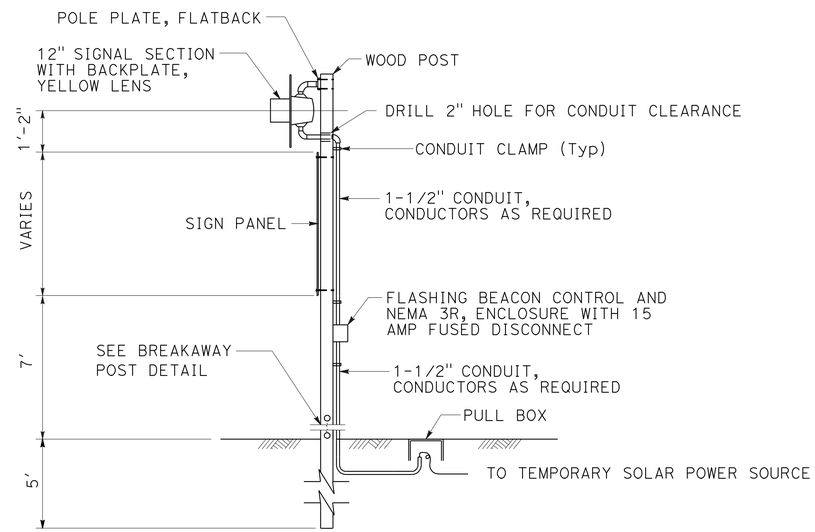

TEMPORARY FLASHING BEACON

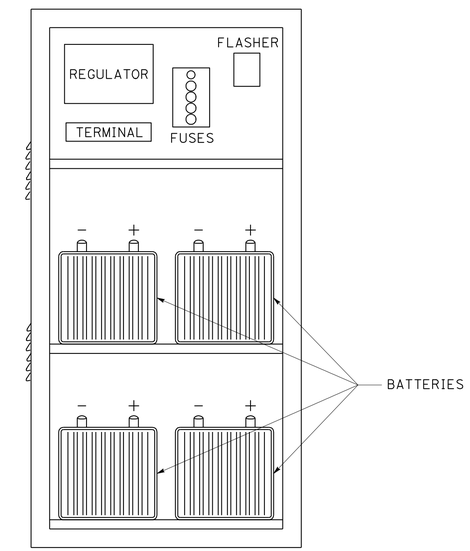

NEMA 4 BATTERY AND CONTROL ENCLOSURE

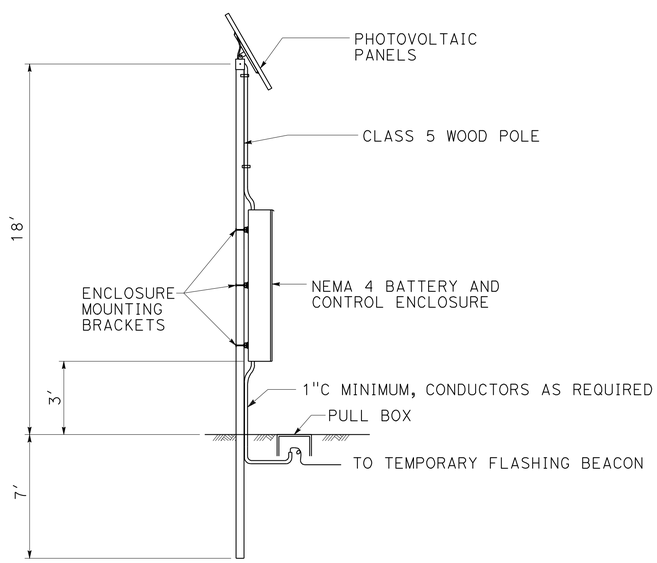

NOTE: POLE SHALL BE LOCATED 15' FROM ETW OR PROVIDE ATTENUATION.

TEMPORARY SOLAR POWER SOURCE

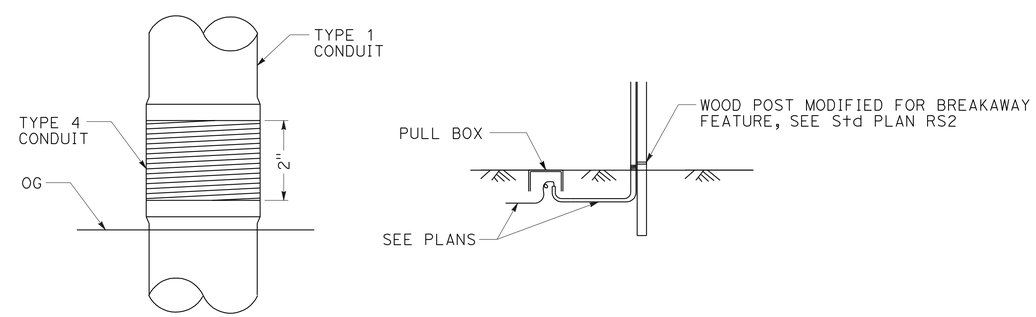

BREAKAWAY POST DETAIL
(CONDUIT CONNECTION)

TEMPORARY FLASHING BEACON
NO SCALE

E-1

THIS PLAN ACCURATE FOR ELECTRICAL WORK ONLY

REVISED BY	DATE REVISED
J. M. HANNIGAN	JIM ELGIN

CALCULATED-DESIGNED BY / CHECKED BY

FUNCTIONAL SUPERVISOR: ROB STINGER

STATE OF CALIFORNIA - DEPARTMENT OF TRANSPORTATION
Caltrans® ELECTRICAL DESIGN

P:\proj2\02\2E060_plans\pse\22e060ua001.dgn

LAST REVISION 02-09-10 | DATE PLOTTED => 24-MAR-2010 | TIME PLOTTED => 13:28

DIST	COUNTY	ROUTE	POST MILES TOTAL PROJECT	SHEET NO.	TOTAL SHEETS
02	Tri	36	36.7/37.1	29	47

Randell D. Hiatt
REGISTERED CIVIL ENGINEER

June 6, 2008
PLANS APPROVAL DATE

REGISTERED PROFESSIONAL ENGINEER
Randell D. Hiatt
No. C50200
Exp. 6-30-09
CIVIL
STATE OF CALIFORNIA

The State of California or its officers or agents shall not be responsible for the accuracy or completeness of electronic copies of this plan sheet.

To accompany plans dated 3-22-10

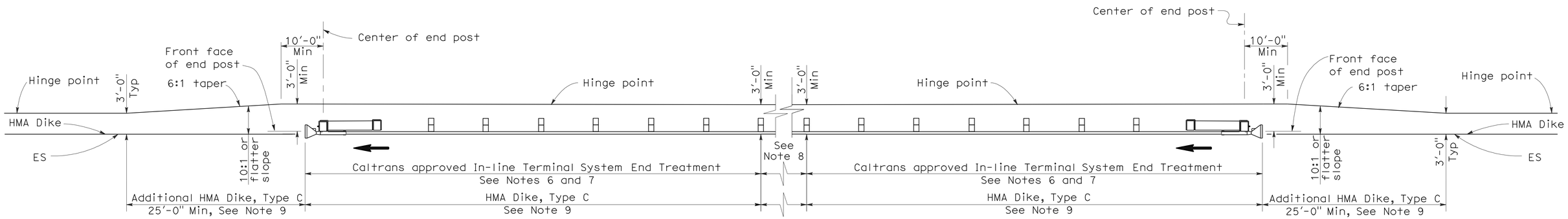

TYPE 11D LAYOUT

(EMBANKMENT GUARD RAILING INSTALLATION WITH IN-LINE END TREATMENT AT EACH END OF RAILING)
See Note 5

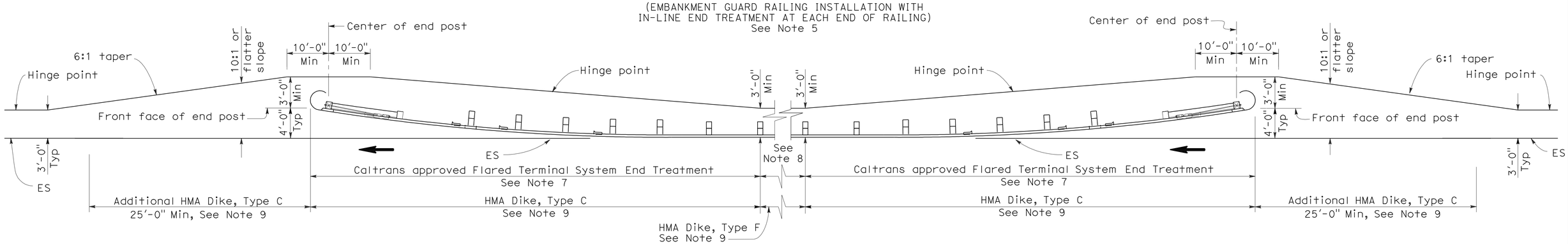

TYPE 11E LAYOUT

(EMBANKMENT GUARD RAILING INSTALLATION WITH FLARED END TREATMENT AT EACH END OF RAILING)
See Note 5

NOTES:

1. Line post, blocks and hardware to be used are shown on Standard Plans A77A1, A77A2, A77B1, A77C1 and A77C2.
2. Guard rail post spacing to be 6'-3" center to center, except as otherwise noted.
3. Except as noted, line posts are 6" x 8" x 6'-0" wood with 6" x 8" x 1'-2" wood blocks. W6 x 9 steel posts, 6'-0" in length, with 6" x 8" x 1'-2" notched wood blocks or plastic blocks may be used for 6" x 8" x 6'-0" wood post with 6" x 8" x 1'-2" wood blocks where applicable and when specified.
4. Direction of adjacent traffic indicated by ⟶.
5. Layout Types 11D through 11L, shown on the A77E Series of Revised Standard Plans, are typically used where guard railing is recommended to shield embankment slopes and a crashworthy end treatment is required for both directions of traffic.
6. In-line Terminal System End Treatments are used where site conditions will not accommodate a flared end treatment.
7. The type of terminal system end treatment to be used will be shown on the Project Plans.
8. Dependent on site conditions (embankment height and side slope), construction of additional guard railing (length equal to multiples of 12'-6" with 6'-3" post spacing) may be advisable.
9. Where placement of dike is required with guard railing installations, see Revised Standard Plan RSP A77C4 for dike positioning details.

STATE OF CALIFORNIA
DEPARTMENT OF TRANSPORTATION

METAL BEAM GUARD RAILING TYPICAL LAYOUTS FOR EMBANKMENTS

NO SCALE

RSP A77E2 DATED JUNE 6, 2008 SUPERSEDES STANDARD PLAN A77E2
DATED MAY 1, 2006 - PAGE 49 OF THE STANDARD PLANS BOOK DATED MAY 2006.

REVISED STANDARD PLAN RSP A77E2

2006 REVISED STANDARD PLAN RSP A77E2

12-10-07

DIST	COUNTY	ROUTE	POST MILES TOTAL PROJECT	SHEET NO.	TOTAL SHEETS
02	Tri	36	36.7/37.1	30	47

REGISTERED CIVIL ENGINEER

June 15, 2007
PLANS APPROVAL DATE

REGISTERED PROFESSIONAL ENGINEER Glenn DeCou No. C34547 Exp. 9-30-07 CIVIL STATE OF CALIFORNIA

The State of California or its officers or agents shall not be responsible for the accuracy or completeness of electronic copies of this plan sheet.

To accompany plans dated 3-22-10

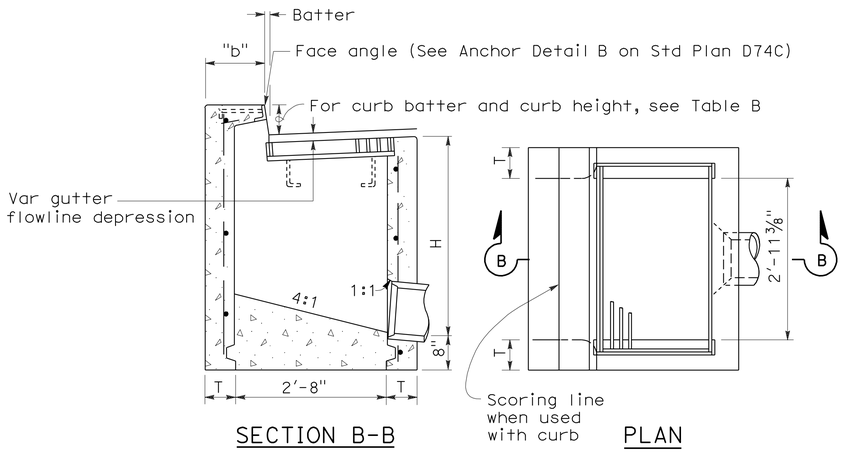

TYPE GO

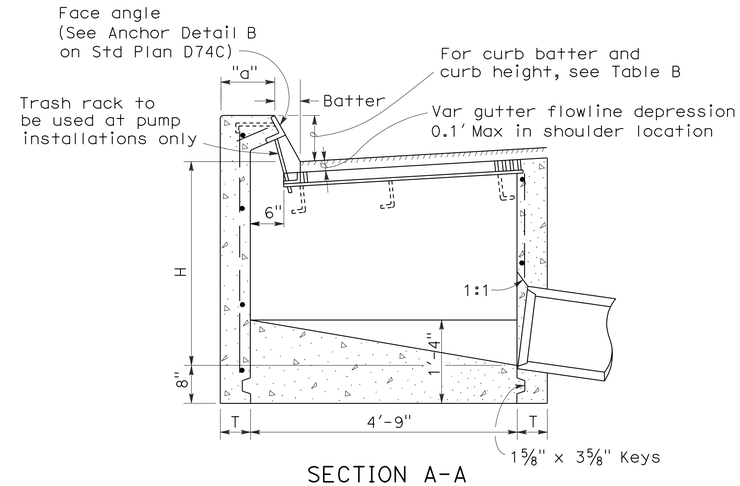

SECTION A-A

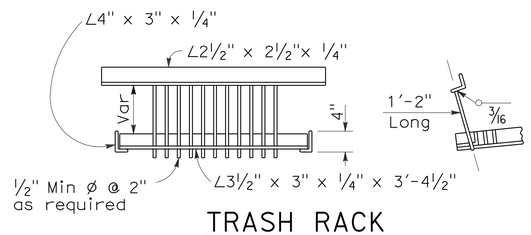

TRASH RACK

(For use with pump installation)

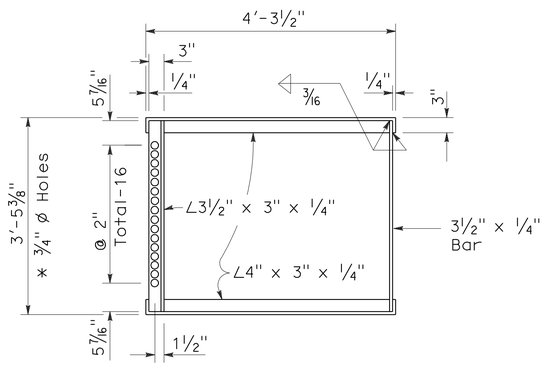

* 3/4" ø Holes required only with trash rack

GRATE FRAME FOR TYPE GDO INLET

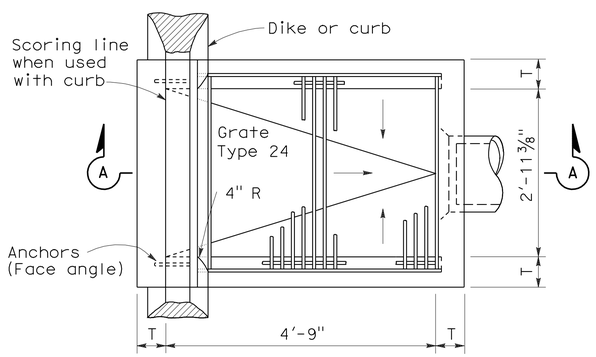

PLAN

TYPE GDO

TABLE A

CONCRETE QUANTITIES				
	H=3'-0" TO 8'-0" (T=6")		H=8'-1" TO 20'-0" (T=8")	
TYPE	H=3'-0" (CY)	ADDITIONAL PCC PER FOOT (CY)	H=8'-1" (CY)	ADDITIONAL PCC PER FOOT (CY)
GO	1.24	0.245	3.39	0.346
GDO	1.62	0.322	4.36	0.446

Table based on 8" floor slab, no deduction for pipe openings, and curb type giving highest quantity of concrete. No deductions or adjustments are to be made to these quantities because of pipe openings, different floor alternatives or different curb type.

TABLE B

CURB TYPE	NORMAL CURB HEIGHT	CURB BATTER	"a" DIMENSION	"b" DIMENSION
A1-6	6"	1 1/2"	T+7 1/2"	T+6 1/2"
A1-8	8"	2"	T+7"	T+6"
B1-6	6"	4"	T+5"	T+4"
Type A Dike	6"	3"	T+6"	T+5"

NOTES:

1. "H" is the difference in elevation between the outlet pipe flow line and the normal gutter grade line undepressed.
2. For "T" wall thickness, see Table A below.
3. Wall reinforcing not required when "H" is 8'-0" or less and the unsupported width or length is 7'-0" or less. Walls exceeding these limits shall be reinforced with #4 @ 18"± centers placed 1 1/2" clear to inside of box unless otherwise shown.
4. Inlet bottom reinforcing not required. See Standard Plan D74C for alternative reinforced bottom.
5. Steps - None required where "H" is less than 2'-6" Where "H" is 2'-6" or more, install steps with lowest rung 1'-0" above the floor and highest rung not more than 6" below top of inlet. The distance between steps shall not exceed 1'-0" and shall be uniform throughout the length of the wall. Place steps in the wall without an opening. Step inserts may be substituted for the bar steps. Step Inserts shall comply with State Industrial Safety requirements. See Standard Plan D74C for step details.
6. When shown on the project plans, place a 3/4" plain round protection bar horizontally across the length of the opening and bend back 4" into the inlet wall on each side.
7. Pipe(s) can be placed in any wall.
8. Curb section shall match adjacent curb.
9. Basin floors shall have wood trowel finish and shall slope toward the outlet pipe as shown.
10. Galvanizing - See Standard Specifications or Special Provisions.
11. See Standard Plan D77A and D77B for grate and frame details and weights of miscellaneous iron and Steel.
12. See Standard Plan D78A for gutter depression details.
13. Full penetration butt welds may be substituted for the fillet welds on all anchors.
14. Standard square, hexagon, round or equivalent headed anchors may be substituted for the right angle hooks on the anchors shown on this plan.
15. Cast-in-place or precast alternative is optional with contractor. See Standard Specifications.
16. Cast-in-place inlets to be formed around all pipes/stubs intersecing the inlet and concrete poured in one continuous operation. Precast inlets shall have mortared pipe connections conforming to details for Type GCP inlets on Standard Plan D75B. See Standard Specifications for mortar composition.

STATE OF CALIFORNIA
DEPARTMENT OF TRANSPORTATION

DRAINAGE INLETS

NO SCALE

RSP D74B DATED JUNE 15, 2007 SUPERSEDES STANDARD PLAN D74B DATED MAY 1, 2006 - PAGE 150 OF THE STANDARD PLANS BOOK DATED MAY 2006.

REVISED STANDARD PLAN RSP D74B

2006 REVISED STANDARD PLAN RSP D74B

4-16-07

DIST	COUNTY	ROUTE	POST MILES TOTAL PROJECT	SHEET NO.	TOTAL SHEETS
02	Tri	36	36.7/37.1	31	47

Raymond Don Tsztoo
REGISTERED CIVIL ENGINEER

January 18, 2008
PLANS APPROVAL DATE

REGISTERED PROFESSIONAL ENGINEER
Raymond Don Tsztoo
No. C37332
Exp. 6-30-08
CIVIL
STATE OF CALIFORNIA

The State of California or its officers or agents shall not be responsible for the accuracy or completeness of electronic copies of this plan sheet.

To accompany plans dated 3-22-10

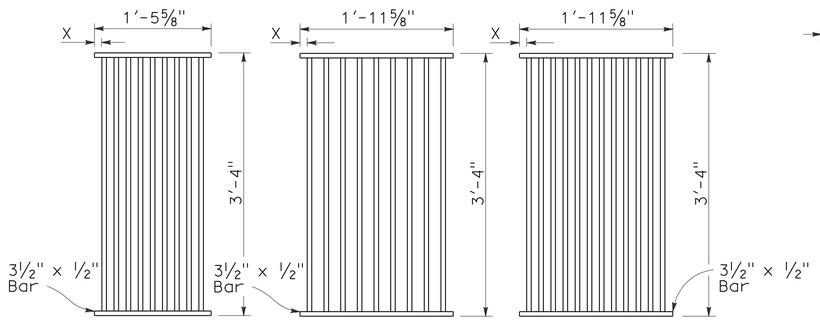

TYPE 18-9

1⅜" Clear spacing. Use within the roadbed on highways where bicycles and pedestrians are excluded.

TYPE 24-9

2" Clear spacing. Use in locations off the roadbed on all types of highways.

TYPE 24-12

1⅜" Clear spacing. Use within the roadbed on highways where bicycles and pedestrians are excluded.

RECTANGULAR GRATE DETAILS

(See table below)

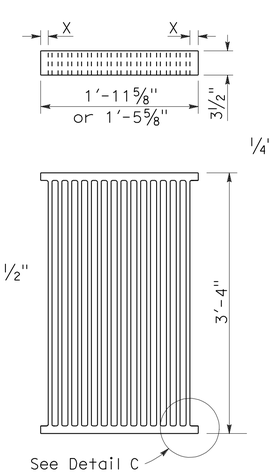

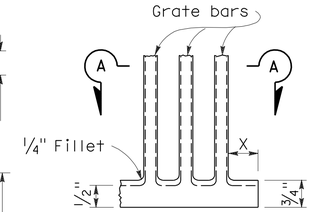

DETAIL C

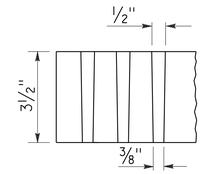

SECTION A-A

ALTERNATIVE CAST NODULAR IRON GRATE OR CAST STEEL GRATE

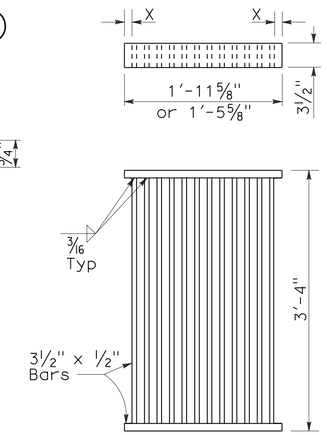

ALTERNATIVE WELDED GRATE

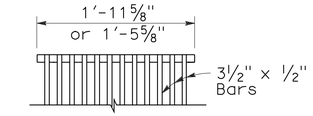

CAST END BLOCK

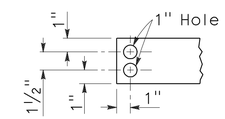

END OF BAR

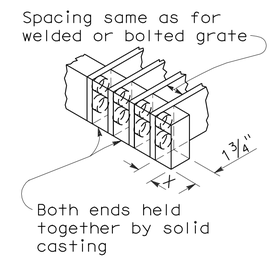

ALTERNATIVE CAST NODULAR IRON OR CAST STEEL END BLOCK GRATE

NOTES:

1. Grate type numbers refer to approximate width of grate in inches and number of bars, respectively.
2. Contractor has the option of using cast nodular iron, cast steel, welded, bolted, or cast end block grate.
3. See Special Provisions for requirements pertaining to galvanizing or asphalt dipping of grates and frames.
4. Rounded top of bars optional on all grates.
5. Pipe inlets with a grate shall be placed so that bars parallel direction of principle surface flow.
6. Full penetration butt welds may be substituted for the fillet welds on all anchors.
7. Standard square, hexagon, round or equivalent headed anchors may be substituted for the right angle hooks on the anchors shown on this plan.
8. Grate and frame weights are based on welded grates (weights of face angles, steps, protection bars, etc. are not included).

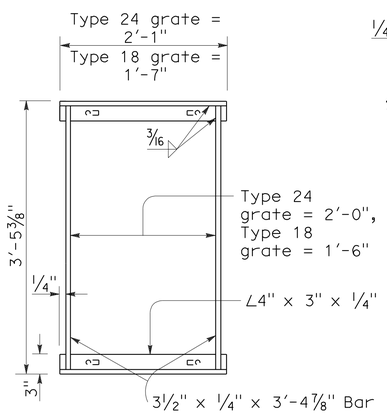

TYPICAL FRAME

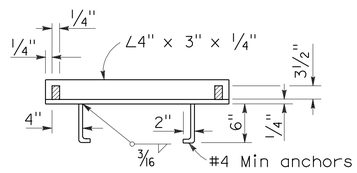

CROSS SECTION

(Thru frame)

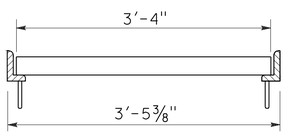

LONGITUDINAL SECTION

(Thru frame and grate)

RECTANGULAR FRAME DETAILS

(For all rectangular grates)

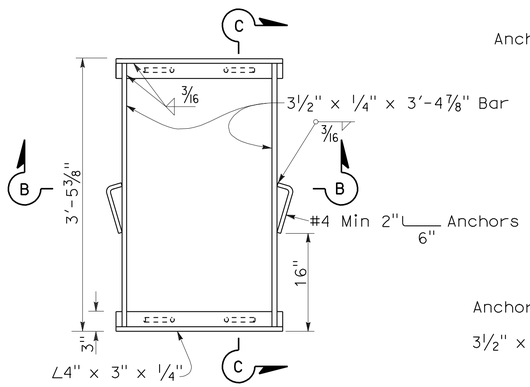

TYPICAL FRAME

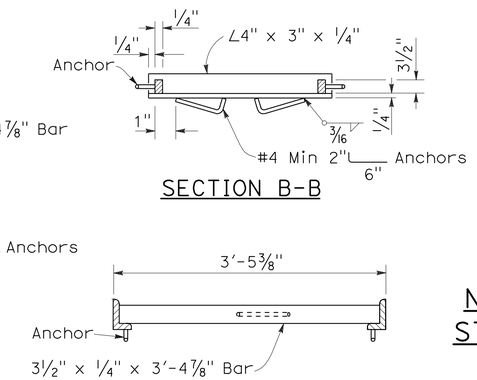

SECTION B-B

SECTION C-C

ALTERNATIVE ANCHOR FOR RECTANGULAR FRAME

(For details not shown, See Rectangular Frame Details)

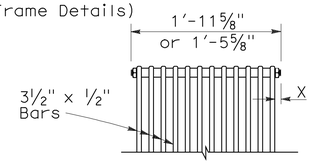

BOLTED END BLOCK

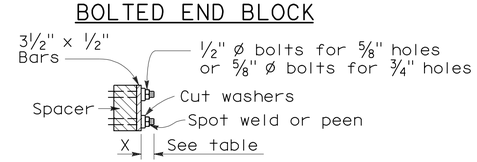

BOLTING DETAIL

ALTERNATIVE BOLTED GRATE

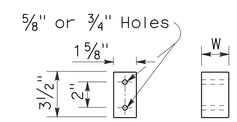

BAR SPACER

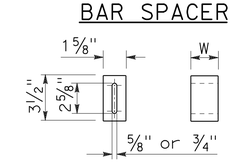

ALTERNATIVE SPACER

W = 1⅜" or 2"

GRATE BAR SPACING TABLE

TYPE	No. OF BARS	CLEAR BAR SPACING	X
18-9	9	1⅜"	1 1/16"
24-9	9	2"	1 9/16"
24-12	12	1⅜"	1¼"

INLET TYPE	COVER TYPE	WEIGHT LB
OS	PLATE	174
OL-7	PLATE	170
OL-10	PLATE	170
OL-14	PLATE	170
OL-21	PLATE	170
OCP	PLATE	112
OCPI	PLATE	112
OCPI	REDWOOD	42
OMP	PLATE	177
OMPI	PLATE	177

INLET TYPE	GRATE TYPE	No. OF GRATES	WEIGHT LB
GDO	24-12	2	634
GOL-7	24-12	1	326
GOL-10	24-12	1	326
GO,G1,G2,G3,G4 (TYPE 24)	24-9	1	263
	24-12	1	326
G4 (TYPE 18),G5,G6	18-9	1	249
GT1	18-9	2	498
GT2	18-9	2	498
GT3	24-12	2	652
GT4	24-12	2	652
TRASH RACK			22

BASIS FOR MISC IRON & STEEL FINAL PAY WEIGHTS FOR DRAINAGE INLETS

(See General Notes, No 8)

STATE OF CALIFORNIA
DEPARTMENT OF TRANSPORTATION

GRATE DETAILS

NO SCALE

RSP D77A DATED JANUARY 18, 2008 SUPERSEDES STANDARD PLAN D77A
DATED MAY 1, 2006 - PAGE 155 OF THE STANDARD PLANS BOOK DATED MAY 2006.

REVISED STANDARD PLAN RSP D77A

2006 REVISED STANDARD PLAN RSP D77A

12-14-07

DIST	COUNTY	ROUTE	POST MILES TOTAL PROJECT	SHEET NO.	TOTAL SHEETS
02	Tri	36	36.7/37.1	32	47

Raymond Don Tsztoo
REGISTERED CIVIL ENGINEER

June 6, 2008
PLANS APPROVAL DATE

REGISTERED PROFESSIONAL ENGINEER Raymond Don Tsztoo No. C37332 Exp. 6-30-08 CIVIL STATE OF CALIFORNIA

The State of California or its officers or agents shall not be responsible for the accuracy or completeness of electronic copies of this plan sheet.

ANNULAR AND HELICAL PROFILE

COUPLING TYPE	PIPE CORRUGATION	PIPE SIZE	W OR A	PIPE WALL THICKNESS CSP	PIPE WALL THICKNESS CAP	BAND THICKNESS CSP	BAND THICKNESS CAP	BAR AND STRAP (CSP ONLY) STRAP THICKNESS	BOLTS Dia	BAR Dia	BAR YIELD STRENGTH	ANGLE DIMENSIONS CSP	ANGLE DIMENSIONS CAP	BOLTS (No.- Dia) CSP	BOLTS (No.- Dia) CAP	RIVETS ANGLE TO BAND CSP	RIVETS ANGLE TO BAND CAP	SPOT WELDS ANGLE TO BAND CSP
TWO PIECE INTEGRAL FLANGE	1½′ × ¼"	6"-10"	7"	0.052"-0.079"	0.048"-0.060"	0.052"	0.060"							2-⅜"	2-⅜"			
		12"-18"	7"	0.052"-0.079"		0.064"								2-½"				
	2⅔" × ½"	12"-24"	7"	0.052"-0.079"	0.060"-0.105"	0.064"	0.060"							2-½"	2-½"			
UNIVERSAL	2⅔" × ½"	THROUGH 36"	12"	0.052"-0.138"	0.060"-0.135"	0.052"	0.060"					2" × 2" × 3/16"	2" × 2" × 3/16"	3-½"	3-½"	3-⅜"	3-⅜"	3-½"
		42"-60"	12"	0.052"-0.168"	0.075"-0.164"	0.052"	0.060"					2" × 2" × 3/16"	2" × 2" × 3/16"	3-½"	3-½"	3-⅜"	3-⅜"	5-½"
		THROUGH 72"	12"	0.052"-0.168"	0.164"	0.052"	0.105"	0.079"	½"	⅞"	32 ksi	2" × 2" × 3/16"	2" × 2" × 3/16"	3-½"	3-½"	3-⅜"	3-⅜"	5-½"
		78"-84"	16¼"	0.168"		0.079"		DOUBLE 0.079"	½"	⅞"	32 ksi							
ANNULAR	2⅔" × ½"	THROUGH 36"	7"	0.064"-0.138"	0.060"-0.135"	0.052"	0.060"	0.079"	½"	⅞"	32 ksi	2" × 2" × 3/16"	2" × 2" × 3/16"	2-½"	2-½"	3-⅜"	3-⅜"	3-½"
		42"-72"	12"	0.064"-0.168"	0.075"-0.164"	0.052"	0.105"	0.079"	½"	⅞"	32 ksi	2" × 2" × 3/16"	2" × 2" × 3/16"	3-½"	3-½"	3-⅜"	3-⅜"	5-½"
		78"-84"	12"	0.168"		0.079"		0.109"	½"	⅞"	45 ksi	2" × 2" × 3/16"		3-½"		3-⅜"		5-½"
	3" × 1"	48"-90"	14"	0.064"-0.109"		0.052"		0.079"	½"	⅞"	32 ksi	2" × 2" × 3/16"		3-½"		3-⅜"		5-½"
		96"-120"	14"	0.079"-0.109"		0.052"		0.109"	½"	⅞"	45 ksi	2" × 2" × 3/16"		3-½"		4-⅜"		
		42"-108"	14"		0.060"-0.135"		0.060"						2" × 2" × 3/16"		3-½"		3-⅜"	
HELICAL	2⅔" × ½"	THROUGH 36"	12"	0.052"-0.138"	0.060"-0.135"	0.052"	0.060"	0.079"	½"	⅞"	32 ksi	2" × 2" × 3/16"	2" × 2" × 3/16"	3-½"	3-½"	3-⅜"	3-⅜"	3-½"
		42"-72"	12"	0.052"-0.168"	0.075"-0.164"	0.052"	0.060"	0.079"	½"	⅞"	32 ksi	2" × 2" × 3/16"	2" × 2" × 3/16"	3-½"	3-½"	3-⅜"	3-⅜"	5-½"
		78"-84"	12"	0.168"		0.079"		0.109"	½"	⅞"	45 ksi	2" × 2" × 3/16"		3-½"		3-⅜"		5-½"
	3" × 1"	48"-90"	14"	0.064"-0.109"		0.052"		0.079"	½"	⅞"	32 ksi	2" × 2" × 3/16"		3-½"		3-⅜"		5-½"
		96"-120"	14"	0.079"-0.109"		0.052"		0.109"	½"	⅞"	45 ksi	2" × 2" × 3/16"		3-½"		4-⅜"		
		42"-108"	14"		0.060"-0.135"		0.060"						2" × 2" × 3/16"		3-½"		3-⅜"	
HUGGER	2⅔" × ½" REROLLED END	12"-54"	4"	0.052"-0.109"		0.052"						2½" × 1½" × 3/16"	2½" × 1½" × 3/16"	1-½"				3-½"
		60"-66"	4"	0.109"		0.064"						2½" × 1½" × 3/16"	2½" × 1½" × 3/16"	1-½"				3-½"
		36"-48"	4"	0.138"		0.064"						2½" × 1½" × 3/16"	2½" × 1½" × 3/16"	1-½"				3-½"
		THROUGH 72"	10½"	0.052"-0.168"		0.052"		0.079"	½"	⅞"	32 ksi							
		78"-84"	10½"	0.168"		0.079"		0.109"	½"	⅞"	45 ksi							
	3" × 1" REROLLED END	48"-90"	10½"	0.064"-0.109"		0.052"		0.079"	½"	⅞"	32 ksi							
		96"-120"	10½"	0.079"-0.109"		0.052"		0.109"	½"	⅞"	45 ksi							
	5" × 1" REROLLED END	48"-66"	7½"	0.064"-0.109"		0.064"		0.079"	½"	⅞"	32 ksi	2½" × 1½" × 3/16"	2½" × 1½" × 3/16"	1-½"				3-½"
		72"-90"	7½"	0.064"-0.079"		0.064"		0.079"	½"	⅞"	32 ksi	2½" × 1½" × 3/16"	2½" × 1½" × 3/16"	1-½"				3-½"
		48"-90"	7½"	0.064"-0.138"		0.064"		0.079"	½"	⅞"	32 ksi							
		48"-120"	12" SEE	0.064"-0.109"		0.064"		0.079"	½"	⅞"	32 ksi							
		48"-84"	12" NOTE	0.138"		0.064"		0.079"	½"	⅞"	32 ksi							
		90"-120"	12" 11	0.138"		0.064"		DOUBLE 0.079"	½"	⅞"	32 ksi							

SPIRAL RIB PROFILE

COUPLING TYPE	PIPE CORRUGATION	PIPE SIZE	W	PIPE WALL THICKNESS SSRP	PIPE WALL THICKNESS ASRP	BAND THICKNESS SSRP	BAND THICKNESS ASRP	BAR AND STRAP (SSRP ONLY) STRAP THICKNESS	BOLTS Dia	BAR Dia	BAR YIELD STRENGTH	ANGLE DIMENSIONS SSRP	ANGLE DIMENSIONS ASRP	BOLTS (No.- Dia) SSRP	BOLTS (No.- Dia) ASRP	RIVETS ANGLE TO BAND SSRP	RIVETS ANGLE TO BAND ASRP	SPOT WELDS ANGLE TO BAND SSRP
ANNULAR	2⅔" × ½" * REROLLED END	24"-36"	12"	0.064"-0.109"	0.060"-0.105"	0.052"	0.060"	0.079"	½"	⅞"	32 ksi	2" × 2" × 3/16"	2" × 2" × 3/16"	3-½"	3-½"	3-⅜"	3-⅜"	5-½"
		42"-60"	12"	0.064"-0.109"	0.075"-0.105"	0.052"	0.105"	0.079"	½"	⅞"	32 ksi	2" × 2" × 3/16"	2" × 2" × 3/16"	3-½"	3-½"	3-⅜"	3-⅜"	5-½"
		66"-72"	12"	0.064"-0.109"		0.052"		0.079"	½"	⅞"	32 ksi	2" × 2" × 3/16"	2" × 2" × 3/16"	3-½"	3-½"	3-⅜"	3-⅜"	5-½"
		78"-114"	12"	0.079"-0.109"		0.079"		0.109"	½"	⅞"	45 ksi	2" × 2" × 3/16"	2" × 2" × 3/16"	3-½"	3-½"	3-⅜"	3-⅜"	5-½"
HUGGER	2⅔" × ½" * REROLLED END	24"-72"	10½"	0.064"-0.109"		0.052"		0.079"	½"	⅞"	32 ksi							
		78"-84"	10½"	0.109"		0.079"		0.109"	½"	⅞"	45 ksi							

* See Note 14.

14. All profiles of Spiral Rib Pipe (¾" × ¾" ribs at 7½" pitch and ¾" × 1" ribs at 11½" pitch in both steel and aluminum and ¾" × 1" ribs at 8½" pitch in steel only) shall be manufactured with rerolled ends. Corrugation profile of the rerolled ends shall be 2⅔" × ½" annual corrugations with a minimum of two full corrugations at each end.

NOTES:

To accompany plans dated 3-22-10

1. All ferrous metal coupling band connection hardware shall be galvanized or electro-plated in accordance with the Standard Specifications.
2. For helically corrugated coupling bands, the connection angles may be oriented parallel to the pipe axis, provided connecting holes are slotted lengthwise sufficiently to allow adjustment for the helix angle.
3. Tension strap may be connected to band with either spot welds or fillet welds that develop minimum required strength of strap.
4. Use 1¼" gage line dimension on attached angle leg for rivets and spot welds.
5. Band thickness shall not be less than:
   a. 3 standard thicknesses lighter than the thickness of the pipe for Corrugated Steel Pipe.
   b. 2 standard thicknesses lighter than the thickness of the pipe and in no case lighter than 0.060" for Corrugated Aluminum Pipe.
6. Dimensions, thicknesses and strengths shown are minimum.
7. For pipe arches use same width band as for round pipe of equal periphery.
8. Fillet welds of equivalent strenght may be substituted for spot welds or rivets.
9. Spot welds shall develop minimum required strength of strap.
10. Pipe with rerolled ends having at least two 2⅔" × ½" annular corrugations at each end with or without an upturned flange may be connected with any of the annular coupling bands shown for pipe of the same diameter and wall thickness and having 2⅔" × ½" corrugations.
11. In the case of H-12 huggerbands, two piece bands are required for diameters through 96" and three piece bands are required for diameters 102" through 120".
12. Two piece bands are required for pipes greater than 42" diameter.
13. The 2¼" × 2" × 0.109" thick galvanized die-formed angle connector may be used in lieu of the 2" × 2" × 3/16" angle connector for standard joints only on pipes through 72" diameter.

STATE OF CALIFORNIA
DEPARTMENT OF TRANSPORTATION

CORRUGATED METAL PIPE COUPLING DETAILS No. 5 STANDARD JOINT

NO SCALE

RSP D97E DATED JUNE 6, 2008 SUPERSEDES STANDARD PLAN D97E
DATED MAY 1, 2006 - PAGE 187 OF THE STANDARD PLANS BOOK DATED MAY 2006.

REVISED STANDARD PLAN RSP D97E

2006 REVISED STANDARD PLAN RSP D97E

4-2-08

DIST	COUNTY	ROUTE	POST MILES TOTAL PROJECT	SHEET NO.	TOTAL SHEETS
02	Tri	36	36.7/37.1	33	47

Raymond Don Tsztoo
REGISTERED CIVIL ENGINEER

June 6, 2008
PLANS APPROVAL DATE

REGISTERED PROFESSIONAL ENGINEER
Raymond Don Tsztoo
No. C37332
Exp. 6-30-08
CIVIL
STATE OF CALIFORNIA

The State of California or its officers or agents shall not be responsible for the accuracy or completeness of electronic copies of this plan sheet.

To accompany plans dated 3-22-10

ANNULAR AND HELICAL PROFILE

COUPLING TYPE	PIPE CORRUGATION	PIPE SIZE	W OR A	PIPE WALL THICKNESS		BAND THICKNESS		BAR AND STRAP (CSP ONLY)			ANGLE						
											DIMENSIONS		BOLTS (No.- Dia)		RIVETS ANGLE TO BAND		SPOT WELDS ANGLE TO BAND
				CSP	CAP	CSP	CAP	STRAP THICKNESS	BOLTS Dia	BAR Dia	CSP	CAP	CSP	CAP	CSP	CAP	CSP
TWO PIECE INTEGRAL FLANGE	1½′ × ¼"	6"	7"	0.064"-0.168"		0.052"							3-⅜"				
	1½′ × ¼"	8"-10"	7"	0.064"-0.168"	0.060"-0.164"	0.064"	0.060"						3-⅜"	3-⅜"			
ANNULAR	2⅔" × ½"	THROUGH 24"	12"	0.064"-0.168"	0.060"-0.164"	0.064"	0.060"				2" × 2" × 3/16"	2" × 2" × 3/16"	3-½"	3-½"	3-⅜"	3-⅜"	3-½"
HUGGER	2⅔" × ½" REROLLED END	THROUGH 24"	10½"	0.064"-0.168"		0.064"		0.079"	½"	⅞"							

SPIRAL RIB PROFILE

COUPLING TYPE	PIPE CORRUGATION	PIPE SIZE	W	PIPE WALL THICKNESS		BAND THICKNESS		BAR AND STRAP (SSRP ONLY)			ANGLE						
											DIMENSIONS		BOLTS (No.- Dia)		RIVETS ANGLE TO BAND		SPOT WELDS ANGLE TO BAND
				SSRP	ASRP	SSRP	ASRP	STRAP THICKNESS	BOLTS Dia	BAR Dia	SSRP	ASRP	SSRP	ASRP	SSRP	ASRP	SSRP
ANNULAR	2⅔" × ½" * REROLLED END	24"	12"	0.064"-0.168"	0.060"-0.164"	0.064"	0.060"				2" × 2" × 3/16"	2" × 2" × 3/16"	3-½"	3-½"	3-⅜"	3-⅜"	3-½"
HUGGER	2⅔" × ½" * REROLLED END	24"	10½"	0.064"-0.168"		0.064"		0.079"	½"	⅞"							

* See Note 12.

12. All profiles of Spiral Rib Pipe (¾" × ¾" ribs at 7½" pitch and ¾" × 1" ribs at 11½" pitch in both steel and aluminum and ¾" × 1" ribs at 8½" pitch in steel only) shall be manufactured with rerolled ends. Corrugation profile of the rerolled ends shall be 2⅔" × ½" annual corrugations with a minimum of two full corrugations at each end.

NOTES:

1. All ferrous metal coupling band connection hardware shall be galvanized or electro-plated in accordance with the Standard Specifications.
2. For helically corrugated coupling bands, the connection angles may be oriented parallel to the pipe axis, provided connecting holes are slotted lengthwise sufficiently to allow adjustment for the helix angle.
3. Tension strap may be connected to band with either spot welds or fillet welds that develop minimum required strength of strap.
4. Use 1¼" gage line dimension on attached angle leg for rivets and spot welds.
5. Band thickness shall not be less than:
   a. 3 standard thicknesses lighter than the thickness of the pipe for Corrugated Steel Pipe.
   b. 2 standard thicknesses lighter than the thickness of the pipe and in no case lighter than 0.060" for Corrugated Aluminum Pipe.
6. Dimensions, thicknesses and strengths shown are minimum.
7. For pipe arches use same width band as for round pipe of equal periphery.
8. Fillet welds of equivalent strenght may be substituted for spot welds or rivets.
9. Spot welds shall develop minimum required strength of strap.
10. Pipe with rerolled ends having at least two 2⅔" × ½" annular corrugations at each end with or without an upturned flange may be connected with any of the annular coupling bands shown for pipe of the same diameter and wall thickness and having 2⅔" × ½" corrugations.
11. For downdrain applications, two piece integral flange couplers shall have factory applied sleeve type rubber gaskets with a minimum length of 7" measured along the length of the pipe.

STATE OF CALIFORNIA
DEPARTMENT OF TRANSPORTATION

CORRUGATED METAL PIPE COUPLING DETAILS No. 7 DOWNDRAIN

NO SCALE

RSP D97G DATED JUNE 6, 2008 SUPERSEDES STANDARD PLAN D97G
DATED MAY 1, 2006 - PAGE 189 OF THE STANDARD PLANS BOOK DATED MAY 2006.

REVISED STANDARD PLAN RSP D97G

2006 REVISED STANDARD PLAN RSP D97G

4-4-08

DIST	COUNTY	ROUTE	POST MILES TOTAL PROJECT	SHEET NO.	TOTAL SHEETS
02	Tri	36	36.7/37.1	34	47

Randell D. Hiatt
REGISTERED CIVIL ENGINEER

June 6, 2008
PLANS APPROVAL DATE

REGISTERED PROFESSIONAL ENGINEER
Randell D. Hiatt
No. C50200
Exp. 6-30-09
CIVIL
STATE OF CALIFORNIA

The State of California or its officers or agents shall not be responsible for the accuracy or completeness of electronic copies of this plan sheet.

To accompany plans dated 3-22-10

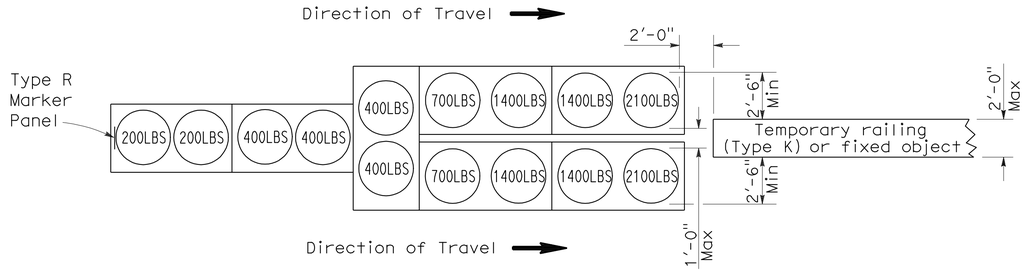

ARRAY 'TU14'

Approach speed 45 mph or more

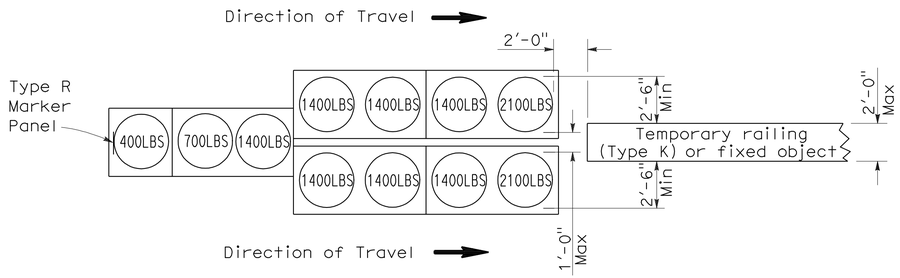

ARRAY 'TU11'

Approach speed less than 45 mph

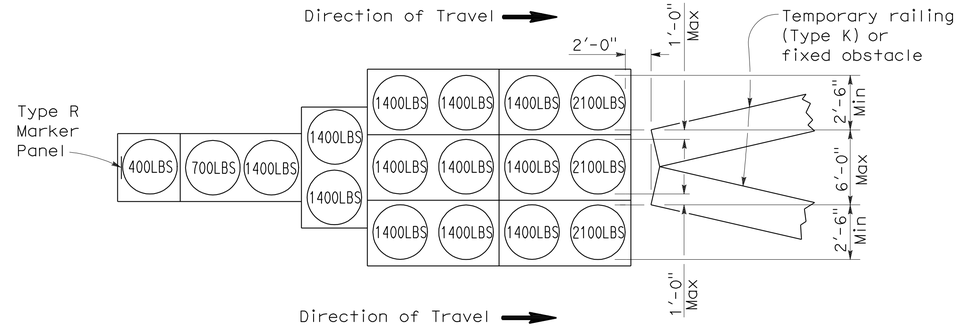

ARRAY 'TU17'

Approach speed less than 45 mph

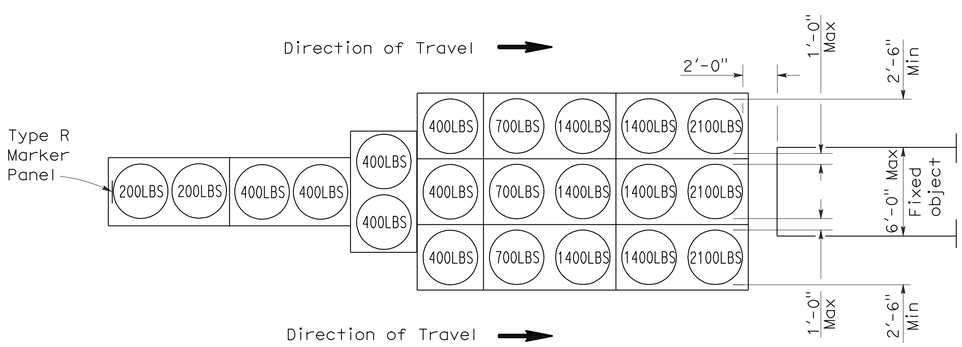

ARRAY 'TU21'

Approach speed 45 mph or more

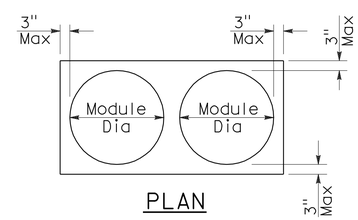

PLAN

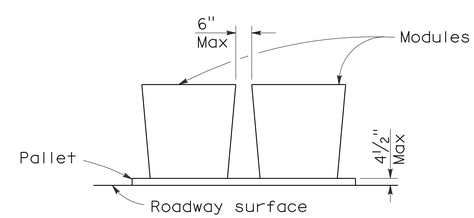

ELEVATION

CRASH CUSHION PALLET DETAIL

See Note 7

NOTES:

1. (XXX) Indicates sand filled module location and weight of sand in pounds for each module. Module spacing is based on the greater diameter of the module.
2. All sand weights are nominal.
3. Temporary crash cushion arrays shall not encroach on the traveled way.
4. Place the top of Type R marker panel 1" below the module lid.
5. Refer to Standard Plan A73B for marker details.
6. Approach speeds indicated conform to NCHRP 350 Report criteria.
7. Use of pallets is optional.

STATE OF CALIFORNIA
DEPARTMENT OF TRANSPORTATION

TEMPORARY CRASH CUSHION, SAND FILLED (UNIDIRECTIONAL)

NO SCALE

RSP T1A DATED JUNE 6, 2008 SUPERSEDES STANDARD PLAN T1A
DATED MAY 1, 2006 - PAGE 211 OF THE STANDARD PLANS BOOK DATED MAY 2006.

REVISED STANDARD PLAN RSP T1A

2006 REVISED STANDARD PLAN RSP T1A

DIST	COUNTY	ROUTE	POST MILES TOTAL PROJECT	SHEET NO.	TOTAL SHEETS
02	Tri	36	36.7/37.1	35	47

Randell D. Hiatt
REGISTERED CIVIL ENGINEER

June 6, 2008
PLANS APPROVAL DATE

REGISTERED PROFESSIONAL ENGINEER
Randell D. Hiatt
No. C50200
Exp. 6-30-09
CIVIL
STATE OF CALIFORNIA

The State of California or its officers or agents shall not be responsible for the accuracy or completeness of electronic copies of this plan sheet.

To accompany plans dated 3-22-10

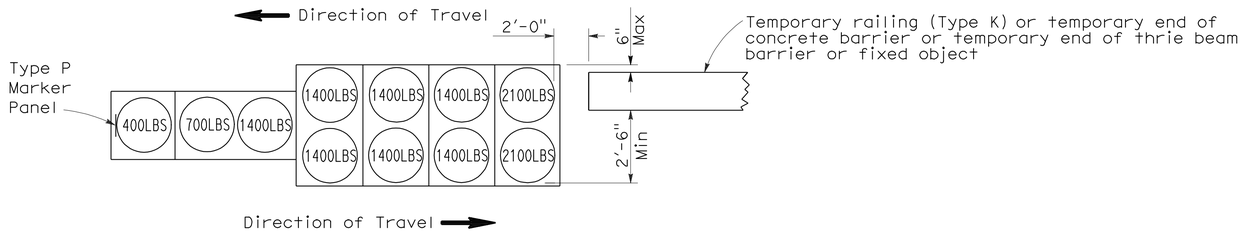

ARRAY 'TB11'

Approach speed less than 45 mph

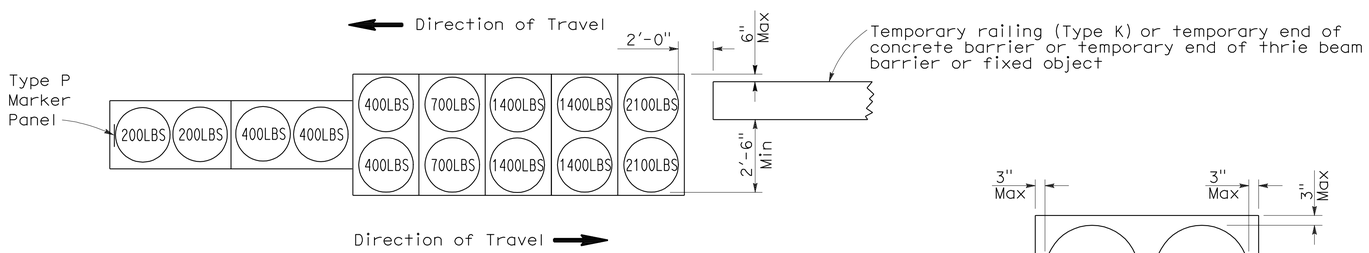

ARRAY 'TB14'

Approach speed 45 mph or more

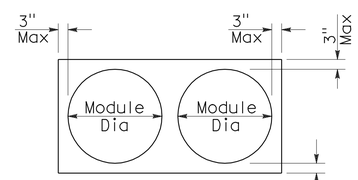

PLAN

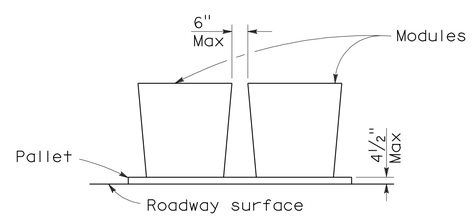

ELEVATION

CRASH CUSHION PALLET DETAIL

See Note 7

NOTES:

1. (XXX) Indicates sand filled module location and weight of sand in pounds for each module. Module spacing is based on the greater diameter of the module.
2. All sand weights are nominal.
3. Temporary crash cushion arrays shall not encroach on the traveled way.
4. Place the Type P marker panel so that the bottom of the panel rests upon the pallet.
5. Refer to Standard Plan A73B for marker details.
6. Approach speeds indicated conform to NCHRP 350 Report criteria.
7. Use of pallets is optional.

STATE OF CALIFORNIA
DEPARTMENT OF TRANSPORTATION

TEMPORARY CRASH CUSHION, SAND FILLED (BIDIRECTIONAL)

NO SCALE

RSP T1B DATED JUNE 6, 2008 SUPERSEDES STANDARD PLAN T1B
DATED MAY 1, 2006 - PAGE 212 OF THE STANDARD PLANS BOOK DATED MAY 2006.

REVISED STANDARD PLAN RSP T1B

2006 REVISED STANDARD PLAN RSP T1B

5-15-08

DIST	COUNTY	ROUTE	POST MILES TOTAL PROJECT	SHEET NO.	TOTAL SHEETS
02	Tri	36	36.7/37.1	36	47

Randell D. Hiatt
REGISTERED CIVIL ENGINEER

June 6, 2008
PLANS APPROVAL DATE

REGISTERED PROFESSIONAL ENGINEER
Randell D. Hiatt
No. C50200
Exp. 6-30-09
CIVIL
STATE OF CALIFORNIA

The State of California or its officers or agents shall not be responsible for the accuracy or completeness of electronic copies of this plan sheet.

To accompany plans dated 3-22-10

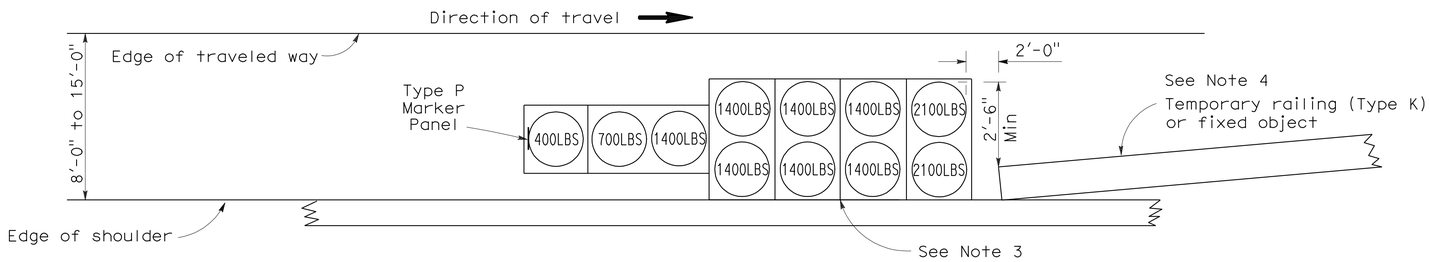

ARRAY 'TS11'

Approach speed less than 45 mph
See Note 9

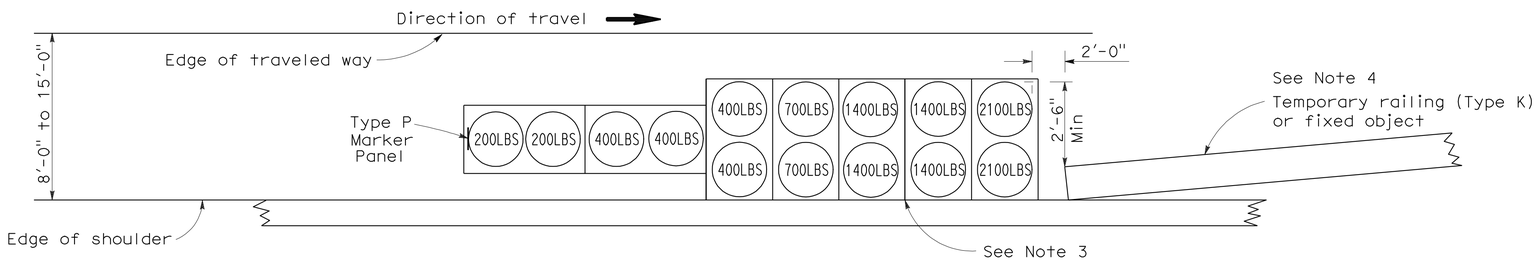

ARRAY 'TS14'

Approach speed 45 mph or more
See Note 9

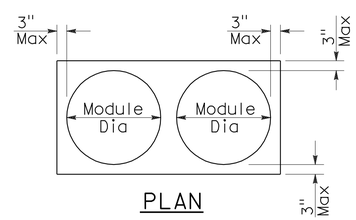

PLAN

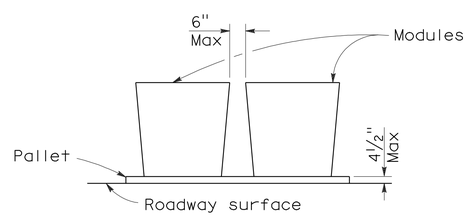

ELEVATION

CRASH CUSHION PALLET DETAIL

See Note 11

NOTES:

1. (XXX) Indicates sand filled module location and weight of sand in pounds for each module. Module spacing is based on the greater diameter of the module.
2. All sand weights are nominal.
3. The temporary crash cushion arrays shown on this plan shall be used only in locations where there will be traffic on one side of the temporary crash cushion array.
4. If the fixed object or approach end of the temporary railing is less than 15'-0" from the edge of traveled way, a temporary crash cushion is required in a construction or work zone.
5. Temporary crash cushion arrays shall not encroach on the traveled way.
6. Arrays for median shoulders shall conform to details shown on this plan for outside shoulders.
7. Place the Type P marker panel so that the bottom of the panel rests upon the pallet and faces traffic.
8. Refer to Standard Plan A73B for marker details.
9. For shoulder widths less than 8'-0", appropriate approved crash cushion protection, other than sand filled modules, shall be provided at fixed objects and at approach ends of temporary railing. The specific type of crash cushion shall be as shown on the project plans or as specified in the Special Provisions, or if not shown on the project plans or specified in the Special Provisions, shall be as approved by the Engineer.
10. Approach speeds indicated conform to NCHRP 350 Report criteria.
11. Use of pallets is optional.

STATE OF CALIFORNIA
DEPARTMENT OF TRANSPORTATION

TEMPORARY CRASH CUSHION, SAND FILLED (SHOULDER INSTALLATIONS)

NO SCALE

RSP T2 DATED JUNE 6, 2008 SUPERSEDES STANDARD PLAN T2
DATED MAY 1, 2006 - PAGE 213 OF THE STANDARD PLANS BOOK DATED MAY 2006.

REVISED STANDARD PLAN RSP T2

2006 REVISED STANDARD PLAN RSP T2

5-15-08

DIST	COUNTY	ROUTE	POST MILES TOTAL PROJECT	SHEET NO.	TOTAL SHEETS
02	Tri	36	36.7/37.1	37	47

REGISTERED CIVIL ENGINEER

November 17, 2006
PLANS APPROVAL DATE

REGISTERED PROFESSIONAL ENGINEER — Greg W. Edwards — No. C36386 — Exp. 6-30-08 — CIVIL — STATE OF CALIFORNIA

The State of California or its officers or agents shall not be responsible for the accuracy or completeness of electronic copies of this plan sheet.

To accompany plans dated 3-22-10

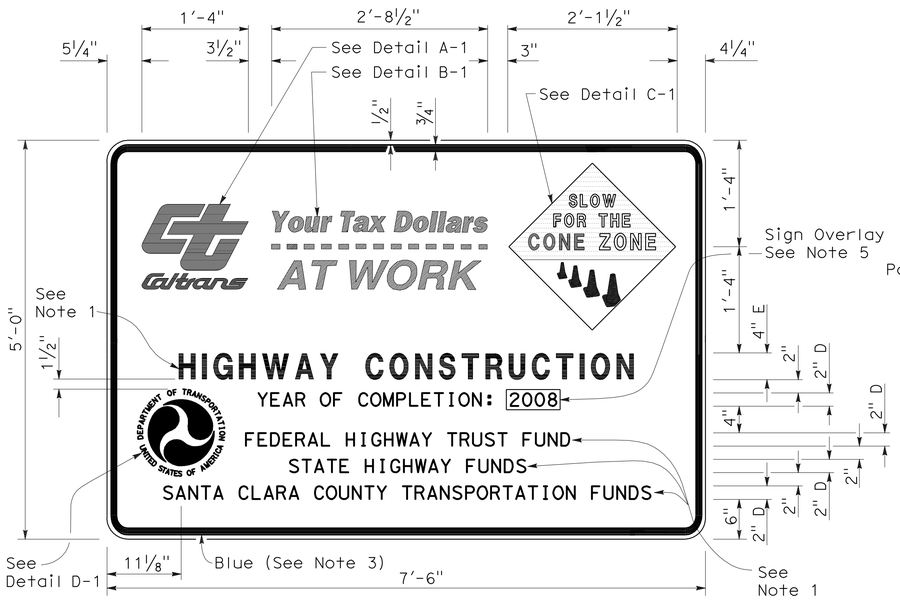

TYPE 1

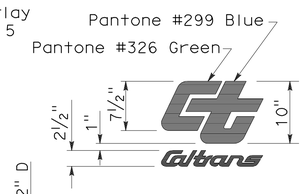

DETAIL A-1

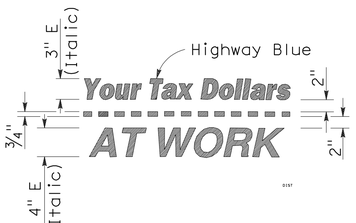

DETAIL B-1
(See Note 3)

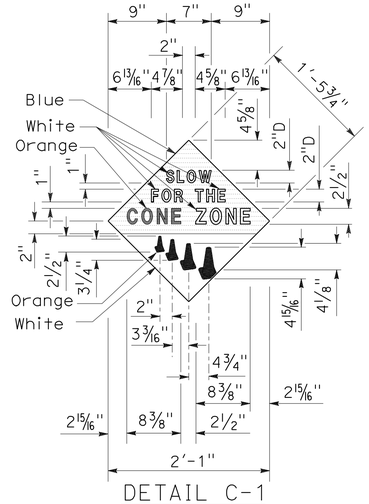

DETAIL C-1
(See Note 4)

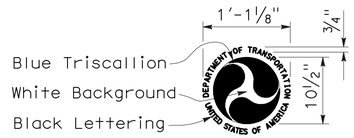

DETAIL D-1
(See Note 6)

NOTES:

1. The sign messages shown for type of project and fund types are examples only. See the Special Provisions for the applicable type of project and fund type messages to be used.
2. Except as otherwise shown, the legend of sign shall be black on a white background (non-reflective).
3. The border of the signs and details "B-1" and "B-2" shall be blue (non-reflective).
4. The diamond in details "C-1" and "C-2" shall be blue for the background of message, " SLOW FOR THE CONE ZONE", and white background for the orange cones. The color and type of font for the "SLOW FOR THE CONE ZONE" message shall be: "SLOW" white D; "FOR THE" white D; "CONE" orange Arial font; "ZONE" white Arial font.
5. Year of completion of project construction shown on the overlay is an example only. See the Special Provisions.
6. Use when the Project involves Federal Highway Trust Fund.

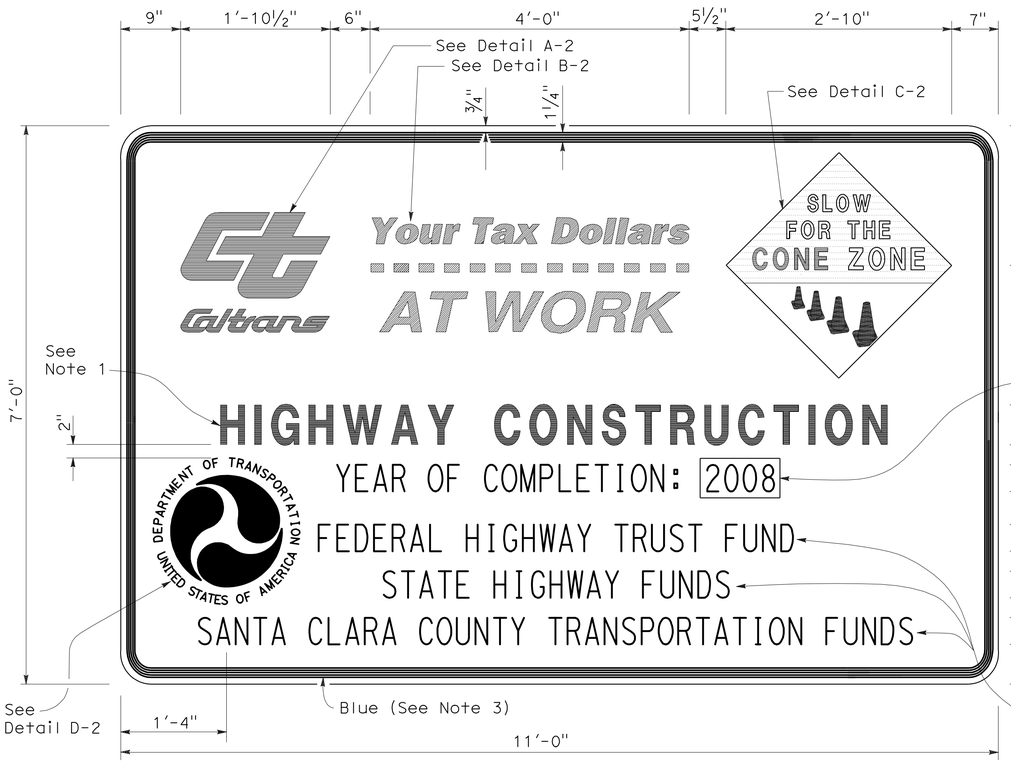

TYPE 2

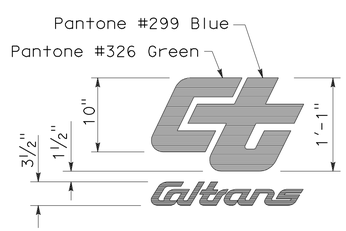

DETAIL A-2

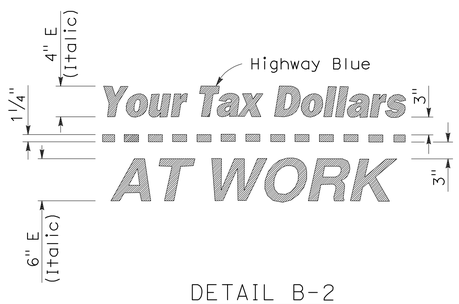

DETAIL B-2
(See Note 3)

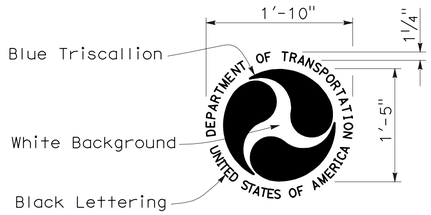

DETAIL D-2
(See Note 6)

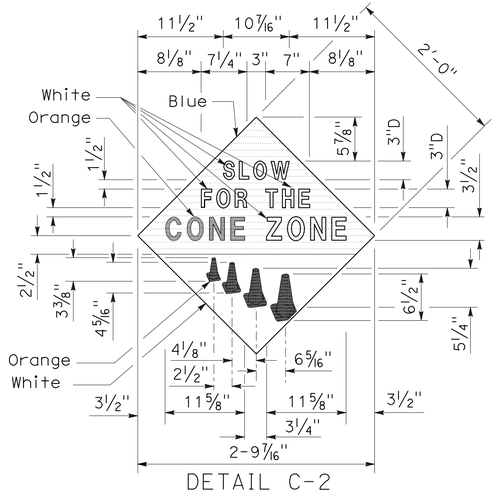

DETAIL C-2
(See Note 4)

STATE OF CALIFORNIA
DEPARTMENT OF TRANSPORTATION

CONSTRUCTION PROJECT FUNDING IDENTIFICATION SIGNS

NO SCALE

RSP T7 DATED NOVEMBER 17, 2006 SUPERSEDES STANDARD PLAN T7
DATED MAY 1, 2006 - PAGE 217 OF THE STANDARD PLANS BOOK DATED MAY 2006.

REVISED STANDARD PLAN RSP T7

2006 REVISED STANDARD PLAN RSP T7

5-15-08

DIST	COUNTY	ROUTE	POST MILES TOTAL PROJECT	SHEET NO.	TOTAL SHEETS
02	Tri	36	36.7/37.1	38	47

Robert B Schott
LICENSED LANDSCAPE ARCHITECT

April 3, 2009
PLANS APPROVAL DATE

LICENSED LANDSCAPE ARCHITECT
Robert B. Schott 3625
Robert B Schott
Signature
11-30-10
Renewal Date
2-25-09
Date
STATE OF CALIFORNIA

The State of California or its officers or agents shall not be responsible for the accuracy or completeness of electronic copies of this plan sheet.

To accompany plans dated 3-22-10

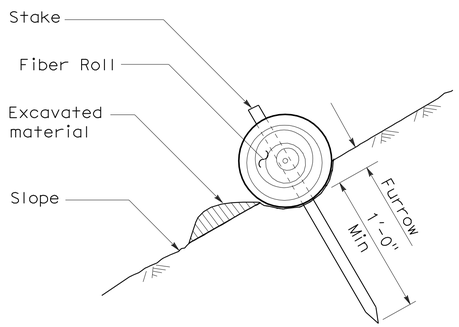

SECTION

TEMPORARY FIBER ROLL (TYPE 1)

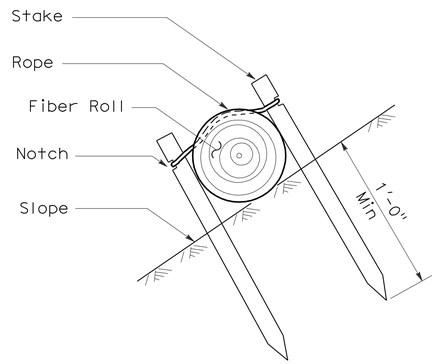

SECTION

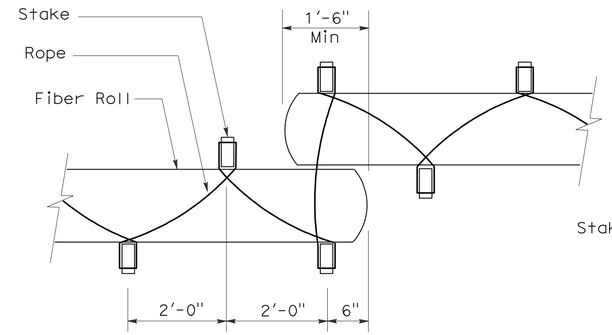

PLAN

TEMPORARY FIBER ROLL (TYPE 2)

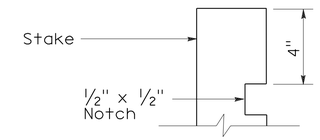

ELEVATION

STAKE NOTCH DETAIL

NOTES:

1. Temporary fiber roll spacing varies depending upon slope inclination.
2. Installations shown in the perspectives are for slope inclination of 10:1 and steeper.

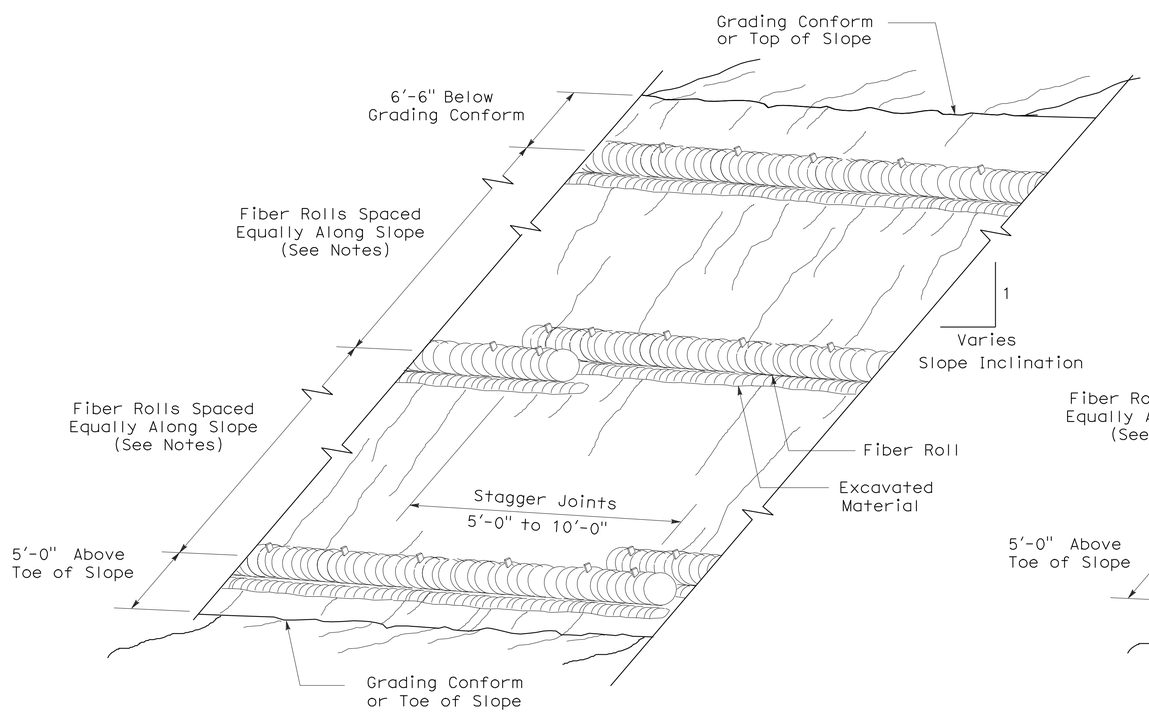

PERSPECTIVE

TEMPORARY FIBER ROLL (TYPE 1)

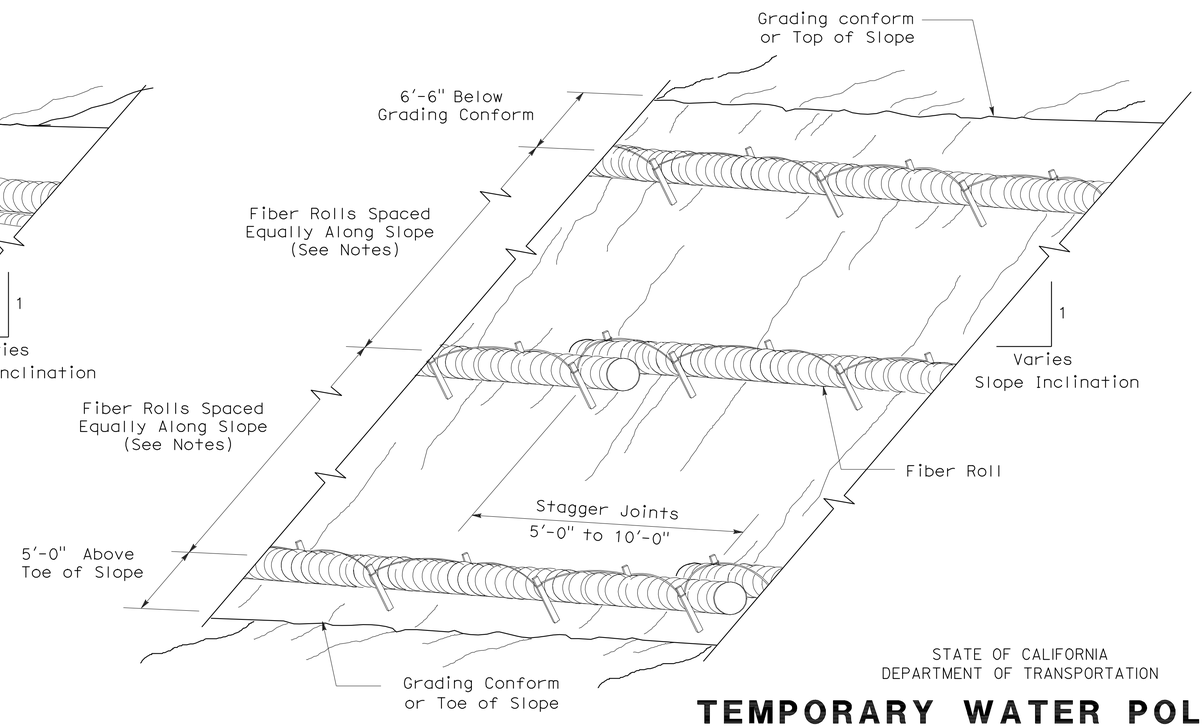

PERSPECTIVE

TEMPORARY FIBER ROLL (TYPE 2)

STATE OF CALIFORNIA
DEPARTMENT OF TRANSPORTATION

TEMPORARY WATER POLLUTION CONTROL DETAILS (TEMPORARY FIBER ROLL)

NO SCALE

RSP T56 DATED APRIL 3, 2009 SUPERSEDES STANDARD PLAN T56
DATED MAY 1, 2006 - PAGE 232 OF THE STANDARD PLANS BOOK DATED MAY 2006.

REVISED STANDARD PLAN RSP T56

2006 REVISED STANDARD PLAN RSP T56

2-23-09

DIST	COUNTY	ROUTE	POST MILES TOTAL PROJECT	SHEET NO.	TOTAL SHEETS
02	Tri	36	36.7/37.1	39	47

LICENSED LANDSCAPE ARCHITECT

August 15, 2008
PLANS Approval DATE

LICENSED LANDSCAPE ARCHITECT
Robert B. Schott 3625
Signature
11-04-08
Renewal Date
08-11-08
Date
STATE OF CALIFORNIA

The State of California or its officers or agents shall not be responsible for the accuracy or completeness of electronic copies of this plan sheet.

To accompany plans dated 3-22-10

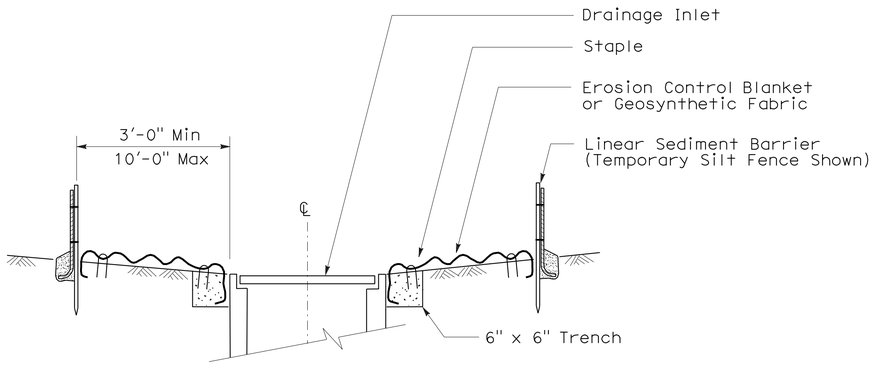

SECTION A-A

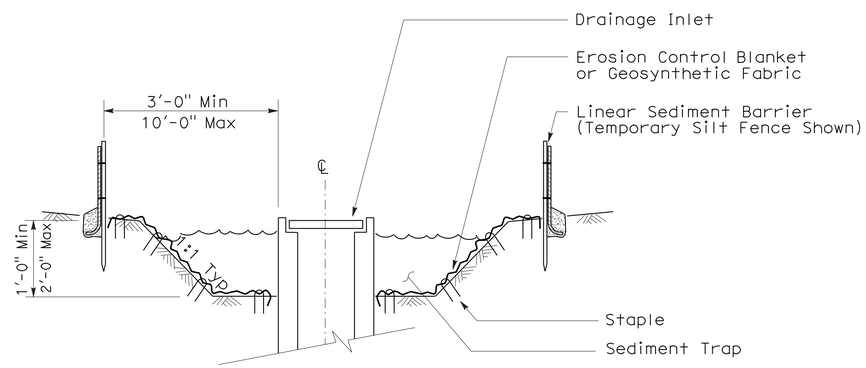

SECTION B-B

NOTES:

1. See Standard Plan T51 for Temporary Silt Fence.
2. Dimensions may vary to fit field conditions.

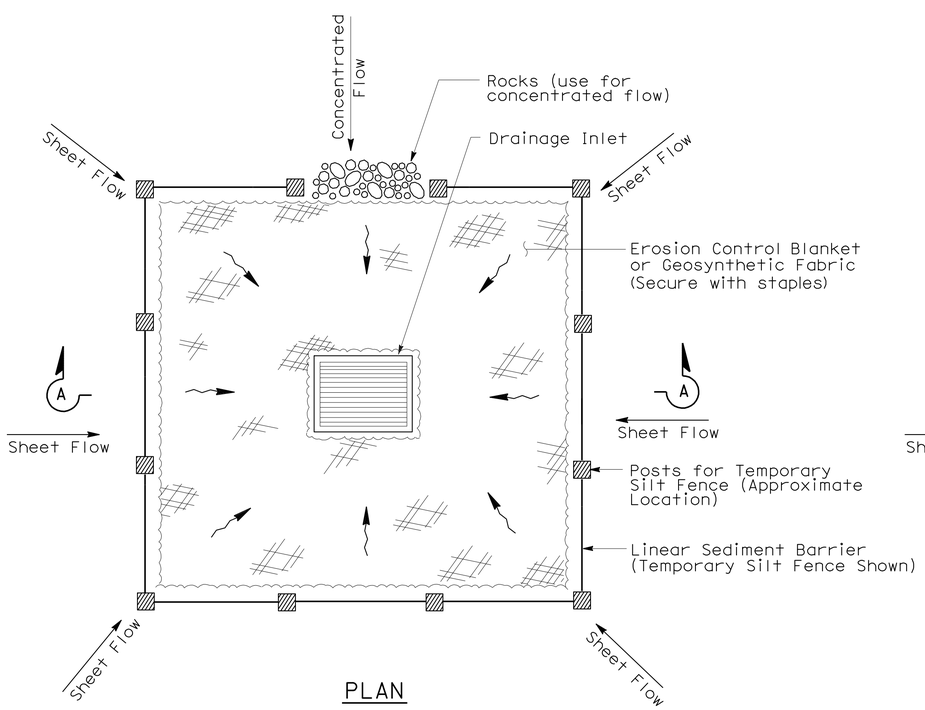

PLAN

TEMPORARY DRAINAGE INLET PROTECTION (TYPE 1)

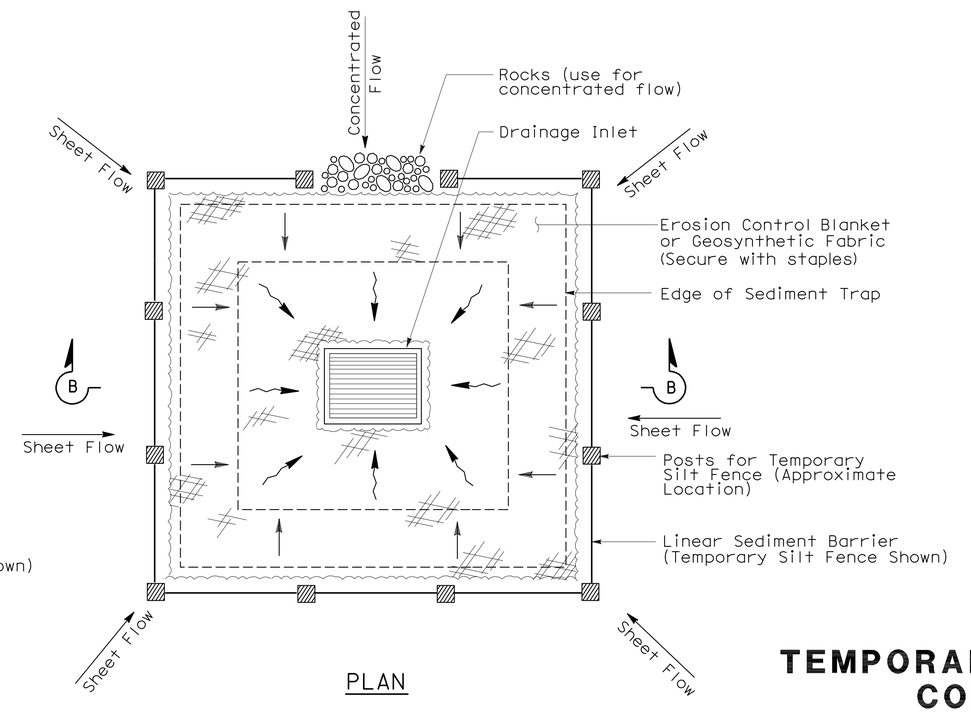

PLAN

TEMPORARY DRAINAGE INLET PROTECTION (TYPE 2) (EXCAVATED SEDIMENT TRAP)

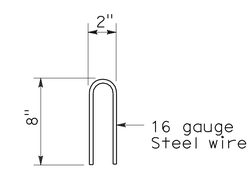

STAPLE DETAIL

STATE OF CALIFORNIA
DEPARTMENT OF TRANSPORTATION

TEMPORARY WATER POLLUTION CONTROL DETAILS (TEMPORARY DRAINAGE INLET PROTECTION)

NO SCALE

NSP T61 DATED AUGUST 15, 2008 SUPPLEMENTS THE STANDARD PLANS BOOK DATED MAY 2006.

NEW STANDARD PLAN NSP T61

2006 NEW STANDARD PLAN NSP T61

7-11-08

DIST	COUNTY	ROUTE	POST MILES TOTAL PROJECT	SHEET NO.	TOTAL SHEETS
02	Tri	36	36.7/37.1	40	47

LICENSED LANDSCAPE ARCHITECT

August 15, 2008
PLANS APPROVAL DATE

The State of California or its officers or agents shall not be responsible for the accuracy or completeness of electronic copies of this plan sheet.

LICENSED LANDSCAPE ARCHITECT — Robert B. Schott — Signature — 11-04-08 Renewal Date — 08-11-08 Date — STATE OF CALIFORNIA

To accompany plans dated 3-22-10

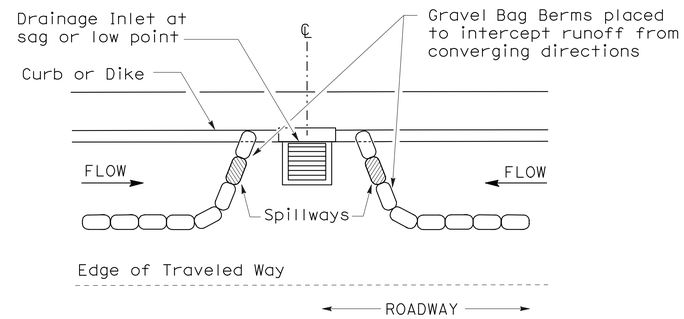

PLAN

CONFIGURATION FOR SAG POINT INLET (GRAVEL BAG BERM)

GRAVEL BAG BERM (TYPE 3A) SPACING TABLE

SLOPE OF ROADWAY (PERCENT)	1 to 3.9	4 to 5.9	6 to 7.9	8 to 10	10+
INTERVAL BETWEEN BERM	100′	75′	50′	25′	12′

For slope of less than 1%, install barriers only if erosion/sediment is prevalent

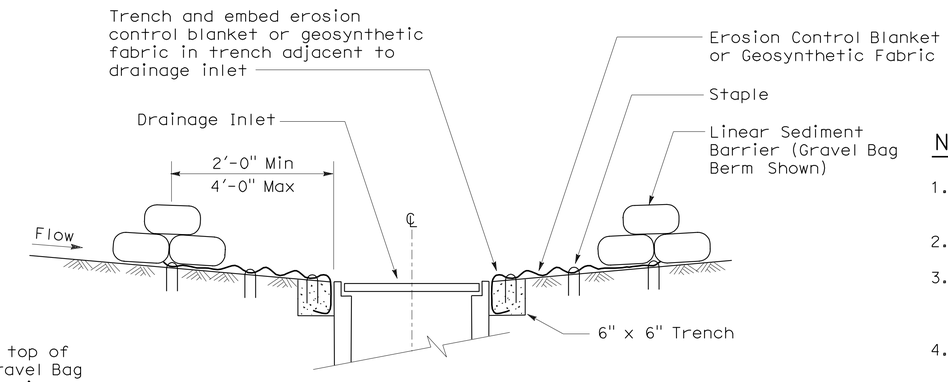

SECTION A-A

NOTES:

1. Place safety cones adjacent to drainage inlet protection.
2. Dimensions may vary to fit field conditions.
3. Install a minimum of 3 gravel bag berms upstream of each drainage inlet to be protected.
4. Position erosion control blanket or geosynthetic fabric at edge of concrete apron and secure in trench.
5. Erosion control blanket or geosynthetic fabric is not required if the area adjacent to the drainage inlet is vegetated or paved.

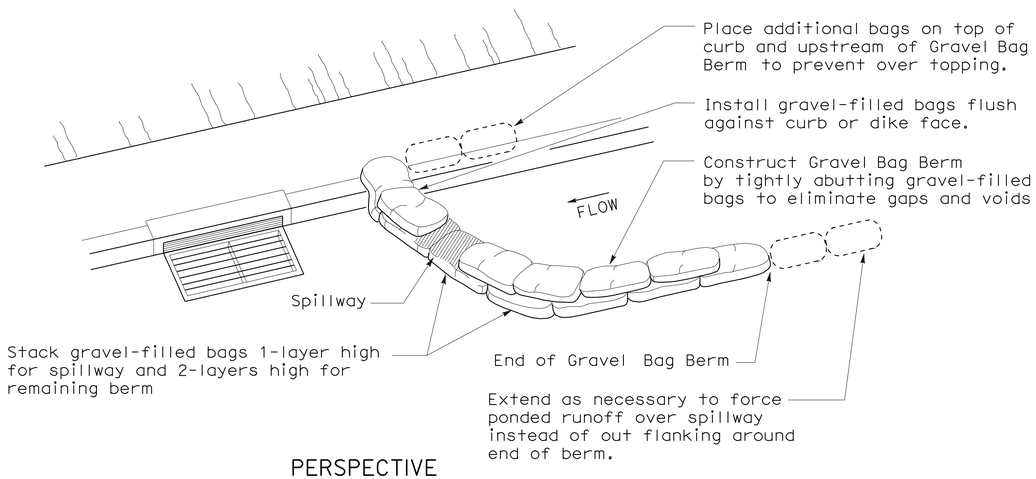

PERSPECTIVE

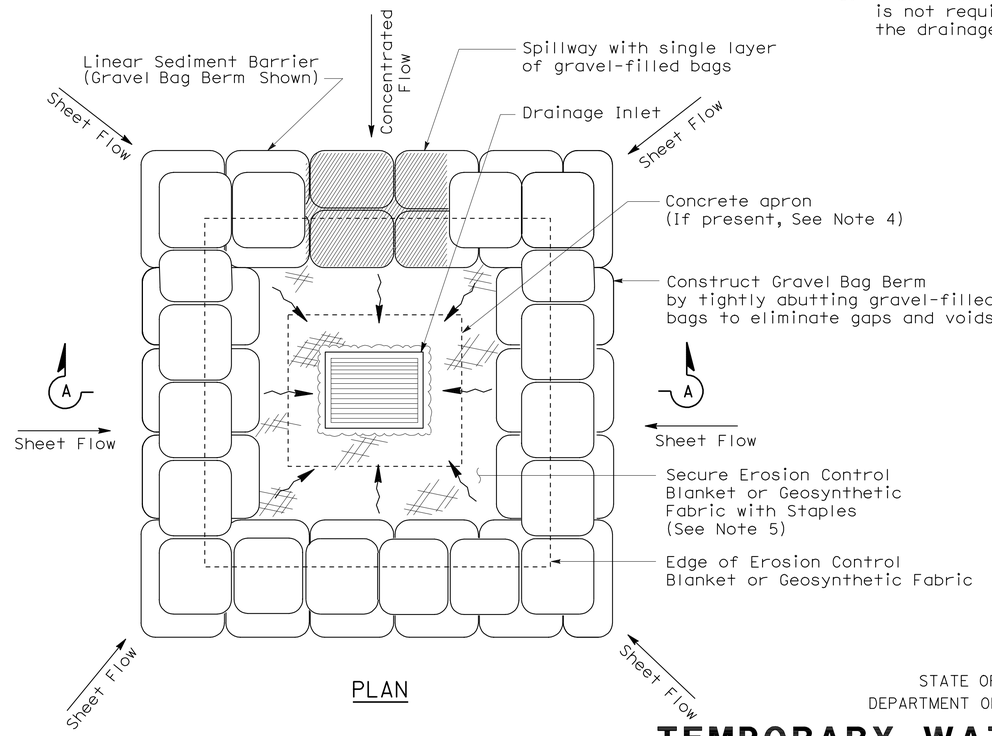

PLAN

TEMPORARY DRAINAGE INLET PROTECTION (TYPE 3B)

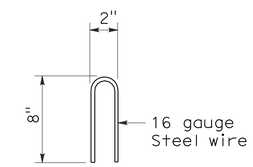

STAPLE DETAIL

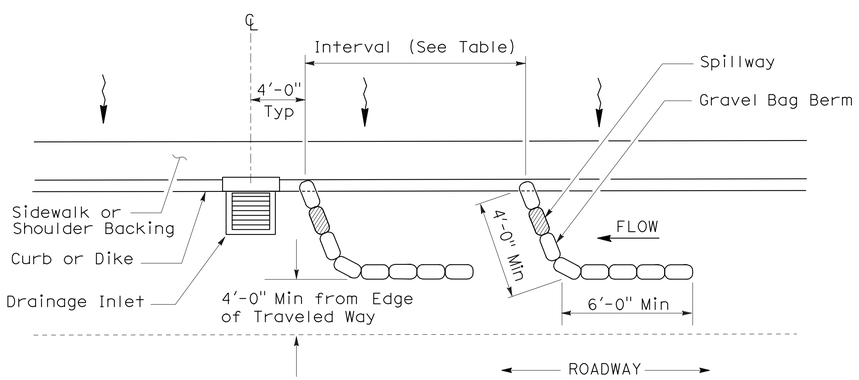

PLAN

TEMPORARY DRAINAGE INLET PROTECTION (TYPE 3A) (GRAVEL BAG BERM)

STATE OF CALIFORNIA
DEPARTMENT OF TRANSPORTATION

TEMPORARY WATER POLLUTION CONTROL DETAILS (TEMPORARY DRAINAGE INLET PROTECTION)

NO SCALE

NSP T62 DATED AUGUST 15, 2008 SUPPLEMENTS THE STANDARD PLANS BOOK DATED MAY 2006.

NEW STANDARD PLAN NSP T62

2006 NEW STANDARD PLAN NSP T62

7-11-08

DIST	COUNTY	ROUTE	POST MILES TOTAL PROJECT	SHEET NO.	TOTAL SHEETS
02	Tri	36	36.7/37.1	41	47

LICENSED LANDSCAPE ARCHITECT

August 15, 2008
PLANS APPROVAL DATE

The State of California or its officers or agents shall not be responsible for the accuracy or completeness of electronic copies of this plan sheet.

LICENSED LANDSCAPE ARCHITECT — Robert B. Schott — Signature — 11-04-08 Renewal Date — 08-11-08 Date — STATE OF CALIFORNIA

To accompany plans dated 3-22-10

FLEXIBLE SEDIMENT BARRIER SPACING TABLE

SLOPE OF ROADWAY (PERCENT)	0 to 0.9	1 to 1.9	2 to 2.9	3 to 4	5+
INTERVAL BETWEEN BARRIERS	50′	35′	30′	25′	20′
ANGLE FROM FACE OF CURB	70°	70°	70°	45°	45°
SUGGESTED BARRIER LENGTH	6′	6′	6′	6′	6′

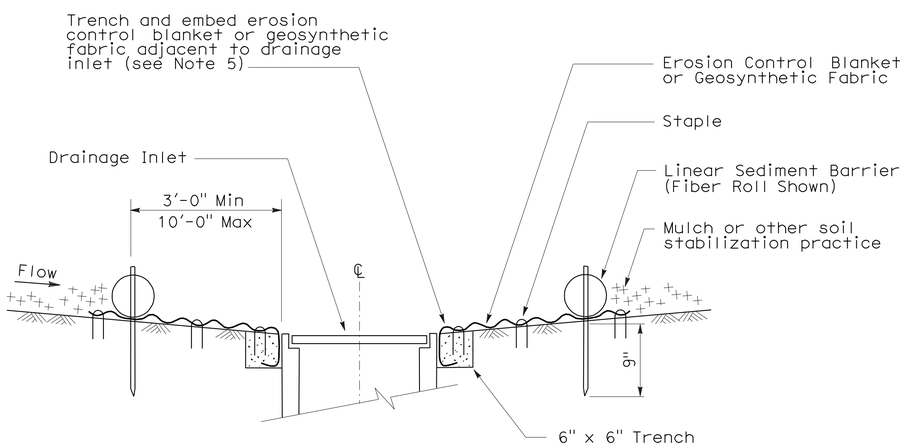

SECTION A-A

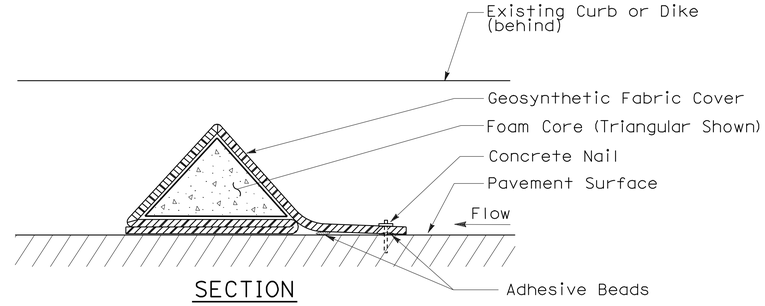

SECTION

FLEXIBLE SEDIMENT BARRIER DETAIL (FOAM BARRIER SHOWN)

NOTES:

1. See Standard Plan T51 for Temporary Silt Fence.
2. Dimensions may vary to fit field conditions.
3. Install a minimum of 3 flexible sediment barriers upstream of each drainage inlet to be protected.
4. Position erosion control blanket or geosynthetic fabric at edge of concrete apron and secure in trench.
5. Erosion control blanket or geosynthetic fabric is not required if the area adjacent to the drainage inlet is vegetated.

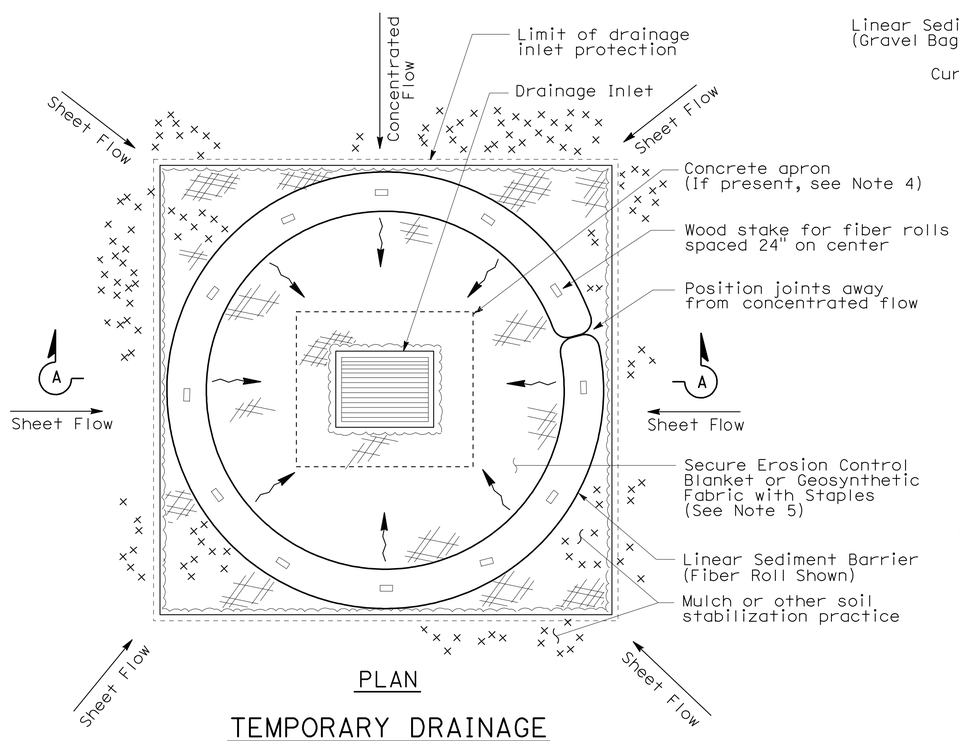

PLAN

TEMPORARY DRAINAGE INLET PROTECTION (TYPE 4A)

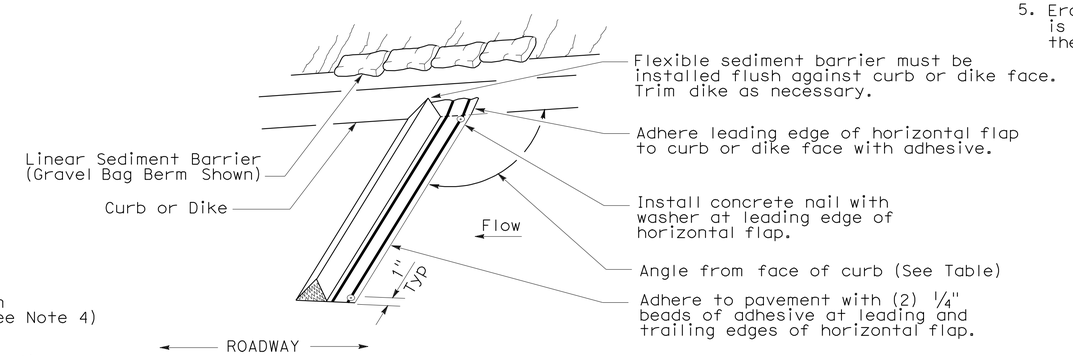

PERSPECTIVE

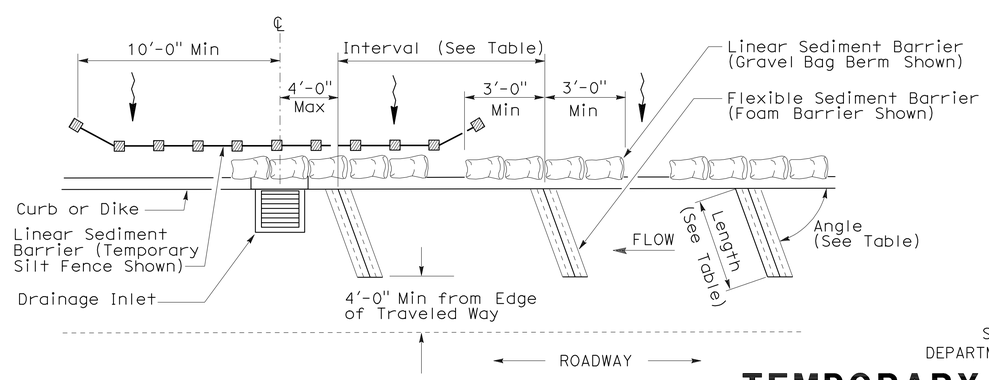

PLAN

TEMPORARY DRAINAGE INLET PROTECTION (TYPE 4B) FLEXIBLE SEDIMENT BARRIER

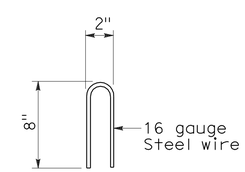

STAPLE DETAIL

STATE OF CALIFORNIA
DEPARTMENT OF TRANSPORTATION

TEMPORARY WATER POLLUTION CONTROL DETAILS (TEMPORARY DRAINAGE INLET PROTECTION)

NO SCALE

NSP T63 DATED AUGUST 15, 2008 SUPPLEMENTS THE STANDARD PLANS BOOK DATED MAY 2006.

NEW STANDARD PLAN NSP T63

2006 NEW STANDARD PLAN NSP T63

DIST	COUNTY	ROUTE	POST MILES TOTAL PROJECT	SHEET NO.	TOTAL SHEETS
02	Tri	36	36.7/37.1	42	47

LICENSED LANDSCAPE ARCHITECT

August 15, 2008
PLANS APPROVAL DATE

LICENSED LANDSCAPE ARCHITECT
Robert B. Schott 3625
Signature
11-04-08
Renewal Date
08-11-08
Date
STATE OF CALIFORNIA

The State of California or its officers or agents shall not be responsible for the accuracy or completeness of electronic copies of this plan sheet.

To accompany plans dated 3-22-10

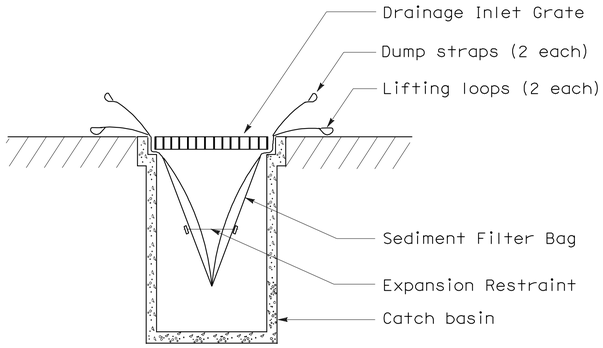

SECTION B-B

SEDIMENT FILTER BAG DETAIL

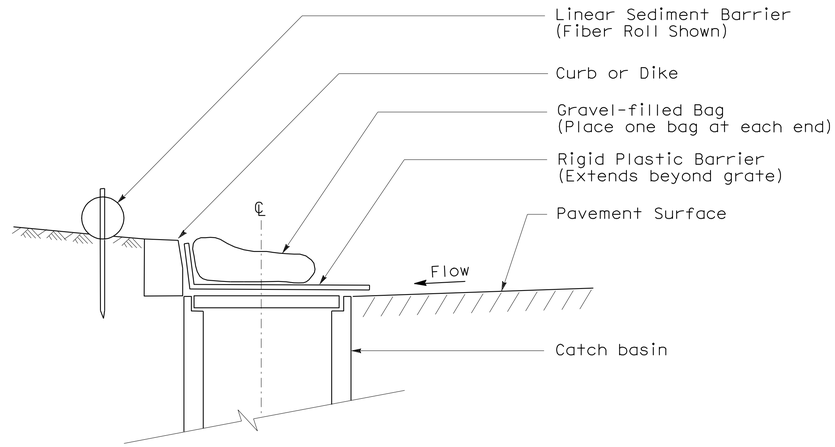

SECTION

TEMPORARY DRAINAGE INLET PROTECTION (TYPE 6A) (CATCH BASIN WITH GRATE)

NOTES:

1. See Standard Plan T51 for Temporary Silt Fence.
2. Dimensions may vary to fit field conditions.

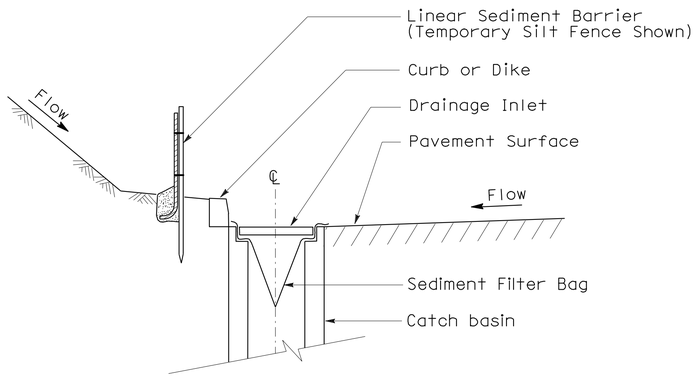

SECTION A-A

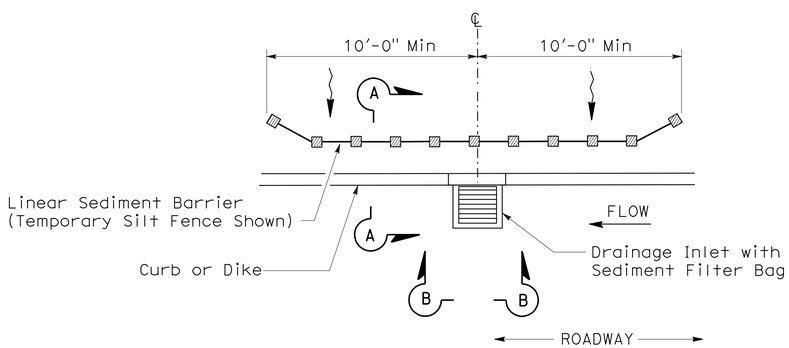

PLAN

TEMPORARY DRAINAGE INLET PROTECTION (TYPE 5) (SEDIMENT FILTER BAG)

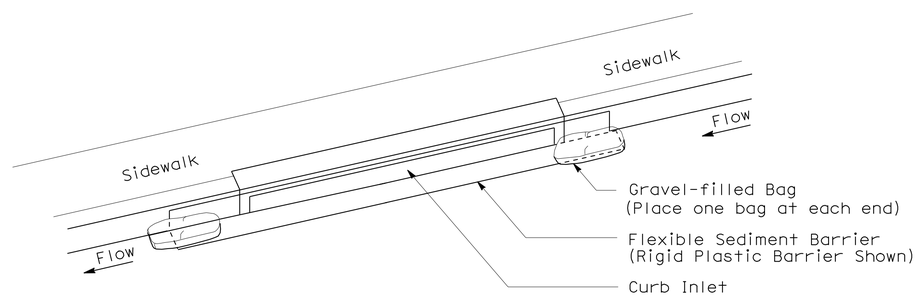

PERSPECTIVE

TEMPORARY DRAINAGE INLET PROTECTION (TYPE 6B) (CURB INLET WITHOUT GRATE)

STATE OF CALIFORNIA
DEPARTMENT OF TRANSPORTATION

TEMPORARY WATER POLLUTION CONTROL DETAILS (TEMPORARY DRAINAGE INLET PROTECTION)

NO SCALE

NSP T64 DATED AUGUST 15, 2008 SUPPLEMENTS
THE STANDARD PLANS BOOK DATED MAY 2006.

NEW STANDARD PLAN NSP T64

2006 NEW STANDARD PLAN NSP T64

7-11-08

DIST	COUNTY	ROUTE	POST MILES TOTAL PROJECT	SHEET NO.	TOTAL SHEETS
02	Tri	36	36.7/37.1	43	47

REGISTERED ELECTRICAL ENGINEER

October 5, 2007
PLANS APPROVAL DATE

REGISTERED PROFESSIONAL ENGINEER Jeffery G. McRae No. E14512 Exp. 6-30-08 ELECTRICAL STATE OF CALIFORNIA

The State of California or its officers or agents shall not be responsible for the accuracy or completeness of electronic copies of this plan sheet.

To accompany plans dated 3-22-10

ELECTROLIERS

STANDARD TYPES
15, 15D
15 STRUCTURE
21, 21D STRUCTURE
30
31
32
35
36-20A

High mast light pole

Double Arm lighting standard

Existing electrolier

Electrolier foundation (Future installation)

NOTES:

1. Luminaires shall be 310 W HPS when installed on Type 21, 21D, 30, 31, 32, 35 and 36-20A Standards, unless otherwise specified. Luminaires shall be 200 W HPS when installed on other type standards or poles, unless otherwise specified.
2. Luminaires shall be the cutoff type, ANSI Type Ⅲ medium cutoff lighting distribution, unless otherwise specified.
3. Variations noted adjacent to symbol on project plans.

Electrolier (see project notes or project plans)

Luminaire on wood pole

STANDARD NOTES:

- AB — Abandon. If applied to conduit, remove conductors.
- BC — Install pull box in existing conduit run.
- BP — Pedestrian barricade, type as indicated on plan.
- CB — Install conduit into existing pull box.
- CC — Connect new and existing conduit. Remove existing conductors and install conductors as indicated.
- CF — Conduit to remain for future use. Remove conductors. Install pull wire or rope.
- DH — Detector handhole.
- FA — Foundation to be abandoned.
- IS — Install sign on signal mast arm.
- NS — No slip base on standard.
- PEC — Photoelectric control.
- PEU — Photoelectric unit.
- RC — Equipment or material to be removed and become the property of the Contractor.
- RE — Remove electrolier, fuses and ballast. Tape ends of conductors.
- RL — Relocate equipment.
- RR — Remove and reuse equipment.
- RS — Remove and salvage equipment.
- SC — Splice new to existing conductors.
- SD — Service disconnect.
- SF — Standard to remain for future use. Remove luminaire, pole conductors, fuses and ballast.
- TSP — Telephone service point.

ABBREVIATIONS AND EQUIPMENT DESIGNATIONS

PROPOSED	EXISTING	
BBS	bbs	Battery backup system
BC	bc	Bolt circle
C	C	Conduit
CCTV	cctv	Closed circuit television
CKT	ckt	Circuit
CMS	cms	Changeable message sign
DLC	dlc	Loop detector lead-in cable
EMS	ems	Extinguishable message sign
EVC	evc	Emergency vehicle cable
EVD	evd	Emergency vehicle detector
FB	fb	Flashing beacon
FBCA	fbca	Flashing beacon control assembly
FBS	fbs	Flashing beacon with slip base
FO	fo	Fiber optic
G	G	Ground (Equipment Grounding Conductor)
GFCI	GFCI	Ground fault circuit interrupt
HAR	har	Highway advisory radio
HEX	hex	Hexagonal
HPS	hps	High pressure sodium
IISNS	iisns	Internally illuminated street name sign
ISL	isl	Induction sign lighting
LED	led	Light emitting diode
LMA	lma	Luminaire mast arm
LPS	lps	Low pressure sodium
LTG	ltg	Lighting
LUM	lum	Luminaire
MAT	mat	Mast arm mounting vehicle signal faces, top attachment
MAS	mas	Mast arm mounting vehicle signal faces, side attachment
MAS-4A	mas-4A	Mast arm mounting vehicle signal faces, side attachment - 4 signal section
MAS-4B	mas-4B	
MAS-4C	mas-4C	
MAS-5A	mas-5A	Mast arm mounting vehicle signal faces, side attachment - 5 signal section
MAS-5B	mas-5B	
MC	mc	Mercury contactor
M/M	m/m	Multiple to multiple transformer
MT	mt	Conduit with pull wire or rope only
MTG	mtg	Mounting
	mv	Mercury vapor lighting fixture
N	N	Neutral (Grounded Conductor)
NC	NC	Normally closed
NO	NO	Normally open
PB	pb	Pull box
PEC	pec	Photoelectric control (Type I, Ⅱ, Ⅲ, Ⅳ or Ⅴ as shown)
PED	ped	Pedestrian
PEU	peu	Photoelectric unit
PPB	ppb	Pedestrian push button
RL		Relocated equipment
RM	rm	Ramp metering
SB	sb	Slip base
SIC	sic	Signal interconnect cable
SIG	sig	Signal
SMA	sma	Signal mast arm
SNS	sns	Street name sign
SP	sp	Service point
TDC	tdc	Telephone demarcation cabinet
TMS	tms	Traffic monitoring station
TOS	tos	Traffic Operations System
VEH	veh	Vehicle
XFMR	xfmr	Transformer
COMM	comm	Communication
RWIS	rwis	Roadway weather information system

SOFFIT AND WALL MOUNTED LUMINAIRES

Pendant, 70 W HPS unless otherwise specified.

Flush, 70 W HPS unless otherwise specified.

Wall surface, 70 W HPS unless otherwise specified.

Existing soffit or wall luminaire to remain unmodified.

Existing soffit or wall luminaire to be modified as specified.

NOTE:

Arrow indicates "street side" of luminaire.

STATE OF CALIFORNIA
DEPARTMENT OF TRANSPORTATION

ELECTRICAL SYSTEMS (SYMBOLS AND ABBREVIATIONS)

NO SCALE

RSP ES-1A DATED OCTOBER 5, 2007 SUPERSEDES STANDARD PLAN ES-1A DATED MAY 1, 2006 - PAGE 400 OF THE STANDARD PLANS BOOK DATED MAY 2006.

REVISED STANDARD PLAN RSP ES-1A

2006 REVISED STANDARD PLAN RSP ES-1A

DIST	COUNTY	ROUTE	POST MILES TOTAL PROJECT	SHEET NO.	TOTAL SHEETS
02	Tri	36	36.7/37.1	44	47

REGISTERED ELECTRICAL ENGINEER

October 5, 2007
PLANS APPROVAL DATE

REGISTERED PROFESSIONAL ENGINEER Jeffery G. McRae No. E14512 Exp. 6-30-08 ELECTRICAL STATE OF CALIFORNIA

The State of California or its officers or agents shall not be responsible for the accuracy or completeness of electronic copies of this plan sheet.

To accompany plans dated 3-22-10

CONDUIT

PROPOSED	EXISTING	
		Lighting Conduit, unless otherwise indicated or noted
		Traffic signal conduit
C	c	Communication conduit
T	t	Telephone conduit
F	f	Fire alarm conduit
FO	fo	Fiber optic conduit
		Conduit termination (RSP ES-9A C)
R	r	Conduit riser in/on structure or service pole

SERVICE EQUIPMENT

PROPOSED	EXISTING	
OH	oh	Overhead lines
U	U	Wood pole "U" indicates utility owned
		Pole guy with anchor
		Utility transformer - ground mounted
III		Service equipment enclosure type
		Service equipment enclosure door indicates front of enclosure
T	t	Telephone demarcation cabinet

POLE-MOUNTED SERVICE DESIGNATION

Type of installation

TYPE H SERVICE - 28'-10" ← Pole height above grade

ILLUMINATED OVERHEAD SIGN

PROPOSED	EXISTING	
		Overhead sign - Single post
		Overhead sign - Two post
		Overhead sign - Mounted on structure
		Overhead sign with electrolier

SIGNAL EQUIPMENT

PROPOSED	EXISTING	
		Pedestrian signal face
		Pedestrian push button post
		Pedestrian barricade
		Vehicle signal face (with backplate, 3-Section: red, yellow and green)
		Vehicle signal face with angle visors
PV	PV	Modifications of basic symbols: "L" indicates all non-arrow sections louvered "LG" indicates louvered green section only "PV" indicates 12" programmed visibility sections "8" indicates all 8" sections (only when specified)
		Type 15TS and Vehicle signal face
		Vehicle signal face with red, yellow and green left arrow sections
		Vehicle signal face with red and yellow sections and up green arrow
		Vehicle signal face (5 Section) with red, yellow and green sections and yellow and green right arrows
		Type 1 Standard and attached vehicle signal faces
		Standard with signal mast arm only and attached vehicle signal faces and internally illuminated street name sign
		Type 33 Standard, Left-turn vehicle signal face and sign
		Standard with luminaire and signal mast arms and attached vehicle signal faces
		Cantilever flashing beacon Type 9 Frame, with a sign unless otherwise specified or indicated
		Type 15-FBS Standard with two vehicle signal face sections with lens, backplate and visor with a sign
R	Y	Flashing beacon. One vehicle signal face section with lens, backplate and visor. "R" indicates red indication, "Y" indicates yellow indication
		Controller assembly. Door indicates front of cabinet

SIGNAL EQUIPMENT Cont

PROPOSED	EXISTING	
		Guard post
		Type 1 Standard with "Meter On" sign
		Emergency Vehicle detector

NOTES:

1. All signal sections shall be 12" unless shown otherwise.
2. Signal heads shall be provided with backplates unless shown otherwise.
3. Signal indication shall be LED.

STATE OF CALIFORNIA
DEPARTMENT OF TRANSPORTATION

ELECTRICAL SYSTEMS (SYMBOLS AND ABBREVIATIONS)

NO SCALE

RSP ES-1B DATED OCTOBER 5, 2007 SUPERCEDES STANDARD PLAN ES-1B DATED MAY 1, 2006 - PAGE 401 OF THE STANDARD PLANS BOOK DATED MAY 2006.

REVISED STANDARD PLAN RSP ES-1B

2006 REVISED STANDARD PLAN RSP ES-1B

7-10-07

DIST	COUNTY	ROUTE	POST MILES TOTAL PROJECT	SHEET NO.	TOTAL SHEETS
02	Tri	36	36.7/37.1	45	47

REGISTERED ELECTRICAL ENGINEER

October 5, 2007
PLANS APPROVAL DATE

REGISTERED PROFESSIONAL ENGINEER Jeffery G. McRae No. E14512 Exp. 6-30-08 ELECTRICAL STATE OF CALIFORNIA

The State of California or its officers or agents shall not be responsible for the accuracy or completeness of electronic copies of this plan sheet.

To accompany plans dated 3-22-10

EQUIPMENT IDENTIFICATION

ILLUMINATED SIGN IDENTIFICATION NUMBER:

Sign No. 12345 — Sign number - Place on post or structure

10 ISL SCI 1.0

- 1.0 — Transformer rating (kVA)
- SCI — Lighting control type
- 10 ISL — Number and type of fixtures

Do NOT place on standard or structure

ELECTROLIER OR EQUIPMENT IDENTIFICATION NUMBER:

12345 - 15'-0"

- 15'-0" — Mast arm length, if shown. Do not place on standard or structure.
- 12345 — Equipment number - Place on standard or structure. Existing equipment numbers are shown in parenthesis

CONDUIT AND CONDUCTOR IDENTIFICATION:

1½"C, 2#10, 15#14, 2 DLC

- 2#10, 15#14, 2 DLC — Number and size of conductors and cables
- 1½"C — Size of conduit in inches

Ø1, Ø2, Ø2P, etc.	Traffic phase identification for signal faces, detectors and phase diagrams
1 2 3	Project note numbers
A B C	Equipment description, installation or item numbers
1 2 3	Conduit run numbers

SIGNAL AND LIGHTING STANDARD (TYPICAL DESIGNATION):

19A - 3 - 100

- 100 — Wind velocity = 100 mph
- 3 — Case 3 arm loading
- 19A — Standard type
- Standard Plan sheet number
- Detail number or letter

MISCELLANEOUS EQUIPMENT

PROPOSED	EXISTING	
CMS	cms	Changeable message sign
		Closed circuit television camera
		Highway advisory radio pole and antenna
EMS	ems	Extinguishable message sign
M V	m v	Detection device M = Microwave sensor V = Video image sensor

WIRING DIAGRAM LEGEND

P	Pole
CB	Circuit breaker
A	Ampere
V	Volt
M	Metered
UM	Unmetered
NB	Neutral bus
GB	Ground bus
G	Equipment grounding conductor
N	Grounded conductor (Neutral)

- External conductor
- Conductor or bus
- Tie point
- Contactor coil
- Contactor, Contact NO
- Terminal blocks
- Contactor, Contact NC
- Enclosure bond
- Grounding electrode
- Circuit breaker
- Receptacle

PULL BOXES

PROPOSED EXISTING

Pull box-No. 5 unless otherwise indicated or noted.

3 — 9A(21)

Pull box-Additional designations or descriptions

3	= No. 3½ pull box
5	= No. 5 pull box
6	= No. 6 pull box
7	= No. 7 (Ceiling pull box)
8	= No. 8 (Pendant soffit pull box)
9	= No. 9 pull box
9A	= No. 9A pull box

(C)	= Communications pull box
(E)	= Pull box with extension
(S)	= Sprinkler control pull box
(21)	= Anchor bolts and conduit for future installation of Type 21 Standard
(T)	= Traffic pull box

VEHICLE DETECTORS

5 J 9 U

- U — U = Upper, L = Lower
- 9 — Slot number in input file
- J — Input file (I or J)
- 5 — Phase

PROPOSED	EXISTING	
		Type A detector loop. Outline of sawcut shown.
		Type B detector loop. Outline of sawcut shown.
		Type C detector loop. Outline of sawcut shown.
		Type D detector loop. Outline of sawcut shown.
		Type E detector loop. Outline of sawcut shown.
		Type Q detector loop. Outline of sawcut shown.
		Magnetic detector
DH	dh	Detector handhole
		Microwave or video detection zone

STATE OF CALIFORNIA
DEPARTMENT OF TRANSPORTATION

ELECTRICAL SYSTEMS (SYMBOLS AND ABBREVIATIONS)

NO SCALE

RSP ES-1C DATED OCTOBER 5, 2007 SUPERCEDES STANDARD PLAN ES-1C DATED MAY 1, 2006 - PAGE 402 OF THE STANDARD PLANS BOOK DATED MAY 2006.

REVISED STANDARD PLAN RSP ES-1C

2006 REVISED STANDARD PLAN RSP ES-1C

DIST	COUNTY	ROUTE	POST MILES TOTAL PROJECT	SHEET NO.	TOTAL SHEETS
02	Tri	36	36.7/37.1	46	47

REGISTERED ELECTRICAL ENGINEER

June 6, 2008
PLANS APPROVAL DATE

REGISTERED PROFESSIONAL ENGINEER
Jeffery G. McRae
No. E14512
Exp. 6-30-10
ELECTRICAL
STATE OF CALIFORNIA

The State of California or its officers or agents shall not be responsible for the accuracy or completeness of electronic copies of this plan sheet.

To accompany plans dated 3-22-10

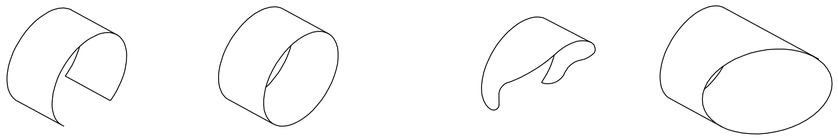

VISORS

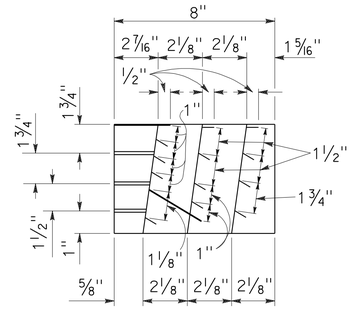

SECTION A-A

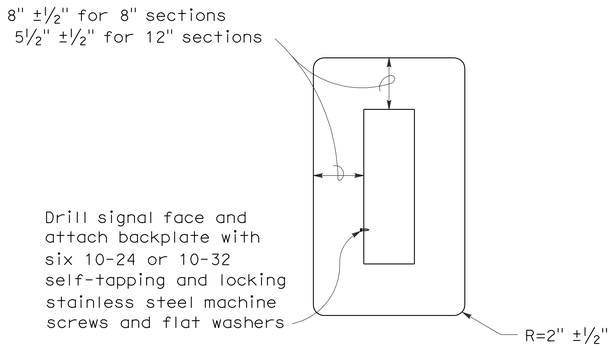

8" AND 12" SECTIONS

BACKPLATE

1/16" minimum thickness
3001-14 aluminum, or plastic when specified

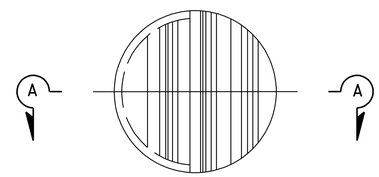

FRONT VIEW

DIRECTIONAL LOUVER

Directional louvers shall be oriented as directed by the Engineer and secured in place with one plated brass machine screw and nut.

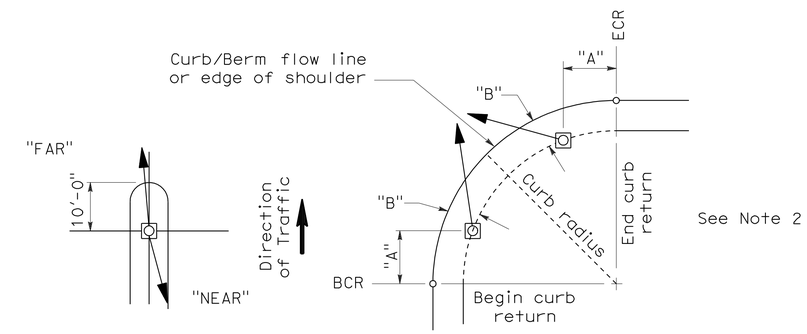

NOTES:

1. Typical signal pole placement unless dimensioned on plans.
2. For "A" and "B" dimensions, see Pole Schedule, or as directed by the Engineer.

SIGNAL STANDARD PLACEMENT DIMENSIONS AND EQUIPMENT LOCATIONS

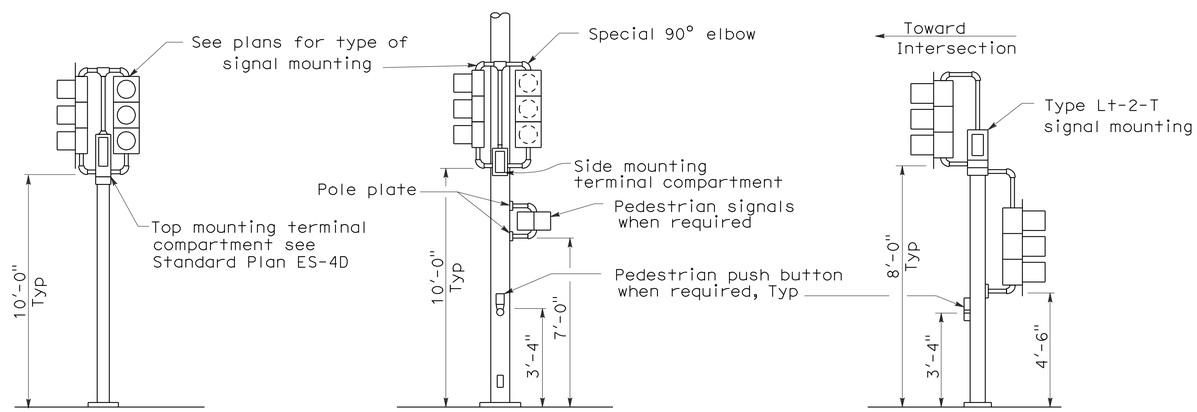

TOP MOUNTED SIGNALS (TV)
Type 1-A, 1-B, 1-C and 1-D standard as indicated on the plans

SIDE MOUNTED SIGNALS (SV AND SP)
Normally used on standards with luminaire or signal mast arm

LEFT TURN LANE SIGNAL
Type 1-A, 1-B, 1-C and 1-D standard as indicated on plans

TYPICAL SIGNAL INSTALLATIONS

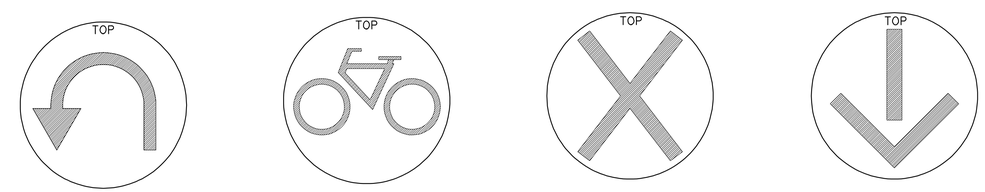

U-TURN SIGNAL FACE | BICYCLE SIGNAL FACE | LANE CONTROL SIGNAL FACE | LANE CONTROL SIGNAL FACE

STATE OF CALIFORNIA
DEPARTMENT OF TRANSPORTATION

ELECTRICAL SYSTEMS (SIGNAL HEADS AND MOUNTINGS)

NO SCALE

RSP ES-4C DATED JUNE 6, 2008 SUPERSEDES STANDARD PLAN ES-4C DATED MAY 1, 2006 - PAGE 420 OF THE STANDARD PLANS BOOK DATED MAY 2006.

REVISED STANDARD PLAN RSP ES-4C

2006 REVISED STANDARD PLAN RSP ES-4C

5-19-08

DIST	COUNTY	ROUTE	POST MILES TOTAL PROJECT	SHEET NO.	TOTAL SHEETS
02	Tri	36	36.7/37.1	47	47

REGISTERED ELECTRICAL ENGINEER

June 6, 2008
PLANS APPROVAL DATE

REGISTERED PROFESSIONAL ENGINEER Jeffery G. McRae No. E14512 Exp. 6-30-10 ELECTRICAL STATE OF CALIFORNIA

The State of California or its officers or agents shall not be responsible for the accuracy or completeness of electronic copies of this plan sheet.

To accompany plans dated 3-22-10

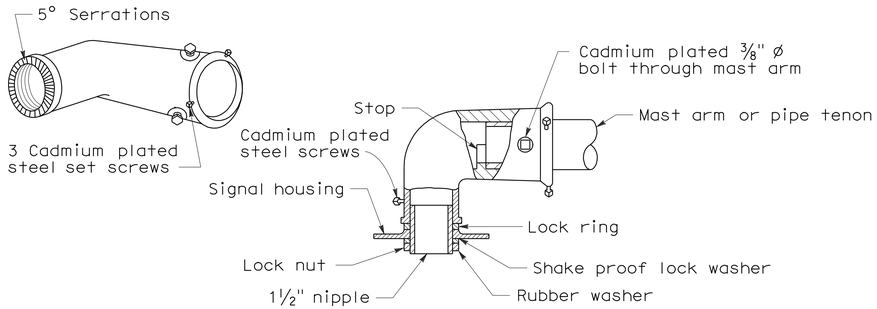

MAST ARM MOUNTING - TYPE "MAT"

For 2 NPS pipe, see Note 1.

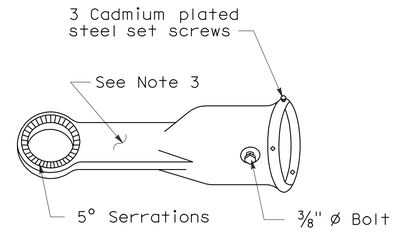

MAST ARM MOUNTING - TYPE "MAS"

For 2 NPS pipe. See Note 1.

SIGNAL SLIP FITTERS

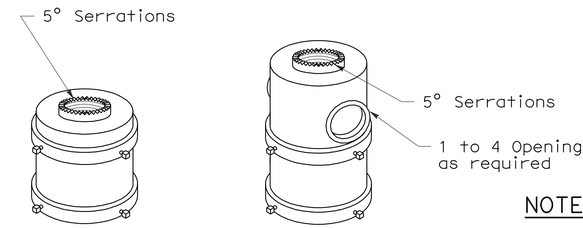

For one mounting For mulitiple mountings

TOP MOUNTINGS

For 4 NPS pipe, see Note 2.

NOTES:

1. After mast arm signal has been plumbed and secured, drill 7/16" hole through mast arm tenon in line with slip fitter hole. Place a cadmium plated 3/8" ø galvanized bolt with washer under bolt head through hole and secure with washer, nut, and locknut. Seal openings between mast arm mountings and mast arm with mastic.
2. (a) Threaded top mounted slip fitter openings shall be 1 1/2 NPS.
   (b) Serrations in fittings shall match those on bottom of signal heads or in lock ring.
   (c) Top opening shall be offset when backplate is used.
3. Wireway shall have a cross section area of 0.95 square inch minimum. Minimum width of 1/2".

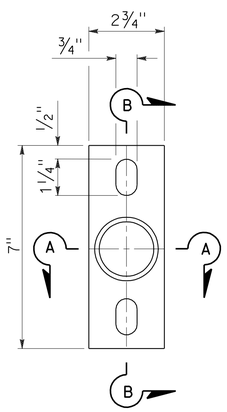

POLE PLATE

For side mountings

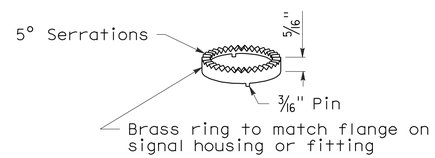

LOCK RING

Use where locking ring is not integral with signal housing or fitting.

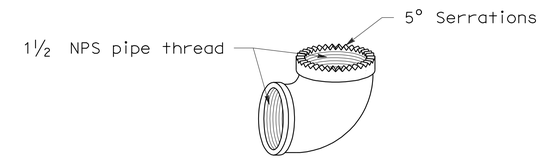

SPECIAL 90° ELBOW

One for each signal head, except those with special slip fitter mounting

MISCELLANEOUS MOUNTING HARDWARE

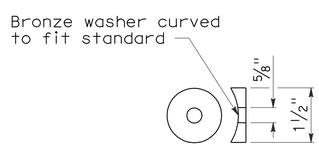

DETAIL "C"

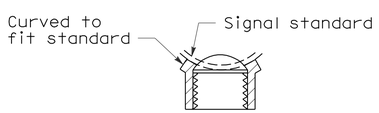

SECTION A-A

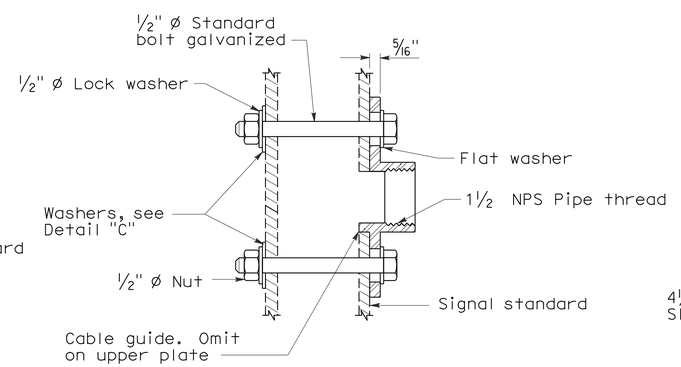

SECTION B-B

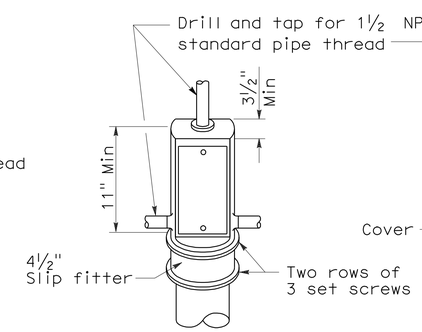

TOP MOUNTING

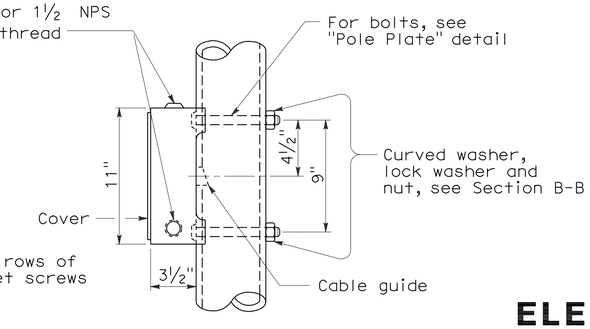

SIDE MOUNTING

TERMINAL COMPARTMENTS

STATE OF CALIFORNIA
DEPARTMENT OF TRANSPORTATION

ELECTRICAL SYSTEMS (SIGNAL HEADS AND MOUNTINGS)

NO SCALE

RSP ES-4D DATED June 6, 2008 SUPERSEDES STANDARD PLAN ES-4D
DATED MAY 1, 2006 - PAGE 421 OF THE STANDARD PLANS BOOK DATED MAY 2006.

REVISED STANDARD PLAN RSP ES-4D

2006 REVISED STANDARD PLAN RSP ES-4D

5-19-08