Dist	COUNTY	ROUTE	POST MILES TOTAL PROJECT	SHEET No.	TOTAL SHEETS
02	Plu	70	17.2/17.5	1	42

STATE OF CALIFORNIA

DEPARTMENT OF TRANSPORTATION

HSSTP-P070(125)E

PROJECT PLANS FOR CONSTRUCTION ON

STATE HIGHWAY

IN PLUMAS COUNTY
NEAR BELDEN
FROM 0.6 MILE TO
0.9 MILE EAST OF OF CARIBOU ROAD

TO BE SUPPLEMENTED BY STANDARD PLANS DATED MAY 2006

INDEX OF PLANS

SHEET No.	DESCRIPTION
1	TITLE AND LOCATION MAP
2-3	TYPICAL CROSS SECTIONS
4	LAYOUTS
5-6	PROFILES AND SUPERELEVATION DIAGRAM
7-12	CONSTRUCTION DETAILS
13-18	DRAINAGE PLANS, PROFILES, DETAILS AND QUANTITIES
19	CONSTRUCTION AREA SIGNS
20	TRAFFIC HANDLING PLANS
21-23	PAVEMENT DELINEATION AND SIGN PLANS, DETAILS AND QUANTITIES
24	SUMMARY OF QUANTITIES
25-42	REVISED, NEW AND REVISED NEW STANDARD PLANS

THE STANDARD PLANS LIST APPLICABLE TO THIS CONTRACT IS INCLUDED IN THE NOTICE TO BIDDERS AND SPECIAL PROVISIONS BOOK.

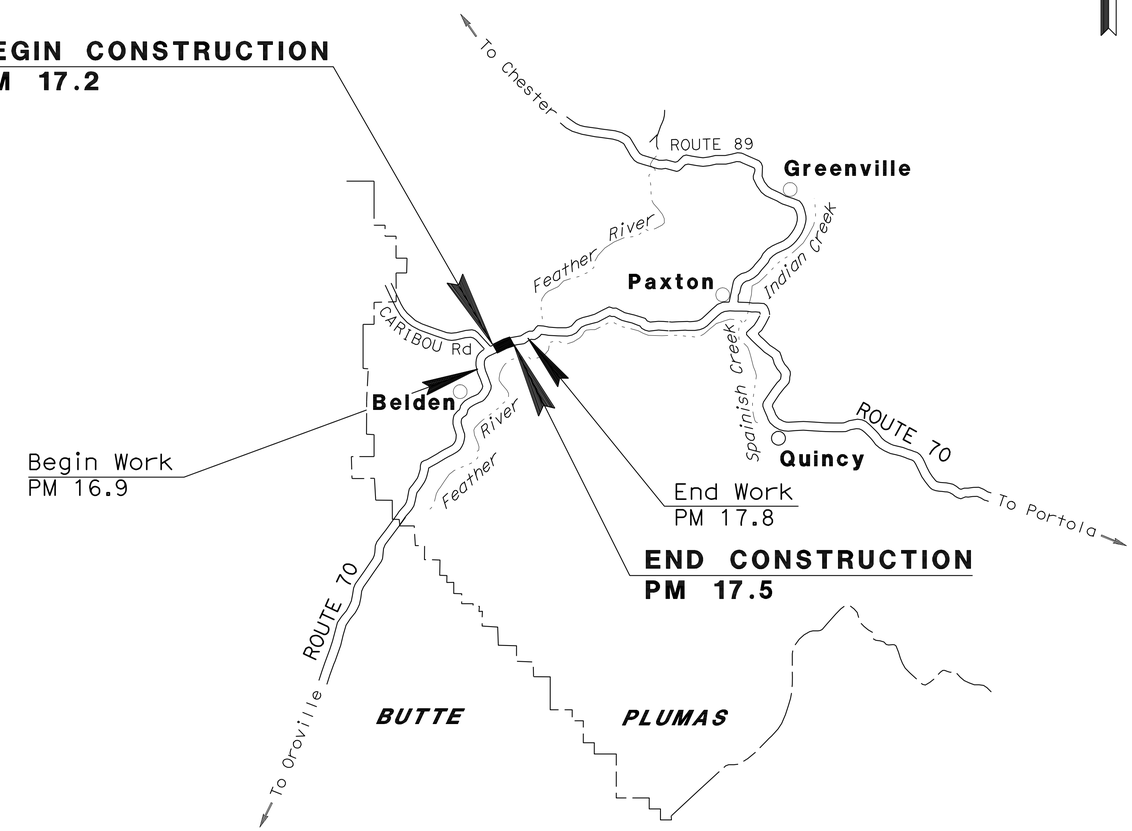

NO SCALE

THE CONTRACTOR SHALL POSSESS THE CLASS (OR CLASSES) OF LICENSE AS SPECIFIED IN THE "NOTICE TO BIDDERS."

Justin W. Borders 06-14-10
PROJECT ENGINEER DATE
REGISTERED CIVIL ENGINEER

August 2, 2010
PLANS APPROVAL DATE

REGISTERED PROFESSIONAL ENGINEER
JUSTIN W. BORDERS
No. C65918
Exp. 6-30-12
CIVIL
STATE OF CALIFORNIA

THE STATE OF CALIFORNIA OR ITS OFFICERS OR AGENTS SHALL NOT BE RESPONSIBLE FOR THE ACCURACY OR COMPLETENESS OF ELECTRONIC COPIES OF THIS PLAN SHEET.

CONTRACT No.	02-2E0004
PROJECT ID	0200000187

PROJECT MANAGER: CHRIS HARVEY
DESIGN ENGINEER: AL TRUJILLO

P:\proj2\02\2E000_plans\pse\22e000ab001.dgn

LAST REVISION 06-14-10
DATE PLOTTED => 08-SEP-2010
TIME PLOTTED => 04:56

Dist	COUNTY	ROUTE	POST MILES TOTAL PROJECT	SHEET No.	TOTAL SHEETS
02	Plu	70	17.2/17.5	2	42

Justin W Borders 06-14-10
REGISTERED CIVIL ENGINEER DATE

8-2-10
PLANS APPROVAL DATE

REGISTERED PROFESSIONAL ENGINEER JUSTIN W. BORDERS No. C65918 Exp. 6-30-12 CIVIL STATE OF CALIFORNIA

THE STATE OF CALIFORNIA OR ITS OFFICERS OR AGENTS SHALL NOT BE RESPONSIBLE FOR THE ACCURACY OR COMPLETENESS OF SCANNED COPIES OF THIS PLAN SHEET.

NOTES:

1. DIMENSIONS OF THE PAVEMENT STRUCTURES (STRUCTURAL SECTIONS) ARE SUBJECT TO TOLERANCES SPECIFIED IN THE STANDARD SPECIFICATIONS.
2. SUPERELEVATIONS AS SHOWN OR AS DIRECTED BY THE ENGINEER.

ABBREVIATION:

NOA - NATURALLY OCCURRING ASBESTOS

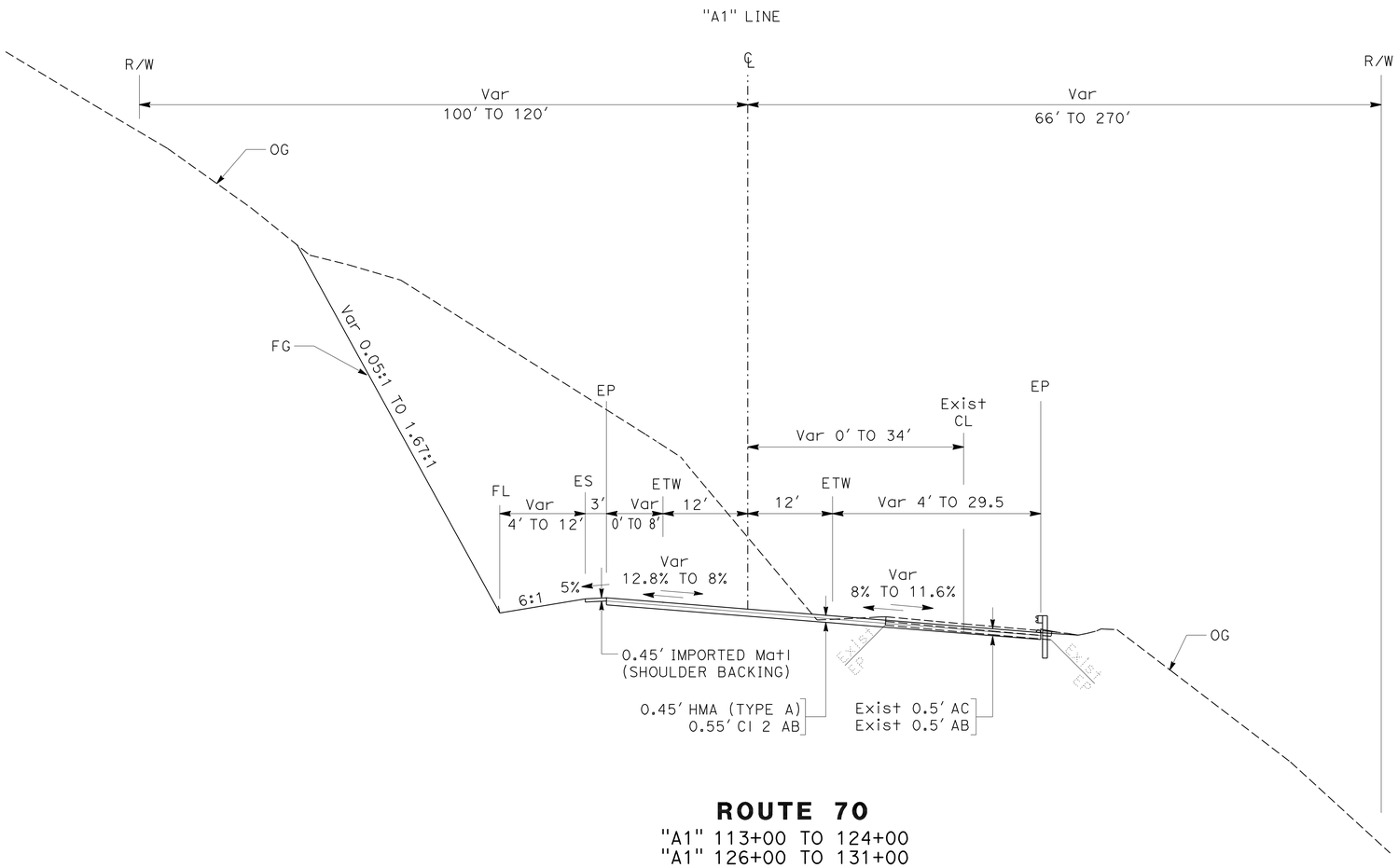

ROUTE 70
"A1" 113+00 TO 124+00
"A1" 126+00 TO 131+00

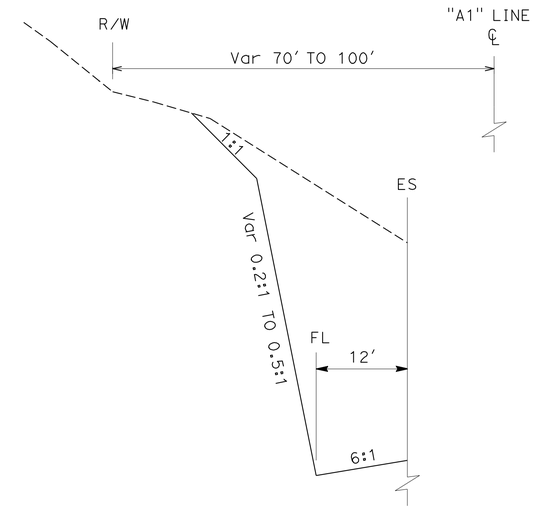

ROUTE 70
"A1" 120+00 TO 122+00
"A1" 127+00 TO 129+50

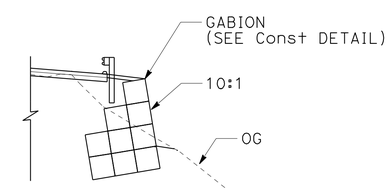

GABION (TYPICAL)
"A1" 118+02.0 TO 119+33.5

TYPICAL CROSS SECTIONS

NO SCALE

X-1

REVISED BY	DATE REVISED

CALCULATED-DESIGNED BY	WILLIAM LEHMAN
CHECKED BY	JUSTIN BORDERS
FUNCTIONAL SUPERVISOR	AL TRUJILLO

STATE OF CALIFORNIA - DEPARTMENT OF TRANSPORTATION
Caltrans®
DESIGN

P:\proj2\02\2E000_plans\pse\22e000ca001.dgn

LAST REVISION 06-14-10
DATE PLOTTED => 06-AUG-2010
TIME PLOTTED => 06:31

Dist	COUNTY	ROUTE	POST MILES TOTAL PROJECT	SHEET No.	TOTAL SHEETS
02	Plu	70	17.2/17.5	3	42

REGISTERED CIVIL ENGINEER 06-14-10 DATE

8-2-10
PLANS APPROVAL DATE

REGISTERED PROFESSIONAL ENGINEER
JUSTIN W. BORDERS
No. C65918
Exp. 6-30-12
CIVIL
STATE OF CALIFORNIA

THE STATE OF CALIFORNIA OR ITS OFFICERS OR AGENTS SHALL NOT BE RESPONSIBLE FOR THE ACCURACY OR COMPLETENESS OF SCANNED COPIES OF THIS PLAN SHEET.

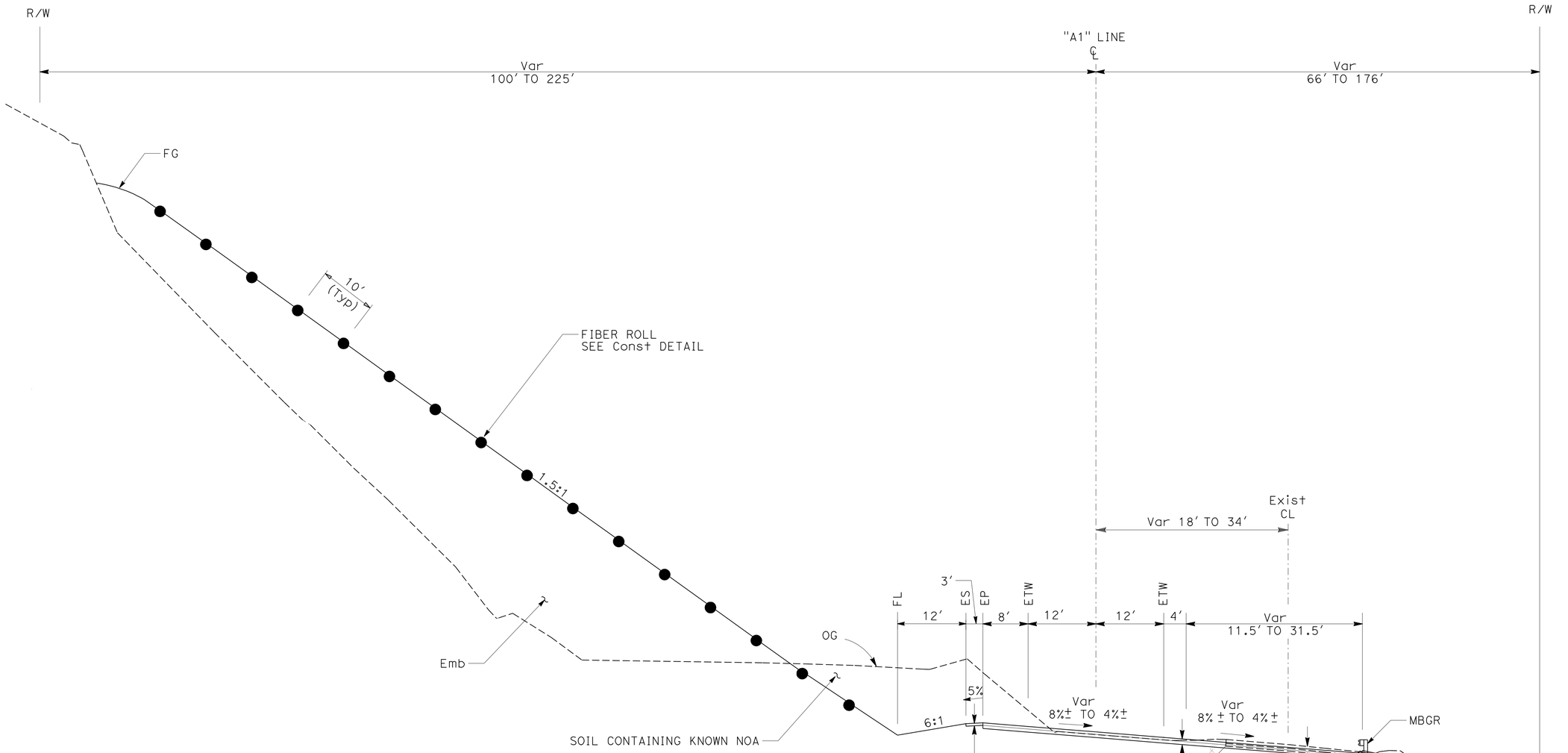

ROUTE 70

"A1" 124+00 TO 126+00

TYPICAL CROSS SECTIONS

NO SCALE

X-2

REVISED BY	DATE REVISED

CALCULATED-DESIGNED BY	CHECKED BY
WILLIAM LEHMAN	JUSTIN BORDERS

FUNCTIONAL SUPERVISOR: AL TRUJILLO

STATE OF CALIFORNIA - DEPARTMENT OF TRANSPORTATION

Caltrans® **DESIGN**

P:\proj2\02\2E000_plans\pse\22e000ca002.dgn

LAST REVISION 06-14-10 | DATE PLOTTED => 06-AUG-2010 | TIME PLOTTED => 06:31

Dist	COUNTY	ROUTE	POST MILES TOTAL PROJECT	SHEET No.	TOTAL SHEETS
02	Plu	70	17.2/17.5	4	42

Justin W Borders 06-14-10
REGISTERED CIVIL ENGINEER DATE

8-2-10
PLANS APPROVAL DATE

REGISTERED PROFESSIONAL ENGINEER JUSTIN W. BORDERS No. C65918 Exp. 6-30-12 CIVIL STATE OF CALIFORNIA

THE STATE OF CALIFORNIA OR ITS OFFICERS OR AGENTS SHALL NOT BE RESPONSIBLE FOR THE ACCURACY OR COMPLETENESS OF SCANNED COPIES OF THIS PLAN SHEET.

NOTES:

1. FOR COMPLETE RIGHT OF WAY DATA, SEE RIGHT OF WAY RECORD MAPS AT DISTRICT OFFICE.
2. FINAL LOCATION OF ROCK FALL ATTENUATOR SYSTEM TO BE DETERMINED BY THE RESIDENT ENGINEER.
3. OVERHEAD SERVICE DROP TO BE REMOVED BY PG&E.

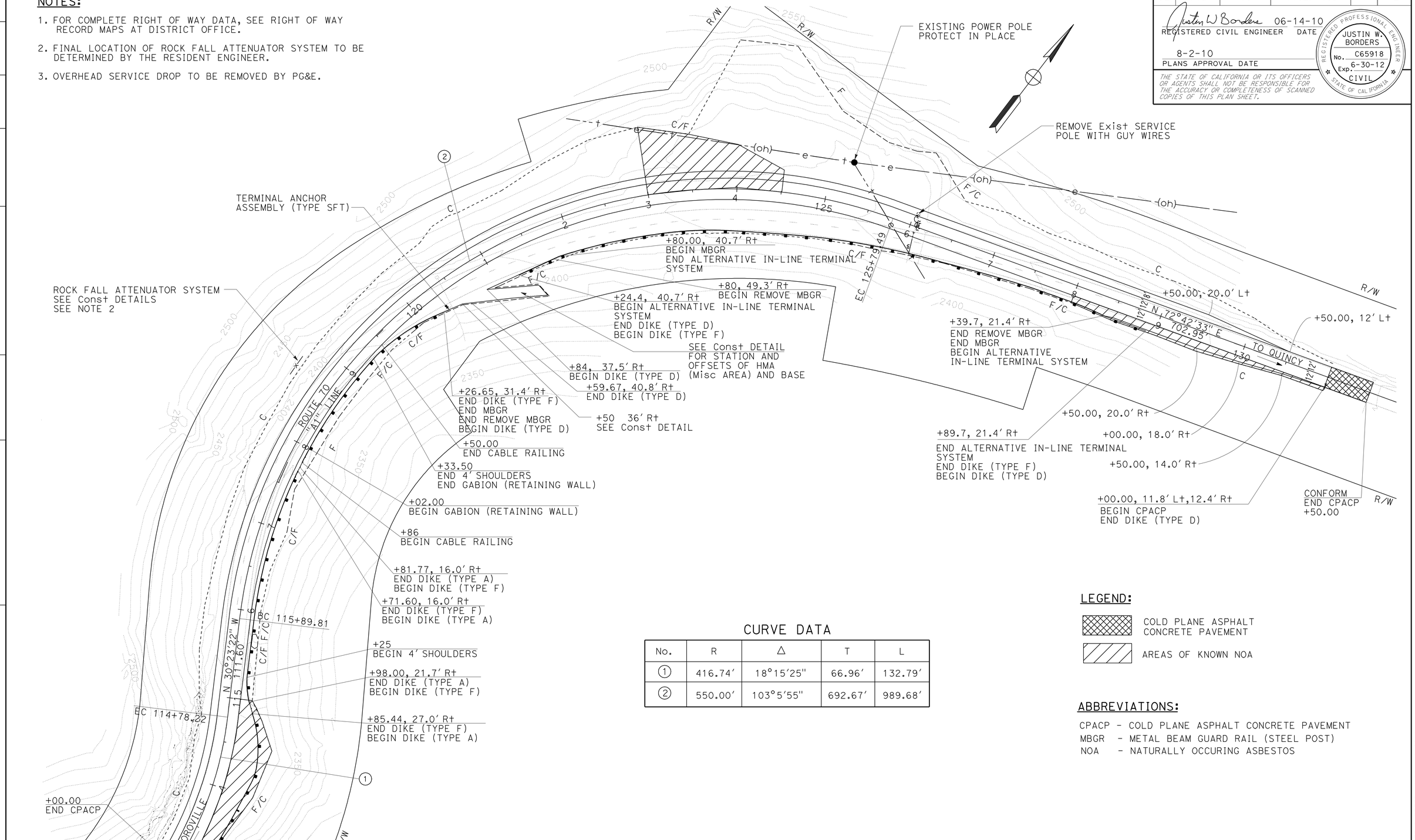

CURVE DATA

No.	R	Δ	T	L
1	416.74'	18°15'25"	66.96'	132.79'
2	550.00'	103°5'55"	692.67'	989.68'

LEGEND:

COLD PLANE ASPHALT CONCRETE PAVEMENT

AREAS OF KNOWN NOA

ABBREVIATIONS:

CPACP - COLD PLANE ASPHALT CONCRETE PAVEMENT
MBGR - METAL BEAM GUARD RAIL (STEEL POST)
NOA - NATURALLY OCCURING ASBESTOS

LAYOUT

SCALE: 1" = 50'

L-1

REVISED BY | DATE REVISED
WILLIAM LEHMAN | JUSTIN BORDERS
CALCULATED-DESIGNED BY | CHECKED BY
FUNCTIONAL SUPERVISOR
AL TRUJILLO

STATE OF CALIFORNIA - DEPARTMENT OF TRANSPORTATION
Caltrans
DESIGN

P:\proj2\02\2E000_plans\pse\22e000ea001.dgn

LAST REVISION 06-14-10 | DATE PLOTTED => 05-AUG-2010 | TIME PLOTTED => 17:04

BORDER LAST REVISED 4/11/2008 | RELATIVE BORDER SCALE IS IN INCHES 0 1 2 3 | USERNAME => trstrk | DGN FILE => 22e000ea001.dgn | CU 03 242 | EA 2E0001

Dist	COUNTY	ROUTE	POST MILES TOTAL PROJECT	SHEET No.	TOTAL SHEETS
02	Plu	70	17.2/17.5	5	42

Justin W Borders 06-14-10
REGISTERED CIVIL ENGINEER DATE

8-2-10
PLANS APPROVAL DATE

REGISTERED PROFESSIONAL ENGINEER
JUSTIN W. BORDERS
No. C65918
Exp. 6-30-12
CIVIL
STATE OF CALIFORNIA

THE STATE OF CALIFORNIA OR ITS OFFICERS OR AGENTS SHALL NOT BE RESPONSIBLE FOR THE ACCURACY OR COMPLETENESS OF SCANNED COPIES OF THIS PLAN SHEET.

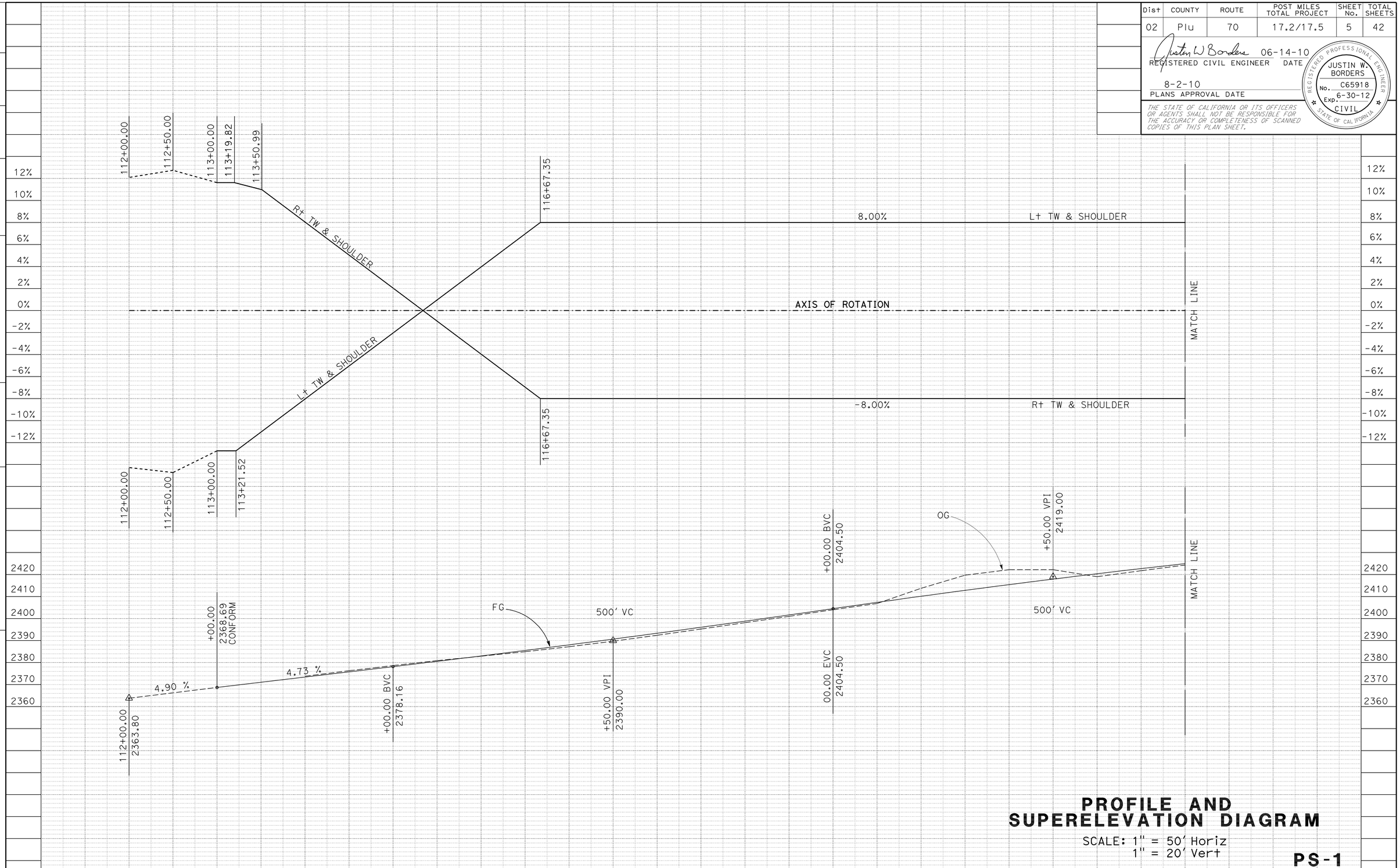

PROFILE AND SUPERELEVATION DIAGRAM

SCALE: 1" = 50' Horiz
1" = 20' Vert

PS-1

STATION	112+00	113+00	114+00	115+00	116+00	117+00	118+00	119+00	120+00	121+00	122+00	123+00	124+00	TOTAL
CY Exc		18450												18450
CY Emb		2317												2317

REVISED BY	DATE REVISED
WILLIAM LEHMAN	JUSTIN BORDERS
CALCULATED-DESIGNED BY	CHECKED BY
FUNCTIONAL SUPERVISOR	AL TRUJILLO

STATE OF CALIFORNIA - DEPARTMENT OF TRANSPORTATION
Caltrans
DESIGN

P:\proj2\02\2E000_plans\pse\22e000fb001.dgn

LAST REVISION 06-14-10
DATE PLOTTED => 05-AUG-2010
TIME PLOTTED => 17:04

Dist	COUNTY	ROUTE	POST MILES TOTAL PROJECT	SHEET No.	TOTAL SHEETS
02	Plu	70	17.2/17.5	6	42

REGISTERED CIVIL ENGINEER 06-14-10 DATE

8-2-10
PLANS APPROVAL DATE

REGISTERED PROFESSIONAL ENGINEER JUSTIN W. BORDERS No. C65918 Exp. 6-30-12 CIVIL STATE OF CALIFORNIA

THE STATE OF CALIFORNIA OR ITS OFFICERS OR AGENTS SHALL NOT BE RESPONSIBLE FOR THE ACCURACY OR COMPLETENESS OF SCANNED COPIES OF THIS PLAN SHEET.

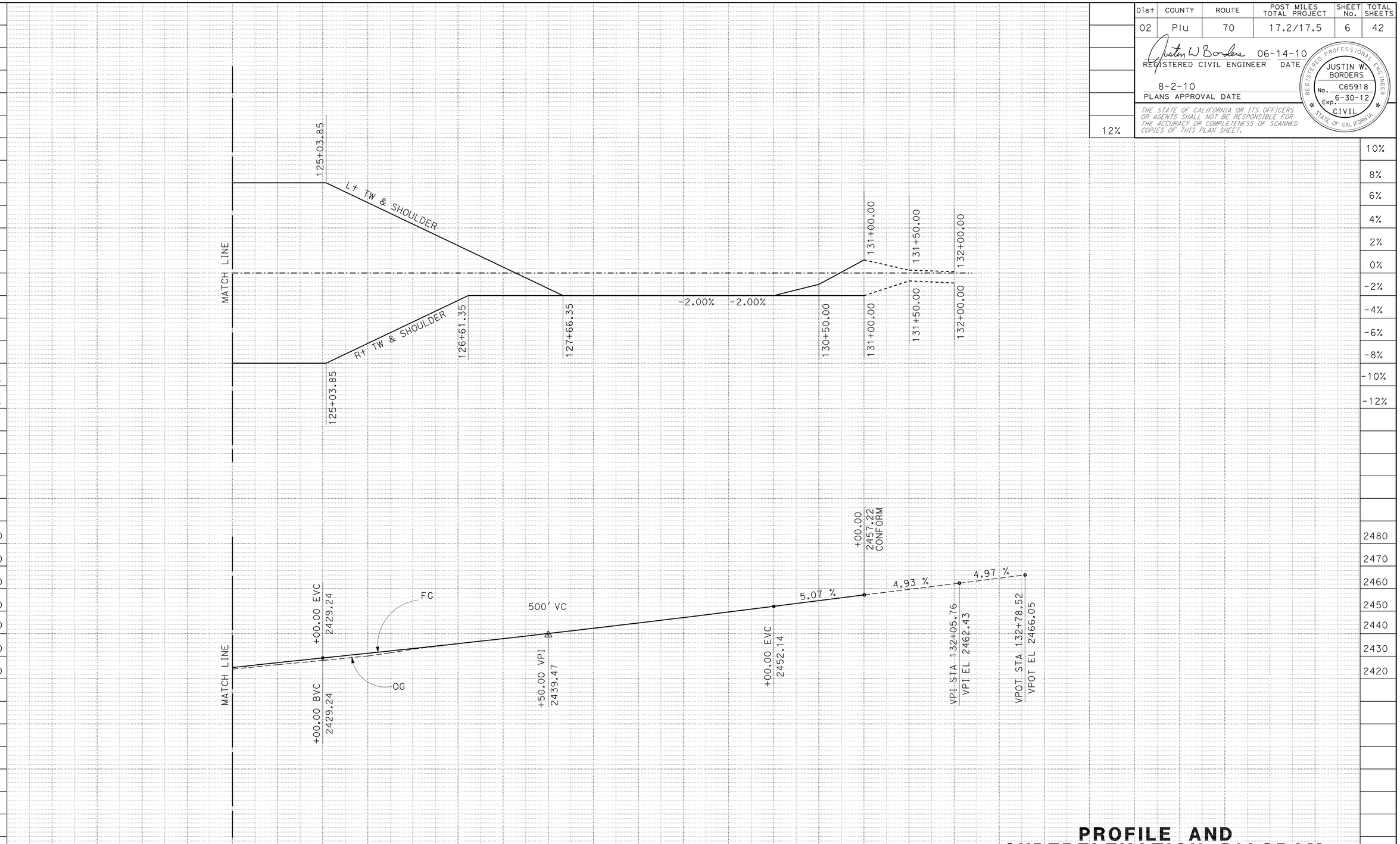

PROFILE AND SUPERELEVATION DIAGRAM

SCALE: 1" = 50' Horiz
1" = 20' Vert

PS-2

STATION	124+00	125+00	126+00	127+00	128+00	129+00	130+00	131+00	132+00	TOTAL
CY Exc	7228									7228
CY Emb	8133									8133

REVISED BY / DATE REVISED: WILLIAM LEHMAN / JUSTIN BORDERS

CALCULATED-DESIGNED BY / CHECKED BY: FUNCTIONAL SUPERVISOR: AL TRUJILLO

STATE OF CALIFORNIA - DEPARTMENT OF TRANSPORTATION
Caltrans DESIGN

P:\proj2\02\2E000_plans\pse\22e000fb002.dgn

LAST REVISION 06-14-10
DATE PLOTTED => 06-AUG-2010
TIME PLOTTED => 06:31

Dist	COUNTY	ROUTE	POST MILES TOTAL PROJECT	SHEET No.	TOTAL SHEETS
02	Plu	70	17.2/17.5	7	42

Justin W Borders 06-14-10
REGISTERED CIVIL ENGINEER DATE

8-2-10
PLANS APPROVAL DATE

REGISTERED PROFESSIONAL ENGINEER JUSTIN W. BORDERS No. C65918 Exp. 6-30-12 CIVIL STATE OF CALIFORNIA

THE STATE OF CALIFORNIA OR ITS OFFICERS OR AGENTS SHALL NOT BE RESPONSIBLE FOR THE ACCURACY OR COMPLETENESS OF SCANNED COPIES OF THIS PLAN SHEET.

NOTES:

1. GROUND ANCHOR AND POST FOUNDATION LOCATIONS TO BE DETERMINED IN THE FIELD BY THE ENGINEER.
2. LATERAL SUPPORT CABLES, UPSLOPE SUPPORT CABLES AND TOP SUPPORT CABLE TO BE SEPARATE INDEPENDENT CABLES.
3. FINAL CABLE MESH DIMENSIONS TO BE DETERMINED BY THE ENGINEER AFTER SLOPE EXCAVATION.

ABBREVIATION:

CPACP - COLD PLANE ASPHALT CONCRETE PAVEMENT

LEGEND

- PLACE HMA (Misc AREA)
- ROCKFALL ATTENUATOR SYSTEM
- CPACP
- POST FOUNDATION LOCATION/NUMBER
- LATERAL GROUND ANCHOR
- UPSLOPE GROUND ANCHOR

STATION TABLE

#	STATION	OFFSET
1	"A1" 118+80	45'
2	"A1" 119+05	45'

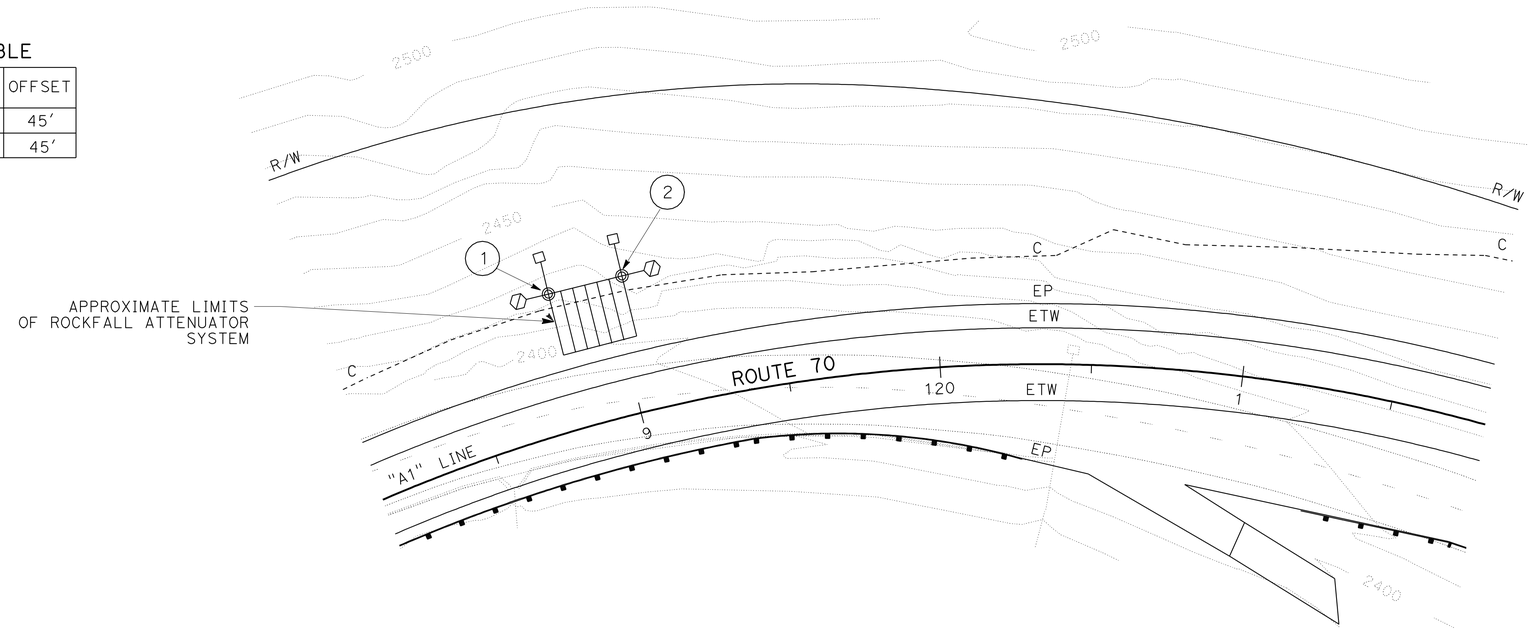

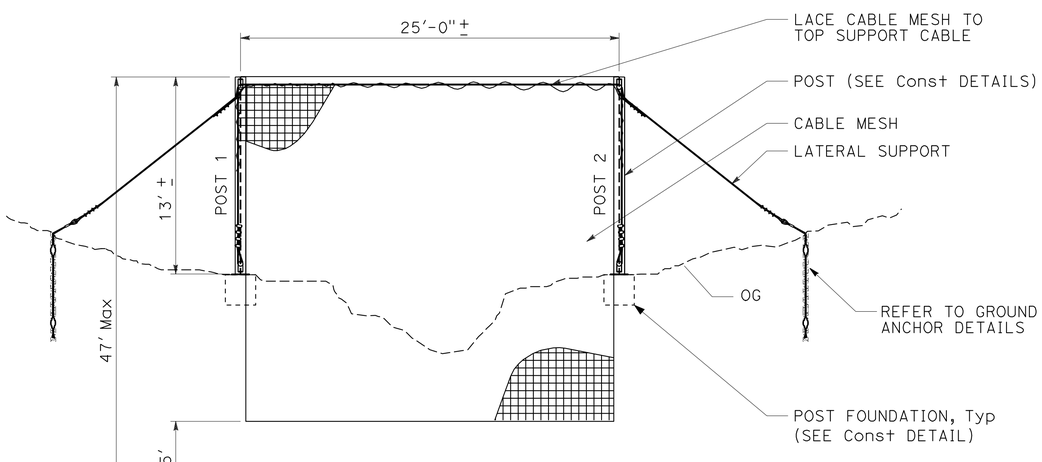

ELEVATION

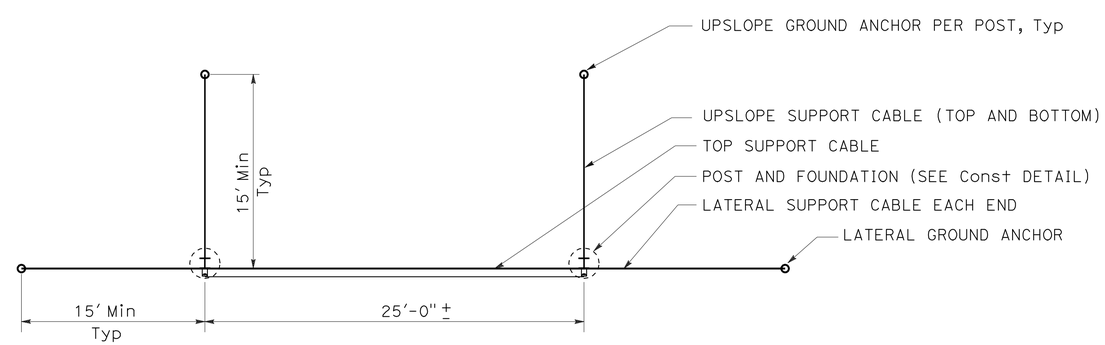

PLAN

ROCKFALL ATTENUATOR SYSTEM

"A1" 118+80 TO "A1" 119+05

CONSTRUCTION DETAILS

NO SCALE

C-1

REVISED BY	DATE REVISED
WILLIAM LEHMAN	JUSTIN BORDERS
CALCULATED-DESIGNED BY	CHECKED BY
FUNCTIONAL SUPERVISOR	AL TRUJILLO

STATE OF CALIFORNIA - DEPARTMENT OF TRANSPORTATION

Caltrans® **DESIGN**

P:\proj2\02\2E000_plans\pse\22e000ga001.dgn

LAST REVISION 06-14-10 | DATE PLOTTED => 05-AUG-2010 | TIME PLOTTED => 17:05

Dist	COUNTY	ROUTE	POST MILES TOTAL PROJECT	SHEET No.	TOTAL SHEETS
02	Plu	70	17.2/17.5	8	42

REGISTERED CIVIL ENGINEER 06-14-10 DATE

8-2-10
PLANS APPROVAL DATE

REGISTERED PROFESSIONAL ENGINEER JUSTIN W. BORDERS No. C65918 Exp. 6-30-12 CIVIL STATE OF CALIFORNIA

THE STATE OF CALIFORNIA OR ITS OFFICERS OR AGENTS SHALL NOT BE RESPONSIBLE FOR THE ACCURACY OR COMPLETENESS OF SCANNED COPIES OF THIS PLAN SHEET.

NOTES:

1. EXACT LOCATION OF ANCHORS TO BE DETERMINED IN THE FIELD BY THE ENGINEER.
2. DESIGN LOAD OF ANCHORS SHALL BE 10 TONS.

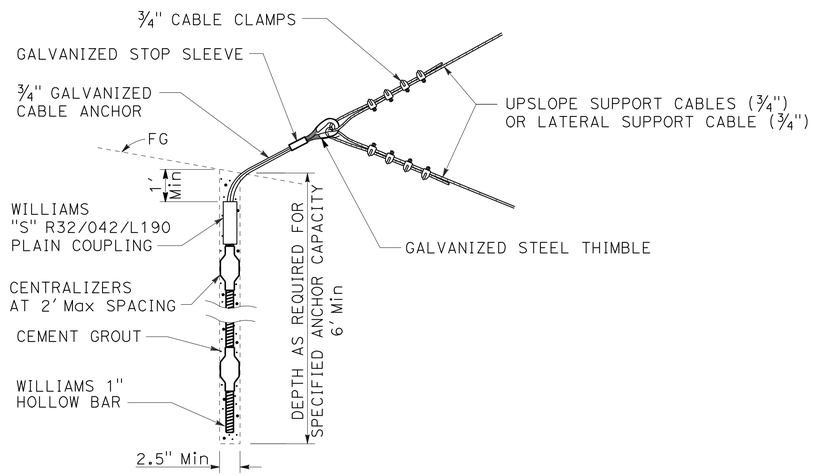

ALTERNATE B
GROUND ANCHOR
(HOLLOW BAR ANCHOR)

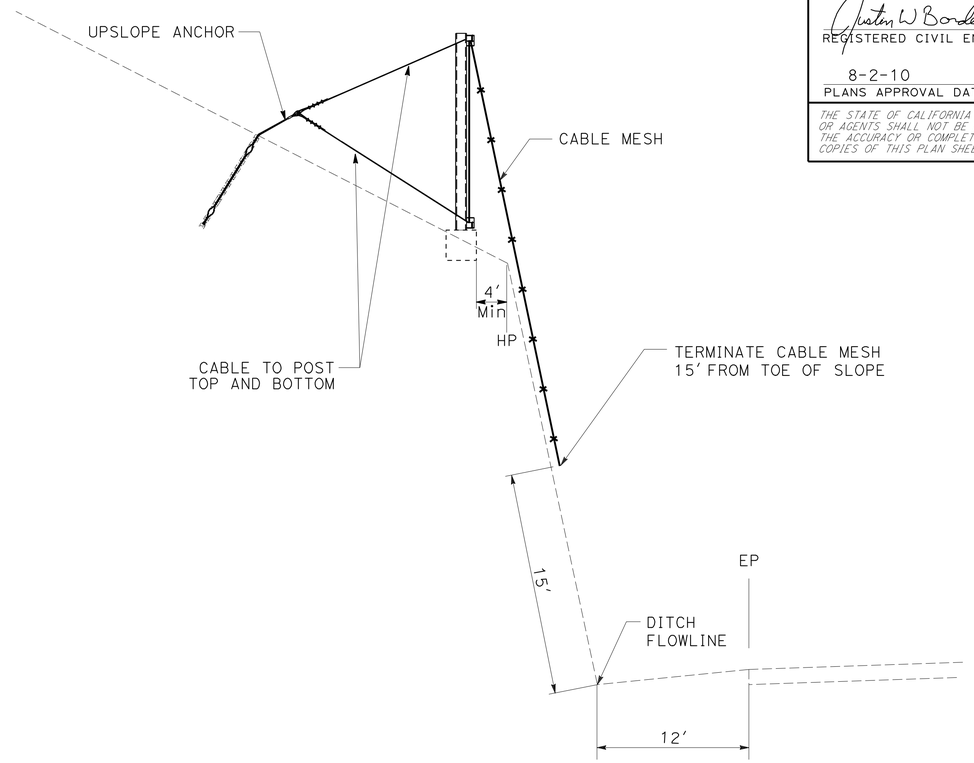

CABLE MESH PLACEMENT

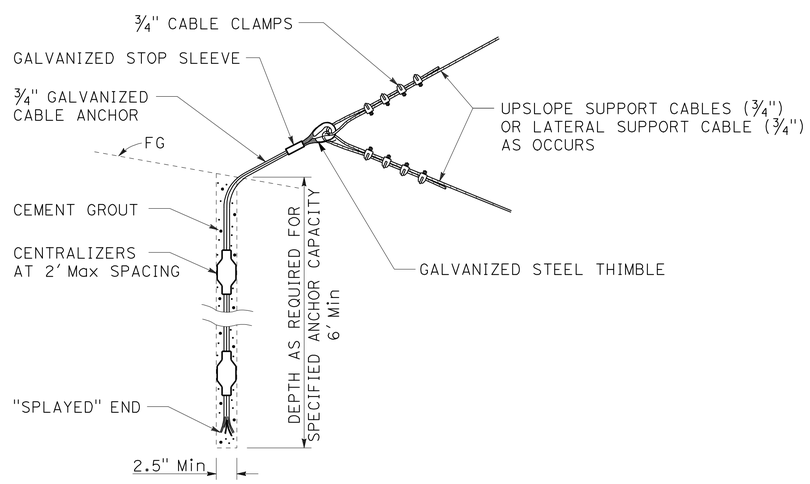

ALTERNATE A
GROUND ANCHOR
(CABLE ANCHOR)

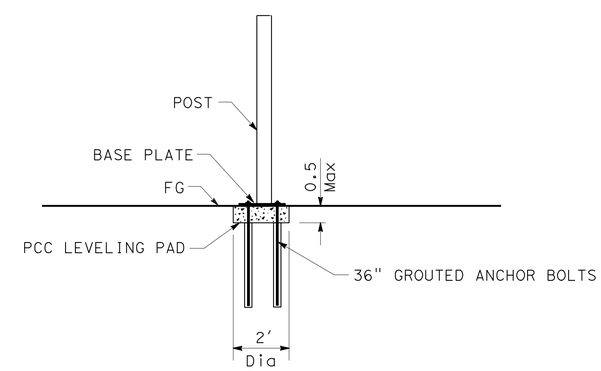

ROCK-POST FOUNDATION DETAIL

ROCKFALL ATTENUATOR SYSTEM

CONSTRUCTION DETAILS
NO SCALE

C-2

REVISED BY	DATE REVISED

CALCULATED-DESIGNED BY	CHECKED BY
WILLIAM LEHMAN	JUSTIN BORDERS

FUNCTIONAL SUPERVISOR: AL TRUJILLO

STATE OF CALIFORNIA - DEPARTMENT OF TRANSPORTATION
Caltrans
DESIGN

P:\proj\02\2E000_plans\pse\22e000ga002.dgn

LAST REVISION 06-14-10 | DATE PLOTTED => 05-AUG-2010 | TIME PLOTTED => 17:05

Dist	COUNTY	ROUTE	POST MILES TOTAL PROJECT	SHEET No.	TOTAL SHEETS
02	Plu	70	17.2/17.5	9	42

Justin W Borders 06-14-10
REGISTERED CIVIL ENGINEER DATE

8-2-10
PLANS APPROVAL DATE

REGISTERED PROFESSIONAL ENGINEER JUSTIN W. BORDERS No. C65918 Exp. 6-30-12 CIVIL STATE OF CALIFORNIA

THE STATE OF CALIFORNIA OR ITS OFFICERS OR AGENTS SHALL NOT BE RESPONSIBLE FOR THE ACCURACY OR COMPLETENESS OF SCANNED COPIES OF THIS PLAN SHEET.

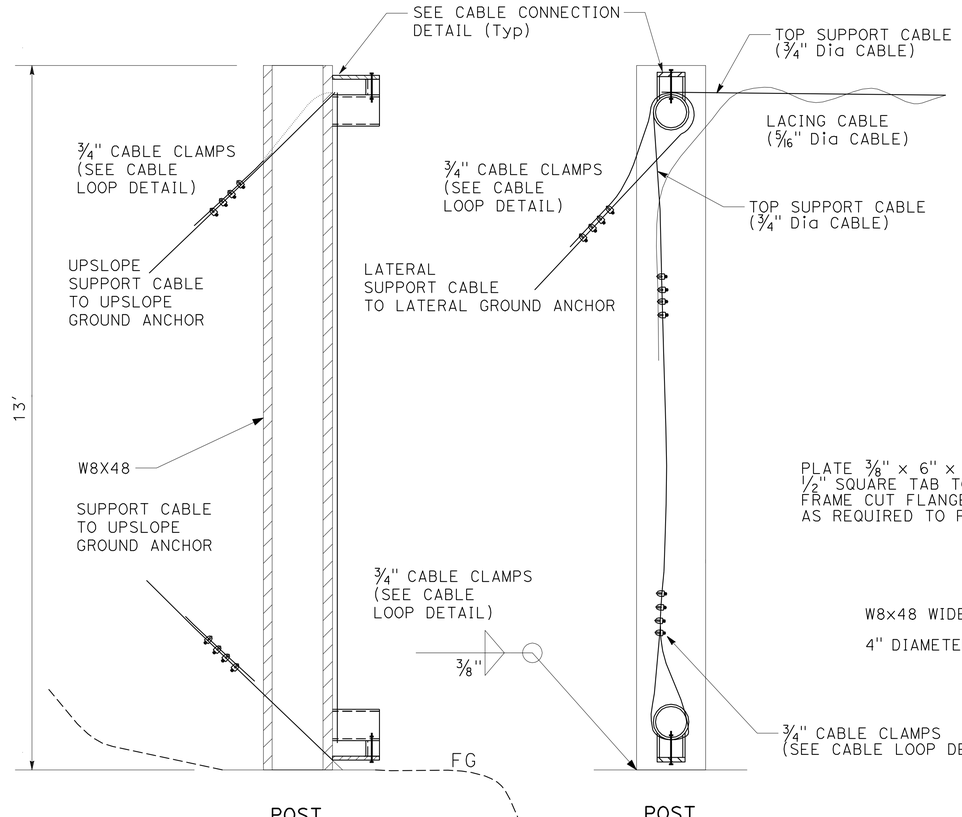

POST CONNECTION DETAILS

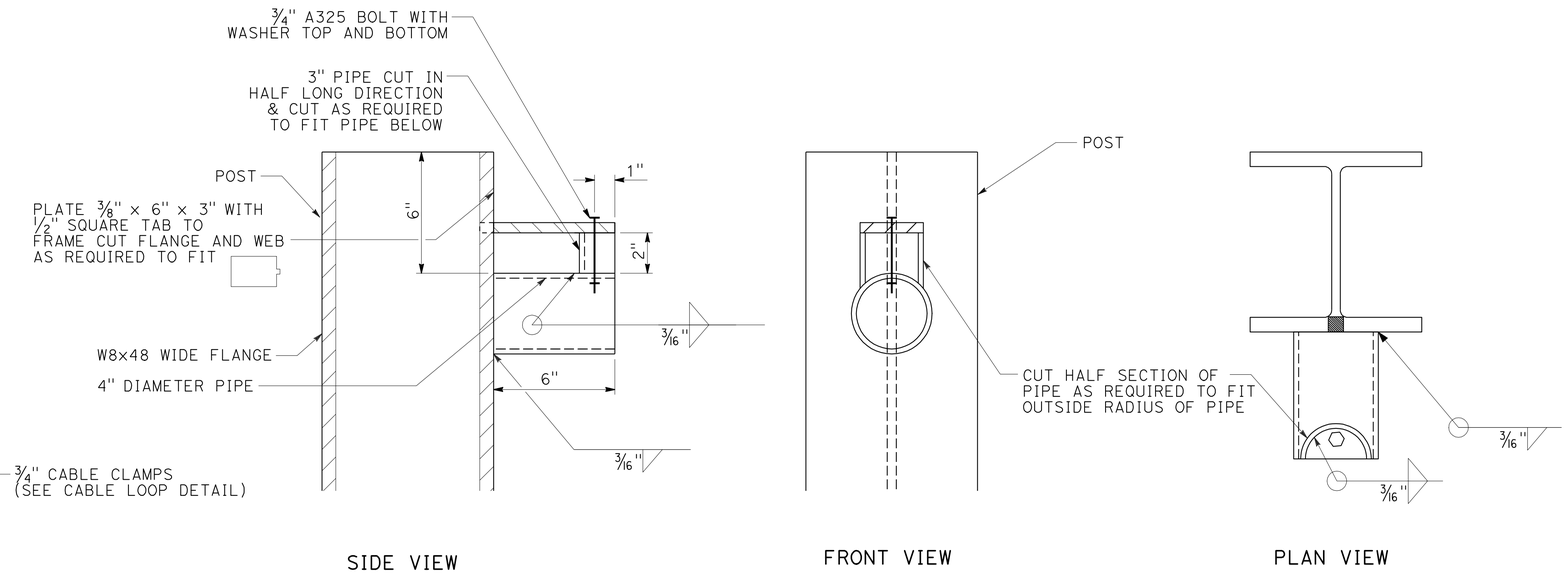

TOP AND BOTTOM CABLE CONNECTION DETAIL

CABLE

CABLE DIAMETER	CABLE CLAMP SIZE	CABLE CLIP QUANTITY		A	B	C	TORQUE REQUIRED
INCHES		AA	BB	INCHES			FT-LBS
5/16	5/16	3	6	5	5	5	30
1/2	1/2	4	8	7	7	7	65
5/8	5/8	4	8	9	9	9	95
¾	¾	5	10	11	11	11	130
CABLE TO POST CONNECTION							
¾	¾	5	10	46	11	11	130

NOTE: MANUFACTURER SPECIFICATIONS OVERRIDE

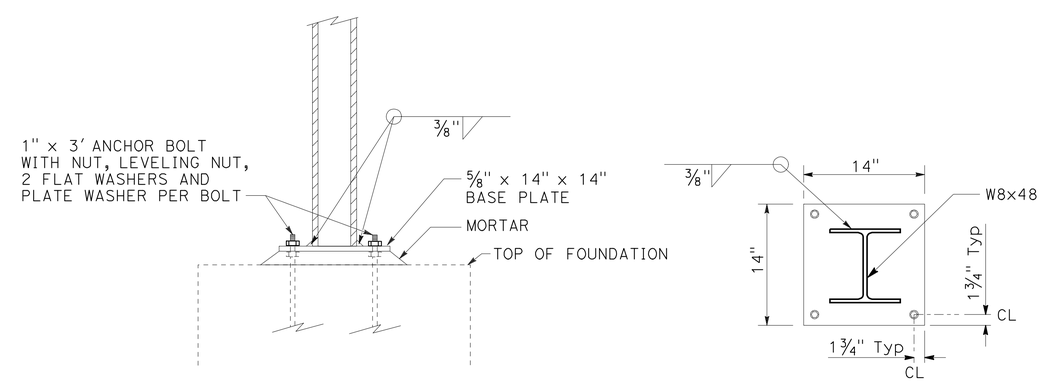

POST & POST FOUNDATION

BASE PLATE

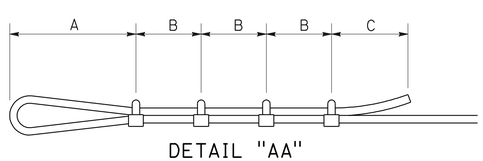

DETAIL "AA"

CABLE LOOP DETAIL

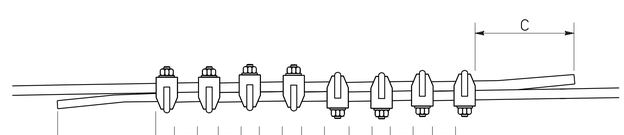

DETAIL "BB"

CABLE SPLICE DETAIL

CONSTRUCTION DETAILS

NO SCALE

C-3

STATE OF CALIFORNIA - DEPARTMENT OF TRANSPORTATION
Caltrans® DESIGN

FUNCTIONAL SUPERVISOR: AL TRUJILLO
CALCULATED-DESIGNED BY: WILLIAM LEHMAN
CHECKED BY: JUSTIN BORDERS
REVISED BY / DATE REVISED

P:\proj2\02\2E000_plans\pse\22e000ga003.dgn

LAST REVISION 06-14-10 | DATE PLOTTED => 06-AUG-2010 | TIME PLOTTED => 06:31

Dist	COUNTY	ROUTE	POST MILES TOTAL PROJECT	SHEET No.	TOTAL SHEETS
02	Plu	70	17.2/17.5	10	42

REGISTERED CIVIL ENGINEER 06-14-10 DATE

8-2-10
PLANS APPROVAL DATE

REGISTERED PROFESSIONAL ENGINEER JUSTIN W. BORDERS No. C65918 Exp. 6-30-12 CIVIL STATE OF CALIFORNIA

THE STATE OF CALIFORNIA OR ITS OFFICERS OR AGENTS SHALL NOT BE RESPONSIBLE FOR THE ACCURACY OR COMPLETENESS OF SCANNED COPIES OF THIS PLAN SHEET.

NOTES:

1. FOR DETAILS NOT SHOWN REFER TO STD PLAN B11-47.
2. CABLE SHALL BE PARALLEL TO "A1" LINE.
3. POSTS PLACED IN BASKETS 9' CENTER TO CENTER.
4. GABION ROCK FILL SHALL BE NATIVE ROCK.

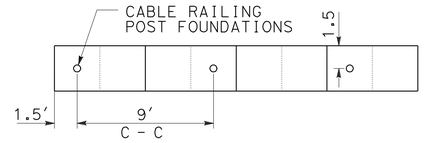

PLAN

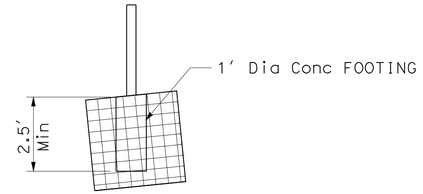

ELEVATION

CABLE RAILING DETAIL

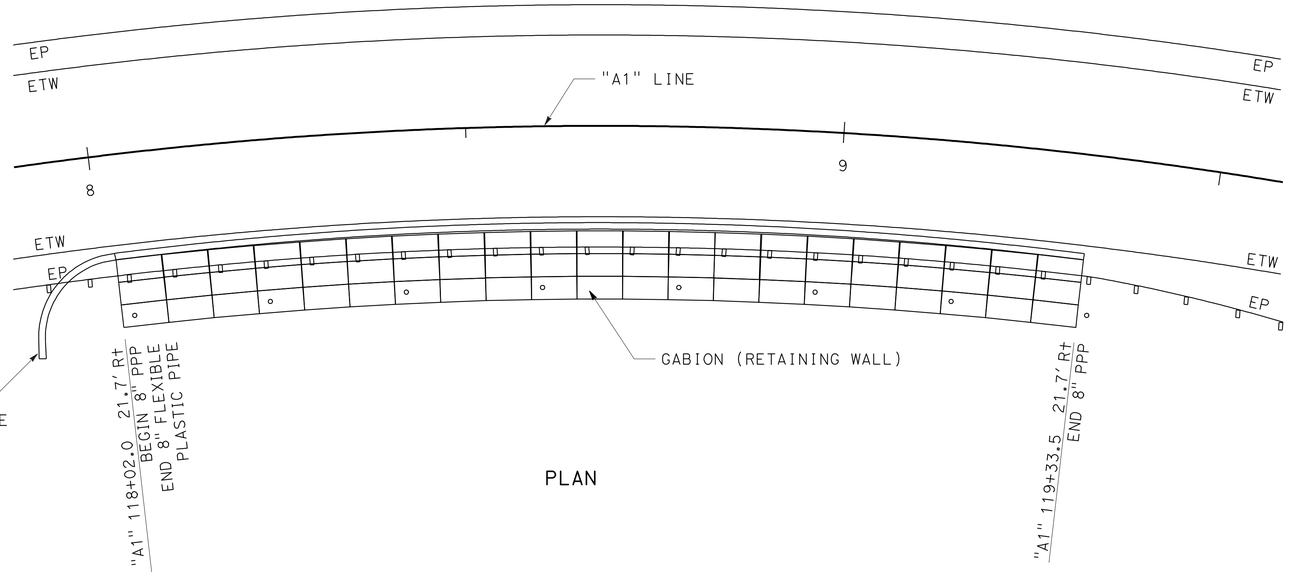

PLAN

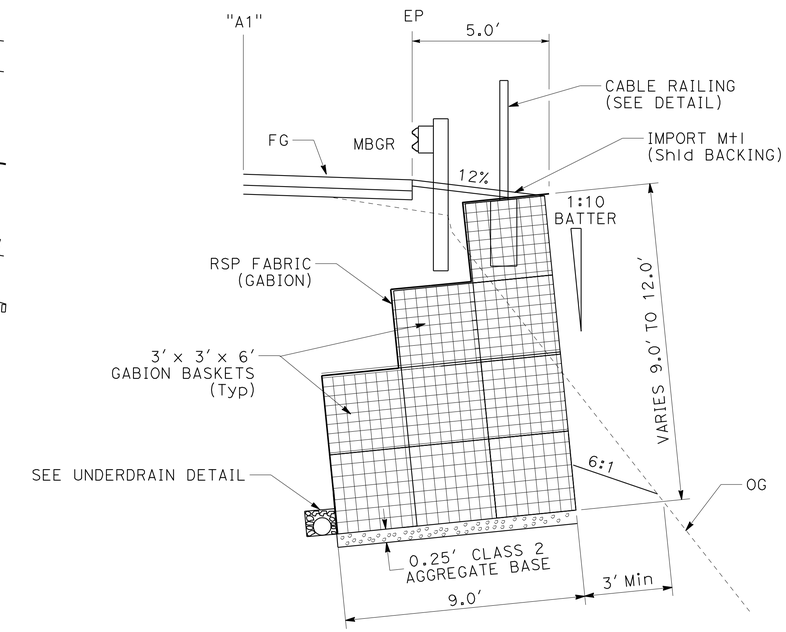

SIDE VIEW

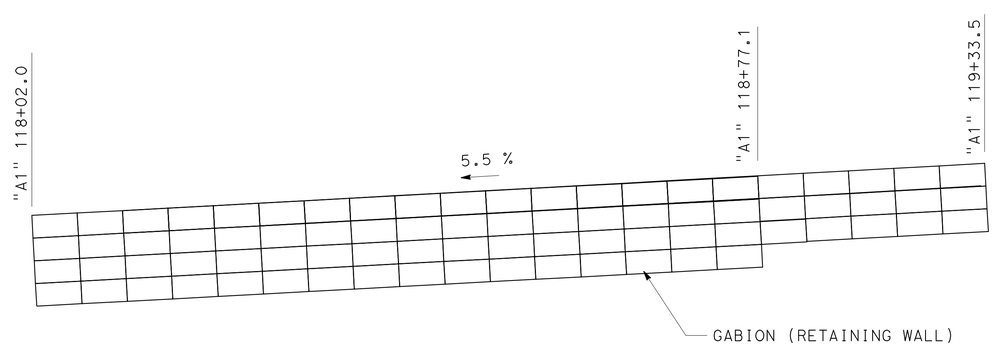

ELEVATION

GABION (RETAINING WALL)

"A1" 118+02 TO 119+33.5

GABION TABLE

	A	B	C	D	E
OFFSET →	12.87'	22.87'	12.57'	22.57'	21.67'
STATION	ELEVATION				
118+02.0	2378.6'	2379.5'			2391.5'
118+27.0	2380.0'	2380.9'			2392.9'
118+52.1	2381.3'	2382.2'			2394.2'
118+77.1	2382.7'	2383.6'	2385.7'	2386.6'	2395.6'
119+02.2			2387.1'	2388.0'	2397.0'
119+27.3			2388.5'	2388.5'	2398.4'
119+33.5			2388.9'	2388.9'	2398.8'

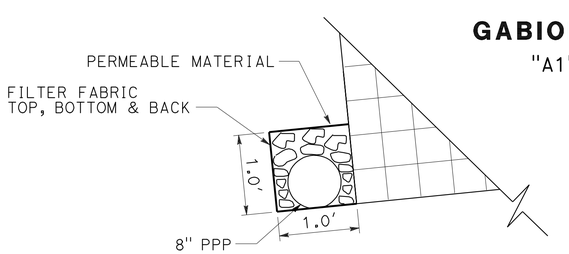

UNDERDRAIN DETAIL

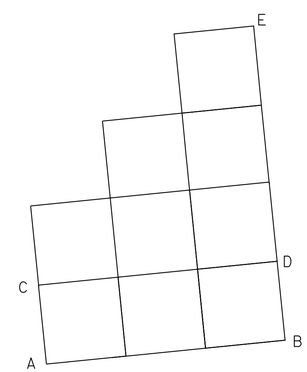

POINT CHART

CONSTRUCTION DETAILS

NO SCALE

C-4

REVISED BY | DATE REVISED
WILLIAM LEHMAN | JUSTIN BORDERS
CALCULATED-DESIGNED BY | CHECKED BY
FUNCTIONAL SUPERVISOR
AL TRUJILLO

STATE OF CALIFORNIA - DEPARTMENT OF TRANSPORTATION
Caltrans
DESIGN

P:\proj2\02\2E000_plans\pse\22e000ga004.dgn

LAST REVISION 06-14-10 | DATE PLOTTED => 06-AUG-2010 | TIME PLOTTED => 06:31

Dist	COUNTY	ROUTE	POST MILES TOTAL PROJECT	SHEET No.	TOTAL SHEETS
02	Plu	70	17.2/17.5	11	42

Justin W Borders 06-14-10
REGISTERED CIVIL ENGINEER DATE

8-2-10
PLANS APPROVAL DATE

REGISTERED PROFESSIONAL ENGINEER
JUSTIN W. BORDERS
No. C65918
Exp. 6-30-12
CIVIL
STATE OF CALIFORNIA

THE STATE OF CALIFORNIA OR ITS OFFICERS OR AGENTS SHALL NOT BE RESPONSIBLE FOR THE ACCURACY OR COMPLETENESS OF SCANNED COPIES OF THIS PLAN SHEET.

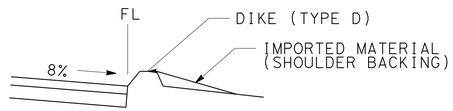

SECTION A-A

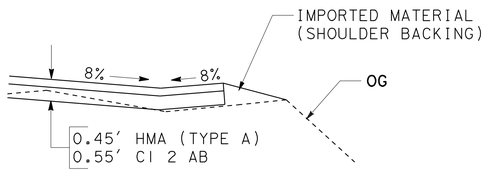

SECTION B-B

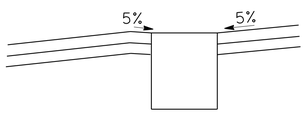

SECTION C-C

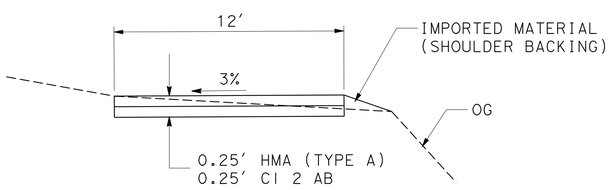

SECTION D-D

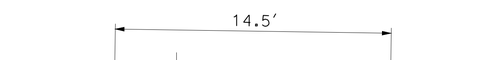

SECTION E-E

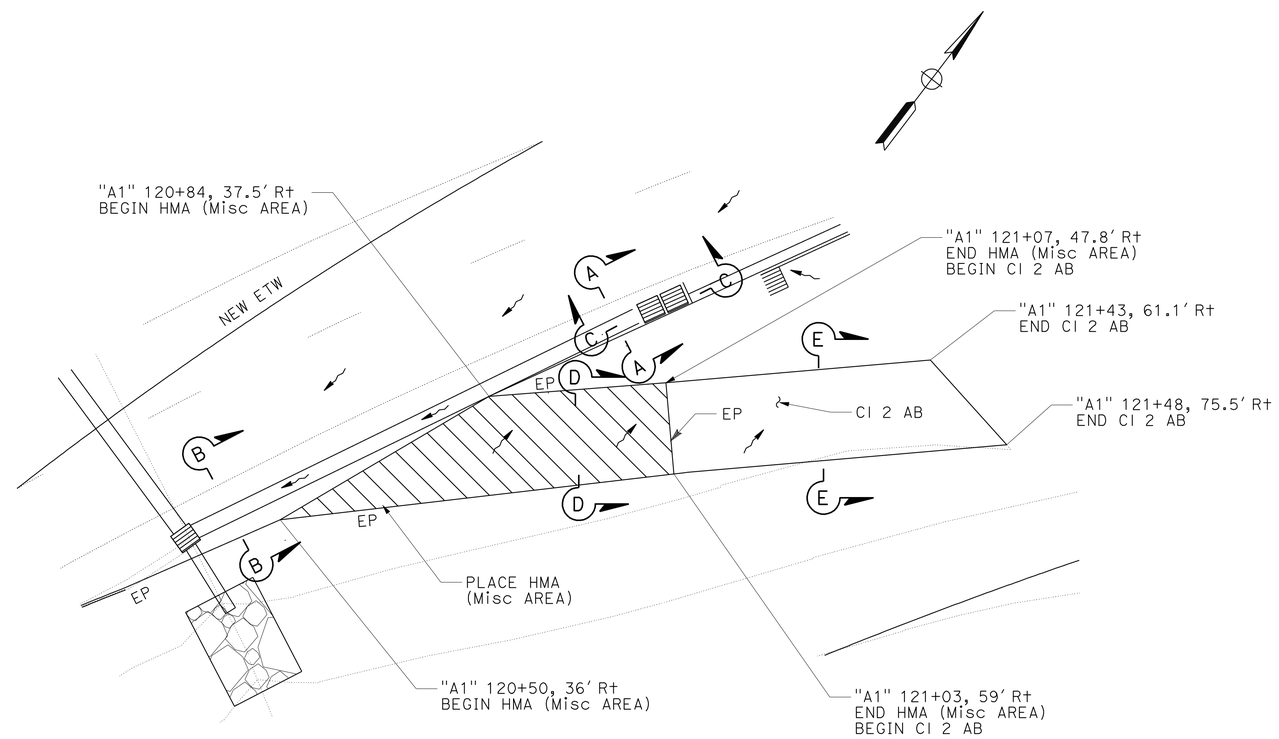

DRIVEWAY DETAIL

CONSTRUCTION DETAILS

NO SCALE

C-5

REVISED BY	DATE REVISED

CALCULATED-DESIGNED BY: WILLIAM LEHMAN
CHECKED BY: JUSTIN BORDERS
FUNCTIONAL SUPERVISOR: AL TRUJILLO

STATE OF CALIFORNIA - DEPARTMENT OF TRANSPORTATION
Caltrans
DESIGN

P:\proj2\02\2E000_plans\pse\22e000ga005.dgn

LAST REVISION 06-14-10 | DATE PLOTTED => 06-AUG-2010 | TIME PLOTTED => 06:31

Dist	COUNTY	ROUTE	POST MILES TOTAL PROJECT	SHEET No.	TOTAL SHEETS
02	Plu	70	17.2/17.5	12	42

REGISTERED CIVIL ENGINEER 06-14-10 DATE

8-2-10
PLANS APPROVAL DATE

REGISTERED PROFESSIONAL ENGINEER JUSTIN W. BORDERS No. C65918 Exp. 6-30-12 CIVIL STATE OF CALIFORNIA

THE STATE OF CALIFORNIA OR ITS OFFICERS OR AGENTS SHALL NOT BE RESPONSIBLE FOR THE ACCURACY OR COMPLETENESS OF SCANNED COPIES OF THIS PLAN SHEET.

NOTE:

1. EMBED FIBER ROLL 4" BELOW FINISH GRADE, FOR DETAILS NOT SHOWN, REFER TO Std PLANS.

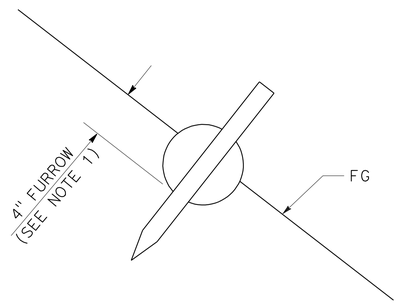

FIBER ROLL DETAIL (TYPE 1)
"A1" 123+50 TO 126+50

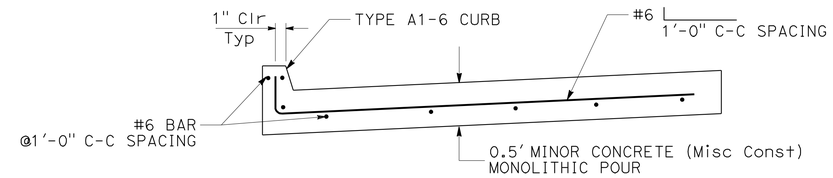

SECTION A-A

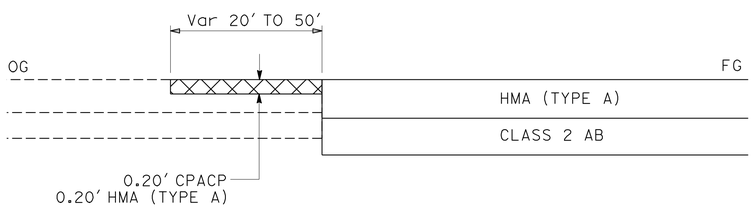

CONFORM DETAIL
"A1" 112+80 TO 113+00
"A1" 131+00 TO 131+50

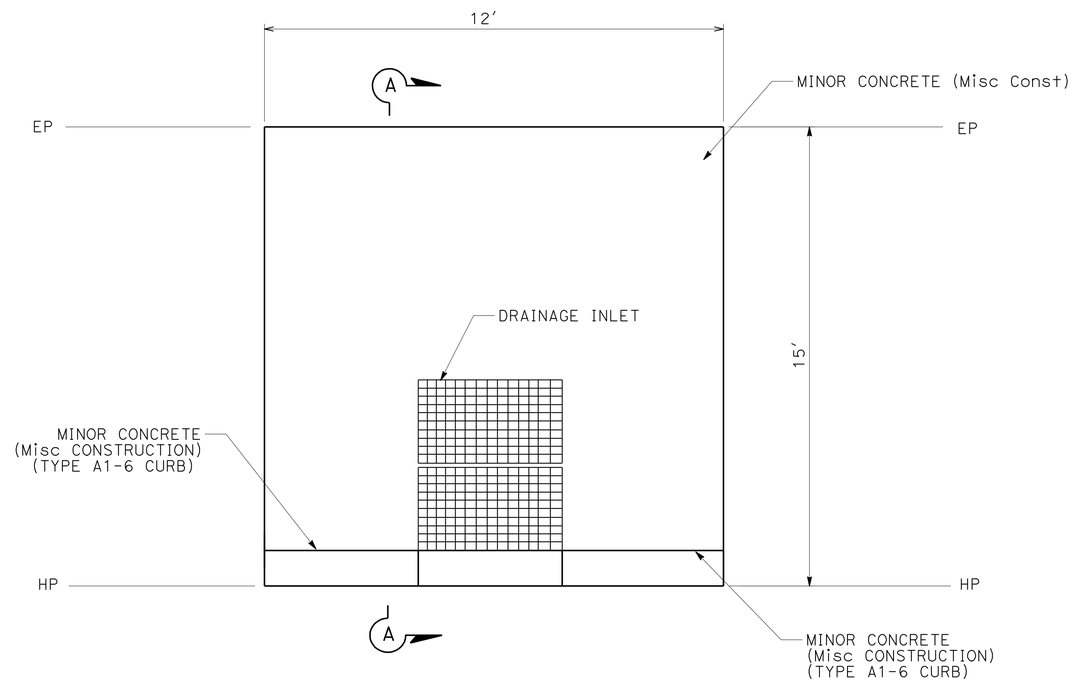

APRON DETAIL

CONSTRUCTION DETAILS
NO SCALE

C-6

REVISED BY	DATE REVISED

CALCULATED-DESIGNED BY	CHECKED BY
WILLIAM LEHMAN	JUSTIN BORDERS

FUNCTIONAL SUPERVISOR: AL TRUJILLO

STATE OF CALIFORNIA - DEPARTMENT OF TRANSPORTATION
Caltrans
DESIGN

P:\proj2\02\2E000_plans\pse\22e000ga006.dgn

LAST REVISION 06-14-10 | DATE PLOTTED => 05-AUG-2010 | TIME PLOTTED => 17:05

Dist	COUNTY	ROUTE	POST MILES TOTAL PROJECT	SHEET No.	TOTAL SHEETS
02	Plu	70	17.2/17.5	13	42

Justin W Borders 06-14-10
REGISTERED CIVIL ENGINEER DATE

8-2-10
PLANS APPROVAL DATE

REGISTERED PROFESSIONAL ENGINEER JUSTIN W. BORDERS No. C65918 Exp. 6-30-12 CIVIL STATE OF CALIFORNIA

THE STATE OF CALIFORNIA OR ITS OFFICERS OR AGENTS SHALL NOT BE RESPONSIBLE FOR THE ACCURACY OR COMPLETENESS OF SCANNED COPIES OF THIS PLAN SHEET.

NOTE:

1. FOR COMPLETE RIGHT OF WAY DATA, SEE RIGHT OF WAY RECORD MAPS AT DISTRICT OFFICE.

LEGEND:

- DRAINAGE SYSTEM No.
- DRAINAGE UNIT

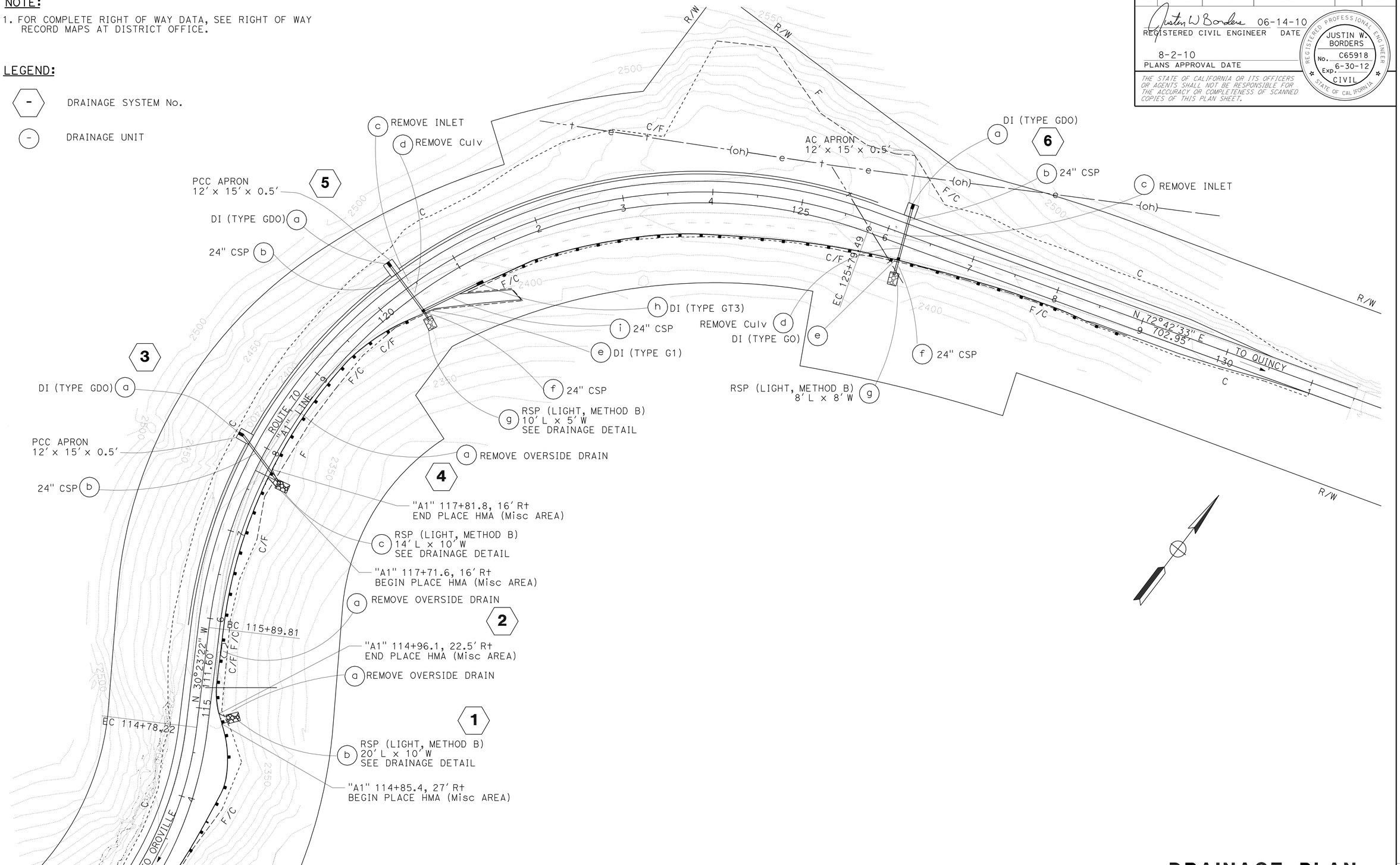

DRAINAGE PLAN

SCALE: 1" = 50'

D-1

THIS PLAN ACCURATE FOR DRAINAGE WORK ONLY

REVISED BY	DATE REVISED
WILLIAM LEHMAN	JUSTIN BORDERS

CALCULATED-DESIGNED BY | CHECKED BY

FUNCTIONAL SUPERVISOR: AL TRUJILLO

STATE OF CALIFORNIA - DEPARTMENT OF TRANSPORTATION

Caltrans® DESIGN

P:\proj2\02\2E000_plans\pse\22e000ia001.dgn

LAST REVISION 06-14-10 | DATE PLOTTED => 05-AUG-2010 | TIME PLOTTED => 17:05

Dist	COUNTY	ROUTE	POST MILES TOTAL PROJECT	SHEET No.	TOTAL SHEETS
02	Plu	70	17.2/17.5	14	42

Justin W Borders 06-14-10
REGISTERED CIVIL ENGINEER DATE

8-2-10
PLANS APPROVAL DATE

REGISTERED PROFESSIONAL ENGINEER
JUSTIN W. BORDERS
No. C65918
Exp. 6-30-12
CIVIL
STATE OF CALIFORNIA

THE STATE OF CALIFORNIA OR ITS OFFICERS OR AGENTS SHALL NOT BE RESPONSIBLE FOR THE ACCURACY OR COMPLETENESS OF SCANNED COPIES OF THIS PLAN SHEET.

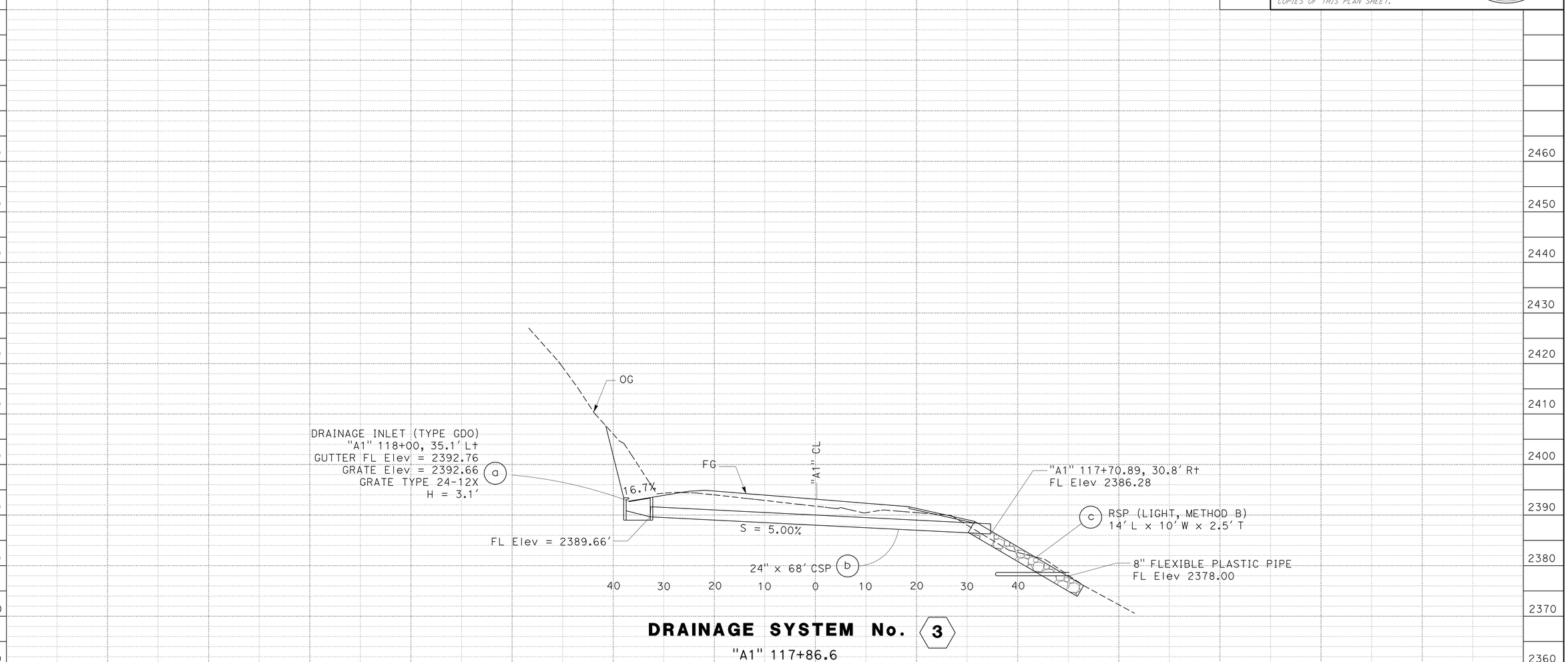

DRAINAGE SYSTEM No. 3

"A1" 117+86.6

DRAINAGE PROFILES

SCALE: 1" = 20' Horiz
1" = 20' Vert

DP-1

STATION		TOTAL
CY	Exc	
	Emb	

REVISED BY | DATE REVISED
WILLIAM LEHMAN | JUSTIN BORDERS
CALCULATED-DESIGNED BY | CHECKED BY
FUNCTIONAL SUPERVISOR: AL TRUJILLO

STATE OF CALIFORNIA - DEPARTMENT OF TRANSPORTATION
Caltrans®
DESIGN

P:\proj2\02\2E000_plans\pse\22e000ib001.dgn

LAST REVISION | DATE PLOTTED => 05-AUG-2010
06-14-10 | TIME PLOTTED => 17:05

Dist	COUNTY	ROUTE	POST MILES TOTAL PROJECT	SHEET No.	TOTAL SHEETS
02	Plu	70	17.2/17.5	15	42

Justin W Borders 06-14-10
REGISTERED CIVIL ENGINEER DATE

8-2-10
PLANS APPROVAL DATE

REGISTERED PROFESSIONAL ENGINEER
JUSTIN W. BORDERS
No. C65918
Exp. 6-30-12
CIVIL
STATE OF CALIFORNIA

THE STATE OF CALIFORNIA OR ITS OFFICERS OR AGENTS SHALL NOT BE RESPONSIBLE FOR THE ACCURACY OR COMPLETENESS OF SCANNED COPIES OF THIS PLAN SHEET.

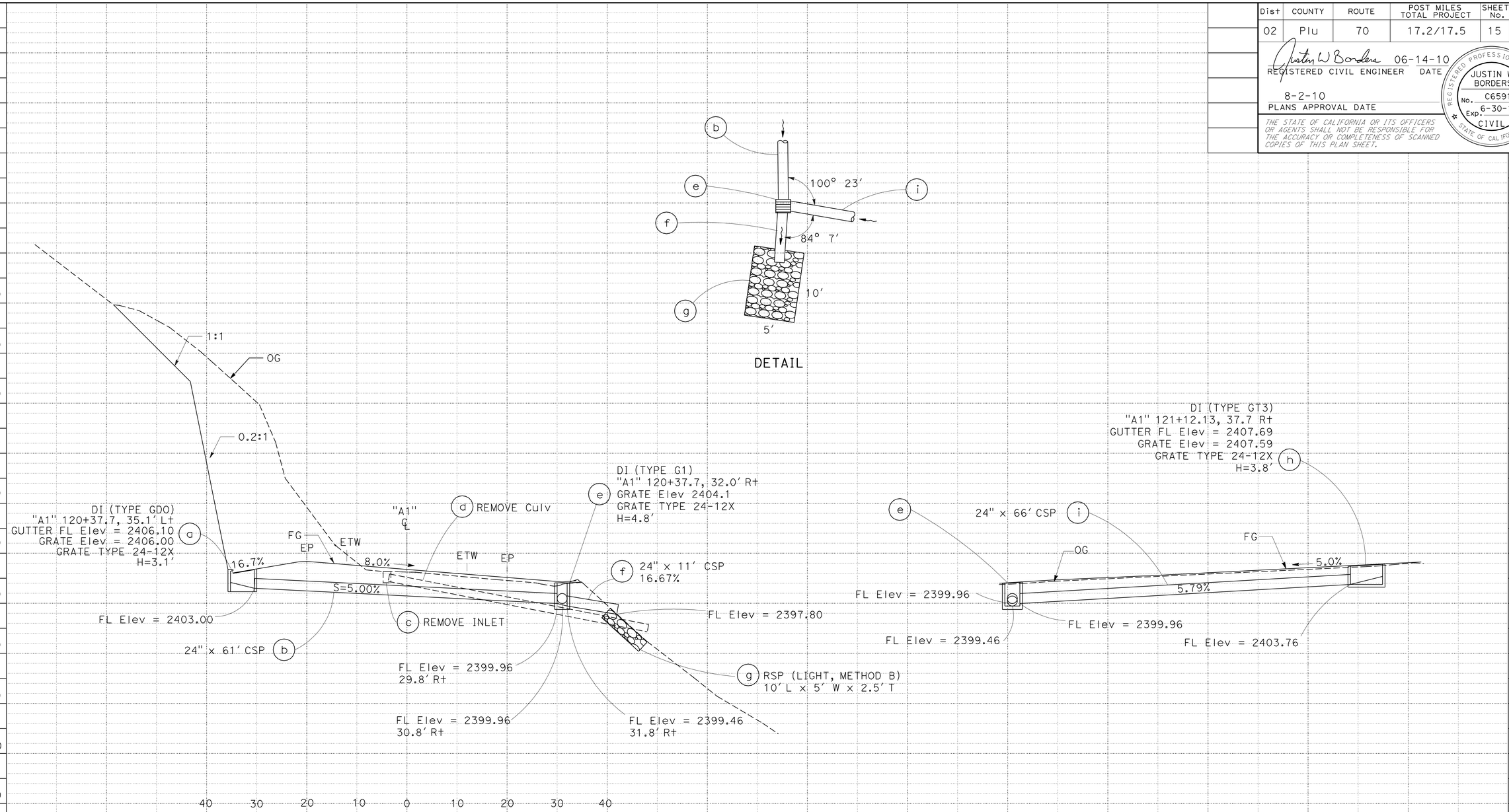

DRAINAGE SYSTEM No. 5

"A1" 120+37.7

DRAINAGE PROFILES

SCALE: 1" = 20′ Horiz
1" = 20′ Vert

DP-2

STATION		TOTAL
CY	Exc	
	Emb	

REVISED BY | DATE REVISED
WILLIAM LEHMAN | JUSTIN BORDERS
CALCULATED-DESIGNED BY | CHECKED BY
FUNCTIONAL SUPERVISOR: AL TRUJILLO

STATE OF CALIFORNIA - DEPARTMENT OF TRANSPORTATION
Caltrans
DESIGN

P:\proj\02\2E000_plans\pse\22e000ib002.dgn

LAST REVISION | DATE PLOTTED => 05-AUG-2010
06-14-10 | TIME PLOTTED => 17:05

Dist	COUNTY	ROUTE	POST MILES TOTAL PROJECT	SHEET No.	TOTAL SHEETS
02	Plu	70	17.2/17.5	16	42

REGISTERED CIVIL ENGINEER 06-14-10 DATE

8-2-10
PLANS APPROVAL DATE

REGISTERED PROFESSIONAL ENGINEER JUSTIN W. BORDERS No. C65918 Exp. 6-30-12 CIVIL STATE OF CALIFORNIA

THE STATE OF CALIFORNIA OR ITS OFFICERS OR AGENTS SHALL NOT BE RESPONSIBLE FOR THE ACCURACY OR COMPLETENESS OF SCANNED COPIES OF THIS PLAN SHEET.

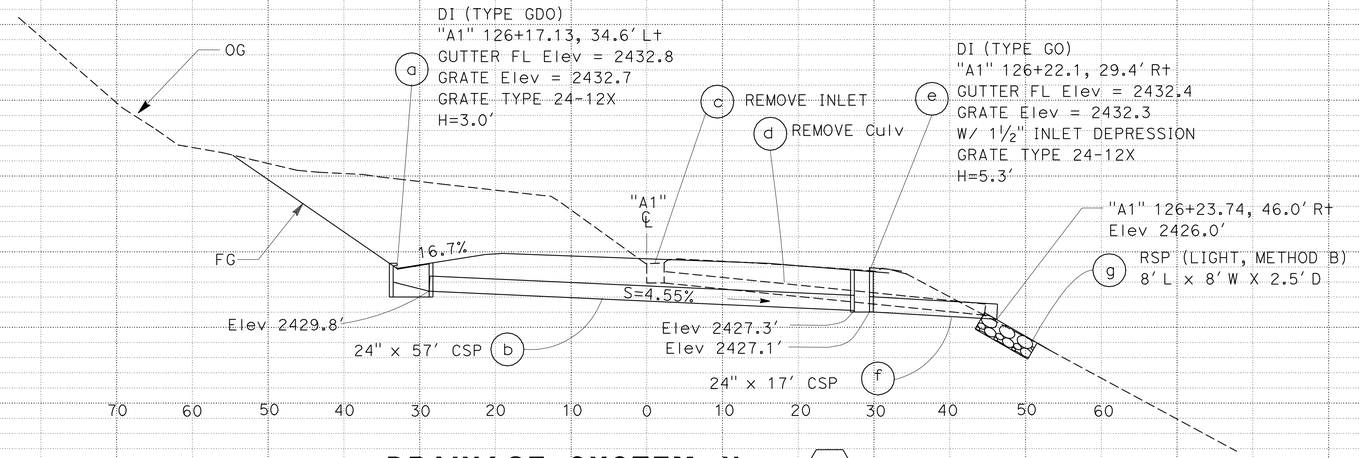

DRAINAGE SYSTEM No. 6

"A1" 126+19.6

DRAINAGE PROFILES

SCALE: 1" = 20′ Horiz
1" = 20′ Vert

DP-3

STATION		TOTAL
CY	Exc	
	Emb	

REVISED BY | DATE REVISED

WILLIAM LEHMAN | JUSTIN BORDERS

CALCULATED-DESIGNED BY | CHECKED BY

FUNCTIONAL SUPERVISOR: AL TRUJILLO

STATE OF CALIFORNIA - DEPARTMENT OF TRANSPORTATION

Caltrans® **DESIGN**

P:\proj2\02\2E000_plans\pse\22e000ib003.dgn

LAST REVISION 06-14-10 | DATE PLOTTED => 05-AUG-2010 | TIME PLOTTED => 16:54

BORDER LAST REVISED 4/11/2008 | RELATIVE BORDER SCALE IS IN INCHES 0 1 2 3 | USERNAME => trrichf | DGN FILE => 22e000ib003.dgn | CU 03 242 | EA 2E0001

Dist	COUNTY	ROUTE	POST MILES TOTAL PROJECT	SHEET No.	TOTAL SHEETS
02	Plu	70	17.2/17.5	17	42

REGISTERED CIVIL ENGINEER 06-14-10 DATE

8-2-10
PLANS APPROVAL DATE

REGISTERED PROFESSIONAL ENGINEER JUSTIN W. BORDERS No. C65918 Exp. 6-30-12 CIVIL STATE OF CALIFORNIA

THE STATE OF CALIFORNIA OR ITS OFFICERS OR AGENTS SHALL NOT BE RESPONSIBLE FOR THE ACCURACY OR COMPLETENESS OF SCANNED COPIES OF THIS PLAN SHEET.

NOTE:
1. USE NATIVE ROCK AS RSP.

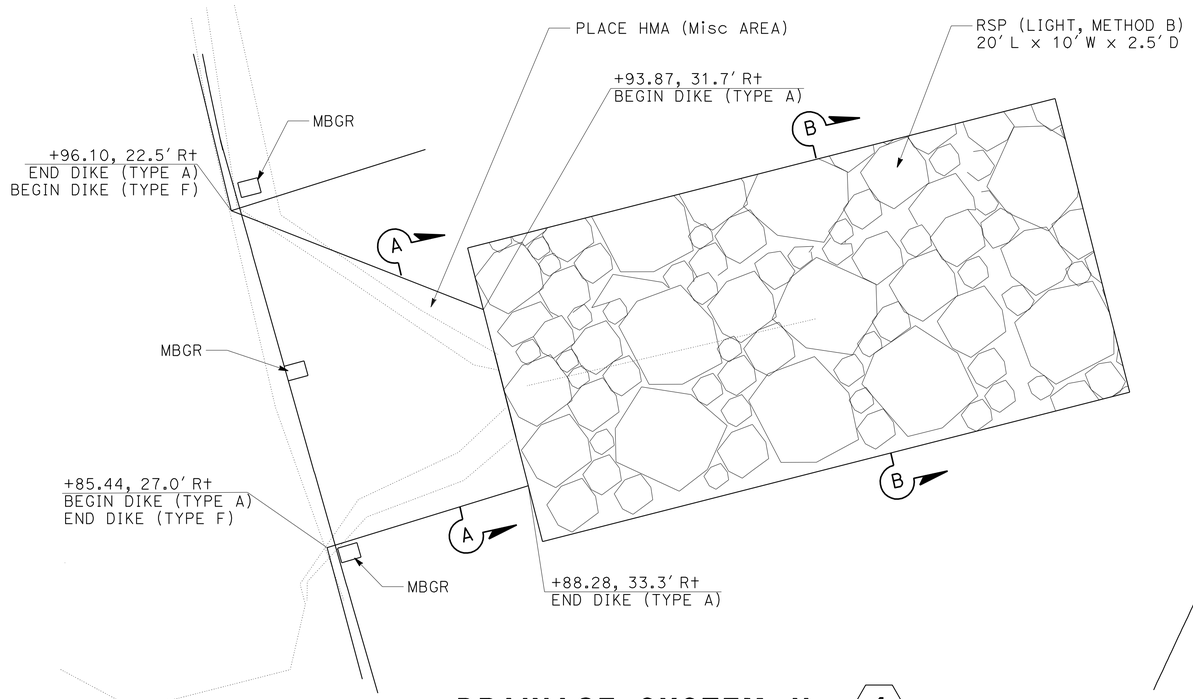

DRAINAGE SYSTEM No. 1
"A1" 114+91

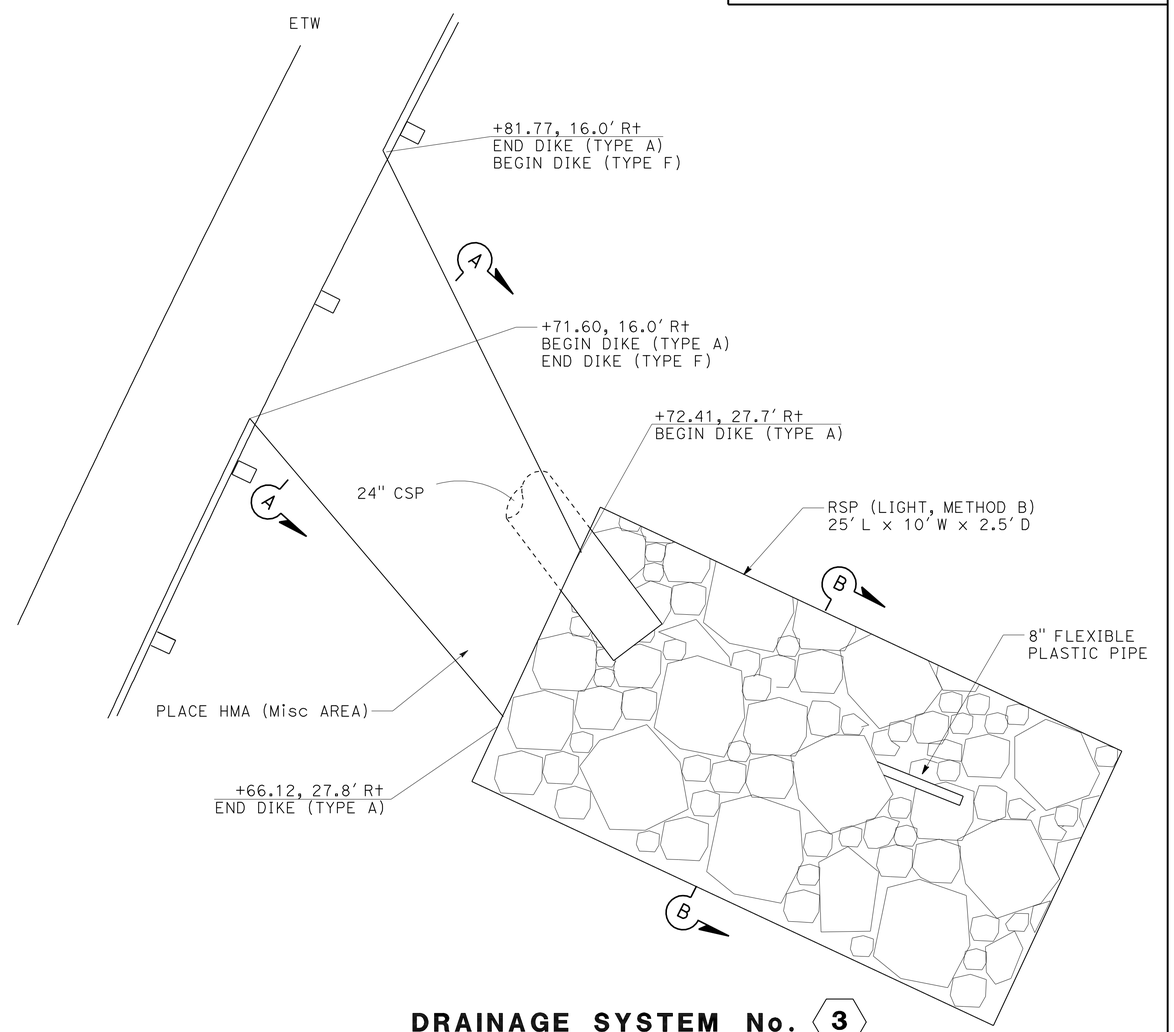

DRAINAGE SYSTEM No. 3
"A1" 117+86.6

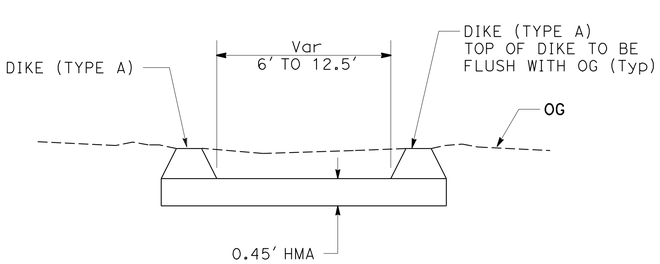

SECTION A-A

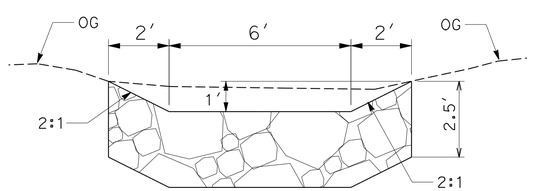

SECTION B-B

DRAINAGE DETAILS
NO SCALE

DD-1

REVISED BY	DATE REVISED

CALCULATED-DESIGNED BY	CHECKED BY
WILLIAM LEHMAN	JUSTIN BORDERS

FUNCTIONAL SUPERVISOR: AL TRUJILLO

STATE OF CALIFORNIA - DEPARTMENT OF TRANSPORTATION
Caltrans
DESIGN

P:\proj2\02\2E000_plans\pse\22e000ic001.dgn

LAST REVISION 06-14-10 | DATE PLOTTED => 05-AUG-2010 | TIME PLOTTED => 16:54

Dist	COUNTY	ROUTE	POST MILES TOTAL PROJECT	SHEET No.	TOTAL SHEETS
02	Plu	70	17.2/17.5	18	42

REGISTERED CIVIL ENGINEER 06-14-10 DATE

8-2-10
PLANS APPROVAL DATE

REGISTERED PROFESSIONAL ENGINEER JUSTIN W. BORDERS No. C65918 Exp. 6-30-12 CIVIL STATE OF CALIFORNIA

THE STATE OF CALIFORNIA OR ITS OFFICERS OR AGENTS SHALL NOT BE RESPONSIBLE FOR THE ACCURACY OR COMPLETENESS OF SCANNED COPIES OF THIS PLAN SHEET.

DRAINAGE QUANTITIES

SHEET No.	DRAINAGE SYSTEM NO. ⬡	DRAINAGE UNIT NO. ○	REMOVE CULVERT	REMOVE OVERSIDE DRAIN	REMOVE INLET	24" CORRUGATED STEEL PIPE (.138" THICK)	MINOR CONCRETE (MINOR STRUCTURE)	Misc IRON AND STEEL	ROCK SLOPE PROTECTION (LIGHT, METHOD B)	(N) HEIGHT	S_X	S_L			STATION	COMMENTS	DRAINAGE SYSTEM NO. ⬡	DRAINAGE UNIT NO. ○
	⬡	○	EA	EA	EA	LF	CY	LB	CY	LF	%	%					⬡	○
D-1	1	a		1											"A1" 114+91	REMOVE TAPERED INLET	1	a
		b							18.5							RSP (20' X 10' X 2.5')		b
D-1	2	a		1											"A1" 115+66	REMOVE TAPERED INLET	2	a
D-1	3	a					1.65	473		3.1	16.7	5.4			"A1" 117+86.6	W/2 24-12X GRATES	3	a
		b				68										DI (TYPE GDO)		b
		c							25.8							RSP (14' X 10' X 2.5')		c
D-1	4	a		1											"A1" 118+52	REMOVE TAPERED INLET	4	a
D-1	5	a					1.65	473		3.1	16.7	5.7			"A1" 120+37.7	W/2 24-12X GRATES	5	a
		b				61										DI (TYPE GDO)		b
		c			1													c
		d	1													REMOVE 18" CSP		d
		e					1.41	239		4.8	0	5				W/24-12X GRATE		e
		f				11										DI (TYPE G1)		f
		g							4.6							RSP (10' X 5' X 2.5')		g
		h					1.97	478		3.7	0	5				W/2 24-12X GRATES		h
		i				66										DI (TYPE GT3)		i
D-1	6	a					1.62	473		3.0	16.7	8.2			"A1" 126+19.6	W/2 24-12X GRATES	6	a
		b				57										DI (TYPE GDO)		b
		c			1													c
		d	1													REMOVE 18" CSP		d
		e					1.83	239		5.3	7.4	6.0				DI (TYPE GO)		e
		f				17										W/ 24-12X GRATE		f
		g							5.9							RSP (8' X 8' X 2.5')		g
TOTAL			2	3	2	280	10.13	2375	54.8									

(N) NOT A SEPARATE PAY ITEM, FOR INFORMATION ONLY.

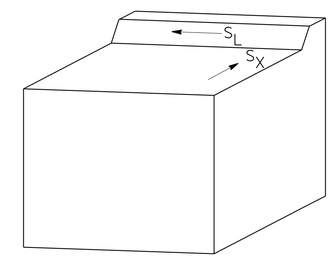

DRAINAGE QUANTITIES
DQ-1

WILLIAM LEHMAN — REVISED BY
JUSTIN BORDERS — DATE REVISED
CALCULATED-DESIGNED BY
CHECKED BY
FUNCTIONAL SUPERVISOR: AL TRUJILLO

STATE OF CALIFORNIA - DEPARTMENT OF TRANSPORTATION
Caltrans
DESIGN

P:\proj2\02\2E000_plans\pse\22e000id001.dgn

LAST REVISION 06-14-10 | DATE PLOTTED => 06-AUG-2010 | TIME PLOTTED => 06:31

Dist	COUNTY	ROUTE	POST MILES TOTAL PROJECT	SHEET No.	TOTAL SHEETS
02	Plu	70	17.2/17.5	19	42

REGISTERED CIVIL ENGINEER 06-14-10 DATE

8-2-10
PLANS APPROVAL DATE

REGISTERED PROFESSIONAL ENGINEER JUSTIN W. BORDERS No. C65918 Exp. 6-30-12 CIVIL STATE OF CALIFORNIA

THE STATE OF CALIFORNIA OR ITS OFFICERS OR AGENTS SHALL NOT BE RESPONSIBLE FOR THE ACCURACY OR COMPLETENESS OF SCANNED COPIES OF THIS PLAN SHEET.

NOTE:

1. EXACT SIGN LOCATIONS TO BE DETERMINED BY THE ENGINEER.

LEGEND

SIGN ON WOOD POST

DIRECTION OF TRAVEL

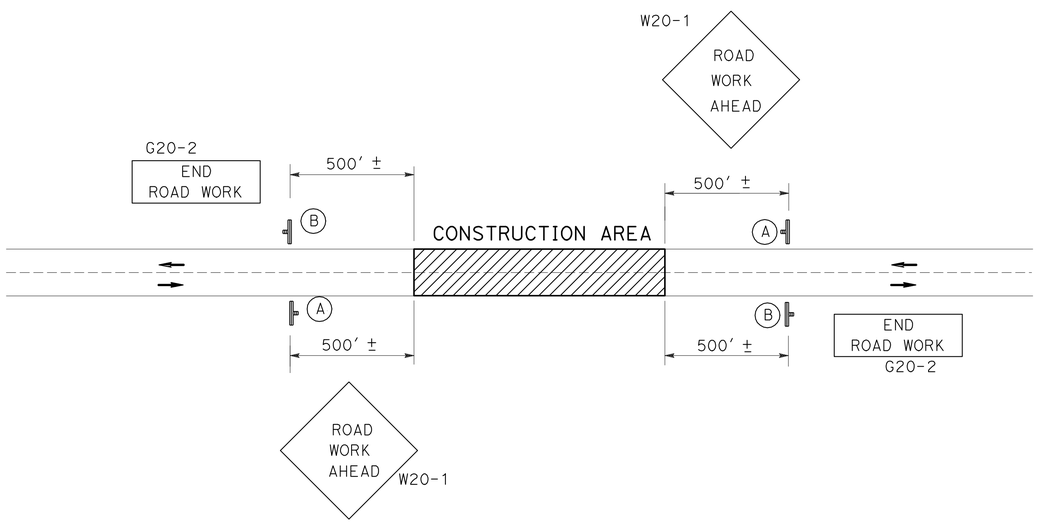

STATIONARY MOUNTED CONSTRUCTION AREA SIGNS

SIGN No.	SIGN CODE	PANEL SIZE	SIGN MESSAGE	No. AND SIZE OF POSTS	EACH
A	W20-1	48" x 48"	ROAD WORK AHEAD	1 - 4" x 6"	2
	C23B	36" x 18"	HIGHWAY REALIGNMENT		
B	G20-2	36" x 18"	END ROAD WORK	1 - 4" x 4"	2
				TOTAL	4

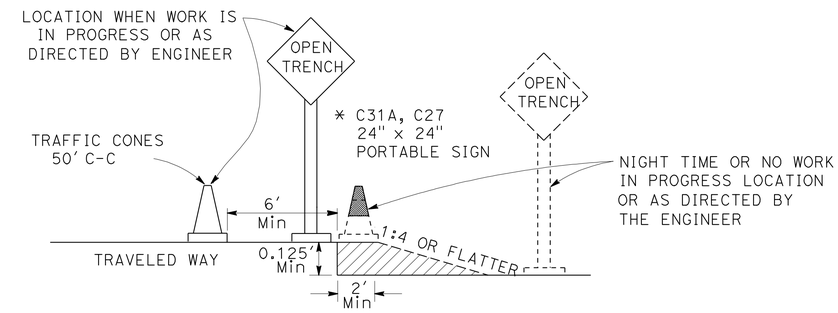

OPEN TRENCH SIGNING AND MARKING

* THE OPEN TRENCH AREA ALTERNATE C27 (OPEN TRENCH) AND C31A (NO SHOULDER) SIGNS PLACE AT 500' INTERVALS THROUGH THE LIMITS OF THE PROJECT

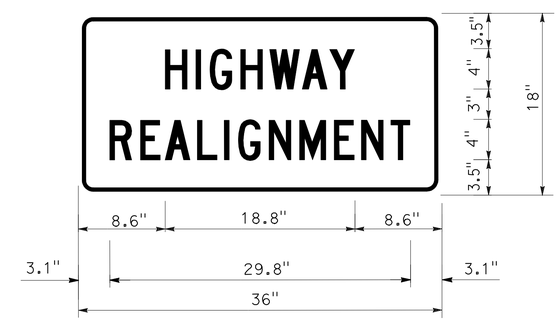

SIGN DETAIL C-23B

1.5" RADIUS, 0.4" BORDER, 0.4" INDENT, BLACK ON ORANGE; [HIGHWAY] C; [REALIGNMENT] C;

CONSTRUCTION AREA SIGNS

NO SCALE

CS-1

REVISED BY | DATE REVISED
WILLIAM LEHMAN | JUSTIN BORDERS
CALCULATED-DESIGNED BY | CHECKED BY
FUNCTIONAL SUPERVISOR: AL TRUJILLO

STATE OF CALIFORNIA - DEPARTMENT OF TRANSPORTATION
Caltrans
DESIGN

P:\proj2\02\2E000_plans\pse\22e0001a001.dgn

LAST REVISION 06-14-10 | DATE PLOTTED => 06-AUG-2010 | TIME PLOTTED => 06:31

BORDER LAST REVISED 4/11/2008 | RELATIVE BORDER SCALE IS IN INCHES 0 1 2 3 | USERNAME => trmikesl | DGN FILE => 22e0001a001.dgn | CU 03 242 | EA 2E0001

Dist	COUNTY	ROUTE	POST MILES TOTAL PROJECT	SHEET No.	TOTAL SHEETS
02	Plu	70	17.2/17.5	20	42

REGISTERED CIVIL ENGINEER 06-14-10 DATE

8-2-10
PLANS APPROVAL DATE

REGISTERED PROFESSIONAL ENGINEER JUSTIN W. BORDERS No. C65918 Exp. 6-30-12 CIVIL STATE OF CALIFORNIA

THE STATE OF CALIFORNIA OR ITS OFFICERS OR AGENTS SHALL NOT BE RESPONSIBLE FOR THE ACCURACY OR COMPLETENESS OF SCANNED COPIES OF THIS PLAN SHEET.

NOTE:

1. STD PLAN T13 LANE CLOSURE WITH 24 HOUR TRAFFIC CONTROL DURING GABION WALL CONSTRUCTION.

LEGEND

→ DIRECTION OF TRAFFIC

▨ WORK ZONE FOR GABION WALL CONSTRUCTION

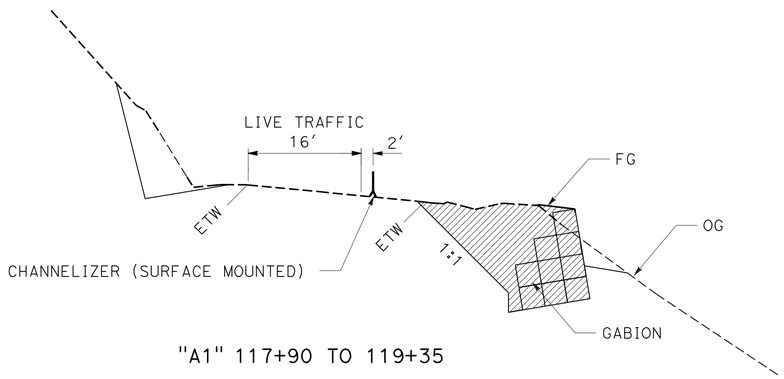

"A1" 117+90 TO 119+35

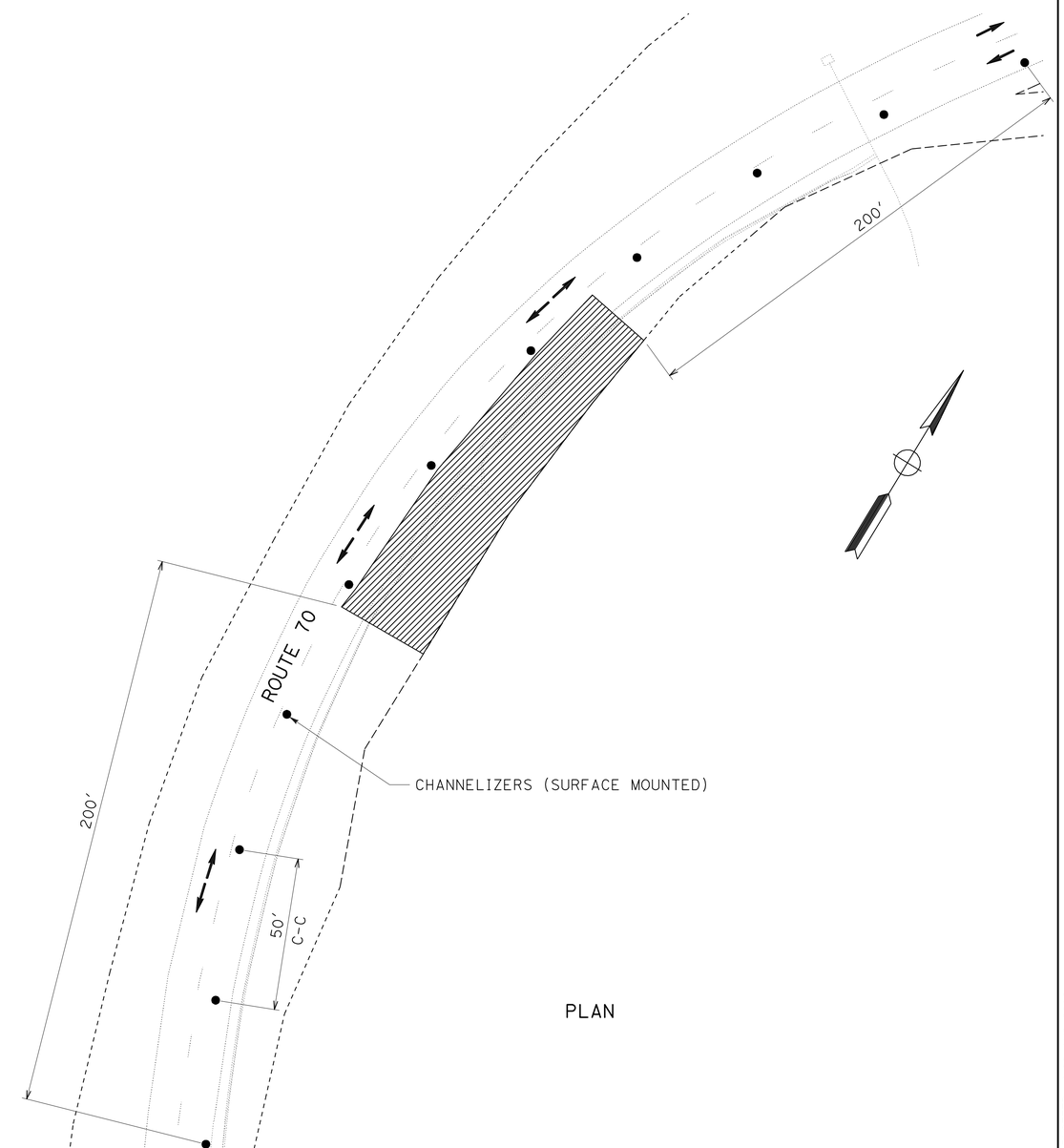

PLAN

TRAFFIC HANDLING PLAN

NO SCALE

TH-1

REVISED BY	DATE REVISED

CALCULATED-DESIGNED BY	WILLIAM LEHMAN
CHECKED BY	JUSTIN BORDERS

FUNCTIONAL SUPERVISOR: AL TRUJILLO

STATE OF CALIFORNIA - DEPARTMENT OF TRANSPORTATION

Caltrans® **DESIGN**

V:\Project+Plans\PSEWorking\d2\02-2e0001-rdw\22e000md001.dgn

LAST REVISION 06-14-10 | DATE PLOTTED => 06-AUG-2010 | TIME PLOTTED => 06:31

Dist	COUNTY	ROUTE	POST MILES TOTAL PROJECT	SHEET No.	TOTAL SHEETS
02	Plu	70	17.2/17.5	21	42

Justin W Borders 06-14-10
REGISTERED CIVIL ENGINEER DATE

8-2-10
PLANS APPROVAL DATE

REGISTERED PROFESSIONAL ENGINEER
JUSTIN W. BORDERS
No. C65918
Exp. 6-30-12
CIVIL
STATE OF CALIFORNIA

THE STATE OF CALIFORNIA OR ITS OFFICERS OR AGENTS SHALL NOT BE RESPONSIBLE FOR THE ACCURACY OR COMPLETENESS OF SCANNED COPIES OF THIS PLAN SHEET.

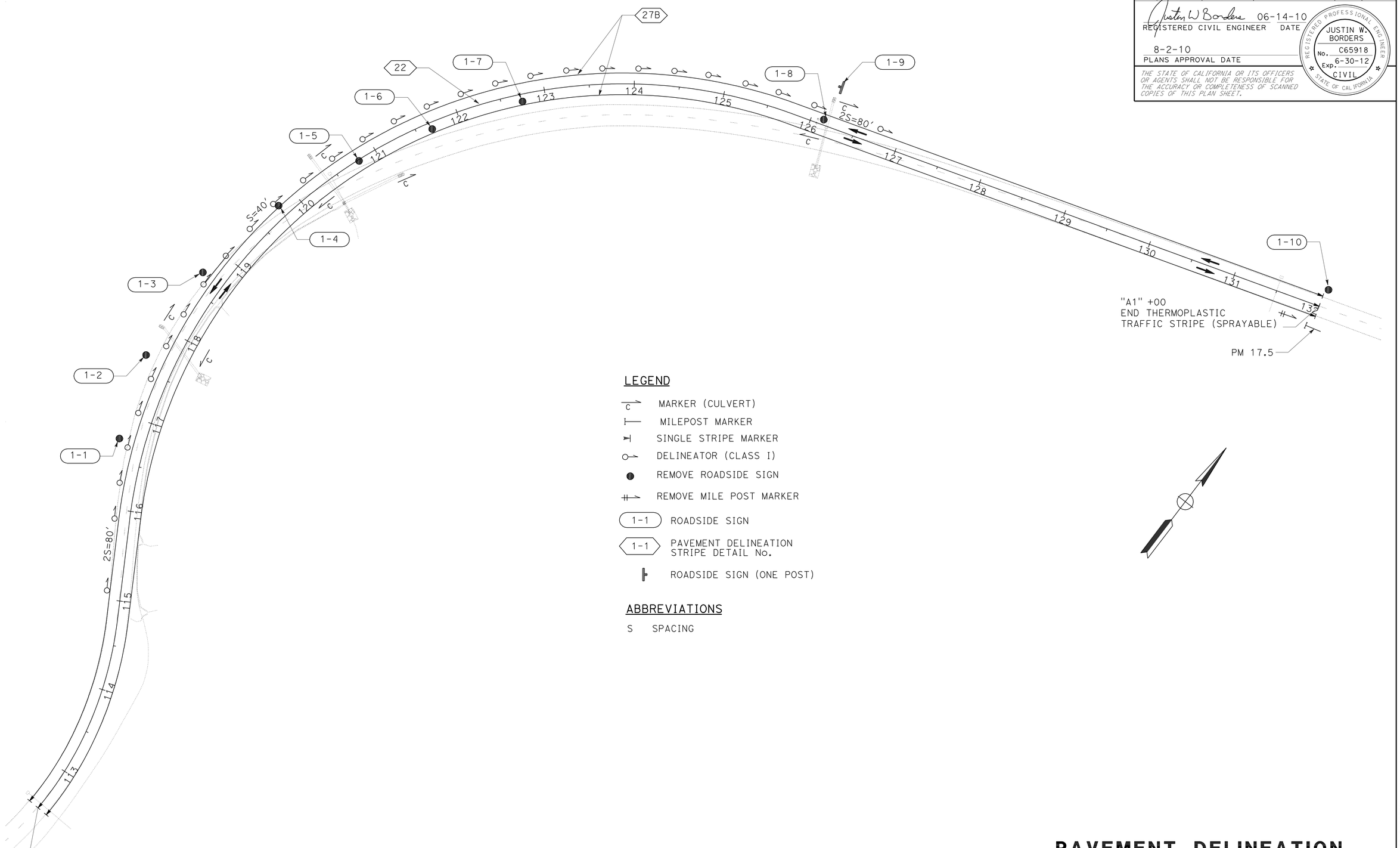

LEGEND

- MARKER (CULVERT)
- MILEPOST MARKER
- SINGLE STRIPE MARKER
- DELINEATOR (CLASS I)
- REMOVE ROADSIDE SIGN
- REMOVE MILE POST MARKER
- 1-1 ROADSIDE SIGN
- 1-1 PAVEMENT DELINEATION STRIPE DETAIL No.
- ROADSIDE SIGN (ONE POST)

ABBREVIATIONS

S SPACING

THIS PLAN ACCURATE FOR PAVEMENT DELINEATIN AND SIGN WORK ONLY

PAVEMENT DELINEATION AND SIGN PLAN

SCALE: 1" = 50'

PD-1

REVISED BY | DATE REVISED
WILLIAM LEHMAN | JUSTIN BORDERS
CALCULATED-DESIGNED BY | CHECKED BY
FUNCTIONAL SUPERVISOR
AL TRUJILLO

STATE OF CALIFORNIA - DEPARTMENT OF TRANSPORTATION
Caltrans
DESIGN

P:\proj2\02\2E000_plans\pse\22e000na001.dgn

LAST REVISION 06-14-10 | DATE PLOTTED => 05-AUG-2010 | TIME PLOTTED => 16:55

BORDER LAST REVISED 4/11/2008 | RELATIVE BORDER SCALE IS IN INCHES 0 1 2 3 | USERNAME => trrichf | DGN FILE => 22e000na001.dgn | CU 03 242 | EA 2E0001

Dist	COUNTY	ROUTE	POST MILES TOTAL PROJECT	SHEET No.	TOTAL SHEETS
02	Plu	70	17.2/17.5	22	42

REGISTERED CIVIL ENGINEER 06-14-10 DATE

8-2-10
PLANS APPROVAL DATE

REGISTERED PROFESSIONAL ENGINEER JUSTIN W. BORDERS No. C65918 Exp. 6-30-12 CIVIL STATE OF CALIFORNIA

THE STATE OF CALIFORNIA OR ITS OFFICERS OR AGENTS SHALL NOT BE RESPONSIBLE FOR THE ACCURACY OR COMPLETENESS OF SCANNED COPIES OF THIS PLAN SHEET.

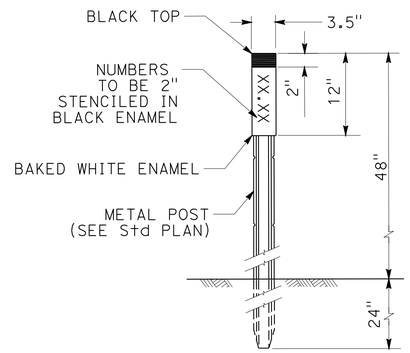

CULVERT MARKER

CULVERT MARKERS

DRAINAGE SYSTEM NO.	PM	EA
3	17.44	2
5	17.45	3
6	17.46	2
TOTAL		7

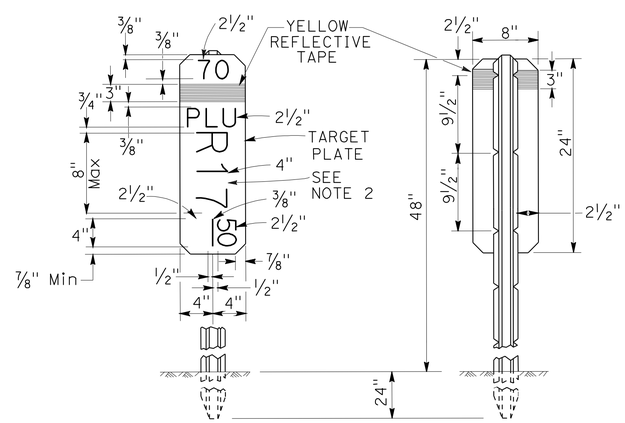

NOTES:

1. THE MARKER SHALL BE WHITE (NON-REFLECTIVE) TARGET PLATE WITH BLACK SERIES D NUMERALS AND LETTERS.

POST MILE MARKER DETAIL

"A1" 132+00

PAVEMENT DELINEATION DETAILS

NO SCALE

PDD-1

REVISED BY	DATE REVISED

CALCULATED-DESIGNED BY	WILLIAM LEHMAN
CHECKED BY	JUSTIN BORDERS

FUNCTIONAL SUPERVISOR: AL TRUJILLO

STATE OF CALIFORNIA - DEPARTMENT OF TRANSPORTATION

Caltrans® DESIGN

P:\proj2\02\2E000_plans\pse\22e000nb001.dgn

LAST REVISION 06-14-10 | DATE PLOTTED => 05-AUG-2010 | TIME PLOTTED => 16:55

Dist	COUNTY	ROUTE	POST MILES TOTAL PROJECT	SHEET No.	TOTAL SHEETS
02	Plu	70	17.2/17.5	23	42

REGISTERED CIVIL ENGINEER 06-14-10 DATE

8-2-10
PLANS APPROVAL DATE

REGISTERED PROFESSIONAL ENGINEER JUSTIN W. BORDERS No. C65918 Exp. 6-30-12 CIVIL STATE OF CALIFORNIA

THE STATE OF CALIFORNIA OR ITS OFFICERS OR AGENTS SHALL NOT BE RESPONSIBLE FOR THE ACCURACY OR COMPLETENESS OF SCANNED COPIES OF THIS PLAN SHEET.

STRIPING AND PAVEMENT MARKERS

SHEET No.	DELINEATOR (CLASS 1)	MARKER (CULVERT)	MILEPOST MARKER	REMOVE MILEPOST MARKER	THERMOPLASTIC TRAFFIC STRIPE (SPRAYABLE) DETAIL 22	THERMOPLASTIC TRAFFIC STRIPE (SPRAYABLE) DETAIL 27B	PAVEMENT MARKER (RETROREFLECTIVE RECESSED)	CHANNELIZERS (SURFACE MOUNTED)	COMMENTS
	EA	EA	EA	EA	LF	LF	EA	EA	
PD-1	29	7	1	1	1950	3900	163		PM 17.5
TH-1								11	
TOTAL	29	7	1	1	5850		163	11	

MATERIAL SUMMARY CONTRACTOR FURNISHED SIGNS

No.	SIGN CODE	SIGN SIZE (L x D)	SINGLE FACED	BACKGROUND SHEETING COLOR	BACKGROUND RETROREFLECTIVE ASTM TYPE	LEGEND SHEETING COLOR	LEGEND RETROREFLECTIVE ASTM TYPE	ROADSIDE SINGLE-SHEET ALUMINUM UNFRAMED 0.063"	DESCRIPTION (REMARKS)
1-9	W1-2 (L+)	36" x 36"	x	YELLOW	III	BLACK	II	x	CURVE WARNING LEFT
	W13-1	24" x 24"	x	YELLOW	III	BLACK	II	x	CURVE SPEED 40 MPH

XX - SPEED TO BE DETERMINED BY ENGINEER.

ROADSIDE SIGNS

SHEET No.	SIGN No.	SIGN CODE	REMOVE ROADSIDE SIGN	ROADSIDE SIGN (ONE POST)	FURNISH SINGLE SHEET ALUMINUM SIGN (0.063" UNFRAMED)	COMMENTS
			EA	EA	SQFT	
PD-1	1-1	W8-1	1			CHEVRON
	1-2	W8-1	1			CHEVRON
	1-3	W8-1	1			CHEVRON
	1-4	W8-1	1			CHEVRON
	1-5	W8-1	1			CHEVRON
	1-6	W8-1	1			CHEVRON
	1-7	W8-1	1			CHEVRON
	1-8		1			WITH FLASHING BEACON ASSEMBLIES
	1-9	W1-2 (L+) W13-1		1	9 4	CURVE LEFT 40 MPH
	1-10	W6	1			ADVISORY SPEED
TOTAL			9	1	13	

PAVEMENT DELINEATION AND SIGN QUANTITIES

PDQ-1

REVISED BY | DATE REVISED
WILLIAM LEHMAN | JUSTIN BORDERS
CALCULATED-DESIGNED BY | CHECKED BY
FUNCTIONAL SUPERVISOR
AL TRUJILLO

STATE OF CALIFORNIA - DEPARTMENT OF TRANSPORTATION
Caltrans DESIGN

P:\proj2\02\2E000_plans\pse\22e000nc001.dgn

LAST REVISION 06-14-10 | DATE PLOTTED => 06-AUG-2010 | TIME PLOTTED => 06:31

Dist	COUNTY	ROUTE	POST MILES TOTAL PROJECT	SHEET No.	TOTAL SHEETS
02	Plu	70	17.2/17.5	24	42

Justin W Borders 06-14-10
REGISTERED CIVIL ENGINEER DATE

8-2-10
PLANS APPROVAL DATE

REGISTERED PROFESSIONAL ENGINEER JUSTIN W. BORDERS No. C65918 Exp. 6-30-12 CIVIL STATE OF CALIFORNIA

THE STATE OF CALIFORNIA OR ITS OFFICERS OR AGENTS SHALL NOT BE RESPONSIBLE FOR THE ACCURACY OR COMPLETENESS OF SCANNED COPIES OF THIS PLAN SHEET.

NOTE:

1. N - NOT A SEPARATE PAY ITEM, FOR INFORMATION ONLY.

TERMINAL ANCHOR ASSEMBLY (TYPE SFT)

STATION	EA
"A1" 120+26.6 TO 120+32.9	1
TOTAL	1

TEMPORARY WATER POLLUTION CONTROL

TEMPORARY DRAINAGE INLET PROTECTION
EA
6

ALTERNATIVE IN-LINE TERMINAL SYSTEM

STATION	EA
"A1" 121+24.4 TO 121+80	1
"A1" 128+39.7 TO 128+89.7	1
TOTAL	2

EROSION CONTROL (HYDROSEED)

STATION	ACRE
"A1" 124+00 TO 126+00	3.7
TOTAL	3.7

ROCKFALL ATTENUATOR SYSTEM

STATION	SQFT
"A1" 118+80 TO 119+05	800
TOTAL	800

CABLE RAILING

STATION	LF
"A1" 117+86 TO 119+50	164
TOTAL	164

MINOR CONCRETE (Misc CONSTRUCTION)

STATION	CY	COMMENTS
"A1" 117+86.6	3.6	CONCRETE APRON
	0.3	CONCRETE CURB
"A1" 120+37.7	3.6	CONCRETE APRON
	0.3	CONCRETE CURB
"A1" 126+19.6	2.9	CONCRETE APRON
	0.3	CONCRETE CURB
TOTAL	11.0	

REMOVE MBGR

STATION	LF
"A1" 113+00 TO 120+26.7	741
"A1" 121+80 TO 128+38.8	622
TOTAL	1363

MBGR (STEEL POST)

STATION	LF
"A1" 113+00 TO 120+26.7	737.5
"A1" 121+80 TO 128+39.7	628
TOTAL	1365.5

PLACE HMA DIKE

STATION	TYPE		
	A	D	F
	LF		
"A1" 113+00 TO 114+85			202
"A1" 114+85.4 TO 114+98	27.7		
"A1" 114+98 TO 117+71.6			267
"A1" 117+71.6 TO 117+81.8	15.8		
"A1" 117+81.7 TO 120+26.7			239
"A1" 120+26.7 TO 120+59.7		32.6	
"A1" 120+84.3 TO 121+24.4		40.1	
"A1" 121+24.4 TO 128+89.7			765.3
"A1" 128+89.7 TO 131+00		211	
TOTAL	43.5	283.7	1473.3

ROADWAY QUANTITIES

STATION	ROCK EXCAVATION	ROADWAY EXCAVATION (NATURALLY OCCURING ASBESTOS)	CLASS 2 AGGREGATE BASE	PLACE HMA (Misc AREA)	HOT MIX ASPHALT (TYPE A)	IMPORTED MATERIAL (SHOULDER BACKING)	(N) EMBANKMENT	COLD PLANE ASPHALT CONCRETE PAVEMENT	FIBER ROLL	TACK COAT	REMOVE WOOD POLE
	CY	CY	CY	SQYD	TON	TON	CY	SQYD	LF	TON	EA
"A1" 112+80 TO 113+00					6.1			53.3			
"A1" 113+00 TO 131+00	22717		1629		2888.7	180	10448			1	
"A1" 114+85 TO 114+98				6.9	2.1						
"A1" 117+71 TO 117+81				10.4	3.2						
"A1" 118+00 TO 122+50											
"A1" 120+84 TO 121+70				55.6	5.1						
"A1" 120+50 TO 121+48	15		5.9								
"A1" 123+00 TO 124+50		2961									
"A1" 123+50 TO 126+50									2918		1
"A1" 131+00 TO 131+50					15.3			133.3			
HMA DIKE					41.6						
TOTAL	22732	2961	1634.9	72.9	2962.1	180	10448	186.7	2918	1	1

GABION (RETAINING WALL)

STATION	GABION	CI 2 AB (N)	8" FLEXIBLE PLASTIC PIPE (N)	8" PPP (N)	PERMEABLE MGTI (N)
	CY	CY	LF	LF	CY
"A1" 118+02 TO 119+34	348	22	40	132	4.9
TOTAL	348	22	40	132	4.9

SUMMARY OF QUANTITIES

Q-1

REVISED BY | DATE REVISED
WILLIAM LEHMAN | JUSTIN BORDERS
CALCULATED-DESIGNED BY | CHECKED BY
FUNCTIONAL SUPERVISOR
AL TRUJILLO

STATE OF CALIFORNIA - DEPARTMENT OF TRANSPORTATION
Caltrans
DESIGN

P:\proj2\02\2E000_plans\pse\22e000pa001.dgn

LAST REVISION 06-14-10
DATE PLOTTED => 06-AUG-2010
TIME PLOTTED => 06:32

DIST	COUNTY	ROUTE	POST MILES TOTAL PROJECT	SHEET NO.	TOTAL SHEETS
02	Plu	70	17.2/17.5	25	42

Randell D. Hiatt
REGISTERED CIVIL ENGINEER

June 6, 2008
PLANS APPROVAL DATE

REGISTERED PROFESSIONAL ENGINEER
Randell D. Hiatt
No. C50200
Exp. 6-30-09
CIVIL
STATE OF CALIFORNIA

The State of California or its officers or agents shall not be responsible for the accuracy or completeness of electronic copies of this plan sheet.

To accompany plans dated 8-2-10

NOTES:

1. When necessary to place dike in front of face of guard railing, only Type C dike may be used. For dike details, see Standard Plan A87B.

2. For standard railing post embedment, see Standard Plans A77C3.

3. Guard railing delineation to be used where shown on the Project Plans.

4. When dike or curb is placed under guard railing, the maximum height of the dike or curb shall be 4". Mountable dike should not be used. For dike and curb details, see Revised Standard Plans RSP A87A and Standard Plan A87B.

5. For details of typical distance between the face of rail and hinge point, see Standard Plan A77C3.

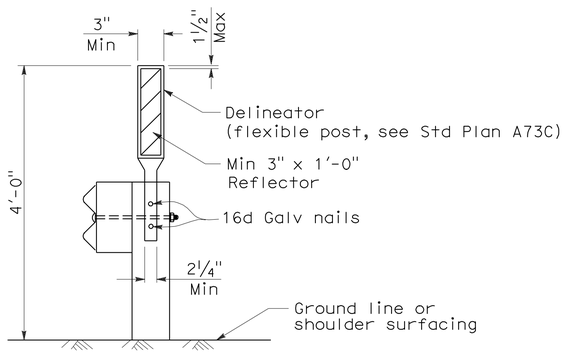

GUARD RAILING DELINEATION

See Note 3

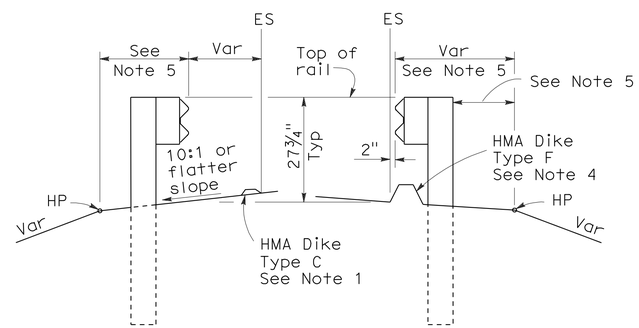

DIKE POSITIONING

See Note 1

STATE OF CALIFORNIA
DEPARTMENT OF TRANSPORTATION

METAL BEAM GUARD RAILING TYPICAL RAILING DELINEATION AND DIKE POSITIONING DETAILS

NO SCALE

RSP A77C4 DATED JUNE 6, 2008 SUPERSEDES STANDARD PLAN A77C4
DATED MAY 1, 2006 - PAGE 47 OF THE STANDARD PLANS BOOK DATED MAY 2006.

REVISED STANDARD PLAN RSP A77C4

2006 REVISED STANDARD PLAN RSP A77C4

12-10-07

DIST	COUNTY	ROUTE	POST MILES TOTAL PROJECT	SHEET NO.	TOTAL SHEETS
02	Plu	70	17.2/17.5	26	42

Randell D. Hiatt
REGISTERED CIVIL ENGINEER

June 6, 2008
PLANS APPROVAL DATE

REGISTERED PROFESSIONAL ENGINEER Randell D. Hiatt No. C50200 Exp. 6-30-09 CIVIL STATE OF CALIFORNIA

The State of California or its officers or agents shall not be responsible for the accuracy or completeness of electronic copies of this plan sheet.

To accompany plans dated 8-2-10

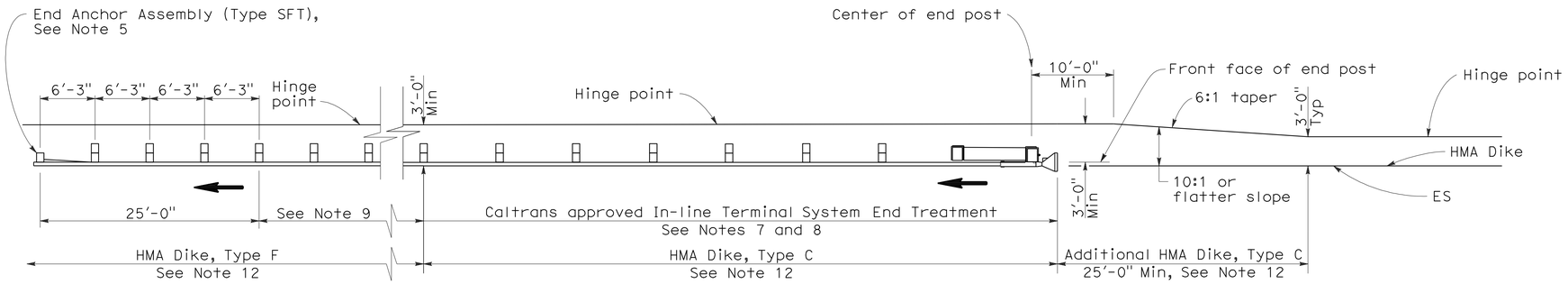

TYPE 11A LAYOUT

(EMBANKMENT GUARD INSTALLATION WITH IN-LINE END TREATMENT AT TRAFFIC APPROACH END OF RAILING)
See Note 6

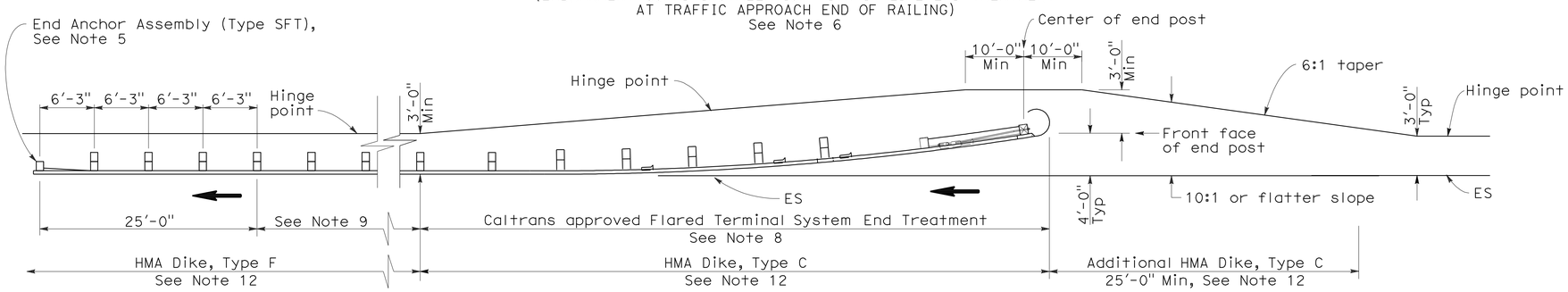

TYPE 11B LAYOUT

(EMBANKMENT GUARD RAILING INSTALLATION WITH FLARED END TREATMENT AT TRAFFIC APPROACH END OF RAILING)
See Note 6

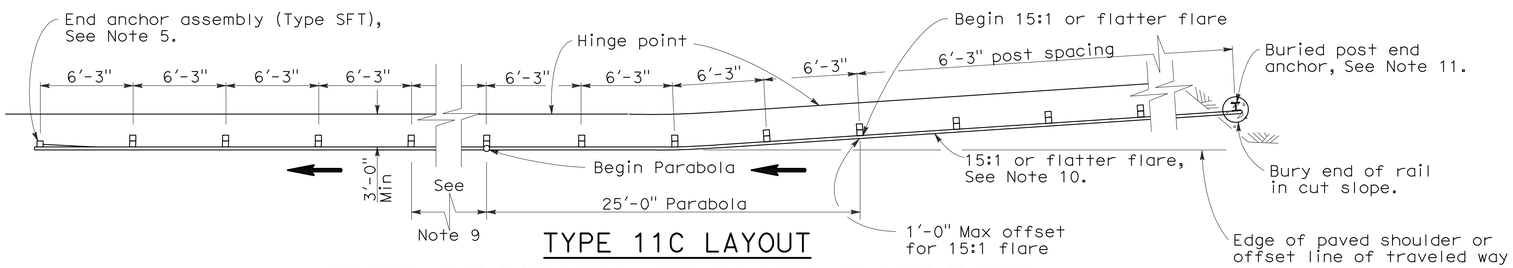

TYPE 11C LAYOUT

(EMBANKMENT GUARD RAILING INSTALLATION WITH BURIED END ANCHOR TREATMENT AT TRAFFIC APPROACH END OF RAILING)
See Notes 6 and 12

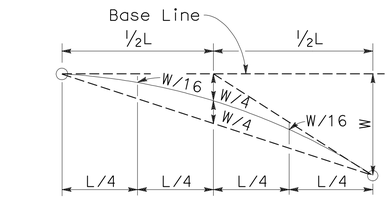

TYPICAL PARABOLIC LAYOUT

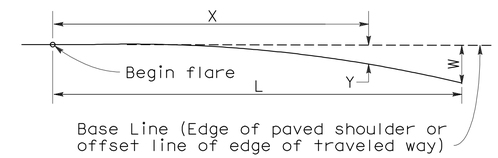

$$Y = \frac{WX^2}{L^2}$$

Y = Offset from base line
W = Maximum offset
X = Distance along base line
L = Length of flare

PARABOLIC FLARE OFFSETS

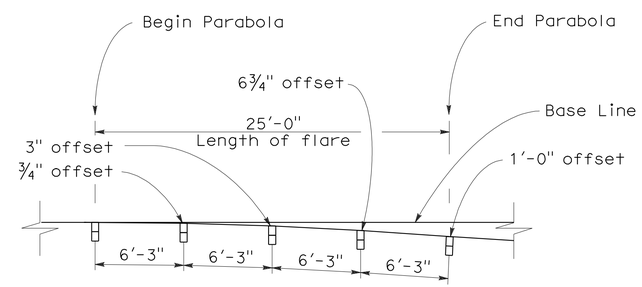

TYPICAL FLARE OFFSETS FOR 1 FOOT MAX END OFFSET

NOTES:

1. Line post, blocks and hardware to be used are shown on Standard Plans A77A1, A77A2, A77B1, A77C1, and A77C2.
2. Guard rail post spacing to be 6'-3" center to center, except as otherwise noted.
3. Except as noted, line posts are 6" x 8" x 6'-0" wood with 6" x 8" x 1'-2" wood blocks. W6 x 9 steel posts, 6'-0" in length, with 6" x 8" x 1'-2" notched wood blocks or recycled plastic blocks may be used for 6" x 8" x 6'-0" wood post with 6" x 8" x 1'-2" wood blocks where applicable and when specified.
4. Direction of adjacent traffic indicated by ⟶.
5. For End Anchor Assembly (Type SFT) details, see Standard Plan A77H1.
6. Layout Types 11A, 11B or 11C are typically used where guard railing is recommended to shield embankment slopes and a crashworthy end treatment is required for only one direction of traffic.
7. In-line Terminal System End Treatments are used where site conditions will not accommodate a flared end treatment.
8. The type of terminal system end treatment to be used will be shown on the Project Plans.
9. Dependent on site conditions (embankment height and side slope), construction of additional guard railing (length equal to multiples of 12'-6" with 6'-3" post spacing) may be advisable.
10. The 15:1 or flatter flare used with buried end anchors is based on the edge of the paved shoulder or offset line of edge of the traveled way. The length of guard railing within the 15:1 or flatter flare is based on site conditions and should be a length equal to multiples of 12'-6".
11. For details of the buried post end anchor used with Type 11C Layout, see Standard Plan A77I2.
12. Where placement of dike is required with guard railing installations, see Revised Standard Plan RSP A77C4 for dike positioning details.

STATE OF CALIFORNIA
DEPARTMENT OF TRANSPORTATION

METAL BEAM GUARD RAILING TYPICAL LAYOUTS FOR EMBANKMENTS

NO SCALE

RSP A77E1 DATED JUNE 6, 2008 SUPERSEDES STANDARD PLAN A77E1
DATED MAY 1, 2006 - PAGE 48 OF THE STANDARD PLANS BOOK DATED MAY 2006.

REVISED STANDARD PLAN RSP A77E1

2006 REVISED STANDARD PLAN RSP A77E1

12-10-07

DIST	COUNTY	ROUTE	POST MILES TOTAL PROJECT	SHEET NO.	TOTAL SHEETS
02	Plu	70	17.2/17.5	27	42

Randell D. Hiatt
REGISTERED CIVIL ENGINEER

June 6, 2008
PLANS APPROVAL DATE

REGISTERED PROFESSIONAL ENGINEER
Randell D. Hiatt
No. C50200
Exp. 6-30-09
CIVIL
STATE OF CALIFORNIA

The State of California or its officers or agents shall not be responsible for the accuracy or completeness of electronic copies of this plan sheet.

To accompany plans dated 8-2-10

2006 REVISED STANDARD PLAN RSP A77E2

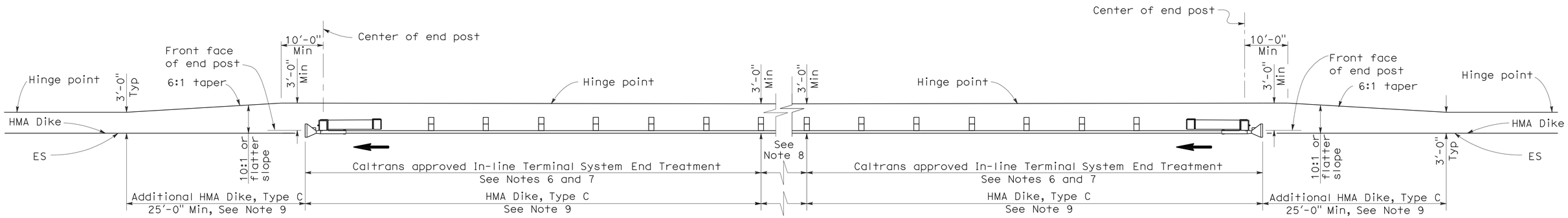

TYPE 11D LAYOUT

(EMBANKMENT GUARD RAILING INSTALLATION WITH
IN-LINE END TREATMENT AT EACH END OF RAILING)
See Note 5

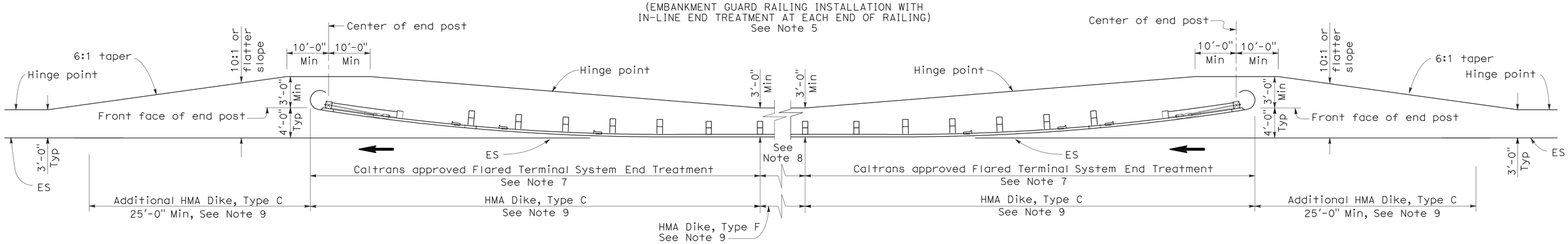

TYPE 11E LAYOUT

(EMBANKMENT GUARD RAILING INSTALLATION WITH
FLARED END TREATMENT AT EACH END OF RAILING)
See Note 5

NOTES:

1. Line post, blocks and hardware to be used are shown on Standard Plans A77A1, A77A2, A77B1, A77C1 and A77C2.
2. Guard rail post spacing to be 6'-3" center to center, except as otherwise noted.
3. Except as noted, line posts are 6" x 8" x 6'-0" wood with 6" x 8" x 1'-2" wood blocks, W6 x 9 steel posts, 6'-0" in length, with 6" x 8" x 1'-2" notched wood blocks or plastic blocks may be used for 6" x 8" x 6'-0" wood post with 6" x 8" x 1'-2" wood blocks where applicable and when specified.
4. Direction of adjacent traffic indicated by ⟶.
5. Layout Types 11D through 11L, shown on the A77E Series of Revised Standard Plans, are typically used where guard railing is recommended to shield embankment slopes and a crashworthy end treatment is required for both directions of traffic.
6. In-line Terminal System End Treatments are used where site conditions will not accommodate a flared end treatment.
7. The type of terminal system end treatment to be used will be shown on the Project Plans.
8. Dependent on site conditions (embankment height and side slope), construction of additional guard railing (length equal to multiples of 12'-6" with 6'-3" post spacing) may be advisable.
9. Where placement of dike is required with guard railing installations, see Revised Standard Plan RSP A77C4 for dike positioning details.

STATE OF CALIFORNIA
DEPARTMENT OF TRANSPORTATION

METAL BEAM GUARD RAILING TYPICAL LAYOUTS FOR EMBANKMENTS

NO SCALE

RSP A77E2 DATED JUNE 6, 2008 SUPERSEDES STANDARD PLAN A77E2
DATED MAY 1, 2006 - PAGE 49 OF THE STANDARD PLANS BOOK DATED MAY 2006.

REVISED STANDARD PLAN RSP A77E2

DIST	COUNTY	ROUTE	POST MILES TOTAL PROJECT	SHEET NO.	TOTAL SHEETS
02	Plu	70	17.2/17.5	28	42

Randell D. Hiatt
REGISTERED CIVIL ENGINEER

June 6, 2008
PLANS APPROVAL DATE

REGISTERED PROFESSIONAL ENGINEER
Randell D. Hiatt
No. C50200
Exp. 6-30-09
CIVIL
STATE OF CALIFORNIA

The State of California or its officers or agents shall not be responsible for the accuracy or completeness of electronic copies of this plan sheet.

To accompany plans dated 8-2-10

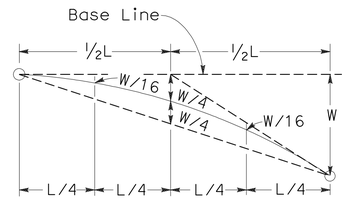

TYPICAL PARABOLIC LAYOUT

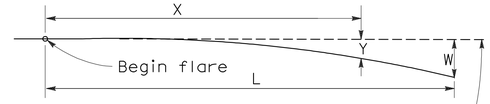

Base Line (Edge of paved shoulder or offset line of edge of traveled way)

$$Y = \frac{WX^2}{L^2}$$

Y = Offset from base line
W = Maximum offset
X = Distance along base line
L = Length of flare

PARABOLIC FLARE OFFSETS

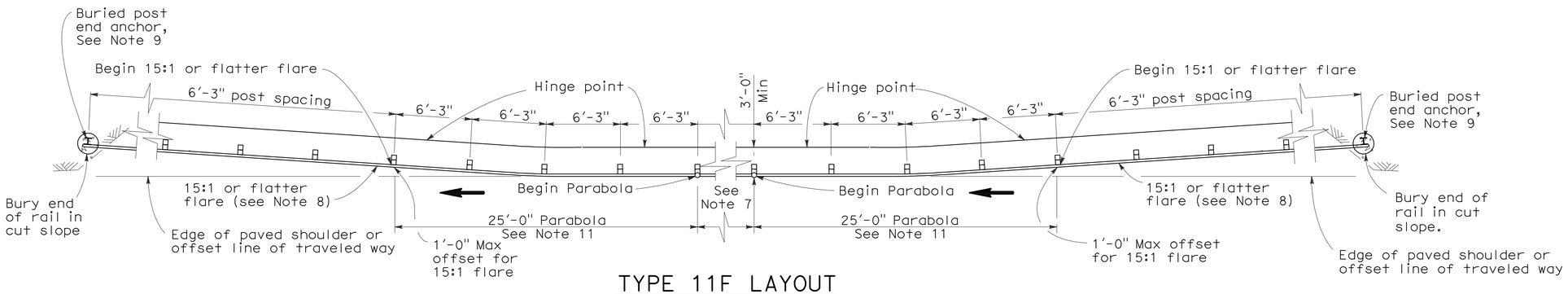

TYPE 11F LAYOUT

(EMBANKMENT GUARD RAILING INSTALLATION WITH A BURIED END ANCHOR TREATMENT AT EACH END OF RAILING)
See Notes 5 and 10

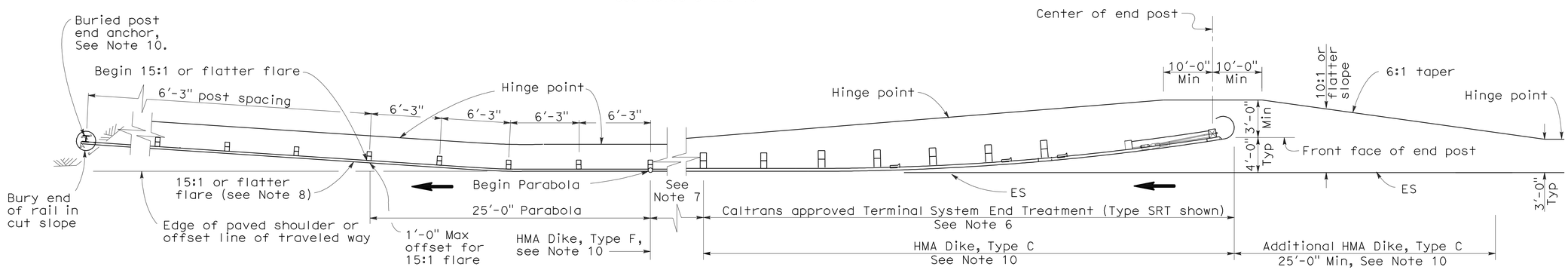

TYPE 11G LAYOUT

(EMBANKMENT GUARD RAILING INSTALLATION WITH FLARED END TREATMENT AND A BURIED END ANCHOR TREATMENT AT THE ENDS OF RAILING)
See Notes 5 and 10

NOTES:

1. Line post, blocks and hardware to be used are shown on Standard Plans A77A1, A77A2, A77B1, A77C1 and A77C2.
2. Guard rail post spacing to be 6'-3" center to center, except as otherwise noted.
3. Except as noted, line posts are 6" x 8" x 6'-0" wood with 6" x 8" x 1'-2" wood blocks. W6 x 9 steel posts, 6'-0" in length, with 6" x 8" x 1'-2" notched wood blocks or plastic blocks may be used for 6" x 8" x 6'-0" wood post with 6" x 8" x 1'-2" wood blocks where applicable and when specified.
4. Direction of adjacent traffic indicated by ⟶.
5. Layout Types 11D through 11L, shown on the A77E Series of Revised Standard Plans, are typically used where guard railing is recommended to shield embankment slopes and a crashworthy end treatment is required for both directions of traffic.
6. The type of terminal system end treatment to be used will be shown on the Project Plans.
7. Dependent on site conditions (embankment height and side slope), construction of additional guard railing (length equal to multiples of 12'-6" with 6'-3" post spacing) may be advisable.
8. The 15:1 or flatter flare used with buried end anchors is based on the edge of the paved shoulder or offset line of edge of the traveled way. The length of guard railing within the 15:1 or flatter flare is based on site conditions and should be a length equal to multiples of 12'-6".
9. For details of the buried post end anchor used with Type 11F and 11G Layouts, see Standard Plan A77I2.
10. Where placement of dike is required with guard railing installations, see Revised Standard Plan RSP A77C4 for dike positioning details.
11. For typical flare offsets for 25'-0" length parabola with maximum offset of 1'-0", see Revised Standard Plan RSP A77E1.

STATE OF CALIFORNIA
DEPARTMENT OF TRANSPORTATION

METAL BEAM GUARD RAILING TYPICAL LAYOUTS FOR EMBANKMENTS

NO SCALE

RSP A77E3 DATED JUNE 6, 2008 SUPERSEDES STANDARD PLAN A77E3 DATED MAY 1, 2006 - PAGE 50 OF THE STANDARD PLANS BOOK DATED MAY 2006.

REVISED STANDARD PLAN RSP A77E3

2006 REVISED STANDARD PLAN RSP A77E3

12-10-07

DIST	COUNTY	ROUTE	POST MILES TOTAL PROJECT	SHEET NO.	TOTAL SHEETS
02	Plu	70	17.2/17.5	29	42

Randell D. Hiatt
REGISTERED CIVIL ENGINEER

June 6, 2008
PLANS APPROVAL DATE

REGISTERED PROFESSIONAL ENGINEER
Randell D. Hiatt
No. C50200
Exp. 6-30-09
CIVIL
STATE OF CALIFORNIA

The State of California or its officers or agents shall not be responsible for the accuracy or completeness of electronic copies of this plan sheet.

To accompany plans dated 8-2-10

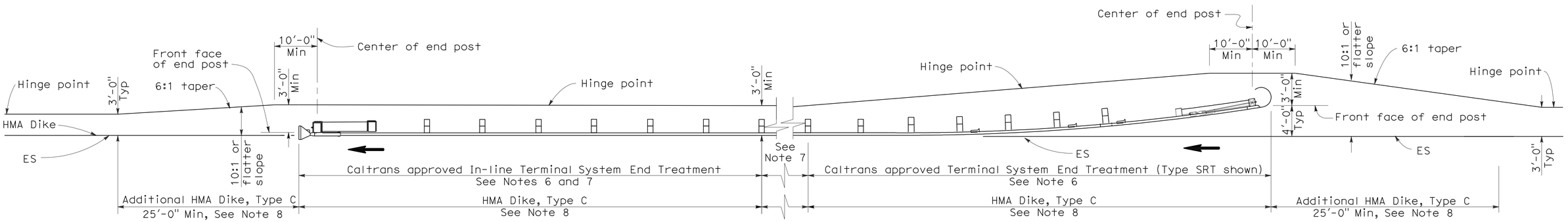

TYPE 11H LAYOUT

(EMBANKMENT GUARD RAILING INSTALLATION WITH FLARED END TREATMENT
AND AN IN-LINE TREATMENT AT THE ENDS OF RAILING)
See Notes 5 and 8

NOTES:

1. Line post, blocks and hardware to be used are shown on Standard Plans A77A1, A77A2, A77B1, A77C1 and A77C2.
2. Guard rail post spacing to be 6'-3" center to center, except as otherwise noted.
3. Except as noted, line posts are 6" x 8" x 6'-0" wood with 6" x 8" x 1'-2" wood blocks. W6 x 9 steel posts, 6'-0" in length, with 6" x 8" x 1'-2" notched wood blocks or plastic blocks may be used for 6" x 8" x 6'-0" wood post with 6" x 8" x 1'-2" wood blocks where applicable and when specified.
4. Direction of adjacent traffic indicated by ⟶.
5. Layout Types 11D through 11L, shown on the A77E Series of Revised Standard Plans, are typically used where guard railing is recommended to shield embankment slopes and a crashworthy end treatment is required for both directions of traffic.
6. The type of terminal system end treatment to be used will be shown on the Project Plans.
7. Dependent on site conditions (embankment height and side slope), construction of additional guard railing (length equal to multiples of 12'-6" with 6'-3" post spacing) may be advisable.
8. Where placement of dike is required with guard railing installations, see Revised Standard Plan RSP A77C4 for dike positioning details.

STATE OF CALIFORNIA
DEPARTMENT OF TRANSPORTATION

METAL BEAM GUARD RAILING TYPICAL LAYOUTS FOR EMBANKMENTS

NO SCALE

RSP A77E4 DATED JUNE 6, 2008 SUPERSEDES STANDARD PLAN A77E4
DATED MAY 1, 2006 - PAGE 51 OF THE STANDARD PLANS BOOK DATED MAY 2006.

REVISED STANDARD PLAN RSP A77E4

2006 REVISED STANDARD PLAN RSP A77E4

12-10-07

DIST	COUNTY	ROUTE	POST MILES TOTAL PROJECT	SHEET NO.	TOTAL SHEETS
02	Plu	70	17.2/17.5	30	42

Randell D. Hiatt
REGISTERED CIVIL ENGINEER

June 6, 2008
PLANS APPROVAL DATE

REGISTERED PROFESSIONAL ENGINEER
Randell D. Hiatt
No. C50200
Exp. 6-30-09
CIVIL
STATE OF CALIFORNIA

The State of California or its officers or agents shall not be responsible for the accuracy or completeness of electronic copies of this plan sheet.

To accompany plans dated 8-2-10

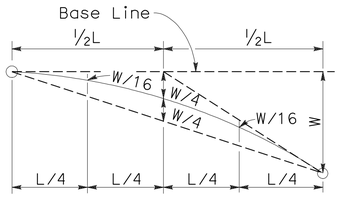

TYPICAL PARABOLIC LAYOUT

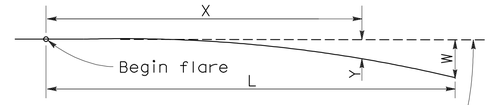

Base Line (Edge of paved shoulder or offset line of edge of traveled way)

$$Y = \frac{WX^2}{L^2}$$

Y = Offset from base line
W = Maximum offset
X = Distance along base line
L = Length of flare

PARABOLIC FLARE OFFSETS

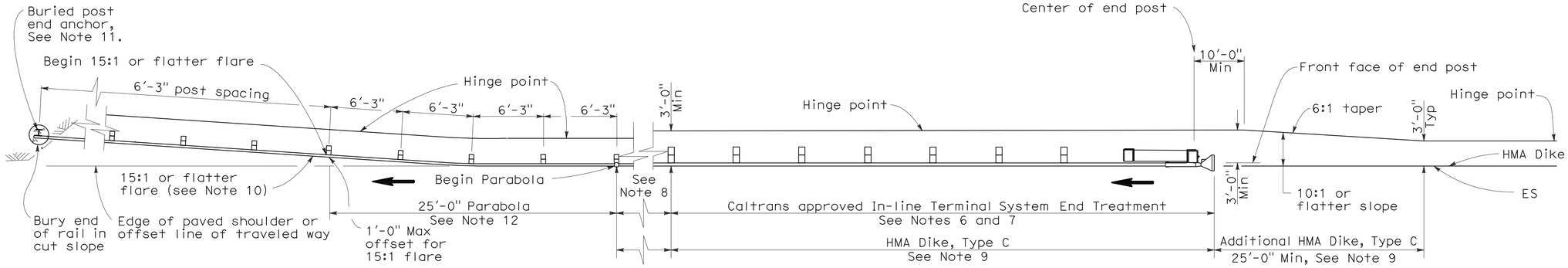

TYPE 11I LAYOUT

(EMBANKMENT GUARD RAILING INSTALLATION WITH IN-LINE END TREATMENT AND A BURIED END ANCHOR TREATMENT AT THE ENDS OF RAILING)
See Note 5

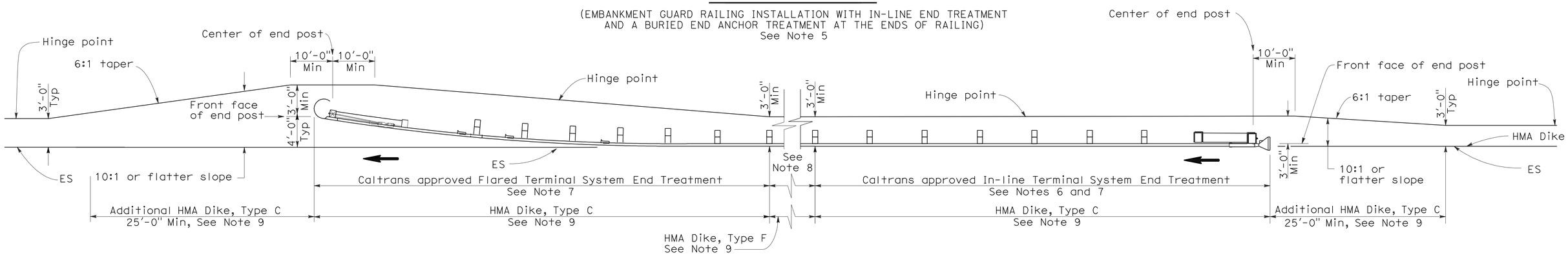

TYPE 11J LAYOUT

(EMBANKMENT GUARD RAILING INSTALLATION WITH IN-LINE END TREATMENT AND FLARED END TREATMENT AT THE ENDS OF RAILING)
See Note 5

NOTES:

1. Line post, blocks and hardware to be used are shown on Standard Plans A77A1, A77A2, A77B1, A77C1 and A77C2.
2. Guard rail post spacing to be 6'-3" center to center, except as otherwise noted.
3. Except as noted, line posts are 6" x 8" x 6'-0" wood with 6" x 8" x 1'-2" wood blocks. W6 x 9 steel posts, 6'-0" in length, with 6" x 8" x 1'-2" notched wood blocks or plastic blocks may be used for 6" x 8" x 6'-0" wood post with 6" x 8" x 1'-2" wood blocks where applicable and when specified.
4. Direction of adjacent traffic indicated by ➡.
5. Layout Types 11D through 11L, shown on the A77E Series of Revised Standard Plans, are typically used where guard railing is recommended to shield embamkment slopes and a crashworthy end treatment is required for both directions of traffic.
6. In-line Terminal System End Treatments are used where site conditions will not accommodate a flared end treatment.
7. The type of terminal system end treatment to be used will be shown on the Project Plans.
8. Dependent on site conditions (embankment height and side slope), construction of additional guard railing (length equal to multiples of 12'-6" with 6'-3" post spacing) may be advisable.
9. Where placement of dike is required with guard railing installations, see Revised Standard Plan RSP A77C4 for dike positioning details.
10. The 15:1 or flatter flare used with buried end anchors is based on the edge of the paved shoulder or offset line of edge of the traveled way. The length of guard railing within the 15:1 or flatter flare is based on site conditions and should be a length equal to multiples of 12'-6".
11. For details of the buried post end anchor used with Type 11I Layout, see Standard Plan A77I2.
12. For typical flare offsets for 25'-0" length parabola with maximum offset of 1'-0", see Revised Standard Plan RSP A77E1.

STATE OF CALIFORNIA
DEPARTMENT OF TRANSPORTATION

METAL BEAM GUARD RAILING TYPICAL LAYOUTS FOR EMBANKMENTS

NO SCALE

RSP A77E5 DATED JUNE 6, 2008 SUPERSEDES STANDARD PLAN A77E5 DATED MAY 1, 2006 - PAGE 52 OF THE STANDARD PLANS BOOK DATED MAY 2006.

REVISED STANDARD PLAN RSP A77E5

2006 REVISED STANDARD PLAN RSP A77E5

12-10-07

DIST	COUNTY	ROUTE	POST MILES TOTAL PROJECT	SHEET NO.	TOTAL SHEETS
02	Plu	70	17.2/17.5	31	42

Randell D. Hiatt
REGISTERED CIVIL ENGINEER

June 6, 2008
PLANS APPROVAL DATE

REGISTERED PROFESSIONAL ENGINEER
Randell D. Hiatt
No. C50200
Exp. 6-30-09
CIVIL
STATE OF CALIFORNIA

The State of California or its officers or agents shall not be responsible for the accuracy or completeness of electronic copies of this plan sheet.

To accompany plans dated 8-2-10

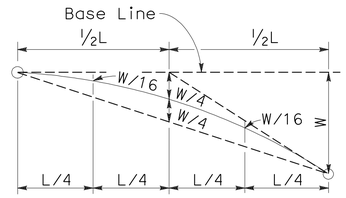

TYPICAL PARABOLIC LAYOUT

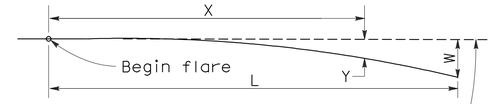

Base Line (Edge of paved shoulder or offset line of edge of traveled way)

$$Y = \frac{WX^2}{L^2}$$

Y = Offset from base line
W = Maximum offset
X = Distance along base line
L = Length of flare

PARABOLIC FLARE OFFSETS

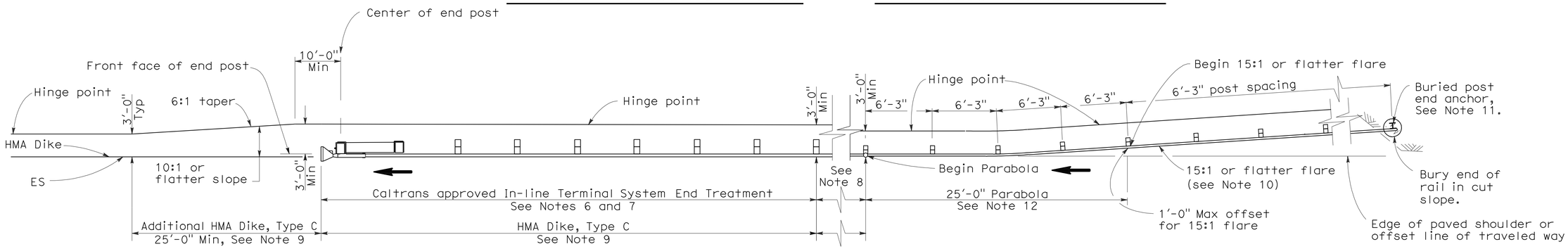

TYPE 11K LAYOUT

(EMBANKMENT GUARD RAILING INSTALLATION WITH A BURIED END ANCHOR TREATMENT AND AN IN-LINE END TREATMENT AT THE ENDS OF RAILING)
See Note 5

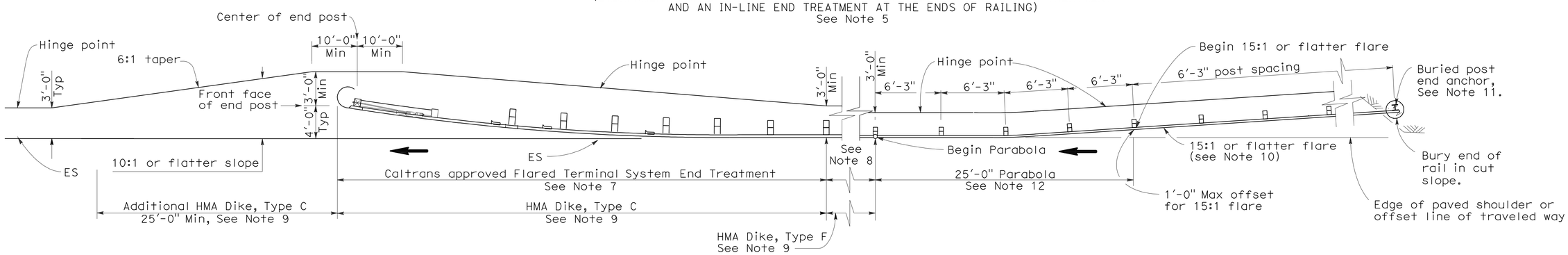

TYPE 11L LAYOUT

(EMBANKMENT GUARD RAILING INSTALLATION WITH A BURIED END ANCHOR TREATMENT AND A FLARED END TREATMENT AT THE ENDS OF RAILING)
See Note 5

NOTES:

1. Line post, blocks and hardware to be used are shown on Standard Plans A77A1, A77A2, A77B1, A77C1 and A77C2.
2. Guard rail post spacing to be 6'-3" center to center, except as otherwise noted.
3. Except as noted, line posts are 6" x 8" x 6'-0" wood with 6" x 8" x 1'-2" wood blocks. W6 x 9 steel posts, 6'-0" in length, with 6" x 8" x 1'-2" notched wood blocks or plastic blocks may be used for 6" x 8" x 6'-0" wood post with 6" x 8" x 1'-2" wood blocks where applicable and when specified.
4. Direction of adjacent traffic indicated by ⟶.
5. Layout Types 11D through 11L, shown on the A77E Series of Revised Standard Plans, are typically used where guard railing is recommended to shield embamkment slopes and a crashworthy end treatment is required for both directions of traffic.
6. In-line Terminal System End Treatments are used where site conditions will not accommodate a flared end treatment.
7. The type of terminal system end treatment to be used will be shown on the Project Plans.
8. Dependent on site conditions (embankment height and side slope), construction of additional guard railing (length equal to multiples of 12'-6" with 6'-3" post spacing) may be advisable.
9. Where placement of dike is required with guard railing installations, see Revised Standard Plan RSP A77C4 for dike positioning details.
10. The 15:1 or flatter flare used with buried end anchors is based on the edge of the paved shoulder or offset line of edge of the traveled way. The length of guard railing within the 15:1 or flatter flare is based on site conditions and should be a length equal to multiples of 12'-6".
11. For details of the buried post end anchor used with Type 11K and 11L Layouts, see Standard Plan A77I2.
12. For typical flare offsets for 25'-0" length parabola with maximum offset of 1'-0", see Revised Standard Plan RSP A77E1.

STATE OF CALIFORNIA
DEPARTMENT OF TRANSPORTATION

METAL BEAM GUARD RAILING TYPICAL LAYOUTS FOR EMBANKMENTS

NO SCALE

RSP A77E6 DATED JUNE 6, 2008 SUPERSEDES STANDARD PLAN A77E6
DATED MAY 1, 2006 - PAGE 53 OF THE STANDARD PLANS BOOK DATED MAY 2006.

REVISED STANDARD PLAN RSP A77E6

2006 REVISED STANDARD PLAN RSP A77E6

12-10-07

DIST	COUNTY	ROUTE	POST MILES TOTAL PROJECT	SHEET NO.	TOTAL SHEETS
02	Plu	70	17.2/17.5	32	42

REGISTERED CIVIL ENGINEER

November 17, 2006
PLANS APPROVAL DATE

REGISTERED PROFESSIONAL ENGINEER Michael Janzen No. 44788 Exp. 03-31-08 CIVIL STATE OF CALIFORNIA

The State of California or its officers or agents shall not be responsible for the accuracy or completeness of electronic copies of this plan sheet.

To accompany plans dated 8-2-10

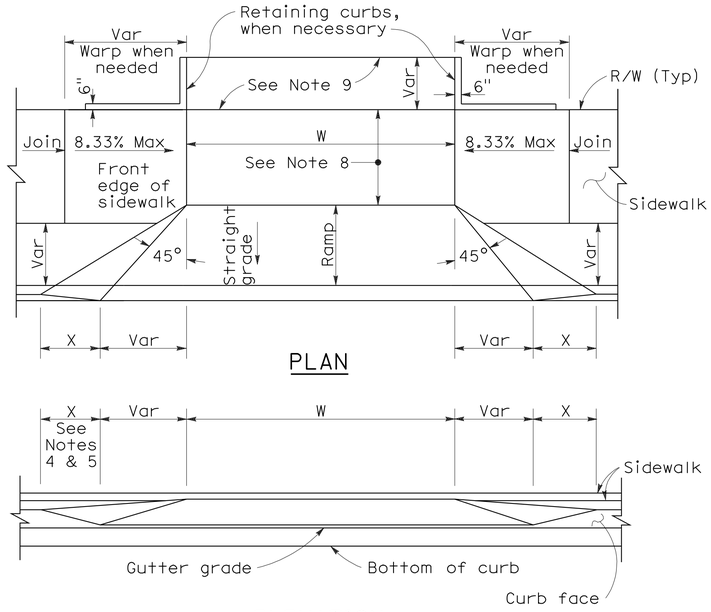

PLAN

ELEVATION

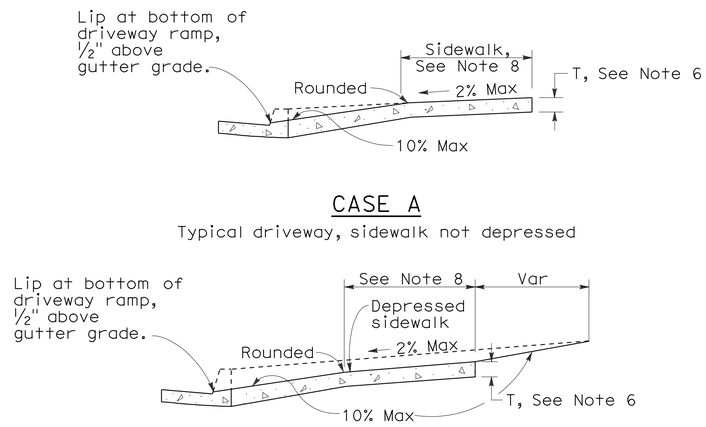

CASE A

Typical driveway, sidewalk not depressed

CASE B

Driveway with depressed sidewalk

SECTIONS

CURB QUANTITIES

TYPE	CUBIC YARDS PER LINEAR FOOT
A1-6	0.02585
A1-8	0.03084
A2-6	0.05903
A2-8	0.06379
A3-6	0.01036
A3-8	0.01435
B1-4	0.02185
B1-6	0.02930
B2-4	0.05515
B2-6	0.06171
B3-4	0.00641
B3-6	0.01074
B4	0.05709
D-4	0.04083
D-6	0.06804
E	0.06661

TABLE A

CURB TYPE	DIMENSIONS "H1"	"H2"	"W1"	"W2"
A1-6	1'-2"	6"	7½"	1½"
A1-8	1'-4"	8"	8"	2"
A2-6	1'-0"	6"	2'-7½"	1½"
A2-8	1'-2"	8"	2'-8"	2"
A3-6	6"	5"	7¼"	1¼"
A3-8	8"	7"	7¾"	1¾"
B1-4	1'-0"	4"	7½"	2½"
B1-6	1'-2"	6"	9"	4"
B2-4	10"	4"	2'-7½"	2½"
B2-6	1'-0"	6"	2'-9"	4"
B3-4	4"	3"	7"	2"
B3-6	6"	5"	8½"	3½"
D-4	10"	4"	1'-6"	1'-1"
D-6	1'-0"	6"	2'-2"	1'-8"

DRIVEWAYS

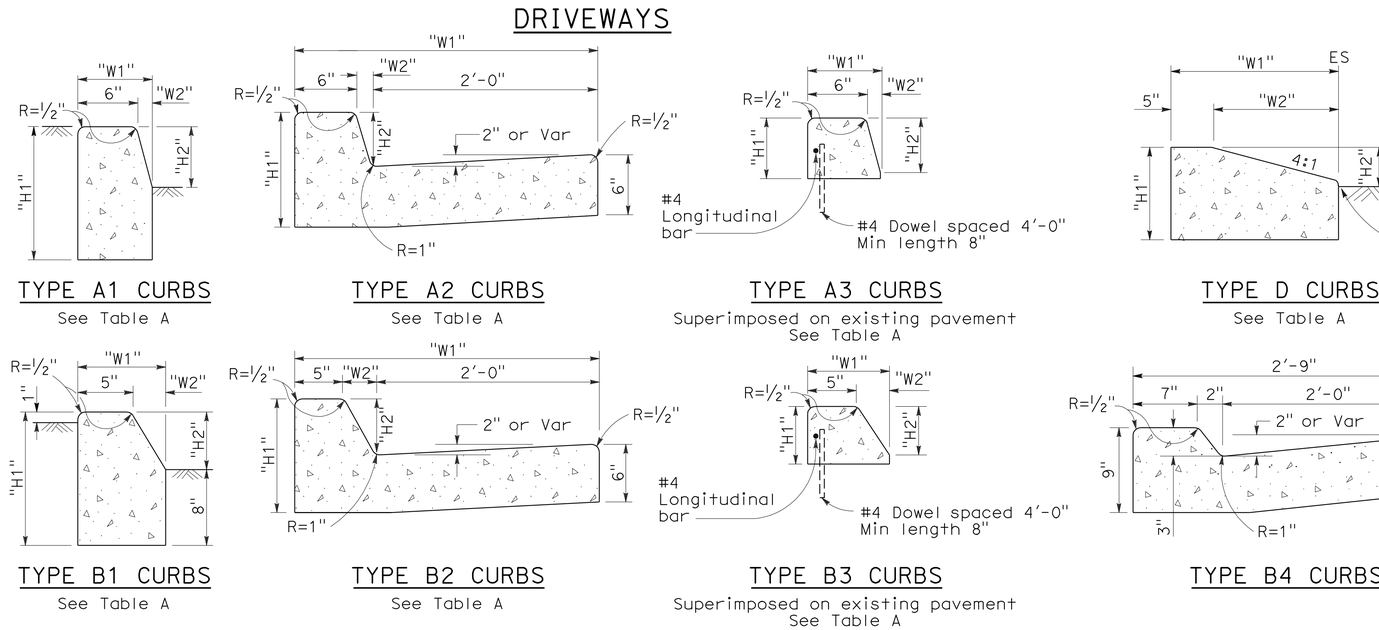

TYPE A1 CURBS
See Table A

TYPE A2 CURBS
See Table A

TYPE A3 CURBS
Superimposed on existing pavement
See Table A

TYPE D CURBS
See Table A

TYPE E CURB

TYPE B1 CURBS
See Table A

TYPE B2 CURBS
See Table A

TYPE B3 CURBS
Superimposed on existing pavement
See Table A

TYPE B4 CURBS

TYPE H CURB
On Bridges

CURBS

NOTES:

1. Case A driveway section typically applies.
2. Use Case B driveway section when ramp slopes would exceed 10% in Case A.
3. Use Case B driveway section when sidewalk cross slope would exceed 2% in Case A.
4. X=3'-0" except for curb heights over 10" where 4:1 slopes shall be used on curb slope.
5. X is a variable when sidewalk is located where wheelchairs may traverse the surface. Slopes shall not exceed 8.33%.
6. Sidewalk and ramp thickness "T" at driveway shall be 4" for residental and 6" for commercial.
7. Difference in slope of the driveway ramp and the slope of a line between the gutter and a point on the roadway 5'-0" from gutter line shall not exceed 15%. Reduce driveway ramp slope, not gutter slope, where required.
8. Minimum width of clear passageway for sidewalk shall be 4'-0".
9. Retaining curbs and acquisition of construction easement may be necessary for narrow sidewalks or curb heights in excess of 6".
10. Across the pedestrian route at curb ramp locations, the gutter pan slope shall not exceed 1" of depth for each 2'-0" of width.

STATE OF CALIFORNIA
DEPARTMENT OF TRANSPORTATION

CURBS AND DRIVEWAYS

NO SCALE

RSP A87A DATED NOVEMBER 17, 2006 SUPERSEDES STANDARD PLAN A87A DATED MAY 1, 2006 - PAGE 113 OF THE STANDARD PLANS BOOK DATED MAY 2006.

REVISED STANDARD PLAN RSP A87A

2006 REVISED STANDARD PLAN RSP A87A

10-25-06

DIST	COUNTY	ROUTE	POST MILES TOTAL PROJECT	SHEET NO.	TOTAL SHEETS
02	Plu	70	17.2/17.5	33	42

REGISTERED CIVIL ENGINEER

June 5, 2009
PLANS APPROVAL DATE

Glenn DeCou No. C34547 Exp. 9-30-09 CIVIL
REGISTERED PROFESSIONAL ENGINEER STATE OF CALIFORNIA

The State of California or its officers or agents shall not be responsible for the accuracy or completeness of electronic copies of this plan sheet.

To accompany plans dated 8-2-10

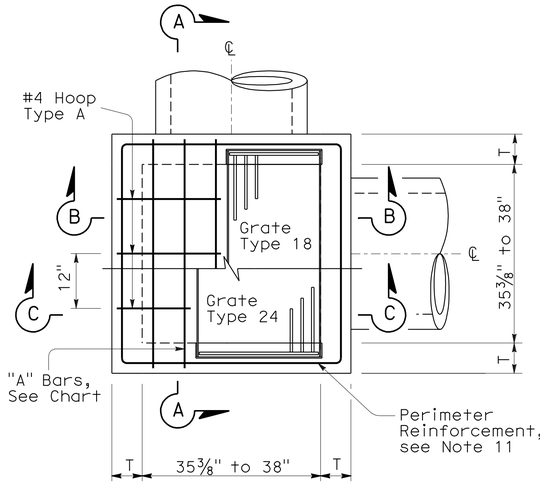

STANDARD TYPE G2 OR G4

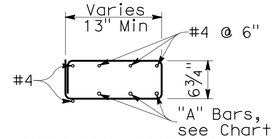

TYPICAL SECTION
(HOOP TYPE A)

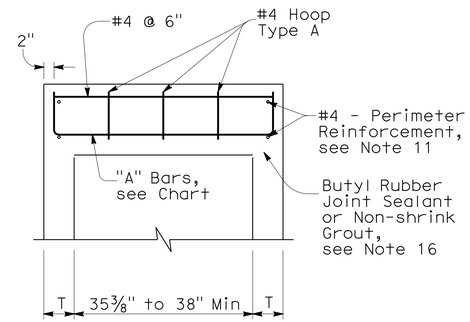

SECTION A-A

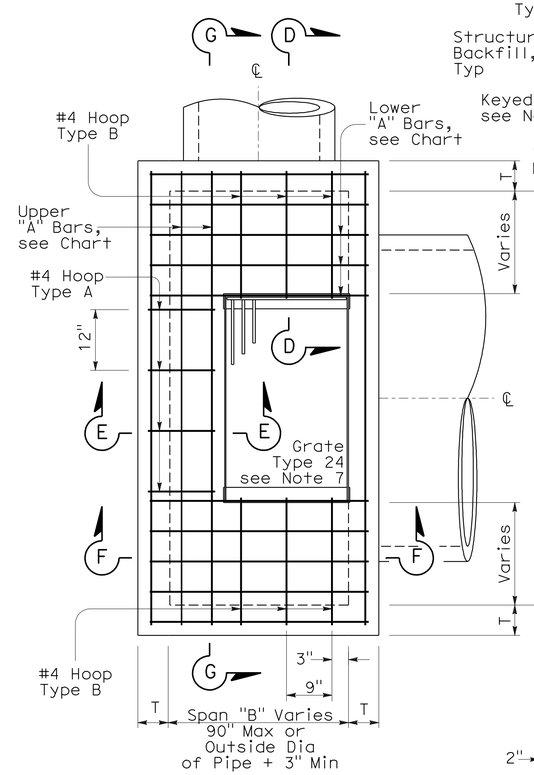

EXPANDED TYPE G2 OR G4
(Top Rebar Not Shown)

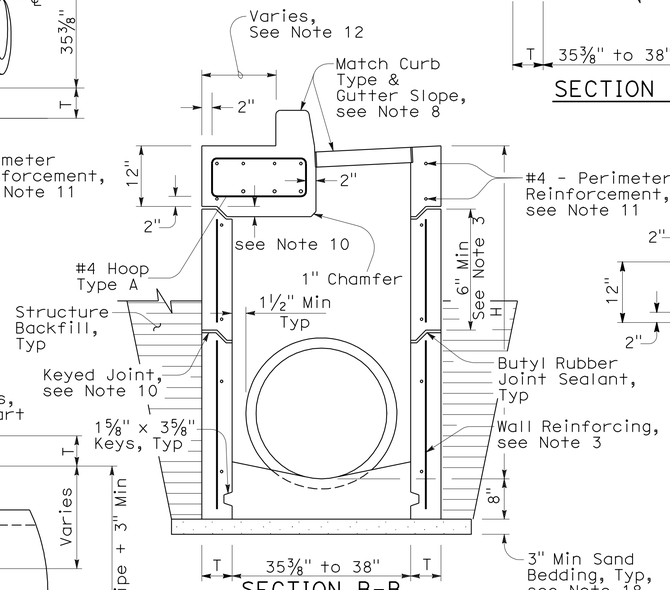

SECTION B-B
(with G4 Top)

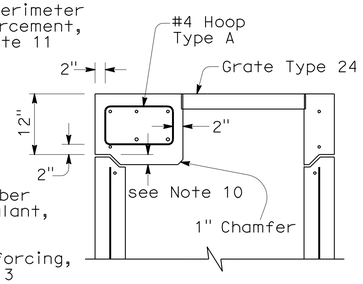

SECTION C-C
(with G2 Top)

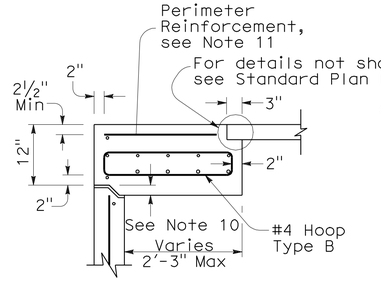

SECTION D-D

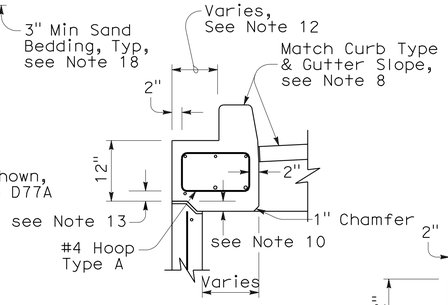

SECTION E-E
(with G4 Top)

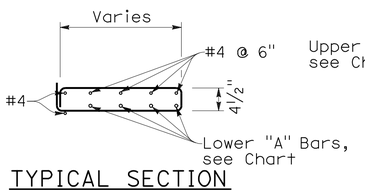

TYPICAL SECTION
(HOOP TYPE B)

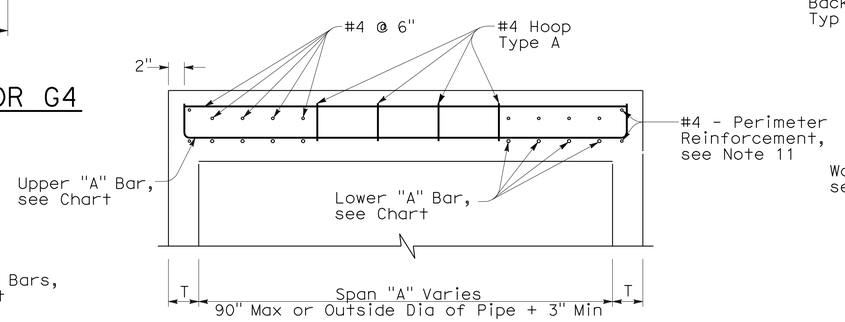

SECTION G-G

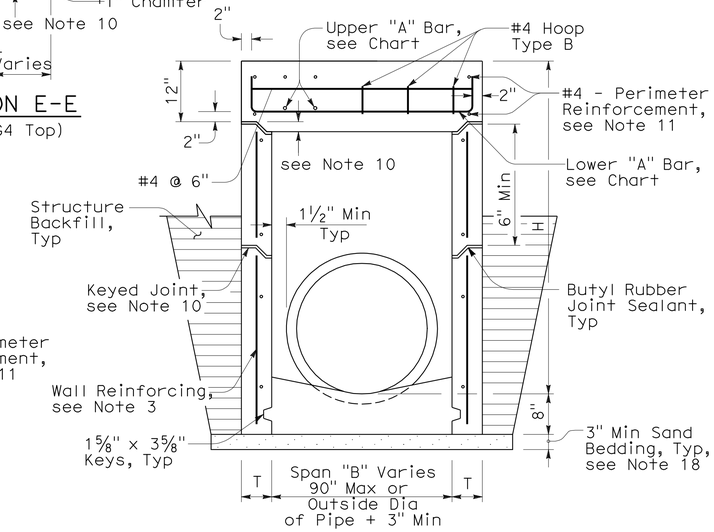

SECTION F-F
(with G2 Top)

NOTES:

1. "H" is the difference in elevation between the outlet pipe flow line and the normal gutter grade line undepressed.
2. For "T" wall thickness: T=6" when "H" is 8' or less. T=8" when "H" is over 8'.
3. Wall reinforcing not required when "H" is 8' or less and the unsupported width or length is 6'-0" or less. Reinforce wall exceeding these limits with #4 bars @ 1'-6" ± centers placed 2" clear to the inside of inlet unless otherwise shown. Short independent wall sections or height adjustment rings 6" to 24" high must have a minimum of two #4 horizontal bars.
4. Seal pre-cast inlets connection openings between wall and pipe with non-shrink grout or resilient connectors as specified in the Special Provisions.
5. Steps - None required where "H" is less than 2'-6". Where "H" is 2'-6" or more, install steps with lowest rung 1'-0" above the floor and highest rung not more than 6" below bottom of lid. The distance between steps must not exceed 1'-0" and be uniform throughout the length of the wall. Place steps in the wall without an opening. Steps inserts may be substituted for the bar steps. Step inserts must comply with State Industrial Safety Requirements. See Standard Plan D74C for step details.
6. Pipe(s) can be placed in any wall.
7. Set inlet so that grate bars are parallel to direction of principal surface flow.
8. Type G4 inlet can use Grate Type 18 or 24. Type G2 inlet uses Grate Type 24. See Revised Standard Plan RSP D77A and Standard Plan D77B for grate and frame details and weights of miscellaneous Iron and Steel.
9. G4 inlet details are the same as the G2 with the addition of a curb and sloped grate that matches the adjacent curb and gutter depression. See Standard Plans D78A & D78B for gutter and inlet depresssion details. See Revised Standard Plan RSP A87A & Standard Plan A87B for Curb and Dike Details.
10. Provide pre-cast inlets with separate top sections for final grade adjustment under Standard Specifcation Section 51-1.02. Provide keyed joints between the top and wall and multiple wall sections. Joint design may vary but must be 1" to 3" in depth.
11. Perimeter reinforcement serves as a rigid frame to position and attach the required structural reinforcement and may be tack welded at outer corners when using ASTM A706 weldable bars.
12. This dimension will vary with different grates, curbs types, box width and wall thickness.
13. 2" unless inlet is expanded in the Span "A" direction, then clearance is 2" plus the diameter of the lower "A" bar.
14. Place "A" Bars at an angle so hooked ends will maintain 2" clear coverage.
15. Refer to Standard Plan D73, Table A for concrete quantities.
16. Non-shrink grout can be used for upper most joint to facilitate final top grade adjustment.
17. Slope inlet floors 4:1 towards the outlet pipe. Pre-cast inlets may have monolithic sloped floors, flat floors, or no floors in which case a sloped floor must be cast in the field. Inlet floors do not require reinforcing.
18. Extend sand bedding under all structure backfill.

TOP REINFORCEMENT CHART

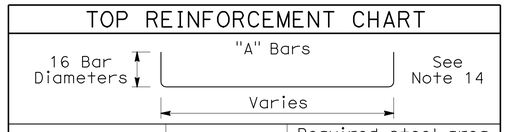

Span	"A" Bars	Required steel area per foot (in^2/ft)
Under 38" with Type 24 Grate	#5 @ 7" C-C 2-#5 Min	0.525
Under 38" with Type 18 Grate	#5 @ 7" C-C 3-#5 Min	0.525
38"-60"	#5 @ 6" C-C	0.621
61"-72"	#5 @ 5" C-C	0.744
73"-90"	#6 @ 6" C-C	0.811

STATE OF CALIFORNIA
DEPARTMENT OF TRANSPORTATION

DRAINAGE INLETS (PRECAST)

NO SCALE

NSP D73A DATED JUNE 5, 2009 SUPPLEMENTS THE STANDARD PLANS BOOK DATED MAY 2006.

NEW STANDARD PLAN NSP D73A

2006 NEW STANDARD PLAN NSP D73A

3-16-09

DIST	COUNTY	ROUTE	POST MILES TOTAL PROJECT	SHEET NO.	TOTAL SHEETS
02	Plu	70	17.2/17.5	34	42

REGISTERED CIVIL ENGINEER

June 15, 2007
PLANS APPROVAL DATE

REGISTERED PROFESSIONAL ENGINEER Glenn DeCou No. C34547 Exp. 9-30-07 CIVIL STATE OF CALIFORNIA

The State of California or its officers or agents shall not be responsible for the accuracy or completeness of electronic copies of this plan sheet.

To accompany plans dated 8-2-10

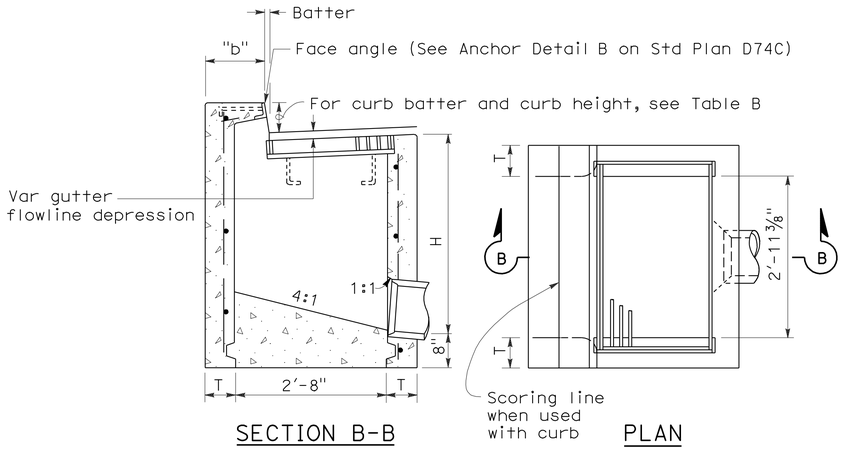

SECTION B-B PLAN

TYPE GO

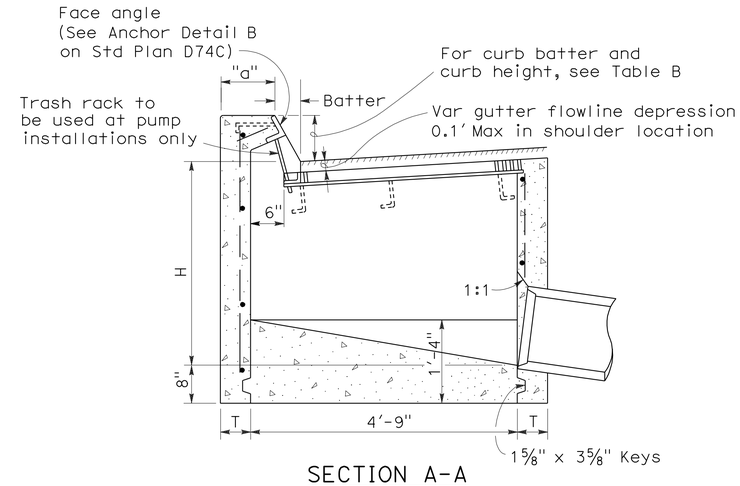

SECTION A-A

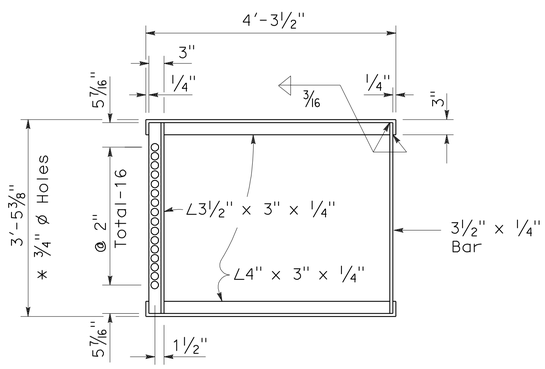

* 3/4" ø Holes required only with trash rack

GRATE FRAME FOR TYPE GDO INLET

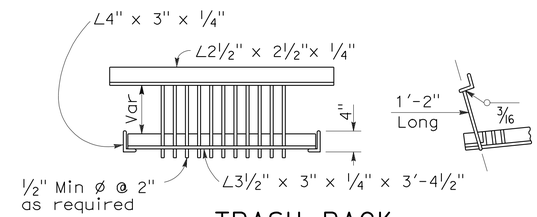

TRASH RACK

(For use with pump installation)

TABLE A

CONCRETE QUANTITIES				
	H=3'-0" TO 8'-0" (T=6")		H=8'-1" TO 20'-0" (T=8")	
TYPE	H=3'-0" (CY)	ADDITIONAL PCC PER FOOT (CY)	H=8'-1" (CY)	ADDITIONAL PCC PER FOOT (CY)
GO	1.24	0.245	3.39	0.346
GDO	1.62	0.322	4.36	0.446

Table based on 8" floor slab, no deduction for pipe openings, and curb type giving highest quantity of concrete. No deductions or adjustments are to be made to these quantities because of pipe openings, different floor alternatives or different curb type.

TABLE B

CURB TYPE	NORMAL CURB HEIGHT	CURB BATTER	"a" DIMENSION	"b" DIMENSION
A1-6	6"	1 1/2"	T+7 1/2"	T+6 1/2"
A1-8	8"	2"	T+7"	T+6"
B1-6	6"	4"	T+5"	T+4"
Type A Dike	6"	3"	T+6"	T+5"

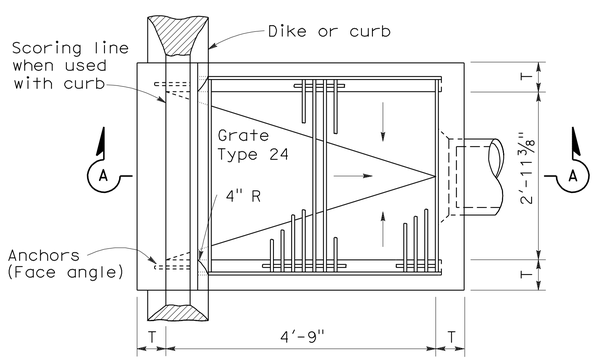

PLAN

TYPE GDO

NOTES:

1. "H" is the difference in elevation between the outlet pipe flow line and the normal gutter grade line undepressed.
2. For "T" wall thickness, see Table A below.
3. Wall reinforcing not required when "H" is 8'-0" or less and the unsupported width or length is 7'-0" or less. Walls exceeding these limits shall be reinforced with #4 @ 18"± centers placed 1 1/2" clear to inside of box unless otherwise shown.
4. Inlet bottom reinforcing not required. See Standard Plan D74C for alternative reinforced bottom.
5. Steps - None required where "H" is less than 2'-6" Where "H" is 2'-6" or more, install steps with lowest rung 1'-0" above the floor and highest rung not more than 6" below top of inlet. The distance between steps shall not exceed 1'-0" and shall be uniform throughout the length of the wall. Place steps in the wall without an opening. Step inserts may be substituted for the bar steps. Step Inserts shall comply with State Industrial Safety requirements. See Standard Plan D74C for step details.
6. When shown on the project plans, place a 3/4" plain round protection bar horizontally across the length of the opening and bend back 4" into the inlet wall on each side.
7. Pipe(s) can be placed in any wall.
8. Curb section shall match adjacent curb.
9. Basin floors shall have wood trowel finish and shall slope toward the outlet pipe as shown.
10. Galvanizing - See Standard Specifications or Special Provisions.
11. See Standard Plan D77A and D77B for grate and frame details and weights of miscellaneous iron and Steel.
12. See Standard Plan D78A for gutter depression details.
13. Full penetration butt welds may be substituted for the fillet welds on all anchors.
14. Standard square, hexagon, round or equivalent headed anchors may be substituted for the right angle hooks on the anchors shown on this plan.
15. Cast-in-place or precast alternative is optional with contractor. See Standard Specifications.
16. Cast-in-place inlets to be formed around all pipes/stubs intersecing the inlet and concrete poured in one continuous operation. Precast inlets shall have mortared pipe connections conforming to details for Type GCP inlets on Standard Plan D75B. See Standard Specifications for mortar composition.

STATE OF CALIFORNIA
DEPARTMENT OF TRANSPORTATION

DRAINAGE INLETS

NO SCALE

RSP D74B DATED JUNE 15, 2007 SUPERSEDES STANDARD PLAN D74B DATED MAY 1, 2006 - PAGE 150 OF THE STANDARD PLANS BOOK DATED MAY 2006.

REVISED STANDARD PLAN RSP D74B

2006 REVISED STANDARD PLAN RSP D74B

4-16-07

DIST	COUNTY	ROUTE	POST MILES TOTAL PROJECT	SHEET NO.	TOTAL SHEETS
02	Plu	70	17.2/17.5	35	42

LICENSED LANDSCAPE ARCHITECT

April 3, 2009
PLANS APPROVAL DATE

The State of California or its officers or agents shall not be responsible for the accuracy or completeness of electronic copies of this plan sheet.

LICENSED LANDSCAPE ARCHITECT
Gregory A. Balzer 3878
Gregory A. Balzer
Signature
02-28-11
Renewal Date
03-04-09
Date
STATE OF CALIFORNIA

To accompany plans dated 8-2-10

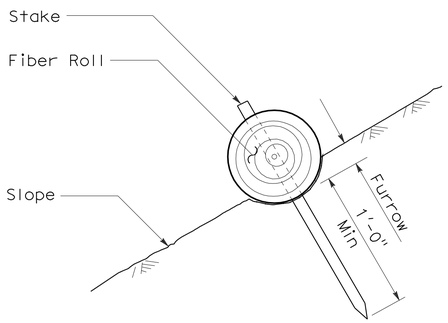

SECTION

FIBER ROLL
(TYPE 1)

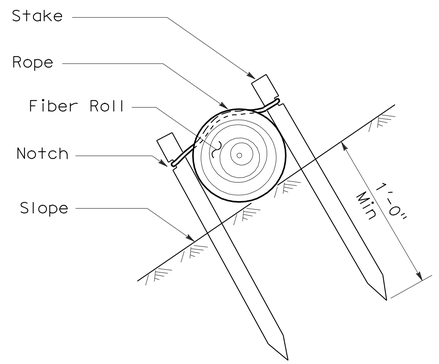

SECTION

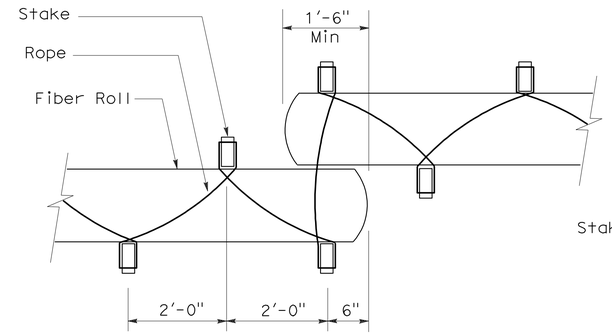

PLAN

FIBER ROLL
(TYPE 2)

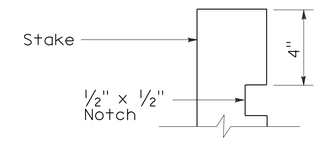

ELEVATION

STAKE NOTCH DETAIL

NOTES:

1. Fiber roll spacing varies depending upon slope inclination.
2. Installations shown in the perspectives are for slope inclination of 10:1 and steeper.

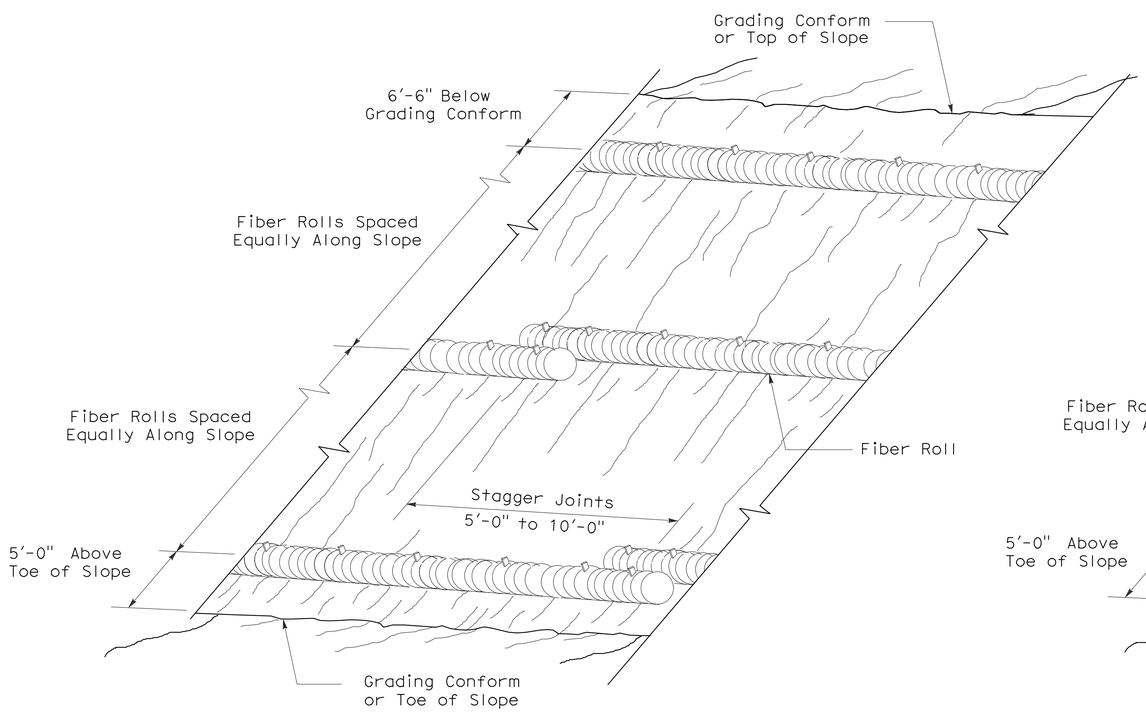

PERSPECTIVE

FIBER ROLL (TYPE 1)

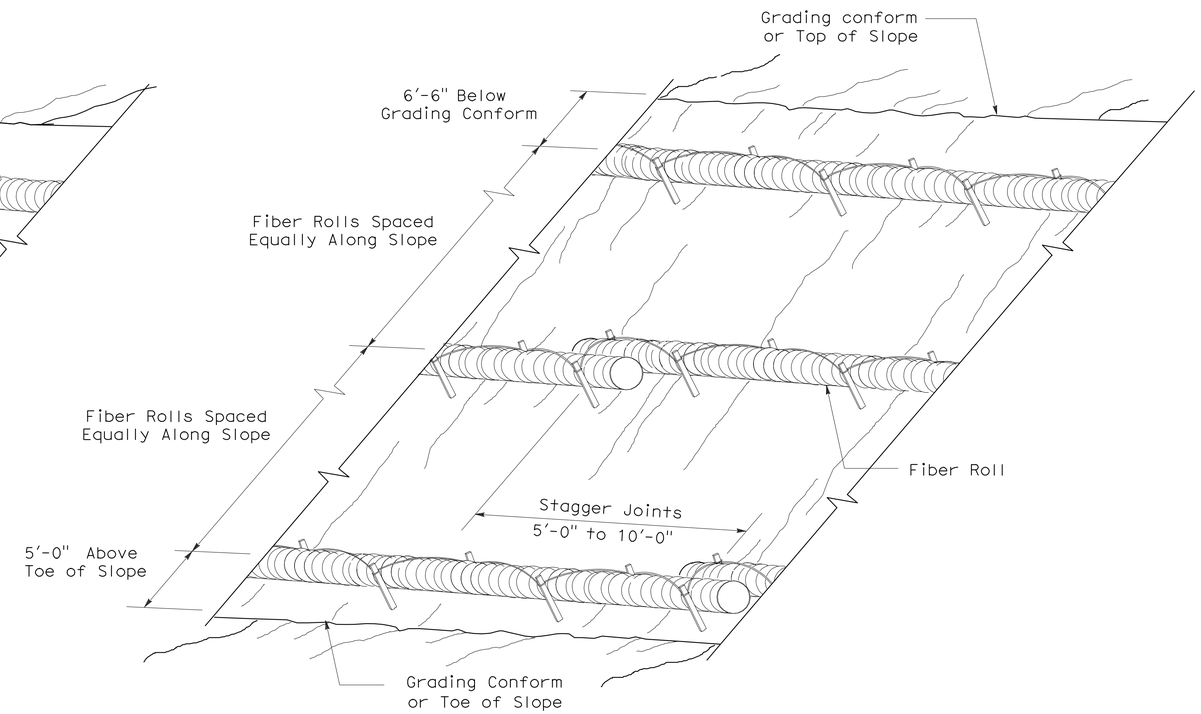

PERSPECTIVE

FIBER ROLL (TYPE 2)

STATE OF CALIFORNIA
DEPARTMENT OF TRANSPORTATION

EROSION CONTROL DETAILS (FIBER ROLL)

NO SCALE

RNSP H51 DATED APRIL 3, 2009 SUPERSEDES NSP H51 DATED DECEMBER 1, 2006 THAT SUPPLEMENTS THE STANDARD PLANS BOOK DATED MAY 2006.

REVISED NEW STANDARD PLAN RNSP H51

2006 REVISED NEW STANDARD PLAN RNSP H51

3-4-09

DIST	COUNTY	ROUTE	POST MILES TOTAL PROJECT	SHEET NO.	TOTAL SHEETS
02	Plu	70	17.2/17.5	36	42

Randell D. Hiatt
REGISTERED CIVIL ENGINEER

June 6, 2008
PLANS APPROVAL DATE

REGISTERED PROFESSIONAL ENGINEER
Randell D. Hiatt
No. C50200
Exp. 6-30-09
CIVIL
STATE OF CALIFORNIA

The State of California or its officers or agents shall not be responsible for the accuracy or completeness of electronic copies of this plan sheet.

To accompany plans dated 8-2-10

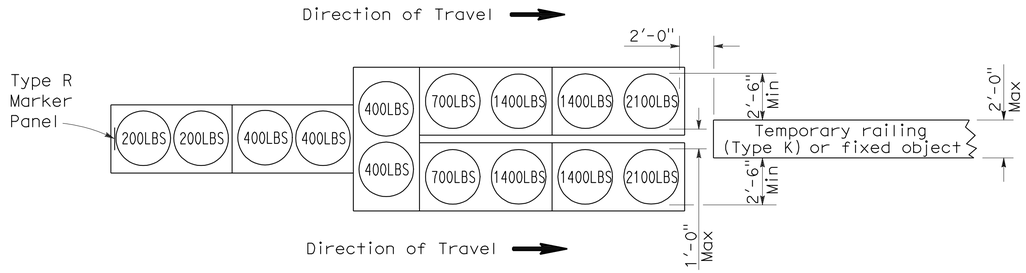

ARRAY 'TU14'

Approach speed 45 mph or more

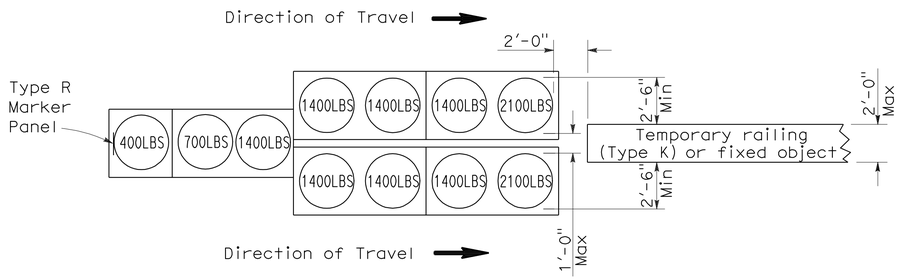

ARRAY 'TU11'

Approach speed less than 45 mph

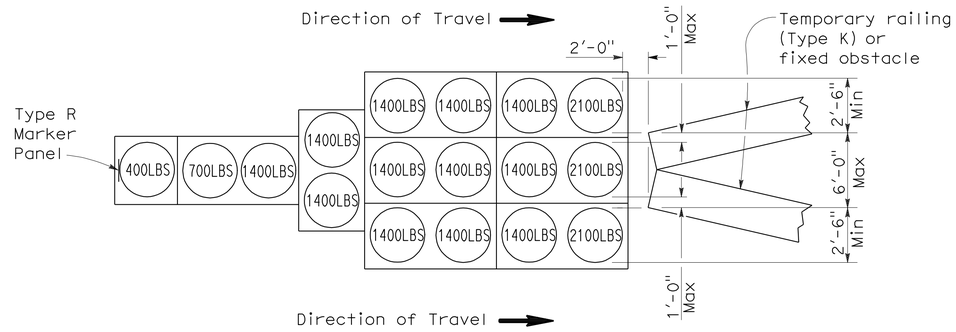

ARRAY 'TU17'

Approach speed less than 45 mph

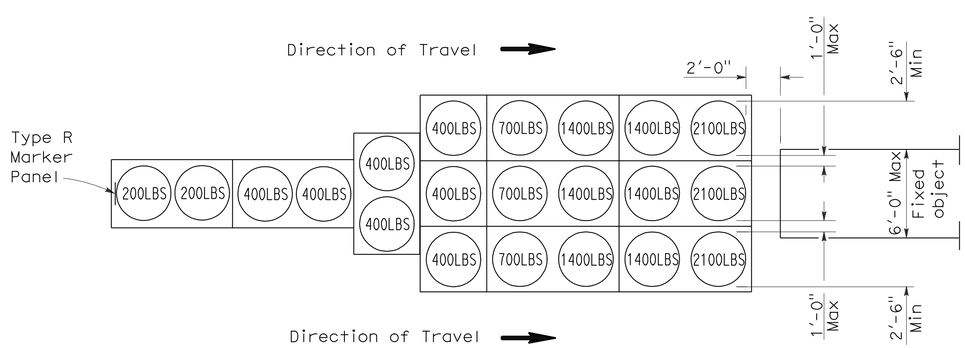

ARRAY 'TU21'

Approach speed 45 mph or more

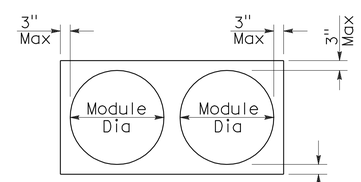

PLAN

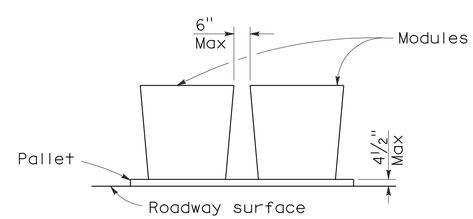

ELEVATION

CRASH CUSHION PALLET DETAIL

See Note 7

NOTES:

1. (XXX) Indicates sand filled module location and weight of sand in pounds for each module. Module spacing is based on the greater diameter of the module.
2. All sand weights are nominal.
3. Temporary crash cushion arrays shall not encroach on the traveled way.
4. Place the top of Type R marker panel 1" below the module lid.
5. Refer to Standard Plan A73B for marker details.
6. Approach speeds indicated conform to NCHRP 350 Report criteria.
7. Use of pallets is optional.

STATE OF CALIFORNIA
DEPARTMENT OF TRANSPORTATION

TEMPORARY CRASH CUSHION, SAND FILLED (UNIDIRECTIONAL)

NO SCALE

RSP T1A DATED JUNE 6, 2008 SUPERSEDES STANDARD PLAN T1A
DATED MAY 1, 2006 - PAGE 211 OF THE STANDARD PLANS BOOK DATED MAY 2006.

REVISED STANDARD PLAN RSP T1A

2006 REVISED STANDARD PLAN RSP T1A

DIST	COUNTY	ROUTE	POST MILES TOTAL PROJECT	SHEET NO.	TOTAL SHEETS
02	Plu	70	17.2/17.5	37	42

Randell D. Hiatt
REGISTERED CIVIL ENGINEER

June 6, 2008
PLANS APPROVAL DATE

REGISTERED PROFESSIONAL ENGINEER
Randell D. Hiatt
No. C50200
Exp. 6-30-09
CIVIL
STATE OF CALIFORNIA

The State of California or its officers or agents shall not be responsible for the accuracy or completeness of electronic copies of this plan sheet.

To accompany plans dated 8-2-10

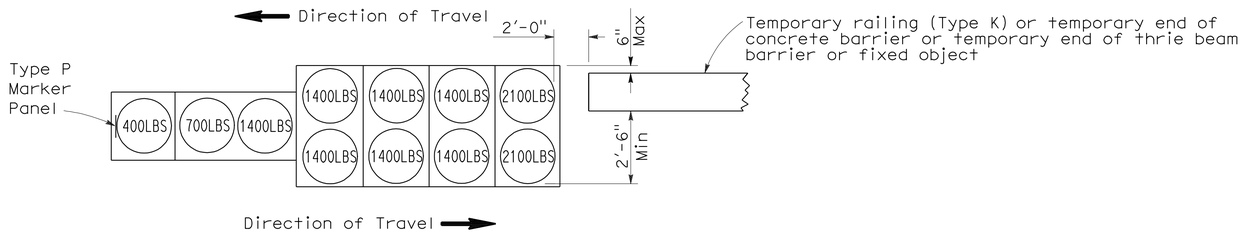

ARRAY 'TB11'

Approach speed less than 45 mph

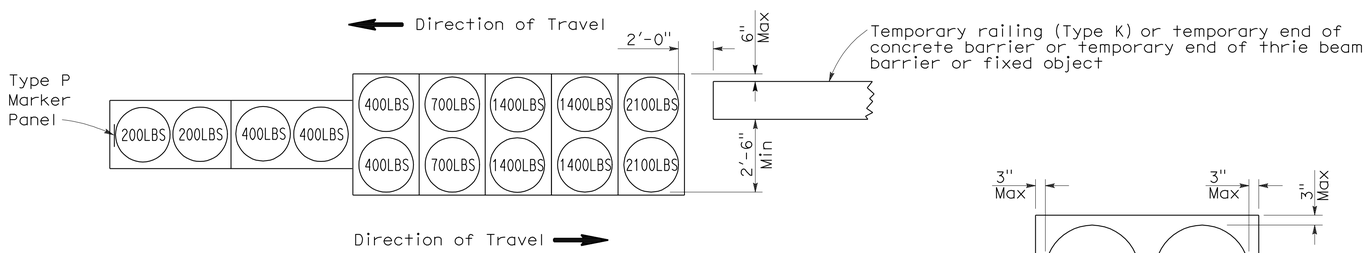

ARRAY 'TB14'

Approach speed 45 mph or more

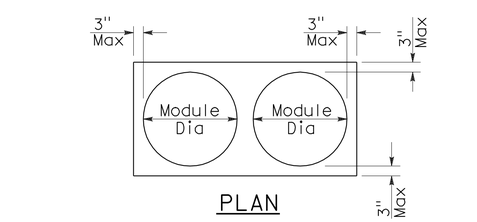

PLAN

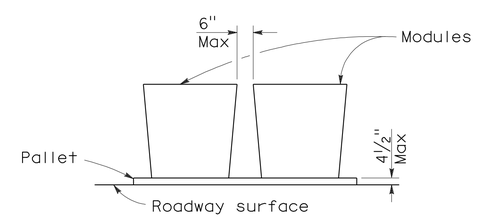

ELEVATION

CRASH CUSHION PALLET DETAIL

See Note 7

NOTES:

1. (XXX) Indicates sand filled module location and weight of sand in pounds for each module. Module spacing is based on the greater diameter of the module.
2. All sand weights are nominal.
3. Temporary crash cushion arrays shall not encroach on the traveled way.
4. Place the Type P marker panel so that the bottom of the panel rests upon the pallet.
5. Refer to Standard Plan A73B for marker details.
6. Approach speeds indicated conform to NCHRP 350 Report criteria.
7. Use of pallets is optional.

STATE OF CALIFORNIA
DEPARTMENT OF TRANSPORTATION

TEMPORARY CRASH CUSHION, SAND FILLED (BIDIRECTIONAL)

NO SCALE

RSP T1B DATED JUNE 6, 2008 SUPERSEDES STANDARD PLAN T1B
DATED MAY 1, 2006 - PAGE 212 OF THE STANDARD PLANS BOOK DATED MAY 2006.

REVISED STANDARD PLAN RSP T1B

2006 REVISED STANDARD PLAN RSP T1B

5-15-08

DIST	COUNTY	ROUTE	POST MILES TOTAL PROJECT	SHEET NO.	TOTAL SHEETS
02	Plu	70	17.2/17.5	38	42

Randell D. Hiatt
REGISTERED CIVIL ENGINEER

June 6, 2008
PLANS APPROVAL DATE

REGISTERED PROFESSIONAL ENGINEER
Randell D. Hiatt
No. C50200
Exp. 6-30-09
CIVIL
STATE OF CALIFORNIA

The State of California or its officers or agents shall not be responsible for the accuracy or completeness of electronic copies of this plan sheet.

To accompany plans dated 8-2-10

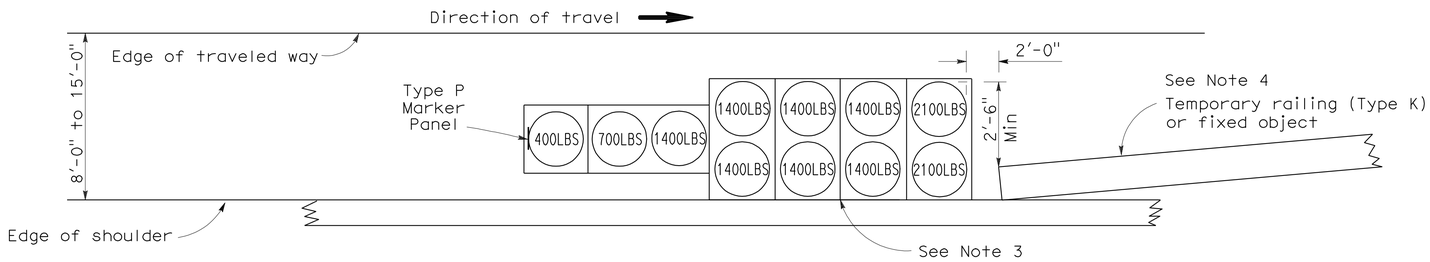

ARRAY 'TS11'

Approach speed less than 45 mph
See Note 9

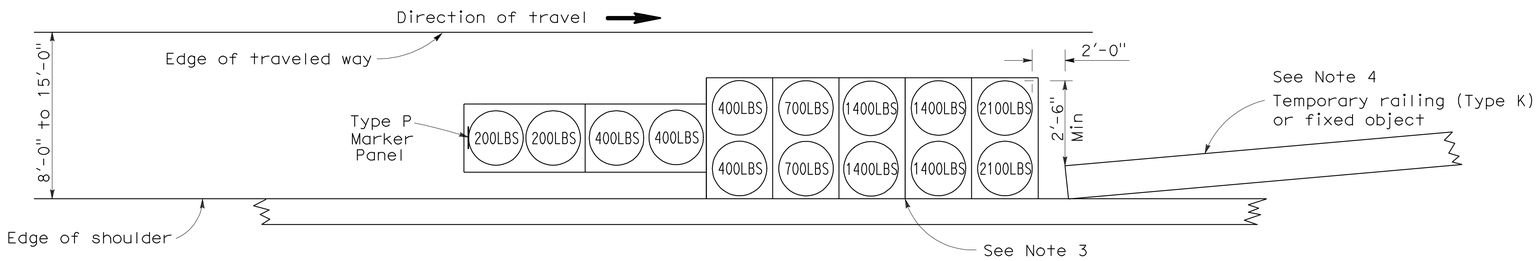

ARRAY 'TS14'

Approach speed 45 mph or more
See Note 9

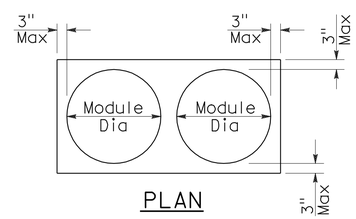

PLAN

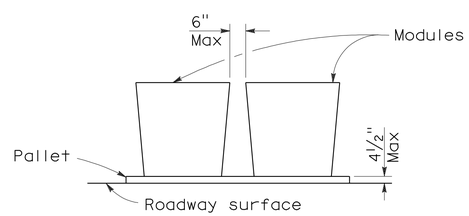

ELEVATION

CRASH CUSHION PALLET DETAIL

See Note 11

NOTES:

1. (XXX) Indicates sand filled module location and weight of sand in pounds for each module. Module spacing is based on the greater diameter of the module.
2. All sand weights are nominal.
3. The temporary crash cushion arrays shown on this plan shall be used only in locations where there will be traffic on one side of the temporary crash cushion array.
4. If the fixed object or approach end of the temporary railing is less than 15'-0" from the edge of traveled way, a temporary crash cushion is required in a construction or work zone.
5. Temporary crash cushion arrays shall not encroach on the traveled way.
6. Arrays for median shoulders shall conform to details shown on this plan for outside shoulders.
7. Place the Type P marker panel so that the bottom of the panel rests upon the pallet and faces traffic.
8. Refer to Standard Plan A73B for marker details.
9. For shoulder widths less than 8'-0", appropriate approved crash cushion protection, other than sand filled modules, shall be provided at fixed objects and at approach ends of temporary railing. The specific type of crash cushion shall be as shown on the project plans or as specified in the Special Provisions, or if not shown on the project plans or specified in the Special Provisions, shall be as approved by the Engineer.
10. Approach speeds indicated conform to NCHRP 350 Report criteria.
11. Use of pallets is optional.

STATE OF CALIFORNIA
DEPARTMENT OF TRANSPORTATION

TEMPORARY CRASH CUSHION, SAND FILLED (SHOULDER INSTALLATIONS)

NO SCALE

RSP T2 DATED JUNE 6, 2008 SUPERSEDES STANDARD PLAN T2
DATED MAY 1, 2006 - PAGE 213 OF THE STANDARD PLANS BOOK DATED MAY 2006.

REVISED STANDARD PLAN RSP T2

2006 REVISED STANDARD PLAN RSP T2

DIST	COUNTY	ROUTE	POST MILES TOTAL PROJECT	SHEET NO.	TOTAL SHEETS
02	Plu	70	17.2/17.5	39	42

Robert B Schott
LICENSED LANDSCAPE ARCHITECT

August 15, 2008
PLANS Approval DATE

LICENSED LANDSCAPE ARCHITECT Robert B. Schott 3625 Signature 11-04-08 Renewal Date 08-11-08 Date STATE OF CALIFORNIA

The State of California or its officers or agents shall not be responsible for the accuracy or completeness of electronic copies of this plan sheet.

To accompany plans dated 8-2-10

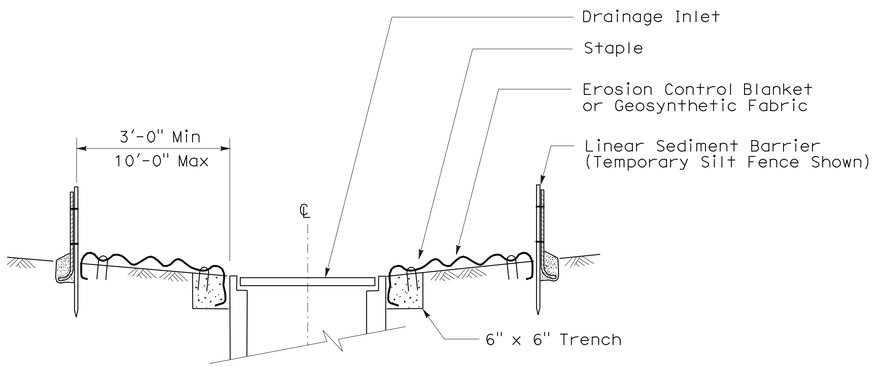

SECTION A-A

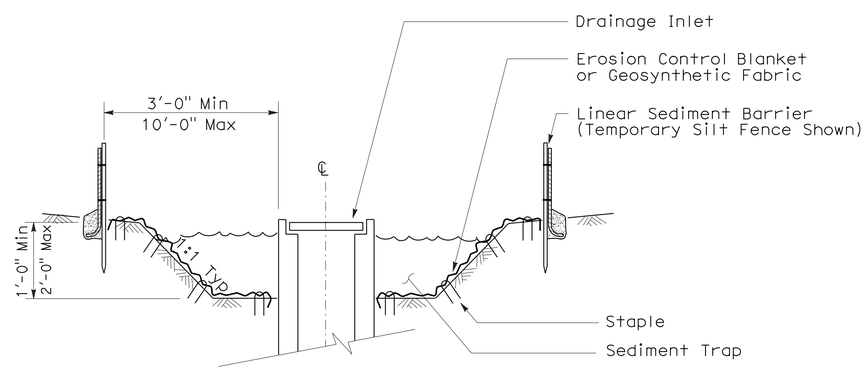

SECTION B-B

NOTES:

1. See Standard Plan T51 for Temporary Silt Fence.
2. Dimensions may vary to fit field conditions.

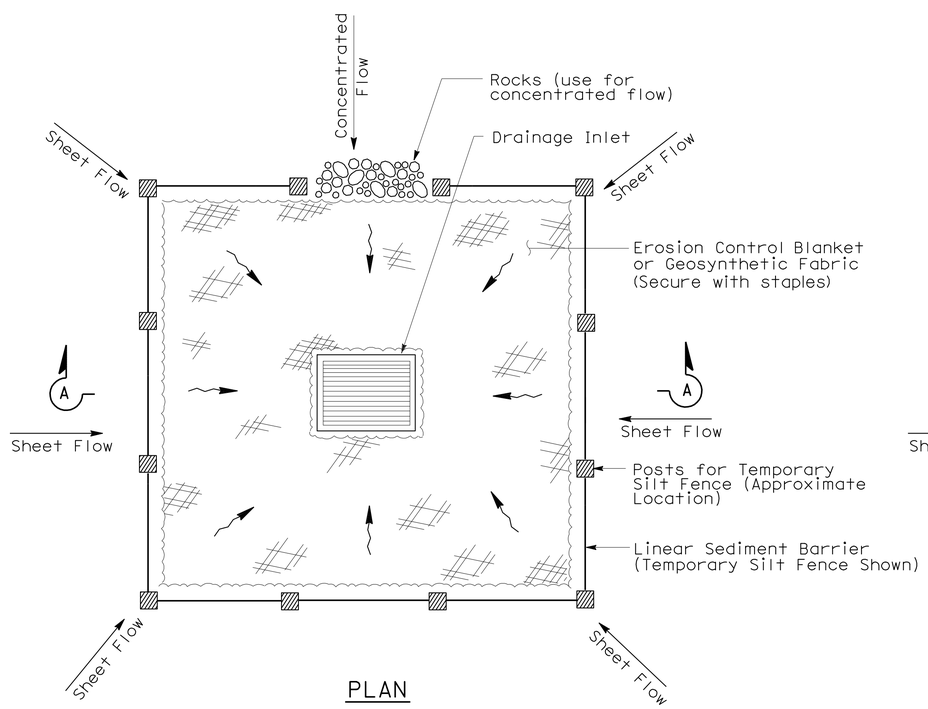

PLAN

TEMPORARY DRAINAGE INLET PROTECTION (TYPE 1)

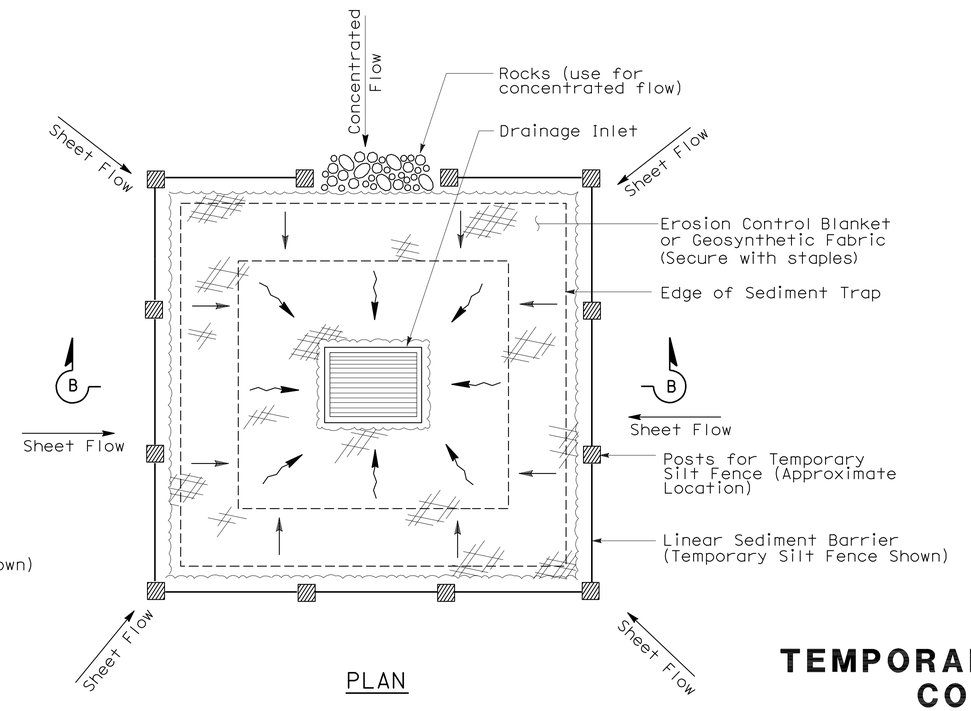

PLAN

TEMPORARY DRAINAGE INLET PROTECTION (TYPE 2) (EXCAVATED SEDIMENT TRAP)

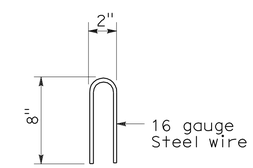

STAPLE DETAIL

STATE OF CALIFORNIA
DEPARTMENT OF TRANSPORTATION

TEMPORARY WATER POLLUTION CONTROL DETAILS (TEMPORARY DRAINAGE INLET PROTECTION)

NO SCALE

NSP T61 DATED AUGUST 15, 2008 SUPPLEMENTS THE STANDARD PLANS BOOK DATED MAY 2006.

NEW STANDARD PLAN NSP T61

2006 NEW STANDARD PLAN NSP T61

7-11-08

DIST	COUNTY	ROUTE	POST MILES TOTAL PROJECT	SHEET NO.	TOTAL SHEETS
02	Plu	70	17.2/17.5	40	42

LICENSED LANDSCAPE ARCHITECT

August 15, 2008
PLANS APPROVAL DATE

LICENSED LANDSCAPE ARCHITECT — Robert B. Schott — Signature — 11-04-08 Renewal Date — 08-11-08 Date — STATE OF CALIFORNIA

The State of California or its officers or agents shall not be responsible for the accuracy or completeness of electronic copies of this plan sheet.

To accompany plans dated 8-2-10

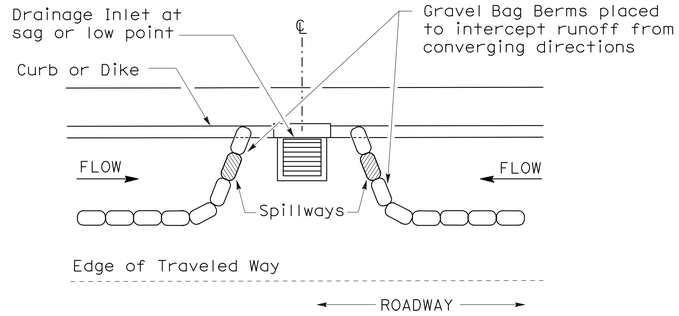

PLAN

CONFIGURATION FOR SAG POINT INLET (GRAVEL BAG BERM)

GRAVEL BAG BERM (TYPE 3A) SPACING TABLE

SLOPE OF ROADWAY (PERCENT)	1 to 3.9	4 to 5.9	6 to 7.9	8 to 10	10+
INTERVAL BETWEEN BERM	100′	75′	50′	25′	12′

For slope of less than 1%, install barriers only if erosion/sediment is prevalent

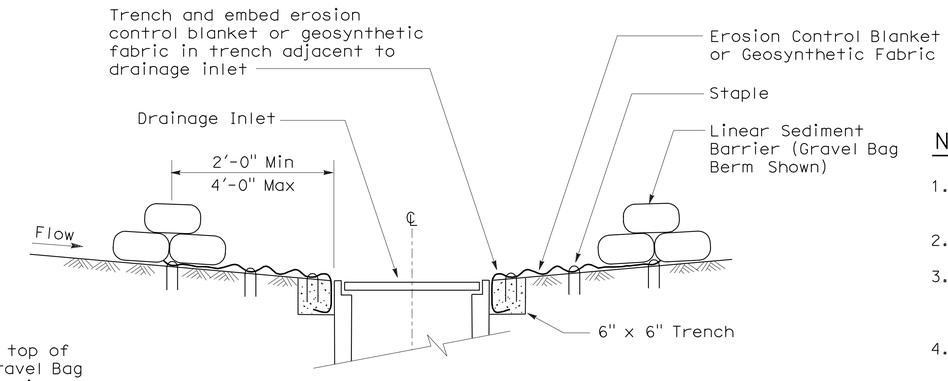

SECTION A-A

NOTES:

1. Place safety cones adjacent to drainage inlet protection.
2. Dimensions may vary to fit field conditions.
3. Install a minimum of 3 gravel bag berms upstream of each drainage inlet to be protected.
4. Position erosion control blanket or geosynthetic fabric at edge of concrete apron and secure in trench.
5. Erosion control blanket or geosynthetic fabric is not required if the area adjacent to the drainage inlet is vegetated or paved.

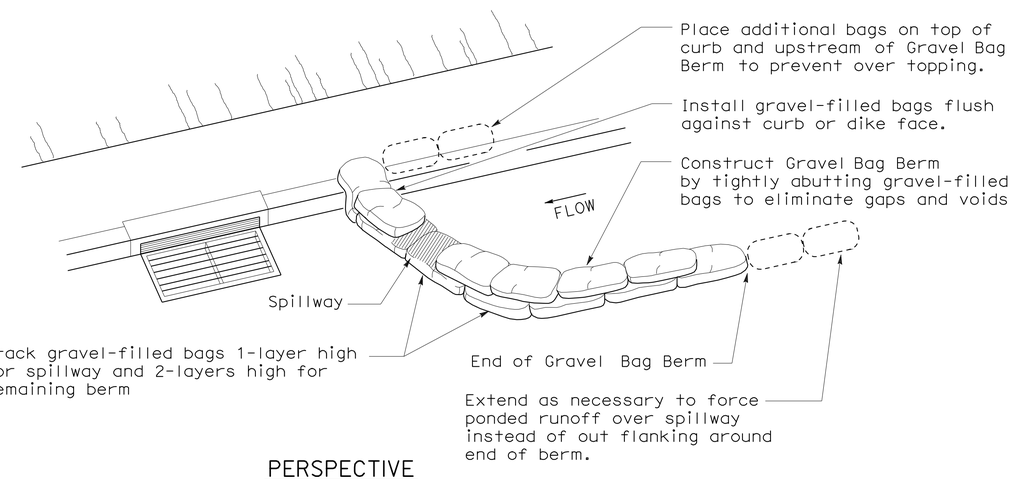

PERSPECTIVE

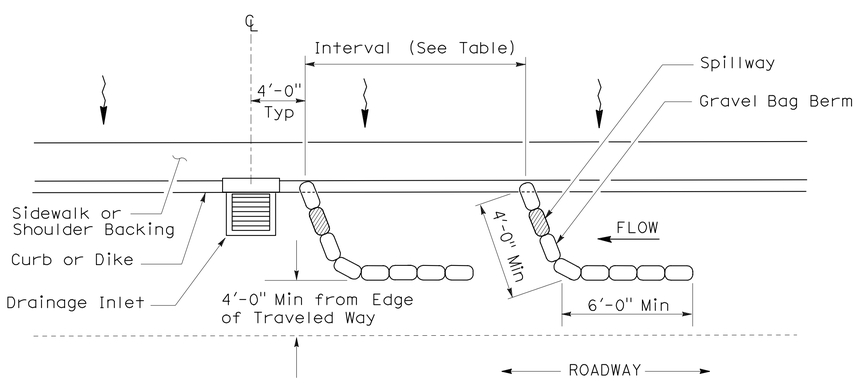

PLAN

TEMPORARY DRAINAGE INLET PROTECTION (TYPE 3A) (GRAVEL BAG BERM)

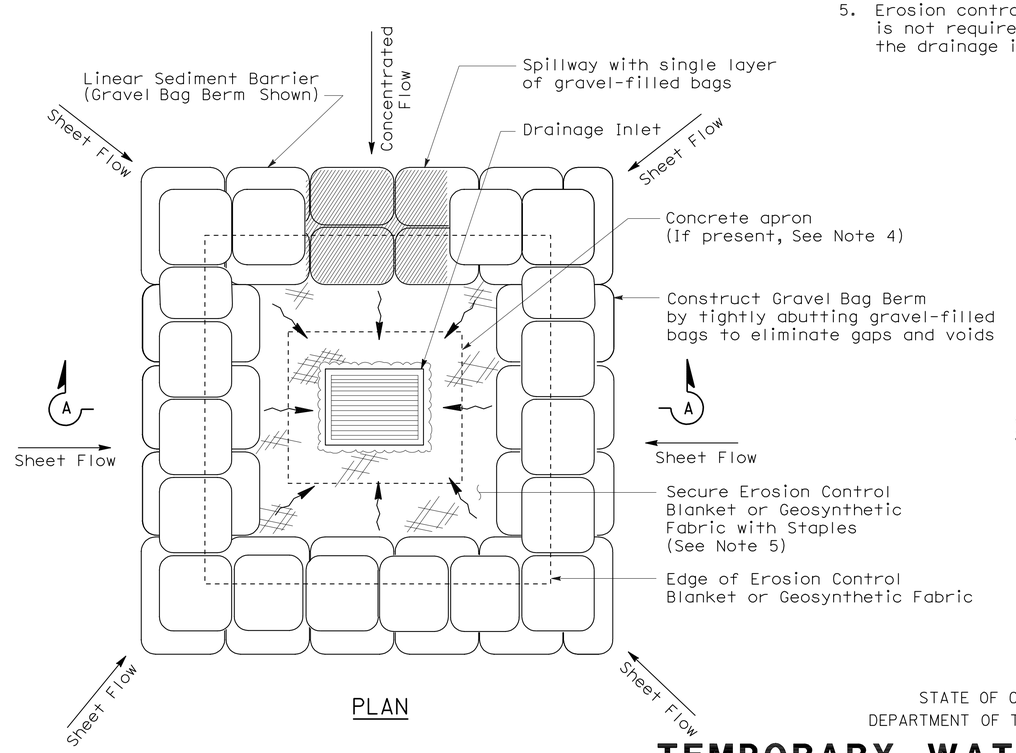

PLAN

TEMPORARY DRAINAGE INLET PROTECTION (TYPE 3B)

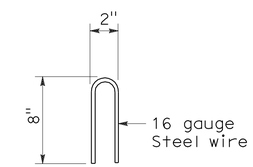

STAPLE DETAIL

STATE OF CALIFORNIA
DEPARTMENT OF TRANSPORTATION

TEMPORARY WATER POLLUTION CONTROL DETAILS (TEMPORARY DRAINAGE INLET PROTECTION)

NO SCALE

NSP T62 DATED AUGUST 15, 2008 SUPPLEMENTS THE STANDARD PLANS BOOK DATED MAY 2006.

NEW STANDARD PLAN NSP T62

2006 NEW STANDARD PLAN NSP T62

7-11-08

DIST	COUNTY	ROUTE	POST MILES TOTAL PROJECT	SHEET NO.	TOTAL SHEETS
02	Plu	70	17.2/17.5	41	42

Robert B Schott
LICENSED LANDSCAPE ARCHITECT

August 15, 2008
PLANS APPROVAL DATE

The State of California or its officers or agents shall not be responsible for the accuracy or completeness of electronic copies of this plan sheet.

LICENSED LANDSCAPE ARCHITECT Robert B. Schott 3625 Signature 11-04-08 Renewal Date 08-11-08 Date STATE OF CALIFORNIA

To accompany plans dated 8-2-10

FLEXIBLE SEDIMENT BARRIER SPACING TABLE

SLOPE OF ROADWAY (PERCENT)	0 to 0.9	1 to 1.9	2 to 2.9	3 to 4	5+
INTERVAL BETWEEN BARRIERS	50′	35′	30′	25′	20′
ANGLE FROM FACE OF CURB	70°	70°	70°	45°	45°
SUGGESTED BARRIER LENGTH	6′	6′	6′	6′	6′

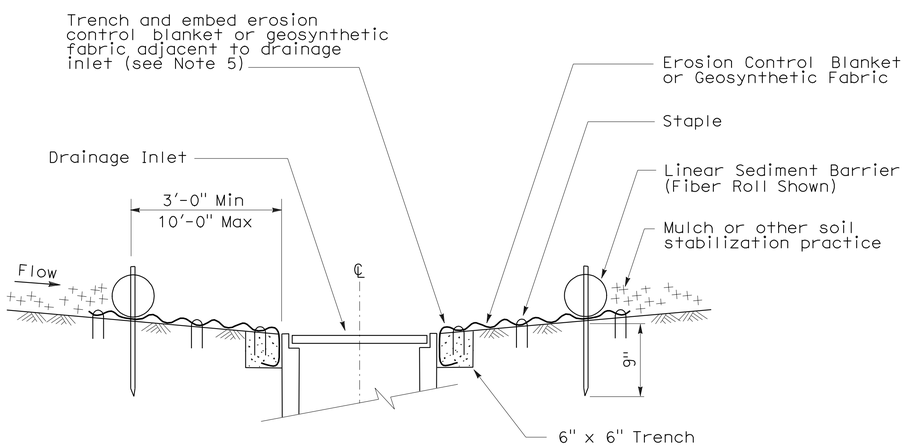

SECTION A-A

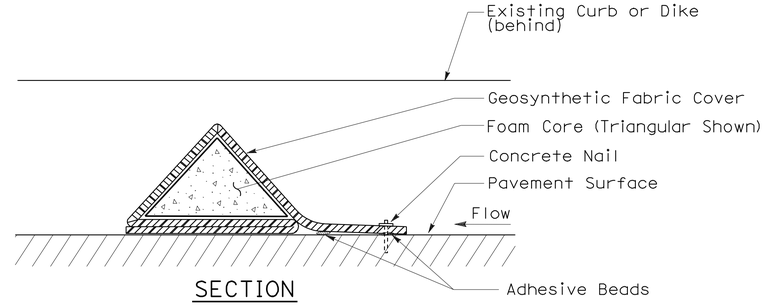

SECTION

FLEXIBLE SEDIMENT BARRIER DETAIL (FOAM BARRIER SHOWN)

NOTES:

1. See Standard Plan T51 for Temporary Silt Fence.
2. Dimensions may vary to fit field conditions.
3. Install a minimum of 3 flexible sediment barriers upstream of each drainage inlet to be protected.
4. Position erosion control blanket or geosynthetic fabric at edge of concrete apron and secure in trench.
5. Erosion control blanket or geosynthetic fabric is not required if the area adjacent to the drainage inlet is vegetated.

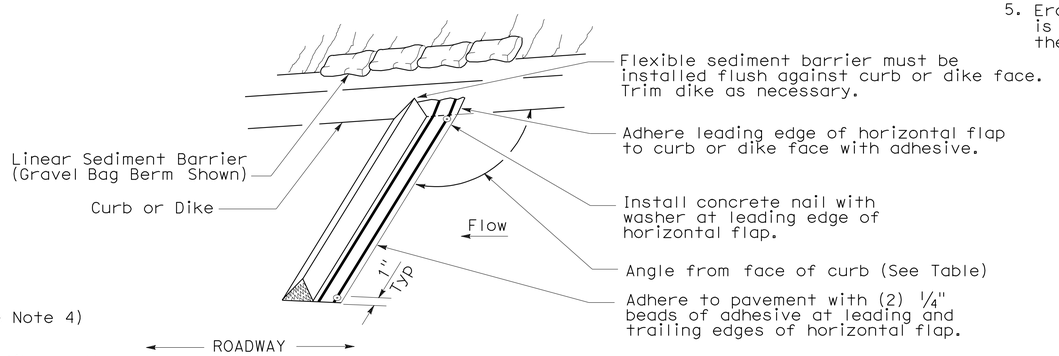

PERSPECTIVE

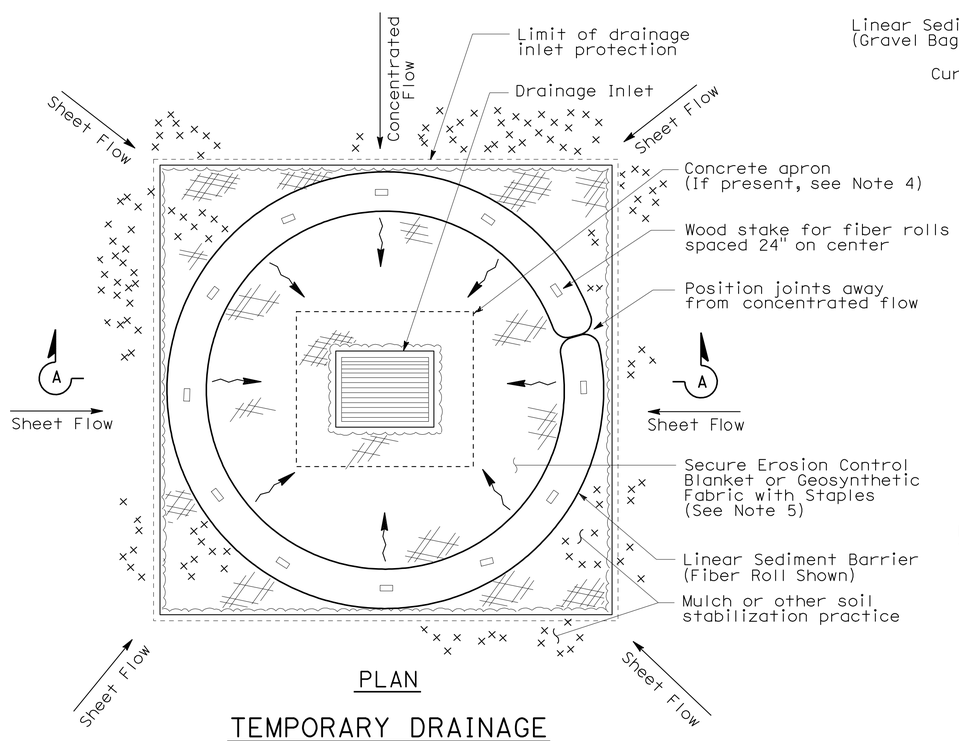

PLAN

TEMPORARY DRAINAGE INLET PROTECTION (TYPE 4A)

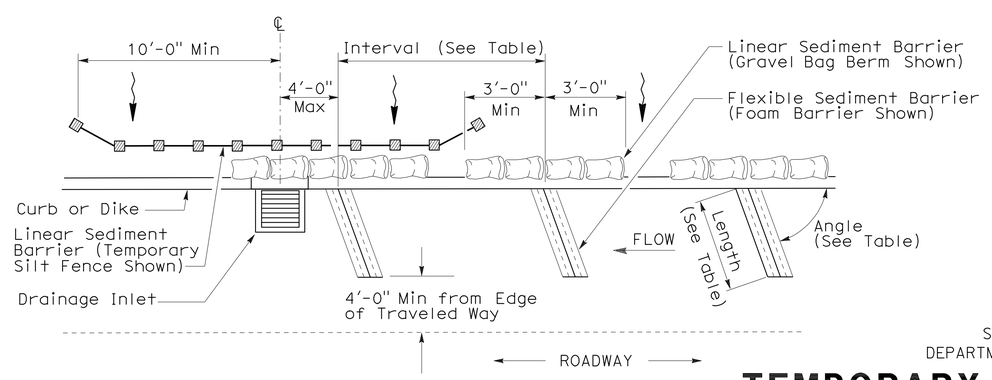

PLAN

TEMPORARY DRAINAGE INLET PROTECTION (TYPE 4B) FLEXIBLE SEDIMENT BARRIER

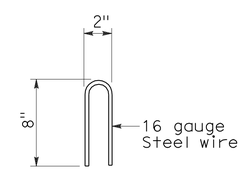

STAPLE DETAIL

STATE OF CALIFORNIA
DEPARTMENT OF TRANSPORTATION

TEMPORARY WATER POLLUTION CONTROL DETAILS (TEMPORARY DRAINAGE INLET PROTECTION)

NO SCALE

NSP T63 DATED AUGUST 15, 2008 SUPPLEMENTS THE STANDARD PLANS BOOK DATED MAY 2006.

NEW STANDARD PLAN NSP T63

2006 NEW STANDARD PLAN NSP T63

7-11-08

DIST	COUNTY	ROUTE	POST MILES TOTAL PROJECT	SHEET NO.	TOTAL SHEETS
02	Plu	70	17.2/17.5	42	42

Robert B Schott
LICENSED LANDSCAPE ARCHITECT

August 15, 2008
PLANS APPROVAL DATE

LICENSED LANDSCAPE ARCHITECT
Robert B. Schott 3625
Signature
11-04-08
Renewal Date
08-11-08
Date
STATE OF CALIFORNIA

The State of California or its officers or agents shall not be responsible for the accuracy or completeness of electronic copies of this plan sheet.

To accompany plans dated 8-2-10

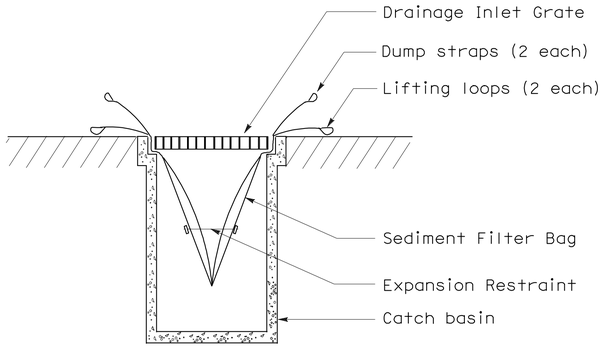

SECTION B-B

SEDIMENT FILTER BAG DETAIL

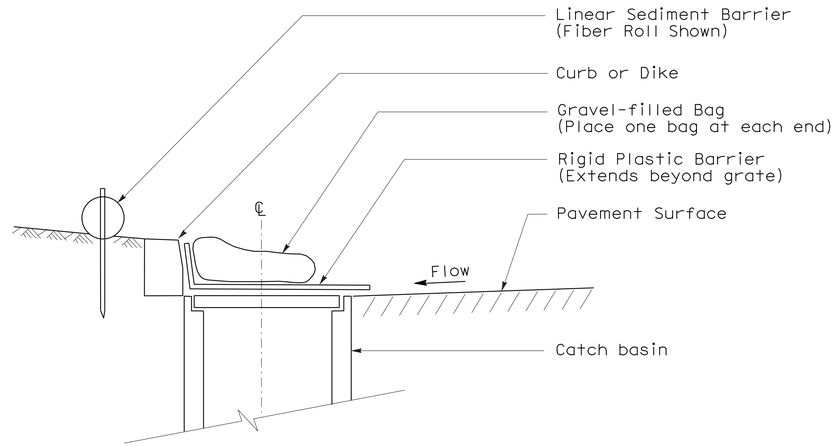

SECTION

TEMPORARY DRAINAGE INLET PROTECTION (TYPE 6A) (CATCH BASIN WITH GRATE)

NOTES:

1. See Standard Plan T51 for Temporary Silt Fence.
2. Dimensions may vary to fit field conditions.

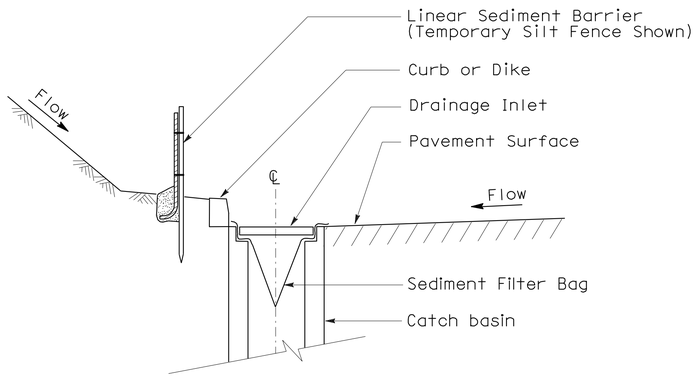

SECTION A-A

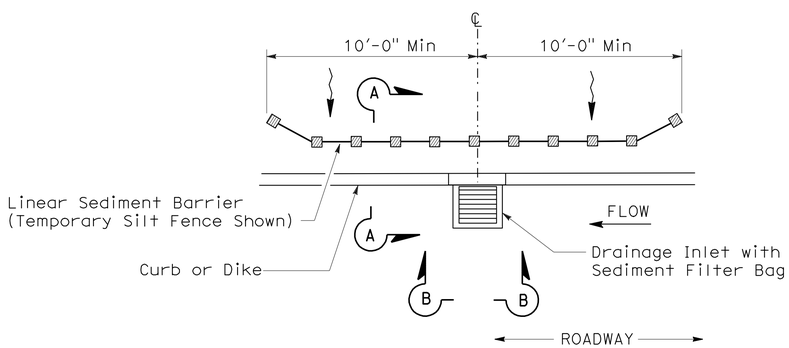

PLAN

TEMPORARY DRAINAGE INLET PROTECTION (TYPE 5) (SEDIMENT FILTER BAG)

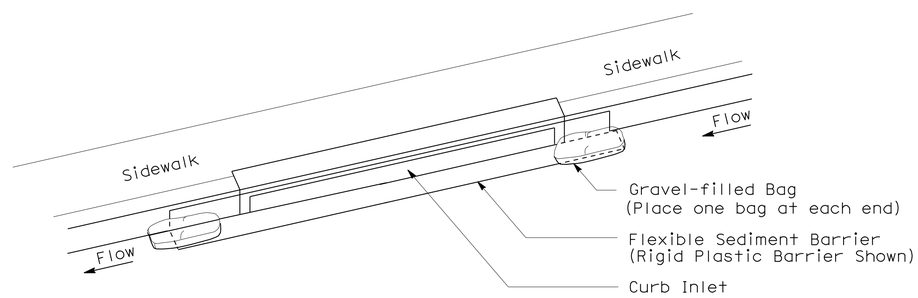

PERSPECTIVE

TEMPORARY DRAINAGE INLET PROTECTION (TYPE 6B) (CURB INLET WITHOUT GRATE)

STATE OF CALIFORNIA
DEPARTMENT OF TRANSPORTATION

TEMPORARY WATER POLLUTION CONTROL DETAILS (TEMPORARY DRAINAGE INLET PROTECTION)

NO SCALE

NSP T64 DATED AUGUST 15, 2008 SUPPLEMENTS
THE STANDARD PLANS BOOK DATED MAY 2006.

NEW STANDARD PLAN NSP T64

2006 NEW STANDARD PLAN NSP T64