Dist	COUNTY	ROUTE	POST MILES TOTAL PROJECT	SHEET No.	TOTAL SHEETS
02	Tri	3	68.5,70.7	1	93

BRSTP-X033(030)E

STATE OF CALIFORNIA
DEPARTMENT OF TRANSPORTATION

PROJECT PLANS FOR CONSTRUCTION ON
STATE HIGHWAY

IN TRINITY COUNTY
AT TRINITY RIVER BRIDGE
AND AT MINNEHAHA CREEK BRIDGE

TO BE SUPPLEMENTED BY STANDARD PLANS DATED MAY 2006

INDEX OF SHEETS

SHEET No.	DESCRIPTION
1	TITLE AND LOCATION MAP
2	TYPICAL CROSS SECTIONS
3-4	LAYOUTS
5-7	CONSTRUCTION DETAILS
8-13	EROSION CONTROL PLANS, DETAILS AND QUANTITIES
14	DRAINAGE PLAN, PROFILE AND QUANTITIES
15	UTILITY PLAN
16	CONSTRUCTION AREA SIGNS
17-18	STAGE CONSTRUCTION PLANS
19	PAVEMENT DELINEATION PLAN AND QUANTITIES
20	SUMMARY OF QUANTITIES
21-22	ELECTRICAL PLANS
23-50	REVISED AND NEW STANDARD PLANS

STRUCTURE PLANS

51-75	TRINITY RIVER BRIDGE (SCOUR RETROFIT) Br No. 05-0028
76-93	MINNEHAHA CREEK BRIDGE (REPLACE) Br No. 05-0048

THE STANDARD PLANS LIST APPLICABLE TO THIS CONTRACT IS INCLUDED IN THE NOTICE TO BIDDERS AND SPECIAL PROVISIONS BOOK.

LOCATION MAP

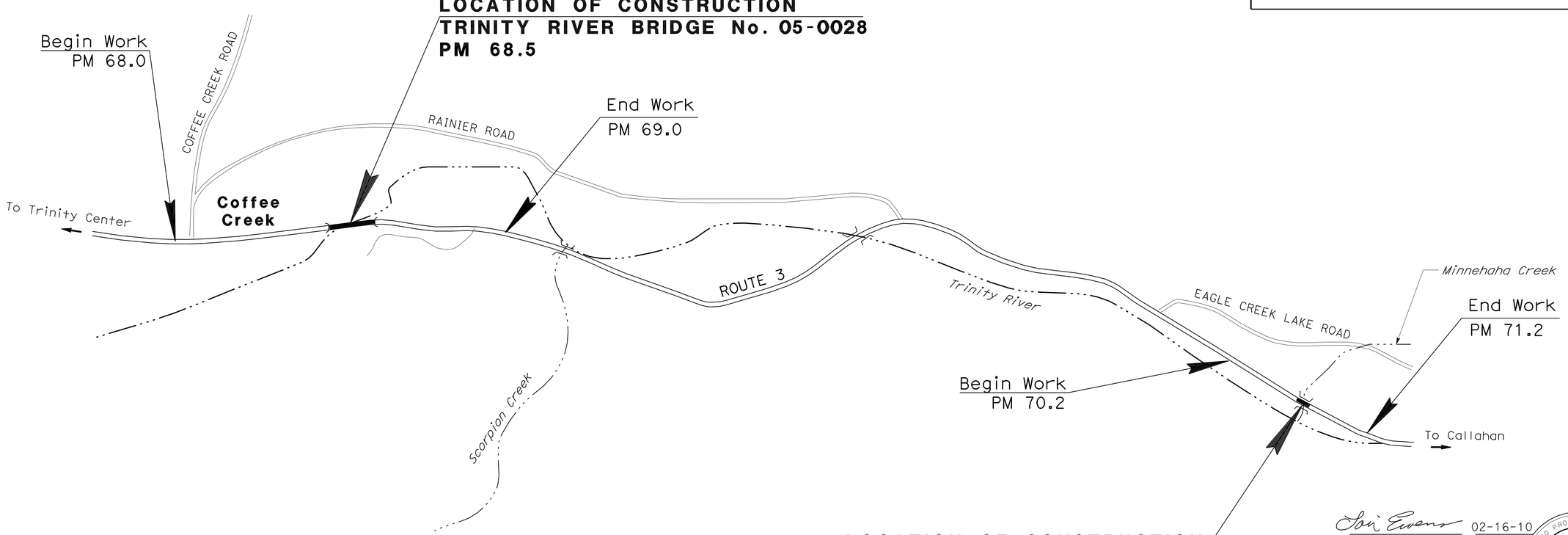

Lori Ewens 02-16-10
PROJECT ENGINEER DATE
REGISTERED CIVIL ENGINEER

REGISTERED PROFESSIONAL ENGINEER
LORI EWENS
No. C43919
Exp. 6-30-11
CIVIL
STATE OF CALIFORNIA

August 23, 2010
PLANS APPROVAL DATE

THE STATE OF CALIFORNIA OR ITS OFFICERS OR AGENTS SHALL NOT BE RESPONSIBLE FOR THE ACCURACY OR COMPLETENESS OF SCANNED COPIES OF THIS PLAN SHEET.

THE CONTRACTOR SHALL POSSESS THE CLASS (OR CLASSES) OF LICENSE AS SPECIFIED IN THE "NOTICE TO BIDDERS."

NO SCALE

CONTRACT No.	02-2C9904
PROJECT ID	0200000186

PROJECT MANAGER: STEVE ROGERS
DESIGN ENGINEER: ROB BURNETT

P:\proj2\02\2c990\pse\22c990ab001.dgn

LAST REVISION 02-16-10
DATE PLOTTED => 07-DEC-2010
TIME PLOTTED => 11:17

Dist	COUNTY	ROUTE	POST MILES TOTAL PROJECT	SHEET No.	TOTAL SHEETS
02	Tri	3	68.5,70.7	2	93

Lori Ewens 02-16-10
REGISTERED CIVIL ENGINEER DATE

8-23-10
PLANS APPROVAL DATE

REGISTERED PROFESSIONAL ENGINEER
LORI EWENS
No. C43919
Exp. 6-30-11
CIVIL
STATE OF CALIFORNIA

THE STATE OF CALIFORNIA OR ITS OFFICERS OR AGENTS SHALL NOT BE RESPONSIBLE FOR THE ACCURACY OR COMPLETENESS OF ELECTRONIC COPIES OF THIS PLAN SHEET.

NOTES:

1. DIMENSIONS OF THE PAVEMENT STRUCTURES (STRUCTURAL SECTIONS) ARE SUBJECT TO TOLERANCES SPECIFIED IN THE STANDARD SPECIFICATIONS.
2. SUPERELEVATIONS AS SHOWN OR AS DETERMINED BY THE ENGINEER.
3. FOR MBGR DETAILS SEE LAYOUT SHEETS.
4. MATCH EXISTING PROFILE GRADE.

DESIGN DESIGNATION

2004 ADT	2010 ADT	2030 DHV	TRUCKS
120	200	120	65%

DESIGN SPEED = 55 mph

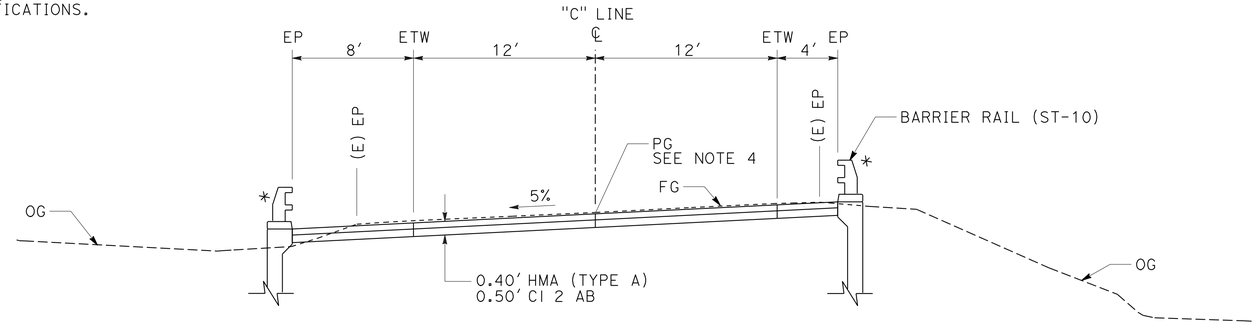

"C" 357+64 TO BEGIN BRIDGE
END BRIDGE TO "C" 358+52

LEGEND

* FOR LOCATION OF WINGWALLS AND BARRIER RAIL (ST-10) SEE Str PLANS

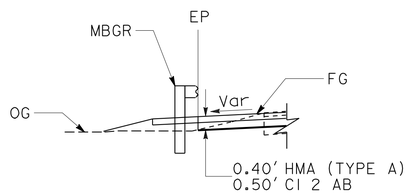

MBGR

"C" 356+53, 24′ Lt TO 357+65, 20′ Lt AND
"C" 358+45, 20′ Lt TO 359+13, 23′ Lt

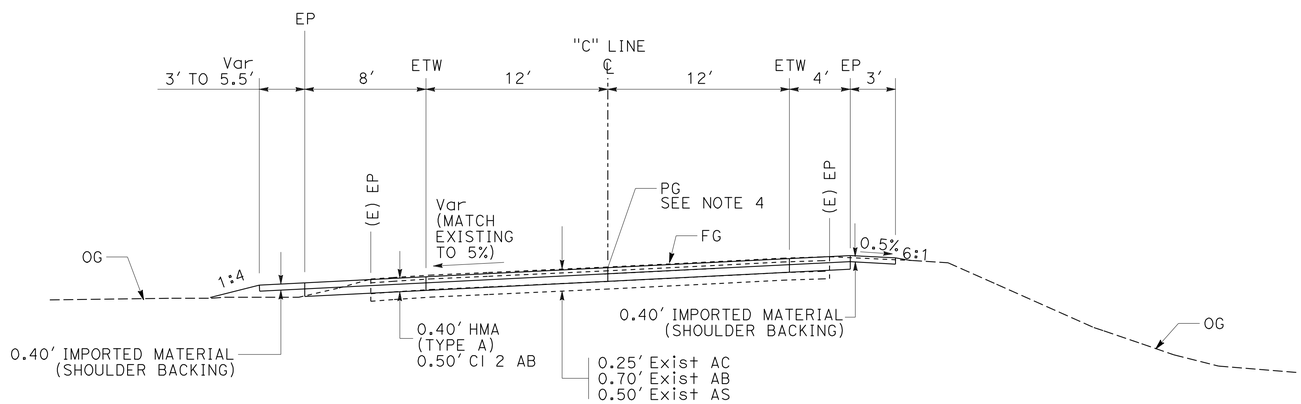

"C" 357+32 TO 357+64
"C" 358+52 TO 358+84

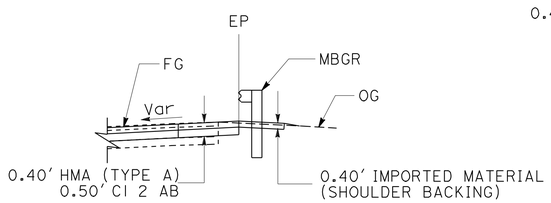

MBGR

"C" 356+60, 24′Rt TO 357+72, 16′ Rt AND
"C" 358+52, 16′ Rt TO 359+64, 23′ Rt

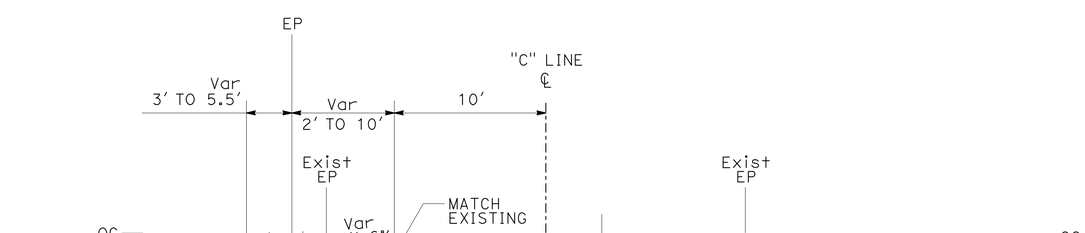

ROUTE 3
"C" 356+44 TO 357+31.9
"C" 358+84 TO 360+00

LOCATION 2
TYPICAL CROSS SECTIONS
NO SCALE

X-1

REVISED BY	DATE REVISED

CALCULATED-DESIGNED BY	CHECKED BY
LORIE EWENS	BRIAN STEINER

FUNCTIONAL SUPERVISOR: ROB BURNETT

STATE OF CALIFORNIA - DEPARTMENT OF TRANSPORTATION
Caltrans **DESIGN**

P:\proj2\02\2c990\pse\22c990ca001.dgn

LAST REVISION 12-15-09 | DATE PLOTTED => 26-AUG-2010 | TIME PLOTTED => 13:08

Dist	COUNTY	ROUTE	POST MILES TOTAL PROJECT	SHEET No.	TOTAL SHEETS
02	Tri	3	68.5,70.7	3	93

Lori Evens 02-16-10
REGISTERED CIVIL ENGINEER DATE

8-23-10
PLANS APPROVAL DATE

REGISTERED PROFESSIONAL ENGINEER
LORI EWENS
No. C43919
Exp. 6-30-11
CIVIL
STATE OF CALIFORNIA

THE STATE OF CALIFORNIA OR ITS OFFICERS OR AGENTS SHALL NOT BE RESPONSIBLE FOR THE ACCURACY OR COMPLETENESS OF ELECTRONIC COPIES OF THIS PLAN SHEET.

NOTES:

1. FOR COMPLETE RIGHT OF WAY, SEE RIGHT OF WAY RECORD MAPS AT THE DISTRICT OFFICE.
2. DURING CONSTRUCTION, CONTRACTOR WILL PROTECT-IN-PLACE FIBER OPTIC CABLES.

LEGEND

FLOW DIRECTION

BENCHMARK

ABBREVIATIONS

TCE TEMPORARY CONSTRUCTION EASEMENT

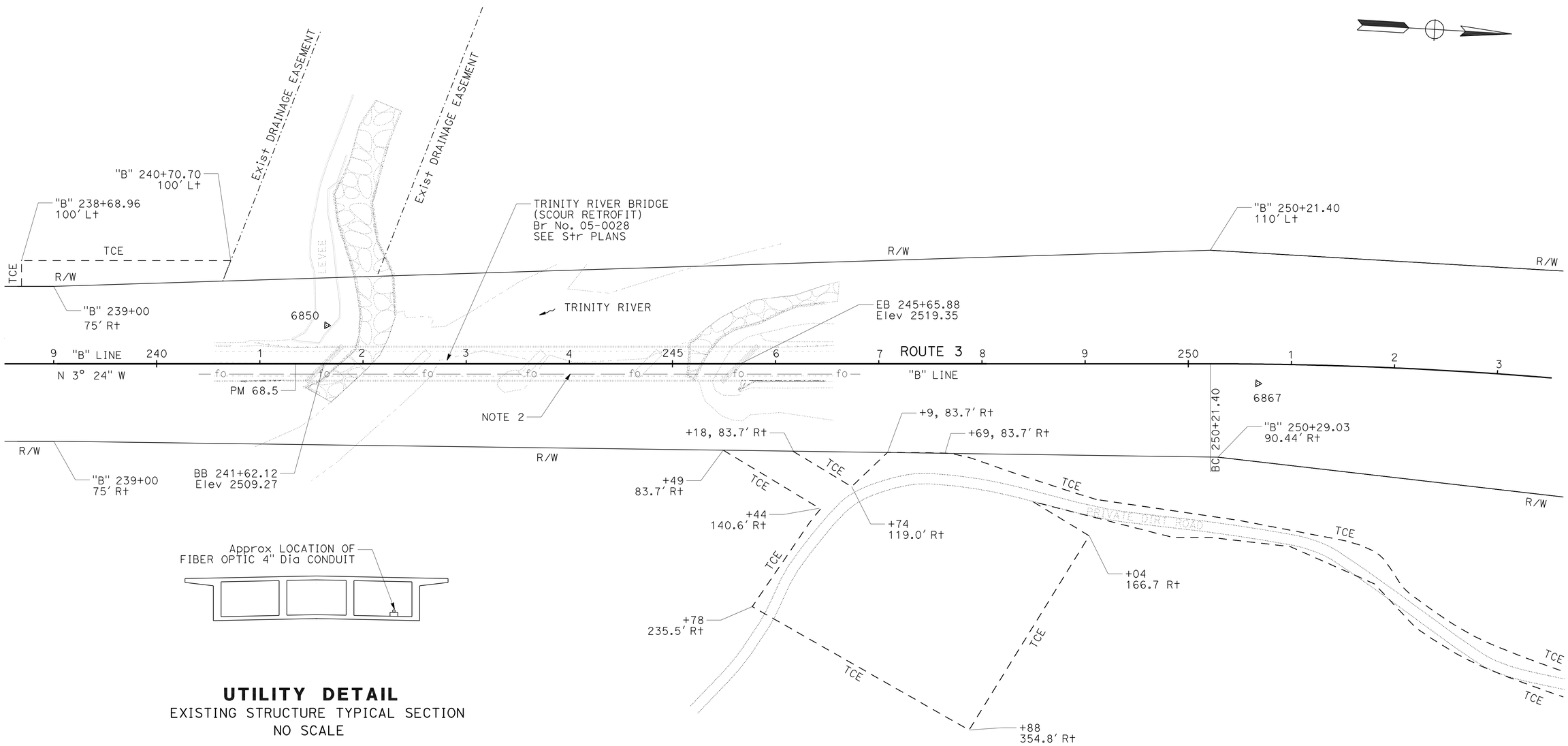

UTILITY DETAIL

EXISTING STRUCTURE TYPICAL SECTION
NO SCALE

BENCHMARKS

No.	STATION	OFFSET	ELEVATION	DESCRIPTION
6850	"B" 241+64.74	37.25' Lt	2507.318'	"5-3-68.50 GPS" - BDIC
6867	"B" 250+67.46	19.13 Rt	2531.248'	"CM 68.67" - REBAR w/ Alum CAP

LOCATION 1

TRINITY RIVER BRIDGE
Br No. 05-0028
PM 68.5

LAYOUT

SCALE: 1" = 50'

L-1

REVISED BY | DATE REVISED
LORIE EWENS
CALCULATED-DESIGNED BY
CHECKED BY DELARE VIOLETTI
FUNCTIONAL SUPERVISOR
ROB BURNETT

STATE OF CALIFORNIA - DEPARTMENT OF TRANSPORTATION
Caltrans
DESIGN

P:\proj2\02\2c990\pse\22c990ea001.dgn

LAST REVISION | DATE PLOTTED => 14-SEP-2010
01-28-10 | TIME PLOTTED => 10:36

Dist	COUNTY	ROUTE	POST MILES TOTAL PROJECT	SHEET No.	TOTAL SHEETS
02	Tri	3	68.5,70.7	4	93

Lori Ewens 02-16-10
REGISTERED CIVIL ENGINEER DATE

8-23-10
PLANS APPROVAL DATE

REGISTERED PROFESSIONAL ENGINEER
LORI EWENS
No. C43919
Exp. 6-30-11
CIVIL
STATE OF CALIFORNIA

THE STATE OF CALIFORNIA OR ITS OFFICERS OR AGENTS SHALL NOT BE RESPONSIBLE FOR THE ACCURACY OR COMPLETENESS OF ELECTRONIC COPIES OF THIS PLAN SHEET.

NOTES:

1. FOR COMPLETE RIGHT OF WAY,
   SEE RIGHT OF WAY RECORD MAPS AT THE DISTRICT OFFICE.
2. REMOVE EXISTING MBGR.
3. GUARD RAIL INSTALLATION AT STRUCTURE APPROACH WITH FLARED END TREATMENT:

   3A TRANSITION RAILING (TYPE WB)
   50′ MBGR
   ALTERNATE FLARED TERMINAL SYSTEM

   3B TRANSITION RAILING (TYPE WB)
   50′ MBGR
   ALTERNATE FLARED TERMINAL SYSTEM

   3C TRANSITION RAILING (TYPE WB)
   25′ MBGR
   BURIED END ANCHOR

4. PLACE GUARD RAILING DELINEATOR AT APPROACH END OF GUARD RAIL
   AND PLACE SECOND DELINEATOR 50′ FROM END.
5. FIBER OPTIC NOT SHOWN. SEE UTILITY PLAN SHEET.
6. HMA DIKE:
   (TYPE F) "C" 358+45 TO "C" 359+00
   (TYPE C) "C" 359+00 TO 359+60

BENCHMARKS

No.	STATION	OFFSET	ELEVATION	DESCRIPTION
7069	"C" 357+42.40	20.67 R+	2620.894	"CM 70.69" - REBAR w/ Alum CAP

"C" LINE CURVE DATA

No.	R	Δ	T	L
(1)	2350.00′	43°30′00"	937.56′	1784.16′

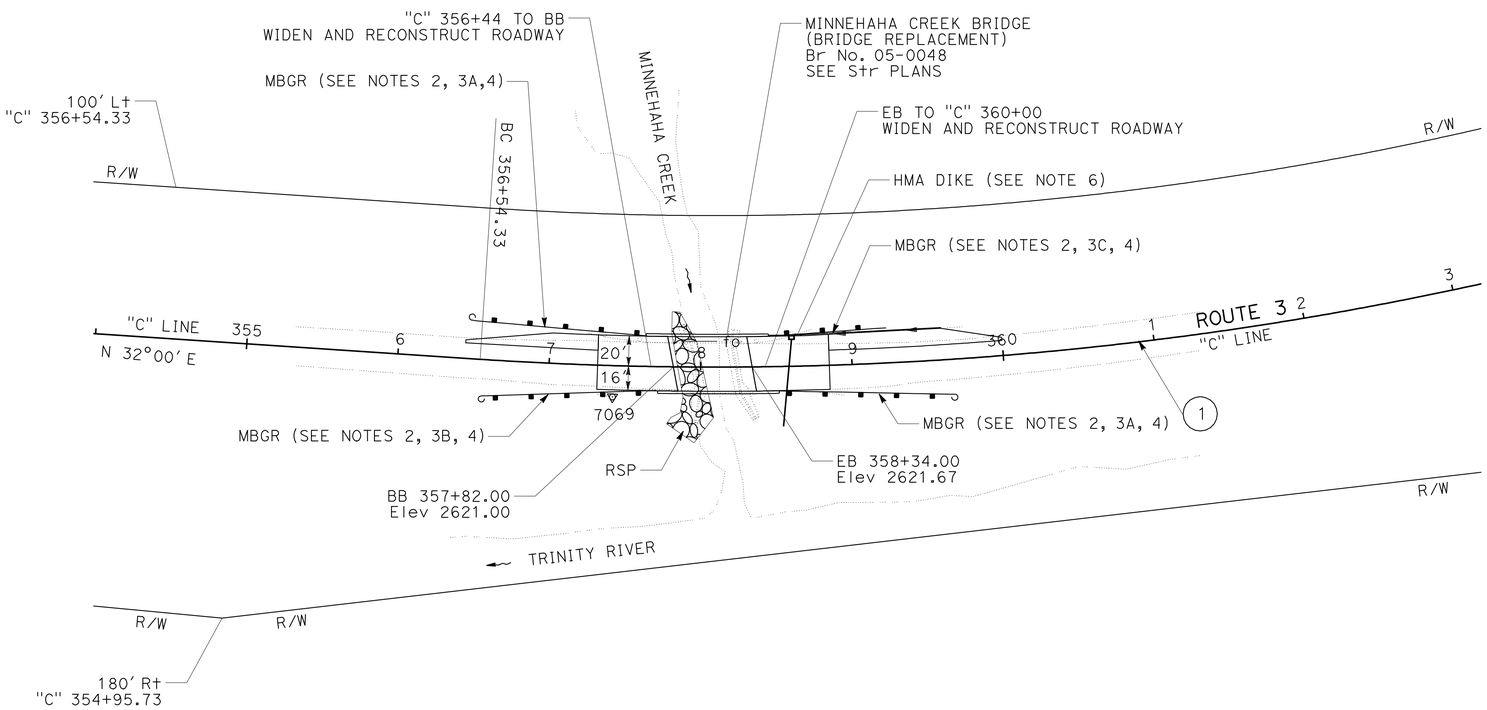

LOCATION 2

MINNEHAHA CREEK BRIDGE
Br No. 05-0048
PM 70.7

LAYOUT

SCALE: 1" = 50′

L-2

REVISED BY	DATE REVISED
LORIE EWENS	DELARE VIOLETTI

CALCULATED-DESIGNED BY
CHECKED BY
FUNCTIONAL SUPERVISOR ROB BURNETT

STATE OF CALIFORNIA - DEPARTMENT OF TRANSPORTATION
Caltrans DESIGN

P:\proj2\02\2c990\pse\22c990ea002.dgn

LAST REVISION 01-27-10 | DATE PLOTTED => 26-AUG-2010 | TIME PLOTTED => 13:09

Dist	COUNTY	ROUTE	POST MILES TOTAL PROJECT	SHEET No.	TOTAL SHEETS
02	Tri	3	68.5,70.7	5	93

Lori Ewens 02-16-10
REGISTERED CIVIL ENGINEER DATE

8-23-10
PLANS APPROVAL DATE

REGISTERED PROFESSIONAL ENGINEER LORI EWENS No. C43919 Exp. 6-30-11 CIVIL STATE OF CALIFORNIA

THE STATE OF CALIFORNIA OR ITS OFFICERS OR AGENTS SHALL NOT BE RESPONSIBLE FOR THE ACCURACY OR COMPLETENESS OF ELECTRONIC COPIES OF THIS PLAN SHEET.

LEGEND

- RSP
- PROTECT EXISTING SLOPE AND NATURAL ROCK DEPOSITS
- PORTION OF ABUTMENT TO BE REMOVED SEE STRUCTURE PLANS FOR REMOVAL DETAILS
- FG CONTOUR LINE
- OG CONTOUR LINE
- TFESA — TEMPORARY FENCE (TYPE ESA)

ABBREVIATIONS

ESA ENVIRONMENTALLY SENSITIVE AREA
TCE TEMPORARY CONSTRUCTION EASEMENT

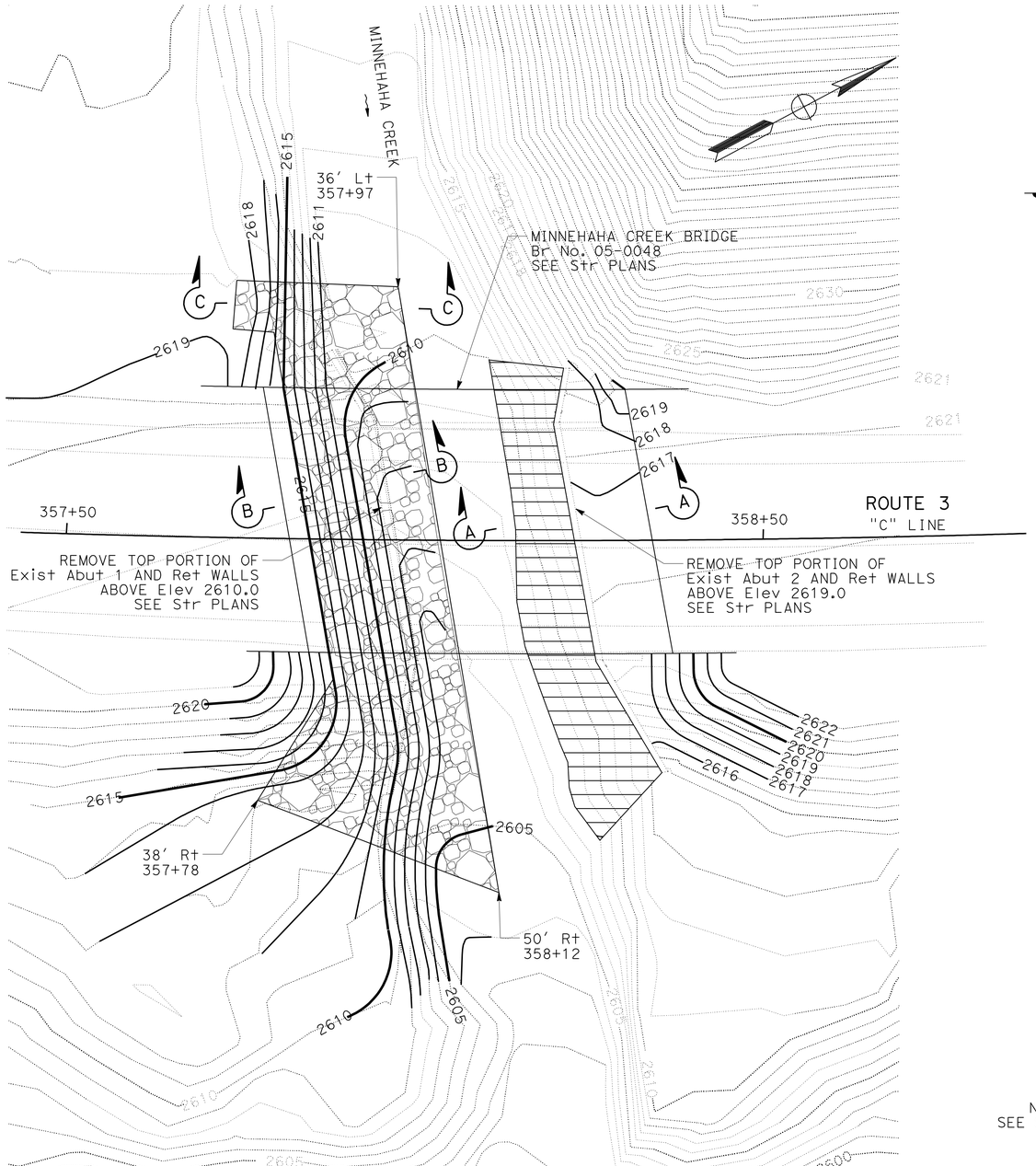

PLAN
CONTOUR GRADING
SCALE: 1" = 10'

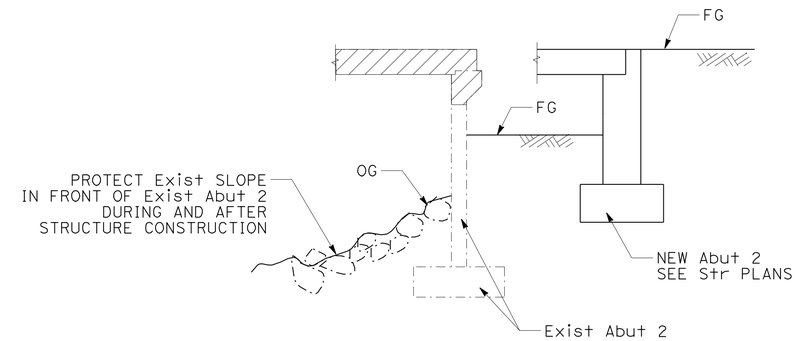

SECTION A-A
NO SCALE

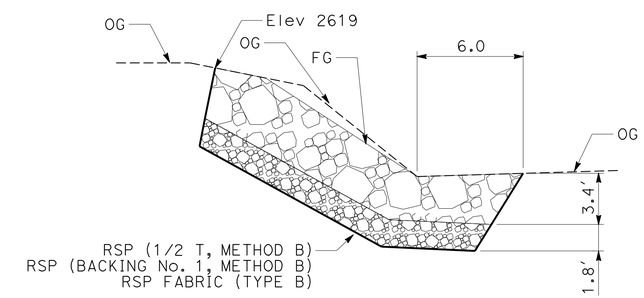

SECTION C-C
NO SCALE

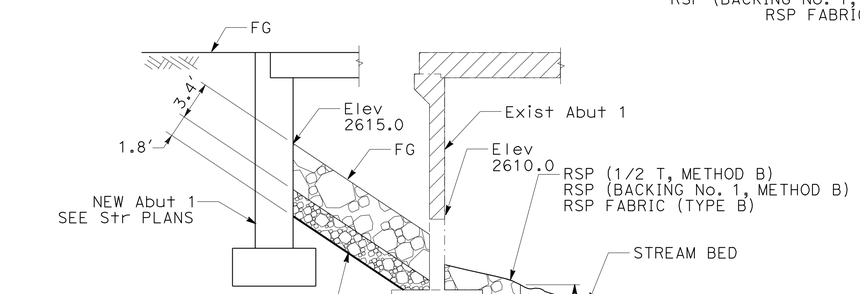

SECTION B-B
NO SCALE

THIS SHEET ACCURATE FOR CONSTRUCTION DETAILS ONLY.

LOCATION 2
CONSTRUCTION DETAILS
SCALE: AS SHOWN

C-1

REVISED BY	DATE REVISED
LORIE EWENS	DELARE VIOLETTI
CALCULATED-DESIGNED BY	CHECKED BY
FUNCTIONAL SUPERVISOR	ROB BURNETT

STATE OF CALIFORNIA - DEPARTMENT OF TRANSPORTATION
Caltrans **DESIGN**

P:\proj2\02\2c990\pse\22c990ga001.dgn

LAST REVISION 01-11-10 | DATE PLOTTED => 26-AUG-2010 | TIME PLOTTED => 13:09

Dist	COUNTY	ROUTE	POST MILES TOTAL PROJECT	SHEET No.	TOTAL SHEETS
02	Tri	3	68.5,70.7	6	93

Lori Ewens 02-16-10
REGISTERED CIVIL ENGINEER DATE

8-23-10
PLANS APPROVAL DATE

REGISTERED PROFESSIONAL ENGINEER
LORI EWENS
No. C43919
Exp. 6-30-11
CIVIL
STATE OF CALIFORNIA

THE STATE OF CALIFORNIA OR ITS OFFICERS OR AGENTS SHALL NOT BE RESPONSIBLE FOR THE ACCURACY OR COMPLETENESS OF ELECTRONIC COPIES OF THIS PLAN SHEET.

NOTES:

1. FOR COMPLETE RIGHT OF WAY, SEE RIGHT OF WAY RECORD MAPS AT THE DISTRICT OFFICE.
2. CONTRACTOR HAS THE OPTION OF CONSTRUCTING AN ACCESS ROAD AT THIS LOCATION.
3. TREES WITHIN TCE SHALL BE FENCED AND PROTECTED.

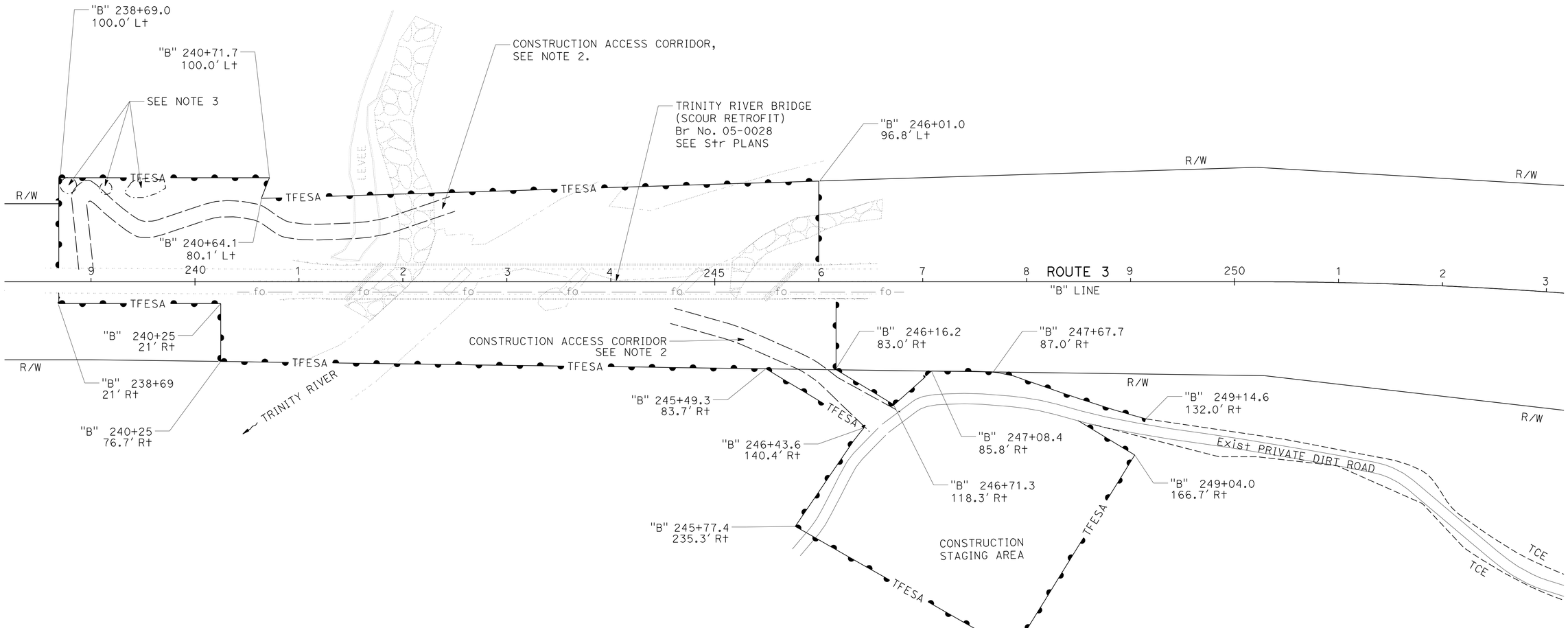

CONSTRUCTION ACCESS ROADS AND STAGING AREA

THIS PLAN ACCURATE FOR CONSTRUCTION DETAILS ONLY.

LOCATION 1
CONSTRUCTION DETAILS

SCALE: 1" = 50'

C-2

STATE OF CALIFORNIA - DEPARTMENT OF TRANSPORTATION
Caltrans DESIGN

FUNCTIONAL SUPERVISOR: ROB BURNETT

CALCULATED-DESIGNED BY: LORIE EWENS
CHECKED BY: DELARE VIOLETTI

REVISED BY | DATE REVISED

P:\proj2\02\2c990\pse\22c990ga002.dgn

LAST REVISION 12-15-09 | DATE PLOTTED => 26-AUG-2010 | TIME PLOTTED => 13:09

BORDER LAST REVISED 3/1/2007 | RELATIVE BORDER SCALE IS IN INCHES 0 1 2 3 | USERNAME => trrichf | DGN FILE => 22c990ga002.dgn | CU 03 243 | EA 2C9901

Dist	COUNTY	ROUTE	POST MILES TOTAL PROJECT	SHEET No.	TOTAL SHEETS
02	Tri	3	68.5,70.7	7	93

Lori Ewens 02-16-10
REGISTERED CIVIL ENGINEER DATE

8-23-10
PLANS APPROVAL DATE

REGISTERED PROFESSIONAL ENGINEER
LORI EWENS
No. C43919
Exp. 6-30-11
CIVIL
STATE OF CALIFORNIA

THE STATE OF CALIFORNIA OR ITS OFFICERS OR AGENTS SHALL NOT BE RESPONSIBLE FOR THE ACCURACY OR COMPLETENESS OF ELECTRONIC COPIES OF THIS PLAN SHEET.

NOTES:

1. FOR COMPLETE RIGHT OF WAY, SEE RIGHT OF WAY RECORD MAPS AT THE DISTRICT OFFICE.
2. CONTRACTOR HAS THE OPTION OF CONSTRUCTING AN ACCESS ROAD AT THIS LOCATION.

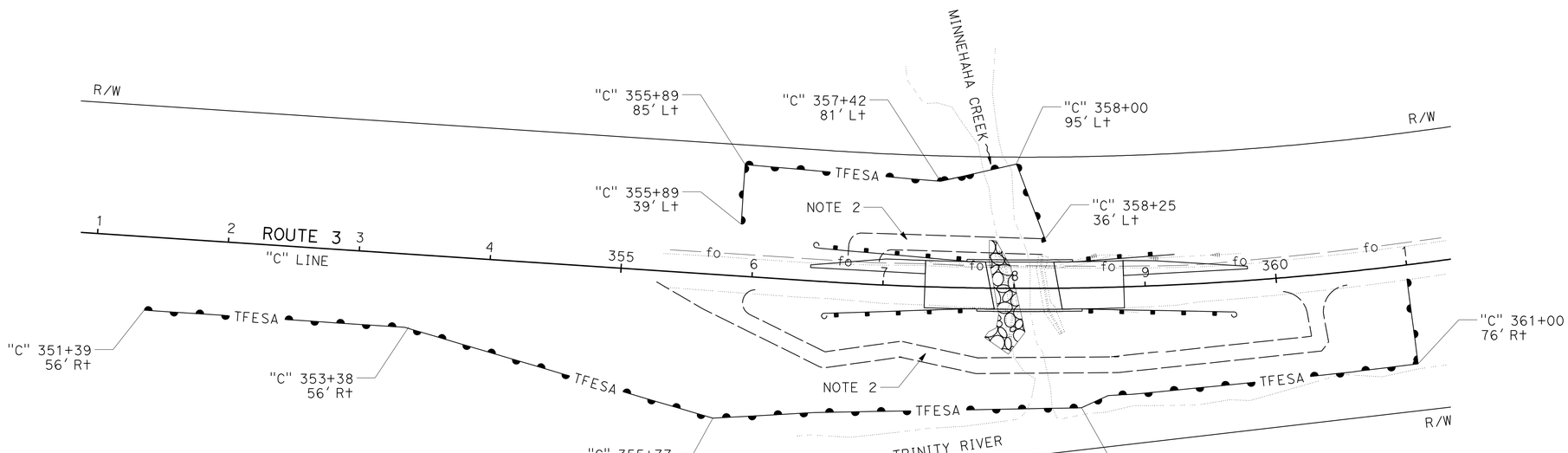

CONSTRUCTION ACCESS ROADS AND STAGING AREA

THIS PLAN ACCURATE FOR CONSTRUCTION DETAILS ONLY.

LOCATION 2
CONSTRUCTION DETAILS

SCALE: 1" = 50'

C-3

REVISED BY	DATE REVISED

CALCULATED-DESIGNED BY: LORIE EWENS
CHECKED BY: DELARE VIOLETTI
FUNCTIONAL SUPERVISOR: ROB BURNETT

STATE OF CALIFORNIA - DEPARTMENT OF TRANSPORTATION
Caltrans DESIGN

P:\proj2\02\2c990\pse\22c990ga003.dgn

LAST REVISION 12-15-09 | DATE PLOTTED => 26-AUG-2010 | TIME PLOTTED => 13:09

DIST	COUNTY	ROUTE	POST MILES TOTAL PROJECT	SHEET No	TOTAL SHEETS
02	Tri	3	68.5,70.7	8	93

LICENSED LANDSCAPE ARCHITECT

8-23-10

PLANS APPROVAL DATE

LICENSED LANDSCAPE ARCHITECT RONALD MARTIN FLORY #4981 STATE OF CALIFORNIA

Effective 9-30-01
Renewal Date 6-1-10
Date

The State of California or its officers or agents shall not be responsible for the accuracy or completeness of electronic copies of this plan sheet.

NOTE:

1. FOR COMPLETE RIGHT OF WAY DATA, SEE RIGHT OF WAY RECORD MAPS AT DISTRICT OFFICE.

LEGEND

EROSION CONTROL (TYPE 1)
DECOMPACT SOILS
COMPOST BLANKET
EROSION CONTROL (HYDROSEED-TRINITY TYPE A)

EROSION CONTROL (TYPE 1)
DECOMPACT SOILS
COMPOST BLANKET
EROSION CONTROL (HYDROSEED-MINNEHAHA TYPE B)

EROSION CONTROL (TYPE 1A)
EROSION CONTROL (HYDROSEED-MINNEHAHA TYPE B)

EROSION CONTROL (TYPE 2)
SOIL ROUGHENING
EROSION CONTROL (BFM-TRINITY TYPE A)

EROSION CONTROL (TYPE 2)
SOIL ROUGHENING
EROSION CONTROL (BFM-MINNEHAHA TYPE B)

FIBER ROLL

ABBREVIATIONS

TCE TEMPORARY CONSTRUCTION EASEMENT

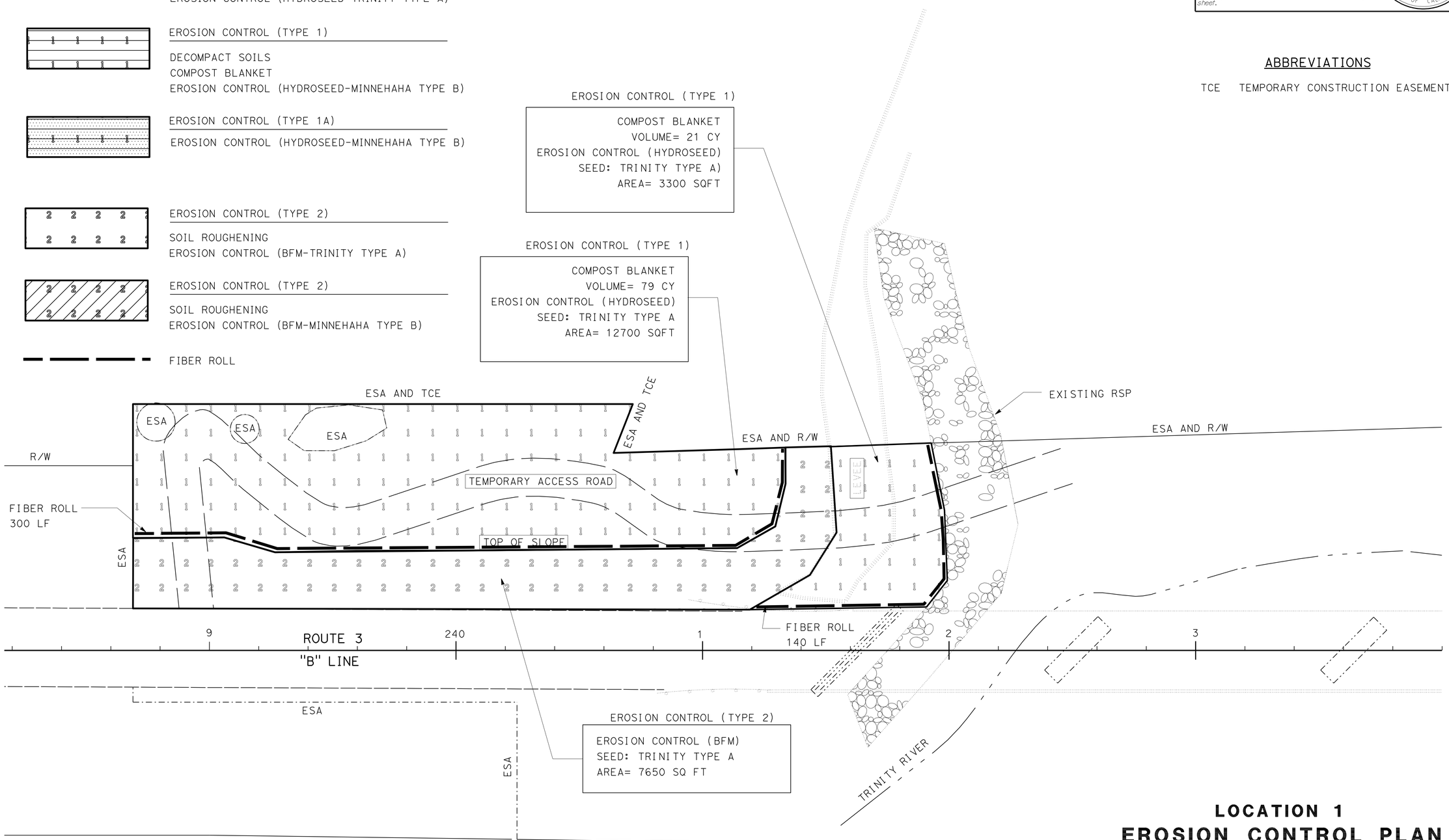

THIS PLAN ACCURATE FOR EROSION CONTROL WORK ONLY.

LOCATION 1
EROSION CONTROL PLAN

SCALE: 1" = 20'

EC-1

REVISED BY	DATE	DATE REVISED
ROBIN SOLARI		
RON FLORY		

CALCULATED/DESIGNED BY: ROBIN SOLARI
CHECKED BY: RON FLORY

PROJECT LANDSCAPE ARCHITECT: RON FLORY

STATE OF CALIFORNIA - DEPARTMENT OF TRANSPORTATION
LANDSCAPE ARCHITECTURE

P:\proj2\02\2c990\pse\22c990ge001.dgn

LAST REVISION 02-16-10 | DATE PLOTTED => 26-AUG-2010 | TIME PLOTTED => 14:04

RELATIVE BORDER SCALE IS IN INCHES 0 1 2 3

USERNAME => trrichf
DGN FILE => 22c990ge001.dgn

CU 03 342

EA 2C9901

NOTE:

1. FOR COMPLETE RIGHT OF WAY DATA, SEE RIGHT OF WAY RECORD MAPS AT DISTRICT OFFICE.

DIST	COUNTY	ROUTE	POST MILES TOTAL PROJECT	SHEET No	TOTAL SHEETS
02	Tri	3	68.5,70.7	9	93

LICENSED LANDSCAPE ARCHITECT

8-23-10

PLANS APPROVAL DATE

LICENSED LANDSCAPE ARCHITECT RONALD MARTIN FLORY #4981 Effective 9-30-01 Renewal Date 6-1-10 Date STATE OF CALIFORNIA

The State of California or its officers or agents shall not be responsible for the accuracy or completeness of electronic copies of this plan sheet.

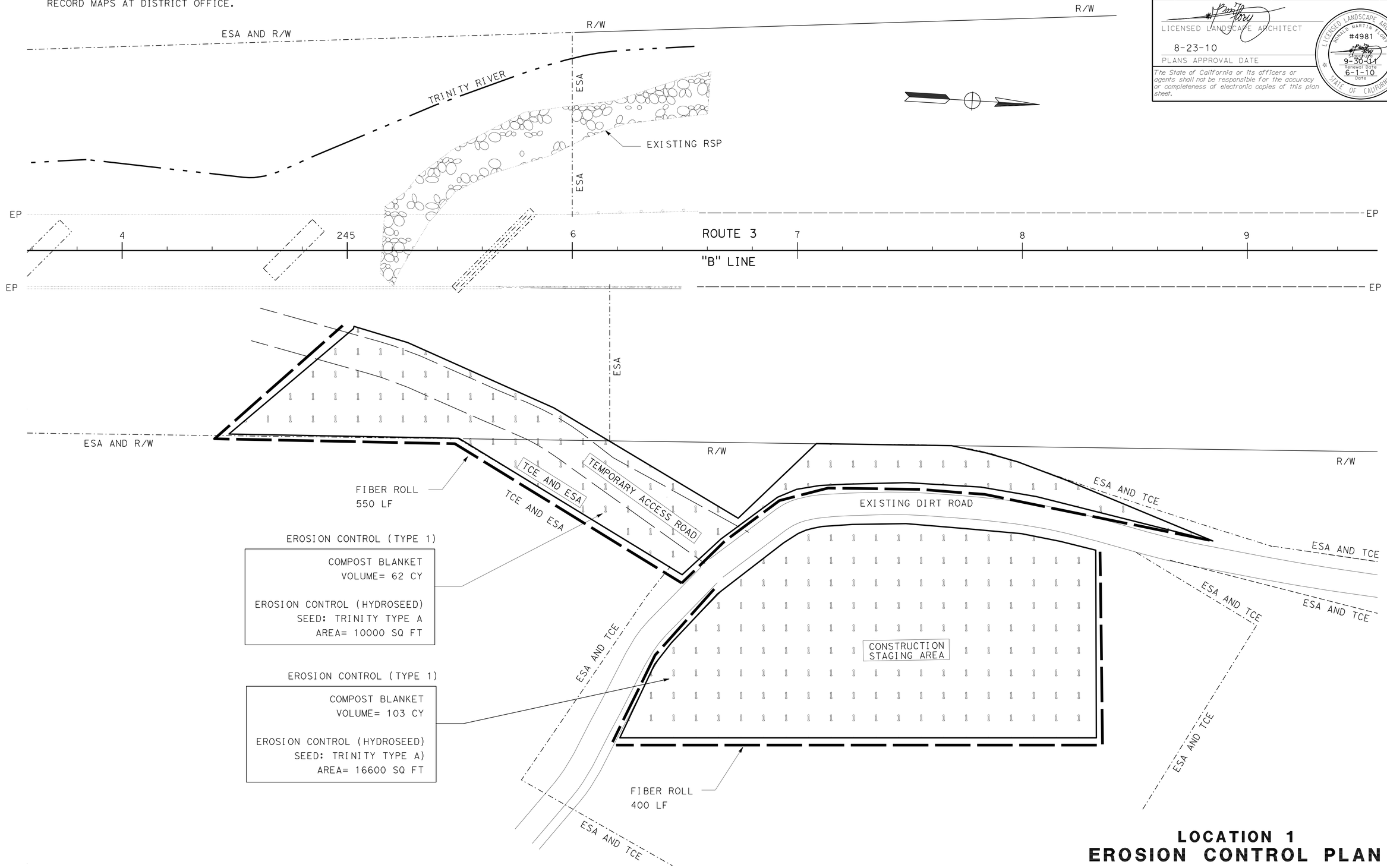

THIS PLAN ACCURATE FOR EROSION CONTROL WORK ONLY.

LOCATION 1
EROSION CONTROL PLAN

SCALE: 1" = 20'

EC-2

DATE	REVISED BY	DATE REVISED

CALCULATED/DESIGNED BY: ROBIN SOLARI

CHECKED BY: RON FLORY

PROJECT LANDSCAPE ARCHITECT: RON FLORY

STATE OF CALIFORNIA - DEPARTMENT OF TRANSPORTATION

Caltrans LANDSCAPE ARCHITECTURE

P:\proj2\02\2c990\pse\22c990ge002.dgn

LAST REVISION 02-16-10 | DATE PLOTTED => 26-AUG-2010 | TIME PLOTTED => 14:04

RELATIVE BORDER SCALE IS IN INCHES 0 1 2 3

USERNAME => trrichf
DGN FILE => 22c990ge002.dgn

CU 03 342

EA 2C9901

DIST	COUNTY	ROUTE	POST MILES TOTAL PROJECT	SHEET No	TOTAL SHEETS
02	Tri	3	68.5,70.7	10	93

LICENSED LANDSCAPE ARCHITECT

8-23-10

PLANS APPROVAL DATE

LICENSED LANDSCAPE ARCHITECT
RONALD MARTIN FLORY
#4981
Effective
9-30-01
Renewal Date
6-1-10
Date
STATE OF CALIFORNIA

The State of California or its officers or agents shall not be responsible for the accuracy or completeness of electronic copies of this plan sheet.

R/W R/W

NOTE:

1. FOR COMPLETE RIGHT OF WAY DATA, SEE RIGHT OF WAY RECORD MAPS AT DISTRICT OFFICE.

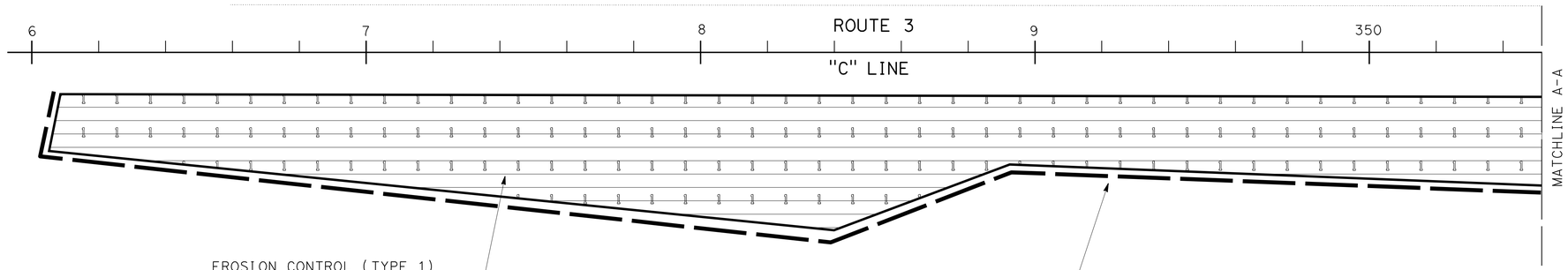

EROSION CONTROL (TYPE 1)

COMPOST BLANKET
VOLUME= 75 CY
EROSION CONTROL (HYDROSEED)
SEED: MINNEHAHA TYPE B
AREA= 12050 SQFT

FIBER ROLL
480 LF

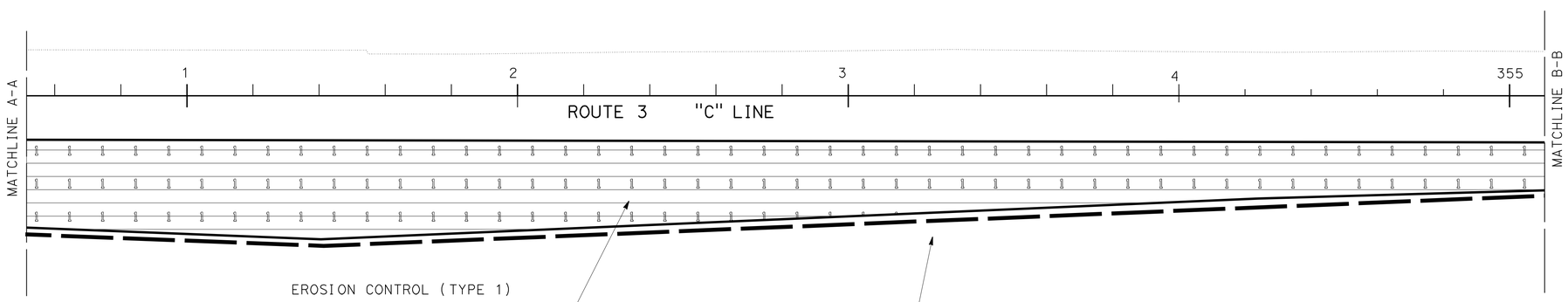

EROSION CONTROL (TYPE 1)

COMPOST BLANKET
VOLUME= 66 CY
EROSION CONTROL (HYDROSEED)
SEED: MINNEHAHA TYPE B
AREA= 10550 SQFT

FIBER ROLL
460 LF

THIS PLAN ACCURATE FOR EROSION CONTROL WORK ONLY.

LOCATION 2
EROSION CONTROL PLAN
SCALE: 1" = 20'

EC-3

REVISED BY	DATE REVISED
ROBIN SOLARI	DATE
RON FLORY	
CALCULATED/DESIGNED BY	
CHECKED BY	
PROJECT LANDSCAPE ARCHITECT	
RON FLORY	

STATE OF CALIFORNIA - DEPARTMENT OF TRANSPORTATION
Caltrans LANDSCAPE ARCHITECTURE

P:\proj2\02\2c990\pse\22c990ge003.dgn

LAST REVISION 02-16-10 | DATE PLOTTED => 26-AUG-2010 TIME PLOTTED => 14:04

RELATIVE BORDER SCALE IS IN INCHES 0 1 2 3

USERNAME => trrichf
DGN FILE => 22c990ge003.dgn

CU 03 342 | EA 2C9901

DIST	COUNTY	ROUTE	POST MILES TOTAL PROJECT	SHEET No	TOTAL SHEETS
02	Tri	3	68.5,70.7	11	93

LICENSED LANDSCAPE ARCHITECT

8-23-10
PLANS APPROVAL DATE

LICENSED LANDSCAPE ARCHITECT
RONALD MARTIN FLORY
#4981
Effective
9-30-11
Renewal Date
6-1-10
Date
STATE OF CALIFORNIA

The State of California or its officers or agents shall not be responsible for the accuracy or completeness of electronic copies of this plan sheet.

NOTE:

1. FOR COMPLETE RIGHT OF WAY DATA, SEE RIGHT OF WAY RECORD MAPS AT DISTRICT OFFICE.

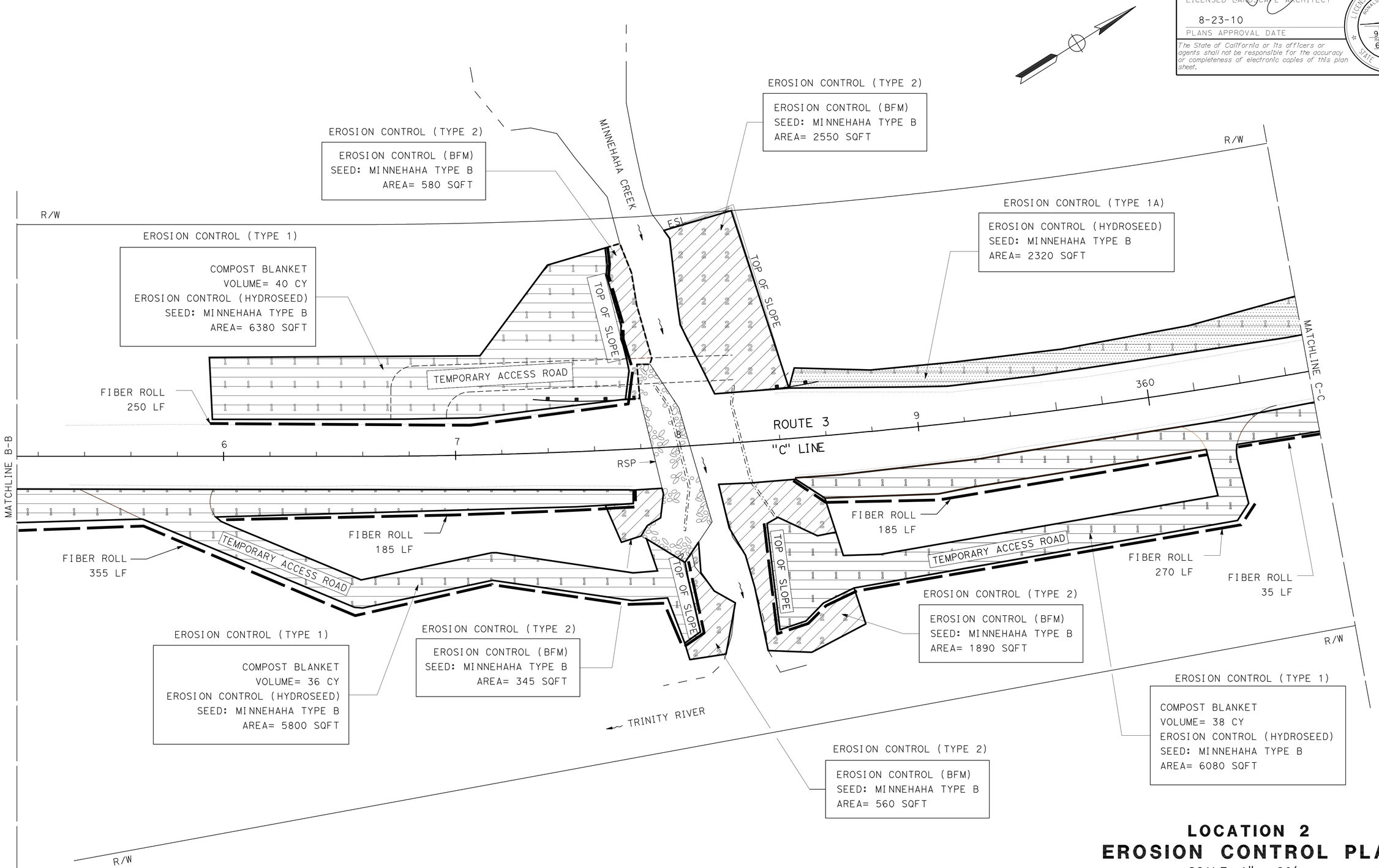

LOCATION 2
EROSION CONTROL PLAN
SCALE: 1" = 20'

EC-4

THIS PLAN ACCURATE FOR EROSION CONTROL WORK ONLY.

REVISED BY	DATE REVISED

CALCULATED/DESIGNED BY: ROBIN SOLARI
CHECKED BY: RON FLORY
PROJECT LANDSCAPE ARCHITECT: RON FLORY

STATE OF CALIFORNIA - DEPARTMENT OF TRANSPORTATION
Caltrans LANDSCAPE ARCHITECTURE

P:\proj2\02\2c990\pse\22c990ge004.dgn

LAST REVISION 02-16-10 | DATE PLOTTED => 26-AUG-2010 | TIME PLOTTED => 14:04

RELATIVE BORDER SCALE IS IN INCHES 0 1 2 3

USERNAME => trrichf
DGN FILE => 22c990ge004.dgn

CU 03 342

EA 2C9901

DIST	COUNTY	ROUTE	POST MILES TOTAL PROJECT	SHEET No	TOTAL SHEETS
02	Tri	3	68.5,70.7	12	93

LICENSED LANDSCAPE ARCHITECT

8-23-10
PLANS APPROVAL DATE

LICENSED LANDSCAPE ARCHITECT
RONALD MARTIN FLORY
#4981
Signature
9-30-11
Renewal Date
6-1-10
Date
STATE OF CALIFORNIA

The State of California or its officers or agents shall not be responsible for the accuracy or completeness of electronic copies of this plan sheet.

NOTE:

1. FOR COMPLETE RIGHT OF WAY DATA, SEE RIGHT OF WAY RECORD MAPS AT DISTRICT OFFICE.

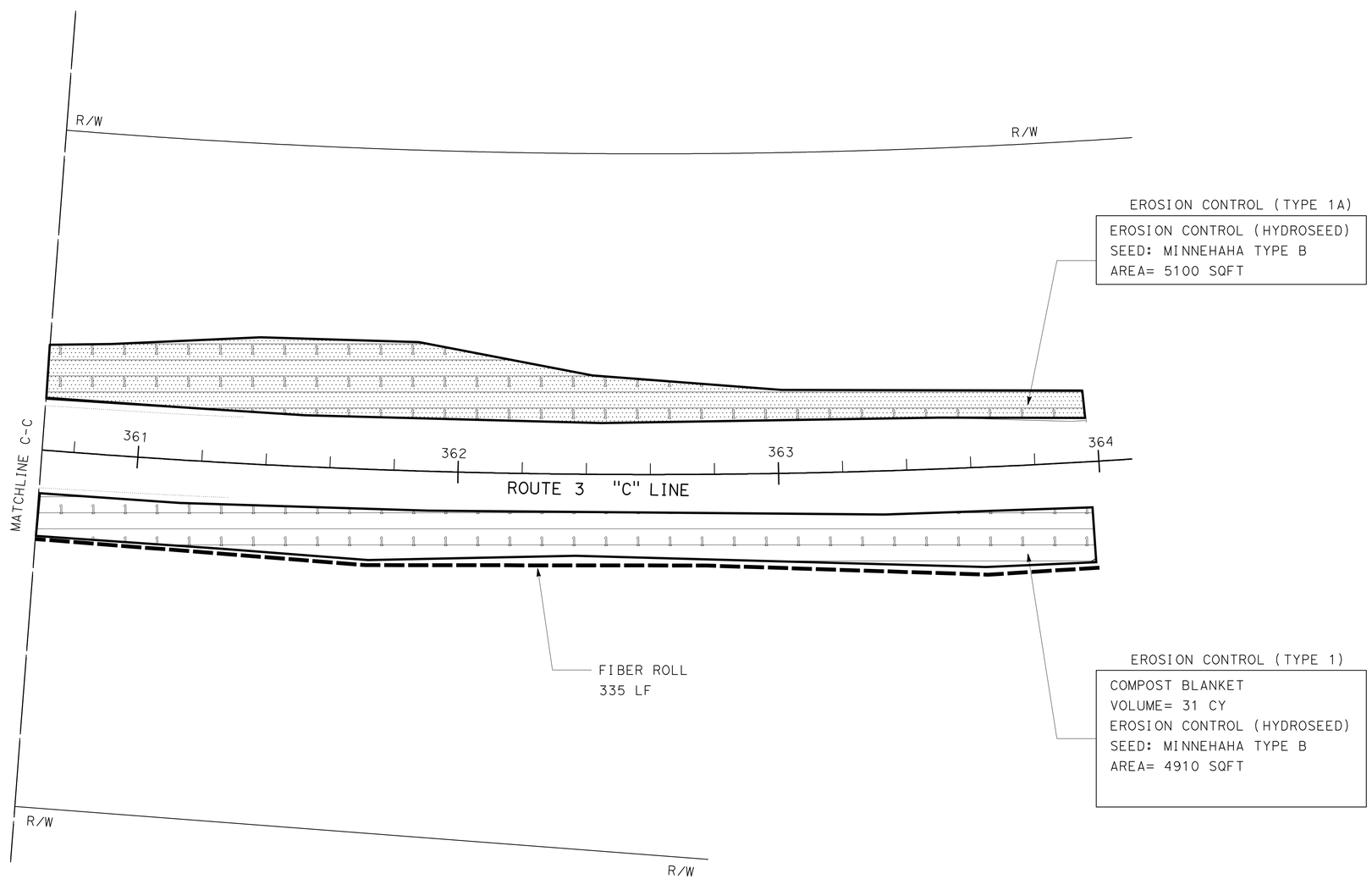

LOCATION 2
EROSION CONTROL PLAN
SCALE: 1" = 20'

EC-5

THIS PLAN ACCURATE FOR EROSION CONTROL WORK ONLY.

REVISED BY | DATE | DATE REVISED

ROBIN SOLARI | RON FLORY

CALCULATED/DESIGNED BY | CHECKED BY

PROJECT LANDSCAPE ARCHITECT: RON FLORY

STATE OF CALIFORNIA - DEPARTMENT OF TRANSPORTATION
Caltrans LANDSCAPE ARCHITECTURE

P:\proj2\02\2c990\pse\22c990ge005.dgn

LAST REVISION 02-16-10 | DATE PLOTTED => 26-AUG-2010 | TIME PLOTTED => 14:04

RELATIVE BORDER SCALE IS IN INCHES 0 1 2 3

USERNAME => trrichf
DGN FILE => 22c990ge005.dgn

CU 03 342 | EA 2C9901

DIST	COUNTY	ROUTE	POST MILES TOTAL PROJECT	SHEET No	TOTAL SHEETS
02	Tri	3	68.5,70.7	13	93

LICENSED LANDSCAPE ARCHITECT

8-23-10

PLANS APPROVAL DATE

LICENSED LANDSCAPE ARCHITECT RONALD MARTIN FLORY #4981 Expires 9-30-11 Renewal Date 6-1-10 Date STATE OF CALIFORNIA

The State of California or its officers or agents shall not be responsible for the accuracy or completeness of electronic copies of this plan sheet.

ABBREVIATIONS

EC EROSION CONTROL

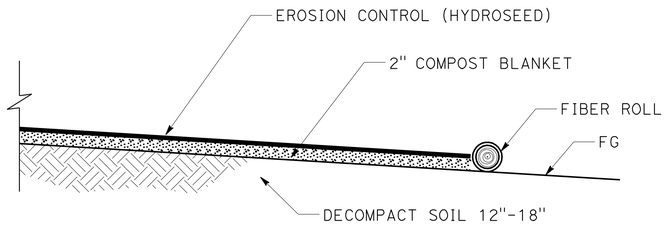

TYPICAL SECTION

TYPICAL EROSION CONTROL (TYPE 1)

(SLOPES 3:1 OR FLATTER)

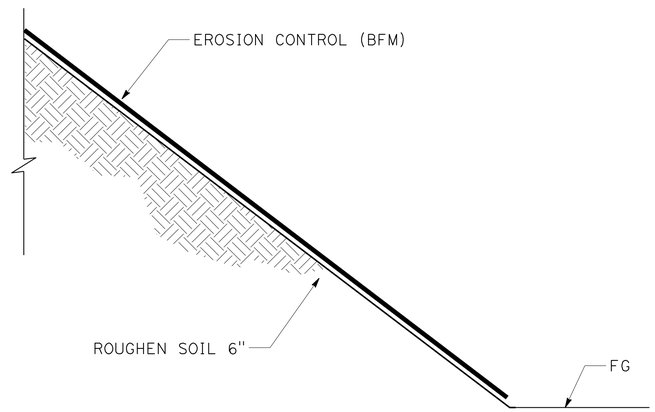

TYPICAL SECTION

TYPICAL EROSION CONTROL (TYPE 2)

(SLOPES STEEPER THAN 3:1)

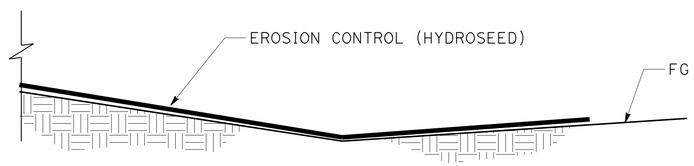

TYPICAL SECTION

TYPICAL EROSION CONTROL (TYPE 1A)

(PER PLAN)

PERMANENT EROSION CONTROL QUANTITIES

SHEET No.	COMPOST BLANKET	EC (HYDROSEED) SEED: (TRINITY TYPE A)	EC (BFM) SEED: (TRINITY TYPE A)	EC (HYDROSEED) SEED: (MINNEHAHA TYPE B)	EC (BFM) SEED: (MINNEHAHA TYPE B)	FIBER ROLL
UNIT	CY	SQFT	SQFT	SQFT	SQFT	LF
EC-1	100	16,000	7650			440
EC-2	165	26,600				950
EC-3	141			22,600		940
EC-4	114			20,580	5925	1280
EC-5	31			10,010		335
TOTAL	551	42,600	7650	53,190	5925	3945

THIS PLAN ACCURATE FOR EROSION CONTROL WORK ONLY.

EROSION CONTROL DETAILS AND QUANTITIES

NO SCALE

ECD-1

PROJECT LANDSCAPE ARCHITECT: RON FLORY

CALCULATED/DESIGNED BY: ROBIN SOLARI

CHECKED BY: RON FLORY

REVISED BY / DATE REVISED / DATE

STATE OF CALIFORNIA - DEPARTMENT OF TRANSPORTATION

Caltrans LANDSCAPE ARCHITECTURE

P:\proj2\02\2c990\pse\22c990gf001.dgn

LAST REVISION 02-16-10 | DATE PLOTTED => 26-AUG-2010 | TIME PLOTTED => 14:04

RELATIVE BORDER SCALE IS IN INCHES 0 1 2 3

USERNAME => trrichf
DGN FILE => 22c990gf001.dgn

CU 03 342

EA 2C9901

Dist	COUNTY	ROUTE	POST MILES TOTAL PROJECT	SHEET No.	TOTAL SHEETS
02	Tri	3	68.5,70.7	14	93

Lori Ewens 02-16-10
REGISTERED CIVIL ENGINEER DATE

8-23-10
PLANS APPROVAL DATE

REGISTERED PROFESSIONAL ENGINEER
LORI EWENS
No. C43919
Exp. 6-30-11
CIVIL
STATE OF CALIFORNIA

THE STATE OF CALIFORNIA OR ITS OFFICERS OR AGENTS SHALL NOT BE RESPONSIBLE FOR THE ACCURACY OR COMPLETENESS OF ELECTRONIC COPIES OF THIS PLAN SHEET.

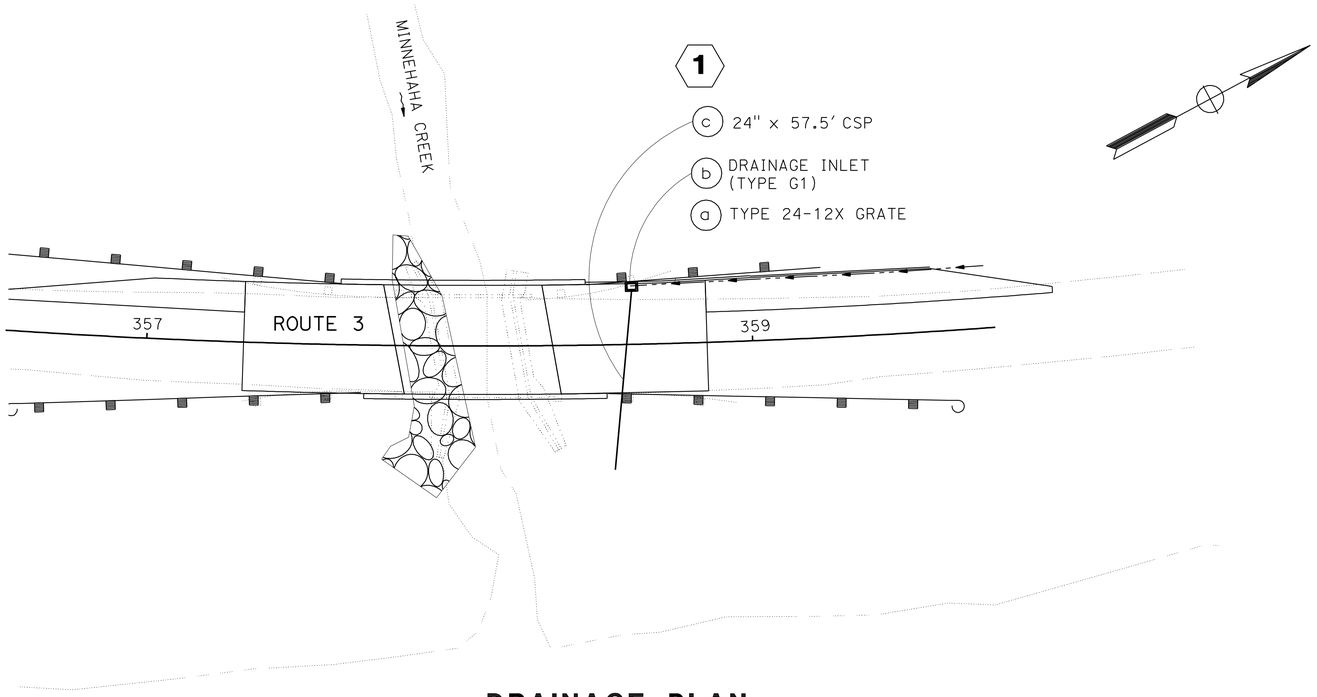

DRAINAGE PLAN
NO SCALE

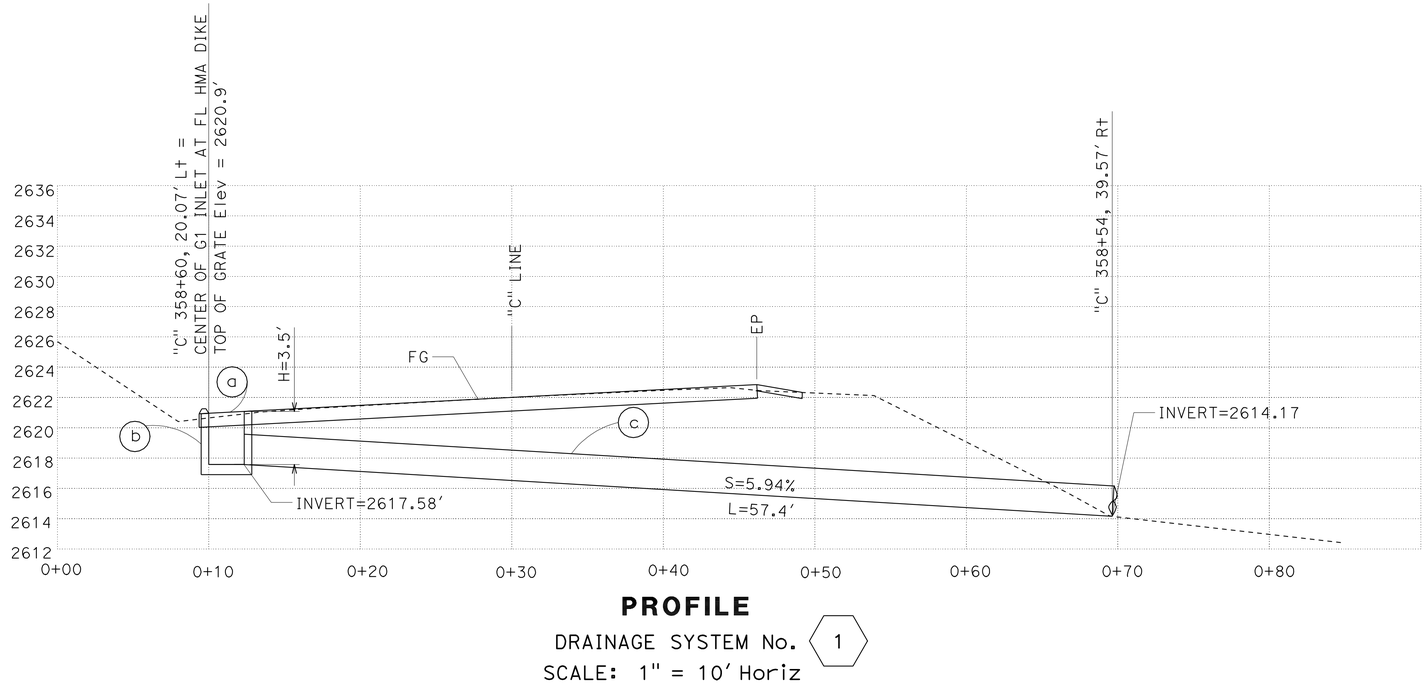

PROFILE
DRAINAGE SYSTEM No. 1
SCALE: 1" = 10' Horiz
1" = 10' Vert

LEGEND

- DRAINAGE SYSTEM No.
- DRAINAGE UNIT No.
- RSP

DRAINAGE QUANTITIES

DRAINAGE SYSTEM No.	DRAINAGE UNIT No.	MINOR CONCRETE (MINOR STRUCTURE)	MISCELLANEOUS IRON AND STEEL	(N) H = HEIGHT OF INLET	(N) INLET GRATE (TYPE 24-12X)	24" CORRUGATED STEEL PIPE (0.079" THICK)	(N) JOINT CLASSIFICATION
		CY	LB	FT	EA	LF	
1	a		239		1		
	b	1.1		3.5			
	c					57.5	S
TOTAL		1.1	239			57.5	

(N) NOT A SEPARATE PAY ITEM, FOR INFORMATION ONLY
S - STANDARD JOINT

LOCATION 2
DRAINAGE PLAN AND PROFILE
SCALE: AS NOTED

D-1

REVISED BY | DATE REVISED
LORIE EWENS | DELARE VIOLETTI
CALCULATED-DESIGNED BY | CHECKED BY
FUNCTIONAL SUPERVISOR
ROB BURNETT

STATE OF CALIFORNIA - DEPARTMENT OF TRANSPORTATION
Caltrans
DESIGN

P:\proj2\02\2c990\pse\22c9901a001.dgn

LAST REVISION 12-03-09 | DATE PLOTTED => 14-SEP-2010 | TIME PLOTTED => 10:36

Dist	COUNTY	ROUTE	POST MILES TOTAL PROJECT	SHEET No.	TOTAL SHEETS
02	Tri	3	68.5,70.7	15	93

Lori Ewens 8-19-10
REGISTERED CIVIL ENGINEER DATE

8-23-10
PLANS APPROVAL DATE

REGISTERED PROFESSIONAL ENGINEER
LORI EWENS
No. C43919
Exp. 6-30-11
CIVIL
STATE OF CALIFORNIA

THE STATE OF CALIFORNIA OR ITS OFFICERS OR AGENTS SHALL NOT BE RESPONSIBLE FOR THE ACCURACY OR COMPLETENESS OF ELECTRONIC COPIES OF THIS PLAN SHEET.

NOTES:

1. FIBER OPTIC CABLE IS A MAIN INTERNATIONAL CABLE THAT CROSSES THE PACIFIC OCEAN. BOTH TEMPORARY AERIAL CABLE AND FINAL BURIED CABLE SHALL BE PROTECTED IN PLACE.
2. CONTRACTOR SHALL VERIFY UTILITY LOCATIONS SHOWN ON PLANS PRIOR TO CONSTRUCTION.
3. AT THE END OF STAGE 1 CONSTRUCTION, OTHERS WILL RELOCATE TEMPORARY AERIAL FIBER OPTIC TO FINAL BURIED LOCATION.

LEGEND

—FO— — —(OH)— —	TEMPORARY AERIAL FIBER OPTIC
·fo·····fo·····	ABANDONED BURIED FIBER OPTIC
—FO— — —FO— —	FINAL BURIED FIBER OPTIC
⊗	NEW VAULT LOCATION
⬢	TEMPORARY FIBER OPTIC POLE

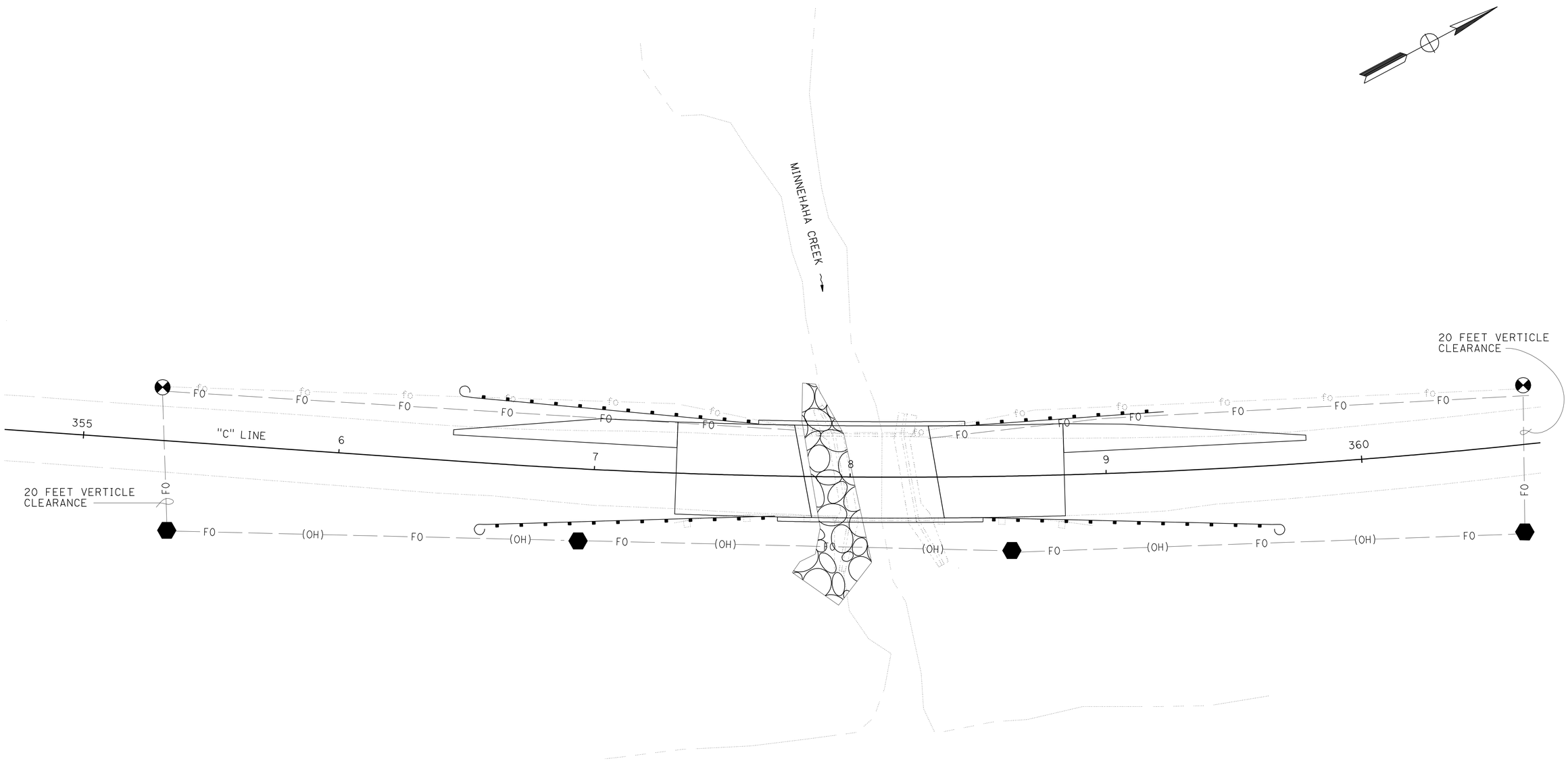

LOCATION 2
UTILITY PLAN
SCALE: 1" = 20'

U-1

THIS SHEET ACCURATE FOR UTILITY WORK ONLY.

REVISED BY | DATE REVISED
LORI EWENS | DELARE VIOLETTI
CALCULATED-DESIGNED BY | CHECKED BY
FUNCTIONAL SUPERVISOR
ROB BURNETT

STATE OF CALIFORNIA - DEPARTMENT OF TRANSPORTATION
Caltrans **DESIGN**

P:\proj2\02\2c990\pse\22c990ka001.dgn

LAST REVISION 12-15-09 | DATE PLOTTED => 07-SEP-2010 | TIME PLOTTED => 08:45

Dist	COUNTY	ROUTE	POST MILES TOTAL PROJECT	SHEET No.	TOTAL SHEETS
02	Tri	3	68.5,70.7	16	93

Lori Ewens 02-16-10
REGISTERED CIVIL ENGINEER DATE

8-23-10
PLANS APPROVAL DATE

REGISTERED PROFESSIONAL ENGINEER LORI EWENS No. C43919 Exp. 6-30-11 CIVIL STATE OF CALIFORNIA

THE STATE OF CALIFORNIA OR ITS OFFICERS OR AGENTS SHALL NOT BE RESPONSIBLE FOR THE ACCURACY OR COMPLETENESS OF ELECTRONIC COPIES OF THIS PLAN SHEET.

NOTES:

1. EXACT SIGN LOCATIONS WILL BE DETERMINED BY THE ENGINEER
2. CALIFORNIA CODES ARE DESIGNATED BY (CA), OTHERWISE FEDERAL CODES ARE SHOWN
3. ALL SIGNS SHALL BE BLACK ON ORANGE EXCEPT R4-1 AND R10-6
4. MOUNTED ON POST WITH FLASHING BEACON
5. MOUNTED ON POST
6. MOUNTED ON POST WITH TRAFFIC SYMBOL

LEGEND

- FLASHING BEACON
- STATIONARY MOUNTED SIGN
- TEMPORARY TRAFFIC SIGNAL

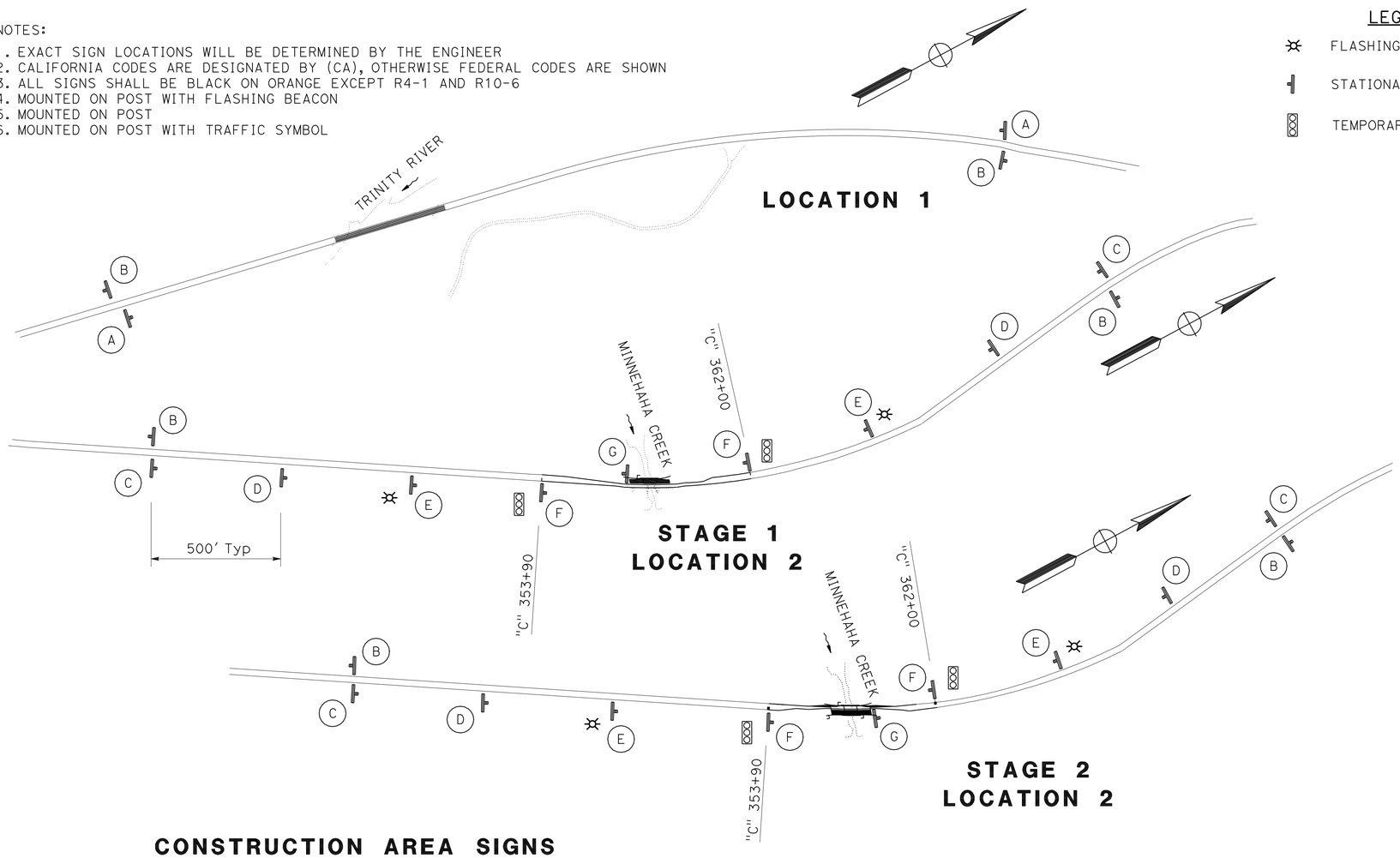

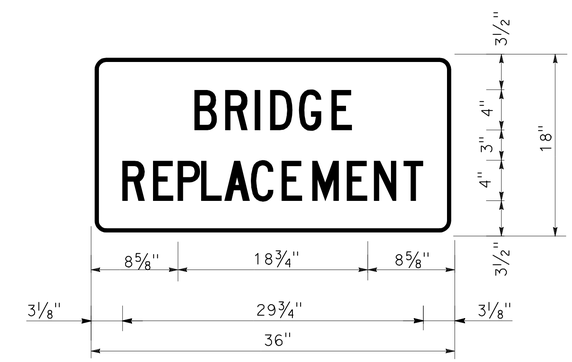

SIGN DETAIL

1.5" RADIUS, 0.4" BORDER, 0.4" INDENT, BLACK ON ORANGE; [BRIDGE] C; [REPLACEMENT] C;

CONSTRUCTION AREA SIGNS (STATIONARY MOUNTED)

SIGN No.	TYPE	MESSAGE	POST EA	No. OF SIGNS	PANEL SIZE
A	W20-1	ROAD WORK AHEAD NEXT 1 MILE	1 - 4" x 6"	2	36" x 36"
B	G20-2	END ROAD WORK	1 - 4" x 6"	4	36" x 18"
C	W20-1	ROAD WORK AHEAD	1 - 4" x 6"	2	36" x 36"
	C23B(CA)	BRIDGE REPLACEMENT			36" x 18"
D	W20-4	ONE LANE ROAD AHEAD	1 - 4" x 6"	2	48" x 48"
	R4-1	DO NOT PASS	SEE NOTE 5	2	24" x 30"
E	W3-3	SIGNAL SYMBOL	SEE NOTE 4	2	48" x 48"
	W34A (CA)	500 FEET AHEAD	SEE NOTE 4	2	36" x 30"
F	R10-6	STOP HERE ON RED	SEE NOTE 6	2	24" x 36"
G	R11-4	REVERSE CURVE SYMBOL SIGN	1 - 4" x 6"	1	30" x 30"

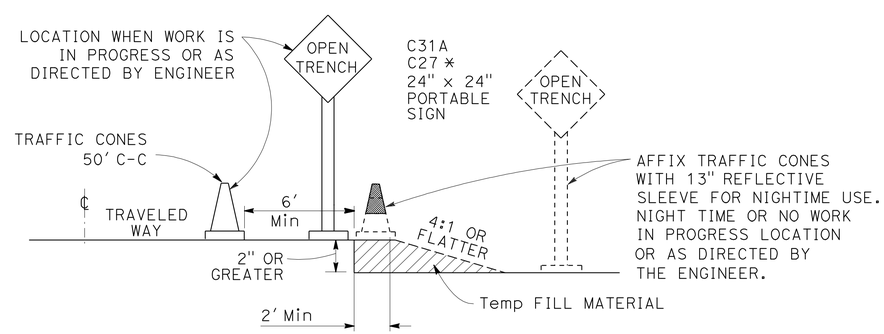

OPEN TRENCH SIGNING AND MARKING

NO SCALE

* PLACE AT 250' INTERVALS THROUGH THE OPEN TRENCH AREA, ALTERNATE C27 (OPEN TRENCH) AND C31A (NO SHOULDER) SIGNS

CONSTRUCTION AREA SIGNS

NO SCALE

CS-1

REVISED BY | DATE REVISED
LORIE EWENS | BRIAN STEINER
CALCULATED-DESIGNED BY | CHECKED BY
FUNCTIONAL SUPERVISOR: ROB BURNETT

STATE OF CALIFORNIA - DEPARTMENT OF TRANSPORTATION
Caltrans DESIGN

P:\proj2\02\2c990\pse\22c9901a001.dgn

LAST REVISION 01-29-10 | DATE PLOTTED => 26-AUG-2010 | TIME PLOTTED => 12:40

Dist	COUNTY	ROUTE	POST MILES TOTAL PROJECT	SHEET No.	TOTAL SHEETS
02	Tri	3	68.5,70.7	17	93

Lori Ewens 02-16-10
REGISTERED CIVIL ENGINEER DATE

8-23-10
PLANS APPROVAL DATE

REGISTERED PROFESSIONAL ENGINEER
LORI EWENS
No. C43919
Exp. 6-30-11
CIVIL
STATE OF CALIFORNIA

THE STATE OF CALIFORNIA OR ITS OFFICERS OR AGENTS SHALL NOT BE RESPONSIBLE FOR THE ACCURACY OR COMPLETENESS OF ELECTRONIC COPIES OF THIS PLAN SHEET.

NOTE:

1. FOR STAGE 1 AND STAGE 2 CONSTRUCT HMA 0.15′ BELOW FINISH GRADE FROM "C" 357+32 TO BEGIN BRIDGE AND FROM END BRIDGE TO "C" 358+84. COMPLETE FINAL LIFT OF HMA AFTER STAGED BRIDGE CONSTRUCTION IS COMPLETE

LEGEND

- STAGE 1 CONSTRUCTION
- TEMPORARY RAILING (TYPE K)
- DIRECTION OF TRAFFIC
- SURFACE MOUNTED CHANNELIZERS (SPACED 25′ C-C)

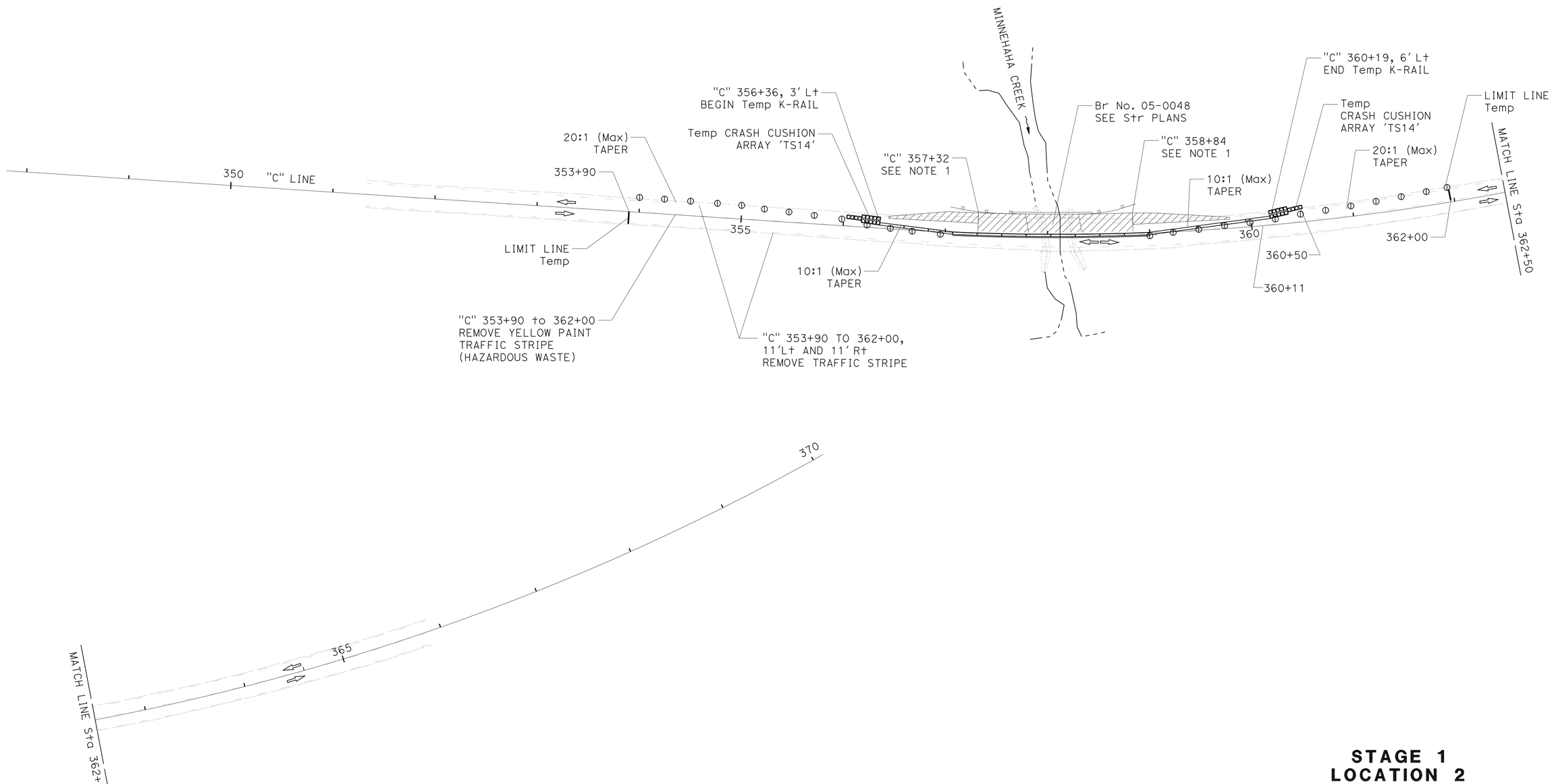

THIS SHEET ACCURATE FOR STAGE CONSTRUCTION ONLY.

STAGE 1
LOCATION 2

STAGE CONSTRUCTION

SCALE: 1" = 50′

SC-1

REVISED BY	DATE REVISED

CALCULATED-DESIGNED BY	CHECKED BY
LORIE EWENS	BRIAN STEINER

FUNCTIONAL SUPERVISOR: ROB BURNETT

STATE OF CALIFORNIA - DEPARTMENT OF TRANSPORTATION
Caltrans DESIGN

P:\proj2\02\2c990\pse\22c990ma001.dgn

LAST REVISION 12-15-09 | DATE PLOTTED => 26-AUG-2010 | TIME PLOTTED => 12:40

Dist	COUNTY	ROUTE	POST MILES TOTAL PROJECT	SHEET No.	TOTAL SHEETS
02	Tri	3	68.5,70.7	18	93

Lori Ewens 02-16-10
REGISTERED CIVIL ENGINEER DATE

8-23-10
PLANS APPROVAL DATE

REGISTERED PROFESSIONAL ENGINEER
LORI EWENS
No. C43919
Exp. 6-30-11
CIVIL
STATE OF CALIFORNIA

THE STATE OF CALIFORNIA OR ITS OFFICERS OR AGENTS SHALL NOT BE RESPONSIBLE FOR THE ACCURACY OR COMPLETENESS OF ELECTRONIC COPIES OF THIS PLAN SHEET.

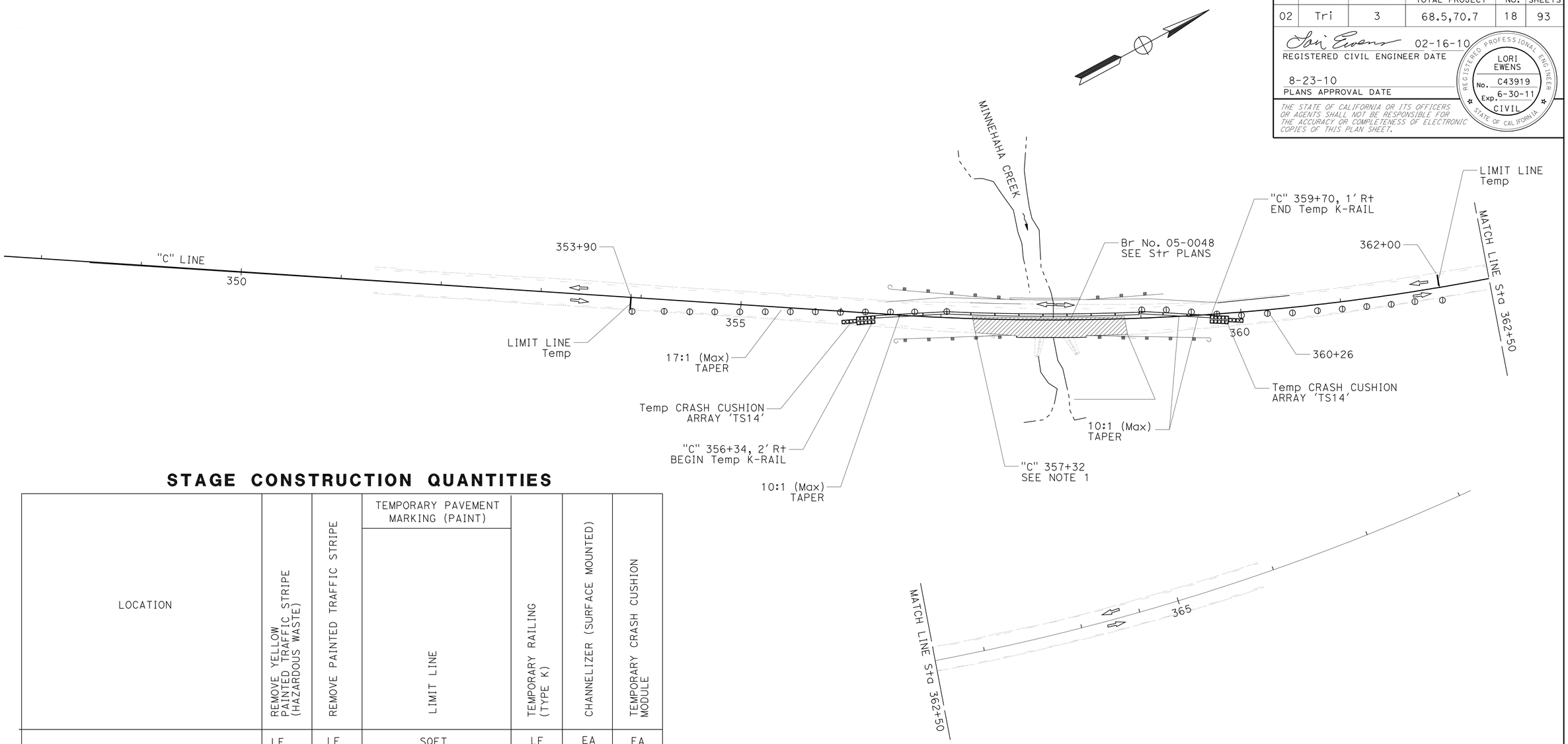

STAGE CONSTRUCTION QUANTITIES

LOCATION	REMOVE YELLOW PAINTED TRAFFIC STRIPE (HAZARDOUS WASTE)	REMOVE PAINTED TRAFFIC STRIPE	TEMPORARY PAVEMENT MARKING (PAINT)	TEMPORARY RAILING (TYPE K)	CHANNELIZER (SURFACE MOUNTED)	TEMPORARY CRASH CUSHION MODULE
			LIMIT LINE			
	LF	LF	SQFT	LF	EA	EA
STAGE 1						
"C" 353+90 TO 362+00	810					
L+ AND R+ "C" 353+90 TO 362		1620				
L+ "C" 353+90 TO 362					26	
"C" 353+90 AND 362			24.0			
"C" 356+36 TO 360+19				380		
"C" 356+40 AND 360+19						28
STAGE 2						
L+ "C" 353+90 TO 362						
R+ "C" 356+90 TO 362					26	
"C" 356+34 TO 359+70				340		
"C" 356+34 AND 359+70						28
TOTAL	810	1620	24.0	720	52	56

THIS PLAN ACCURATE FOR STAGE CONSTRUCTION ONLY.

STAGE 2
LOCATION 2

STAGE CONSTRUCTION

SCALE: 1" = 50'

SC-2

REVISED BY	DATE REVISED

CALCULATED-DESIGNED BY: LORIE EWENS
CHECKED BY: BRIAN STEINER
FUNCTIONAL SUPERVISOR: ROB BURNETT

STATE OF CALIFORNIA - DEPARTMENT OF TRANSPORTATION
Caltrans DESIGN

P:\proj2\02\2c990\pse\22c990ma002.dgn

LAST REVISION 12-15-09 | DATE PLOTTED => 26-AUG-2010 | TIME PLOTTED => 12:40

Dist	COUNTY	ROUTE	POST MILES TOTAL PROJECT	SHEET No.	TOTAL SHEETS
02	Tri	3	68.5,70.7	19	93

Lori Ewens 02-16-10
REGISTERED CIVIL ENGINEER DATE

8-23-10
PLANS APPROVAL DATE

REGISTERED PROFESSIONAL ENGINEER
LORI EWENS
No. C43919
Exp. 6-30-11
CIVIL
STATE OF CALIFORNIA

THE STATE OF CALIFORNIA OR ITS OFFICERS OR AGENTS SHALL NOT BE RESPONSIBLE FOR THE ACCURACY OR COMPLETENESS OF ELECTRONIC COPIES OF THIS PLAN SHEET.

LEGEND

- PAVEMENT DELINEATION DETAIL NUMBER
- SINGLE STRIPE MARKER
- STRIPE CHANGE LOCATION
- DIRECTION OF TRAFFIC

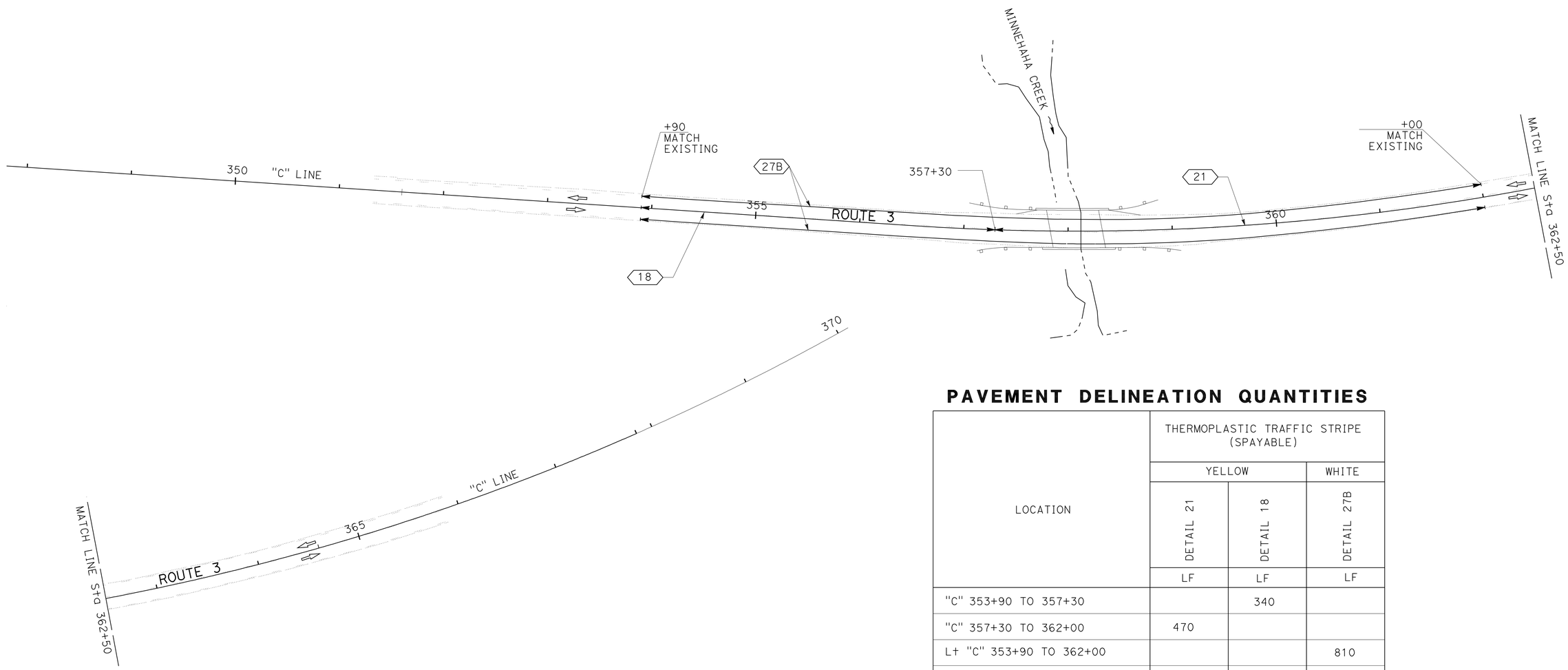

PAVEMENT DELINEATION QUANTITIES

LOCATION	THERMOPLASTIC TRAFFIC STRIPE (SPAYABLE)		
	YELLOW		WHITE
	DETAIL 21	DETAIL 18	DETAIL 27B
	LF	LF	LF
"C" 353+90 TO 357+30		340	
"C" 357+30 TO 362+00	470		
L+ "C" 353+90 TO 362+00			810
R+ "C" 353+90 TO 362+00			810
SUBTOTAL	470	340	1620
TOTAL	2430		

LOCATION 2
PAVEMENT DELINEATION PLAN

SCALE: 1" = 50'

PD-1

THIS SHEET ACCURATE FOR PAVEMENT DELINEATION WORK ONLY.

REVISED BY	DATE REVISED

CALCULATED-DESIGNED BY	LORIE EWENS
CHECKED BY	BRIAN STEINER
FUNCTIONAL SUPERVISOR	ROB BURNETT

STATE OF CALIFORNIA - DEPARTMENT OF TRANSPORTATION
Caltrans
DESIGN

P:\proj2\02\2c990\pse\22c990na001.dgn

LAST REVISION 12-15-09
DATE PLOTTED => 26-AUG-2010
TIME PLOTTED => 12:40

Dist	COUNTY	ROUTE	POST MILES TOTAL PROJECT	SHEET No.	TOTAL SHEETS
02	Tri	3	68.5,70.7	20	93

Lori Ewens 02-16-10
REGISTERED CIVIL ENGINEER DATE

8-23-10
PLANS APPROVAL DATE

REGISTERED PROFESSIONAL ENGINEER LORI EWENS No. C43919 Exp. 6-30-11 CIVIL STATE OF CALIFORNIA

THE STATE OF CALIFORNIA OR ITS OFFICERS OR AGENTS SHALL NOT BE RESPONSIBLE FOR THE ACCURACY OR COMPLETENESS OF ELECTRONIC COPIES OF THIS PLAN SHEET.

NOTE:

(N) - NOT A SEPARATE PAY ITEM, FOR INFORMATION ONLY.

ABBREVIATIONS:

NOA - NATURALLY OCCURING ASBESTOS

METAL BEAM GUARD RAILING

STATION	REMOVE METAL BEAM GUARD RAILING	METAL BEAM GUARD RAILING	TRANSITION RAILING (TYPE WB)	ALTERNATIVE FLARED TERMINAL SYSTEM	(N) BURIED END ANCHOR	GUARD RAILING DELINEATOR	(N) * ROCK AND MBGR STAINING	DESCRIPTION
	LF	LF	EA	EA	EA	EA	SQFT	
"C" 357+24, 21' L+ TO 357+88, 16' L+	65							
"C" 356+50, 24' L+ TO 357+63, 20' L+		50	1	1		2	174	TYPE 12B LAYOUT
"C" 358+31, 16' L+ TO 358+74, 24' L+	50							
"C" 358+45, 20' L+ TO 359+24 24' L+		25	1		1	2	138	TYPE 12C LAYOUT
"C" 357+32, 20' R+ TO 357+96, 16' R+	65							
"C" 356+56, 24' R+ TO 357+72, 16' R+		50	1	1		2	174	TYPE 12B LAYOUT
"C" 358+31, 16' R+ TO 358+94, 20' R+	65							
"C" 358+58, 16' R+ TO 359+59, 23' R+		50	1	1		2	174	TYPE 12B LAYOUT
TOTAL	245	175	4	3	1	8	660	

* ADDITIONAL QUANTITIES SHOWN ELSEWHERE ON SHEET

ROCK SLOPE PROTECTION

LOCATION	1/2 TON RSP (METHOD B)	RSP (BACKING No. 1, METHOD B)	RSP FABRIC	(N) ROCK AND METAL BEAM GUARD RAILING STAINING *
	CY	CY	SQYD	SQFT
ABUTMENT 1	219	116	330	2530

* ADDITIONAL QUANTITIES SHOWN ELSEWHERE ON SHEET

ROADWAY ITEMS

STATION	HMA (TYPE A)	CLASS 2 AGGREGATE BASE	IMPORTED MATERIAL (SHOULDER BACKING)	ROADWAY EXCAVATION (NOA)	PALCE HMA DIKE (TYPE F)	PLACE HMA DIKE (TYPE C)
	TON	CY	TON	CY	LF	LF
"C" 356+44 TO 357+32 L+	20.8	11.7	7.4	21.7		
"C" 357+32 TO BEGIN BRIDGE	58.9	33.0	4.2	62.2		
"C" END BRIDGE TO 358+84	59.4	33.4	4.9	58.2	41	
"C" 359+00 TO 359+79 L+	22.2	12.5	7.9	18.4		60
TOTAL	161.3	90.6	24.4	160.5	41	60

TEMPORARY EROSION CONTROL

STATION	TEMPORARY FENCE (TYPE ESA)	TEMPORARY FIBER ROLL	TEMPORARY SILT FENCE	TEMPORARY GRAVEL BAG BERM	TEMPORARY CONSTRUCTION ENTRANCE	TEMPORARY COVER	TEMPORARY CHECK DAM	TEMPORARY STRAW BALE BARRIER	TEMPORARY HYDRAULIC MULCH (BONDED FIBER MATRIX)	DESCRIPTION
	LF	LF	LF	LF	EA	SQYD	LF	LF	SQYD	
"B" 238+68 TO 349+00	1965									CONSTRUCTION DETAIL SHEET C-2
"B" 238+68 TO 349+00			785						5300	
"B" 241+00 TO 346+00				60		1850	33	33		AS NEEDED FOR EROSION CONTROL
"B" 246+52, 248+95, "C" 355+60, "C" 356+80					5					
"C" 351+35 TO 361+00	1965									CONSTRUCTION DETAIL SHEET C-3
"C" 351+35 TO 361+00			785						6000	
"C" 355+00 TO 360+00				70		1850	40	40		AS NEEDED FOR EROSION CONTROL
TOTAL	3930	500	1570	130	5	3700	73	73	11300	

SUMMARY OF QUANTITIES

Q-1

REVISED BY | DATE REVISED
LORIE EWENS | DELARE VIOLETTI
CALCULATED-DESIGNED BY | CHECKED BY
FUNCTIONAL SUPERVISOR
ROB BURNETT

STATE OF CALIFORNIA - DEPARTMENT OF TRANSPORTATION
Caltrans DESIGN

P:\proj2\02\2c990\pse\22c990pa001.dgn

LAST REVISION 12-15-09 | DATE PLOTTED => 14-SEP-2010 | TIME PLOTTED => 10:49

Dist	COUNTY	ROUTE	POST MILES TOTAL PROJECT	SHEET No.	TOTAL SHEETS
02	Tri	3	68.5,70.7	21	93

REGISTERED ELECTRICAL ENGINEER 02-17-10

8-23-10
PLANS APPROVAL DATE

REGISTERED PROFESSIONAL ENGINEER J.M. HANNIGAN No. E13665 Exp. 6-30-11 ELECTRICAL STATE OF CALIFORNIA

THE STATE OF CALIFORNIA OR ITS OFFICERS OR AGENTS SHALL NOT BE RESPONSIBLE FOR THE ACCURACY OR COMPLETENESS OF ELECTRONIC COPIES OF THIS PLAN SHEET.

PROJECT NOTES:

1. SIGNAL HEADS SHALL HAVE 3-12" SECTIONS.
2. LOCATIONS ARE APPROXIMATE ONLY. EXACT LOCATIONS TO BE DETERMINED BY THE ENGINEER.
3. SEE CONSTRUCTION AREA SIGNS PLANS FOR FLASHING BEACON LOCATIONS.
4. MARK WOOD POLES WITH REFLECTORIZED TAPE AS SHOWN ON DETAIL "A". POLES SHALL BE LOCATED 15′ FROM ETW OR PROVIDE ATTENUATION.

5 CLASS 2 WOOD POLE.

6 SV-1-T MOUNTING WITH BOTTOM OF SIGNAL HOUSING 10′ ABOVE GRADE.

7 MAS ON 20′ SMA WITH 17′ CLEARANCE FROM BOTTOM OF SIGNAL HOUSING TO GRADE.

8 15′ LMA WITH 200 W HPS LUMINAIRE.

9 INSTALL STATE-FURNISHED CONTROLLER ASSEMBLY (TYPE 332 CABINET).

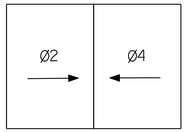

PHASE DIAGRAM

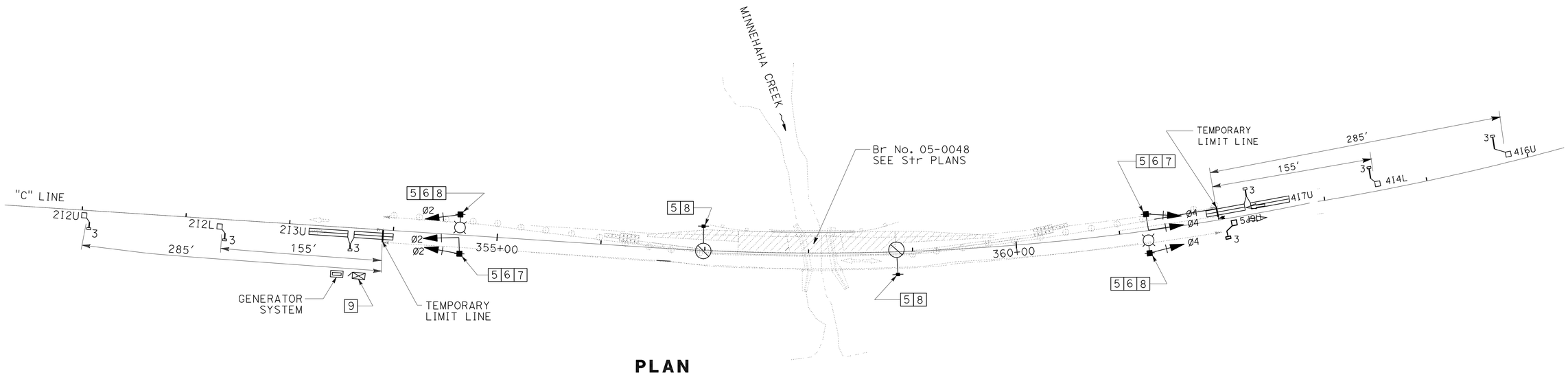

PLAN
SCALE: 1" = 50′

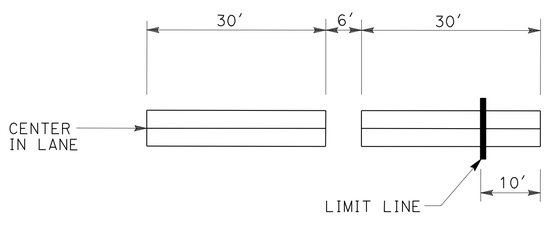

TYPE C DETECTOR INSTALLATION
TEMPORARY SIGNAL SYSTEM
NO SCALE

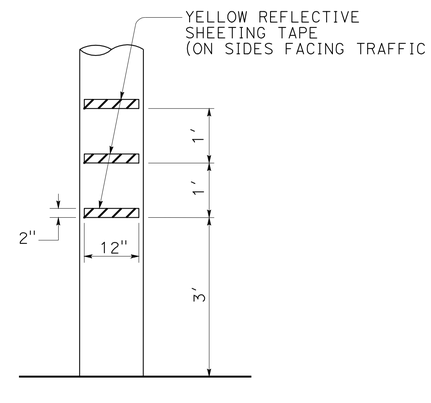

DETAIL A
NO SCALE

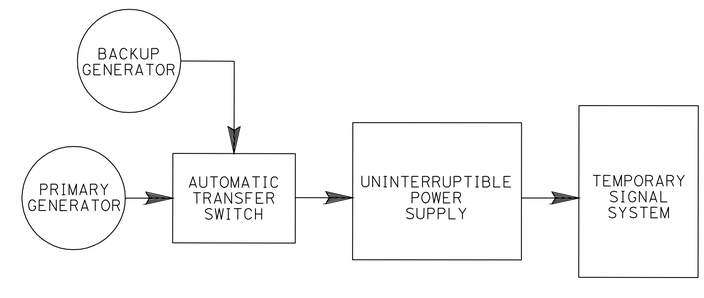

POWER SUPPLY BLOCK DIAGRAM
NO SCALE

TEMPORARY SIGNAL SYSTEM

SCALE: AS NOTED

E-1

JAMES M. HANNIGAN — JIM ELGIN — REVISED BY — DATE REVISED — CALCULATED-DESIGNED BY — CHECKED BY — FUNCTIONAL SUPERVISOR — ROB STINGER

STATE OF CALIFORNIA - DEPARTMENT OF TRANSPORTATION
Caltrans ELECTRICAL DESIGN

P:\proj2\02\2c990\pse\22c990ua001.dgn

LAST REVISION 02-17-10 | DATE PLOTTED => 26-AUG-2010 | TIME PLOTTED => 14:44

Dist	COUNTY	ROUTE	POST MILES TOTAL PROJECT	SHEET No.	TOTAL SHEETS
02	Tri	3	68.5,70.7	22	93

J. Hannigan 02-17-10
REGISTERED ELECTRICAL ENGINEER

8-23-10
PLANS APPROVAL DATE

REGISTERED PROFESSIONAL ENGINEER J.M. HANNIGAN No. E13665 Exp. 6-30-11 ELECTRICAL STATE OF CALIFORNIA

THE STATE OF CALIFORNIA OR ITS OFFICERS OR AGENTS SHALL NOT BE RESPONSIBLE FOR THE ACCURACY OR COMPLETENESS OF ELECTRONIC COPIES OF THIS PLAN SHEET.

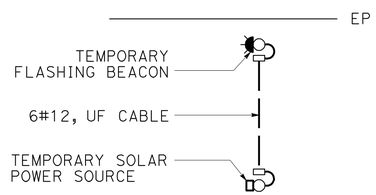

TYPICAL SOLAR INSTALLATION

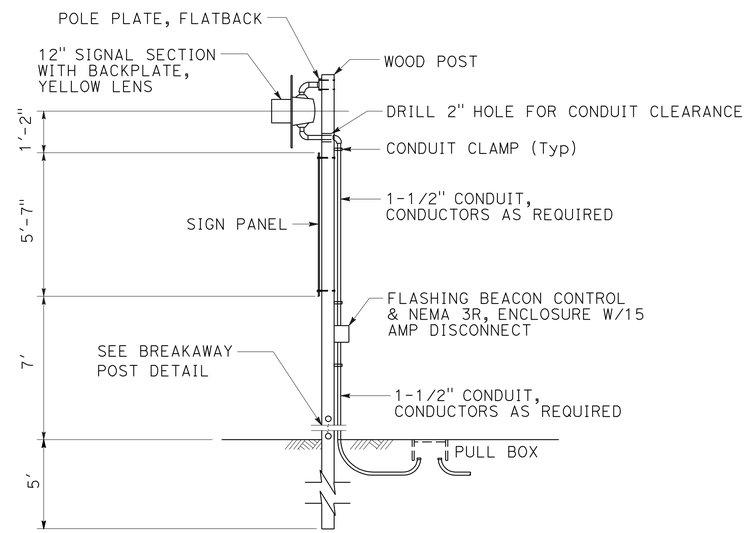

TEMPORARY FLASHING BEACON

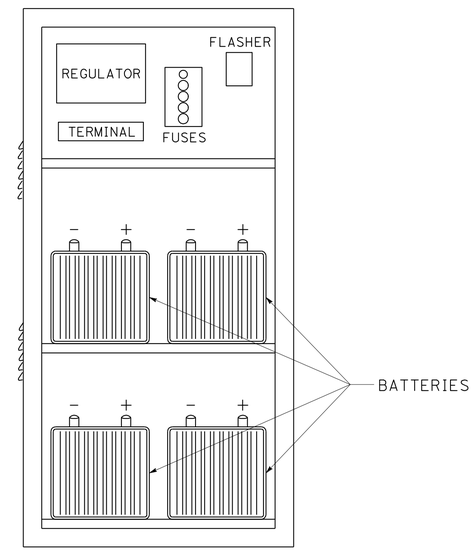

NEMA 4 BATTERY AND CONTROL ENCLOSURE

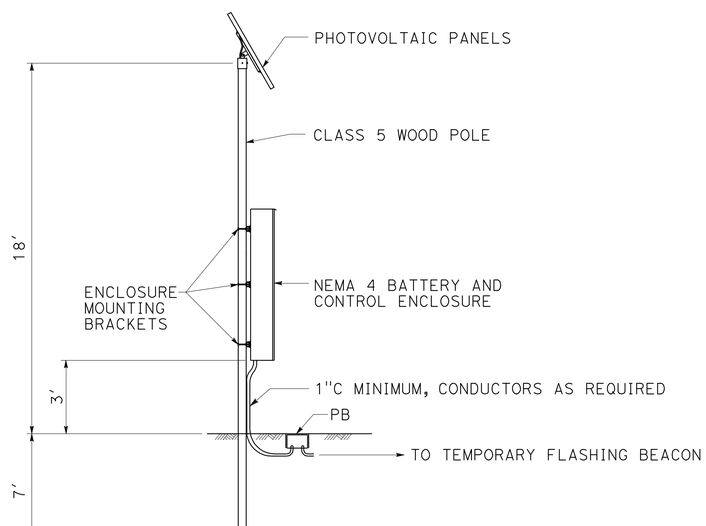

TEMPORARY SOLAR POWER SOURCE

NOTE: POLE SHALL BE LOCATED 15' FROM ETW OR PROVIDE ATTENUATION.

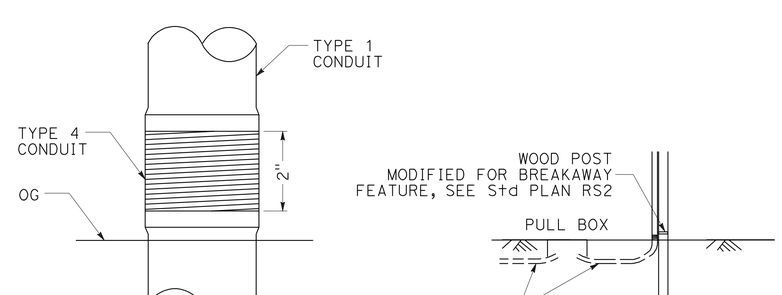

BREAKAWAY POST
(CONDUIT CONNECTION)

ELECTRICAL DETAILS
NO SCALE

E-2

REVISED BY	DATE REVISED

CALCULATED-DESIGNED BY	JAMES M. HANNIGAN
CHECKED BY	JIM ELGIN

FUNCTIONAL SUPERVISOR: ROB STINGER

STATE OF CALIFORNIA - DEPARTMENT OF TRANSPORTATION
Caltrans ELECTRICAL DESIGN

P:\proj2\02\2c990\pse\22c990ua002.dgn

LAST REVISION 02-17-10 | DATE PLOTTED => 26-AUG-2010 | TIME PLOTTED => 14:44

DIST	COUNTY	ROUTE	POST MILES TOTAL PROJECT	SHEET NO.	TOTAL SHEETS
02	Tri	3	68.5,70.7	23	93

Randell D. Hiatt
REGISTERED CIVIL ENGINEER

June 6, 2008
PLANS APPROVAL DATE

REGISTERED PROFESSIONAL ENGINEER Randell D. Hiatt No. C50200 Exp. 6-30-09 CIVIL STATE OF CALIFORNIA

The State of California or its officers or agents shall not be responsible for the accuracy or completeness of electronic copies of this plan sheet.

To accompany plans dated 8-23-10

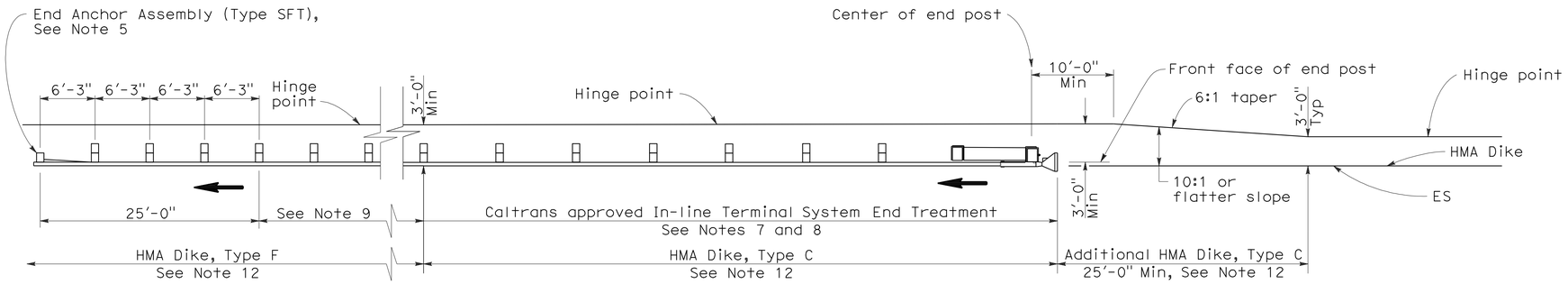

TYPE 11A LAYOUT

(EMBANKMENT GUARD INSTALLATION WITH IN-LINE END TREATMENT AT TRAFFIC APPROACH END OF RAILING)
See Note 6

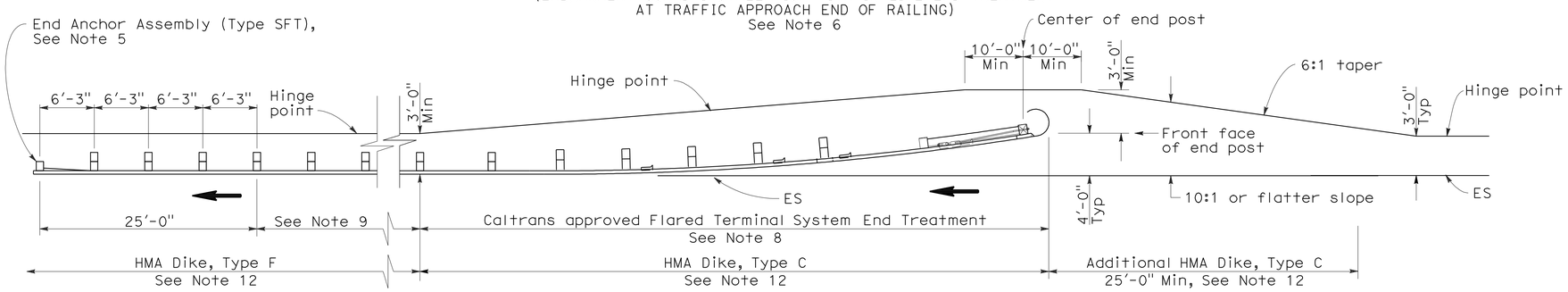

TYPE 11B LAYOUT

(EMBANKMENT GUARD RAILING INSTALLATION WITH FLARED END TREATMENT AT TRAFFIC APPROACH END OF RAILING)
See Note 6

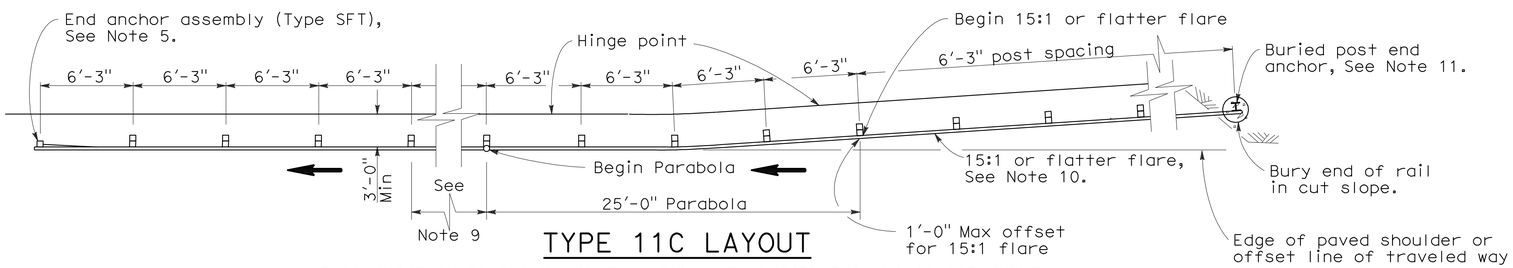

TYPE 11C LAYOUT

(EMBANKMENT GUARD RAILING INSTALLATION WITH BURIED END ANCHOR TREATMENT AT TRAFFIC APPROACH END OF RAILING)
See Notes 6 and 12

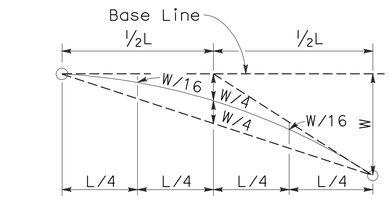

TYPICAL PARABOLIC LAYOUT

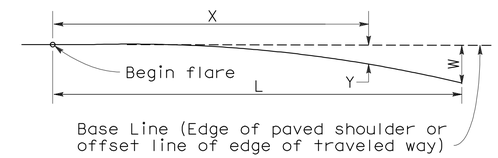

$$Y = \frac{WX^2}{L^2}$$

Y = Offset from base line
W = Maximum offset
X = Distance along base line
L = Length of flare

PARABOLIC FLARE OFFSETS

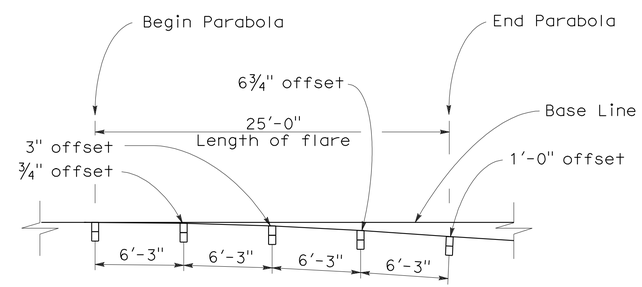

TYPICAL FLARE OFFSETS FOR 1 FOOT MAX END OFFSET

NOTES:

1. Line post, blocks and hardware to be used are shown on Standard Plans A77A1, A77A2, A77B1, A77C1, and A77C2.
2. Guard rail post spacing to be 6'-3" center to center, except as otherwise noted.
3. Except as noted, line posts are 6" x 8" x 6'-0" wood with 6" x 8" x 1'-2" wood blocks. W6 x 9 steel posts, 6'-0" in length, with 6" x 8" x 1'-2" notched wood blocks or recycled plastic blocks may be used for 6" x 8" x 6'-0" wood post with 6" x 8" x 1'-2" wood blocks where applicable and when specified.
4. Direction of adjacent traffic indicated by ⟶.
5. For End Anchor Assembly (Type SFT) details, see Standard Plan A77H1.
6. Layout Types 11A, 11B or 11C are typically used where guard railing is recommended to shield embankment slopes and a crashworthy end treatment is required for only one direction of traffic.
7. In-line Terminal System End Treatments are used where site conditions will not accommodate a flared end treatment.
8. The type of terminal system end treatment to be used will be shown on the Project Plans.
9. Dependent on site conditions (embankment height and side slope), construction of additional guard railing (length equal to multiples of 12'-6" with 6'-3" post spacing) may be advisable.
10. The 15:1 or flatter flare used with buried end anchors is based on the edge of the paved shoulder or offset line of edge of the traveled way. The length of guard railing within the 15:1 or flatter flare is based on site conditions and should be a length equal to multiples of 12'-6".
11. For details of the buried post end anchor used with Type 11C Layout, see Standard Plan A77I2.
12. Where placement of dike is required with guard railing installations, see Revised Standard Plan RSP A77C4 for dike positioning details.

STATE OF CALIFORNIA
DEPARTMENT OF TRANSPORTATION

METAL BEAM GUARD RAILING TYPICAL LAYOUTS FOR EMBANKMENTS

NO SCALE

RSP A77E1 DATED JUNE 6, 2008 SUPERSEDES STANDARD PLAN A77E1
DATED MAY 1, 2006 - PAGE 48 OF THE STANDARD PLANS BOOK DATED MAY 2006.

REVISED STANDARD PLAN RSP A77E1

2006 REVISED STANDARD PLAN RSP A77E1

12-10-07

DIST	COUNTY	ROUTE	POST MILES TOTAL PROJECT	SHEET NO.	TOTAL SHEETS
02	Tri	3	68.5,70.7	24	93

Randell D. Hiatt
REGISTERED CIVIL ENGINEER

June 6, 2008
PLANS APPROVAL DATE

REGISTERED PROFESSIONAL ENGINEER
Randell D. Hiatt
No. C50200
Exp. 6-30-09
CIVIL
STATE OF CALIFORNIA

The State of California or its officers or agents shall not be responsible for the accuracy or completeness of electronic copies of this plan sheet.

To accompany plans dated 8-23-10

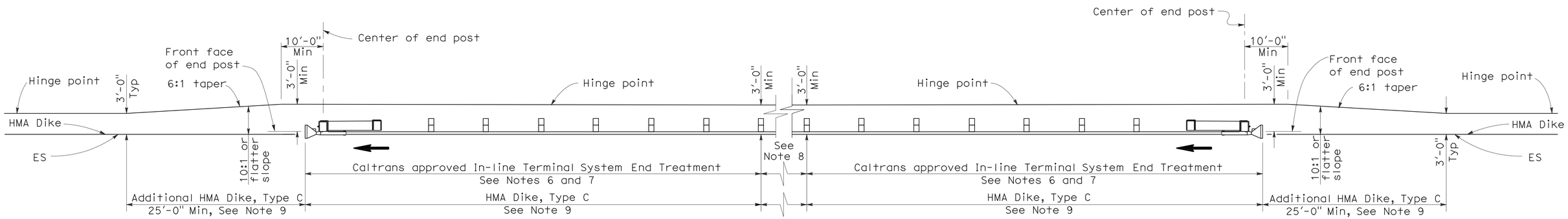

TYPE 11D LAYOUT

(EMBANKMENT GUARD RAILING INSTALLATION WITH
IN-LINE END TREATMENT AT EACH END OF RAILING)
See Note 5

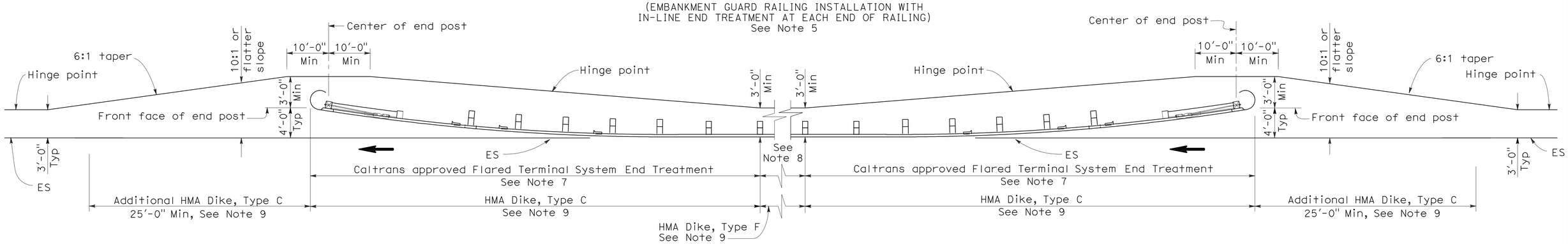

TYPE 11E LAYOUT

(EMBANKMENT GUARD RAILING INSTALLATION WITH
FLARED END TREATMENT AT EACH END OF RAILING)
See Note 5

NOTES:

1. Line post, blocks and hardware to be used are shown on Standard Plans A77A1, A77A2, A77B1, A77C1 and A77C2.
2. Guard rail post spacing to be 6'-3" center to center, except as otherwise noted.
3. Except as noted, line posts are 6" x 8" x 6'-0" wood with 6" x 8" x 1'-2" wood blocks, W6 x 9 steel posts, 6'-0" in length, with 6" x 8" x 1'-2" notched wood blocks or plastic blocks may be used for 6" x 8" x 6'-0" wood post with 6" x 8" x 1'-2" wood blocks where applicable and when specified.
4. Direction of adjacent traffic indicated by ⟶.
5. Layout Types 11D through 11L, shown on the A77E Series of Revised Standard Plans, are typically used where guard railing is recommended to shield embankment slopes and a crashworthy end treatment is required for both directions of traffic.
6. In-line Terminal System End Treatments are used where site conditions will not accommodate a flared end treatment.
7. The type of terminal system end treatment to be used will be shown on the Project Plans.
8. Dependent on site conditions (embankment height and side slope), construction of additional guard railing (length equal to multiples of 12'-6" with 6'-3" post spacing) may be advisable.
9. Where placement of dike is required with guard railing installations, see Revised Standard Plan RSP A77C4 for dike positioning details.

STATE OF CALIFORNIA
DEPARTMENT OF TRANSPORTATION

METAL BEAM GUARD RAILING TYPICAL LAYOUTS FOR EMBANKMENTS

NO SCALE

RSP A77E2 DATED JUNE 6, 2008 SUPERSEDES STANDARD PLAN A77E2
DATED MAY 1, 2006 - PAGE 49 OF THE STANDARD PLANS BOOK DATED MAY 2006.

REVISED STANDARD PLAN RSP A77E2

2006 REVISED STANDARD PLAN RSP A77E2

12-10-07

DIST	COUNTY	ROUTE	POST MILES TOTAL PROJECT	SHEET NO.	TOTAL SHEETS
02	Tri	3	68.5,70.7	25	93

Randell D. Hiatt
REGISTERED CIVIL ENGINEER

June 6, 2008
PLANS APPROVAL DATE

REGISTERED PROFESSIONAL ENGINEER
Randell D. Hiatt
No. C50200
Exp. 6-30-09
CIVIL
STATE OF CALIFORNIA

The State of California or its officers or agents shall not be responsible for the accuracy or completeness of electronic copies of this plan sheet.

To accompany plans dated 8-23-10

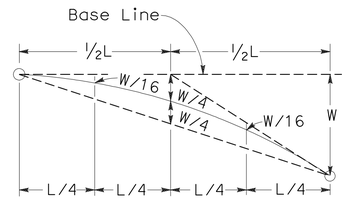

TYPICAL PARABOLIC LAYOUT

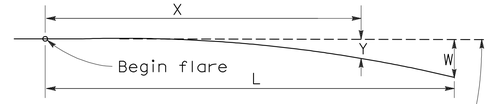

Base Line (Edge of paved shoulder or offset line of edge of traveled way)

$$Y = \frac{WX^2}{L^2}$$

Y = Offset from base line
W = Maximum offset
X = Distance along base line
L = Length of flare

PARABOLIC FLARE OFFSETS

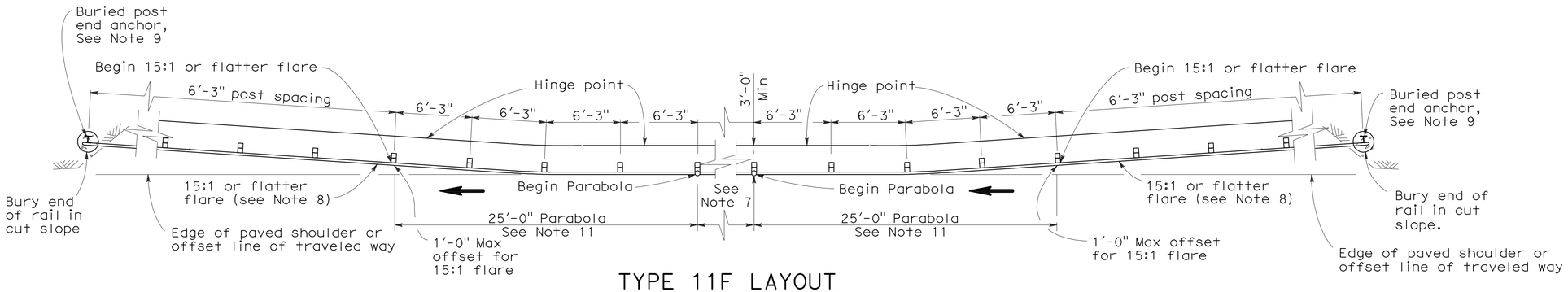

TYPE 11F LAYOUT

(EMBANKMENT GUARD RAILING INSTALLATION WITH A BURIED END ANCHOR TREATMENT AT EACH END OF RAILING)
See Notes 5 and 10

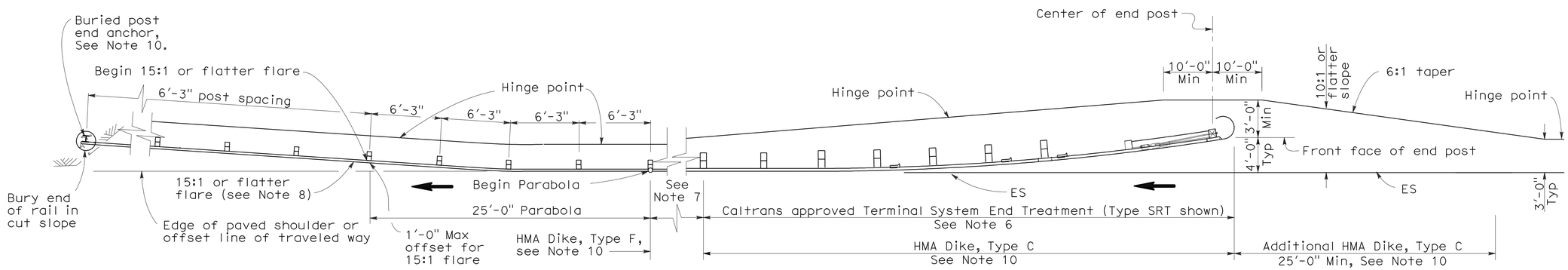

TYPE 11G LAYOUT

(EMBANKMENT GUARD RAILING INSTALLATION WITH FLARED END TREATMENT AND A BURIED END ANCHOR TREATMENT AT THE ENDS OF RAILING)
See Notes 5 and 10

NOTES:

1. Line post, blocks and hardware to be used are shown on Standard Plans A77A1, A77A2, A77B1, A77C1 and A77C2.
2. Guard rail post spacing to be 6'-3" center to center, except as otherwise noted.
3. Except as noted, line posts are 6" x 8" x 6'-0" wood with 6" x 8" x 1'-2" wood blocks. W6 x 9 steel posts, 6'-0" in length, with 6" x 8" x 1'-2" notched wood blocks or plastic blocks may be used for 6" x 8" x 6'-0" wood post with 6" x 8" x 1'-2" wood blocks where applicable and when specified.
4. Direction of adjacent traffic indicated by ⟶.
5. Layout Types 11D through 11L, shown on the A77E Series of Revised Standard Plans, are typically used where guard railing is recommended to shield embankment slopes and a crashworthy end treatment is required for both directions of traffic.
6. The type of terminal system end treatment to be used will be shown on the Project Plans.
7. Dependent on site conditions (embankment height and side slope), construction of additional guard railing (length equal to multiples of 12'-6" with 6'-3" post spacing) may be advisable.
8. The 15:1 or flatter flare used with buried end anchors is based on the edge of the paved shoulder or offset line of edge of the traveled way. The length of guard railing within the 15:1 or flatter flare is based on site conditions and should be a length equal to multiples of 12'-6".
9. For details of the buried post end anchor used with Type 11F and 11G Layouts, see Standard Plan A77I2.
10. Where placement of dike is required with guard railing installations, see Revised Standard Plan RSP A77C4 for dike positioning details.
11. For typical flare offsets for 25'-0" length parabola with maximum offset of 1'-0", see Revised Standard Plan RSP A77E1.

STATE OF CALIFORNIA
DEPARTMENT OF TRANSPORTATION

METAL BEAM GUARD RAILING TYPICAL LAYOUTS FOR EMBANKMENTS

NO SCALE

RSP A77E3 DATED JUNE 6, 2008 SUPERSEDES STANDARD PLAN A77E3 DATED MAY 1, 2006 - PAGE 50 OF THE STANDARD PLANS BOOK DATED MAY 2006.

REVISED STANDARD PLAN RSP A77E3

2006 REVISED STANDARD PLAN RSP A77E3

12-10-07

DIST	COUNTY	ROUTE	POST MILES TOTAL PROJECT	SHEET NO.	TOTAL SHEETS
02	Tri	3	68.5,70.7	26	93

Randell D. Hiatt
REGISTERED CIVIL ENGINEER

June 6, 2008
PLANS APPROVAL DATE

REGISTERED PROFESSIONAL ENGINEER
Randell D. Hiatt
No. C50200
Exp. 6-30-09
CIVIL
STATE OF CALIFORNIA

The State of California or its officers or agents shall not be responsible for the accuracy or completeness of electronic copies of this plan sheet.

To accompany plans dated 8-23-10

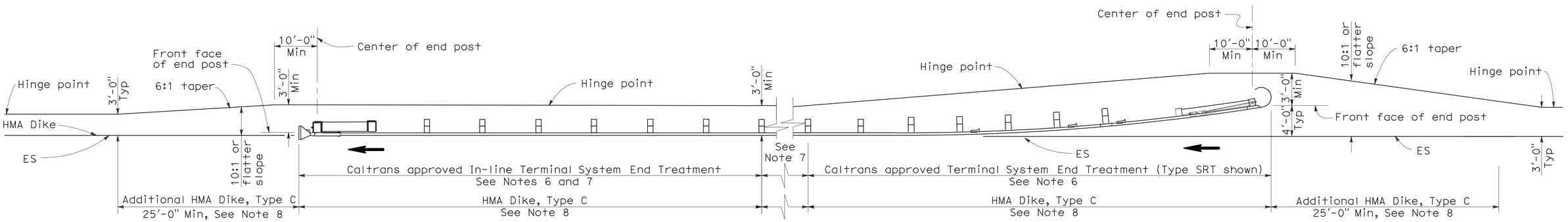

TYPE 11H LAYOUT

(EMBANKMENT GUARD RAILING INSTALLATION WITH FLARED END TREATMENT
AND AN IN-LINE TREATMENT AT THE ENDS OF RAILING)
See Notes 5 and 8

NOTES:

1. Line post, blocks and hardware to be used are shown on Standard Plans A77A1, A77A2, A77B1, A77C1 and A77C2.
2. Guard rail post spacing to be 6'-3" center to center, except as otherwise noted.
3. Except as noted, line posts are 6" x 8" x 6'-0" wood with 6" x 8" x 1'-2" wood blocks. W6 x 9 steel posts, 6'-0" in length, with 6" x 8" x 1'-2" notched wood blocks or plastic blocks may be used for 6" x 8" x 6'-0" wood post with 6" x 8" x 1'-2" wood blocks where applicable and when specified.
4. Direction of adjacent traffic indicated by ⟶.
5. Layout Types 11D through 11L, shown on the A77E Series of Revised Standard Plans, are typically used where guard railing is recommended to shield embankment slopes and a crashworthy end treatment is required for both directions of traffic.
6. The type of terminal system end treatment to be used will be shown on the Project Plans.
7. Dependent on site conditions (embankment height and side slope), construction of additional guard railing (length equal to multiples of 12'-6" with 6'-3" post spacing) may be advisable.
8. Where placement of dike is required with guard railing installations, see Revised Standard Plan RSP A77C4 for dike positioning details.

STATE OF CALIFORNIA
DEPARTMENT OF TRANSPORTATION

METAL BEAM GUARD RAILING TYPICAL LAYOUTS FOR EMBANKMENTS

NO SCALE

RSP A77E4 DATED JUNE 6, 2008 SUPERSEDES STANDARD PLAN A77E4
DATED MAY 1, 2006 - PAGE 51 OF THE STANDARD PLANS BOOK DATED MAY 2006.

REVISED STANDARD PLAN RSP A77E4

2006 REVISED STANDARD PLAN RSP A77E4

12-10-07

DIST	COUNTY	ROUTE	POST MILES TOTAL PROJECT	SHEET NO.	TOTAL SHEETS
02	Tri	3	68.5,70.7	27	93

Randell D. Hiatt
REGISTERED CIVIL ENGINEER

June 6, 2008
PLANS APPROVAL DATE

REGISTERED PROFESSIONAL ENGINEER
Randell D. Hiatt
No. C50200
Exp. 6-30-09
CIVIL
STATE OF CALIFORNIA

The State of California or its officers or agents shall not be responsible for the accuracy or completeness of electronic copies of this plan sheet.

To accompany plans dated 8-23-10

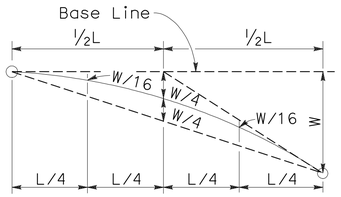

TYPICAL PARABOLIC LAYOUT

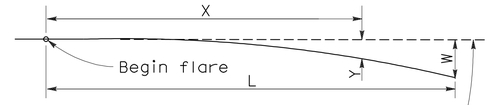

Base Line (Edge of paved shoulder or offset line of edge of traveled way)

$$Y = \frac{WX^2}{L^2}$$

Y = Offset from base line
W = Maximum offset
X = Distance along base line
L = Length of flare

PARABOLIC FLARE OFFSETS

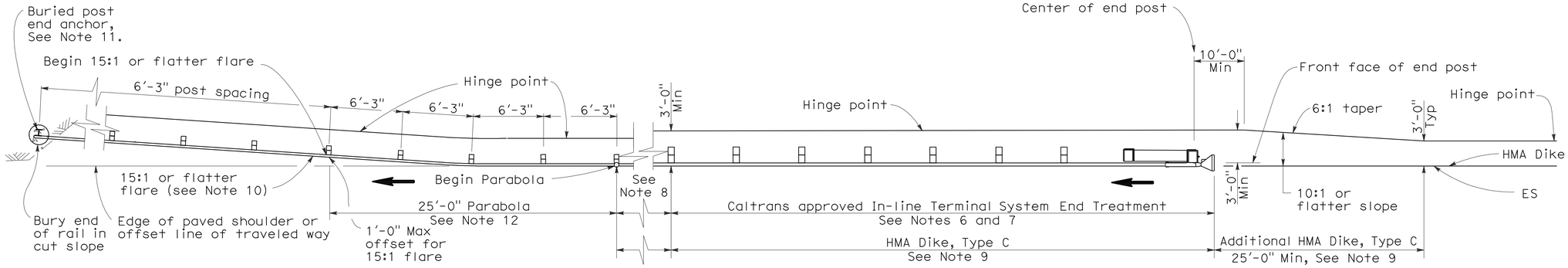

TYPE 11I LAYOUT

(EMBANKMENT GUARD RAILING INSTALLATION WITH IN-LINE END TREATMENT AND A BURIED END ANCHOR TREATMENT AT THE ENDS OF RAILING)
See Note 5

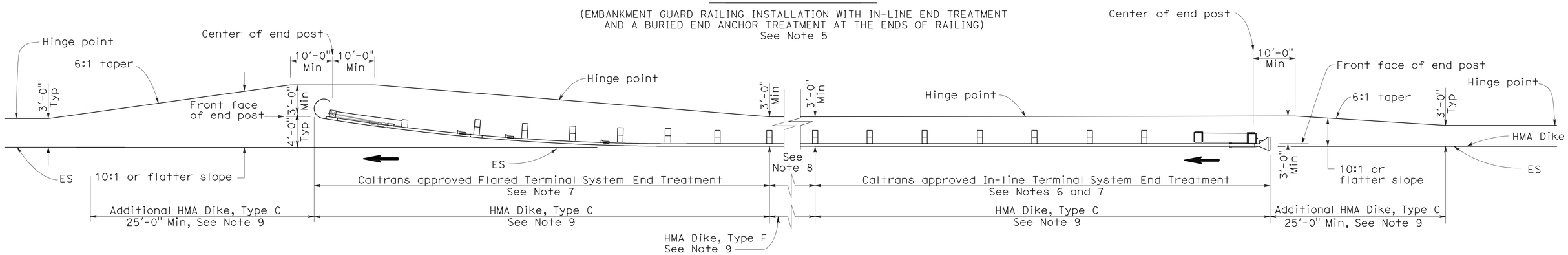

TYPE 11J LAYOUT

(EMBANKMENT GUARD RAILING INSTALLATION WITH IN-LINE END TREATMENT AND FLARED END TREATMENT AT THE ENDS OF RAILING)
See Note 5

NOTES:

1. Line post, blocks and hardware to be used are shown on Standard Plans A77A1, A77A2, A77B1, A77C1 and A77C2.
2. Guard rail post spacing to be 6'-3" center to center, except as otherwise noted.
3. Except as noted, line posts are 6" x 8" x 6'-0" wood with 6" x 8" x 1'-2" wood blocks. W6 x 9 steel posts, 6'-0" in length, with 6" x 8" x 1'-2" notched wood blocks or plastic blocks may be used for 6" x 8" x 6'-0" wood post with 6" x 8" x 1'-2" wood blocks where applicable and when specified.
4. Direction of adjacent traffic indicated by ➡.
5. Layout Types 11D through 11L, shown on the A77E Series of Revised Standard Plans, are typically used where guard railing is recommended to shield embamkment slopes and a crashworthy end treatment is required for both directions of traffic.
6. In-line Terminal System End Treatments are used where site conditions will not accommodate a flared end treatment.
7. The type of terminal system end treatment to be used will be shown on the Project Plans.
8. Dependent on site conditions (embankment height and side slope), construction of additional guard railing (length equal to multiples of 12'-6" with 6'-3" post spacing) may be advisable.
9. Where placement of dike is required with guard railing installations, see Revised Standard Plan RSP A77C4 for dike positioning details.
10. The 15:1 or flatter flare used with buried end anchors is based on the edge of the paved shoulder or offset line of edge of the traveled way. The length of guard railing within the 15:1 or flatter flare is based on site conditions and should be a length equal to multiples of 12'-6".
11. For details of the buried post end anchor used with Type 11I Layout, see Standard Plan A77I2.
12. For typical flare offsets for 25'-0" length parabola with maximum offset of 1'-0", see Revised Standard Plan RSP A77E1.

STATE OF CALIFORNIA
DEPARTMENT OF TRANSPORTATION

METAL BEAM GUARD RAILING TYPICAL LAYOUTS FOR EMBANKMENTS

NO SCALE

RSP A77E5 DATED JUNE 6, 2008 SUPERSEDES STANDARD PLAN A77E5 DATED MAY 1, 2006 - PAGE 52 OF THE STANDARD PLANS BOOK DATED MAY 2006.

REVISED STANDARD PLAN RSP A77E5

2006 REVISED STANDARD PLAN RSP A77E5

12-10-07

DIST	COUNTY	ROUTE	POST MILES TOTAL PROJECT	SHEET NO.	TOTAL SHEETS
02	Tri	3	68.5,70.7	28	93

Randell D. Hiatt
REGISTERED CIVIL ENGINEER

June 6, 2008
PLANS APPROVAL DATE

REGISTERED PROFESSIONAL ENGINEER
Randell D. Hiatt
No. C50200
Exp. 6-30-09
CIVIL
STATE OF CALIFORNIA

The State of California or its officers or agents shall not be responsible for the accuracy or completeness of electronic copies of this plan sheet.

To accompany plans dated 8-23-10

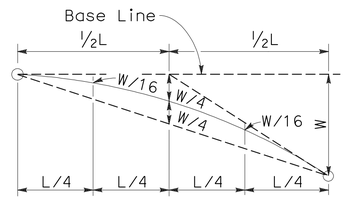

TYPICAL PARABOLIC LAYOUT

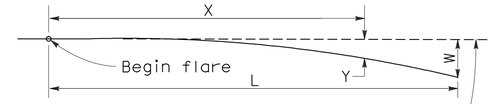

Base Line (Edge of paved shoulder or offset line of edge of traveled way)

$$Y = \frac{WX^2}{L^2}$$

Y = Offset from base line
W = Maximum offset
X = Distance along base line
L = Length of flare

PARABOLIC FLARE OFFSETS

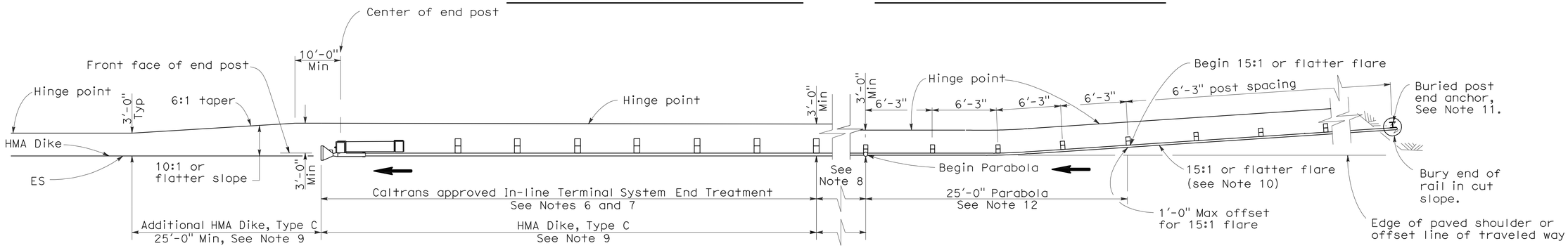

TYPE 11K LAYOUT

(EMBANKMENT GUARD RAILING INSTALLATION WITH A BURIED END ANCHOR TREATMENT AND AN IN-LINE END TREATMENT AT THE ENDS OF RAILING)
See Note 5

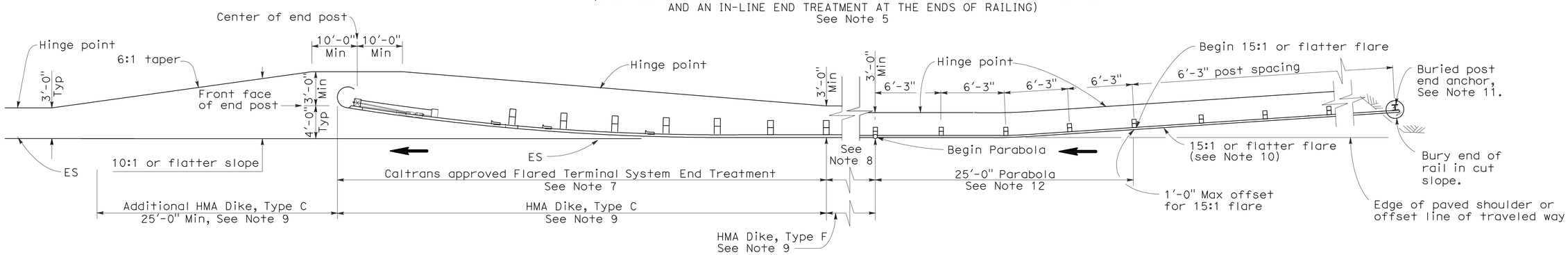

TYPE 11L LAYOUT

(EMBANKMENT GUARD RAILING INSTALLATION WITH A BURIED END ANCHOR TREATMENT AND A FLARED END TREATMENT AT THE ENDS OF RAILING)
See Note 5

NOTES:

1. Line post, blocks and hardware to be used are shown on Standard Plans A77A1, A77A2, A77B1, A77C1 and A77C2.
2. Guard rail post spacing to be 6'-3" center to center, except as otherwise noted.
3. Except as noted, line posts are 6" x 8" x 6'-0" wood with 6" x 8" x 1'-2" wood blocks. W6 x 9 steel posts, 6'-0" in length, with 6" x 8" x 1'-2" notched wood blocks or plastic blocks may be used for 6" x 8" x 6'-0" wood post with 6" x 8" x 1'-2" wood blocks where applicable and when specified.
4. Direction of adjacent traffic indicated by ⟶.
5. Layout Types 11D through 11L, shown on the A77E Series of Revised Standard Plans, are typically used where guard railing is recommended to shield embamkment slopes and a crashworthy end treatment is required for both directions of traffic.
6. In-line Terminal System End Treatments are used where site conditions will not accommodate a flared end treatment.
7. The type of terminal system end treatment to be used will be shown on the Project Plans.
8. Dependent on site conditions (embankment height and side slope), construction of additional guard railing (length equal to multiples of 12'-6" with 6'-3" post spacing) may be advisable.
9. Where placement of dike is required with guard railing installations, see Revised Standard Plan RSP A77C4 for dike positioning details.
10. The 15:1 or flatter flare used with buried end anchors is based on the edge of the paved shoulder or offset line of edge of the traveled way. The length of guard railing within the 15:1 or flatter flare is based on site conditions and should be a length equal to multiples of 12'-6".
11. For details of the buried post end anchor used with Type 11K and 11L Layouts, see Standard Plan A77I2.
12. For typical flare offsets for 25'-0" length parabola with maximum offset of 1'-0", see Revised Standard Plan RSP A77E1.

STATE OF CALIFORNIA
DEPARTMENT OF TRANSPORTATION

METAL BEAM GUARD RAILING TYPICAL LAYOUTS FOR EMBANKMENTS

NO SCALE

RSP A77E6 DATED JUNE 6, 2008 SUPERSEDES STANDARD PLAN A77E6
DATED MAY 1, 2006 - PAGE 53 OF THE STANDARD PLANS BOOK DATED MAY 2006.

REVISED STANDARD PLAN RSP A77E6

2006 REVISED STANDARD PLAN RSP A77E6

12-10-07

DIST	COUNTY	ROUTE	POST MILES TOTAL PROJECT	SHEET NO.	TOTAL SHEETS
02	Tri	3	68.5,70.7	29	93

Randell D. Hiatt
REGISTERED CIVIL ENGINEER

June 6, 2008
PLANS APPROVAL DATE

REGISTERED PROFESSIONAL ENGINEER
Randell D. Hiatt
No. C50200
Exp. 6-30-09
CIVIL
STATE OF CALIFORNIA

The State of California or its officers or agents shall not be responsible for the accuracy or completeness of electronic copies of this plan sheet.

To accompany plans dated 8-23-10

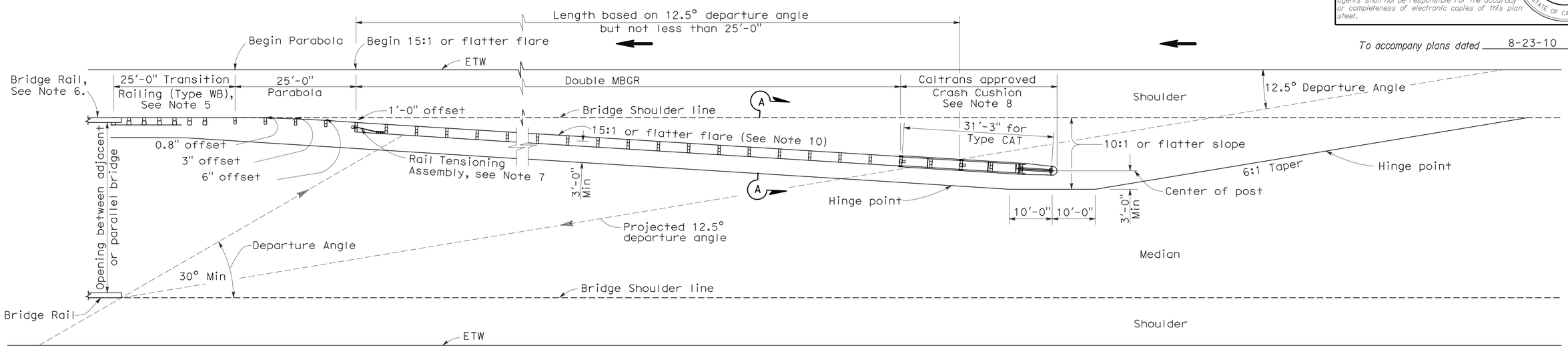

TYPE 12E LAYOUT

See Note 10

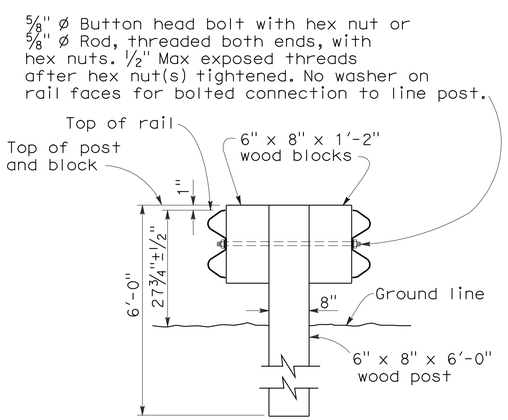

SECTION A-A

TYPICAL DOUBLE METAL BEAM GUARD RAILING

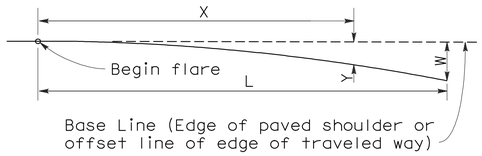

$$Y = \frac{WX^2}{L^2}$$

Y = Offset from base line
W = Maximum offset
X = Distance along base line
L = Length of flare

PARABOLIC FLARE OFFSETS

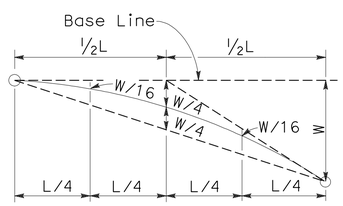

TYPICAL PARABOLIC LAYOUT

NOTES:

1. Line post, blocks and hardware to be used are shown on Standard Plans A77A1, A77A2, A77B1, A77C1 and A77C2.
2. Guard railing post spacing to be 6'-3" center to center, except as otherwise noted.
3. Except as noted, line posts are 6" x 8" x 6'-0" wood with 6" x 8" x 1'-2" wood blocks. W6 x 9 steel posts, 6'-0" in length, with 6" x 8" x 1'-2" notched wood blocks or notched recycled plastic blocks may be used for 6" x 8" x 6'-0" wood line posts with 6" x 8" x 1'-2" wood blocks where applicable and when specified.
4. Direction of adjacent traffic indicated by ⟶.
5. For Transition Railing (Type WB) details, see Standard Plan A77J4.
6. For additional details of a typical connection to bridge rail, see Connection Detail AA on Revised Standard Plan RSP A77J1.
7. For Rail Tensioning Assembly details, see Standard Plan A77H2.
8. The type of Crash Cushion to be used will be shown on the Project Plans.
9. Type 12E Layout is typically used left of approaching traffic at the end of each structure on multilane freeways or expressways where a median type barrier is not constructed between separated roadbeds.
10. The 15:1 or flatter flare is measured off of the edge of traveled way.

STATE OF CALIFORNIA
DEPARTMENT OF TRANSPORTATION

METAL BEAM GUARD RAILING TYPICAL LAYOUTS FOR STRUCTURE APPROACH

NO SCALE

RSP A77F3 DATED JUNE 6, 2008 SUPERSEDES STANDARD PLAN A77F3
DATED MAY 1, 2006 - PAGE 56 OF THE STANDARD PLANS BOOK DATED MAY 2006.

REVISED STANDARD PLAN RSP A77F3

2006 REVISED STANDARD PLAN RSP A77F3

12-10-07

DIST	COUNTY	ROUTE	POST MILES TOTAL PROJECT	SHEET NO.	TOTAL SHEETS
02	Tri	3	68.5,70.7	30	93

Randell D. Hiatt
REGISTERED CIVIL ENGINEER

June 6, 2008
PLANS APPROVAL DATE

REGISTERED PROFESSIONAL ENGINEER
Randell D. Hiatt
No. C50200
Exp. 6-30-09
CIVIL
STATE OF CALIFORNIA

The State of California or its officers or agents shall not be responsible for the accuracy or completeness of electronic copies of this plan sheet.

To accompany plans dated 8-23-10

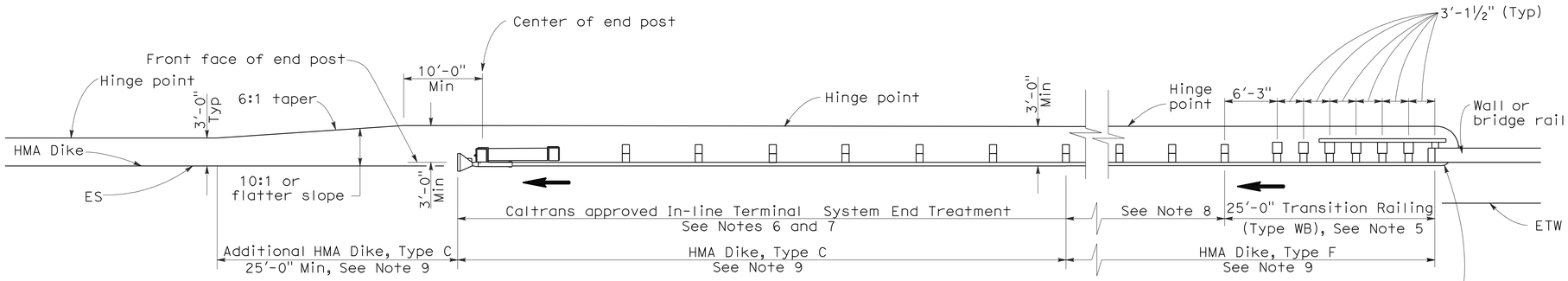

TYPE 12AA LAYOUT

(GUARD RAILING INSTALLATION AT STRUCTURE DEPARTURE WITH AN IN-LINE END TREATMENT AT TRAILING END OF RAILING)
See Notes 9 and 10

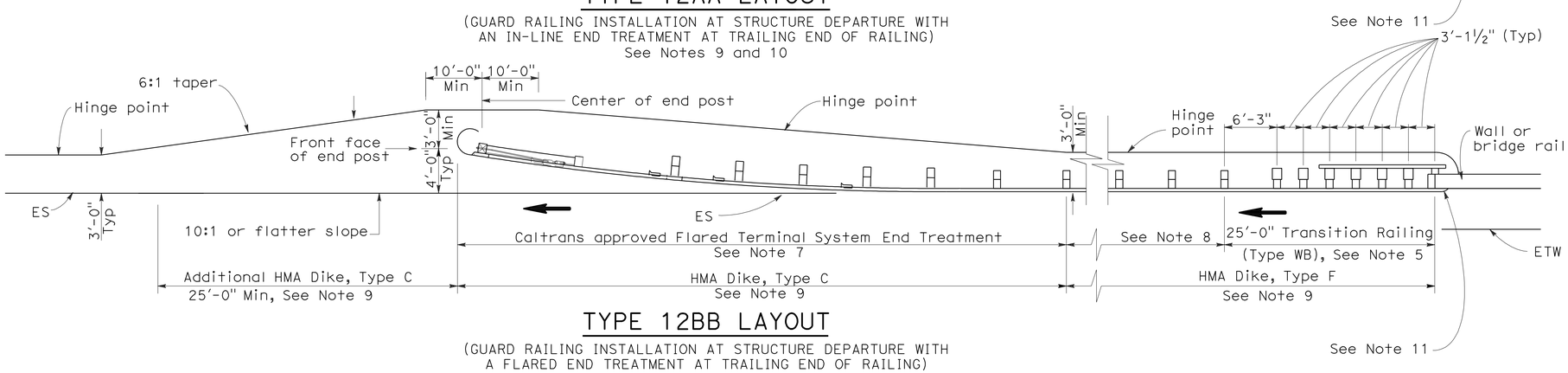

TYPE 12BB LAYOUT

(GUARD RAILING INSTALLATION AT STRUCTURE DEPARTURE WITH A FLARED END TREATMENT AT TRAILING END OF RAILING)
See Notes 9 and 10

NOTES:

1. Line post, blocks and hardware to be used are shown on Standard Plans A77A1, A77A2, A77B1, A77C1 and A77C2.
2. Guard rail post spacing to be 6'-3" center to center, except as otherwise noted.
3. Except as noted, line posts are 6" x 8" x 6'-0" wood with 6" x 8" x 1'-2" wood blocks. W6 x 9 steel posts, 6'-0" in length, with 6" x 8" x 1-2" notched wood blocks or notched recycled plastic blocks may be used for 6" x 8" x 6'-0" wood posts with 6" x 8" x 1'-2" wood blocks where applicable and when specified.
4. Direction of adjacent traffic indicated by ⟶.
5. For Transition Railing (Type WB) details for Types 12AA and 12BB Layouts, see Standard Plan A77J4.
6. In-line Terminal System Treatments are used where site conditions will not accommodate a flared end treatment.
7. The type of terminal system to be used will be shown on the Project Plans.
8. Dependent on site conditions (embankment height, side slopes, other fixed objects), it may be advisable to construct additional guard railing (a length equal to multiples of 12'-6" with 6'-3" post spacing) between the transition railing and end treatments.
9. Where placement of dike is required with guard railing installations, see Revised Standard Plan RSP A77C4 for dike positioning details.
10. Type 12AA or Type 12BB Layouts are typically used to the right of traffic departing a structure on two-way conventional highways where the roadbed width across the structure is less than 40 feet.
11. For additional details of typical connections to bridge rail, see Connection Detail CC on Revised Standard Plan RSP A77J2 and Connection Detail HH on Standard Plans A77k2.

STATE OF CALIFORNIA
DEPARTMENT OF TRANSPORTATION

METAL BEAM GUARD RAILING TYPICAL LAYOUTS FOR STRUCTURE DEPARTURE

NO SCALE

RSP A77F4 DATED JUNE 6, 2008 SUPERSEDES STANDARD PLAN A77F4
DATED MAY 1, 2006 - PAGE 57 OF THE STANDARD PLANS BOOK DATED MAY 2006.

REVISED STANDARD PLAN RSP A77F4

2006 REVISED STANDARD PLAN RSP A77F4

12-10-07

DIST	COUNTY	ROUTE	POST MILES TOTAL PROJECT	SHEET NO.	TOTAL SHEETS
02	Tri	3	68.5,70.7	31	93

Randell D. Hiatt
REGISTERED CIVIL ENGINEER

June 5, 2009
PLANS APPROVAL DATE

REGISTERED PROFESSIONAL ENGINEER
Randell D. Hiatt
No. C50200
Exp. 6-30-09
CIVIL
STATE OF CALIFORNIA

The State of California or its officers or agents shall not be responsible for the accuracy or completeness of electronic copies of this plan sheet.

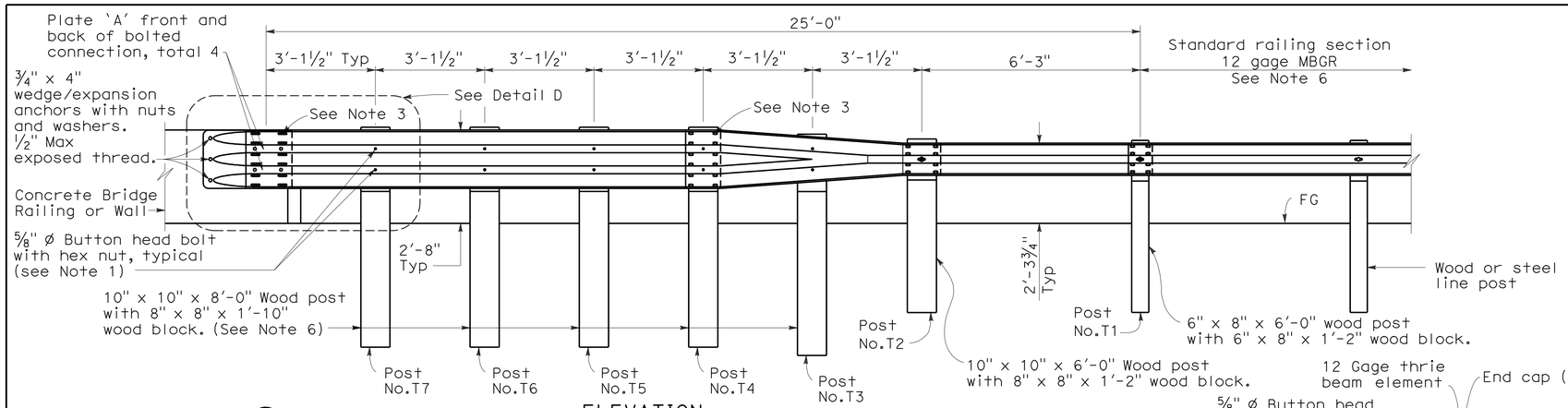

ELEVATION

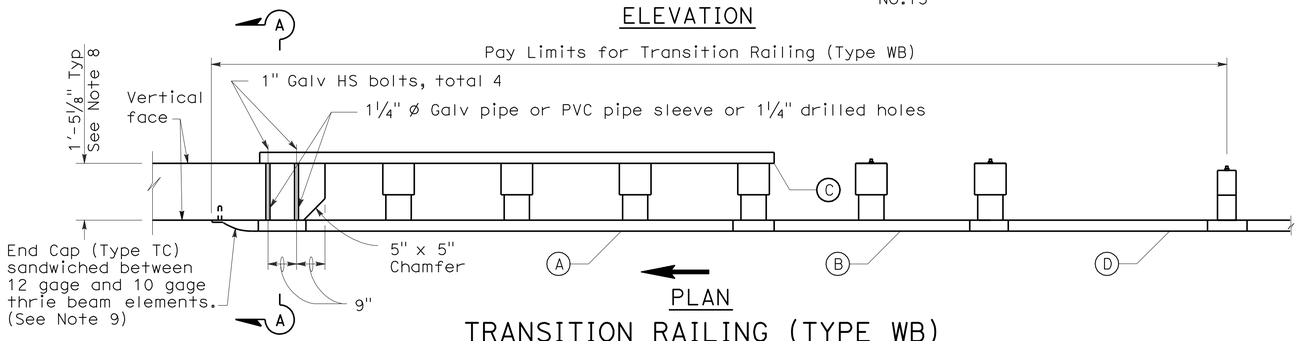

PLAN

TRANSITION RAILING (TYPE WB)

(No Blockout Attachment)

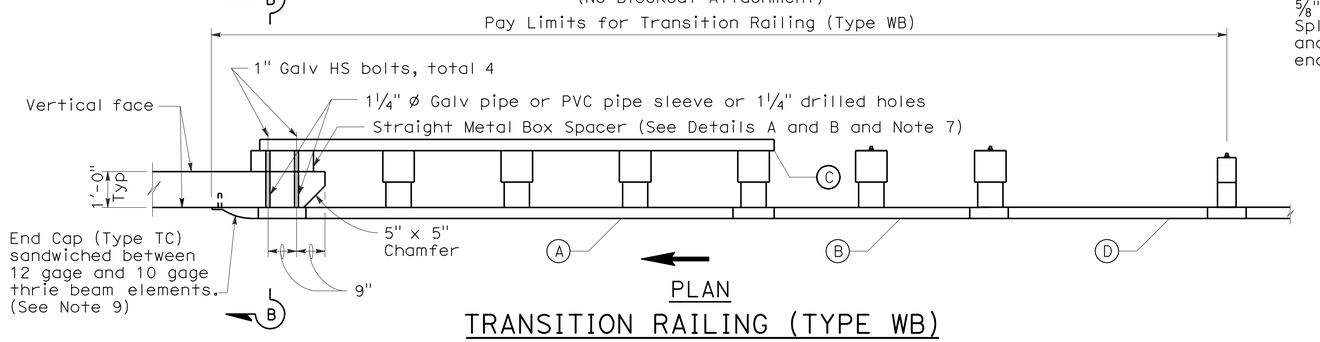

PLAN

TRANSITION RAILING (TYPE WB)

(Blockout Attachment)

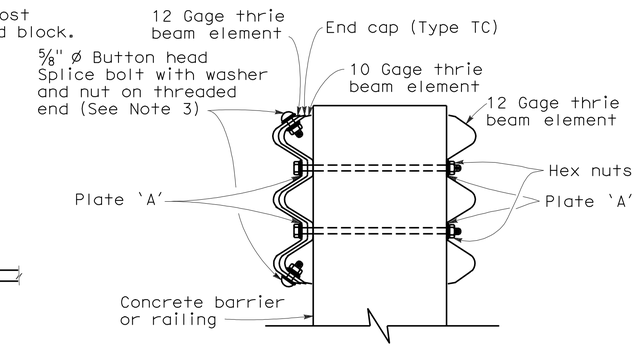

SECTION A-A

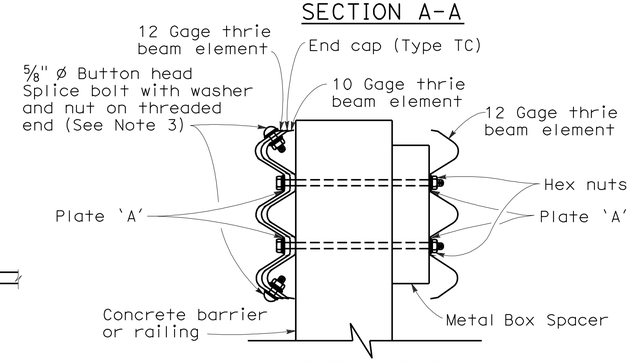

SECTION B-B

LEGEND

(A) Nested thrie beam elements (one 12 gage element nested over one 10 gage element).

(B) One 10 gage "W" beam to thrie beam element.

(C) One 12 gage thrie beam element.

(D) One 10 gage "W" beam rail element (7'-3½" length)

10 gage = 0.135" thick

12 gage = 0.108" thick

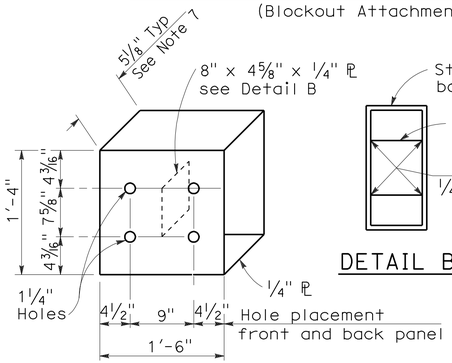

DETAIL A

STRAIGHT METAL BOX SPACER

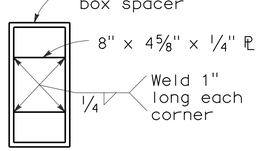

DETAIL B

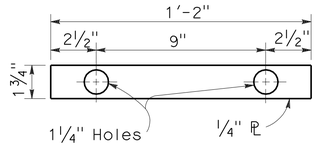

DETAIL C

PLATE 'A'

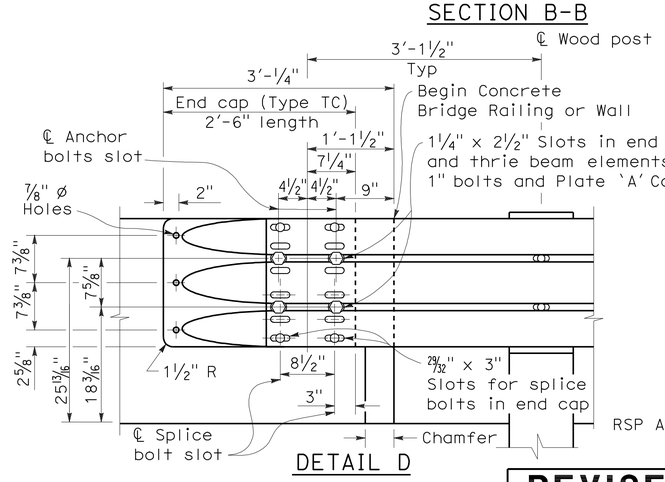

DETAIL D

NOTES:

To accompany plans dated 8-23-10

1. Use 5/8 " ø Button head bolts and hex nuts for connections to posts. No washer on rail face for bolted connections to post.
2. The nested rail elements, end cap, and 'W' beam to thrie beam element may be spliced together prior to bolting the elements to the wood post and concrete barrier or railing.
3. Exterior splice bolt holes for rail element splices at Post No.T4 and the connection to the concrete barrier or railing shall be the standard 29/32 " x 1 1/8 " slot size. Interior splice bolt holes at these locations may be increased up to 1 1/4 " ø. Only the top 2 and the bottom 2 splice bolts with washers and nuts are required for rail splices at Post No.T4 and the connection to the concrete barrier or railing.
4. Direction of adjacent traffic indicated by →.
5. The top elevation of Post Nos.T2 through T7 shall not project more than 1" above the top elevation of the rail element.
6. Typically, the railing connected to Transition Railing (Type WB) will be either standard railing section of metal beam guard railing or an approved Caltrans end treatment attached to Post No.T1.
7. The depth of the metal box spacer varies from the 5 1/8 " to 1 1/2 " and is dependent on the width of the concrete railing or wall. The combined dimension for the depth of the metal box spacer plus the width of railing or wall is typically 17 1/8 ". Where the space between the backside of the concrete railing or wall and the rear thrie beam element is less than 1 1/2 ", metal plates similar to Plate 'A' are to be used as spacers.
8. Where the width of the concrete railing or wall is greater than 17 1/8 ", wood blocks are to be used to fill the space created between the backside of Posts No.4 through No.7 and the rear thrie beam element. These wood blocks shall be 8" in width and 1'-2" in length. The dimension between the front thrie beam element and the rear thrie beam element is to match the width of the concrete railing or wall.
9. End cap may be installed over 12 gage and 10 gage thrie beam elements where transition railing is installed on the departure end of bridge railing.

STATE OF CALIFORNIA
DEPARTMENT OF TRANSPORTATION

METAL BEAM GUARD RAILING TRANSITION RAILING (TYPE WB)

NO SCALE

RSP A77J4 DATED JUNE 5, 2009 SUPERSEDES RSP A77J4 DATED JUNE 6, 2008 AND STANDARD PLAN A77J4 DATED MAY 1, 2006 - PAGE 75 OF THE STANDARD PLANS BOOK DATED MAY 2006.

REVISED STANDARD PLAN RSP A77J4

2006 REVISED STANDARD PLAN RSP A77J4

DIST	COUNTY	ROUTE	POST MILES TOTAL PROJECT	SHEET NO.	TOTAL SHEETS
02	Tri	3	68.5,70.7	32	93

LICENSED LANDSCAPE ARCHITECT

April 3, 2009
PLANS APPROVAL DATE

The State of California or its officers or agents shall not be responsible for the accuracy or completeness of electronic copies of this plan sheet.

LICENSED LANDSCAPE ARCHITECT
Gregory A. Balzer
03-04-09
Signature
02-28-11
Renewal Date
03-04-09
Date
STATE OF CALIFORNIA

To accompany plans dated 8-23-10

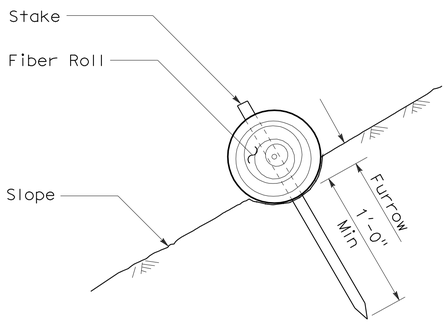

SECTION

FIBER ROLL
(TYPE 1)

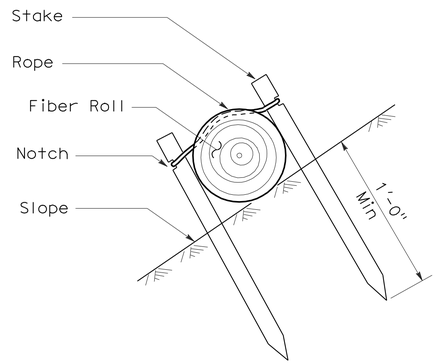

SECTION

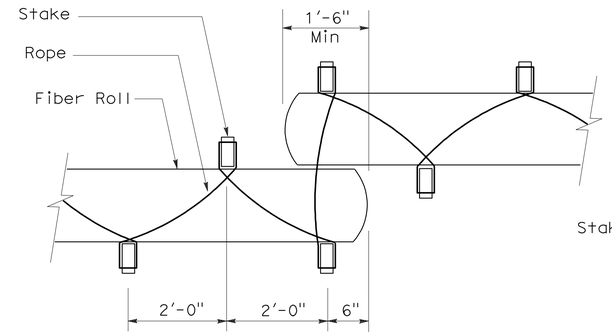

PLAN

FIBER ROLL
(TYPE 2)

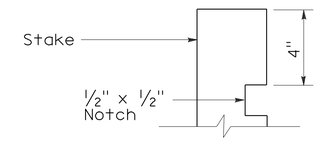

ELEVATION

STAKE NOTCH DETAIL

NOTES:

1. Fiber roll spacing varies depending upon slope inclination.
2. Installations shown in the perspectives are for slope inclination of 10:1 and steeper.

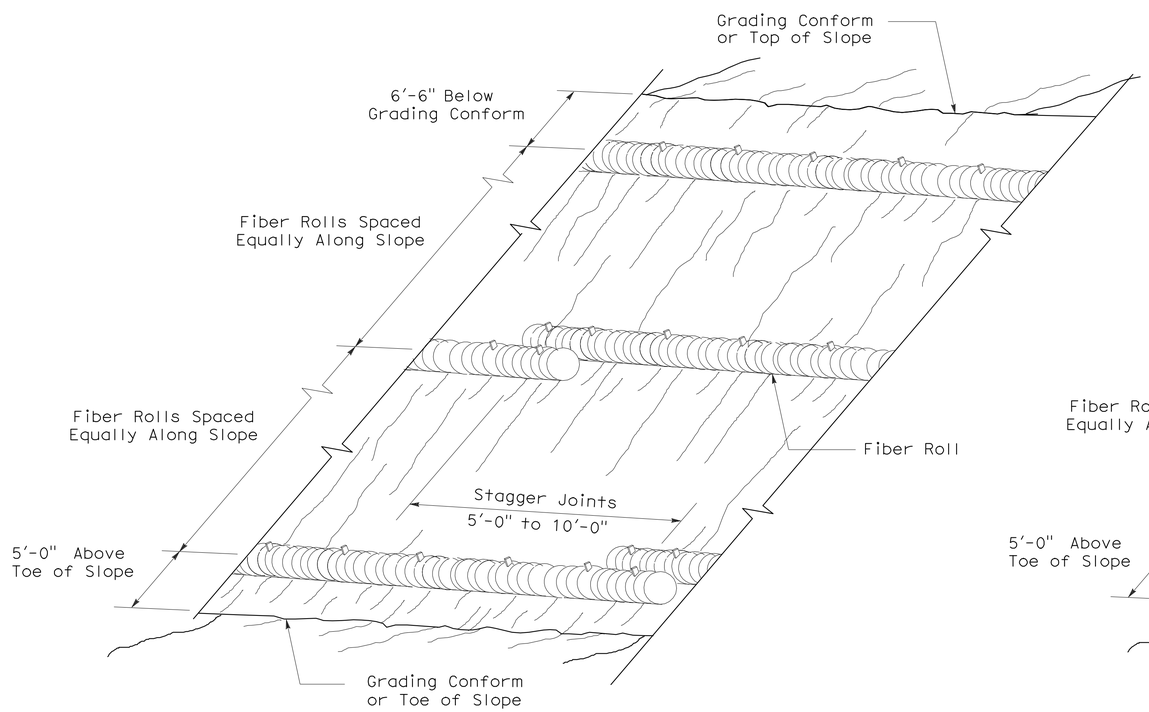

PERSPECTIVE

FIBER ROLL (TYPE 1)

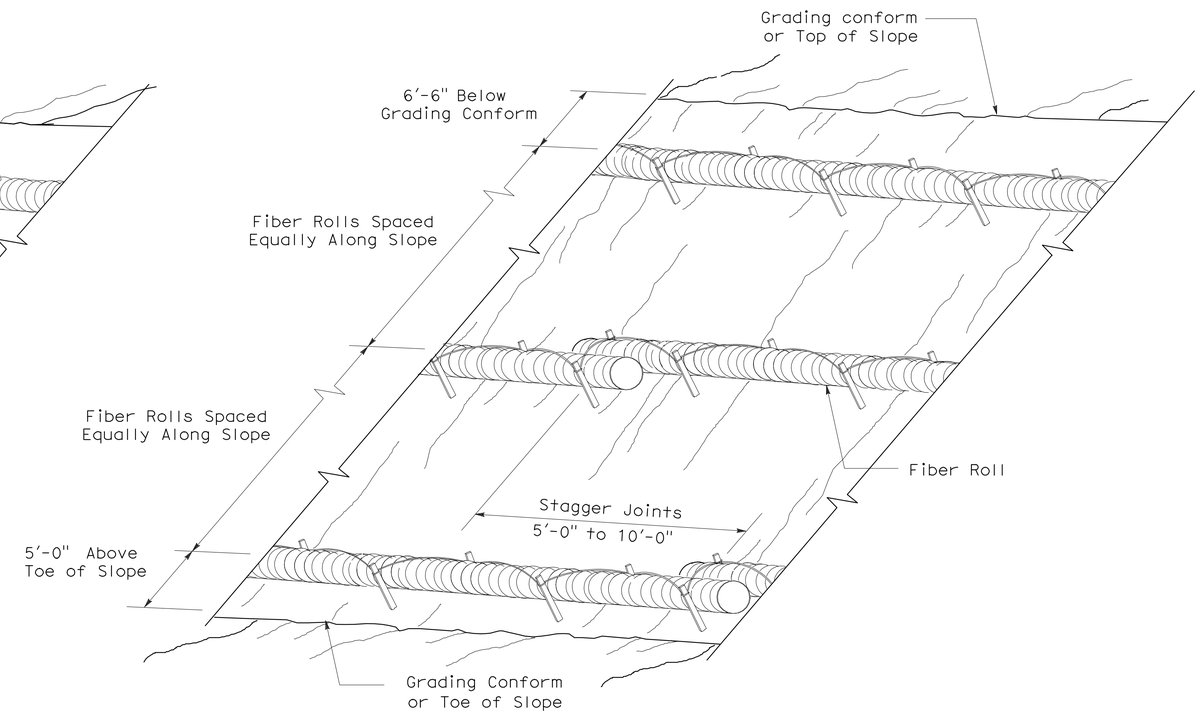

PERSPECTIVE

FIBER ROLL (TYPE 2)

STATE OF CALIFORNIA
DEPARTMENT OF TRANSPORTATION

EROSION CONTROL DETAILS (FIBER ROLL)

NO SCALE

RNSP H51 DATED APRIL 3, 2009 SUPERSEDES NSP H51 DATED DECEMBER 1, 2006 THAT SUPPLEMENTS THE STANDARD PLANS BOOK DATED MAY 2006.

REVISED NEW STANDARD PLAN RNSP H51

2006 REVISED NEW STANDARD PLAN RNSP H51

DIST	COUNTY	ROUTE	POST MILES TOTAL PROJECT	SHEET NO.	TOTAL SHEETS
02	Tri	3	68.5,70.7	33	93

Randell D. Hiatt
REGISTERED CIVIL ENGINEER

June 6, 2008
PLANS APPROVAL DATE

REGISTERED PROFESSIONAL ENGINEER
Randell D. Hiatt
No. C50200
Exp. 6-30-09
CIVIL
STATE OF CALIFORNIA

The State of California or its officers or agents shall not be responsible for the accuracy or completeness of electronic copies of this plan sheet.

To accompany plans dated 8-23-10

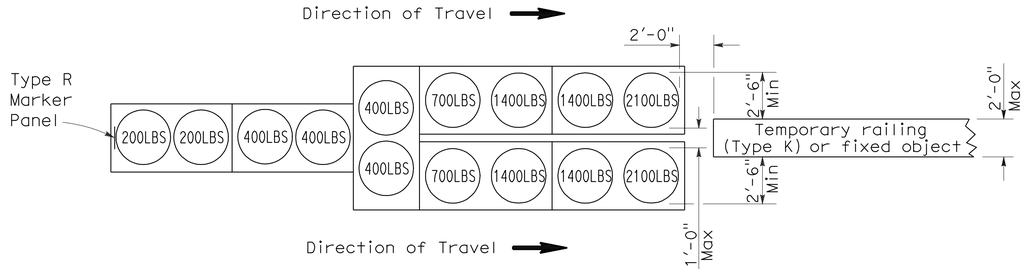

ARRAY 'TU14'

Approach speed 45 mph or more

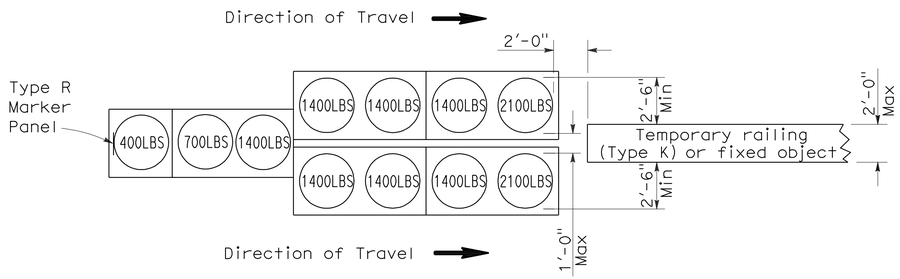

ARRAY 'TU11'

Approach speed less than 45 mph

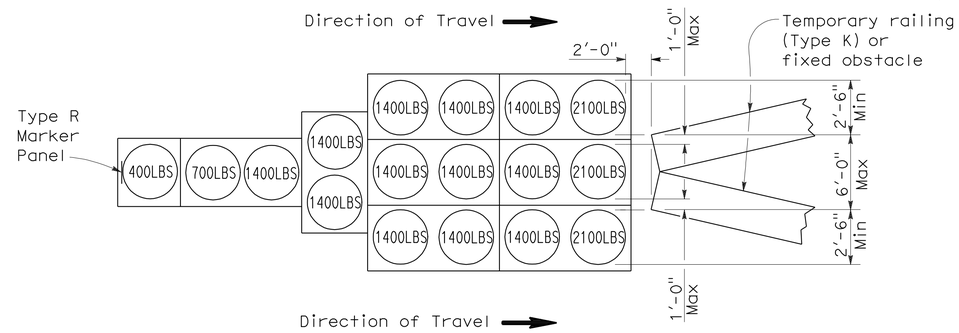

ARRAY 'TU17'

Approach speed less than 45 mph

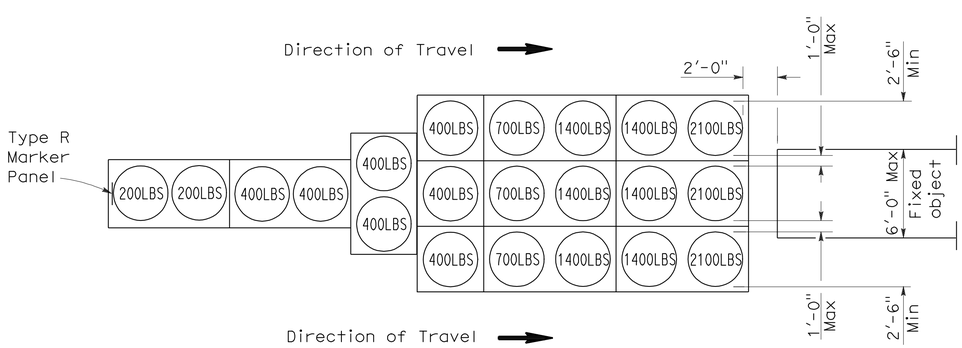

ARRAY 'TU21'

Approach speed 45 mph or more

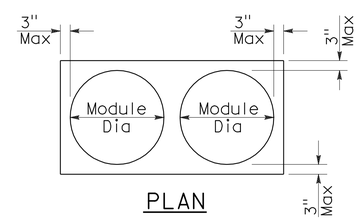

PLAN

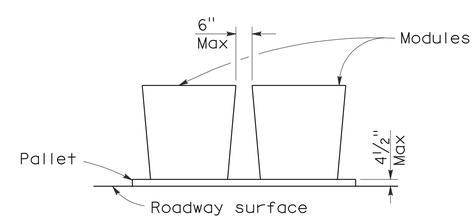

ELEVATION

CRASH CUSHION PALLET DETAIL

See Note 7

NOTES:

1. (XXX) Indicates sand filled module location and weight of sand in pounds for each module. Module spacing is based on the greater diameter of the module.
2. All sand weights are nominal.
3. Temporary crash cushion arrays shall not encroach on the traveled way.
4. Place the top of Type R marker panel 1" below the module lid.
5. Refer to Standard Plan A73B for marker details.
6. Approach speeds indicated conform to NCHRP 350 Report criteria.
7. Use of pallets is optional.

STATE OF CALIFORNIA
DEPARTMENT OF TRANSPORTATION

TEMPORARY CRASH CUSHION, SAND FILLED (UNIDIRECTIONAL)

NO SCALE

RSP T1A DATED JUNE 6, 2008 SUPERSEDES STANDARD PLAN T1A
DATED MAY 1, 2006 - PAGE 211 OF THE STANDARD PLANS BOOK DATED MAY 2006.

REVISED STANDARD PLAN RSP T1A

2006 REVISED STANDARD PLAN RSP T1A

5-15-08

DIST	COUNTY	ROUTE	POST MILES TOTAL PROJECT	SHEET NO.	TOTAL SHEETS
02	Tri	3	68.5,70.7	34	93

Randell D. Hiatt
REGISTERED CIVIL ENGINEER

June 6, 2008
PLANS APPROVAL DATE

REGISTERED PROFESSIONAL ENGINEER
Randell D. Hiatt
No. C50200
Exp. 6-30-09
CIVIL
STATE OF CALIFORNIA

The State of California or its officers or agents shall not be responsible for the accuracy or completeness of electronic copies of this plan sheet.

To accompany plans dated 8-23-10

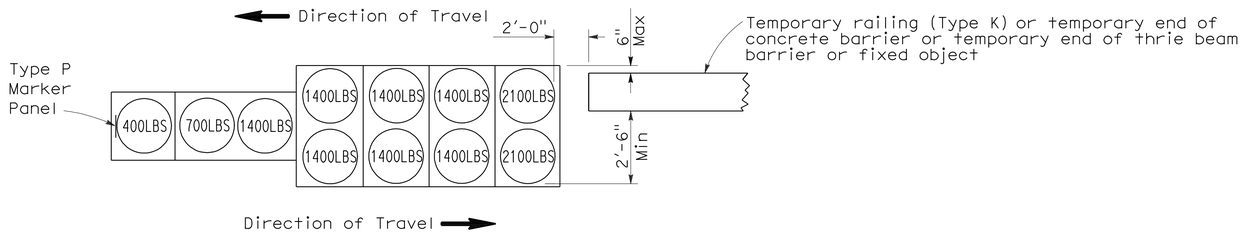

ARRAY 'TB11'

Approach speed less than 45 mph

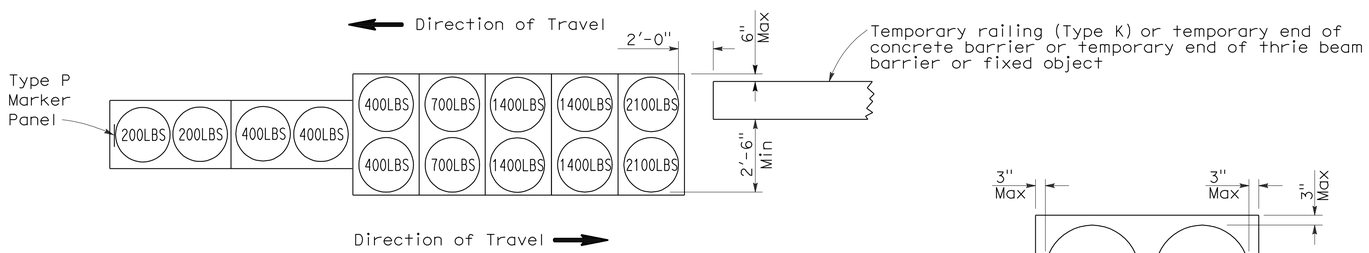

ARRAY 'TB14'

Approach speed 45 mph or more

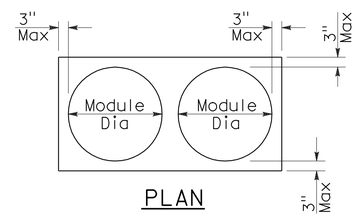

PLAN

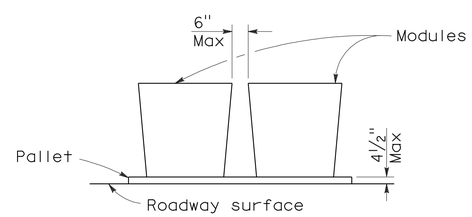

ELEVATION

CRASH CUSHION PALLET DETAIL

See Note 7

NOTES:

1. (XXX) Indicates sand filled module location and weight of sand in pounds for each module. Module spacing is based on the greater diameter of the module.
2. All sand weights are nominal.
3. Temporary crash cushion arrays shall not encroach on the traveled way.
4. Place the Type P marker panel so that the bottom of the panel rests upon the pallet.
5. Refer to Standard Plan A73B for marker details.
6. Approach speeds indicated conform to NCHRP 350 Report criteria.
7. Use of pallets is optional.

STATE OF CALIFORNIA
DEPARTMENT OF TRANSPORTATION

TEMPORARY CRASH CUSHION, SAND FILLED (BIDIRECTIONAL)

NO SCALE

RSP T1B DATED JUNE 6, 2008 SUPERSEDES STANDARD PLAN T1B
DATED MAY 1, 2006 - PAGE 212 OF THE STANDARD PLANS BOOK DATED MAY 2006.

REVISED STANDARD PLAN RSP T1B

2006 REVISED STANDARD PLAN RSP T1B

5-15-08

DIST	COUNTY	ROUTE	POST MILES TOTAL PROJECT	SHEET NO.	TOTAL SHEETS
02	Tri	3	68.5,70.7	35	93

Randell D. Hiatt
REGISTERED CIVIL ENGINEER

June 6, 2008
PLANS APPROVAL DATE

REGISTERED PROFESSIONAL ENGINEER
Randell D. Hiatt
No. C50200
Exp. 6-30-09
CIVIL
STATE OF CALIFORNIA

The State of California or its officers or agents shall not be responsible for the accuracy or completeness of electronic copies of this plan sheet.

To accompany plans dated 8-23-10

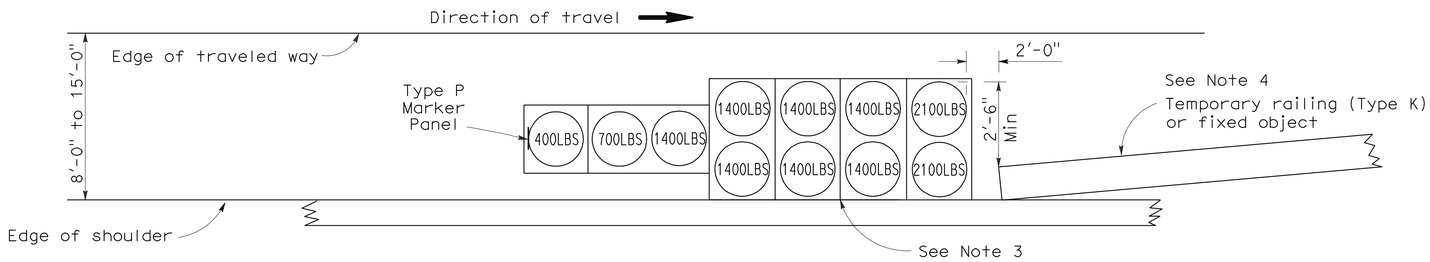

ARRAY 'TS11'

Approach speed less than 45 mph
See Note 9

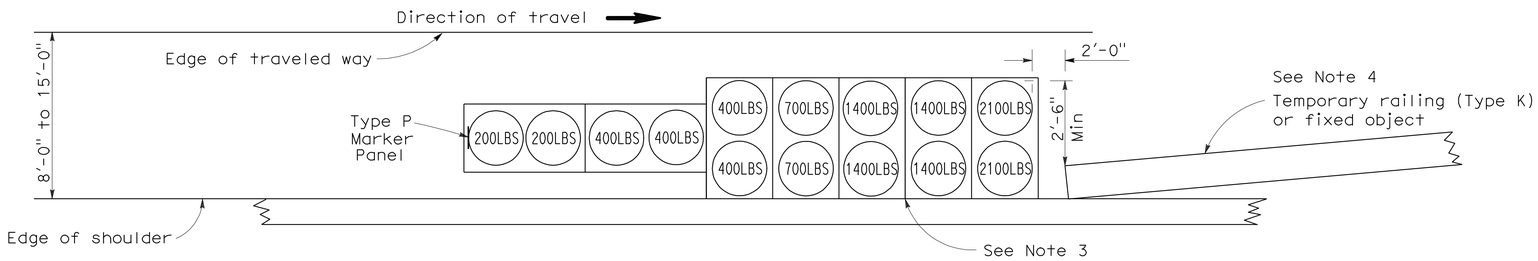

ARRAY 'TS14'

Approach speed 45 mph or more
See Note 9

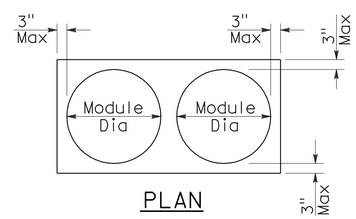

PLAN

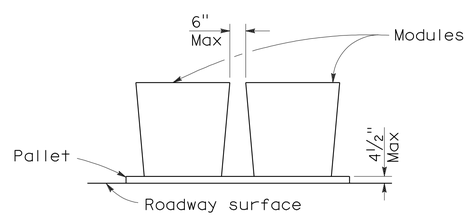

ELEVATION

CRASH CUSHION PALLET DETAIL

See Note 11

NOTES:

1. (XXX) Indicates sand filled module location and weight of sand in pounds for each module. Module spacing is based on the greater diameter of the module.
2. All sand weights are nominal.
3. The temporary crash cushion arrays shown on this plan shall be used only in locations where there will be traffic on one side of the temporary crash cushion array.
4. If the fixed object or approach end of the temporary railing is less than 15'-0" from the edge of traveled way, a temporary crash cushion is required in a construction or work zone.
5. Temporary crash cushion arrays shall not encroach on the traveled way.
6. Arrays for median shoulders shall conform to details shown on this plan for outside shoulders.
7. Place the Type P marker panel so that the bottom of the panel rests upon the pallet and faces traffic.
8. Refer to Standard Plan A73B for marker details.
9. For shoulder widths less than 8'-0", appropriate approved crash cushion protection, other than sand filled modules, shall be provided at fixed objects and at approach ends of temporary railing. The specific type of crash cushion shall be as shown on the project plans or as specified in the Special Provisions, or if not shown on the project plans or specified in the Special Provisions, shall be as approved by the Engineer.
10. Approach speeds indicated conform to NCHRP 350 Report criteria.
11. Use of pallets is optional.

STATE OF CALIFORNIA
DEPARTMENT OF TRANSPORTATION

TEMPORARY CRASH CUSHION, SAND FILLED (SHOULDER INSTALLATIONS)

NO SCALE

RSP T2 DATED JUNE 6, 2008 SUPERSEDES STANDARD PLAN T2
DATED MAY 1, 2006 - PAGE 213 OF THE STANDARD PLANS BOOK DATED MAY 2006.

REVISED STANDARD PLAN RSP T2

2006 REVISED STANDARD PLAN RSP T2

DIST	COUNTY	ROUTE	POST MILES TOTAL PROJECT	SHEET NO.	TOTAL SHEETS
02	Tri	3	68.5,70.7	36	93

REGISTERED CIVIL ENGINEER

November 17, 2006
PLANS APPROVAL DATE

REGISTERED PROFESSIONAL ENGINEER
Greg W. Edwards
No. C36386
Exp. 6-30-08
CIVIL
STATE OF CALIFORNIA

The State of California or its officers or agents shall not be responsible for the accuracy or completeness of electronic copies of this plan sheet.

To accompany plans dated 8-23-10

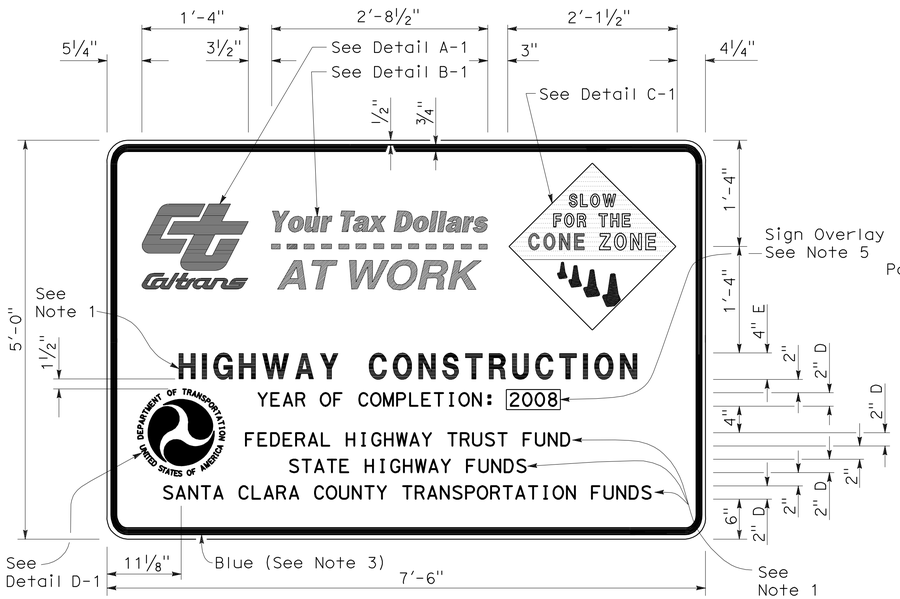

TYPE 1

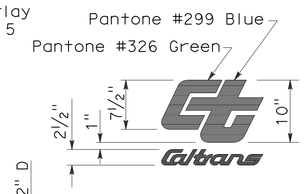

DETAIL A-1

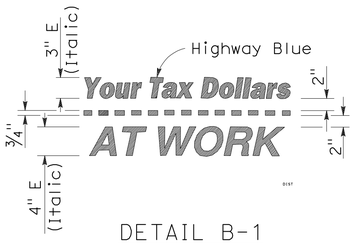

DETAIL B-1
(See Note 3)

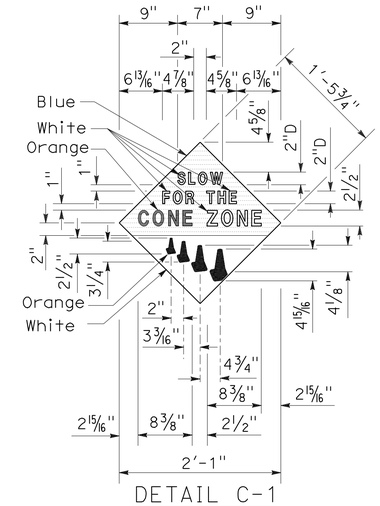

DETAIL C-1
(See Note 4)

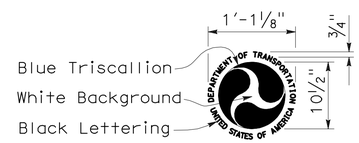

DETAIL D-1
(See Note 6)

NOTES:

1. The sign messages shown for type of project and fund types are examples only. See the Special Provisions for the applicable type of project and fund type messages to be used.
2. Except as otherwise shown, the legend of sign shall be black on a white background (non-reflective).
3. The border of the signs and details "B-1" and "B-2" shall be blue (non-reflective).
4. The diamond in details "C-1" and "C-2" shall be blue for the background of message, " SLOW FOR THE CONE ZONE", and white background for the orange cones. The color and type of font for the "SLOW FOR THE CONE ZONE" message shall be: "SLOW" white D; "FOR THE" white D; "CONE" orange Arial font; "ZONE" white Arial font.
5. Year of completion of project construction shown on the overlay is an example only. See the Special Provisions.
6. Use when the Project involves Federal Highway Trust Fund.

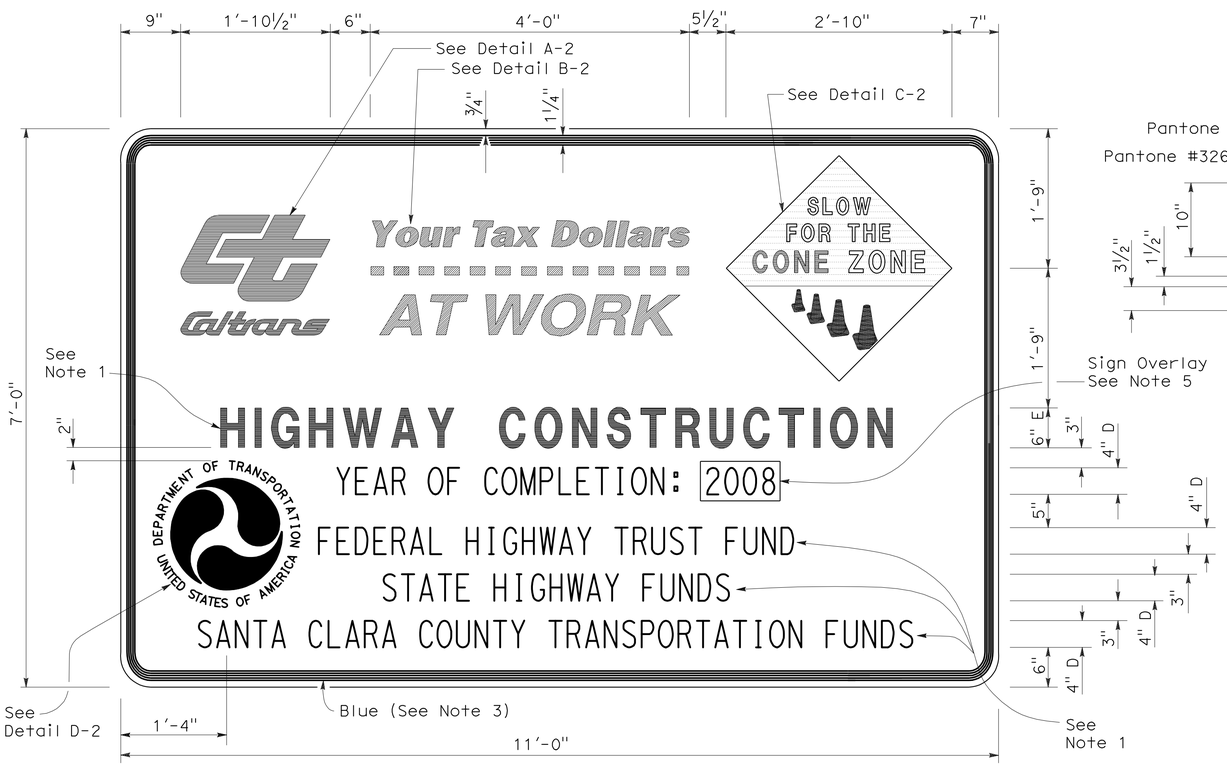

TYPE 2

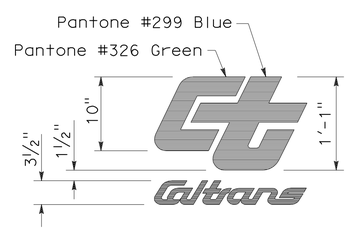

DETAIL A-2

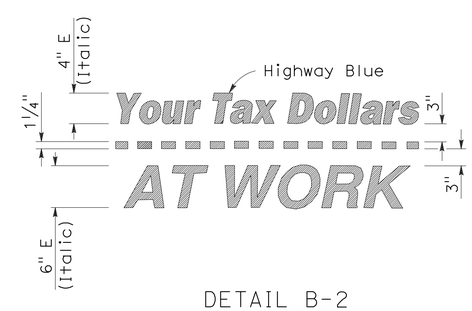

DETAIL B-2
(See Note 3)

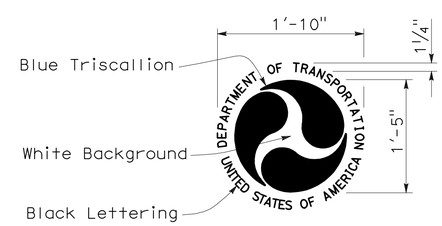

DETAIL D-2
(See Note 6)

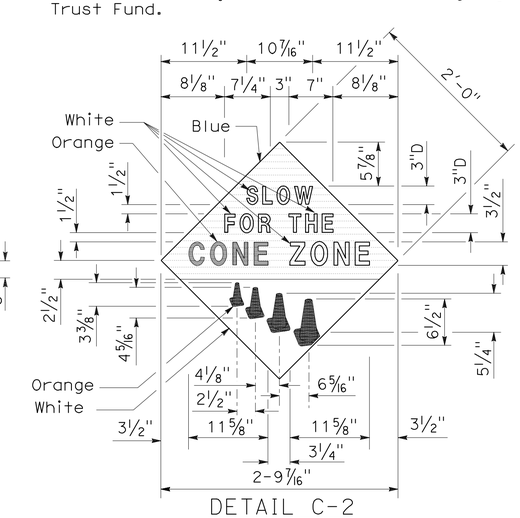

DETAIL C-2
(See Note 4)

STATE OF CALIFORNIA
DEPARTMENT OF TRANSPORTATION

CONSTRUCTION PROJECT FUNDING IDENTIFICATION SIGNS

NO SCALE

RSP T7 DATED NOVEMBER 17, 2006 SUPERSEDES STANDARD PLAN T7
DATED MAY 1, 2006 - PAGE 217 OF THE STANDARD PLANS BOOK DATED MAY 2006.

REVISED STANDARD PLAN RSP T7

2006 REVISED STANDARD PLAN RSP T7

9-7-06

DIST	COUNTY	ROUTE	POST MILES TOTAL PROJECT	SHEET NO.	TOTAL SHEETS
02	Tri	3	68.5,70.7	37	93

Robert B Schott
LICENSED LANDSCAPE ARCHITECT

April 3, 2009
PLANS APPROVAL DATE

LICENSED LANDSCAPE ARCHITECT — Robert B. Schott 3025 — Signature — 11-30-10 Renewal Date — 2-25-09 Date — STATE OF CALIFORNIA

The State of California or its officers or agents shall not be responsible for the accuracy or completeness of electronic copies of this plan sheet.

To accompany plans dated 8-23-10

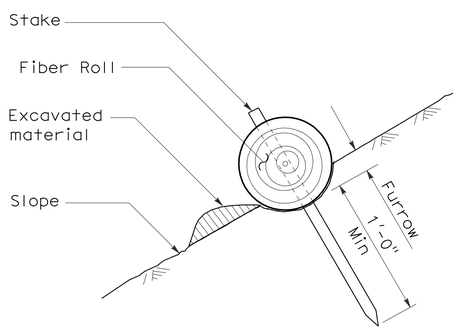

SECTION

TEMPORARY FIBER ROLL (TYPE 1)

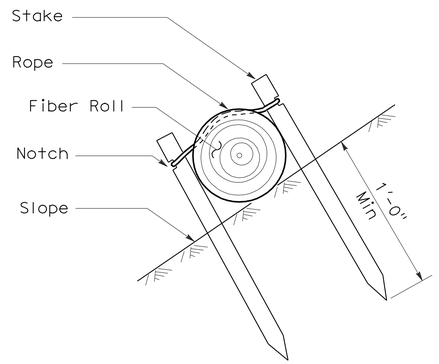

SECTION

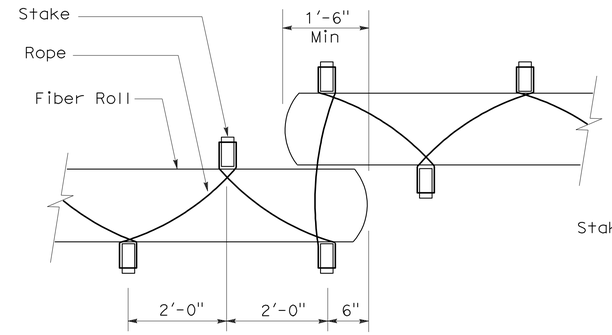

PLAN

TEMPORARY FIBER ROLL (TYPE 2)

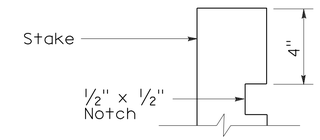

ELEVATION

STAKE NOTCH DETAIL

NOTES:

1. Temporary fiber roll spacing varies depending upon slope inclination.
2. Installations shown in the perspectives are for slope inclination of 10:1 and steeper.

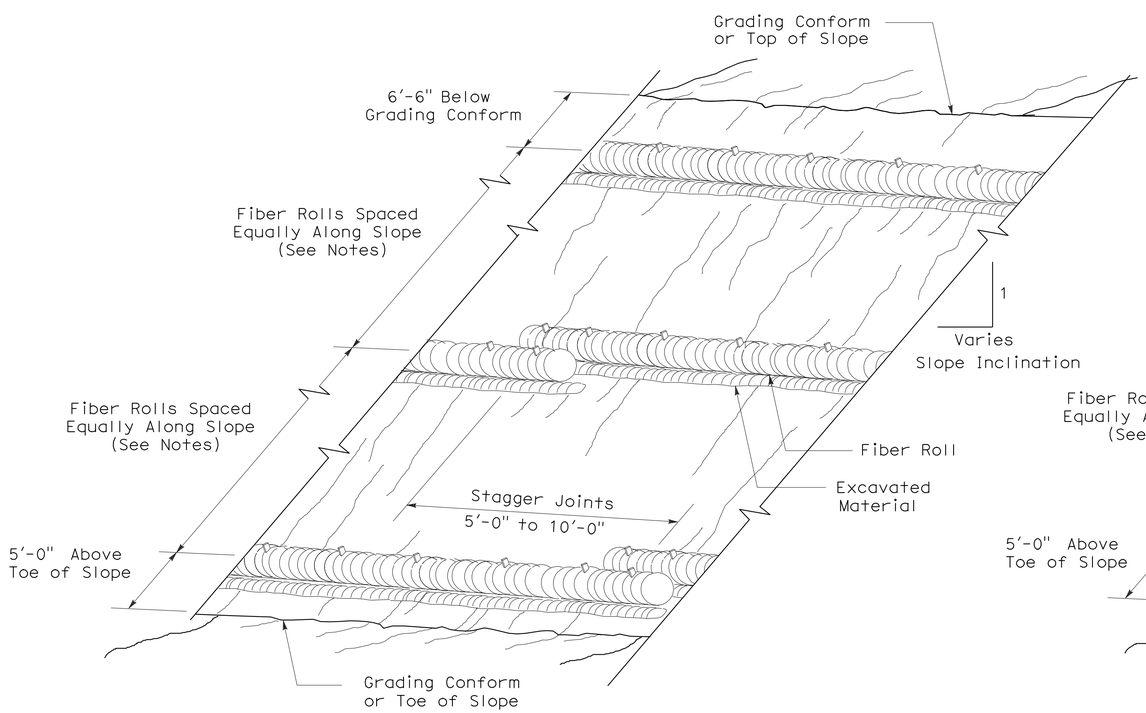

PERSPECTIVE

TEMPORARY FIBER ROLL (TYPE 1)

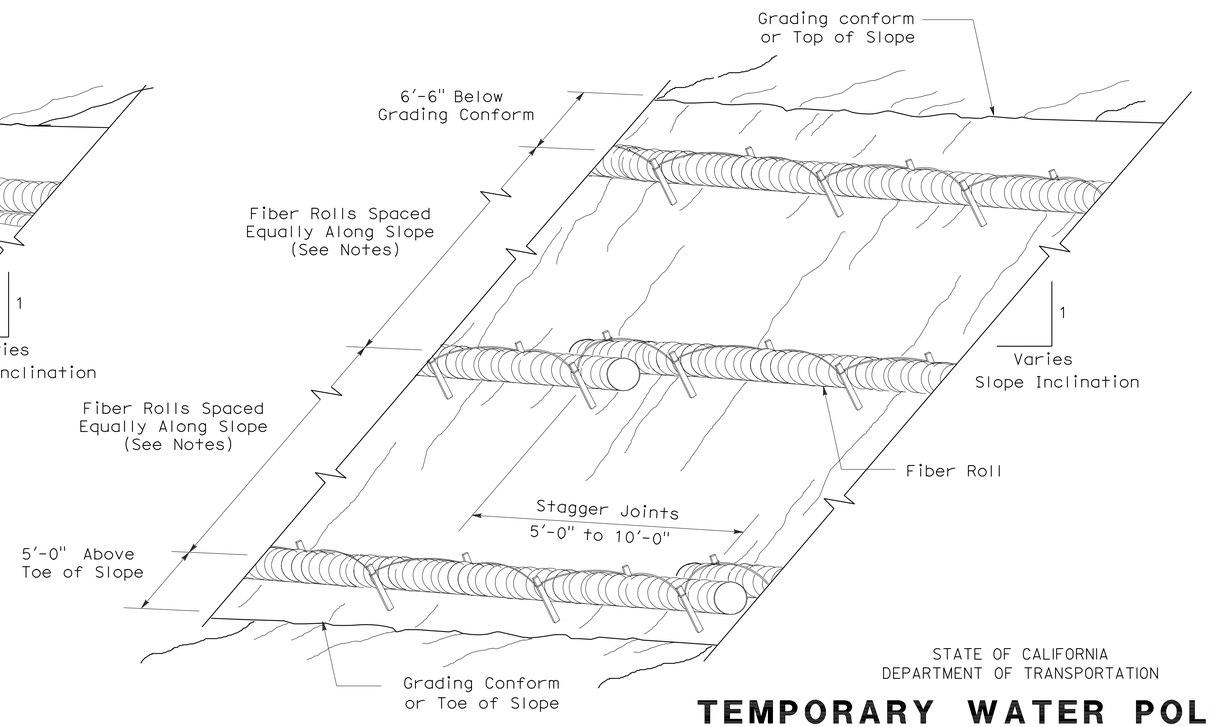

PERSPECTIVE

TEMPORARY FIBER ROLL (TYPE 2)

STATE OF CALIFORNIA
DEPARTMENT OF TRANSPORTATION

TEMPORARY WATER POLLUTION CONTROL DETAILS (TEMPORARY FIBER ROLL)

NO SCALE

RSP T56 DATED APRIL 3, 2009 SUPERSEDES STANDARD PLAN T56
DATED MAY 1, 2006 - PAGE 232 OF THE STANDARD PLANS BOOK DATED MAY 2006.

REVISED STANDARD PLAN RSP T56

2006 REVISED STANDARD PLAN RSP T56

2-23-09

DIST	COUNTY	ROUTE	POST MILES TOTAL PROJECT	SHEET NO.	TOTAL SHEETS
02	Tri	3	68.5,70.7	38	93

LICENSED LANDSCAPE ARCHITECT

August 15, 2008
PLANS Approval DATE

The State of California or its officers or agents shall not be responsible for the accuracy or completeness of electronic copies of this plan sheet.

LICENSED LANDSCAPE ARCHITECT
Robert B. Schott 3825
Signature
11-04-08
Renewal Date
08-11-08
Date
STATE OF CALIFORNIA

To accompany plans dated 8-23-10

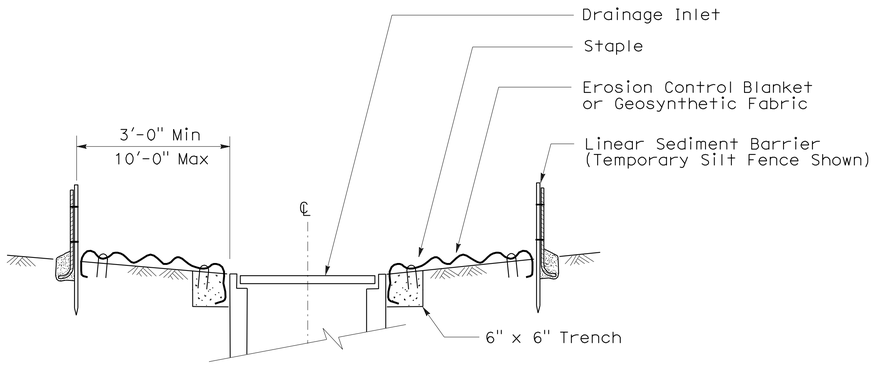

SECTION A-A

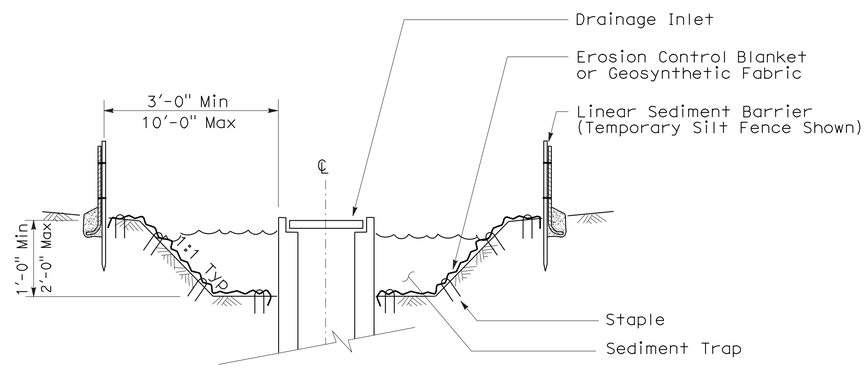

SECTION B-B

NOTES:

1. See Standard Plan T51 for Temporary Silt Fence.
2. Dimensions may vary to fit field conditions.

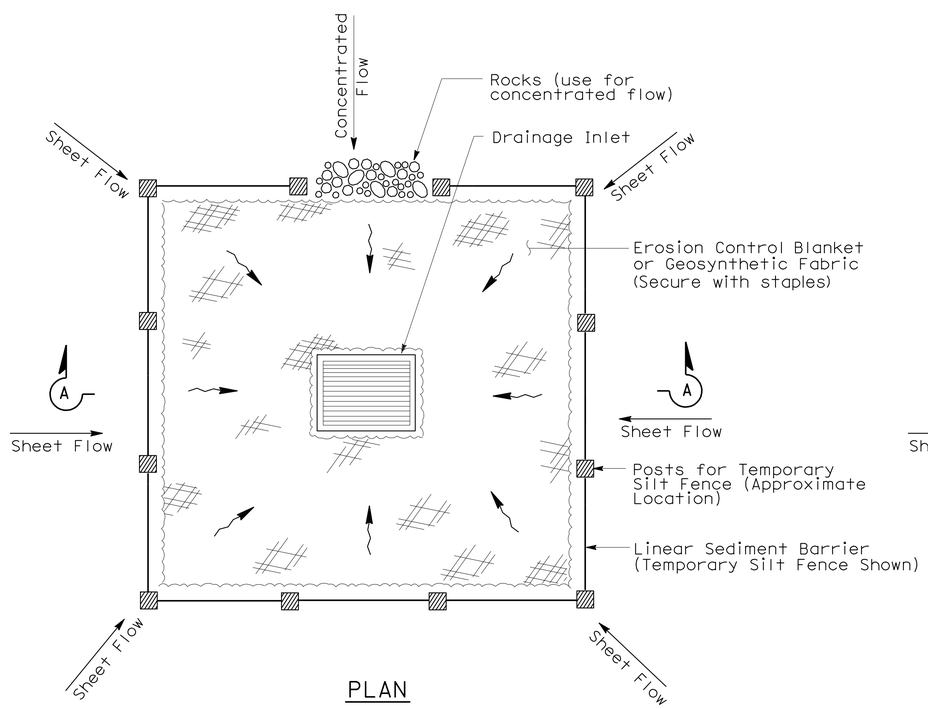

PLAN

TEMPORARY DRAINAGE INLET PROTECTION (TYPE 1)

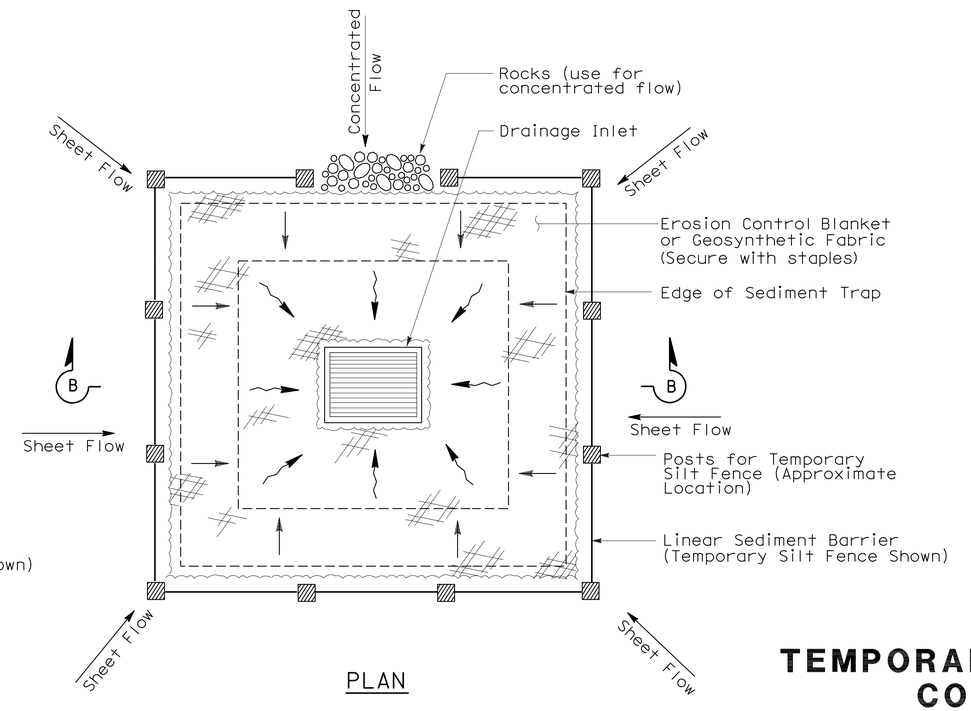

PLAN

TEMPORARY DRAINAGE INLET PROTECTION (TYPE 2) (EXCAVATED SEDIMENT TRAP)

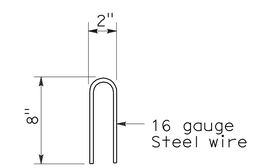

STAPLE DETAIL

STATE OF CALIFORNIA
DEPARTMENT OF TRANSPORTATION

TEMPORARY WATER POLLUTION CONTROL DETAILS (TEMPORARY DRAINAGE INLET PROTECTION)

NO SCALE

NSP T61 DATED AUGUST 15, 2008 SUPPLEMENTS THE STANDARD PLANS BOOK DATED MAY 2006.

NEW STANDARD PLAN NSP T61

2006 NEW STANDARD PLAN NSP T61

7-11-08

DIST	COUNTY	ROUTE	POST MILES TOTAL PROJECT	SHEET NO.	TOTAL SHEETS
02	Tri	3	68.5,70.7	39	93

LICENSED LANDSCAPE ARCHITECT

August 15, 2008
PLANS APPROVAL DATE

LICENSED LANDSCAPE ARCHITECT Robert B. Schott 3625 Signature 11-04-08 Renewal Date 08-11-08 Date STATE OF CALIFORNIA

The State of California or its officers or agents shall not be responsible for the accuracy or completeness of electronic copies of this plan sheet.

To accompany plans dated 8-23-10

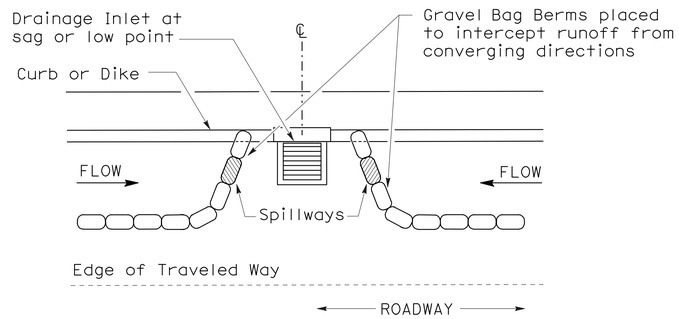

PLAN

CONFIGURATION FOR SAG POINT INLET (GRAVEL BAG BERM)

GRAVEL BAG BERM (TYPE 3A) SPACING TABLE

SLOPE OF ROADWAY (PERCENT)	1 to 3.9	4 to 5.9	6 to 7.9	8 to 10	10+
INTERVAL BETWEEN BERM	100′	75′	50′	25′	12′

For slope of less than 1%, install barriers only if erosion/sediment is prevalent

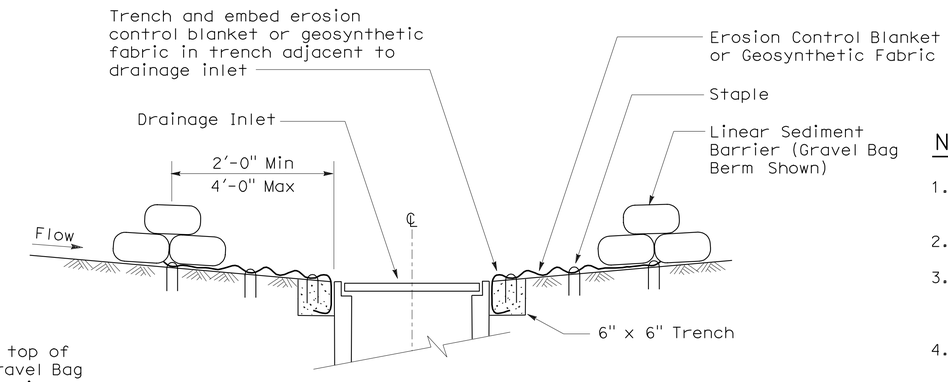

SECTION A-A

NOTES:

1. Place safety cones adjacent to drainage inlet protection.
2. Dimensions may vary to fit field conditions.
3. Install a minimum of 3 gravel bag berms upstream of each drainage inlet to be protected.
4. Position erosion control blanket or geosynthetic fabric at edge of concrete apron and secure in trench.
5. Erosion control blanket or geosynthetic fabric is not required if the area adjacent to the drainage inlet is vegetated or paved.

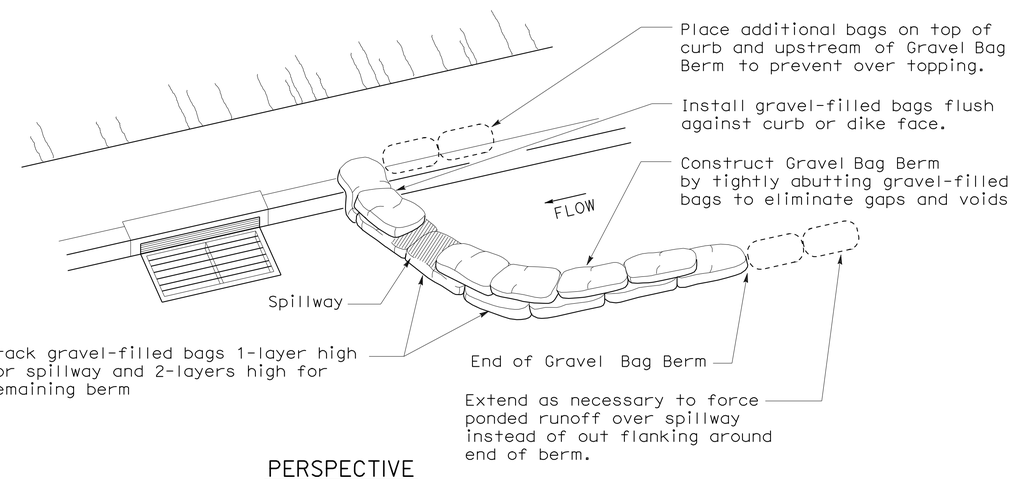

PERSPECTIVE

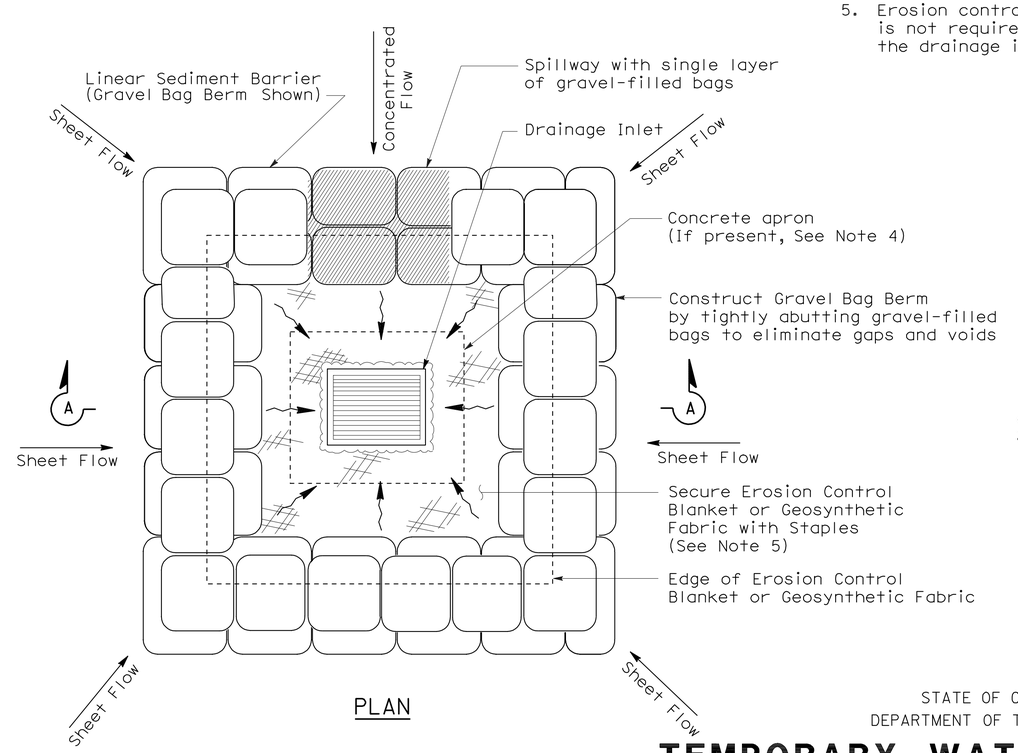

PLAN

TEMPORARY DRAINAGE INLET PROTECTION (TYPE 3B)

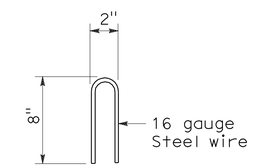

STAPLE DETAIL

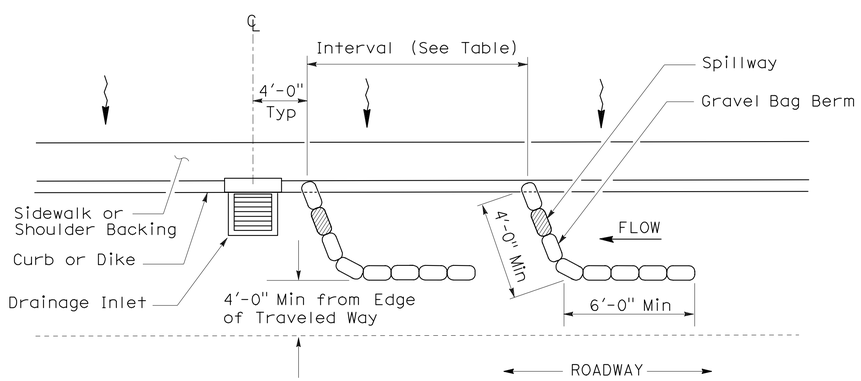

PLAN

TEMPORARY DRAINAGE INLET PROTECTION (TYPE 3A) (GRAVEL BAG BERM)

STATE OF CALIFORNIA
DEPARTMENT OF TRANSPORTATION

TEMPORARY WATER POLLUTION CONTROL DETAILS (TEMPORARY DRAINAGE INLET PROTECTION)

NO SCALE

NSP T62 DATED AUGUST 15, 2008 SUPPLEMENTS THE STANDARD PLANS BOOK DATED MAY 2006.

NEW STANDARD PLAN NSP T62

2006 NEW STANDARD PLAN NSP T62

7-11-08

DIST	COUNTY	ROUTE	POST MILES TOTAL PROJECT	SHEET NO.	TOTAL SHEETS
02	Tri	3	68.5,70.7	40	93

LICENSED LANDSCAPE ARCHITECT

August 15, 2008
PLANS APPROVAL DATE

The State of California or its officers or agents shall not be responsible for the accuracy or completeness of electronic copies of this plan sheet.

LICENSED LANDSCAPE ARCHITECT — Robert B. Schott — Signature — 11-04-08 Renewal Date — 08-11-08 Date — STATE OF CALIFORNIA

To accompany plans dated 8-23-10

FLEXIBLE SEDIMENT BARRIER SPACING TABLE

SLOPE OF ROADWAY (PERCENT)	0 to 0.9	1 to 1.9	2 to 2.9	3 to 4	5+
INTERVAL BETWEEN BARRIERS	50′	35′	30′	25′	20′
ANGLE FROM FACE OF CURB	70°	70°	70°	45°	45°
SUGGESTED BARRIER LENGTH	6′	6′	6′	6′	6′

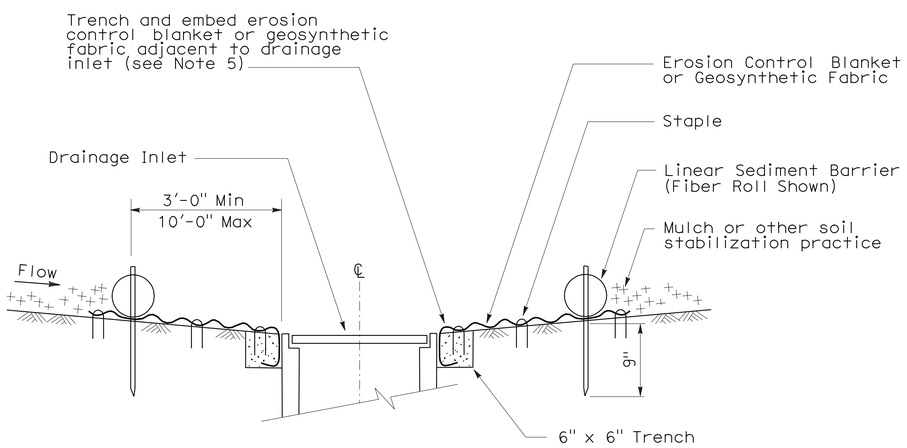

SECTION A-A

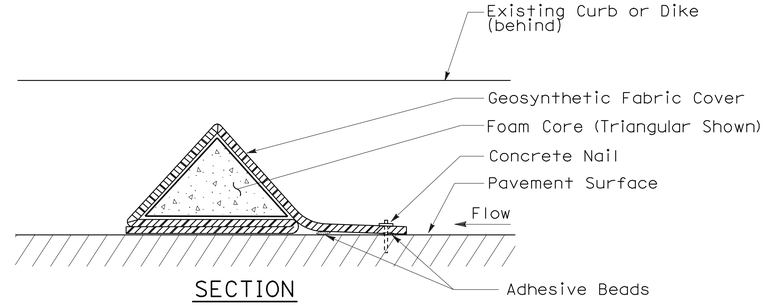

SECTION

FLEXIBLE SEDIMENT BARRIER DETAIL (FOAM BARRIER SHOWN)

NOTES:

1. See Standard Plan T51 for Temporary Silt Fence.
2. Dimensions may vary to fit field conditions.
3. Install a minimum of 3 flexible sediment barriers upstream of each drainage inlet to be protected.
4. Position erosion control blanket or geosynthetic fabric at edge of concrete apron and secure in trench.
5. Erosion control blanket or geosynthetic fabric is not required if the area adjacent to the drainage inlet is vegetated.

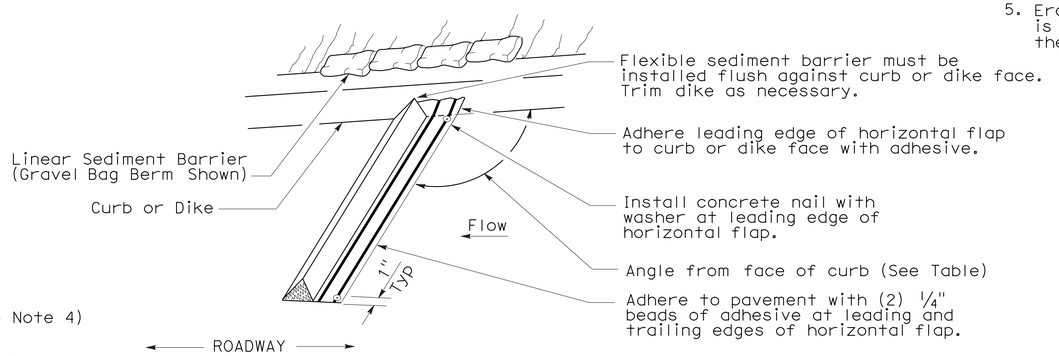

PERSPECTIVE

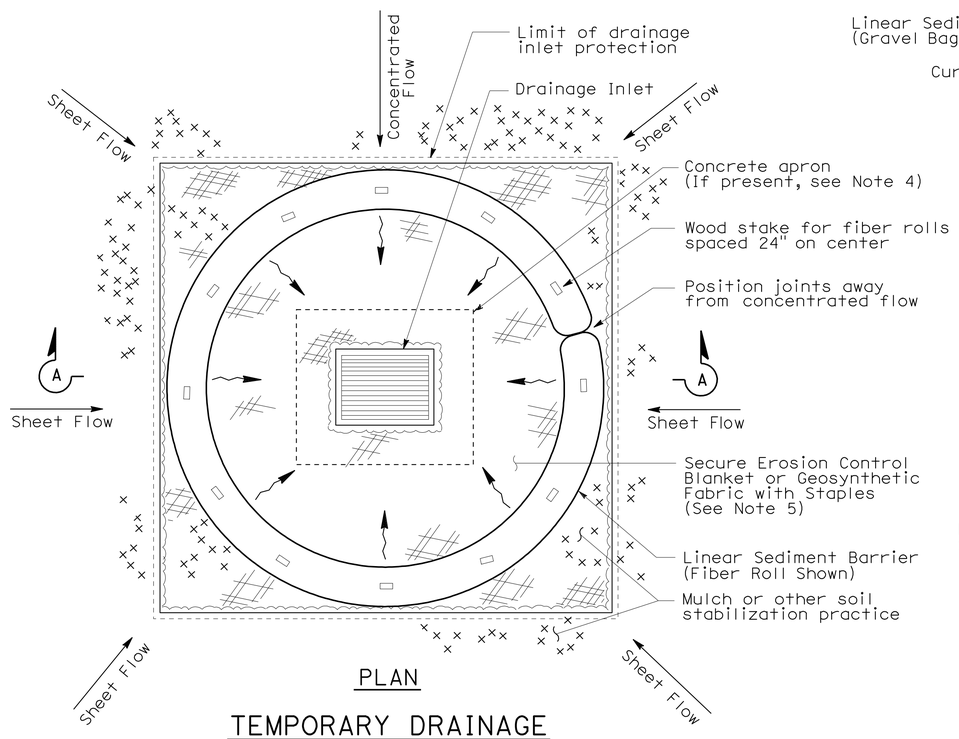

PLAN

TEMPORARY DRAINAGE INLET PROTECTION (TYPE 4A)

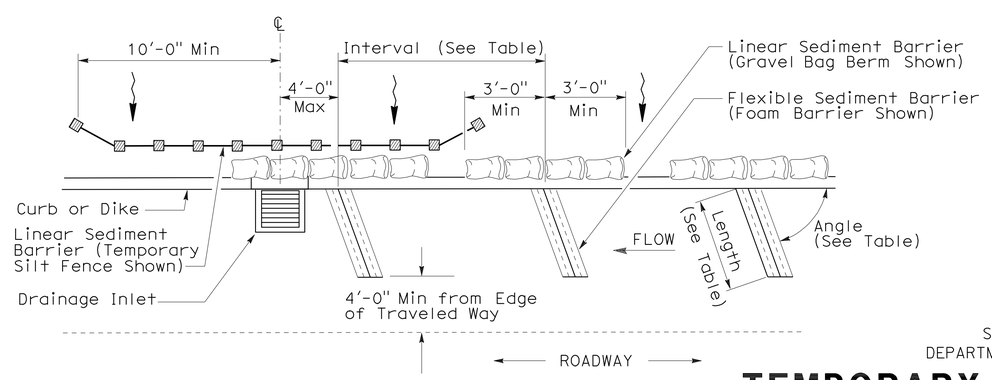

PLAN

TEMPORARY DRAINAGE INLET PROTECTION (TYPE 4B) FLEXIBLE SEDIMENT BARRIER

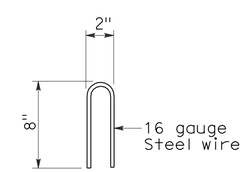

STAPLE DETAIL

STATE OF CALIFORNIA
DEPARTMENT OF TRANSPORTATION

TEMPORARY WATER POLLUTION CONTROL DETAILS (TEMPORARY DRAINAGE INLET PROTECTION)

NO SCALE

NSP T63 DATED AUGUST 15, 2008 SUPPLEMENTS THE STANDARD PLANS BOOK DATED MAY 2006.

NEW STANDARD PLAN NSP T63

2006 NEW STANDARD PLAN NSP T63

7-11-08

DIST	COUNTY	ROUTE	POST MILES TOTAL PROJECT	SHEET NO.	TOTAL SHEETS
02	Tri	3	68.5,70.7	41	93

LICENSED LANDSCAPE ARCHITECT

August 15, 2008
PLANS APPROVAL DATE

LICENSED LANDSCAPE ARCHITECT
Robert B. Schott 3625
Signature
11-04-08
Renewal Date
08-11-08
Date
STATE OF CALIFORNIA

The State of California or its officers or agents shall not be responsible for the accuracy or completeness of electronic copies of this plan sheet.

To accompany plans dated 8-23-10

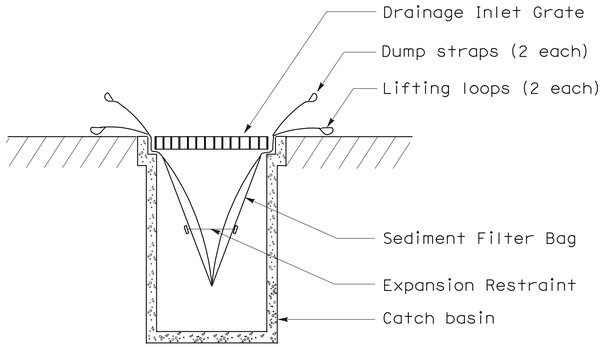

SECTION B-B

SEDIMENT FILTER BAG DETAIL

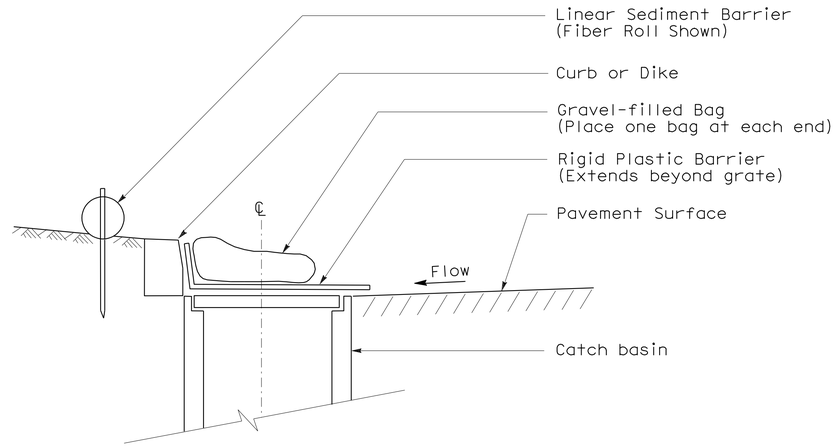

SECTION

TEMPORARY DRAINAGE INLET PROTECTION (TYPE 6A) (CATCH BASIN WITH GRATE)

NOTES:

1. See Standard Plan T51 for Temporary Silt Fence.
2. Dimensions may vary to fit field conditions.

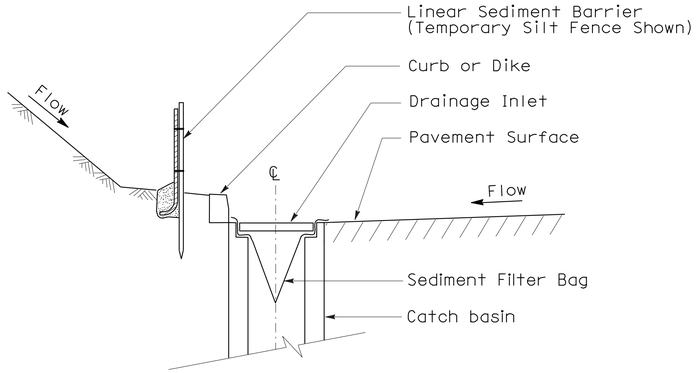

SECTION A-A

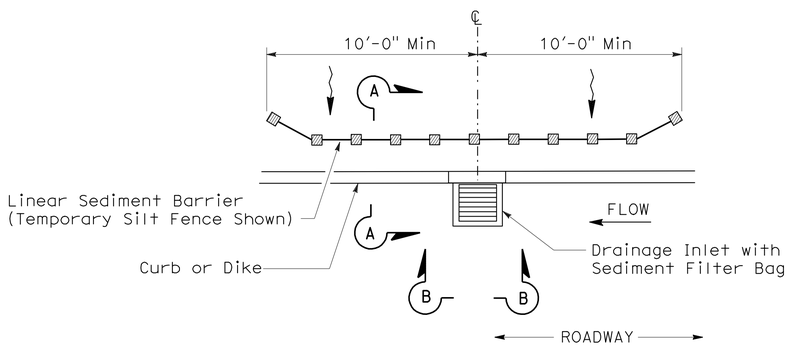

PLAN

TEMPORARY DRAINAGE INLET PROTECTION (TYPE 5) (SEDIMENT FILTER BAG)

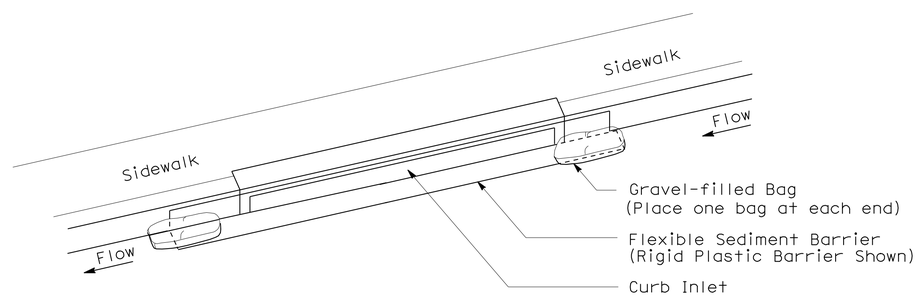

PERSPECTIVE

TEMPORARY DRAINAGE INLET PROTECTION (TYPE 6B) (CURB INLET WITHOUT GRATE)

STATE OF CALIFORNIA
DEPARTMENT OF TRANSPORTATION

TEMPORARY WATER POLLUTION CONTROL DETAILS (TEMPORARY DRAINAGE INLET PROTECTION)

NO SCALE

NSP T64 DATED AUGUST 15, 2008 SUPPLEMENTS
THE STANDARD PLANS BOOK DATED MAY 2006.

NEW STANDARD PLAN NSP T64

2006 NEW STANDARD PLAN NSP T64

7-11-08

DIST	COUNTY	ROUTE	POST MILES TOTAL PROJECT	SHEET NO.	TOTAL SHEETS
02	Tri	3	68.5,70.7	42	93

LICENSED LANDSCAPE ARCHITECT

April 3, 2009
PLANS APPROVAL DATE

LICENSED LANDSCAPE ARCHITECT
Robert B. Schott 3025
Signature
11-30-10
Renewal Date
2-25-09
Date
STATE OF CALIFORNIA

The State of California or its officers or agents shall not be responsible for the accuracy or completeness of electronic copies of this plan sheet.

To accompany plans dated 8-23-10

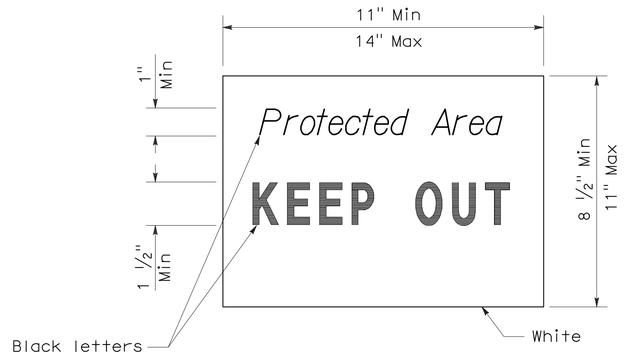

SIGN DETAIL

NOTE:

1. Temporary silt fence and temporary straw bale barrier shown for reference purposes only.

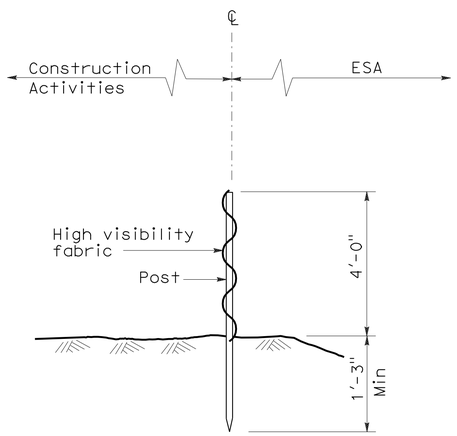

SECTION
TEMPORARY FENCE (TYPE ESA)

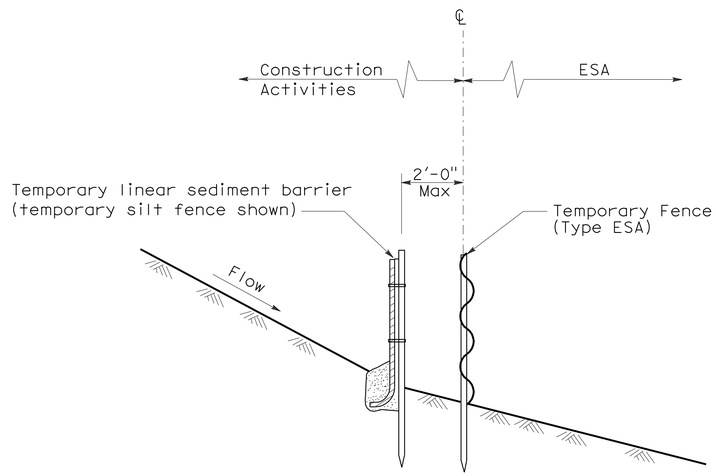

SECTION
PLACEMENT DETAIL
FOR TEMPORARY LINEAR SEDIMENT BARRIER
USED WITH TEMPORARY
FENCE (TYPE ESA)
(See Note 1)

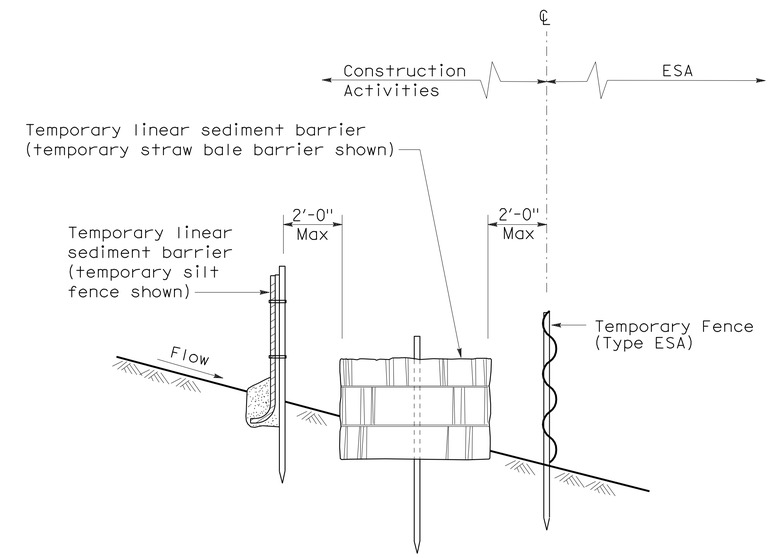

SECTION
PLACEMENT DETAIL
FOR TEMPORARY SILT FENCE
AND TEMPORARY STRAW BALE BARRIER
USED WITH TEMPORARY FENCE (TYPE ESA)
(See Note 1)

STATE OF CALIFORNIA
DEPARTMENT OF TRANSPORTATION

TEMPORARY WATER POLLUTION CONTROL DETAILS [TEMPORARY FENCE (TYPE ESA)]

NO SCALE

NSP T65 DATED APRIL 3, 2009 SUPPLEMENTS
THE STANDARD PLANS BOOK DATED MAY 2006.

NEW STANDARD PLAN NSP T65

2006 NEW STANDARD PLAN NSP T65

DIST	COUNTY	ROUTE	POST MILES TOTAL PROJECT	SHEET NO.	TOTAL SHEETS
02	Tri	3	68.5,70.7	43	93

REGISTERED CIVIL ENGINEER

October 5, 2007
PLANS APPROVAL DATE

REGISTERED PROFESSIONAL ENGINEER Efthymios Delis No. C51434 Exp. 6-30-08 CIVIL STATE OF CALIFORNIA

The State of California or its officers or agents shall not be responsible for the accuracy or completeness of electronic copies of this plan sheet.

To accompany plans dated 8-23-10

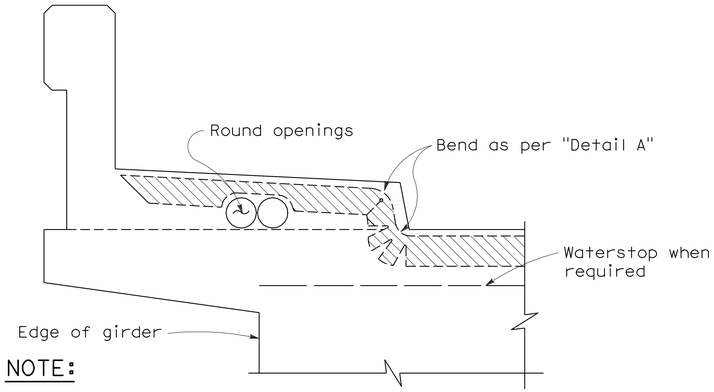

NOTE:

Type "B" seal shown. Type "A" seals to comform to the general path of seal shown, cuts for bending not required. Bend Type "A" seals 3" up into curb or barrier rail on only the low end of the seal.

CONCRETE BARRIER AND SIDEWALK

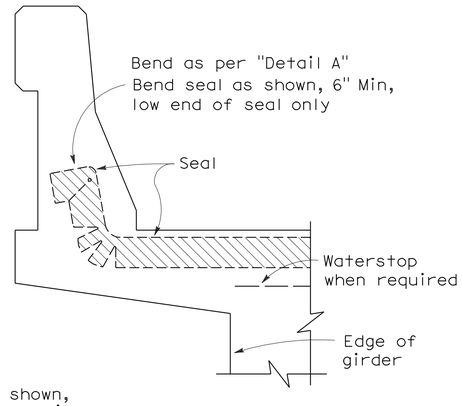

CONCRETE BARRIER

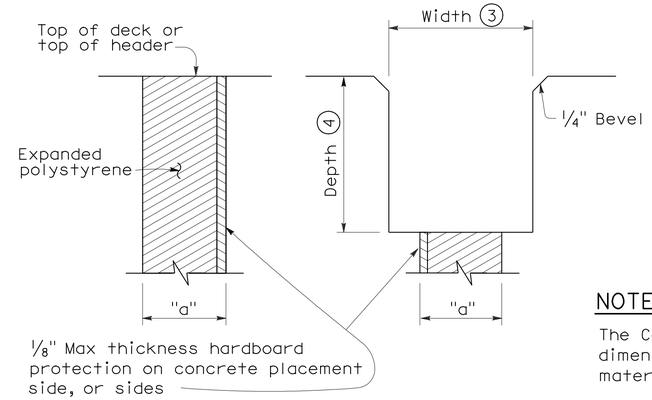

FORMING DETAIL SAWCUT DETAIL

NOTE:

The Contractor shall verify all controlling field dimensions before ordering or fabricatiing any material.

JOINT SEALS DETAILS

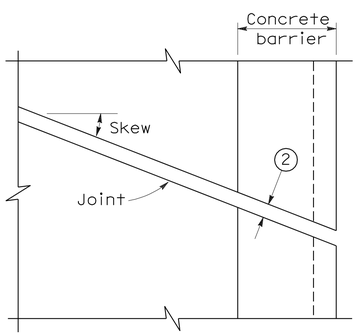

PLAN OF JOINT (SKEW ≤ 20°)

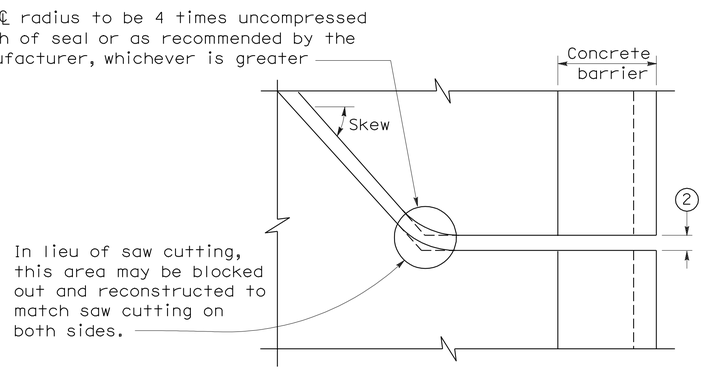

PLAN OF JOINT (SKEW > 20°)

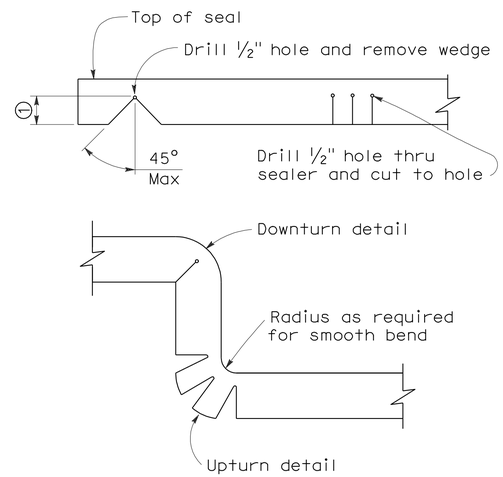

DETAIL A

NOTES:

1. Make smooth cuts from the bottom of seal to 1½" clear of top leaving at least one complete cell between the top of the cut and top of the seal. When necessary cut back of seal to clear conduit and round openings.
2. Opening in barrier to match width of sawn deck joint.
3. Sawcut groove widths shall be as ordered by the Engineer.
4. Depth of sawcut: Type A - Depth to be 2" minimum.
   Type B - Depth to be equal to or greater than the depth of seal measured along the contact surface, when compressed to minimum width position (W_2) plus dimensions shown.
5. MR (movement rating) as shown on other plan sheets.
6. Other depths must be approved by the Engineer.

DIMENSIONS "a" OF JOINT REQUIRED

Movement Rating (MR) (5)	Bridge Type	"a" Dimension Deck Concrete Placed		
		Winter	Fall-Spring	Summer
2"	All except CIP/PS	1½"	1¼"	¾"
	CIP/PS	1¼"	1"	½"
1½"	All except CIP/PS	1¼"	1"	½"
	CIP/PS	1"	¾"	½"
1"	All except CIP/PS	1"	¾"	½"
	CIP/PS	¾"	½"	½"
½"	All except CIP/PS	¾"	¾"	½"
	CIP/PS	½"	½"	½"

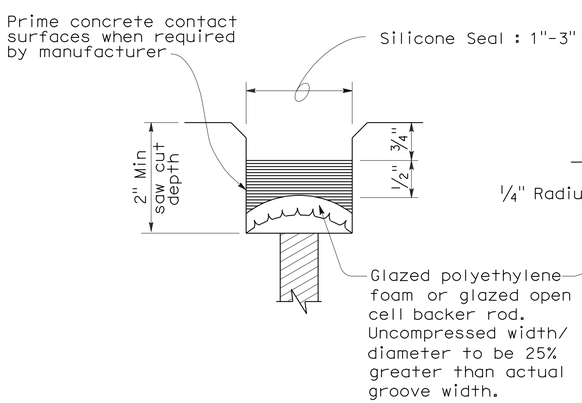

TYPE A SEAL

Movement rating : Silicone = 1" Max

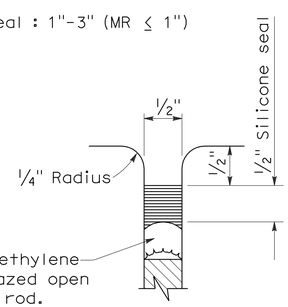

TYPE AL SEAL

Longitudinal joints only

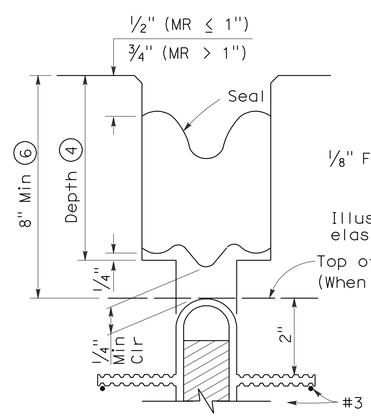

TYPE B JOINT SEAL IN MINIMUM WIDTH POSITION (W_2)

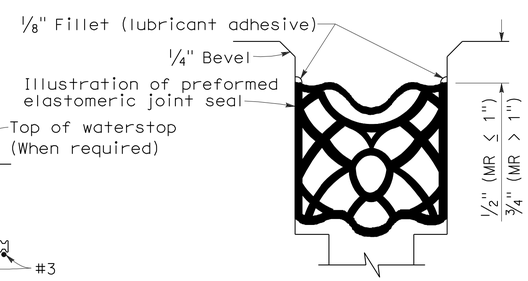

TYPE B SEAL

Movement Rating ≤ 2"

STATE OF CALIFORNIA
DEPARTMENT OF TRANSPORTATION

JOINT SEALS (MAXIMUM MOVEMENT RATING = 2")

NO SCALE

RSP B6-21 DATED OCTOBER 5, 2007 SUPERSEDES STANDARD PLAN B6-21 DATED MAY 1, 2006 - PAGE 258 OF THE STANDARD PLANS BOOK DATED MAY 2006.

REVISED STANDARD PLAN RSP B6-21

2006 REVISED STANDARD PLAN RSP B6-21

5-8-07

DIST	COUNTY	ROUTE	POST MILES TOTAL PROJECT	SHEET NO.	TOTAL SHEETS
02	Tri	3	68.5,70.7	44	93

REGISTERED CIVIL ENGINEER

June 30, 2006
PLANS APPROVAL DATE

REGISTERED PROFESSIONAL ENGINEER
Tillat Satter
No. C42892
Exp. 03-31-08
CIVIL
STATE OF CALIFORNIA

The State of California or its officers or agents shall not be responsible for the accuracy or completeness of electronic copies of this plan sheet.

To accompany plans dated 8-23-10

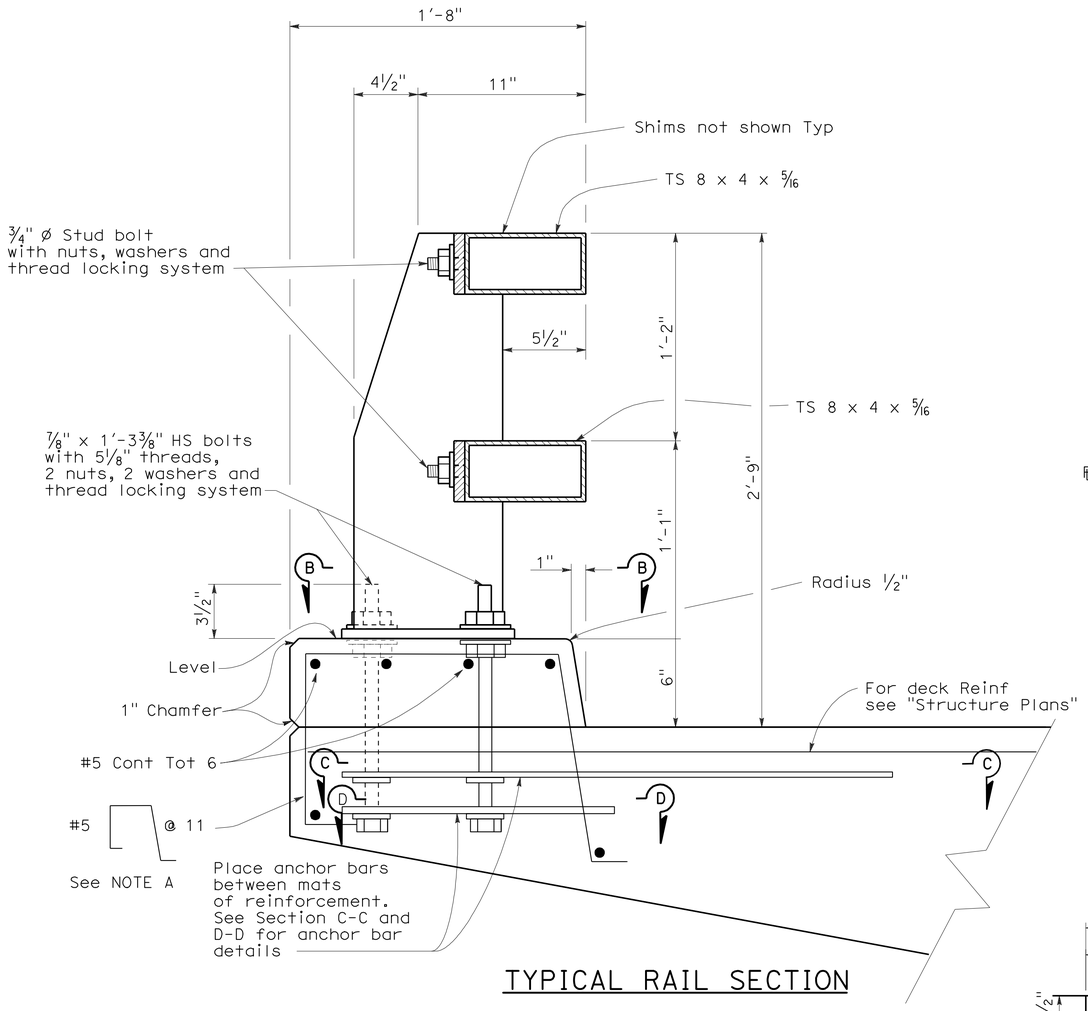

TYPICAL RAIL SECTION

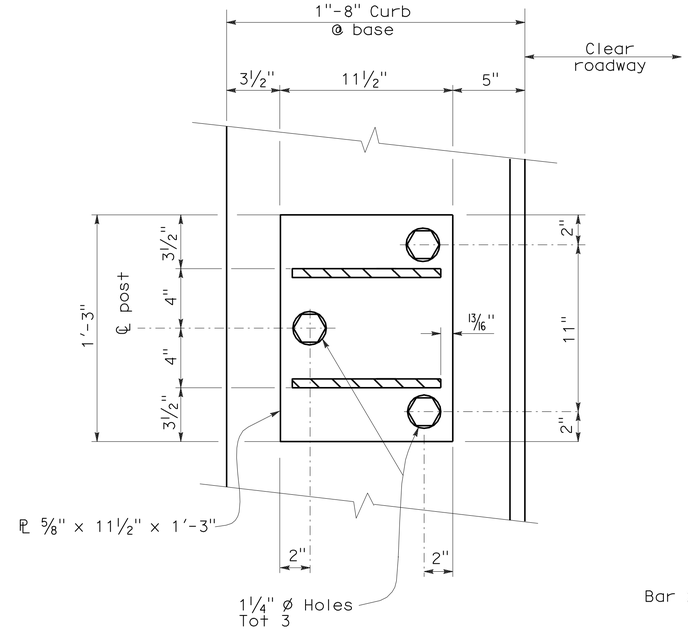

SECTION B-B

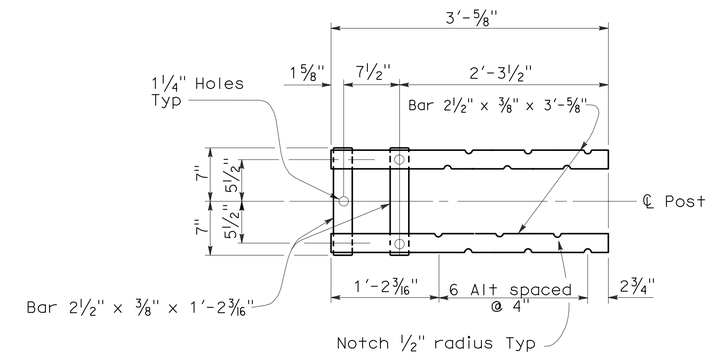

SECTION C-C
Top Anchorage

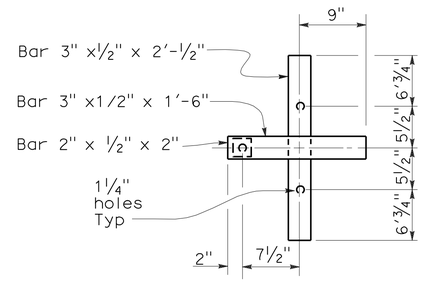

SECTION D-D
Lower Anchorage

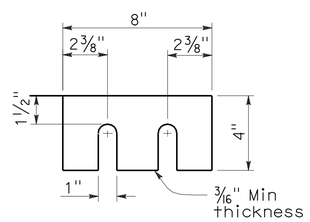

SHIMS REQUIRED FOR TOP AND BOTTOM RAIL

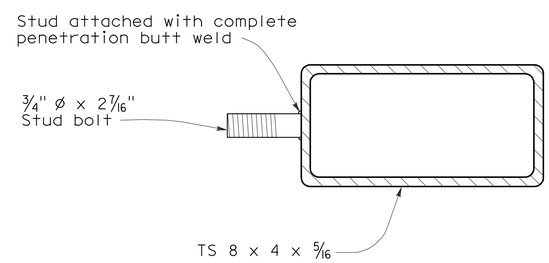

SECTION AT POST

STUD BOLT DETAIL

NOTE A

Adjust spacing to clear scupper opening by 2" if applicable.

STATE OF CALIFORNIA
DEPARTMENT OF TRANSPORTATION

CALIFORNIA ST-10 BRIDGE RAIL (SHEET 1 OF 3)

NO SCALE

RSP B11-68 DATED JUNE 30, 2006 SUPERSEDES STANDARD PLAN DATED MAY 1, 2006 - PAGE 284 OF THE STANDARD PLANS BOOK DATED MAY 2006.

REVISED STANDARD PLAN RSP B11-68

2006 REVISED STANDARD PLAN RSP B11-68

6-19-06

DIST	COUNTY	ROUTE	POST MILES TOTAL PROJECT	SHEET NO.	TOTAL SHEETS
02	Tri	3	68.5,70.7	45	93

REGISTERED ELECTRICAL ENGINEER

October 5, 2007
PLANS APPROVAL DATE

REGISTERED PROFESSIONAL ENGINEER Jeffery G. McRae No. E14512 Exp. 6-30-08 ELECTRICAL STATE OF CALIFORNIA

The State of California or its officers or agents shall not be responsible for the accuracy or completeness of electronic copies of this plan sheet.

To accompany plans dated 8-23-10

ELECTROLIERS

STANDARD TYPES
15, 15D
15 STRUCTURE
21, 21D STRUCTURE
30
31
32
35
36-20A

High mast light pole

Double Arm lighting standard

Existing electrolier

Electrolier foundation (Future installation)

NOTES:

1. Luminaires shall be 310 W HPS when installed on Type 21, 21D, 30, 31, 32, 35 and 36-20A Standards, unless otherwise specified. Luminaires shall be 200 W HPS when installed on other type standards or poles, unless otherwise specified.
2. Luminaires shall be the cutoff type, ANSI Type Ⅲ medium cutoff lighting distribution, unless otherwise specified.
3. Variations noted adjacent to symbol on project plans.

Electrolier (see project notes or project plans)

Luminaire on wood pole

STANDARD NOTES:

- AB — Abandon. If applied to conduit, remove conductors.
- BC — Install pull box in existing conduit run.
- BP — Pedestrian barricade, type as indicated on plan.
- CB — Install conduit into existing pull box.
- CC — Connect new and existing conduit. Remove existing conductors and install conductors as indicated.
- CF — Conduit to remain for future use. Remove conductors. Install pull wire or rope.
- DH — Detector handhole.
- FA — Foundation to be abandoned.
- IS — Install sign on signal mast arm.
- NS — No slip base on standard.
- PEC — Photoelectric control.
- PEU — Photoelectric unit.
- RC — Equipment or material to be removed and become the property of the Contractor.
- RE — Remove electrolier, fuses and ballast. Tape ends of conductors.
- RL — Relocate equipment.
- RR — Remove and reuse equipment.
- RS — Remove and salvage equipment.
- SC — Splice new to existing conductors.
- SD — Service disconnect.
- SF — Standard to remain for future use. Remove luminaire, pole conductors, fuses and ballast.
- TSP — Telephone service point.

ABBREVIATIONS AND EQUIPMENT DESIGNATIONS

PROPOSED	EXISTING	
BBS	bbs	Battery backup system
BC	bc	Bolt circle
C	C	Conduit
CCTV	cctv	Closed circuit television
CKT	ckt	Circuit
CMS	cms	Changeable message sign
DLC	dlc	Loop detector lead-in cable
EMS	ems	Extinguishable message sign
EVC	evc	Emergency vehicle cable
EVD	evd	Emergency vehicle detector
FB	fb	Flashing beacon
FBCA	fbca	Flashing beacon control assembly
FBS	fbs	Flashing beacon with slip base
FO	fo	Fiber optic
G	G	Ground (Equipment Grounding Conductor)
GFCI	GFCI	Ground fault circuit interrupt
HAR	har	Highway advisory radio
HEX	hex	Hexagonal
HPS	hps	High pressure sodium
IISNS	iisns	Internally illuminated street name sign
ISL	isl	Induction sign lighting
LED	led	Light emitting diode
LMA	lma	Luminaire mast arm
LPS	lps	Low pressure sodium
LTG	ltg	Lighting
LUM	lum	Luminaire
MAT	mat	Mast arm mounting vehicle signal faces, top attachment
MAS	mas	Mast arm mounting vehicle signal faces, side attachment
MAS-4A	mas-4A	Mast arm mounting vehicle signal faces, side attachment - 4 signal section
MAS-4B	mas-4B	
MAS-4C	mas-4C	
MAS-5A	mas-5A	Mast arm mounting vehicle signal faces, side attachment - 5 signal section
MAS-5B	mas-5B	
MC	mc	Mercury contactor
M/M	m/m	Multiple to multiple transformer
MT	mt	Conduit with pull wire or rope only
MTG	mtg	Mounting
	mv	Mercury vapor lighting fixture
N	N	Neutral (Grounded Conductor)
NC	NC	Normally closed
NO	NO	Normally open
PB	pb	Pull box
PEC	pec	Photoelectric control (Type Ⅰ, Ⅱ, Ⅲ, Ⅳ or Ⅴ as shown)
PED	ped	Pedestrian
PEU	peu	Photoelectric unit
PPB	ppb	Pedestrian push button
RL		Relocated equipment
RM	rm	Ramp metering
SB	sb	Slip base
SIC	sic	Signal interconnect cable
SIG	sig	Signal
SMA	sma	Signal mast arm
SNS	sns	Street name sign
SP	sp	Service point
TDC	tdc	Telephone demarcation cabinet
TMS	tms	Traffic monitoring station
TOS	tos	Traffic Operations System
VEH	veh	Vehicle
XFMR	xfmr	Transformer
COMM	comm	Communication
RWIS	rwis	Roadway weather information system

SOFFIT AND WALL MOUNTED LUMINAIRES

Pendant, 70 W HPS unless otherwise specified.

Flush, 70 W HPS unless otherwise specified.

Wall surface, 70 W HPS unless otherwise specified.

Existing soffit or wall luminaire to remain unmodified.

Existing soffit or wall luminaire to be modified as specified.

NOTE:

Arrow indicates "street side" of luminaire.

STATE OF CALIFORNIA
DEPARTMENT OF TRANSPORTATION

ELECTRICAL SYSTEMS (SYMBOLS AND ABBREVIATIONS)

NO SCALE

RSP ES-1A DATED OCTOBER 5, 2007 SUPERSEDES STANDARD PLAN ES-1A DATED MAY 1, 2006 - PAGE 400 OF THE STANDARD PLANS BOOK DATED MAY 2006.

REVISED STANDARD PLAN RSP ES-1A

2006 REVISED STANDARD PLAN RSP ES-1A

DIST	COUNTY	ROUTE	POST MILES TOTAL PROJECT	SHEET NO.	TOTAL SHEETS
02	Tri	3	68.5,70.7	46	93

REGISTERED ELECTRICAL ENGINEER

October 5, 2007
PLANS APPROVAL DATE

REGISTERED PROFESSIONAL ENGINEER
Jeffery G. McRae
No. E14512
Exp. 6-30-08
ELECTRICAL
STATE OF CALIFORNIA

The State of California or its officers or agents shall not be responsible for the accuracy or completeness of electronic copies of this plan sheet.

To accompany plans dated 8-23-10

CONDUIT

PROPOSED	EXISTING	
		Lighting Conduit, unless otherwise indicated or noted
		Traffic signal conduit
C	c	Communication conduit
T	t	Telephone conduit
F	f	Fire alarm conduit
FO	fo	Fiber optic conduit
		Conduit termination (RSP ES-9A C)
R	r	Conduit riser in/on structure or service pole

SERVICE EQUIPMENT

PROPOSED	EXISTING	
OH	oh	Overhead lines
U	U	Wood pole "U" indicates utility owned
		Pole guy with anchor
		Utility transformer - ground mounted
III		Service equipment enclosure type
		Service equipment enclosure door indicates front of enclosure
T	t	Telephone demarcation cabinet

POLE-MOUNTED SERVICE DESIGNATION

Type of installation

TYPE H SERVICE - 28'-10" ← Pole height above grade

ILLUMINATED OVERHEAD SIGN

PROPOSED	EXISTING	
		Overhead sign - Single post
		Overhead sign - Two post
		Overhead sign - Mounted on structure
		Overhead sign with electrolier

SIGNAL EQUIPMENT

PROPOSED	EXISTING	
		Pedestrian signal face
		Pedestrian push button post
		Pedestrian barricade
		Vehicle signal face (with backplate, 3-Section: red, yellow and green)
		Vehicle signal face with angle visors
PV	PV	Modifications of basic symbols: "L" indicates all non-arrow sections louvered "LG" indicates louvered green section only "PV" indicates 12" programmed visibility sections "8" indicates all 8" sections (only when specified)
		Type 15TS and Vehicle signal face
		Vehicle signal face with red, yellow and green left arrow sections
		Vehicle signal face with red and yellow sections and up green arrow
		Vehicle signal face (5 Section) with red, yellow and green sections and yellow and green right arrows
		Type 1 Standard and attached vehicle signal faces
		Standard with signal mast arm only and attached vehicle signal faces and internally illuminated street name sign
		Type 33 Standard, Left-turn vehicle signal face and sign
		Standard with luminaire and signal mast arms and attached vehicle signal faces
		Cantilever flashing beacon Type 9 Frame, with a sign unless otherwise specified or indicated
		Type 15-FBS Standard with two vehicle signal face sections with lens, backplate and visor with a sign
R	Y	Flashing beacon. One vehicle signal face section with lens, backplate and visor. "R" indicates red indication, "Y" indicates yellow indication
		Controller assembly. Door indicates front of cabinet

SIGNAL EQUIPMENT Cont

PROPOSED	EXISTING	
		Guard post
		Type 1 Standard with "Meter On" sign
		Emergency Vehicle detector

NOTES:

1. All signal sections shall be 12" unless shown otherwise.
2. Signal heads shall be provided with backplates unless shown otherwise.
3. Signal indication shall be LED.

STATE OF CALIFORNIA
DEPARTMENT OF TRANSPORTATION

ELECTRICAL SYSTEMS (SYMBOLS AND ABBREVIATIONS)

NO SCALE

RSP ES-1B DATED OCTOBER 5, 2007 SUPERCEDES STANDARD PLAN ES-1B DATED MAY 1, 2006 - PAGE 401 OF THE STANDARD PLANS BOOK DATED MAY 2006.

REVISED STANDARD PLAN RSP ES-1B

2006 REVISED STANDARD PLAN RSP ES-1B

DIST	COUNTY	ROUTE	POST MILES TOTAL PROJECT	SHEET NO.	TOTAL SHEETS
02	Tri	3	68.5,70.7	47	93

REGISTERED ELECTRICAL ENGINEER

October 5, 2007
PLANS APPROVAL DATE

REGISTERED PROFESSIONAL ENGINEER Jeffery G. McRae No. E14512 Exp. 6-30-08 ELECTRICAL STATE OF CALIFORNIA

The State of California or its officers or agents shall not be responsible for the accuracy or completeness of electronic copies of this plan sheet.

To accompany plans dated 8-23-10

EQUIPMENT IDENTIFICATION

ILLUMINATED SIGN IDENTIFICATION NUMBER:

Sign No. 12345

10 ISL SCI 1.0

- Sign number - Place on post or structure
- Transformer rating (kVA)
- Lighting control type
- Number and type of fixtures

Do NOT place on standard or structure

ELECTROLIER OR EQUIPMENT IDENTIFICATION NUMBER:

12345 - 15'-0"

- Mast arm length, if shown. Do not place on standard or structure.
- Equipment number - Place on standard or structure. Existing equipment numbers are shown in parenthesis

CONDUIT AND CONDUCTOR IDENTIFICATION:

1½"C, 2#10, 15#14, 2 DLC

- Number and size of conductors and cables
- Size of conduit in inches

Ø1, Ø2, Ø2P, etc.	Traffic phase identification for signal faces, detectors and phase diagrams
1 2 3	Project note numbers
A B C	Equipment description, installation or item numbers
1 2 3	Conduit run numbers

SIGNAL AND LIGHTING STANDARD (TYPICAL DESIGNATION):

19A - 3 - 100

- Wind velocity = 100 mph
- Case 3 arm loading
- Standard type
- Standard Plan sheet number
- Detail number or letter

MISCELLANEOUS EQUIPMENT

PROPOSED	EXISTING	
CMS	cms	Changeable message sign
		Closed circuit television camera
		Highway advisory radio pole and antenna
EMS	ems	Extinguishable message sign
M V	m v	Detection device M = Microwave sensor V = Video image sensor

WIRING DIAGRAM LEGEND

P	Pole
CB	Circuit breaker
A	Ampere
V	Volt
M	Metered
UM	Unmetered
NB	Neutral bus
GB	Ground bus
G	Equipment grounding conductor
N	Grounded conductor (Neutral)

- External conductor
- Conductor or bus
- Tie point
- Contactor coil
- Contactor, Contact NO
- Terminal blocks
- Contactor, Contact NC
- Enclosure bond
- Grounding electrode
- Circuit breaker
- Receptacle

PULL BOXES

PROPOSED EXISTING

Pull box-No. 5 unless otherwise indicated or noted.

3 9A(21)

Pull box-Additional designations or descriptions

3	= No. 3½ pull box
5	= No. 5 pull box
6	= No. 6 pull box
7	= No. 7 (Ceiling pull box)
8	= No. 8 (Pendant soffit pull box)
9	= No. 9 pull box
9A	= No. 9A pull box

(C)	= Communications pull box
(E)	= Pull box with extension
(S)	= Sprinkler control pull box
(21)	= Anchor bolts and conduit for future installation of Type 21 Standard
(T)	= Traffic pull box

VEHICLE DETECTORS

5 J 9 U

- Vehicle detector designation
- U = Upper
- L = Lower
- Slot number in input file
- Input file (I or J)
- Phase

PROPOSED EXISTING

	Type A detector loop. Outline of sawcut shown.
	Type B detector loop. Outline of sawcut shown.
	Type C detector loop. Outline of sawcut shown.
	Type D detector loop. Outline of sawcut shown.
	Type E detector loop. Outline of sawcut shown.
	Type Q detector loop. Outline of sawcut shown.
	Magnetic detector
DH dh	Detector handhole
	Microwave or video detection zone

STATE OF CALIFORNIA
DEPARTMENT OF TRANSPORTATION

ELECTRICAL SYSTEMS (SYMBOLS AND ABBREVIATIONS)

NO SCALE

RSP ES-1C DATED OCTOBER 5, 2007 SUPERCEDES STANDARD PLAN ES-1C DATED MAY 1, 2006 - PAGE 402 OF THE STANDARD PLANS BOOK DATED MAY 2006.

REVISED STANDARD PLAN RSP ES-1C

2006 REVISED STANDARD PLAN RSP ES-1C

DIST	COUNTY	ROUTE	POST MILES TOTAL PROJECT	SHEET NO.	TOTAL SHEETS
02	Tri	3	68.5,70.7	48	93

REGISTERED ELECTRICAL ENGINEER

June 6, 2008
PLANS APPROVAL DATE

REGISTERED PROFESSIONAL ENGINEER
Jeffery G. McRae
No. E14512
Exp. 6-30-10
ELECTRICAL
STATE OF CALIFORNIA

The State of California or its officers or agents shall not be responsible for the accuracy or completeness of electronic copies of this plan sheet.

To accompany plans dated 8-23-10

VISORS

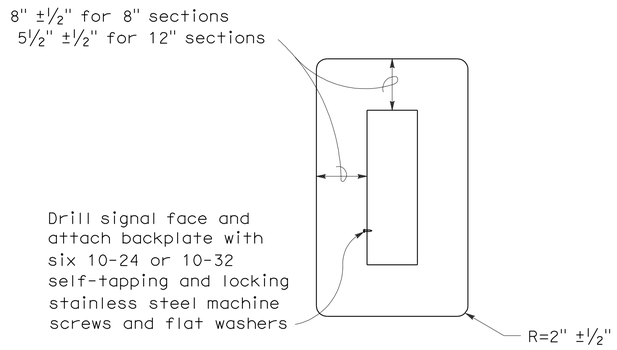

8" AND 12" SECTIONS

BACKPLATE

1/16" minimum thickness
3001-14 aluminum, or plastic when specified

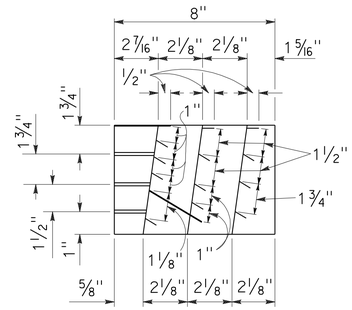

SECTION A-A

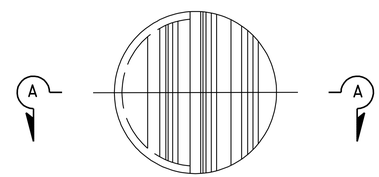

FRONT VIEW

DIRECTIONAL LOUVER

Directional louvers shall be oriented as directed by the Engineer and secured in place with one plated brass machine screw and nut.

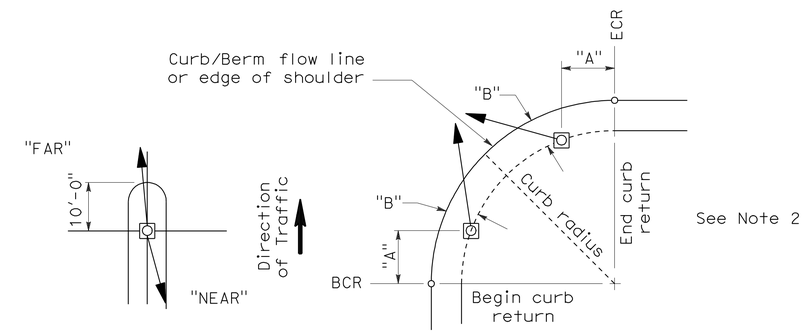

NOTES:

1. Typical signal pole placement unless dimensioned on plans.
2. For "A" and "B" dimensions, see Pole Schedule, or as directed by the Engineer.

SIGNAL STANDARD PLACEMENT DIMENSIONS AND EQUIPMENT LOCATIONS

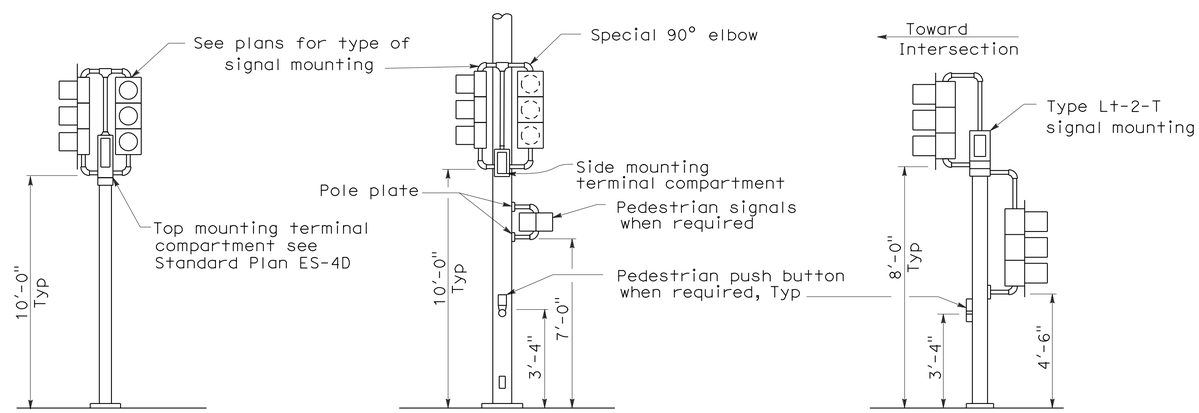

TOP MOUNTED SIGNALS (TV)

Type 1-A, 1-B, 1-C and 1-D standard as indicated on the plans

SIDE MOUNTED SIGNALS (SV AND SP)

Normally used on standards with luminaire or signal mast arm

LEFT TURN LANE SIGNAL

Type 1-A, 1-B, 1-C and 1-D standard as indicated on plans

TYPICAL SIGNAL INSTALLATIONS

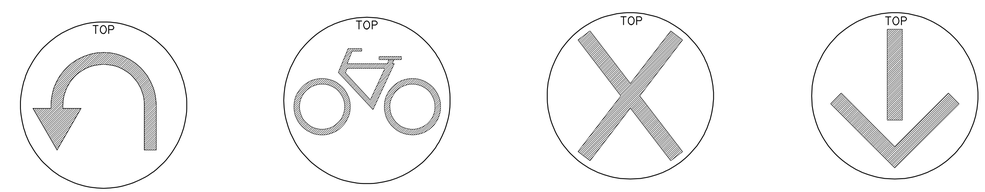

U-TURN SIGNAL FACE

BICYCLE SIGNAL FACE

LANE CONTROL SIGNAL FACE

LANE CONTROL SIGNAL FACE

STATE OF CALIFORNIA
DEPARTMENT OF TRANSPORTATION

ELECTRICAL SYSTEMS (SIGNAL HEADS AND MOUNTINGS)

NO SCALE

RSP ES-4C DATED JUNE 6, 2008 SUPERSEDES STANDARD PLAN ES-4C DATED MAY 1, 2006 - PAGE 420 OF THE STANDARD PLANS BOOK DATED MAY 2006.

REVISED STANDARD PLAN RSP ES-4C

2006 REVISED STANDARD PLAN RSP ES-4C

5-19-08

DIST	COUNTY	ROUTE	POST MILES TOTAL PROJECT	SHEET NO.	TOTAL SHEETS
02	Tri	3	68.5,70.7	49	93

REGISTERED ELECTRICAL ENGINEER

June 6, 2008
PLANS APPROVAL DATE

REGISTERED PROFESSIONAL ENGINEER Jeffery G. McRae No. E14512 Exp. 6-30-10 ELECTRICAL STATE OF CALIFORNIA

The State of California or its officers or agents shall not be responsible for the accuracy or completeness of electronic copies of this plan sheet.

To accompany plans dated 8-23-10

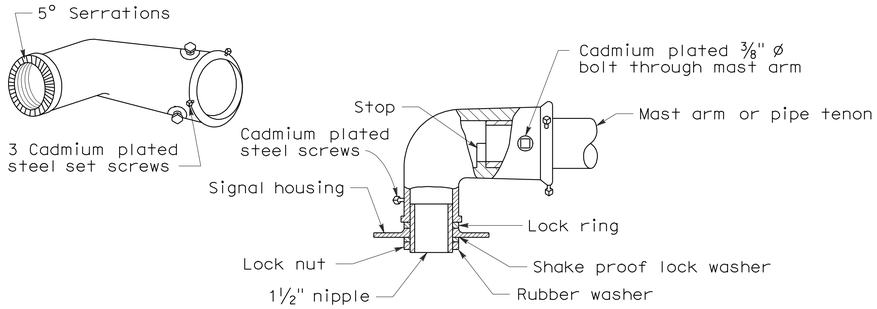

MAST ARM MOUNTING - TYPE "MAT"

For 2 NPS pipe, see Note 1.

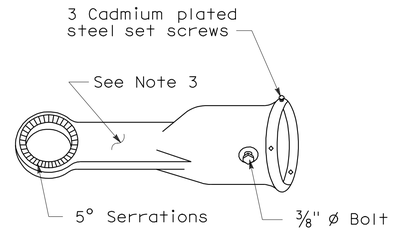

MAST ARM MOUNTING - TYPE "MAS"

For 2 NPS pipe. See Note 1.

SIGNAL SLIP FITTERS

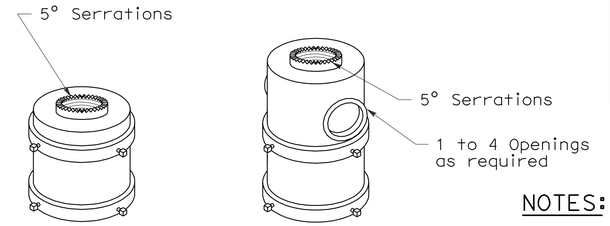

For one mounting For mulitiple mountings

TOP MOUNTINGS

For 4 NPS pipe, see Note 2.

NOTES:

1. After mast arm signal has been plumbed and secured, drill 7/16" hole through mast arm tenon in line with slip fitter hole. Place a cadmium plated ⅜" ø galvanized bolt with washer under bolt head through hole and secure with washer, nut, and locknut. Seal openings between mast arm mountings and mast arm with mastic.
2. (a) Threaded top mounted slip fitter openings shall be 1½ NPS.
   (b) Serrations in fittings shall match those on bottom of signal heads or in lock ring.
   (c) Top opening shall be offset when backplate is used.
3. Wireway shall have a cross section area of 0.95 square inch minimum. Minimum width of ½".

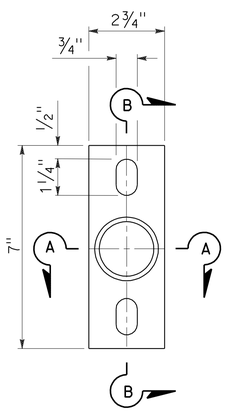

POLE PLATE

For side mountings

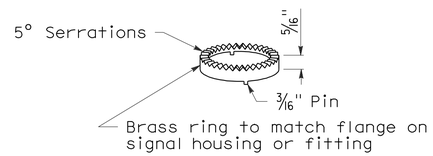

LOCK RING

Use where locking ring is not integral with signal housing or fitting.

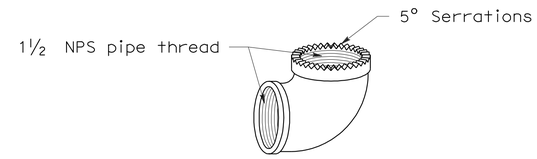

SPECIAL 90° ELBOW

One for each signal head, except those with special slip fitter mounting

MISCELLANEOUS MOUNTING HARDWARE

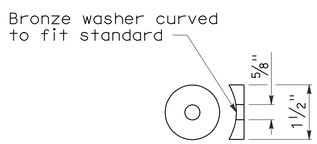

DETAIL "C"

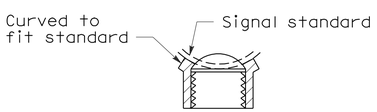

SECTION A-A

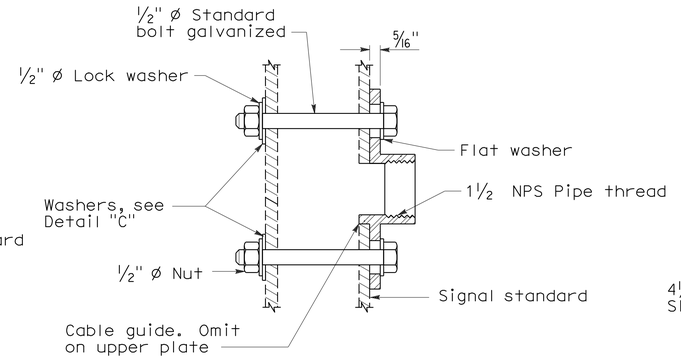

SECTION B-B

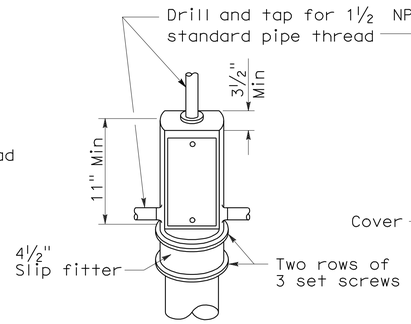

TOP MOUNTING

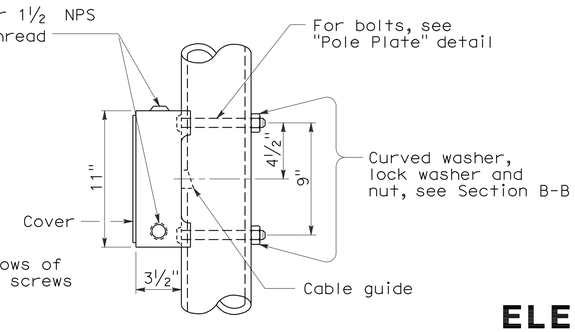

SIDE MOUNTING

TERMINAL COMPARTMENTS

STATE OF CALIFORNIA
DEPARTMENT OF TRANSPORTATION

ELECTRICAL SYSTEMS (SIGNAL HEADS AND MOUNTINGS)

NO SCALE

RSP ES-4D DATED June 6, 2008 SUPERSEDES STANDARD PLAN ES-4D
DATED MAY 1, 2006 - PAGE 421 OF THE STANDARD PLANS BOOK DATED MAY 2006.

REVISED STANDARD PLAN RSP ES-4D

2006 REVISED STANDARD PLAN RSP ES-4D

5-19-08

DIST	COUNTY	ROUTE	POST MILES TOTAL PROJECT	SHEET NO.	TOTAL SHEETS
02	Tri	3	68.5,70.7	50	93

REGISTERED ELECTRICAL ENGINEER

October 5, 2007
PLANS APPROVAL DATE

REGISTERED PROFESSIONAL ENGINEER Jeffery G. McRae No. E14512 Exp. 6-30-08 ELECTRICAL STATE OF CALIFORNIA

The State of California or its officers or agents shall not be responsible for the accuracy or completeness of electronic copies of this plan sheet.

To accompany plans dated 8-23-10

LOOP INSTALLATION PROCEDURE

1. Loops shall be centered in lanes.
2. Saw slots in pavement for loop conductors as shown in details.
3. Distance between side of loop and a lead-in saw cut from adjacent detectors shall be 2'-0" minimum. Distance between lead-in saw cuts shall be 6" minimum.
4. Bottom of saw slot shall be smooth with no sharp edges.
5. Slots shall be washed until clean, blown out and thoroughly dried before installing loop conductors.
6. Adjacent loops on the same sensor unit channel shall be wound in opposite directions.
7. Identify and tag loop circuit pairs in the pull box with loop number, start (S) and finish (F) of conductor. Identify and tag lead-in-cable with sensor number and phase.
8. Install loop conductor in slot using a 3/16" to 1/4" thick wood paddle. Hold loop conductors with wood paddles (at the bottom of the sawed slot) during sealant placement.
9. No more than 2 twisted pairs shall be installed in one sawed slot.
10. Allow additional 5'-0" of slack length of conductor for the lead-in run to pull box.
11. The additional length of each conductor for each loop shall be twisted together into a pair (6 turns per 3'-4" minimum) before being placed in the slot and conduit leading to pull box.
12. Test each loop circuit for continuity, circuit resistance and insulation resistance at the pull box before filling slots.
13. Fill slots as shown in details.
14. Splice loop conductors to lead-in-cable. Splices shall be soldered.
15. End of lead-in-cable and Type 2 loop conductor shall be waterproofed prior to installing in conduit to prevent moisture from entering the cable.
16. Lead-in-cable shall not be spliced between the pull box and the controller cabinet terminals.
17. Test each loop circuit for continuity, circuit resistance and insulation resistance at the controller cabinet location.
18. Where loop conductors are not to be spliced to a lead-in-cable, the ends of the conductors shall be taped and waterproofed with electrical insulating coating.

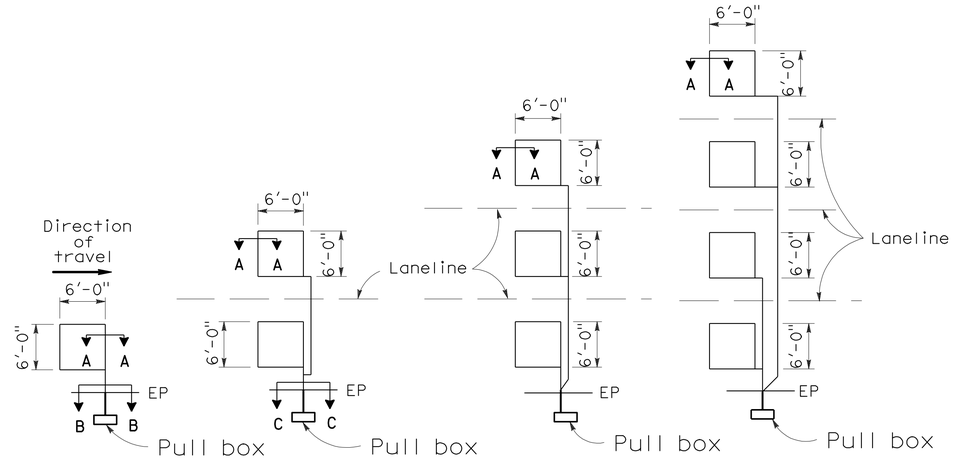

TYPE 1A INSTALLATION | TYPE 2A INSTALLATION | TYPE 3A INSTALLATION | TYPE 4A INSTALLATION

SAWCUT DETAILS

(Type A loop detector configurations illustrated)

1. 1A thru 4A = 1 Type A loop configuration in each lane.
2. 1B thru 4B = 1 Type B loop configuration in each lane.
3. 1C = 1 Type C loop configuration entering lanes as required.
4. 1D thru 4D = 1 Type D loop configuration in each lane.
5. 1E thru 4E = 1 Type E loop configuration in each lane.
6. 1Q thru 4Q = 1 Type Q loop configuration in each lane. (Use Type A, B, C, D, E or Q loop detector configurations only when specified or shown on plans)

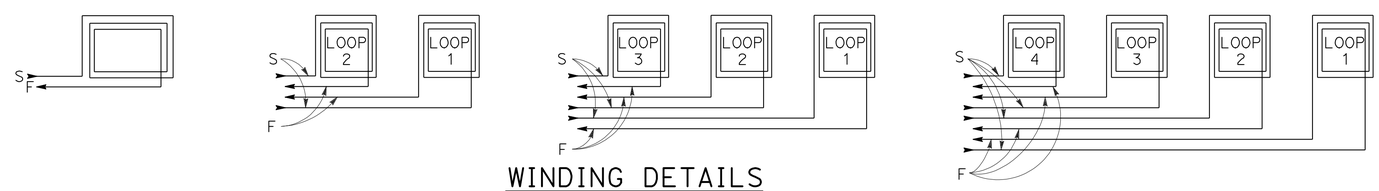

WINDING DETAILS

See Notes 6 and 7

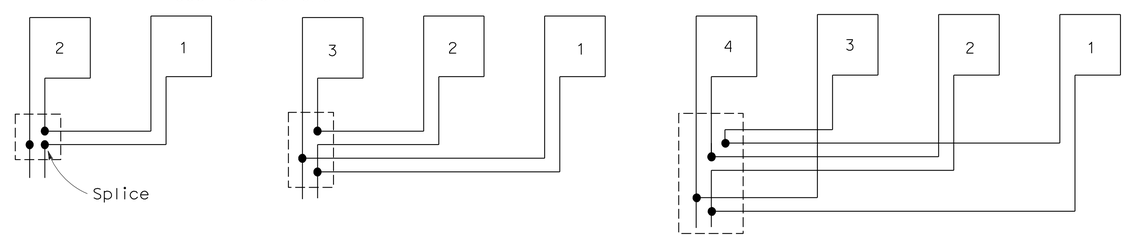

TYPICAL LOOP CONNECTIONS

(Dashed lines represent the pull box)

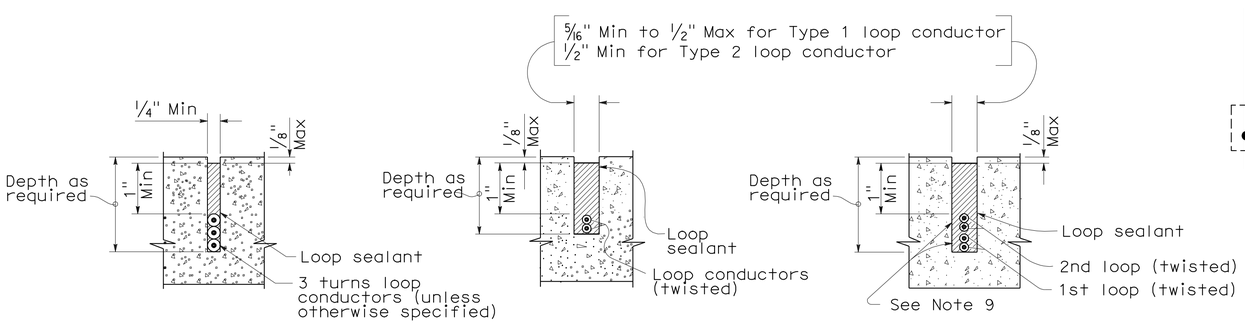

SECTION A-A | SECTION B-B | SECTION C-C

SLOT DETAILS - TYPE 1 AND TYPE 2 LOOP CONDUCTOR

STATE OF CALIFORNIA
DEPARTMENT OF TRANSPORTATION

ELECTRICAL SYSTEMS (DETECTORS)

NO SCALE

RSP ES-5A DATED OCTOBER 5, 2007 SUPERCEDES STANDARD PLAN ES-5A DATED MAY 1, 2006 - PAGE 423 OF THE STANDARD PLANS BOOK DATED MAY 2006.

REVISED STANDARD PLAN RSP ES-5A

2006 REVISED STANDARD PLAN RSP ES-5A

DIST	COUNTY	ROUTE	POST MILES TOTAL PROJECT	SHEET No	TOTAL SHEETS
02	Tri	3	68.5,70.7	51	93

REGISTERED CIVIL ENGINEER 1-27-10 DATE

8-23-10
PLANS APPROVAL DATE

REGISTERED PROFESSIONAL ENGINEER
Lewis L Shen
No. 56921
Exp. 6-30-11
CIVIL
STATE OF CALIFORNIA

The State of California or its officers or agents shall not be responsible for the accuracy or completeness of electronic copies of this plan sheet.

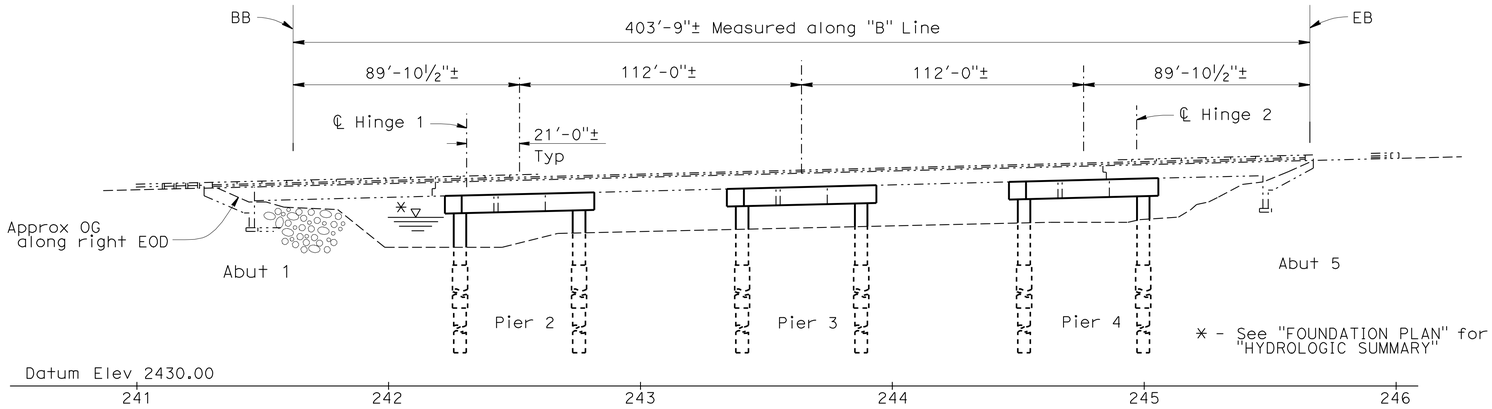

ELEVATION

1" = 30'

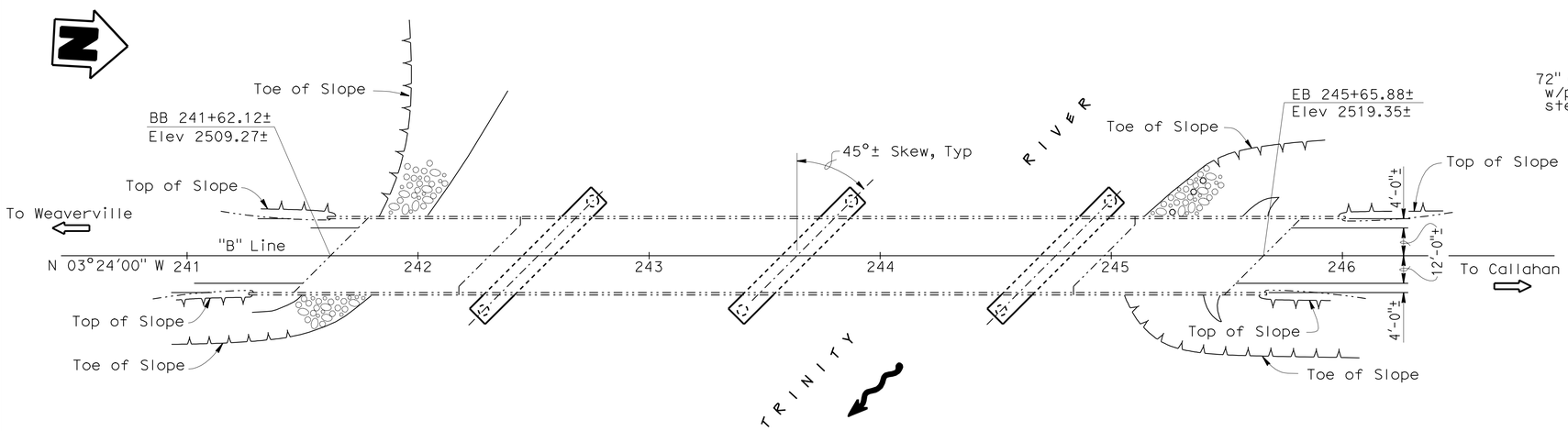

PLAN

1" = 30'

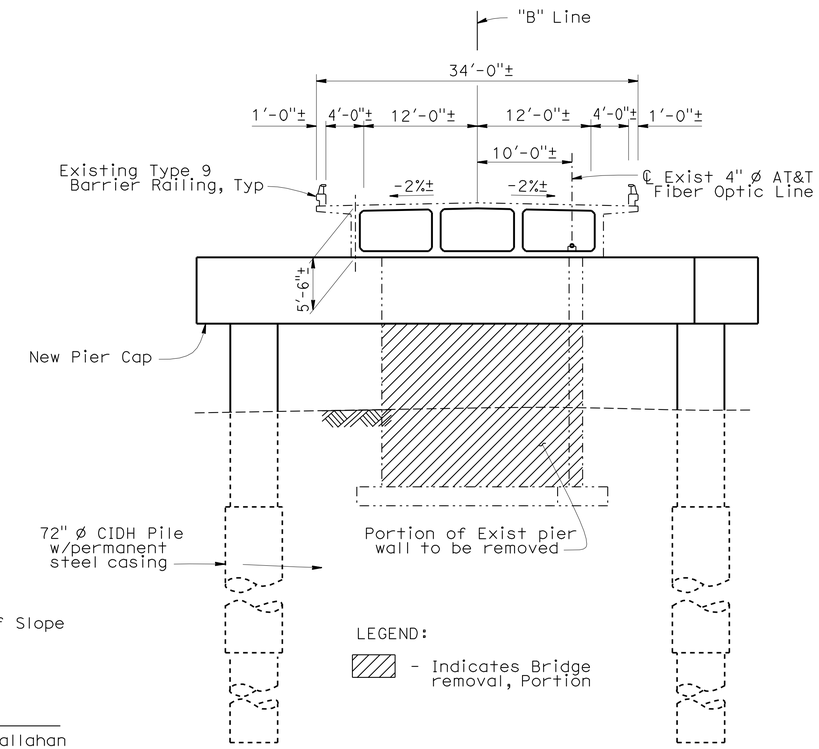

TYPICAL SECTION

⅛" = 1'-0"

QUANTITIES:

ACCESS OPENING, SOFFIT	12	EA
BRIDGE REMOVAL (PORTION), LOCATION B	LUMP	SUM
STRUCTURE EXCAVATION (TYPE D)	100	CY
72" PERMANENT STEEL CASING	387	LF
72" CAST-IN-DRILLED-HOLE CONCRETE PILING	387	LF
60" CAST-IN-DRILLED-HOLE CONCRETE PILING (ROCK SOCKET)	194	LF
STRUCTURAL CONCRETE, BRIDGE	720	CY
DRILL AND BOND DOWEL	41	LF
CORE AND PRESSURE GROUT BAR REINFORCING STEEL	70	LF
DRILL AND PRESSURE GROUT BAR REINFORCING STEEL	788	LF
BAR REINFORCING STEEL (BRIDGE)	354,000	LB
HEADED BAR REINFORCEMENT	579	EA

NOTE:
THE CONTRACTOR SHALL VERIFY ALL CONTROLLING FIELD DIMENSIONS BEFORE ORDERING OR FABRICATING ANY MATERIAL.

NOTE:
For "PILE DATA", "GENERAL NOTES" and "INDEX TO PLANS", see "INDEX TO PLANS" sheet.

Joseph E Downing
DESIGN ENGINEER

	BY	CHECKED		
DESIGN	Eric G Burgeson	Ali Asnaashari	LOAD FACTOR DESIGN	LIVE LOADING: HS20-44 AND ALTERNATIVE AND PERMIT DESIGN LOAD
DETAILS	Nancy C Gwynn	Ali Asnaashari	LAYOUT: Eric G Burgeson	CHECKED Ali Asnaashari
QUANTITIES	Mufeed Khalaf	Binayak Sharma	SPECIFICATIONS: Dave Klein	PLANS AND SPECS COMPARED Dave Klein

ORIGINAL SCALE IN INCHES FOR REDUCED PLANS 0 1 2 3

STATE OF CALIFORNIA
DEPARTMENT OF TRANSPORTATION

DIVISION OF ENGINEERING SERVICES
STRUCTURE DESIGN
DESIGN BRANCH 3

CU 02243
EA 2C9901

BRIDGE NO. 05-0028
POST MILE 68.5

TRINITY RIVER BRIDGE (SCOUR RETROFIT)
GENERAL PLAN

DISREGARD PRINTS BEARING EARLIER REVISION DATES

REVISION DATES: 7-7-08 | 1-11-10 | 6-26-09 | 8-18-09 | 9-3-09 | 9-14-09 | 10-23-09 | 10-29-09 | 12-16-09

SHEET 1 OF 25

STRUCTURES DESIGN GENERAL PLAN SHEET (ENGLISH) (REV.07-24-06)

FILE => 05-0028-a-gp.dgn

USERNAME => trmartin DATE PLOTTED => 26-AUG-2010 TIME PLOTTED => 14:40

DIST	COUNTY	ROUTE	POST MILES TOTAL PROJECT	SHEET No	TOTAL SHEETS
02	Tri	3	68.5,70.7	52	93

REGISTERED CIVIL ENGINEER 1-27-10 DATE

8-23-10
PLANS APPROVAL DATE

REGISTERED PROFESSIONAL ENGINEER Lewis L Shen No. 56921 Exp. 6-30-11 CIVIL STATE OF CALIFORNIA

The State of California or its officers or agents shall not be responsible for the accuracy or completeness of electronic copies of this plan sheet.

GENERAL NOTES
LOAD FACTOR DESIGN

This Design method was used for substructure design with Exist bridge

DESIGN: CALTRANS BRIDGE DESIGN SPECIFICATIONS LFD Version April 2000 (1996 AASHTO with Interims and Revision by Caltrans)

SEISMIC DESIGN: CALTRANS SEISMIC DESIGN CRITERIA (SDC) Version 1.4, June 2006

DEAD LOAD: Includes 35 psf for Future Wearing Surface

LIVE LOAD: HS20-44 and Alternative and Permit Design Load

SEISMIC LOAD: See Below

REINFORCED CONCRETE: See Below

STRUCTURAL STEEL: See Below

GENERAL NOTES
LOAD AND RESISTANCE FACTOR DESIGN (LRFD)

This Design method was used for substructure design with a future superstructure replacement

DESIGN: AASHTO LRFD Bridge Design Specifications, 4th edition and the California Amendments dated December 2008

SEISMIC DESIGN: CALTRANS SEISMIC DESIGN CRITERIA (SDC) Version 1.4, June 2006

DEAD LOAD: Includes 35 psf for Future Wearing Surface

LIVE LOAD: HL93 and permit design load

SEISMIC LOADING: See Below

CONCRETE: See Below

STRUCTURAL STEEL: See Below

SEISMIC LOADING:
Soil profile type D
Magnitude group 7.0
Peak Rock Acceleration 0.2g

CONCRETE:
fy = 60 ksi
f'c = 4.0 ksi
n = 8

STRUCTURAL STEEL:
STEEL CASING: ASTM A252, GRADE 3, fy = 45 ksi
fu = 66 ksi

LEGEND:

- Indicates Headed Bar Reinf, screw type

NOTE:
THE CONTRACTOR SHALL VERIFY ALL CONTROLLING FIELD DIMENSIONS BEFORE ORDERING OR FABRICATING ANY MATERIAL.

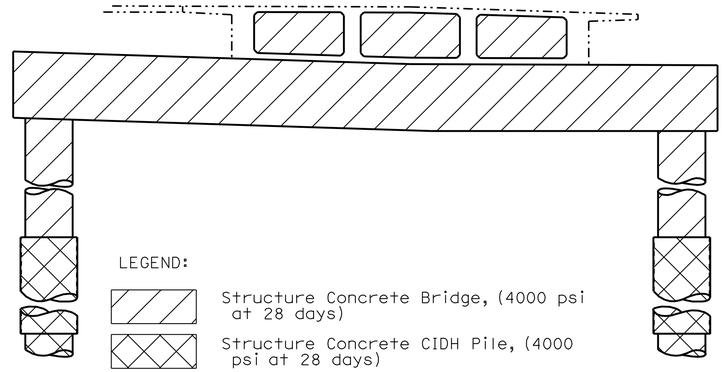

CONCRETE STRENGTH & TYPE LIMITS

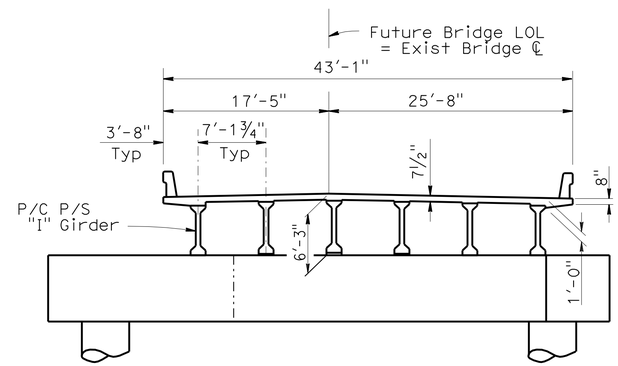

FUTURE TYPICAL SECTION USED FOR LRFD ANALYSIS

PILE DATA TABLE

Location Location	Pile Type	Nominal Resistance		Cut-Off Elevation	Steel Casing Specified Tip Elevation	Design Tip Elevation	Specified Tip Elevation
		Compression	Tension				
Pier 22	72" CIDH w/PP72"x1¼" Permanent Steel Casing 60" CIDH Rock Socket	3080	0	2479	2426.0	2398.0 (a) 2430.0 (b)	2398.0
Pier 33	72" CIDH w/PP72"x1¼" Permanent Steel Casing 60" CIDH Rock Socket	3030	0	2479	2414.5	2385.5 (a) 2431.0 (b)	2385.5
Pier 44	72" CIDH w/PP72"x1¼" Permanent Steel Casing 60" CIDH Rock Socket	3100	0	2479	2403.0	2363.0 (a) 2424.0 (b)	2363.0

NOTES:
1. Design Tip Elevations are controlled by
   (a) Compression
   (b) Lateral and scour
2. The CIDH Specified Tip Elevation shall not be raised
3. Nominal Resistance and Specified Tip Elevations were controlled by LRFD

INDEX TO PLANS

SHEET No.	TITLE
1	GENERAL PLAN
2	INDEX TO PLANS
3	FOUNDATION PLAN
4	PIER DETAILS No. 1
5	PIER DETAILS No. 2
6	PIER DETAILS No. 3
7	PIER DETAILS No. 4
8	PIER DETAILS No. 5
9	PIER DETAILS No. 6
10	PIER DETAILS No. 7
11	PIER DETAILS No. 8
12	PIER DETAILS No. 9
13	PIER DETAILS No. 10
14	PIER DETAILS No. 11
15	CONCRETE REMOVAL LIMITS
16	SOFFIT OPENING
17	LOG OF TEST BORINGS 1 OF 9
18	LOG OF TEST BORINGS 2 OF 9
19	LOG OF TEST BORINGS 3 OF 9
20	LOG OF TEST BORINGS 4 OF 9
21	LOG OF TEST BORINGS 5 OF 9
22	LOG OF TEST BORINGS 6 OF 9
23	LOG OF TEST BORINGS 7 OF 9
24	LOG OF TEST BORINGS 8 OF 9
25	LOG OF TEST BORINGS 9 OF 9

STANDARD PLANS dated MAY 2006

A10A	ACRONYMS AND ABBREVIATIONS (A-L)
A10B	ACRONYMS AND ABBREVIATIONS (M-Z)
A10C	SYMBOLS (SHEET 1 OF 2)
A10D	SYMBOLS (SHEET 2 OF 2)
A62C	LIMITS OF PAYMENT FOR EXCAVATION AND BACKFILL - BRIDGE
B7-10	UTILITY OPENING BOX GIRDER

STANDARD PLAN SHEET No.
DETAIL No.

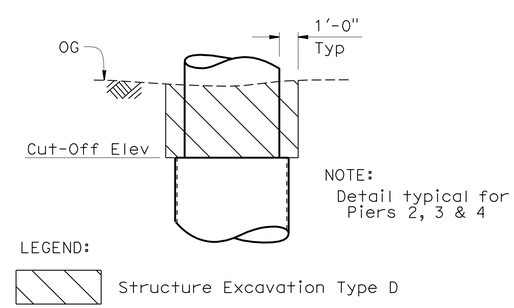

LIMITS OF STRUCTURE EXCACATION TYPE D

No Scale

DESIGN	BY Eric G Burgeson	CHECKED Ali Asnaashari	
DETAILS	BY Nancy C Gwynn	CHECKED Ali Asnaashari	
QUANTITIES	BY Mufeed Khalaf	CHECKED Bingyak Sharma	

STATE OF CALIFORNIA DEPARTMENT OF TRANSPORTATION

DIVISION OF ENGINEERING SERVICES STRUCTURE DESIGN DESIGN BRANCH 3

BRIDGE NO. 05-0028
POST MILE 68.5

TRINITY RIVER BRIDGE (SCOUR RETROFIT)
INDEX TO PLANS

STRUCTURES DESIGN DETAIL SHEET (ENGLISH) (REV. 10/25/05)

ORIGINAL SCALE IN INCHES FOR REDUCED PLANS 0 1 2 3

CU 02243
EA 2C9901

DISREGARD PRINTS BEARING EARLIER REVISION DATES

REVISION DATES: 5-22-09 6-15-09 8-6-09 9-11-09 10-23-09 10-26-09 11-09-09 12-11-09 1-12-10

SHEET 2 OF 25

FILE => 05-0028-b-index.dgn

USERNAME => ttmcrtin DATE PLOTTED => 26-AUG-2010 TIME PLOTTED => 14:40

DIST	COUNTY	ROUTE	POST MILES TOTAL PROJECT	SHEET No	TOTAL SHEETS
02	Tri	3	68.5,70.7	53	93

REGISTERED CIVIL ENGINEER 1-27-10 DATE

8-23-10
PLANS APPROVAL DATE

REGISTERED PROFESSIONAL ENGINEER
Lewis L Shen
No. 56921
Exp. 6-30-11
CIVIL
STATE OF CALIFORNIA

The State of California or its officers or agents shall not be responsible for the accuracy or completeness of electronic copies of this plan sheet.

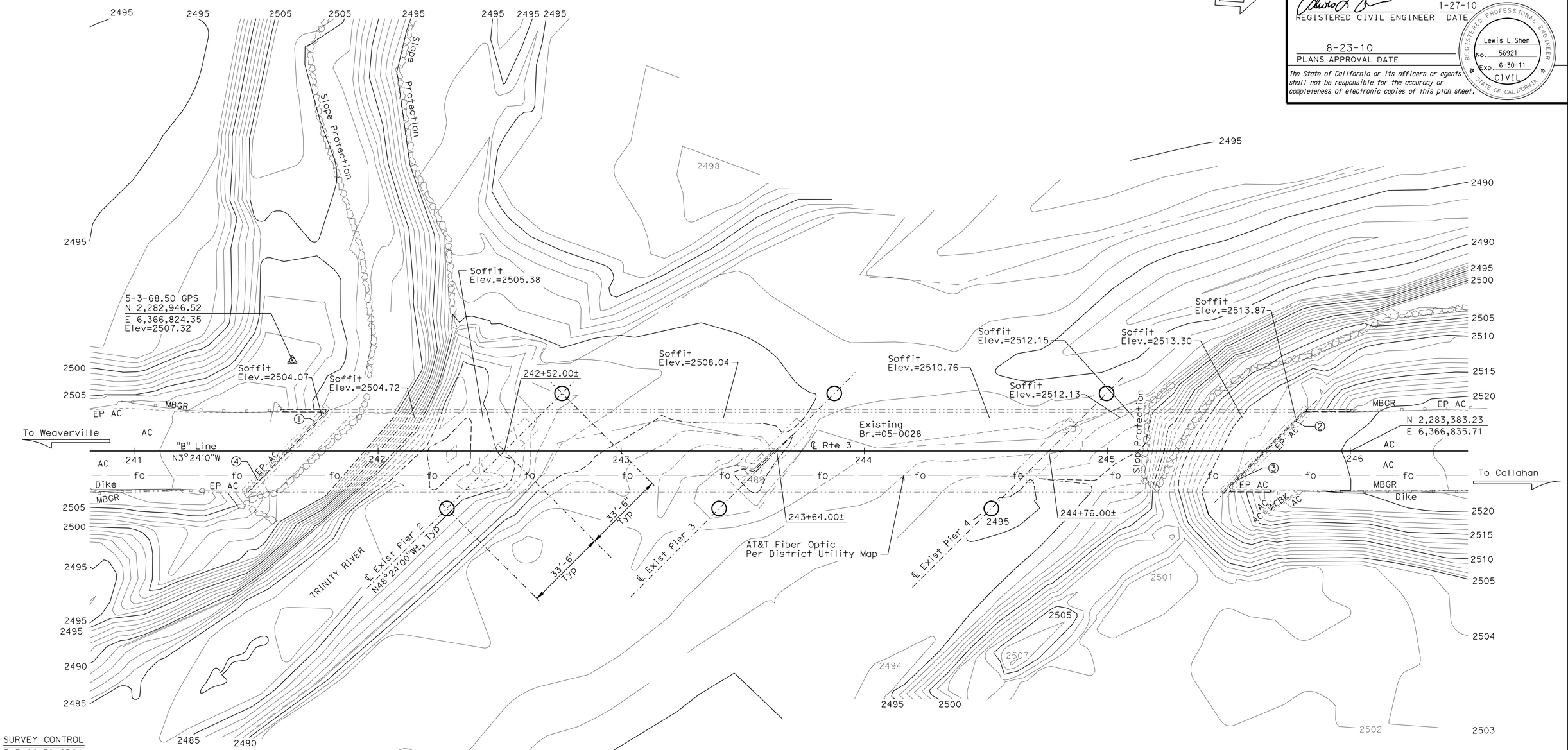

SURVEY CONTROL

5-3-68.50 GPS

Fnd 2¼" CADT Brass Disk/IP in Conc.
37.25 Ft Lt. "B" Line ℄ Rte 3
Sta. 241+64.73
N 2,282,946.52
E 6,366,824.35
Elev.=2507.32

5-3-68.82 GPS (Not Shown)

Fnd 2¼" CADT Brass Disk/IP in Conc.
1206.75 Ft to the End of "B" Line ℄ Rte 3
Sta. 247+37.76, Bearing S0°2'41"E
N 2,284,727.50
E 6,366,826.60
Elev.=2554.32

Bridge No. 05-0028 (PN Points)

① - 11.94 Ft. Lt "B" Line ℄ Rte 3, Sta.241+74.19 Elev.=2509.39±
② - 12.21 Ft. Lt "B" Line ℄ Rte 3, Sta.245+77.68 Elev.=2519.40±
③ - 11.96 Ft. Rt "B" Line ℄ Rte 3, Sta.245+53.52 Elev.=2518.89±
④ - 11.91 Ft. Rt "B" Line ℄ Rte 3, Sta.241+50.50 Elev.=2508.81±

LEGEND:

○ Indicates pile

NOTE:
THE CONTRACTOR SHALL VERIFY ALL CONTROLLING FIELD DIMENSIONS BEFORE ORDERING OR FABRICATING ANY MATERIAL.

HYDROLOGIC SUMMARY

DRAINAGE AREA: 157 SQUARE MILES

	DESIGN FLOOD	BASE FLOOD	OVERTOPPING FLOOD
FREQUENCY (YEARS)	50	100	N/A
DISCHARGE (CUBIC FEET PER SECOND)	23,000	30,000	N/A
WATER SURFACE ELEV. AT BRIDGE (FEET)	2503.5	2504.9	N/A

FLOOD PLAIN DATA ARE BASED UPON INFORMATION AVAILABLE WHEN THE PLANS WERE PREPARED AND ARE SHOWN TO MEET FEDERAL REQUIREMENTS. THE ACCURACY OF SAID INFORMATION IS NOT WARRANTED BY THE STATE AND INTERESTED OR AFFECTED PARTIES SHOULD MAKE THEIR OWN INVESTIGATIONS.

PRELIMINARY INVESTIGATION SECTION

SCALE	VERT.DATUM NAVD88	PHOTOGRAMMETRY AS OF: X			
1"=20'	HORZ.DATUM NAD83 (2004.69)	SURVEYED	BY District	CHECKED	BY M. Licha 01/2008
ALIGNMENT TIES Dist. Traverse Sheet		DRAFTED	BY S. Zheng 01/2008	CHECKED	BY T.Zolnikova 01/2008

DESIGN	BY Eric G Burgeson	CHECKED Ali Asnaashari
DETAILS	BY Nancy C Gwynn	CHECKED Ali Asnaashari
QUANTITIES	BY Murfeed Khalaf	CHECKED Binayak Sharma

STATE OF CALIFORNIA
DEPARTMENT OF TRANSPORTATION

DIVISION OF ENGINEERING SERVICES
STRUCTURE DESIGN
DESIGN BRANCH 3

BRIDGE NO. 05-0028
POST MILE 68.5

TRINITY RIVER BRIDGE (SCOUR RETROFIT)
FOUNDATION PLAN

STRUCTURES FOUNDATION PLAN SHEET (ENGLISH) (REV. 10/25/05)

ORIGINAL SCALE IN INCHES FOR REDUCED PLANS 0 1 2 3

CU 02243
EA 2C9901

DISREGARD PRINTS BEARING EARLIER REVISION DATES

REVISION DATES: 07/01/08 5-7-09 6-23-09 8-18-09 8-31-09 11-18-09

SHEET 3 OF 25

FILE => 05-0028-e-fp01.dgn

USERNAME => trmartin DATE PLOTTED => 26-AUG-2010 TIME PLOTTED => 14:40

DIST	COUNTY	ROUTE	POST MILES TOTAL PROJECT	SHEET No	TOTAL SHEETS
02	Tri	3	68.5,70.7	54	93

REGISTERED CIVIL ENGINEER 1-27-10 DATE

8-23-10
PLANS APPROVAL DATE

REGISTERED PROFESSIONAL ENGINEER
Lewis L Shen
No. 56921
Exp. 6-30-11
CIVIL
STATE OF CALIFORNIA

The State of California or its officers or agents shall not be responsible for the accuracy or completeness of electronic copies of this plan sheet.

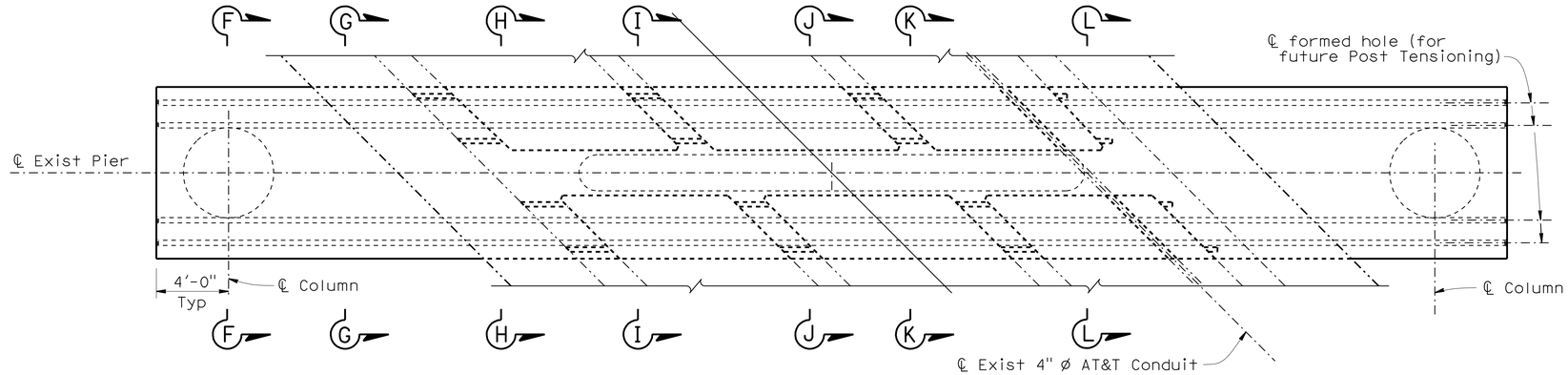

PLAN
1/4" = 1'-0"

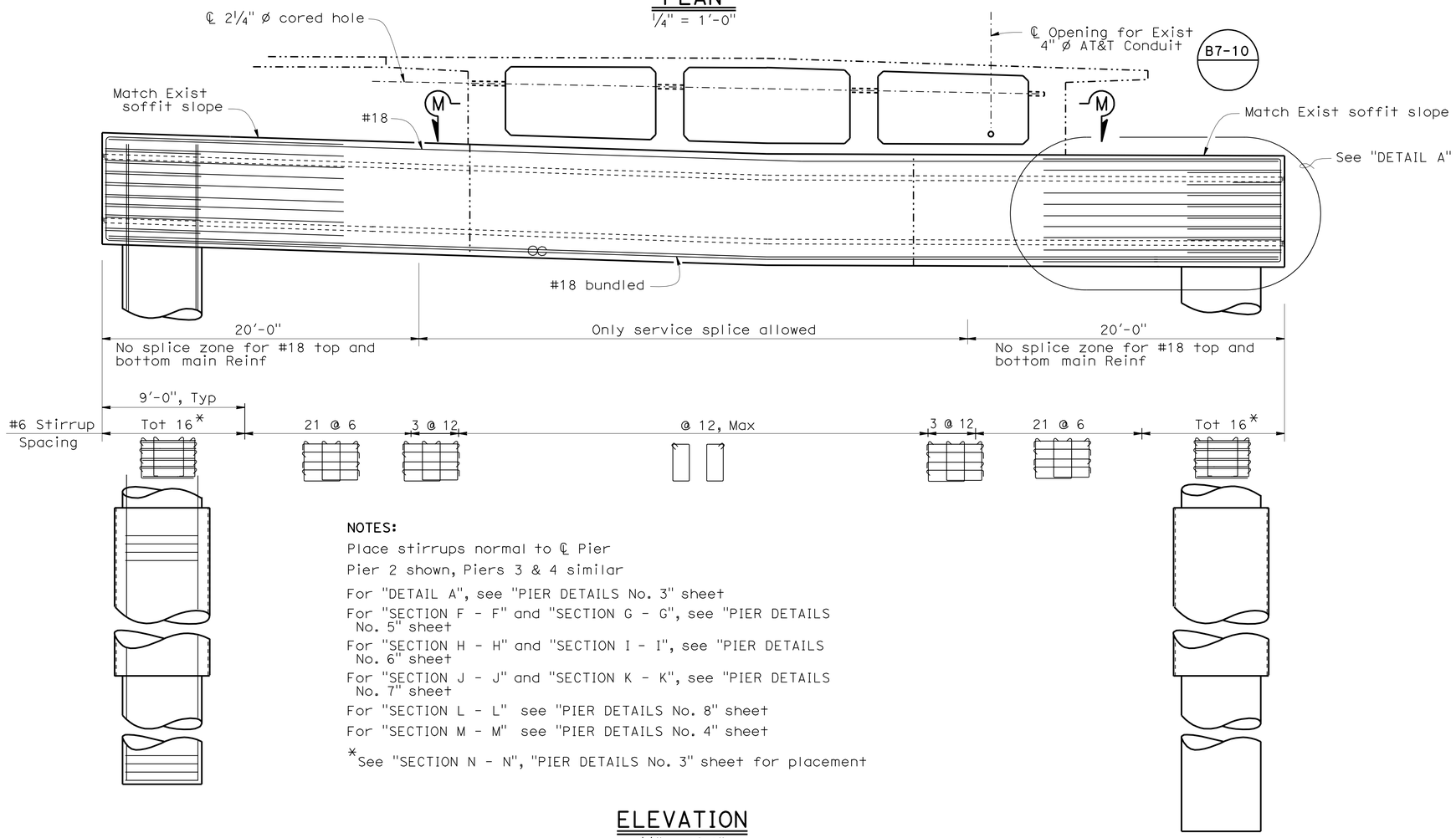

NOTES:

Place stirrups normal to ℄ Pier

Pier 2 shown, Piers 3 & 4 similar

For "DETAIL A", see "PIER DETAILS No. 3" sheet

For "SECTION F - F" and "SECTION G - G", see "PIER DETAILS No. 5" sheet

For "SECTION H - H" and "SECTION I - I", see "PIER DETAILS No. 6" sheet

For "SECTION J - J" and "SECTION K - K", see "PIER DETAILS No. 7" sheet

For "SECTION L - L" see "PIER DETAILS No. 8" sheet

For "SECTION M - M" see "PIER DETAILS No. 4" sheet

*See "SECTION N - N", "PIER DETAILS No. 3" sheet for placement

ELEVATION
1/4" = 1'-0"

NOTE:
THE CONTRACTOR SHALL VERIFY ALL CONTROLLING FIELD DIMENSIONS BEFORE ORDERING OR FABRICATING ANY MATERIAL.

	BY	CHECKED
DESIGN	Eric G Burgeson	Ali Asnaashari
DETAILS	Nancy C Gwynn	Ali Asnaashari
QUANTITIES	Mufeed Khalaf	Binayak Sharma

STATE OF CALIFORNIA
DEPARTMENT OF TRANSPORTATION

DIVISION OF ENGINEERING SERVICES
STRUCTURE DESIGN
DESIGN BRANCH 3

BRIDGE NO. 05-0028
POST MILE 68.5

TRINITY RIVER BRIDGE (SCOUR RETROFIT)
PIER DETAILS NO. 1

STRUCTURES DESIGN DETAIL SHEET (ENGLISH) (REV. 10/25/05)

ORIGINAL SCALE IN INCHES FOR REDUCED PLANS 0 1 2 3

CU 02243
EA 2C9901

DISREGARD PRINTS BEARING EARLIER REVISION DATES

REVISION DATES: 5-27-09 6-11-09 8-18-09 9-1-09 9-11-09 10-21-09 10-28-09 11-09-09 12-10-09

SHEET 4 OF 25

FILE => 05-0028-h-pr01.dgn

USERNAME => ttmartin DATE PLOTTED => 26-AUG-2010 TIME PLOTTED => 14:40

DIST	COUNTY	ROUTE	POST MILES TOTAL PROJECT	SHEET No	TOTAL SHEETS
02	Tri	3	68.5,70.7	55	93

REGISTERED CIVIL ENGINEER 1-27-10 DATE

8-23-10
PLANS APPROVAL DATE

REGISTERED PROFESSIONAL ENGINEER Lewis L Shen No. 56921 Exp. 6-30-11 CIVIL STATE OF CALIFORNIA

The State of California or its officers or agents shall not be responsible for the accuracy or completeness of electronic copies of this plan sheet.

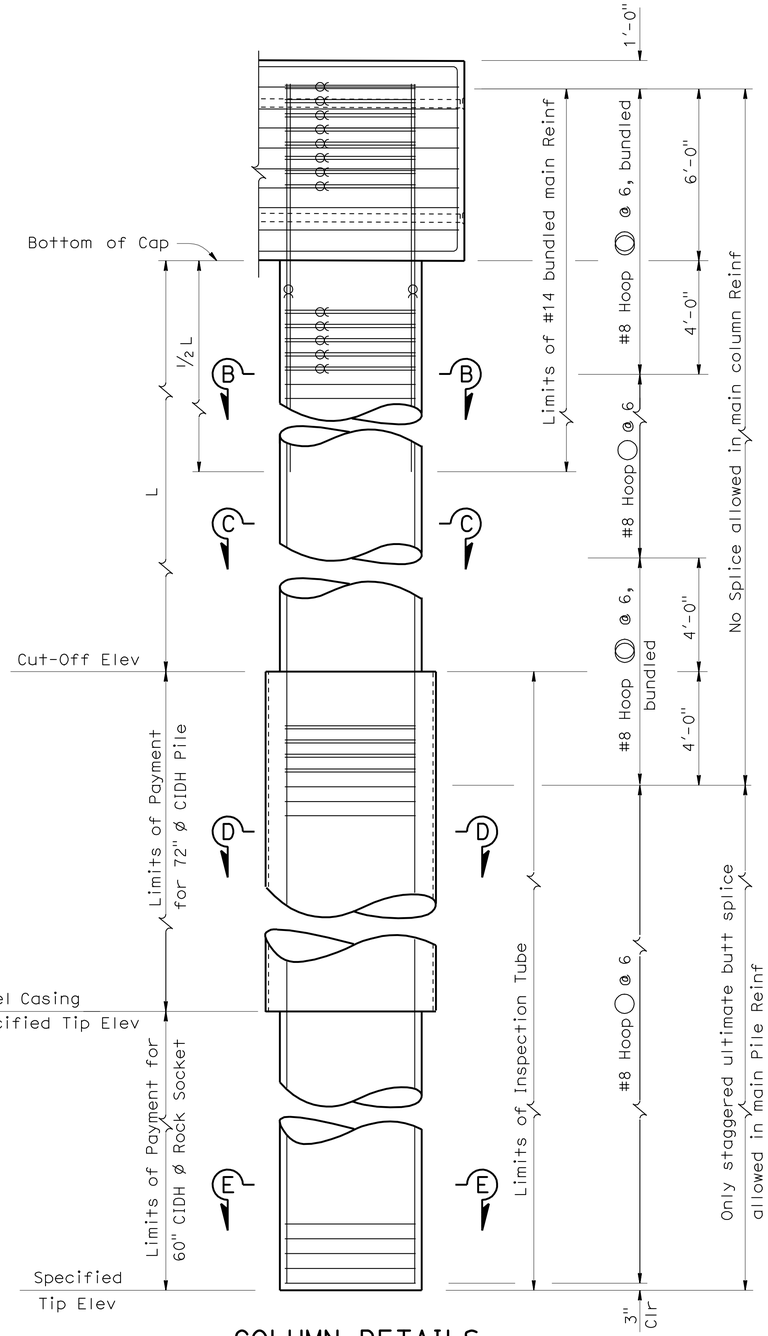

COLUMN DETAILS

⅜" = 1'-0"

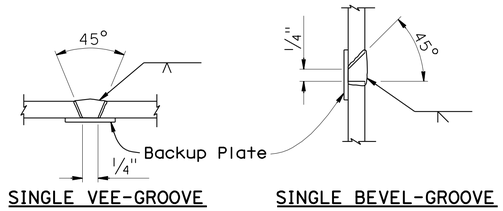

SINGLE VEE-GROOVE SINGLE BEVEL-GROOVE

PILE WELDING DETAIL - BUTT JOINTS

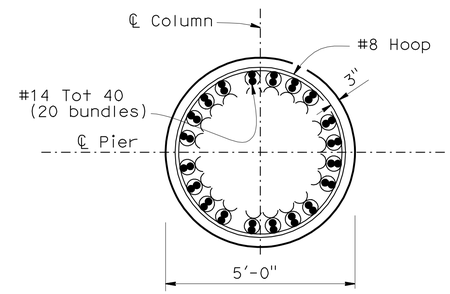

SECTION B - B

½" = 1'-0"

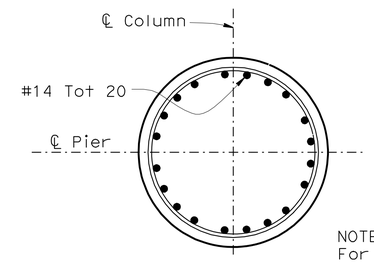

NOTE:
For details not shown, see "SECTION B - B"

SECTION C - C

½" = 1'-0"

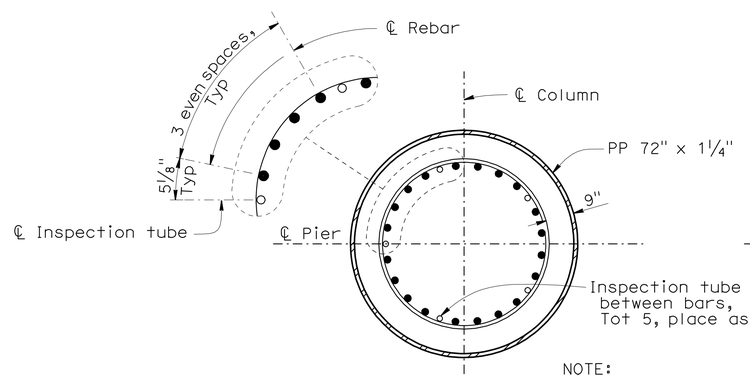

NOTE:
For details not shown, see "SECTION C - C"

SECTION D - D

½" = 1'-0"

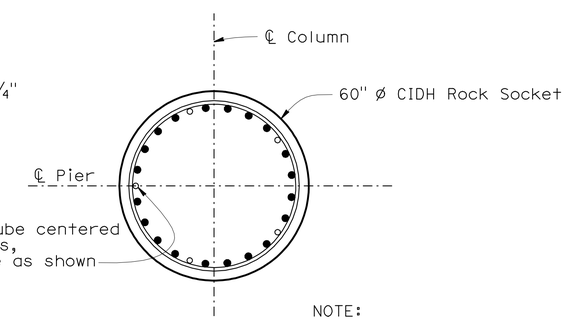

NOTE:
For details not shown, see "SECTION C - C" and "SECTION D - D"

SECTION E - E

½" = 1'-0"

NOTE:
THE CONTRACTOR SHALL VERIFY ALL CONTROLLING FIELD DIMENSIONS BEFORE ORDERING OR FABRICATING ANY MATERIAL.

NOTE:
All hoops are ultimate butt spliced continuous

LEGEND:
ᗡ - Indicates bundled Reinf

	BY	CHECKED
DESIGN	Eric G Burgeson	Ali Asnaashari
DETAILS	Nancy C Gwynn	Ali Asnaashari
QUANTITIES	Mufeed Khalaf	Binayak Sharma

STATE OF CALIFORNIA DEPARTMENT OF TRANSPORTATION

DIVISION OF ENGINEERING SERVICES STRUCTURE DESIGN DESIGN BRANCH 3

BRIDGE NO. 05-0028
POST MILE 68.5

TRINITY RIVER BRIDGE (SCOUR RETROFIT)
PIER DETAILS NO. 2

STRUCTURES DESIGN DETAIL SHEET (ENGLISH) (REV. 10/25/05)

ORIGINAL SCALE IN INCHES FOR REDUCED PLANS 0 1 2 3

CU 02243
EA 2C9901

DISREGARD PRINTS BEARING EARLIER REVISION DATES

REVISION DATES: 5-21-09 8-31-09 11-09-09 12-10-09 12-14-09 1-11-10

SHEET 5 OF 25

FILE => 05-0028-h-pr02.dgn

USERNAME => frmartin DATE PLOTTED => 26-AUG-2010 TIME PLOTTED => 14:40

DIST	COUNTY	ROUTE	POST MILES TOTAL PROJECT	SHEET No	TOTAL SHEETS
02	Tri	3	68.5,70.7	56	93

REGISTERED CIVIL ENGINEER 1-27-10 DATE

8-23-10
PLANS APPROVAL DATE

The State of California or its officers or agents shall not be responsible for the accuracy or completeness of electronic copies of this plan sheet.

REGISTERED PROFESSIONAL ENGINEER
Lewis L Shen
No. 56921
Exp. 6-30-11
CIVIL
STATE OF CALIFORNIA

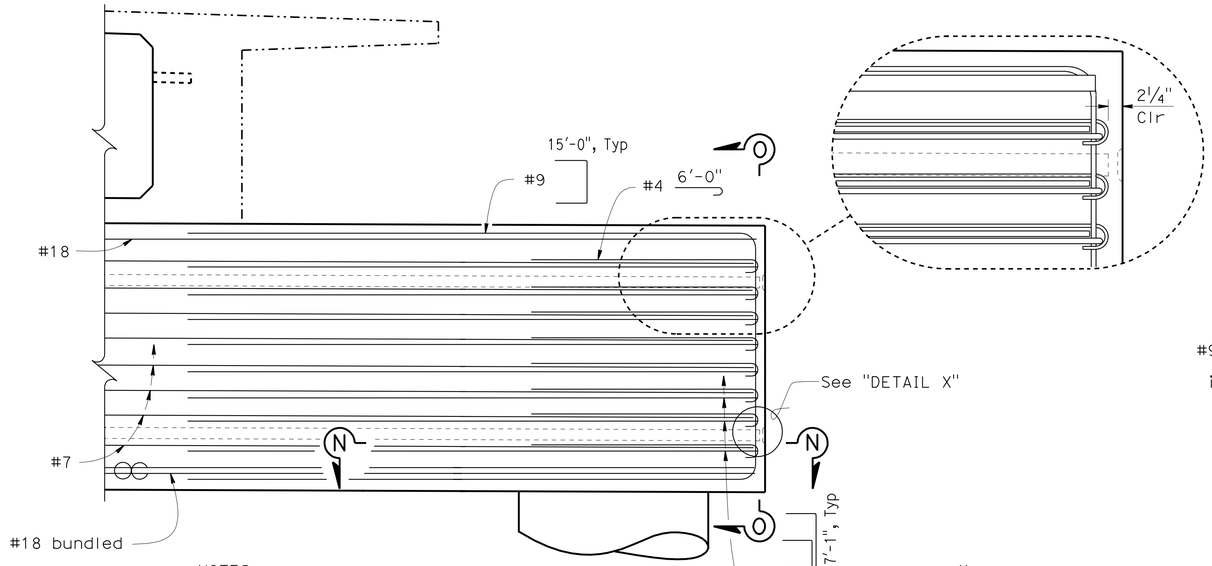

NOTES:
* Place to avoid conflict with formed holes or other Reinf, no splice allowed in Reinf.
All Reinf not shown.

DETAIL A
1/2" = 1'-0"

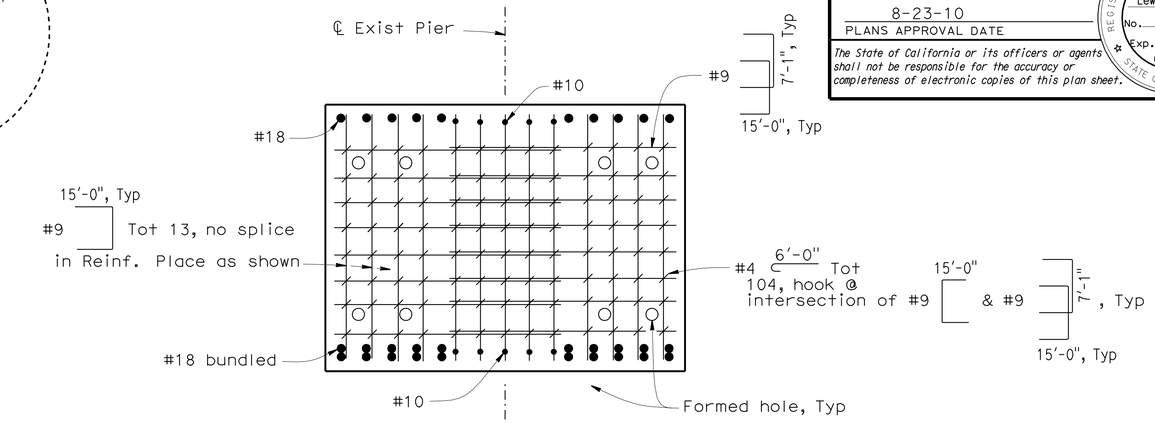

SECTION O - O
1/2" = 1'-0"

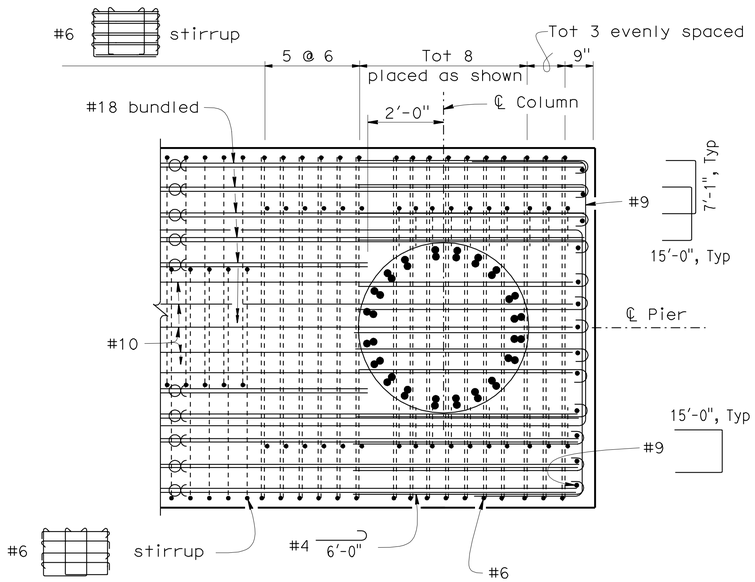

SECTION N - N
1/2" = 1'-0"

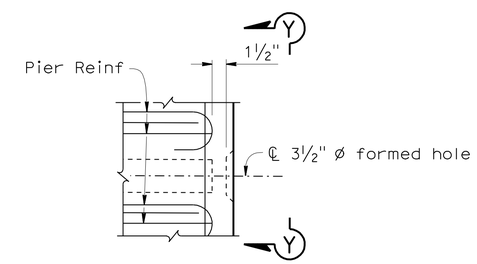

DETAIL X
1 1/2" = 1'-0"

NOTE:
Details typical
at all formed holes

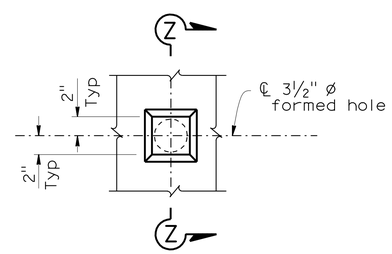

VIEW Y - Y
1 1/2" = 1'-0"

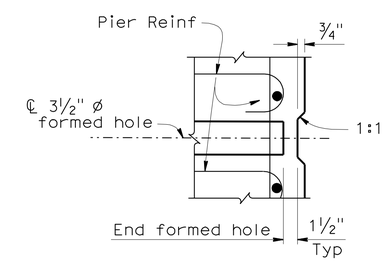

SECTION Z - Z
1 1/2" = 1'-0"

NOTE:
THE CONTRACTOR SHALL VERIFY ALL CONTROLLING FIELD DIMENSIONS BEFORE ORDERING OR FABRICATING ANY MATERIAL.

	BY	CHECKED
DESIGN	Eric G Burgeson	Ali Asnaashari
DETAILS	Nancy C Gwynn	Ali Asnaashari
QUANTITIES	Mufeed Khalaf	Binayak Sharma

STATE OF CALIFORNIA
DEPARTMENT OF TRANSPORTATION

DIVISION OF ENGINEERING SERVICES
STRUCTURE DESIGN
DESIGN BRANCH 3

BRIDGE NO. 05-0028
POST MILE 68.5

TRINITY RIVER BRIDGE (SCOUR RETROFIT)
PIER DETAILS NO. 3

STRUCTURES DESIGN DETAIL SHEET (ENGLISH) (REV. 10/25/05)

ORIGINAL SCALE IN INCHES FOR REDUCED PLANS 0 1 2 3

CU 02243
EA 2C9901

DISREGARD PRINTS BEARING EARLIER REVISION DATES

REVISION DATES: 5-21-09 9-11-09 8-18-09 9-1-09 9-14-09 10-21-09 10-26-09 11-09-09 12-18-09 1-11-10

SHEET 6 OF 25

FILE => 05-0028-h-pr03.dgn

USERNAME => trmartin DATE PLOTTED => 26-AUG-2010 TIME PLOTTED => 14:40

DIST	COUNTY	ROUTE	POST MILES TOTAL PROJECT	SHEET No	TOTAL SHEETS
02	Tri	3	68.5,70.7	57	93

REGISTERED CIVIL ENGINEER 1-27-10 DATE

8-23-10
PLANS APPROVAL DATE

REGISTERED PROFESSIONAL ENGINEER
Lewis L Shen
No. 56921
Exp. 6-30-11
CIVIL
STATE OF CALIFORNIA

The State of California or its officers or agents shall not be responsible for the accuracy or completeness of electronic copies of this plan sheet.

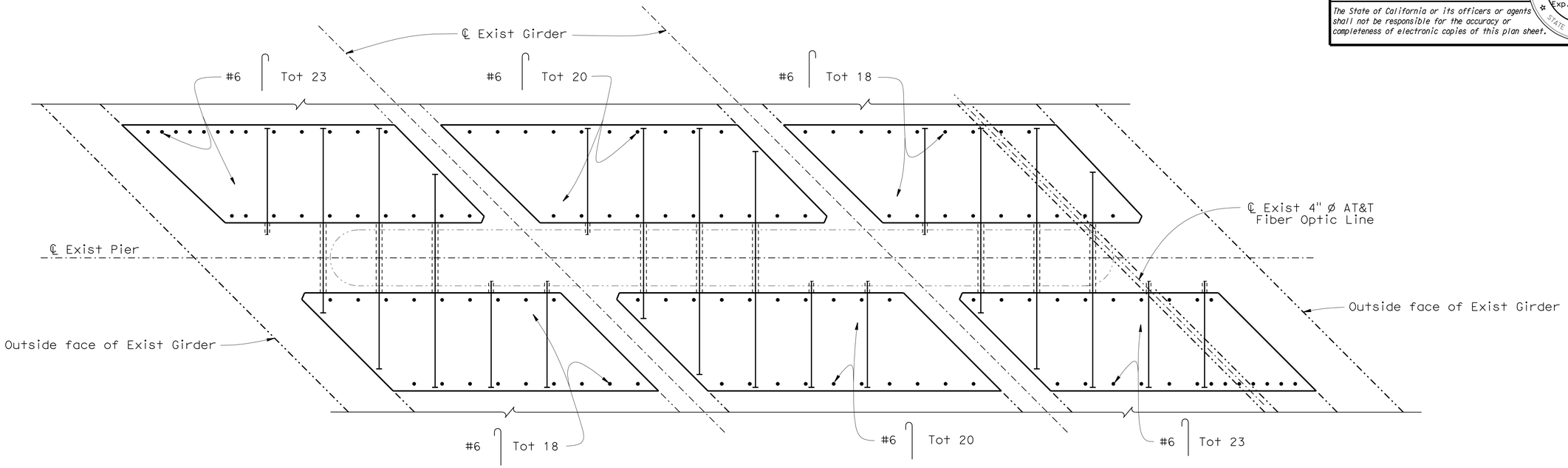

NOTES:

All Reinf not shown

Details typical at all Piers

For location of "SECTION M - M", see "PIER DETAILS No. 1" sheet.

For #6 spacing, see "PIER DETAILS No. 9" sheet.

- Indicates #6 drill & bond bar Reinf steel, see "PIER DETAILS No. 10" for spacing

- Indicates #6 drill & pressure grout dowel, see "PIER DETAILS No. 10" for spacing

- Indicates Headed Bar Reinf

SECTION M - M

1/2" = 1'-0"

NOTE:
THE CONTRACTOR SHALL VERIFY ALL CONTROLLING FIELD DIMENSIONS BEFORE ORDERING OR FABRICATING ANY MATERIAL.

	BY	CHECKED
DESIGN	Eric G Burgeson	Ali Asnaashari
DETAILS	Nancy C Gwynn	Ali Asnaashari
QUANTITIES	Mufeed Khalaf	Binayak Sharma

STATE OF CALIFORNIA
DEPARTMENT OF TRANSPORTATION

DIVISION OF ENGINEERING SERVICES
STRUCTURE DESIGN
DESIGN BRANCH 3

BRIDGE NO. 05-0028
POST MILE 68.5

TRINITY RIVER BRIDGE (SCOUR RETROFIT)
PIER DETAILS NO. 4

STRUCTURES DESIGN DETAIL SHEET (ENGLISH) (REV. 10/25/05)

ORIGINAL SCALE IN INCHES FOR REDUCED PLANS 0 1 2 3

CU 02243
EA 2C9901

DISREGARD PRINTS BEARING EARLIER REVISION DATES 11-19-09 12-18-09 1-19-10

REVISION DATES

SHEET 7 OF 25

FILE => 05-0028-h-pr04.dgn

USERNAME => frmartin DATE PLOTTED => 26-AUG-2010 TIME PLOTTED => 14:40

DIST	COUNTY	ROUTE	POST MILES TOTAL PROJECT	SHEET No	TOTAL SHEETS
02	Tri	3	68.5,70.7	58	93

REGISTERED CIVIL ENGINEER 1-27-10 DATE

8-23-10
PLANS APPROVAL DATE

REGISTERED PROFESSIONAL ENGINEER Lewis L Shen No. 56921 Exp. 6-30-11 CIVIL STATE OF CALIFORNIA

The State of California or its officers or agents shall not be responsible for the accuracy or completeness of electronic copies of this plan sheet.

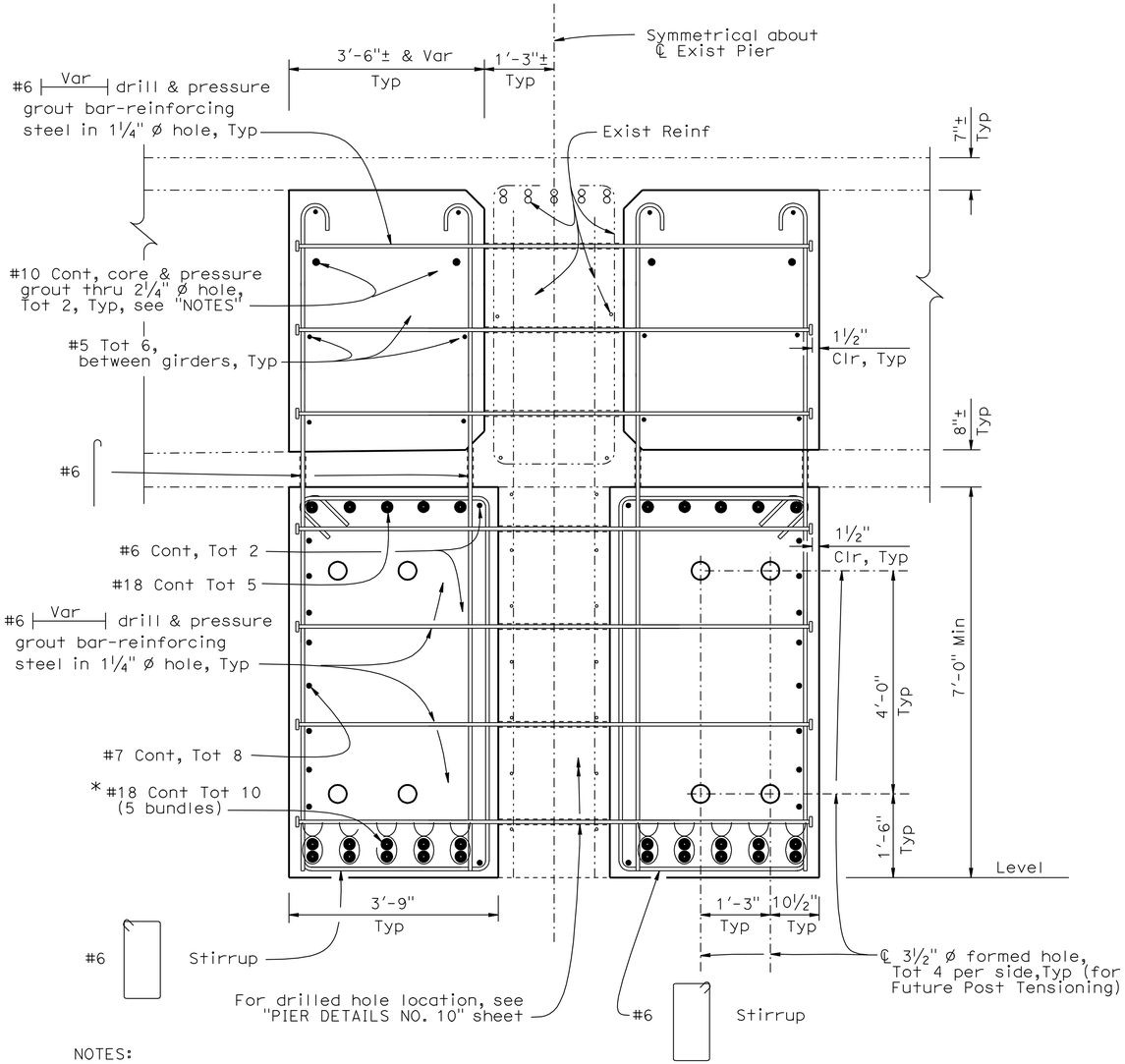

NOTES:

* For bar cut-off location, see "SECTION N - N", "PIER DETAILS NO. 3" sheet

For no splice zone for #18 bar, see "ELEVATION", "PIER DETAILS NO. 1" sheet

For location of 2¼" ø cored holes, see "PIER DETAILS NO. 10" and "PIER DETAILS NO. 11" sheets

For #6 see "PIER DETAILS NO. 4" sheet

TYPICAL SECTON

¾" = 1'-0"

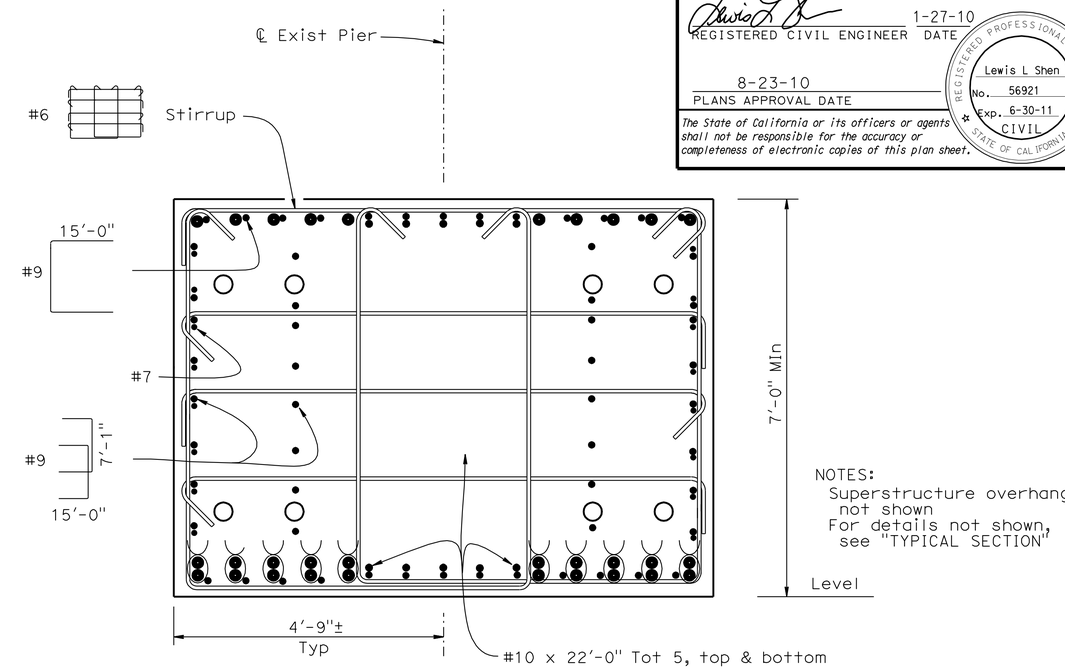

NOTES:
Superstructure overhang not shown
For details not shown, see "TYPICAL SECTION"

SECTION G - G

¾" = 1'-0"

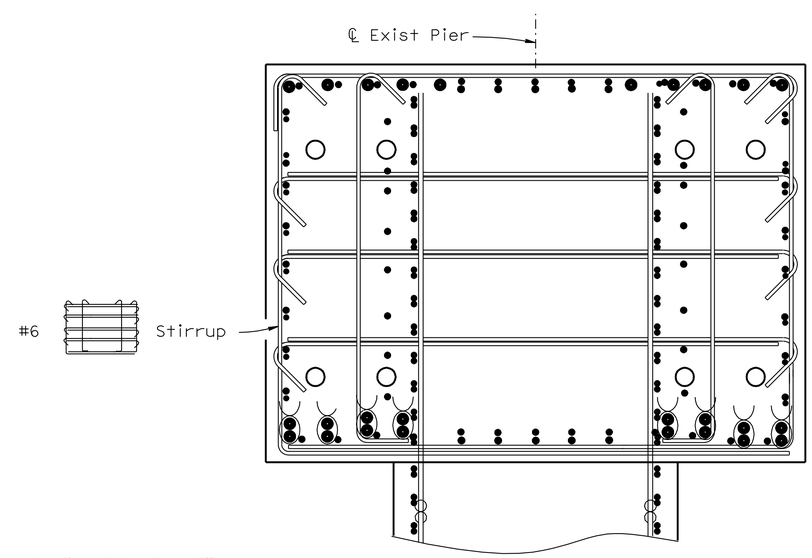

NOTE:
For details not shown, see "SECTION G - G"

SECTION F - F

¾" = 1'-0"

NOTE:
THE CONTRACTOR SHALL VERIFY ALL CONTROLLING FIELD DIMENSIONS BEFORE ORDERING OR FABRICATING ANY MATERIAL.

NOTES:
For Stirrup spacing and location of "SECTION F - F" and "SECTION G - G", see "PIER DETAILS NO. 1" sheet

|———| - Indicates Headed Bar Reinf, screw type

	BY	CHECKED
DESIGN	Eric G Burgeson	Ali Asnaashari
DETAILS	Nancy C Gwynn	Ali Asnaashari
QUANTITIES	Mufeed Khalaf	Bingyak Sharma

STATE OF CALIFORNIA DEPARTMENT OF TRANSPORTATION

DIVISION OF ENGINEERING SERVICES STRUCTURE DESIGN DESIGN BRANCH 3

BRIDGE NO. 05-0028
POST MILE 68.5

TRINITY RIVER BRIDGE (SCOUR RETROFIT)
PIER DETAILS NO. 5

STRUCTURES DESIGN DETAIL SHEET (ENGLISH) (REV. 10/25/05)

ORIGINAL SCALE IN INCHES FOR REDUCED PLANS 0 1 2 3

CU 02243
EA 2C9901

DISREGARD PRINTS BEARING EARLIER REVISION DATES

REVISION DATES: 6-1-09 6-26-09 8-14-09 9-14-09 10-23-09 10-29-09 11-20-09 12-18-09 1-11-10

SHEET 8 OF 25

FILE => 05-0028-h-pr05.dgn

USERNAME => trpnits DATE PLOTTED => 26-AUG-2010 TIME PLOTTED => 13:09

DIST	COUNTY	ROUTE	POST MILES TOTAL PROJECT	SHEET No	TOTAL SHEETS
02	Tri	3	68.5,70.7	59	93

REGISTERED CIVIL ENGINEER 1-27-10 DATE

8-23-10
PLANS APPROVAL DATE

REGISTERED PROFESSIONAL ENGINEER
Lewis L Shen
No. 56921
Exp. 6-30-11
CIVIL
STATE OF CALIFORNIA

The State of California or its officers or agents shall not be responsible for the accuracy or completeness of electronic copies of this plan sheet.

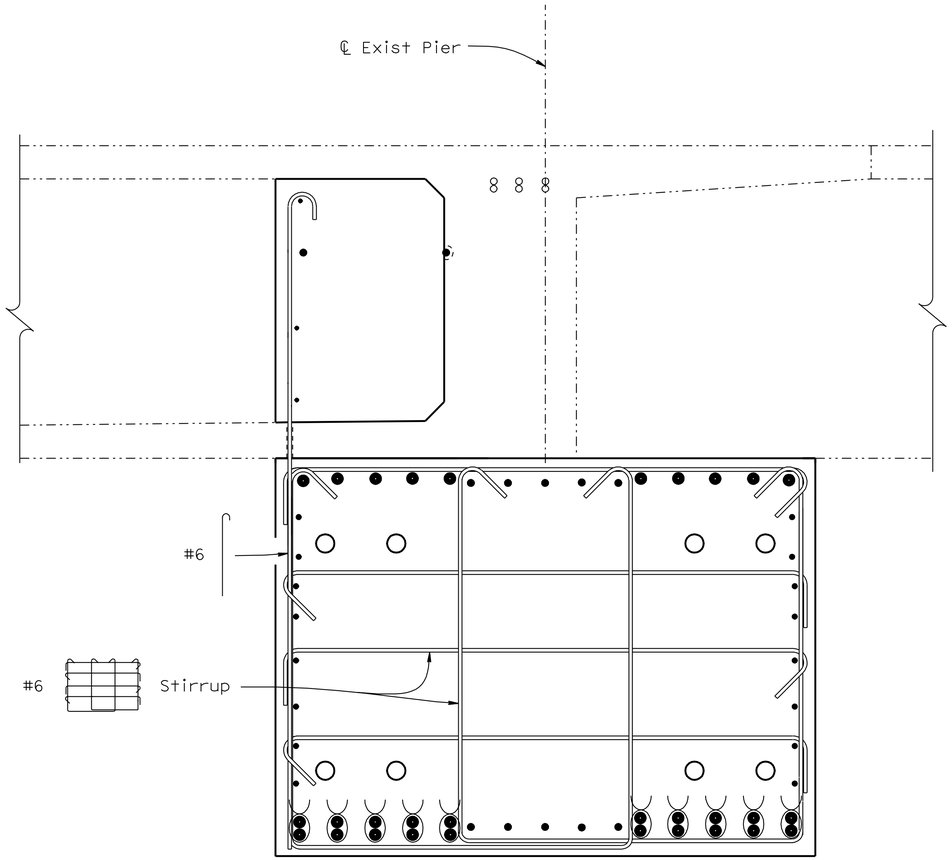

SECTION H - H

3/4" = 1'-0"

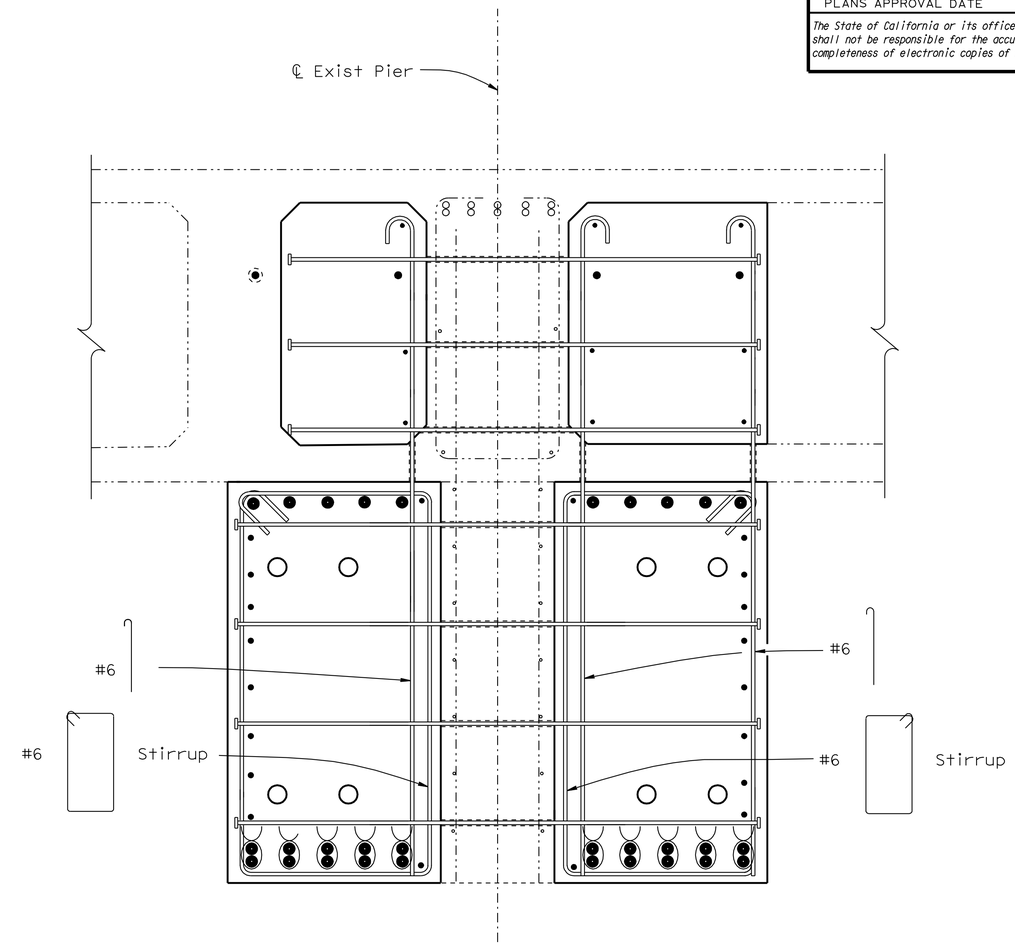

SECTION I - I

3/4" = 1'-0"

NOTES:
For Stirrup spacing see "PIER DETAILS NO. 1" sheet
For details not shown, see "PIER DETAILS NO. 5" sheet
For location of "SECTION H - H" and "SECTION I - I", see "PIER DETAILS NO. 1" sheet

NOTE:
THE CONTRACTOR SHALL VERIFY ALL CONTROLLING FIELD DIMENSIONS BEFORE ORDERING OR FABRICATING ANY MATERIAL.

	BY	CHECKED
DESIGN	Eric G Burgeson	Ali Asnaashari
DETAILS	Nancy C Gwynn	Ali Asnaashari
QUANTITIES	Mufeed Khalaf	Binayak Sharma

STATE OF CALIFORNIA
DEPARTMENT OF TRANSPORTATION

DIVISION OF ENGINEERING SERVICES
STRUCTURE DESIGN
DESIGN BRANCH 3

BRIDGE NO. 05-0028
POST MILE 68.5

TRINITY RIVER BRIDGE (SCOUR RETROFIT)
PIER DETAILS NO. 6

STRUCTURES DESIGN DETAIL SHEET (ENGLISH) (REV. 10/25/05)

ORIGINAL SCALE IN INCHES FOR REDUCED PLANS 0 1 2 3

CU 02243
EA 2C9901

DISREGARD PRINTS BEARING EARLIER REVISION DATES

REVISION DATES: 6-1-09 6-22-09 8-12-09 9-14-09 10-23-09 10-30-09 11-06-09 1-11-10

SHEET 9 OF 25

FILE => 05-0028-h-pr06.dgn

USERNAME => trpnlts DATE PLOTTED => 26-AUG-2010 TIME PLOTTED => 13:09

DIST	COUNTY	ROUTE	POST MILES TOTAL PROJECT	SHEET No	TOTAL SHEETS
02	Tri	3	68.5,70.7	60	93

REGISTERED CIVIL ENGINEER 1-27-10 DATE

8-23-10
PLANS APPROVAL DATE

REGISTERED PROFESSIONAL ENGINEER
Lewis L Shen
No. 56921
Exp. 6-30-11
CIVIL
STATE OF CALIFORNIA

The State of California or its officers or agents shall not be responsible for the accuracy or completeness of electronic copies of this plan sheet.

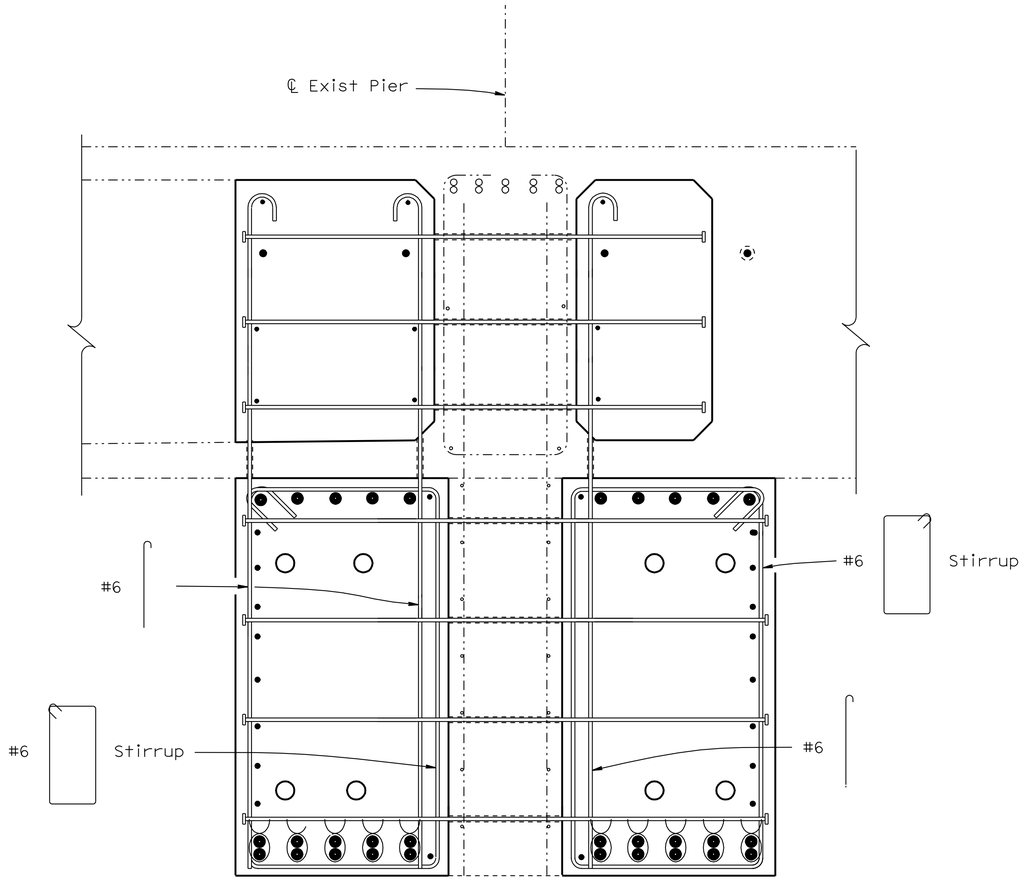

SECTION J - J

3/4" = 1'-0"

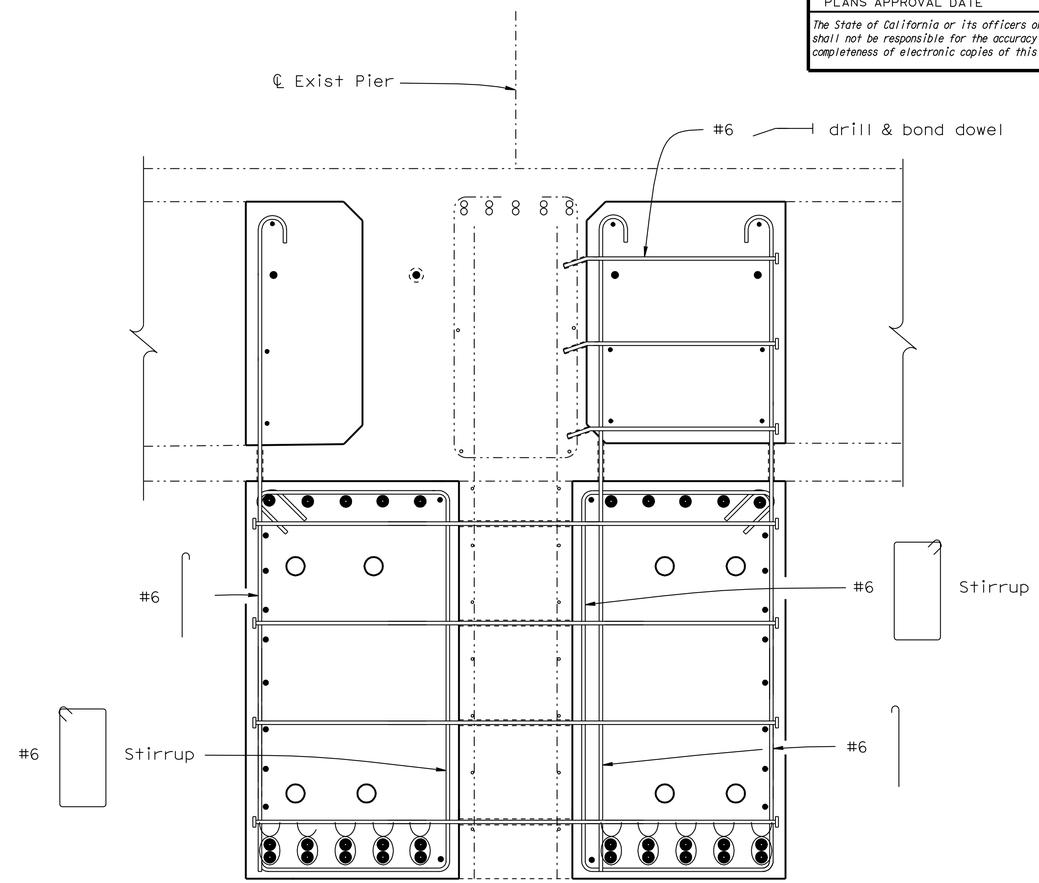

SECTION K - K

3/4" = 1'-0"

NOTES:
For Stirrup spacing see "PIER DETAILS NO. 1" sheet
For details not shown, see "PIER DETAILS NO. 5" sheet
For location of "SECTION J - J" and "SECTION K - K", see "PIER DETAILS NO. 1" sheet
- Indicates Headed Bar Reinf

NOTE:
THE CONTRACTOR SHALL VERIFY ALL CONTROLLING FIELD DIMENSIONS BEFORE ORDERING OR FABRICATING ANY MATERIAL.

	BY	CHECKED
DESIGN	Eric G Burgeson	Ali Asnaashari
DETAILS	Nancy C Gwynn	Ali Asnaashari
QUANTITIES	Mufeed Khalaf	Binayak Sharma

STATE OF CALIFORNIA
DEPARTMENT OF TRANSPORTATION

DIVISION OF ENGINEERING SERVICES
STRUCTURE DESIGN
DESIGN BRANCH 3

BRIDGE NO. 05-0028
POST MILE 68.5

TRINITY RIVER BRIDGE (SCOUR RETROFIT)
PIER DETAILS NO. 7

STRUCTURES DESIGN DETAIL SHEET (ENGLISH) (REV. 10/25/05)

ORIGINAL SCALE IN INCHES FOR REDUCED PLANS 0 1 2 3

CU 02243
EA 2C9901

DISREGARD PRINTS BEARING EARLIER REVISION DATES

REVISION DATES: 5-1-09 6-29-09 8-14-09 9-14-09 10-23-09 10-26-09 11-06-09 1-11-10

SHEET 10 OF 25

FILE => 05-0028-h-pr07.dgn

USERNAME => trphilts DATE PLOTTED => 26-AUG-2010 TIME PLOTTED => 13:09

DIST	COUNTY	ROUTE	POST MILES TOTAL PROJECT	SHEET No	TOTAL SHEETS
02	Tri	3	68.5,70.7	61	93

REGISTERED CIVIL ENGINEER 1-27-10 DATE

8-23-10
PLANS APPROVAL DATE

REGISTERED PROFESSIONAL ENGINEER
Lewis L Shen
No. 56921
Exp. 6-30-11
CIVIL
STATE OF CALIFORNIA

The State of California or its officers or agents shall not be responsible for the accuracy or completeness of electronic copies of this plan sheet.

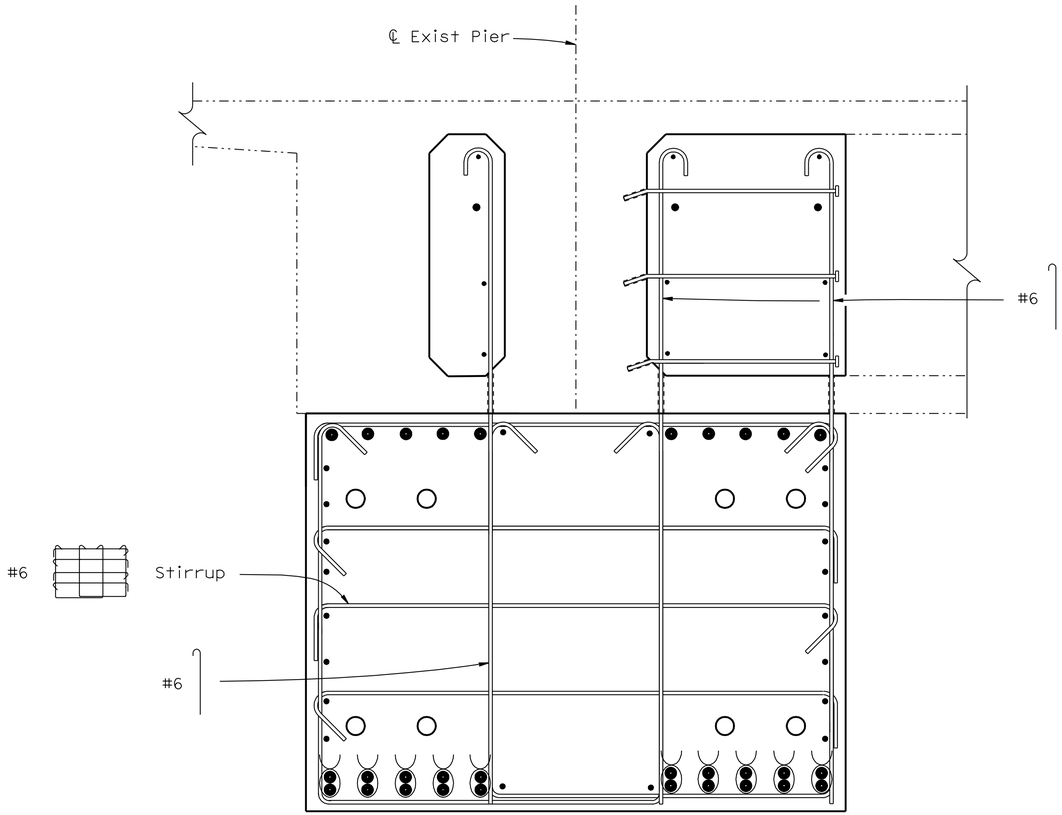

SECTION L - L

¾" = 1'-0"

NOTES:

For stirrup spacing and location of "SECTION L - L" see "PIER DETAILS NO. 1" sheet

For details not shown, see "PIER DETAILS NO. 5" sheet

NOTE:
THE CONTRACTOR SHALL VERIFY ALL CONTROLLING FIELD DIMENSIONS BEFORE ORDERING OR FABRICATING ANY MATERIAL.

	BY	CHECKED
DESIGN	Eric G Burgeson	Ali Asnaashari
DETAILS	Nancy C Gwynn	Ali Asnaashari
QUANTITIES	Mufeed Khalaf	Binayak Sharma

STATE OF CALIFORNIA
DEPARTMENT OF TRANSPORTATION

DIVISION OF ENGINEERING SERVICES
STRUCTURE DESIGN
DESIGN BRANCH 3

BRIDGE NO. 05-0028
POST MILE 68.5

TRINITY RIVER BRIDGE (SCOUR RETROFIT)
PIER DETAILS NO. 8

STRUCTURES DESIGN DETAIL SHEET (ENGLISH) (REV. 10/25/05)

ORIGINAL SCALE IN INCHES FOR REDUCED PLANS 0 1 2 3

CU 02243
EA 2C9901

DISREGARD PRINTS BEARING EARLIER REVISION DATES

REVISION DATES: 8-1-09 8-14-09 10-16-09 11-06-09 1-11-10

SHEET 11 OF 25

FILE => 05-0028-h-pr08.dgn

USERNAME => trphilis DATE PLOTTED => 26-AUG-2010 TIME PLOTTED => 13:09

DIST	COUNTY	ROUTE	POST MILES TOTAL PROJECT	SHEET No	TOTAL SHEETS
02	Tri	3	68.5,70.7	62	93

REGISTERED CIVIL ENGINEER 1-27-10 DATE

8-23-10
PLANS APPROVAL DATE

REGISTERED PROFESSIONAL ENGINEER Lewis L Shen No. 56921 Exp. 6-30-11 CIVIL STATE OF CALIFORNIA

The State of California or its officers or agents shall not be responsible for the accuracy or completeness of electronic copies of this plan sheet.

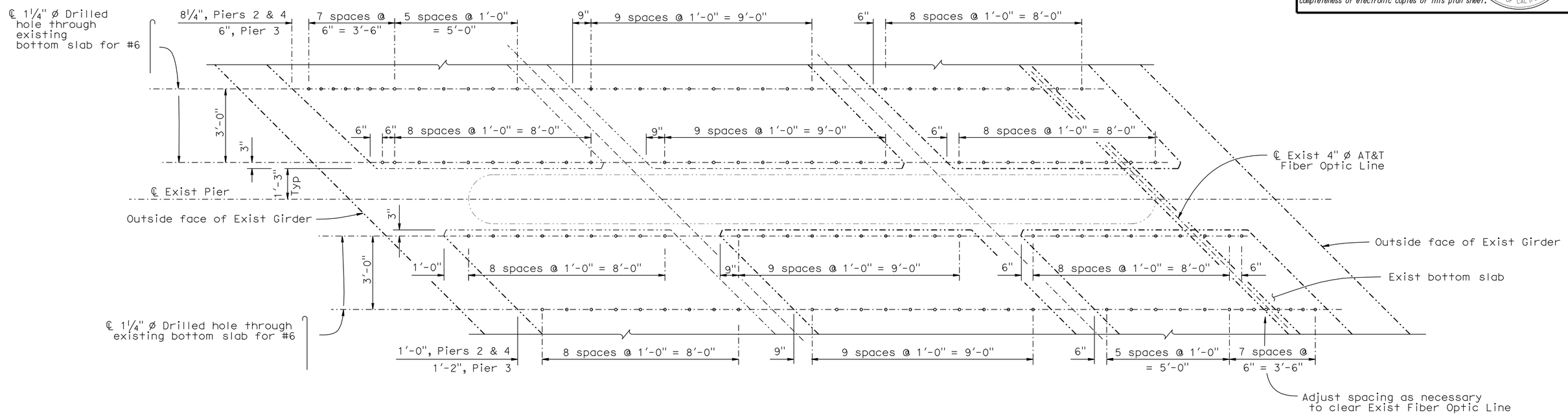

NOTE:
Details typical at all Piers except as shown

PLAN
½" = 1'-0"

NOTE:
THE CONTRACTOR SHALL VERIFY ALL CONTROLLING FIELD DIMENSIONS BEFORE ORDERING OR FABRICATING ANY MATERIAL.

	BY	CHECKED
DESIGN	Eric G Burgeson	Ali Asnaashari
DETAILS	Nancy C Gwynn	Ali Asnaashari
QUANTITIES	Mufeed Khalaf	Binayak Sharma

STATE OF CALIFORNIA
DEPARTMENT OF TRANSPORTATION

DIVISION OF ENGINEERING SERVICES
STRUCTURE DESIGN
DESIGN BRANCH 3

BRIDGE NO. 05-0028
POST MILE 68.5

TRINITY RIVER BRIDGE (SCOUR RETROFIT)
PIER DETAILS NO. 9

STRUCTURES DESIGN DETAIL SHEET (ENGLISH) (REV. 10/25/05)

ORIGINAL SCALE IN INCHES FOR REDUCED PLANS 0 1 2 3

CU 02243
EA 2C9901

DISREGARD PRINTS BEARING EARLIER REVISION DATES

REVISION DATES: 5-22-09 6-26-09 8-26-09 10-23-09 1-11-10

SHEET 12 OF 25

FILE => 05-0028-h-pr09.dgn

USERNAME => trphillis DATE PLOTTED => 26-AUG-2010 TIME PLOTTED => 13:09

DIST	COUNTY	ROUTE	POST MILES TOTAL PROJECT	SHEET No	TOTAL SHEETS
02	Tri	3	68.5,70.7	63	93

REGISTERED CIVIL ENGINEER 1-27-10 DATE

8-23-10
PLANS APPROVAL DATE

REGISTERED PROFESSIONAL ENGINEER Lewis L Shen No. 56921 Exp. 6-30-11 CIVIL STATE OF CALIFORNIA

The State of California or its officers or agents shall not be responsible for the accuracy or completeness of electronic copies of this plan sheet.

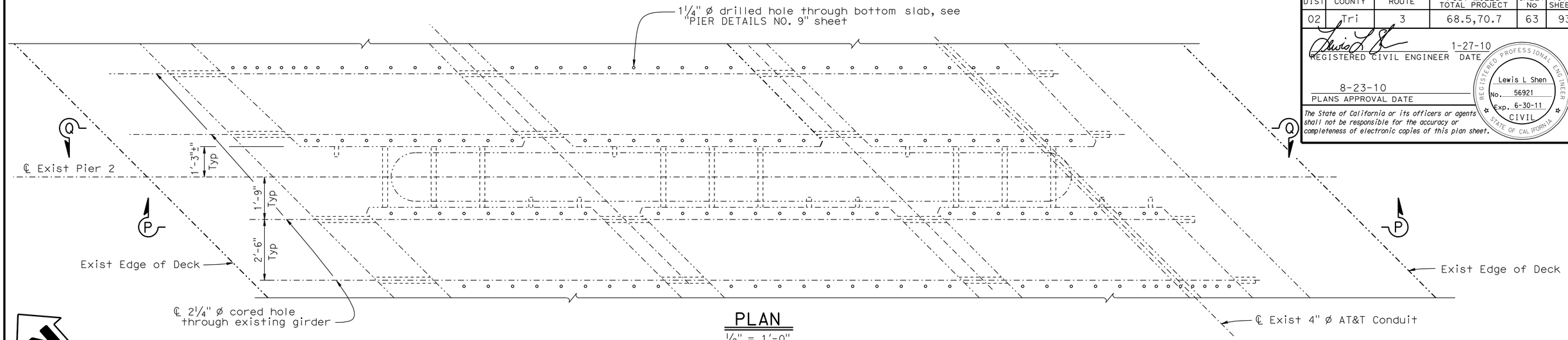

PLAN

½" = 1'-0"

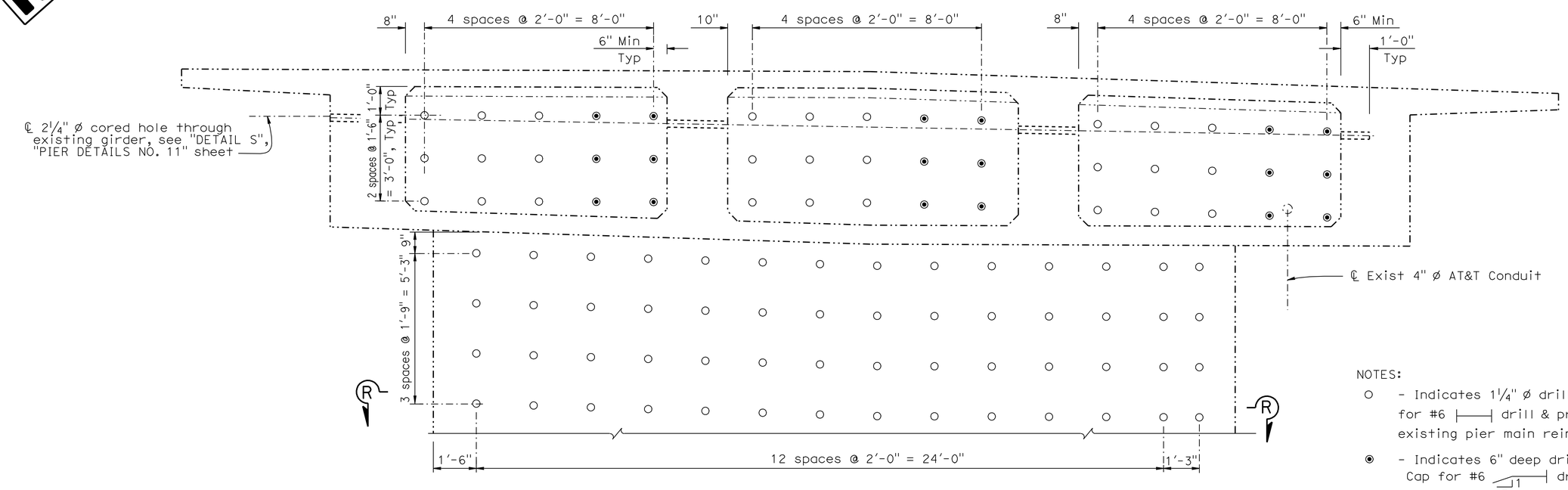

SECTION P - P

½" = 1'-0"

NOTES:

○ - Indicates 1¼" ø drilled hole through existing pier for #6 drill & pressure grout. Avoid existing pier main reinforcement

◉ - Indicates 6" deep drilled hole into existing Pier Cap for #6 drill & bond dowel

Pier 2 shown, Pier 3 and Pier 4 similar

For "SECTION Q - Q", see "PIER DETAILS NO. 11" sheet

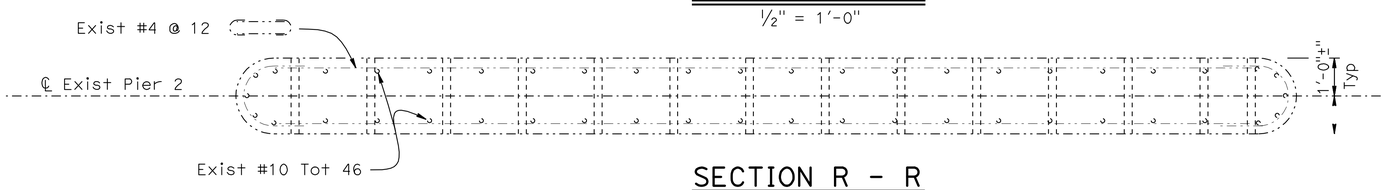

SECTION R - R

½" = 1'-0"

NOTE:
THE CONTRACTOR SHALL VERIFY ALL CONTROLLING FIELD DIMENSIONS BEFORE ORDERING OR FABRICATING ANY MATERIAL.

	BY	CHECKED
DESIGN	Eric G Burgeson	Ali Asnaashari
DETAILS	Nancy C Gwynn	Ali Asnaashari
QUANTITIES	Mufeed Khalaf	Binayak Sharma

STATE OF CALIFORNIA
DEPARTMENT OF TRANSPORTATION

DIVISION OF ENGINEERING SERVICES
STRUCTURE DESIGN
DESIGN BRANCH 3

BRIDGE NO. 05-0028
POST MILE 68.5

TRINITY RIVER BRIDGE (SCOUR RETROFIT)
PIER DETAILS NO. 10

STRUCTURES DESIGN DETAIL SHEET (ENGLISH) (REV. 10/25/05)

ORIGINAL SCALE IN INCHES FOR REDUCED PLANS 0 1 2 3

CU 02243
EA 2C9901

DISREGARD PRINTS BEARING EARLIER REVISION DATES

REVISION DATES: 5-25-09 6-25-09 8-25-09 9-11-09 10-23-09 10-29-09 1-11-10

SHEET 13 OF 25

FILE => 05-0028-h-pr10.dgn

USERNAME => trphtis DATE PLOTTED => 26-AUG-2010 TIME PLOTTED => 13:03

DIST	COUNTY	ROUTE	POST MILES TOTAL PROJECT	SHEET No	TOTAL SHEETS
02	Tri	3	68.5,70.7	64	93

REGISTERED CIVIL ENGINEER 1-27-10 DATE

8-23-10
PLANS APPROVAL DATE

REGISTERED PROFESSIONAL ENGINEER
Lewis L Shen
No. 56921
Exp. 6-30-11
CIVIL
STATE OF CALIFORNIA

The State of California or its officers or agents shall not be responsible for the accuracy or completeness of electronic copies of this plan sheet.

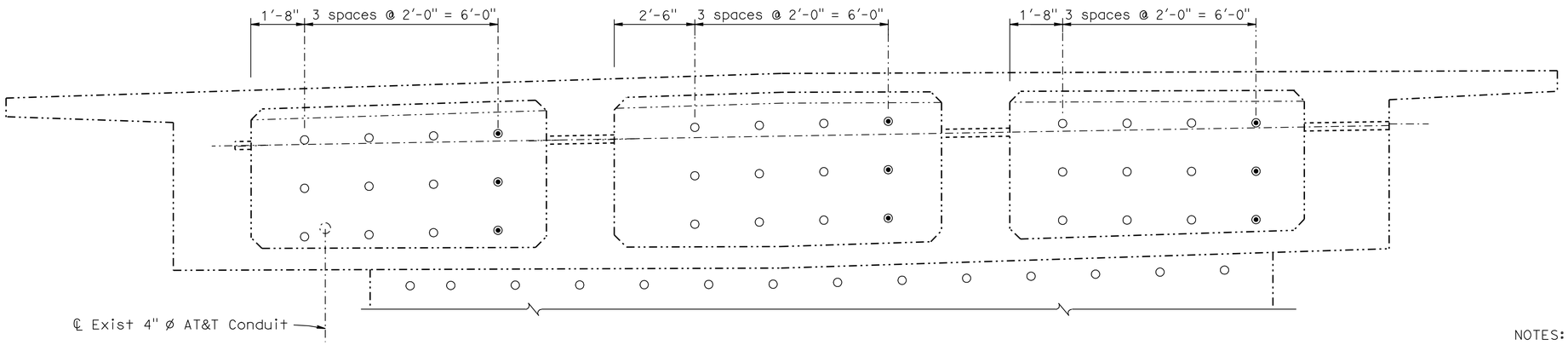

SECTION Q - Q

½" = 1'-0"

NOTES:

○ - Indicates 1¼" ø drilled hole through existing pier for #6 ⊢—⊣ drill & pressure grout. Avoid existing pier main reinforcement

◉ - Indicates 6" deep drilled hole into existing Pier Cap for #6 ⊢—⊣ drill & bond dowel

For location of "SECTION Q - Q", see "PIER DETAIL NO. 10" sheet

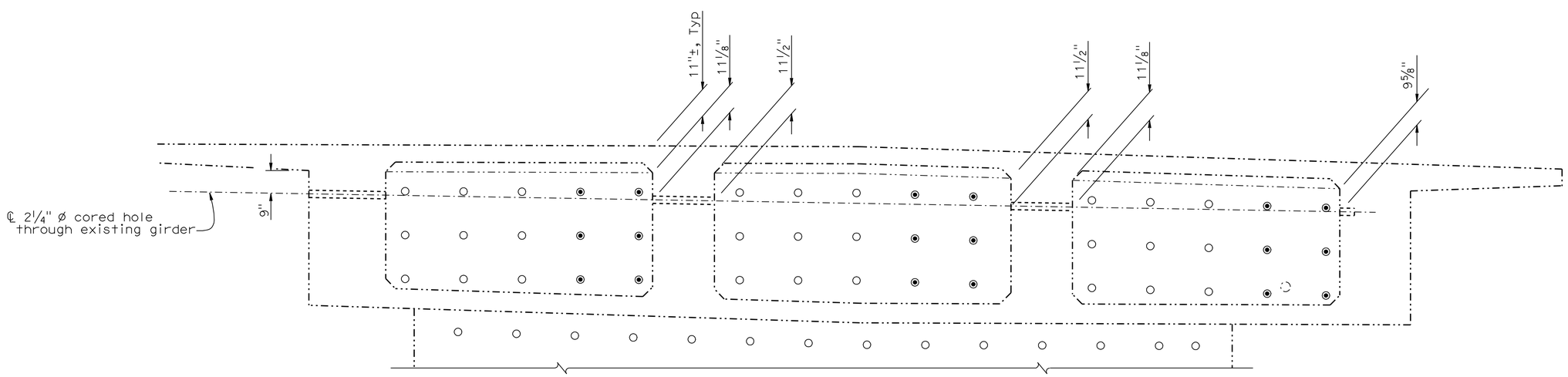

DETAIL S

½" = 1'-0"

NOTE:
THE CONTRACTOR SHALL VERIFY ALL CONTROLLING FIELD DIMENSIONS BEFORE ORDERING OR FABRICATING ANY MATERIAL.

	BY	CHECKED
DESIGN	Eric G Burgeson	Ali Asnaashari
DETAILS	Nancy C Gwynn	Ali Asnaashari
QUANTITIES	Mufeed Khalaf	Bingyak Sharma

STATE OF CALIFORNIA
DEPARTMENT OF TRANSPORTATION

DIVISION OF ENGINEERING SERVICES
STRUCTURE DESIGN
DESIGN BRANCH 3

BRIDGE NO. 05-0028
POST MILE 68.5

TRINITY RIVER BRIDGE (SCOUR RETROFIT)
PIER DETAILS NO. 11

STRUCTURES DESIGN DETAIL SHEET (ENGLISH) (REV. 10/25/05)

ORIGINAL SCALE IN INCHES FOR REDUCED PLANS 0 1 2 3

CU 02243
EA 2C9901

DISREGARD PRINTS BEARING EARLIER REVISION DATES

REVISION DATES: 5-29-09 6-29-09 8-14-09 9-14-09 10-23-09

SHEET 14 OF 25

FILE => 05-0028-h-pr11.dgn

USERNAME => frphtlg DATE PLOTTED => 26-AUG-2010 TIME PLOTTED => 13:03

DIST	COUNTY	ROUTE	POST MILES TOTAL PROJECT	SHEET No	TOTAL SHEETS
02	Tri	3	68.5,70.7	65	93

REGISTERED CIVIL ENGINEER 1-27-10 DATE

8-23-10
PLANS APPROVAL DATE

REGISTERED PROFESSIONAL ENGINEER
Lewis L Shen
No. 56921
Exp. 6-30-11
CIVIL
STATE OF CALIFORNIA

The State of California or its officers or agents shall not be responsible for the accuracy or completeness of electronic copies of this plan sheet.

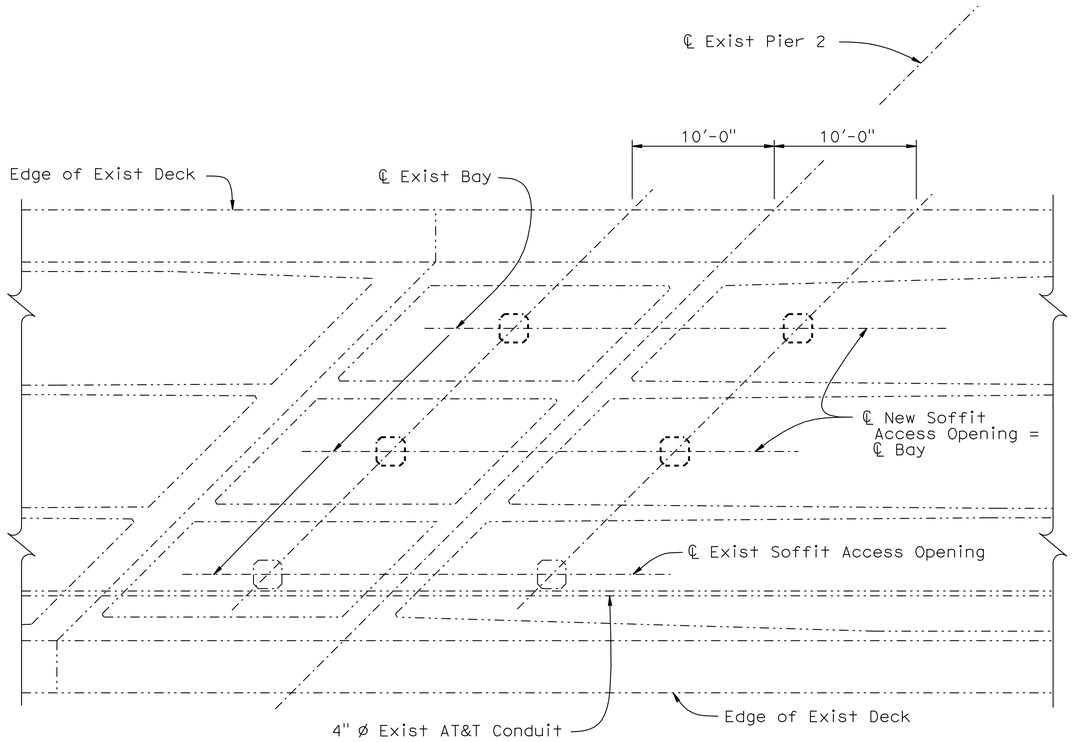

NOTES:

Existing Pier 2 shown, Piers 3 & 4 similar

For details not shown, see "SOFFIT OPENING" sheet

PART PLAN

3/16" = 1'-0"

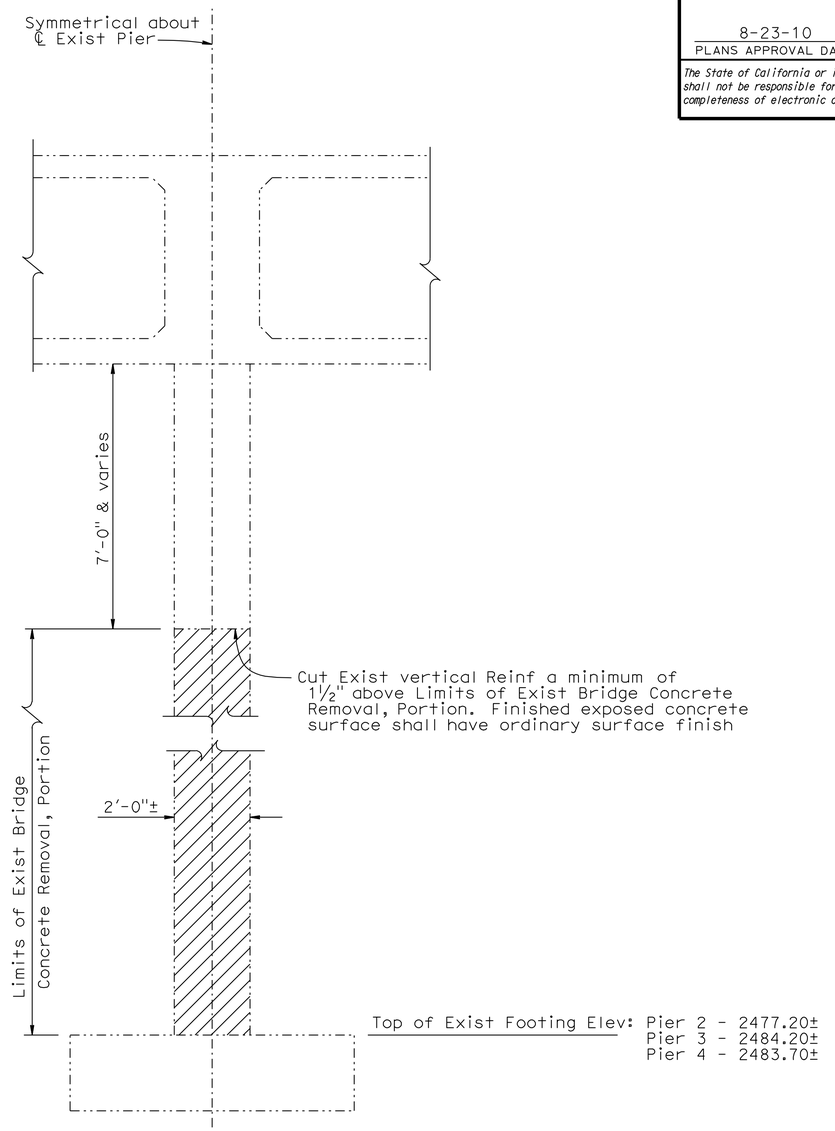

NOTES:

- Indicates Bridge Removal, Portion

Existing pier shall not be removed until all concrete construction has reached f'c = 4000 psi

SECTION THRU EXIST PIER

½" = 1'-0"

NOTE:
THE CONTRACTOR SHALL VERIFY ALL CONTROLLING FIELD DIMENSIONS BEFORE ORDERING OR FABRICATING ANY MATERIAL.

	BY	CHECKED
DESIGN	Eric G Burgeson	Ali Asnaashari
DETAILS	Nancy C Gwynn	Ali Asnaashari
QUANTITIES	Mufeed Khalaf	Binayak Sharma

STATE OF CALIFORNIA
DEPARTMENT OF TRANSPORTATION

DIVISION OF ENGINEERING SERVICES
STRUCTURE DESIGN
DESIGN BRANCH 3

BRIDGE NO. 05-0028
POST MILE 68.5

TRINITY RIVER BRIDGE (SCOUR RETROFIT)
CONCRETE REMOVAL LIMITS

STRUCTURES DESIGN DETAIL SHEET (ENGLISH) (REV. 10/25/05)

ORIGINAL SCALE IN INCHES FOR REDUCED PLANS 0 1 2 3

CU 02243
EA 2C9901

DISREGARD PRINTS BEARING EARLIER REVISION DATES

REVISION DATES: 5-29-09 6-29-09 8-26-09 9-7-09 9-11-09 10-23-09 10-30-09 12-11-09 1-11-10

SHEET 15 OF 25

FILE => 05-0028-i-conc.dgn

USERNAME => tthphils DATE PLOTTED => 26-AUG-2010 TIME PLOTTED => 13:10

DIST	COUNTY	ROUTE	POST MILES TOTAL PROJECT	SHEET No	TOTAL SHEETS
02	Tri	3	68.5,70.7	66	93

REGISTERED CIVIL ENGINEER 1-27-10 DATE

8-23-10
PLANS APPROVAL DATE

REGISTERED PROFESSIONAL ENGINEER
Lewis L Shen
No. 56921
Exp. 6-30-11
CIVIL
STATE OF CALIFORNIA

The State of California or its officers or agents shall not be responsible for the accuracy or completeness of electronic copies of this plan sheet.

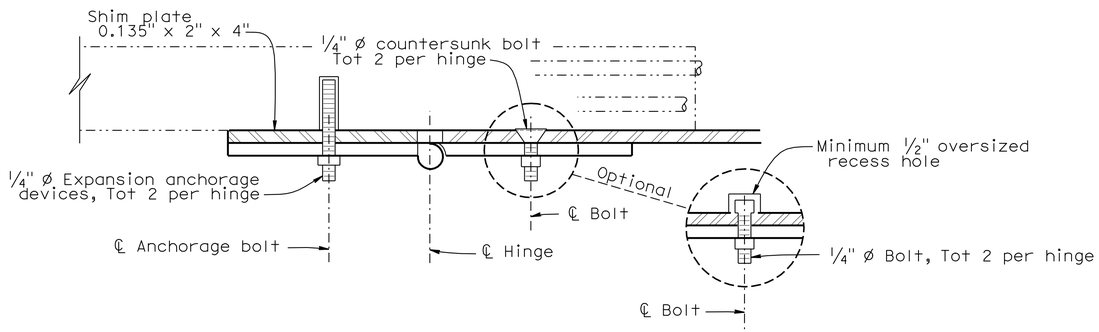

HINGE ANCHORAGE DETAIL

No Scale

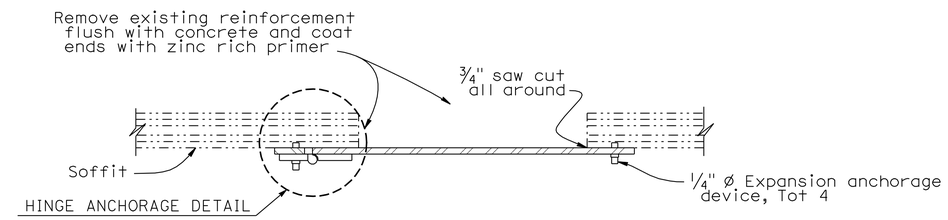

SECTION A - A

No Scale

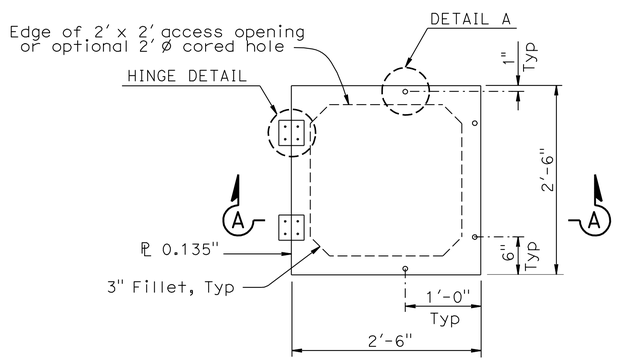

PLAN

1" = 1'-0"

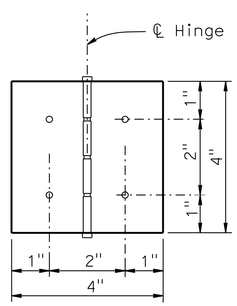

HINGE DETAIL

1" = 6"

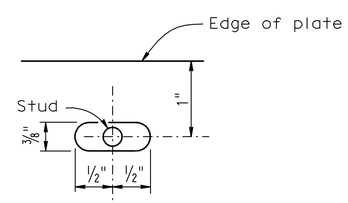

DETAIL A

No Scale

SOFFIT ACCESS DOOR ASSEMBLY

Note: Soffit access door opening direction to be determined by the engineer

NOTES:

- Non-removable pin in hinge
- Hinge assembly to be galvanized, brass or stainless steel
- Use thread locking system for all hinge nuts
- Hinge assembly to be minimum 1/8" thick

NOTE:
THE CONTRACTOR SHALL VERIFY ALL CONTROLLING FIELD DIMENSIONS BEFORE ORDERING OR FABRICATING ANY MATERIAL.

	BY	CHECKED
DESIGN	Eric G Burgeson	Ali Asnaashari
DETAILS	Nancy C Gwynn	Ali Asnaashari
QUANTITIES	Mufeed Khalaf	Binayak Sharma

STATE OF CALIFORNIA
DEPARTMENT OF TRANSPORTATION

DIVISION OF ENGINEERING SERVICES
STRUCTURE DESIGN
DESIGN BRANCH 3

BRIDGE NO. 05-0028
POST MILE 68.5

TRINITY RIVER BRIDGE (SCOUR RETROFIT)

SOFFIT OPENING

STRUCTURES DESIGN DETAIL SHEET (ENGLISH) (REV. 10/25/05)

ORIGINAL SCALE IN INCHES FOR REDUCED PLANS 0 1 2 3

CU 02243
EA 2C9901

DISREGARD PRINTS BEARING EARLIER REVISION DATES 6-18-09

REVISION DATES

SHEET 16 OF 25

FILE => 05-0028-n-soffit.dgn

USERNAME => trphtis DATE PLOTTED => 26-AUG-2010 TIME PLOTTED => 13:10

DIST	COUNTY	ROUTE	POST MILES TOTAL PROJECT	SHEET No	TOTAL SHEETS
02	Tri	3	68.5,70.7	67	93

PROFESSIONAL GEOLOGIST — 11-10-09 DATE

8-23-10
PLANS APPROVAL DATE

PROFESSIONAL GEOLOGIST Joseph Kaump No. 7837 Exp. 1-31-11 PROFESSIONAL GEOLOGIST STATE OF CALIFORNIA

The State of California or its officers or agents shall not be responsible for the accuracy or completeness of electronic copies of this plan sheet.

KLEINFELDER INC.
3077 FITE CIR.
SACRAMENTO, CA 95827

This LOTB sheet was prepared in accordance with the Caltrans Soil & Rock Logging, Classification, and Presentation Manual (June 2007).

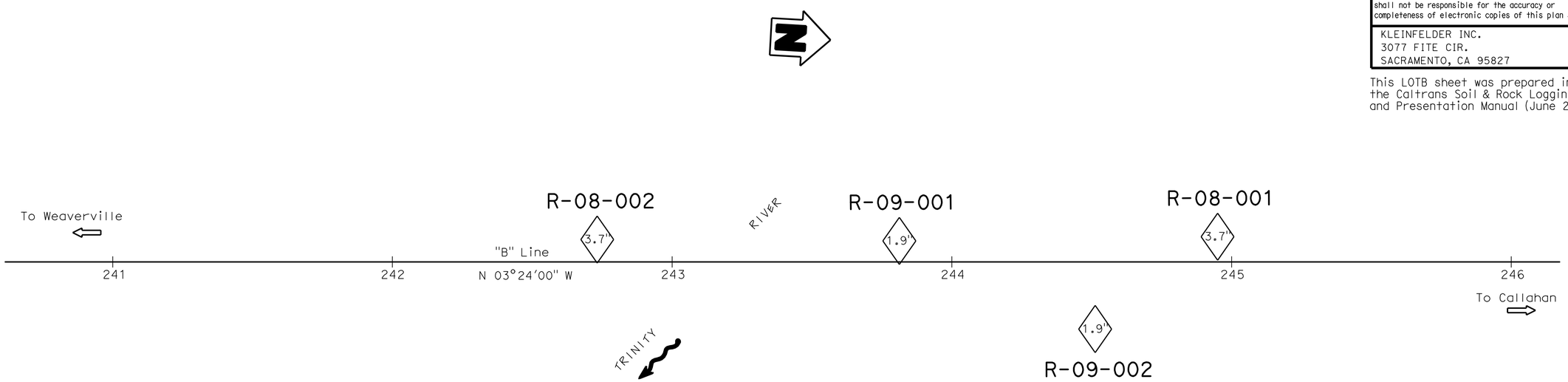

PLAN
1"=20'

BENCHMARK

STATION	OFFSET	N	E	ELEV	DESCRIPTION
241+64.73	37.25' Lt	2280946.52	6366824.35	2507.32	5-3-68, 50 GPS Find 2 1/4" CADT Brass Disk/IP in Conc.

SURVEY CONTROL
1. Vertical Datum NAVD88

Notes:

1. Mobile B-47, (C# 4785) with a safety hammer and Acker Truck Mounted rig (C# 1974) with an automatic hammer were used to obtain SPT samples.
2. SPT N values shown on the Log of Test Boring (LOTB) sheet are actual values recorded in the field.
3. UC = Unconfined Compressive Strength from laboratory testing (ASTM D 2938-95).
4. PL = Point Load Strength Index I_S (50) multiplied by the connection factor of 24.5 for a 2.4" diameter sample to estimate the uniaxial compressive strength from the Point Load Test (ASTM D 5731-95).

DIST	COUNTY	ROUTE	POST MILES TOTAL PROJECT	SHEET No	TOTAL SHEETS
02	Tri	3	68.5,70.7	68	93

PROFESSIONAL GEOLOGIST — 11-10-09 DATE

8-23-10
PLANS APPROVAL DATE

PROFESSIONAL GEOLOGIST — Joseph Kaump No. 7837 Exp. 1-31-11 — STATE OF CALIFORNIA

The State of California or its officers or agents shall not be responsible for the accuracy or completeness of electronic copies of this plan sheet.

KLEINFELDER INC.
3077 FITE CIR.
SACRAMENTO, CA 95827

This LOTB sheet was prepared in accordance with the Caltrans Soil & Rock Logging, Classification, and Presentation Manual (June 2007).

FOR PLAN VIEW AND ADDITIONAL NOTES, SEE "LOG OF TEST BORINGS" SHEET 1 OF 9

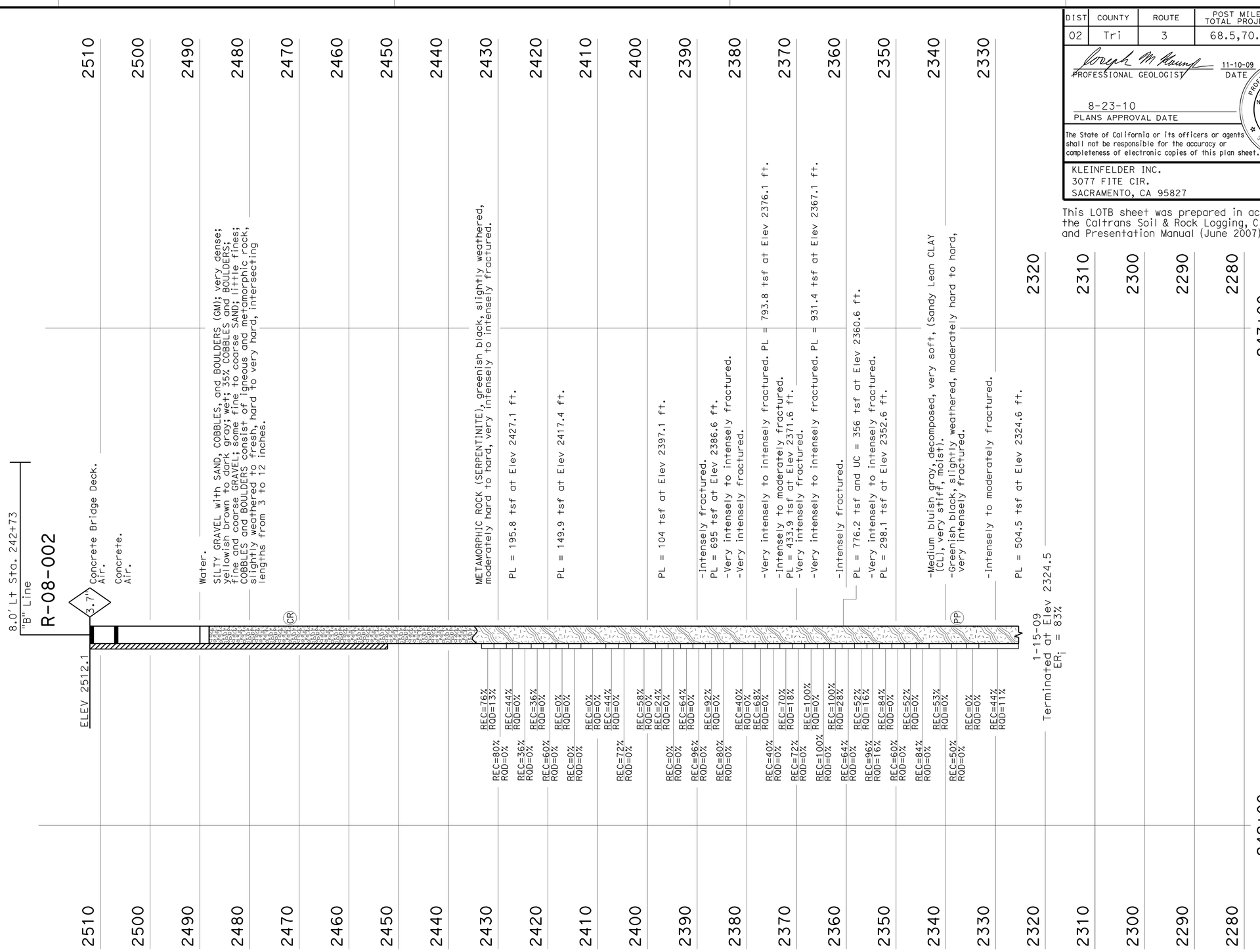

PROFILE
HOR. 1"=10'
VER. 1"=10'

ENGINEERING SERVICES	GEOTECHNICAL SERVICES	STATE OF CALIFORNIA DEPARTMENT OF TRANSPORTATION	DIVISION OF ENGINEERING SERVICES STRUCTURE DESIGN DESIGN BRANCH 3	BRIDGE NO. 05-0028 POST MILES 68.5	TRINITY RIVER BRIDGE (SCOUR RETROFIT) LOG OF TEST BORINGS 2 OF 9
FUNCTIONAL SUPERVISOR NAME: R. Buell	DRAWN BY: A. Sanchez (KLEINFELDER INC.) CHECKED BY: J. Martin	FIELD INVESTIGATION BY: J. Kaump			
OGS CIVIL LOG OF TEST BORINGS SHEET	ORIGINAL SCALE IN INCHES FOR REDUCED PLANS 0 1 2 3		CU 02243 EA 2C9901	DISREGARD PRINTS BEARING EARLIER REVISION DATES	REVISION DATES 10-15-09 11-10-09 SHEET 18 OF 25

FILE => 05-0028-x-lotb2of9.dgn

USERNAME => trmorlok DATE PLOTTED => 26-AUG-2010 TIME PLOTTED => 12:54

DIST	COUNTY	ROUTE	POST MILES TOTAL PROJECT	SHEET No	TOTAL SHEETS
02	Tri	3	68.5,70.7	69	93

PROFESSIONAL GEOLOGIST — 11-10-09 DATE

8-23-10
PLANS APPROVAL DATE

PROFESSIONAL GEOLOGIST — Joseph Kaump No. 7837 Exp. 1-31-11 — STATE OF CALIFORNIA

The State of California or its officers or agents shall not be responsible for the accuracy or completeness of electronic copies of this plan sheet.

KLEINFELDER INC.
3077 FITE CIR.
SACRAMENTO, CA 95827

This LOTB sheet was prepared in accordance with the Caltrans Soil & Rock Logging, Classification, and Presentation Manual (June 2007).

FOR PLAN VIEW AND ADDITIONAL NOTES, SEE "LOG OF TEST BORINGS" SHEET 1 OF 9

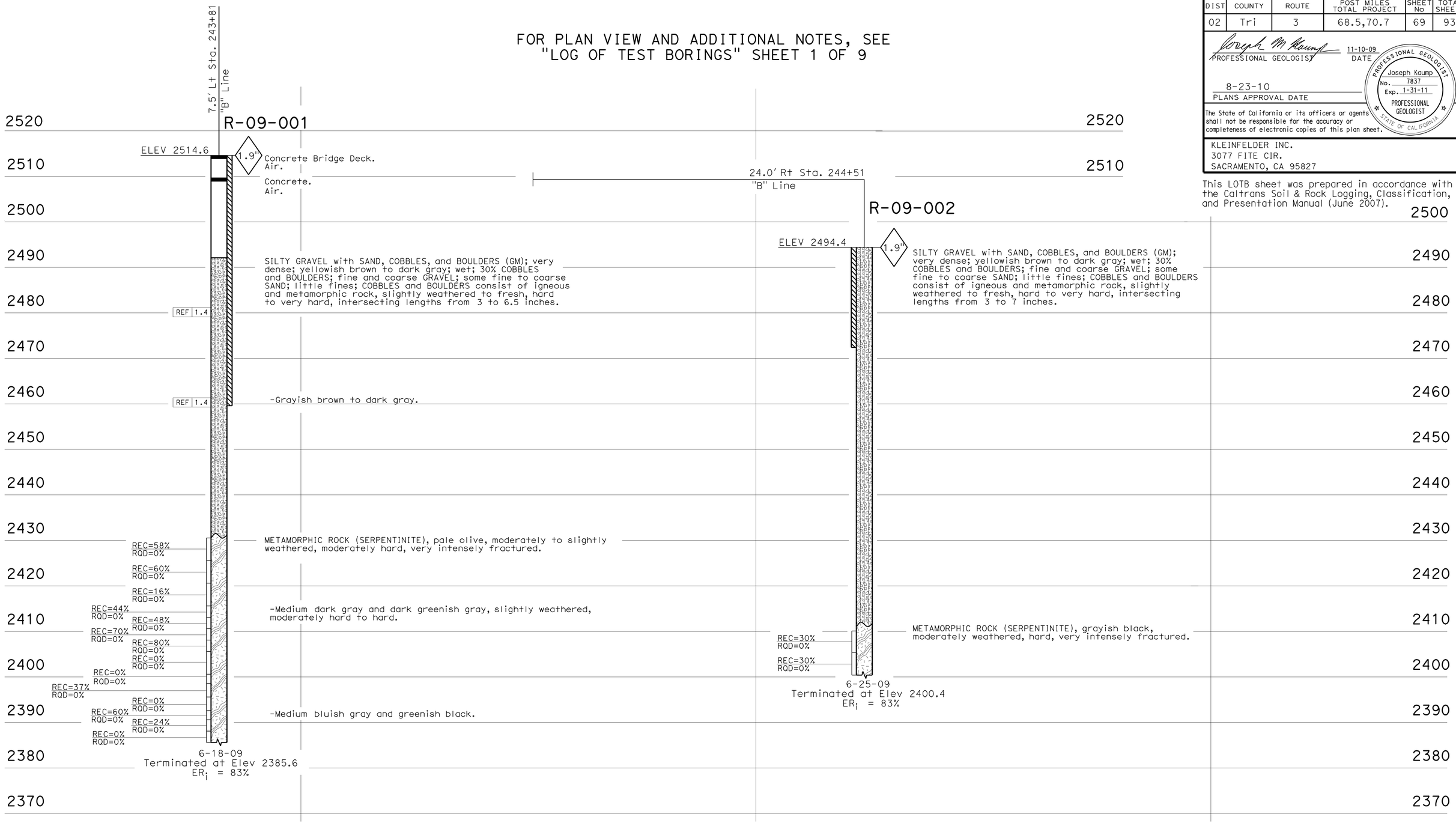

PROFILE
HOR. 1"=10'
VER. 1"=10'

ENGINEERING SERVICES	GEOTECHNICAL SERVICES	STATE OF CALIFORNIA DEPARTMENT OF TRANSPORTATION	DIVISION OF ENGINEERING SERVICES STRUCTURE DESIGN DESIGN BRANCH 3	BRIDGE NO. 05-0028 POST MILES 68.5	TRINITY RIVER BRIDGE (SCOUR RETROFIT) LOG OF TEST BORINGS 3 OF 9
FUNCTIONAL SUPERVISOR NAME: R. Buell	DRAWN BY: A. Sanchez (KLEINFELDER INC.) CHECKED BY: J. Martin	FIELD INVESTIGATION BY: J. Kaump			

OGS CIVIL LOG OF TEST BORINGS SHEET

ORIGINAL SCALE IN INCHES FOR REDUCED PLANS 0 1 2 3

CU 02243
EA 2C9901

DISREGARD PRINTS BEARING EARLIER REVISION DATES

REVISION DATES: 10-15-09 11-10-09

SHEET 19 OF 25

FILE => 05-0028-x-lotb3of9.dgn

USERNAME => trmarlok DATE PLOTTED => 26-AUG-2010 TIME PLOTTED => 12:54

DIST	COUNTY	ROUTE	POST MILES TOTAL PROJECT	SHEET No	TOTAL SHEETS
02	Tri	3	68.5,70.7	70	93

PROFESSIONAL GEOLOGIST — 11-10-09 DATE

8-23-10
PLANS APPROVAL DATE

PROFESSIONAL GEOLOGIST — Joseph Kaump No. 7837 Exp. 1-31-11 — STATE OF CALIFORNIA

The State of California or its officers or agents shall not be responsible for the accuracy or completeness of electronic copies of this plan sheet.

KLEINFELDER INC.
3077 FITE CIR.
SACRAMENTO, CA 95827

This LOTB sheet was prepared in accordance with the Caltrans Soil & Rock Logging, Classification, and Presentation Manual (June 2007).

FOR PLAN VIEW AND ADDITIONAL NOTES, SEE "LOG OF TEST BORINGS" SHEET 1 OF 9

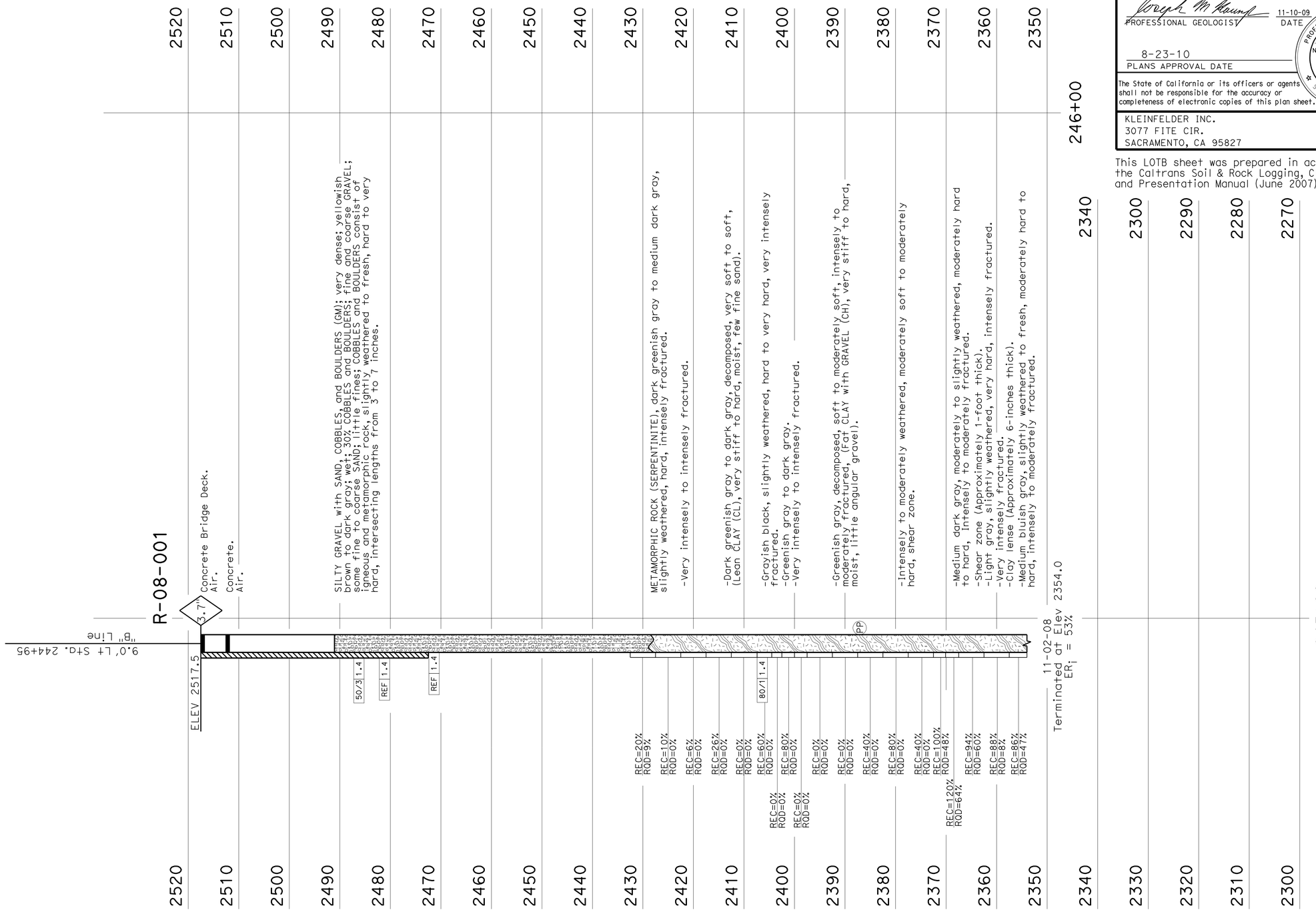

ENGINEERING SERVICES	GEOTECHNICAL SERVICES	STATE OF CALIFORNIA DEPARTMENT OF TRANSPORTATION	DIVISION OF ENGINEERING SERVICES STRUCTURE DESIGN	BRIDGE NO. 05-0028	TRINITY RIVER BRIDGE (SCOUR RETROFIT)
FUNCTIONAL SUPERVISOR	DRAWN BY: A. Sanchez (KLEINFELDER INC.)	FIELD INVESTIGATION BY:	DESIGN BRANCH 3	POST MILES 68.5	LOG OF TEST BORINGS 4 OF 9
NAME: R. Buell	CHECKED BY: J. Martin	J. Kaump			

OGS CIVIL LOG OF TEST BORINGS SHEET

ORIGINAL SCALE IN INCHES FOR REDUCED PLANS 0 1 2 3

CU 02243
EA 2C9901

DISREGARD PRINTS BEARING EARLIER REVISION DATES 10-13-09 11-10-09

REVISION DATES

SHEET 20 OF 25

FILE => 05-0028-x-lotb4of9.dgn

USERNAME => trmorlok DATE PLOTTED => 26-AUG-2010 TIME PLOTTED => 12:54

DIST	COUNTY	ROUTE	POST MILES TOTAL PROJECT	SHEET No	TOTAL SHEETS
02	Tri	3	68.5,70.7	71	93

PROFESSIONAL GEOLOGIST — 11-10-09 DATE

8-23-10
PLANS APPROVAL DATE

PROFESSIONAL GEOLOGIST Joseph Kaump No. 7837 Exp. 1-31-11 PROFESSIONAL GEOLOGIST STATE OF CALIFORNIA

The State of California or its officers or agents shall not be responsible for the accuracy or completeness of electronic copies of this plan sheet.

KLEINFELDER INC.
3077 FITE CIR.
SACRAMENTO, CA 95827

REFERENCE: CALTRANS SOIL & ROCK LOGGING, CLASSIFICATION, AND PRESENTATION MANUAL (JUNE 2007)

CEMENTATION

Description	Criteria
Weak	Crumbles or breaks with handling or little finger pressure.
Moderate	Crumbles or breaks with considerable finger pressure.
Strong	Will not crumble or break with finger pressure.

CONSISTENCY OF COHESIVE SOILS

Description	Unconfined Compressive Strength (tsf)	Pocket Penetrometer Measurement (tsf)	Torvane Measurement (tsf)	Field Approximation
Very Soft	< 0.25	< 0.25	< 0.12	Easily penetrated several inches by fist
Soft	0.25 to 0.50	0.25 to 0.50	0.12 to 0.25	Easily penetrated several inches by thumb
Medium Stiff	0.50 to 1.0	0.50 to 1.0	0.25 to 0.50	Penetrated several inches by thumb with moderate effort
Stiff	1 to 2	1 to 2	0.50 to 1.0	Readily indented by thumb but penetrated only with great effort
Very Stiff	2 to 4	2 to 4	1.0 to 2.0	Readily indented by thumbnail
Hard	> 4.0	> 4.0	> 2.0	Indented by thumbnail with difficulty

BOREHOLE IDENTIFICATION

Symbol	Hole Type	Description
Size	A	Auger Boring
Size	R P	Rotary drilled boring Rotary percussion boring (air)
Size	R	Rotary drilled diamond core
Size	HD HA	Hand driven (1-inch soil tube) Hand Auger
●	D	Dynamic Cone Penetration Boring
▲	CPT	Cone Penetration Test (ASTM D 5778-95)
⬚	O	Other

Note: Size in inches.

PLASTICITY OF FINE-GRAINED SOILS

Description	Criteria
Nonplastic	A 1/8-inch thread cannot be rolled at any water content.
Low	The thread can barely be rolled and the lump cannot be formed when drier than the plastic limit.
Medium	The thread is easy to roll and not much time is required to reach the plastic limit. The thread cannot be rerolled after reaching the plastic limit. The lump crumbles when drier than the plastic limit.
High	It takes considerable time rolling and kneading to reach the plastic limit. The thread can be rerolled several times after reaching the plastic limit. The lump can be formed without crumbling when drier than the plastic limit.

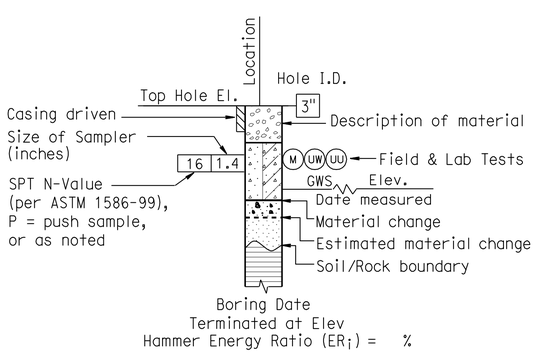

ROTARY BORING

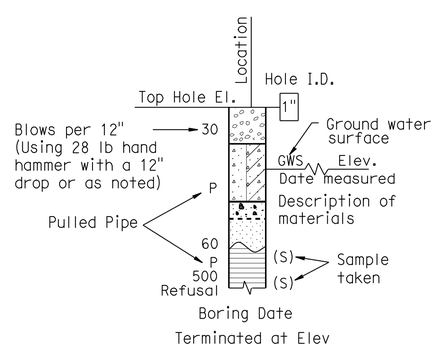

HAND BORING

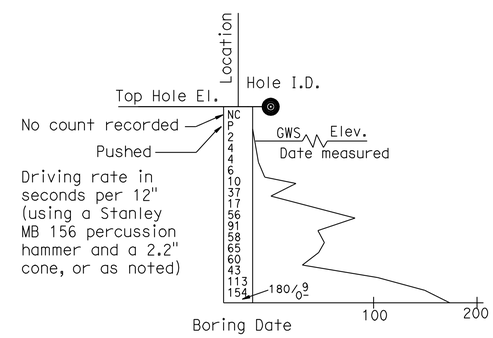

DYNAMIC CONE PENETRATION BORING

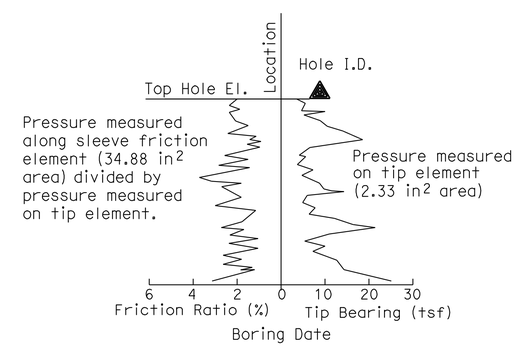

CONE PENETRATION TEST (CPT) SOUNDING

ENGINEERING SERVICES	GEOTECHNICAL SERVICES	STATE OF CALIFORNIA DEPARTMENT OF TRANSPORTATION	DIVISION OF ENGINEERING SERVICES STRUCTURE DESIGN DESIGN BRANCH 3	BRIDGE NO. 05-0028 / POST MILE 68.5	TRINITY RIVER BRIDGE (SCOUR RETROFIT) LOG OF TEST BORINGS 5 OF 9
	PREPARED BY: A. Sanchez (KLEINFELDER INC.)				

GS LOTB SOIL LEGEND

ORIGINAL SCALE IN INCHES FOR REDUCED PLANS 0 1 2 3

CU 02243
EA 2C9901

DISREGARD PRINTS BEARING EARLIER REVISION DATES 10-15-09 11-10-09

REVISION DATES

SHEET 21 OF 25

FILE => 05-0028-x-lotb5of9.dgn

USERNAME => ttmorlok DATE PLOTTED => 26-AUG-2010 TIME PLOTTED => 12:54

REFERENCE: CALTRANS SOIL & ROCK LOGGING, CLASSIFICATION, AND PRESENTATION MANUAL (JUNE 2007)

DIST	COUNTY	ROUTE	POST MILES TOTAL PROJECT	SHEET No	TOTAL SHEETS
02	Tri	3	68.5,70.7	72	93

PROFESSIONAL GEOLOGIST — 11-10-09 DATE

8-23-10
PLANS APPROVAL DATE

PROFESSIONAL GEOLOGIST Joseph Kaump No. 7837 Exp. 1-31-11 PROFESSIONAL GEOLOGIST STATE OF CALIFORNIA

The State of California or its officers or agents shall not be responsible for the accuracy or completeness of electronic copies of this plan sheet.

KLEINFELDER INC.
3077 FITE CIR.
SACRAMENTO, CA 95827

GROUP SYMBOLS AND NAMES

Graphic/Symbol	Group Names
GW	Well-graded GRAVEL Well-graded GRAVEL with SAND
GP	Poorly graded GRAVEL Poorly graded GRAVEL with SAND
GW-GM	Well-graded GRAVEL with SILT Well-graded GRAVEL with SILT and SAND
GW-GC	Well-graded GRAVEL with CLAY (or SILTY CLAY) Well-graded GRAVEL with CLAY and SAND (or SILTY CLAY and SAND)
GP-GM	Poorly graded GRAVEL with SILT Poorly graded GRAVEL with SILT and SAND
GP-GC	Poorly graded GRAVEL with CLAY (or SILTY CLAY) Poorly graded GRAVEL with CLAY and SAND (or SILTY CLAY and SAND)
GM	SILTY GRAVEL SILTY GRAVEL with SAND
GC	CLAYEY GRAVEL CLAYEY GRAVEL with SAND
GC-GM	SILTY, CLAYEY GRAVEL SILTY, CLAYEY GRAVEL with SAND
SW	Well-graded SAND Well-graded SAND with GRAVEL
SP	Poorly graded SAND Poorly graded SAND with GRAVEL
SW-SM	Well-graded SAND with SILT Well-graded SAND with SILT and GRAVEL
SW-SC	Well-graded SAND with CLAY (or SILTY CLAY) Well-graded SAND with CLAY and GRAVEL (or SILTY CLAY and GRAVEL)
SP-SM	Poorly graded SAND with SILT Poorly graded SAND with SILT and GRAVEL
SP-SC	Poorly graded SAND with CLAY (or SILTY CLAY) Poorly graded SAND with CLAY and GRAVEL (or SILTY CLAY and GRAVEL)
SM	SILTY SAND SILTY SAND with GRAVEL
SC	CLAYEY SAND CLAYEY SAND with GRAVEL
SC-SM	SILTY, CLAYEY SAND SILTY, CLAYEY SAND with GRAVEL
PT	PEAT
	COBBLES COBBLES and BOULDERS BOULDERS

Graphic/Symbol	Group Names
CL	Lean CLAY Lean CLAY with SAND Lean CLAY with GRAVEL SANDY lean CLAY SANDY lean CLAY with GRAVEL GRAVELLY lean CLAY GRAVELLY lean CLAY with SAND
CL-ML	SILTY CLAY SILTY CLAY with SAND SILTY CLAY with GRAVEL SANDY SILTY CLAY SANDY SILTY CLAY with GRAVEL GRAVELLY SILTY CLAY GRAVELLY SILTY CLAY with SAND
ML	SILT SILT with SAND SILT with GRAVEL SANDY SILT SANDY SILT with GRAVEL GRAVELLY SILT GRAVELLY SILT with SAND
OL	ORGANIC lean CLAY ORGANIC lean CLAY with SAND ORGANIC lean CLAY with GRAVEL SANDY ORGANIC lean CLAY SANDY ORGANIC lean CLAY with GRAVEL GRAVELLY ORGANIC lean CLAY GRAVELLY ORGANIC lean CLAY with SAND
OL	ORGANIC SILT ORGANIC SILT with SAND ORGANIC SILT with GRAVEL SANDY ORGANIC SILT SANDY ORGANIC SILT with GRAVEL GRAVELLY ORGANIC SILT GRAVELLY ORGANIC SILT with SAND
CH	Fat CLAY Fat CLAY with SAND Fat CLAY with GRAVEL SANDY fat CLAY SANDY fat CLAY with GRAVEL GRAVELLY fat CLAY GRAVELLY fat CLAY with SAND
MH	Elastic SILT Elastic SILT with SAND Elastic SILT with GRAVEL SANDY elastic SILT SANDY elastic SILT with GRAVEL GRAVELLY elastic SILT GRAVELLY elastic SILT with SAND
OH	ORGANIC fat CLAY ORGANIC fat CLAY with SAND ORGANIC fat CLAY with GRAVEL SANDY ORGANIC fat CLAY SANDY ORGANIC fat CLAY with GRAVEL GRAVELLY ORGANIC fat CLAY GRAVELLY ORGANIC fat CLAY with SAND
OH	ORGANIC elastic SILT ORGANIC elastic SILT with SAND ORGANIC elastic SILT with GRAVEL SANDY ORGANIC elastic SILT SANDY ORGANIC elastic SILT with GRAVEL GRAVELLY ORGANIC elastic SILT GRAVELLY ORGANIC elastic SILT with SAND
OL/OH	ORGANIC SOIL ORGANIC SOIL with SAND ORGANIC SOIL with GRAVEL SANDY ORGANIC SOIL SANDY ORGANIC SOIL with GRAVEL GRAVELLY ORGANIC SOIL GRAVELLY ORGANIC SOIL with SAND

FIELD AND LABORATORY TESTING

- (C) Consolidation (ASTM D 2435)
- (CL) Collapse Potential (ASTM D 5333)
- (CP) Compaction Curve (CTM 216)
- (CR) Corrosivity Testing (CTM 643, CTM 422, CTM 417)
- (CU) Consolidated Undrained Triaxial (ASTM D 4767)
- (DS) Direct Shear (ASTM D 3080)
- (EI) Expansion Index (ASTM D 4829)
- (M) Moisture Content (ASTM D 2216)
- (OC) Organic Content-% (ASTM D 2974)
- (P) Permeability (CTM 220)
- (PA) Particle Size Analysis (ASTM D 422)
- (PI) Plasticity Index (AASHTO T 90) Liquid Limit (AASHTO T 89)
- (PL) Point Load Index (ASTM D 5731)
- (PM) Pressure Meter
- (PP) Pocket Penetrometer
- (R) R-Value (CTM 301)
- (SE) Sand Equivalent (CTM 217)
- (SG) Specific Gravity (AASHTO T 100)
- (SL) Shrinkage Limit (ASTM D 427)
- (SW) Swell Potential (ASTM D 4546)
- (TV) Pocket Torvane
- (UC) Unconfined Compression-Soil (ASTM D 2166) Unconfined Compression-Rock (ASTM D 2938)
- (UU) Unconsolidated Undrained Triaxial (ASTM D 2850)
- (UW) Unit Weight (ASTM D 4767)
- (VS) Vane Shear (AASHTO T 223)

APPARENT DENSITY OF COHESIONLESS SOILS

Description	SPT N_{60} (Blows / 12 inches)
Very loose	0 - 4
Loose	5 - 10
Medium Dense	11 - 30
Dense	31 - 50
Very Dense	> 50

MOISTURE

Description	Criteria
Dry	Absence of moisture, dusty, dry to the touch
Moist	Damp but no visible water
Wet	Visible free water, usually soil is below water table

PERCENT OR PROPORTION OF SOILS

Description	Criteria
Trace	Particles are present but estimated to be less than 5%
Few	5 to 10%
Little	15 to 25%
Some	30 to 45%
Mostly	50 to 100%

PARTICLE SIZE

Description		Size
Boulder		> 12"
Cobble		3" to 12"
Gravel	Coarse	3/4" to 3"
	Fine	No. 4 to 3/4"
Sand	Coarse	No. 10 to No. 4
	Medium	No. 40 to No. 10
	Fine	No. 200 to No. 40

ENGINEERING SERVICES

GEOTECHNICAL SERVICES
PREPARED BY:
A. Sanchez (KLEINFELDER INC.)

STATE OF CALIFORNIA
DEPARTMENT OF TRANSPORTATION

DIVISION OF ENGINEERING SERVICES
STRUCTURE DESIGN
DESIGN BRANCH 3

BRIDGE NO. 05-0028
POST MILE 68.5

TRINITY RIVER BRIDGE (SCOUR RETROFIT)
LOG OF TEST BORINGS 6 OF 9

GS LOTB SOIL LEGEND

ORIGINAL SCALE IN INCHES FOR REDUCED PLANS 0 1 2 3

CU 02243
EA 2C9901

DISREGARD PRINTS BEARING EARLIER REVISION DATES → 10-13-09 11-10-09

REVISION DATES

SHEET 22 OF 25

FILE => 05-0028-x-lotb6of9.dgn

USERNAME => trmartok DATE PLOTTED => 26-AUG-2010 TIME PLOTTED => 12:55

REFERENCE: CALTRANS SOIL & ROCK LOGGING, CLASSIFICATION, AND PRESENTATION MANUAL (JUNE 2007)

DIST	COUNTY	ROUTE	POST MILES TOTAL PROJECT	SHEET No	TOTAL SHEETS
02	Tri	3	68.5,70.7	73	93

PROFESSIONAL GEOLOGIST — DATE 11-10-09

8-23-10
PLANS APPROVAL DATE

PROFESSIONAL GEOLOGIST Joseph Kaump No. 7837 Exp. 1-31-11 STATE OF CALIFORNIA

The State of California or its officers or agents shall not be responsible for the accuracy or completeness of electronic copies of this plan sheet.

KLEINFELDER INC.
3077 FITE CIR.
SACRAMENTO, CA 95827

PERCENT CORE RECOVERY (REC) & ROCK QUALITY DESIGNATION (RQD)

$$REC = \frac{\sum \text{Length of the recovered core pieces (inches)}}{\text{Total length of core run (inches)}} \times 100\%$$

$$RQD = \frac{\sum \text{Length of intact core pieces} \geq 4''}{\text{Total length of core run (inches)}} \times 100\%$$

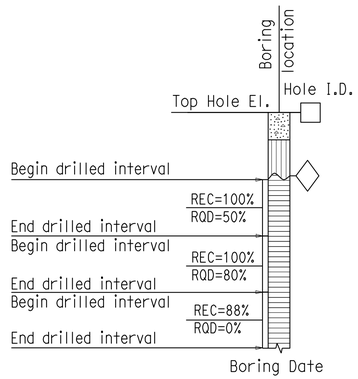

RELATIVE STRENGTH OF INTACT ROCK

Term	Uniaxial Compressive Strength (PSI)
Extremely Strong	> 30,000
Very Strong	14,500 - 30,000
Strong	7,000 - 14,500
Medium Strong	3,500 - 7,000
Weak	700 - 3,500
Very Weak	150 - 700
Extremely Weak	< 150

BEDDING SPACING

Description	Thickness / Spacing
Massive	Greater than 10 ft
Very thickly bedded	3 to 10 ft
Thickly bedded	1 to 3 ft
Moderately bedded	3-5/8" to 1 ft
Thinly bedded	1-1/4" to 3-5/8"
Very thinly bedded	3/8" to 1-1/4"
Laminated	Less than 3/8"

LEGEND OF ROCK MATERIALS

- IGNEOUS ROCK
- SEDIMENTARY ROCK
- METAMORPHIC ROCK

ROCK HARDNESS

Description	Criteria
Extremely Hard	Specimen cannot be scratched with a pocket knife or sharp pick; can only be chipped with repeated heavy hammer blows.
Very Hard	Specimen cannot be scratched with a pocket knife or sharp pick. Breaks with repeated heavy hammer blows.
Hard	Specimen can be scratched with a pocket knife or sharp pick with difficulty (heavy pressure). Heavy hammer blows required to break specimen.
Moderately Hard	Specimen can be scratched with pocket knife or sharp pick with light or moderate pressure. Core breaks with moderate hammer blows.
Moderately Soft	Specimen can be grooved 1/6" deep with a pocket knife or sharp pick with moderate or heavy pressure. Breaks with light hammer blow or heavy manual pressure.
Soft	Specimen can be grooved or gouged easily by a pocket knife or sharp pick with light pressure, can be scratched with fingernail. Breaks with light to moderate manual pressure.
Very Soft	Specimen can be readily indented, grooved or gouged with fingernail, or carved with a pocket knife. Breaks with light manual pressure.

FRACTURE DENSITY

Description	Observed Fracture Density
Unfractured	No fractures.
Very slightly fractured	Lengths greater than 3 feet.
Slightly fractured	Lengths from 1 to 3 feet with few lengths less than 1 foot or greater than 3 feet.
Moderately fractured	Lengths mostly in 4" to 1 foot range with most lengths about 8"
Intensely fractured	Lengths average from 1 to 4" with scattered fragmented intervals with lengths less than 4"
Very intensely fractured	Mostly chips and fragments with a few scattered short core lengths.

Combination descriptors (such as "Very intensely to intensely fractured") are used where equal distribution of both fracture density characteristics is present over a significant interval or exposure, or where characteristics are "in between" the descriptor definitions. Only two adjacent descriptors may be combined.

WEATHERING DESCRIPTORS FOR INTACT ROCK

Description	Diagnostic features					General Characteristics
	Chemical Weathering-Discoloration and/or oxidation		Mechanical Weathering-Grain boundary conditions (disaggregation) primarily for granitics and some coarse-grained sediments	Texture and Solutioning		
	Body of Rock	Fracture Surfaces		Texture	Solutioning	
Fresh	No discoloration, not oxidized.	No discoloration or oxidation.	No separation, intact (tight).	No change.	No solutioning.	Hammer rings when crystalline rocks are struck.
Slightly Weathered	Discoloration or oxidation is limited to surface of, or short distance from, fractures; some feldspar crystals are dull.	Minor to complete discoloration or oxidation of most surfaces.	No visible separation, intact (tight).	Preserved.	Minor leaching of some soluble minerals may be noted.	Hammer rings when crystalline rocks are struck. Body of rock not weakened.
Moderately Weathered	Discoloration or oxidation extends from fractures usually throughout; Fe-Mg minerals are "rusty," feldspar crystals are "cloudy."	All fracture surfaces are discolored or oxidized.	Partial separation of boundaries visible.	Generally preserved.	Soluble minerals may be mostly leached.	Hammer does not ring when rock is struck. Body of rock is slightly weakened.
Intensely Weathered	Discoloration or oxidation throughout; all feldspars and Fe-Mg minerals are altered to clay to some extent; or chemical alteration produces in-situ disaggregation, see grain boundary conditions.	All fracture surfaces are discolored or oxidized, surfaces friable.	Partial separation, rock is friable; in semiarid conditions granitics are disaggregated.	Texture altered by chemical disintegration (hydration, argillation).	Leaching of soluble minerals may be complete.	Dull sound when struck with hammer, usually can be broken with moderate to heavy manual pressure or by light hammer blow without reference to planes of weakness such as incipient or hairline fractures, or veinlets. Rock is significantly weakened.
Decomposed	Discolored or oxidized throughout, but resistant minerals such as quartz may be unaltered; all feldspars and Fe-Mg minerals are completely altered to clay.		Complete separation of grain boundaries (disaggregated).	Resembles a soil, partial or complete remnant rock structure may be preserved; leaching of soluble minerals usually complete.		Can be granulated by hand. Resistant minerals such as quartz may be present as "stringers" or "dikes."

Combination descriptors (such as "slightly weathered to fresh") are permissible where equal distribution of both weathering characteristics is present over significant intervals or where characteristics present are "in between" the diagnostic feature. However, combination descriptors should not be used where significant, identifiable zones can be delineated. Only two adjacent descriptors may be combined. "Very intensely weathered" is the combination descriptor for "intensely weathered to decomposed."

ENGINEERING SERVICES

GEOTECHNICAL SERVICES
PREPARED BY: A. Sanchez (KLEINFELDER INC.)

STATE OF CALIFORNIA
DEPARTMENT OF TRANSPORTATION

DIVISION OF ENGINEERING SERVICES
STRUCTURE DESIGN
DESIGN BRANCH 3

BRIDGE NO. 05-0028
POST MILE 68.5

TRINITY RIVER BRIDGE (SCOUR RETROFIT)
LOG OF TEST BORINGS 7 OF 9

GS LOTB ROCK LEGEND

ORIGINAL SCALE IN INCHES FOR REDUCED PLANS 0 1 2 3

CU 02243
EA 2C9901

DISREGARD PRINTS BEARING EARLIER REVISION DATES 10-15-09 11-10-09

REVISION DATES

SHEET 23 OF 25

FILE => 05-0028-x-lotb7of9.dgn

USERNAME => trmartok DATE PLOTTED => 26-AUG-2010 TIME PLOTTED => 12:55

FED. ROAD DIV. NO.	STATE	F.A. PROJECT NO.	SHEET NO.	TOTAL SHEETS
7	CALIF.		66	

DIST.	COUNTY	ROUTE	SECTION	SHEET NO.	TOTAL SHEETS
02	TRI	3	67.8, 73.8	68	91

REGIST. ENGINEER – CIVIL ENGINEER – LICENSED ENGINEER

DATE APPROVED August 20, 1966

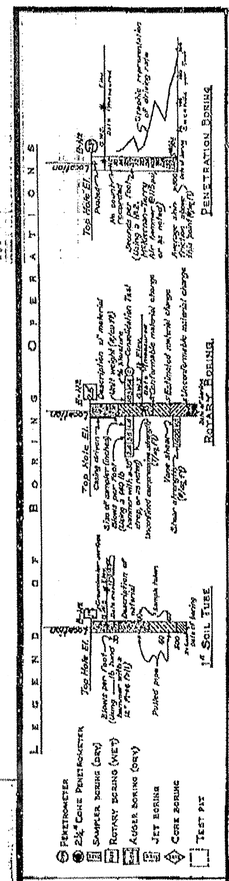

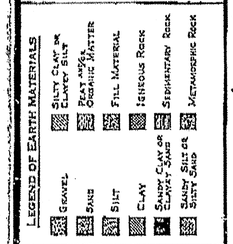

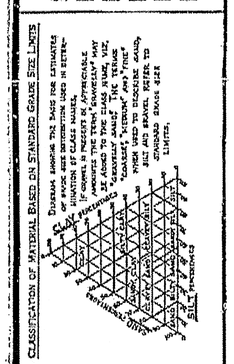

NOTE: Classification of earth material as shown on this sheet is based upon field inspection and is not to be construed to imply mechanical analysis.

FIELD STUDY	J. L. PELL	10-14-64
DRAWN	R. SCHROEDER	11-64
CHECKED	J. L. PELL	11-12-64

Approval Recommended: Robert W. Reynolds
Engineering Geologist

BRIDGE DEPARTMENT
ENGINEERING GEOLOGY SECTION

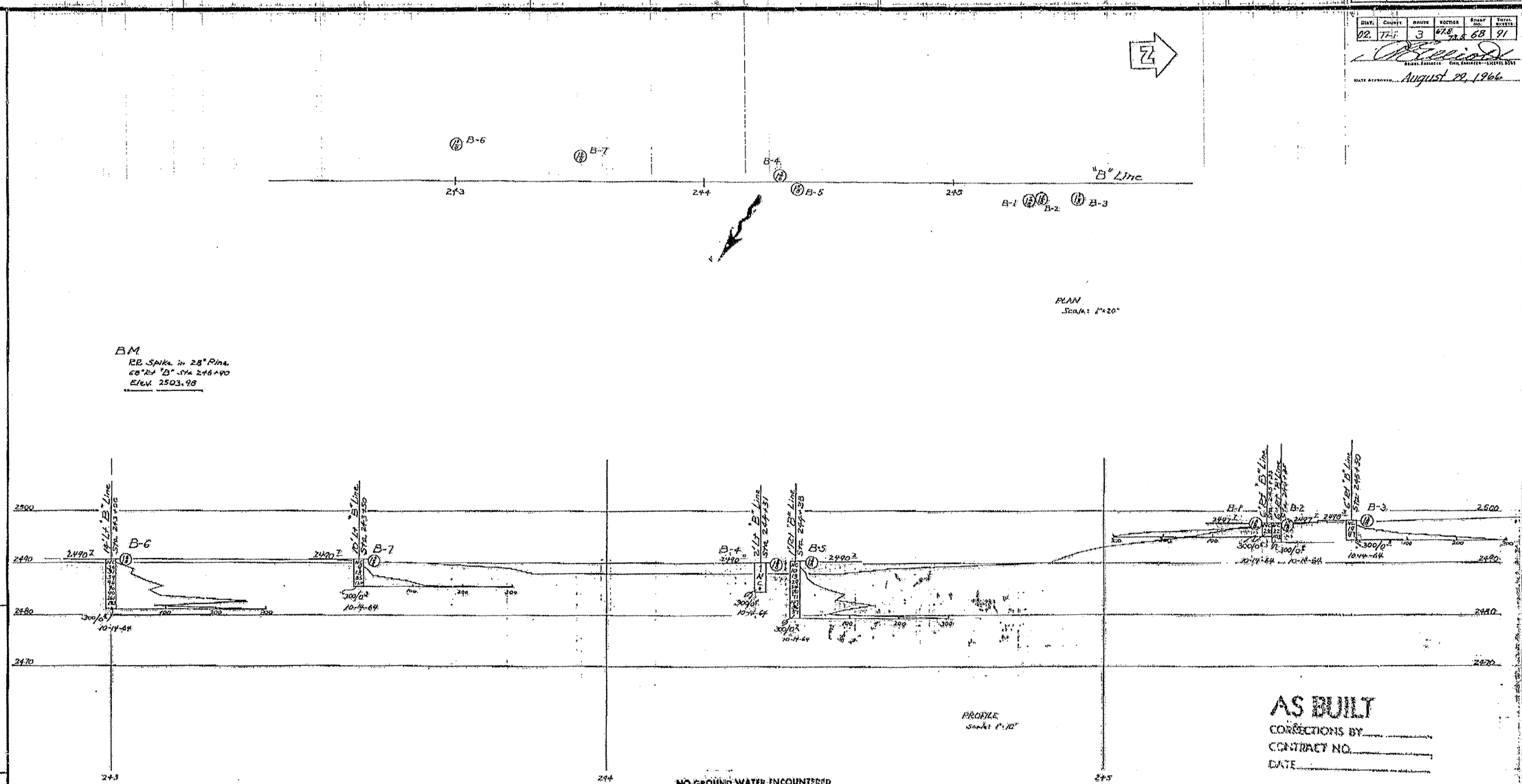

NO GROUND WATER ENCOUNTERED DURING THIS INVESTIGATION BY BRIDGE DEPT. GEOLOGY SECTION
DATE 10-64

AS BUILT
CORRECTIONS BY
CONTRACT NO.
DATE

AS BUILT PLANS
Contract No. 02-044914
Date Completed
Document No. 20000047

DIVISION OF ENGINEERING SERVICES – GEOTECHNICAL SERVICES

As-Built Log of Test Borings sheet is considered an informational document only. As such, the State of California registration seal with signature, license number and registration certificate expiration date confirm that this is a true and accurate copy of the original document. It does not attest to the accuracy or validity of the information contained in the original document. This drawing is available and presented only for the convenience of any bidder, contractor or other interested party.

DIST.	COUNTY	ROUTE	POST MILES-TOTAL PROJECT	Sheet No.	Total Sheets
02	Tri	3	68.5,70.7	74	93

Joseph Kaump 11-10-09
PROFESSIONAL GEOLOGIST DATE

PROFESSIONAL GEOLOGIST
Joseph Kaump
No. 7837
Exp. 1-31-11
PROFESSIONAL GEOLOGIST
STATE OF CALIFORNIA

TRINITY RIVER BRIDGE (SCOUR RETROFIT)

LOG OF TEST BORINGS 8 OF 9

NOTE: A COPY OF THIS LOG OF TEST BORINGS IS AVAILABLE AT OFFICE OF STRUCTURE MAINTENANCE AND INVESTIGATIONS, SACRAMENTO, CALIFORNIA

CU: 02243
EA: 2C9901

BRIDGE No. 05-0028

Sheet 24 of 25

TO ACCOMPANY PLANS DATED 8-23-10

STATE OF CALIFORNIA
DEPARTMENT OF PUBLIC WORKS
DIVISION OF HIGHWAYS

SHEET 11 OF 11

TRINITY RIVER BRIDGE

LOG OF TEST BORINGS

SCALE As Shown | BRIDGE 5-28 | PM 68.7 | DRAWING 0528-12

68

FILENAME => 05-0028-x-lotb8of9.tif

Disregard prints bearing earlier numbers → PREL. DRAWING No. PR-528-2

DIST.	COUNTY	ROUTE	POST MILES-TOTAL PROJECT	SHEET No.	TOTAL SHEETS
02	Tri	3	68.5/75.8	2	6

R. Goldenbaum
CERTIFIED ENGINEERING GEOLOGIST — NUMBER 271
DATE REVIEWED July 1, 1974

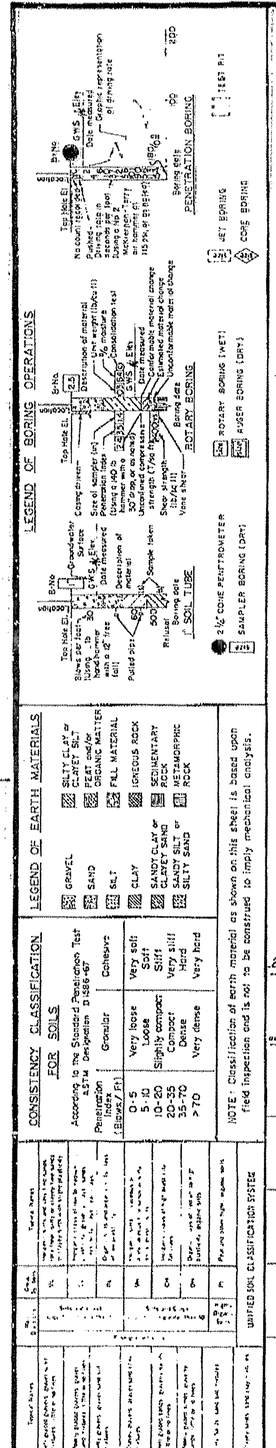

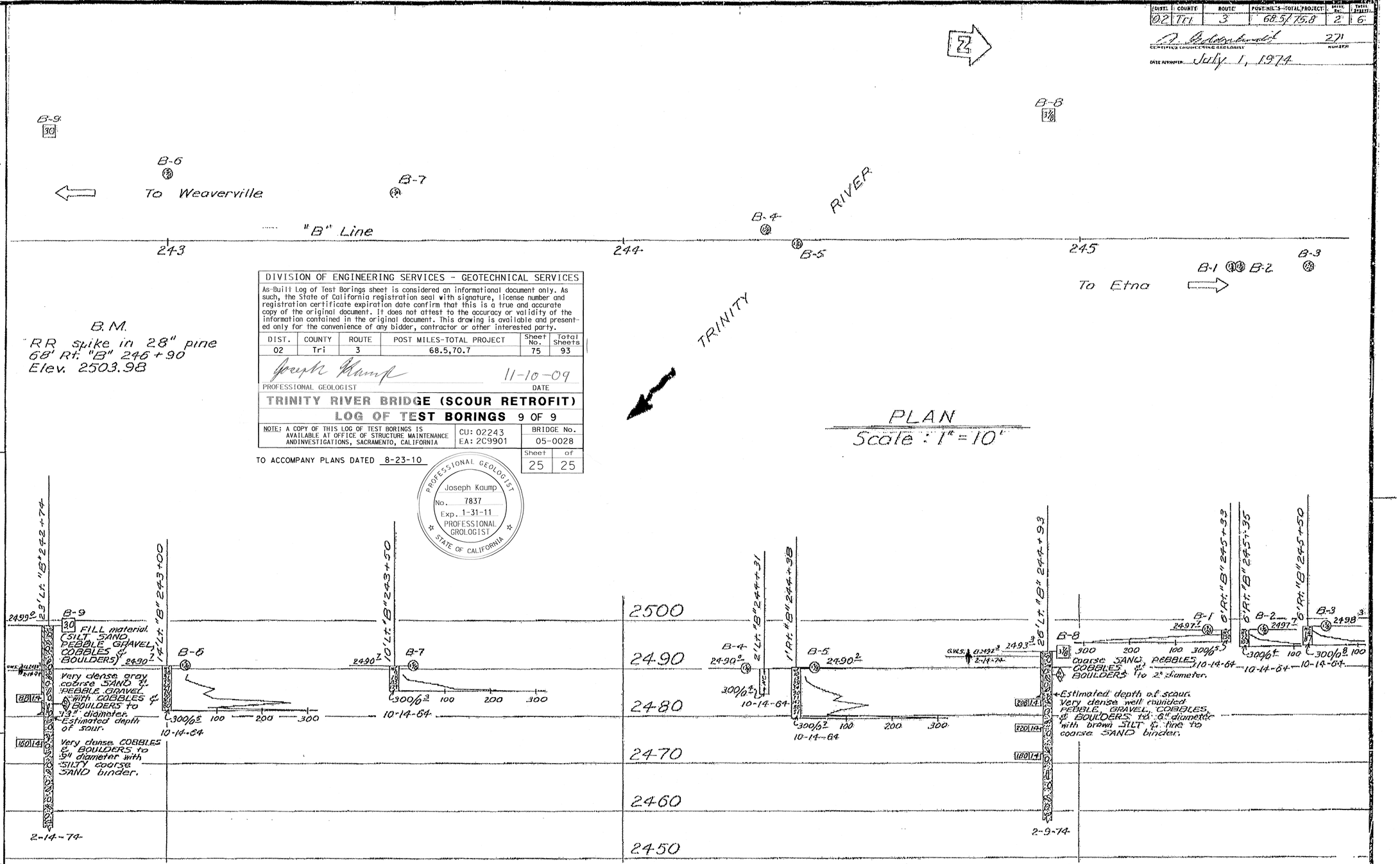

DIVISION OF ENGINEERING SERVICES - GEOTECHNICAL SERVICES

As-Built Log of Test Borings sheet is considered an informational document only. As such, the State of California registration seal with signature, license number and registration certificate expiration date confirm that this is a true and accurate copy of the original document. It does not attest to the accuracy or validity of the information contained in the original document. This drawing is available and presented only for the convenience of any bidder, contractor or other interested party.

DIST.	COUNTY	ROUTE	POST MILES-TOTAL PROJECT	Sheet No.	Total Sheets
02	Tri	3	68.5,70.7	75	93

Joseph Kaump — 11-10-09
PROFESSIONAL GEOLOGIST — DATE

TRINITY RIVER BRIDGE (SCOUR RETROFIT)
LOG OF TEST BORINGS 9 OF 9

NOTE: A COPY OF THIS LOG OF TEST BORINGS IS AVAILABLE AT OFFICE OF STRUCTURE MAINTENANCE ANDINVESTIGATIONS, SACRAMENTO, CALIFORNIA

CU: 02243
EA: 2C9901

BRIDGE No. 05-0028

Sheet 25 of 25

TO ACCOMPANY PLANS DATED 8-23-10

PROFESSIONAL GEOLOGIST — Joseph Kaump — No. 7837 — Exp. 1-31-11 — PROFESSIONAL GEOLOGIST — STATE OF CALIFORNIA

AS BUILT None
CORRECTIONS BY R. Gutn (4-2-96)
CONTRACT NO. 02-122804
DATE 11-24-75

ENGINEERING GEOLOGY SECTION

FIELD STUDY	By J. Pell 10-64, R. Wilhelms 2-74	Approval Recommended By R.C. Wilhelms, ENGINEERING GEOLOGIST
DRAWN	By S.T. Kawamura 2-21-74	
CHECKED	By R. Wilhelms 3-7-74	CERTIFIED ENGINEERING GEOLOGIST NUMBER 560

State of CALIFORNIA DEPARTMENT OF TRANSPORTATION

BRIDGE DEPARTMENT — DESIGN SECTION
PROJECT ENGINEER H.E. Shawn

BRIDGE NO. 5-28
POST MILE 68.7

TRINITY RIVER BRIDGE (FLOOD DAMAGE REPAIR)
LOG OF TEST BORINGS

ORIGINAL SCALE IN INCHES FOR REDUCED PLANS 0 1 2 3

CU 02601
WO

Disregard prints bearing earlier revision dates

REVISION DATES (PRELIMINARY STAGE ONLY)

SHEET 2 OF 2

I HEREBY CERTIFY THAT THIS IS A TRUE AND ACCURATE COPY OF THE ABOVE DOCUMENT TAKEN UNDER MY DIRECTION AND CONTROL ON THIS DATE IN SACRAMENTO, CALIFORNIA PURSUANT TO AUTHORIZATION BY THE DIRECTOR OF TRANSPORTATION.

DATE 2-23-76 SIGNATURE

FILENAME => 05-0028-x-lotb9of9.tif

2

DIST	COUNTY	ROUTE	POST MILES TOTAL PROJECT	SHEET No	TOTAL SHEETS
02	Tri	3	68.5,70.7	76	93

REGISTERED CIVIL ENGINEER 1-27-10 DATE

8-23-10
PLANS APPROVAL DATE

REGISTERED PROFESSIONAL ENGINEER
Lewis L Shen
No. 56921
Exp. 6-30-11
CIVIL
STATE OF CALIFORNIA

The State of California or its officers or agents shall not be responsible for the accuracy or completeness of electronic copies of this plan sheet.

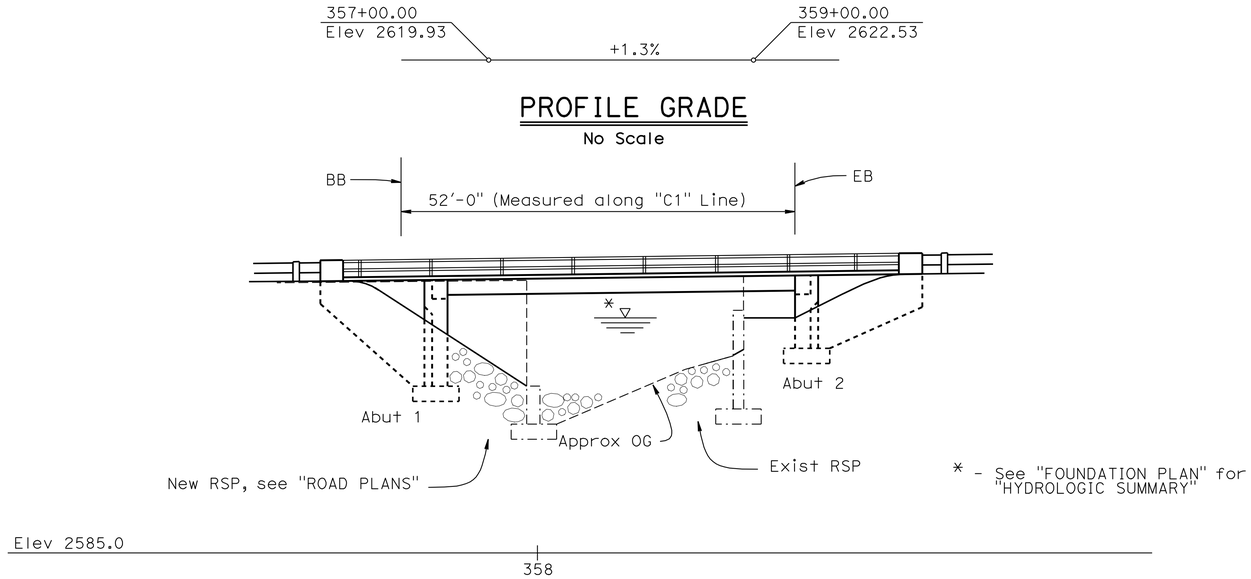

PROFILE GRADE

No Scale

ELEVATION

1" = 10'

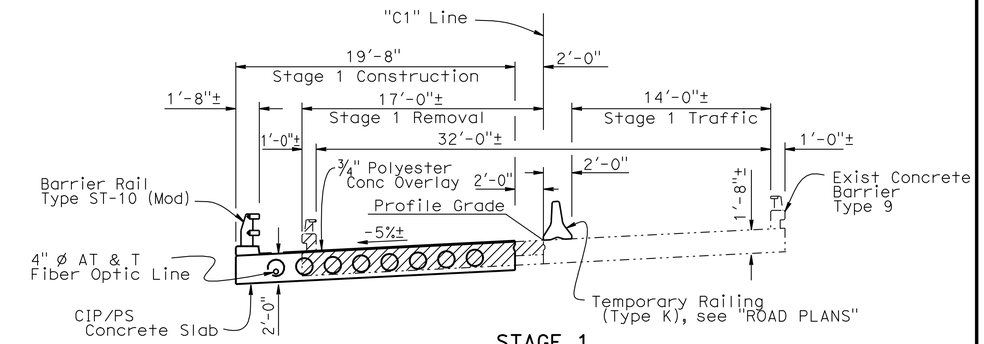

STAGE 1

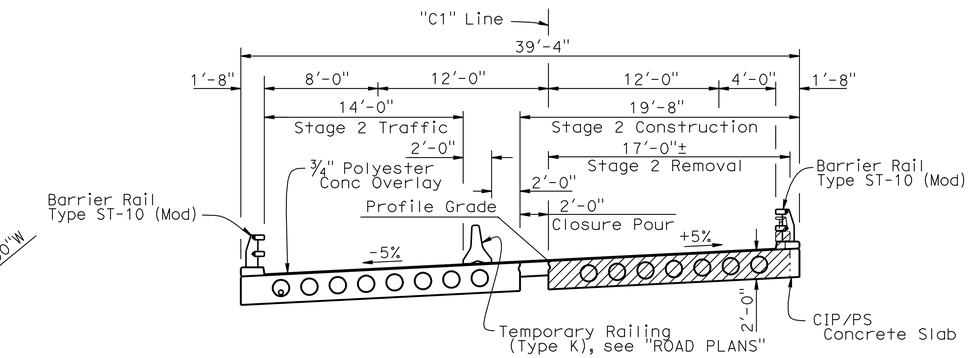

STAGE 2

TYPICAL SECTION

3/16" = 1'-0"

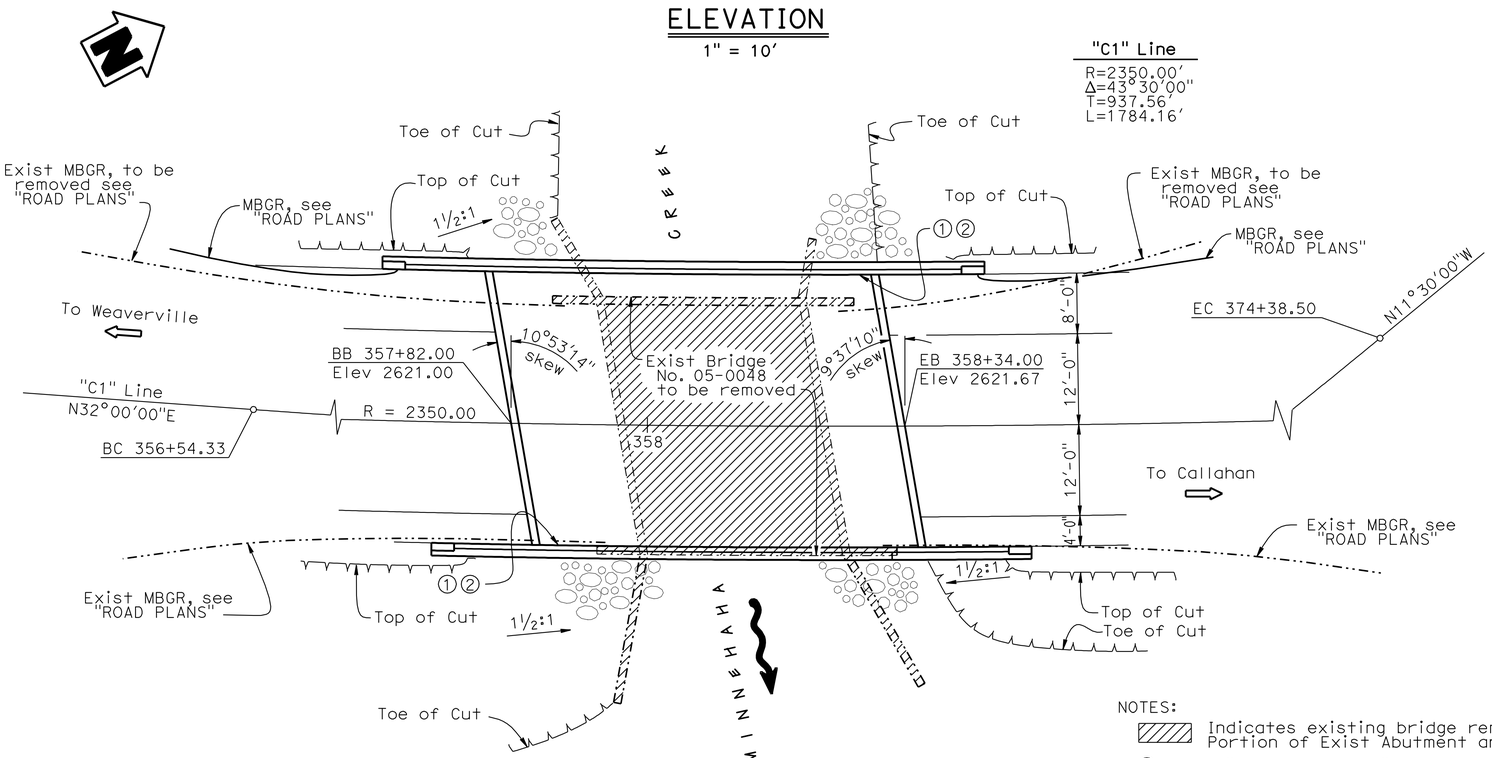

PLAN

1" = 10'

NOTE:
THE CONTRACTOR SHALL VERIFY ALL CONTROLLING FIELD DIMENSIONS BEFORE ORDERING OR FABRICATING ANY MATERIAL.

NOTES:

Indicates existing bridge removal
Portion of Exist Abutment and Wingwall to remain

① Paint "Br. No. 05-0048"

② Paint "MINNEHAHA CREEK BRIDGE"

For "GENERAL NOTES", "SPREAD FOOTING DATA" and "INDEX TO PLANS", see "INDEX TO PLANS" sheet

QUANTITIES

PREPARE CONCRETE BRIDGE DECK SURFACE	1,872	SQFT
BRIDGE REMOVAL, LOCATION A	LUMP	SUM
STRUCTURE EXCAVATION (BRIDGE)	423	CY
STRUCTURE BACKFILL (BRIDGE)	259	CY
PRESTRESSING CAST-IN-PLACE CONCRETE	LUMP	SUM
STRUCTURAL CONCRETE, BRIDGE FOOTING	55	CY
STRUCTURAL CONCRETE, BRIDGE	229	CY
FURNISH POLYESTER CONCRETE OVERLAY	117	CF
PLACE POLYESTER CONCRETE OVERLAY	1,872	SQFT
JOINT SEAL (MR 1")	73	LF
BAR REINFORCING STEEL (BRIDGE)	20,300	LB
BAR REINFORCING STEEL (EPOXY COATED) (BRIDGE)	25,000	LB
CALIFORNIA ST-10 BRIDGE RAIL (MODIFIED)	161	LF

Joseph E Downing
DESIGN ENGINEER

	BY	CHECKED
DESIGN	Mike Bergman	Art V Herrera
DETAILS	Nancy C Gwynn	Art V Herrera
QUANTITIES	Bin Sharma	Art V Herrera

LOAD & RESISTANCE FACTOR DESIGN — LIVE LOADING: HL93 W/"LOW-BOY"; PERMIT DESIGN VEHICLE

	BY	CHECKED
LAYOUT	Mike Bergman	Art V Herrera
SPECIFICATIONS	Dave Klein	PLANS AND SPECS COMPARED Dave Klein

ORIGINAL SCALE IN INCHES FOR REDUCED PLANS 0 1 2 3

STATE OF CALIFORNIA
DEPARTMENT OF TRANSPORTATION

DIVISION OF ENGINEERING SERVICES
STRUCTURE DESIGN
DESIGN BRANCH 3

CU 02243
EA 2C9901

BRIDGE NO. 05-0048
POST MILE 70.7

MINNEHAHA CREEK BRIDGE (REPLACE)
GENERAL PLAN

DISREGARD PRINTS BEARING EARLIER REVISION DATES

REVISION DATES: 7-2-08 | 7-21-08 | 7-23-08 | 8-29-08 | 6-9-09 | 8-3-09 | 10-27-09

SHEET 1 OF 18

STRUCTURES DESIGN GENERAL PLAN SHEET (ENGLISH) (REV.07-24-06)

FILE => 05-0048-a-gp.dgn

USERNAME => tfrim DATE PLOTTED => 26-AUG-2010 TIME PLOTTED => 13:28

DIST	COUNTY	ROUTE	POST MILES TOTAL PROJECT	SHEET No	TOTAL SHEETS
02	Tri	3	68.5,70.7	77	93

REGISTERED CIVIL ENGINEER 1-27-10 DATE

8-23-10
PLANS APPROVAL DATE

REGISTERED PROFESSIONAL ENGINEER
Lewis L Shen
No. 56921
Exp. 6-30-11
CIVIL
STATE OF CALIFORNIA

The State of California or its officers or agents shall not be responsible for the accuracy or completeness of electronic copies of this plan sheet.

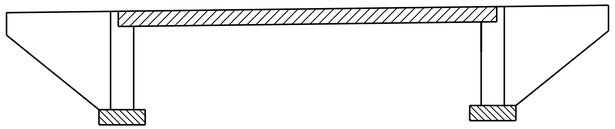

Structural Concrete, Bridge
Structural Concrete, Bridge Footing
Structural Concrete, Bridge (4000 psi at 28 days)

CONCRETE STRENGTH AND TYPE LIMITS

No Scale

SPREAD FOOTING DATA

Location	Working Stress Design(WSD)	
	Permissible Gross Contact Stress (ksf)	Allowable Gross Bearing Capacity (ksf)
Abut 1	4.0	4.0
Abut 2	4.0	4.0

INDEX TO PLANS

SHEET NO.	TITLE
1	GENERAL PLAN
2	INDEX TO PLANS
3	DECK CONTOURS
4	FOUNDATION PLAN
5	ABUTMENT LAYOUT
6	ABUTMENT DETAILS NO. 1
7	ABUTMENT DETAILS NO. 2
8	ABUTMENT DETAILS NO. 3
9	TYPICAL SECTION
10	GIRDER LAYOUT NO. 1
11	GIRDER LAYOUT NO. 2
12	CONCRETE REMOVAL DETAILS
13	LOG OF TEST BORINGS 1 OF 6
14	LOG OF TEST BORINGS 2 OF 6
15	LOG OF TEST BORINGS 3 OF 6
16	LOG OF TEST BORINGS 4 OF 6
17	LOG OF TEST BORINGS 5 OF 6
18	LOG OF TEST BORINGS 6 OF 6

GENERAL NOTES
LOAD AND RESISTANCE FACTOR DESIGN

DESIGN:
AASHTO LRFD Bridge Design Specifications, 3rd edition with the 2005 Interims and the California Amendments v 3.06.01

SEISMIC DESIGN:
Caltrans Seismic Design Criteria (SDC), Version 1.4 dated June 2006

DEADLOAD:
Includes 9.4 psf for Polyester Concrete Overlay

LIVE LOADING:
HL93 and permit design load.

SEISMIC LOADING:
Soil profile type C
Magnitude group M=7.0 ± 0.25
Peak Rock Acceleration 0.2g

REINFORCED CONCRETE:
fy = 60 ksi
f'c = 3.6 ksi
n = 8

PRESTRESSED CONCRETE: See "PRESTRESSING NOTES", "GIRDER LAYOUT NO. 2" sheet

STANDARD PLANS DATED MAY 2006

	A10A	ACRONYMS AND ABBREVIATIONS (SHEET 1 OF 2)
	A10B	ACRONYMS AND ABBREVIATIONS (SHEET 2 OF 2)
	A10C	SYMBOLS (SHEET 1 OF 2)
	A10D	SYMBOLS (SHEET 2 OF 2)
	A62C	LIMITS OF PAYMENT FOR EXCAVATION AND BACKFILL BRIDGE
	B0-1	BRIDGE DETAILS
	B0-3	BRIDGE DETAILS
	B0-5	BRIDGE DETAILS
	B0-13	BRIDGE DETAILS
RSP	B6-21	JOINT SEALS (MAXIMUM MOVEMENT RATING = 2")
	B7-10	UTILITY OPENING BOX GIRDER
	B8-5	CAST-IN-PLACE PRESTRESSED GIRDER DETAILS
RSP	B11-68	CALIFORNIA ST-10 BRIDGE RAIL (SHEET 1 OF 3)
	B11-69	CALIFORNIA ST-10 BRIDGE RAIL (SHEET 2 OF 3)
	B11-70	CALIFORNIA ST-10 BRIDGE RAIL (SHEET 3 OF 3)

STANDARD PLAN SHEET NO.
DETAIL NO.

DESIGN	BY Mike Bergman	CHECKED Art V Herrera
DETAILS	BY Shadi Motalebi	CHECKED Art V Herrera
QUANTITIES	BY Bin Sharma	CHECKED Art V Herrera

STATE OF CALIFORNIA
DEPARTMENT OF TRANSPORTATION

DIVISION OF ENGINEERING SERVICES
STRUCTURE DESIGN
DESIGN BRANCH 3

BRIDGE NO. 05-0048
POST MILE 70.7

MINNEHAHA CREEK BRIDGE (REPLACE)
INDEX TO PLANS

STRUCTURES DESIGN DETAIL SHEET (ENGLISH) (REV. 10/25/05)

ORIGINAL SCALE IN INCHES FOR REDUCED PLANS 0 1 2 3

CU 02243
EA 2C9901

DISREGARD PRINTS BEARING EARLIER REVISION DATES

REVISION DATES: 6-9-09 8-3-09 10-28-09

SHEET 2 OF 18

FILE => 05-0048-b-index.dgn

USERNAME => rtrim DATE PLOTTED => 26-AUG-2010 TIME PLOTTED => 13:28

DIST	COUNTY	ROUTE	POST MILES TOTAL PROJECT	SHEET No	TOTAL SHEETS
02	Tri	3	68.5,70.7	78	93

REGISTERED CIVIL ENGINEER 1-27-10 DATE

8-23-10
PLANS APPROVAL DATE

REGISTERED PROFESSIONAL ENGINEER
Lewis L Shen
No. 56921
Exp. 6-30-11
CIVIL
STATE OF CALIFORNIA

The State of California or its officers or agents shall not be responsible for the accuracy or completeness of electronic copies of this plan sheet.

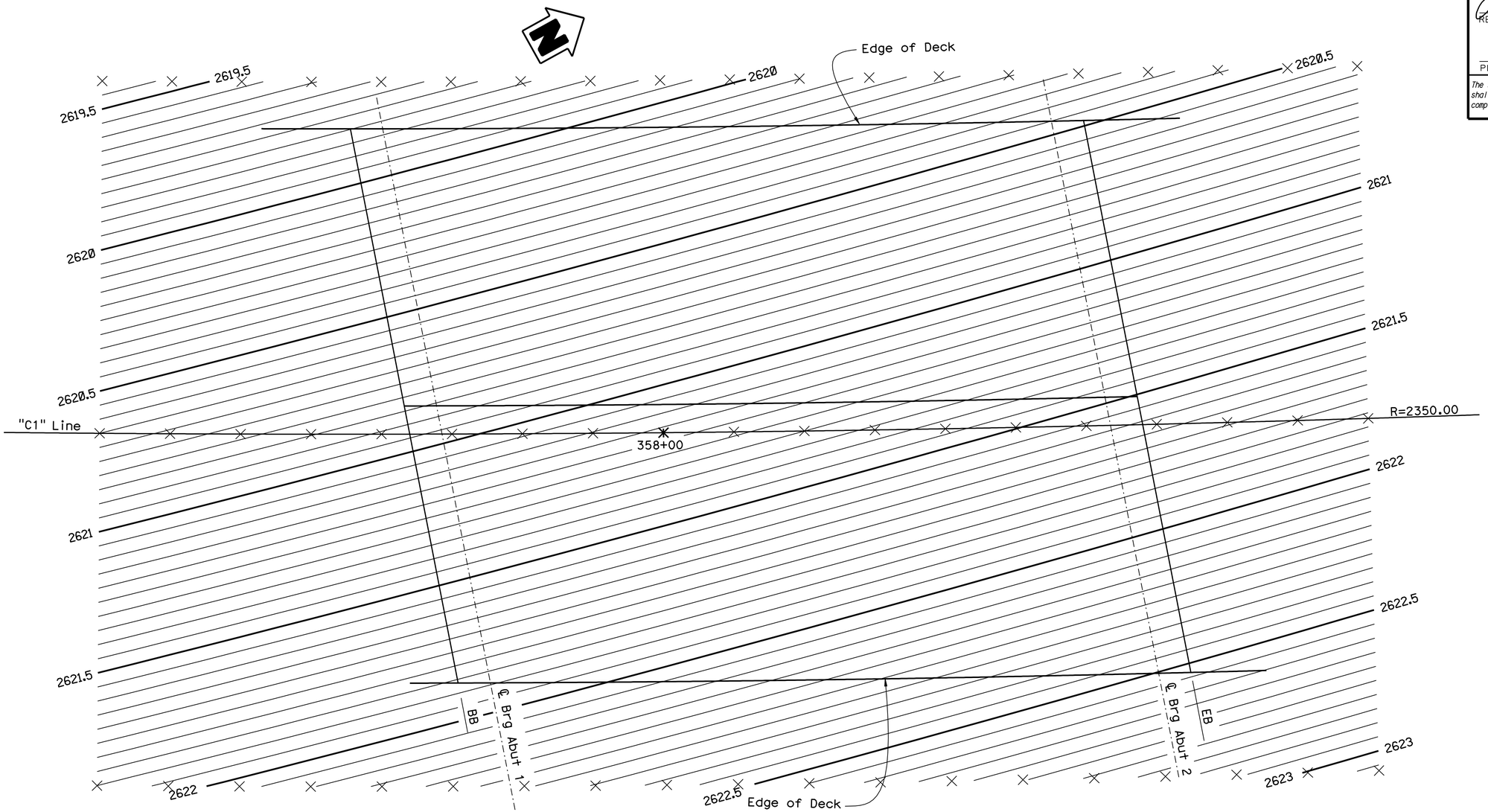

PLAN

1/4" = 1'-0"

NOTES:

Top of polyester concrete overlay shall match the profile grade. The contours shown are for top of concrete deck and have been adjusted by lowering 3/4" from the profiles grade

Contours are at 0.05' intervals

× = 5' intervals along station line

Contours do not include camber

	BY	CHECKED
DESIGN	Mike Bergman	Art V Herrera
DETAILS	SMotalebi/JChlubna	Art V Herrera
QUANTITIES	Bin Sharma	Art V Herrera

STATE OF CALIFORNIA
DEPARTMENT OF TRANSPORTATION

DIVISION OF ENGINEERING SERVICES
STRUCTURE DESIGN
DESIGN BRANCH 3

BRIDGE NO. 05-0048
POST MILE 70.7

MINNEHAHA CREEK BRIDGE (REPLACE)
DECK CONTOURS

STRUCTURES DESIGN DETAIL SHEET (ENGLISH) (REV. 10/25/05)

ORIGINAL SCALE IN INCHES FOR REDUCED PLANS 0 1 2 3

CU 02243
EA 2C9901

DISREGARD PRINTS BEARING EARLIER REVISION DATES

REVISION DATES: 6-9-08 | 7-1-09 | 7-15-09 | 10-28-09

SHEET 3 OF 18

FILE => 05-0048-d-dc01.dgn

USERNAME => trrlm DATE PLOTTED => 26-AUG-2010 TIME PLOTTED => 13:28

DIST	COUNTY	ROUTE	POST MILES TOTAL PROJECT	SHEET No	TOTAL SHEETS
02	Tri	3	68.5,70.7	79	93

REGISTERED CIVIL ENGINEER 1-27-10 DATE

8-23-10
PLANS APPROVAL DATE

REGISTERED PROFESSIONAL ENGINEER Lewis L Shen No. 56921 Exp. 6-30-11 CIVIL STATE OF CALIFORNIA

The State of California or its officers or agents shall not be responsible for the accuracy or completeness of electronic copies of this plan sheet.

CURVE DATA

No.	R	Δ	T	L
(A)	2350.00	43°30'00"	937.56	1784.16

NOTE:

Indicates Bottom of Footing Elevation

SURVEY CONTROL

5-135-0.76 GPS (Not Shown)
Fnd 2¼" CADT Brass Disk/IP in Conc.
530.61 Ft From the End of "C1" Line ℄ Rte 3
Sta. 378+35.30 Bearing N73°09'04"W
N 2,295,870.97
E 6,368,455.28
Elev. = 2644.93

3-Tri-70.32 (Not Shown)
Fnd 3½" CSRC Alum. Disk in Well
50.01 Lt "C1" Line ℄ Rte 3
Sta. 337+83.38
N 2,292,054.34
E 6,367,698.45
Elev. = 2596.28

Bridge # 05-0048 Location (Calculated PN Points)

1 - 15.90 Ft. Lt. "C1" Line ℄ Rte 3, Sta.357+92.66, Elev.=2620.58
2 - 15.86 Ft. Lt. "C1" Line ℄ Rte 3, Sta.358+21.45, Elev.=2620.82
3 - 16.08 Ft. Rt. "C1" Line ℄ Rte 3, Sta.358+27.16, Elev.=2622.48
4 - 15.92 Ft. Rt. "C1" Line ℄ Rte 3, Sta.357+98.56, Elev.=2622.09

HYDROLOGIC SUMMARY

DRAINAGE AREA: 3.75 SQUARE MILES

	DESIGN FLOOD	BASE FLOOD
FREQUENCY (YEARS)	50	100
EXISTING WATER SURFACE ELEV. (FEET)	2614.36	2615.17
DISCHARGE (CUBIC FEET PER SECOND)	1760	2170

FLOOD PLAIN DATA ARE BASED UPON INFORMATION AVAILABLE WHEN THE PLANS WERE PREPARED AND ARE SHOWN TO MEET FEDERAL REQUIREMENTS. THE ACCURACY OF SAID INFORMATION IS NOT WARRANTED BY THE STATE AND INTERESTED OR AFFECTED PARTIES SHOULD MAKE THEIR OWN INVESTIGATIONS.

PRELIMINARY INVESTIGATION SECTION

SCALE 1"=20'	VERT.DATUM NAVD88	PHOTOGRAMMETRY AS OF: X		
	HORZ.DATUM NAD83	SURVEYED	BY District	CHECKED BY M. Lich 07/2008
ALIGNMENT TIES Dist. Traverse Sheet		DRAFTED	BY S. Zheng 07/2008	CHECKED BY T.Zolnikova 07/2008

DESIGN	BY Mike Bergman	CHECKED Art V Herrera
DETAILS	BY Janie Chlubna	CHECKED Art V Herrera
QUANTITIES	BY Bin Sharma	CHECKED Art V Herrera

STATE OF CALIFORNIA
DEPARTMENT OF TRANSPORTATION

DIVISION OF ENGINEERING SERVICES
STRUCTURE DESIGN
DESIGN BRANCH 3

BRIDGE NO. 05-0048
POST MILE 70.7

MINNEHAHA CREEK BRIDGE (REPLACE)
FOUNDATION PLAN

STRUCTURES FOUNDATION PLAN SHEET (ENGLISH) (REV. 10/25/05)

ORIGINAL SCALE IN INCHES FOR REDUCED PLANS 0 1 2 3

CU 02243
EA 2c9901

DISREGARD PRINTS BEARING EARLIER REVISION DATES

REVISION DATES: 3/10/08 7/14/08 6-11-09 6-15-09 7-1-09 8-3-09

SHEET 4 OF 18

FILE => 05-0048-e-fp.dgn

USERNAME => tr1fim DATE PLOTTED => 26-AUG-2010 TIME PLOTTED => 13:28

DIST	COUNTY	ROUTE	POST MILES TOTAL PROJECT	SHEET No	TOTAL SHEETS
02	Tri	3	68.5,70.7	80	93

REGISTERED CIVIL ENGINEER 1-27-10 DATE

8-23-10
PLANS APPROVAL DATE

REGISTERED PROFESSIONAL ENGINEER
Lewis L Shen
No. 56921
Exp. 6-30-11
CIVIL
STATE OF CALIFORNIA

The State of California or its officers or agents shall not be responsible for the accuracy or completeness of electronic copies of this plan sheet.

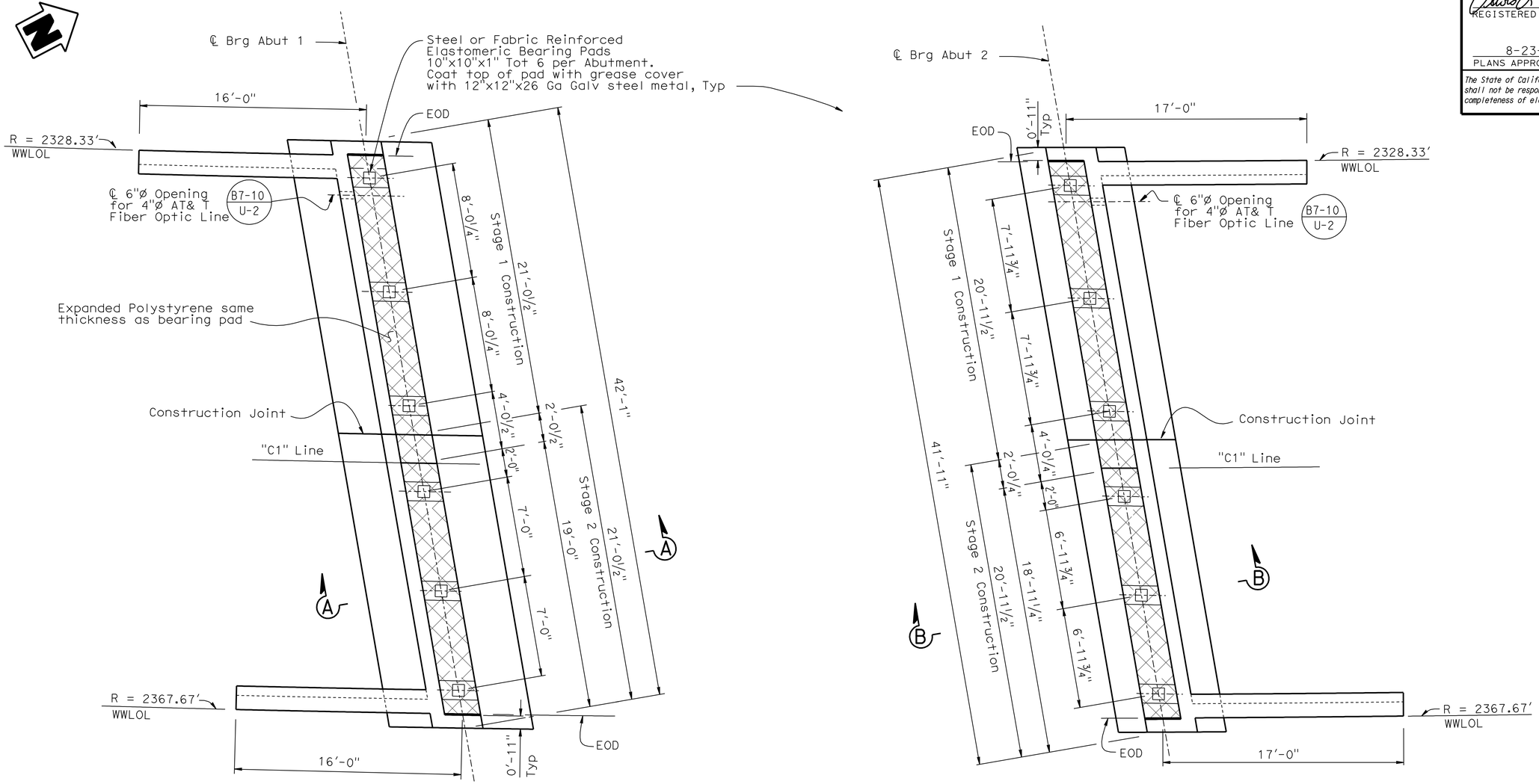

PLAN

¼" = 1'-0"

NOTES:

For "ELEVATION" view and "WINGWALL ELEVATION", see "ABUTMENT DETAILS NO. 1" sheet

For of "SECTION A-A" and "SECTION B-B", see "ABUTMENT DETAILS NO. 2" sheet

	BY	CHECKED
DESIGN	Mike Bergman	Art V Herrera
DETAILS	Shadi Motalebi	Art V Herrera
QUANTITIES	Bin Sharma	Art V Herrera

STATE OF CALIFORNIA
DEPARTMENT OF TRANSPORTATION

DIVISION OF ENGINEERING SERVICES
STRUCTURE DESIGN
DESIGN BRANCH 3

BRIDGE NO. 05-0048
POST MILE 70.7

MINNEHAHA CREEK BRIDGE (REPLACE)
ABUTMENT LAYOUT

STRUCTURES DESIGN DETAIL SHEET (ENGLISH) (REV. 10/25/05)

ORIGINAL SCALE IN INCHES FOR REDUCED PLANS 0 1 2 3

CU 02243
EA 2C9901

DISREGARD PRINTS BEARING EARLIER REVISION DATES

REVISION DATES: 5/13/09 | 6-11-09 | 6-15-09 | 7-1-09 | 8-3-09 | 10-28-09

SHEET 5 OF 18

FILE => 05-0048-f-abut-lo.dgn

USERNAME => tfrlim DATE PLOTTED => 26-AUG-2010 TIME PLOTTED => 13:28

DIST	COUNTY	ROUTE	POST MILES TOTAL PROJECT	SHEET No	TOTAL SHEETS
02	Tri	3	68.5,70.7	81	93

REGISTERED CIVIL ENGINEER 1-27-10 DATE

8-23-10
PLANS APPROVAL DATE

REGISTERED PROFESSIONAL ENGINEER
Lewis L Shen
No. 56921
Exp. 6-30-11
CIVIL
STATE OF CALIFORNIA

The State of California or its officers or agents shall not be responsible for the accuracy or completeness of electronic copies of this plan sheet.

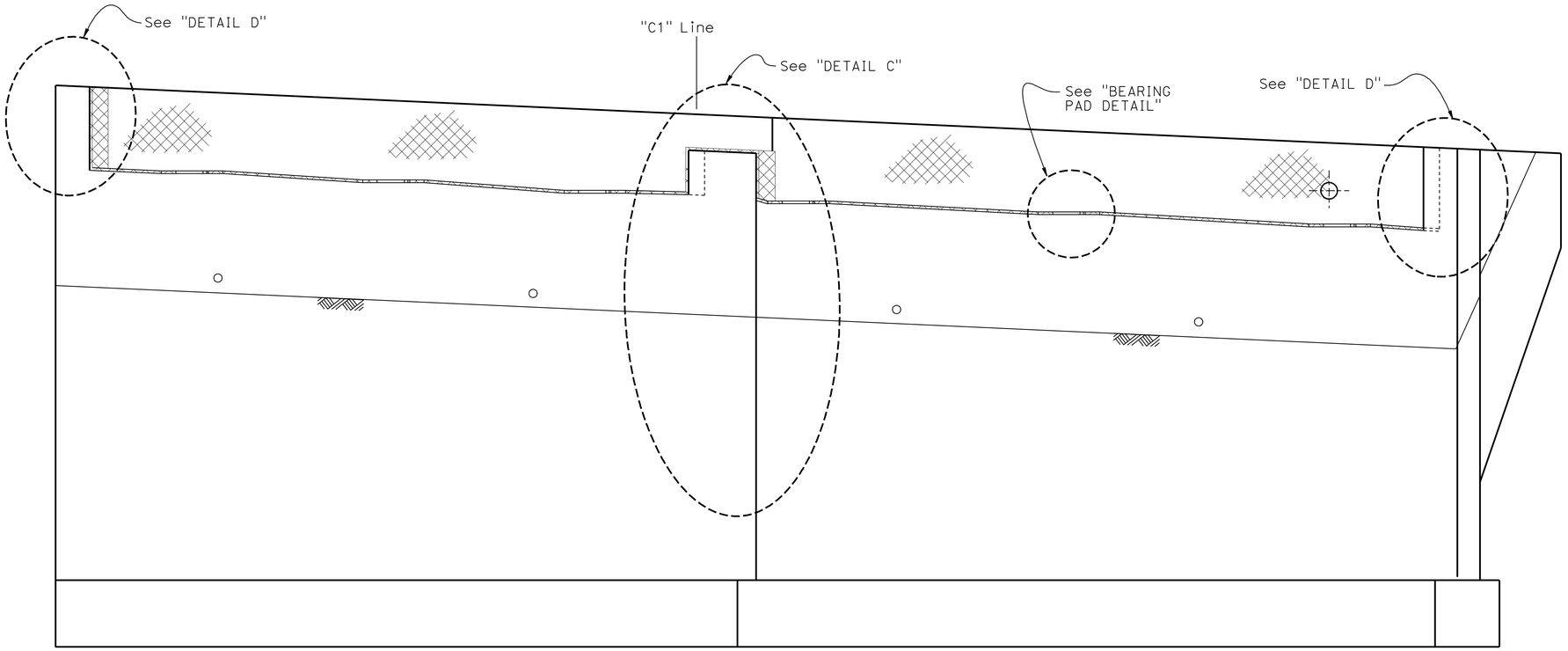

NOTE:

For "PLAN" view and details not shown, see "ABUTMENT LAYOUT" sheet

For "DETAIL C" and "DETAIL D", see "ABUTMENT DETAILS NO. 3" sheet

NOTE:
Abutment 1 shown
Abutment 2 similar

ELEVATION
½" = 1'-0"

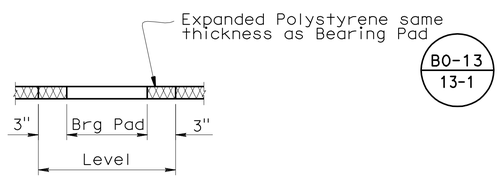

NOTE:

Detail typical at all Bearing Pad Locations

BEARING PAD DETAIL
No Scale

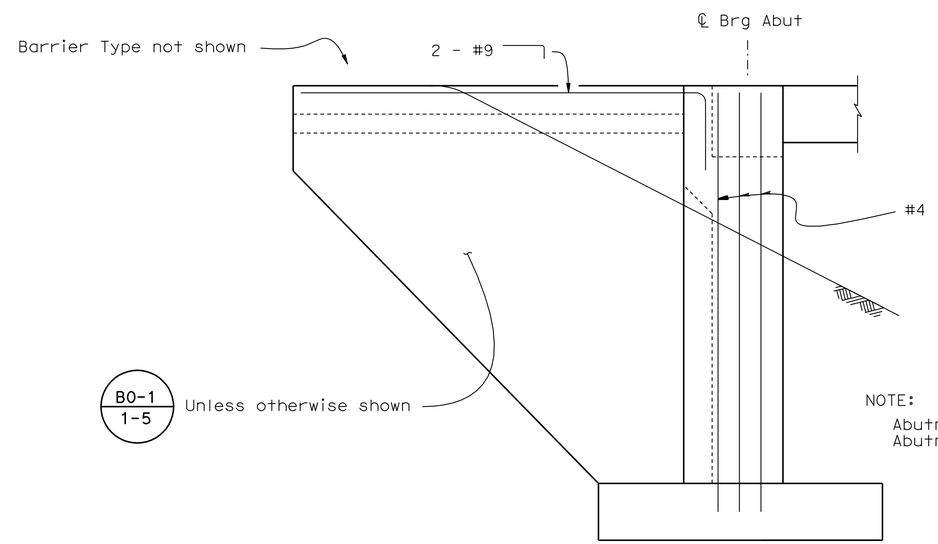

NOTE:
Abutment 1 wingwall shown
Abutment 2 wingwall similar

WINGWALL ELEVATION
⅜" = 1'-0"

DESIGN	BY Mike Bergman	CHECKED Art V Herrera	
DETAILS	BY Janie Chlubna	CHECKED X	
QUANTITIES	BY Bin Sharma	CHECKED Art V Herrera	

STATE OF CALIFORNIA
DEPARTMENT OF TRANSPORTATION

DIVISION OF ENGINEERING SERVICES
STRUCTURE DESIGN
DESIGN BRANCH 3

BRIDGE NO. 05-0048
POST MILE 70.7

MINNEHAHA CREEK BRIDGE (REPLACE)
ABUTMENT DETAILS NO. 1

STRUCTURES DESIGN DETAIL SHEET (ENGLISH) (REV. 10/25/05)

ORIGINAL SCALE IN INCHES FOR REDUCED PLANS 0 1 2 3

CU 02243
EA 2C9901

DISREGARD PRINTS BEARING EARLIER REVISION DATES

REVISION DATES: 6-16-09 8-3-09

SHEET 6 OF 18

FILE => 05-0048-g-abut01.dgn

USERNAME => rrrlim DATE PLOTTED => 26-AUG-2010 TIME PLOTTED => 13:28

DIST	COUNTY	ROUTE	POST MILES TOTAL PROJECT	SHEET No	TOTAL SHEETS
02	Tri	3	68.5,70.7	82	93

REGISTERED CIVIL ENGINEER 1-27-10 DATE

8-23-10
PLANS APPROVAL DATE

REGISTERED PROFESSIONAL ENGINEER Lewis L Shen No. 56921 Exp. 6-30-11 CIVIL STATE OF CALIFORNIA

The State of California or its officers or agents shall not be responsible for the accuracy or completeness of electronic copies of this plan sheet.

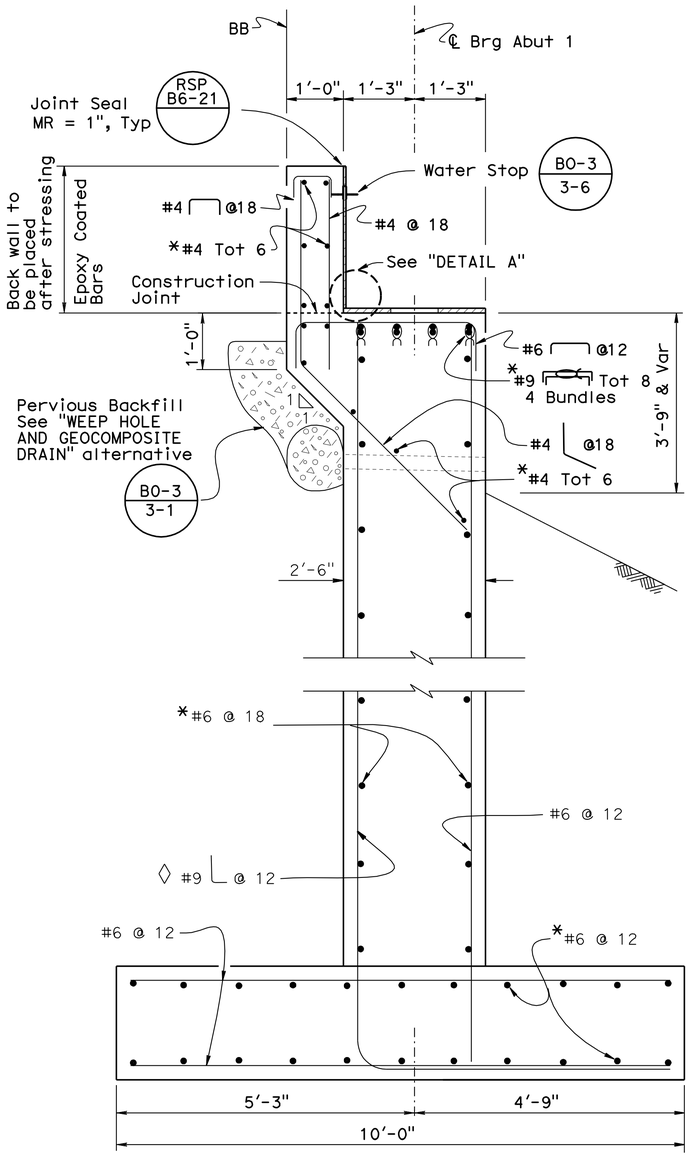

SECTION A-A

3/4" = 1'-0"

NOTE:

For location of "SECTION A-A" and "SECTION B-B", see "ABUTMENT LAYOUT" sheet

ↄ Indicates Bundled Bars

* To be mechanically spliced between stages

◊ Service Splice Allowed

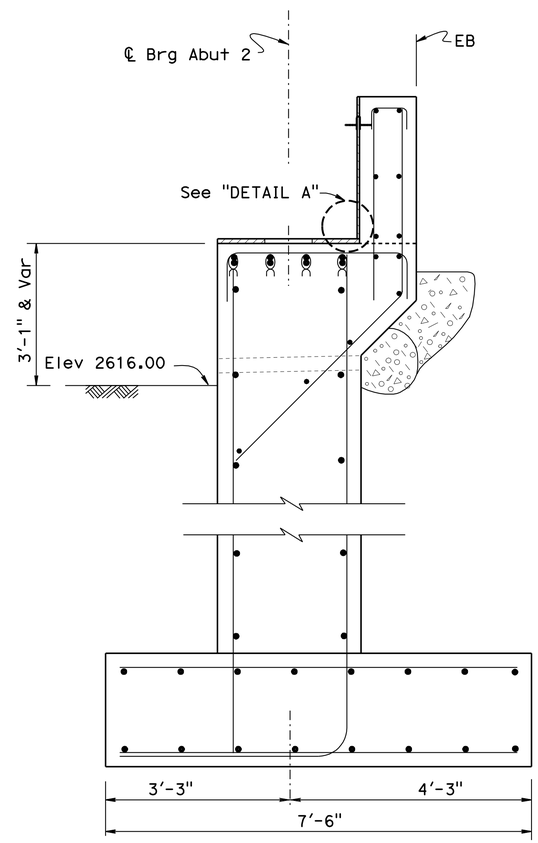

NOTE:

For details not shown see "SECTION A-A"

SECTION B-B

3/4" = 1'-0"

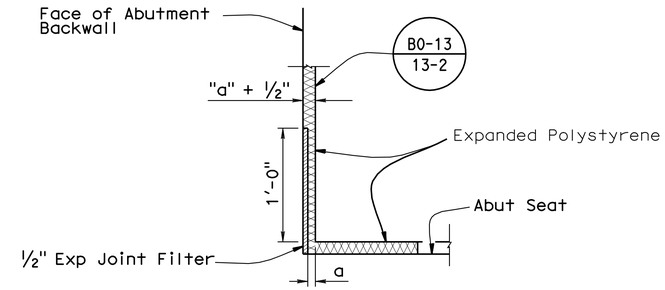

DETAIL A

No Scale

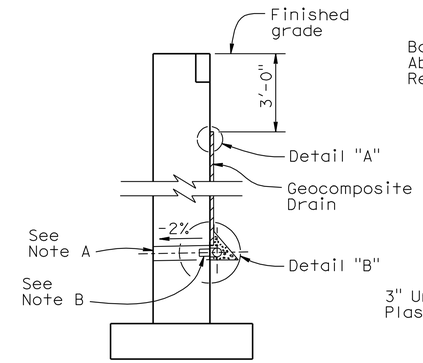

WALL SECTION

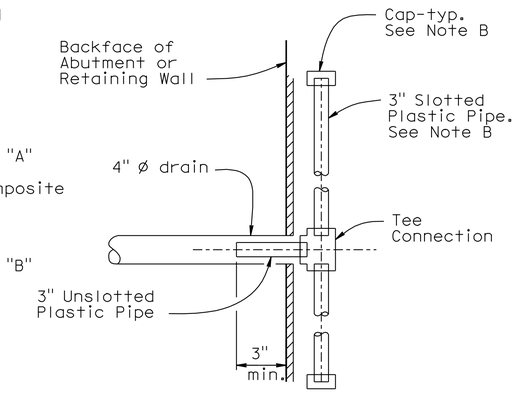

SECTION A-A

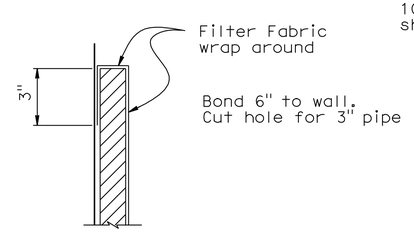

DETAIL "A"

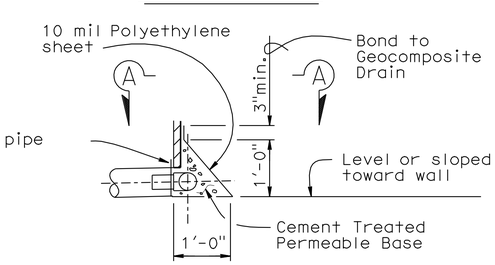

DETAIL "B"

WEEP HOLE AND GEOCOMPOSITE DRAIN

ALTERNATIVE TO BRIDGE DETAIL B0-3 / 3-1

Notes:

A. 4" ø drains at intermediate sag points and at 25' max center to center (9' c-c for Type 3 and 9'-3" c-c for Type 4 retaining walls).
For walls adjacent to sidewalks or curbs, provide 4" cast iron or asbestos cement pipe under the sidewalk to discharge through curb face.
Exposed wall drains shall be located 3"± above finished grade.

B. Geocomposite drain, cement treated permeable base, and 3"ø slotted plastic pipe continuous behind retaining wall or abutment. Cap ends of pipe. Provide "Tee" connection at each 4" ø drain.

C. Connect the low end of plastic pipe to the main outlet pipe as apprlicable.

	BY	CHECKED
DESIGN	Mike Bergman	Art V Herrera
DETAILS	SMotalebi/JChlubna	Art V Herrera
QUANTITIES	Bin Sharma	Art V Herrera

STATE OF CALIFORNIA DEPARTMENT OF TRANSPORTATION

DIVISION OF ENGINEERING SERVICES STRUCTURE DESIGN DESIGN BRANCH 3

BRIDGE NO. 05-0048
POST MILE 70.7

MINNEHAHA CREEK BRIDGE (REPLACE)
ABUTMENT DETAILS NO. 2

STRUCTURES DESIGN DETAIL SHEET (ENGLISH) (REV. 10/25/05)

ORIGINAL SCALE IN INCHES FOR REDUCED PLANS 0 1 2 3

CU 02243
EA 2C9901

DISREGARD PRINTS BEARING EARLIER REVISION DATES

REVISION DATES: 5/12/09 6-15-09 7-1-09 8-3-09 10-29-09

SHEET 7 OF 18

FILE => 05-0048-g-abut02.dgn

USERNAME => tri lm DATE PLOTTED => 26-AUG-2010 TIME PLOTTED => 13:29

DIST	COUNTY	ROUTE	POST MILES TOTAL PROJECT	SHEET No	TOTAL SHEETS
02	Tri	3	68.5,70.7	83	93

REGISTERED CIVIL ENGINEER 1-27-10 DATE

8-23-10
PLANS APPROVAL DATE

REGISTERED PROFESSIONAL ENGINEER Lewis L Shen No. 56921 Exp. 6-30-11 CIVIL STATE OF CALIFORNIA

The State of California or its officers or agents shall not be responsible for the accuracy or completeness of electronic copies of this plan sheet.

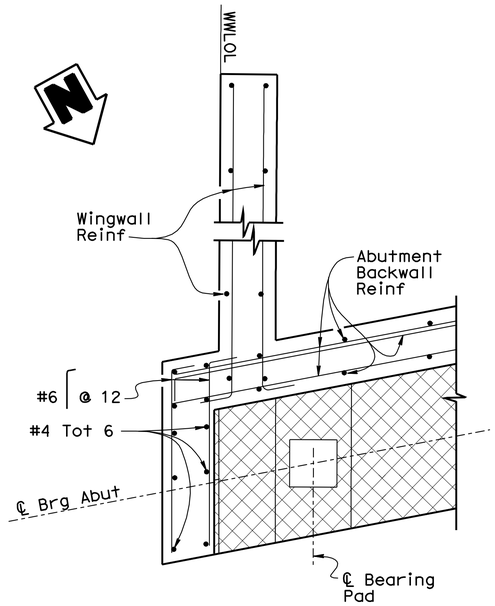

SECTION D-D
¾" = 1'-0"

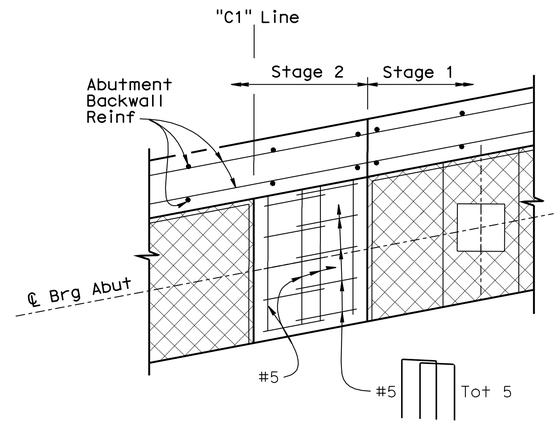

SECTION C-C
¾" = 1'-0"

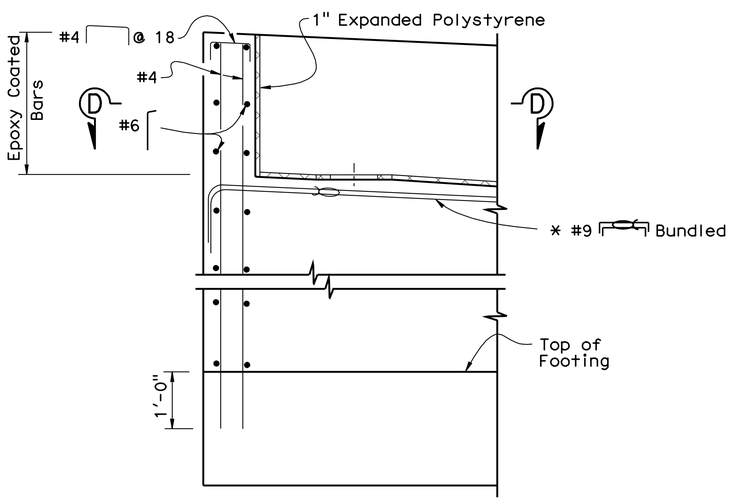

DETAIL D
¾" = 1'-0"

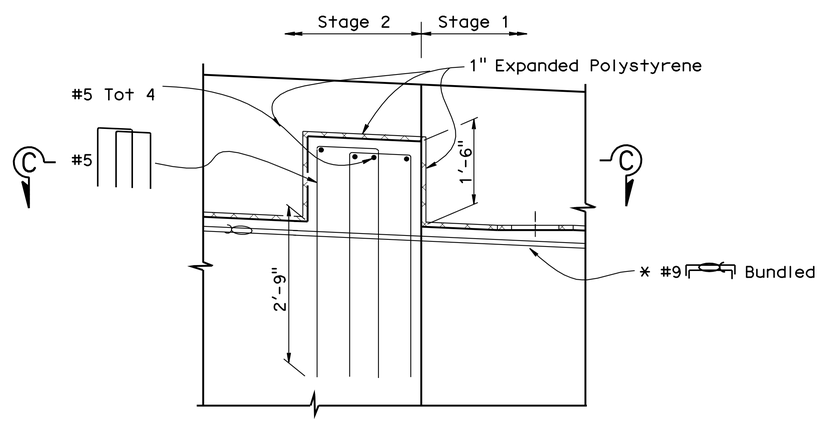

DETAIL C
¾" = 1'-0"

NOTES:

For location of "DETAIL C" and "DETAIL D", see "ABUTMENT DETAILS NO. 2" sheet

ɔ Indicates Bundled Bars

Abutment 1 Shown
Abutment 2 Similar

* To be Mechanically Spliced between stages

DESIGN	BY Mike Bergman	CHECKED Art V Herrera	
DETAILS	BY Janie Chlubna	CHECKED Art V Herrera	
QUANTITIES	BY Bin Sharma	CHECKED Art V Herrera	

STATE OF CALIFORNIA
DEPARTMENT OF TRANSPORTATION

DIVISION OF ENGINEERING SERVICES
STRUCTURE DESIGN
DESIGN BRANCH 3

BRIDGE NO. 05-0048
POST MILE 70.7

MINNEHAHA CREEK BRIDGE (REPLACE)
ABUTMENT DETAILS NO. 3

STRUCTURES DESIGN DETAIL SHEET (ENGLISH) (REV. 10/25/05)

ORIGINAL SCALE IN INCHES FOR REDUCED PLANS 0 1 2 3

CU 02243
EA 2C9901

DISREGARD PRINTS BEARING EARLIER REVISION DATES

REVISION DATES: 6-17-09 7-1-09 8-3-09 10-29-09

SHEET 8 OF 18

FILE => 05-0048-g-abut03.dgn

USERNAME => tfrim DATE PLOTTED => 26-AUG-2010 TIME PLOTTED => 13:29

DIST	COUNTY	ROUTE	POST MILES TOTAL PROJECT	SHEET No	TOTAL SHEETS
02	Tri	3	68.5,70.7	84	93

REGISTERED CIVIL ENGINEER 1-27-10 DATE

8-23-10
PLANS APPROVAL DATE

REGISTERED PROFESSIONAL ENGINEER
Lewis L Shen
No. 56921
Exp. 6-30-11
CIVIL
STATE OF CALIFORNIA

The State of California or its officers or agents shall not be responsible for the accuracy or completeness of electronic copies of this plan sheet.

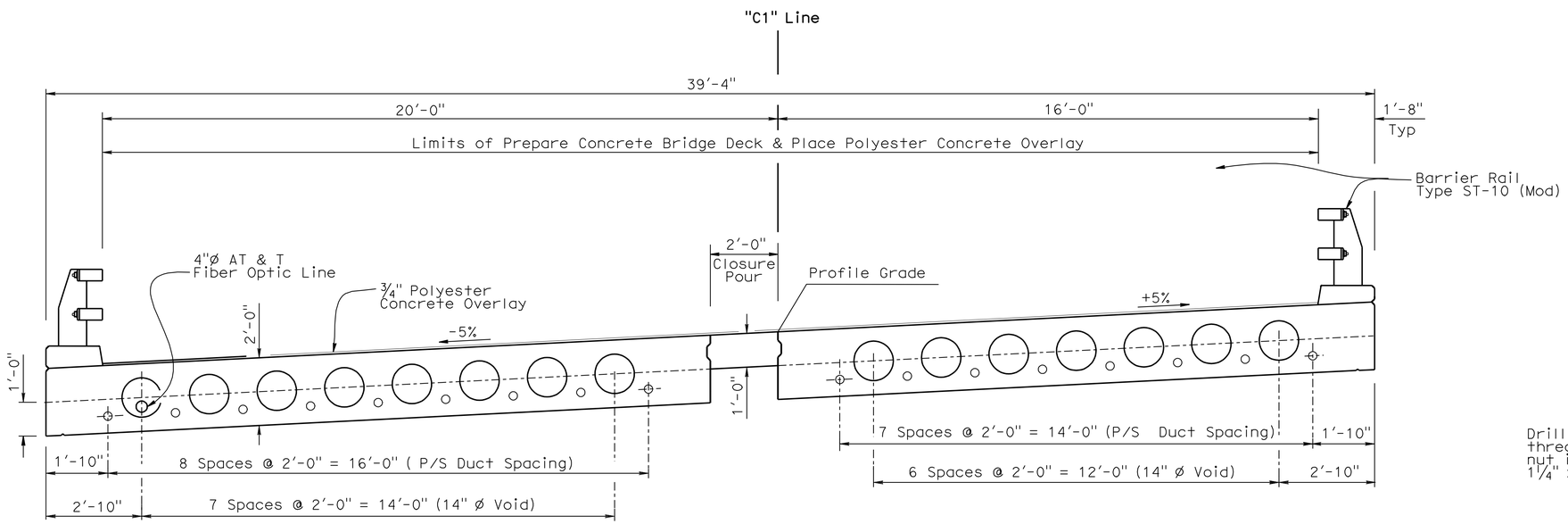

TYPICAL SECTION

1/2" = 1'-0"

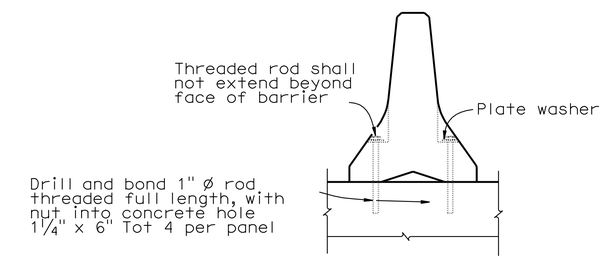

NOTE:

For Temporary Railing (Type K) location see "ROAD PLANS"

TYPE K RAILING ATTACHMENT

No Scale

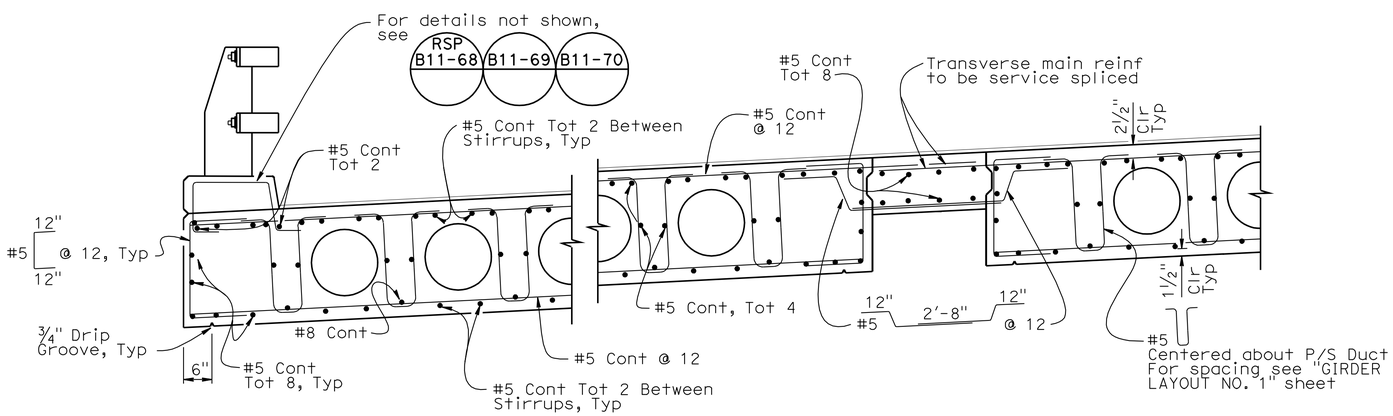

NOTE:

All bars to be Epoxy Coated

PART TYPICAL SECTION

B0-5
5-2

3/4" = 1'-0"

FALSEWORK RELEASE

Alternative 1:

Falsework shall be released as soon as permitted by the specifications. Closure pour shall not be placed sooner than 60 days after the falsework had been released.

Alternative 2:

Falsework shall not be released less than 28 days after the last concrete has been placed. Closure pour shall not be placed sooner than 14 days after the falsework has been released.

When Falsework Release Alternative 2 is used, camber values are 0.75 times those shown.

	BY	CHECKED
DESIGN	Mike Bergman	Art V Herrera
DETAILS	Shadi Motalebi	Art V Herrera
QUANTITIES	Bin Sharma	Art V Herrera

STATE OF CALIFORNIA
DEPARTMENT OF TRANSPORTATION

DIVISION OF ENGINEERING SERVICES
STRUCTURE DESIGN
DESIGN BRANCH 3

BRIDGE NO. 05-0048
POST MILE 70.7

MINNEHAHA CREEK BRIDGE (REPLACE)
TYPICAL SECTION

STRUCTURES DESIGN DETAIL SHEET (ENGLISH) (REV. 10/25/05)

ORIGINAL SCALE IN INCHES FOR REDUCED PLANS 0 1 2 3

CU 02243
EA 2C9901

DISREGARD PRINTS BEARING EARLIER REVISION DATES

REVISION DATES: 4-28-09 6-17-09 7-1-09 8-3-09 10-28-09 1-19-10

SHEET 9 OF 18

FILE => 05-0048-h-typ.dgn

USERNAME => trilim DATE PLOTTED => 26-AUG-2010 TIME PLOTTED => 13:29

DIST	COUNTY	ROUTE	POST MILES TOTAL PROJECT	SHEET No	TOTAL SHEETS
02	Tri	3	68.5,70.7	85	93

REGISTERED CIVIL ENGINEER 1-27-10 DATE

8-23-10
PLANS APPROVAL DATE

REGISTERED PROFESSIONAL ENGINEER
Lewis L Shen
No. 56921
Exp. 6-30-11
CIVIL
STATE OF CALIFORNIA

The State of California or its officers or agents shall not be responsible for the accuracy or completeness of electronic copies of this plan sheet.

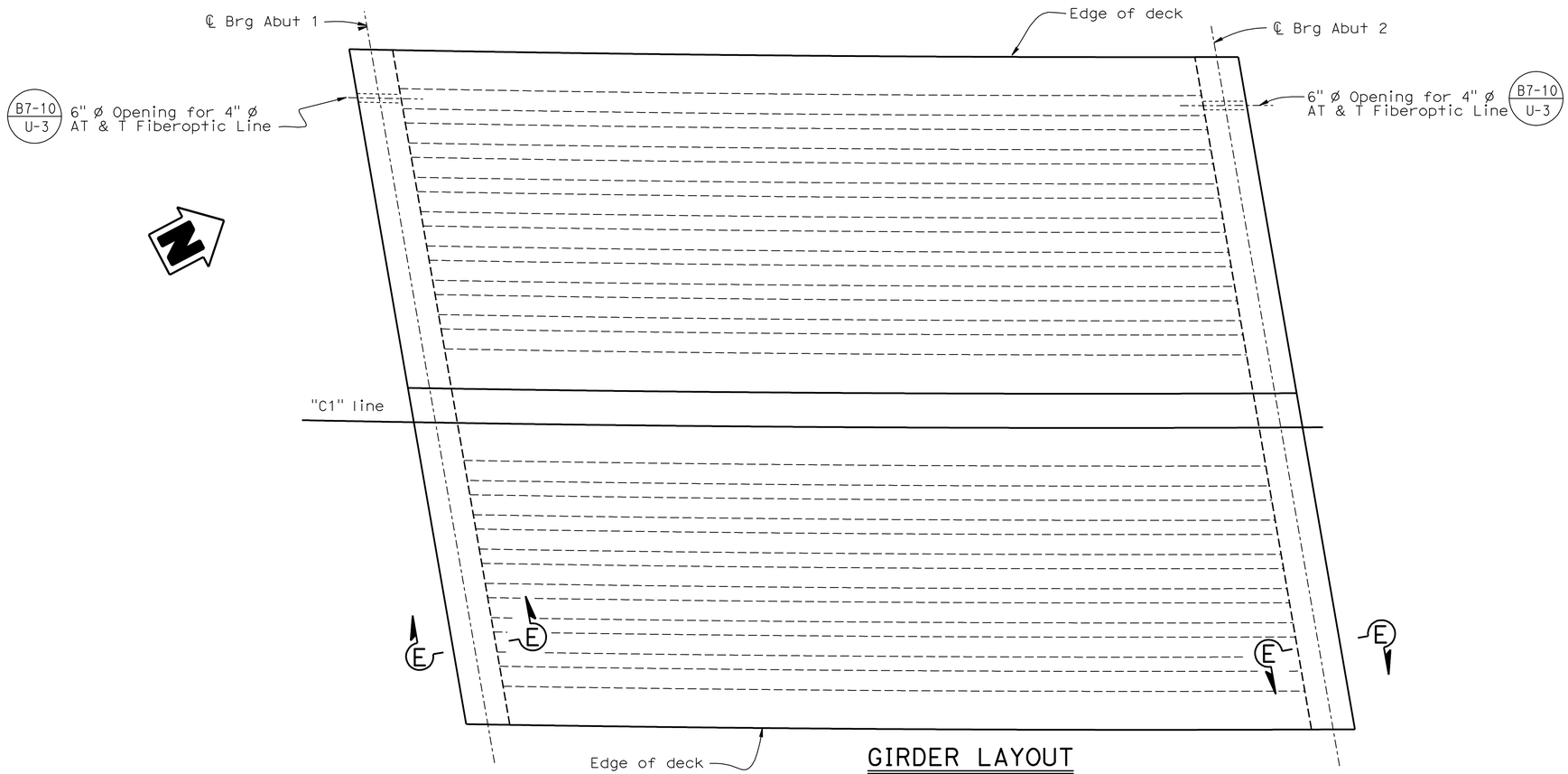

GIRDER LAYOUT

1/4" = 1'-0"

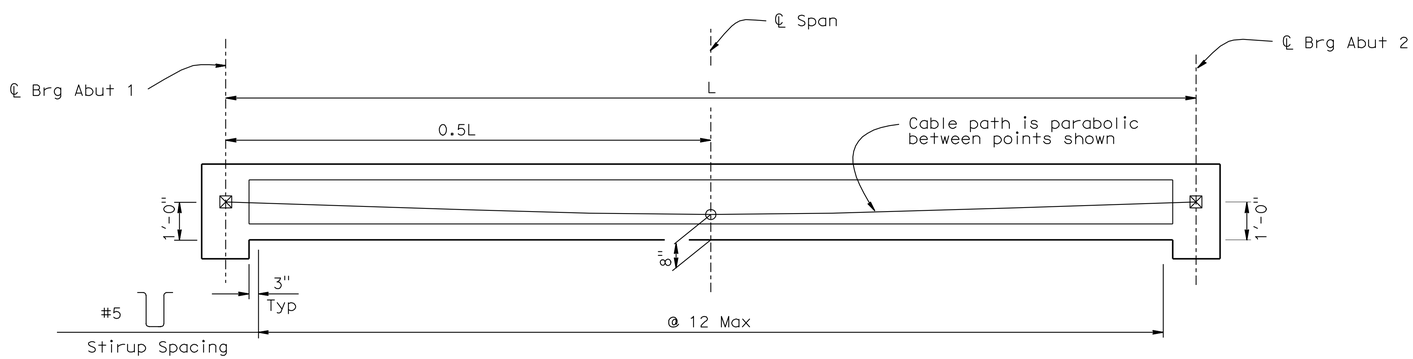

LONGITUDINAL SECTION

Horiz 1/4" = 1'-0"
Vert 1/2" = 1'-0"

NOTE:

For "SECTION E-E", see "GIRDER LAYOUT NO 2" sheet

	BY	CHECKED
DESIGN	Mike Bergman	Art V Herrera
DETAILS	Shadi Motalebi	Art V Herrera
QUANTITIES	Bin Sharma	Art V Herrera

STATE OF CALIFORNIA
DEPARTMENT OF TRANSPORTATION

DIVISION OF ENGINEERING SERVICES
STRUCTURE DESIGN
DESIGN BRANCH 3

BRIDGE NO. 05-0048
POST MILE 70.7

MINNEHAHA CREEK BRIDGE (REPLACE)
GIRDER LAYOUT NO. 1

STRUCTURES DESIGN DETAIL SHEET (ENGLISH) (REV. 10/25/05)

ORIGINAL SCALE IN INCHES FOR REDUCED PLANS 0 1 2 3

CU 02243
EA 2C9901

DISREGARD PRINTS BEARING EARLIER REVISION DATES

REVISION DATES: 5/9/09 6-17-09 8-3-09 10-29-09

SHEET 10 OF 18

FILE => 05-0048-j-grd01.dgn

USERNAME => trsttrk DATE PLOTTED => 26-AUG-2010 TIME PLOTTED => 12:51

DIST	COUNTY	ROUTE	POST MILES TOTAL PROJECT	SHEET No	TOTAL SHEETS
02	Tri	3	68.5,70.7	86	93

REGISTERED CIVIL ENGINEER 1-27-10 DATE

8-23-10
PLANS APPROVAL DATE

REGISTERED PROFESSIONAL ENGINEER Lewis L Shen No. 56921 Exp. 6-30-11 CIVIL STATE OF CALIFORNIA

The State of California or its officers or agents shall not be responsible for the accuracy or completeness of electronic copies of this plan sheet.

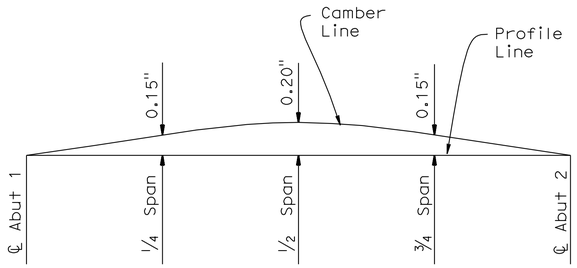

CAMBER DIAGRAM STAGE 1

No Scale
Does not include allowance for falswork settlement

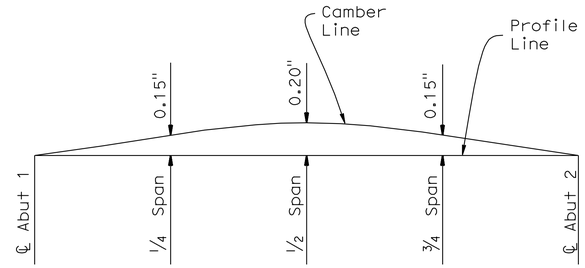

CAMBER DIAGRAM STAGE 2

No Scale
Does not include allowance for falswork settlement

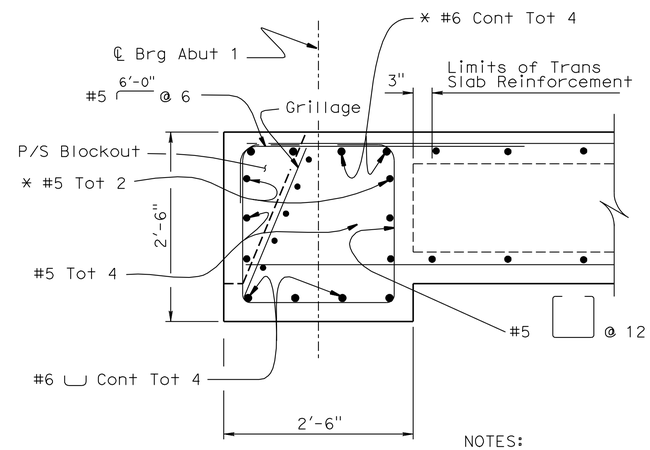

NOTES:

* To be service spliced between stages

All bars to be Epoxy Coated

SECTION E-E

1" = 1'-0"

B8-5

NOTE:

For location of "SECTION E-E", see "GIRDER LAYOUT NO. 1" sheet

STAGE 1

PRESTRESSING NOTES

270 KSI Low Relaxation Strand:

P_{jack} = 5000 kips

Anchor Set = 3/8 in

Total Number of Ducts = 9

Distribution of prestress force (Pjack) between ducts shall not exceed the ratio of 3:2.
Maximum final force variation between ducts shall not exceed 725 kips.

Concrete: f'_c = 4,000 psi @ 28 days

f'_{ci} = 3,500 psi @ time of stressing

Contractor shall submit elongation calculations based on initial stress at

⊠ = 0.911 times jacking stress.

One end stressing shall be performed from either end

STAGE 2

PRESTRESSING NOTES

270 KSI Low Relaxation Strand:

P_{jack} = 4700 kips

Anchor Set = 3/8 in

Total Number of Ducts = 8

Distribution of prestress force (Pjack) between ducts shall not exceed the ratio of 3:2.
Maximum final force variation between ducts shall not exceed 725 kips.

Concrete: f'_c = 4,000 psi @ 28 days

f'_{ci} = 3,500 psi @ time of stressing

Contractor shall submit elongation calculations based on initial stress at

⊠ = 0.912 times jacking stress.

One end stressing shall be performed from either end

	BY	CHECKED
DESIGN	Mike Bergman	Art V Herrera
DETAILS	Shadi Motalebi	Art V Herrera
QUANTITIES	Bin Sharma	Art V Herrera

STATE OF CALIFORNIA
DEPARTMENT OF TRANSPORTATION

DIVISION OF ENGINEERING SERVICES
STRUCTURE DESIGN
DESIGN BRANCH 3

BRIDGE NO. 05-0048
POST MILE 70.7

MINNEHAHA CREEK BRIDGE (REPLACE)
GIRDER LAYOUT NO. 2

STRUCTURES DESIGN DETAIL SHEET (ENGLISH) (REV. 10/25/05)

ORIGINAL SCALE IN INCHES FOR REDUCED PLANS 0 1 2 3

CU 02243
EA 2C9901

DISREGARD PRINTS BEARING EARLIER REVISION DATES

REVISION DATES: 6-8-09 7-1-09 8-3-09 10-29-09 1-19-10

SHEET 11 OF 18

FILE => 05-0048-j-grd02.dgn

USERNAME => TFSTRK DATE PLOTTED => 26-AUG-2010 TIME PLOTTED => 12:51

DIST	COUNTY	ROUTE	POST MILES TOTAL PROJECT	SHEET No	TOTAL SHEETS
02	Tri	3	68.5,70.7	87	93

REGISTERED CIVIL ENGINEER — DATE 1-27-10

8-23-10
PLANS APPROVAL DATE

REGISTERED PROFESSIONAL ENGINEER — Lewis L Shen — No. 56921 — Exp. 6-30-11 — CIVIL — STATE OF CALIFORNIA

The State of California or its officers or agents shall not be responsible for the accuracy or completeness of electronic copies of this plan sheet.

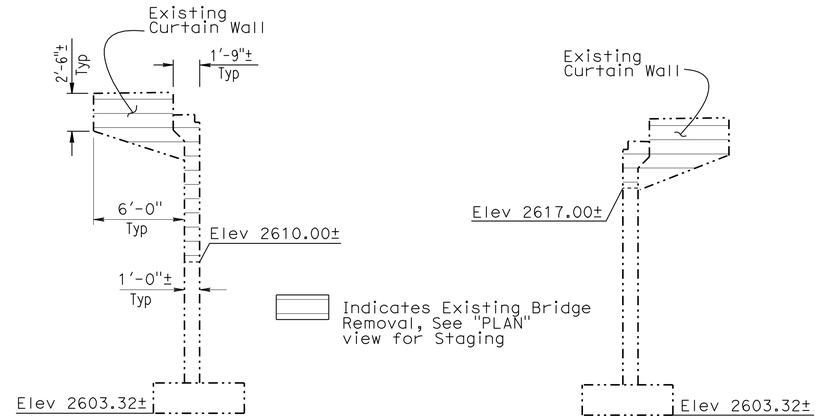

EXISTING ABUTMENT 1 — EXISTING ABUTMENT 2

ELEVATION
CONCRETE REMOVAL
1" = 5'-0"

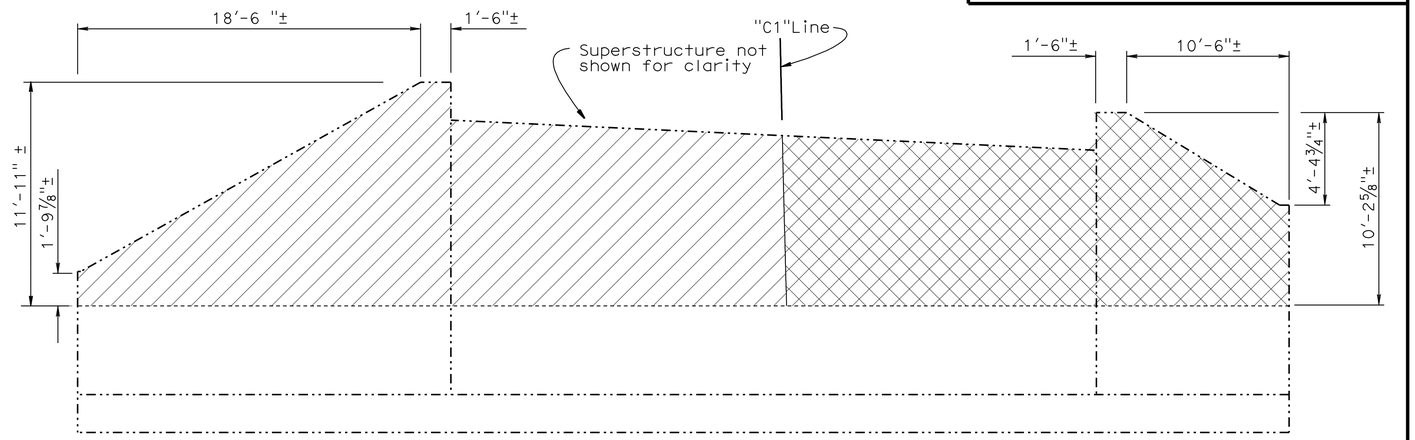

SECTION A-A
No Scale

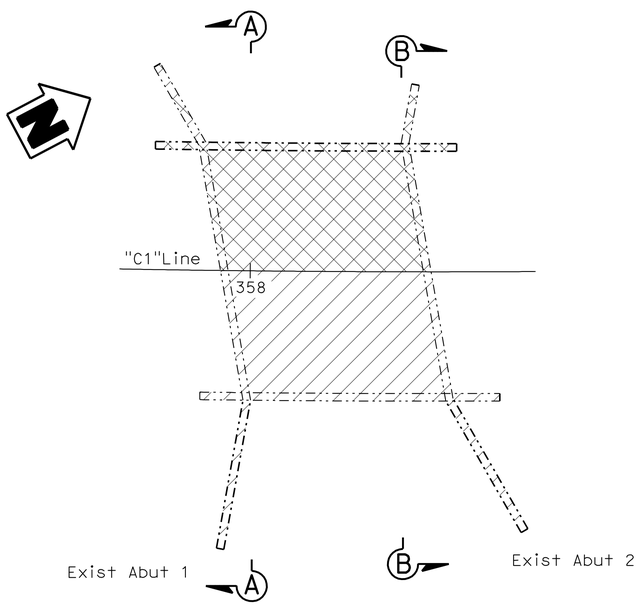

PLAN
CONCRETE REMOVAL
1" = 10'-0"

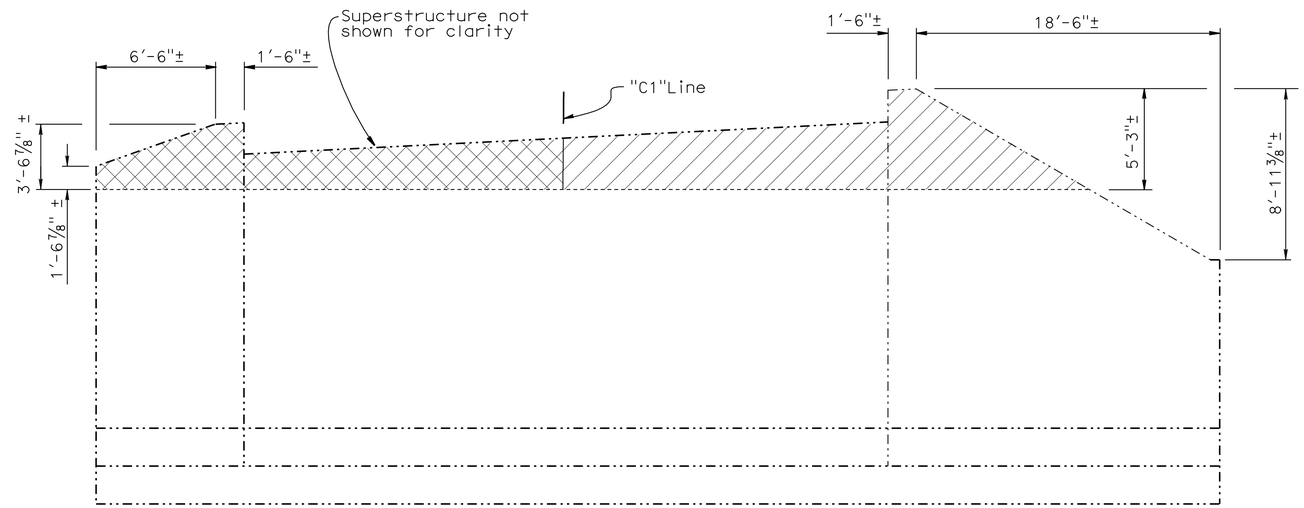

SECTION B-B
No Scale

NOTE:
THE CONTRACTOR SHALL VERIFY ALL CONTROLLING FIELD DIMENSIONS BEFORE ORDERING OR FABRICATING ANY MATERIAL.

NOTES:

Indicates Existing Bridge Removal Stage 1

Indicates Existing Bridge Removal Stage 2

	BY	CHECKED
DESIGN	Mike Bergman	Art V Herrera
DETAILS	Shadi Motalebi	Art V Herrera
QUANTITIES	Bin Sharma	Art V Herrera

STATE OF CALIFORNIA
DEPARTMENT OF TRANSPORTATION

DIVISION OF ENGINEERING SERVICES
STRUCTURE DESIGN
DESIGN BRANCH 3

BRIDGE NO. 05-0048
POST MILE 70.7

MINNEHAHA CREEK BRIDGE (REPLACE)
CONCRETE REMOVAL DETAILS

STRUCTURES DESIGN DETAIL SHEET (ENGLISH) (REV. 10/25/05)

ORIGINAL SCALE IN INCHES FOR REDUCED PLANS 0 1 2 3

CU 02243
EA 2C9901

DISREGARD PRINTS BEARING EARLIER REVISION DATES

REVISION DATES: 6-3-09 | 6-18-09 | 7-1-09 | 8-3-09 | 10-29-09

SHEET 12 OF 18

FILE => 05-0048-k-removal.dgn

USERNAME => tr6ttk DATE PLOTTED => 26-AUG-2010 TIME PLOTTED => 12:51

DIST	COUNTY	ROUTE	POST MILES TOTAL PROJECT	SHEET No	TOTAL SHEETS
02	Tri	3	68.5,70.7	88	93

PROFESSIONAL GEOLOGIST — 11-10-09 DATE

8-23-10
PLANS APPROVAL DATE

PROFESSIONAL GEOLOGIST Joseph Kaump No. 7837 Exp. 1-31-11 PROFESSIONAL GEOLOGIST STATE OF CALIFORNIA

The State of California or its officers or agents shall not be responsible for the accuracy or completeness of electronic copies of this plan sheet.

KLEINFELDER INC.
3077 FITE CIR.
SACRAMENTO, CA 95827

This LOTB sheet was prepared in accordance with the Caltrans Soil & Rock Logging, Classification, and Presentation Manual (June 2007).

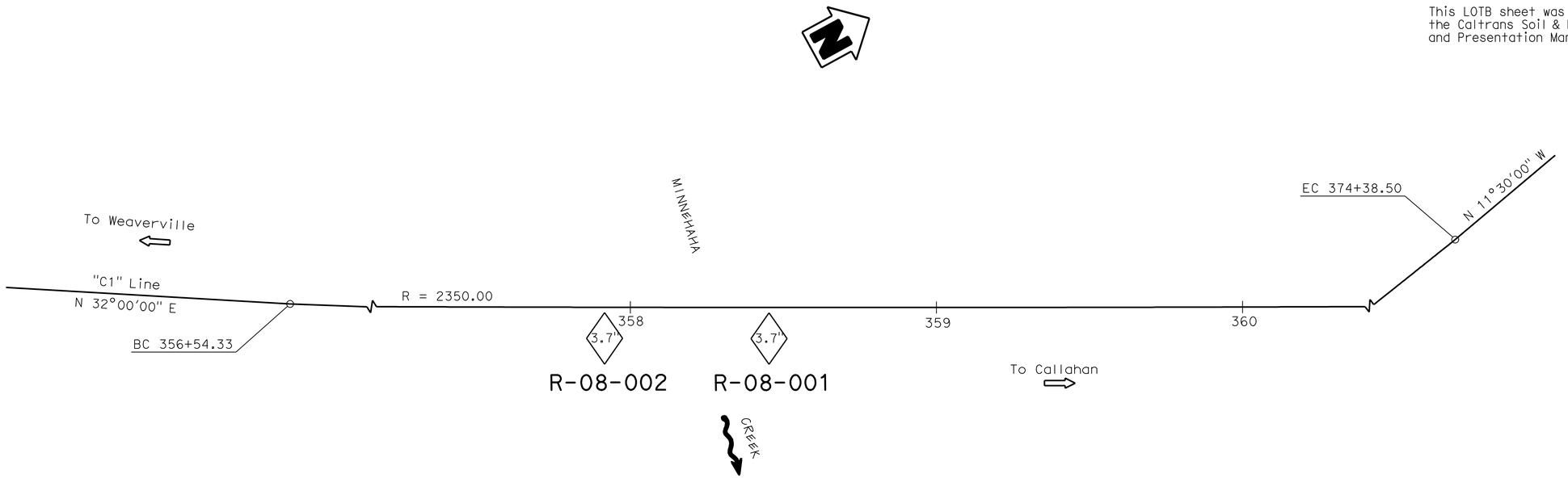

PLAN
1"=20'

BENCHMARK

STATION	OFFSET	N	E	ELEV	DESCRIPTION
357+42.4	20.7" Rt	2293679.753	6368795.497	2620.89	CM 70.69 Rebar w/ Aluminum Cap
359+29.9	23.4" Rt	2293846.236	6368885.530	2622.60	CM 70.72 Rebar w/ Aluminum Cap

SURVEY CONTROL

1. Vertical Datum NAVD88

Notes:

1. Mobile B-47 Truck Mounted rig (C# 4785) with a safety hammer was used to obtain SPT samples.
2. SPT N values shown on the Log of Test Boring (LOTB) sheet are actual values recorded in the field.
3. PP = Unconfined Compressive Strength using a pocket penetrometer

ENGINEERING SERVICES | GEOTECHNICAL SERVICES

FUNCTIONAL SUPERVISOR
NAME: R. Buell

DRAWN BY: A. Sanchez (KLEINFELDER INC.)
CHECKED BY: J. Martin

FIELD INVESTIGATION BY:
J. Kaump

STATE OF CALIFORNIA
DEPARTMENT OF TRANSPORTATION

DIVISION OF ENGINEERING SERVICES
STRUCTURE DESIGN
DESIGN BRANCH 3

BRIDGE NO. 05-0048
POST MILES 70.7

MINNEHAHA CREEK BRIDGE (REPLACE)
LOG OF TEST BORINGS 1 OF 6

OGS CIVIL LOG OF TEST BORINGS SHEET

ORIGINAL SCALE IN INCHES FOR REDUCED PLANS 0 1 2 3

CU 02243
EA 2C9901

DISREGARD PRINTS BEARING EARLIER REVISION DATES
REVISION DATES: 10-13-09 11-10-09

SHEET 13 OF 18

FILE => 05-0048-z-log01.dgn

USERNAME => tfstrk DATE PLOTTED => 26-AUG-2010 TIME PLOTTED => 12:51

DIST	COUNTY	ROUTE	POST MILES TOTAL PROJECT	SHEET No	TOTAL SHEETS
02	Tri	3	68.5,70.7	89	93

PROFESSIONAL GEOLOGIST — 11-10-09 DATE

8-23-10
PLANS APPROVAL DATE

PROFESSIONAL GEOLOGIST — Joseph Kaump No. 7837 Exp. 1-31-11 — STATE OF CALIFORNIA

The State of California or its officers or agents shall not be responsible for the accuracy or completeness of electronic copies of this plan sheet.

KLEINFELDER INC.
3077 FITE CIR.
SACRAMENTO, CA 95827

This LOTB sheet was prepared in accordance with the Caltrans Soil & Rock Logging, Classification, and Presentation Manual (June 2007).

FOR PLAN VIEW AND ADDITIONAL NOTES, SEE "LOG OF TEST BORINGS" SHEET 1 OF 6

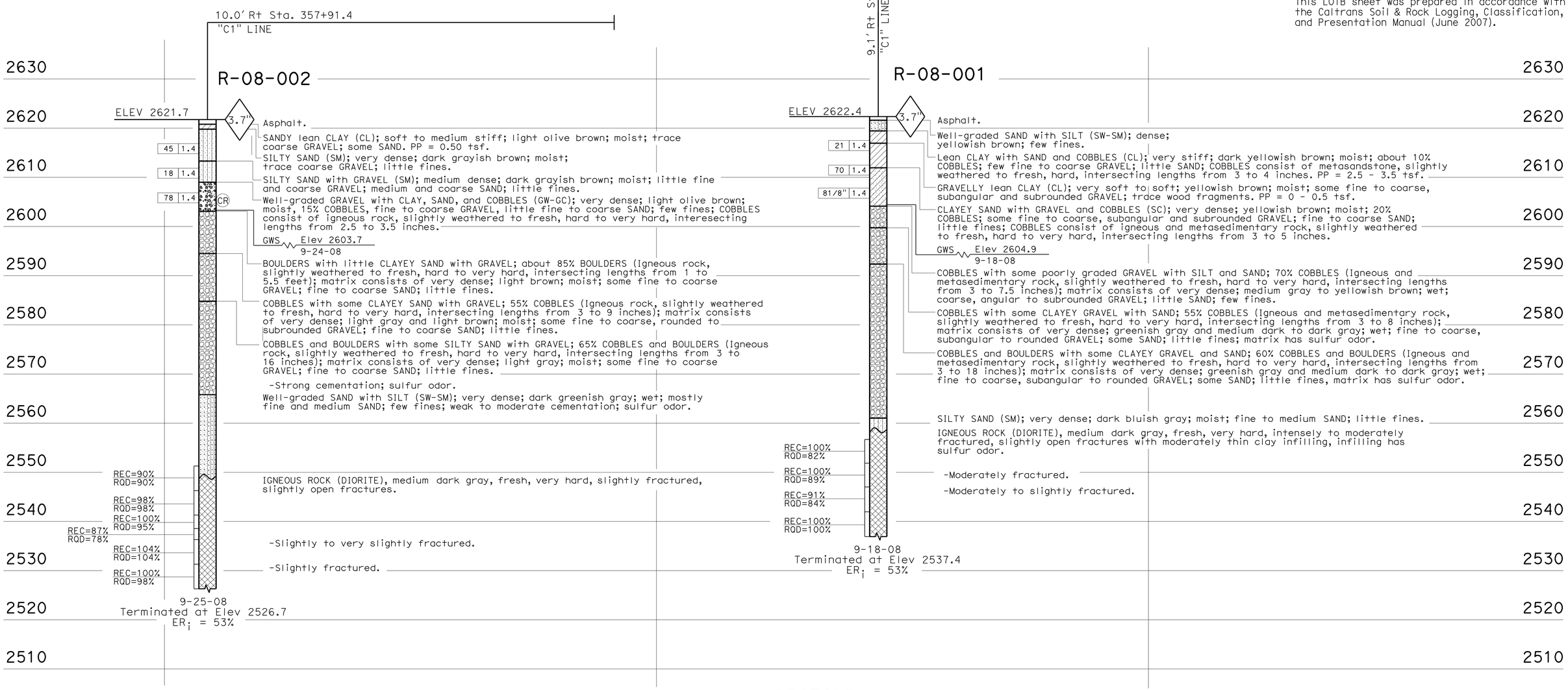

PROFILE
HOR. 1"=10'
VER. 1"=10'

ENGINEERING SERVICES	GEOTECHNICAL SERVICES	STATE OF CALIFORNIA DEPARTMENT OF TRANSPORTATION	DIVISION OF ENGINEERING SERVICES STRUCTURE DESIGN DESIGN BRANCH 3	BRIDGE NO. 05-0048 POST MILES 70.7	MINNEHAHA CREEK BRIDGE (REPLACE) LOG OF TEST BORINGS 2 OF 6
FUNCTIONAL SUPERVISOR NAME: R. Buell	DRAWN BY: A. Sanchez (KLEINFELDER INC.) CHECKED BY: J. Martin	FIELD INVESTIGATION BY: J. Kaump			

OGS CIVIL LOG OF TEST BORINGS SHEET

ORIGINAL SCALE IN INCHES FOR REDUCED PLANS 0 1 2 3

CU 02243
EA 2C9901

DISREGARD PRINTS BEARING EARLIER REVISION DATES

REVISION DATES: 10-13-09 11-10-09

SHEET 14 OF 18

FILE => 05-0048-z-log02.dgn

USERNAME => TrPstrk DATE PLOTTED => 26-AUG-2010 TIME PLOTTED => 12:51

DIST	COUNTY	ROUTE	POST MILES TOTAL PROJECT	SHEET No	TOTAL SHEETS
02	Tri	3	68.5,70.7	90	93

PROFESSIONAL GEOLOGIST — 11-10-09 DATE

8-23-10
PLANS APPROVAL DATE

PROFESSIONAL GEOLOGIST Joseph Kaump No. 7837 Exp. 1-31-11 PROFESSIONAL GEOLOGIST STATE OF CALIFORNIA

The State of California or its officers or agents shall not be responsible for the accuracy or completeness of electronic copies of this plan sheet.

KLEINFELDER INC.
3077 FITE CIR.
SACRAMENTO, CA 95827

REFERENCE: CALTRANS SOIL & ROCK LOGGING, CLASSIFICATION, AND PRESENTATION MANUAL (JUNE 2007)

CEMENTATION

Description	Criteria
Weak	Crumbles or breaks with handling or little finger pressure.
Moderate	Crumbles or breaks with considerable finger pressure.
Strong	Will not crumble or break with finger pressure.

CONSISTENCY OF COHESIVE SOILS

Description	Unconfined Compressive Strength (tsf)	Pocket Penetrometer Measurement (tsf)	Torvane Measurement (tsf)	Field Approximation
Very Soft	< 0.25	< 0.25	< 0.12	Easily penetrated several inches by fist
Soft	0.25 to 0.50	0.25 to 0.50	0.12 to 0.25	Easily penetrated several inches by thumb
Medium Stiff	0.50 to 1.0	0.50 to 1.0	0.25 to 0.50	Penetrated several inches by thumb with moderate effort
Stiff	1 to 2	1 to 2	0.50 to 1.0	Readily indented by thumb but penetrated only with great effort
Very Stiff	2 to 4	2 to 4	1.0 to 2.0	Readily indented by thumbnail
Hard	> 4.0	> 4.0	> 2.0	Indented by thumbnail with difficulty

BOREHOLE IDENTIFICATION

Symbol	Hole Type	Description
Size	A	Auger Boring
Size	R P	Rotary drilled boring Rotary percussion boring (air)
Size	R	Rotary drilled diamond core
Size	HD HA	Hand driven (1-inch soil tube) Hand Auger
●	D	Dynamic Cone Penetration Boring
▲	CPT	Cone Penetration Test (ASTM D 5778-95)
⬚	O	Other

Note: Size in inches.

PLASTICITY OF FINE-GRAINED SOILS

Description	Criteria
Nonplastic	A 1/8-inch thread cannot be rolled at any water content.
Low	The thread can barely be rolled and the lump cannot be formed when drier than the plastic limit.
Medium	The thread is easy to roll and not much time is required to reach the plastic limit. The thread cannot be rerolled after reaching the plastic limit. The lump crumbles when drier than the plastic limit.
High	It takes considerable time rolling and kneading to reach the plastic limit. The thread can be rerolled several times after reaching the plastic limit. The lump can be formed without crumbling when drier than the plastic limit.

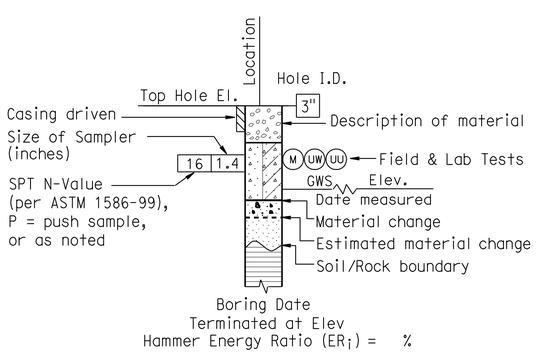

ROTARY BORING

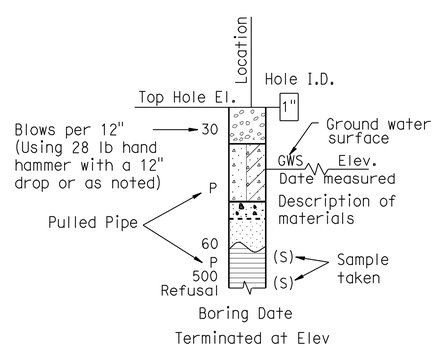

HAND BORING

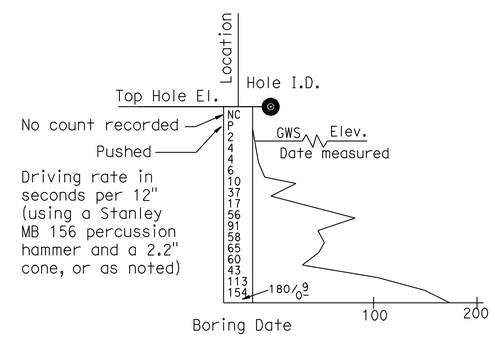

DYNAMIC CONE PENETRATION BORING

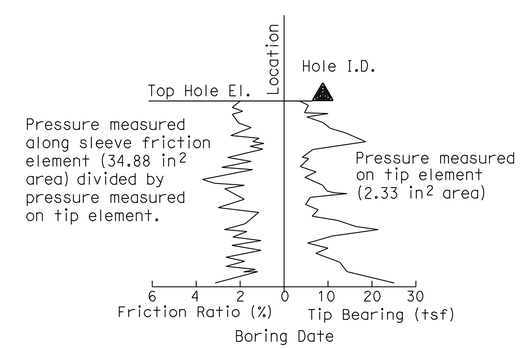

CONE PENETRATION TEST (CPT) SOUNDING

ENGINEERING SERVICES	GEOTECHNICAL SERVICES	STATE OF CALIFORNIA DEPARTMENT OF TRANSPORTATION	DIVISION OF ENGINEERING SERVICES STRUCTURE DESIGN DESIGN BRANCH 3	BRIDGE NO. 05-0048 POST MILE 70.7	MINNEHAHA CREEK BRIDGE (REPLACE) LOG OF TEST BORINGS 3 OF 6
	PREPARED BY: A. Sanchez (KLEINFELDER INC.)				

GS LOTB SOIL LEGEND

ORIGINAL SCALE IN INCHES FOR REDUCED PLANS 0 1 2 3

CU 02243
EA 2C9901

DISREGARD PRINTS BEARING EARLIER REVISION DATES 10-15-09 11-10-09

REVISION DATES | SHEET 15 OF 18

FILE => 05-0048-z-log03.dgn

USERNAME => tfrstrk DATE PLOTTED => 26-AUG-2010 TIME PLOTTED => 12:51

REFERENCE: CALTRANS SOIL & ROCK LOGGING, CLASSIFICATION, AND PRESENTATION MANUAL (JUNE 2007)

DIST	COUNTY	ROUTE	POST MILES TOTAL PROJECT	SHEET No	TOTAL SHEETS
02	Tri	3	68.5,70.7	91	93

Joseph M Kaump 11-10-09
PROFESSIONAL GEOLOGIST DATE

8-23-10
PLANS APPROVAL DATE

PROFESSIONAL GEOLOGIST Joseph Kaump No. 7837 Exp. 1-31-11 PROFESSIONAL GEOLOGIST STATE OF CALIFORNIA

The State of California or its officers or agents shall not be responsible for the accuracy or completeness of electronic copies of this plan sheet.

KLEINFELDER INC.
3077 FITE CIR.
SACRAMENTO, CA 95827

GROUP SYMBOLS AND NAMES

Graphic/Symbol	Group Names
GW	Well-graded GRAVEL Well-graded GRAVEL with SAND
GP	Poorly graded GRAVEL Poorly graded GRAVEL with SAND
GW-GM	Well-graded GRAVEL with SILT Well-graded GRAVEL with SILT and SAND
GW-GC	Well-graded GRAVEL with CLAY (or SILTY CLAY) Well-graded GRAVEL with CLAY and SAND (or SILTY CLAY and SAND)
GP-GM	Poorly graded GRAVEL with SILT Poorly graded GRAVEL with SILT and SAND
GP-GC	Poorly graded GRAVEL with CLAY (or SILTY CLAY) Poorly graded GRAVEL with CLAY and SAND (or SILTY CLAY and SAND)
GM	SILTY GRAVEL SILTY GRAVEL with SAND
GC	CLAYEY GRAVEL CLAYEY GRAVEL with SAND
GC-GM	SILTY, CLAYEY GRAVEL SILTY, CLAYEY GRAVEL with SAND
SW	Well-graded SAND Well-graded SAND with GRAVEL
SP	Poorly graded SAND Poorly graded SAND with GRAVEL
SW-SM	Well-graded SAND with SILT Well-graded SAND with SILT and GRAVEL
SW-SC	Well-graded SAND with CLAY (or SILTY CLAY) Well-graded SAND with CLAY and GRAVEL (or SILTY CLAY and GRAVEL)
SP-SM	Poorly graded SAND with SILT Poorly graded SAND with SILT and GRAVEL
SP-SC	Poorly graded SAND with CLAY (or SILTY CLAY) Poorly graded SAND with CLAY and GRAVEL (or SILTY CLAY and GRAVEL)
SM	SILTY SAND SILTY SAND with GRAVEL
SC	CLAYEY SAND CLAYEY SAND with GRAVEL
SC-SM	SILTY, CLAYEY SAND SILTY, CLAYEY SAND with GRAVEL
PT	PEAT
	COBBLES COBBLES and BOULDERS BOULDERS

Graphic/Symbol	Group Names
CL	Lean CLAY Lean CLAY with SAND Lean CLAY with GRAVEL SANDY lean CLAY SANDY lean CLAY with GRAVEL GRAVELLY lean CLAY GRAVELLY lean CLAY with SAND
CL-ML	SILTY CLAY SILTY CLAY with SAND SILTY CLAY with GRAVEL SANDY SILTY CLAY SANDY SILTY CLAY with GRAVEL GRAVELLY SILTY CLAY GRAVELLY SILTY CLAY with SAND
ML	SILT SILT with SAND SILT with GRAVEL SANDY SILT SANDY SILT with GRAVEL GRAVELLY SILT GRAVELLY SILT with SAND
OL	ORGANIC lean CLAY ORGANIC lean CLAY with SAND ORGANIC lean CLAY with GRAVEL SANDY ORGANIC lean CLAY SANDY ORGANIC lean CLAY with GRAVEL GRAVELLY ORGANIC lean CLAY GRAVELLY ORGANIC lean CLAY with SAND
OL	ORGANIC SILT ORGANIC SILT with SAND ORGANIC SILT with GRAVEL SANDY ORGANIC SILT SANDY ORGANIC SILT with GRAVEL GRAVELLY ORGANIC SILT GRAVELLY ORGANIC SILT with SAND
CH	Fat CLAY Fat CLAY with SAND Fat CLAY with GRAVEL SANDY fat CLAY SANDY fat CLAY with GRAVEL GRAVELLY fat CLAY GRAVELLY fat CLAY with SAND
MH	Elastic SILT Elastic SILT with SAND Elastic SILT with GRAVEL SANDY elastic SILT SANDY elastic SILT with GRAVEL GRAVELLY elastic SILT GRAVELLY elastic SILT with SAND
OH	ORGANIC fat CLAY ORGANIC fat CLAY with SAND ORGANIC fat CLAY with GRAVEL SANDY ORGANIC fat CLAY SANDY ORGANIC fat CLAY with GRAVEL GRAVELLY ORGANIC fat CLAY GRAVELLY ORGANIC fat CLAY with SAND
OH	ORGANIC elastic SILT ORGANIC elastic SILT with SAND ORGANIC elastic SILT with GRAVEL SANDY ORGANIC elastic SILT SANDY ORGANIC elastic SILT with GRAVEL GRAVELLY ORGANIC elastic SILT GRAVELLY ORGANIC elastic SILT with SAND
OL/OH	ORGANIC SOIL ORGANIC SOIL with SAND ORGANIC SOIL with GRAVEL SANDY ORGANIC SOIL SANDY ORGANIC SOIL with GRAVEL GRAVELLY ORGANIC SOIL GRAVELLY ORGANIC SOIL with SAND

FIELD AND LABORATORY TESTING

- (C) Consolidation (ASTM D 2435)
- (CL) Collapse Potential (ASTM D 5333)
- (CP) Compaction Curve (CTM 216)
- (CR) Corrosivity Testing (CTM 643, CTM 422, CTM 417)
- (CU) Consolidated Undrained Triaxial (ASTM D 4767)
- (DS) Direct Shear (ASTM D 3080)
- (EI) Expansion Index (ASTM D 4829)
- (M) Moisture Content (ASTM D 2216)
- (OC) Organic Content-% (ASTM D 2974)
- (P) Permeability (CTM 220)
- (PA) Particle Size Analysis (ASTM D 422)
- (PI) Plasticity Index (AASHTO T 90) Liquid Limit (AASHTO T 89)
- (PL) Point Load Index (ASTM D 5731)
- (PM) Pressure Meter
- (PP) Pocket Penetrometer
- (R) R-Value (CTM 301)
- (SE) Sand Equivalent (CTM 217)
- (SG) Specific Gravity (AASHTO T 100)
- (SL) Shrinkage Limit (ASTM D 427)
- (SW) Swell Potential (ASTM D 4546)
- (TV) Pocket Torvane
- (UC) Unconfined Compression-Soil (ASTM D 2166) Unconfined Compression-Rock (ASTM D 2938)
- (UU) Unconsolidated Undrained Triaxial (ASTM D 2850)
- (UW) Unit Weight (ASTM D 4767)
- (VS) Vane Shear (AASHTO T 223)

APPARENT DENSITY OF COHESIONLESS SOILS

Description	SPT N_{60} (Blows / 12 inches)
Very loose	0 - 4
Loose	5 - 10
Medium Dense	11 - 30
Dense	31 - 50
Very Dense	> 50

MOISTURE

Description	Criteria
Dry	Absence of moisture, dusty, dry to the touch
Moist	Damp but no visible water
Wet	Visible free water, usually soil is below water table

PERCENT OR PROPORTION OF SOILS

Description	Criteria
Trace	Particles are present but estimated to be less than 5%
Few	5 to 10%
Little	15 to 25%
Some	30 to 45%
Mostly	50 to 100%

PARTICLE SIZE

Description		Size
Boulder		> 12"
Cobble		3" to 12"
Gravel	Coarse	3/4" to 3"
	Fine	No. 4 to 3/4"
Sand	Coarse	No. 10 to No. 4
	Medium	No. 40 to No. 10
	Fine	No. 200 to No. 40

ENGINEERING SERVICES

GEOTECHNICAL SERVICES
PREPARED BY:
A. Sanchez (KLEINFELDER INC.)

STATE OF CALIFORNIA
DEPARTMENT OF TRANSPORTATION

DIVISION OF ENGINEERING SERVICES
STRUCTURE DESIGN
DESIGN BRANCH 3

BRIDGE NO. 05-0048
POST MILE 70.7

MINNEHAHA CREEK BRIDGE (REPLACE)
LOG OF TEST BORINGS 4 OF 6

GS LOTB SOIL LEGEND

ORIGINAL SCALE IN INCHES FOR REDUCED PLANS 0 1 2 3

CU 02243
EA 2C9901

DISREGARD PRINTS BEARING EARLIER REVISION DATES → 10-13-09 11-10-09

REVISION DATES

SHEET 16 OF 18

FILE => 05-0048-z-log04.dgn

USERNAME => tr6trk DATE PLOTTED => 26-AUG-2010 TIME PLOTTED => 12:52

REFERENCE: CALTRANS SOIL & ROCK LOGGING, CLASSIFICATION, AND PRESENTATION MANUAL (JUNE 2007)

DIST	COUNTY	ROUTE	POST MILES TOTAL PROJECT	SHEET No	TOTAL SHEETS
02	Tri	3	68.5,70.7	92	93

Joseph M Kaump 11-10-09
PROFESSIONAL GEOLOGIST DATE

8-23-10
PLANS APPROVAL DATE

PROFESSIONAL GEOLOGIST Joseph Kaump No. 7837 Exp. 1-31-11 PROFESSIONAL GEOLOGIST STATE OF CALIFORNIA

The State of California or its officers or agents shall not be responsible for the accuracy or completeness of electronic copies of this plan sheet.

KLEINFELDER INC.
3077 FITE CIR.
SACRAMENTO, CA 95827

PERCENT CORE RECOVERY (REC) & ROCK QUALITY DESIGNATION (RQD)

$$REC = \frac{\sum \text{Length of the recovered core pieces (inches)}}{\text{Total length of core run (inches)}} \times 100\%$$

$$RQD = \frac{\sum \text{Length of intact core pieces} \geq 4''}{\text{Total length of core run (inches)}} \times 100\%$$

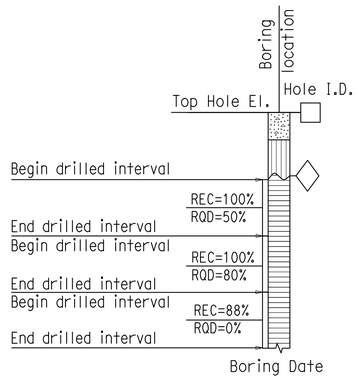

RELATIVE STRENGTH OF INTACT ROCK

Term	Uniaxial Compressive Strength (PSI)
Extremely Strong	> 30,000
Very Strong	14,500 - 30,000
Strong	7,000 - 14,500
Medium Strong	3,500 - 7,000
Weak	700 - 3,500
Very Weak	150 - 700
Extremely Weak	< 150

BEDDING SPACING

Description	Thickness / Spacing
Massive	Greater than 10 ft
Very thickly bedded	3 to 10 ft
Thickly bedded	1 to 3 ft
Moderately bedded	3-5/8" to 1 ft
Thinly bedded	1-1/4" to 3-5/8"
Very thinly bedded	3/8" to 1-1/4"
Laminated	Less than 3/8"

LEGEND OF ROCK MATERIALS

- IGNEOUS ROCK
- SEDIMENTARY ROCK
- METAMORPHIC ROCK

ROCK HARDNESS

Description	Criteria
Extremely Hard	Specimen cannot be scratched with a pocket knife or sharp pick; can only be chipped with repeated heavy hammer blows.
Very Hard	Specimen cannot be scratched with a pocket knife or sharp pick. Breaks with repeated heavy hammer blows.
Hard	Specimen can be scratched with a pocket knife or sharp pick with difficulty (heavy pressure). Heavy hammer blows required to break specimen.
Moderately Hard	Specimen can be scratched with pocket knife or sharp pick with light or moderate pressure. Core breaks with moderate hammer blows.
Moderately Soft	Specimen can be grooved 1/6" deep with a pocket knife or sharp pick with moderate or heavy pressure. Breaks with light hammer blow or heavy manual pressure.
Soft	Specimen can be grooved or gouged easily by a pocket knife or sharp pick with light pressure, can be scratched with fingernail. Breaks with light to moderate manual pressure.
Very Soft	Specimen can be readily indented, grooved or gouged with fingernail, or carved with a pocket knife. Breaks with light manual pressure.

FRACTURE DENSITY

Description	Observed Fracture Density
Unfractured	No fractures.
Very slightly fractured	Lengths greater than 3 feet.
Slightly fractured	Lengths from 1 to 3 feet with few lengths less than 1 foot or greater than 3 feet.
Moderately fractured	Lengths mostly in 4" to 1 foot range with most lengths about 8"
Intensely fractured	Lengths average from 1 to 4" with scattered fragmented intervals with lengths less than 4"
Very intensely fractured	Mostly chips and fragments with a few scattered short core lengths.

Combination descriptors (such as "Very intensely to intensely fractured") are used where equal distribution of both fracture density characteristics is present over a significant interval or exposure, or where characteristics are "in between" the descriptor definitions. Only two adjacent descriptors may be combined.

WEATHERING DESCRIPTORS FOR INTACT ROCK

Description	Diagnostic features					General Characteristics
	Chemical Weathering-Discoloration and/or oxidation		Mechanical Weathering-Grain boundary conditions (disaggregation) primarily for granitics and some coarse-grained sediments	Texture and Solutioning		
	Body of Rock	Fracture Surfaces		Texture	Solutioning	
Fresh	No discoloration, not oxidized.	No discoloration or oxidation.	No separation, intact (tight).	No change.	No solutioning.	Hammer rings when crystalline rocks are struck.
Slightly Weathered	Discoloration or oxidation is limited to surface of, or short distance from, fractures; some feldspar crystals are dull.	Minor to complete discoloration or oxidation of most surfaces.	No visible separation, intact (tight).	Preserved.	Minor leaching of some soluble minerals may be noted.	Hammer rings when crystalline rocks are struck. Body of rock not weakened.
Moderately Weathered	Discoloration or oxidation extends from fractures usually throughout; Fe-Mg minerals are "rusty," feldspar crystals are "cloudy."	All fracture surfaces are discolored or oxidized.	Partial separation of boundaries visible.	Generally preserved.	Soluble minerals may be mostly leached.	Hammer does not ring when rock is struck. Body of rock is slightly weakened.
Intensely Weathered	Discoloration or oxidation throughout; all feldspars and Fe-Mg minerals are altered to clay to some extent; or chemical alteration produces in-situ disaggregation, see grain boundary conditions.	All fracture surfaces are discolored or oxidized, surfaces friable.	Partial separation, rock is friable; in semiarid conditions granitics are disaggregated.	Texture altered by chemical disintegration (hydration, argillation).	Leaching of soluble minerals may be complete.	Dull sound when struck with hammer, usually can be broken with moderate to heavy manual pressure or by light hammer blow without reference to planes of weakness such as incipient or hairline fractures, or veinlets. Rock is significantly weakened.
Decomposed	Discolored or oxidized throughout, but resistant minerals such as quartz may be unaltered; all feldspars and Fe-Mg minerals are completely altered to clay.		Complete separation of grain boundaries (disaggregated).	Resembles a soil, partial or complete remnant rock structure may be preserved; leaching of soluble minerals usually complete.		Can be granulated by hand. Resistant minerals such as quartz may be present as "stringers" or "dikes."

Combination descriptors (such as "slightly weathered to fresh") are permissible where equal distribution of both weathering characteristics is present over significant intervals or where characteristics present are "in between" the diagnostic feature. However, combination descriptors should not be used where significant, identifiable zones can be delineated. Only two adjacent descriptors may be combined. "Very intensely weathered" is the combination descriptor for "intensely weathered to decomposed."

ENGINEERING SERVICES

GEOTECHNICAL SERVICES
PREPARED BY:
A. Sanchez (KLEINFELDER INC.)

STATE OF CALIFORNIA
DEPARTMENT OF TRANSPORTATION

DIVISION OF ENGINEERING SERVICES
STRUCTURE DESIGN
DESIGN BRANCH 3

BRIDGE NO. 05-0048
POST MILE 70.7

MINNEHAHA CREEK BRIDGE (REPLACE)
LOG OF TEST BORINGS 5 OF 6

GS LOTB ROCK LEGEND

ORIGINAL SCALE IN INCHES FOR REDUCED PLANS 0 1 2 3

CU 02243
EA 2C9901

DISREGARD PRINTS BEARING EARLIER REVISION DATES 10-15-09 11-10-09

REVISION DATES

SHEET 17 OF 18

FILE => 05-0048-z-log05.dgn

USERNAME => tr6trk DATE PLOTTED => 26-AUG-2010 TIME PLOTTED => 12:52

FED. ROAD DIV. NO.	STATE	F.A. PROJECT NO.	SHEET NO.	TOTAL SHEETS
7	CALIF.			

DIST.	COUNTY	ROUTE	P.M.	SHEET NO.	TOTAL SHEETS
02	Tri	3	67.8/70.8	91	91

Date approved August 29, 1966

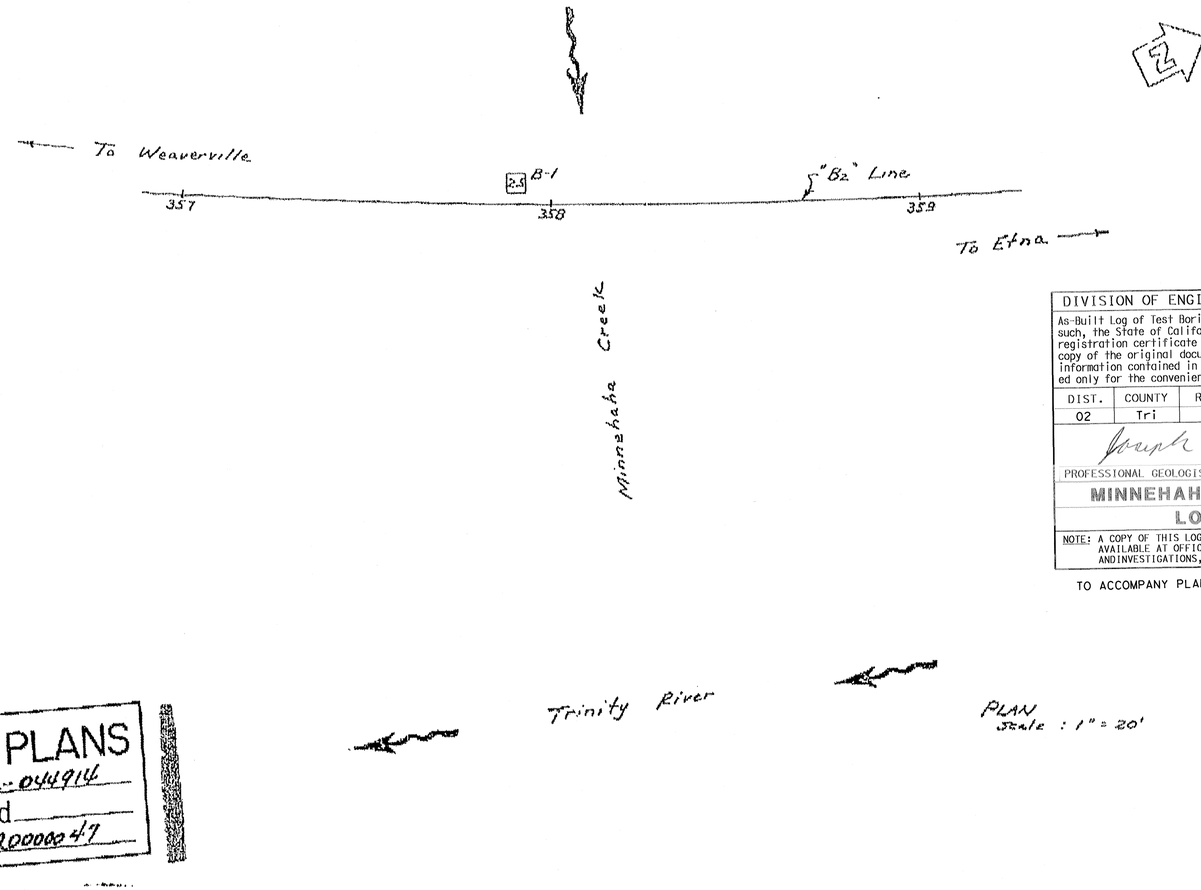

AS BUILT PLANS
Contract No. 02-044914
Date Completed
Document No. 20000047

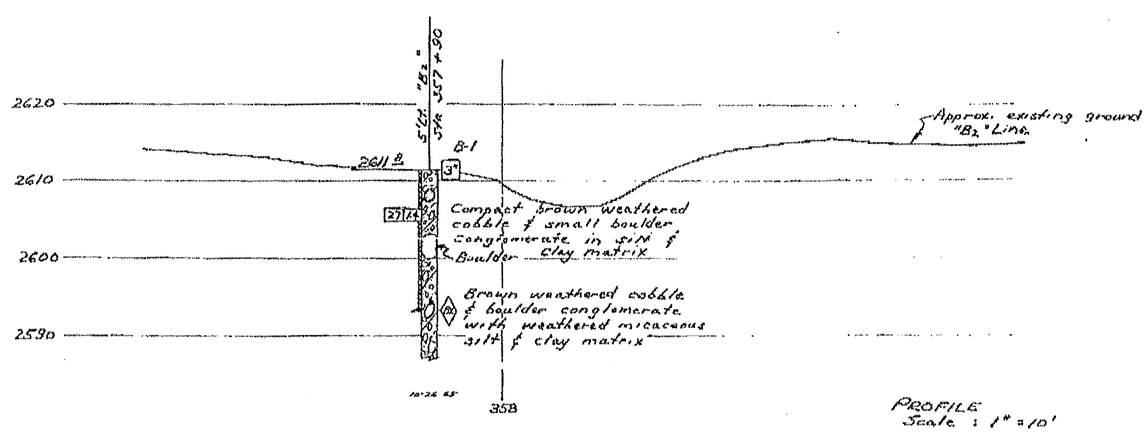

TBM "A"
"□" on boulder
8' ± Lt. "B2" 358 + 00 ±
Elev. 2611.26 (USC & GS Datum)

Note: Ground water will approximate stream level

DIVISION OF ENGINEERING SERVICES - GEOTECHNICAL SERVICES

As-Built Log of Test Borings sheet is considered an informational document only. As such, the State of California registration seal with signature, license number and registration certificate expiration date confirm that this is a true and accurate copy of the original document. It does not attest to the accuracy or validity of the information contained in the original document. This drawing is available and presented only for the convenience of any bidder, contractor or other interested party.

DIST.	COUNTY	ROUTE	POST MILES-TOTAL PROJECT	Sheet No.	Total Sheets
02	Tri	3	68.5,70.7	93	93

Joseph Kaump 11-10-09
PROFESSIONAL GEOLOGIST DATE

PROFESSIONAL GEOLOGIST
Joseph Kaump
No. 7837
Exp. 1-31-11
PROFESSIONAL GEOLOGIST
STATE OF CALIFORNIA

MINNEHAHA CREEK BRIDGE (REPLACE)
LOG OF TEST BORINGS 6 OF 6

NOTE: A COPY OF THIS LOG OF TEST BORINGS IS AVAILABLE AT OFFICE OF STRUCTURE MAINTENANCE AND INVESTIGATIONS, SACRAMENTO, CALIFORNIA

CU: 02
EA: 2C9901

BRIDGE No. 05-0048

Sheet 18 of 18

TO ACCOMPANY PLANS DATED 8-23-10

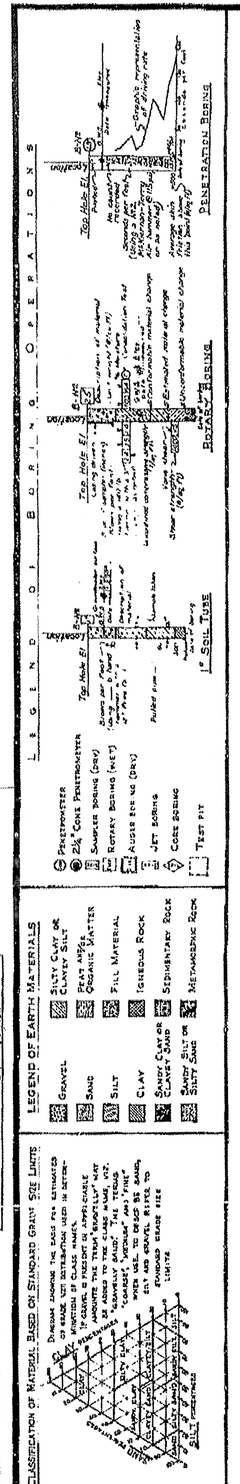

NOTE: Classification of earth material as shown on this sheet is based upon field inspection and is not to be construed to imply mechanical analysis.

FIELD STUDY	By T. Holton	11-7-66
DRAWN	By M. Maley	11-22-66
CHECKED	By T. Holton	11-22-66

Submitted for Recommendation by [signature] Supervising Geologist

BRIDGE DEPARTMENT
ENGINEERING GEOLOGY SECTION

STATE OF CALIFORNIA
DEPARTMENT OF PUBLIC WORKS
DIVISION OF HIGHWAYS

SHEET 5 OF 5

MINNEHAHA CREEK BRIDGE

LOG OF TEST BORINGS

SCALE As Noted | BRIDGE 5-48 | FILE PR 70 8 | DRAWING 0548-5

91

FILENAME => 05-0048-z-log6.tif

02.205

Disregard prints bearing earlier numbers

PREL. DRAWING No. PR-570-5