Dist	COUNTY	ROUTE	POST MILES TOTAL PROJECT	SHEET No.	TOTAL SHEETS
02	Sha	5	R30.6, 61.8	1	33

ACBHIM-005-8(345)E

STATE OF CALIFORNIA
DEPARTMENT OF TRANSPORTATION

PROJECT PLANS FOR CONSTRUCTION ON
STATE HIGHWAY
IN SHASTA COUNTY
ABOUT 8 MILES NORTH OF SHASTA LAKE CITY
AT TUNNEL GULCH VIADUCT AND
NEAR CASTELLA AT SWEETBRIER OVERCROSSING

TO BE SUPPLEMENTED BY STANDARD PLANS DATED MAY 2006

INDEX OF PLANS

SHEET No.	DESCRIPTION
1	TITLE AND LOCATION MAP
2	LAYOUTS
3	CONSTRUCTION DETAILS
4-5	DRAINAGE PLANS AND DETAILS
6	CONSTRUCTION AREA SIGNS
7-9	TRAFFIC HANDLING PLANS
10-12	PAVEMENT DELINEATION PLANS
13	SUMMARY OF QUANTITIES
14-20	REVISED AND NEW STANDARD PLANS

STRUCTURE PLANS

21-26	EARTHQUAKE RETROFIT PROJECT SWEETBRIER OVERCROSSING Br No. 06-0115
27-33	EARTHQUAKE RETROFIT PROJECT TUNNEL GULCH SIDE HILL VIADUCT Br No. 06-0131R

THE STANDARD PLANS LIST APPLICABLE TO THIS CONTRACT IS INCLUDED IN THE NOTICE TO BIDDERS AND SPECIAL PROVISIONS BOOK.

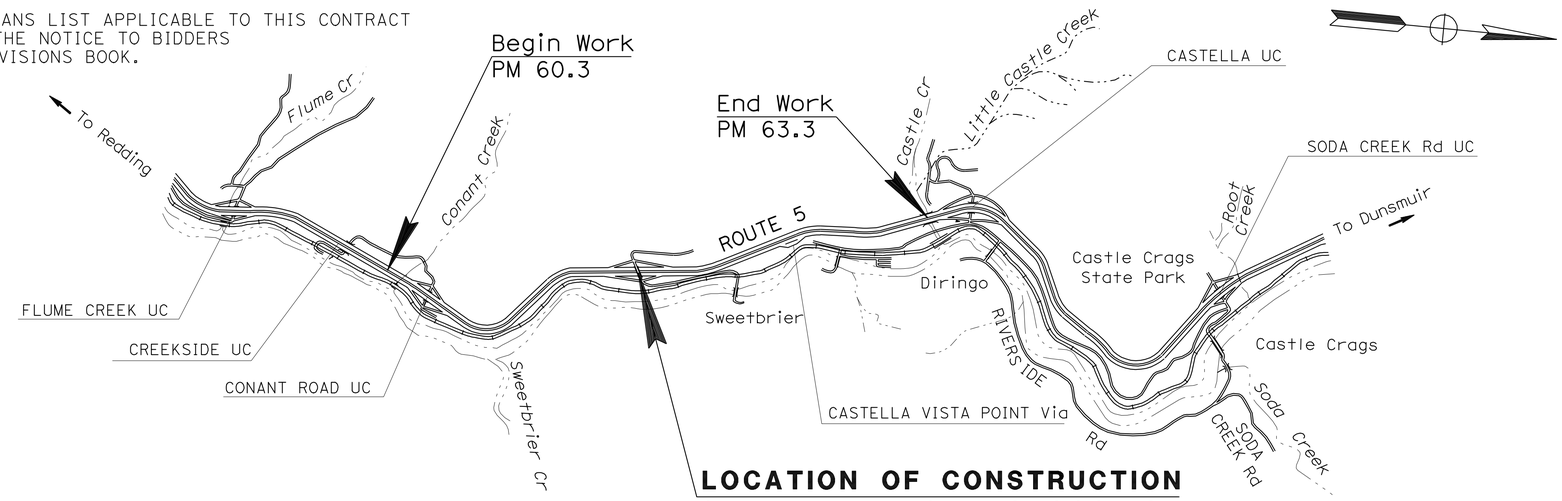

LOCATION MAP

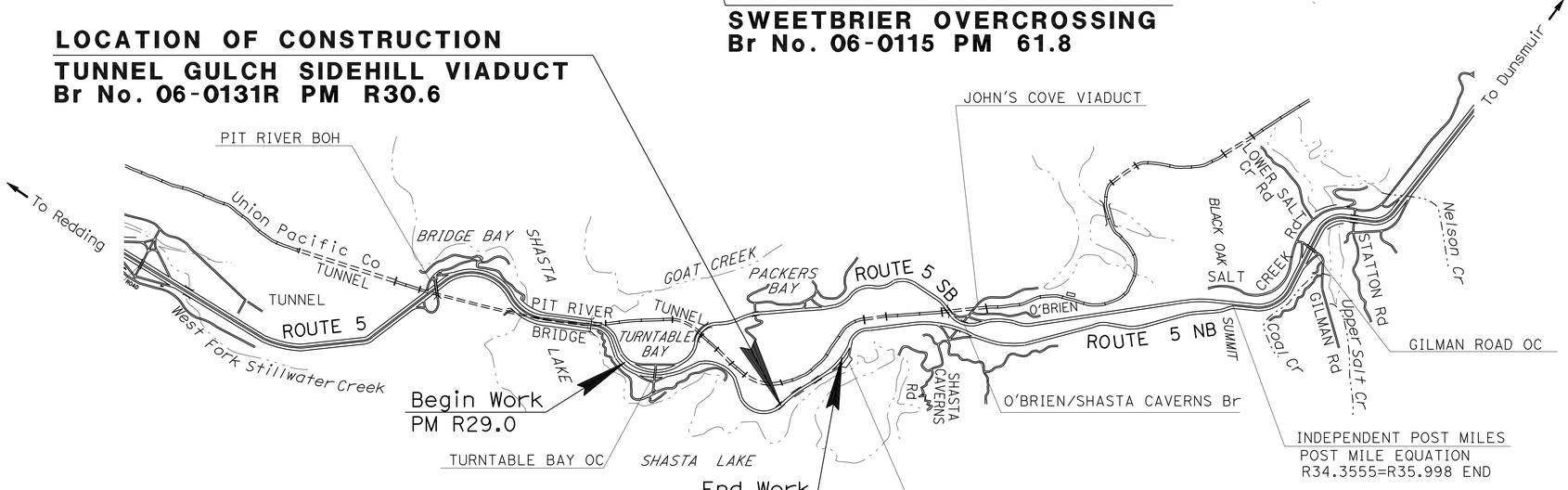

NO SCALE

THE CONTRACTOR SHALL POSSESS THE CLASS (OR CLASSES) OF LICENSE AS SPECIFIED IN THE "NOTICE TO BIDDERS."

PROJECT MANAGER: THOMAS BALKOW
DESIGN ENGINEER: JULIE CASEY

Michael R. Webb 01-24-11
PROJECT ENGINEER REGISTERED CIVIL ENGINEER — DATE

April 4, 2011
PLANS APPROVAL DATE

REGISTERED PROFESSIONAL ENGINEER — MICHAEL R. WEBB — No. C73986 — Exp. 6-30-11 — CIVIL — STATE OF CALIFORNIA

THE STATE OF CALIFORNIA OR ITS OFFICERS OR AGENTS SHALL NOT BE RESPONSIBLE FOR THE ACCURACY OR COMPLETENESS OF SCANNED COPIES OF THIS PLAN SHEET.

CONTRACT No.	02-2C2304
PROJECT ID	0200000168

LAST REVISION 01-24-11 — DATE PLOTTED => 18-MAY-2011 — TIME PLOTTED => 06:17

p:\proj1\02\2c230\pse\22c230ab001.dgn

Dist	COUNTY	ROUTE	POST MILES TOTAL PROJECT	SHEET No.	TOTAL SHEETS
02	Sha	5	R30.6,61.8	2	33

Michael R. Webb 01-24-11
REGISTERED CIVIL ENGINEER DATE

4-4-11
PLANS APPROVAL DATE

REGISTERED PROFESSIONAL ENGINEER MICHAEL R. WEBB No. C73986 Exp. 6-30-11 CIVIL STATE OF CALIFORNIA

THE STATE OF CALIFORNIA OR ITS OFFICERS OR AGENTS SHALL NOT BE RESPONSIBLE FOR THE ACCURACY OR COMPLETENESS OF SCANNED COPIES OF THIS PLAN SHEET.

NOTE:

FOR ACCURATE RIGHT OF WAY AND ACCESS DATA,
CONTACT RIGHT OF WAY ENGINEERING AT THE DISTRICT OFFICE.

ABBREVIATION:

ESA ENVIRONMENTALLY SENSITIVE AREA

LEGEND

- OH POWER
- OH TELEPHONE
- AT&T (SBC) UG FIBER OPTIC
- UNION PACIFIC RR
- Exist CONCRETE BARRIER
- DIRECTION OF TRAFFIC

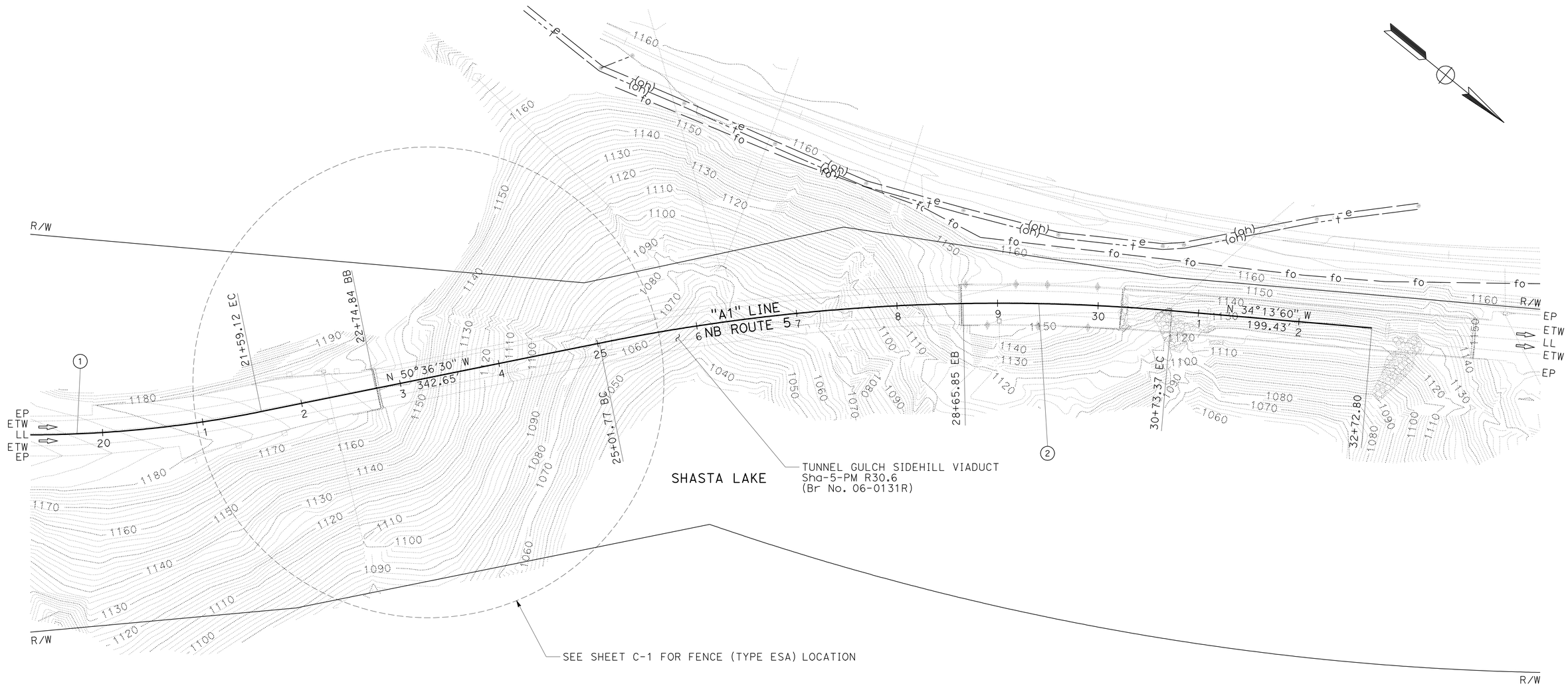

CURVE DATA

No.	R	Δ	T	L
1	1162.00′	54°41′19″	600.89′	1109.12′
2	2000.00′	16°22′30″	287.76′	571.60′

LAYOUT

SCALE: 1" = 50′ **L-1**

REVISED BY | DATE REVISED
MICHAEL R. WEBB | KATHY ECKARD
CALCULATED-DESIGNED BY | CHECKED BY
FUNCTIONAL SUPERVISOR: JULIE CASEY

STATE OF CALIFORNIA - DEPARTMENT OF TRANSPORTATION
Caltrans
DESIGN

p:\proj\02\2c230\pse\22c230ea001.dgn

LAST REVISION 01-24-11 | DATE PLOTTED => 06-APR-2011 | TIME PLOTTED => 11:15

BORDER LAST REVISED 7/2/2010 | USERNAME => trlim | DGN FILE => 22c230ea001.dgn | RELATIVE BORDER SCALE IS IN INCHES 0 1 2 3 | UNIT 0318 | PROJECT NUMBER & PHASE 02000001681

Dist	COUNTY	ROUTE	POST MILES TOTAL PROJECT	SHEET No.	TOTAL SHEETS
02	Sha	5	R30.6,61.8	3	33

Michael R. Webb 01-24-11
REGISTERED CIVIL ENGINEER DATE

4-4-11
PLANS APPROVAL DATE

REGISTERED PROFESSIONAL ENGINEER
MICHAEL R. WEBB
No. C73986
Exp. 6-30-11
CIVIL
STATE OF CALIFORNIA

THE STATE OF CALIFORNIA OR ITS OFFICERS OR AGENTS SHALL NOT BE RESPONSIBLE FOR THE ACCURACY OR COMPLETENESS OF SCANNED COPIES OF THIS PLAN SHEET.

NOTE:

FOR ACCURATE RIGHT OF WAY DATA, CONTACT RIGHT OF WAY ENGINEERING AT THE DISTRICT OFFICE.

LEGEND:

—×———×— TEMPORARY FENCE (TYPE ESA)

ABBREVIATION:

ESA ENVIRONMENTALLY SENSITIVE AREA

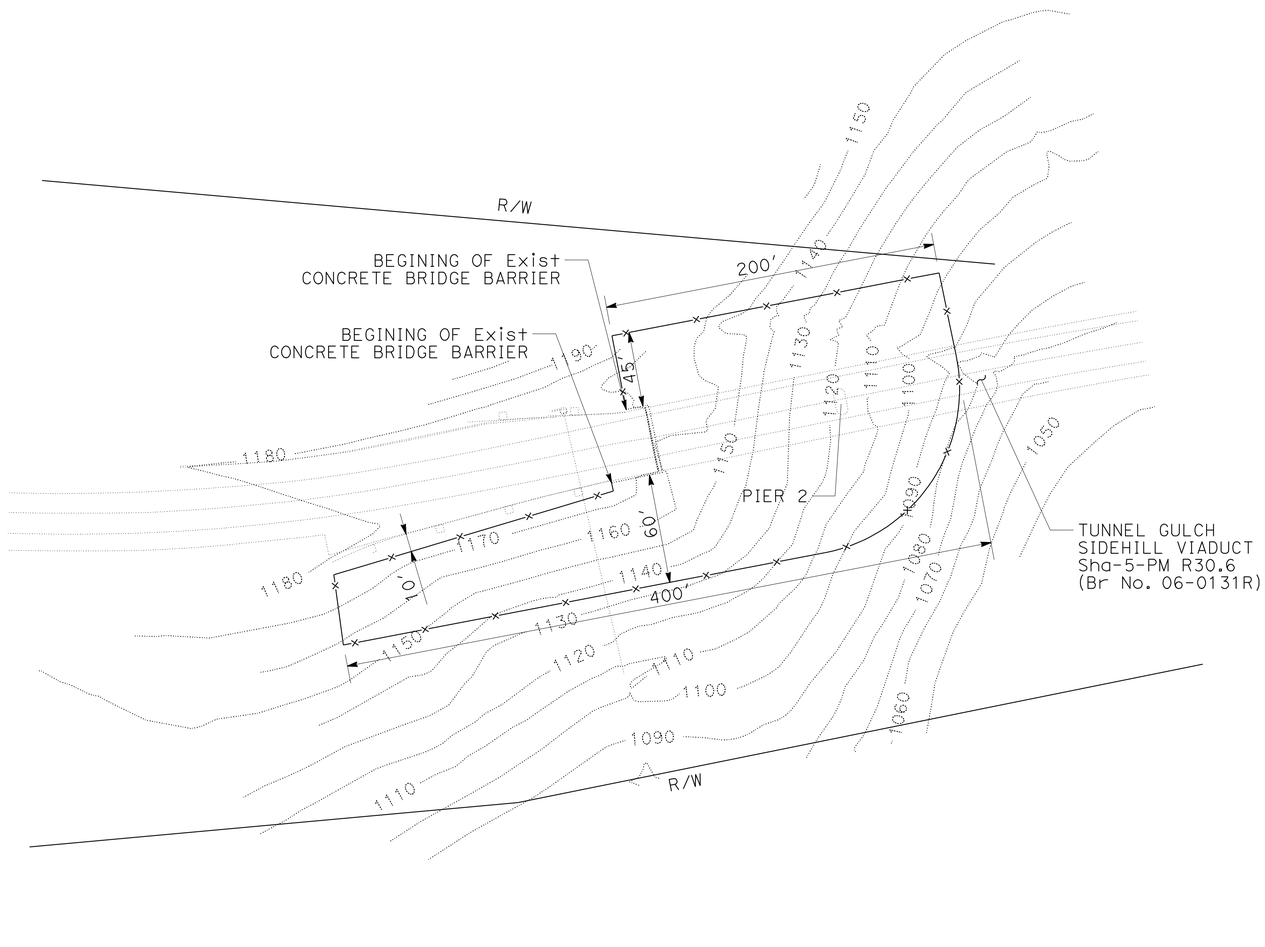

TEMPORARY FENCE LOCATION (TYPE ESA)

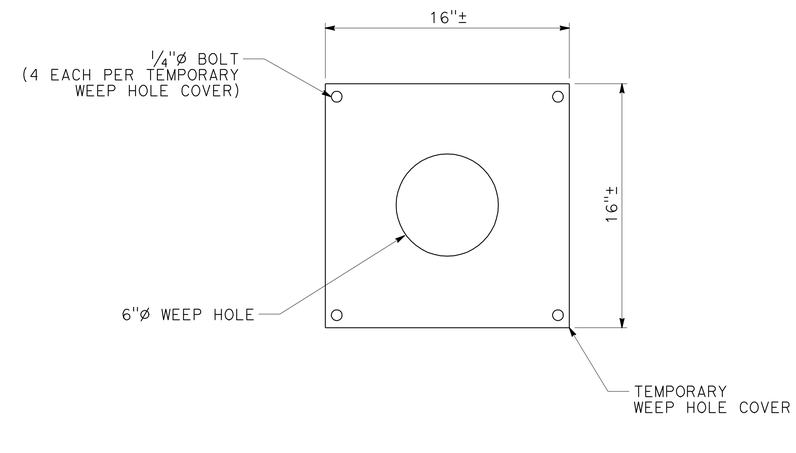

TEMPORARY WEEP HOLE COVER

CONSTRUCTION DETAILS

NO SCALE

C-1

REVISED BY | DATE REVISED
MICHAEL R. WEBB | KATHY ECKARD
CALCULATED-DESIGNED BY | CHECKED BY
FUNCTIONAL SUPERVISOR: JULIE CASEY

STATE OF CALIFORNIA - DEPARTMENT OF TRANSPORTATION
Caltrans
DESIGN

p:\proj\02\2c230\pse\22c230ga001.dgn

LAST REVISION 01-24-11 | DATE PLOTTED => 06-APR-2011 | TIME PLOTTED => 11:15

Dist	COUNTY	ROUTE	POST MILES TOTAL PROJECT	SHEET No.	TOTAL SHEETS
02	Sha	5	R30.6,61.8	4	33

Michael R. Webb 01-24-11
REGISTERED CIVIL ENGINEER DATE

4-4-11
PLANS APPROVAL DATE

REGISTERED PROFESSIONAL ENGINEER
MICHAEL R. WEBB
No. C73986
Exp. 6-30-11
CIVIL
STATE OF CALIFORNIA

THE STATE OF CALIFORNIA OR ITS OFFICERS OR AGENTS SHALL NOT BE RESPONSIBLE FOR THE ACCURACY OR COMPLETENESS OF SCANNED COPIES OF THIS PLAN SHEET.

NOTE:

FOR ACCURATE RIGHT OF WAY AND ACCESS DATA,
CONTACT RIGHT OF WAY ENGINEERING AT THE DISTRICT OFFICE.

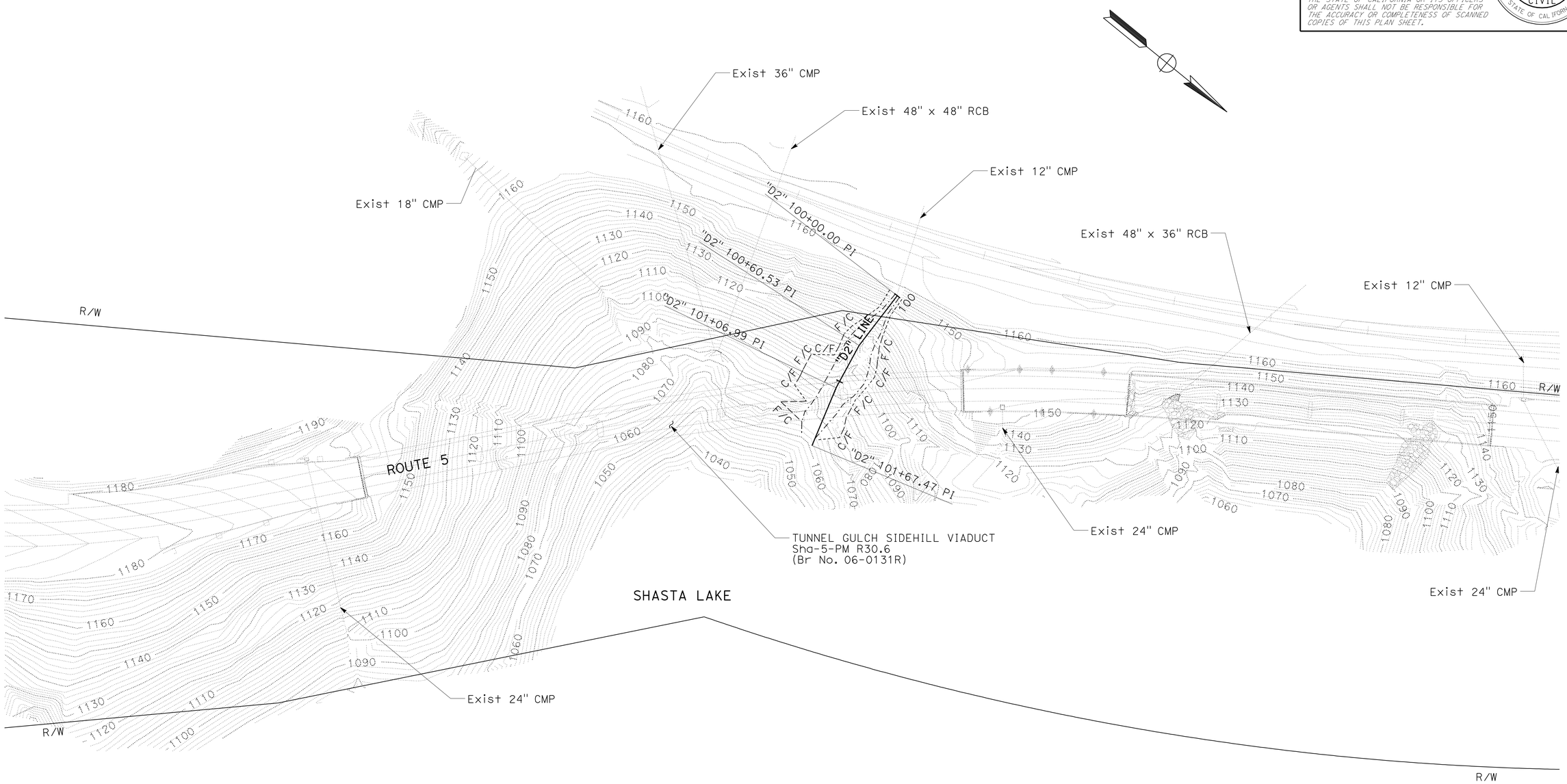

DRAINAGE PLAN

NO SCALE

D-1

THIS PLAN ACCURATE FOR DRAINAGE WORK ONLY

STATE OF CALIFORNIA - DEPARTMENT OF TRANSPORTATION
Caltrans
DESIGN

FUNCTIONAL SUPERVISOR: JULIE CASEY
CALCULATED-DESIGNED BY: MICHAEL R. WEBB
CHECKED BY: KATHY ECKARD
REVISED BY
DATE REVISED

p:\proj1\02\2c230\pse\22c230ia001.dgn

LAST REVISION DATE PLOTTED => 06-APR-2011
01-24-11 TIME PLOTTED => 11:15

Dist	COUNTY	ROUTE	POST MILES TOTAL PROJECT	SHEET No.	TOTAL SHEETS
02	Sha	5	R30.6,61.8	5	33

REGISTERED CIVIL ENGINEER 01-24-11 DATE

4-4-11
PLANS APPROVAL DATE

REGISTERED PROFESSIONAL ENGINEER MICHAEL R. WEBB No. C73986 Exp. 6-30-11 CIVIL STATE OF CALIFORNIA

THE STATE OF CALIFORNIA OR ITS OFFICERS OR AGENTS SHALL NOT BE RESPONSIBLE FOR THE ACCURACY OR COMPLETENESS OF SCANNED COPIES OF THIS PLAN SHEET.

LEGEND:

DITCH EXCAVATION

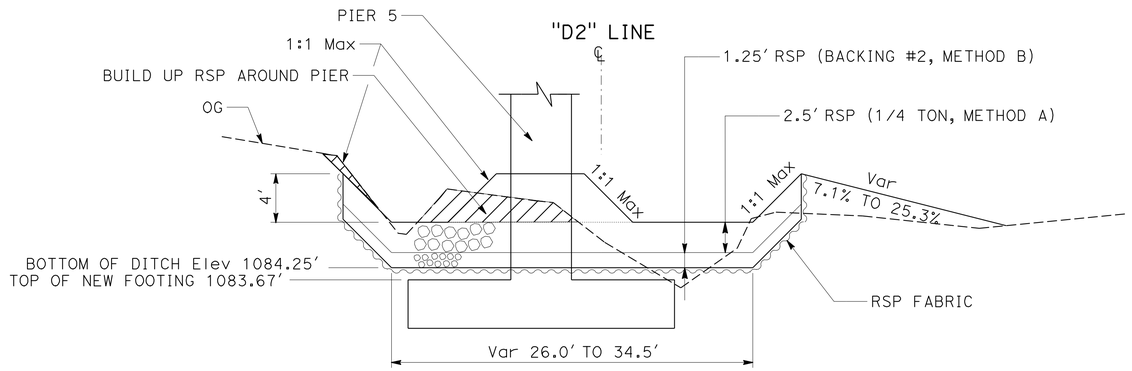

"D2" 100+90 TO 101+20

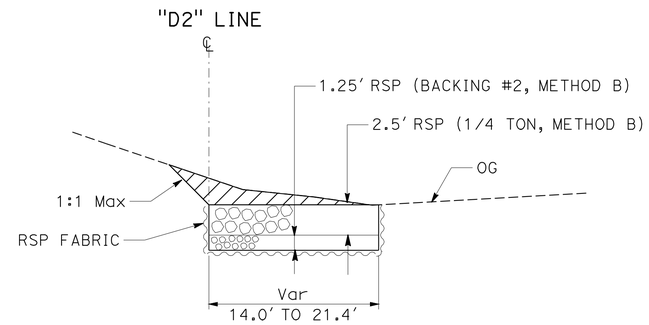

101+50 TO 101+60

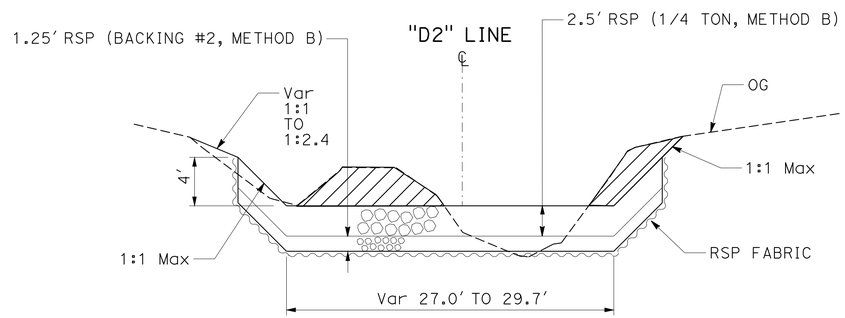

"D2" 100+60 TO 100+70

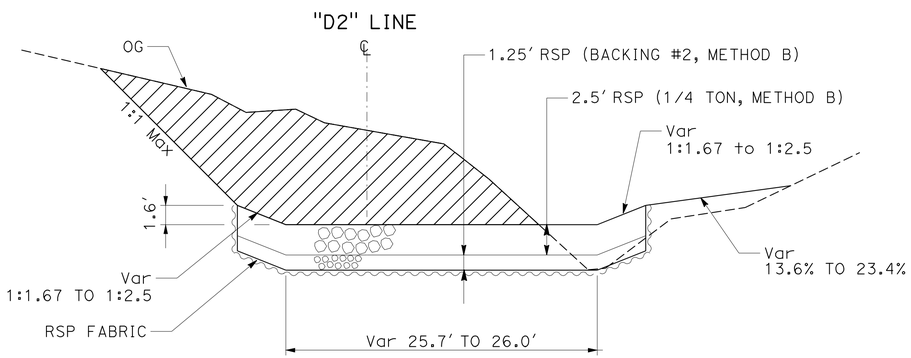

101+20 TO 101+50

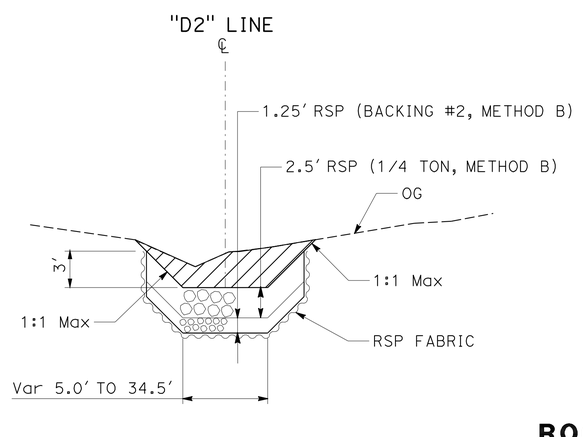

"D2" 100+20 TO 100+60
"D2" 100+70 TO 100+90

DITCH EXCAVATION
ROCK SLOPE PROTECTION

DRAINAGE DETAILS
NO SCALE

DD-1

REVISED BY | DATE REVISED
MICHAEL R. WEBB | KATHY ECKARD
CALCULATED-DESIGNED BY | CHECKED BY
FUNCTIONAL SUPERVISOR: JULIE CASEY

STATE OF CALIFORNIA - DEPARTMENT OF TRANSPORTATION
Caltrans
DESIGN

p:\proj1\02\2c230\pse\22c230ic001.dgn

LAST REVISION 01-24-11 | DATE PLOTTED => 06-APR-2011 | TIME PLOTTED => 11:15

Dist	COUNTY	ROUTE	POST MILES TOTAL PROJECT	SHEET No.	TOTAL SHEETS
02	Sha	5	R30.6,61.8	6	33

REGISTERED CIVIL ENGINEER 01-24-11 DATE

4-4-11
PLANS APPROVAL DATE

REGISTERED PROFESSIONAL ENGINEER MICHAEL R. WEBB No. C73986 Exp. 6-30-11 CIVIL STATE OF CALIFORNIA

THE STATE OF CALIFORNIA OR ITS OFFICERS OR AGENTS SHALL NOT BE RESPONSIBLE FOR THE ACCURACY OR COMPLETENESS OF SCANNED COPIES OF THIS PLAN SHEET.

CONSTRUCTION AREA SIGNS (STATIONARY MOUNTED)

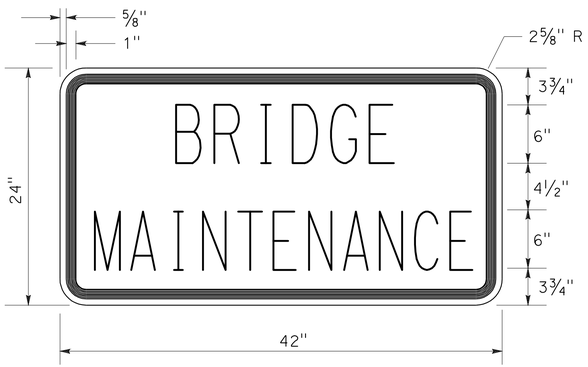

C23B SIGN PANEL DETAIL

TYPE	CODE	PANEL SIZE	SIGN MESSAGE	No. AND SIZE OF POST	No. OF SIGNS
A	W20-1	48" x 48"	ROAD WORK AHEAD	1 - 4" x 6"	7
B	C23B	42" x 24"	BRIDGE MAINTENANCE		4
C	W4-2L	48" x 48"	LANE ENDS SYMBOL	1 - 4" x 6"	4
D	C40 (CA)	72" x 36"	TRAFFIC FINES DOUBLED IN CONSTRUCTION ZONES	2 - 4" x 6"	2
E	G20-2	36" x 18"	END ROAD WORK	1 - 4" x 4"	5
F	C20 (CA)	48" x 48"	LEFT LANE CLOSED AHEAD	1 - 4" x 6"	4

ABBREVIATION:

PCMS PORTABLE CHANGEABLE MESSAGE SIGN

LEGEND:

- 1-POST SIGN
- 2-POST SIGN
- TRAFFIC CONE
- PORTABLE FLASHING BEACON

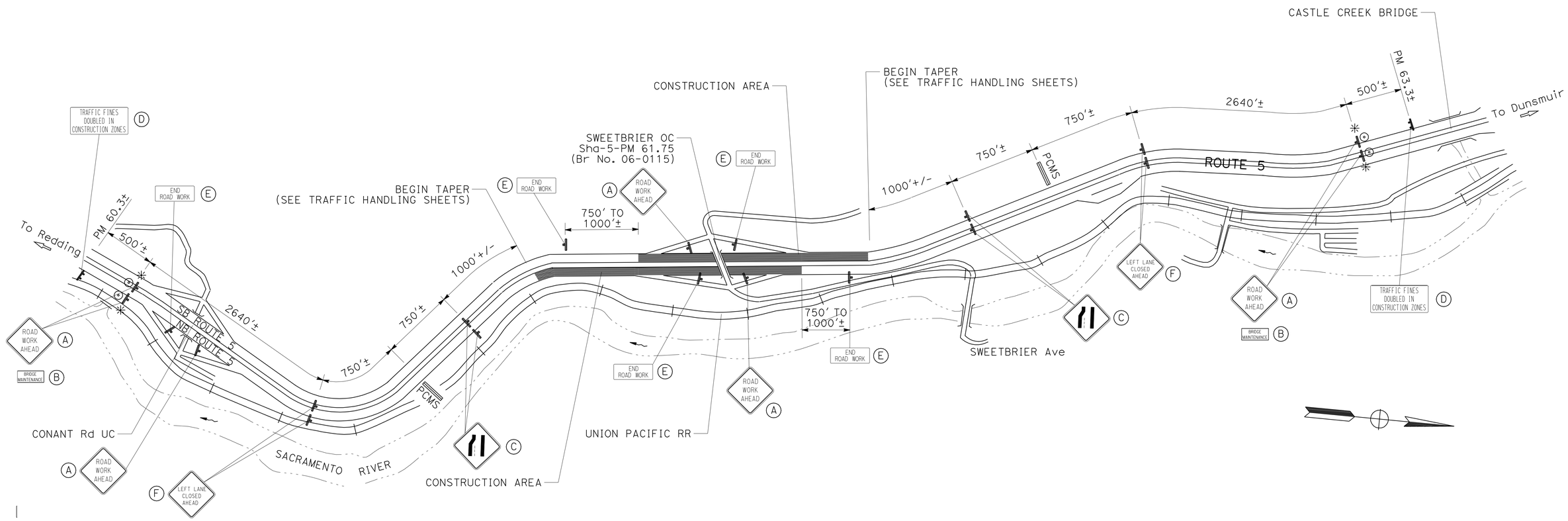

TYPICAL CONSTRUCTION AREA SIGN PLAN

CONSTRUCTION AREA SIGNS

NO SCALE

CS-1

THIS PLAN ACCURATE FOR CONSTRUCTION AREA SIGN WORK ONLY

STATE OF CALIFORNIA - DEPARTMENT OF TRANSPORTATION
Caltrans® DESIGN

FUNCTIONAL SUPERVISOR: JULIE CASEY
CALCULATED-DESIGNED BY: MICHAEL R. WEBB
CHECKED BY: KATHY ECKARD
REVISED BY / DATE REVISED

P:\proj1\02\2c230\pse\22c2301a001.dgn

LAST REVISION 01-24-11 | DATE PLOTTED => 06-APR-2011 | TIME PLOTTED => 11:15

Dist	COUNTY	ROUTE	POST MILES TOTAL PROJECT	SHEET No.	TOTAL SHEETS
02	Sha	5	R30.6,61.8	7	33

Michael R. Webb 01-24-11
REGISTERED CIVIL ENGINEER DATE

4-4-11
PLANS APPROVAL DATE

REGISTERED PROFESSIONAL ENGINEER MICHAEL R. WEBB No. C73986 Exp. 6-30-11 CIVIL STATE OF CALIFORNIA

THE STATE OF CALIFORNIA OR ITS OFFICERS OR AGENTS SHALL NOT BE RESPONSIBLE FOR THE ACCURACY OR COMPLETENESS OF SCANNED COPIES OF THIS PLAN SHEET.

NOTES:

1. EXACT LOCATIONS OF TRAFFIC HANDLING ITEMS SHALL BE DETERMINED BY THE ENGINEER.
2. SURFACE MOUNTED CHANNELIZERS ARE TO BE PLACED 2′ (MINIMUM) FROM THE ETW.

LEGEND:

- TEMPORARY RAILING (TYPE K) (CROSS SECTION)
- TEMPORARY RAILING (TYPE K) (PLAN)
- TEMPORARY PAVEMENT MARKING ARROW (TYPE VI)
- CHANNELIZER (SURFACE MOUNTED)
- FLASHING ARROW SIGN (TYPE I)
- MARKER (TYPE P)
- DIRECTION OF TRAFFIC
- TEMPORARY CRASH CUSHION MODULE
- Exist CONCRETE MEDIAN BARRIER
- Exist CHAIN LINK RAILING
- Exist CONCRETE BRIDGE BARRIER

- BT (XX) BEGIN TEMPORARY TRAFFIC STRIPE (PAINT)
- ET (XX) END TEMPORARY TRAFFIC STRIPE (PAINT)
- T (XX) TEMPORARY TRAFFIC STRIPE (PAINT)
- BR (XX) BEGIN REMOVE THERMOPLASTIC TRAFFIC STRIPE
- ER (XX) END REMOVE THERMOPLASTIC TRAFFIC STRIPE
- (XX) DETAIL NUMBER

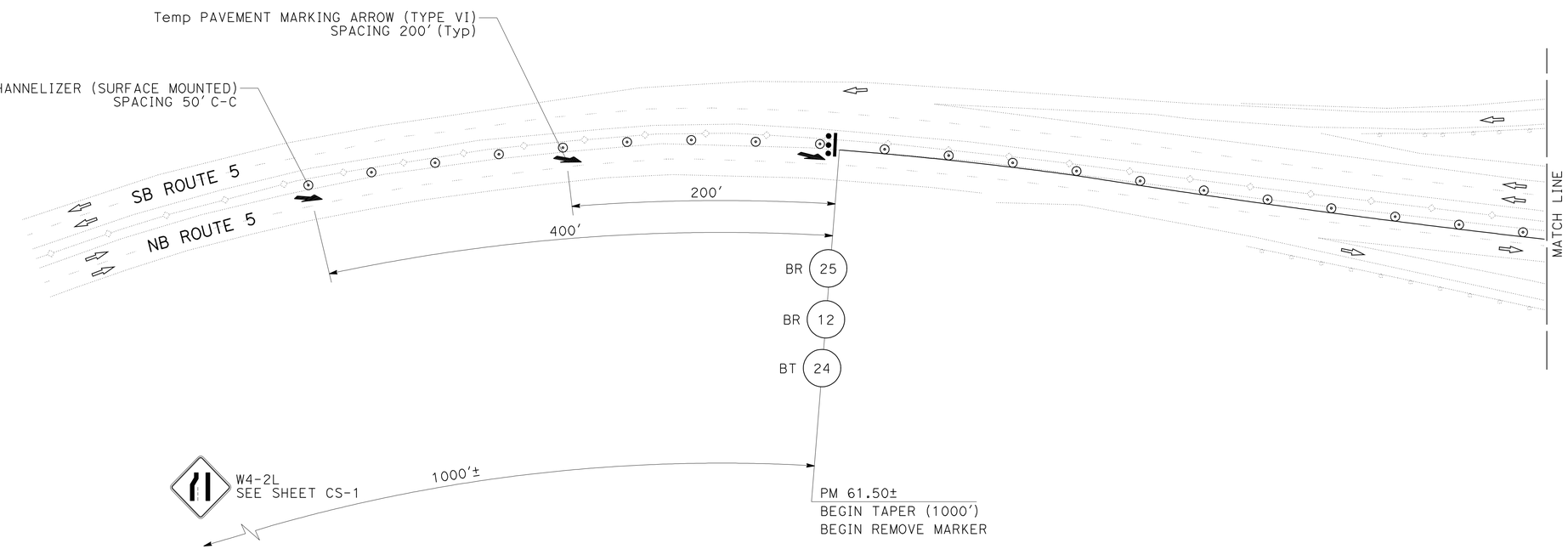

TRAFFIC HANDLING PLAN

SCALE: 1" = 50′

TH-1

THIS PLAN ACCURATE FOR TRAFFIC HANDLING WORK ONLY

REVISED BY	DATE REVISED

CALCULATED-DESIGNED BY: MICHAEL R. WEBB
CHECKED BY: KATHY ECKARD
FUNCTIONAL SUPERVISOR: JULIE CASEY

STATE OF CALIFORNIA - DEPARTMENT OF TRANSPORTATION
Caltrans
DESIGN

p:\proj\02\2c230\pse\22c230md001.dgn

LAST REVISION 01-24-11 | DATE PLOTTED => 06-APR-2011 | TIME PLOTTED => 11:15

BORDER LAST REVISED 7/2/2010 | USERNAME => trlim | DGN FILE => 22c230md001.dgn | RELATIVE BORDER SCALE IS IN INCHES 0 1 2 3 | UNIT 0318 | PROJECT NUMBER & PHASE 02000001681

Dist	COUNTY	ROUTE	POST MILES TOTAL PROJECT	SHEET No.	TOTAL SHEETS
02	Sha	5	R30.6,61.8	8	33

Michael R. Webb 01-24-11
REGISTERED CIVIL ENGINEER DATE

4-4-11
PLANS APPROVAL DATE

REGISTERED PROFESSIONAL ENGINEER
MICHAEL R. WEBB
No. C73986
Exp. 6-30-11
CIVIL
STATE OF CALIFORNIA

THE STATE OF CALIFORNIA OR ITS OFFICERS OR AGENTS SHALL NOT BE RESPONSIBLE FOR THE ACCURACY OR COMPLETENESS OF SCANNED COPIES OF THIS PLAN SHEET.

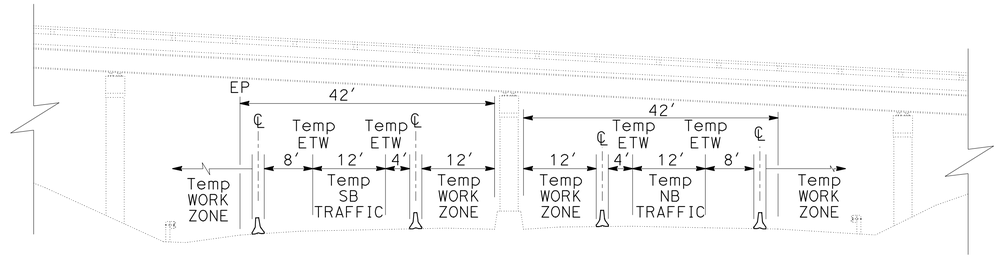

TYPICAL STRUCTURE SECTION

SWEETBRIER OC (Br No. 06-0115)
NO SCALE

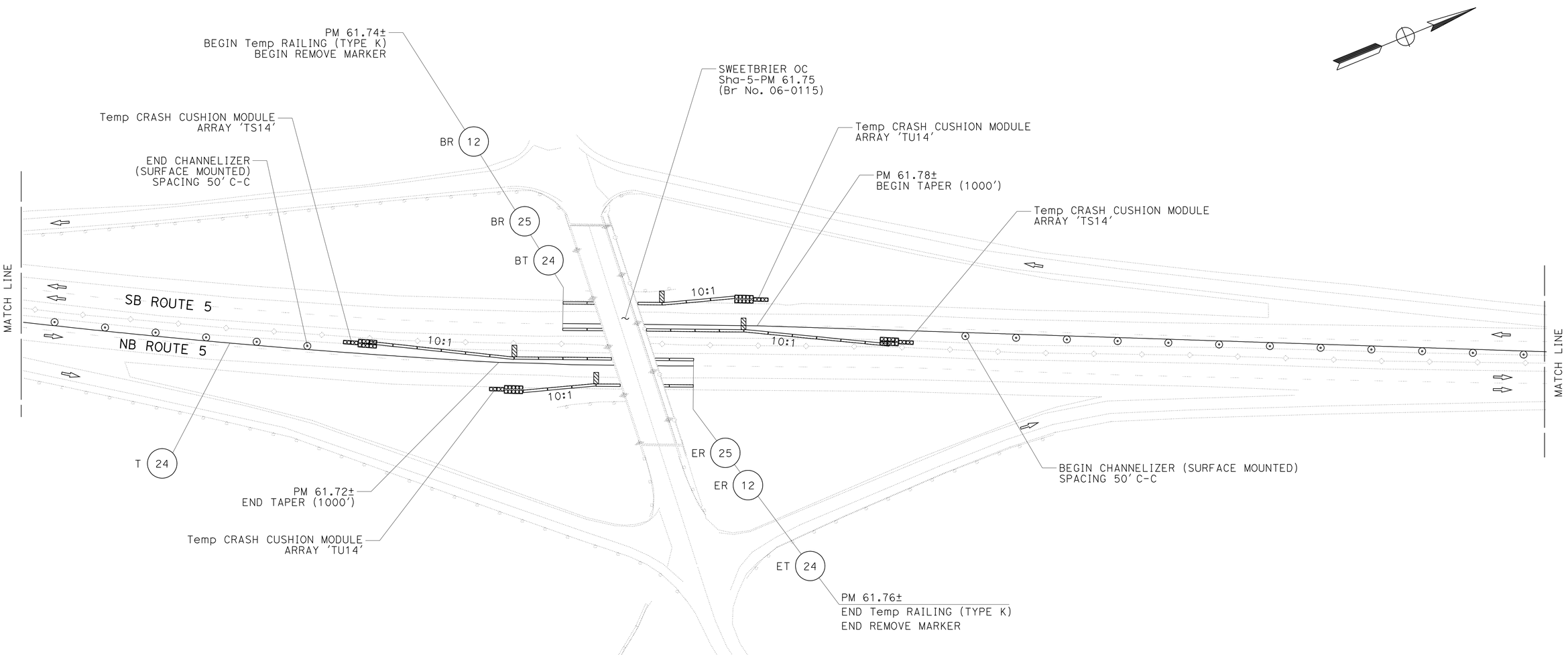

TRAFFIC HANDLING PLAN

SCALE: 1" = 50'

TH-2

THIS PLAN ACCURATE FOR TRAFFIC HANDLING WORK ONLY

REVISED BY | DATE REVISED
MICHAEL R. WEBB | KATHY ECKARD
CALCULATED-DESIGNED BY | CHECKED BY
FUNCTIONAL SUPERVISOR: JULIE CASEY

STATE OF CALIFORNIA - DEPARTMENT OF TRANSPORTATION
Caltrans
DESIGN

p:\proj1\02\2c230\pse\22c230md002.dgn

LAST REVISION 01-24-11 | DATE PLOTTED => 06-APR-2011 | TIME PLOTTED => 11:16

BORDER LAST REVISED 7/2/2010 | USERNAME => trlim | DGN FILE => 22c230md002.dgn | RELATIVE BORDER SCALE IS IN INCHES 0 1 2 3 | UNIT 0318 | PROJECT NUMBER & PHASE 02000001681

Dist	COUNTY	ROUTE	POST MILES TOTAL PROJECT	SHEET No.	TOTAL SHEETS
02	Sha	5	R30.6,61.8	9	33

Michael R. Webb 01-24-11
REGISTERED CIVIL ENGINEER DATE

4-4-11
PLANS APPROVAL DATE

REGISTERED PROFESSIONAL ENGINEER
MICHAEL R. WEBB
No. C73986
Exp. 6-30-11
CIVIL
STATE OF CALIFORNIA

THE STATE OF CALIFORNIA OR ITS OFFICERS OR AGENTS SHALL NOT BE RESPONSIBLE FOR THE ACCURACY OR COMPLETENESS OF SCANNED COPIES OF THIS PLAN SHEET.

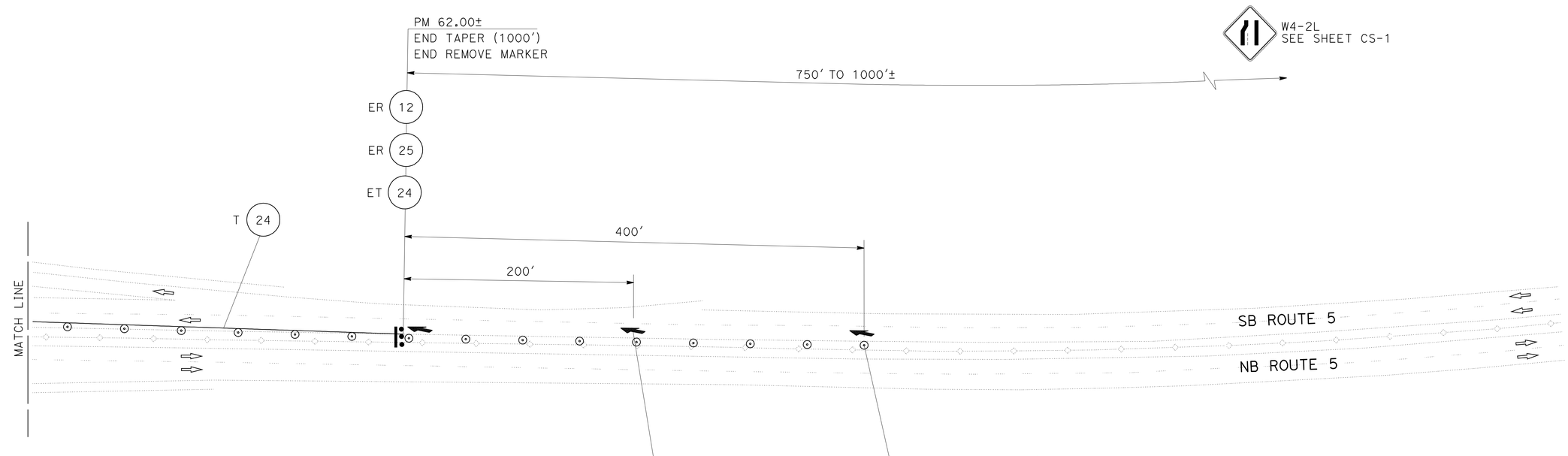

TRAFFIC HANDLING PLAN

SCALE: 1" = 50'

TH-3

THIS PLAN ACCURATE FOR TRAFFIC HANDLING WORK ONLY

REVISED BY	DATE REVISED

CALCULATED-DESIGNED BY	CHECKED BY
MICHAEL R. WEBB	KATHY ECKARD

FUNCTIONAL SUPERVISOR: JULIE CASEY

STATE OF CALIFORNIA - DEPARTMENT OF TRANSPORTATION
Caltrans
DESIGN

p:\proj1\02\2c230\pse\22c230md003.dgn

LAST REVISION 01-24-11 | DATE PLOTTED => 06-APR-2011 | TIME PLOTTED => 11:16

Dist	COUNTY	ROUTE	POST MILES TOTAL PROJECT	SHEET No.	TOTAL SHEETS
02	Sha	5	R30.6,61.8	10	33

Michael R. Webb 01-24-11
REGISTERED CIVIL ENGINEER DATE

4-4-11
PLANS APPROVAL DATE

REGISTERED PROFESSIONAL ENGINEER
MICHAEL R. WEBB
No. C73986
Exp. 6-30-11
CIVIL
STATE OF CALIFORNIA

THE STATE OF CALIFORNIA OR ITS OFFICERS OR AGENTS SHALL NOT BE RESPONSIBLE FOR THE ACCURACY OR COMPLETENESS OF SCANNED COPIES OF THIS PLAN SHEET.

LEGEND:

XX — PAVEMENT DELINEATION STRIPE DETAIL No.

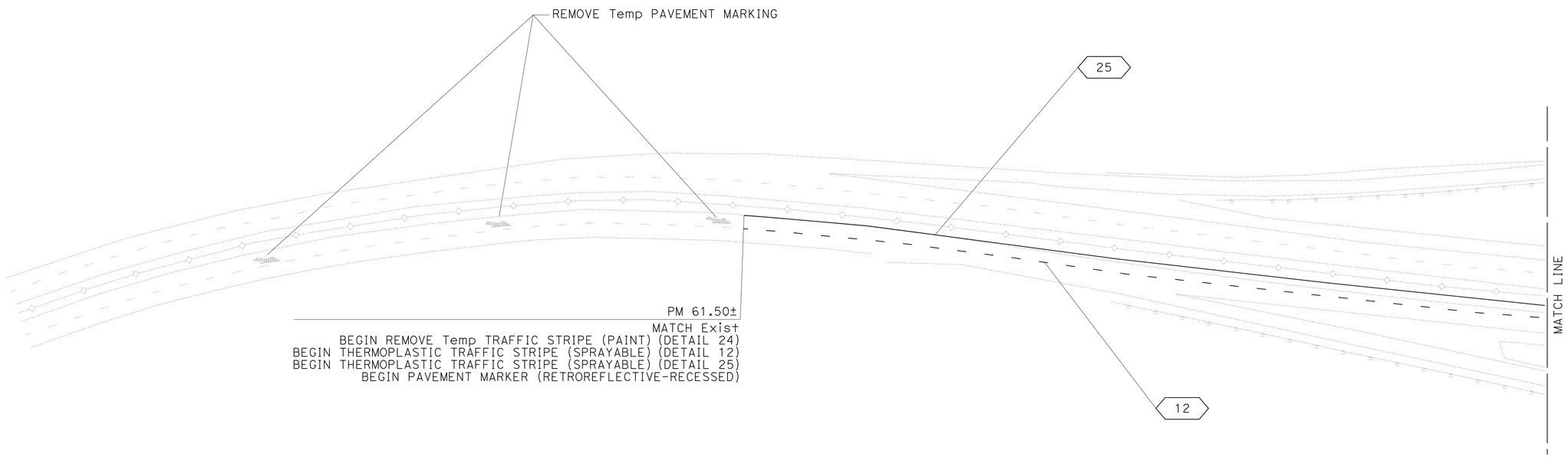

PAVEMENT DELINEATION PLAN

SCALE: 1" = 50'

PD-1

THIS PLAN ACCURATE FOR PAVEMENT DELINEATION WORK ONLY

REVISED BY	DATE REVISED

CALCULATED-DESIGNED BY	MICHAEL R. WEBB
CHECKED BY	KATHY ECKARD
FUNCTIONAL SUPERVISOR	JULIE CASEY

STATE OF CALIFORNIA - DEPARTMENT OF TRANSPORTATION
Caltrans® DESIGN

p:\proj1\02\2c230\pse\22c230na001.dgn

LAST REVISION 01-24-11 | DATE PLOTTED => 06-APR-2011 | TIME PLOTTED => 11:16

Dist	COUNTY	ROUTE	POST MILES TOTAL PROJECT	SHEET No.	TOTAL SHEETS
02	Sha	5	R30.6,61.8	11	33

Michael R. Webb 01-24-11
REGISTERED CIVIL ENGINEER DATE

4-4-11
PLANS APPROVAL DATE

REGISTERED PROFESSIONAL ENGINEER
MICHAEL R. WEBB
No. C73986
Exp. 6-30-11
CIVIL
STATE OF CALIFORNIA

THE STATE OF CALIFORNIA OR ITS OFFICERS OR AGENTS SHALL NOT BE RESPONSIBLE FOR THE ACCURACY OR COMPLETENESS OF SCANNED COPIES OF THIS PLAN SHEET.

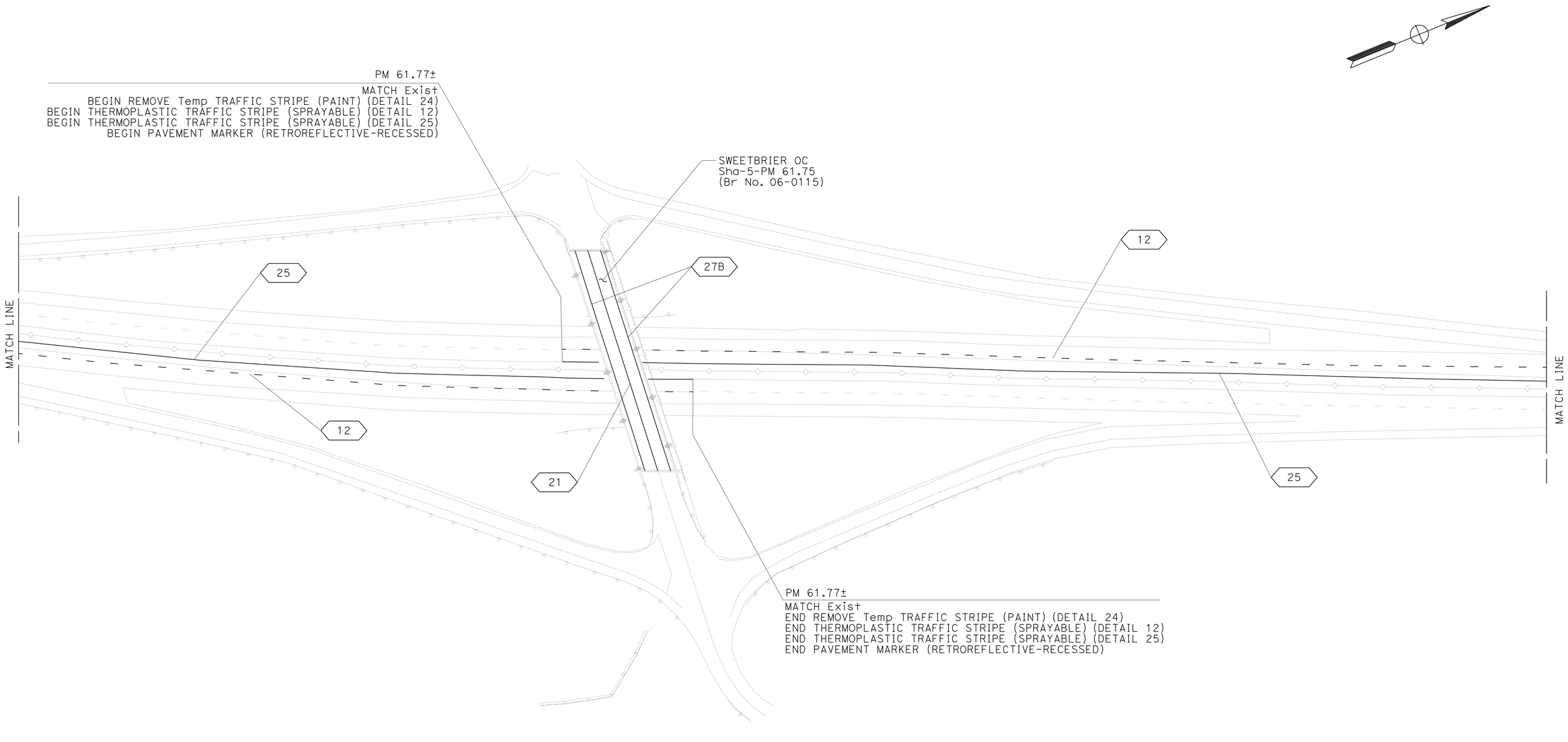

PAVEMENT DELINEATION PLAN

SCALE: 1" = 50'

PD-2

THIS PLAN ACCURATE FOR PAVEMENT DELINEATION WORK ONLY

REVISED BY	DATE REVISED

CALCULATED-DESIGNED BY	CHECKED BY
MICHAEL R. WEBB	KATHY ECKARD

FUNCTIONAL SUPERVISOR: JULIE CASEY

STATE OF CALIFORNIA - DEPARTMENT OF TRANSPORTATION
Caltrans®
DESIGN

p:\proj\02\2c230\pse\22c230na002.dgn

LAST REVISION 01-24-11 | DATE PLOTTED => 06-APR-2011 | TIME PLOTTED => 11:16

Dist	COUNTY	ROUTE	POST MILES TOTAL PROJECT	SHEET No.	TOTAL SHEETS
02	Sha	5	R30.6,61.8	12	33

Michael R. Webb 01-24-11
REGISTERED CIVIL ENGINEER DATE

4-4-11
PLANS APPROVAL DATE

REGISTERED PROFESSIONAL ENGINEER
MICHAEL R. WEBB
No. C73986
Exp. 6-30-11
CIVIL
STATE OF CALIFORNIA

THE STATE OF CALIFORNIA OR ITS OFFICERS OR AGENTS SHALL NOT BE RESPONSIBLE FOR THE ACCURACY OR COMPLETENESS OF SCANNED COPIES OF THIS PLAN SHEET.

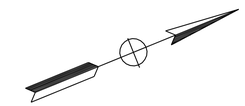

PM 62.00±
MATCH Exist
END REMOVE Temp TRAFFIC STRIPE (PAINT) (DETAIL 24)
END THERMOPLASTIC TRAFFIC STRIPE (DETAIL 12)
END THERMOPLASTIC TRAFFIC STRIPE (DETAIL 25)
END PAVEMENT MARKER (RETROREFLECTIVE-RECESSED)

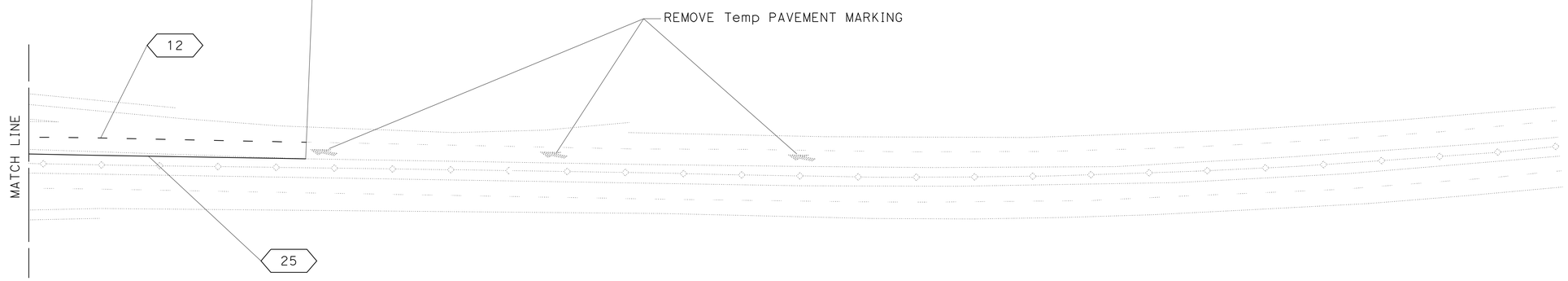

PAVEMENT DELINEATION PLAN

SCALE: 1" = 50'

PD-3

THIS PLAN ACCURATE FOR PAVEMENT DELINEATION WORK ONLY

CALCULATED-DESIGNED BY	MICHAEL R. WEBB	REVISED BY	
CHECKED BY	KATHY ECKARD	DATE REVISED	
FUNCTIONAL SUPERVISOR	JULIE CASEY		

STATE OF CALIFORNIA - DEPARTMENT OF TRANSPORTATION
Caltrans® DESIGN

p:\proj1\02\2c230\pse\22c230na003.dgn

LAST REVISION 01-24-11 | DATE PLOTTED => 06-APR-2011 | TIME PLOTTED => 11:16

Dist	COUNTY	ROUTE	POST MILES TOTAL PROJECT	SHEET No.	TOTAL SHEETS
02	Sha	5	R30.6,61.8	13	33

REGISTERED CIVIL ENGINEER 01-24-11 DATE

PLANS APPROVAL DATE 4-4-11

REGISTERED PROFESSIONAL ENGINEER MICHAEL R. WEBB No. C73986 Exp. 6-30-11 CIVIL STATE OF CALIFORNIA

THE STATE OF CALIFORNIA OR ITS OFFICERS OR AGENTS SHALL NOT BE RESPONSIBLE FOR THE ACCURACY OR COMPLETENESS OF SCANNED COPIES OF THIS PLAN SHEET.

NOTE:

(N) - NOT A SEPARATE PAY ITEM, FOR INFORMATION ONLY.

PAVEMENT DELINEATION ITEMS

		REMOVE PAINTED TRAFFIC STRIPE	REMOVE PAINTED PAVEMENT MARKING	THERMOPLASTIC TRAFFIC STRIPE (SPRAYABLE)		PAVEMENT MARKER (RETROREFLECTIVE-RECESSED)
				DETAIL 12	DETAIL 25	TYPE H
		LF	SQFT	LF	LF	EA
PM 61.5 TO 61.8	NB	1584	126	1584	1584	66
PM 61.7 TO 62.0	SB	1584	126	1584	1584	66
TOTAL		3168	252	6336		132

TEMPORARY FENCE (TYPE ESA)

	LF
TOTAL	1000

INSTALL TEMPORARY WEEP HOLE COVER

	INSTALL TEMPORARY WEEP HOLE COVER
	EA
PIER 2 TUNNEL GULCH SIDEHILL VIADUCT	8
TOTAL	8

WATER POLLUTION CONTROL

	TEMPORARY FIBER ROLL	TEMPORARY SILT FENCE	TEMPORARY CONSTRUCTION ENTRANCE	TEMPORARY COVER	TEMPORARY CHECK DAM	MOVE-IN/MOVE-OUT TEMPORARY EROSION CONTROL	TEMPORARY HYDRAULIC MULCH (POLYMER STABILIZED FIBER MATRIX)	TEMPORARY CONSTRUCTION ROADWAY
	LF	LF	EA	SQYD	LF	EA	SQYD	CY
	500	500	2	500	200	2	9680	500
TOTAL	500	500	2	500	200	2	9680	500

DRAINAGE ITEMS

SHEET	STATION	ROCK SLOPE PROTECTION (1/4 TON, METHOD B)	ROCK SLOPE PROTECTION (1/4 TON, METHOD A)	ROCK SLOPE PROTECTION (BACKING No. 2, METHOD B)	ROCK SLOPE PROTECTION FABRIC	DITCH EXCAVATION	(N) EMBANKMENT
		CY	CY	CY	SQYD	CY	CY
D-1	"D2" 100+00 TO "D2" 101+60				708	299	60
D-1	"D2" 100+00 TO "D2" 100+90	184		92			
D-1	"D2" 100+90 TO "D2" 101+20		178	89			
D-1	"D2" 101+20 TO "D2" 101+60	73		37			
TOTAL		257	178	218	708	299	60

EROSION CONTROL ITEMS *

LOCATION	EROSION CONTROL (HYDROSEED) (ACRE)	(N) STRAW (EROSION CONTROL)	(N) FIBER (EROSION CONTROL)	(N) PURE LIVE SEED (EROSION CONTROL)	(N) COMMERCIAL FERTILIZER (EROSION CONTROL)	(N) COMPOST (EROSION CONTROL)	(N) STABILIZING EMULSION (EROSION CONTROL)
	ACRE	TON	LB	LB	LB	CY	LB
TUNNEL GULCH SIDEHILL VIADUCT	3.7	7.4	12,210	425.5	370	8.2	1110
SWEETBRIER OVER CROSSING	0.6	1.2	1,980	69.0	60	1.3	180
TOTAL	4.3	8.6	14,190	494.5	430	9.5	1290

* APPLY EROSION CONTROL TO ALL DISTURBED AREAS.

TRAFFIC HANDLING ITEMS

		TEMPORARY PAVEMENT MARKING (PAINT)	TEMPORARY TRAFFIC STRIPE (PAINT)	CHANNELIZER (SURFACE MOUNTED)	TEMPORARY RAILING (TYPE K)	(N) TEMPORARY OBJECT MARKER (TYPE P)	TEMPORARY CRASH CUSHION MODULE	REMOVE YELLOW THERMO-PLASTIC TRAFFIC STRIPE (HAZARDOUS WASTE)	REMOVE MARKER	REMOVE THERMOPLASTIC TRAFFIC STRIPE
		SQFT	LF	EA	LF	EA	EA	LF	EA	LF
PM 61.5 TO 61.8	NB	126	1584	26	500	2	28	1584	66	396
PM 61.7 TO 62.0	SB	126	1584	27	500	2	28	1584	66	396
TOTAL		252	3168	53	1000	4	56	3168	132	792

SUMMARY OF QUANTITIES
Q-1

REVISED BY | DATE REVISED

MICHAEL R. WEBB | KATHY ECKARD

CALCULATED-DESIGNED BY | CHECKED BY

FUNCTIONAL SUPERVISOR: JULIE CASEY

STATE OF CALIFORNIA - DEPARTMENT OF TRANSPORTATION

Caltrans DESIGN

p:\proj1\02\2c230\pse\22c230pa001.dgn

LAST REVISION 01-24-11 | DATE PLOTTED => 08-APR-2011 | TIME PLOTTED => 14:00

DIST	COUNTY	ROUTE	POST MILES TOTAL PROJECT	SHEET NO.	TOTAL SHEETS
02	Sha	5	R30.6,61.8	14	33

Randell D. Hiatt
REGISTERED CIVIL ENGINEER

June 6, 2008
PLANS APPROVAL DATE

REGISTERED PROFESSIONAL ENGINEER
Randell D. Hiatt
No. C50200
Exp. 6-30-09
CIVIL
STATE OF CALIFORNIA

The State of California or its officers or agents shall not be responsible for the accuracy or completeness of electronic copies of this plan sheet.

To accompany plans dated 4-4-11

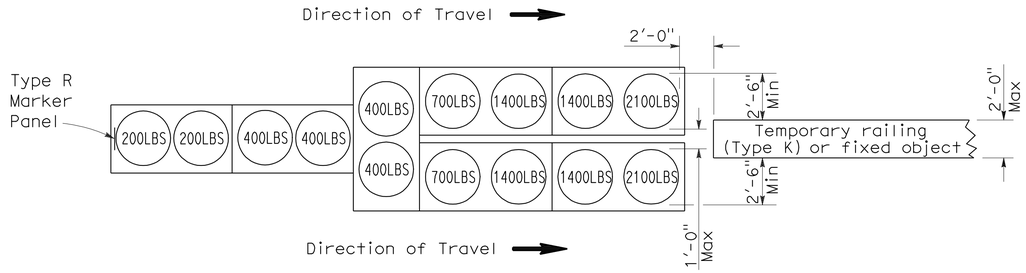

ARRAY 'TU14'

Approach speed 45 mph or more

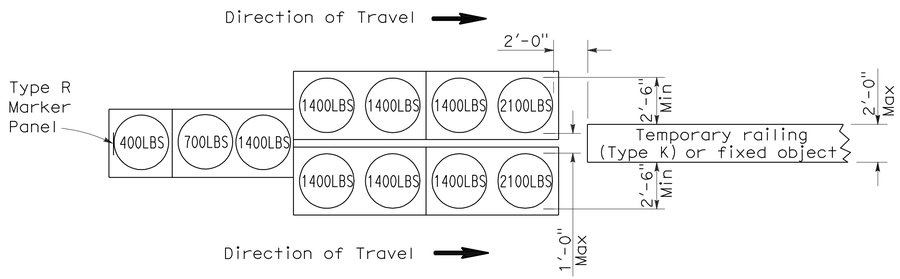

ARRAY 'TU11'

Approach speed less than 45 mph

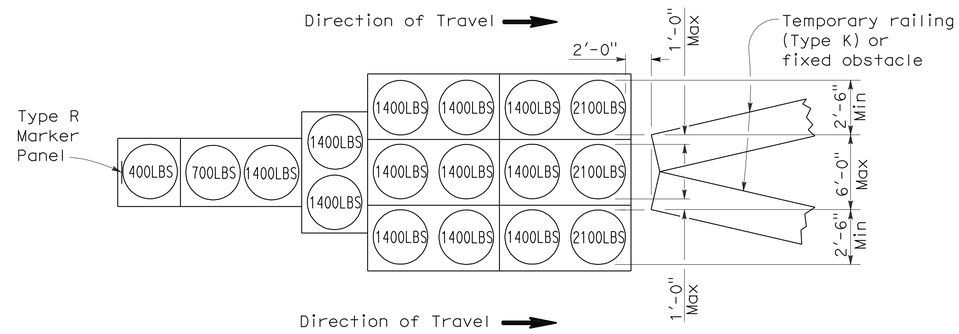

ARRAY 'TU17'

Approach speed less than 45 mph

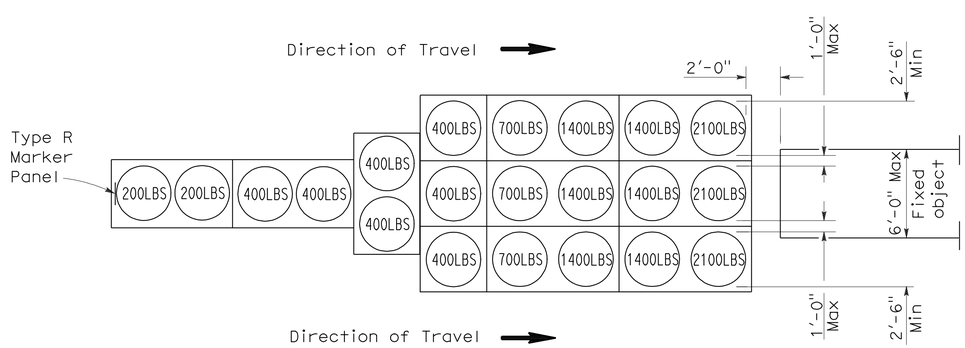

ARRAY 'TU21'

Approach speed 45 mph or more

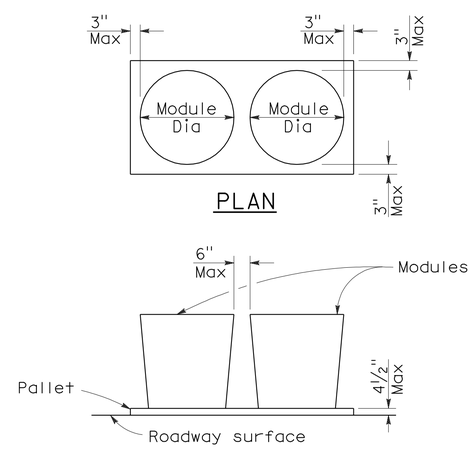

PLAN

ELEVATION

CRASH CUSHION PALLET DETAIL

See Note 7

NOTES:

1. (XXX) Indicates sand filled module location and weight of sand in pounds for each module. Module spacing is based on the greater diameter of the module.
2. All sand weights are nominal.
3. Temporary crash cushion arrays shall not encroach on the traveled way.
4. Place the top of Type R marker panel 1" below the module lid.
5. Refer to Standard Plan A73B for marker details.
6. Approach speeds indicated conform to NCHRP 350 Report criteria.
7. Use of pallets is optional.

STATE OF CALIFORNIA
DEPARTMENT OF TRANSPORTATION

TEMPORARY CRASH CUSHION, SAND FILLED (UNIDIRECTIONAL)

NO SCALE

RSP T1A DATED JUNE 6, 2008 SUPERSEDES STANDARD PLAN T1A
DATED MAY 1, 2006 - PAGE 211 OF THE STANDARD PLANS BOOK DATED MAY 2006.

REVISED STANDARD PLAN RSP T1A

2006 REVISED STANDARD PLAN RSP T1A

DIST	COUNTY	ROUTE	POST MILES TOTAL PROJECT	SHEET NO.	TOTAL SHEETS
02	Sha	5	R30.6,61.8	15	33

Randell D. Hiatt
REGISTERED CIVIL ENGINEER

June 6, 2008
PLANS APPROVAL DATE

REGISTERED PROFESSIONAL ENGINEER
Randell D. Hiatt
No. C50200
Exp. 6-30-09
CIVIL
STATE OF CALIFORNIA

The State of California or its officers or agents shall not be responsible for the accuracy or completeness of electronic copies of this plan sheet.

To accompany plans dated 4-4-11

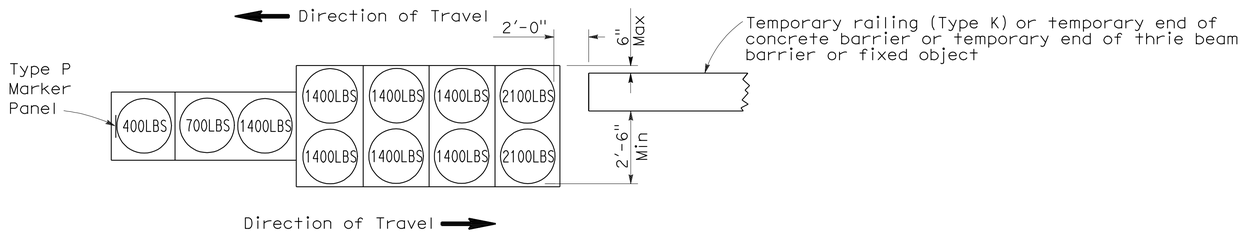

ARRAY 'TB11'

Approach speed less than 45 mph

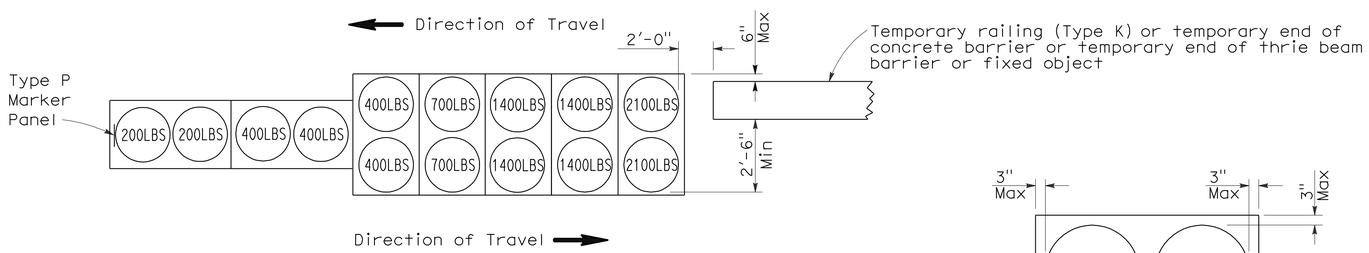

ARRAY 'TB14'

Approach speed 45 mph or more

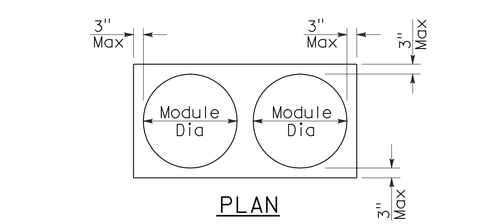

PLAN

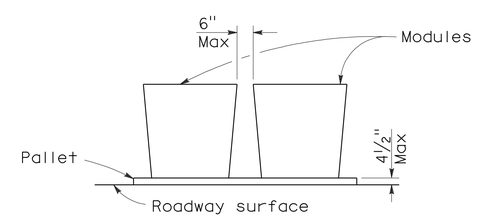

ELEVATION

CRASH CUSHION PALLET DETAIL

See Note 7

NOTES:

1. (XXX) Indicates sand filled module location and weight of sand in pounds for each module. Module spacing is based on the greater diameter of the module.
2. All sand weights are nominal.
3. Temporary crash cushion arrays shall not encroach on the traveled way.
4. Place the Type P marker panel so that the bottom of the panel rests upon the pallet.
5. Refer to Standard Plan A73B for marker details.
6. Approach speeds indicated conform to NCHRP 350 Report criteria.
7. Use of pallets is optional.

STATE OF CALIFORNIA
DEPARTMENT OF TRANSPORTATION

TEMPORARY CRASH CUSHION, SAND FILLED (BIDIRECTIONAL)

NO SCALE

RSP T1B DATED JUNE 6, 2008 SUPERSEDES STANDARD PLAN T1B
DATED MAY 1, 2006 - PAGE 212 OF THE STANDARD PLANS BOOK DATED MAY 2006.

REVISED STANDARD PLAN RSP T1B

2006 REVISED STANDARD PLAN RSP T1B

5-15-08

DIST	COUNTY	ROUTE	POST MILES TOTAL PROJECT	SHEET NO.	TOTAL SHEETS
02	Sha	5	R30.6,61.8	16	33

Randell D. Hiatt
REGISTERED CIVIL ENGINEER

June 6, 2008
PLANS APPROVAL DATE

REGISTERED PROFESSIONAL ENGINEER
Randell D. Hiatt
No. C50200
Exp. 6-30-09
CIVIL
STATE OF CALIFORNIA

The State of California or its officers or agents shall not be responsible for the accuracy or completeness of electronic copies of this plan sheet.

To accompany plans dated 4-4-11

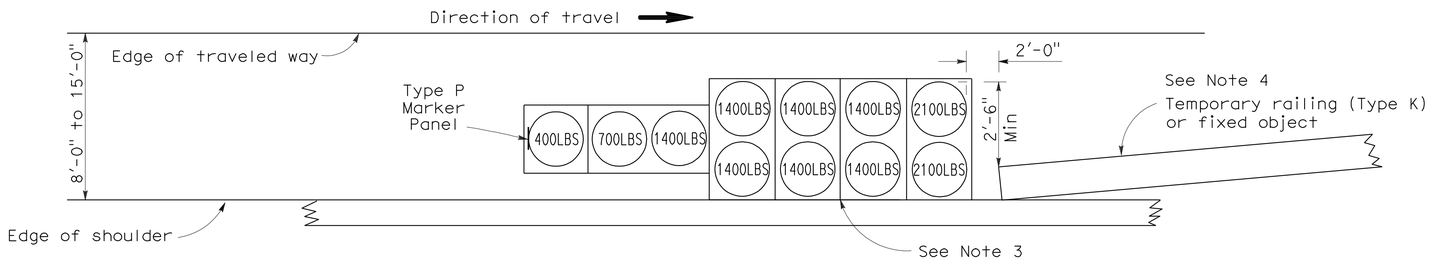

ARRAY 'TS11'

Approach speed less than 45 mph
See Note 9

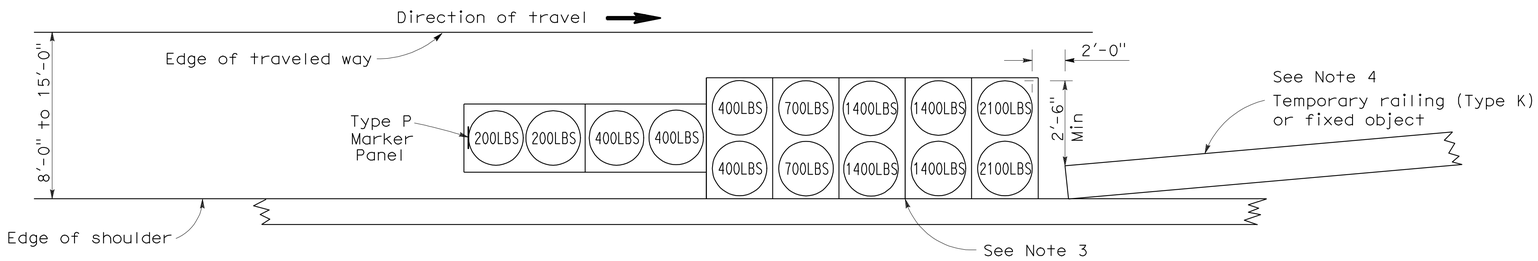

ARRAY 'TS14'

Approach speed 45 mph or more
See Note 9

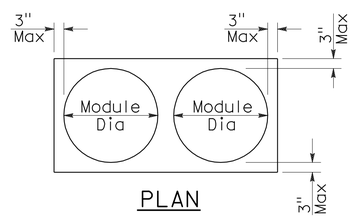

PLAN

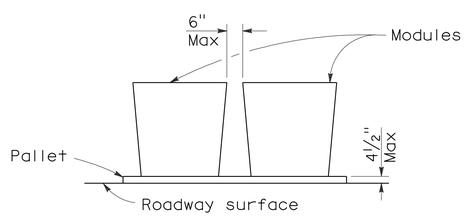

ELEVATION

CRASH CUSHION PALLET DETAIL

See Note 11

NOTES:

1. (XXX) Indicates sand filled module location and weight of sand in pounds for each module. Module spacing is based on the greater diameter of the module.
2. All sand weights are nominal.
3. The temporary crash cushion arrays shown on this plan shall be used only in locations where there will be traffic on one side of the temporary crash cushion array.
4. If the fixed object or approach end of the temporary railing is less than 15'-0" from the edge of traveled way, a temporary crash cushion is required in a construction or work zone.
5. Temporary crash cushion arrays shall not encroach on the traveled way.
6. Arrays for median shoulders shall conform to details shown on this plan for outside shoulders.
7. Place the Type P marker panel so that the bottom of the panel rests upon the pallet and faces traffic.
8. Refer to Standard Plan A73B for marker details.
9. For shoulder widths less than 8'-0", appropriate approved crash cushion protection, other than sand filled modules, shall be provided at fixed objects and at approach ends of temporary railing. The specific type of crash cushion shall be as shown on the project plans or as specified in the Special Provisions, or if not shown on the project plans or specified in the Special Provisions, shall be as approved by the Engineer.
10. Approach speeds indicated conform to NCHRP 350 Report criteria.
11. Use of pallets is optional.

STATE OF CALIFORNIA
DEPARTMENT OF TRANSPORTATION

TEMPORARY CRASH CUSHION, SAND FILLED (SHOULDER INSTALLATIONS)

NO SCALE

RSP T2 DATED JUNE 6, 2008 SUPERSEDES STANDARD PLAN T2
DATED MAY 1, 2006 - PAGE 213 OF THE STANDARD PLANS BOOK DATED MAY 2006.

REVISED STANDARD PLAN RSP T2

2006 REVISED STANDARD PLAN RSP T2

DIST	COUNTY	ROUTE	POST MILES TOTAL PROJECT	SHEET NO.	TOTAL SHEETS
02	Sha	5	R30.6,61.8	17	33

LICENSED LANDSCAPE ARCHITECT

April 3, 2009
PLANS APPROVAL DATE

LICENSED LANDSCAPE ARCHITECT — Robert B. Schott — Signature — 11-30-10 Renewal Date — 2-25-09 Date — STATE OF CALIFORNIA

The State of California or its officers or agents shall not be responsible for the accuracy or completeness of electronic copies of this plan sheet.

To accompany plans dated 4-4-11

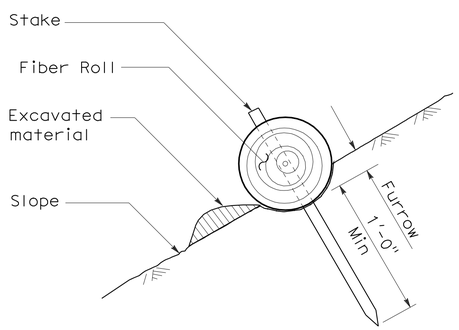

SECTION

TEMPORARY FIBER ROLL (TYPE 1)

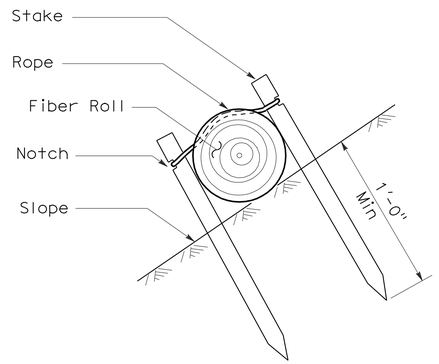

SECTION

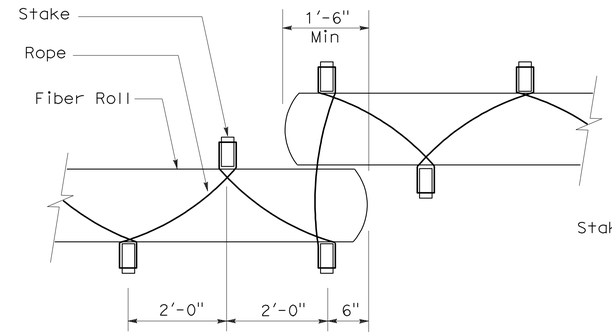

PLAN

TEMPORARY FIBER ROLL (TYPE 2)

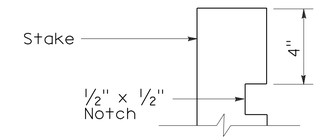

ELEVATION

STAKE NOTCH DETAIL

NOTES:

1. Temporary fiber roll spacing varies depending upon slope inclination.
2. Installations shown in the perspectives are for slope inclination of 10:1 and steeper.

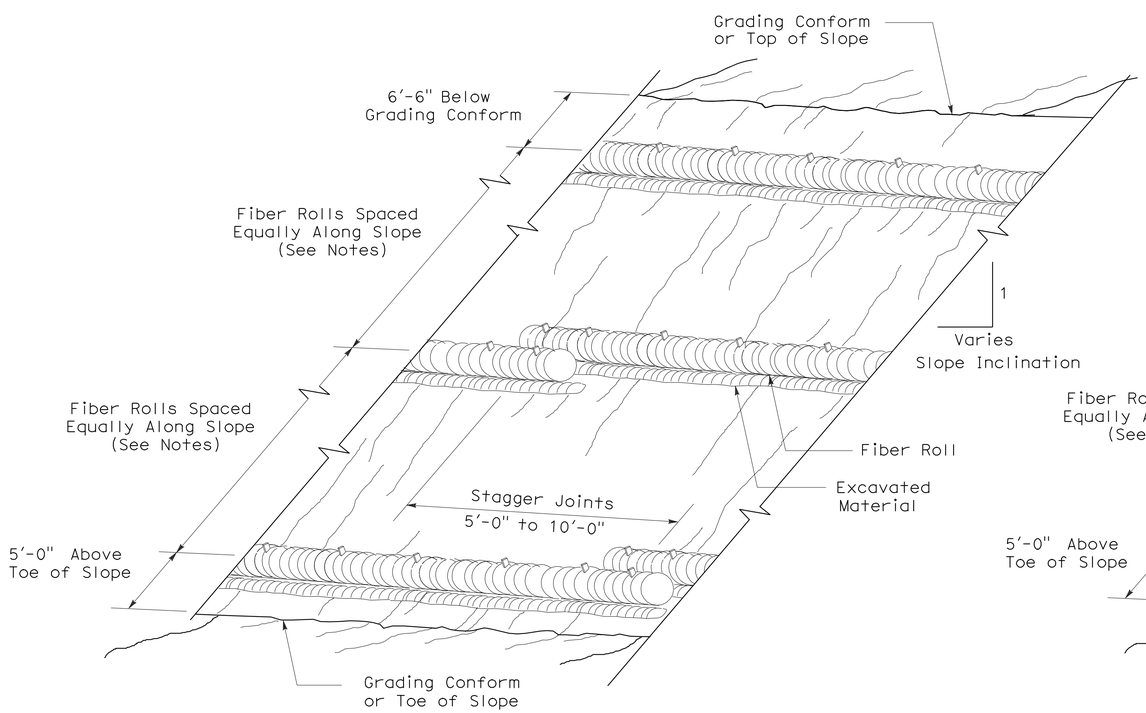

PERSPECTIVE

TEMPORARY FIBER ROLL (TYPE 1)

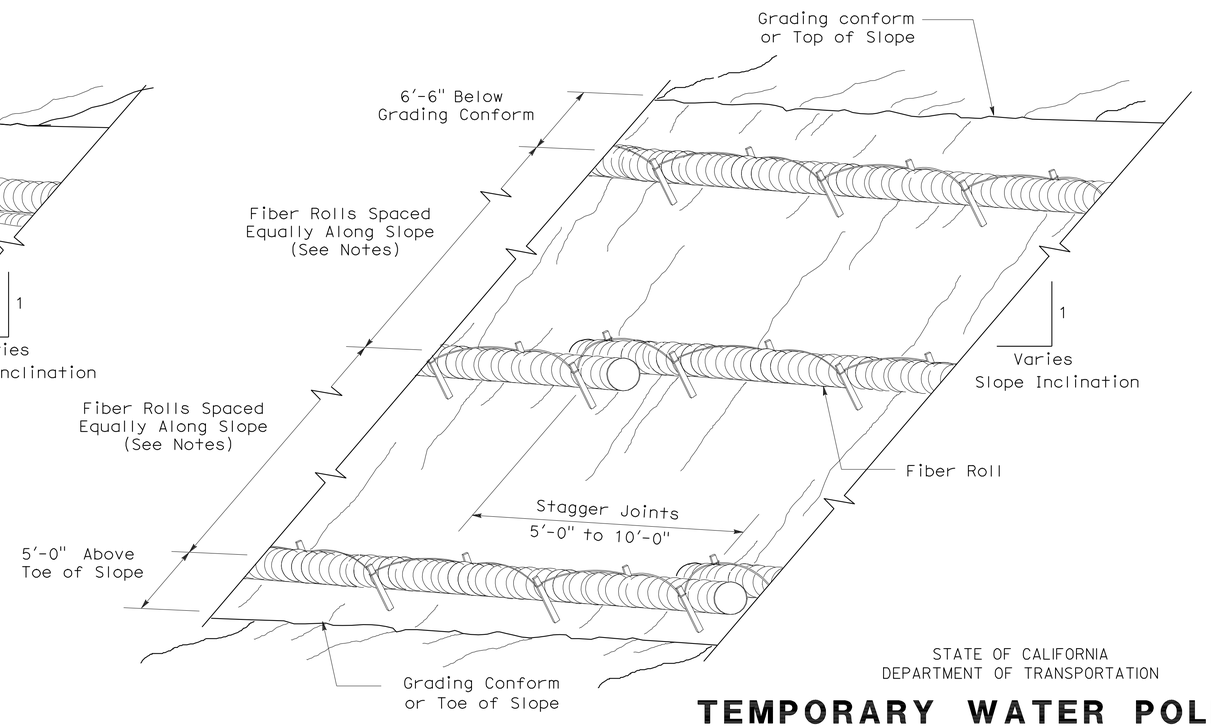

PERSPECTIVE

TEMPORARY FIBER ROLL (TYPE 2)

STATE OF CALIFORNIA
DEPARTMENT OF TRANSPORTATION

TEMPORARY WATER POLLUTION CONTROL DETAILS (TEMPORARY FIBER ROLL)

NO SCALE

RSP T56 DATED APRIL 3, 2009 SUPERSEDES STANDARD PLAN T56
DATED MAY 1, 2006 - PAGE 232 OF THE STANDARD PLANS BOOK DATED MAY 2006.

REVISED STANDARD PLAN RSP T56

2006 REVISED STANDARD PLAN RSP T56

2-23-09

DIST	COUNTY	ROUTE	POST MILES TOTAL PROJECT	SHEET NO.	TOTAL SHEETS
02	Sha	5	R30.6,61.8	18	33

LICENSED LANDSCAPE ARCHITECT

April 3, 2009
PLANS APPROVAL DATE

LICENSED LANDSCAPE ARCHITECT
Robert B. Schott 3025
Signature
11-30-10
Renewal Date
2-25-09
Date
STATE OF CALIFORNIA

The State of California or its officers or agents shall not be responsible for the accuracy or completeness of electronic copies of this plan sheet.

To accompany plans dated 4-4-11

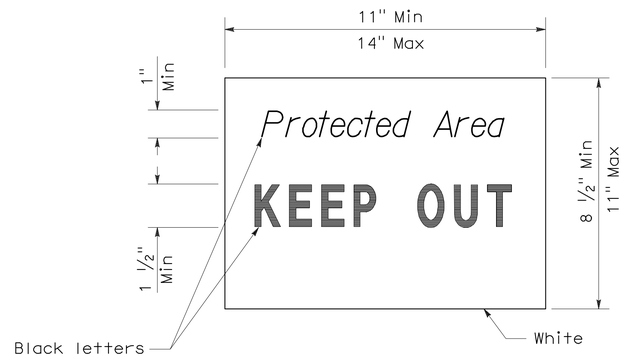

SIGN DETAIL

NOTE:

1. Temporary silt fence and temporary straw bale barrier shown for reference purposes only.

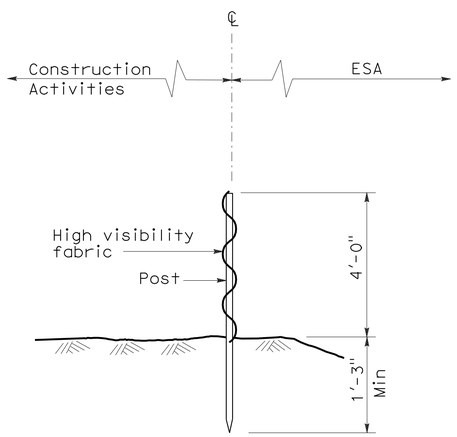

SECTION
TEMPORARY FENCE (TYPE ESA)

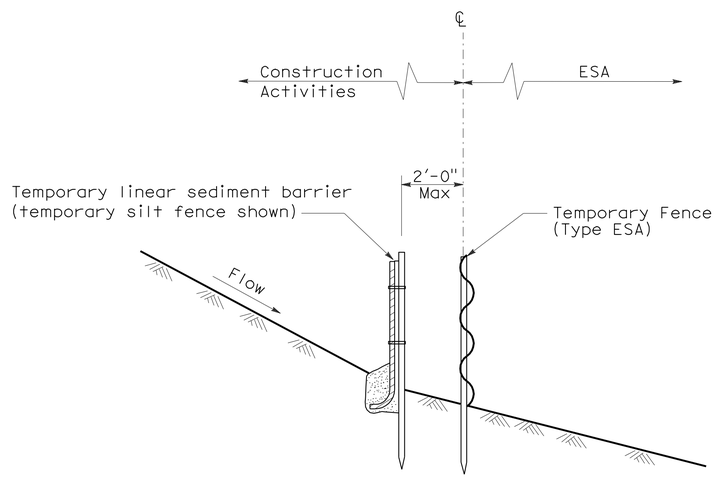

SECTION
PLACEMENT DETAIL
FOR TEMPORARY LINEAR SEDIMENT BARRIER
USED WITH TEMPORARY
FENCE (TYPE ESA)
(See Note 1)

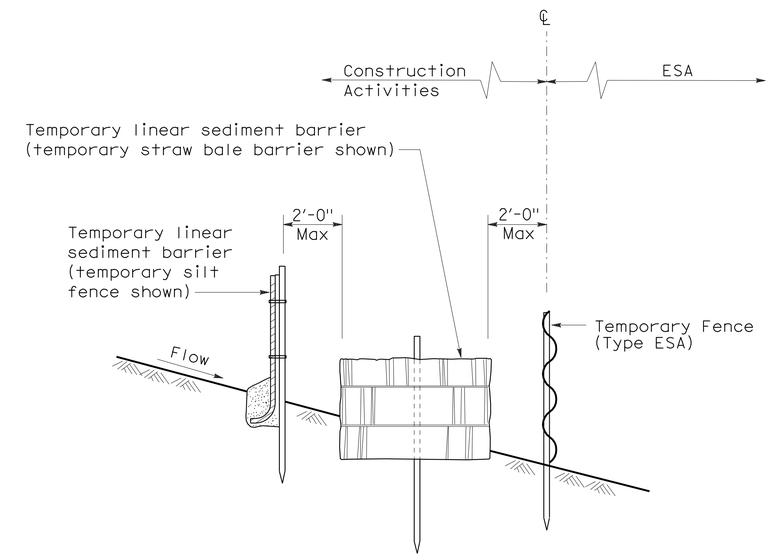

SECTION
PLACEMENT DETAIL
FOR TEMPORARY SILT FENCE
AND TEMPORARY STRAW BALE BARRIER
USED WITH TEMPORARY FENCE (TYPE ESA)
(See Note 1)

STATE OF CALIFORNIA
DEPARTMENT OF TRANSPORTATION

TEMPORARY WATER POLLUTION CONTROL DETAILS [TEMPORARY FENCE (TYPE ESA)]

NO SCALE

NSP T65 DATED APRIL 3, 2009 SUPPLEMENTS
THE STANDARD PLANS BOOK DATED MAY 2006.

NEW STANDARD PLAN NSP T65

2006 NEW STANDARD PLAN NSP T65

DIST	COUNTY	ROUTE	POST MILES TOTAL PROJECT	SHEET NO.	TOTAL SHEETS
02	Sha	5	R30.6,61.8	19	33

LICENSED LANDSCAPE ARCHITECT

June 5, 2009
PLANS APPROVAL DATE

The State of California or its officers or agents shall not be responsible for the accuracy or completeness of electronic copies of this plan sheet.

LICENSED LANDSCAPE ARCHITECT Robert B. Schott 6135 Signature 11-30-10 Renewal Date 5-22-09 Date STATE OF CALIFORNIA

To accompany plans dated 4-4-11

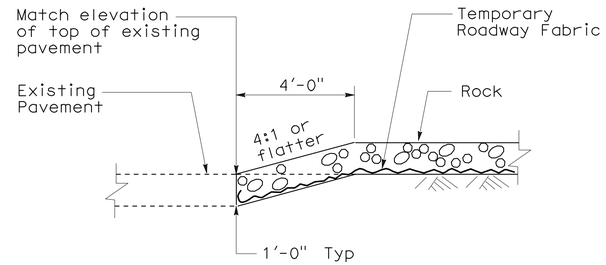

SECTION

CONFORM DETAIL

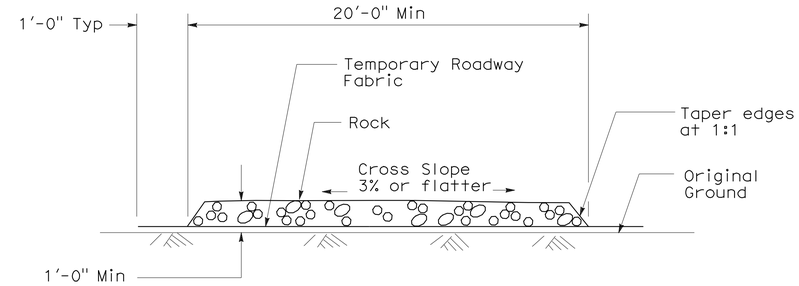

SECTION

TEMPORARY CONSTRUCTION ROADWAY

STATE OF CALIFORNIA
DEPARTMENT OF TRANSPORTATION

TEMPORARY WATER POLLUTION CONTROL DETAILS (TEMPORARY CONSTRUCTION ROADWAY)

NO SCALE

NSP T67 DATED JUNE 5, 2009 SUPPLEMENTS
THE STANDARD PLANS BOOK DATED MAY 2006.

NEW STANDARD PLAN NSP T67

2006 NEW STANDARD PLAN NSP T67

3-5-09

DIST	COUNTY	ROUTE	POST MILES TOTAL PROJECT	SHEET NO.	TOTAL SHEETS
02	Sha	5	R30.6,61.8	20	33

REGISTERED CIVIL ENGINEER

October 5, 2007
PLANS APPROVAL DATE

REGISTERED PROFESSIONAL ENGINEER Efthymios Delis No. C51434 Exp. 6-30-08 CIVIL STATE OF CALIFORNIA

The State of California or its officers or agents shall not be responsible for the accuracy or completeness of electronic copies of this plan sheet.

To accompany plans dated 4-4-11

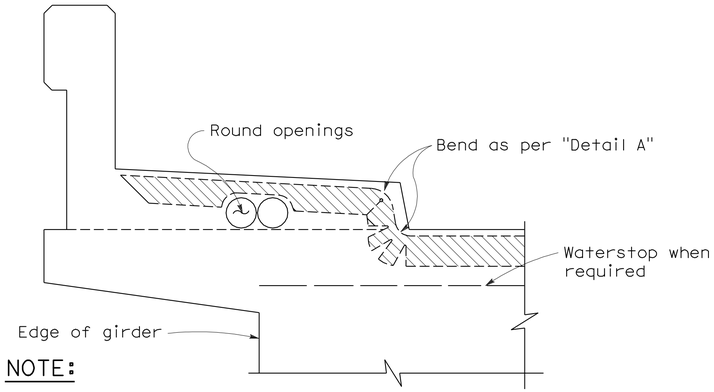

NOTE:

Type "B" seal shown. Type "A" seals to comform to the general path of seal shown, cuts for bending not required. Bend Type "A" seals 3" up into curb or barrier rail on only the low end of the seal.

CONCRETE BARRIER AND SIDEWALK

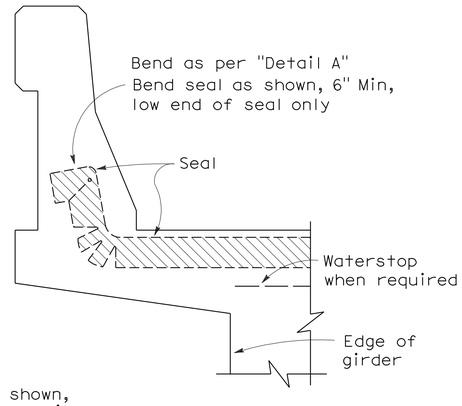

CONCRETE BARRIER

JOINT SEALS DETAILS

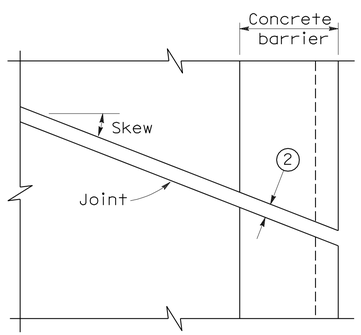

PLAN OF JOINT (SKEW ≤ 20°)

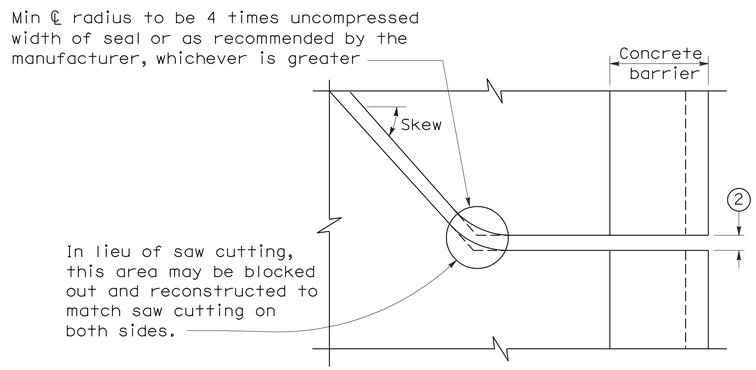

PLAN OF JOINT (SKEW > 20°)

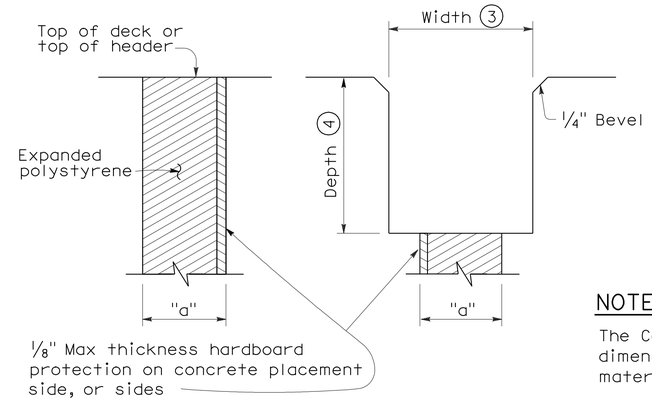

FORMING DETAIL SAWCUT DETAIL

NOTE:

The Contractor shall verify all controlling field dimensions before ordering or fabricatiing any material.

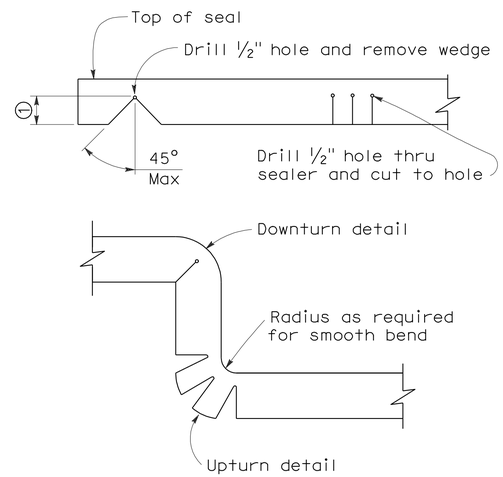

DETAIL A

NOTES:

1. Make smooth cuts from the bottom of seal to 1½" clear of top leaving at least one complete cell between the top of the cut and top of the seal. When necessary cut back of seal to clear conduit and round openings.
2. Opening in barrier to match width of sawn deck joint.
3. Sawcut groove widths shall be as ordered by the Engineer.
4. Depth of sawcut: Type A - Depth to be 2" minimum.
   Type B - Depth to be equal to or greater than the depth of seal measured along the contact surface, when compressed to minimum width position (W_2) plus dimensions shown.
5. MR (movement rating) as shown on other plan sheets.
6. Other depths must be approved by the Engineer.

DIMENSIONS "a" OF JOINT REQUIRED

Movement Rating (MR) 5	Bridge Type	"a" Dimension Deck Concrete Placed		
		Winter	Fall-Spring	Summer
2"	All except CIP/PS	1½"	1¼"	¾"
	CIP/PS	1¼"	1"	½"
1½"	All except CIP/PS	1¼"	1"	½"
	CIP/PS	1"	¾"	½"
1"	All except CIP/PS	1"	¾"	½"
	CIP/PS	¾"	½"	½"
½"	All except CIP/PS	¾"	¾"	½"
	CIP/PS	½"	½"	½"

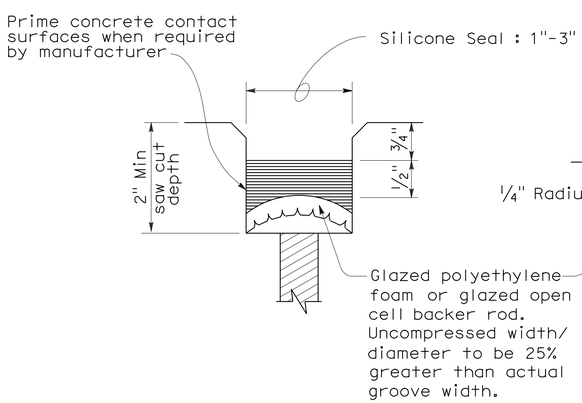

TYPE A SEAL

Movement rating : Silicone = 1" Max

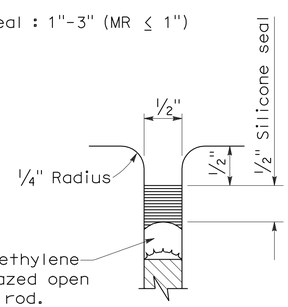

TYPE AL SEAL

Longitudinal joints only

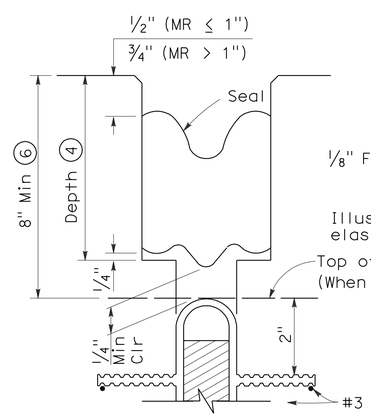

TYPE B JOINT SEAL IN MINIMUM WIDTH POSITION (W_2)

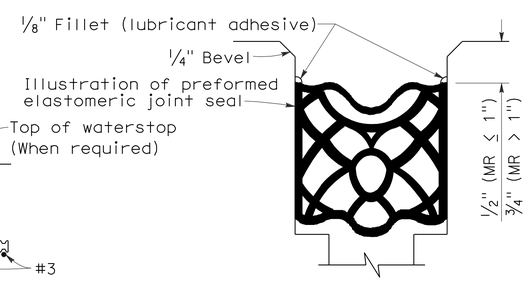

TYPE B SEAL

Movement Rating ≤ 2"

STATE OF CALIFORNIA
DEPARTMENT OF TRANSPORTATION

JOINT SEALS (MAXIMUM MOVEMENT RATING = 2")

NO SCALE

RSP B6-21 DATED OCTOBER 5, 2007 SUPERSEDES STANDARD PLAN B6-21 DATED MAY 1, 2006 - PAGE 258 OF THE STANDARD PLANS BOOK DATED MAY 2006.

REVISED STANDARD PLAN RSP B6-21

2006 REVISED STANDARD PLAN RSP B6-21

5-8-07

DIST	COUNTY	ROUTE	POST MILES TOTAL PROJECT	SHEET No	TOTAL SHEETS
02	Sha	5	R30.6,61.8	21	33

REGISTERED CIVIL ENGINEER 1-4-11 DATE

4-4-11
PLANS APPROVAL DATE

REGISTERED PROFESSIONAL ENGINEER LEWIS L SHEN No. 56921 Exp. 6-30-11 CIVIL STATE OF CALIFORNIA

The State of California or its officers or agents shall not be responsible for the accuracy or completeness of electronic copies of this plan sheet.

NOTES:

Ⓐ Abutment Retrofit
Ⓑ Bent Cap Retrofit
Ⓒ Indicates Remove Existing 2" Deck Concrete Place 2" Min Polyester Concrete Overlay

LEGEND:

Indicates Existing Structure
Indicates New Structure
Indicates limits of Remove Existing 2" Deck Concrete, prepare Bridge Deck & Place 2" Min Polyester Concrete Overlay
Indicates Joint Seal Replacement (Type B)

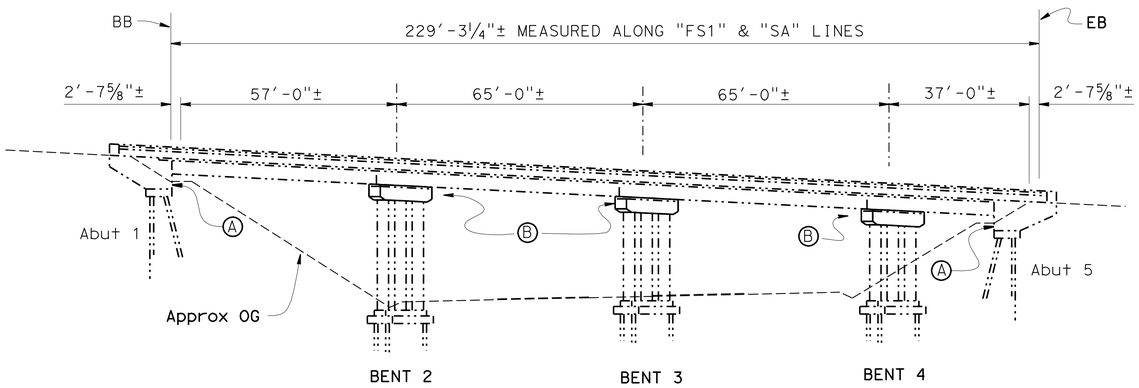

DATUM Elev 1900±

1+00 0+00 1+00

ELEVATION

1" = 20'

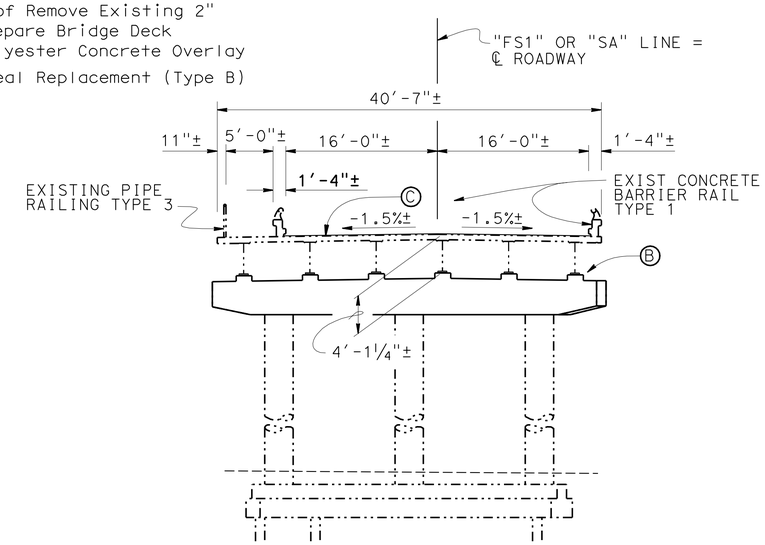

TYPICAL SECTION

⅛" = 1'-0"

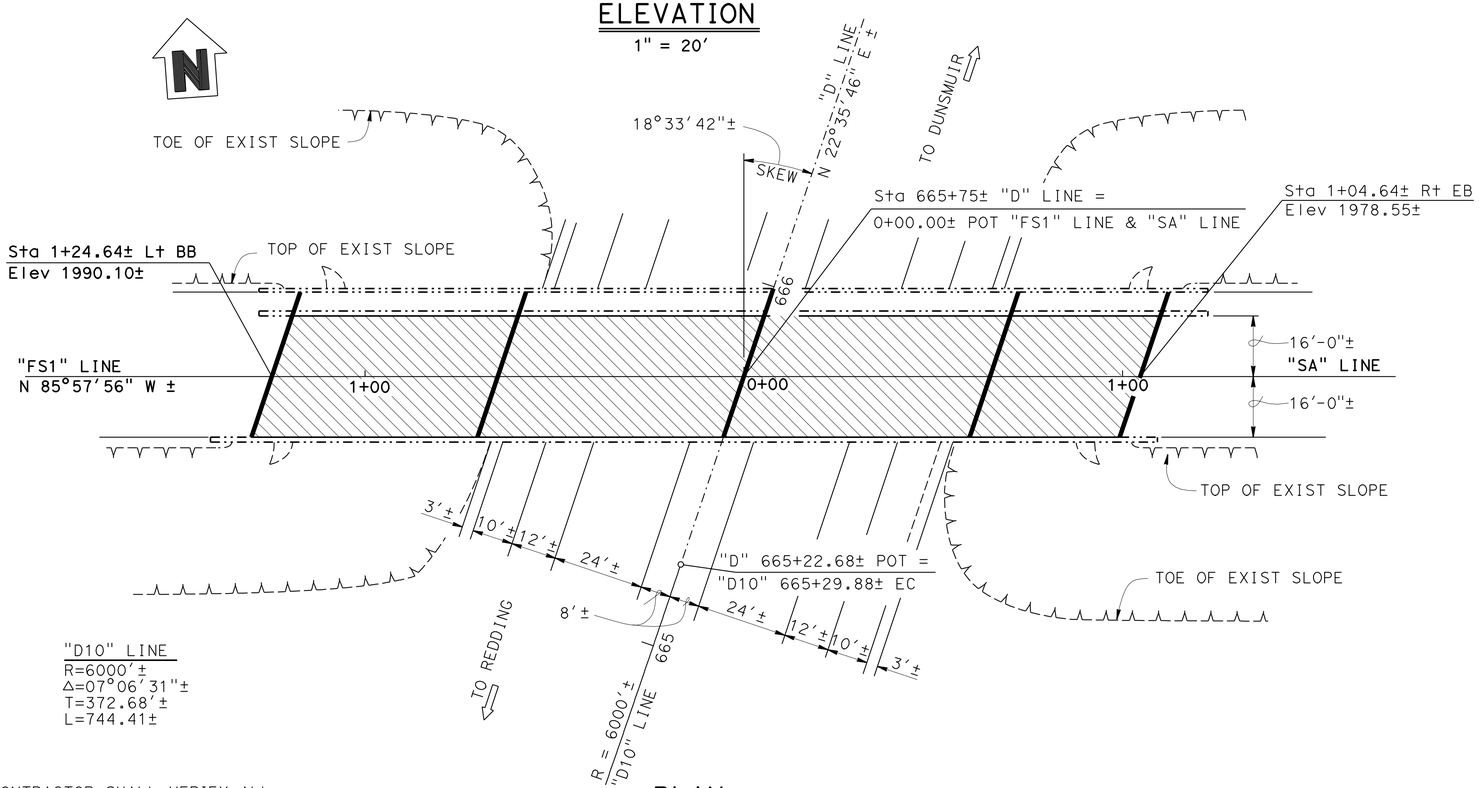

"D10" LINE
R=6000'±
Δ=07°06'31"±
T=372.68'±
L=744.41±

PLAN

1" = 20'

QUANTITIES:

REMOVE CONCRETE DECK SURFACE	7,235	SQFT
PREPARE CONCRETE BRIDGE DECK SURFACE	7,235	SQFT
STRUCTURE EXCAVATION (BRIDGE)	17	CY
STRUCTURE BACKFILL (BRIDGE)	10	CY
STRUCTURAL CONCRETE, BRIDGE	54	CY
DRILL AND BOND DOWEL	977	LF
CLEAN EXPANSION JOINT	215	LF
FURNISH POLYESTER CONCRETE OVERLAY	1,230	CF
PLACE POLYESTER CONCRETE OVERLAY	7,235	SQFT
JOINT SEAL (MR 1")	215	LF
BAR REINFORCING STEEL (BRIDGE)	14,713	LB

NOTE:
THE CONTRACTOR SHALL VERIFY ALL CONTROLLING FIELD DIMENSIONS BEFORE ORDERING OR FABRICATING ANY MATERIAL.

EARTHQUAKE RETROFIT PROJECT
SWEETBRIER OVERCROSSING
GENERAL PLAN

Joseph E Downing
DESIGN ENGINEER

	BY	CHECKED			
DESIGN	Mufeed Khalaf	Art V Herrera	LOAD FACTOR DESIGN		
DETAILS	NGwynn/JChlubna	Art V Herrera	LAYOUT	Mufeed Khalaf	Art V Herrera
QUANTITIES	Art V Herrera	Quang Nguyen	SPECIFICATIONS	Christa Siegenthaler	PLANS AND SPECS COMPARED Christa Siegenthaler

STATE OF CALIFORNIA
DEPARTMENT OF TRANSPORTATION

DIVISION OF ENGINEERING SERVICES
STRUCTURE DESIGN
DESIGN BRANCH 3

BRIDGE NO. 06-0115
POST MILE 61.8

ORIGINAL SCALE IN INCHES FOR REDUCED PLANS 0 1 2 3

CU 02246
EA 2C2301

DISREGARD PRINTS BEARING EARLIER REVISION DATES

REVISION DATES: 2-2-10 8-30-10 8-31-10 10-14-10 12-20-10 3-16-10 3-22-10 3-26-10 7-26-10

SHEET 1 OF 6

STRUCTURES DESIGN GENERAL PLAN SHEET (ENGLISH) (REV.07-24-06)

FILE => 06-0115-a-gp.dgn

USERNAME => trmartin DATE PLOTTED => 06-APR-2011 TIME PLOTTED => 11:01

DIST	COUNTY	ROUTE	POST MILES TOTAL PROJECT	SHEET No	TOTAL SHEETS
02	Sha	5	R30.6,61.8	22	33

REGISTERED CIVIL ENGINEER 1-4-11 DATE

4-4-11
PLANS APPROVAL DATE

REGISTERED PROFESSIONAL ENGINEER
LEWIS L SHEN
No. 56921
Exp. 6-30-11
CIVIL
STATE OF CALIFORNIA

The State of California or its officers or agents shall not be responsible for the accuracy or completeness of electronic copies of this plan sheet.

GENERAL NOTES
LOAD FACTOR DESIGN

DESIGN:
Bridge Design Specifications
(April 2000 AASHTO w/ Interms and Revisions by Caltrans)

SEISMIC DESIGN:
Caltrans Seismic Design Criteria (SDC), Version 1.5 2009
see "SITE SPECIFIC ARS CURVE"

DEAD LOAD:
Includes 25 psf for Polyester Concrete Overlay.

EXISTING STRUCTURAL STEEL:
fy = 33 ksi

REINFORCED CONCRETE:
fy = 60 ksi
f'c = 3.6 ksi
n = 8

JOINT SEAL TABLE

LOCATION	JOINT SEAL TYPE	MINIMUM "MR" (In) ±	APPROXIMATE LENGTH (Ft) ±	EXISTING WATERSTOP	Approx DEPTH TO CLEAN Exp JOINT
ABUT 1	B	1"	42'-9¾"±	NO	1'-0"±
BENT 2	B	1"	42'-9¾"±	NO	1'-0"±
BENT 3	B	1"	42'-9¾"±	NO	1'-0"±
BENT 4	B	1"	42'-9¾"±	NO	1'-0"±
ABUT 5	B	1"	42'-9¾"±	NO	1'-0"±

ACCELERATION RESPONSE SPECTRUM

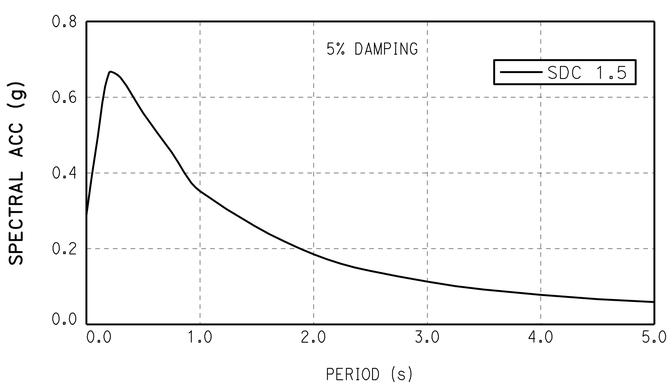

SITE SPECIFIC ARS CURVE

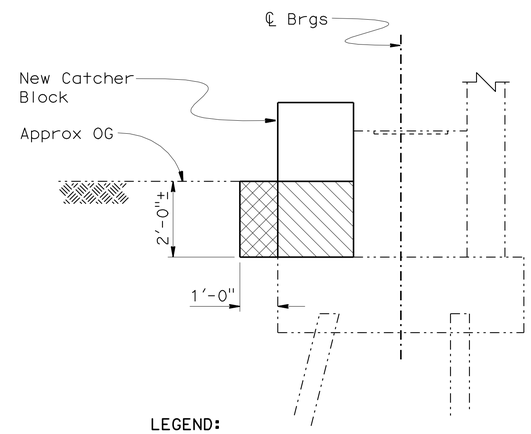

LEGEND:

Indicates Structure Excavation, Bridge

Indicates Structure Backfill, Bridge

LIMITS OF STRUCTURE EXCAVATION AND BACKFILL

NO SCALE

INDEX TO PLANS

SHEET No.	TITLE
1	GENERAL PLAN
2	INDEX TO PLANS
3	ABUTMENT DETAILS NO. 1
4	ABUTMENT DETAILS NO. 2
5	BENT DETAILS NO. 1
6	BENT DETAILS NO. 2

STANDARD PLANS DATED MAY 2006

A10A	ACRONYMS AND ABBREVIATIONS (SHEET 1 OF 2)
A10B	ACRONYMS AND ABBREVIATIONS (SHEET 2 OF 2)
A10C	SYMBOLS (SHEET 1 OF 2)
A10D	SYMBOLS (SHEET 2 OF 2)
RSP B6-21	JOINT SEALS (MAXIMUM MOVEMENT RATING = 2")

STANDARD PLAN SHEET No.

DETAIL No.

NOTE:
THE CONTRACTOR SHALL VERIFY ALL CONTROLLING FIELD DIMENSIONS BEFORE ORDERING OR FABRICATING ANY MATERIAL.

	BY	CHECKED
DESIGN	Mufeed Khalaf	Art V Herrera
DETAILS	Jay Reid	Art V Herrera
QUANTITIES	Art V Herrera	Quang Nguyen

STATE OF CALIFORNIA
DEPARTMENT OF TRANSPORTATION

DIVISION OF ENGINEERING SERVICES
STRUCTURE DESIGN
DESIGN BRANCH 3

BRIDGE NO. 06-0115
POST MILE 61.8

EARTHQUAKE RETROFIT PROJECT
SWEETBRIER OVERCROSSING
INDEX TO PLANS

STRUCTURES DESIGN DETAIL SHEET (ENGLISH) (REV. 10/25/05)

ORIGINAL SCALE IN INCHES FOR REDUCED PLANS 0 1 2 3

CU 02246
EA 2C2301

DISREGARD PRINTS BEARING EARLIER REVISION DATES

REVISION DATES: 3-11-10 3-16-10 3-24-10 3-26-10 5-12-10 7-26-10 7-28-10 8-10-10 10-11-10 12-20-10

SHEET 2 OF 6

FILE => 06-0115-a-itp.dgn

USERNAME => trmart1n DATE PLOTTED => 06-APR-2011 TIME PLOTTED => 11:01

DIST	COUNTY	ROUTE	POST MILES TOTAL PROJECT	SHEET No	TOTAL SHEETS
02	Sha	5	R30.6,61.8	23	33

REGISTERED CIVIL ENGINEER 1-4-11 DATE

4-4-11
PLANS APPROVAL DATE

REGISTERED PROFESSIONAL ENGINEER
LEWIS L SHEN
No. 56921
Exp. 6-30-11
CIVIL
STATE OF CALIFORNIA

The State of California or its officers or agents shall not be responsible for the accuracy or completeness of electronic copies of this plan sheet.

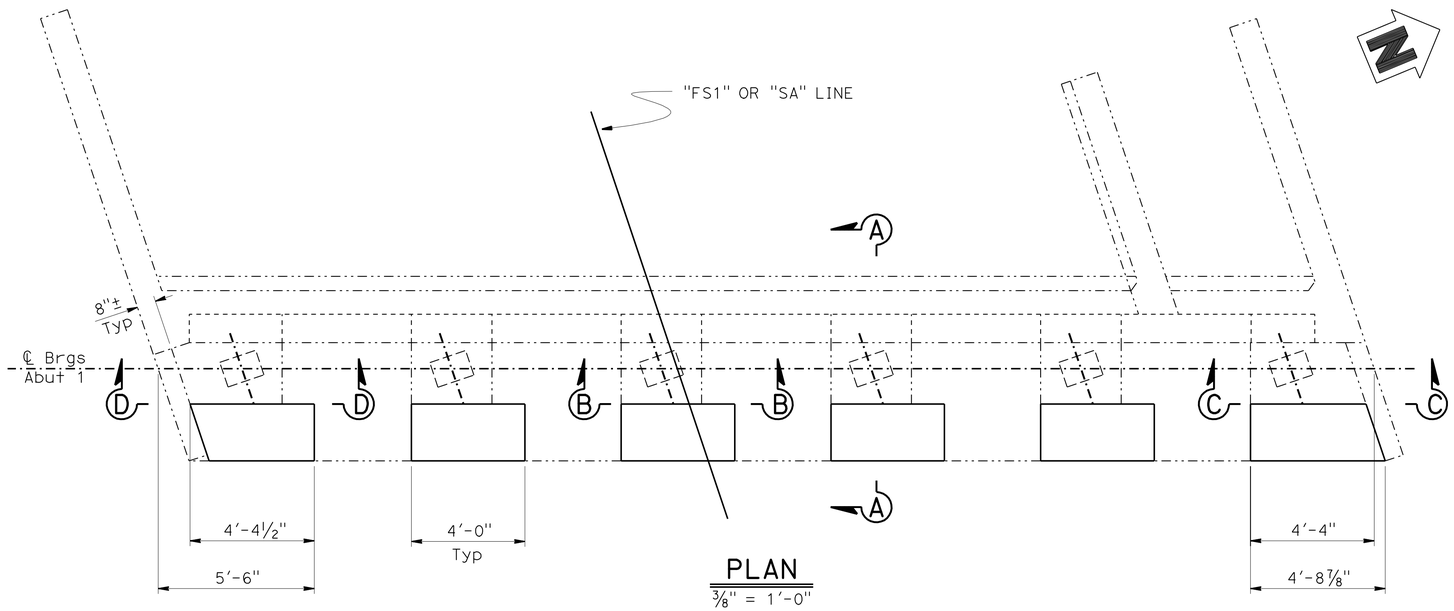

PLAN
⅜" = 1'-0"

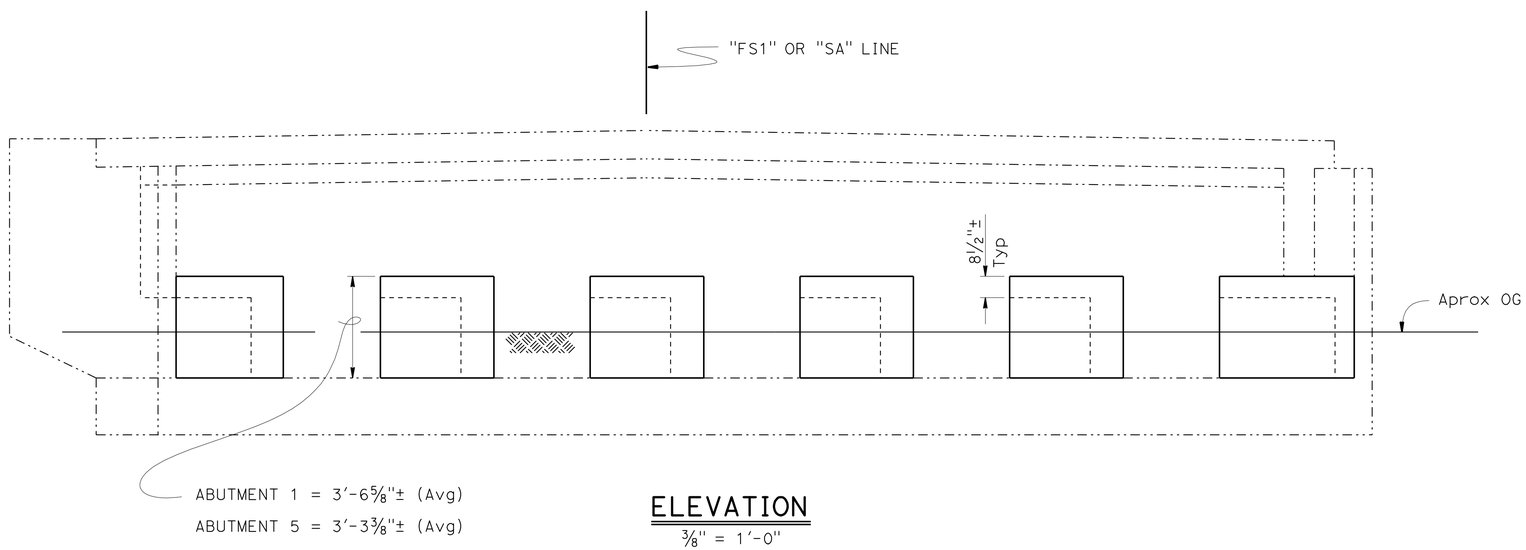

ELEVATION
⅜" = 1'-0"

NOTES:
1. Abutment 1 shown Abutment 5 similar
2. Superstructure not shown
3. Piles not shown
4. Barrier not shown
5. For "SECTIONS A-A, B-B, C-C" see "ABUTMENT DETAILS No. 2" sheet.

NOTE:
THE CONTRACTOR SHALL VERIFY ALL CONTROLLING FIELD DIMENSIONS BEFORE ORDERING OR FABRICATING ANY MATERIAL.

	BY	CHECKED
DESIGN	Mufeed Khalaf	Art V Herrera
DETAILS	Jay Reid	Art V Herrera
QUANTITIES	Art V Herrera	Quang Nguyen

STATE OF CALIFORNIA
DEPARTMENT OF TRANSPORTATION

DIVISION OF ENGINEERING SERVICES
STRUCTURE DESIGN
DESIGN BRANCH 3

BRIDGE NO. 06-0115
POST MILE 61.8

EARTHQUAKE RETROFIT PROJECT
SWEETBRIER OVERCROSSING
ABUTMENT DETAILS NO. 1

STRUCTURES DESIGN DETAIL SHEET (ENGLISH) (REV. 10/25/05)

ORIGINAL SCALE IN INCHES FOR REDUCED PLANS 0 1 2 3

CU 02246
EA 2C2301

DISREGARD PRINTS BEARING EARLIER REVISION DATES

REVISION DATES: 3-1-10 | 12-20-10 | 3-16-10 | 3-22-10 | 3-26-10 | 7-22-10 | 7-28-10 | 8-18-10 | 10-11-10

SHEET 3 OF 6

FILE => 06-0115-f-a01dt01.dgn

USERNAME => trmartin DATE PLOTTED => 06-APR-2011 TIME PLOTTED => 11:01

DIST	COUNTY	ROUTE	POST MILES TOTAL PROJECT	SHEET No	TOTAL SHEETS
02	Sha	5	R30.6,61.8	24	33

REGISTERED CIVIL ENGINEER 1-4-11 DATE

4-4-11
PLANS APPROVAL DATE

REGISTERED PROFESSIONAL ENGINEER
LEWIS L SHEN
No. 56921
Exp. 6-30-11
CIVIL
STATE OF CALIFORNIA

The State of California or its officers or agents shall not be responsible for the accuracy or completeness of electronic copies of this plan sheet.

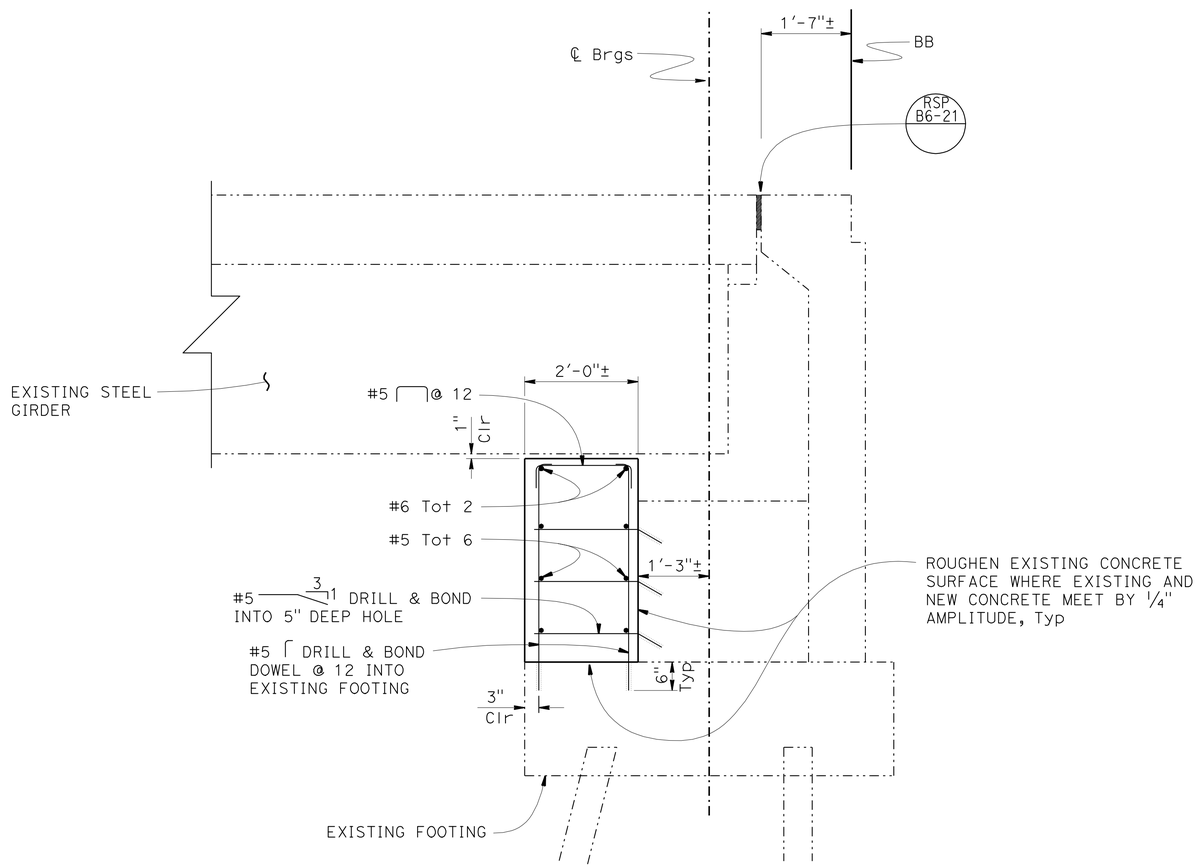

SECTION A-A
3/4" = 1'-0"

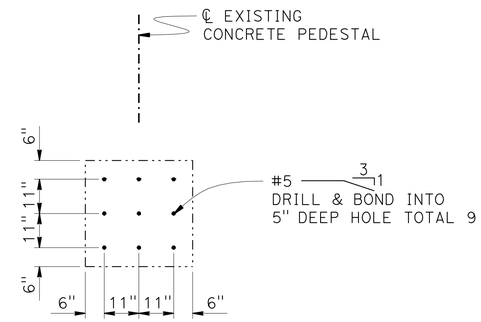

SECTION B-B
1/2" = 1'-0"

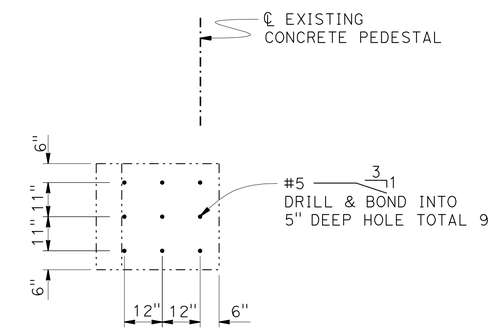

SECTION D-D
1/2" = 1'-0"

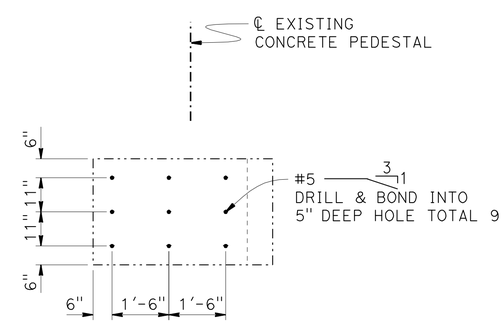

SECTION C-C
1/2" = 1'-0"

NOTE:
THE CONTRACTOR SHALL VERIFY ALL CONTROLLING FIELD DIMENSIONS BEFORE ORDERING OR FABRICATING ANY MATERIAL.

	BY	CHECKED
DESIGN	Mufeed Khalaf	Art V Herrera
DETAILS	Jay Reid	Art V Herrera
QUANTITIES	Art V Herrera	Quang Nguyen

STATE OF CALIFORNIA
DEPARTMENT OF TRANSPORTATION

DIVISION OF ENGINEERING SERVICES
STRUCTURE DESIGN
DESIGN BRANCH 3

BRIDGE NO. 06-0115
POST MILE 61.8

EARTHQUAKE RETROFIT PROJECT
SWEETBRIER OVERCROSSING
ABUTMENT DETAILS NO. 2

STRUCTURES DESIGN DETAIL SHEET (ENGLISH) (REV. 10/25/05)

ORIGINAL SCALE IN INCHES FOR REDUCED PLANS 0 1 2 3

CU 02246
EA 2C2301

DISREGARD PRINTS BEARING EARLIER REVISION DATES

REVISION DATES: 3-1-10 10-11-10 12-20-10 3-22-10 7-22-10 7-28-10 8-3-10 8-10-10 8-31-10

SHEET 4 OF 6

FILE => 06-0115-f-a01dt02.dgn

USERNAME => trmikesl DATE PLOTTED => 06-APR-2011 TIME PLOTTED => 12:46

DIST	COUNTY	ROUTE	POST MILES TOTAL PROJECT	SHEET No	TOTAL SHEETS
02	Sha	5	R30.6,61.8	25	33

REGISTERED CIVIL ENGINEER 1-4-11 DATE

4-4-11
PLANS APPROVAL DATE

REGISTERED PROFESSIONAL ENGINEER
LEWIS L SHEN
No. 56921
Exp. 6-30-11
CIVIL
STATE OF CALIFORNIA

The State of California or its officers or agents shall not be responsible for the accuracy or completeness of electronic copies of this plan sheet.

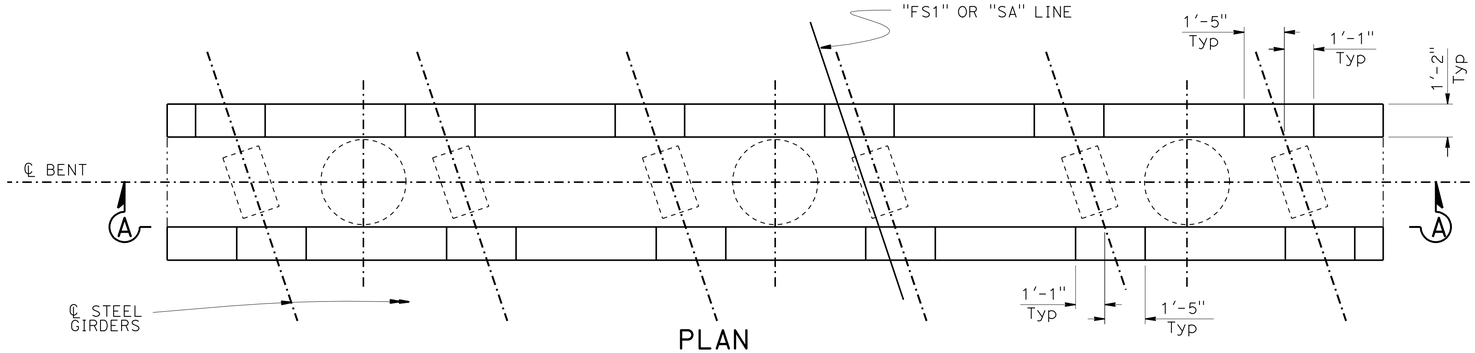

PLAN
3/8" = 1'-0"

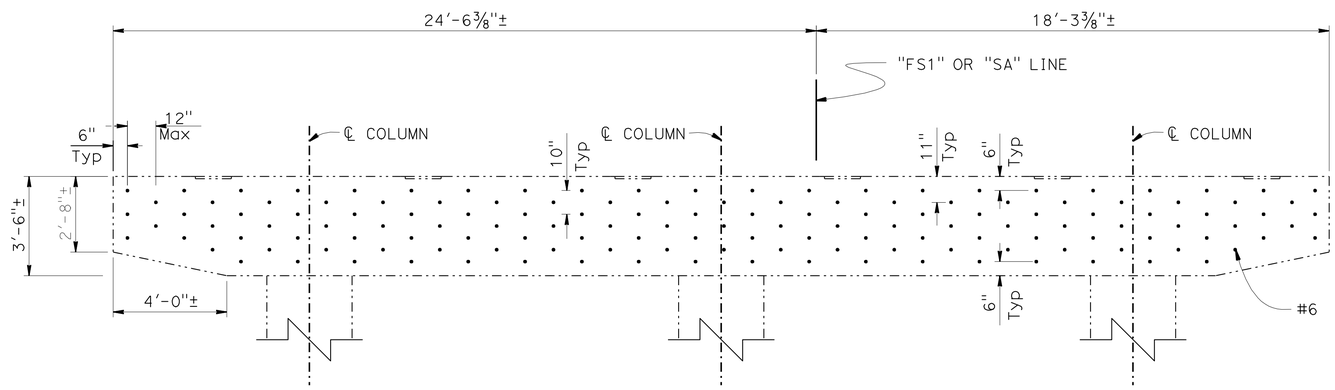

SECTION A-A
3/8" = 1'-0"

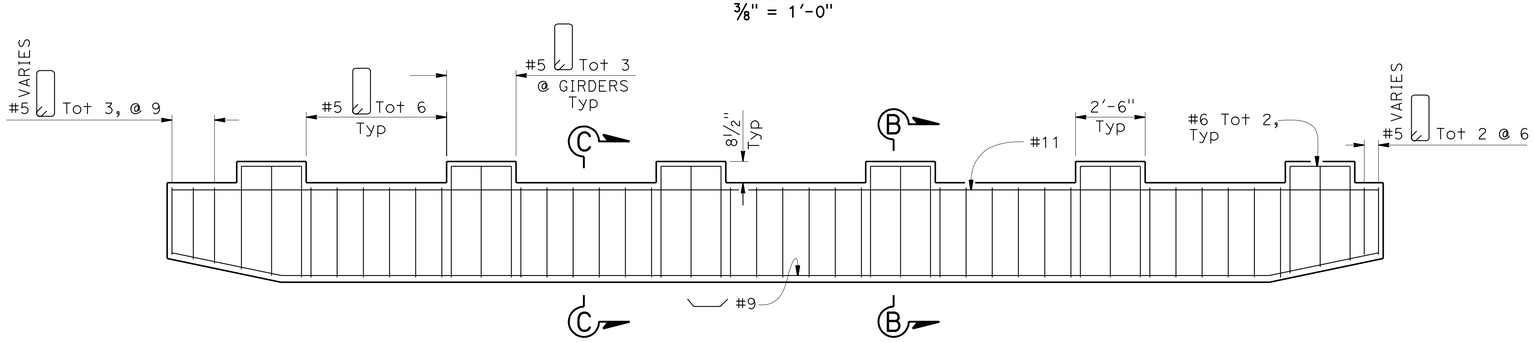

ELEVATION
3/8" = 1'-0"

NOTES:
1. Superstructure not shown
2. Typical Bent shown
3. For "SECTIONS B-B, C-C" see "BENT DETAILS No. 2" sheet

NOTE:
THE CONTRACTOR SHALL VERIFY ALL CONTROLLING FIELD DIMENSIONS BEFORE ORDERING OR FABRICATING ANY MATERIAL.

	BY	CHECKED
DESIGN	Mufeed Khalaf	Art V Herrera
DETAILS	Jay Reid	Art V Herrera
QUANTITIES	Art V Herrera	Quang Nguyen

STATE OF CALIFORNIA
DEPARTMENT OF TRANSPORTATION

DIVISION OF ENGINEERING SERVICES
STRUCTURE DESIGN
DESIGN BRANCH 3

BRIDGE NO. 06-0115
POST MILE 61.8

EARTHQUAKE RETROFIT PROJECT
SWEETBRIER OVERCROSSING
BENT DETAILS NO. 1

STRUCTURES DESIGN DETAIL SHEET (ENGLISH) (REV. 10/25/05)

ORIGINAL SCALE IN INCHES FOR REDUCED PLANS 0 1 2 3

CU 02246
EA 2C2301

DISREGARD PRINTS BEARING EARLIER REVISION DATES

REVISION DATES: 3-4-10 | 3-8-10 | 3-22-10 | 3-26-10 | 7-28-10 | 8-3-10 | 8-10-10 | 8-31-10 | 10-11-10 | 12-20-10

SHEET 5 OF 6

FILE => 06-0115-h-b01dt01.dgn

USERNAME => ttmartin DATE PLOTTED => 06-APR-2011 TIME PLOTTED => 11:01

DIST	COUNTY	ROUTE	POST MILES TOTAL PROJECT	SHEET No	TOTAL SHEETS
02	Sha	5	R30.6,61.8	26	33

REGISTERED CIVIL ENGINEER 1-4-11 DATE

4-4-11
PLANS APPROVAL DATE

REGISTERED PROFESSIONAL ENGINEER
LEWIS L SHEN
No. 56921
Exp. 6-30-11
CIVIL
STATE OF CALIFORNIA

The State of California or its officers or agents shall not be responsible for the accuracy or completeness of electronic copies of this plan sheet.

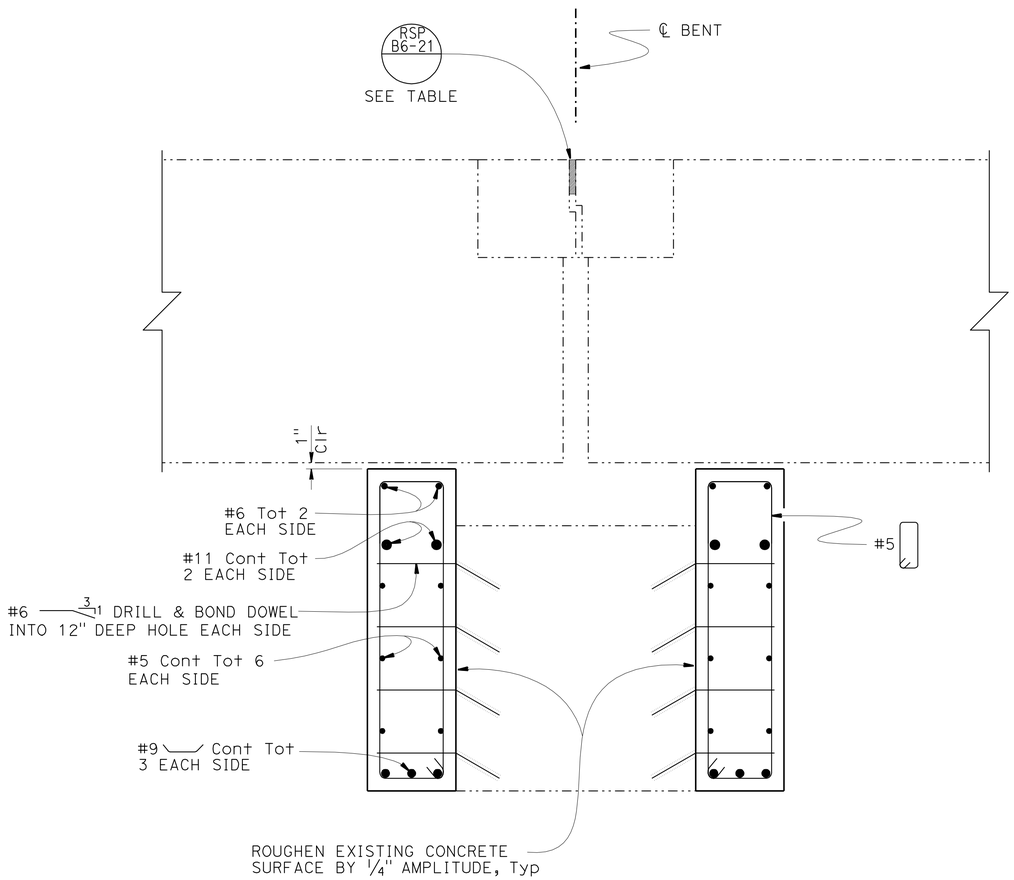

SECTION B-B

1" = 1'-0"

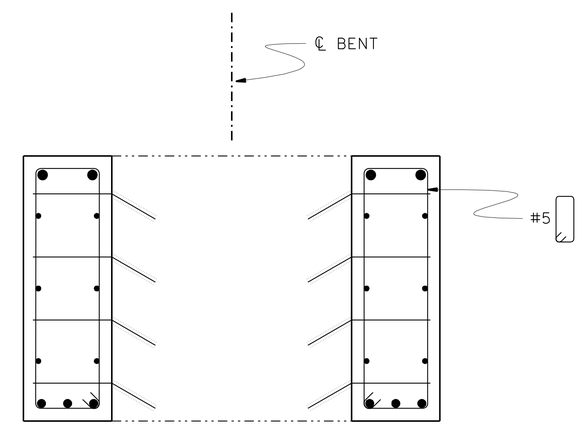

NOTE:
FOR DETAILS NOT SHOWN
SEE "SECTION B-B"

SECTION C-C

1" = 1'-0"

NOTES:
1. Typical Bent shown
2. Superstructure not shown

NOTE:
THE CONTRACTOR SHALL VERIFY ALL CONTROLLING FIELD DIMENSIONS BEFORE ORDERING OR FABRICATING ANY MATERIAL.

	BY	CHECKED
DESIGN	Mufeed Khalaf	Art V Herrera
DETAILS	Jay Reid	Art V Herrera
QUANTITIES	Art V Herrera	Quang Nguyen

STATE OF CALIFORNIA
DEPARTMENT OF TRANSPORTATION

DIVISION OF ENGINEERING SERVICES
STRUCTURE DESIGN
DESIGN BRANCH 3

BRIDGE NO. 06-0115
POST MILE 61.8

EARTHQUAKE RETROFIT PROJECT
SWEETBRIER OVERCROSSING
BENT DETAILS NO. 2

STRUCTURES DESIGN DETAIL SHEET (ENGLISH) (REV. 10/25/05)

ORIGINAL SCALE IN INCHES FOR REDUCED PLANS 0 1 2 3

CU 02246
EA 2C2301

DISREGARD PRINTS BEARING EARLIER REVISION DATES

REVISION DATES: 3-4-10 | 3-8-10 | 3-22-10 | 3-26-10 | 7-28-10 | 8-3-10 | 8-10-10 | 8-31-10 | 10-11-10 | 12-20-10

SHEET 6 OF 6

FILE => 06-0115-h-b01dt02.dgn

USERNAME => trmikes1 DATE PLOTTED => 06-APR-2011 TIME PLOTTED => 12:46

DIST	COUNTY	ROUTE	POST MILES TOTAL PROJECT	SHEET No	TOTAL SHEETS
02	Sha	5	R30.6,61.8	27	33

REGISTERED CIVIL ENGINEER — DATE 1-4-11

4-4-11
PLANS APPROVAL DATE

REGISTERED PROFESSIONAL ENGINEER — Lewis L Shen — No. 56921 — Exp. 6-30-11 — CIVIL — STATE OF CALIFORNIA

The State of California or its officers or agents shall not be responsible for the accuracy or completeness of electronic copies of this plan sheet.

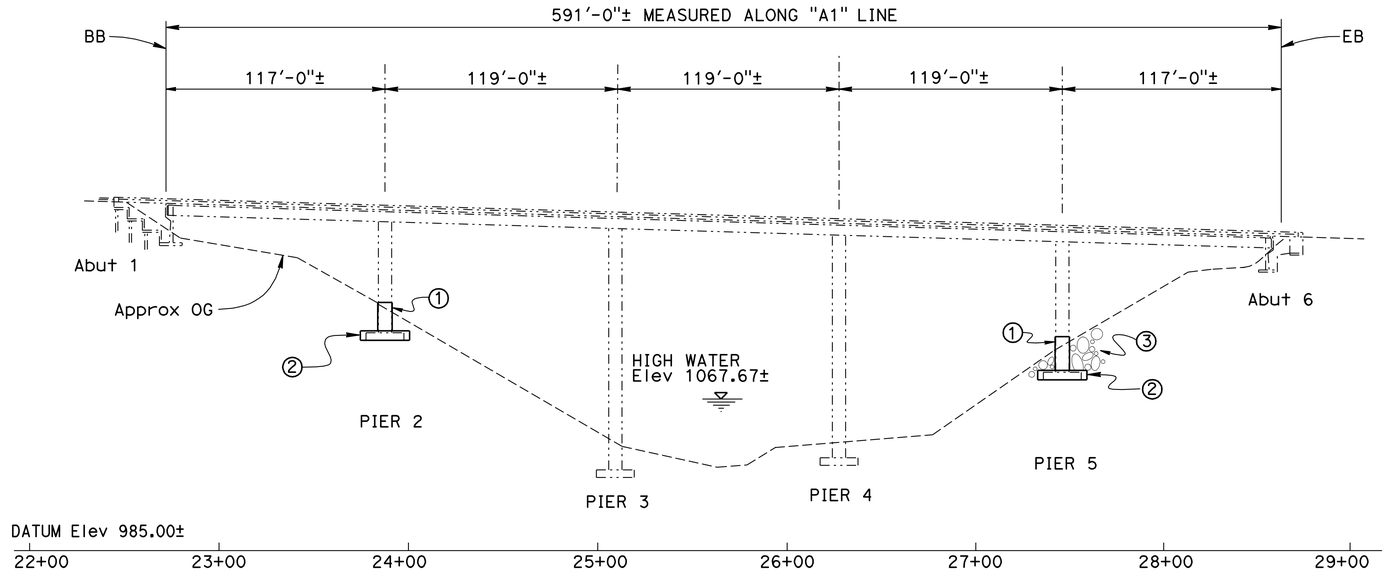

ELEVATION

1" = 40'

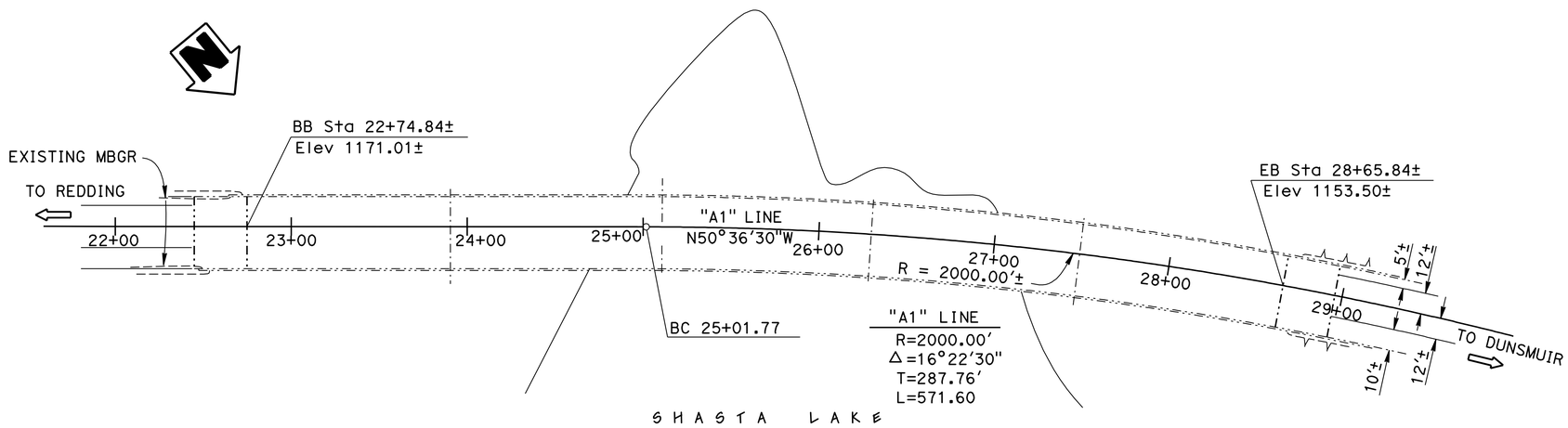

PLAN

1" = 40'

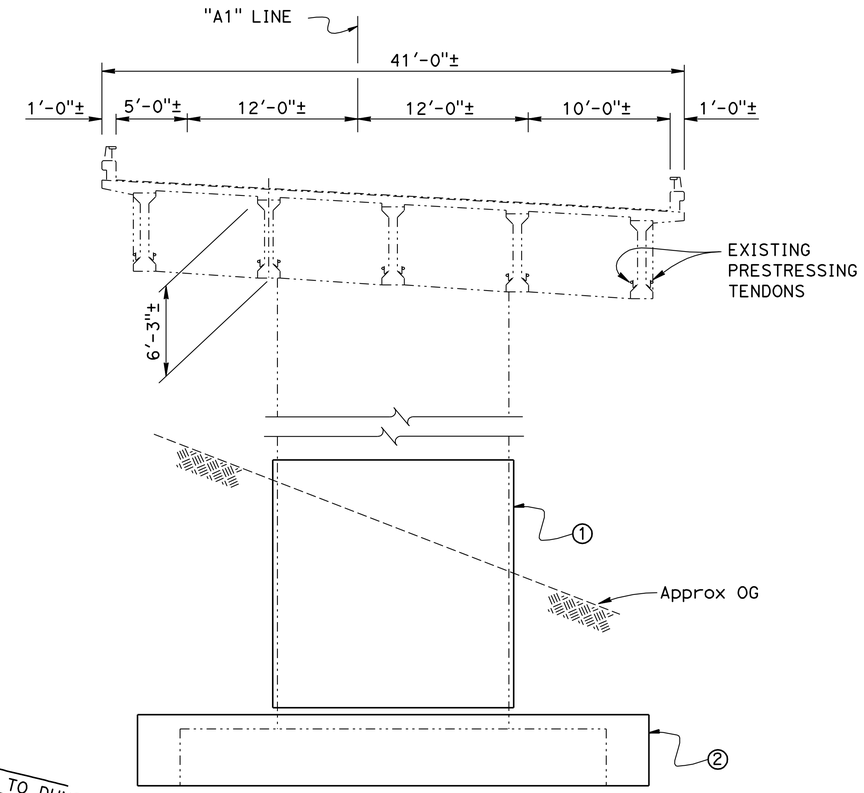

TYPICAL SECTION

3/16" = 1'-0"

LEGEND:

- Indicates Existing Structure
- Indicates New Structure
- ① Partial Steel Column Casing
- ② Footing Retrofit
- ③ RSP, see" ROAD PLANS"

NOTES:

For "GENERAL NOTES" and "INDEX TO PLANS" see, "INDEX TO PLAN" sheet

QUANTITIES

BRIDGE REMOVAL (PORTION)	LUMP	SUM
STRUCTURE EXCAVATION (BRIDGE)	1,181	CY
STRUCTURE BACKFILL (BRIDGE)	879	CY
STRUCTURAL CONCRETE, BRIDGE FOOTING	296	CY
DRILL AND BOND DOWEL	1,344	LF
BAR REINFORCING STEEL (BRIDGE)	48,800	LB
HEADED BAR REINFORCEMENT	960	EA
ASPHALT MEMBRANE WATERPROOFING	890	SQFT
COLUMN CASING	26,200	LB

NOTE:
THE CONTRACTOR SHALL VERIFY ALL CONTROLLING FIELD DIMENSIONS BEFORE ORDERING OR FABRICATING ANY MATERIAL.

Joseph E Downing
DESIGN ENGINEER

	BY	CHECKED			
DESIGN	Ali Asnaashari	Quang Nguyen	LOAD FACTOR DESIGN		
DETAILS	Shadi Motalebi	Quang Nguyen	LAYOUT	Ali Asnaashari	Quang Nguyen
QUANTITIES	Quang Nguyen	Art V Herrera	SPECIFICATIONS	Christa Siegenthaler	PLANS AND SPECS COMPARED Christa Siegenthaler

STATE OF CALIFORNIA
DEPARTMENT OF TRANSPORTATION

DIVISION OF ENGINEERING SERVICES
STRUCTURE DESIGN
DESIGN BRANCH 3

BRIDGE NO. 06-0131R
POST MILE 30.6R

EARTHQUAKE RETROFIT PROJECT
TUNNEL GULCH SIDE HILL VIADUCT
GENERAL PLAN

ORIGINAL SCALE IN INCHES FOR REDUCED PLANS 0 1 2 3

CU 03246
EA 2C2301

DISREGARD PRINTS BEARING EARLIER REVISION DATES

REVISION DATES: 10-21-08 | 9-23-09 | 10-6-09 | 10-20-09 | 11-10-09 | 11-25-09 | 1-28-10 | 2-2-10

SHEET 1 OF 7

STRUCTURES DESIGN GENERAL PLAN SHEET (ENGLISH) (REV.07-24-06)

FILE => 06-0131r-a-gp.dgn

USERNAME => trrlcnf DATE PLOTTED => 06-APR-2011 TIME PLOTTED => 10:31

DIST	COUNTY	ROUTE	POST MILES TOTAL PROJECT	SHEET No	TOTAL SHEETS
02	Sha	5	R30.6,61.8	28	33

REGISTERED CIVIL ENGINEER 1-4-11 DATE

4-4-11
PLANS APPROVAL DATE

REGISTERED PROFESSIONAL ENGINEER
Lewis L Shen
No. 56921
Exp. 6-30-11
CIVIL
STATE OF CALIFORNIA

The State of California or its officers or agents shall not be responsible for the accuracy or completeness of electronic copies of this plan sheet.

GENERAL NOTES

DESIGN:
Bridge Design Specifications LFD Version April 2000
(1996 AASHTO with Interims and Revisions by Caltrans)

SEISMIC DESIGN:
Caltrans Seismic Design Criteria (SDC),Version 1.5, 2009
SEISMIC LOADING:
See " SITE SPECIFIC ARS CURVE"
REINFORCED CONCRETE:
fy = 60 ksi
f'c = 3.6 ksi
n = 8

STRUCTURAL STEEL:
fy = 36 ksi

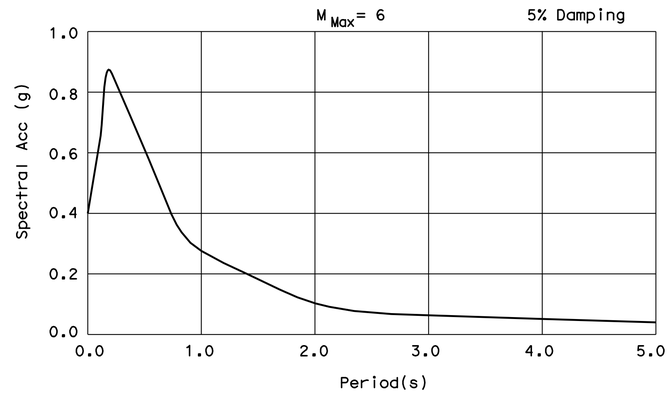

SITE SPECIFIC ARS CURVE

INDEX TO PLANS

SHEET NO.	TITLE
1	GENERAL PLAN
2	INDEX TO PLANS
3	FOUNDATION PLAN
4	PIER DETAILS NO. 1
5	PIER DETAILS NO. 2
6	STEEL COLUMN JACKETS DETAIL
7	LOG OF TEST BORINGS 1 OF 1

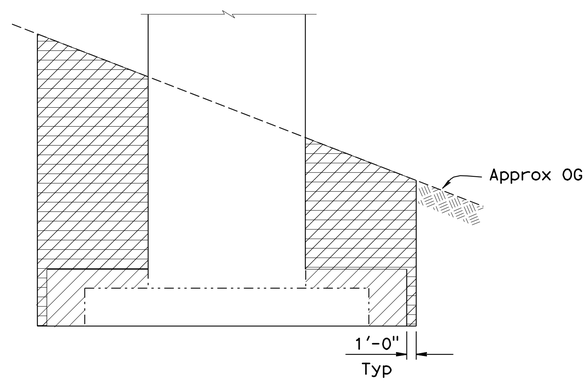

INDICATES STRUCTURE EXCAVATION BRIDGE

INDICATES STRUCTURE BACKFILL BRIDGE

LIMITS OF EXCAVATION AND BACKFILL

NO SCALE

SPREAD FOOTING DATA TABLE

Support Location	WSD	LFD
	Gross Allowable Bearing Capacity (q all)	Nominal Bearing Resistance (qn)
Pier 2	N/A	24 ksf
Pier 5	N/A	24 ksf

STANDARD PLANS DATED MAY 2006

A10A	ACRONYMS AND ABBREVIATIONS (SHEET 1 OF 2)
A10B	ACRONYMS AND ABBREVIATIONS (SHEET 2 OF 2)
A10C	SYMBOLS (SHEET 1 OF 2)
A10D	SYMBOLS (SHEET 2 OF 2)
A62C	LIMITS OF PAYMENT FOR EXCAVATION AND BACKFILL BRIDGE

STANDARD PLAN SHEET NO.

DETAIL NO.

NOTE:
THE CONTRACTOR SHALL VERIFY ALL CONTROLLING FIELD DIMENSIONS BEFORE ORDERING OR FABRICATING ANY MATERIAL.

	BY	CHECKED
DESIGN	Ali Asnaashari	Quang Nguyen
DETAILS	Shadi Motalebi	Quang Nguyen
QUANTITIES	Quang Nguyen	Art V Herrera

STATE OF CALIFORNIA
DEPARTMENT OF TRANSPORTATION

DIVISION OF ENGINEERING SERVICES
STRUCTURE DESIGN
DESIGN BRANCH 3

BRIDGE NO. 06-0131R
POST MILE 30.6R

EARTHQUAKE RETROFIT PROJECT
TUNNEL GULCH SIDE HILL VIADUCT
INDEX TO PLANS

STRUCTURES DESIGN DETAIL SHEET (ENGLISH) (REV. 10/25/05)

ORIGINAL SCALE IN INCHES FOR REDUCED PLANS 0 1 2 3

CU 03246
EA 2C2301

DISREGARD PRINTS BEARING EARLIER REVISION DATES 5-20-09

REVISION DATES

SHEET 2 OF 7

FILE => 06-0131r-b-index.dgn

USERNAME => trrichf DATE PLOTTED => 06-APR-2011 TIME PLOTTED => 10:31

DIST	COUNTY	ROUTE	POST MILES TOTAL PROJECT	SHEET No	TOTAL SHEETS
02	Sha	5	R30.6,61.8	29	33

REGISTERED CIVIL ENGINEER 1-4-11 DATE

4-4-11
PLANS APPROVAL DATE

REGISTERED PROFESSIONAL ENGINEER
Lewis L Shen
No. 56921
Exp. 6-30-11
CIVIL
STATE OF CALIFORNIA

The State of California or its officers or agents shall not be responsible for the accuracy or completeness of electronic copies of this plan sheet.

CURVE DATA

No.	R	Δ	T	L
(A)	2000.00	16°22'30"	287.76	571.60

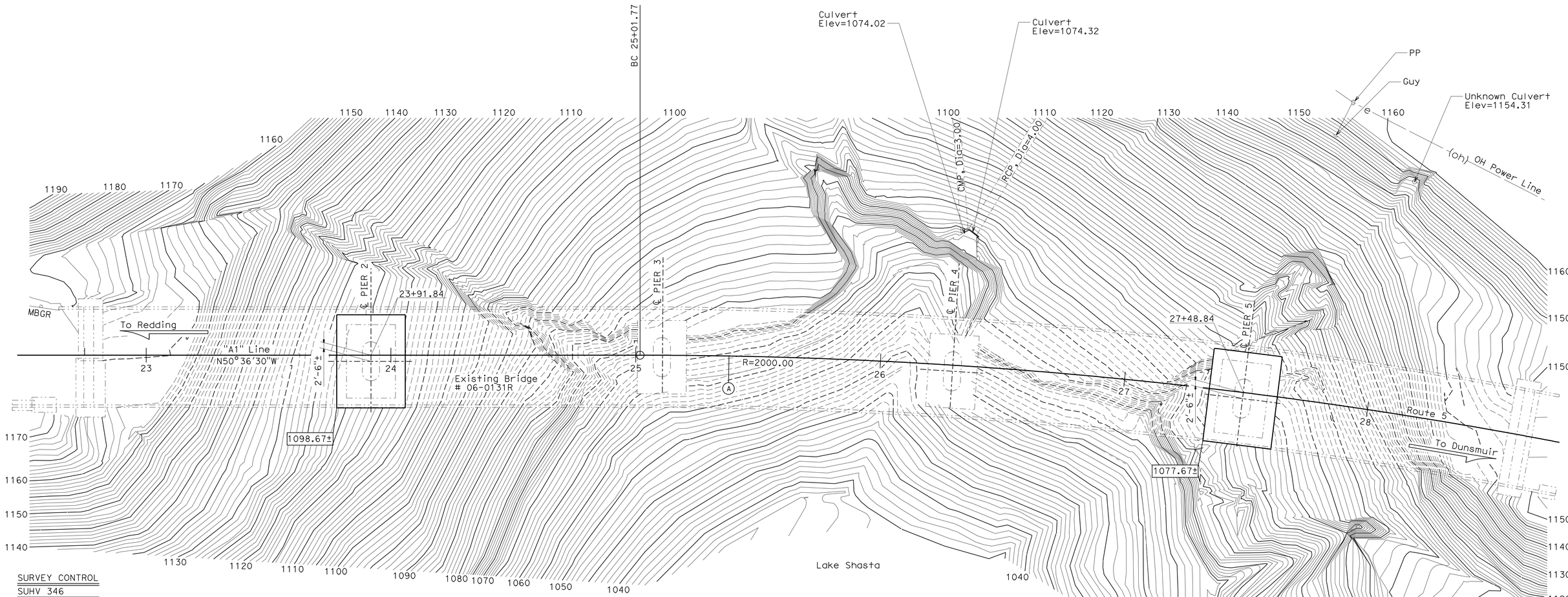

SURVEY CONTROL

SUHV 346

Fnd CDH Brass Disk Stamped 6-5-346
45.00 Ft Rt "A1" Line, Rte 5
Sta 17+98.76
N 2,170,049.39
E 6,476,146.83
Elev= 1194.58

SUHV 348

Fnd CDH Brass Disk in Conc. Stamped 6-5-348
37.18 Ft Lt "A1" Line, Rte 5
Sta 29+93.21
N 2,170,843.36
E 6,475,237.59
Elev= 1155.82

NOTE:

_ Indicates bottom of footing elevation

NOTE:
THE CONTRACTOR SHALL VERIFY ALL CONTROLLING FIELD DIMENSIONS BEFORE ORDERING OR FABRICATING ANY MATERIAL.

PRELIMINARY INVESTIGATION SECTION

SCALE 1"=20'	VERT.DATUM NAVD88	PHOTOGRAMMETRY AS OF: X		
	HORZ.DATUM NAD83	SURVEYED	BY District/J.Pallares	CHECKED BY J.Pallares 07/2010
	ALIGNMENT TIES Dist. Traverse Sheet	DRAFTED	BY J.Martinez 07/2010	CHECKED BY L.Lew 07/2010

	BY	CHECKED
DESIGN	Ali Asnaashari	Quang Nguyen
DETAILS	Shadi Motalebi	Quang Nguyen
QUANTITIES	Quang Nguyen	Art V Herrera

STATE OF CALIFORNIA
DEPARTMENT OF TRANSPORTATION

DIVISION OF ENGINEERING SERVICES
STRUCTURE DESIGN
DESIGN BRANCH 3

BRIDGE NO. 06-0131R
POST MILE 30.6R

EARTHQUAKE RETROFIT PROJECT
TUNNEL GULCH SIDE HILL VIADUCT
FOUNDATION PLAN

STRUCTURES FOUNDATION PLAN SHEET (ENGLISH) (REV. 10/25/05)

ORIGINAL SCALE IN INCHES FOR REDUCED PLANS 0 1 2 3

CU 03246
EA 2C2301

DISREGARD PRINTS BEARING EARLIER REVISION DATES

REVISION DATES: 01/12/10

SHEET 3 OF 7

FILE => 06-0131r-c-fp101.dgn

USERNAME => trrlcht DATE PLOTTED => 06-APR-2011 TIME PLOTTED => 10:31

DIST	COUNTY	ROUTE	POST MILES TOTAL PROJECT	SHEET No	TOTAL SHEETS
02	Sna	5	R30.6,61.8	30	33

REGISTERED CIVIL ENGINEER 1-4-11 DATE

4-4-11
PLANS APPROVAL DATE

REGISTERED PROFESSIONAL ENGINEER
Lewis L Shen
No. 56921
Exp. 6-30-11
CIVIL
STATE OF CALIFORNIA

The State of California or its officers or agents shall not be responsible for the accuracy or completeness of electronic copies of this plan sheet.

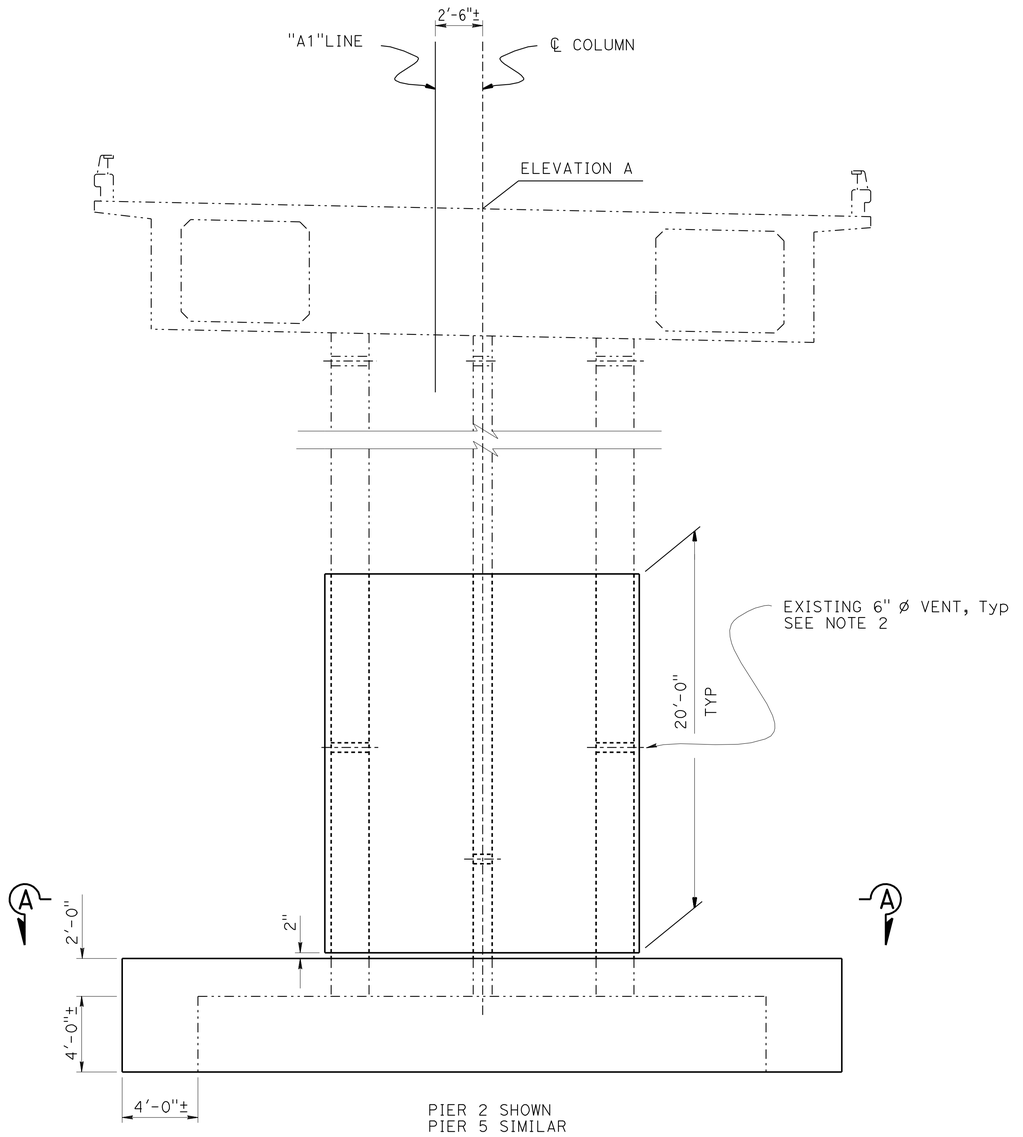

PIER ELEVATION

1/4" = 1'-0"

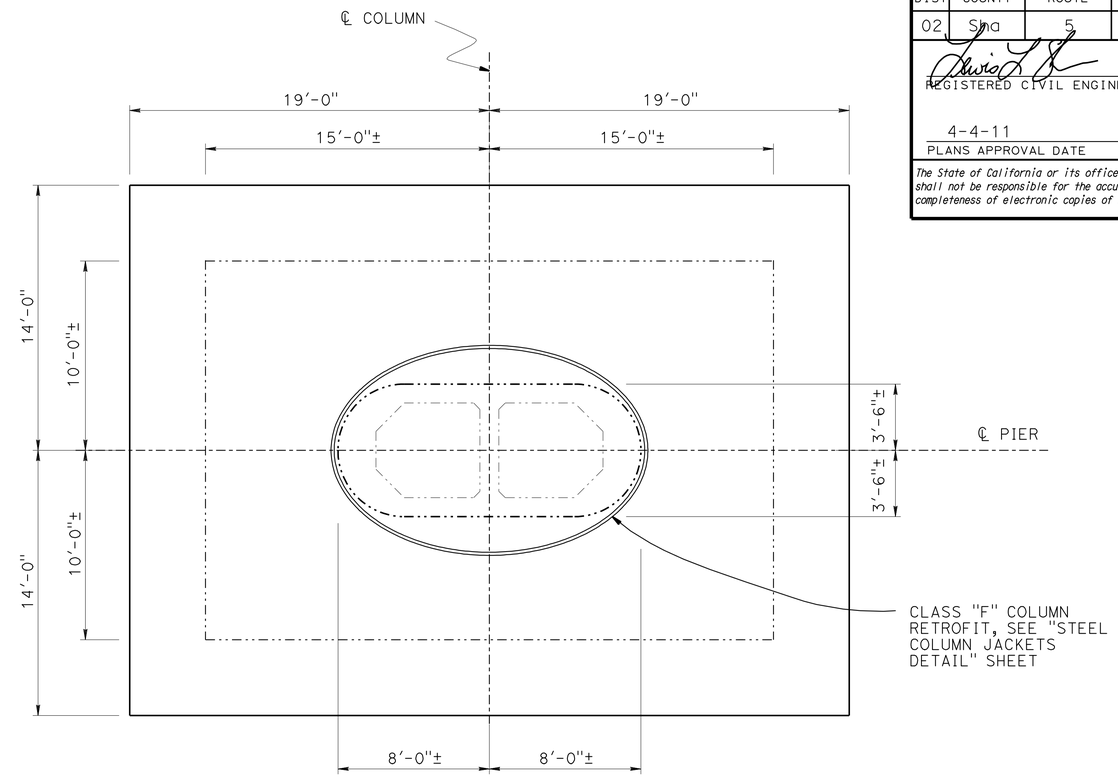

SECTION A-A

1/4" = 1'-0"

NOTE:

1. For reinforcement and details not shown, see "PIER DETAIL NO. 2" sheet
2. For existing 6" venting holes opening see "CASING OPENING" detail on "STEEL COLUMN JACKETS DETAIL" sheet

LEGEND:

-.-.- Indicates existing structure
____ Indicates new structure

BENT Sta	Elev A	* OG Elev
2391+84.00±	1166.29±	1118.00±
2748+84.00±	1155.37±	1091.00±

* Average OG elevation at intersection to ℄ column and ℄ pier

NOTE:
THE CONTRACTOR SHALL VERIFY ALL CONTROLLING FIELD DIMENSIONS BEFORE ORDERING OR FABRICATING ANY MATERIAL.

	BY	CHECKED
DESIGN	Ali Asnaashari	Quang Nguyen
DETAILS	Shadi Motalebi	Quang Nguyen
QUANTITIES	Quang Nguyen	Art V Herrera

STATE OF CALIFORNIA
DEPARTMENT OF TRANSPORTATION

DIVISION OF ENGINEERING SERVICES
STRUCTURE DESIGN
DESIGN BRANCH 3

BRIDGE NO. 06-0131R
POST MILE 30.6R

EARTHQUAKE RETROFIT PROJECT
TUNNEL GULCH SIDE HILL VIADUCT
PIER DETAILS NO. 1

STRUCTURES DESIGN DETAIL SHEET (ENGLISH) (REV. 10/25/05)

ORIGINAL SCALE IN INCHES FOR REDUCED PLANS 0 1 2 3

CU 03246
EA 2C2301

DISREGARD PRINTS BEARING EARLIER REVISION DATES

REVISION DATES: 3/18/10

SHEET 4 OF 7

FILE => 06-0131r-d-pier1.dgn

USERNAME => trrichf DATE PLOTTED => 06-APR-2011 TIME PLOTTED => 10:31

DIST	COUNTY	ROUTE	POST MILES TOTAL PROJECT	SHEET No	TOTAL SHEETS
02	Sna	5	R30.6,61.8	31	33

REGISTERED CIVIL ENGINEER 1-4-11 DATE

4-4-11
PLANS APPROVAL DATE

REGISTERED PROFESSIONAL ENGINEER
Lewis L Shen
No. 56921
Exp. 6-30-11
CIVIL
STATE OF CALIFORNIA

The State of California or its officers or agents shall not be responsible for the accuracy or completeness of electronic copies of this plan sheet.

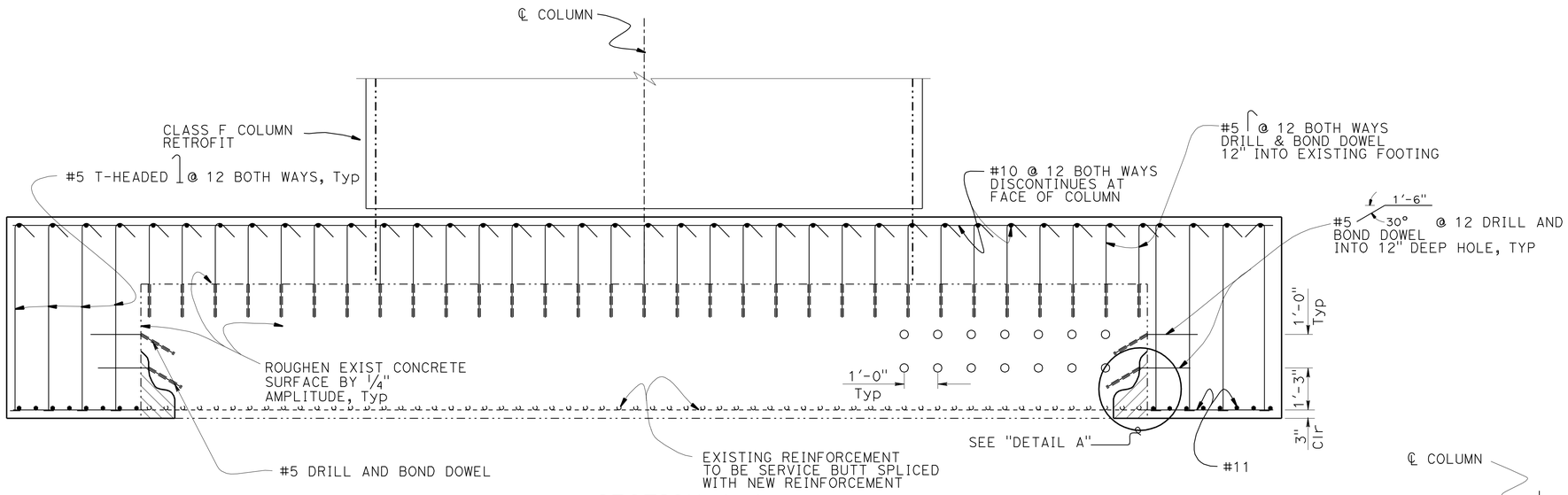

SECTION A-A

1/2" = 1'-0"

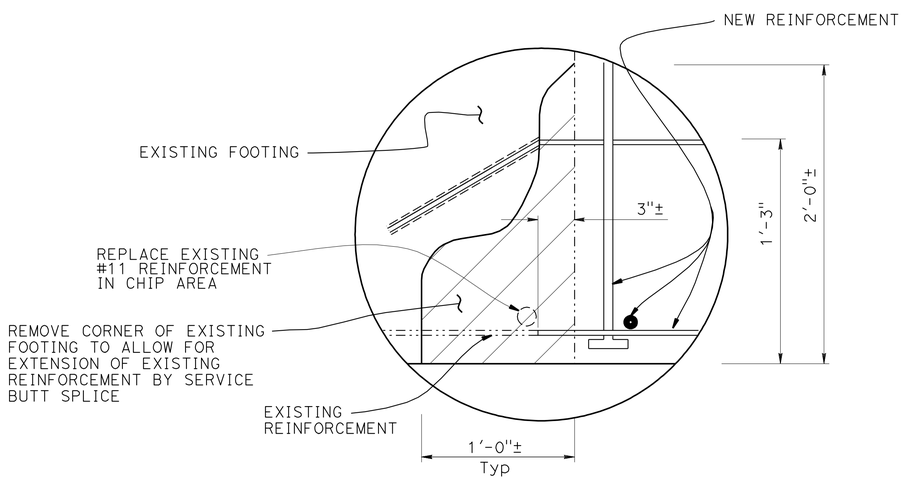

DETAIL A

NO SCALE

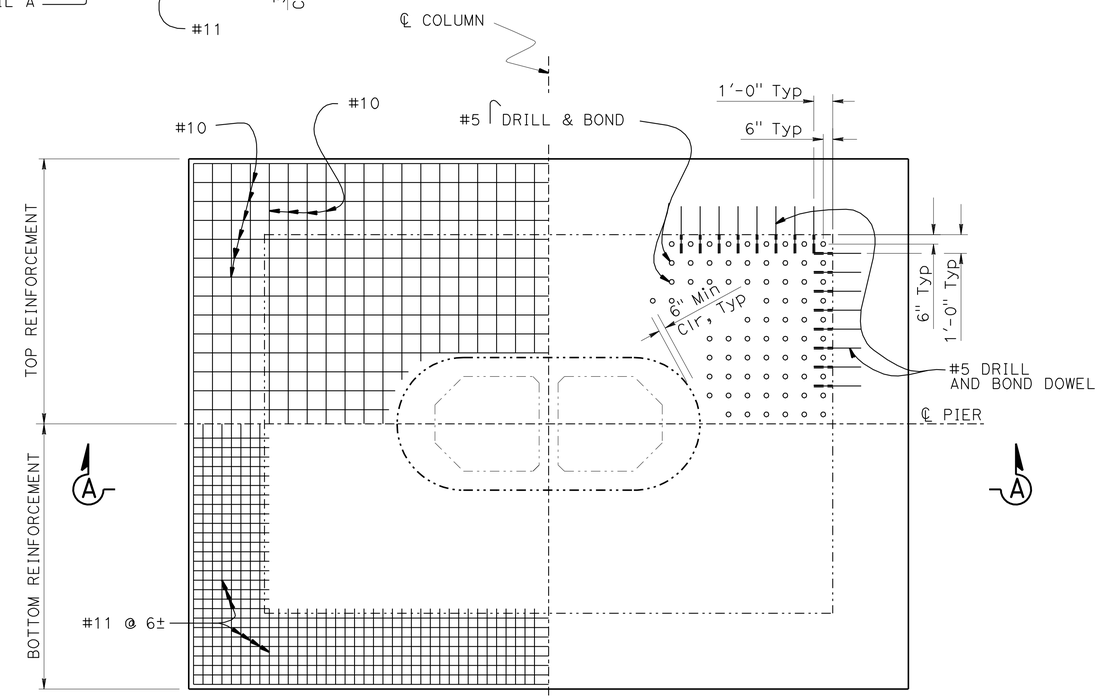

FOOTING PLAN

1/4" = 1'-0"

NOTE:

For footing dimensions see "PIER DETAIL NO. 1" sheet
For details not shown, see"STEEL COLUMN JACKETS DETAIL" sheet

LEGEND:

-·-·- Indicates existing structure
—— Indicates new structure

NOTE:
THE CONTRACTOR SHALL VERIFY ALL CONTROLLING FIELD DIMENSIONS BEFORE ORDERING OR FABRICATING ANY MATERIAL.

	BY	CHECKED
DESIGN	Ali Asnaashari	Quang Nguyen
DETAILS	Shadi Motalebi	Quang Nguyen
QUANTITIES	Quang Nguyen	Art V Herrera

STATE OF CALIFORNIA
DEPARTMENT OF TRANSPORTATION

DIVISION OF ENGINEERING SERVICES
STRUCTURE DESIGN
DESIGN BRANCH 3

BRIDGE NO. 06-0131R
POST MILE 30.6R

EARTHQUAKE RETROFIT PROJECT
TUNNEL GULCH SIDE HILL VIADUCT
PIER DETAILS NO. 2

STRUCTURES DESIGN DETAIL SHEET (ENGLISH) (REV. 10/25/05)

ORIGINAL SCALE IN INCHES FOR REDUCED PLANS 0 1 2 3

CU 03246
EA 2C2301

DISREGARD PRINTS BEARING EARLIER REVISION DATES 4/15/10

REVISION DATES

SHEET 5 OF 7

FILE => 06-0131r-d-pier2.dgn

USERNAME => trrichf DATE PLOTTED => 06-APR-2011 TIME PLOTTED => 10:34

DIST.	COUNTY	ROUTE	KILOMETER POST TOTAL PROJECT	SHEET NO.	TOTAL SHEETS
02	Sha	5	R30.6,61.8	32	33

REGISTERED ENGINEER - CIVIL 1-4-11

4-4-11
PLANS APPROVAL DATE

REGISTERED PROFESSIONAL ENGINEER Lewis L Shen No. 56921 Exp. 6-30-11 CIVIL STATE OF CALIFORNIA

The State of California or its officers or agents shall not be responsible for the accuracy or completeness of electronic copies of this plan sheet.

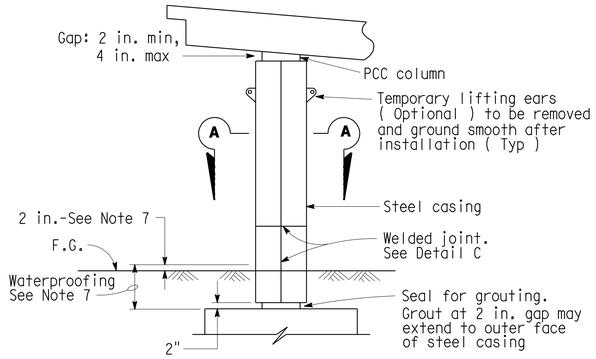

CLASS F COLUMN

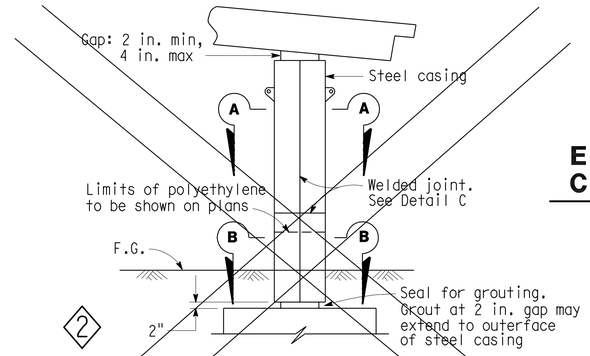

2

CLASS P/F COLUMN

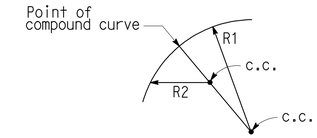

ELLIPTICAL CASING DETAIL CLASS F AND P/F COLUMN

Radii R1 and R2 to be determined by the Contractor subject to the approval of the Engineer

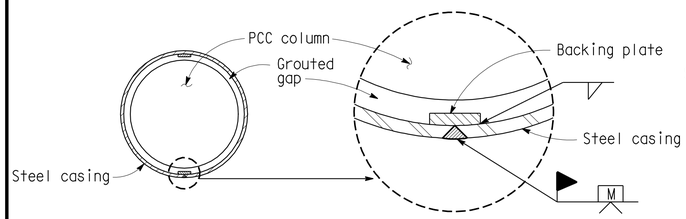

SECTION A-A ROUND COLUMN

Minimum inside diameter of steel casing = 1½" greater than nominal column diameter for Class F and 2½" for Class P/F

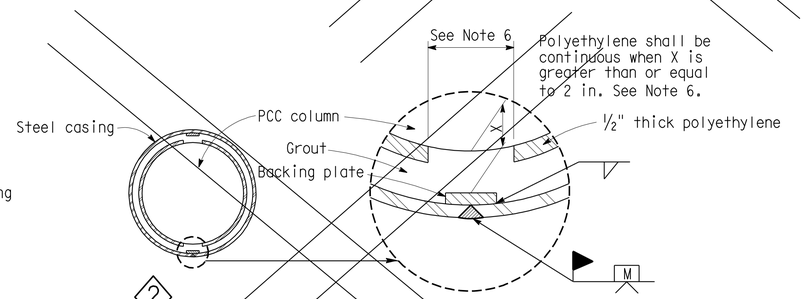

2

SECTION B-B ROUND COLUMN

Minimum inside diameter of steel casing = 2½" greater than nominal column diameter for Class P/F.

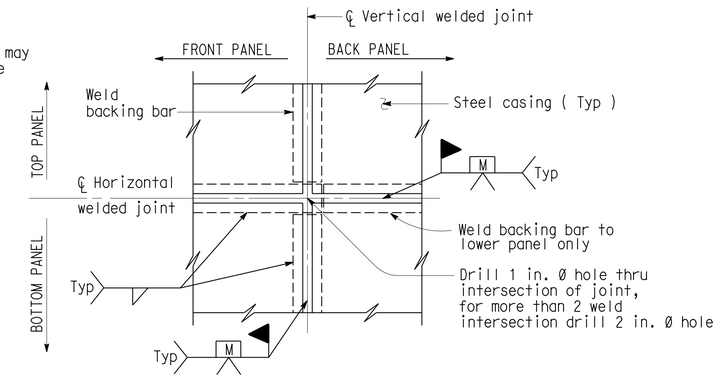

(TWO WELDED INTERSECTION JOINT) DETAIL C

NOTES:

1) For varying thickness steel casing inside surface to remain flush. Minimum clearance from PCC column to casing shall be maintained.
2) Appropriate injection nozzles to be provided on casing, but removed and ground flush following completion of grouting operation.
3) All voids between steel casing and polyethylene (Class P/F), and steel casing and PCC column (Class F) to be filled with grout.
4) Location and number of vertical and horizontal welds to be determined by the Contractor, and subject to the approval of the Engineer. The location of casing welds are for illustration. No skip welds allowed.
5) Circular steel casing to be ¼" thick minimum for casings with a 4'-4" diameter or less; all other steel casings to be ⅜" thick unless noted differently on contract plans. Backing plates to be the same thickness as casing up to maximum ½" thick.
6) Contractor shall remove 12 in. polyethylene strip behind backing plate if backing plate is closer than 2" from face of column.
7) Waterproof limits for steel casings. Typical for Classe "F" and "P/F".
8) For pipe extensions, opening shall be no more than ¼" greater than the pipe extension diameter. For other openings, the opening diameter to be determined by the Engineer.

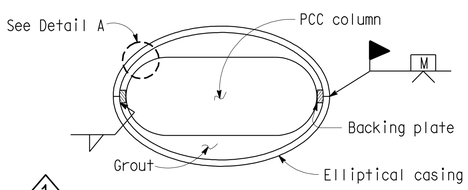

1

SECTION A-A ~~RECTANGULAR~~ COLUMN (ELLIPTICAL)

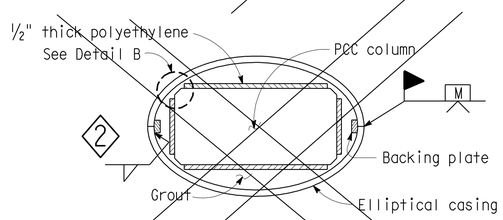

2

SECTION B-B RECTANGULAR COLUMN

DETAIL A

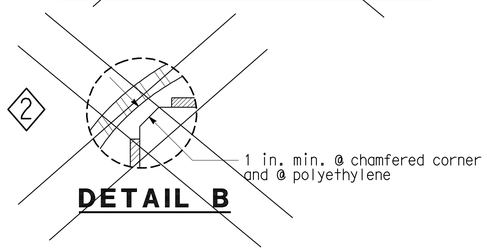

2

DETAIL B

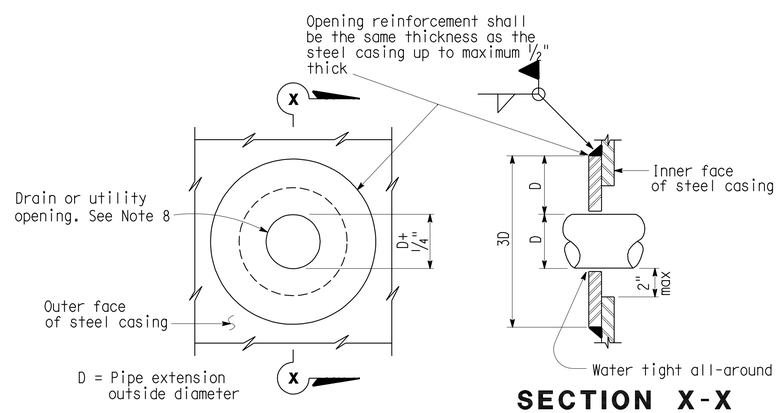

SECTION X-X

CASING OPENING

Note: Opening reinforcement required for drain or utility openings larger than 4 in.

NO SCALE

SPECIAL DETAILS

REVISED STANDARD DRAWING

RELEASE DATE 11-16-06	DESIGN	BY BRIAN MARONEY	CHECKED R.J. ZELINSKI	RELEASED BY Michael D. Keever OFFICE CHIEF	
FILE NO. xs7-010e	DETAILS	BY R. YEE	CHECKED PAT HIPLEY		
	SUBMITTED	BY R.J. ZELINSKI	DRAWING DATE REVISED		

1 Revised detail
2 Dose not apply

STATE OF CALIFORNIA DEPARTMENT OF TRANSPORTATION

DIVISION OF ENGINEERING SERVICES 3

BRIDGE NO. 06-0131R
POST MILE 30.6R

EARTHQUAKE RETROFIT PROJECT
TUNNEL GULCH SIDE HILL VIADUCT
STEEL COLUMN JACKETS DETAIL

STRUCTURES DESIGN DETAIL SHEET (ENGLISH) (REV. 10/25/05)

ORIGINAL SCALE IN INCHES FOR REDUCED PLANS 0 1 2 3

CU 03246
EA 2C2301

DISREGARD PRINTS BEARING EARLIER REVISION DATES

REVISION DATES (PRELIMINARY STAGE ONLY)

SHEET 6 OF 7

USERNAME => trrichf

06-0131r-xs.dgn

DATE PLOTTED => 06-APR-2011 TIME PLOTTED => 10:34

FED. ROAD DIST. NO.	STATE	PM M. No.	FISCAL YEAR	SHEET NO.	TOTAL SHEETS
7	CAL.				

DIST.	COUNTY	ROUTE	SECTION	SHEET NO.	TOTAL SHEETS
02	Sha	5	2.1/R4.1	199	242

BRIDGE ENGINEER — CIVIL ENGINEER — GEOTECHNICAL ENGINEER

DATE APPROVED December 12 1966

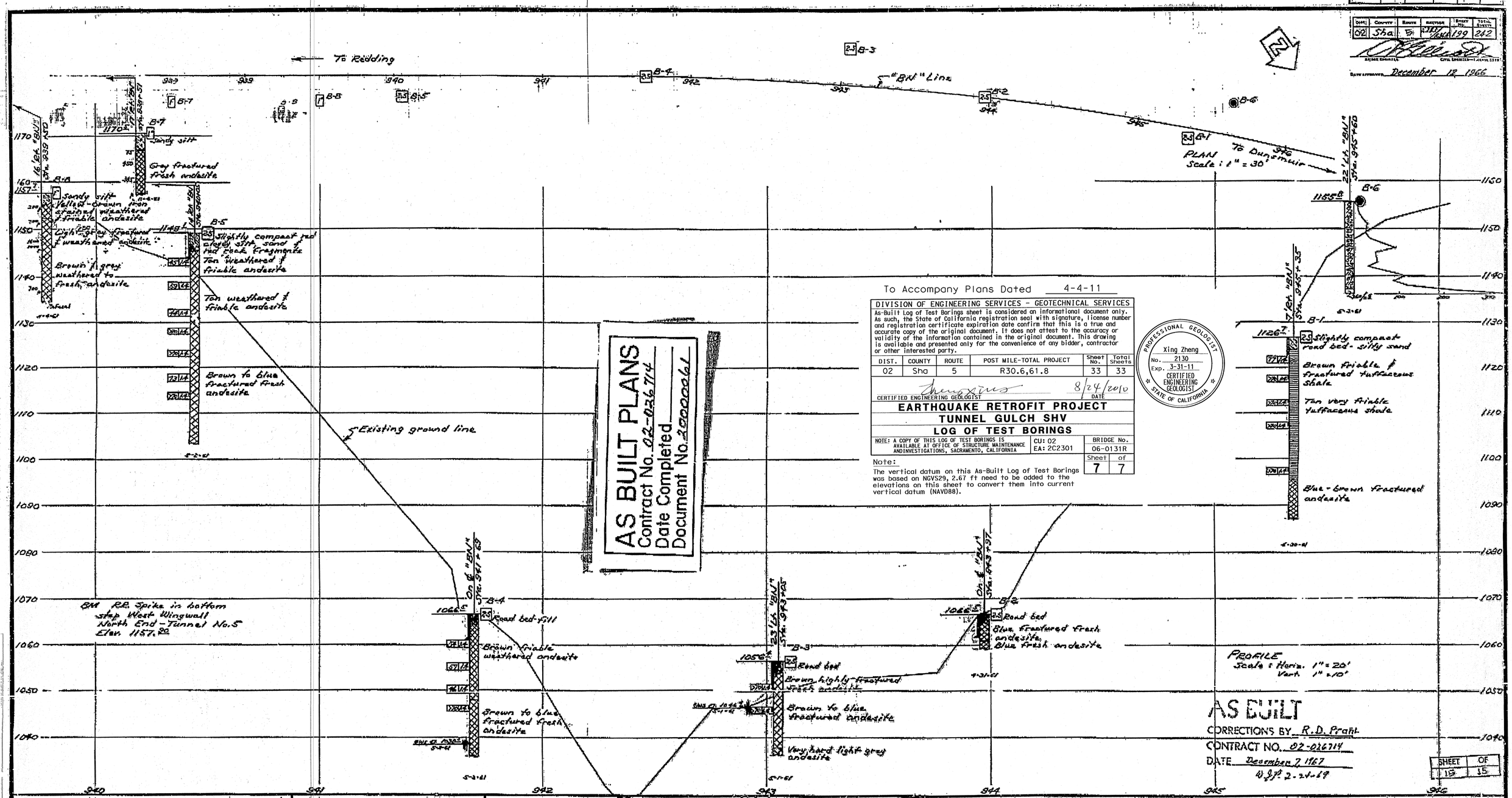

To Accompany Plans Dated 4-4-11

DIVISION OF ENGINEERING SERVICES - GEOTECHNICAL SERVICES

As-Built Log of Test Borings sheet is considered an informational document only. As such, the State of California registration seal with signature, license number and registration certificate expiration date confirm that this is a true and accurate copy of the original document. It does not attest to the accuracy or validity of the information contained in the original document. This drawing is available and presented only for the convenience of any bidder, contractor or other interested party.

DIST.	COUNTY	ROUTE	POST MILE-TOTAL PROJECT	Sheet No.	Total Sheets
02	Sha	5	R30.6,61.8	33	33

CERTIFIED ENGINEERING GEOLOGIST — DATE 8/24/2010

PROFESSIONAL GEOLOGIST — Xing Zheng — No. 2130 — Exp. 3-31-11 — CERTIFIED ENGINEERING GEOLOGIST — STATE OF CALIFORNIA

EARTHQUAKE RETROFIT PROJECT

TUNNEL GULCH SHV

LOG OF TEST BORINGS

NOTE: A COPY OF THIS LOG OF TEST BORINGS IS AVAILABLE AT OFFICE OF STRUCTURE MAINTENANCE AND INVESTIGATIONS, SACRAMENTO, CALIFORNIA

CU: 02
EA: 2C2301

BRIDGE No. 06-0131R

Sheet 7 of 7

Note:
The vertical datum on this As-Built Log of Test Borings was based on NGVS29, 2.67 ft need to be added to the elevations on this sheet to convert them into current vertical datum (NAVD88).

SHEET	OF
15	15

Classification of Material Based on Standard Grade Size Limits

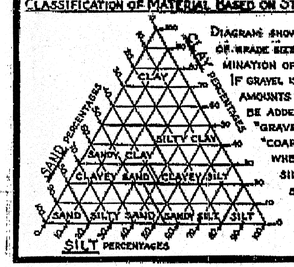

Diagram showing the basis for estimates of grade size distribution used in determination of class names.

If gravel is present in appreciable amounts the term "gravelly" may be added to the class name, viz. "gravelly sand". The terms "coarse", "medium" and "fine" when used to describe sand, silt and gravel refer to standard grade size limits.

Legend of Earth Materials

- Gravel
- Sand
- Silt
- Clay
- Sandy Clay or Clayey Sand
- Sandy Silt or Silty Sand
- Silty Clay or Clayey Silt
- Peat and/or Organic Matter
- Fill Material
- Igneous Rock
- Sedimentary Rock
- Metamorphic Rock

Legend of Boring Operations

- Penetrometer
- 2¼" Cone Penetrometer
- Sampler Boring (Dry)
- Rotary Boring (Wet)
- Auger Boring (Dry)
- Jet Boring
- Core Boring
- Test Pit

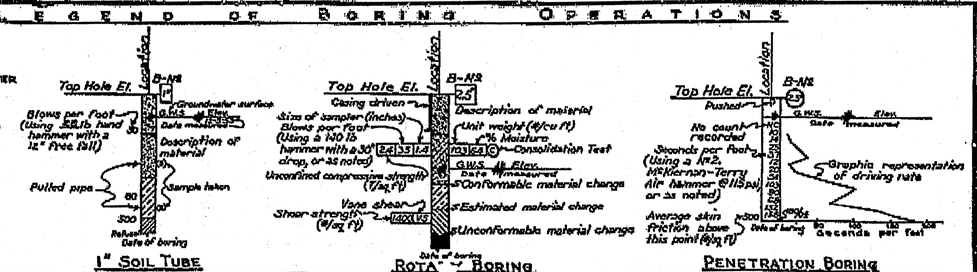

NOTE

Classification of earth material as shown on this sheet is based upon field inspection and is not to be construed to imply mechanical analysis.

STATE OF CALIFORNIA
DEPARTMENT OF PUBLIC WORKS
DIVISION OF HIGHWAYS

TUNNEL GULCH VIADUCT

LOG OF TEST BORINGS

SCALE	BRIDGE	FILE	DRAWING
As Noted	6-131		6131-13

PRELIM. DRAWING NO. P-6131-13 — 2/10 — 2/10

PR-6131-4

BRIDGE DEPARTMENT