Dist	COUNTY	ROUTE	POST MILES TOTAL PROJECT	SHEET No.	TOTAL SHEETS
02	Mod	299	39.3/40.5	1	88

ACSTP-P299(188)E

STATE OF CALIFORNIA
DEPARTMENT OF TRANSPORTATION

PROJECT PLANS FOR CONSTRUCTION ON
STATE HIGHWAY
IN MODOC COUNTY
IN AND NEAR ALTURAS
FROM 0.2 MILE WEST OF MILL STREET
TO 0.1 MILE EAST OF OAK STREET

TO BE SUPPLEMENTED BY STANDARD PLANS DATED MAY 2010

INDEX OF PLANS

SHEET No.	DESCRIPTION
1	TITLE AND LOCATION MAP
2-4	TYPICAL CROSS SECTIONS
5-11	LAYOUTS
12-18	PROFILES AND SUPERELEVATION DIAGRAMS
19-32	CONSTRUCTION DETAILS
33-48	DRAINAGE PLANS, PROFILES, DETAILS AND QUANTITIES
49	CONSTRUCTION AREA SIGNS
50-57	PAVEMENT DELINEATION PLANS, DETAILS AND QUANTITIES
58-61	SIGN PLANS, DETAILS AND QUANTITIES
62	SUMMARY OF QUANTITIES
63-64	EROSION CONTROL PLANS
65-67	ELECTRICAL PLANS
68-88	REVISED STANDARD PLANS

THE STANDARD PLANS LIST APPLICABLE TO THIS CONTRACT IS INCLUDED IN THE NOTICE TO BIDDERS AND SPECIAL PROVISIONS BOOK.

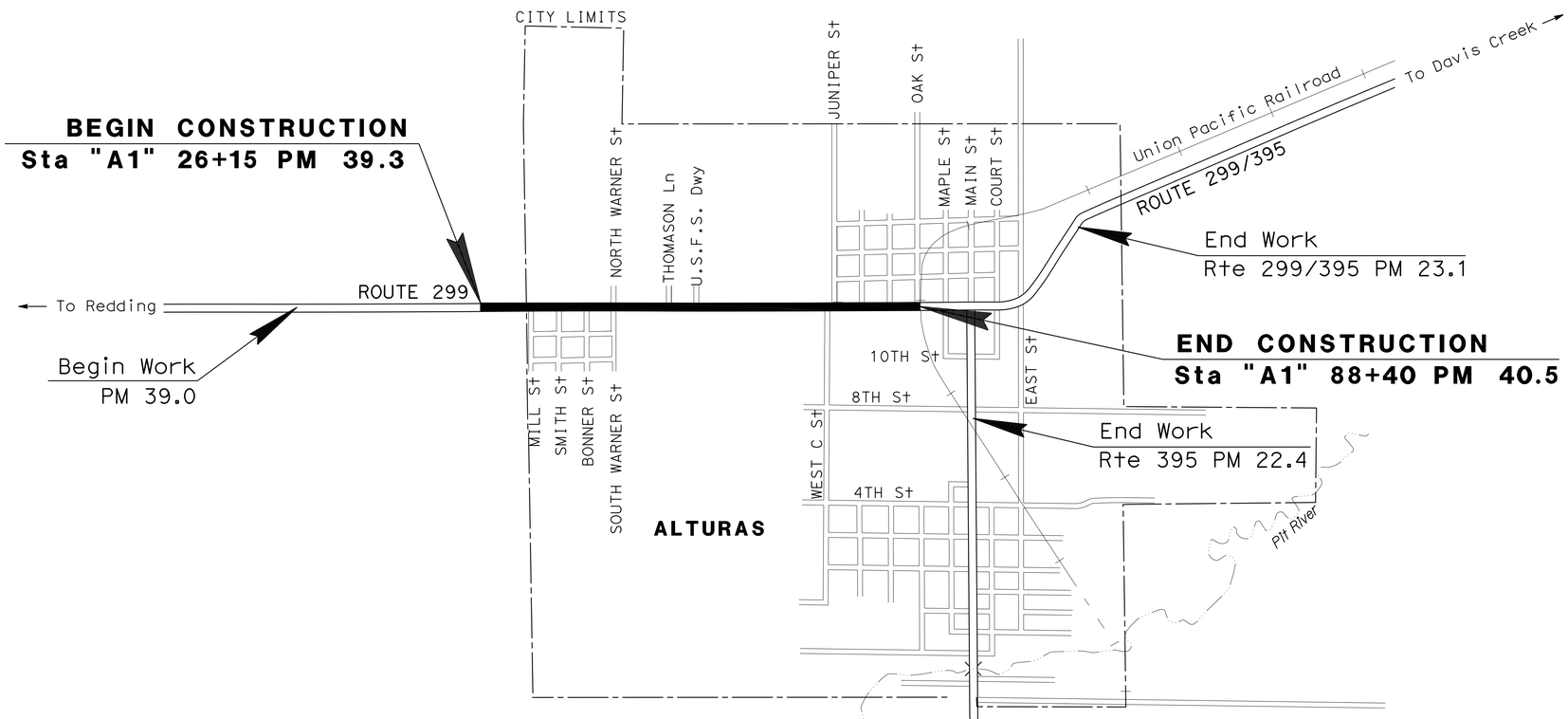

NO SCALE

THE CONTRACTOR SHALL POSSESS THE CLASS (OR CLASSES) OF LICENSE AS SPECIFIED IN THE "NOTICE TO BIDDERS."

10-21-14
PROJECT ENGINEER DATE
REGISTERED CIVIL ENGINEER

November 26, 2014
PLANS APPROVAL DATE

REGISTERED PROFESSIONAL ENGINEER
BYRON STANLEY
No. C60161
Exp. 6-30-16
CIVIL
STATE OF CALIFORNIA

THE STATE OF CALIFORNIA OR ITS OFFICERS OR AGENTS SHALL NOT BE RESPONSIBLE FOR THE ACCURACY OR COMPLETENESS OF SCANNED COPIES OF THIS PLAN SHEET.

CONTRACT No.	02-299714
PROJECT ID	02120000221

PROJECT MANAGER: ERIC AKANA
DESIGN ENGINEER: STEVE TOPAL

P:\proj2\02\29971_plans\pse\229971ab001.dgn

LAST REVISION 11-24-14 | DATE PLOTTED => 01-DEC-2014 | TIME PLOTTED => 15:24

Dist	COUNTY	ROUTE	POST MILES TOTAL PROJECT	SHEET No.	TOTAL SHEETS
02	Mod	299	39.3/40.5	2	88

11-24-14
REGISTERED CIVIL ENGINEER DATE

11-26-14
PLANS APPROVAL DATE

REGISTERED PROFESSIONAL ENGINEER BYRON STANLEY No. C60161 Exp. 6-30-16 CIVIL STATE OF CALIFORNIA

THE STATE OF CALIFORNIA OR ITS OFFICERS OR AGENTS SHALL NOT BE RESPONSIBLE FOR THE ACCURACY OR COMPLETENESS OF SCANNED COPIES OF THIS PLAN SHEET.

NOTES:

1. DIMENSIONS OF THE PAVEMENT STRUCTURES (STRUCTURAL SECTIONS) ARE SUBJECT TO TOLERANCES SPECIFIED IN THE STANDARD SPECIFICATIONS.
2. SUPERELEVATIONS ARE SHOWN ON THE SUPERELEVATION DIAGRAMS.
3. LOCATIONS OF REPLACE ASPHALT CONCRETE SURFACING TO BE DETERMINED BY ENGINEER.
4. SAW CUT 0.2′ OUTSIDE OF EXISTING ETW.

ABBREVIATIONS:

Shld Bkg	SHOULDER BACKING
CPACP	COLD PLANE ASPHALT CONCRETE PAVEMENT
RACS	REPLACE ASPHALT CONCRETE SURFACING
S/C	SAW CUT

DESIGN DESIGNATION:

ADT (2015)	4,253	D	55%
ADT (2035)	4,273	T	10%
DHV	470	V	45/35 mph
		TI_{20}	10.5

PAVEMENT CLIMATE REGION:

HIGH DESERT

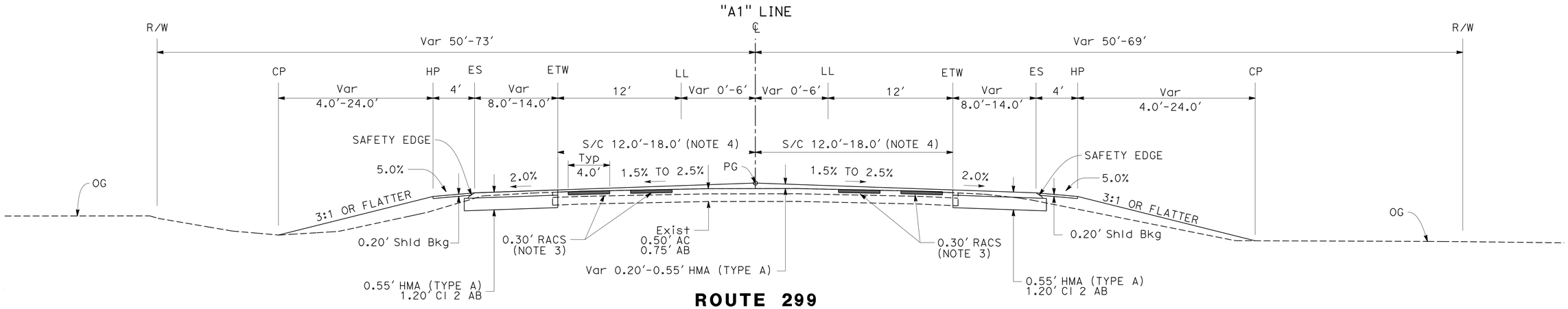

ROUTE 299

Sta 49+73 TO 77+00

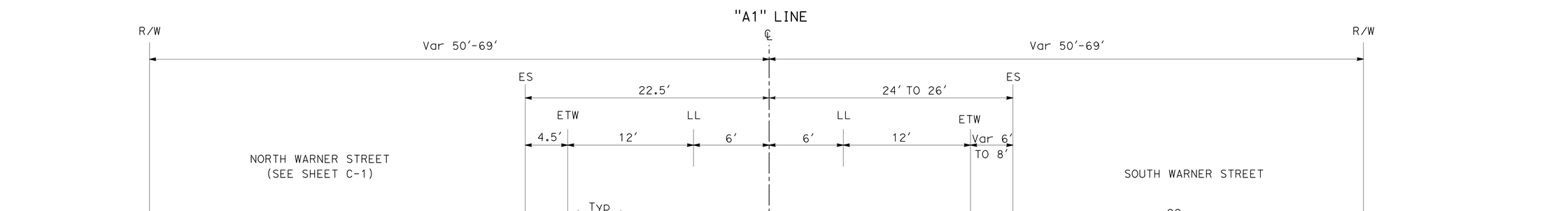

ROUTE 299

Sta 48+55.4 TO 49+73

TYPICAL CROSS SECTIONS

NO SCALE **X-1**

REVISED BY | DATE REVISED
WILL LESLIE | BYRON STANLEY
CALCULATED-DESIGNED BY | CHECKED BY
FUNCTIONAL SUPERVISOR: STEVE TOPAL
STATE OF CALIFORNIA - DEPARTMENT OF TRANSPORTATION
Caltrans® DESIGN

P:\proj2\02\299711_plans\pse\229971ca001.dgn

LAST REVISION 11-24-14 | DATE PLOTTED => 01-DEC-2014 | TIME PLOTTED => 15:24

Dist	COUNTY	ROUTE	POST MILES TOTAL PROJECT	SHEET No.	TOTAL SHEETS
02	Mod	299	39.3/40.5	3	88

REGISTERED CIVIL ENGINEER 11-24-14 DATE

PLANS APPROVAL DATE 11-26-14

REGISTERED PROFESSIONAL ENGINEER BYRON STANLEY No. C60161 Exp. 6-30-16 CIVIL STATE OF CALIFORNIA

THE STATE OF CALIFORNIA OR ITS OFFICERS OR AGENTS SHALL NOT BE RESPONSIBLE FOR THE ACCURACY OR COMPLETENESS OF SCANNED COPIES OF THIS PLAN SHEET.

NOTES:

1. ROAD CONNECTION AND DRIVEWAY SPECIFICS ARE SHOWN ON CONSTRUCTION DETAILS.
2. PAVE TO R/W LINE OR FACE OF BUILDING.
3. MAINTAIN EXISTING PROFILE STA 78+32 TO 88+15
4. SAW CUT 0.2' OUTSIDE OF EXISTING ETW.

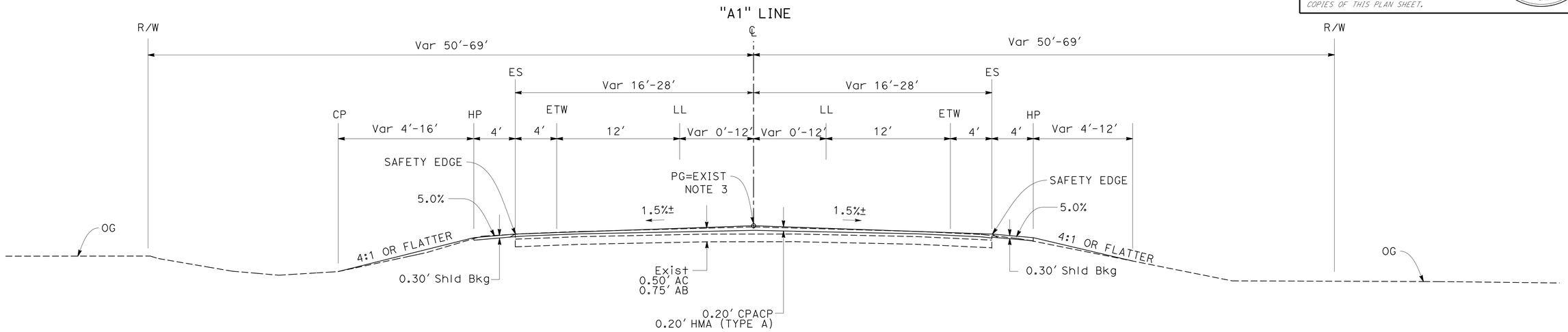

ROUTE 299

Sta 87+00 TO 88+15

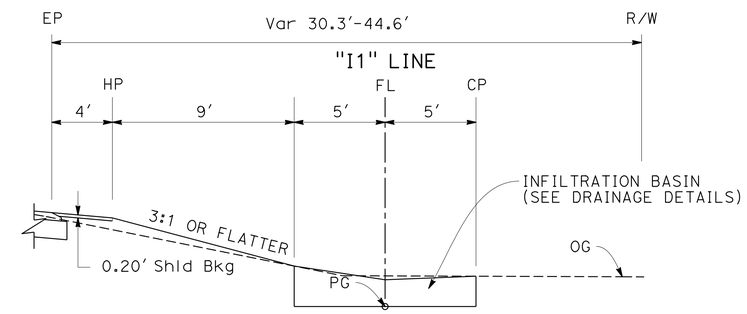

Sta 80+00 TO 85+80

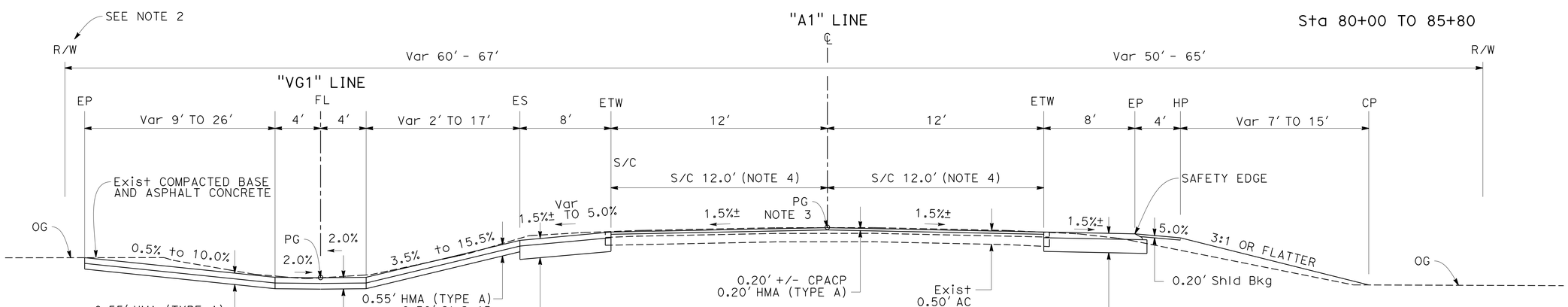

ROUTE 299

Sta 77+00 TO 87+00

Sta 78+19.97 TO 87+02.08

TYPICAL CROSS SECTIONS

NO SCALE

X-2

REVISED BY | DATE REVISED

WILL LESLIE | BYRON STANLEY

CALCULATED-DESIGNED BY | CHECKED BY

FUNCTIONAL SUPERVISOR: STEVE TOPAL

STATE OF CALIFORNIA - DEPARTMENT OF TRANSPORTATION

Caltrans® DESIGN

P:\proj2\02\299711_plans\pse\229971ca002.dgn

LAST REVISION 11-24-14 | DATE PLOTTED => 01-DEC-2014 | TIME PLOTTED => 15:24

BORDER LAST REVISED 7/2/2010 | USERNAME => s123119 | DGN FILE => 229971ca002.dgn | RELATIVE BORDER SCALE IS IN INCHES 0 1 2 3 | UNIT 0319 | PROJECT NUMBER & PHASE 02-1200-0022-1 | EA: 02-299711

Dist	COUNTY	ROUTE	POST MILES TOTAL PROJECT	SHEET No.	TOTAL SHEETS
02	Mod	299	39.3/40.5	4	88

11-24-14
REGISTERED CIVIL ENGINEER DATE

11-26-14
PLANS APPROVAL DATE

REGISTERED PROFESSIONAL ENGINEER
BYRON STANLEY
No. C60161
Exp. 6-30-16
CIVIL
STATE OF CALIFORNIA

THE STATE OF CALIFORNIA OR ITS OFFICERS OR AGENTS SHALL NOT BE RESPONSIBLE FOR THE ACCURACY OR COMPLETENESS OF SCANNED COPIES OF THIS PLAN SHEET.

NOTE:

1. ROAD CONNECTION AND DRIVEWAY SPECIFICS ARE SHOWN ON CONSTRUCTION DETAILS.

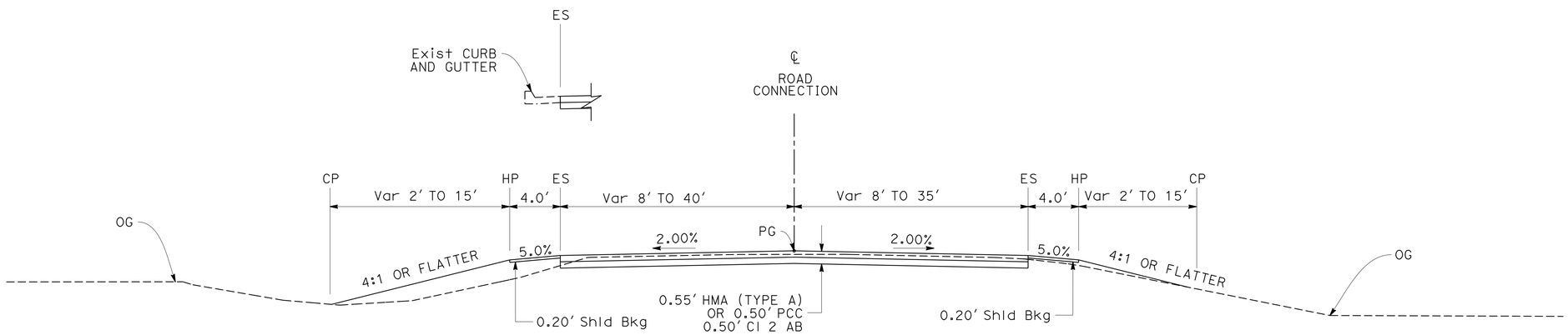

ROAD CONNECTIONS AND DRIVEWAYS

TYPICAL CROSS SECTIONS

NO SCALE

X-3

REVISED BY	
DATE REVISED	
WILL LESLIE	
BYRON STANLEY	
CALCULATED-DESIGNED BY	
CHECKED BY	
FUNCTIONAL SUPERVISOR	
STEVE TOPAL	

STATE OF CALIFORNIA - DEPARTMENT OF TRANSPORTATION
Caltrans
DESIGN

P:\proj2\02\29971_plans\pse\229971ca003.dgn

LAST REVISION 11-24-14
DATE PLOTTED => 01-DEC-2014
TIME PLOTTED => 15:25

Dist	COUNTY	ROUTE	POST MILES TOTAL PROJECT	SHEET No.	TOTAL SHEETS
02	Mod	299	39.3/40.5	5	88

REGISTERED CIVIL ENGINEER 11-24-14 DATE

PLANS APPROVAL DATE 11-26-14

REGISTERED PROFESSIONAL ENGINEER BYRON STANLEY No. C60161 Exp. 6-30-16 CIVIL STATE OF CALIFORNIA

THE STATE OF CALIFORNIA OR ITS OFFICERS OR AGENTS SHALL NOT BE RESPONSIBLE FOR THE ACCURACY OR COMPLETENESS OF SCANNED COPIES OF THIS PLAN SHEET.

NOTES:

1. FOR ACCURATE RIGHT OF WAY DATA, CONTACT RIGHT OF WAY ENGINEERING AT THE DISTRICT OFFICE.
2. SEE CONSTRUCTION DETAILS FOR ADDITIONAL INFORMATION.
3. UNDER GROUND UTILITIES HAVE NOT BEEN POSITIVELY LOCATED
4. UNLESS OTHERWISE SHOWN, PROTECT ALL UTILITIES IN PLACE.

LEGEND:

CPACP

SAW CUT LINE

TCE OR PEC

ABBREVIATIONS:

CPACP	COLD PLANE ASPHALT CONCRETE PAVEMENT
S/C	SAW CUT LINE
(E)	EXISTING
Util	UTILITY

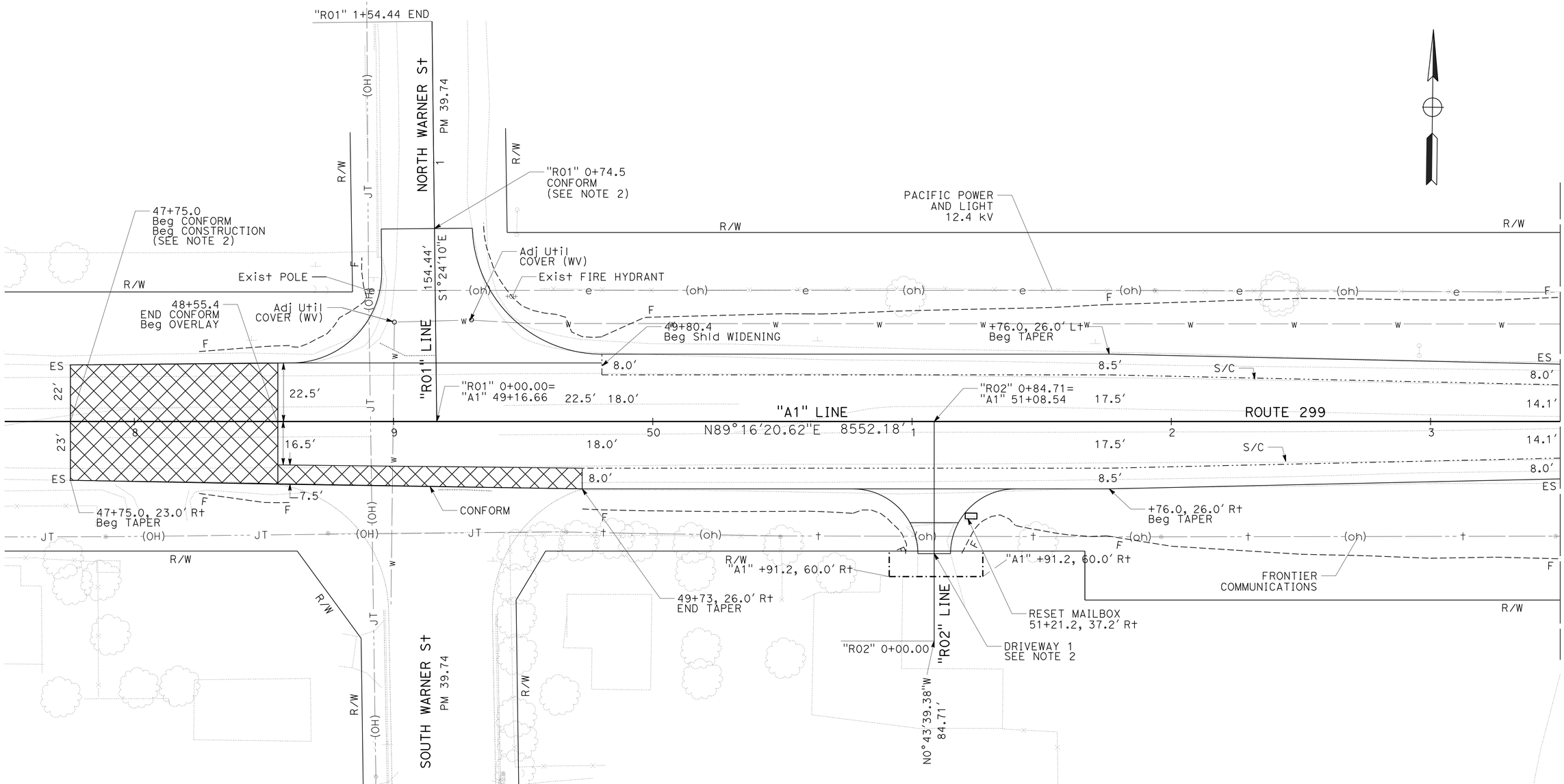

LAYOUT

SCALE: 1" = 20' **L-1**

REVISED BY	DATE REVISED
WILL LESLIE	BYRON STANLEY

CALCULATED-DESIGNED BY / CHECKED BY

FUNCTIONAL SUPERVISOR: STEVE TOPAL

STATE OF CALIFORNIA - DEPARTMENT OF TRANSPORTATION

Caltrans® **DESIGN**

P:\proj2\02\299711_plans\pse\229971ea001.dgn

LAST REVISION 11-24-14 | DATE PLOTTED => 01-DEC-2014 | TIME PLOTTED => 15:25

Dist	COUNTY	ROUTE	POST MILES TOTAL PROJECT	SHEET No.	TOTAL SHEETS
02	Mod	299	39.3/40.5	6	88

REGISTERED CIVIL ENGINEER 11-24-14 DATE

11-26-14
PLANS APPROVAL DATE

REGISTERED PROFESSIONAL ENGINEER BYRON STANLEY No. C60161 Exp. 6-30-16 CIVIL STATE OF CALIFORNIA

THE STATE OF CALIFORNIA OR ITS OFFICERS OR AGENTS SHALL NOT BE RESPONSIBLE FOR THE ACCURACY OR COMPLETENESS OF SCANNED COPIES OF THIS PLAN SHEET.

NOTES:

1. FOR ACCURATE RIGHT OF WAY DATA, CONTACT RIGHT OF WAY ENGINEERING AT THE DISTRICT OFFICE.
2. SEE CONSTRUCTION DETAILS FOR ADDITIONAL INFORMATION.
3. UNDER GROUND UTILITIES HAVE NOT BEEN POSITIVELY LOCATED.

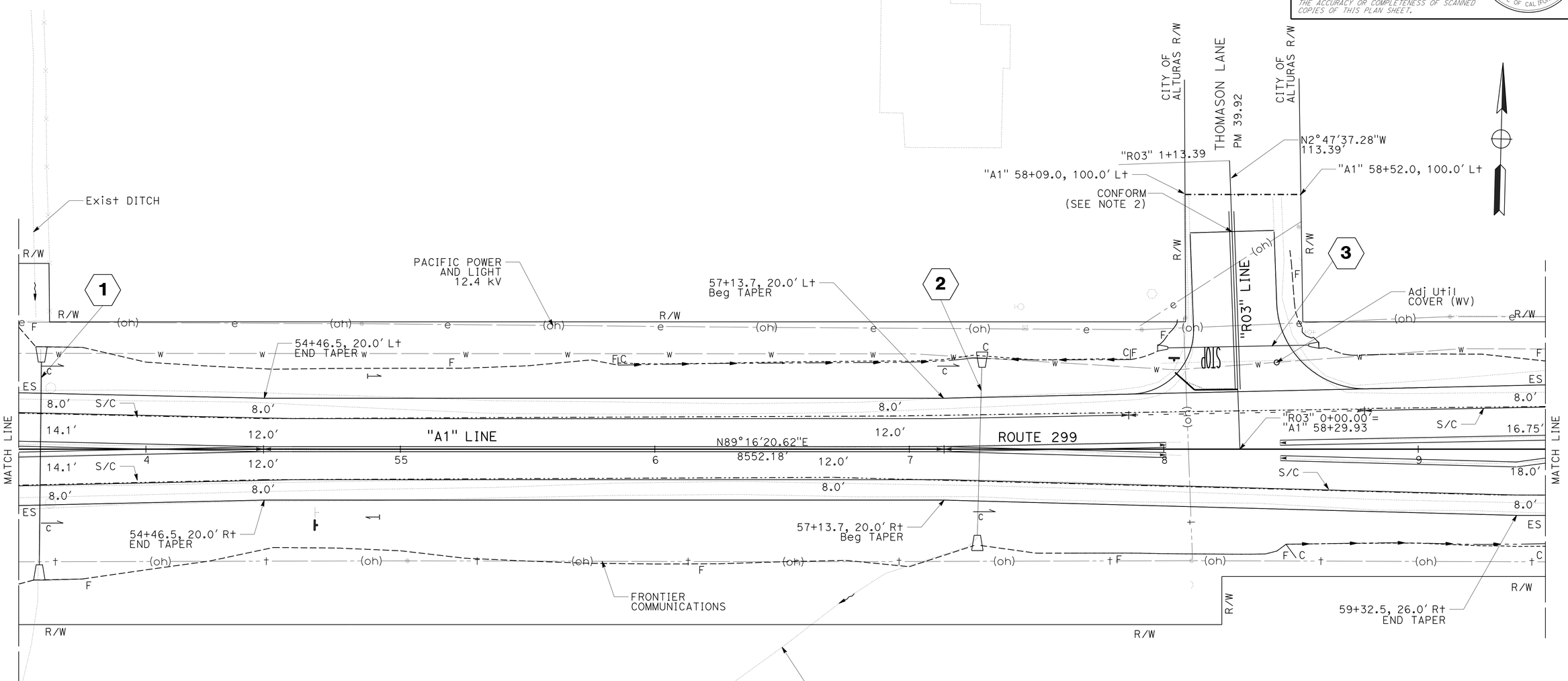

LAYOUT

SCALE: 1" = 20' **L-2**

REVISED BY	DATE REVISED
WILL LESLIE	BYRON STANLEY
CALCULATED-DESIGNED BY	CHECKED BY
FUNCTIONAL SUPERVISOR	STEVE TOPAL

STATE OF CALIFORNIA - DEPARTMENT OF TRANSPORTATION

Caltrans® **DESIGN**

P:\proj2\02\29971_plans\pse\229971ea002.dgn

LAST REVISION 11-24-14 | DATE PLOTTED => 01-DEC-2014 | TIME PLOTTED => 15:25

Dist	COUNTY	ROUTE	POST MILES TOTAL PROJECT	SHEET No.	TOTAL SHEETS
02	Mod	299	39.3/40.5	7	88

REGISTERED CIVIL ENGINEER 11-24-14 DATE

11-26-14
PLANS APPROVAL DATE

REGISTERED PROFESSIONAL ENGINEER BYRON STANLEY No. C60161 Exp. 6-30-16 CIVIL STATE OF CALIFORNIA

THE STATE OF CALIFORNIA OR ITS OFFICERS OR AGENTS SHALL NOT BE RESPONSIBLE FOR THE ACCURACY OR COMPLETENESS OF SCANNED COPIES OF THIS PLAN SHEET.

NOTES:

1. FOR ACCURATE RIGHT OF WAY DATA, CONTACT RIGHT OF WAY ENGINEERING AT THE DISTRICT OFFICE.
2. SEE CONSTRUCTION DETAILS FOR ADDITIONAL INFORMATION.
3. UNDERGROUND UTILITIES HAVE NOT BEEN POSITIVELY LOCATED.

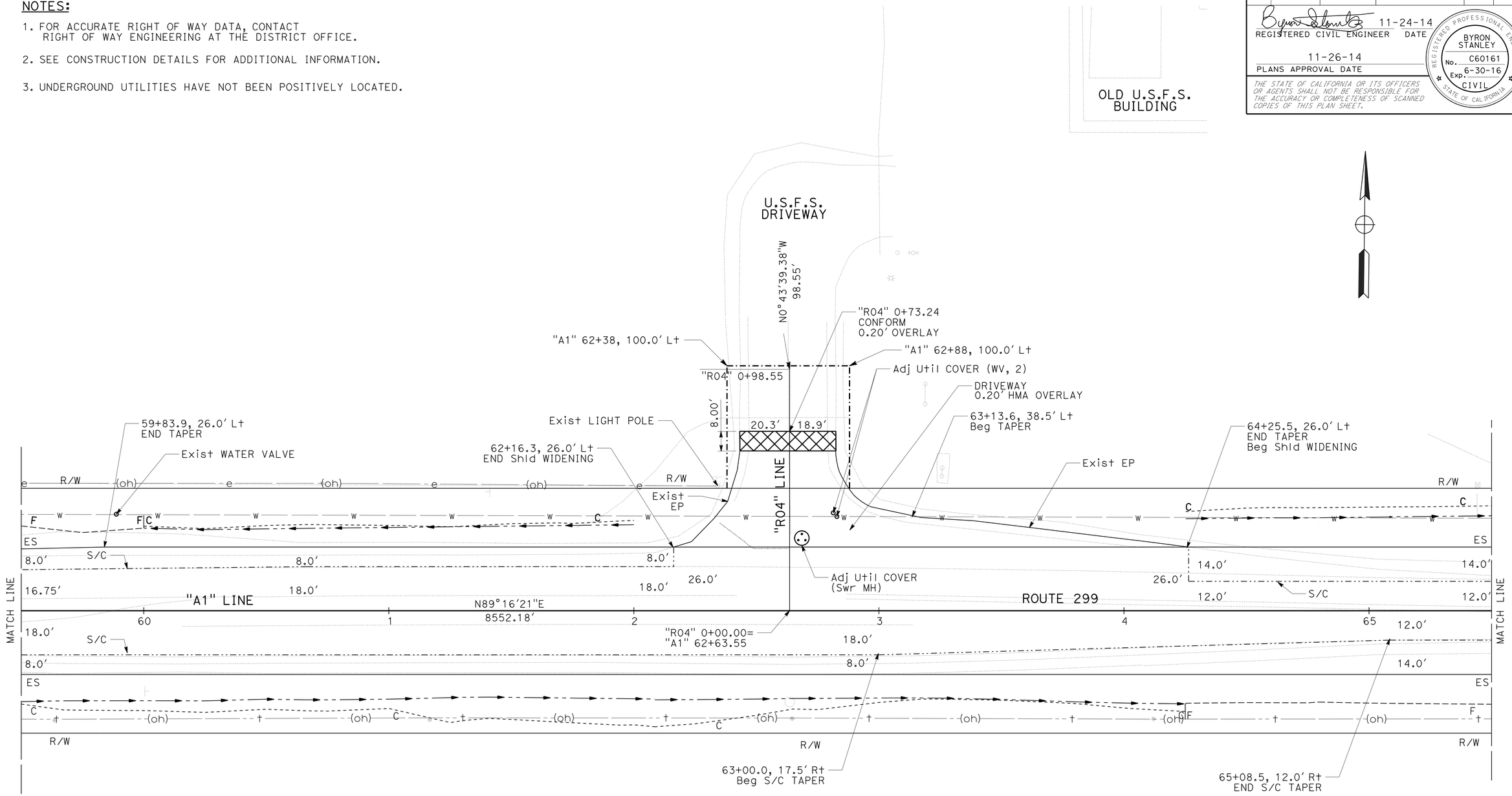

LAYOUT

SCALE: 1" = 20'

L-3

REVISED BY	DATE REVISED
WILL LESLIE	BYRON STANLEY
CALCULATED-DESIGNED BY	CHECKED BY
FUNCTIONAL SUPERVISOR	STEVE TOPAL

STATE OF CALIFORNIA - DEPARTMENT OF TRANSPORTATION

Caltrans DESIGN

P:\proj2\02\299711_plans\pse\229971ea003.dgn

LAST REVISION 11-24-14 | DATE PLOTTED => 01-DEC-2014 TIME PLOTTED => 15:25

Dist	COUNTY	ROUTE	POST MILES TOTAL PROJECT	SHEET No.	TOTAL SHEETS
02	Mod	299	39.3/40.5	8	88

REGISTERED CIVIL ENGINEER 11-24-14 DATE

PLANS APPROVAL DATE 11-26-14

REGISTERED PROFESSIONAL ENGINEER BYRON STANLEY No. C60161 Exp. 6-30-16 CIVIL STATE OF CALIFORNIA

THE STATE OF CALIFORNIA OR ITS OFFICERS OR AGENTS SHALL NOT BE RESPONSIBLE FOR THE ACCURACY OR COMPLETENESS OF SCANNED COPIES OF THIS PLAN SHEET.

NOTES:

1. FOR ACCURATE RIGHT OF WAY DATA, CONTACT RIGHT OF WAY ENGINEERING AT THE DISTRICT OFFICE.
2. SEE CONSTRUCTION DETAILS FOR ADDITIONAL INFORMATION.
3. UTILITY POLES AND PEDESTALS TO BE RELOCATED BY OTHERS BEFORE CONSTRUCTION.
4. UNDERGROUND UTILITIES HAVE NOT BEEN POSITIVELY LOCATED.

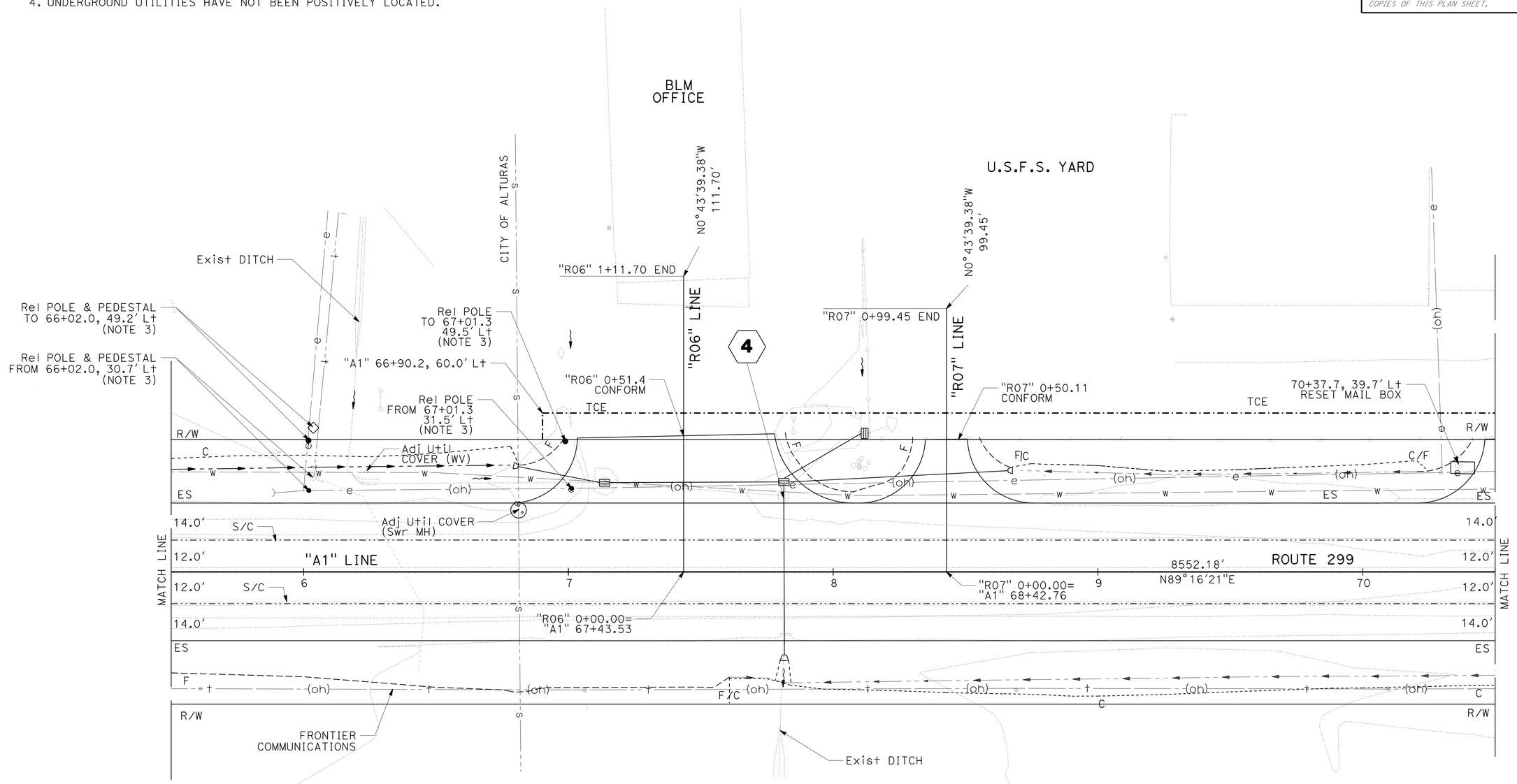

LAYOUT

SCALE: 1" = 20'

L-4

REVISED BY	DATE REVISED
WILL LESLIE	BYRON STANLEY

CALCULATED-DESIGNED BY / CHECKED BY

FUNCTIONAL SUPERVISOR: STEVE TOPAL

STATE OF CALIFORNIA - DEPARTMENT OF TRANSPORTATION

Caltrans

DESIGN

P:\proj2\02\29971_plans\pse\229971ea004.dgn

LAST REVISION 11-24-14 | DATE PLOTTED => 01-DEC-2014 | TIME PLOTTED => 15:25

Dist	COUNTY	ROUTE	POST MILES TOTAL PROJECT	SHEET No.	TOTAL SHEETS
02	Mod	299	39.3/40.5	9	88

REGISTERED CIVIL ENGINEER 11-24-14 DATE

11-26-14
PLANS APPROVAL DATE

REGISTERED PROFESSIONAL ENGINEER BYRON STANLEY No. C60161 Exp. 6-30-16 CIVIL STATE OF CALIFORNIA

THE STATE OF CALIFORNIA OR ITS OFFICERS OR AGENTS SHALL NOT BE RESPONSIBLE FOR THE ACCURACY OR COMPLETENESS OF SCANNED COPIES OF THIS PLAN SHEET.

NOTES:

1. FOR ACCURATE RIGHT OF WAY DATA, CONTACT RIGHT OF WAY ENGINEERING AT THE DISTRICT OFFICE.
2. SEE CONSTRUCTION DETAILS FOR ADDITIONAL INFORMATION.
3. UNDERGROUND UTILITIES HAVE NOT BEEN POSITIVELY LOCATED.

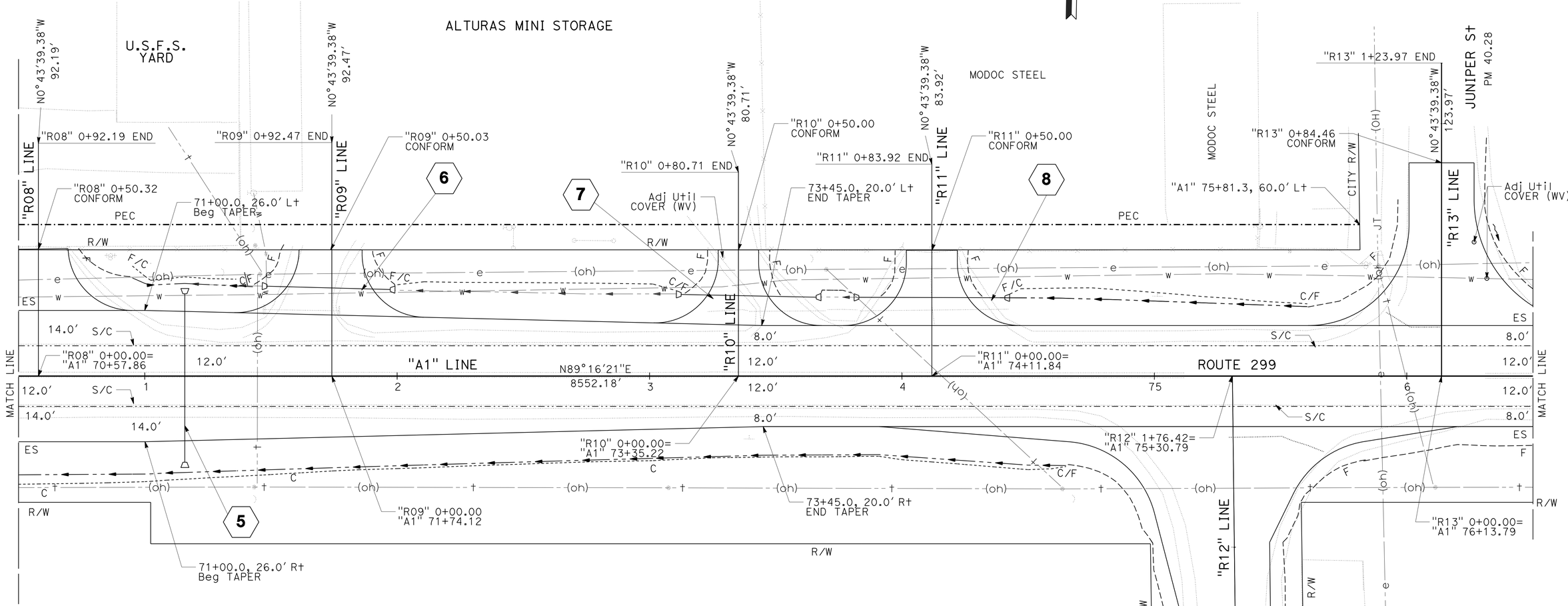

LAYOUT

SCALE: 1" = 20' **L-5**

REVISED BY	DATE REVISED
WILL LESLIE	BYRON STANLEY

CALCULATED-DESIGNED BY / CHECKED BY

FUNCTIONAL SUPERVISOR: STEVE TOPAL

STATE OF CALIFORNIA - DEPARTMENT OF TRANSPORTATION

Caltrans® **DESIGN**

P:\proj2\02\299711_plans\pse\229971ea005.dgn

LAST REVISION 11-24-14 | DATE PLOTTED => 01-DEC-2014 TIME PLOTTED => 15:25

Dist	COUNTY	ROUTE	POST MILES TOTAL PROJECT	SHEET No.	TOTAL SHEETS
02	Mod	299	39.3/40.5	10	88

REGISTERED CIVIL ENGINEER 11-24-14 DATE

11-26-14
PLANS APPROVAL DATE

REGISTERED PROFESSIONAL ENGINEER BYRON STANLEY No. C60161 Exp. 6-30-16 CIVIL STATE OF CALIFORNIA

THE STATE OF CALIFORNIA OR ITS OFFICERS OR AGENTS SHALL NOT BE RESPONSIBLE FOR THE ACCURACY OR COMPLETENESS OF SCANNED COPIES OF THIS PLAN SHEET.

NOTES:

1. FOR ACCURATE RIGHT OF WAY DATA, CONTACT RIGHT OF WAY ENGINEERING AT THE DISTRICT OFFICE.
2. SEE CONSTRUCTION DETAILS FOR ADDITIONAL INFORMATION.
3. PAVE TO FACE OF BUILDING.
4. SEE DRAINAGE DETAILS FOR ADDITIONAL INFORMATION.
5. UNDERGROUND UTILITIES HAVE NOT BEEN POSITIVELY LOCATED.

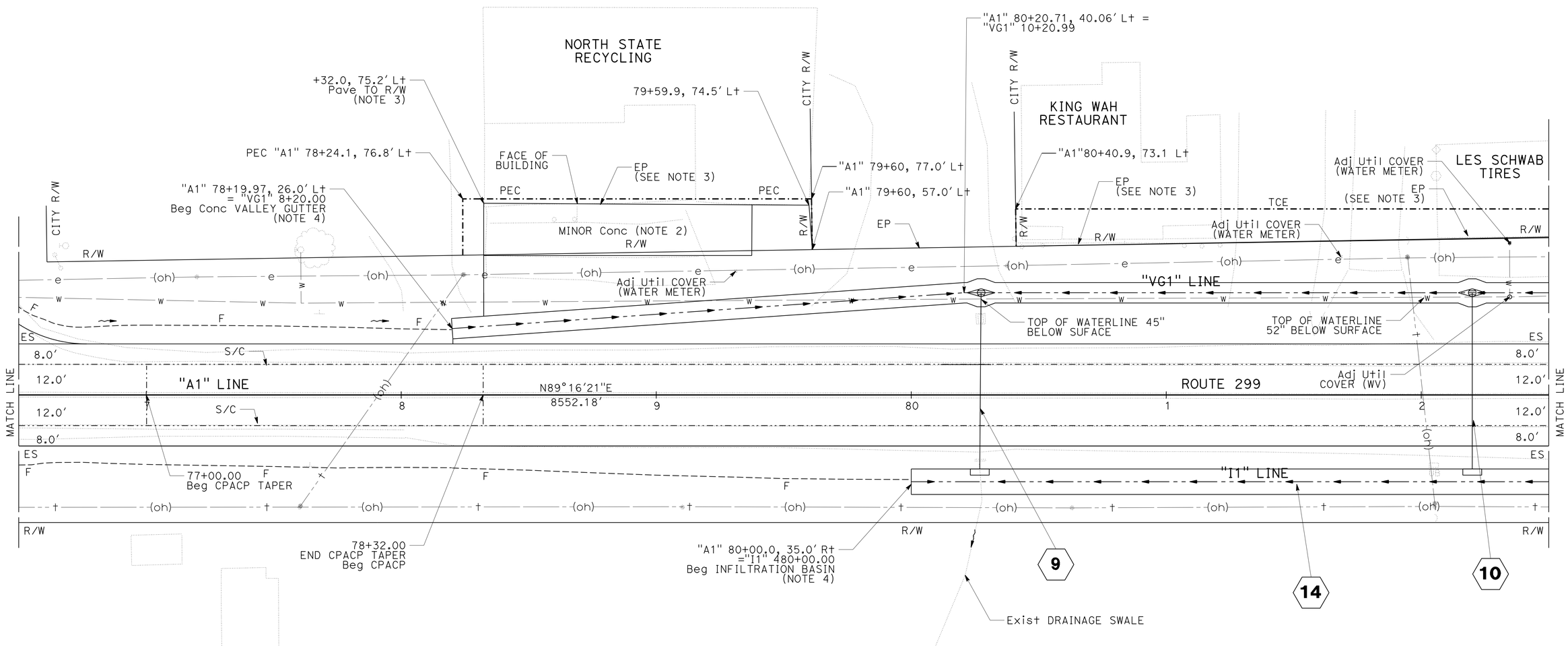

LAYOUT

SCALE: 1" = 20′ **L-6**

REVISED BY	DATE REVISED
WILL LESLIE	BYRON STANLEY
CALCULATED-DESIGNED BY	CHECKED BY
FUNCTIONAL SUPERVISOR	STEVE TOPAL

STATE OF CALIFORNIA - DEPARTMENT OF TRANSPORTATION
Caltrans
DESIGN

P:\proj2\02\29971_plans\pse\229971ea006.dgn

LAST REVISION 11-24-14 | DATE PLOTTED => 01-DEC-2014 | TIME PLOTTED => 15:25

Dist	COUNTY	ROUTE	POST MILES TOTAL PROJECT	SHEET No.	TOTAL SHEETS
02	Mod	299	39.3/40.5	11	88

REGISTERED CIVIL ENGINEER 11-24-14 DATE

PLANS APPROVAL DATE 11-26-14

REGISTERED PROFESSIONAL ENGINEER BYRON STANLEY No. C60161 Exp. 6-30-16 CIVIL STATE OF CALIFORNIA

THE STATE OF CALIFORNIA OR ITS OFFICERS OR AGENTS SHALL NOT BE RESPONSIBLE FOR THE ACCURACY OR COMPLETENESS OF SCANNED COPIES OF THIS PLAN SHEET.

NOTES:

1. FOR ACCURATE RIGHT OF WAY DATA, CONTACT RIGHT OF WAY ENGINEERING AT THE DISTRICT OFFICE.
2. SEE CONSTRUCTION DETAILS FOR ADDITIONAL INFORMATION.
3. PAVE TO FACE OF BUILDING.
4. SEE DRAINAGE DETAILS FOR ADDITIONAL INFORMATION.

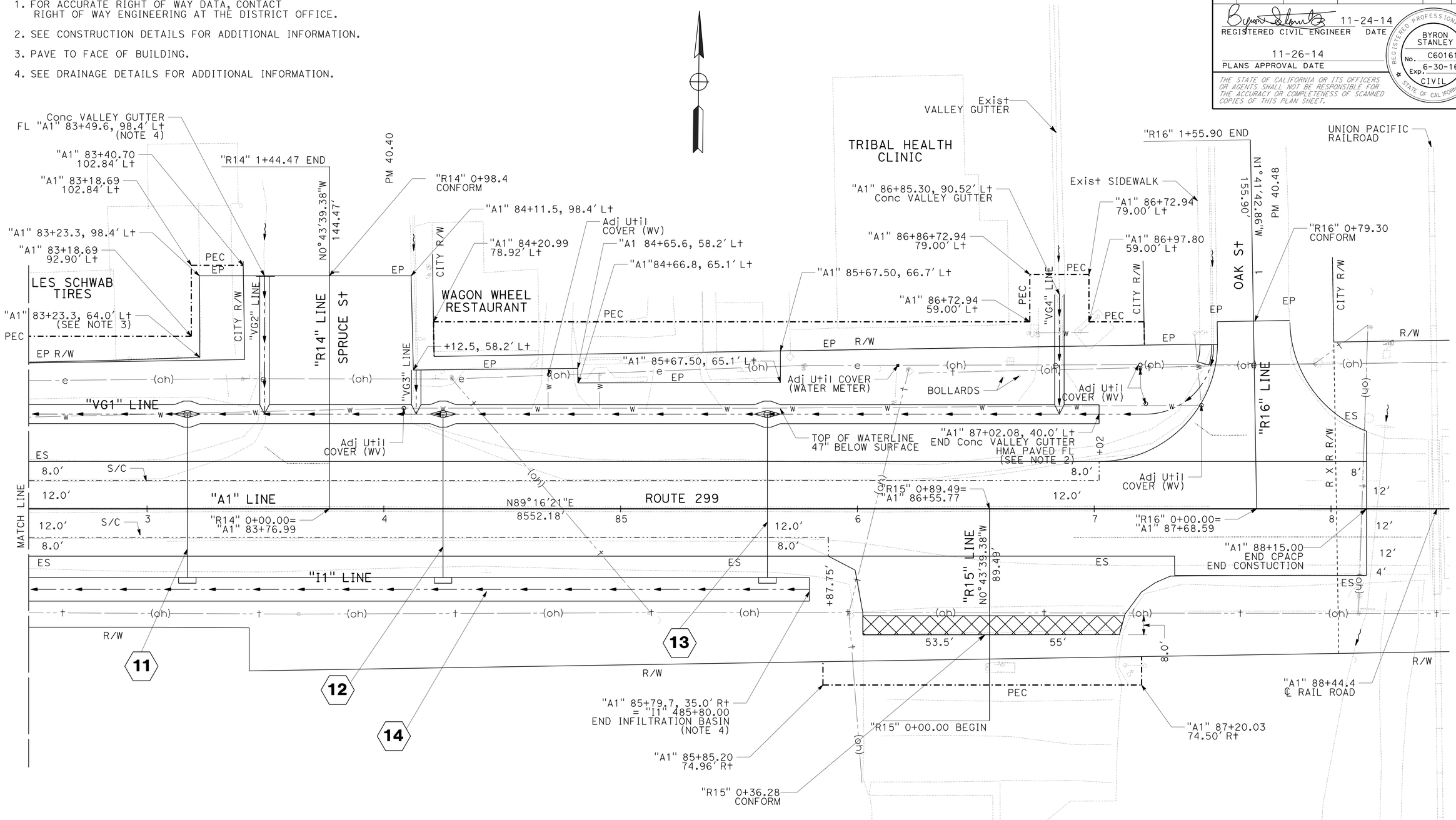

LAYOUT

SCALE: 1" = 20'

L-7

REVISED BY	DATE REVISED
WILL LESLIE	BYRON STANLEY

CALCULATED-DESIGNED BY / CHECKED BY

FUNCTIONAL SUPERVISOR: STEVE TOPAL

STATE OF CALIFORNIA - DEPARTMENT OF TRANSPORTATION

Caltrans DESIGN

P:\proj2\02\29971_plans\pse\229971ea007.dgn

LAST REVISION 11-24-14 | DATE PLOTTED => 01-DEC-2014 | TIME PLOTTED => 15:25

Dist	COUNTY	ROUTE	POST MILES TOTAL PROJECT	SHEET No.	TOTAL SHEETS
02	Mod	299	39.3/40.5	12	88

REGISTERED CIVIL ENGINEER 11-24-14 DATE

11-26-14
PLANS APPROVAL DATE

REGISTERED PROFESSIONAL ENGINEER BYRON STANLEY No. C60161 Exp. 6-30-16 CIVIL STATE OF CALIFORNIA

THE STATE OF CALIFORNIA OR ITS OFFICERS OR AGENTS SHALL NOT BE RESPONSIBLE FOR THE ACCURACY OR COMPLETENESS OF SCANNED COPIES OF THIS PLAN SHEET.

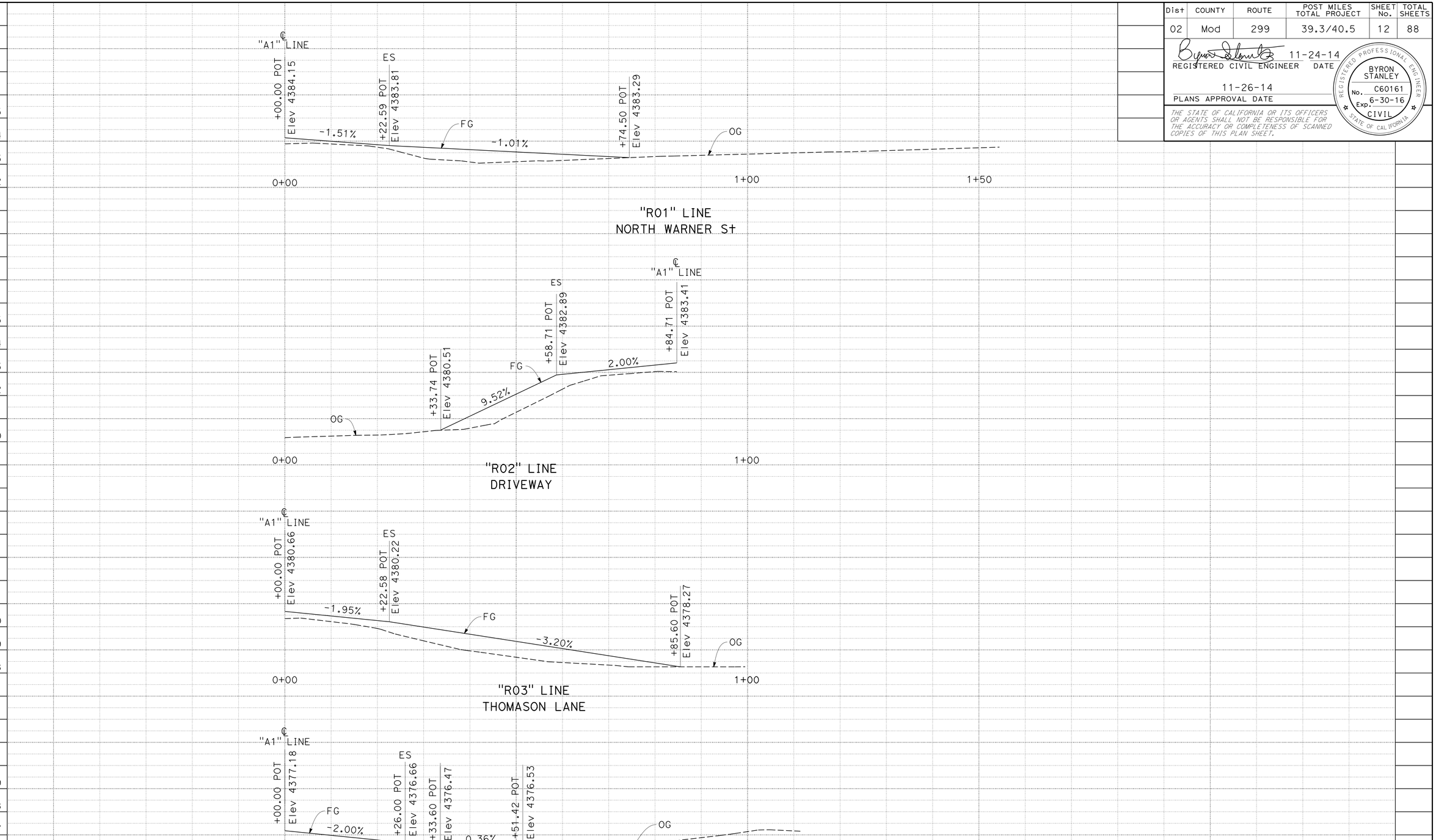

PROFILE

SCALE: 1" = 10' Horiz
1" = 2' Vert

P-1

REVISED BY | DATE REVISED

WILL LESLIE | BYRON STANLEY

CALCULATED-DESIGNED BY | CHECKED BY

FUNCTIONAL SUPERVISOR: STEVE TOPAL

STATE OF CALIFORNIA - DEPARTMENT OF TRANSPORTATION

Caltrans® **DESIGN**

P:\proj2\02\299711\plans\pse\229971fa001.dgn

LAST REVISION 11-24-14 | DATE PLOTTED => 01-DEC-2014 | TIME PLOTTED => 15:25

Dist	COUNTY	ROUTE	POST MILES TOTAL PROJECT	SHEET No.	TOTAL SHEETS
02	Mod	299	39.3/40.5	13	88

REGISTERED CIVIL ENGINEER 11-24-14 DATE

11-26-14
PLANS APPROVAL DATE

REGISTERED PROFESSIONAL ENGINEER BYRON STANLEY No. C60161 Exp. 6-30-16 CIVIL STATE OF CALIFORNIA

THE STATE OF CALIFORNIA OR ITS OFFICERS OR AGENTS SHALL NOT BE RESPONSIBLE FOR THE ACCURACY OR COMPLETENESS OF SCANNED COPIES OF THIS PLAN SHEET.

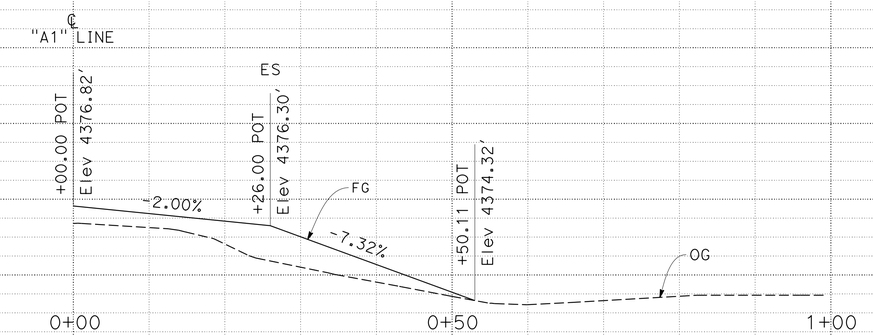

"R07" LINE
U.S.F.S. YARD WEST

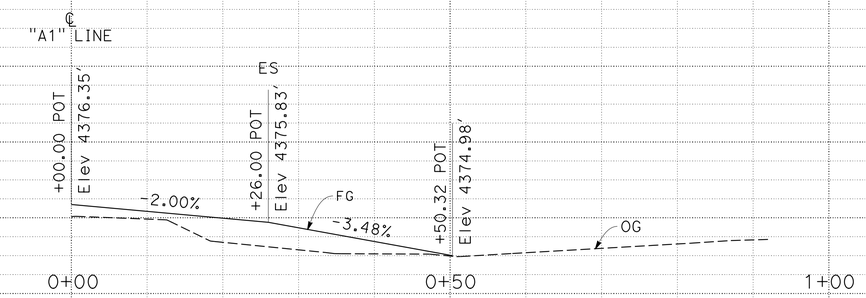

"R08" LINE
U.S.F.S. YARD EAST

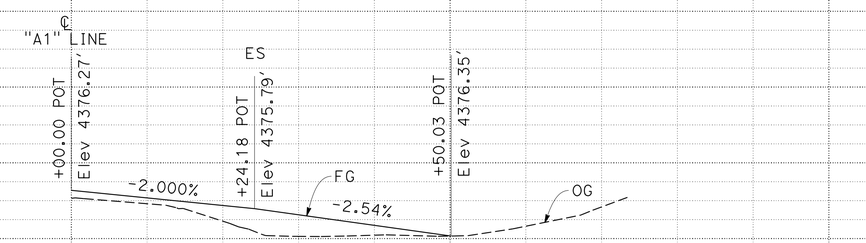

"R09" LINE
ALTURAS MINI STORAGE WEST

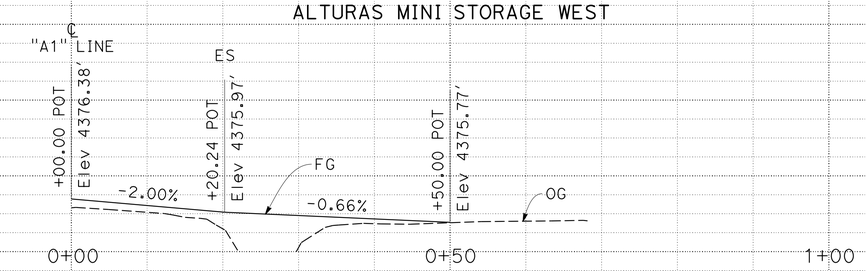

"R10" LINE
ALTURAS MINI STORAGE EAST

PROFILE

SCALE: 1" = 10' Horiz
1" = 2' Vert

P-2

REVISED BY	DATE REVISED

CALCULATED-DESIGNED BY	CHECKED BY
WILL LESLIE	BYRON STANLEY

FUNCTIONAL SUPERVISOR: STEVE TOPAL

STATE OF CALIFORNIA - DEPARTMENT OF TRANSPORTATION
Caltrans
DESIGN

P:\proj2\02\29971_plans\pse\229971fa002.dgn

LAST REVISION 11-24-14 | DATE PLOTTED => 01-DEC-2014 | TIME PLOTTED => 15:25

Dist	COUNTY	ROUTE	POST MILES TOTAL PROJECT	SHEET No.	TOTAL SHEETS
02	Mod	299	39.3/40.5	14	88

REGISTERED CIVIL ENGINEER 11-24-14 DATE

11-26-14
PLANS APPROVAL DATE

REGISTERED PROFESSIONAL ENGINEER BYRON STANLEY No. C60161 Exp. 6-30-16 CIVIL STATE OF CALIFORNIA

THE STATE OF CALIFORNIA OR ITS OFFICERS OR AGENTS SHALL NOT BE RESPONSIBLE FOR THE ACCURACY OR COMPLETENESS OF SCANNED COPIES OF THIS PLAN SHEET.

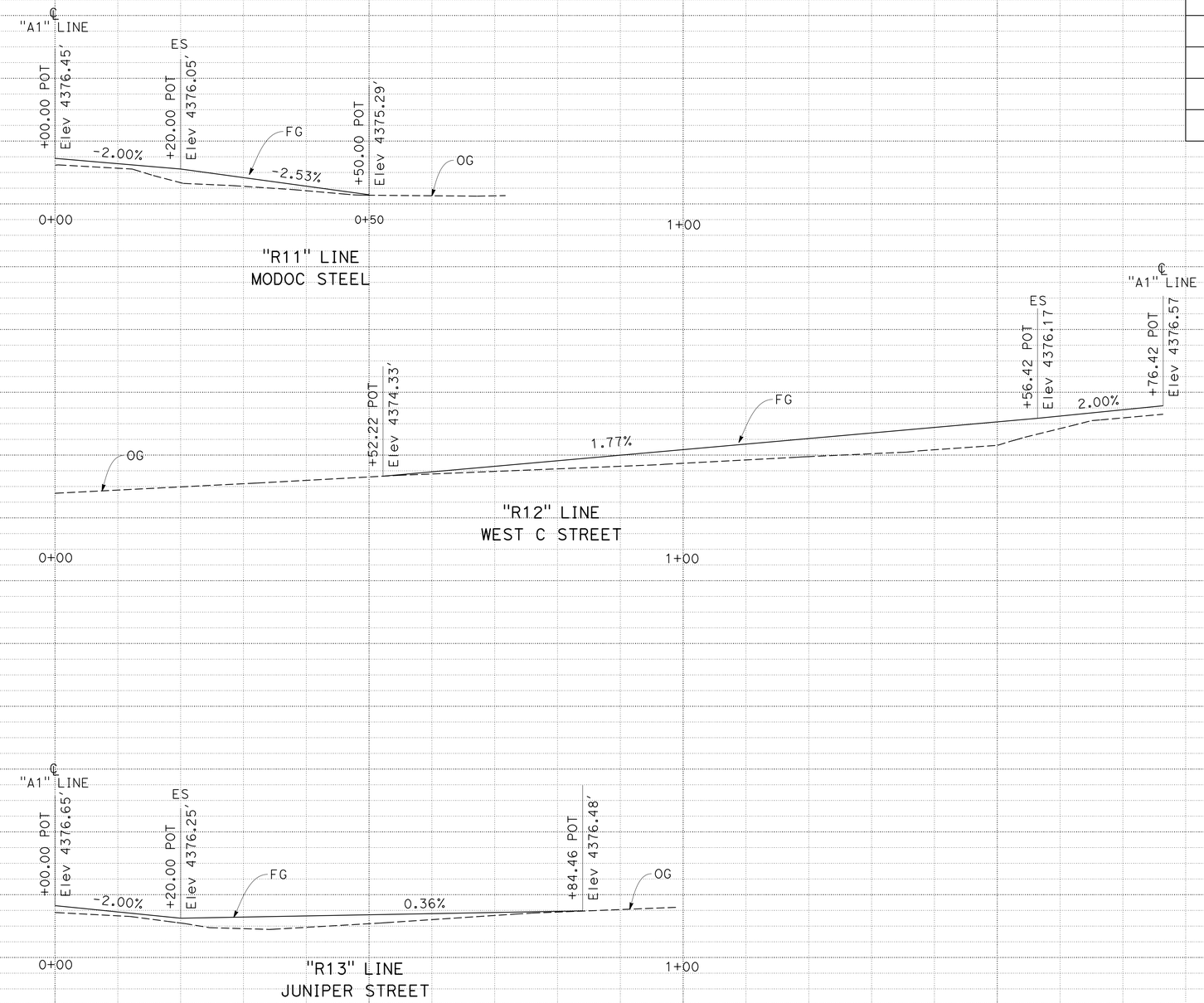

PROFILE

SCALE: 1" = 10' Horiz
1" = 2' Vert

P-3

REVISED BY	DATE REVISED
WILL LESLIE	BYRON STANLEY

CALCULATED-DESIGNED BY	CHECKED BY

FUNCTIONAL SUPERVISOR: STEVE TOPAL

STATE OF CALIFORNIA - DEPARTMENT OF TRANSPORTATION
Caltrans
DESIGN

P:\proj2\02\299711\plans\pse\229971fa003.dgn

LAST REVISION 11-24-14 | DATE PLOTTED => 01-DEC-2014 | TIME PLOTTED => 15:25

Dist	COUNTY	ROUTE	POST MILES TOTAL PROJECT	SHEET No.	TOTAL SHEETS
02	Mod	299	39.3/40.5	15	88

REGISTERED CIVIL ENGINEER 11-24-14 DATE

11-26-14
PLANS APPROVAL DATE

REGISTERED PROFESSIONAL ENGINEER
BYRON STANLEY
No. C60161
Exp. 6-30-16
CIVIL
STATE OF CALIFORNIA

THE STATE OF CALIFORNIA OR ITS OFFICERS OR AGENTS SHALL NOT BE RESPONSIBLE FOR THE ACCURACY OR COMPLETENESS OF SCANNED COPIES OF THIS PLAN SHEET.

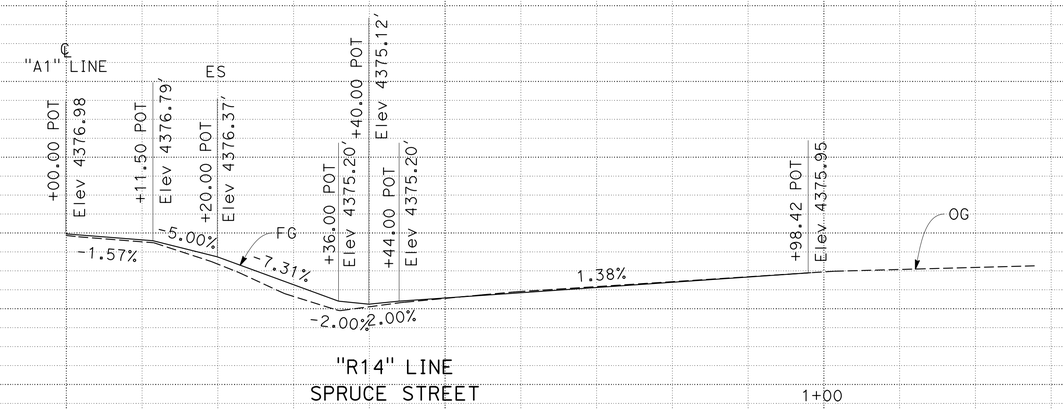

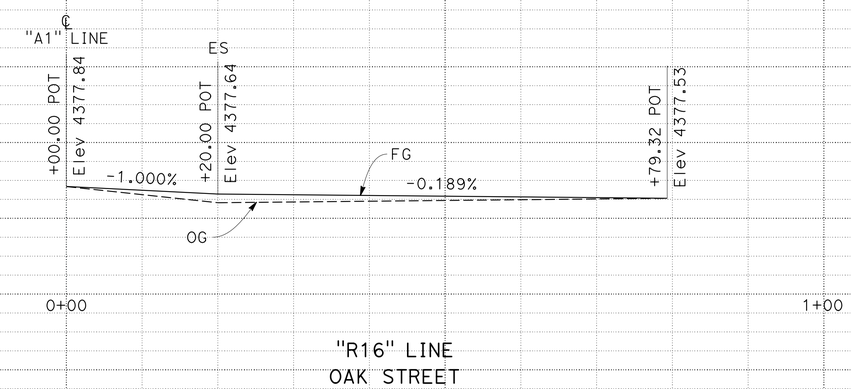

PROFILE

SCALE: 1" = 10' Horiz
1" = 2' Vert

P-4

WILL LESLIE	REVISED BY
BYRON STANLEY	DATE REVISED
CALCULATED-DESIGNED BY	
CHECKED BY	
STEVE TOPAL	FUNCTIONAL SUPERVISOR

STATE OF CALIFORNIA - DEPARTMENT OF TRANSPORTATION
Caltrans
DESIGN

P:\proj2\02\29971_plans\pse\229971fa004.dgn

LAST REVISION 11-24-14
DATE PLOTTED => 01-DEC-2014
TIME PLOTTED => 15:25

Dist	COUNTY	ROUTE	POST MILES TOTAL PROJECT	SHEET No.	TOTAL SHEETS
02	Mod	299	39.3/40.5	16	88

REGISTERED CIVIL ENGINEER 11-24-14 DATE

11-26-14
PLANS APPROVAL DATE

REGISTERED PROFESSIONAL ENGINEER
BYRON STANLEY
No. C60161
Exp. 6-30-16
CIVIL
STATE OF CALIFORNIA

THE STATE OF CALIFORNIA OR ITS OFFICERS OR AGENTS SHALL NOT BE RESPONSIBLE FOR THE ACCURACY OR COMPLETENESS OF SCANNED COPIES OF THIS PLAN SHEET.

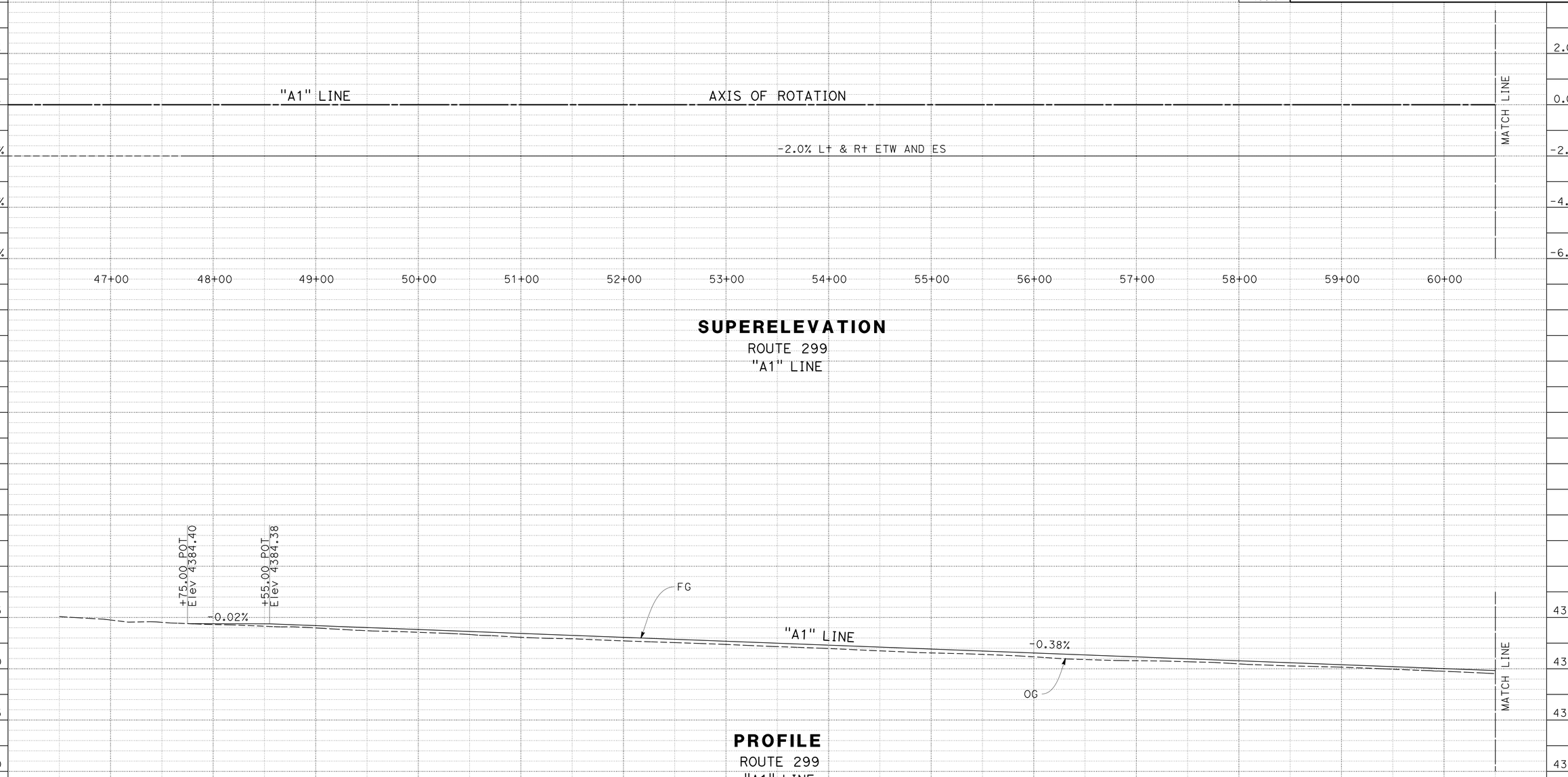

PROFILE AND SUPERELEVATION DIAGRAM

SCALE: 1" = 50' Horiz
1" = 5' Vert

PS-1

REVISED BY | DATE REVISED
WILL LESLIE | BYRON STANLEY
CALCULATED-DESIGNED BY | CHECKED BY
FUNCTIONAL SUPERVISOR: STEVE TOPAL

STATE OF CALIFORNIA - DEPARTMENT OF TRANSPORTATION
Caltrans
DESIGN

P:\proj2\02\299711\plans\pse\229971fb001.dgn

LAST REVISION 11-24-14 | DATE PLOTTED => 01-DEC-2014 | TIME PLOTTED => 15:25

Dist	COUNTY	ROUTE	POST MILES TOTAL PROJECT	SHEET No.	TOTAL SHEETS
02	Mod	299	39.3/40.5	17	88

REGISTERED CIVIL ENGINEER 11-24-14 DATE

11-26-14
PLANS APPROVAL DATE

REGISTERED PROFESSIONAL ENGINEER BYRON STANLEY No. C60161 Exp. 6-30-16 CIVIL STATE OF CALIFORNIA

THE STATE OF CALIFORNIA OR ITS OFFICERS OR AGENTS SHALL NOT BE RESPONSIBLE FOR THE ACCURACY OR COMPLETENESS OF SCANNED COPIES OF THIS PLAN SHEET.

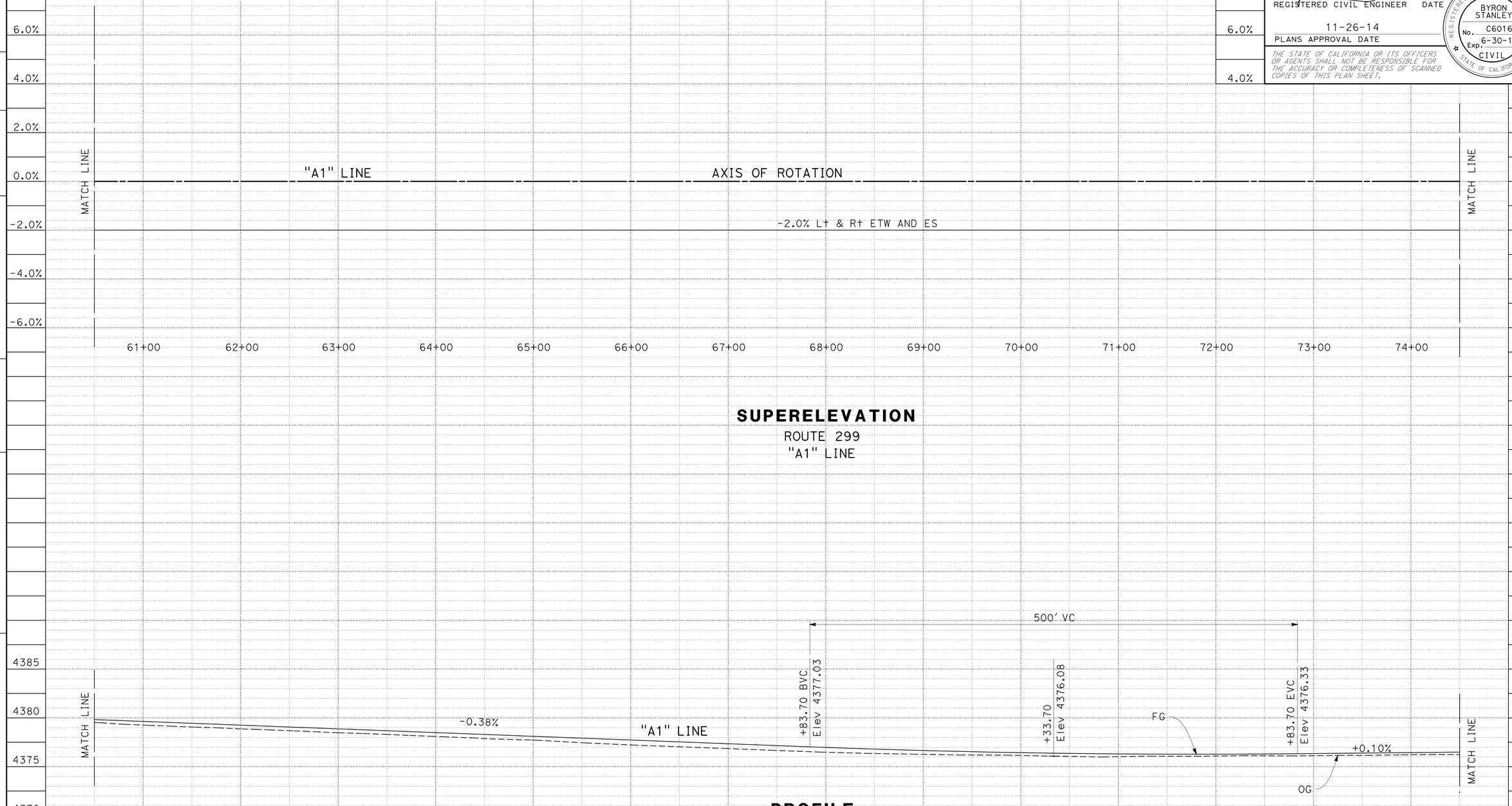

PROFILE AND SUPERELEVATION DIAGRAM

SCALE: 1" = 50' Horiz
1" = 5' Vert

PS-2

REVISED BY | DATE REVISED

WILL LESLIE | BYRON STANLEY

CALCULATED-DESIGNED BY | CHECKED BY

FUNCTIONAL SUPERVISOR: STEVE TOPAL

STATE OF CALIFORNIA - DEPARTMENT OF TRANSPORTATION
Caltrans
DESIGN

P:\proj2\02\29971_plans\pse\229971fb002.dgn

LAST REVISION 11-24-14 | DATE PLOTTED => 01-DEC-2014 | TIME PLOTTED => 15:25

Dist	COUNTY	ROUTE	POST MILES TOTAL PROJECT	SHEET No.	TOTAL SHEETS
02	Mod	299	39.3/40.5	18	88

REGISTERED CIVIL ENGINEER 11-24-14 DATE

PLANS APPROVAL DATE 11-26-14

REGISTERED PROFESSIONAL ENGINEER BYRON STANLEY No. C60161 Exp. 6-30-16 CIVIL STATE OF CALIFORNIA

THE STATE OF CALIFORNIA OR ITS OFFICERS OR AGENTS SHALL NOT BE RESPONSIBLE FOR THE ACCURACY OR COMPLETENESS OF SCANNED COPIES OF THIS PLAN SHEET.

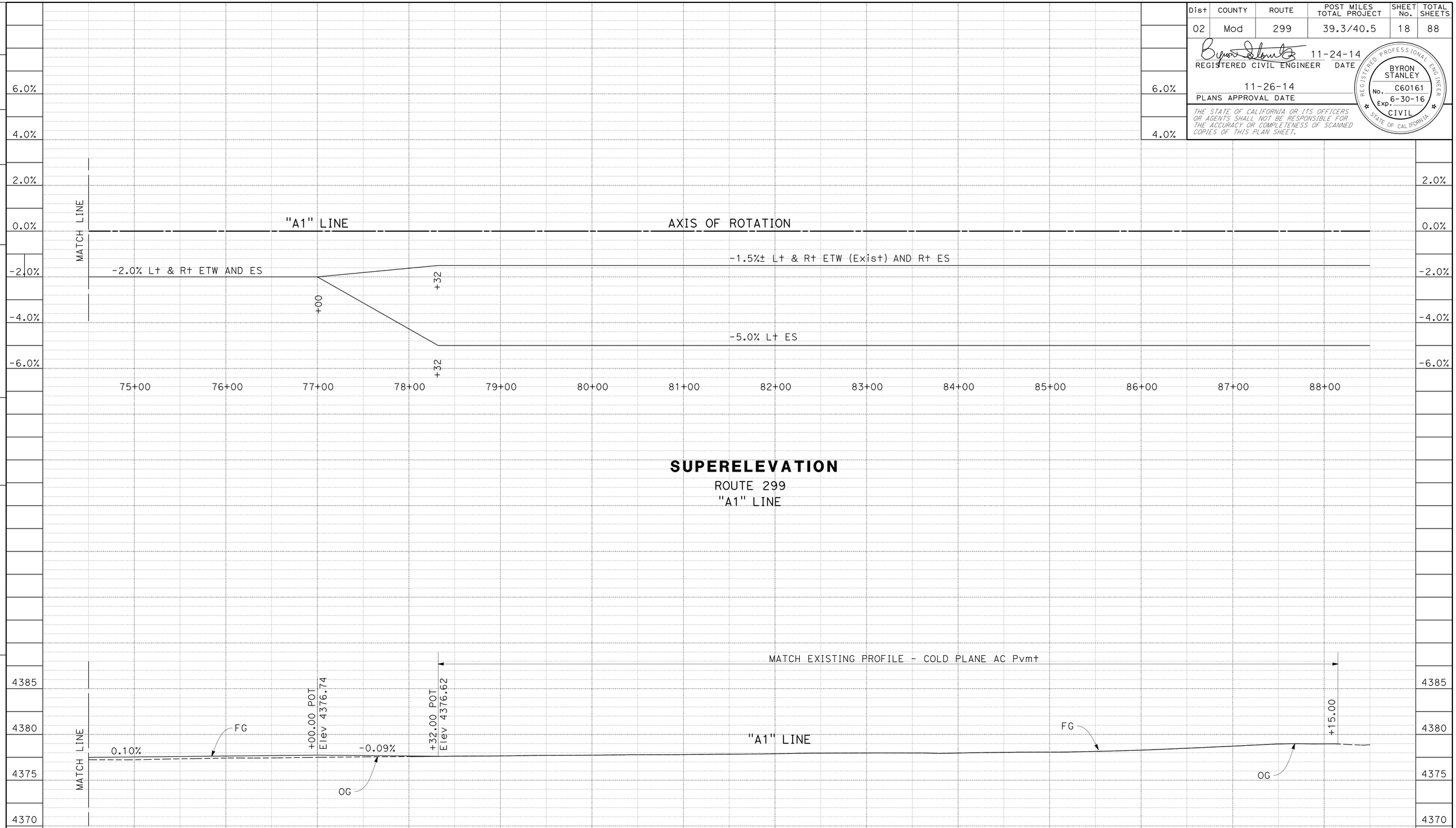

PROFILE AND SUPERELEVATION DIAGRAM

SCALE: 1" = 50' Horiz
1" = 5' Vert

PS-3

REVISED BY | DATE REVISED

WILL LESLIE | BYRON STANLEY

CALCULATED-DESIGNED BY | CHECKED BY

FUNCTIONAL SUPERVISOR: STEVE TOPAL

STATE OF CALIFORNIA - DEPARTMENT OF TRANSPORTATION

Caltrans® **DESIGN**

P:\proj2\02\299711\plans\pse\229971fb003.dgn

LAST REVISION 11-24-14 | DATE PLOTTED => 01-DEC-2014 | TIME PLOTTED => 15:25

Dist	COUNTY	ROUTE	POST MILES TOTAL PROJECT	SHEET No.	TOTAL SHEETS
02	Mod	299	39.3/40.5	19	88

REGISTERED CIVIL ENGINEER 11-24-14 DATE

PLANS APPROVAL DATE 11-26-14

REGISTERED PROFESSIONAL ENGINEER BYRON STANLEY No. C60161 Exp. 6-30-16 CIVIL STATE OF CALIFORNIA

THE STATE OF CALIFORNIA OR ITS OFFICERS OR AGENTS SHALL NOT BE RESPONSIBLE FOR THE ACCURACY OR COMPLETENESS OF SCANNED COPIES OF THIS PLAN SHEET.

NOTES:

1. FOR ACCURATE RIGHT OF WAY DATA, CONTACT RIGHT OF WAY ENGINEERING AT THE DISTRICT OFFICE.
2. UNDERGROUND UTILITIES HAVE NOT BEEN POSITIVELY LOCATED

ABBREVIATIONS:

S/C	SAW CUT
(E)	EXISTING
Stru	STRUCTURAL
Util	UTILITY

LEGEND:

0.50' HMA (TYPE A)
0.50' Cl 2 AB

0.50' PCC
0.50' Cl 2 AB

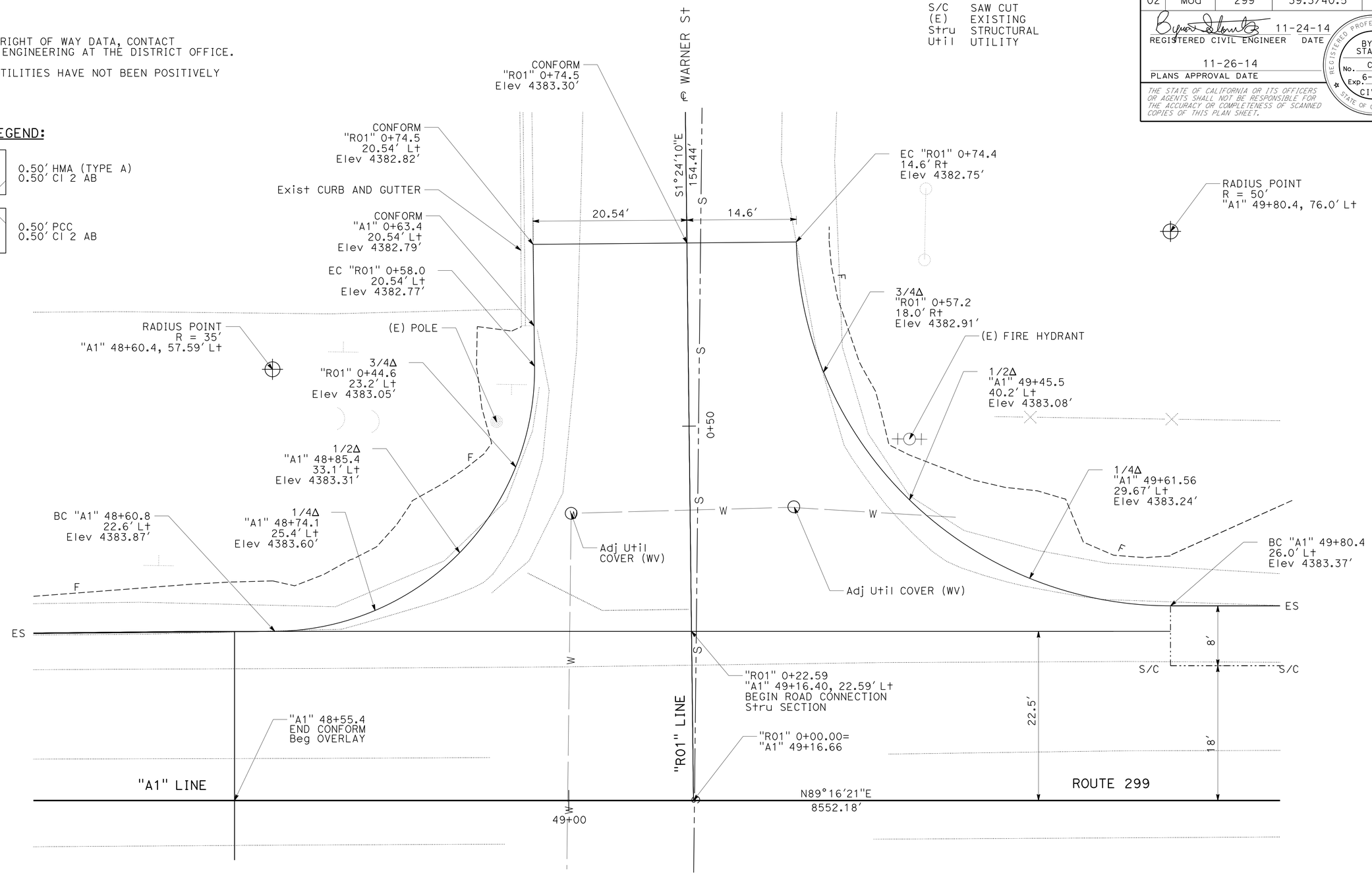

NORTH WARNER St

"A1" 49+16.7

CONSTRUCTION DETAILS

NO SCALE

C-1

REVISED BY | DATE REVISED

WILL LESLIE | BYRON STANLEY

CALCULATED-DESIGNED BY | CHECKED BY

FUNCTIONAL SUPERVISOR: STEVE TOPAL

STATE OF CALIFORNIA - DEPARTMENT OF TRANSPORTATION

Caltrans

DESIGN

P:\proj2\02\29971_plans\pse\229971ga001.dgn

LAST REVISION 11-24-14 | DATE PLOTTED => 01-DEC-2014 | TIME PLOTTED => 15:25

BORDER LAST REVISED 7/2/2010 | USERNAME => s123119 | DGN FILE => 229971ga001.dgn | RELATIVE BORDER SCALE IS IN INCHES 0 1 2 3 | UNIT 0319 | PROJECT NUMBER & PHASE 02-1200-0022-1 | EA: 02-299711

Dist	COUNTY	ROUTE	POST MILES TOTAL PROJECT	SHEET No.	TOTAL SHEETS
02	Mod	299	39.3/40.5	20	88

REGISTERED CIVIL ENGINEER 11-24-14 DATE

11-26-14
PLANS APPROVAL DATE

REGISTERED PROFESSIONAL ENGINEER BYRON STANLEY No. C60161 Exp. 6-30-16 CIVIL STATE OF CALIFORNIA

THE STATE OF CALIFORNIA OR ITS OFFICERS OR AGENTS SHALL NOT BE RESPONSIBLE FOR THE ACCURACY OR COMPLETENESS OF SCANNED COPIES OF THIS PLAN SHEET.

NOTES:

1. FOR ACCURATE RIGHT OF WAY DATA, CONTACT RIGHT OF WAY ENGINEERING AT THE DISTRICT OFFICE.
2. UNDERGROUND UTILITIES HAVE NOT BEEN POSITIVELY LOCATED

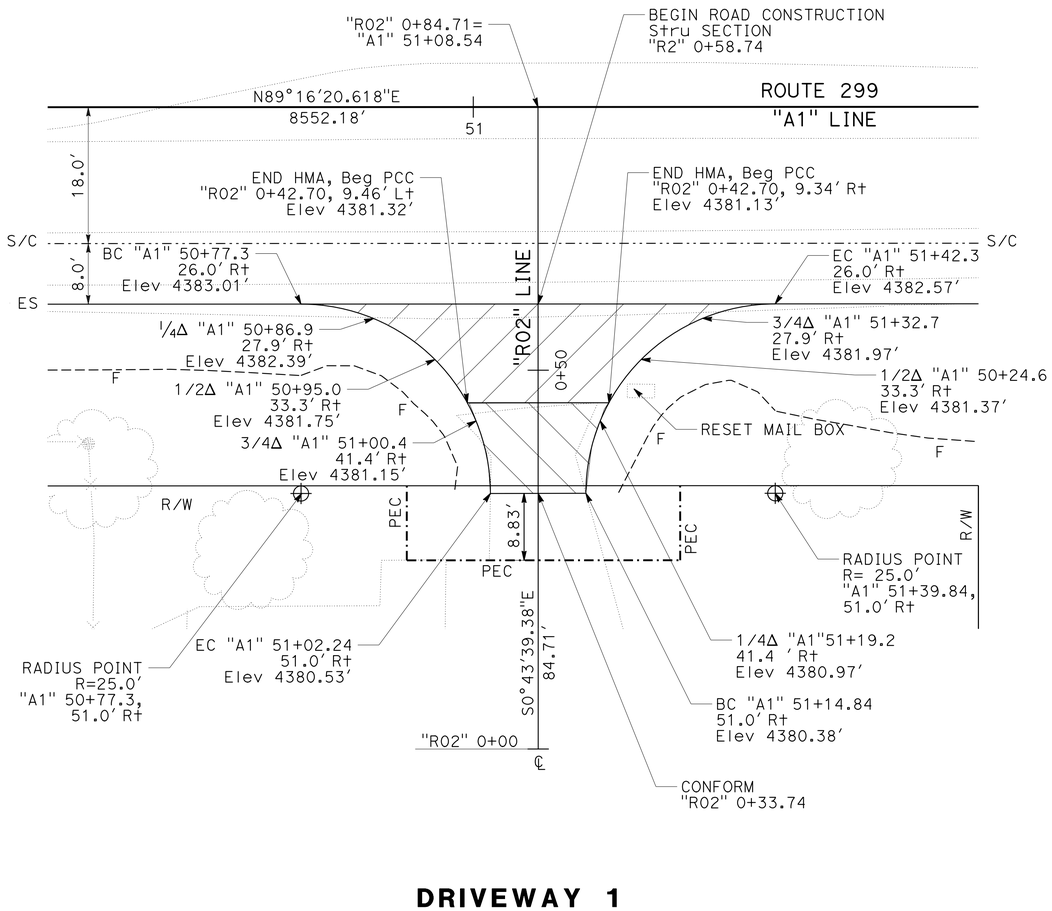

DRIVEWAY 1

Sta "A1" 51+08.54

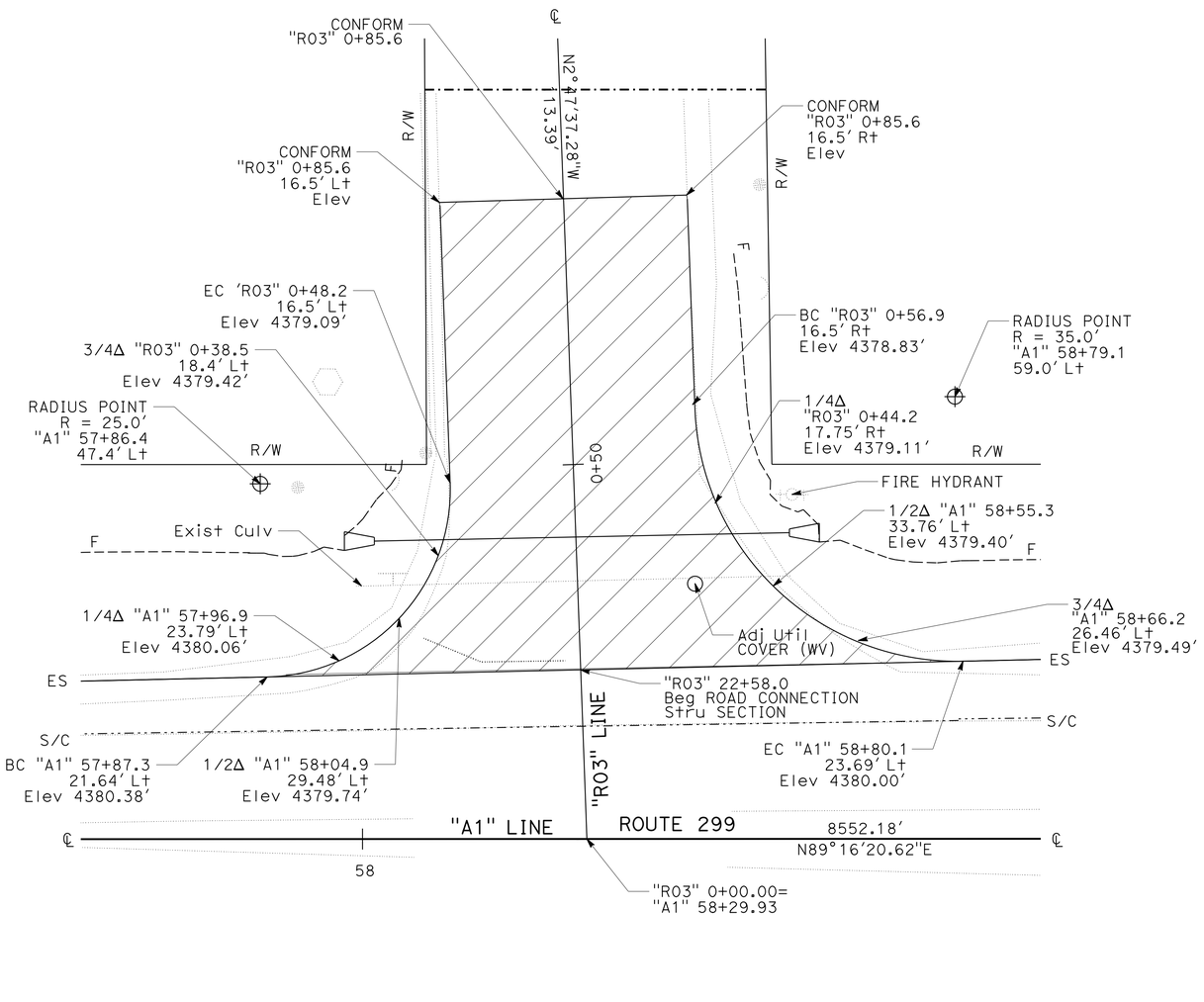

THOMASON LANE

Sta "A1" 58+29.93

CONSTRUCTION DETAILS

NO SCALE

C-2

REVISED BY	DATE REVISED

CALCULATED-DESIGNED BY	CHECKED BY
WILL LESLIE	BYRON STANLEY

FUNCTIONAL SUPERVISOR: STEVE TOPAL

STATE OF CALIFORNIA - DEPARTMENT OF TRANSPORTATION

Caltrans® DESIGN

P:\proj2\02\29971_plans\pse\229971ga002.dgn

LAST REVISION 11-24-14 | DATE PLOTTED => 01-DEC-2014 | TIME PLOTTED => 15:25

Dist	COUNTY	ROUTE	POST MILES TOTAL PROJECT	SHEET No.	TOTAL SHEETS
02	Mod	299	39.3/40.5	21	88

REGISTERED CIVIL ENGINEER 11-24-14 DATE

PLANS APPROVAL DATE 11-26-14

REGISTERED PROFESSIONAL ENGINEER BYRON STANLEY No. C60161 Exp. 6-30-16 CIVIL STATE OF CALIFORNIA

THE STATE OF CALIFORNIA OR ITS OFFICERS OR AGENTS SHALL NOT BE RESPONSIBLE FOR THE ACCURACY OR COMPLETENESS OF SCANNED COPIES OF THIS PLAN SHEET.

NOTES:

1. FOR ACCURATE RIGHT OF WAY DATA, CONTACT RIGHT OF WAY ENGINEERING AT THE DISTRICT OFFICE.
2. UNDERGROUND UTILITIES HAVE NOT BEEN POSITIVELY LOCATED.
3. SEE DRAINAGE PLANS FOR MORE INFORMATION.

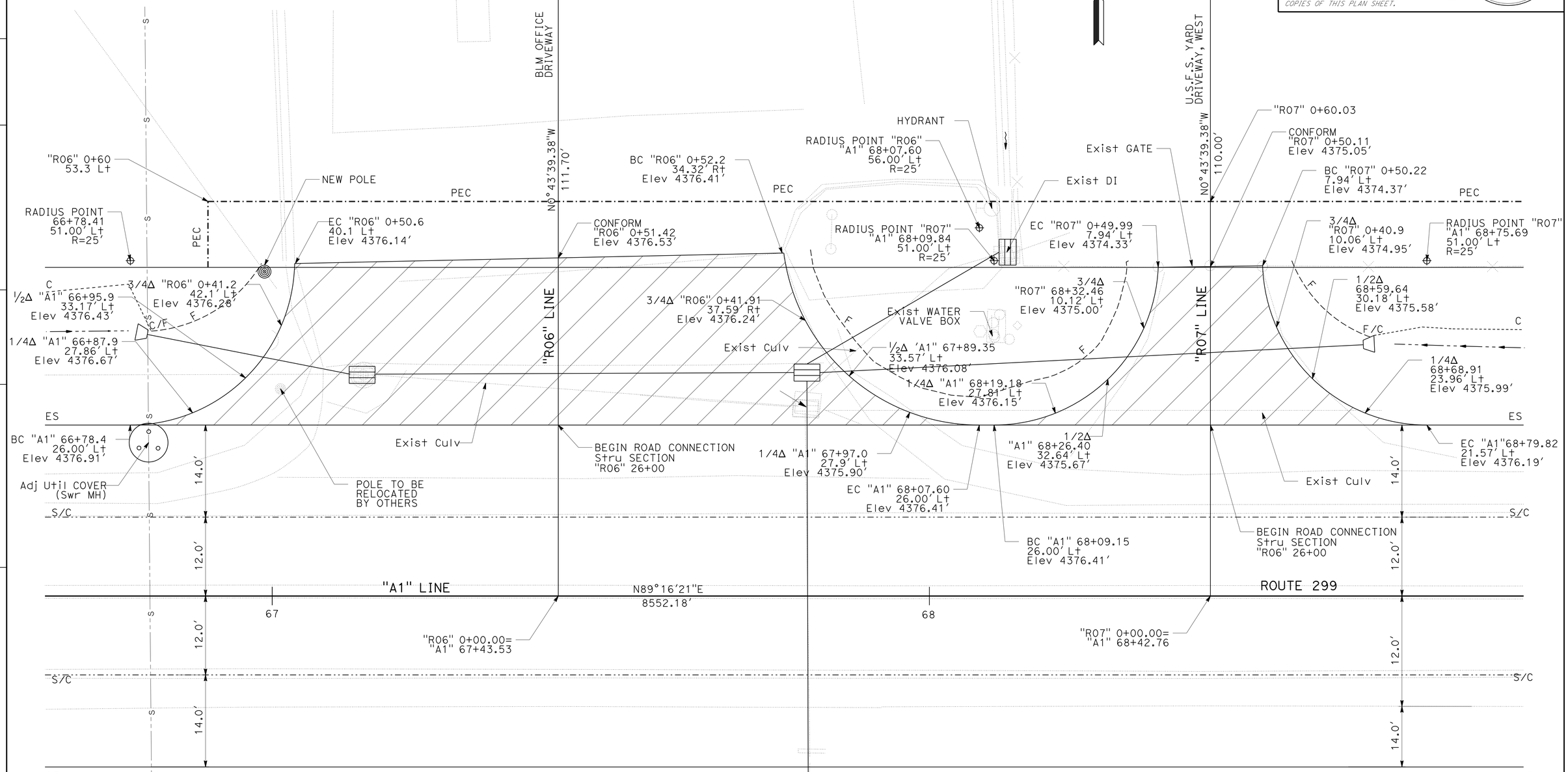

BLM DRIVEWAY
"A1" STA 67+43.53

U.S.F.S. YARD DRIVEWAY WEST
"A1" STA 68+42.47

CONSTRUCTION DETAILS
NO SCALE

C-3

REVISED BY | DATE REVISED
WILL LESLIE | BYRON STANLEY
CALCULATED-DESIGNED BY | CHECKED BY
FUNCTIONAL SUPERVISOR
STEVE TOPAL

STATE OF CALIFORNIA - DEPARTMENT OF TRANSPORTATION
Caltrans
DESIGN

P:\proj2\02\299711_plans\pse\229971ga003.dgn

LAST REVISION | DATE PLOTTED => 01-DEC-2014
11-24-14 | TIME PLOTTED => 15:25

Dist	COUNTY	ROUTE	POST MILES TOTAL PROJECT	SHEET No.	TOTAL SHEETS
02	Mod	299	39.3/40.5	22	88

11-24-14
REGISTERED CIVIL ENGINEER DATE

11-26-14
PLANS APPROVAL DATE

REGISTERED PROFESSIONAL ENGINEER
BYRON STANLEY
No. C60161
Exp. 6-30-16
CIVIL
STATE OF CALIFORNIA

THE STATE OF CALIFORNIA OR ITS OFFICERS OR AGENTS SHALL NOT BE RESPONSIBLE FOR THE ACCURACY OR COMPLETENESS OF SCANNED COPIES OF THIS PLAN SHEET.

NOTES:

1. FOR ACCURATE RIGHT OF WAY DATA, CONTACT RIGHT OF WAY ENGINEERING AT THE DISTRICT OFFICE.
2. UNDERGROUND UTILITIES HAVE NOT BEEN POSITIVELY LOCATED.
3. SEE DRAINAGE PLANS FOR MORE INFORMATION.

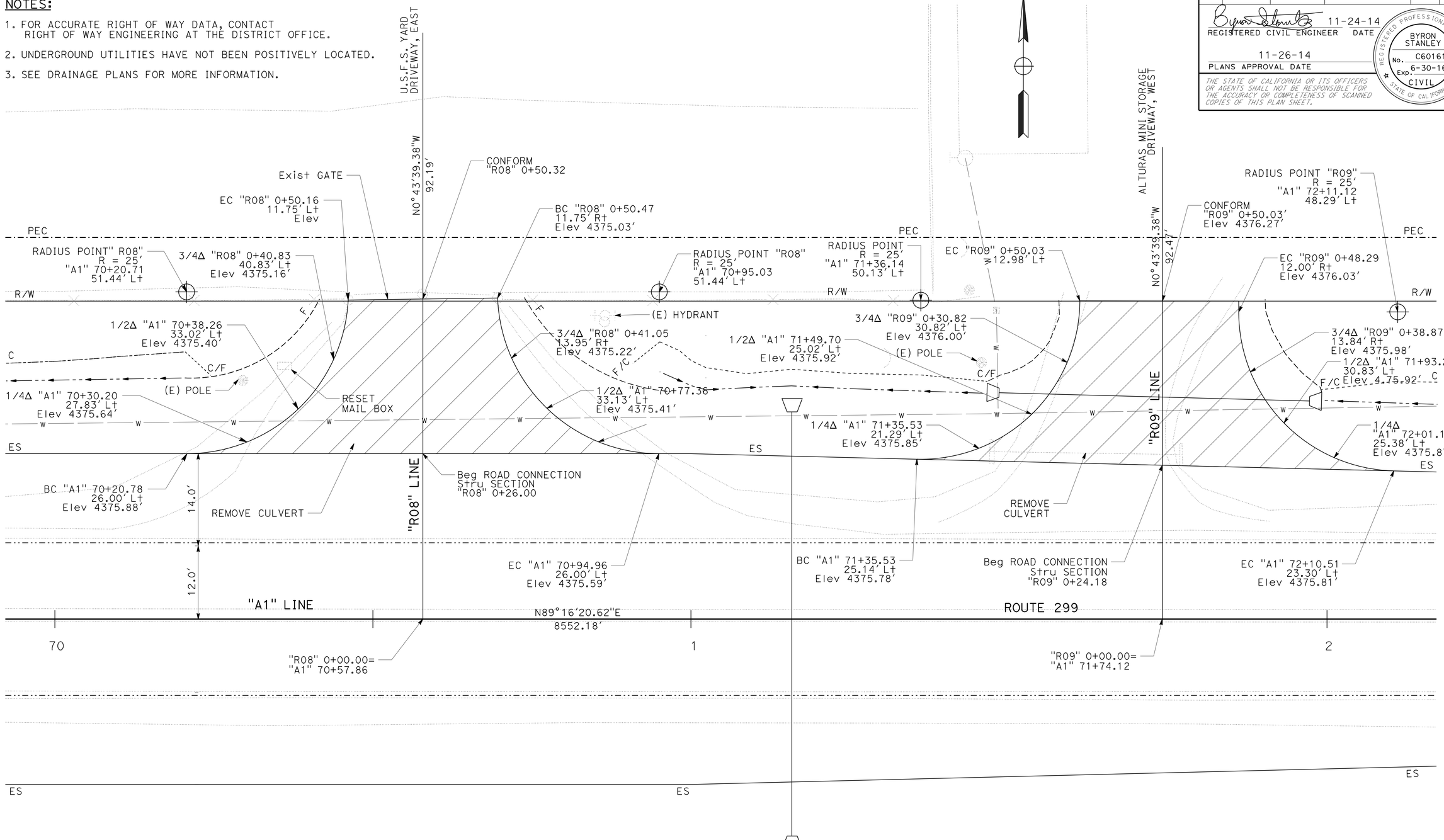

U.S.F.S. YARD AND ALTURAS MINI STORAGE DRIVEWAYS

CONSTRUCTION DETAILS

NO SCALE

C-4

REVISED BY	DATE REVISED
WILL LESLIE	BYRON STANLEY
CALCULATED-DESIGNED BY	CHECKED BY
FUNCTIONAL SUPERVISOR	STEVE TOPAL

STATE OF CALIFORNIA - DEPARTMENT OF TRANSPORTATION

Caltrans

DESIGN

P:\proj2\02\29971_plans\pse\229971ga004.dgn

LAST REVISION 11-24-14 | DATE PLOTTED => 01-DEC-2014 | TIME PLOTTED => 15:25

Dist	COUNTY	ROUTE	POST MILES TOTAL PROJECT	SHEET No.	TOTAL SHEETS
02	Mod	299	39.3/40.5	23	88

REGISTERED CIVIL ENGINEER 11-24-14 DATE

11-26-14
PLANS APPROVAL DATE

REGISTERED PROFESSIONAL ENGINEER BYRON STANLEY No. C60161 Exp. 6-30-16 CIVIL STATE OF CALIFORNIA

THE STATE OF CALIFORNIA OR ITS OFFICERS OR AGENTS SHALL NOT BE RESPONSIBLE FOR THE ACCURACY OR COMPLETENESS OF SCANNED COPIES OF THIS PLAN SHEET.

NOTES:

1. FOR ACCURATE RIGHT OF WAY DATA, CONTACT RIGHT OF WAY ENGINEERING AT THE DISTRICT OFFICE.
2. UNDERGROUND UTILITIES HAVE NOT BEEN POSITIVELY LOCATED.
3. SEE DRAINAGE PLANS FOR MORE INFORMATION.

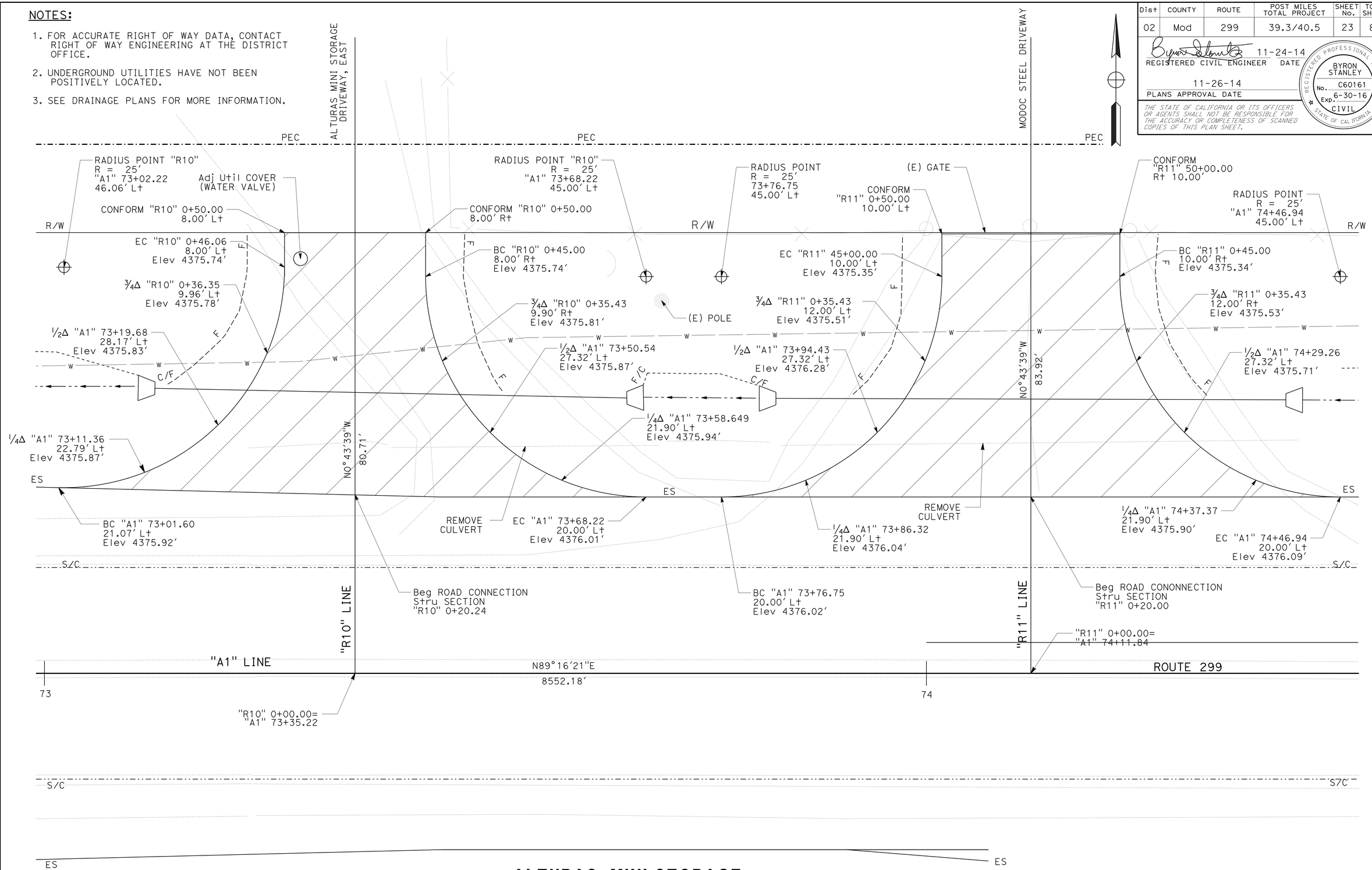

ALTURAS MINI STORAGE AND MODOC STEEL DRIVEWAYS

CONSTRUCTION DETAILS

NO SCALE

C-5

REVISED BY | DATE REVISED
WILL LESLIE | BYRON STANLEY
CALCULATED-DESIGNED BY | CHECKED BY
FUNCTIONAL SUPERVISOR
STEVE TOPAL

STATE OF CALIFORNIA - DEPARTMENT OF TRANSPORTATION
Caltrans
DESIGN

P:\proj2\02\29971_plans\pse\229971ga005.dgn

LAST REVISION 11-24-14 | DATE PLOTTED => 01-DEC-2014 | TIME PLOTTED => 15:25

BORDER LAST REVISED 7/2/2010 | USERNAME => s123119 | DGN FILE => 229971ga005.dgn | RELATIVE BORDER SCALE IS IN INCHES 0 1 2 3 | UNIT 0319 | PROJECT NUMBER & PHASE 02-1200-0022-1 | EA: 02-299711

Dist	COUNTY	ROUTE	POST MILES TOTAL PROJECT	SHEET No.	TOTAL SHEETS
02	Mod	299	39.3/40.5	24	88

REGISTERED CIVIL ENGINEER 11-24-14 DATE

PLANS APPROVAL DATE 11-26-14

REGISTERED PROFESSIONAL ENGINEER BYRON STANLEY No. C60161 Exp. 6-30-16 CIVIL STATE OF CALIFORNIA

THE STATE OF CALIFORNIA OR ITS OFFICERS OR AGENTS SHALL NOT BE RESPONSIBLE FOR THE ACCURACY OR COMPLETENESS OF SCANNED COPIES OF THIS PLAN SHEET.

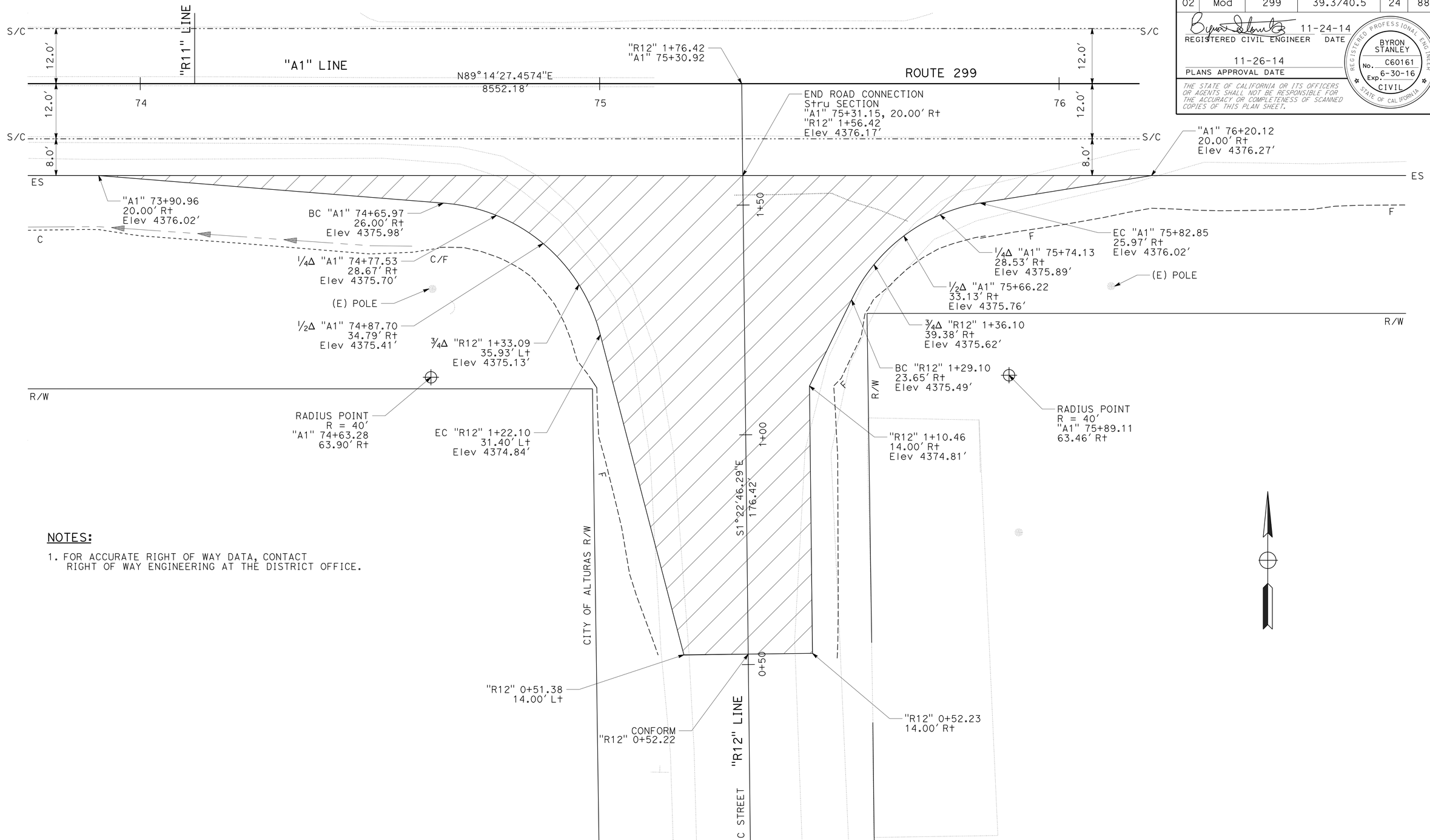

NOTES:

1. FOR ACCURATE RIGHT OF WAY DATA, CONTACT RIGHT OF WAY ENGINEERING AT THE DISTRICT OFFICE.

WEST C STREET

"A1" Sta 75+30.92

CONSTRUCTION DETAILS

NO SCALE

C-6

REVISED BY	DATE REVISED
WILL LESLIE	BYRON STANLEY

CALCULATED-DESIGNED BY / CHECKED BY

FUNCTIONAL SUPERVISOR: STEVE TOPAL

STATE OF CALIFORNIA - DEPARTMENT OF TRANSPORTATION

Caltrans® DESIGN

P:\proj2\02\299711_plans\pse\229971ga006.dgn

LAST REVISION 11-24-14 | DATE PLOTTED => 01-DEC-2014 | TIME PLOTTED => 15:25

Dist	COUNTY	ROUTE	POST MILES TOTAL PROJECT	SHEET No.	TOTAL SHEETS
02	Mod	299	39.3/40.5	25	88

REGISTERED CIVIL ENGINEER 11-24-14 DATE

11-26-14
PLANS APPROVAL DATE

REGISTERED PROFESSIONAL ENGINEER BYRON STANLEY No. C60161 Exp. 6-30-16 CIVIL STATE OF CALIFORNIA

THE STATE OF CALIFORNIA OR ITS OFFICERS OR AGENTS SHALL NOT BE RESPONSIBLE FOR THE ACCURACY OR COMPLETENESS OF SCANNED COPIES OF THIS PLAN SHEET.

NOTES:

1. FOR ACCURATE RIGHT OF WAY DATA, CONTACT RIGHT OF WAY ENGINEERING AT THE DISTRICT OFFICE.

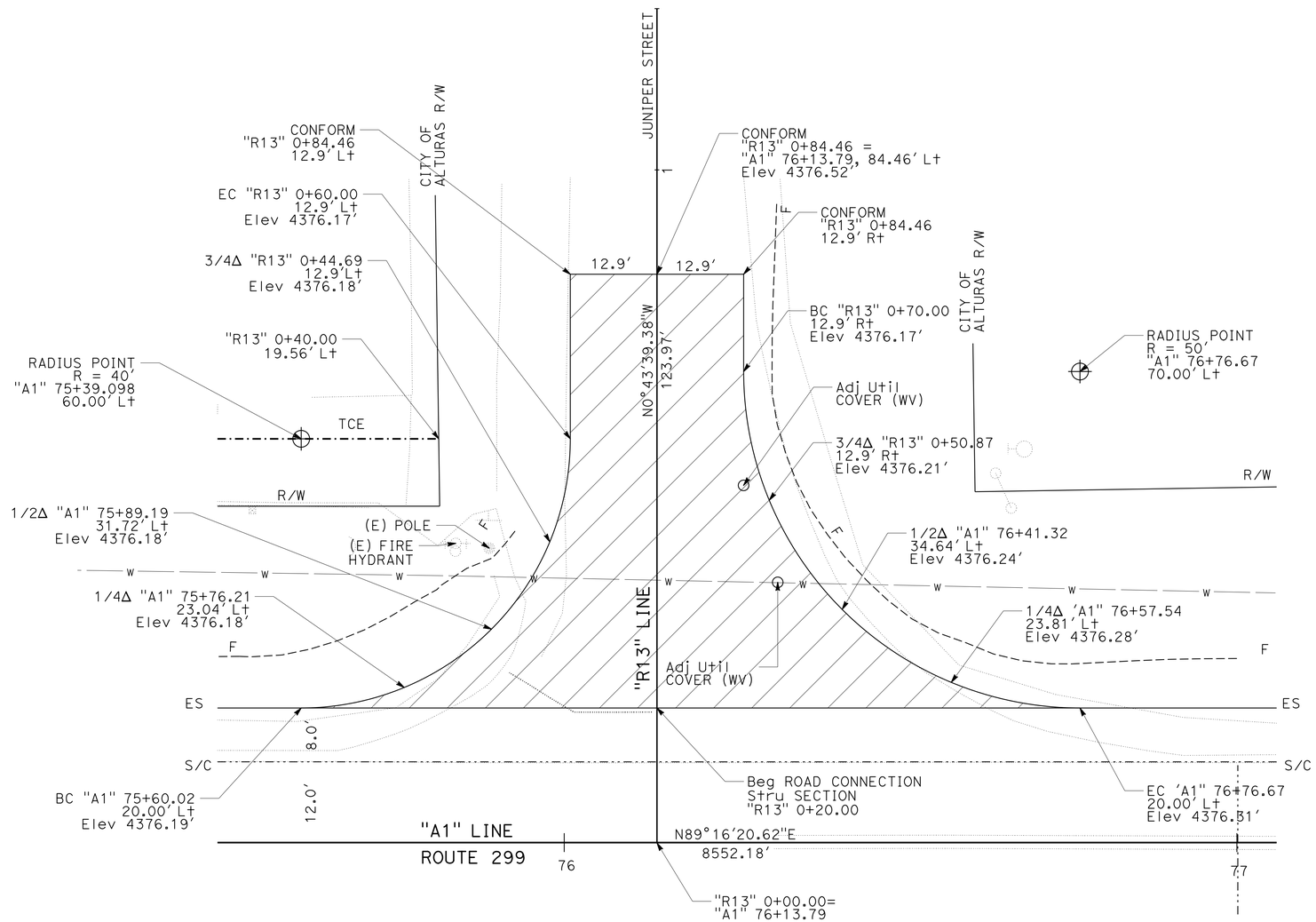

JUNIPER STREET

"A1" STA 76+13.79

CONSTRUCTION DETAILS

SCALE: 1" = 10'

C-7

REVISED BY	DATE REVISED
WILL LESLIE	BYRON STANLEY

CALCULATED-DESIGNED BY	CHECKED BY

FUNCTIONAL SUPERVISOR: STEVE TOPAL

STATE OF CALIFORNIA - DEPARTMENT OF TRANSPORTATION

Caltrans® DESIGN

P:\proj2\02\29971_plans\pse\229971ga007.dgn

LAST REVISION 11-24-14 | DATE PLOTTED => 01-DEC-2014 | TIME PLOTTED => 15:25

Dist	COUNTY	ROUTE	POST MILES TOTAL PROJECT	SHEET No.	TOTAL SHEETS
02	Mod	299	39.3/40.5	26	88

11-24-14
REGISTERED CIVIL ENGINEER DATE

11-26-14
PLANS APPROVAL DATE

REGISTERED PROFESSIONAL ENGINEER
BYRON STANLEY
No. C60161
Exp. 6-30-16
CIVIL
STATE OF CALIFORNIA

THE STATE OF CALIFORNIA OR ITS OFFICERS OR AGENTS SHALL NOT BE RESPONSIBLE FOR THE ACCURACY OR COMPLETENESS OF SCANNED COPIES OF THIS PLAN SHEET.

NOTE:

1. SEE CONSTRUCTION DETAIL SHEET C-13 FOR ADDITIONAL INFORMATION.

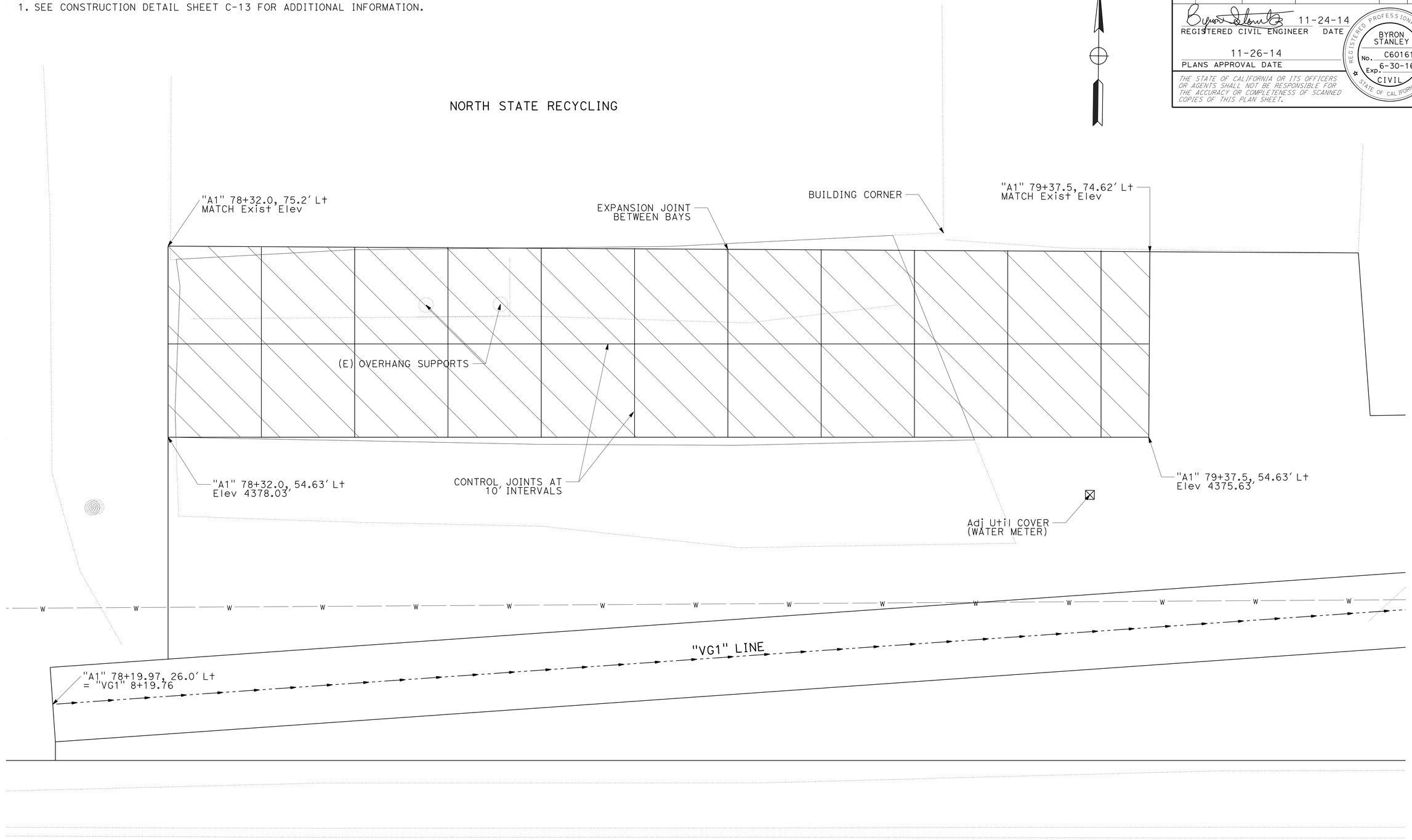

CONSTRUCTION DETAILS

NO SCALE

C-8

REVISED BY	DATE REVISED
WILL LESLIE	BYRON STANLEY
CALCULATED-DESIGNED BY	CHECKED BY
FUNCTIONAL SUPERVISOR	STEVE TOPAL

STATE OF CALIFORNIA - DEPARTMENT OF TRANSPORTATION
Caltrans
DESIGN

P:\proj2\02\299711_plans\pse\229971ga008.dgn

LAST REVISION 11-24-14 | DATE PLOTTED => 01-DEC-2014 | TIME PLOTTED => 15:25

Dist	COUNTY	ROUTE	POST MILES TOTAL PROJECT	SHEET No.	TOTAL SHEETS
02	Mod	299	39.3/40.5	27	88

REGISTERED CIVIL ENGINEER 11-24-14 DATE

11-26-14
PLANS APPROVAL DATE

REGISTERED PROFESSIONAL ENGINEER BYRON STANLEY No. C60161 Exp. 6-30-16 CIVIL STATE OF CALIFORNIA

THE STATE OF CALIFORNIA OR ITS OFFICERS OR AGENTS SHALL NOT BE RESPONSIBLE FOR THE ACCURACY OR COMPLETENESS OF SCANNED COPIES OF THIS PLAN SHEET.

NOTES:

1. FOR ACCURATE RIGHT OF WAY DATA, CONTACT RIGHT OF WAY ENGINEERING AT THE DISTRICT OFFICE.
2. SEE DRAINAGE DETAILS FOR MORE INFORMATION ON Conc VALLEY GUTTERS AND INFILTRATION BASIN.
3. UNDERGROUND UTILITIES HAVE NOT BEEN POSITIVELY LOCATED.

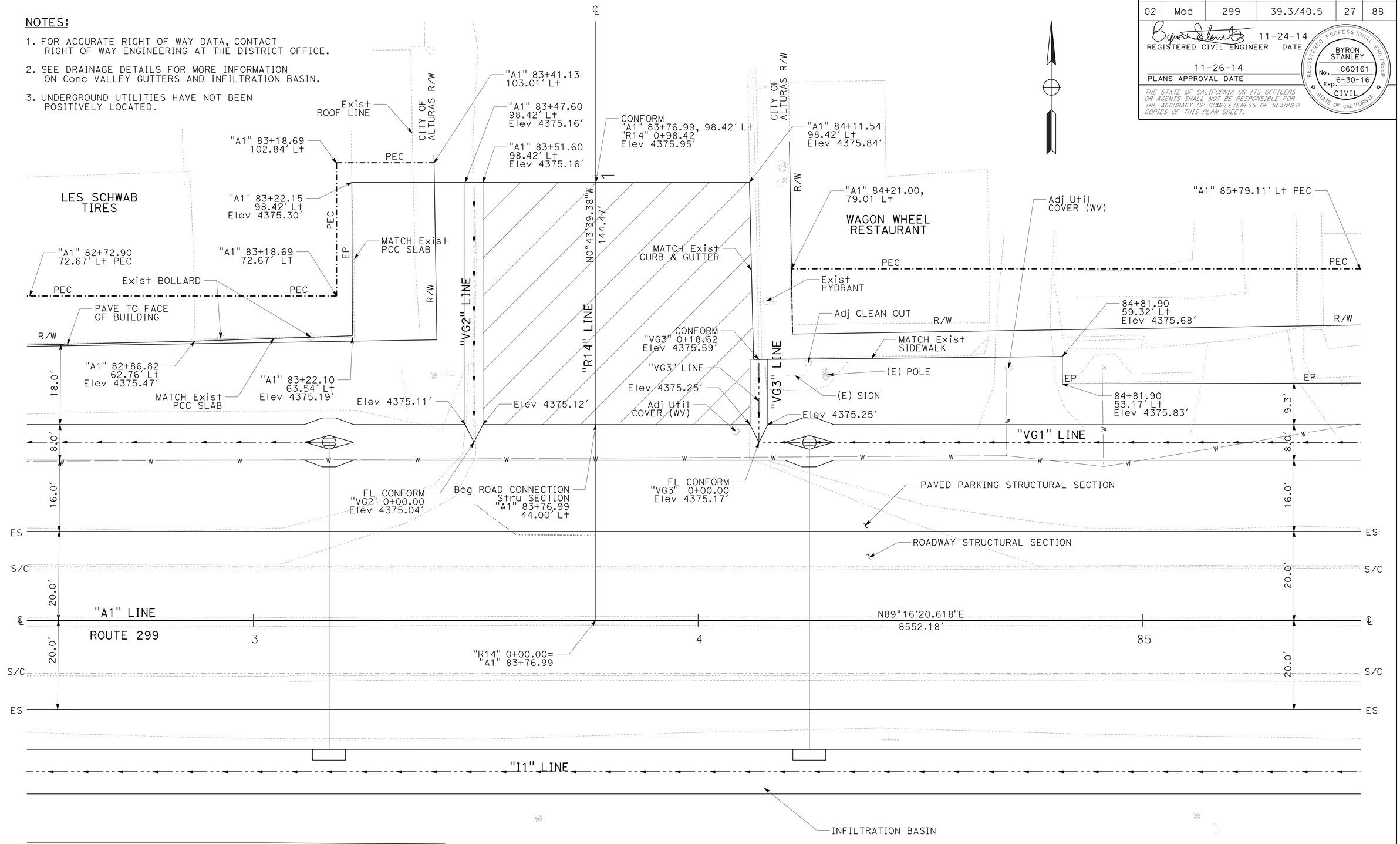

SPRUCE STREET

CONSTRUCTION DETAILS

SCALE: 1" = 20'

C-9

WILL LESLIE — REVISED BY
BYRON STANLEY — DATE REVISED
CALCULATED-DESIGNED BY
CHECKED BY
STEVE TOPAL — FUNCTIONAL SUPERVISOR

STATE OF CALIFORNIA - DEPARTMENT OF TRANSPORTATION
DESIGN

P:\proj2\02\29971_plans\pse\229971ga009.dgn

LAST REVISION 11-24-14 | DATE PLOTTED => 01-DEC-2014 | TIME PLOTTED => 15:25

Dist	COUNTY	ROUTE	POST MILES TOTAL PROJECT	SHEET No.	TOTAL SHEETS
02	Mod	299	39.3/40.5	28	88

11-24-14
REGISTERED CIVIL ENGINEER DATE

11-26-14
PLANS APPROVAL DATE

REGISTERED PROFESSIONAL ENGINEER
BYRON STANLEY
No. C60161
Exp. 6-30-16
CIVIL
STATE OF CALIFORNIA

THE STATE OF CALIFORNIA OR ITS OFFICERS OR AGENTS SHALL NOT BE RESPONSIBLE FOR THE ACCURACY OR COMPLETENESS OF SCANNED COPIES OF THIS PLAN SHEET.

NOTES:

1. FOR ACCURATE RIGHT OF WAY DATA, CONTACT RIGHT OF WAY ENGINEERING AT THE DISTRICT OFFICE.
2. UNDERGROUND UTILITIES HAVE NOT BEEN POSITIVELY LOCATED.
3. SEE SHEET C-11 FOR MORE DETAILS

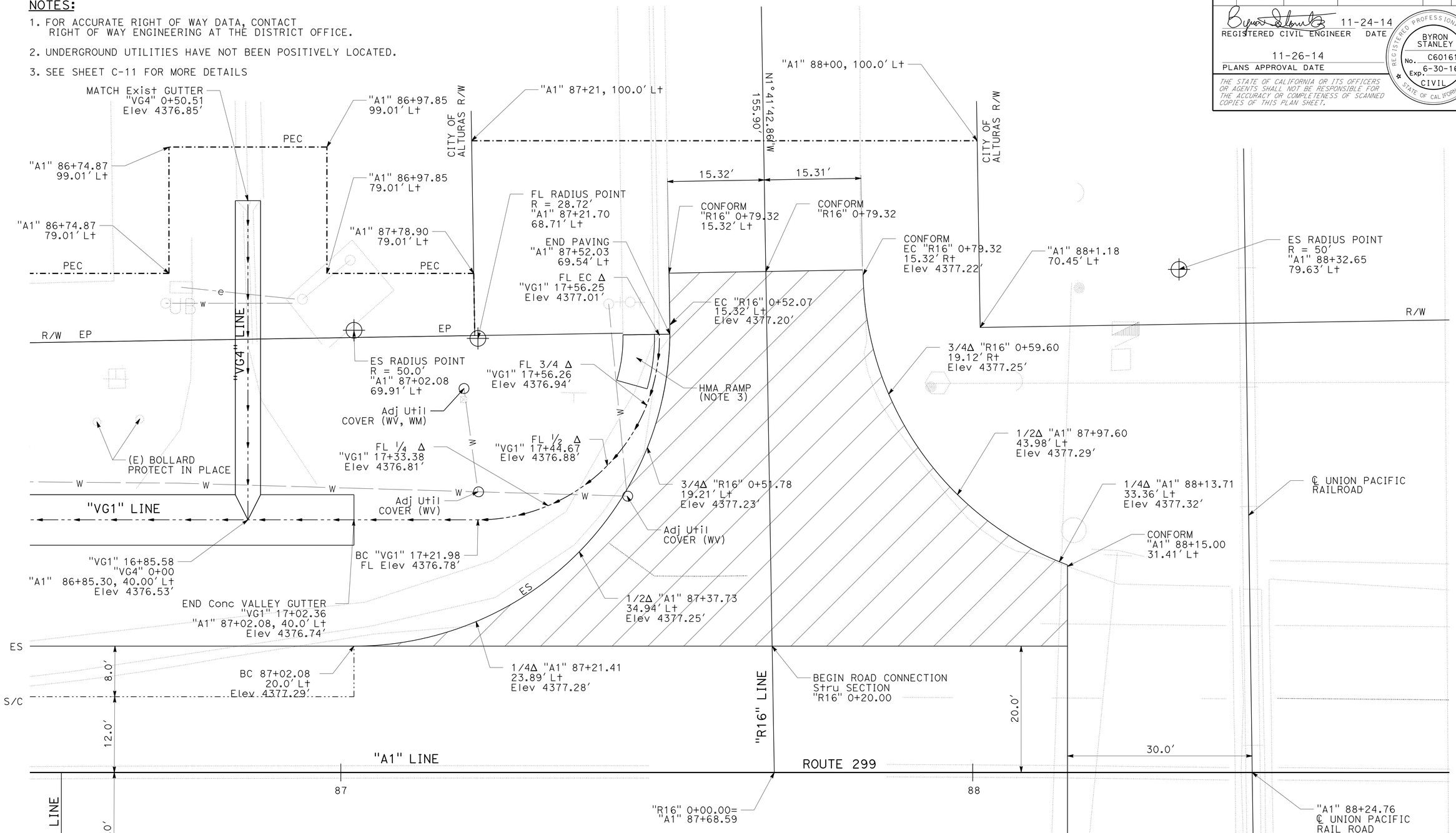

CONSTRUCTION DETAILS

NO SCALE

C-10

STATE OF CALIFORNIA - DEPARTMENT OF TRANSPORTATION
Caltrans
DESIGN

FUNCTIONAL SUPERVISOR: STEVE TOPAL
CALCULATED-DESIGNED BY: WILL LESLIE
CHECKED BY: BYRON STANLEY
REVISED BY
DATE REVISED

P:\proj2\02\29971_plans\pse\229971ga010.dgn

LAST REVISION 11-24-14 | DATE PLOTTED => 01-DEC-2014 | TIME PLOTTED => 15:25

Dist	COUNTY	ROUTE	POST MILES TOTAL PROJECT	SHEET No.	TOTAL SHEETS
02	Mod	299	39.3/40.5	29	88

11-24-14
REGISTERED CIVIL ENGINEER DATE

11-26-14
PLANS APPROVAL DATE

REGISTERED PROFESSIONAL ENGINEER
BYRON STANLEY
No. C60161
Exp. 6-30-16
CIVIL
STATE OF CALIFORNIA

THE STATE OF CALIFORNIA OR ITS OFFICERS OR AGENTS SHALL NOT BE RESPONSIBLE FOR THE ACCURACY OR COMPLETENESS OF SCANNED COPIES OF THIS PLAN SHEET.

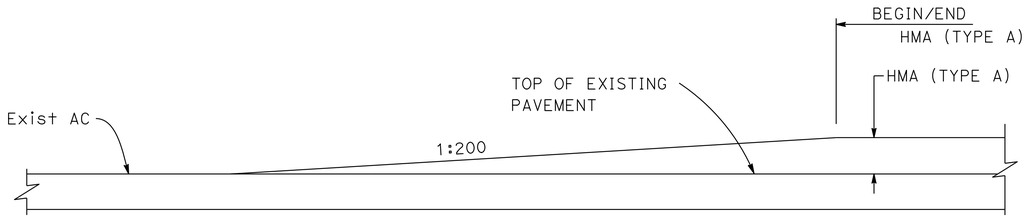

TEMPORARY HMA TAPER

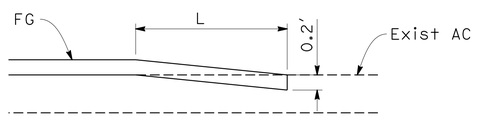

CONFORM TAPER

MAIN LINE "A1" 47+75 TO 48+55, L = 80.4'
SOUTH WARNER STREET, L = 8.0'
U.S.F.S DRIVEWAY, L = 8.0'
NAPA DRIVEWAY, L = 8.0'

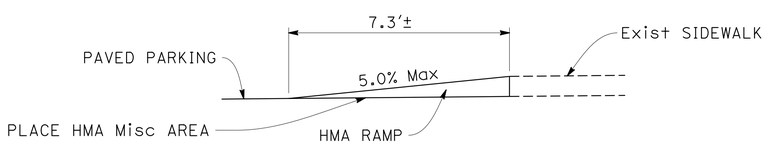

HMA RAMP

PROFILE

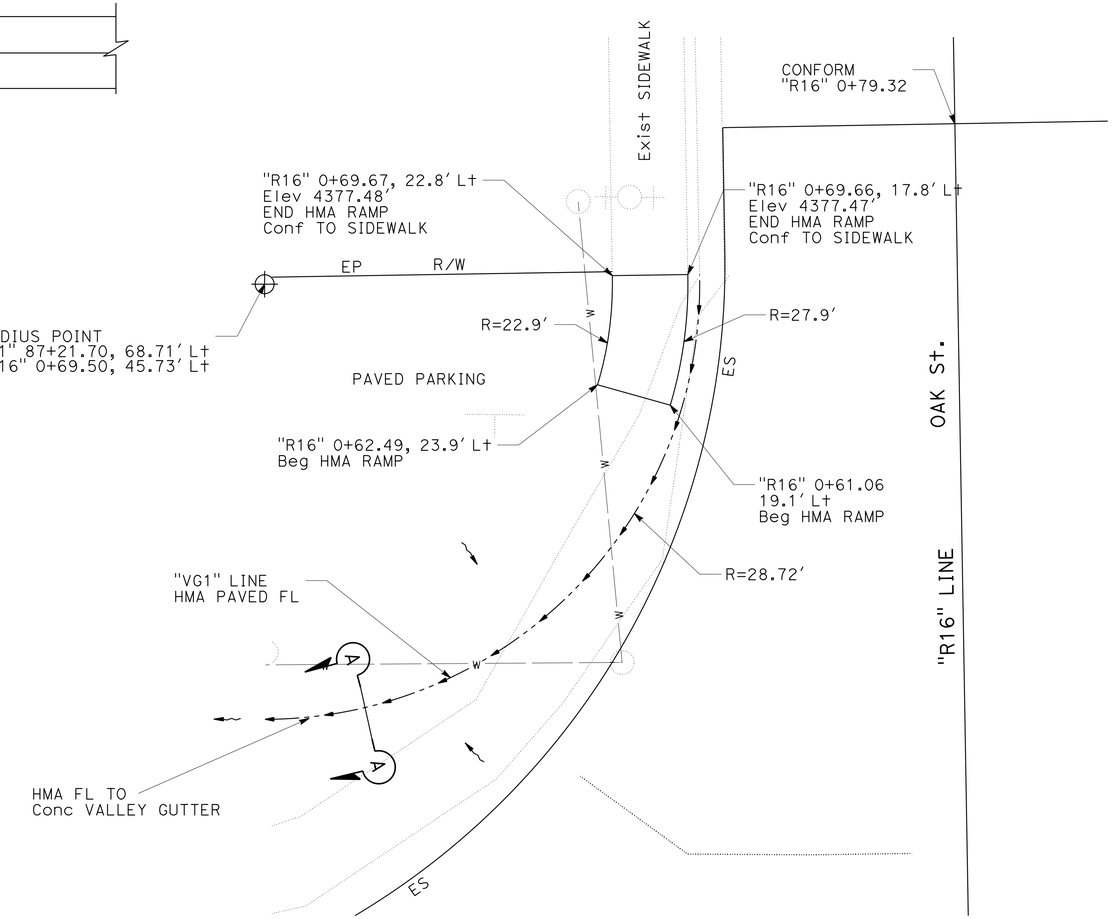

SECTION A-A
HMA SWALE

HMA RAMP

PLAN

CONSTRUCTION DETAILS

NO SCALE

C-11

REVISED BY	DATE REVISED

CALCULATED-DESIGNED BY	WILL LESLIE
CHECKED BY	BYRON STANLEY
FUNCTIONAL SUPERVISOR	STEVE TOPAL

STATE OF CALIFORNIA - DEPARTMENT OF TRANSPORTATION
Caltrans
DESIGN

P:\proj2\02\29971_plans\pse\229971ga011.dgn

LAST REVISION 11-24-14 | DATE PLOTTED => 01-DEC-2014 | TIME PLOTTED => 15:25

Dist	COUNTY	ROUTE	POST MILES TOTAL PROJECT	SHEET No.	TOTAL SHEETS
02	Mod	299	39.3/40.5	30	88

REGISTERED CIVIL ENGINEER 11-24-14 DATE

PLANS APPROVAL DATE 11-26-14

REGISTERED PROFESSIONAL ENGINEER BYRON STANLEY No. C60161 Exp. 6-30-16 CIVIL STATE OF CALIFORNIA

THE STATE OF CALIFORNIA OR ITS OFFICERS OR AGENTS SHALL NOT BE RESPONSIBLE FOR THE ACCURACY OR COMPLETENESS OF SCANNED COPIES OF THIS PLAN SHEET.

NOTES:

1. REDWOOD MATERIAL SHALL BE 2" x 6" OR 2" x 8" TRIMMED TO FIT WITHIN BOTTOM OF MAILBOX FLANGES.
2. NEWSPAPER RECEPTACLES TREAT AS MAILBOX.
3. DETAILS SHOWN ARE FOR 6" WIDTH MAIL BOXES. CONTRACTOR SHALL VERIFY DIMENSIONS IN THE FIELD.
4. MAILBOX SUPPORT HARDWARE SHALL BE GALVANIZED STEEL.

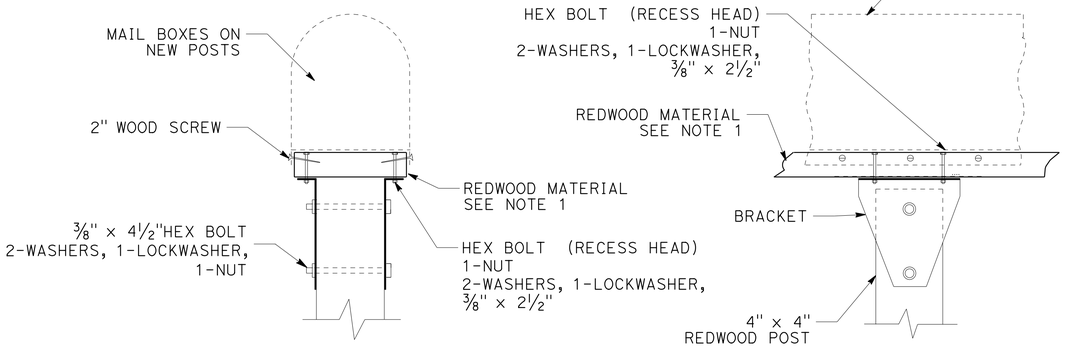

SINGLE MAILBOX ASSEMBLES

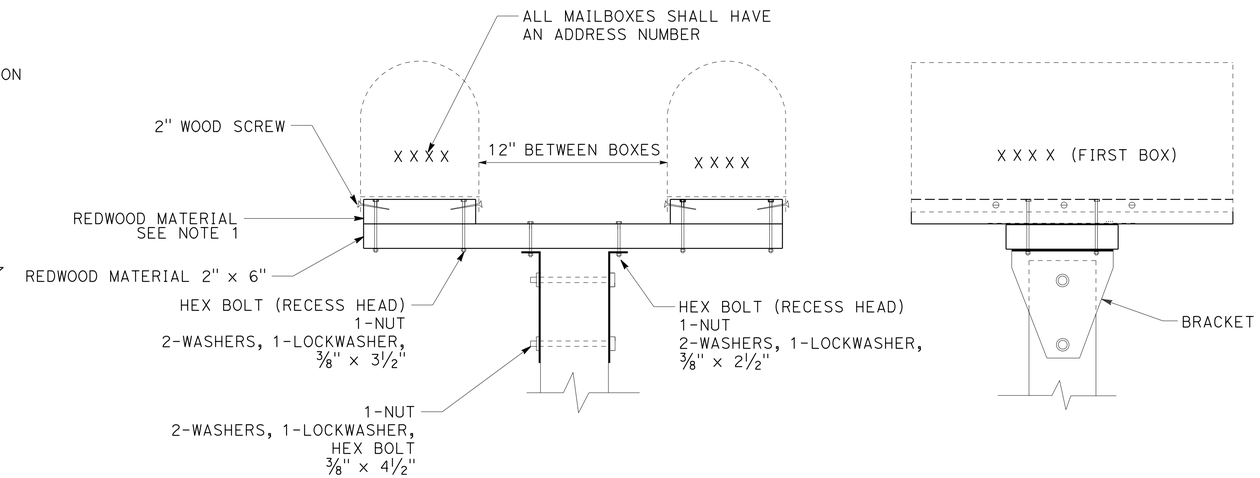

DOUBLE MAILBOX ASSEMBLES

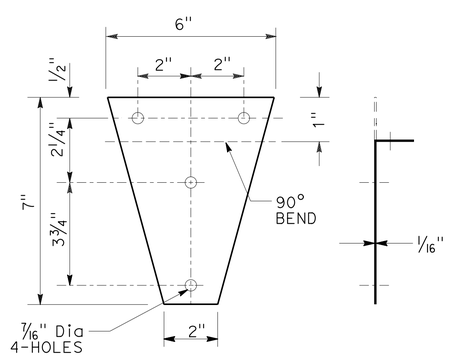

BRACKET

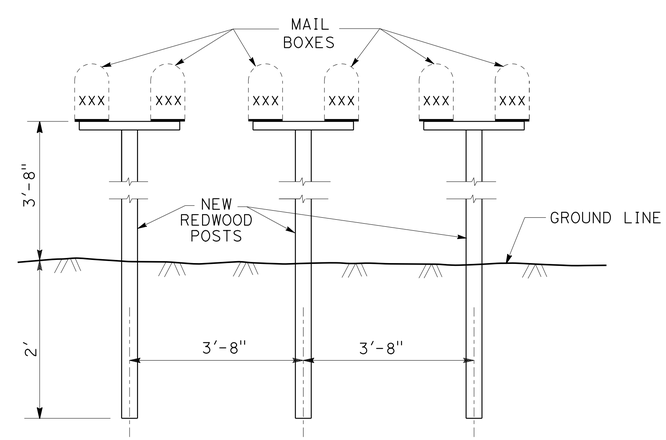

SETTING AND SPACING

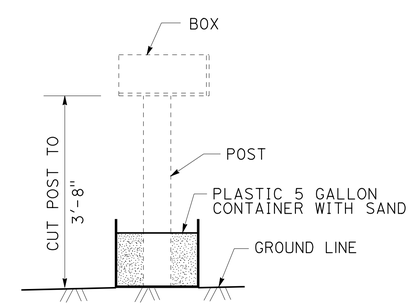

TEMPORARY MAILBOX DETAIL

CONSTRUCTION DETAILS
RESET MAILBOX
NO SCALE

C-12

REVISED BY | DATE REVISED
WILL LESLIE | BYRON STANLEY
CALCULATED-DESIGNED BY | CHECKED BY
FUNCTIONAL SUPERVISOR: STEVE TOPAL

STATE OF CALIFORNIA - DEPARTMENT OF TRANSPORTATION
Caltrans DESIGN

P:\proj2\02\29971_plans\pse\229971ga012.dgn

LAST REVISION 11-24-14 | DATE PLOTTED => 01-DEC-2014 | TIME PLOTTED => 15:26

Dist	COUNTY	ROUTE	POST MILES TOTAL PROJECT	SHEET No.	TOTAL SHEETS
02	Mod	299	39.3/40.5	31	88

11-24-14
REGISTERED CIVIL ENGINEER DATE

11-26-14
PLANS APPROVAL DATE

REGISTERED PROFESSIONAL ENGINEER
BYRON STANLEY
No. C60161
Exp. 6-30-16
CIVIL
STATE OF CALIFORNIA

THE STATE OF CALIFORNIA OR ITS OFFICERS OR AGENTS SHALL NOT BE RESPONSIBLE FOR THE ACCURACY OR COMPLETENESS OF SCANNED COPIES OF THIS PLAN SHEET.

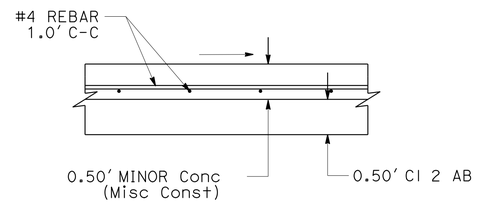

DRIVEWAY SECTION
"A1" STA 78+32 TO 79+37.50

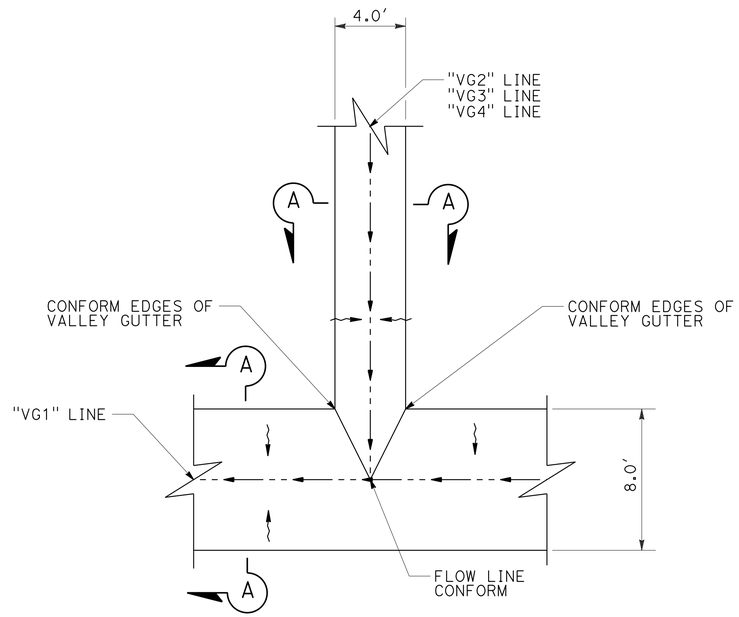

PLAN

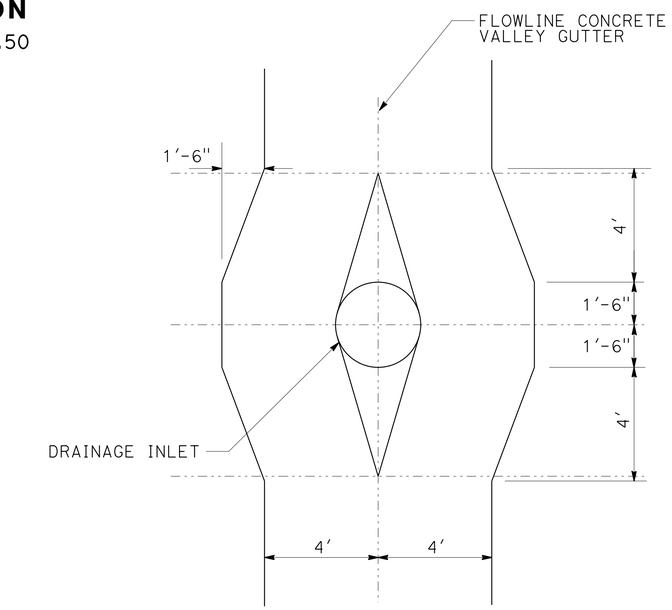

CONCRETE VALLEY GUTTER AT DRAINAGE INLETS

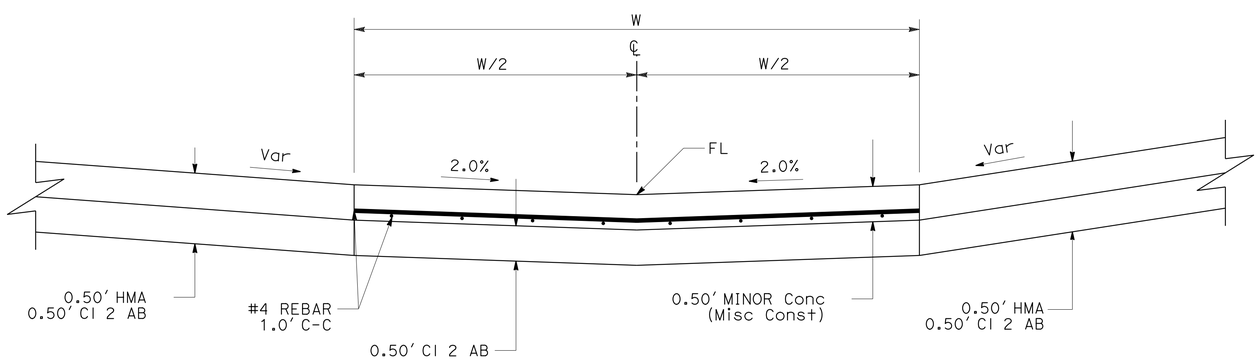

LINE	WIDTH (W)
"VG1"	8.0′
"VG2"	4.0′
"VG3"	4.0′
"VG4"	4.0′

SECTION A-A
CONCRETE VALLEY GUTTER

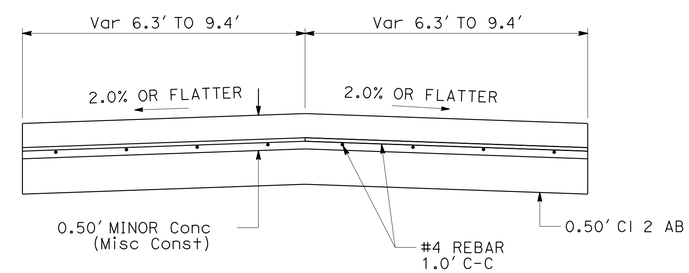

DRIVEWAY DETAIL
"A1" STA 51+08.54

CONSTRUCTION DETAILS
NO SCALE

C-13

REVISED BY | DATE REVISED
BYRON STANLEY | WILL LESLIE
CALCULATED-DESIGNED BY | CHECKED BY
FUNCTIONAL SUPERVISOR: STEVE TOPAL

STATE OF CALIFORNIA - DEPARTMENT OF TRANSPORTATION
Caltrans® DESIGN

P:\proj2\02\29971_plans\pse\229971ga013.dgn

LAST REVISION 11-24-14 | DATE PLOTTED => 01-DEC-2014 | TIME PLOTTED => 15:26

Dist	COUNTY	ROUTE	POST MILES TOTAL PROJECT	SHEET No.	TOTAL SHEETS
02	Mod	299	39.3/40.5	32	88

11-24-14
REGISTERED CIVIL ENGINEER DATE

11-26-14
PLANS APPROVAL DATE

REGISTERED PROFESSIONAL ENGINEER
BYRON STANLEY
No. C60161
Exp. 6-30-16
CIVIL
STATE OF CALIFORNIA

THE STATE OF CALIFORNIA OR ITS OFFICERS OR AGENTS SHALL NOT BE RESPONSIBLE FOR THE ACCURACY OR COMPLETENESS OF SCANNED COPIES OF THIS PLAN SHEET.

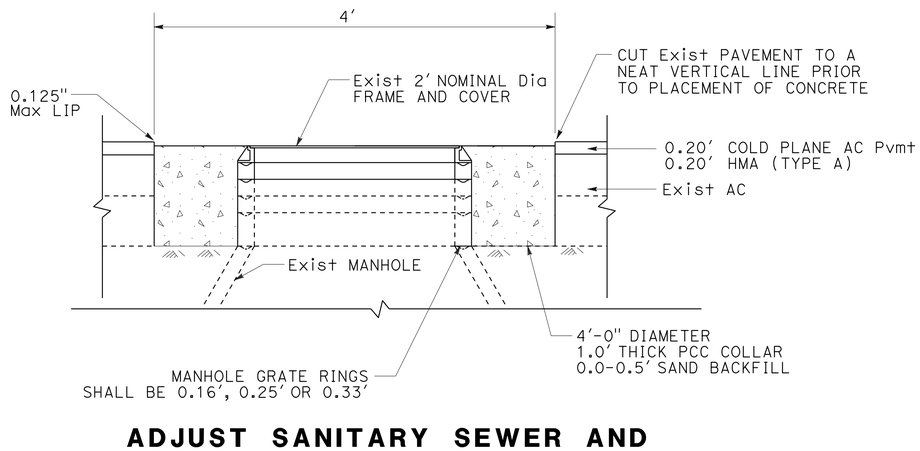

ADJUST SANITARY SEWER AND UTILITY COVER MANHOLE DETAIL

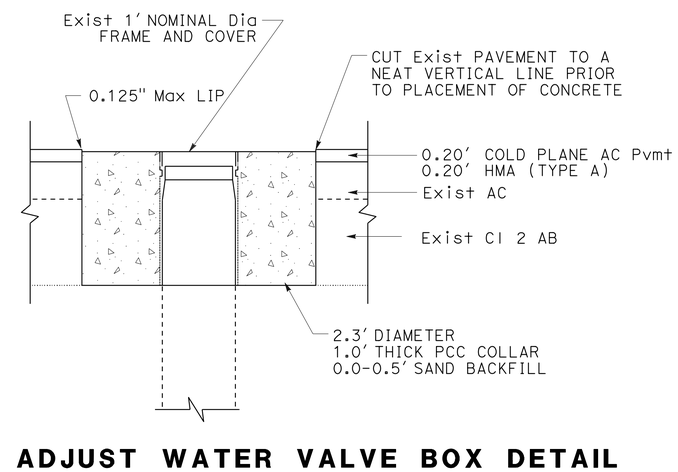

ADJUST WATER VALVE BOX DETAIL

CONSTRUCTION DETAILS

NO SCALE

C-14

REVISED BY | DATE REVISED
CALCULATED-DESIGNED BY | CHECKED BY
FUNCTIONAL SUPERVISOR: STEVE TOPAL

STATE OF CALIFORNIA - DEPARTMENT OF TRANSPORTATION
Caltrans
DESIGN

P:\proj2\02\29971_plans\pse\229971ga014.dgn

LAST REVISION 11-24-14 | DATE PLOTTED => 01-DEC-2014 | TIME PLOTTED => 15:26

Dist	COUNTY	ROUTE	POST MILES TOTAL PROJECT	SHEET No.	TOTAL SHEETS
02	Mod	299	39.3/40.5	33	88

REGISTERED CIVIL ENGINEER 11-24-14 DATE

PLANS APPROVAL DATE 11-26-14

REGISTERED PROFESSIONAL ENGINEER BYRON STANLEY No. C60161 Exp. 6-30-16 CIVIL STATE OF CALIFORNIA

THE STATE OF CALIFORNIA OR ITS OFFICERS OR AGENTS SHALL NOT BE RESPONSIBLE FOR THE ACCURACY OR COMPLETENESS OF SCANNED COPIES OF THIS PLAN SHEET.

NOTE:

1. UNDERGROUND UTILITIES HAVE NOT BEEN POSITIVELY LOCATED.
2. SEE LAYOUT SHEETS FOR ADDITIONAL INFORMATION.

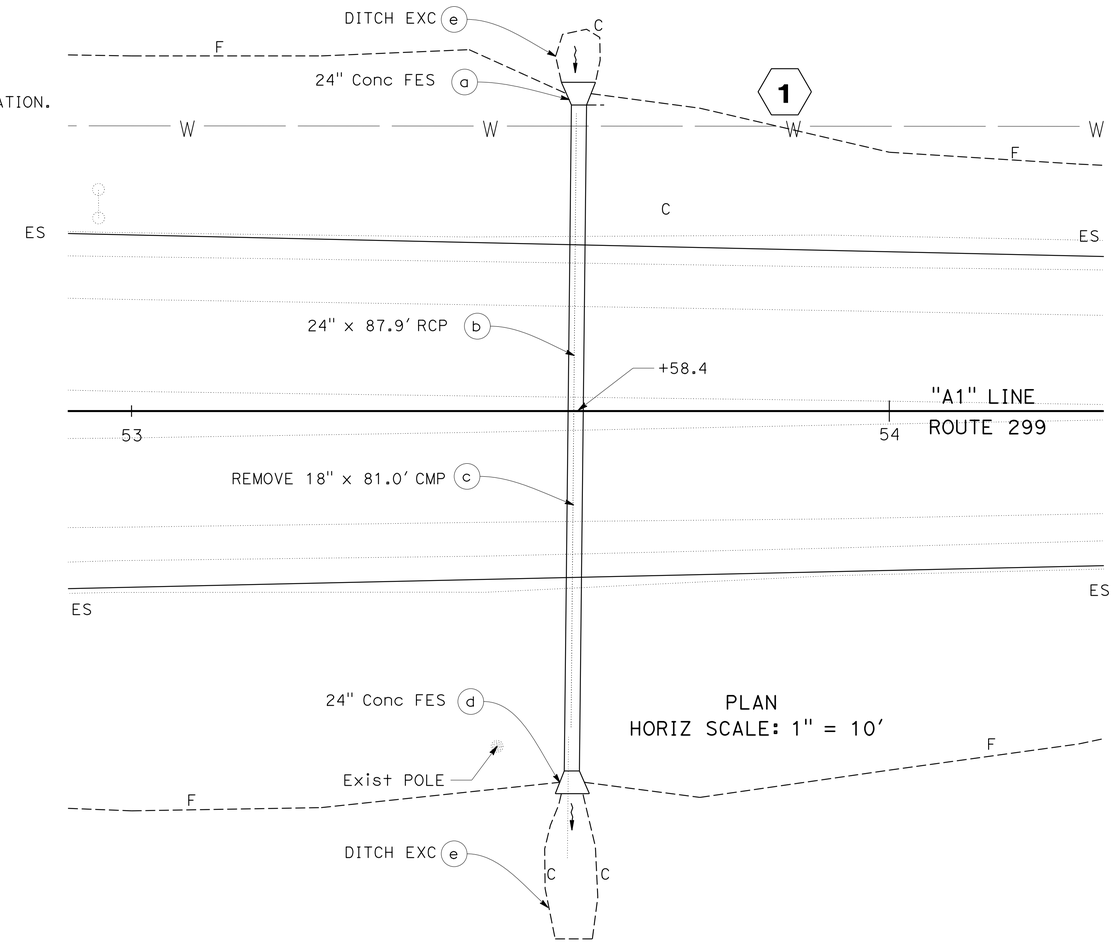

LEGEND

CITY OF ALTURAS
10" ASBESTOS WATERLINE.

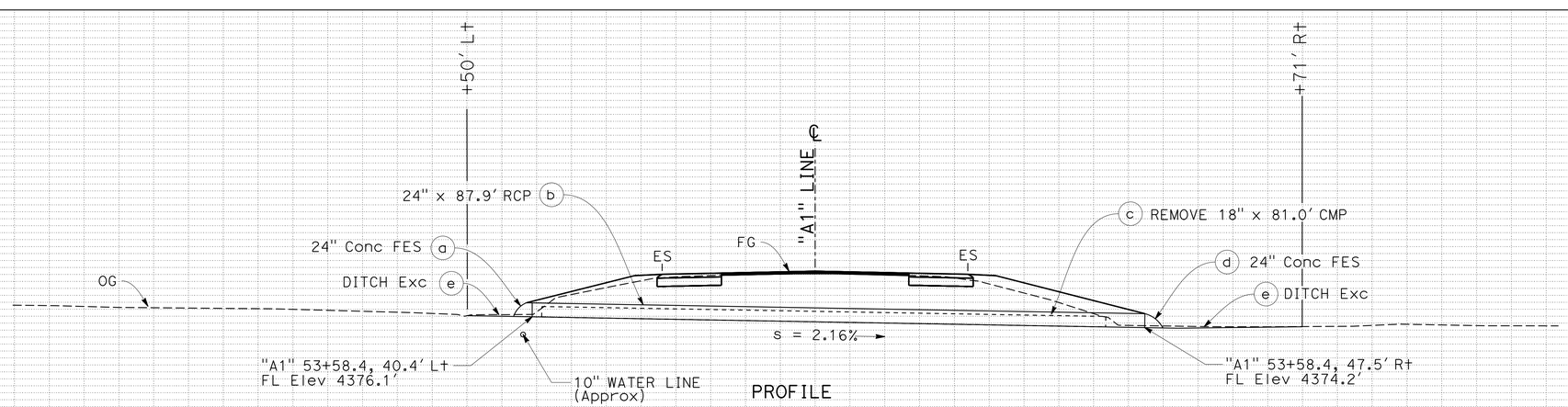

PROFILE
"A1" 53+58.4

DRAINAGE SYSTEM No. 1

APPROVED FOR DRAINAGE WORK ONLY

DRAINAGE PLAN AND PROFILE

SCALE: AS SHOWN **D-1**

REVISED BY | DATE REVISED
BYRON STANLEY | WILL LESLIE
CALCULATED-DESIGNED BY | CHECKED BY
FUNCTIONAL SUPERVISOR: STEVE TOPAL

STATE OF CALIFORNIA - DEPARTMENT OF TRANSPORTATION
Caltrans
DESIGN

P:\proj2\02\29971_plans\pse\229971ia001.dgn

LAST REVISION 11-24-14 | DATE PLOTTED => 01-DEC-2014 | TIME PLOTTED => 15:26

Dist	COUNTY	ROUTE	POST MILES TOTAL PROJECT	SHEET No.	TOTAL SHEETS
02	Mod	299	39.3/40.5	34	88

REGISTERED CIVIL ENGINEER 11-24-14 DATE

11-26-14
PLANS APPROVAL DATE

REGISTERED PROFESSIONAL ENGINEER BYRON STANLEY No. C60161 Exp. 6-30-16 CIVIL STATE OF CALIFORNIA

THE STATE OF CALIFORNIA OR ITS OFFICERS OR AGENTS SHALL NOT BE RESPONSIBLE FOR THE ACCURACY OR COMPLETENESS OF SCANNED COPIES OF THIS PLAN SHEET.

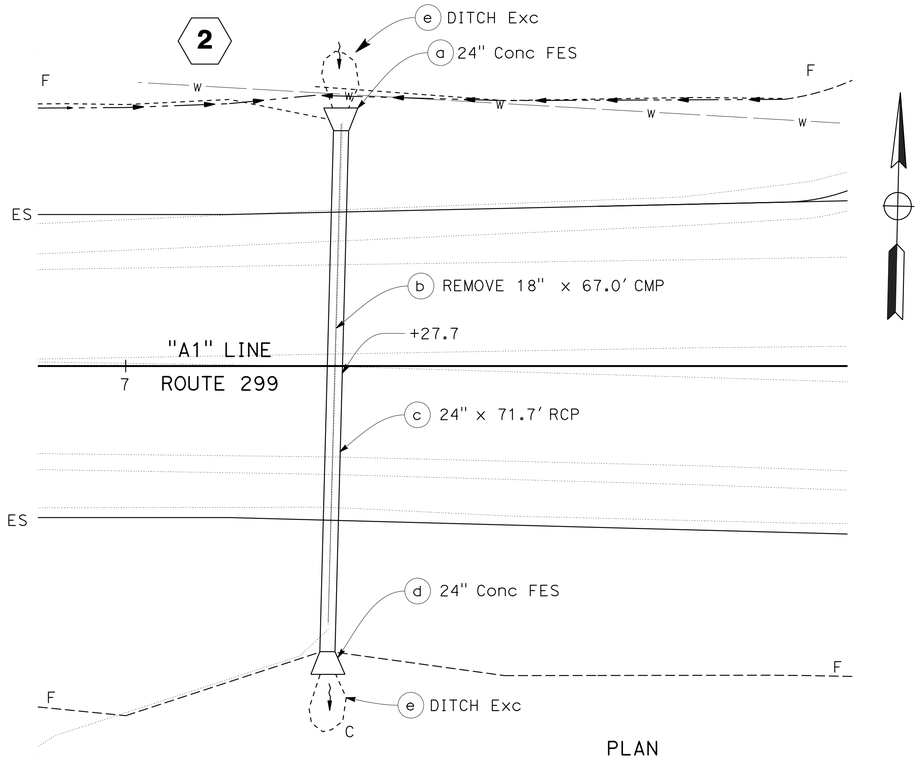

PLAN
HORIZ SCALE: 1" = 10'

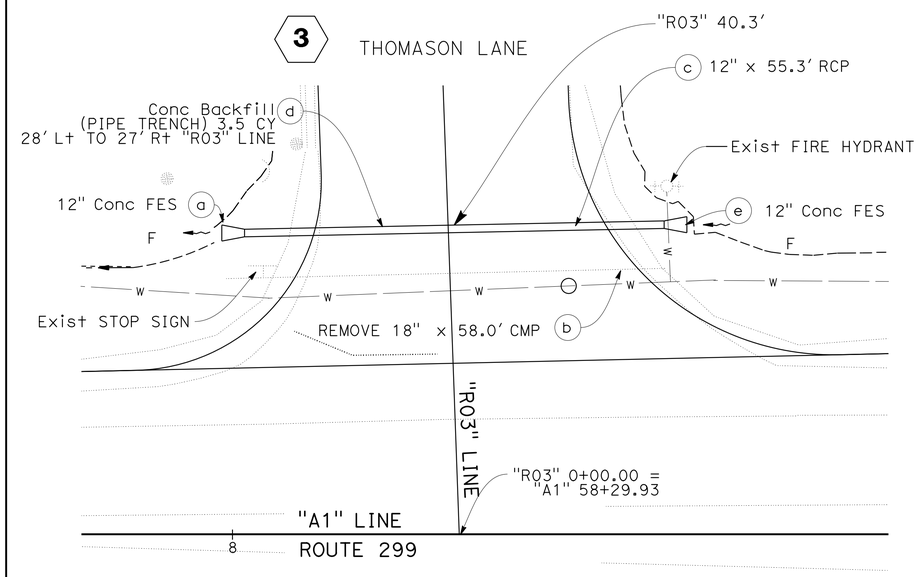

PLAN
HORIZ SCALE: 1" = 10'

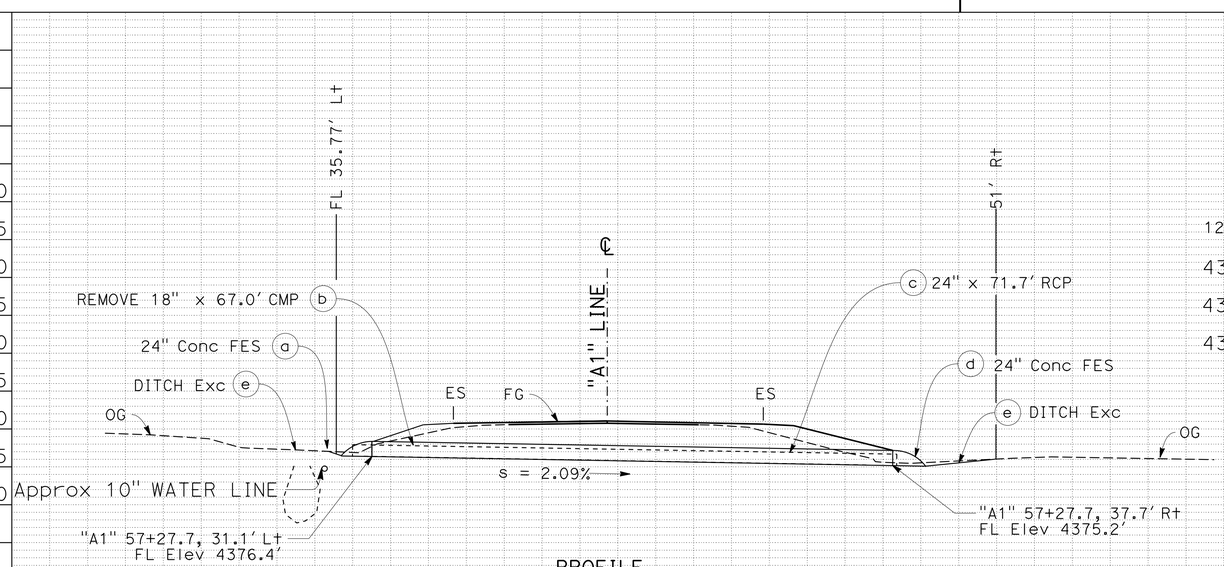

PROFILE
"A1" 57+27.65 SKEW 1.3°
DRAINAGE SYSTEM No. 2
HORIZ & VERT SCALE: 1" = 10'

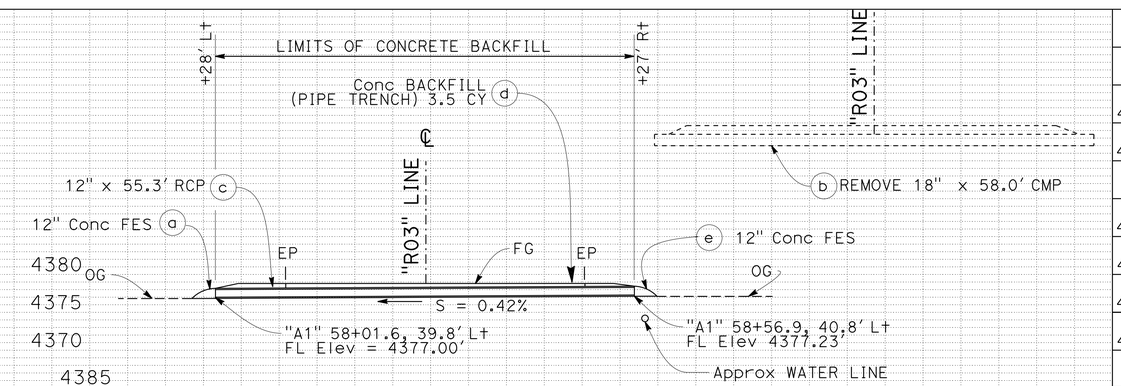

PROFILE
"A1" 58+01.6 TO "A1" 58+56.9 Lt
THOMASON LANE
DRAINAGE SYSTEM No. 3
HORIZ & VERT SCALE: 1" = 10'

DRAINAGE PLAN AND PROFILE
SCALE: AS SHOWN
D-2

APPROVED FOR DRAINAGE WORK ONLY

REVISED BY | DATE REVISED
WILL LESLIE | BYRON STANLEY
CALCULATED-DESIGNED BY | CHECKED BY
FUNCTIONAL SUPERVISOR: STEVE TOPAL
STATE OF CALIFORNIA - DEPARTMENT OF TRANSPORTATION
Caltrans
DESIGN

P:\proj2\02\299711_plans\pse\2299711ia002.dgn

LAST REVISION 11-24-14 | DATE PLOTTED => 01-DEC-2014 | TIME PLOTTED => 15:26

Dist	COUNTY	ROUTE	POST MILES TOTAL PROJECT	SHEET No.	TOTAL SHEETS
02	Mod	299	39.3/40.5	35	88

REGISTERED CIVIL ENGINEER 11-24-14 DATE

PLANS APPROVAL DATE 11-26-14

REGISTERED PROFESSIONAL ENGINEER BYRON STANLEY No. C60161 Exp. 6-30-16 CIVIL STATE OF CALIFORNIA

THE STATE OF CALIFORNIA OR ITS OFFICERS OR AGENTS SHALL NOT BE RESPONSIBLE FOR THE ACCURACY OR COMPLETENESS OF SCANNED COPIES OF THIS PLAN SHEET.

NOTES:

1. FOR ACCURATE RIGHT OF WAY DATA, CONTACT RIGHT OF WAY ENGINEERING AT THE DISTRICT OFFICE.
2. UNDERGROUND UTILITIES HAVE NOT BEEN POSITIVELY LOCATED.

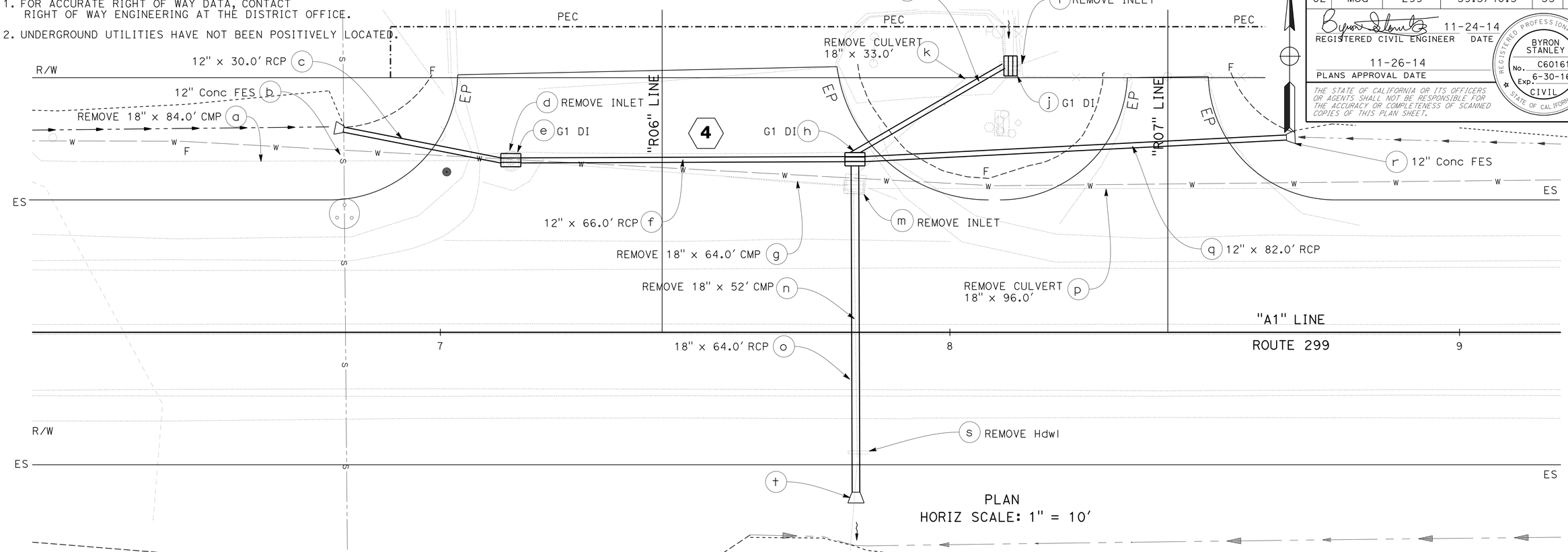

PLAN
HORIZ SCALE: 1" = 10'

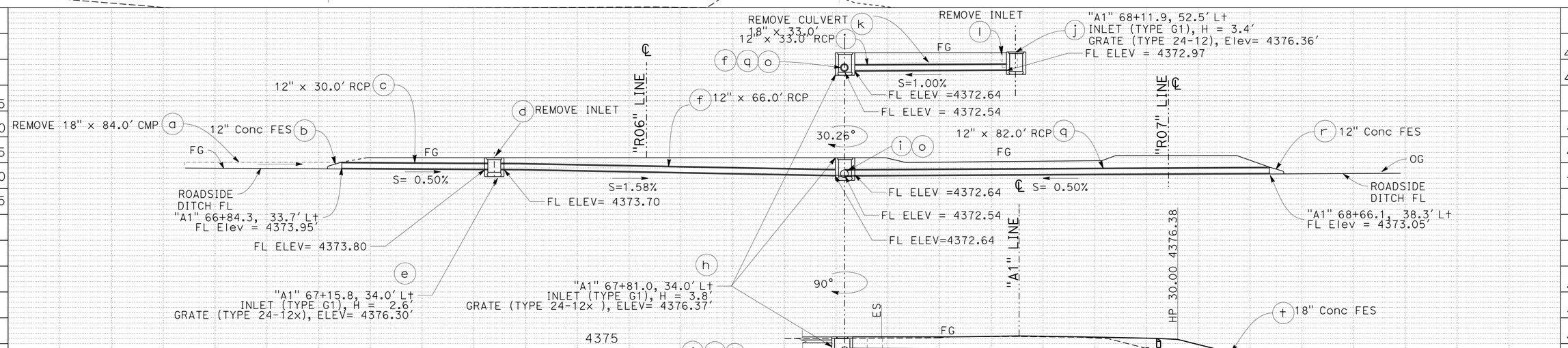

PROFILE
"A1" 67+81

DRAINAGE SYSTEM No 4

Horiz & VERT SCALE: 1" = 10'

APPROVED FOR DRAINAGE WORK ONLY

DRAINAGE PLAN AND PROFILE

SCALE: AS SHOWN

D-3

REVISED BY | DATE REVISED
WILL LESLIE | BYRON STANLEY
CALCULATED-DESIGNED BY | CHECKED BY
FUNCTIONAL SUPERVISOR: STEVE TOPAL

STATE OF CALIFORNIA - DEPARTMENT OF TRANSPORTATION
Caltrans DESIGN

P:\proj2\02\29971_plans\pse\229971ia003.dgn

LAST REVISION DATE PLOTTED => 01-DEC-2014
11-24-14 TIME PLOTTED => 15:26

Dist	COUNTY	ROUTE	POST MILES TOTAL PROJECT	SHEET No.	TOTAL SHEETS
02	Mod	299	39.3/40.5	36	88

REGISTERED CIVIL ENGINEER 11-24-14 DATE

PLANS APPROVAL DATE 11-26-14

REGISTERED PROFESSIONAL ENGINEER BYRON STANLEY No. C60161 Exp. 6-30-16 CIVIL STATE OF CALIFORNIA

THE STATE OF CALIFORNIA OR ITS OFFICERS OR AGENTS SHALL NOT BE RESPONSIBLE FOR THE ACCURACY OR COMPLETENESS OF SCANNED COPIES OF THIS PLAN SHEET.

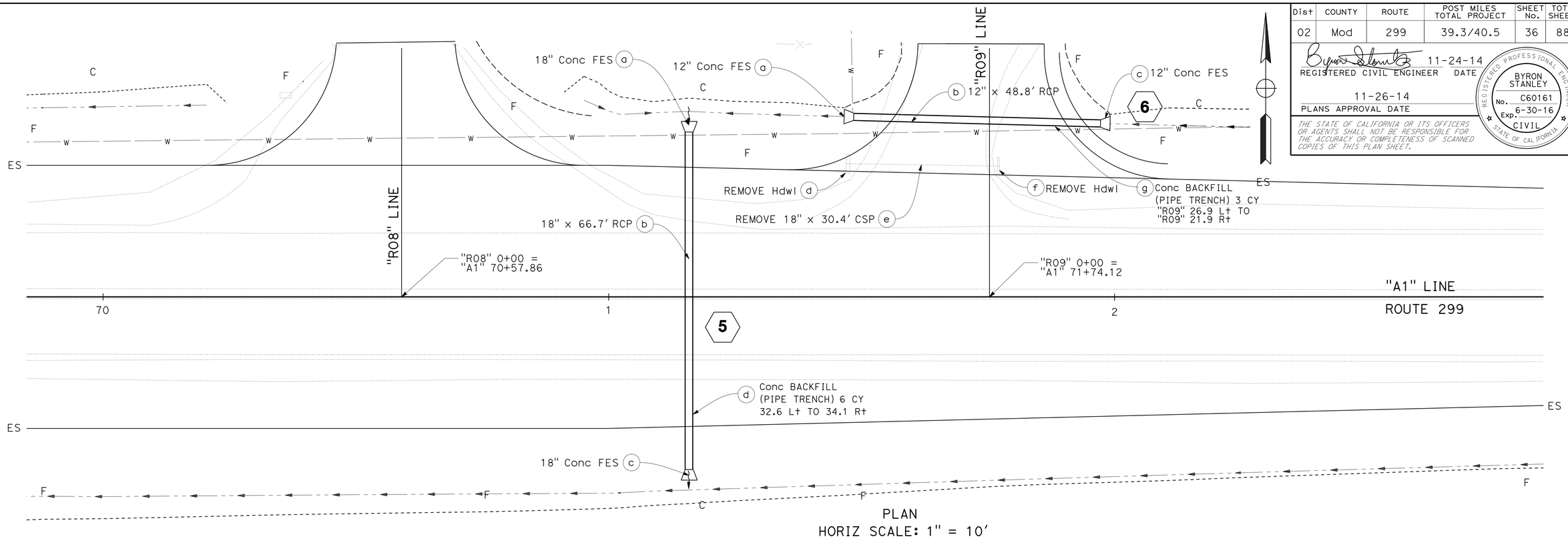

PLAN
HORIZ SCALE: 1" = 10'

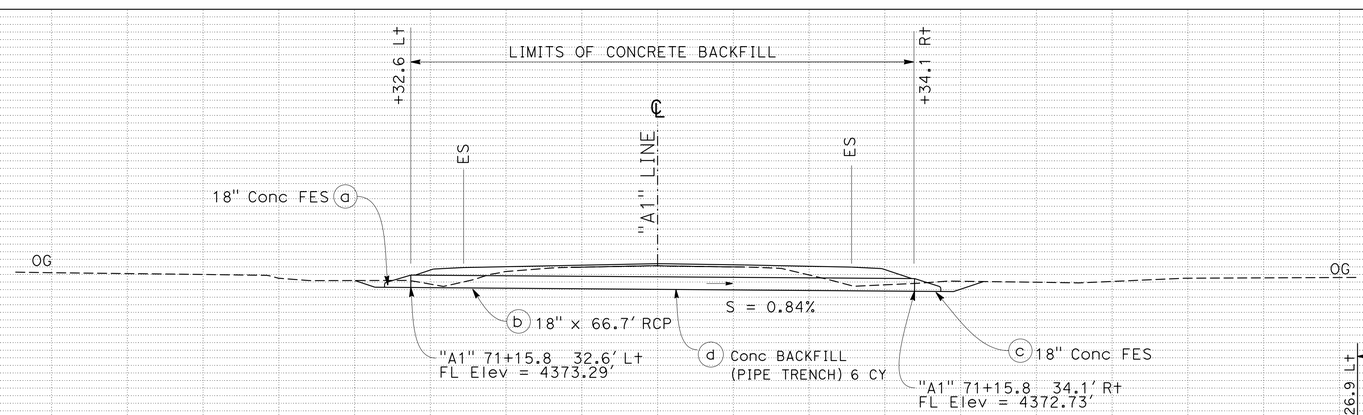

PROFILE
"A1" 71+15.8
DRAINAGE SYSTEM No. 5
HORIZ & VERT SCALE: 1" = 10'

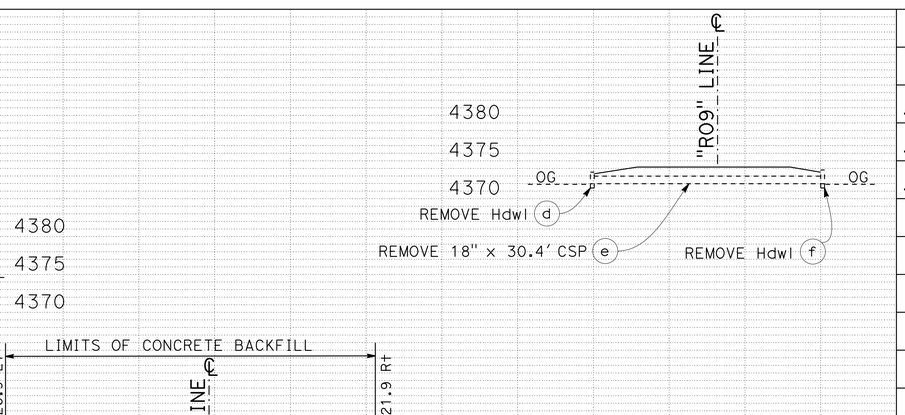

PROFILE
"A1" 71+48.5 TO 71+97.3
DRAINAGE SYSTEM No. 6
HORIZ & VERT SCALE: 1" = 10'

DRAINAGE PLAN AND PROFILE

SCALE: AS SHOWN

D-4

APPROVED FOR DRAINAGE WORK ONLY

REVISED BY | DATE REVISED
WILL LESLIE | BYRON STANLEY
CALCULATED-DESIGNED BY | CHECKED BY
FUNCTIONAL SUPERVISOR: STEVE TOPAL

STATE OF CALIFORNIA - DEPARTMENT OF TRANSPORTATION
Caltrans
DESIGN

P:\proj2\02\299711_plans\pse\229971ia004.dgn

LAST REVISION | DATE PLOTTED => 01-DEC-2014
11-24-14 | TIME PLOTTED => 15:26

Dist	COUNTY	ROUTE	POST MILES TOTAL PROJECT	SHEET No.	TOTAL SHEETS
02	Mod	299	39.3/40.5	37	88

REGISTERED CIVIL ENGINEER 11-24-14 DATE

PLANS APPROVAL DATE 11-26-14

REGISTERED PROFESSIONAL ENGINEER BYRON STANLEY No. C60161 Exp. 6-30-16 CIVIL STATE OF CALIFORNIA

THE STATE OF CALIFORNIA OR ITS OFFICERS OR AGENTS SHALL NOT BE RESPONSIBLE FOR THE ACCURACY OR COMPLETENESS OF SCANNED COPIES OF THIS PLAN SHEET.

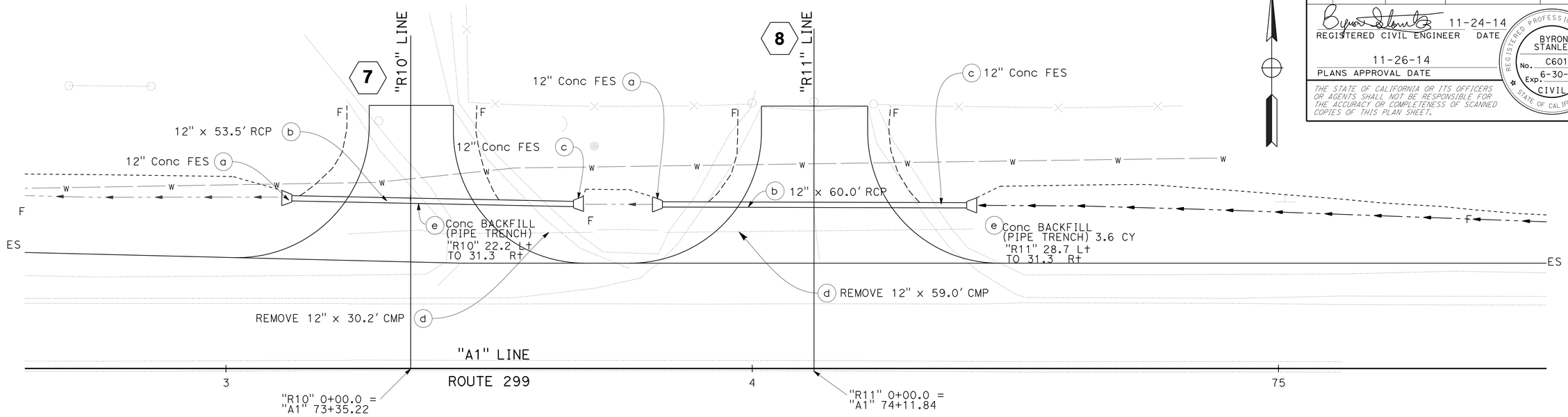

PLAN
SCALE: 1" = 10' Horiz

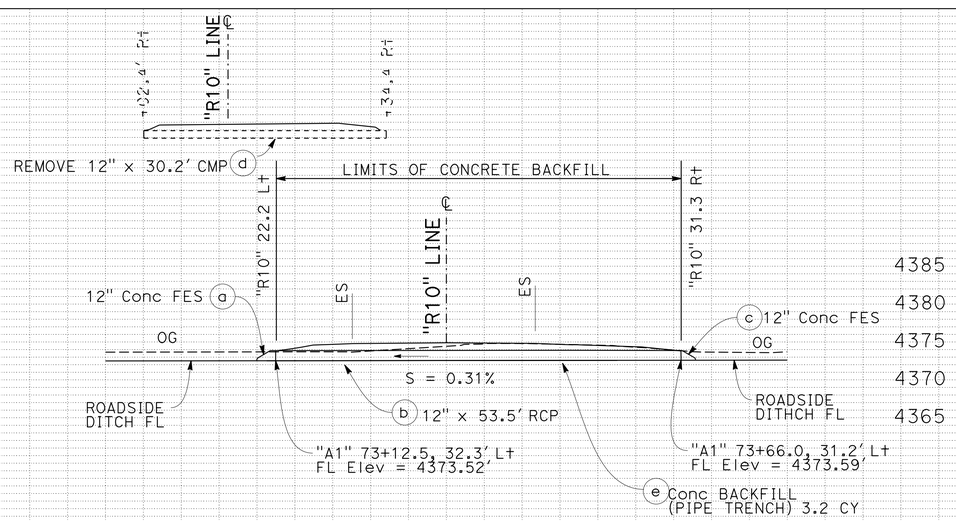

PROFILE
"A1" 73+12.5, 32.3' Lt TO 73+66.0, 31.2' Lt

DRAINAGE SYSTEM No. 7
SCALE: 1" = 10' Horiz & Vert

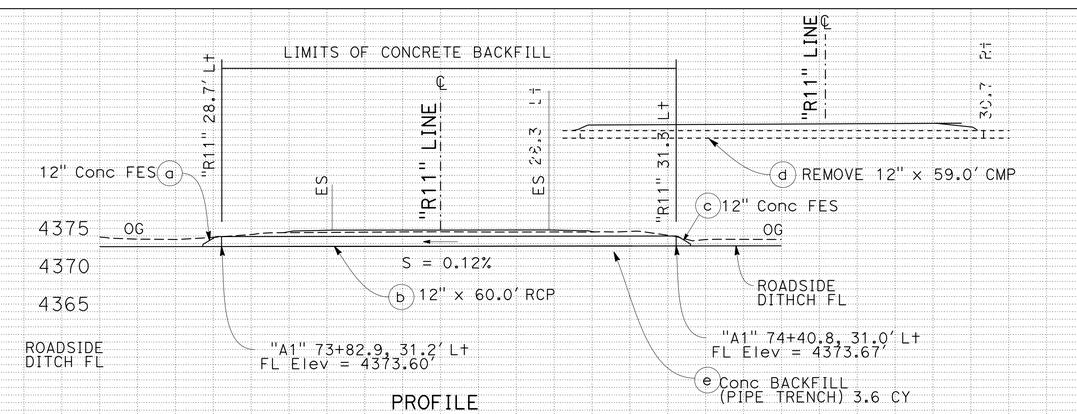

PROFILE
"A1" 73+82.9, 31.2' Lt TO 74+40.8, 31.0' Lt

DRAINAGE SYSTEM No. 8
SCALE: 1" = 10' Horiz & Vert

APPROVED FOR DRAINAGE WORK ONLY

DRAINAGE PLAN AND PROFILE

SCALE: AS SHOWN

D-5

REVISED BY | DATE REVISED
WILL LESLIE | BYRON STANLEY
CALCULATED-DESIGNED BY | CHECKED BY
FUNCTIONAL SUPERVISOR: STEVE TOPAL

STATE OF CALIFORNIA - DEPARTMENT OF TRANSPORTATION
Caltrans
DESIGN

P:\proj2\02\29971_plans\pse\229971ia005.dgn

LAST REVISION 11-24-14 | DATE PLOTTED => 01-DEC-2014 | TIME PLOTTED => 15:26

Dist	COUNTY	ROUTE	POST MILES TOTAL PROJECT	SHEET No.	TOTAL SHEETS
02	Mod	299	39.3/40.5	38	88

REGISTERED CIVIL ENGINEER 11-24-14 DATE

PLANS APPROVAL DATE 11-26-14

REGISTERED PROFESSIONAL ENGINEER BYRON STANLEY No. C60161 Exp. 6-30-16 CIVIL STATE OF CALIFORNIA

THE STATE OF CALIFORNIA OR ITS OFFICERS OR AGENTS SHALL NOT BE RESPONSIBLE FOR THE ACCURACY OR COMPLETENESS OF SCANNED COPIES OF THIS PLAN SHEET.

NOTE:
SEE SHEETS D-9 TONS D-10 FOR COMPLETE CONCRETE VALLEY GUTTER AND INFILTRATION BASIN LAYOUTS.

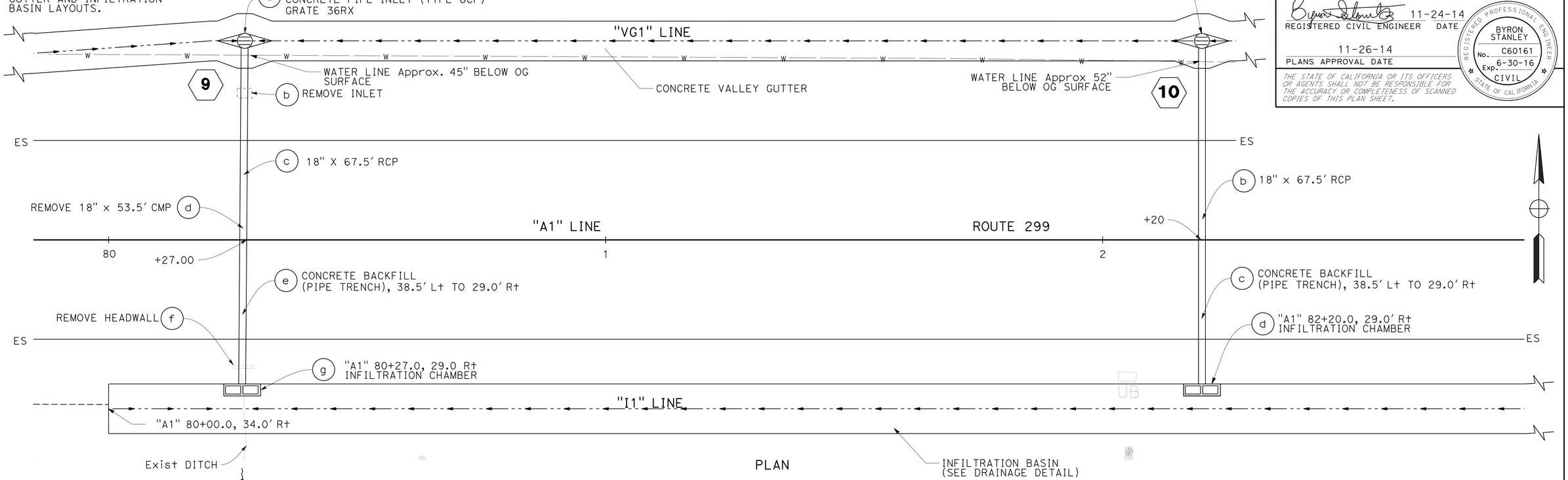

PLAN

HORIZ SCALE: 1" = 10'

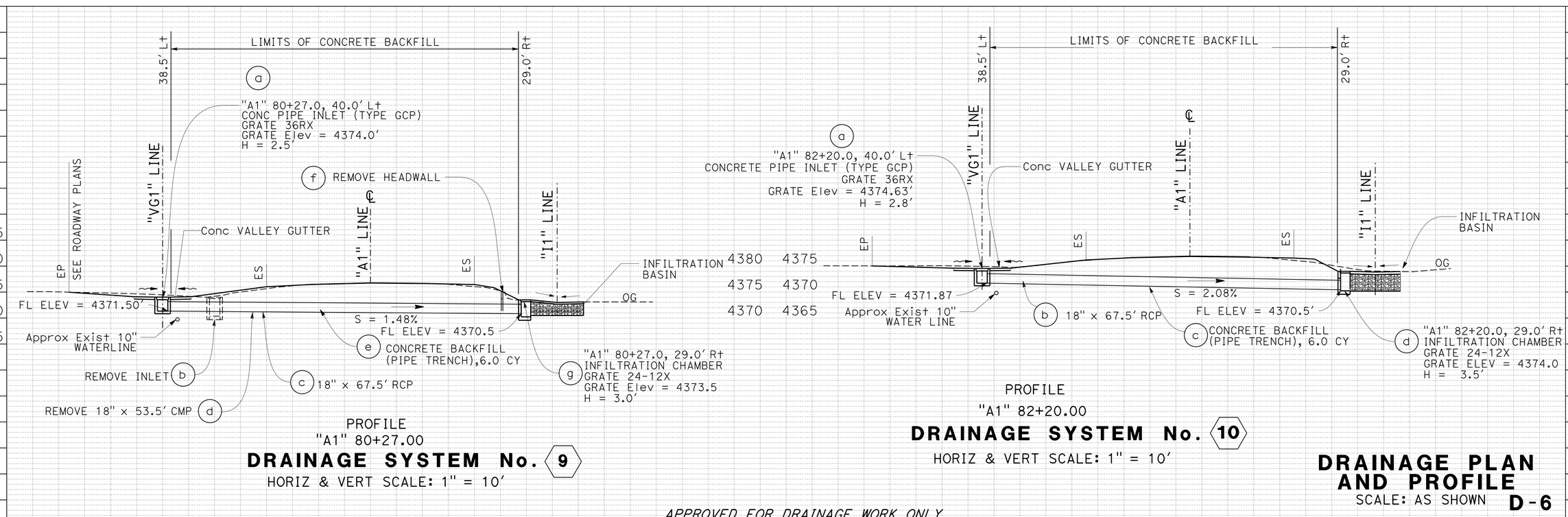

PROFILE
"A1" 80+27.00
DRAINAGE SYSTEM No. 9
HORIZ & VERT SCALE: 1" = 10'

PROFILE
"A1" 82+20.00
DRAINAGE SYSTEM No. 10
HORIZ & VERT SCALE: 1" = 10'

APPROVED FOR DRAINAGE WORK ONLY

DRAINAGE PLAN AND PROFILE

SCALE: AS SHOWN **D-6**

REVISED BY | DATE REVISED
BYRON STANLEY | WILL LESLIE
CALCULATED-DESIGNED BY | CHECKED BY
FUNCTIONAL SUPERVISOR: STEVE TOPAL

STATE OF CALIFORNIA - DEPARTMENT OF TRANSPORTATION
Caltrans
DESIGN

P:\proj2\02\299711_plans\pse\2299711a006.dgn

LAST REVISION | DATE PLOTTED => 01-DEC-2014
11-24-14 | TIME PLOTTED => 15:26

Dist	COUNTY	ROUTE	POST MILES TOTAL PROJECT	SHEET No.	TOTAL SHEETS
02	Mod	299	39.3/40.5	39	88

REGISTERED CIVIL ENGINEER 11-24-14 DATE

PLANS APPROVAL DATE 11-26-14

BYRON STANLEY No. C60161 Exp. 6-30-16 CIVIL — REGISTERED PROFESSIONAL ENGINEER — STATE OF CALIFORNIA

THE STATE OF CALIFORNIA OR ITS OFFICERS OR AGENTS SHALL NOT BE RESPONSIBLE FOR THE ACCURACY OR COMPLETENESS OF SCANNED COPIES OF THIS PLAN SHEET.

NOTE:
SEE SHEETS D-9 TONS D-10 FOR COMPLETE CONCRETE VALLEY GUTTER AND INFILTRATION BASIN LAYOUTS.

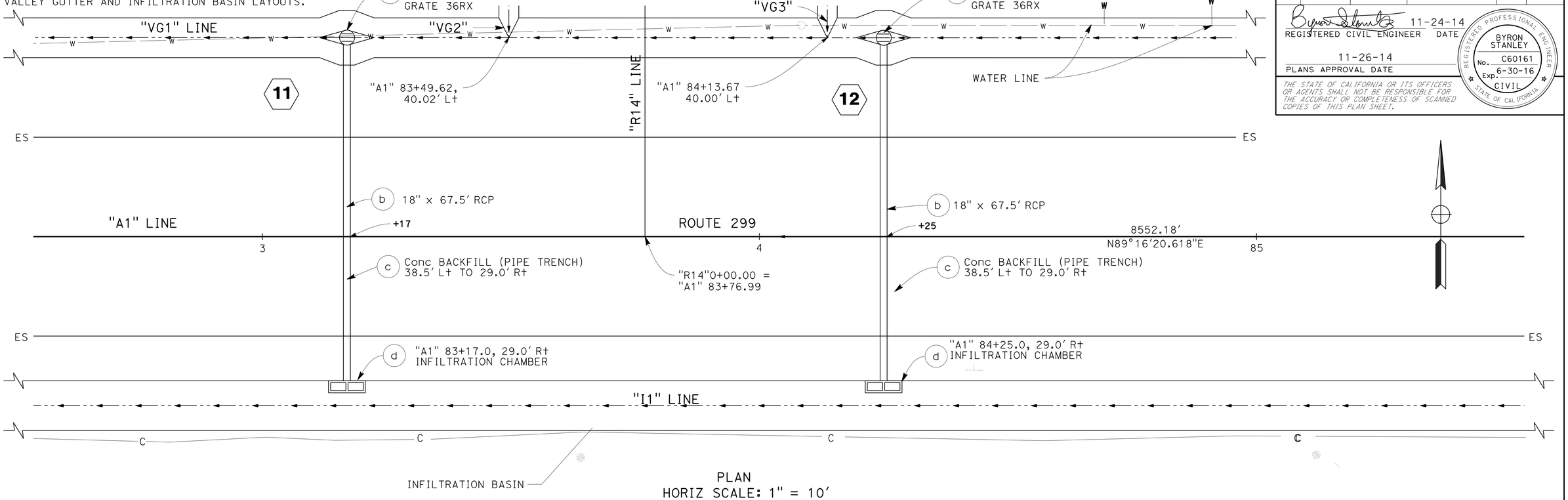

PLAN
HORIZ SCALE: 1" = 10'

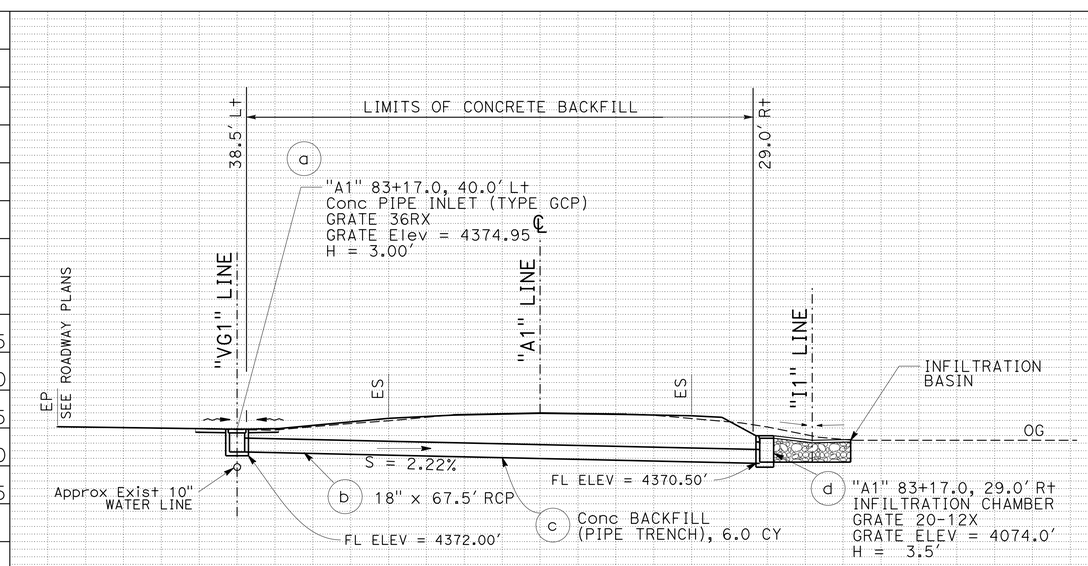

PROFILE
"A1" 83+17.0

DRAINAGE SYSTEM No. 11
HORIZ & VERT SCALE: 1" = 10'

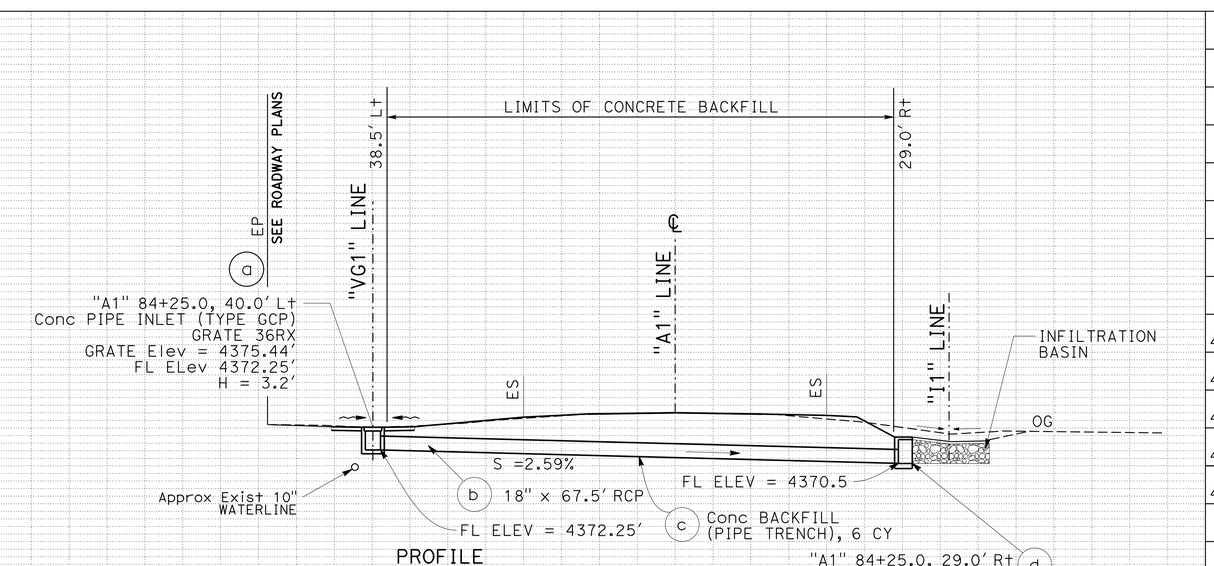

PROFILE
"A1" 84+25.0

DRAINAGE SYSTEM No. 12
HORIZ & VERT SCALE: 1" = 10'

DRAINAGE PLAN AND PROFILE
SCALE: AS SHOWN

D-7

APPROVED FOR DRAINAGE WORK ONLY

REVISED BY	DATE REVISED
BYRON STANLEY	WILL LESLIE
CALCULATED-DESIGNED BY	CHECKED BY

FUNCTIONAL SUPERVISOR: STEVE TOPAL

STATE OF CALIFORNIA - DEPARTMENT OF TRANSPORTATION — DESIGN — Caltrans

P:\proj2\02\299711\plans\pse\229971ia007.dgn

LAST REVISION 11-24-14 — DATE PLOTTED => 01-DEC-2014 — TIME PLOTTED => 15:26

Dist	COUNTY	ROUTE	POST MILES TOTAL PROJECT	SHEET No.	TOTAL SHEETS
02	Mod	299	39.3/40.5	40	88

REGISTERED CIVIL ENGINEER 11-24-14 DATE

11-26-14
PLANS APPROVAL DATE

REGISTERED PROFESSIONAL ENGINEER BYRON STANLEY No. C60161 Exp. 6-30-16 CIVIL STATE OF CALIFORNIA

THE STATE OF CALIFORNIA OR ITS OFFICERS OR AGENTS SHALL NOT BE RESPONSIBLE FOR THE ACCURACY OR COMPLETENESS OF SCANNED COPIES OF THIS PLAN SHEET.

NOTE:
SEE SHEETS D-9 TONS D-10 FOR COMPLETE CONCRETE VALLEY GUTTER AND INFILTRATION BASIN LAYOUTS.

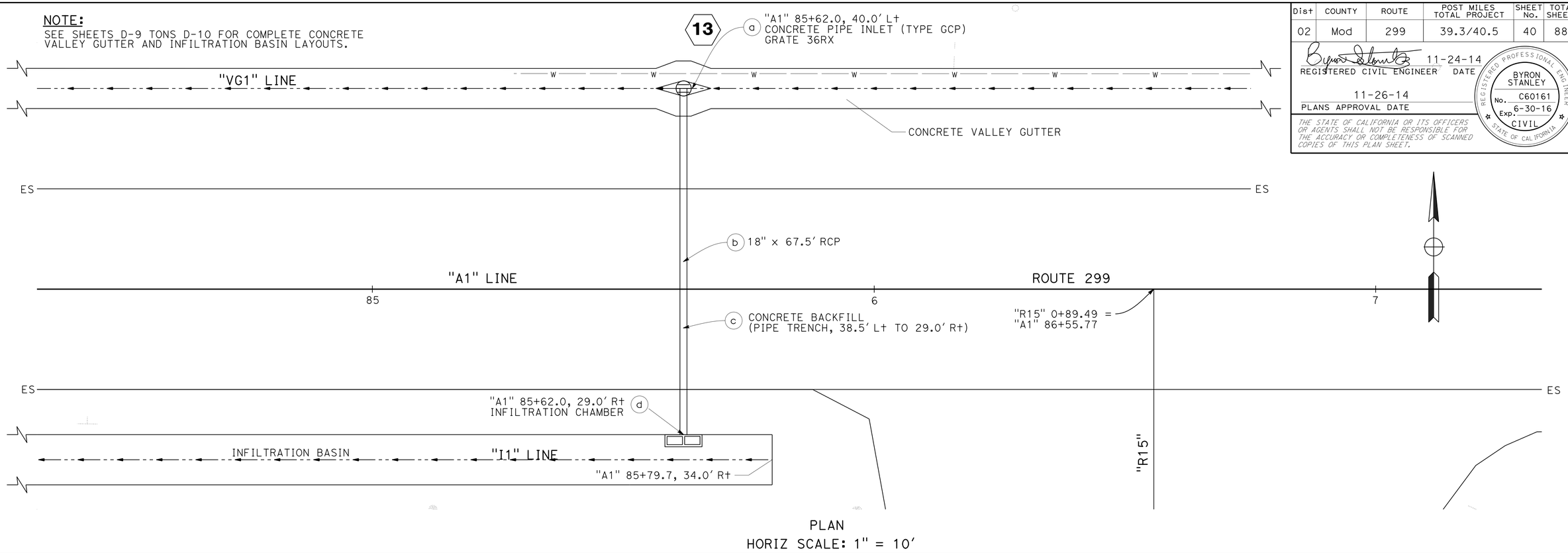

PLAN
HORIZ SCALE: 1" = 10′

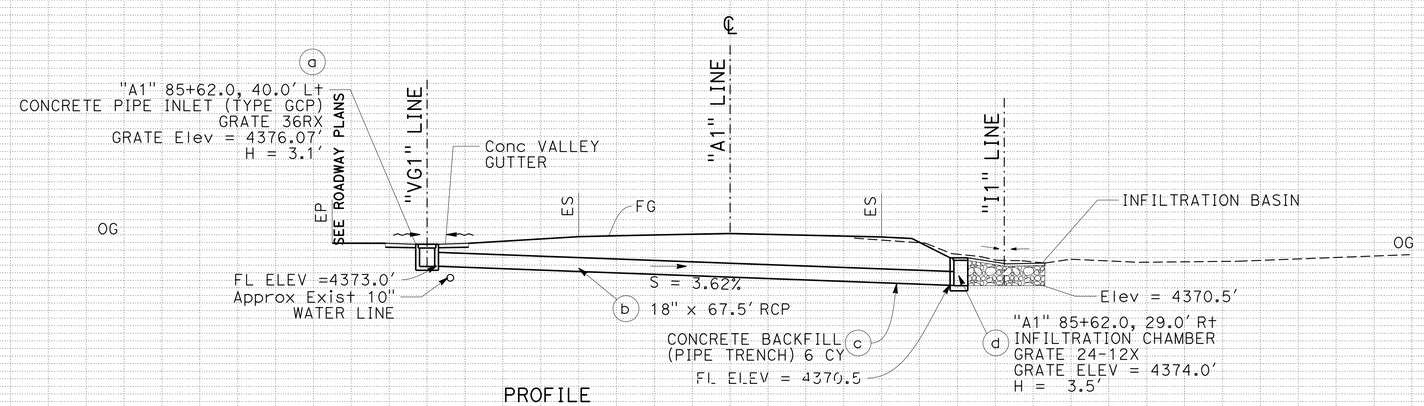

PROFILE
"A1" 85+62.00

DRAINAGE SYSTEM No. 13

HORIZ & VERT SCALE: 1" = 10′

APPROVED FOR DRAINAGE WORK ONLY

DRAINAGE PLAN AND PROFILE

SCALE: AS SHOWN

D-8

REVISED BY | DATE REVISED
BYRON STANLEY | WILL LESLIE
CALCULATED-DESIGNED BY | CHECKED BY
FUNCTIONAL SUPERVISOR: STEVE TOPAL

STATE OF CALIFORNIA - DEPARTMENT OF TRANSPORTATION
Caltrans
DESIGN

P:\proj2\02\299711_plans\pse\2299711a008.dgn

LAST REVISION | DATE PLOTTED => 01-DEC-2014
11-24-14 | TIME PLOTTED => 15:26

Dist	COUNTY	ROUTE	POST MILES TOTAL PROJECT	SHEET No.	TOTAL SHEETS
02	Mod	299	39.3/40.5	41	88

REGISTERED CIVIL ENGINEER 11-24-14 DATE

PLANS APPROVAL DATE 11-26-14

REGISTERED PROFESSIONAL ENGINEER BYRON STANLEY No. C60161 Exp. 6-30-16 CIVIL STATE OF CALIFORNIA

THE STATE OF CALIFORNIA OR ITS OFFICERS OR AGENTS SHALL NOT BE RESPONSIBLE FOR THE ACCURACY OR COMPLETENESS OF SCANNED COPIES OF THIS PLAN SHEET.

NOTES:

1. FOR DETAILS NOT SHOWN, SEE DRAINAGE DETAIL PLANS.
2. UNDERGROUND UTILITIES NOT POSITIVELY LOCATED.
3. THE TOP OF WATERLINE WAS UNCOVERED AT THREE LOCATIONS. APPROXIMATE ELEVATION WAS 4370.3'.

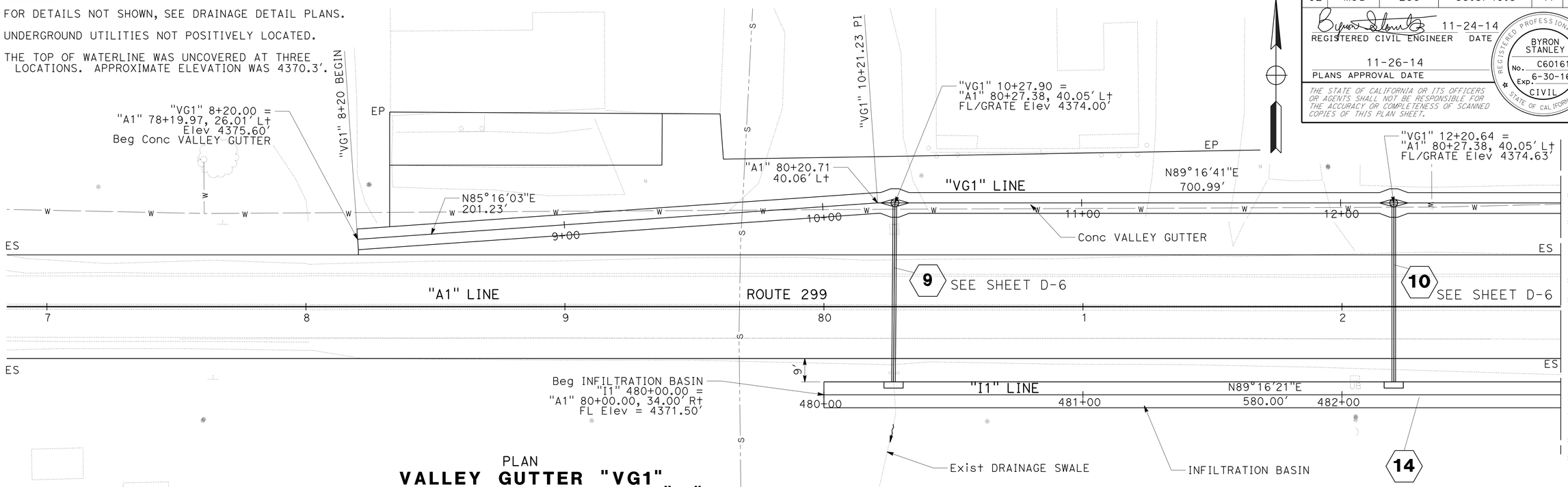

PLAN

VALLEY GUTTER "VG1" AND INFILTRATION BASIN "I1"

Horiz SCALE: 1" = 20'

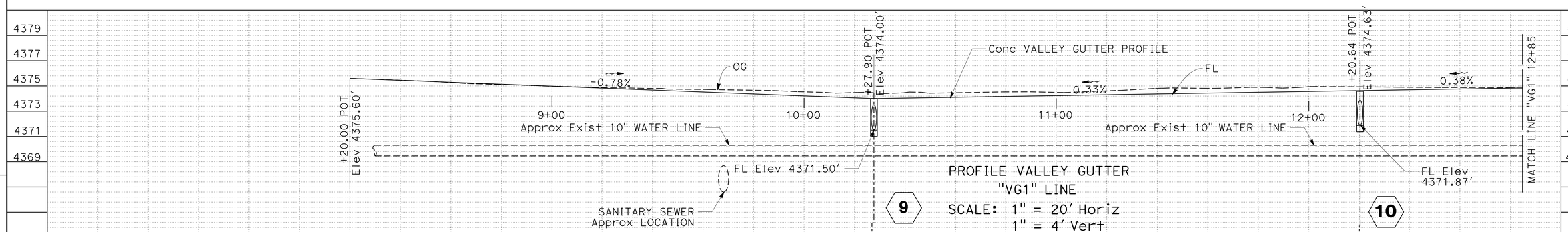

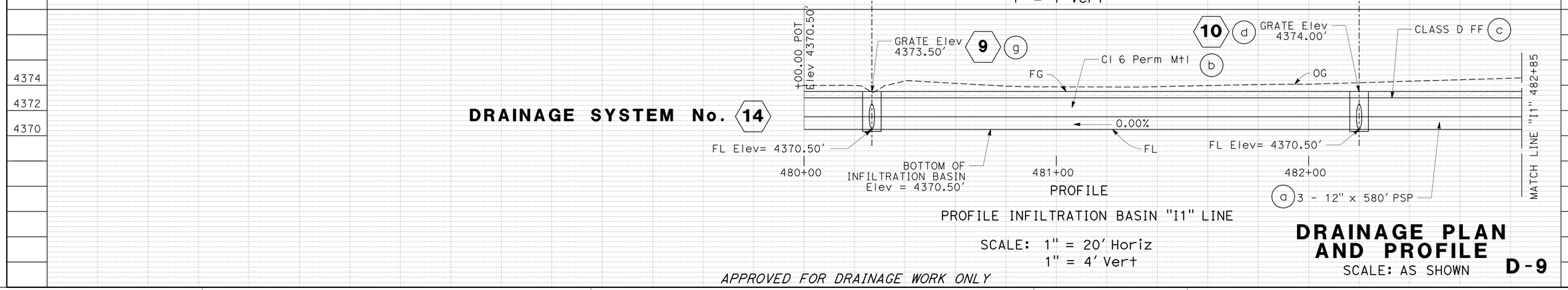

DRAINAGE SYSTEM No. 14

DRAINAGE PLAN AND PROFILE

SCALE: AS SHOWN

D-9

APPROVED FOR DRAINAGE WORK ONLY

REVISED BY | DATE REVISED

WILL LESLIE | BYRON STANLEY

CALCULATED-DESIGNED BY | CHECKED BY

FUNCTIONAL SUPERVISOR: STEVE TOPAL

STATE OF CALIFORNIA - DEPARTMENT OF TRANSPORTATION

Caltrans® DESIGN

P:\proj2\02\29971_plans\pse\229971ia009.dgn

LAST REVISION 11-24-14 | DATE PLOTTED => 01-DEC-2014 | TIME PLOTTED => 15:26

Dist	COUNTY	ROUTE	POST MILES TOTAL PROJECT	SHEET No.	TOTAL SHEETS
02	Mod	299	39.3/40.5	42	88

11-24-14
REGISTERED CIVIL ENGINEER DATE

11-26-14
PLANS APPROVAL DATE

REGISTERED PROFESSIONAL ENGINEER
BYRON STANLEY
No. C60161
Exp. 6-30-16
CIVIL
STATE OF CALIFORNIA

THE STATE OF CALIFORNIA OR ITS OFFICERS OR AGENTS SHALL NOT BE RESPONSIBLE FOR THE ACCURACY OR COMPLETENESS OF SCANNED COPIES OF THIS PLAN SHEET.

CURVE DATA

No. ⊕	R	Δ	T	L
1	29′	91°17′00″	29.37′	45.75′

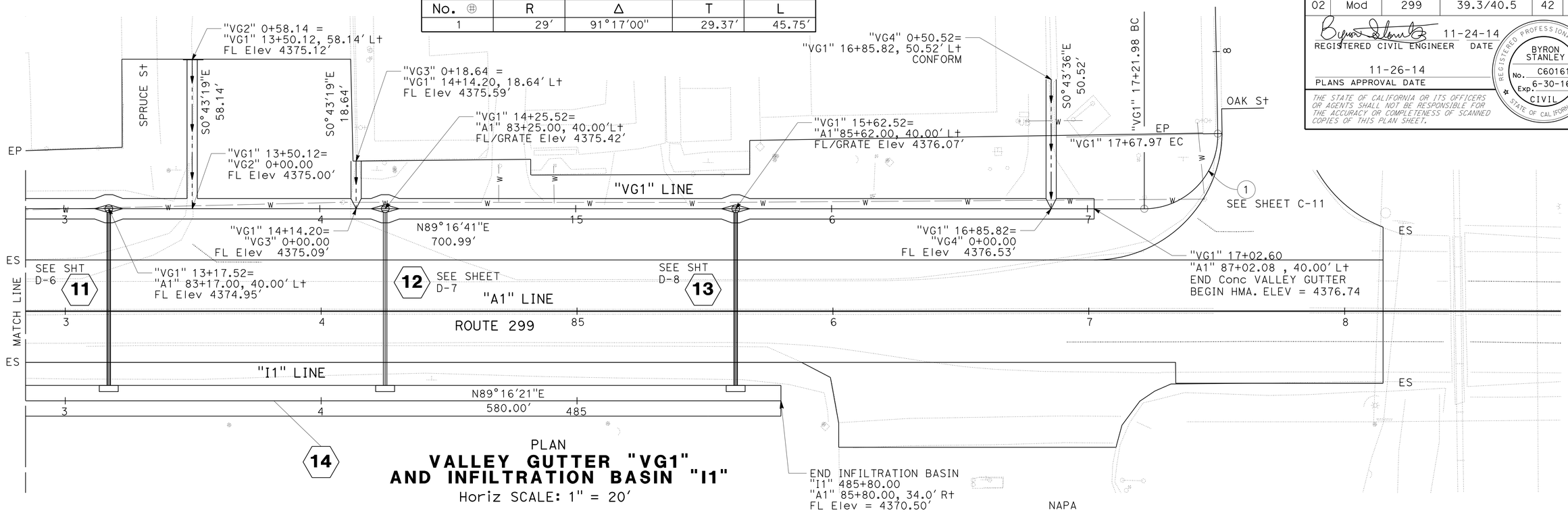

PLAN
VALLEY GUTTER "VG1" AND INFILTRATION BASIN "I1"
Horiz SCALE: 1" = 20′

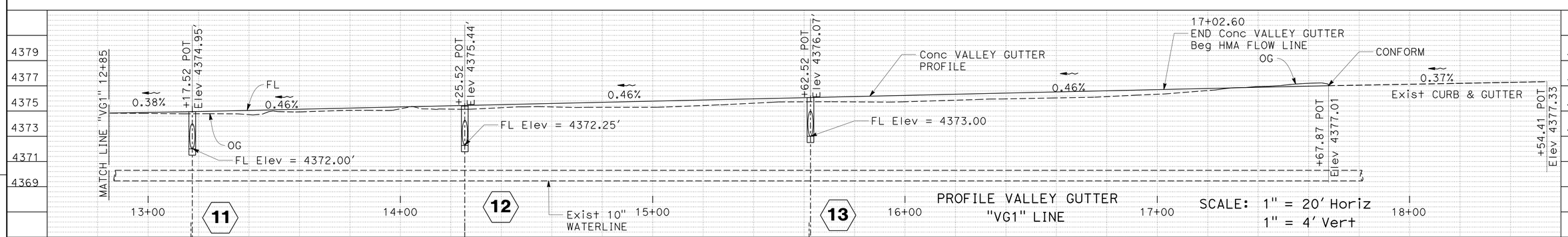

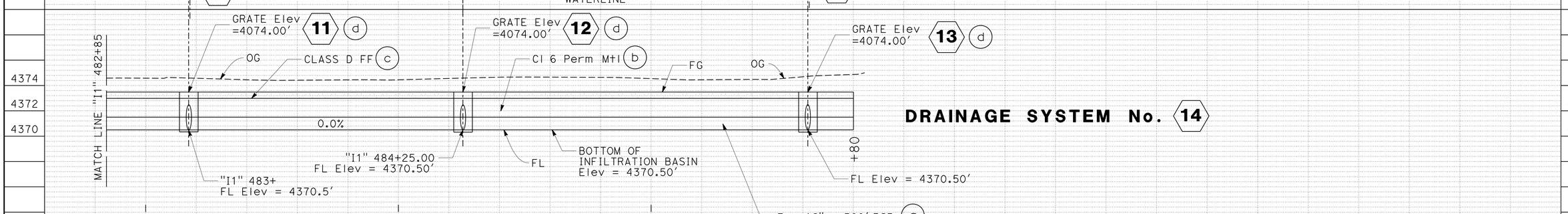

DRAINAGE SYSTEM No. 14

APPROVED FOR DRAINAGE WORK ONLY

DRAINAGE PLAN AND PROFILE

SCALE: AS SHOWN

D-10

REVISED BY | DATE REVISED
WILL LESLIE | BYRON STANLEY
CALCULATED-DESIGNED BY | CHECKED BY
FUNCTIONAL SUPERVISOR: STEVE TOPAL

STATE OF CALIFORNIA - DEPARTMENT OF TRANSPORTATION
Caltrans
DESIGN

P:\proj2\02\299711\plans\pse\229971ia010.dgn

LAST REVISION 11-24-14 | DATE PLOTTED => 01-DEC-2014 | TIME PLOTTED => 15:26

Dist	COUNTY	ROUTE	POST MILES TOTAL PROJECT	SHEET No.	TOTAL SHEETS
02	Mod	299	39.3/40.5	43	88

REGISTERED CIVIL ENGINEER 11-24-14 DATE

PLANS APPROVAL DATE 11-26-14

REGISTERED PROFESSIONAL ENGINEER BYRON STANLEY No. C60161 Exp. 6-30-16 CIVIL STATE OF CALIFORNIA

THE STATE OF CALIFORNIA OR ITS OFFICERS OR AGENTS SHALL NOT BE RESPONSIBLE FOR THE ACCURACY OR COMPLETENESS OF SCANNED COPIES OF THIS PLAN SHEET.

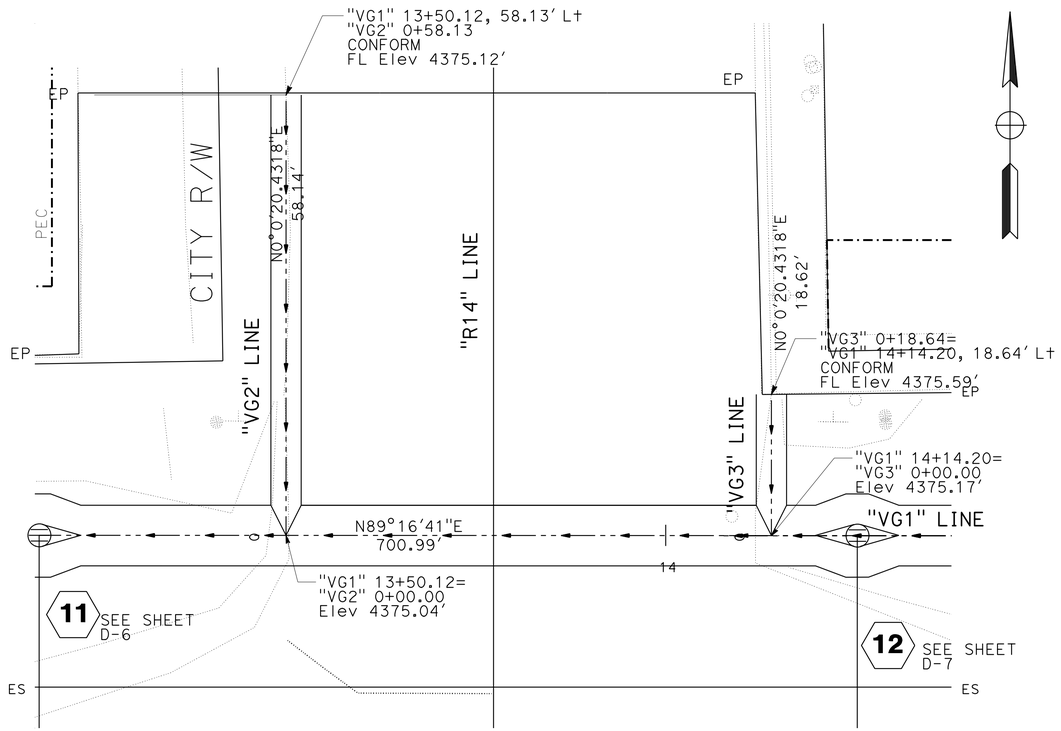

PLAN
Horiz SCALE: 1" = 10'

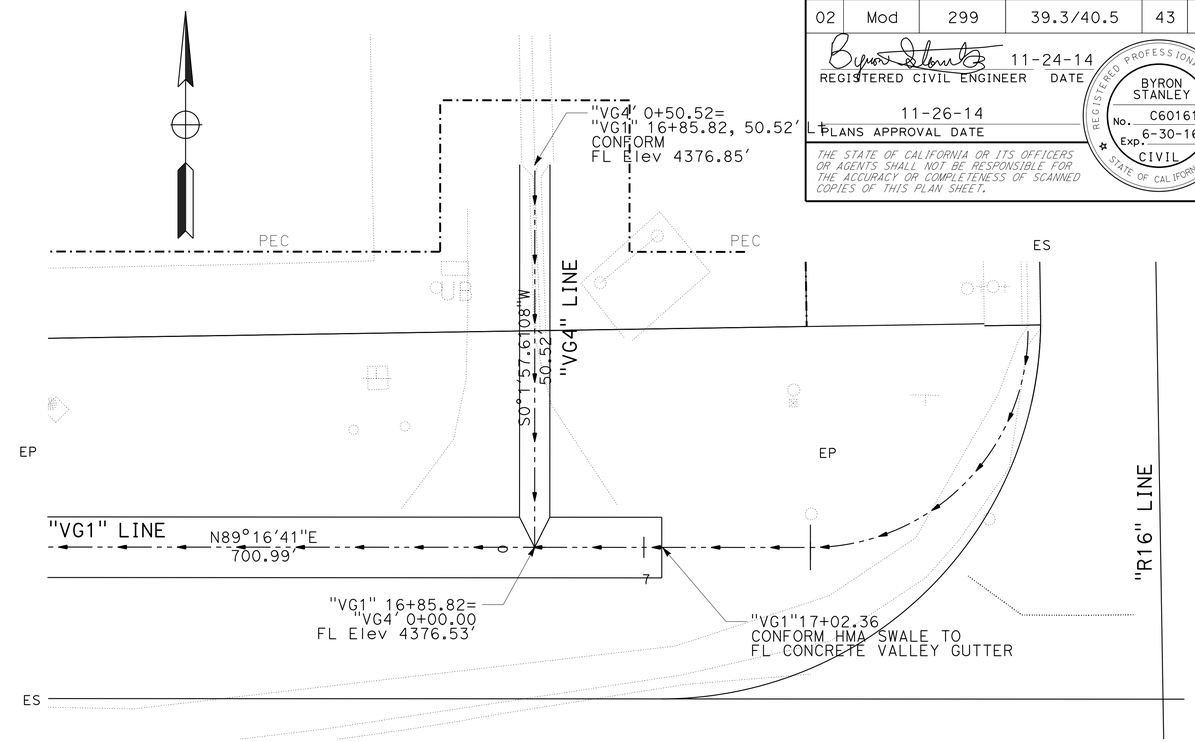

PLAN
Horiz SCALE: 1" = 10'

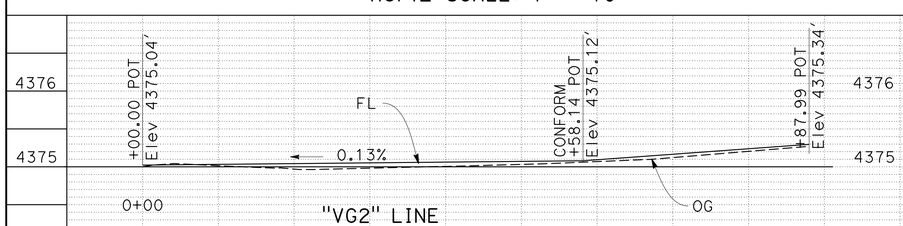

"VG2" LINE
PROFILE
SCALE: 1" = 10' Horiz
1" = 1' Vert

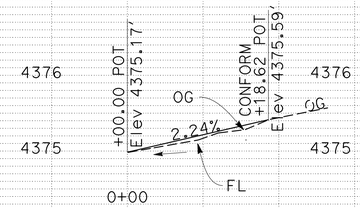

"VG3" LINE
PROFILE
SCALE: 1" = 10' Horiz
1" = 1' Vert

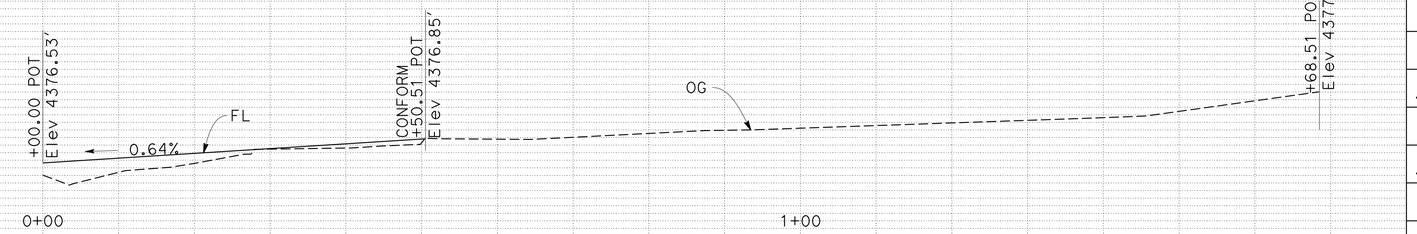

"VG4" LINE
PROFILE
SCALE: 1" = 10' Horiz
1" = 1' Vert

VALLEY GUTTERS "VG2", "VG3", AND "VG4"

NOTES:

1. FOR ACCURATE RIGHT OF WAY DATA, CONTACT RIGHT OF WAY ENGINEERING AT THE DISTRICT OFFICE.

DRAINAGE PLAN AND PROFILES

SCALE: AS SHOWN

D-11

REVISED BY | DATE REVISED
WILL LESLIE | BYRON STANLEY
CALCULATED-DESIGNED BY | CHECKED BY
FUNCTIONAL SUPERVISOR: STEVE TOPAL

STATE OF CALIFORNIA - DEPARTMENT OF TRANSPORTATION
Caltrans DESIGN

P:\proj2\02\29971_plans\pse\229971ia011.dgn

LAST REVISION DATE PLOTTED => 01-DEC-2014
11-24-14 TIME PLOTTED => 15:26

Dist	COUNTY	ROUTE	POST MILES TOTAL PROJECT	SHEET No.	TOTAL SHEETS
02	Mod	299	39.3/40.5	44	88

REGISTERED CIVIL ENGINEER 11-24-14 DATE

11-26-14
PLANS APPROVAL DATE

REGISTERED PROFESSIONAL ENGINEER BYRON STANLEY No. C60161 Exp. 6-30-16 CIVIL STATE OF CALIFORNIA

THE STATE OF CALIFORNIA OR ITS OFFICERS OR AGENTS SHALL NOT BE RESPONSIBLE FOR THE ACCURACY OR COMPLETENESS OF SCANNED COPIES OF THIS PLAN SHEET.

NOTES:

1. 9/16" x 1½" BOLTS WITH WASHERS AND NUTS @ 12" C-C.
2. HARDWARE TO BE STAINLESS STEEL.
3. GRATES ARE FOR OVERFLOW CONDITIONS.
4. RENFORCEMENT SHALL HAVE 0.2' CLEAR.

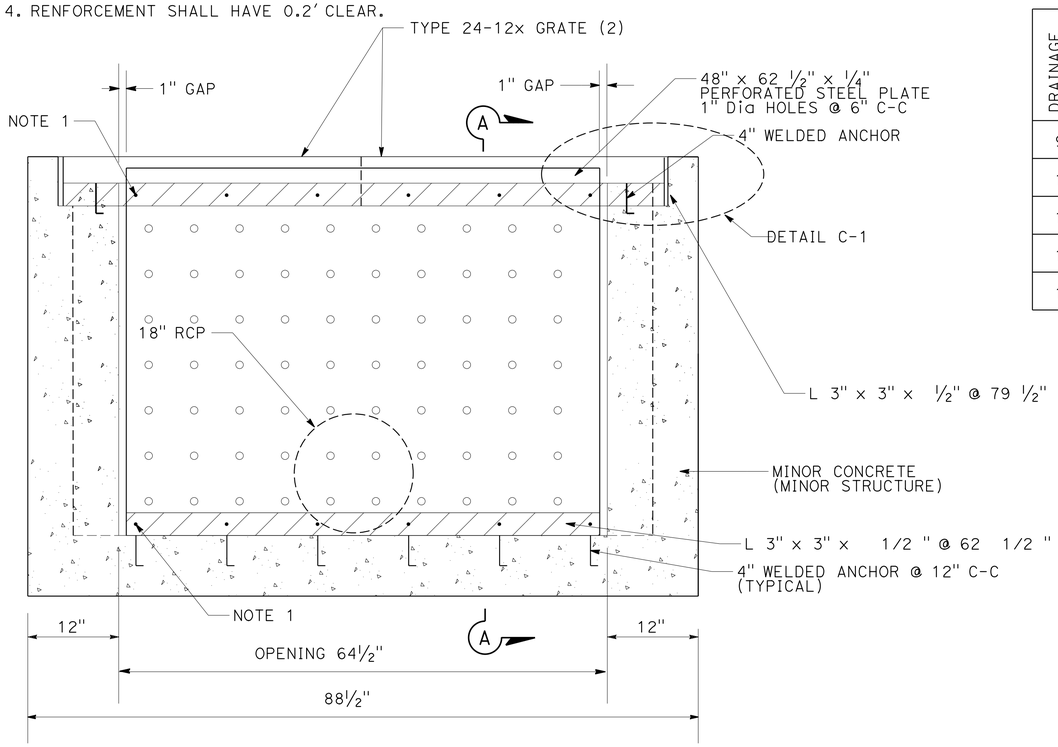

ELEVATION

DRAINAGE SYSTEM	H1"	H2"
9	36"	34"
10	42"	40"
11	42"	40"
12	42"	40"
13	42"	40"

TABLE 1

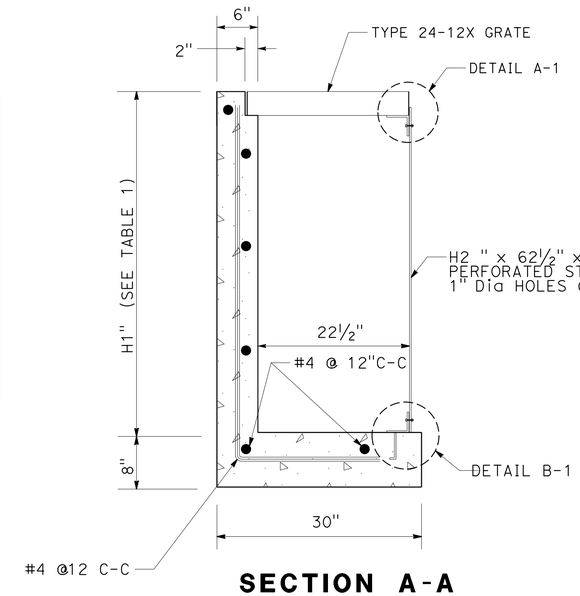

SECTION A-A

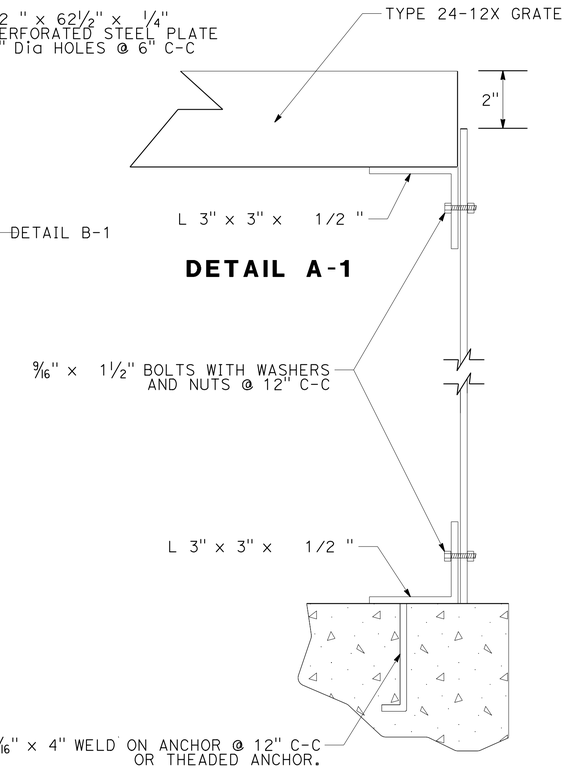

DETAIL A-1

DETAIL B-1

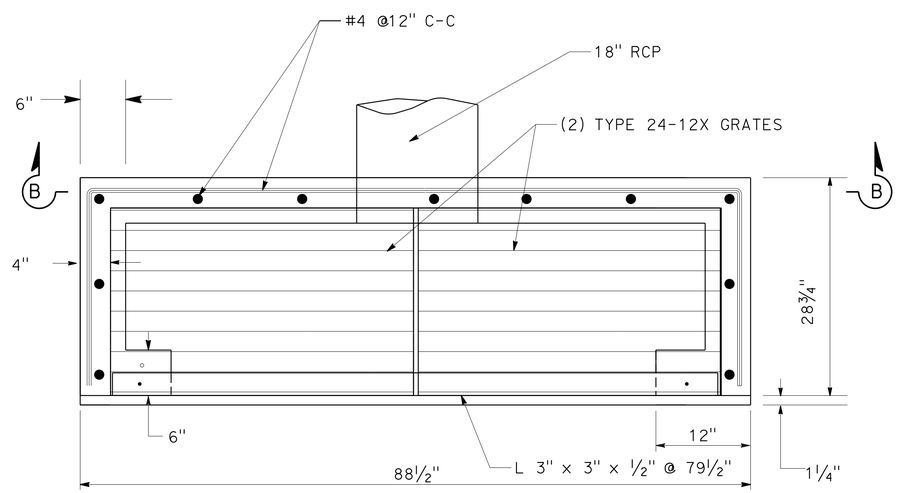

PLAN

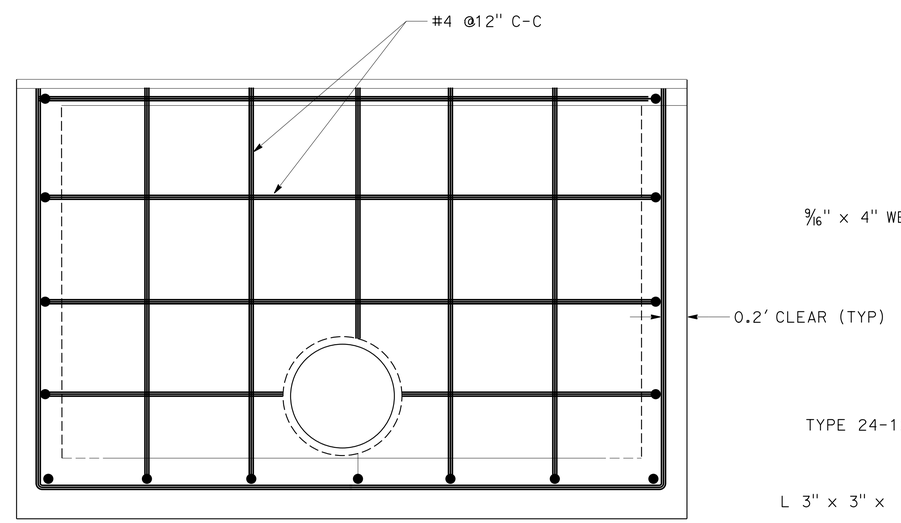

SECTION B-B

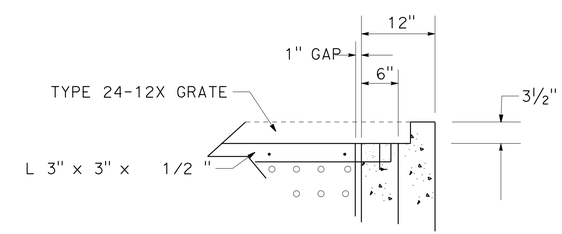

DETAIL C-1

INFILTRATION BASIN INLET STRUCTURE

9 10 11 12 13

DRAINAGE DETAILS

NO SCALE

DD-1

STATE OF CALIFORNIA - DEPARTMENT OF TRANSPORTATION
DESIGN
Caltrans
FUNCTIONAL SUPERVISOR: STEVE TOPAL
CALCULATED-DESIGNED BY: BYRON STANLEY
CHECKED BY: WILL LESLIE
REVISED BY
DATE REVISED
P:\proj2\02\29971_plans\pse\229971ic001.dgn

LAST REVISION 11-24-14 DATE PLOTTED => 01-DEC-2014 TIME PLOTTED => 15:26

Dist	COUNTY	ROUTE	POST MILES TOTAL PROJECT	SHEET No.	TOTAL SHEETS
02	Mod	299	39.3/40.5	45	88

REGISTERED CIVIL ENGINEER 11-24-14 DATE

PLANS APPROVAL DATE 11-26-14

REGISTERED PROFESSIONAL ENGINEER BYRON STANLEY No. C60161 Exp. 6-30-16 CIVIL STATE OF CALIFORNIA

THE STATE OF CALIFORNIA OR ITS OFFICERS OR AGENTS SHALL NOT BE RESPONSIBLE FOR THE ACCURACY OR COMPLETENESS OF SCANNED COPIES OF THIS PLAN SHEET.

NOTE:

1. UNDERGROUND UTILITIES NOT POSITIVELY LOCATED.
2. LEAVE A 5' GAP ON EACH SIDE OF INLET STRUCTURES ℄ FOR THIS PIPE ONLY. CAP BOTH ENDS.

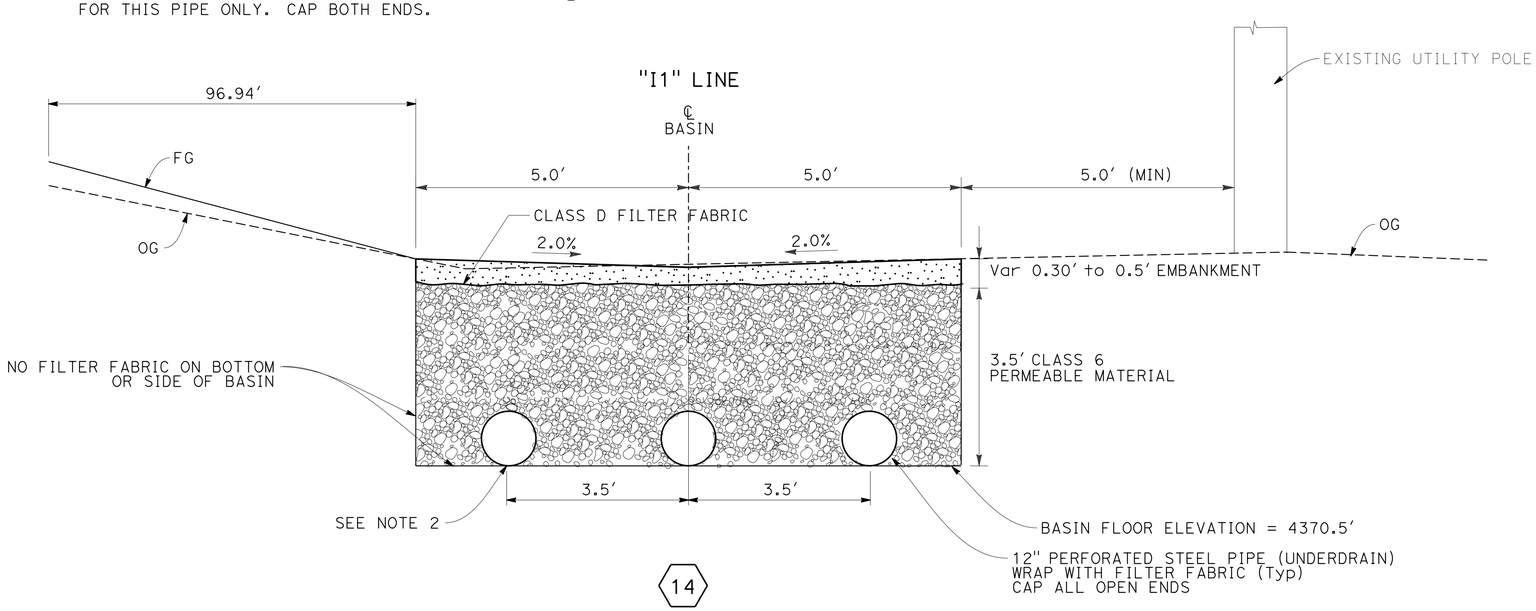

14

INFILTRATION BASIN TYPICAL SECTION

Sta "A1" 80+00.00 TO 85+80.00
Sta "I1" 480+00.00 TO 485+80.00

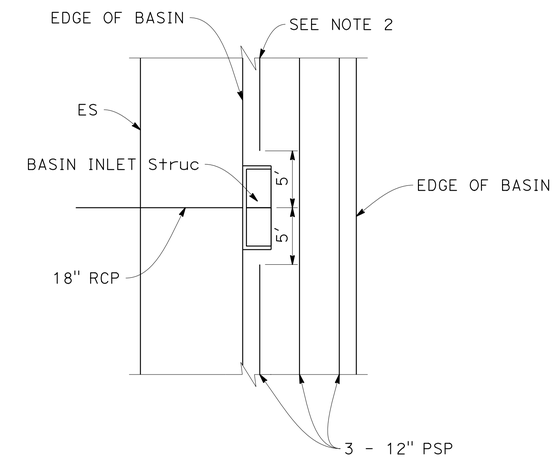

PLAN - NO SCALE

TYPICAL PIPE INSTALATION AT INLET STRUCTURES

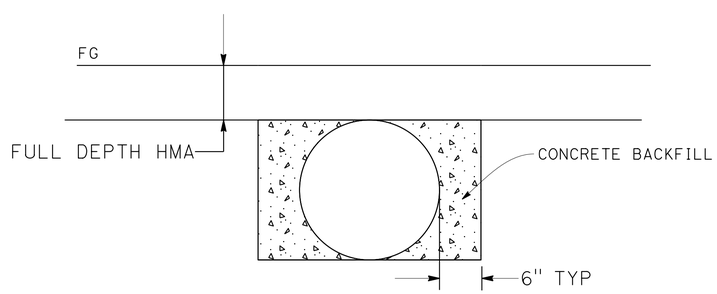

CONCRETE BACKFILL (PIPE TRENCH)

3

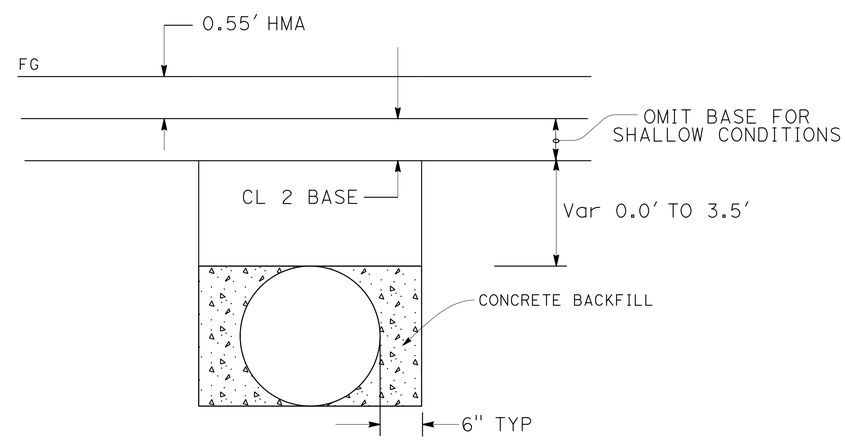

CONCRETE BACKFILL (PIPE TRENCH)

9 10 11 12 13

DRAINAGE DETAILS

NO SCALE

DD-2

STATE OF CALIFORNIA - DEPARTMENT OF TRANSPORTATION
Caltrans® DESIGN

FUNCTIONAL SUPERVISOR: STEVE TOPAL
CALCULATED-DESIGNED BY: BYRON STANLEY
CHECKED BY: WILL LESLIE
REVISED BY / DATE REVISED

P:\proj2\02\29971_plans\pse\2299711c002.dgn

LAST REVISION 11-24-14 | DATE PLOTTED => 01-DEC-2014 | TIME PLOTTED => 15:26

BORDER LAST REVISED 7/2/2010 | USERNAME => s123119 | DGN FILE => 2299711c002.dgn | RELATIVE BORDER SCALE IS IN INCHES 0 1 2 3 | UNIT 0319 | PROJECT NUMBER & PHASE 02-1200-0022-1 | EA: 02-299711

Dist	COUNTY	ROUTE	POST MILES TOTAL PROJECT	SHEET No.	TOTAL SHEETS
02	Mod	299	39.3/40.5	46	88

REGISTERED CIVIL ENGINEER 11-24-14 DATE

11-26-14
PLANS APPROVAL DATE

REGISTERED PROFESSIONAL ENGINEER BYRON STANLEY No. C60161 Exp. 6-30-16 CIVIL STATE OF CALIFORNIA

THE STATE OF CALIFORNIA OR ITS OFFICERS OR AGENTS SHALL NOT BE RESPONSIBLE FOR THE ACCURACY OR COMPLETENESS OF SCANNED COPIES OF THIS PLAN SHEET.

NOTE:

1. (N) - NOT A SEPARATE PAY ITEM, FOR INFORMATION ONLY
2. ALL JOINTS ARE STANDARDS

DRAINAGE QUANTITIES

SHEET No.	DRAINAGE SYSTEM No	DRAINAGE UNIT No.	REMOVE HEADWALL	REMOVE CULVERT	REMOVE INLET	12" REINFORCED CONCRETE PIPE (CLASS II)	18" REINFORCED CONCRETE PIPE (CLASS II)	24" REINFORCED CONCRETE PIPE (CLASS II)	12" PERFORATED STEEL PIPE UNDERDRAIN	36" PRECAST CONCRETE PIPE INLET	12" CONCRETE FLARED END SECTION	18" CONCRETE FLARED END SECTION	24" CONCRETE FLARED END SECTION	MINOR CONCRETE (MINOR STRUCTURE)	Misc IRON AND STEEL	HEIGHT OF INLET = "H" (N)	EMBANKMENT (N)	CONCRETE BACKFILL (PIPE TRENCH)	DITCH EXCAVATION	CLASS 6 PERMEABLE MATERIAL	CLASS D FILTER FABRIC	DESCRIPTION	STATION
			EA	LF	EA	LF	LF	LF	LF	LF	EA	EA	EA	CY	LB	LF	CY	CY	CY	CY	SQYD		
D-1	1	a											1										"A1" 53+58.4
		b						87.9														CROSS CULVERT	
		c		81.0																		Exist 18" x 81' CMP	
		d											1										
		e																	3			AT INLET AND OUTLET	
D-2	2	a											1										"A1" 57+27.6
		b		67.0																		Exist 18" x 67' CMP	
		c						71.7														CROSS CULVERT	
		d											1										
		e																	3			AT INLET AND OUTLET	
	3	a									1												"A1" 58+01.6 to 58+56.9
		b		58.0																		Exist 18" x 58' CMP	
		c				55.3																ROAD CONNECTION CULVERT	
		d															3.5						
		e									1												
D-3	4	a		84.0																		Exist 18" x 84' CMP	
		b									1												
		c				30.0																	
		d			1																	Exist GMP DRAINAGE INLET	
		e												0.86	326	2.6						G1 DI, GRATE TYPE 24-12X	"A1" 67+15.8, 34.0' Lt
		f				66.0																	
		g		64.0																		Exist 18" x 64' CMP	
		h												1.13	326	3.8						G1 DI, GRATE TYPE 24-12X	"A1"67+81.0, 34.0' Lt
		i				33.0																	
		j												1.04	326	3.4						G1 DI, GRATE TYPE 24-12X	"A1" 68+11.9, 52.5' Lt
		k		33.0																		Exist 18" x 33' CMP	
		l			1																	Exist G1 DRAINAGE INLET	
		m			1																	Exist DRAINAGE INLET	
		n		52.0																		Exist 18" x 52' CMP	
		o					64.0																
		p		96.0																		Exist 18" x 96' CMP	
		q				82.0																	
		r									1												
		s	1																			LENTH OF WALL = 7'	
		t										1											
SHEET TOTAL			1	535	3	266.3	64.0	159.6	0	0	4	1	4	3.03	978		0	3.5	6	0	0		

DRAINAGE QUANTITIES

DQ-1

REVISED BY | DATE REVISED
WILL LESLIE | BYRON STANLEY
CALCULATED-DESIGNED BY | CHECKED BY
FUNCTIONAL SUPERVISOR: STEVE TOPAL

STATE OF CALIFORNIA - DEPARTMENT OF TRANSPORTATION
Caltrans
DESIGN

P:\proj2\02\29971_plans\pse\229971id001.dgn

LAST REVISION 11-24-14 | DATE PLOTTED => 01-DEC-2014 | TIME PLOTTED => 15:26

Dist	COUNTY	ROUTE	POST MILES TOTAL PROJECT	SHEET No.	TOTAL SHEETS
02	Mod	299	39.3/40.5	47	88

REGISTERED CIVIL ENGINEER 11-24-14 DATE

PLANS APPROVAL DATE 11-26-14

REGISTERED PROFESSIONAL ENGINEER BYRON STANLEY No. C60161 Exp. 6-30-16 CIVIL STATE OF CALIFORNIA

THE STATE OF CALIFORNIA OR ITS OFFICERS OR AGENTS SHALL NOT BE RESPONSIBLE FOR THE ACCURACY OR COMPLETENESS OF SCANNED COPIES OF THIS PLAN SHEET.

NOTE:

1. (N) - NOT A SEPARATE PAY ITEM, FOR INFORMATION ONLY
2. ALL JOINTS ARE STANDARDS

DRAINAGE QUANTITIES

SHEET No.	DRAINAGE SYSTEM No	DRAINAGE UNIT No.	REMOVE HEADWALL EA	REMOVE CULVERT LF	REMOVE INLET EA	12" REINFORCED CONCRETE PIPE (CLASS II) LF	18" REINFORCED CONCRETE PIPE (CLASS II) LF	24" REINFORCED CONCRETE PIPE (CLASS II) LF	12" PERFORATED STEEL PIPE UNDERDRAIN LF	36" PRECAST CONCRETE PIPE INLET LF	12" CONCRETE FLARED END SECTION EA	18" CONCRETE FLARED END SECTION EA	24" CONCRETE FLARED END SECTION EA	MINOR CONCRETE (MINOR STRUCTURE) CY	Misc IRON AND STEEL LB	EMBANKMENT (N) CY	"H" HEIGHT OF INLET (N) LF	CONCRETE BACKFILL (PIPE TRENCH) CY	DITCH EXCAVATION CY	CLASS 6 PERMEABLE MATERIAL CY	CLASS D FILTER FABRIC SQYD	DESCRIPTION	STATION
D-4	5	a										1											"A1" 71+15.8
		b					66.7															CROSS CULVERT	
		c										1											
		d																6.0					
	6	a									1												"A1" 71+45.2 to 71+93.2
		b				48.8																DRIVEWAY CULVERT	
		c									1												
		d	1																			LENTH OF WALL = 3.5′	
		e		30.4																		18" x 30.4′ CMP	
		f	1																			LENTH OF WALL = 3.5′	
		g																3.0					
D-5	7	a									1												"A1" 73+13.9 to 73+55.9
		b				53.5																DRIVEWAY CULVERT	
		c									1												
		d		30.2																		Exist 12" x 30.2′ CMP	
		e																3.2					
	8	a									1												"A1" 73+88.8 to 74+34.8
		b				60.0																DRIVEWAY CULVERT	
		c									1												
		d		59.0																		Exist 12" x 59.0′ CMP	
		e																3.6					
D-6	9	a								3.0				0.36	215		2.5					(TYPE GCP) GRATE 36RX	"A1" 80+27.0
		b			1																	Exist DRAINAGE INLET	
		c					67.5															CROSS CULVERT	
		d		53.5																		Exist 18" x 53.5′ CMP	
		e																6.0					
		f	1																			LENTH OF WALL = 4.0′	
		g												0.82	785		3.0					INFILTRATION BASIN INLET Str	
	10	a								3.3				0.36	215		2.8					(TYPE GCP) GRATE 36RX	"A1" 82+20.0
		b					67.5															CROSS CULVERT	
		c																6.0					
		d												0.82	785		3.5					INFILTRATION BASIN INLET Str	
SHEET TOTAL			3	173.1	1	162.3	201.7	0	0	6.3	6	2	0	2.36	2000	0		27.8	0	0	0		

DRAINAGE QUANTITIES

DQ-2

REVISED BY | DATE REVISED

BYRON STANLEY | WILL LESLIE

CALCULATED-DESIGNED BY | CHECKED BY

FUNCTIONAL SUPERVISOR: STEVE TOPAL

STATE OF CALIFORNIA - DEPARTMENT OF TRANSPORTATION

Caltrans® DESIGN

P:\proj2\02\29971_plans\pse\2299711d002.dgn

LAST REVISION 11-24-14 | DATE PLOTTED => 01-DEC-2014 | TIME PLOTTED => 15:26

Dist	COUNTY	ROUTE	POST MILES TOTAL PROJECT	SHEET No.	TOTAL SHEETS
02	Mod	299	39.3/40.5	48	88

REGISTERED CIVIL ENGINEER 11-24-14 DATE

11-26-14
PLANS APPROVAL DATE

REGISTERED PROFESSIONAL ENGINEER BYRON STANLEY No. C60161 Exp. 6-30-16 CIVIL STATE OF CALIFORNIA

THE STATE OF CALIFORNIA OR ITS OFFICERS OR AGENTS SHALL NOT BE RESPONSIBLE FOR THE ACCURACY OR COMPLETENESS OF SCANNED COPIES OF THIS PLAN SHEET.

NOTE:

1. (N) - NOT A SEPARATE PAY ITEM, FOR INFORMATION ONLY
2. SEE SHEET Q-1 FOR MINOR CONCRETE (MISC. CONSTRUCTION) TABLE FOR VALLEY GUTTER QUANTITIES.
3. ALL JOINTS ARE STANDARDS

DRAINAGE QUANTITIES

SHEET No.	DRAINAGE SYSTEM No	DRAINAGE UNIT No.	REMOVE HEADWALL	REMOVE CULVERT	REMOVE INLET	12" REINFORCED CONCRETE PIPE (CLASS II)	18" REINFORCED CONCRETE PIPE (CLASS II)	24" REINFORCED CONCRETE PIPE (CLASS II)	12" PERFORATED STEEL PIPE UNDERDRAIN	36" PRECAST CONCRETE PIPE INLET	12" CONCRETE FLARED END SECTION	18" CONCRETE FLARED END SECTION	24" CONCRETE FLARED END SECTION	MINOR CONCRETE (MINOR STRUCTURE)	Misc IRON AND STEEL	"H" HEIGHT OF INLET (N)	EMBANKMENT (N)	CONCRETE BACKFILL (PIPE TRENCH)	DITCH EXCAVATION	CLASS 6 PERMEABLE MATERIAL	CLASS D FILTER FABRIC	DESCRIPTION	STATION
			EA	LF	EA	LF	LF	LF	LF	LF	EA	EA	EA	CY	LB	LF	CY	CY	CY	CY	SQYD		
D-7		a								3.5				0.36	215							(TYPE GCP) GRATE 36RX	"A1" 83+17.0
		b					67.5															CROSS CULVERT	
		c																6					
		d												0.82	785							INFILTRATION BASIN INLET Str	
	12	a								3.7				0.36	215	3.2						(TYPE GCP) GRATE 36RX	"A1" 84+25.0
		b					67.5															CROSS CULVERT	
		c																6					
		d												0.82	785	3.5						INFILTRATION BASIN INLET Str	
D-8	13	a								3.6				0.36	215	3.1						(TYPE GCP) GRATE 36RX	"A1" 85+62.0
		b					67.5															CROSS CULVERT	
		c																6					
		d												0.82	785	3.5						INFILTRATION BASIN INLET Str	
D-9 & 10	14	a							1690													INFILTRATION BASIN	"I1" 480+00 TO
		b															86		837	750			"I1" 485+80
		c																			2412		
SHEET TOTAL			0	0	0	0	202.5	0	1690	10.8	0	0	0	3.54	3000		86	18.0	0	750	2412		
SHEET DQ-1 TOTAL			1	535.0	3	266.3	64.0	159.6	0	0	4	1	4	3.03	978		0	3.5	6	0	0		
SHEET DQ-2 TOTAL			3	173.1	1	162.3	201.7	0	0	6.3	6	2	0	2.36	2000		0	27.8	4	0	0		
GRAND TOTAL			4	708.1	4	428.6	468.2	159.6	1690	17.1	10	3	4	8.93	5978		86	49.3	847	750	2412		

DRAINAGE QUANTITIES

DQ-3

REVISED BY | DATE REVISED

BYRON STANLEY | WILL LESLIE

CALCULATED-DESIGNED BY | CHECKED BY

FUNCTIONAL SUPERVISOR: STEVE TOPAL

STATE OF CALIFORNIA - DEPARTMENT OF TRANSPORTATION

Caltrans DESIGN

P:\proj2\02\29971_plans\pse\229971id003.dgn

LAST REVISION 11-24-14 | DATE PLOTTED => 01-DEC-2014 | TIME PLOTTED => 15:26

Dist	COUNTY	ROUTE	POST MILES TOTAL PROJECT	SHEET No.	TOTAL SHEETS
02	Mod	299	39.3/40.5	49	88

11-24-14
REGISTERED CIVIL ENGINEER DATE

11-26-14
PLANS APPROVAL DATE

REGISTERED PROFESSIONAL ENGINEER
BYRON STANLEY
No. C60161
Exp. 6-30-16
CIVIL
STATE OF CALIFORNIA

THE STATE OF CALIFORNIA OR ITS OFFICERS OR AGENTS SHALL NOT BE RESPONSIBLE FOR THE ACCURACY OR COMPLETENESS OF SCANNED COPIES OF THIS PLAN SHEET.

NOTES:

1. EXACT SIGN LOCATIONS TO BE DETERMINED BY THE ENGINEER.
2. SIGNS SHOWN WITH (CA) INDICATE CALIFORNIA SIGN CODES, OTHERWISE FEDERAL SIGN CODES ARE SHOWN.

ROAD CONNECTIONS*

ROAD NAME	SHEET	STATION	PM
NORTH WARNER St	L-1	49+17, Lt	39.74
SOUTH WARNER St	L-1	49+17, Rt	39.74
THOMASON Ln	L-2	58+27, Lt	39.92
WEST C St	L-5	75+31, Rt	40.26
JUNIPER St	L-5	76+14, Lt	40.28
SPRUCE St	L-7	83+77, Lt	40.40
OAK St	L-7	87+68, Lt	40.48

* ROAD CONNECTIONS REQUIRING TYPE (B) & (C) CONSTRUCTION AREA SIGNS

CONSTRUCTION AREA SIGNS (STATIONARY MOUNTED)

TYPE	CODE	PANEL SIZE	SIGN MESSAGE	NUMBER AND SIZE OF POSTS	No. OF SIGNS	REMARKS
(A)	W20-1	48" x 48"	ROAD WORK AHEAD	1-4" X 6"	2	
	C23B(CA)	48" x 12"	HIGHWAY WIDENING			
(B)	W20-1	36" x 36"	ROAD WORK AHEAD	1-4" X 6"	7	SEE ROAD CONNECTIONS TABLE
(C)	G20-2	36" x 18"	END ROAD WORK	1-4" X 4"	9	SEE ROAD CONNECTIONS TABLE

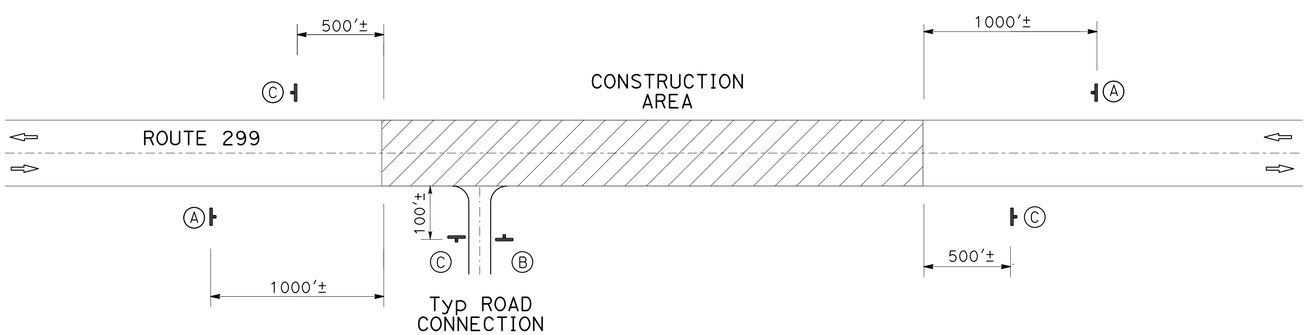

CONSTRUCTION AREA SIGNS

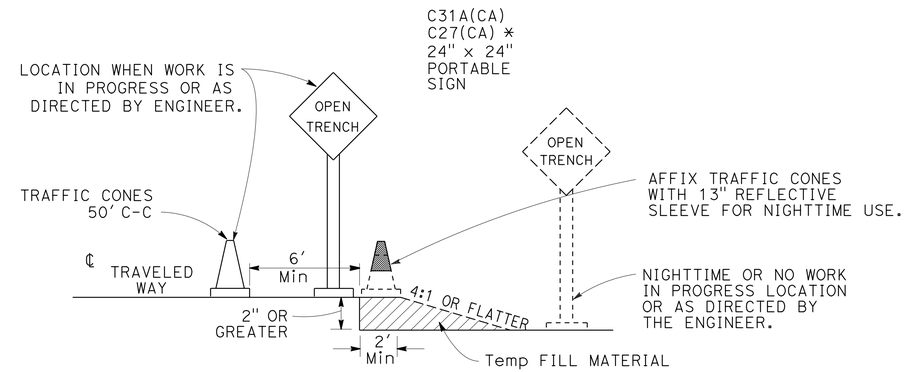

OPEN TRENCH SIGNING AND MARKING

* PLACE AT 250' INTERVALS THROUGH THE OPEN TRENCH AREA-ALTERNATE C27(CA) (OPEN TRENCH) AND C31A(CA) (NO SHOULDER) SIGNS

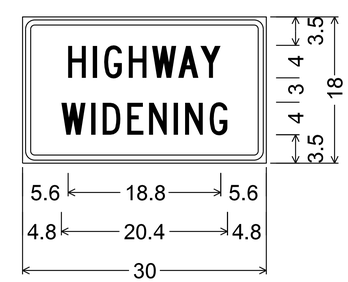

1.5" Radius, 0.6" Border, 0.4" Indent, Black on Orange;
[HIGHWAY] C;
[WIDENING] C;

C23B(CA) SIGN PANEL DETAIL

(ALL DIMENSIONS ARE IN INCHES)

CONSTRUCTION AREA SIGNS

NO SCALE

CS-1

REVISED BY | DATE REVISED
WILL LESLIE | BYRON STANLEY
CALCULATED-DESIGNED BY | CHECKED BY
FUNCTIONAL SUPERVISOR: STEVE TOPAL
STATE OF CALIFORNIA - DEPARTMENT OF TRANSPORTATION
Caltrans
DESIGN
P:\proj2\02\299711_plans\pse\2299711a001.dgn

LAST REVISION 11-24-14 | DATE PLOTTED => 01-DEC-2014 | TIME PLOTTED => 15:26

Dist	COUNTY	ROUTE	POST MILES TOTAL PROJECT	SHEET No.	TOTAL SHEETS
02	Mod	299	39.3/40.5	50	88

REGISTERED CIVIL ENGINEER 11-24-14 DATE

PLANS APPROVAL DATE 11-26-14

REGISTERED PROFESSIONAL ENGINEER BYRON STANLEY No. C60161 Exp. 6-30-16 CIVIL STATE OF CALIFORNIA

THE STATE OF CALIFORNIA OR ITS OFFICERS OR AGENTS SHALL NOT BE RESPONSIBLE FOR THE ACCURACY OR COMPLETENESS OF SCANNED COPIES OF THIS PLAN SHEET.

LEGEND:

- SINGLE STRIPE MARKER
- STRIPE CHANGE LOCATION
- DELINEATOR (TYPE F)
- DELINEATOR (TYPE E)
- DELINEATOR (TYPE G)
- OBJECT MARKER
- MARKER (CULVERT)
- MILEPOST MARKER
- EXISTING SIGN TO REMAIN
- RESET ROADSIDE SIGN
- REMOVE ROADSIDE SIGN
- ROADSIDE SIGN
- PAVEMENT DELINEATION STRIPE DETAIL No.

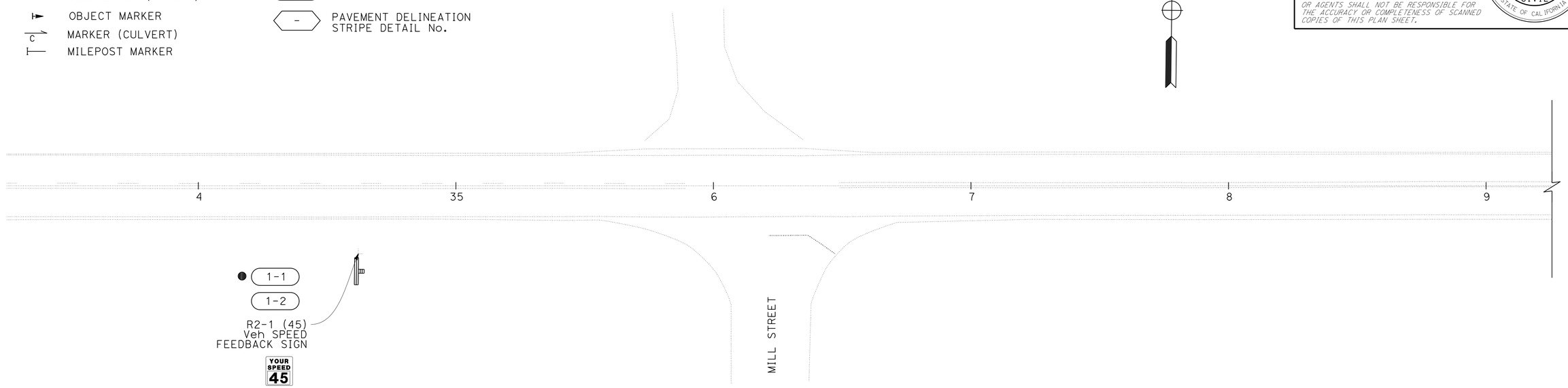

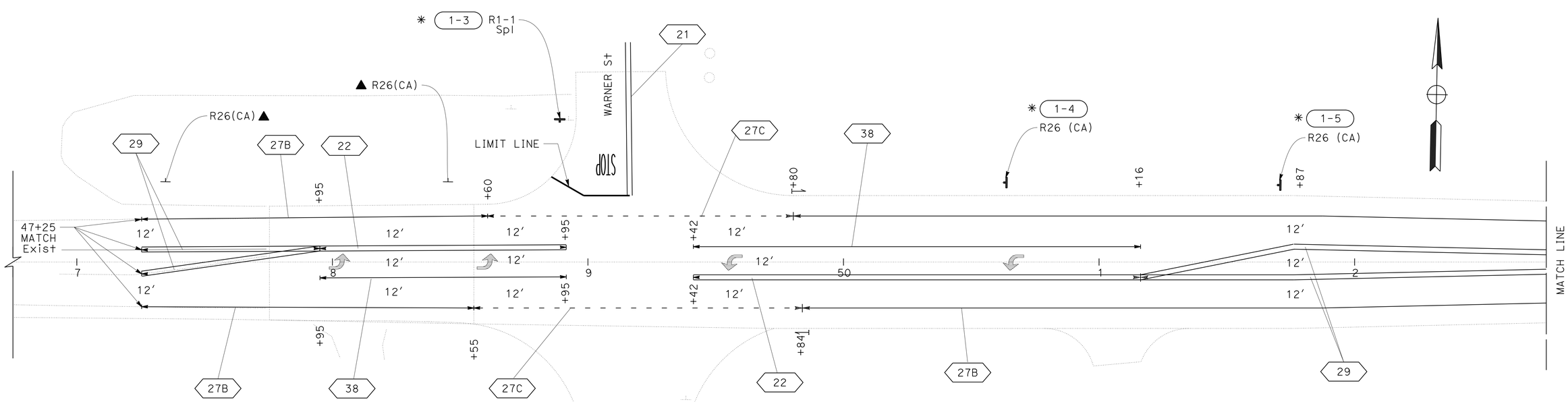

PAVEMENT DELINEATION AND SIGN PLAN

SCALE: 1" = 20′ **PD-1**

APPROVED FOR PAVEMENT DELINEATION AND SIGN WORK ONLY

REVISED BY	DATE REVISED

CALCULATED-DESIGNED BY	CHECKED BY
WILL LESLIE	FRANK RIVAS

FUNCTIONAL SUPERVISOR: STEVE TOPAL

STATE OF CALIFORNIA - DEPARTMENT OF TRANSPORTATION

Caltrans® **DESIGN**

P:\proj2\02\29971_plans\pse\229971na001.dgn

LAST REVISION 11-24-14 | DATE PLOTTED => 01-DEC-2014 | TIME PLOTTED => 15:26

Dist	COUNTY	ROUTE	POST MILES TOTAL PROJECT	SHEET No.	TOTAL SHEETS
02	Mod	299	39.3/40.5	51	88

11-24-14
REGISTERED CIVIL ENGINEER DATE

11-26-14
PLANS APPROVAL DATE

REGISTERED PROFESSIONAL ENGINEER
BYRON STANLEY
No. C60161
Exp. 6-30-16
CIVIL
STATE OF CALIFORNIA

THE STATE OF CALIFORNIA OR ITS OFFICERS OR AGENTS SHALL NOT BE RESPONSIBLE FOR THE ACCURACY OR COMPLETENESS OF SCANNED COPIES OF THIS PLAN SHEET.

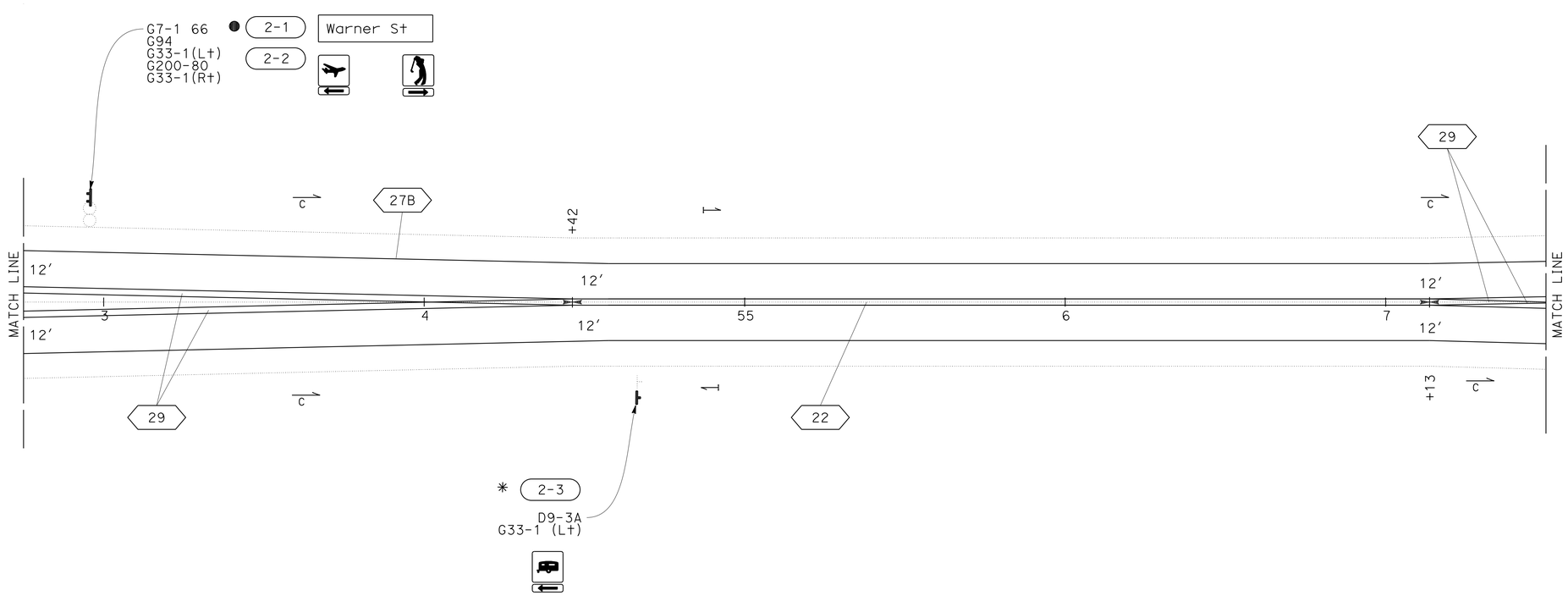

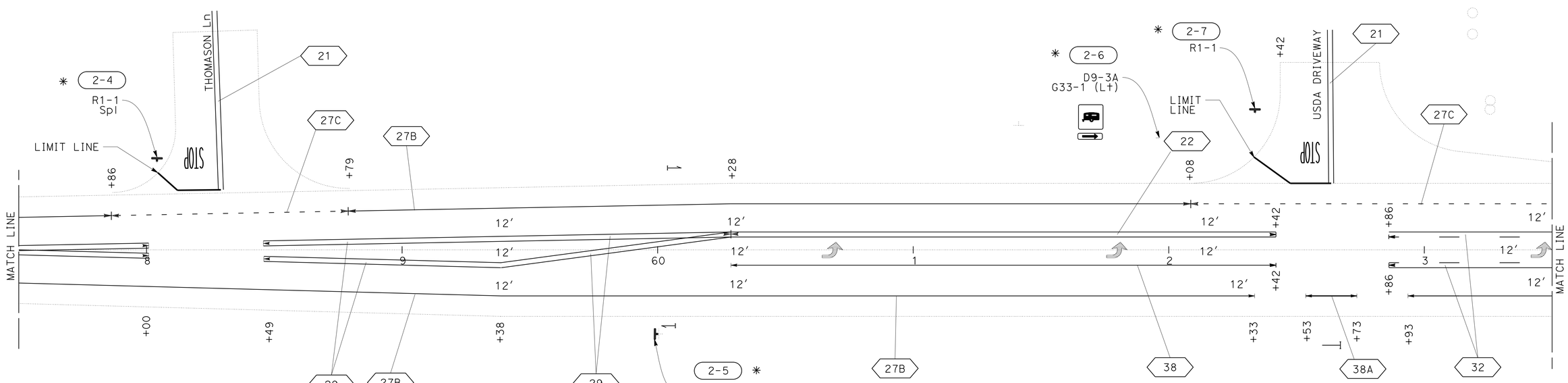

PAVEMENT DELINEATION AND SIGN PLAN

SCALE: 1" = 20'

PD-2

APPROVED FOR PAVEMENT DELINEATION AND SIGN WORK ONLY

REVISED BY	DATE REVISED
WILL LESLIE	FRANK RIVAS

CALCULATED-DESIGNED BY / CHECKED BY

FUNCTIONAL SUPERVISOR: STEVE TOPAL

STATE OF CALIFORNIA - DEPARTMENT OF TRANSPORTATION

Caltrans® DESIGN

P:\proj2\02\299711_plans\pse\229971na002.dgn

LAST REVISION 11-24-14 | DATE PLOTTED => 01-DEC-2014 | TIME PLOTTED => 15:27

Dist	COUNTY	ROUTE	POST MILES TOTAL PROJECT	SHEET No.	TOTAL SHEETS
02	Mod	299	39.3/40.5	52	88

11-24-14
REGISTERED CIVIL ENGINEER DATE

11-26-14
PLANS APPROVAL DATE

REGISTERED PROFESSIONAL ENGINEER
BYRON STANLEY
No. C60161
Exp. 6-30-16
CIVIL
STATE OF CALIFORNIA

THE STATE OF CALIFORNIA OR ITS OFFICERS OR AGENTS SHALL NOT BE RESPONSIBLE FOR THE ACCURACY OR COMPLETENESS OF SCANNED COPIES OF THIS PLAN SHEET.

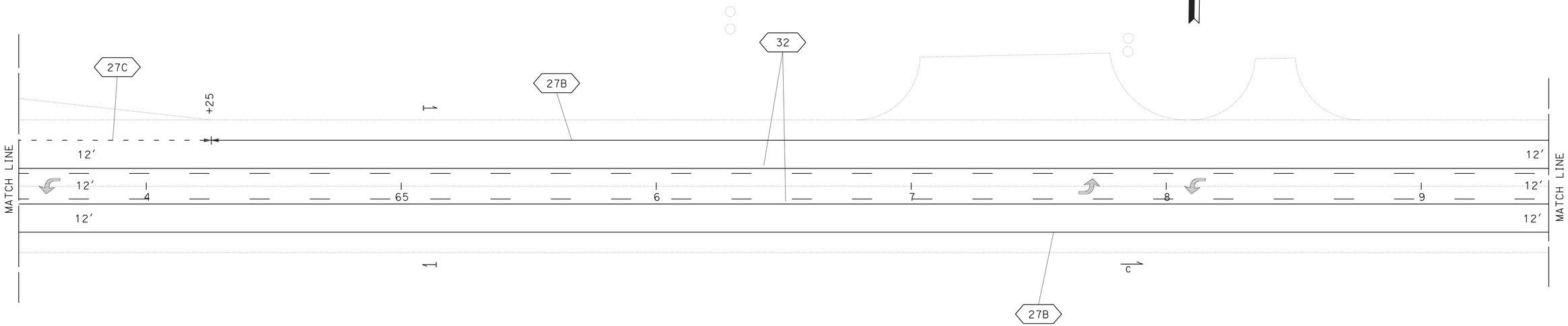

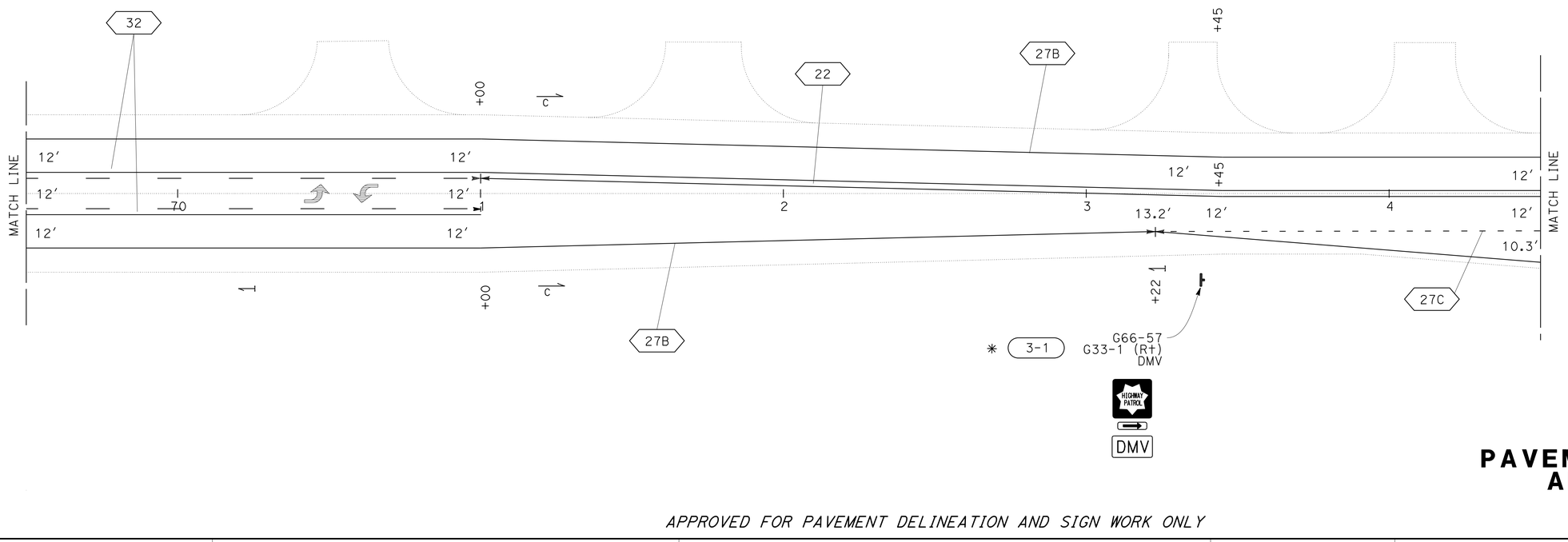

PAVEMENT DELINEATION AND SIGN PLAN

SCALE: 1" = 20′ **PD-3**

APPROVED FOR PAVEMENT DELINEATION AND SIGN WORK ONLY

REVISED BY	DATE REVISED
WILL LESLIE	FRANK RIVAS
CALCULATED-DESIGNED BY	CHECKED BY
FUNCTIONAL SUPERVISOR	STEVE TOPAL

STATE OF CALIFORNIA - DEPARTMENT OF TRANSPORTATION
Caltrans
DESIGN

P:\proj2\02\299711_plans\pse\229971na003.dgn

LAST REVISION 11-24-14 | DATE PLOTTED => 01-DEC-2014 | TIME PLOTTED => 15:27

Dist	COUNTY	ROUTE	POST MILES TOTAL PROJECT	SHEET No.	TOTAL SHEETS
02	Mod	299	39.3/40.5	53	88

11-24-14
REGISTERED CIVIL ENGINEER DATE

11-26-14
PLANS APPROVAL DATE

REGISTERED PROFESSIONAL ENGINEER
BYRON STANLEY
No. C60161
Exp. 6-30-16
CIVIL
STATE OF CALIFORNIA

THE STATE OF CALIFORNIA OR ITS OFFICERS OR AGENTS SHALL NOT BE RESPONSIBLE FOR THE ACCURACY OR COMPLETENESS OF SCANNED COPIES OF THIS PLAN SHEET.

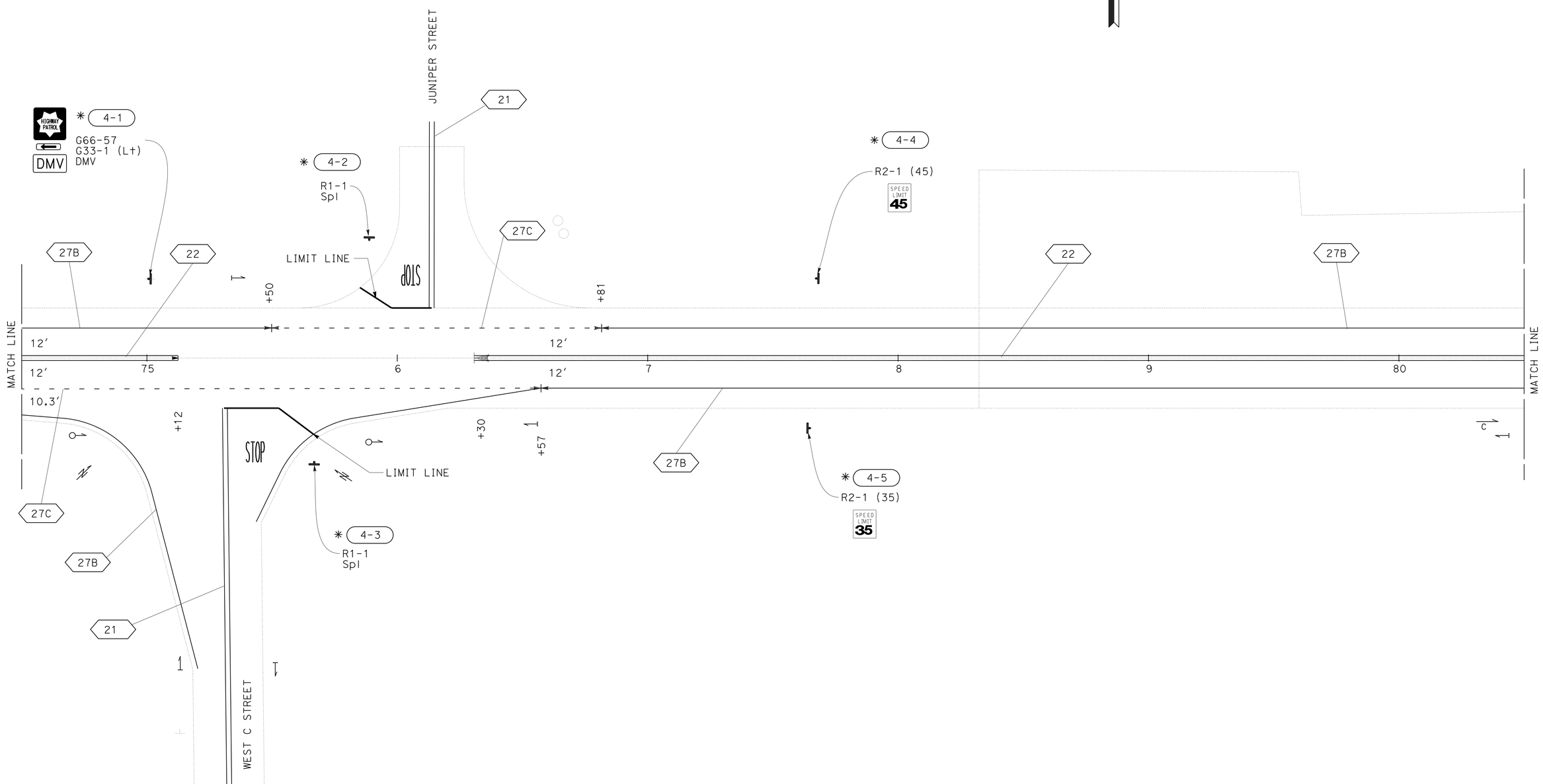

PAVEMENT DELINEATION AND SIGN PLAN

SCALE: 1" = 20′ **PD-4**

APPROVED FOR PAVEMENT DELINEATION AND SIGN WORK ONLY

REVISED BY	DATE REVISED

CALCULATED-DESIGNED BY	WILL LESLIE
CHECKED BY	FRANK RIVAS
FUNCTIONAL SUPERVISOR	STEVE TOPAL

STATE OF CALIFORNIA - DEPARTMENT OF TRANSPORTATION
Caltrans
DESIGN

P:\proj2\02\29971_plans\pse\229971na004.dgn

LAST REVISION 11-24-14
DATE PLOTTED => 01-DEC-2014
TIME PLOTTED => 15:27

Dist	COUNTY	ROUTE	POST MILES TOTAL PROJECT	SHEET No.	TOTAL SHEETS
02	Mod	299	39.3/40.5	54	88

11-24-14
REGISTERED CIVIL ENGINEER DATE

11-26-14
PLANS APPROVAL DATE

REGISTERED PROFESSIONAL ENGINEER
BYRON STANLEY
No. C60161
Exp. 6-30-16
CIVIL
STATE OF CALIFORNIA

THE STATE OF CALIFORNIA OR ITS OFFICERS OR AGENTS SHALL NOT BE RESPONSIBLE FOR THE ACCURACY OR COMPLETENESS OF SCANNED COPIES OF THIS PLAN SHEET.

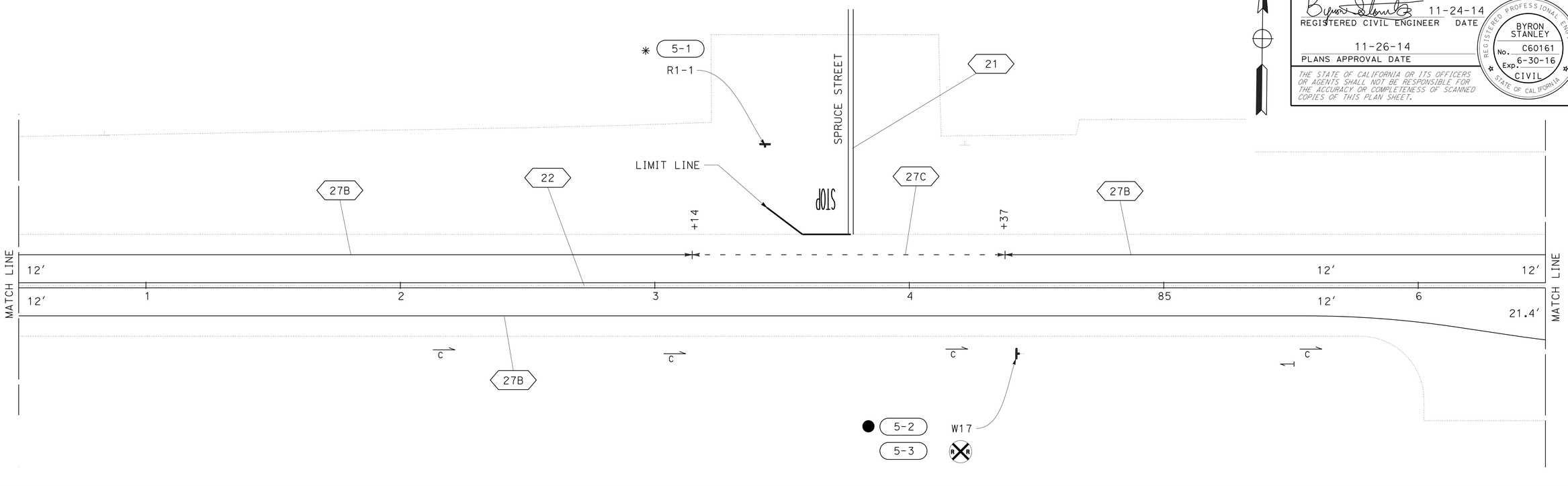

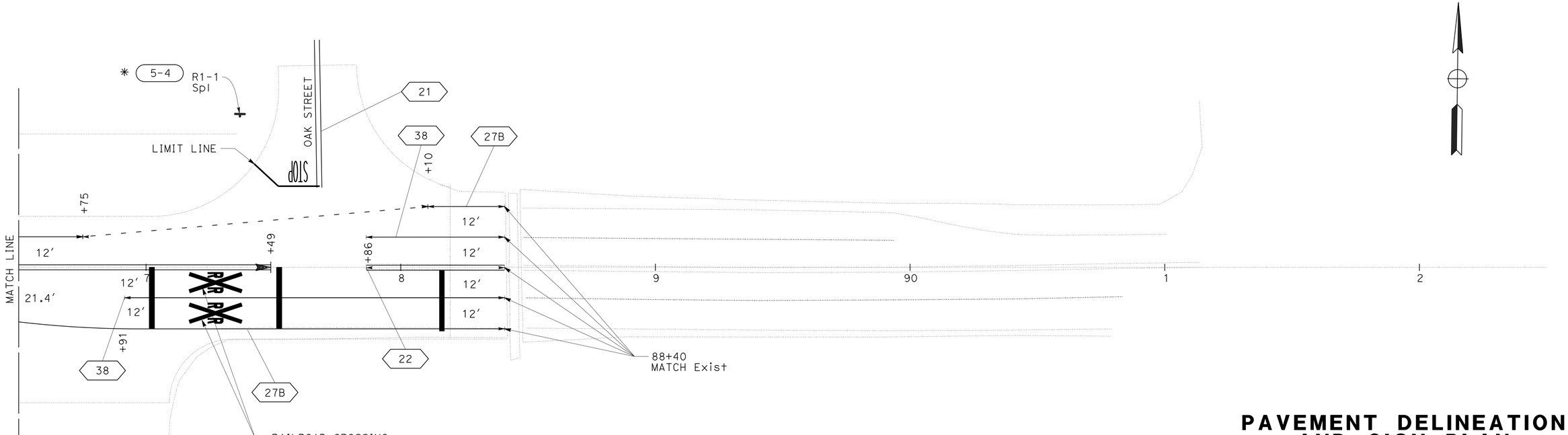

PAVEMENT DELINEATION AND SIGN PLAN

SCALE: 1" = 20′ **PD-5**

APPROVED FOR PAVEMENT DELINEATION AND SIGN WORK ONLY

REVISED BY	DATE REVISED

CALCULATED-DESIGNED BY: WILL LESLIE
CHECKED BY: FRANK RIVAS
FUNCTIONAL SUPERVISOR: STEVE TOPAL

STATE OF CALIFORNIA - DEPARTMENT OF TRANSPORTATION
Caltrans® **DESIGN**

P:\proj2\02\299711_plans\pse\229971na005.dgn

LAST REVISION 11-24-14 | DATE PLOTTED => 01-DEC-2014 | TIME PLOTTED => 15:27

Dist	COUNTY	ROUTE	POST MILES TOTAL PROJECT	SHEET No.	TOTAL SHEETS
02	Mod	299	39.3/40.5	55	88

11-24-14
REGISTERED CIVIL ENGINEER DATE

11-26-14
PLANS APPROVAL DATE

REGISTERED PROFESSIONAL ENGINEER
BYRON STANLEY
No. C60161
Exp. 6-30-16
CIVIL
STATE OF CALIFORNIA

THE STATE OF CALIFORNIA OR ITS OFFICERS OR AGENTS SHALL NOT BE RESPONSIBLE FOR THE ACCURACY OR COMPLETENESS OF SCANNED COPIES OF THIS PLAN SHEET.

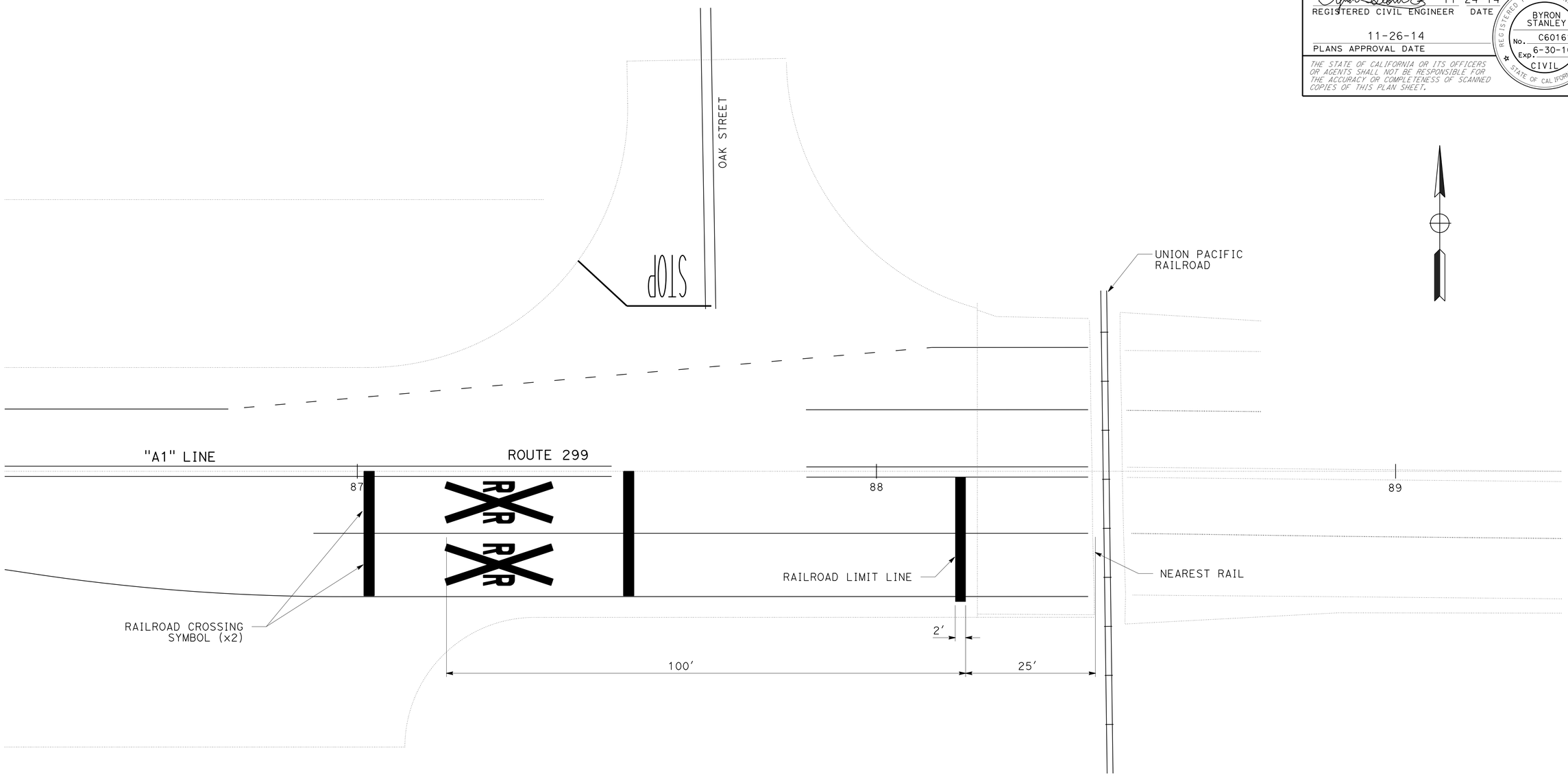

PAVEMENT DELINEATION DETAILS

NO SCALE

PDD-1

APPROVED FOR PAVEMENT DELINEATION WORK ONLY

REVISED BY	DATE REVISED

CALCULATED-DESIGNED BY: WILL LESLIE
CHECKED BY: FRANK RIVAS
FUNCTIONAL SUPERVISOR: STEVE TOPAL

STATE OF CALIFORNIA - DEPARTMENT OF TRANSPORTATION
Caltrans
DESIGN

P:\proj2\02\29971_plans\pse\229971nb001.dgn

LAST REVISION 11-24-14 | DATE PLOTTED => 01-DEC-2014 | TIME PLOTTED => 15:27

Dist	COUNTY	ROUTE	POST MILES TOTAL PROJECT	SHEET No.	TOTAL SHEETS
02	Mod	299	39.3/40.5	56	88

REGISTERED CIVIL ENGINEER 11-24-14 DATE

11-26-14
PLANS APPROVAL DATE

REGISTERED PROFESSIONAL ENGINEER BYRON STANLEY No. C60161 Exp. 6-30-16 CIVIL STATE OF CALIFORNIA

THE STATE OF CALIFORNIA OR ITS OFFICERS OR AGENTS SHALL NOT BE RESPONSIBLE FOR THE ACCURACY OR COMPLETENESS OF SCANNED COPIES OF THIS PLAN SHEET.

NOTES:

1. FOR ACCURATE RIGHT OF WAY DATA, CONTACT RIGHT OF WAY ENGINEERING AT THE DISTRICT OFFICE.

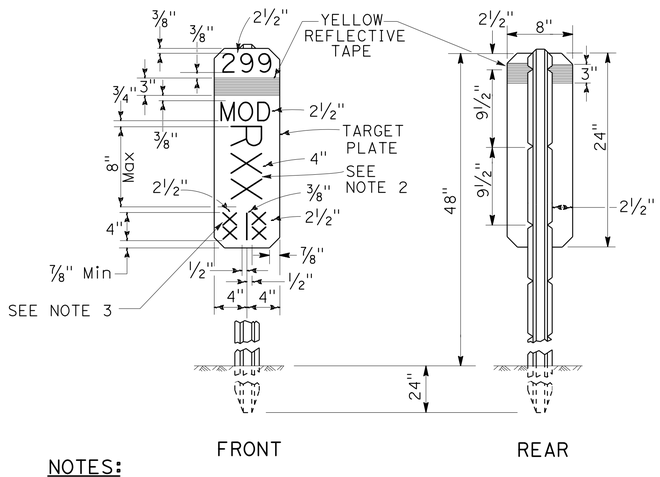

NOTES:

1. THE MARKER SHALL BE WHITE (NON-REFLECTIVE) TARGET PLATE WITH BLACK SERIES D NUMERALS AND LETTERS.
2. A POST MILE PREFIX, SUCH AS "R", SHALL APPLY ONLY WHEN DIRECTED BY THE ENGINEER.
3. "BK" (BACK), "AH" (AHEAD), OR A BLANK SPACE SHALL APPLY AS DIRECTED BY THE ENGINEER.
4. ALL INFORMATION SHALL BE IN ENGLISH UNITS (MILES).

POST MILE MARKER DETAIL

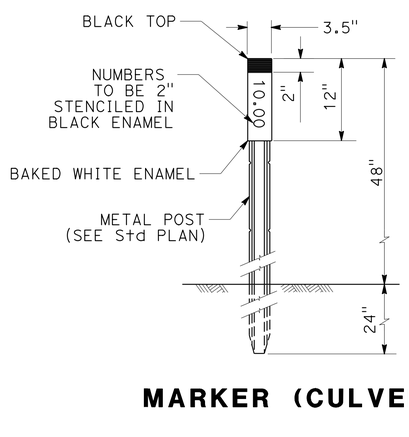

MARKER (CULVERT)

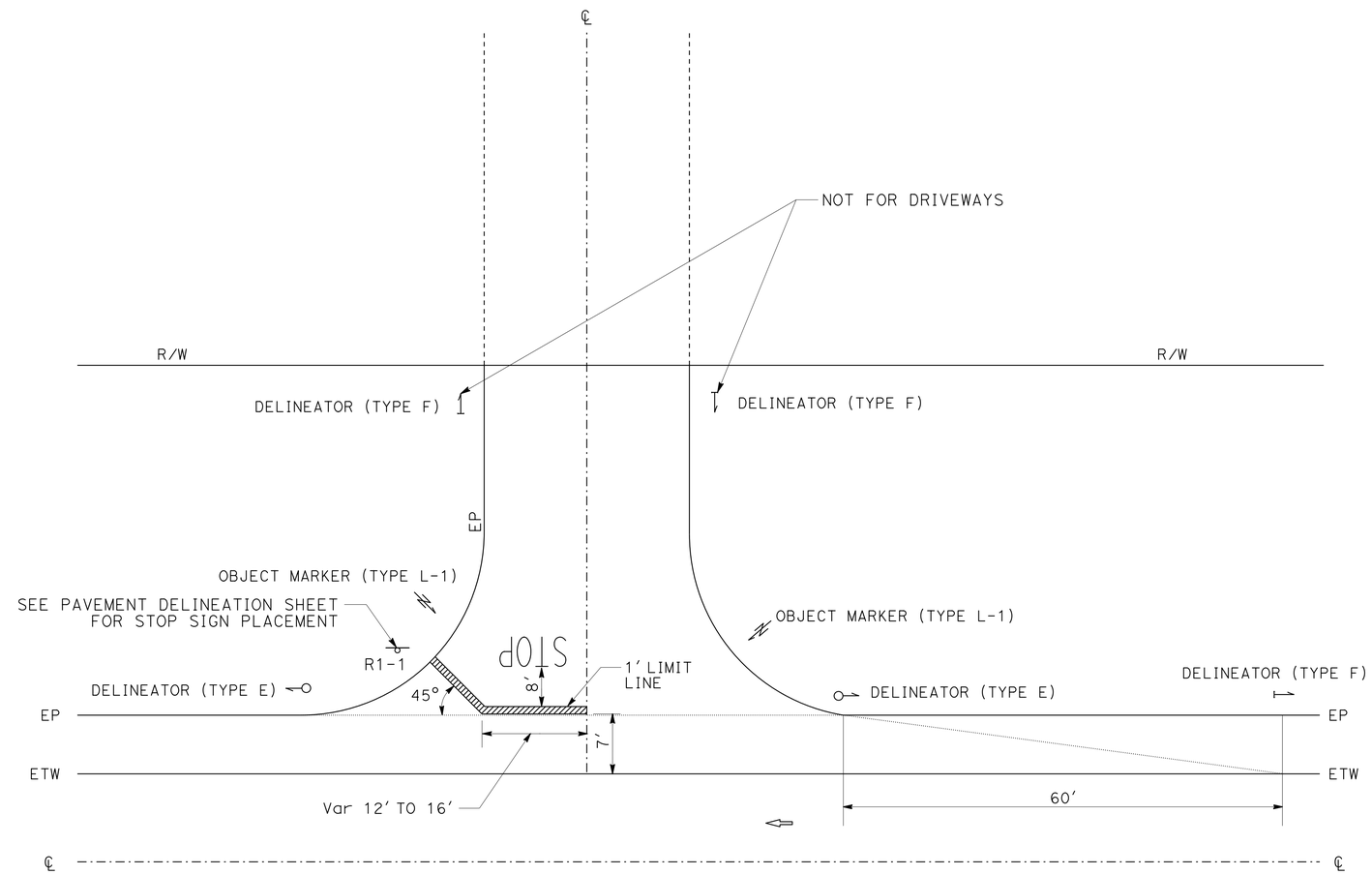

TYPICAL DRIVEWAY AND MINOR ROAD CONNECTION DELINEATOR PLACEMENT DETAIL

PAVEMENT DELINEATION DETAILS

NO SCALE

PDD-2

REVISED BY	DATE REVISED

CALCULATED-DESIGNED BY: WILL LESLIE
CHECKED BY: FRANK RIVAS
FUNCTIONAL SUPERVISOR: STEVE TOPAL

STATE OF CALIFORNIA - DEPARTMENT OF TRANSPORTATION
Caltrans
DESIGN

P:\proj2\02\29971_plans\pse\229971nb002.dgn

LAST REVISION 11-24-14 | DATE PLOTTED => 01-DEC-2014 | TIME PLOTTED => 15:27

Dist	COUNTY	ROUTE	POST MILES TOTAL PROJECT	SHEET No.	TOTAL SHEETS
02	Mod	299	39.3/40.5	57	88

11-24-14
REGISTERED CIVIL ENGINEER DATE

11-26-14
PLANS APPROVAL DATE

REGISTERED PROFESSIONAL ENGINEER
BYRON STANLEY
No. C60161
Exp. 6-30-16
CIVIL
STATE OF CALIFORNIA

THE STATE OF CALIFORNIA OR ITS OFFICERS OR AGENTS SHALL NOT BE RESPONSIBLE FOR THE ACCURACY OR COMPLETENESS OF SCANNED COPIES OF THIS PLAN SHEET.

DELINEATORS & MARKERS

LOCATION "A1" LINE			DELINEATOR (CLASS 2, TYPE F)	DELINEATOR (CLASS 2, TYPE E)	OBJECT MARKER (TYPE L-1)
			EA	EA	EA
47+75.00	TO	88+20.00	14		
NORTH WARNER St			3	2	2
DRIVEWAY			1	2	2
THOMASON Ln			3	2	2
USDA DRIVEWAY			1	2	2
BUREAU OF LAND MANAGEMENT			1	2	2
USDA DRIVEWAY WEST			1	2	2
USDA DRIVEWAY EAST			1	2	2
ALTURAS MINI STORAGE WEST			1	2	2
ALTURAS MINI STORAGE EAST			1	2	2
MODOC STEEL			1	2	2
WEST C STREET			4	2	2
JUNIPER St			3	2	2
NAPA			1	2	2
OAK STREET			3	2	2
SUBTOTAL			39	28	28
TOTAL			67		28

MARKER (CULVERT)

STATION "A1" LINE	SIDE		EA
	Lt	Rt	
53+58.54	X	X	2
57+27.80	X	X	2
67+81.47		X	1
71+15.86	X	X	2
80+27.13		X	1
82+20.00		X	1
83+17.00		X	1
84+19.68		X	1
85+62.00		X	1
TOTAL			12

MARKER (MILE POST)

STATION	PM	EA
"A1" 62+63.60	40.0	1
TOTAL		1

STRIPING

STATION "A1" LINE			THERMOPLASTIC TRAFFIC STRIPE (SPRAYABLE)								PAVEMENT MARKER (RETROREFLECTIVE - RECESSED)	
			4" YELLOW				4" WHITE		8" WHITE			
			DETAIL 21	DETAIL 22	DETAIL 29	DETAIL 32	DETAIL 27B	DETAIL 27C	DETAIL 38	DETAIL 38A	TYPE D	TYPE G
			LF	LF	LF	LF	LF	LF	LF	LF	EA	EA
47+25.00	TO	49+15.00		98	140		266	115	98		18	6
49+15.00	TO	51+16.00		175			186	164	175		16	8
51+16.00	TO	54+42.00			652		652				30	
54+42.00	TO	57+13.00		271			542				26	
57+13.00	TO	60+28.00			530		537	93			24	
60+28.00	TO	62+86.00		214			385	78	258	20	20	12
62+86.00	TO	71+00.00				1628	1489	139			110	
71+00.00	TO	86+00.00		1432			2411	589			122	
86+00.00	TO	88+40.00		203			344	136	204		20	10
WARNER STREET			60									
THOMASON LANE			70									
USDA			60									
WEST C STREET			156				402					
JUNIPER STREET			74									
SPRUCE STREET			88									
OAK STREET			58									
SUBTOTAL			566	2393	1322	1628	7214	1314	735	20	386	36
TOTAL			15192								422	

THERMOPLASTIC PAVEMENT MARKINGS

SHEET No.	STATION "A1" LINE	ELEMENT	AREA SQFT	NOTES
PD-1	47+95.00	TYPE IV (Lt) ARROW	15	
	48+65.00	TYPE IV (Lt) ARROW	15	
	49+07.00	LIMIT LINE	33	WARNER STREET
	49+07.00	STOP	22	WARNER STREET
	49+52.00	TYPE IV (Lt) ARROW	15	
	51+00.00	TYPE IV (Lt) ARROW	15	
PD-2	58+18.00	LIMIT LINE	28	THOMASON LANE
	58+18.00	STOP	22	THOMASON LANE
	60+50.00	TYPE IV (Lt) ARROW	15	
	62+00.00	TYPE IV (Lt) ARROW	15	
	62+55.00	LIMIT LINE	33	USDA
	62+55.00	STOP	22	USDA
	63+50.00	TYPE IV (Lt) ARROW	15	
PD-3	63+66.00	TYPE IV (Lt) ARROW	15	
	68+00.00	TYPE IV (Lt) ARROW	15	
	68+16.00	TYPE IV (Lt) ARROW	15	
	70+50.00	TYPE IV (Lt) ARROW	15	
	70+66.00	TYPE IV (Lt) ARROW	15	
PD-4	75+40.00	LIMIT LINE	39	WEST C STREET
	75+40.00	STOP	22	WEST C STREET
	76+05.00	LIMIT LINE	31	JUNIPER STREET
	76+05.00	STOP	22	JUNIPER STREET
	83+77.00	LIMIT LINE	36	SPRUCE STREET
	83+77.00	STOP	22	SPRUCE STREET
	87+27.00	RAILROAD CROSSING	118	
	87+27.00	RAILROAD CROSSING	118	
	87+60.00	LIMIT LINE	29	OAK STREET
	87+60.00	STOP	22	OAK STREET
	88+15.00	RR LIMIT LINE	48	
TOTAL			847	

PAVEMENT DELINEATION QUANTITIES

PDQ-1

REVISED BY | DATE REVISED
WILL LESLIE | FRANK RIVAS
CALCULATED-DESIGNED BY | CHECKED BY
FUNCTIONAL SUPERVISOR: STEVE TOPAL

STATE OF CALIFORNIA - DEPARTMENT OF TRANSPORTATION
Caltrans® DESIGN

P:\proj2\02\29971_plans\pse\229971nc001.dgn

LAST REVISION 11-24-14 | DATE PLOTTED => 01-DEC-2014 | TIME PLOTTED => 15:27

Dist	COUNTY	ROUTE	POST MILES TOTAL PROJECT	SHEET No.	TOTAL SHEETS
02	Mod	299	39.3/40.5	58	88

REGISTERED CIVIL ENGINEER 11-24-14 DATE

PLANS APPROVAL DATE 11-26-14

REGISTERED PROFESSIONAL ENGINEER BYRON STANLEY No. C60161 Exp. 6-30-16 CIVIL STATE OF CALIFORNIA

THE STATE OF CALIFORNIA OR ITS OFFICERS OR AGENTS SHALL NOT BE RESPONSIBLE FOR THE ACCURACY OR COMPLETENESS OF SCANNED COPIES OF THIS PLAN SHEET.

NOTES:

1. USE A 2¼" Sq TUBE x 30" LONG, 3/16" THICK ANCHOR FOR 2" POSTS. USE A 3" Sq TUBE x 3′ LONG, 3/16" THICK ANCHOR FOR 2-1/2 " POSTS.
2. USE A 5/16" CORNER BOLT OR TWO DRIVE RIVETS TO FASTEN ASSEMBLED SIGN AND POST INTO ANCHOR. INSTALL CORNER BOLT OR DRIVE RIVETS INTO THE SIDES FACING TRAFFIC.
3. REMOVE EXISTING AC OR PCC, DRIVE ANCHOR SLEEVE INTO SOIL AND RECAP WITH LIKE MATERIAL, MATCHING EXISTING THICKNESS.
4. 2" POSTS ARE TO BE 1/8" THICK, PERFORATIONS OF 7/16" IN DIAMETER ARE 1" ON CENTER ON ALL SIDES, LENGTHS ARE 10′ AND 12′.
5. 2-1/2" POSTS ARE TO BE 1/8" THICK, PERFORATIONS OF 7/16" IN DIAMETER ARE 1" ON CENTER ON ALL SIDES, 2-1/2" POSTS ARE 12′ AND 14′ IN LENGTH.
6. FOR DETAILS NOT SHOWN, REFER TO THE STANDARD PLANS.
7. 2-1/2" POSTS SHALL BE USED IN SIDEWALK AND HIGH PEDESTRIAN USE PLACEMENTS.
8. ALL ANCHOR SLEEVES SHALL BE EMBEDDED IN PCC, EXCEPT FOR INSTALLATIONS IN PAVEMENTS OR SIDEWALKS.

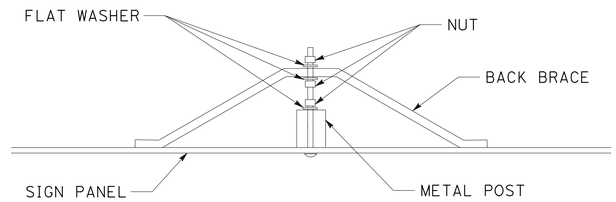

BACK BRACE MOUNTING DETAIL

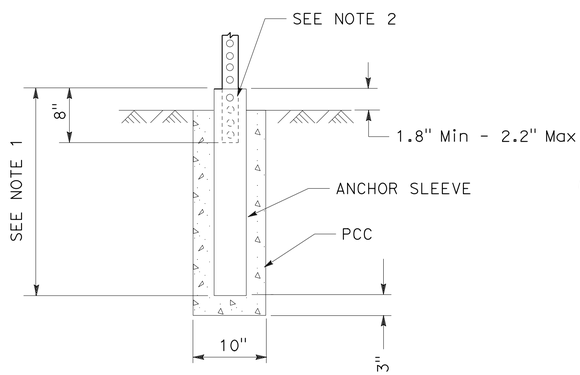

INSTALLATION IN SOIL (PCC)
(SEE NOTE 8)

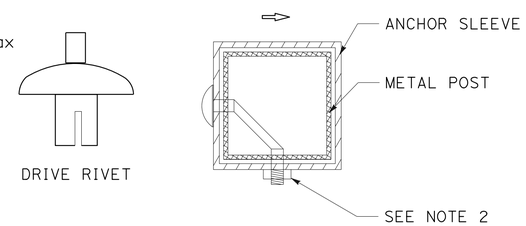

FASTENER DETAILS

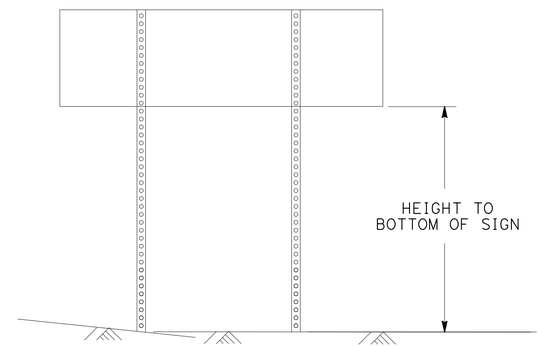

TWO POSTS INSTALLATION
(POST SIZE, SEE CHART BELOW)

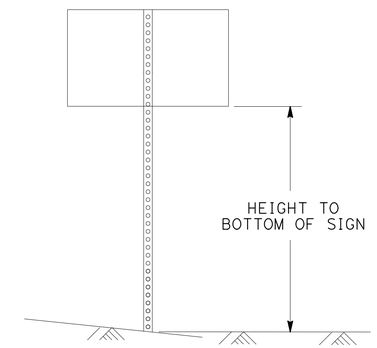

SINGLE POST INSTALLATION
(POST SIZE, SEE CHART BELOW)

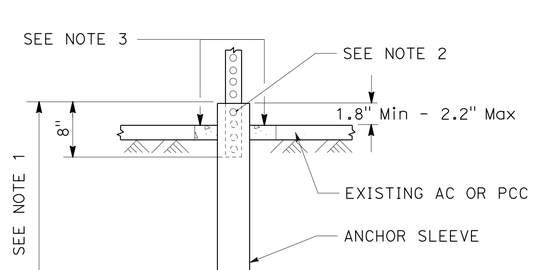

INSTALLATION IN EXISTING AC OR PCC

Max Sq Ft OF SIGN

POST SIZE	60"	72"	84"	96"	108"	120"
2"	18	16	14	12	10	8
2.5"	35	32	28	24	21	21

HEIGHT TO BOTTOM OF SIGN
DOUBLE POST GROUND SIGNS
70 MPH WIND SPEED

Max Sq Ft OF SIGN

POST SIZE	60"	72"	84"	96"	108"	120"
2"	10.5	10	8.7	7.4	6.2	5
2.5"	16	16	16	16	12	12

HEIGHT TO BOTTOM OF SIGN
SINGLE POST GROUND SIGNS
70 MPH WIND SPEED

METAL SIGN POST DETAIL

METAL SIGN POST INSTALLATION DETAILS

SIGN DETAILS
NO SCALE

SD-1

REVISED BY	DATE REVISED

CALCULATED-DESIGNED BY	WILL LESLIE
CHECKED BY	FRANK RIVAS
FUNCTIONAL SUPERVISOR	STEVE TOPAL

STATE OF CALIFORNIA - DEPARTMENT OF TRANSPORTATION
Caltrans
DESIGN

P:\proj2\02\29971_plans\pse\229971ob001.dgn

LAST REVISION 11-24-14 | DATE PLOTTED => 01-DEC-2014 | TIME PLOTTED => 15:27

Dist	COUNTY	ROUTE	POST MILES TOTAL PROJECT	SHEET No.	TOTAL SHEETS
02	Mod	299	39.3/40.5	59	88

11-24-14
REGISTERED CIVIL ENGINEER DATE

11-26-14
PLANS APPROVAL DATE

REGISTERED PROFESSIONAL ENGINEER
BYRON STANLEY
No. C60161
Exp. 6-30-16
CIVIL
STATE OF CALIFORNIA

THE STATE OF CALIFORNIA OR ITS OFFICERS OR AGENTS SHALL NOT BE RESPONSIBLE FOR THE ACCURACY OR COMPLETENESS OF SCANNED COPIES OF THIS PLAN SHEET.

NOTE:

1. ALL DIMENSIONS ARE IN INCHES

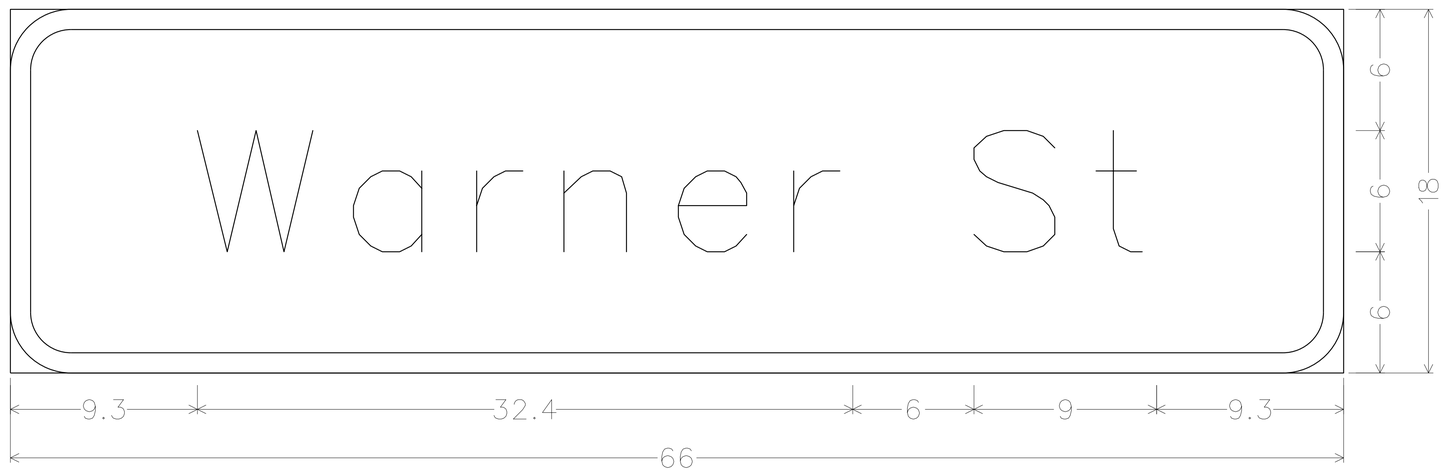

3.0" Radius, 1.0" Border, White on Green;
[Warner St] E Mod;

SIGN 2-2, G7-1

SIGN DETAILS

NO SCALE **SD-2**

REVISED BY	
DATE REVISED	
WILL LESLIE	
BYRON STANLEY	
CALCULATED-DESIGNED BY	
CHECKED BY	
FUNCTIONAL SUPERVISOR	
STEVE TOPAL	

STATE OF CALIFORNIA - DEPARTMENT OF TRANSPORTATION
Caltrans
DESIGN

P:\proj2\02\29971_plans\pse\229971ob002.dgn

LAST REVISION 11-24-14
DATE PLOTTED => 01-DEC-2014
TIME PLOTTED => 15:27

Dist	COUNTY	ROUTE	POST MILES TOTAL PROJECT	SHEET No.	TOTAL SHEETS
02	Mod	299	39.3/40.5	60	88

11-24-14
REGISTERED CIVIL ENGINEER DATE

11-26-14
PLANS APPROVAL DATE

REGISTERED PROFESSIONAL ENGINEER BYRON STANLEY No. C60161 Exp. 6-30-16 CIVIL STATE OF CALIFORNIA

THE STATE OF CALIFORNIA OR ITS OFFICERS OR AGENTS SHALL NOT BE RESPONSIBLE FOR THE ACCURACY OR COMPLETENESS OF SCANNED COPIES OF THIS PLAN SHEET.

NOTE:
1. EXACT LOCATION AND POSITION OF ROADSIDE SIGN TO BE DETERMINED BY ENGINEER.
2. POST SIZE AND LENGTH ARE APPROXIMATE.
3. (N) - NOT A SEPARATE PAY ITEM, FOR INFORMATION ONLY.
4. "C" DIM = VERTICAL CLEARANCE FROM EP TO BOTTOM OF LOWEST SIGN PANEL.

ROADSIDE SIGNS

SHEET No.	SIGN No.	SIGN CODE FEDERAL	SIGN CODE CALIFORNIA	PANEL SIZE In x In	SIGN MESSAGE/DESCRIPTION	"C" DIM FT	POST SIZE AND LENGTH (N) METAL 2½" x 2½"	ROADSIDE SIGN ONE POST EACH	ROADSIDE SIGN TWO POST EACH	RESET ROADSIDE SIGN EACH	REMOVE ROADSIDE SIGN EACH	TREATED WOOD WASTE LB	REMARKS
PD-1	1-1	R2-1 (45)		36 x 48	SPEED LIMIT 45						1	33.3	
	1-2	R2-1 (45)		36 x 48	SPEED LIMIT 45								INSTALLED ON RADAR FEEDBACK ASSEMBLY. SEE ELECTRICAL SHEETS
			SPL		Veh SPEED FEEDBACK SIGN								
	1-3	R1-1		30 x 30	STOP	5				1			
			SPL		WARNER STREET								CITY OF ALTURAS STREET PANEL (PERMIT)
	1-4		R26 (CA)	12 x 18		5				1			
	1-5		R26 (CA)	12 x 18		5				1			
PD-2	2-1		G7-1	66 x 18	WARNER STREET						1	33.3	
			G94	24 x 24	AIRPORT								
			G33-1 (L†)	24 x 6	LEFT ARROW								
			G200-80	24 x 24	GOLFING								
			G33-1 (R†)	24 x 6	RIGHT ARROW								
	2-2		G7-1	66 x 18	WARNER STREET	4	9.0′, 9.5′		1				
			G94	24 x 24	AIRPORT								
			G33-1 (L†)	24 x 6	LEFT ARROW								
			G200-80	24 x 24	GOLFING								
			G33-1 (R†)	24 x 6	RIGHT ARROW								
	2-3	D9-3A		24 x 24	TRAILER CAMPING	5				1			
			G33-1 (L†)	24 x 6	LEFT ARROW								
	2-4	R1-1		30 x 30	STOP	5				1			
			SPL		THOMASON LANE								CITY OF ALTURAS STREET PANEL (PERMIT)
	2-5	R2-1		36 x 48	SPEED LIMIT 45	5				1			
	2-6	D9-3A		24 x 24	TRAILER CAMPING	5				1			
			G33-1 (R†)	24 x 6	RIGHT ARROW								
	2-7	R2-1		30 x 30	STOP	5				1			
PD-3	3-1	G66-57		24 x 24	HIGHWAY PATROL	5				1			
			G33-1 (R†)	24 x 6	RIGHT ARROW								
		DMV		24 x 12	DMV								
PD-4	4-1	G66-57		24 x 24	HIGHWAY PATROL	5				1			
			G33-1 (L†)	24 x 6	LEFT ARROW								
		DMV		24 x 12	DMV								
	4-2	R1-1		30 x 30	STOP	5				1			
			SPL		JUNIPER STREET								CITY OF ALTURAS STREET PANEL (PERMIT)
	4-3	R1-1		30 x 30	STOP	5				1			
			SPL		WEST C STREET								CITY OF ALTURAS STREET PANEL (PERMIT)
	4-4	R2-1 (45)		36 x 48	SPEED LIMIT 45	5				1			
	4-5	R2-1 (35)		36 x 48	SPEED LIMIT 35	5				1			
PD-5	5-1	R1-1		30 x 30	STOP	5				1			
			SPL		SPRUCE STREET								CITY OF ALTURAS STREET PANEL (PERMIT)
	5-2	W10-1		30	RAIL ROAD CROSSING	5					1	33.3	
	5-3	W10-1		36	RAIL ROAD CROSSING	5	8.7′	1					
	5-4	R1-1		30 x 30	STOP	5				1			
			SPL		OAK STREET								CITY OF ALTURAS STREET PANEL (PERMIT)
TOTALS								1	1	16	3	100.0	

SIGN QUANTITIES

SQ-1

REVISED BY | DATE REVISED
BYRON STANLEY | WILL LESLIE
CALCULATED-DESIGNED BY | CHECKED BY
FUNCTIONAL SUPERVISOR: STEVE TOPAL
STATE OF CALIFORNIA - DEPARTMENT OF TRANSPORTATION
Caltrans DESIGN
P:\proj2\02\299711_plans\pse\299711oc001.dgn

LAST REVISION 11-24-14 | DATE PLOTTED => 01-DEC-2014 | TIME PLOTTED => 15:27

Dist	COUNTY	ROUTE	POST MILES TOTAL PROJECT	SHEET No.	TOTAL SHEETS
02	Mod	299	39.3/40.5	61	88

REGISTERED CIVIL ENGINEER 11-24-14 DATE

11-26-14
PLANS APPROVAL DATE

REGISTERED PROFESSIONAL ENGINEER BYRON STANLEY No. C60161 Exp. 6-30-16 CIVIL STATE OF CALIFORNIA

THE STATE OF CALIFORNIA OR ITS OFFICERS OR AGENTS SHALL NOT BE RESPONSIBLE FOR THE ACCURACY OR COMPLETENESS OF SCANNED COPIES OF THIS PLAN SHEET.

NOTE:

1. (N) - NOT A SEPARATE PAY ITEM, FOR INFORMATION ONLY

ABBREVIATIONS:

L	LENGTH
D	DEPTH
FL.	FLORESCENT

ROADSIDE SIGN PANEL QUANTITIES

SIGN No.	SIGN CODE		SIGN MESSAGE/ DESCRIPTION	PANEL SIZE L x D	FACED	SIGN FACING MATERIAL						RETROREFLECTIVE SHEETING (TYPE XI)	FURNISH SINGLE SHEET ALUMINUM SIGN (0.063"- UNFRAMED)	FURNISH SINGLE SHEET ALUMINUM SIGN (0.063"- UNFRAMED) FOR TYPE XI SHEETING	FURNISH SINGLE SHEET ALUMINUM SIGN (0.063"- FRAMED) FOR TYPE XI SHEETING
						BACKGROUND		LEGEND		PROTECTIVE FILM					
	FEDERAL	CALIFORNIA		INCHES	SINGLE FACED	SHEETING COLOR	RETROREFLECTIVE ASTM TYPE	SHEETING COLOR	RETROREFLECTIVE ASTM TYPE	STANDARD	PREMIUM	SQFT	SQFT	SQFT	SQFT
1-2	R2-1 (45)		SPEED LIMIT 45	36 x 48	X	WHITE	IV	BLACK					12		
2-2		G7-1	WARNER STREET	66 x 18	X	GREEN	XI	WHITE	XI		X	8.3			8.3
		G94	AIRPORT	24 x 24	X	GREEN	XI	WHITE	XI			4		4	
		G33-1 (L+)	LEFT ARROW	24 x 6	X	GREEN	XI	WHITE	XI			1		1	
		G200-80	GOLFING	24 x 24	X	BROWN	IV	WHITE	IV				4		
		G33-1 (R+)	RIGHT ARROW	24 x 6	X	BROWN	IV	WHITE	IV				1		
5-3	W10-1		RAIL ROAD CROSSING	36	X	FL. YELLOW	XI	BLACK				7.1		7.1	
TOTALS												20.4	17.0	12.1	8.3

REVISED BY | DATE REVISED

BYRON STANLEY | WILL LESLIE

CALCULATED-DESIGNED BY | CHECKED BY

FUNCTIONAL SUPERVISOR: STEVE TOPAL

STATE OF CALIFORNIA - DEPARTMENT OF TRANSPORTATION

Caltrans® DESIGN

P:\proj2\02\29971_plans\pse\229971oc002.dgn

SIGN QUANTITIES

SQ-2

LAST REVISION 11-24-14 | DATE PLOTTED => 01-DEC-2014 TIME PLOTTED => 15:27

Dist	COUNTY	ROUTE	POST MILES TOTAL PROJECT	SHEET No.	TOTAL SHEETS
02	Mod	299	39.3/40.5	62	88

REGISTERED CIVIL ENGINEER 11-24-14 DATE

11-26-14
PLANS APPROVAL DATE

REGISTERED PROFESSIONAL ENGINEER BYRON STANLEY No. C60161 Exp. 6-30-16 CIVIL STATE OF CALIFORNIA

THE STATE OF CALIFORNIA OR ITS OFFICERS OR AGENTS SHALL NOT BE RESPONSIBLE FOR THE ACCURACY OR COMPLETENESS OF SCANNED COPIES OF THIS PLAN SHEET.

NOTE:

1. (N) - NOT A SEPARATE PAY ITEM, FOR INFORMATION ONLY

REMOVE CONCRETE

LOCATION	SHEET	AREA
		SQYD
"A1" 51+08.54	L1, C1	1.86
"A1" 78+33.18 TO 79+37.45	L6	38.88
	TOTAL	40.74

PLACE HMA (Misc AREA)

STATION	PLACE HMA (Misc AREA)
	SQYD
"A1" 87+46.8, 65.7' L+	4.1
TOTAL	4.1

REPLACE AC SURFACING

STATION		(N) LENGTH	(N) WIDTH	AREA
BEGIN	END	LF	LF	CY
48+55.00	77+00.00	2000	4.0	97.8
TOTAL				97.8

RESET MAILBOX

STATION	MAILBOX
	EA
"A1" 51+21.2	1
"A1" 70+37.4	1
TOTAL	2

MINOR CONCRETE (Misc CONSTRUCTION)

LOCATION	CY	DESCRIPTION
"A1" 51+08	3.23	DRIVEWAY (RESIDENCE)
"A1" 78+33.18 TO 79+37.45	38.88	DRIVEWAY (N. STATE RECYCLING)
"VG1" 8+19.76 TO 17+02.36	130.76	VALLEY GUTTER
"VG2" 0+00.00 TO 0+58.14	4.31	VALLEY GUTTER
"VG3" 0+00.00 TO 0+18.62	1.38	VALLEY GUTTER
"VG4" 0+00.00 TO 0+50.51	3.74	VALLEY GUTTER
TOTAL	182.30	

ROADWAY QUANTITIES

STATION			ROADWAY EXCAVATION	EMBANKMENT (N)	COLD PLANE ASPHALT CONCRETE PAVEMENT	HMA (TYPE A)	CLASS 2 AGGREGATE BASE	SHOULDER BACKING	TACK COAT	DESCRIPTION
LINE	BEGIN	END	CY	CY	SQYD	TON	CY	TON	TON	
"A1"	47+75.00	49+72.80	0.3	2.2	514.6	219.0	0.0	20.2	0.33	MAIN LINE
	49+72.80	77+00.00	2414.2	2288.3		6280.5	2536.4	1137.7	3.59	
	77+00.00	88+20.00	1072.0	150.8	3315.1	2029.5	883.8	268.3	2.18	DITCH EXCAVATION*
"VG1"	8+19.76	17+67.73	1235.5	0.0		1067.9	1260.2		0.62	PAVED R/W
"R01"			96.07	11.58		111.3	51.5	31.1	0.06	N. WARNER St.
"R02"			6.07	16.15		16.4	10.8	16.4	0.01	DRIVEWAY
"R03"			50.35	36.73		98.8	45.7	29.4	0.06	THOMASON Ln.
"R04"					34.8	55.7	0.0	28.5	0.08	USDA
"R06"			54.56	3.94		88.3	40.9	17.2	0.05	BLM OFFICE
"R07"			11.62	9.68		26.0	12.0	16.0	0.02	USDA YARD
"R08"			18.48	7.01		33.9	15.7	16.0	0.02	USDA YARD
"R09"			15.04	25.13		36.5	16.9	16.7	0.02	ALTURAS MINI STORAGE
"R10"			17.01	12.54		29.6	13.7	18.9	0.02	ALTURAS MINI STORAGE
"R11"			28.01	5.14		34.8	16.1	18.7	0.02	MODOC STEEL
"R12"			164.07	84.8		256.0	104.4	84.4	0.15	WEST C St.
"R13"			86.85	12.82		101.6	47.1	32.7	0.06	JUNIPER St.
"R14"			123.86			131.3	60.8		0.07	PINE St.
"R15"					97.3	64.6		9.6	0.09	NAPA AUTO PARTS
"R16"			151.55	2.95		129.3	59.9	13.7	0.08	OAK St.
						0.7				RAMP ON OAK STREET
TOTAL			5545.54	2675.7	3961.8	10811.7	5175.9	1775.2	7.53	

* DITCH EXCAVATION FOR INFILTRATION BASIN IS ACCOUNTED FOR ON SHEET DQ-3.

ADJUST UTILITY COVER

STATION "A1" LINE	OFFSET	WATER VALVE (N)	SEWER MANHOLE (N)	WATER METER (N)	Adj UTILITY COVER
	L+	EA	EA	EA	EA
49+00.30	38.4'	1			1
49+30.10	38.4'	1			1
58+44.40	34.1'	1			1
62+68.50	29.7'		1		1
62+82.80	39.4'	2			2
66+23.90	38.2'	1			1
66+81.20	23.4'		1		1
73+29.00	47.0'	1			1
76+26.70	53.1'	1			1
76+31.70	38.7'	1			1
79+31.10	48.5'			1	1
81+68.50	54.1'			1	1
82+34.70	38.4'	1			1
82+34.70	59.6'			1	1
84+08.50	42.5'	1			1
84+69.40	56.4'	1			1
86+17.2	60.6'	1			1
87+19.5	60.0'	1		1	2
87+21.70	44.4'	1			1
SUBTOTAL		15	2	4	
TOTAL					21

SUMMARY OF QUANTITIES

Q-1

REVISED BY | DATE REVISED
BYRON STANLEY | WILL LESLIE
CALCULATED-DESIGNED BY | CHECKED BY
FUNCTIONAL SUPERVISOR | STEVE TOPAL

STATE OF CALIFORNIA - DEPARTMENT OF TRANSPORTATION
Caltrans DESIGN

P:\proj2\02\29971_plans\pse\229971pa001.dgn

LAST REVISION 11-24-14 | DATE PLOTTED => 01-DEC-2014 | TIME PLOTTED => 15:27

Dist	COUNTY	ROUTE	POST MILES TOTAL PROJECT	SHEET No.	TOTAL SHEETS
02	Mod	299	39.3/40.5	63	88

LICENSED LANDSCAPE ARCHITECT

11-26-14
PLANS APPROVAL DATE

LICENSED LANDSCAPE ARCHITECT J. PATRICK SULLIVAN #3125 Signature 07/31/16 Renewal Date 10/21/14 Date STATE OF CALIFORNIA

THE STATE OF CALIFORNIA OR ITS OFFICERS OR AGENTS SHALL NOT BE RESPONSIBLE FOR THE ACCURACY OR COMPLETENESS OF SCANNED COPIES OF THIS PLAN SHEET.

NOTE:

1. SEE SUMMARY OF EROSION CONTROL QUANTITIES.
2. EXACT LOCATIONS TO BE DETERMINED BY ENGINEER.

DISTURBED AREA

LOCATION	SQFT
LEFT SIDE "A1" Sta 47+76 TO Sta 78+32	45,808
RIGHT SIDE "A1" Sta 47+76 TO Sta 86+00	73,649
TOTAL	119,457

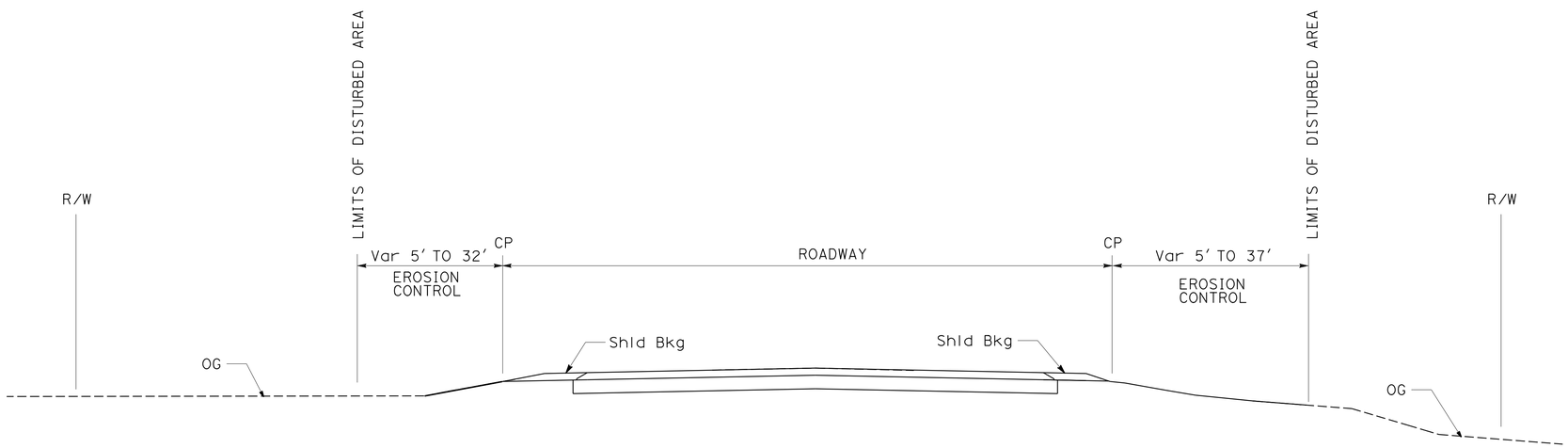

ROUTE 299
"A1" LINE

EROSION CONTROL DETAILS

NO SCALE

ECD-1

APPROVED FOR LANDSCAPE WORK ONLY

REVISED BY | DATE REVISED
J. PATRICK SULLIVAN | RON FLORY
CALCULATED-DESIGNED BY | CHECKED BY
SENIOR LANDSCAPE ARCHITECT | RON FLORY

STATE OF CALIFORNIA - DEPARTMENT OF TRANSPORTATION
Caltrans® LANDSCAPE ARCHITECTURE

P:\proj2\02\29971_plans\pse\229971tf001.dgn

LAST REVISION 11-24-14 | DATE PLOTTED => 01-DEC-2014 TIME PLOTTED => 15:27

Dist	COUNTY	ROUTE	POST MILES TOTAL PROJECT	SHEET No.	TOTAL SHEETS
02	Mod	299	39.3/40.5	64	88

LICENSED LANDSCAPE ARCHITECT

11-26-14
PLANS APPROVAL DATE

LICENSED LANDSCAPE ARCHITECT J. PATRICK SULLIVAN #3125 Signature 07/31/16 Renewal Date 10/21/14 Date STATE OF CALIFORNIA

THE STATE OF CALIFORNIA OR ITS OFFICERS OR AGENTS SHALL NOT BE RESPONSIBLE FOR THE ACCURACY OR COMPLETENESS OF SCANNED COPIES OF THIS PLAN SHEET.

NOTE:

1. (N) - NOT A SEPARATE PAY ITEM, FOR INFORMATION ONLY

EROSION CONTROL SEQUENCE/APPLICATION RATES (N)

SEQUENCE	ITEM	MATERIAL DESCRIPTION	MATERIAL TYPE	APPLICATION RATE (N)
STEP 1	APPLY COMPOST	COMPOST	WOOD PRODUCT	4" OF DEPTH ATOP FINISH GRADE
STEP 2	INCORPORATE COMPOST	INCORPORATE MATERIAL INTO THE SOIL	———	THOROUGHLY MIX INTO 8" OF DEPTH-
STEP 3	APPLY DRY SEEDS	PURE LIVE SEED	MIX	107 LB/ACRE
STEP 5	APPLY FERTILIZER	GRANULAR FERTILIZER	SLOW RELEASE	100 LB/ACRE
STEP 6	APPLY STRAW	STRAW & TACK	RICE/ PSYLLIUM	8000 LB/ACRE 200 LB/ACRE

SEED MIX (N)

BOTANICAL NAME (COMMON NAME)	PERCENT GERMINATION (MINIMUM)	POUNDS PURE LIVE SEED PER ACRE (N) (SLOPE MEASUREMENT)
ACHILLEA MILLEFOLIUM (COMMON YARROW)	50	2
BROMUS CARINATUS (CALIF. BROME)	80	20
ELYMUS ELYMIOIDES (SQUIRREL TAIL WILD RYE)	70	10
FESTUCA IDAHOENSIS (WESTERN FESCUE)	70	25
LOTUS PURSHIANUS (PURSHING)	70	8
LUPINUS BICOLOR (DWARF LUPINES)	60	2
POA SECUNDA (PINE BLUEGRASS)	70	20
VULPIA MICROSTACHYS (SMALL FESCUE)	80	20
	TOTAL	107

EROSION CONTROL TOTALS

MATERIAL DESCRIPTION	MATERIAL TYPE	TOTALS	INCORPORATE MATERIALS	COMPOST	EROSION CONTROL (DRY SEED)	STRAW
COMPOST	WOOD PRODUCT	1475 CY (N)				
PURE LIVE SEED	MIX	293 LBS (N)				
SLOW RELEASE FERTLIZER	GRANULAR	274 LBS (N)				
STRAW	RICE	21,939 LBS (N)				
TACKIFIER	PSYLLIUM	548 LBS (N)	SQFT	SQFT	SQFT	SQFT
LEFT SIDE "A1" STA 47+76 TO "A1" STA 78+32			45,808	45,808	45,808	45,808
RIGHT SIDE "A1" STA 47+76 TO "A1" STA 86+00			73,649	73,649	73,649	73,649
		TOTAL	119,457	119,457	119,457	119,457

APPROVED FOR LANDSCAPE WORK ONLY

EROSION CONTROL QUANTITIES

ECQ-1

REVISED BY | DATE REVISED
J. PATRICK SULLIVAN | RON FLORY
CALCULATED-DESIGNED BY | CHECKED BY
SENIOR LANDSCAPE ARCHITECT | RON FLORY
STATE OF CALIFORNIA - DEPARTMENT OF TRANSPORTATION
Caltrans® LANDSCAPE ARCHITECTURE

P:\proj2\02\29971_plans\pse\229971tg001.dgn

LAST REVISION 11-24-14 | DATE PLOTTED => 01-DEC-2014 | TIME PLOTTED => 15:27

Dist	COUNTY	ROUTE	POST MILES TOTAL PROJECT	SHEET No.	TOTAL SHEETS
02	Mod	299	39.3/40.5	65	88

ART 11-24-14
REGISTERED ELECTRICAL ENGINEER DATE

11-26-14
PLANS APPROVAL DATE

REGISTERED PROFESSIONAL ENGINEER A.P. ROBLES No. E15293 Exp. 3-31-15 ELECTRICAL STATE OF CALIFORNIA

THE STATE OF CALIFORNIA OR ITS OFFICERS OR AGENTS SHALL NOT BE RESPONSIBLE FOR THE ACCURACY OR COMPLETENESS OF SCANNED COPIES OF THIS PLAN SHEET.

NOTE:

1. FOR ACCURATE RIGHT OF WAY DATA, CONTACT RIGHT OF WAY ENGINEERING AT THE DISTRICT OFFICE.

NOTES (THIS SHEET):

1. CENTER LOOPS IN LANES. EXACT LOCATION TO BE DETERMINED BY THE ENGINEER.
2. COIL 10′ OF LOOP CONDUCTORS IN PULL BOX.

LEGEND

(PB) OBJECT MARKER (TYPE PB) AND PULL BOX PAVING

ABBREVIATIONS:

RSFBS RADAR SPEED FEEDBACK SIGN

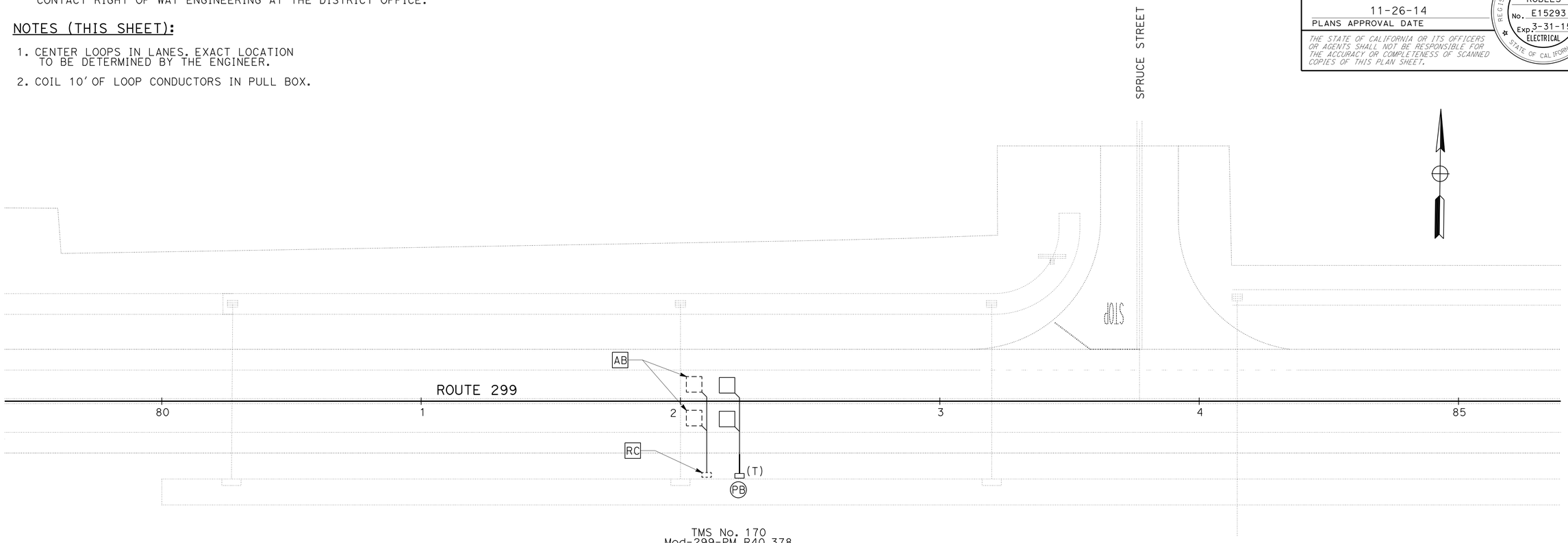

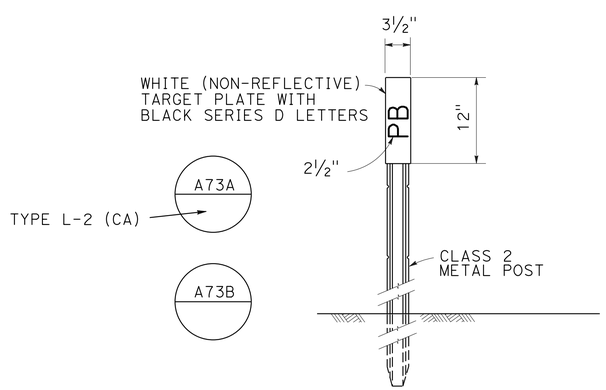

NOTE: MARKERS SHALL COMPLY WITH TYPE L-2 MODIFIED WITH A SNOW POLE BRACKET. PLACE MARKER 2" OUTSIDE PULL BOX PAVING ON SIDE AWAY FROM TRAFFIC. SEE PULL BOX PAVING DETAIL.

OBJECT MARKER (TYPE PB)
NO SCALE

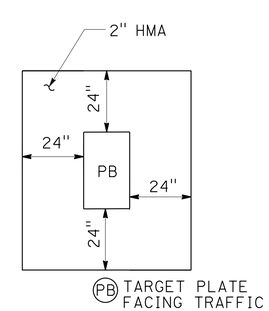

PULL BOX PAVING
NO SCALE

MODIFY TRAFFIC COUNT STATION

SCALE: 1" = 20′

APPROVED FOR ELECTRICAL WORK ONLY

E-1

REVISED BY	DATE REVISED

CALCULATED-DESIGNED BY	CHECKED BY
ARTURO P. ROBLES	JIM HANNIGAN

FUNCTIONAL SUPERVISOR: ROB STINGER

STATE OF CALIFORNIA - DEPARTMENT OF TRANSPORTATION
Caltrans® ELECTRICAL DESIGN

P:\proj2\02\29971_plans\pse\229971ua001.dgn

LAST REVISION 11-24-14 | DATE PLOTTED => 01-DEC-2014 | TIME PLOTTED => 15:27

Dist	COUNTY	ROUTE	POST MILES TOTAL PROJECT	SHEET No.	TOTAL SHEETS
02	Mod	299	39.3/40.5	66	88

ART 11-24-14
REGISTERED ELECTRICAL ENGINEER DATE

11-26-14
PLANS APPROVAL DATE

REGISTERED PROFESSIONAL ENGINEER A.P. ROBLES No. E15293 Exp. 3-31-15 ELECTRICAL STATE OF CALIFORNIA

THE STATE OF CALIFORNIA OR ITS OFFICERS OR AGENTS SHALL NOT BE RESPONSIBLE FOR THE ACCURACY OR COMPLETENESS OF SCANNED COPIES OF THIS PLAN SHEET.

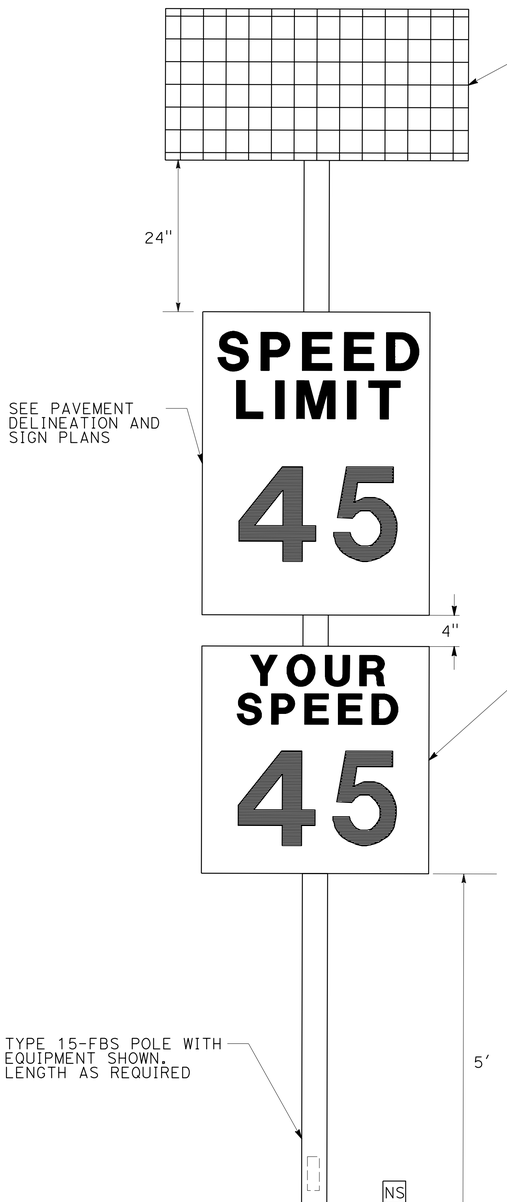

ES-7N
DET A

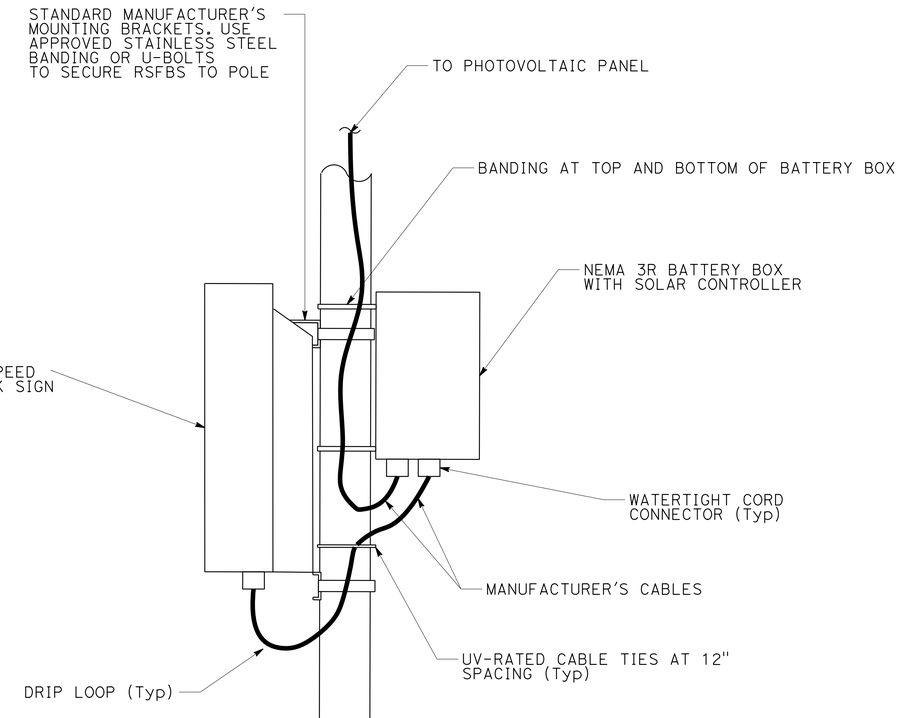

SIDE VIEW

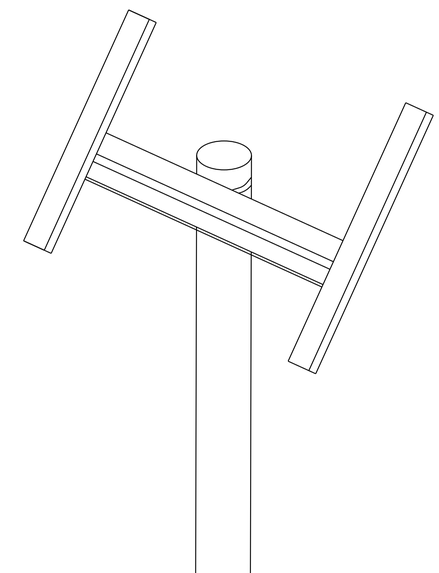

TYPICAL TOP MOUNT RACK

APPROVED FOR ELECTRICAL WORK ONLY

RADAR SPEED FEEDBACK SIGN

NO SCALE

E-2

REVISED BY	DATE REVISED

CALCULATED-DESIGNED BY	CHECKED BY
ARTURO P. ROBLES	JIM HANNIGAN

FUNCTIONAL SUPERVISOR: ROB STINGER

STATE OF CALIFORNIA - DEPARTMENT OF TRANSPORTATION
Caltrans® ELECTRICAL DESIGN

P:\proj2\02\29971_plans\pse\229971ua002.dgn

LAST REVISION 11-24-14 | DATE PLOTTED => 01-DEC-2014 | TIME PLOTTED => 15:27

Dist	COUNTY	ROUTE	POST MILES TOTAL PROJECT	SHEET No.	TOTAL SHEETS
02	Mod	299	39.3/40.5	67	88

ART 11-24-14
REGISTERED ELECTRICAL ENGINEER DATE

11-26-14
PLANS APPROVAL DATE

REGISTERED PROFESSIONAL ENGINEER A.P. ROBLES No. E15293 Exp. 3-31-15 ELECTRICAL STATE OF CALIFORNIA

THE STATE OF CALIFORNIA OR ITS OFFICERS OR AGENTS SHALL NOT BE RESPONSIBLE FOR THE ACCURACY OR COMPLETENESS OF SCANNED COPIES OF THIS PLAN SHEET.

NOTE:

1. (N) - THE ITEMS SHOWN ON THESE TABLES ARE NOT SEPARATE PAY ITEMS, FOR INFORMATION ONLY.

MODIFY TRAFFIC COUNT STATION

SHEET No.	TYPE A LOOP	No.5 PULL BOX (T)	OBJECT MARKER (TYPE PB) AND PULL BOX PAVING
	(N)	(N)	(N)
	EACH	EACH	EACH
E-1	2	1	1

RADAR SPEED FEEDBACK SIGN

SHEET No.	TYPE 15-FBS POLE	RADAR SPEED FEEDBACK SIGN
	(N)	(N)
	EACH	EACH
E-2	1	1

ELECTRICAL QUANTITIES

E-3

STATE OF CALIFORNIA - DEPARTMENT OF TRANSPORTATION
Caltrans® ELECTRICAL DESIGN

FUNCTIONAL SUPERVISOR: ROB STINGER
CALCULATED-DESIGNED BY: ARTURO P. ROBLES
CHECKED BY: JIM HANNIGAN
REVISED BY
DATE REVISED

P:\proj2\02\299711_plans\pse\299711ua003.dgn

LAST REVISION 11-24-14 | DATE PLOTTED => 01-DEC-2014 | TIME PLOTTED => 15:27

M

Maint	MAINTENANCE
Max	MAXIMUM
MB	METAL BEAM
MBB	METAL BEAM BARRIER
MBGR	METAL BEAM GUARD RAILING
Med	MEDIAN
MGS	MIDWEST GUARDRAIL SYSTEM
MH	MANHOLE
Min	MINIMUM
Misc	MISCELLANEOUS
Misc I & S	MISCELLANEOUS IRON AND STEEL
Mkr	MARKER
Mod	MODIFIED,
	MODIFY
Mon	MONUMENT
MP	METAL PLATE
MPGR	METAL PLATE GUARD RAILING
MR	MOVEMENT RATING
MSE	MECHANICALLY STABILIZED EMBANKMENT
Mt	MOUNTAIN, MOUNT
Mtl	MATERIAL
MVP	MAINTENANCE VEHICLE PULLOUT

N

N	NORTH
NB	NORTHBOUND
No.	NUMBER (MUST HAVE PERIOD)
Nos.	NUMBERS (MUST HAVE PERIOD)
NPS	NOMINAL PIPE SIZE
NS	NEAR SIDE
NSP	NEW STANDARD PLAN
NTS	NOT TO SCALE

O

Oblr	OBLITERATE
OC	OVERCROSSING
OD	OUTSIDE DIAMETER
OF	OUTSIDE FACE
OG	ORIGINAL GROUND
OGAC	OPEN GRADED ASPHALT CONCRETE
OGFC	OPEN GRADED FRICTION COURSE
OH	OVERHEAD
OHWM	ORDINARY HIGH WATER MARK
O-O	OUT TO OUT
Opp	OPPOSITE
OSD	OVERSIDE DRAIN

P

P	PAGE
PAP	PERFORATED ALUMINUM PIPE
PB	PULL BOX
PC	POINT OF CURVATURE,
	PRECAST
PCC	POINT OF COMPOUND CURVE,
	PORTLAND CEMENT CONCRETE
PCMS	PORTABLE CHANGEABLE MESSAGE SIGN
PCP	PERFORATED CONCRETE PIPE,
	PRESTRESSED CONCRETE PIPE
PCVC	POINT OF COMPOUND VERTICAL CURVE
PEC	PERMIT TO ENTER AND CONSTRUCT
Ped	PEDESTRIAN
Ped OC	PEDESTRIAN OVERCROSSING
Ped UC	PEDESTRIAN UNDERCROSSING
Perm Mtl	PERMEABLE MATERIAL

P continued

PG	PROFILE GRADE
PI	POINT OF INTERSECTION
PJP	PARTIAL JOINT PENETRATION
Pkwy	PARKWAY
₱,PL	PLATE
P/L	PROPERTY LINE
PM	POST MILE,
	TIME FROM NOON TO MIDNIGHT
PN	PAVING NOTCH
POC	POINT OF HORIZONTAL CURVE
POT	POINT OF TANGENT
POVC	POINT OF VERTICAL CURVE
PP	PIPE PILE,
	PLASTIC PIPE,
	POWER POLE
PPL	PREFORMED PERMEABLE LINER
PPP	PERFORATED PLASTIC PIPE
PRC	POINT OF REVERSE CURVE
PRF	PAVEMENT REINFORCING FABRIC
PRVC	POINT OF REVERSE VERTICAL CURVE
PS&E	PLANS, SPECIFICATIONS AND ESTIMATES
PS, P/S	PRESTRESSED
PSP	PERFORATED STEEL PIPE
PT	POINT OF TANGENCY
PVC	POLYVINYL CHLORIDE
Pvmt	PAVEMENT

Q

Qty	QUANTITY

R

R	RADIUS
R & D	REMOVE AND DISPOSE
R & S	REMOVE AND SALVAGE
R/C	RATE OF CHANGE
RCA	REINFORCED CONCRETE ARCH
RCB	REINFORCED CONCRETE BOX
RCP	REINFORCED CONCRETE PIPE
RCPA	REINFORCED CONCRETE PIPE ARCH
Rd	ROAD
Reinf	REINFORCED,
	REINFORCEMENT,
	REINFORCING
Rel	RELOCATE
Repl	REPLACEMENT
Ret	RETAINING
Rev	REVISED, REVISION
Rdwy	ROADWAY
RHMA	RUBBERIZED HOT MIX ASPHALT
Riv	RIVER
RM	ROAD-MIXED
RP	RADIUS POINT,
	REFERENCE POINT
RR	RAILROAD
RSP	ROCK SLOPE PROTECTION,
	REVISED STANDARD PLAN
Rt	RIGHT
Rte	ROUTE
RW	REDWOOD,
	RETAINING WALL
R/W	RIGHT OF WAY
Rwy	RAILWAY

S

S	SOUTH,
	SUPPLEMENT
SAE	STRUCTURE APPROACH EMBANKMENT
Salv	SALVAGE
SAPP	STRUCTURAL ALUMINUM PLATE PIPE
SB	SOUTHBOUND
SC	SAND CUSHION
SCSP	SLOTTED CORRUGATED STEEL PIPE
SD	STORM DRAIN
Sec	SECOND,
	SECTION
Sep	SEPARATION
SG	SUBGRADE
Shld	SHOULDER
Sht	SHEET
Sim	SIMILAR
℄	STATION LINE
SM	SELECTED MATERIAL
Spec	SPECIAL,
	SPECIFICATIONS
SPP	SLOTTED PLASTIC PIPE
SS	SLOPE STAKE
SSBM	STRAP AND SADDLE BRACKET METHOD
SSD	STRUCTURAL SECTION DRAIN
SSPA	STRUCTURAL STEEL PLATE ARCH
SSPP	STRUCTURAL STEEL PLATE PIPE
SSPPA	STRUCTURAL STEEL PLATE PIPE ARCH
SSRP	STEEL SPIRAL RIB PIPE
St	STREET
Sta	STATION
STBB	SINGLE THRIE BEAM BARRIER
Std	STANDARD
Str	STRUCTURE
Surf	SURFACING
SW	SIDEWALK,
	SOUND WALL
Swr	SEWER
Sym	SYMMETRICAL
S4S	SURFACE 4 SIDES

T

T	SEMI-TANGENT
Tan	TANGENT
TBB	THRIE BEAM BARRIER
Tbr	TIMBER
TC	TOP OF CURB
TCB	TRAFFIC CONTROL BOX
TCE	TEMPORARY CONSTRUCTION EASEMENT
Tel	TELEPHONE
Temp	TEMPORARY
TG	TOP OF GRADE
Tot	TOTAL
TP	TELEPHONE POLE
TPB	TREATED PERMEABLE BASE
TPM	TREATED PERMEABLE MATERIAL
Trans	TRANSITION

T continued

TS	TRANSVERSE,
	TRAFFIC SIGNAL,
	TUBULAR STEEL
Typ	TYPICAL

U

UC	UNDERCROSSING
UD	UNDERDRAIN
UG	UNDERGROUND
UON	UNLESS OTHERWISE NOTED
UP	UNDERPASS

V

V	VALVE,
	DESIGN SPEED
Var	VARIABLE,
	VARIES
VC	VERTICAL CURVE
VCP	VITRIFIED CLAY PIPE
Vert	VERTICAL
Via	VIADUCT
Vol	VOLUME

W

W	WEST,
	WIDTH
WB	WESTBOUND
WH	WEEP HOLE
WM	WIRE MESH
WS	WATER SURFACE
WSP	WELDED STEEL PIPE
Wt	WEIGHT
WV	WATER VALVE
WW	WINGWALL
WWLOL	WINGWALL LAYOUT LINE

X

X Sec	CROSS SECTION
Xing	CROSSING

Y

Yr	YEAR
Yrs	YEARS

Dist	COUNTY	ROUTE	POST MILES TOTAL PROJECT	SHEET No.	TOTAL SHEETS
02	Mod	299	39.3/40.5	68	88

Grace M. Tsushima
REGISTERED CIVIL ENGINEER

July 19, 2013
PLANS APPROVAL DATE

REGISTERED PROFESSIONAL ENGINEER
Grace M. Tsushima
No. C49814
Exp. 9-30-14
CIVIL
STATE OF CALIFORNIA

THE STATE OF CALIFORNIA OR ITS OFFICERS OR AGENTS SHALL NOT BE RESPONSIBLE FOR THE ACCURACY OR COMPLETENESS OF SCANNED COPIES OF THIS PLAN SHEET.

TO ACCOMPANY PLANS DATED 11-26-14

UNIT OF MEASUREMENT SYMBOLS:

Some of the symbols used in the project plan quantity tables and in the Bid Item List are:

TABLE A

SYMBOL USED	DEFINITIONS
ACRE	ACRE
CF	CUBIC FOOT
CY	CUBIC YARD
EA	EACH
GAL	GALLON
LB	POUND
LF	LINEAR FOOT
SQFT	SQUARE FOOT
SQYD	SQUARE YARD
STA	100 FEET
TAB	TABLET
TON	2,000 POUNDS

Some of the symbols used in the plans other than in the project plan quantity tables are:

TABLE B

SYMBOL USED	DEFINITIONS
ksi	KIPS PER SQUARE INCH
ksf	KIPS PER SQUARE FOOT
psi	POUNDS PER SQUARE INCH
psf	POUNDS PER SQUARE FOOT
lb/ft^3, pcf	POUNDS PER CUBIC FOOT
tsf	TONS PER SQUARE FOOT
mph, MPH *	MILES PER HOUR
ø	NOMINAL DIAMETER
oz	OUNCE
lb	POUND
kip	1,000 POUNDS
cal	CALORIE
ft	FOOT OR FEET
gal	GALLON

* For use on a sign panel only

STATE OF CALIFORNIA
DEPARTMENT OF TRANSPORTATION

ABBREVIATIONS (SHEET 2 OF 2)

NO SCALE

RSP A10B DATED JULY 19, 2013 SUPERSEDES STANDARD PLAN A10B DATED MAY 20, 2011 - PAGE 2 OF THE STANDARD PLANS BOOK DATED 2010.

REVISED STANDARD PLAN RSP A10B

2010 REVISED STANDARD PLAN RSP A10B

DATE PLOTTED => 01-DEC-2014
TIME PLOTTED => 15:27

Dist	COUNTY	ROUTE	POST MILES TOTAL PROJECT	SHEET No.	TOTAL SHEETS
02	Mod	299	39.3/40.5	69	88

REGISTERED CIVIL ENGINEER

July 19, 2013
PLANS APPROVAL DATE

REGISTERED PROFESSIONAL ENGINEER Roberta L. McLaughlin No. C40375 Exp. 3-31-15 CIVIL STATE OF CALIFORNIA

THE STATE OF CALIFORNIA OR ITS OFFICERS OR AGENTS SHALL NOT BE RESPONSIBLE FOR THE ACCURACY OR COMPLETENESS OF SCANNED COPIES OF THIS PLAN SHEET.

TO ACCOMPANY PLANS DATED 11-26-14

EXIT RAMP NEUTRAL AREA (GORE) TREATMENT

DETAIL 36

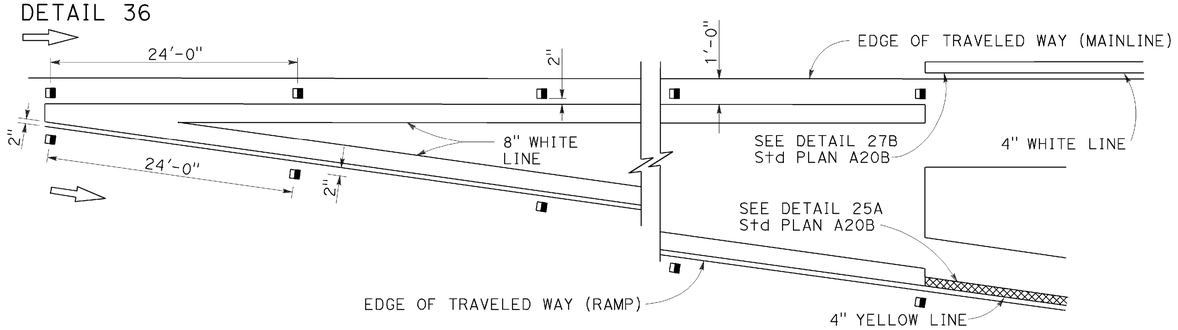

ENTRANCE RAMP NEUTRAL AREA (MERGE) TREATMENT

DETAIL 36A

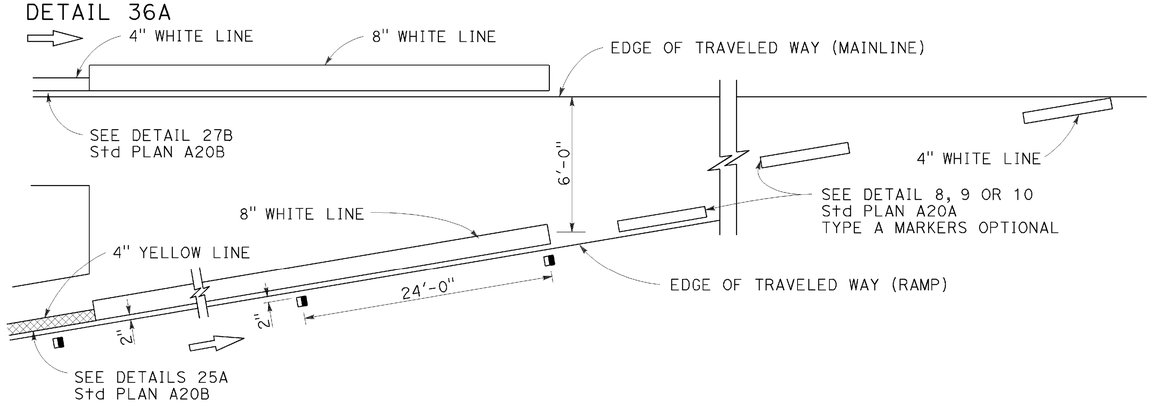

ENTRANCE RAMP NEUTRAL AREA (ACCELERATION LANE) TREATMENT

DETAIL 36B

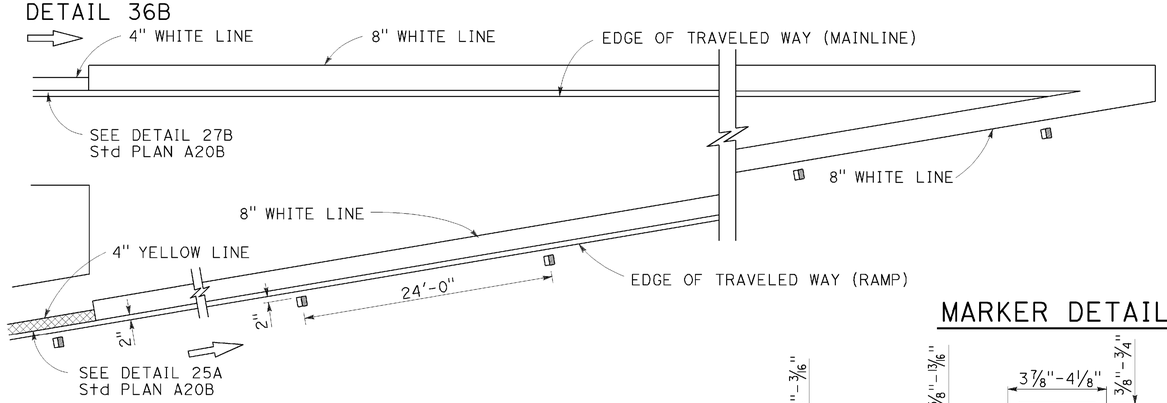

MARKER DETAILS

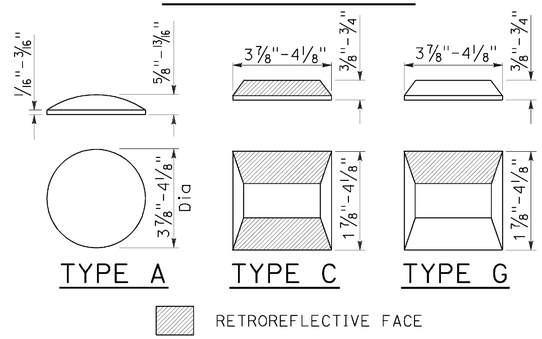

LEGEND:

MARKERS

- ○ TYPE A WHITE NON-REFLECTIVE
- ⊞ TYPE C RED-CLEAR RETROREFLECTIVE
- ◨ TYPE G ONE-WAY CLEAR RETROREFLECTIVE

LANE DROP AT EXIT RAMPS

DETAIL 37

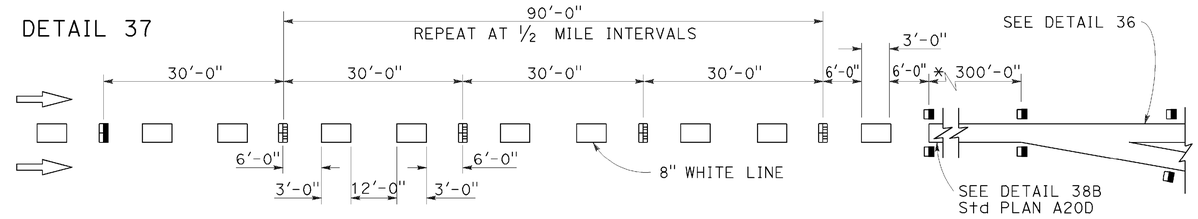

DETAIL 37A

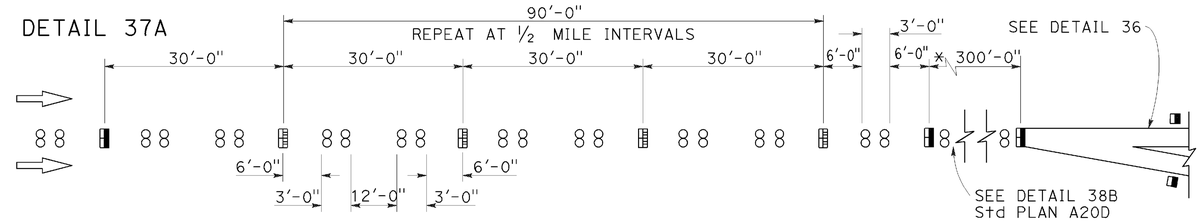

* The solid channelizing line shown may be omitted on short auxiliary lanes where weaving length is critical.

LANE DROP AT INTERSECTIONS

DETAIL 37B

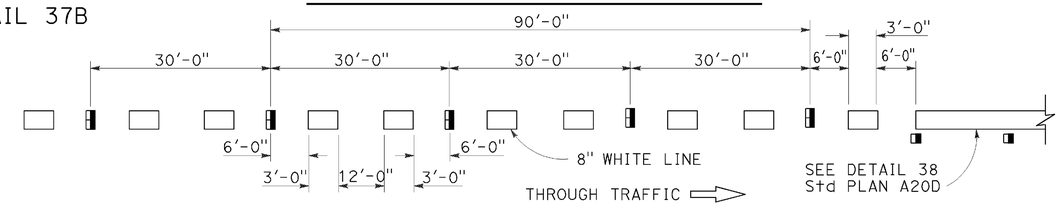

DETAIL 37C

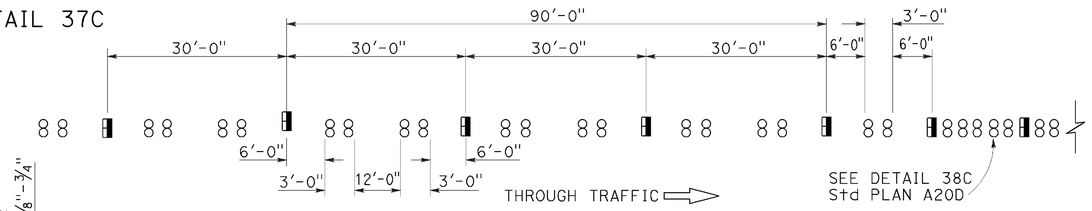

STATE OF CALIFORNIA
DEPARTMENT OF TRANSPORTATION

PAVEMENT MARKERS AND TRAFFIC LINE TYPICAL DETAILS

NO SCALE

RSP A20C DATED JULY 19, 2013 SUPERSEDES STANDARD PLAN A20C DATED MAY 20, 2011 - PAGE 11 OF THE STANDARD PLANS BOOK DATED 2010.

REVISED STANDARD PLAN RSP A20C

2010 REVISED STANDARD PLAN RSP A20C

DATE PLOTTED => 01-DEC-2014
TIME PLOTTED => 15:28

Dist	COUNTY	ROUTE	POST MILES TOTAL PROJECT	SHEET No.	TOTAL SHEETS
02	Mod	299	39.3/40.5	70	88

REGISTERED CIVIL ENGINEER

April 20, 2012
PLANS APPROVAL DATE

REGISTERED PROFESSIONAL ENGINEER
Roberta L. McLaughlin
No. C40375
Exp. 3-31-13
CIVIL
STATE OF CALIFORNIA

THE STATE OF CALIFORNIA OR ITS OFFICERS OR AGENTS SHALL NOT BE RESPONSIBLE FOR THE ACCURACY OR COMPLETENESS OF SCANNED COPIES OF THIS PLAN SHEET.

TO ACCOMPANY PLANS DATED 11-26-14

2010 REVISED STANDARD PLAN RSP A24A

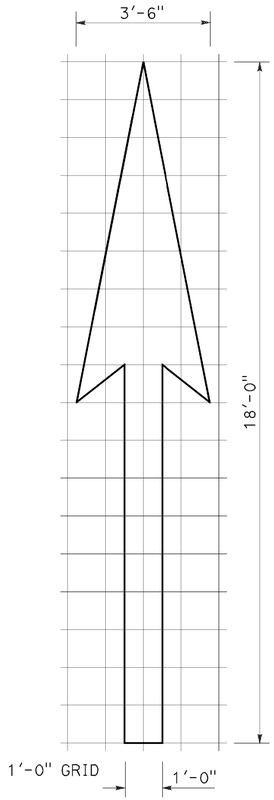

A=25 ft²

TYPE I 18'-0" ARROW

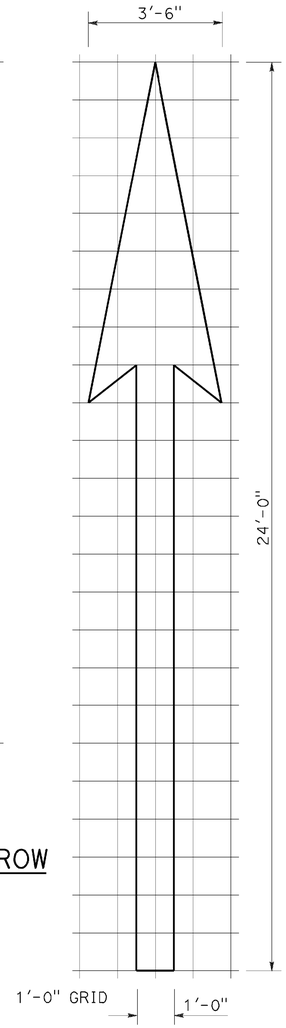

A=31 ft²

TYPE I 24'-0" ARROW

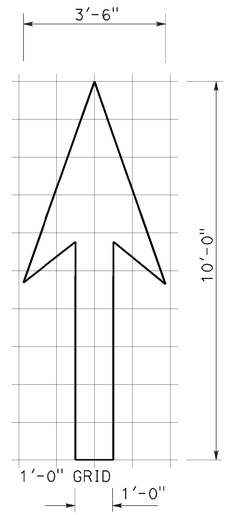

A=14 ft²

TYPE I 10'-0" ARROW

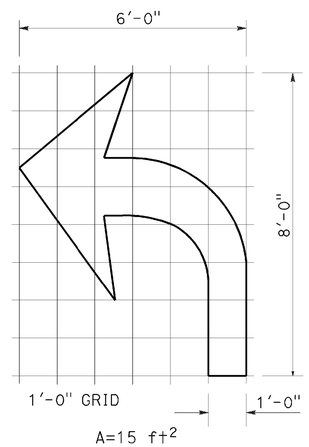

A=15 ft²

TYPE IV (L) ARROW

(For Type IV (R) arrow, use mirror image)

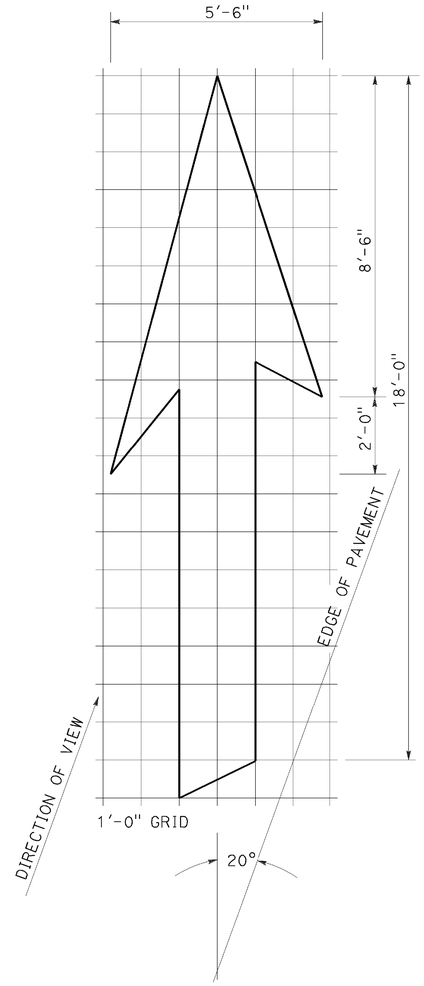

A=42 ft²

TYPE VI ARROW

Right lane drop arrow
(For left lane, use mirror image)

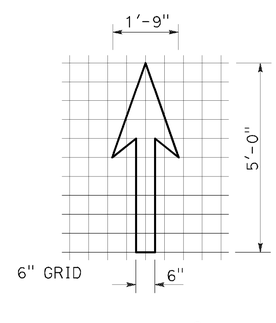

A=3.5 ft²

BIKE LANE ARROW

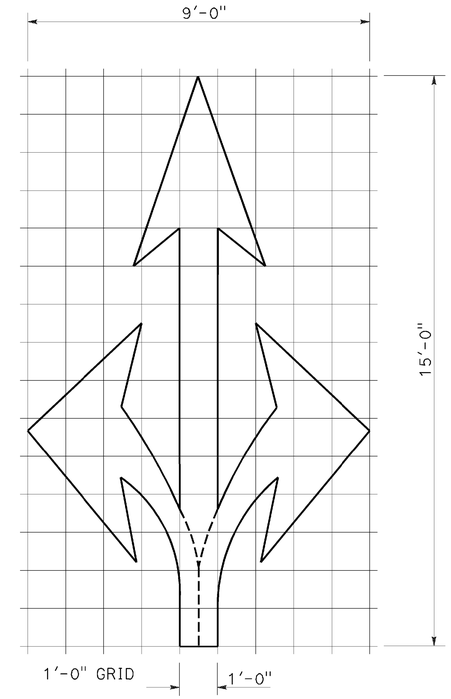

A=36 ft²

TYPE VIII ARROW

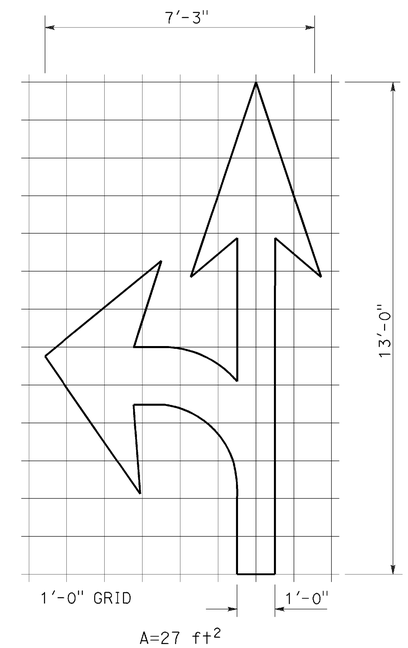

A=27 ft²

TYPE VII (L) ARROW

(For Type VII (R) arrow, use mirror image)

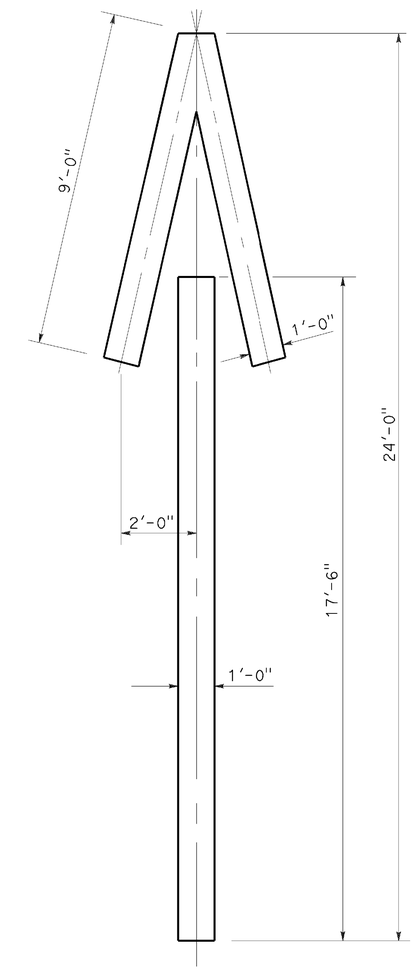

A=33 ft²

TYPE V ARROW

NOTE:
Minor variations in dimensions may be accepted by the Engineer.

STATE OF CALIFORNIA
DEPARTMENT OF TRANSPORTATION

PAVEMENT MARKINGS ARROWS

NO SCALE

RSP A24A DATED APRIL 20, 2012 SUPERSEDES STANDARD PLAN A24A DATED MAY 20, 2011 - PAGE 13 OF THE STANDARD PLANS BOOK DATED 2010.

REVISED STANDARD PLAN RSP A24A

DATE PLOTTED => 01-DEC-2014
TIME PLOTTED => 15:28

Dist	COUNTY	ROUTE	POST MILES TOTAL PROJECT	SHEET No.	TOTAL SHEETS
02	Mod	299	39.3/40.5	71	88

REGISTERED CIVIL ENGINEER

October 19, 2012
PLANS APPROVAL DATE

REGISTERED PROFESSIONAL ENGINEER
Roberta L. McLaughlin
No. C40375
Exp. 3-31-13
CIVIL
STATE OF CALIFORNIA

THE STATE OF CALIFORNIA OR ITS OFFICERS OR AGENTS SHALL NOT BE RESPONSIBLE FOR THE ACCURACY OR COMPLETENESS OF SCANNED COPIES OF THIS PLAN SHEET.

NOTE: TO ACCOMPANY PLANS DATED 11-26-14

Minor variations in dimensions may be accepted by the Engineer.

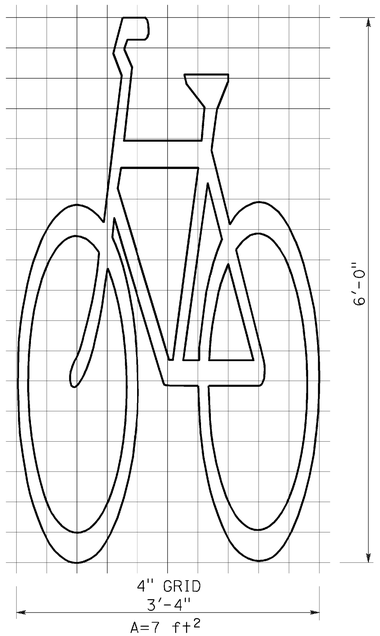

BIKE LANE SYMBOL WITHOUT PERSON

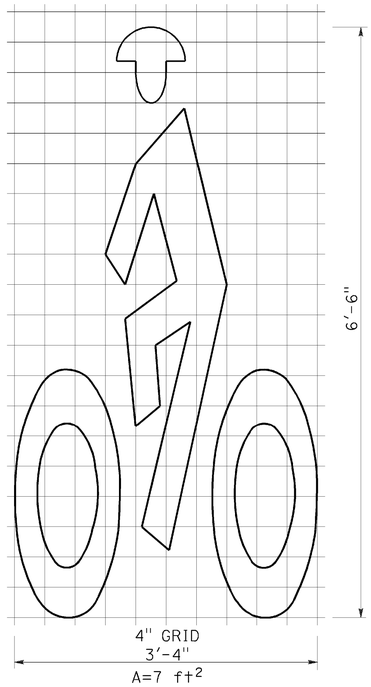

BIKE LANE SYMBOL WITH PERSON

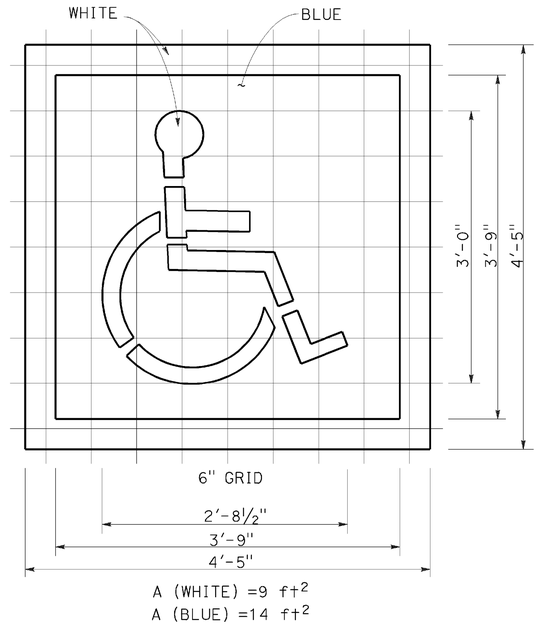

INTERNATIONAL SYMBOL OF ACCESSIBILITY (ISA) MARKING

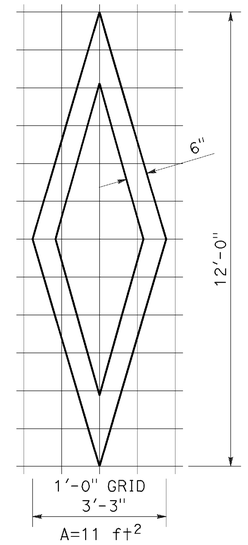

DIAMOND SYMBOL

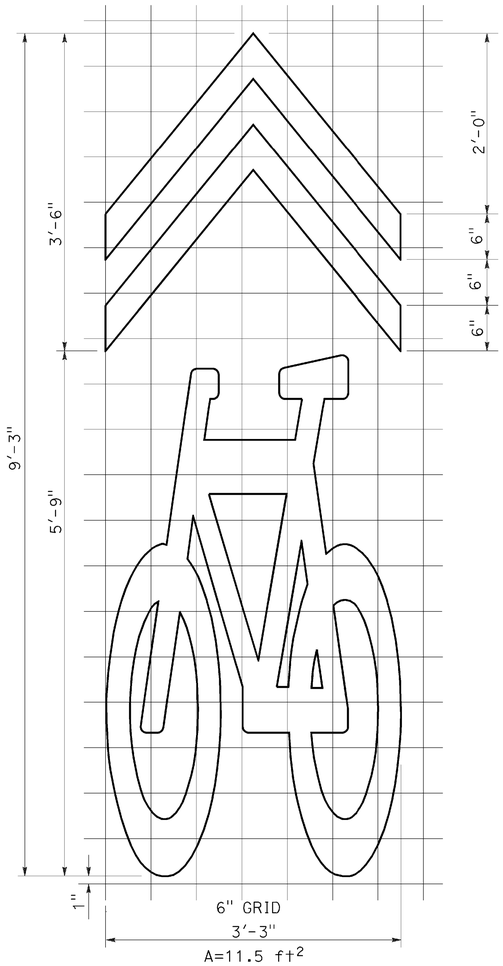

SHARED ROADWAY BICYCLE MARKING

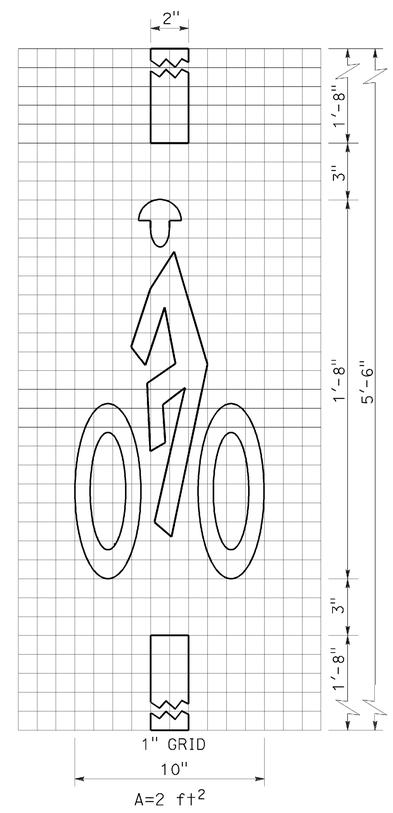

BICYCLE LOOP DETECTOR SYMBOL

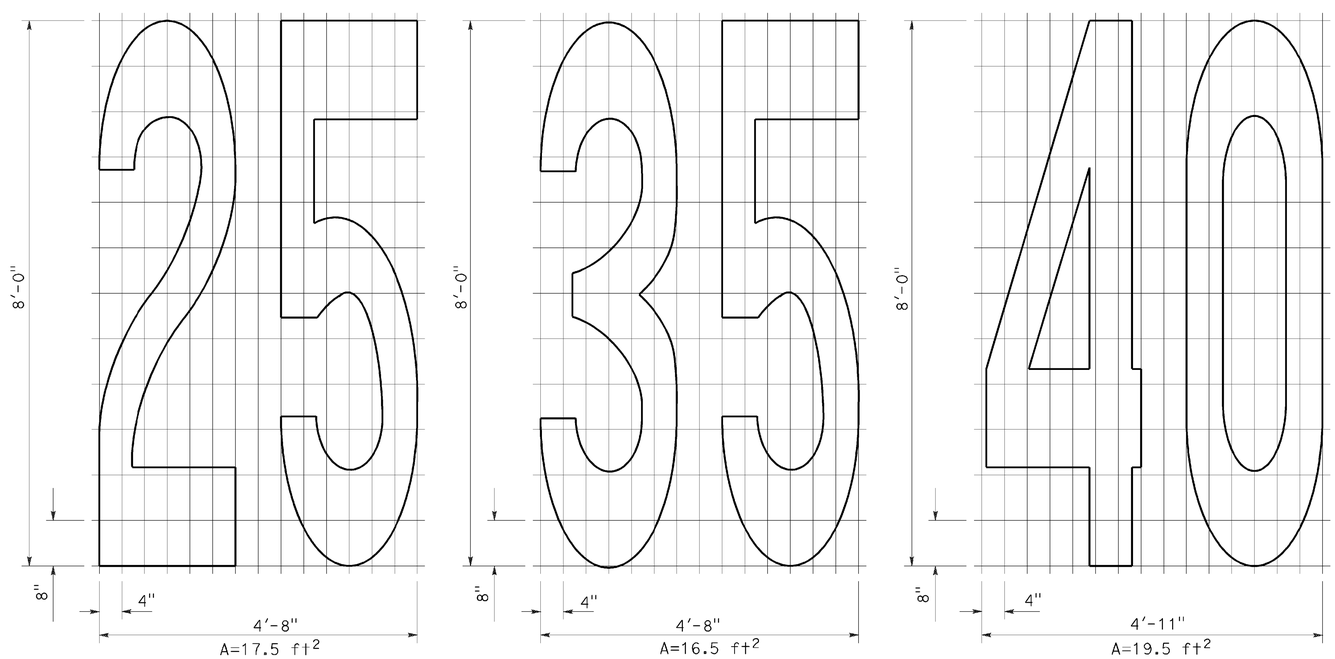

NUMERALS

STATE OF CALIFORNIA
DEPARTMENT OF TRANSPORTATION

PAVEMENT MARKINGS SYMBOLS AND NUMERALS

NO SCALE

RSP A24C DATED OCTOBER 19, 2012 SUPERSEDES STANDARD PLAN A24C DATED MAY 20, 2011 - PAGE 15 OF THE STANDARD PLANS BOOK DATED 2010.

REVISED STANDARD PLAN RSP A24C

2010 REVISED STANDARD PLAN RSP A24C

DATE PLOTTED => 01-DEC-2014
TIME PLOTTED => 15:28

Dist	COUNTY	ROUTE	POST MILES TOTAL PROJECT	SHEET No.	TOTAL SHEETS
02	Mod	299	39.3/40.5	72	88

REGISTERED CIVIL ENGINEER

July 18, 2014
PLANS APPROVAL DATE

REGISTERED PROFESSIONAL ENGINEER
Carl M. Duan
No. C59976
Exp. 6-30-16
CIVIL
STATE OF CALIFORNIA

THE STATE OF CALIFORNIA OR ITS OFFICERS OR AGENTS SHALL NOT BE RESPONSIBLE FOR THE ACCURACY OR COMPLETENESS OF SCANNED COPIES OF THIS PLAN SHEET.

TO ACCOMPANY PLANS DATED 11-26-14

2010 REVISED STANDARD PLAN RSP A62DA

DESIGN NOTES:

Design: AASHTO LRFD Bridge Design Specifications, 4th edition with California Amendments. ACPA DESIGN DATA 1, October 2007. INDIRECT DESIGN METHOD

Soil: w Fe = 162 pcf Installation Type 1
w Fe = 168 pcf Installation Types 2 & 3
w = Unit weight of soil (pcf)
Fe = Soil-structure interaction factor

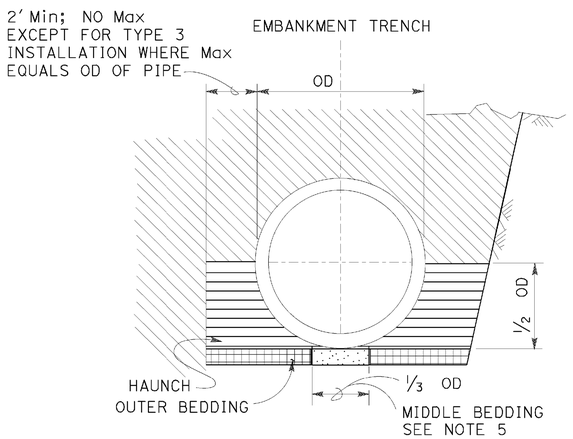

BACKFILL

LEGEND:

- ROADWAY EMBANKMENT
- STRUCTURE BACKFILL (CULVERT) FOR HAUNCH SEE NOTE 6
- STRUCTURE BACKFILL (CULVERT) FOR OUTER BEDDING SEE NOTE 6
- LOOSE BACKFILL
- STRUCTURE EXCAVATION (CULVERT)

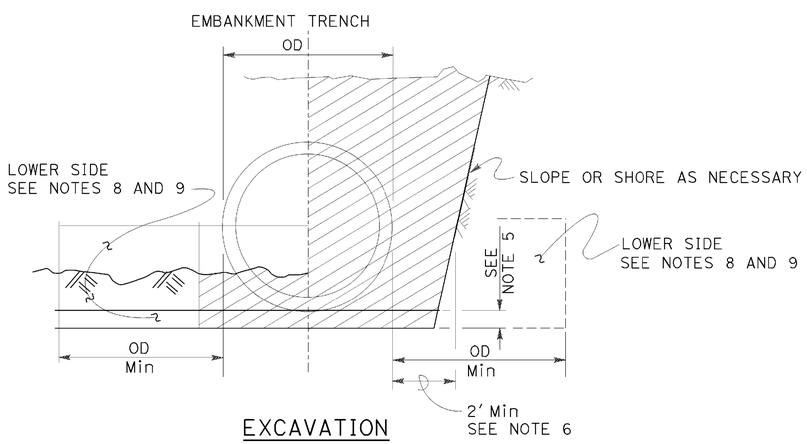

EXCAVATION

INSTALLATION TYPE 1:

The haunch and outer bedding shall be compacted to a minimum 90 percent relative compaction. In addition, the minimum sand equivalent in these areas shall be 30 and the maximum percentage passing the No. 200 sieve size shall be 12.

INSTALLATION TYPE 2:

The haunch and outer bedding shall be compacted to a minimum 90 percent relative compaction. In addition, the minimum sand equivalent in these areas shall be 25.

INSTALLATION TYPE 3:

The haunch and outer bedding shall be compacted to a minimum 85 percent relative compaction. 90 percent relative compaction will be required where the fill over the pipe is less than 4′-0″ or ½ OD. In addition, the minimum sand equivalent in these areas shall be 25 and the material shall not contain rocks, broken concrete, or other solid material exceeding 3″ in greatest dimension.

INSTALLATION TYPE 1

MINIMUM CLASS AND D-LOAD	COVER	
	60″ Dia AND SMALLER	OVER 60″ Dia TO 120″ Dia Max
CLASS II 1000D	14.9′	12.9′
CLASS III 1350D	15.0′ - 21.9′	13.0′ - 18.9′
CLASS III SPECIAL 1700D	22.0′ - 27.9′	19.0′ - 24.9′
CLASS IV 2000D	28.0′ - 32.9′	25.0′ - 29.9′
CLASS IV SPECIAL 2500D	33.0′ - 41.9′	30.0′ - 38.9′
CLASS V 3000D	42.0′ - 49.9′	39.0′ - 46.9′
CLASS V SPECIAL 3600D	50.0′ - 60.0′	47.0′ - 58.0′

INSTALLATION TYPE 2

MINIMUM CLASS AND D-LOAD	COVER	
	60″ Dia AND SMALLER	OVER 60″ Dia TO 120″ Dia Max
CLASS II 1000D	11.9′	9.9′
CLASS III 1350D	12.0′ - 15.9′	10.0′ - 14.9′
CLASS III SPECIAL 1700D	16.0′ - 20.9′	15.0′ - 19.9′
CLASS IV 2000D	21.0′ - 24.9′	20.0′ - 23.9′
CLASS IV SPECIAL 2500D	25.0′ - 31.9′	24.0′ - 30.9′
CLASS V 3000D	32.0′ - 37.9′	31.0′ - 37.9′
CLASS V SPECIAL 3600D	38.0′ - 46.0′	38.0′ - 46.0′

INSTALLATION TYPE 3

MINIMUM CLASS AND D-LOAD	COVER	
	60″ Dia AND SMALLER	OVER 60″ Dia TO 120″ Dia Max
CLASS II 1000D	8.9′	5.9′
CLASS III 1350D	9.0′ - 11.9′	6.0′ - 10.9′
CLASS III SPECIAL 1700D	12.0′ - 15.9′	11.0′ - 13.9′
CLASS IV 2000D	16.0′ - 18.9′	14.0′ - 17.9′
CLASS IV SPECIAL 2500D	19.0′ - 24.9′	18.0′ - 22.9′
CLASS V 3000D	25.0′ - 29.9′	23.0′ - 28.9′
CLASS V SPECIAL 3600D	30.0′ - 36.0′	29.0′ - 35.0′

NOTES:

1. Unless otherwise shown on the plans or specified in the special provision, the Contractor shall have the option of selecting the class of RCP and the type of installation to be used, provided the height of cover does not exceed the value shown for the RCP selected.
   Example: 24″ RCP culvert with maximum cover of 24′-0″ the options are:
   a) Class III Special or stronger with Installation Type 1.
   b) Class IV or stronger with Installation Type 2.
   c) Class IV Special or stronger with Installation Type 3.
   Cover is defined as the maximum vertical distance from top of the pipe to finished grade within the length of any given culvert.
2. The class of RCP and Installation Type selected shall be the same throughout the length of any given culvert.
3. The "length of any culvert" is defined as the culvert between:
   a) Successive drainage structure (inlets, junction boxes, headwalls, etc.).
   b) A drainage structure and the inlet or outlet end of the culvert.
   c) The inlet and outlet end of the culvert when there are no intervening drainage structures.
4. Oval and arch shaped RCP shall not be used.
5. Bedding depth: 1/25 OD Min, not less than 3″.
6. Slurry cement backfill may be substituted for backfill in the outer bedding and haunch areas. If slurry is used, the outer and middle beddings shall be omitted. Prior to installation, the soil under the middle ⅓ of the outside diameter of the pipe shall be softened by scarifying or other means to a minimum depth of 1/25 OD, but not less than 3″. Where slurry cement backfill is used, clear distance to trench wall may be reduced as set forth in the Standard Specifications.
7. Backfill shall be placed full width of excavation except where dimensions are shown for backfill width or thickness. Dimensions shown are minimum.
8. Lower side shall be suitable material as determined by the Engineer. Otherwise it shall be considered unsuitable as set forth in of the Standard Specifications. See Note 9.
9. Where the pipe is placed in a trench, if the trench walls are sloped at 5 vertical to 1 horizontal or steeper for at least 90 percent of the trench height or up to not less than 12″ from the grading plane, the firmness of the soil in the lower side need not be considered.
10. Non-reinforced precast concrete pipe sizes 3′-0″ or smaller may be placed under installation Types 1, 2 or 3.

STATE OF CALIFORNIA
DEPARTMENT OF TRANSPORTATION

EXCAVATION AND BACKFILL CONCRETE PIPE CULVERTS INDIRECT DESIGN METHOD

NO SCALE

RSP A62DA DATED JULY 18, 2014 SUPERSEDES STANDARD PLAN A62DA DATED MAY 20, 2011 - PAGE 24 OF THE STANDARD PLANS BOOK DATED 2010.

REVISED STANDARD PLAN RSP A62DA

DATE PLOTTED => 01-DEC-2014
TIME PLOTTED => 15:28

Dist	COUNTY	ROUTE	POST MILES TOTAL PROJECT	SHEET No.	TOTAL SHEETS
02	Mod	299	39.3/40.5	73	88

REGISTERED CIVIL ENGINEER

July 19, 2013
PLANS APPROVAL DATE

REGISTERED PROFESSIONAL ENGINEER
Michael Janzen
No. 44788
Exp. 03-31-14
CIVIL
STATE OF CALIFORNIA

THE STATE OF CALIFORNIA OR ITS OFFICERS OR AGENTS SHALL NOT BE RESPONSIBLE FOR THE ACCURACY OR COMPLETENESS OF SCANNED COPIES OF THIS PLAN SHEET.

TO ACCOMPANY PLANS DATED 11-26-14

2010 REVISED STANDARD PLAN RSP A87A

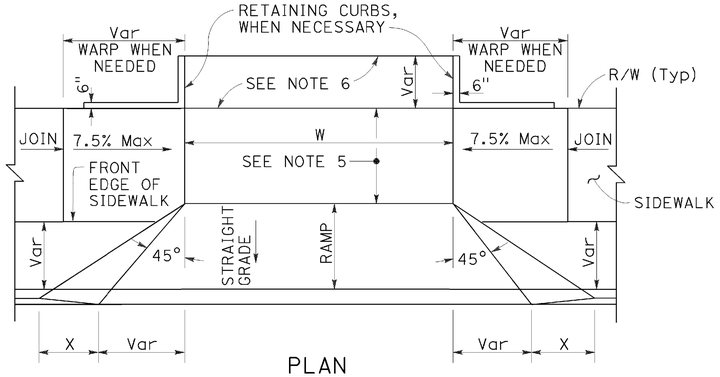

PLAN

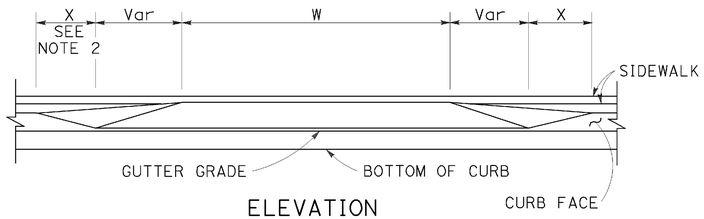

ELEVATION

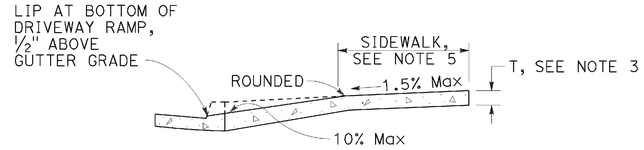

CASE A

Typical driveway, sidewalk not depressed

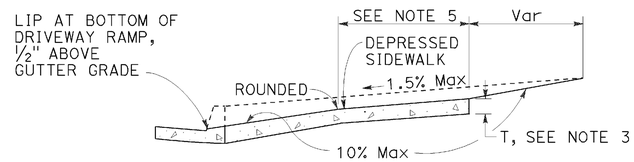

CASE B

Driveway with depressed sidewalk

SECTIONS

DRIVEWAYS

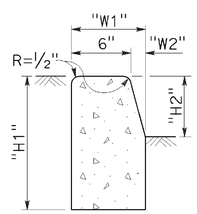

TYPE A1 CURBS

See Table A

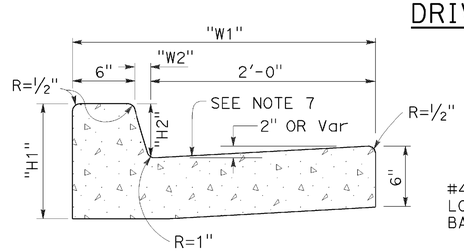

TYPE A2 CURBS

See Table A

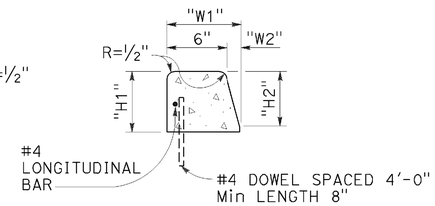

TYPE A3 CURBS

Superimposed on existing pavement
See Table A

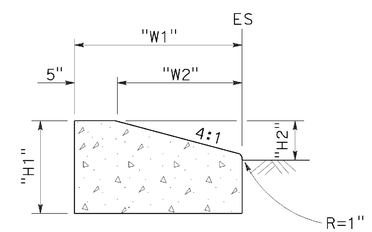

TYPE D CURBS

See Table A

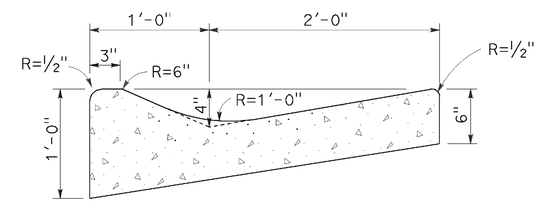

TYPE E CURB

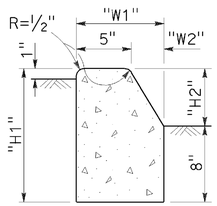

TYPE B1 CURBS

See Table A

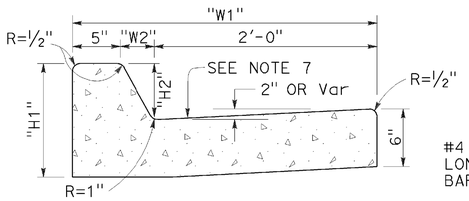

TYPE B2 CURBS

See Table A

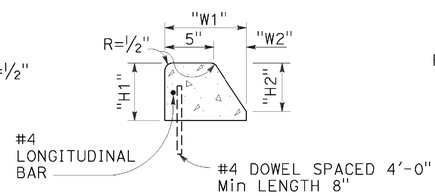

TYPE B3 CURBS

Superimposed on existing pavement
See Table A

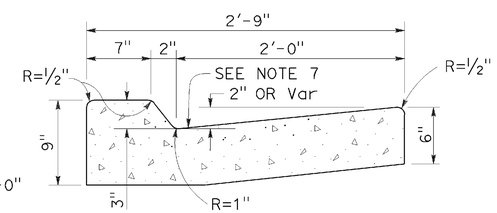

TYPE B4 CURBS

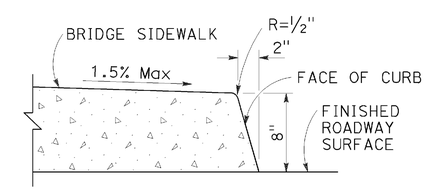

TYPE H CURB

On Bridges

CURBS

TABLE A

CURB TYPE	DIMENSIONS			
	"H1"	"H2"	"W1"	"W2"
A1-6	1'-2"	6"	7½"	1½"
A1-8	1'-4"	8"	8"	2"
A2-6	1'-0"	6"	2'-7½"	1½"
A2-8	1'-2"	8"	2'-8"	2"
A3-6	6"	5"	7¼"	1¼"
A3-8	8"	7"	7¾"	1¾"
B1-4	1'-0"	4"	7½"	2½"
B1-6	1'-2"	6"	9"	4"
B2-4	10"	4"	2'-7½"	2½"
B2-6	1'-0"	6"	2'-9"	4"
B3-4	4"	3"	7"	2"
B3-6	6"	5"	8½"	3½"
D-4	10"	4"	1'-6"	1'-1"
D-6	1'-0"	6"	2'-2"	1'-9"

CURB QUANTITIES

TYPE	CUBIC YARDS PER LINEAR FOOT
A1-6	0.02585
A1-8	0.03084
A2-6	0.05903
A2-8	0.06379
A3-6	0.01036
A3-8	0.01435
B1-4	0.02185
B1-6	0.02930
B2-4	0.05515
B2-6	0.06171
B3-4	0.00641
B3-6	0.01074
B4	0.05709
D-4	0.04083
D-6	0.06804
E	0.06661

NOTES:

1. Case A driveway section typically applies.
2. X=3'-0" except for curb heights over 10" where 4:1 slopes shall be used on curb slope.
3. Sidewalk and ramp thickness "T" at driveway shall be 4" for residental and 6" for commercial.
4. Difference in slope of the driveway ramp and the slope of a line between the gutter and a point on the roadway 5'-0" from gutter line shall not exceed 15%. Reduce driveway ramp slope, not gutter slope, where required.
5. Minimum width of clear passageway for sidewalk shall be 4'-2".
6. Retaining curbs and acquisition of construction easement may be necessary for narrow sidewalks or curb heights in excess of 6".
7. Across the pedestrian route at curb ramp locations, the gutter pan slope shall not exceed 1" of depth for each 2'-0" of width.

STATE OF CALIFORNIA
DEPARTMENT OF TRANSPORTATION

CURBS AND DRIVEWAYS

NO SCALE

RSP A87A DATED JULY 19, 2013 SUPERSEDES STANDARD PLAN A87A
DATED MAY 20, 2011 - PAGE 119 OF THE STANDARD PLANS BOOK DATED 2010.

REVISED STANDARD PLAN RSP A87A

DATE PLOTTED => 01-DEC-2014
TIME PLOTTED => 15:29

DIST	COUNTY	ROUTE	POST MILES TOTAL PROJECT	SHEET No.	TOTAL SHEETS
02	Mod	299	39.3/40.5	74	88

REGISTERED CIVIL ENGINEER

November 15, 2013
PLANS APPROVAL DATE

REGISTERED PROFESSIONAL ENGINEER
Cornelis M. Hakim
No. C55610
Exp. 12-31-14
CIVIL
STATE OF CALIFORNIA

THE STATE OF CALIFORNIA OR ITS OFFICERS OR AGENTS SHALL NOT BE RESPONSIBLE FOR THE ACCURACY OR COMPLETENESS OF SCANNED COPIES OF THIS PLAN SHEET.

TO ACCOMPANY PLANS DATED 11-26-14

ABBREVIATIONS:

SE SAFETY EDGE

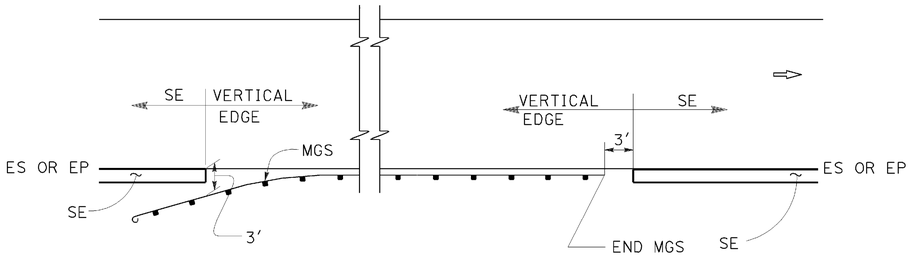

MGS

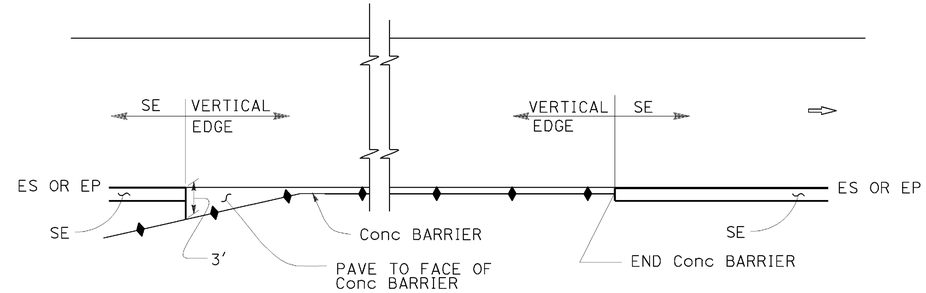

CONCRETE BARRIER

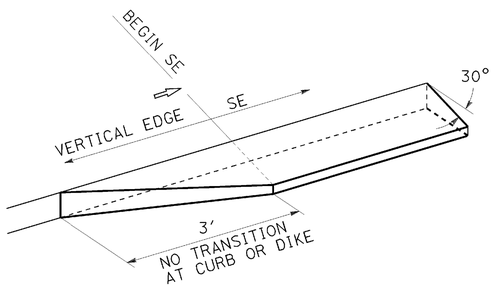

TRANSITION DETAIL FOR CONCRETE ONLY

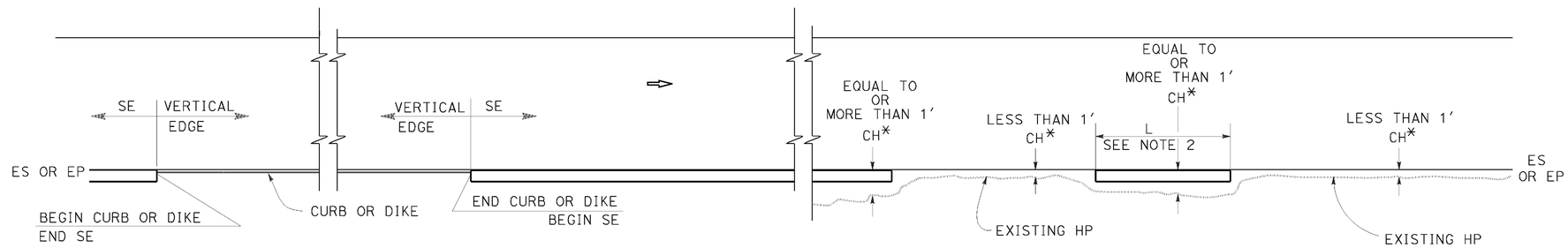

CURB OR DIKE

NARROW SIDE SLOPE

* CH = Distance from ES or EP to existing HP.

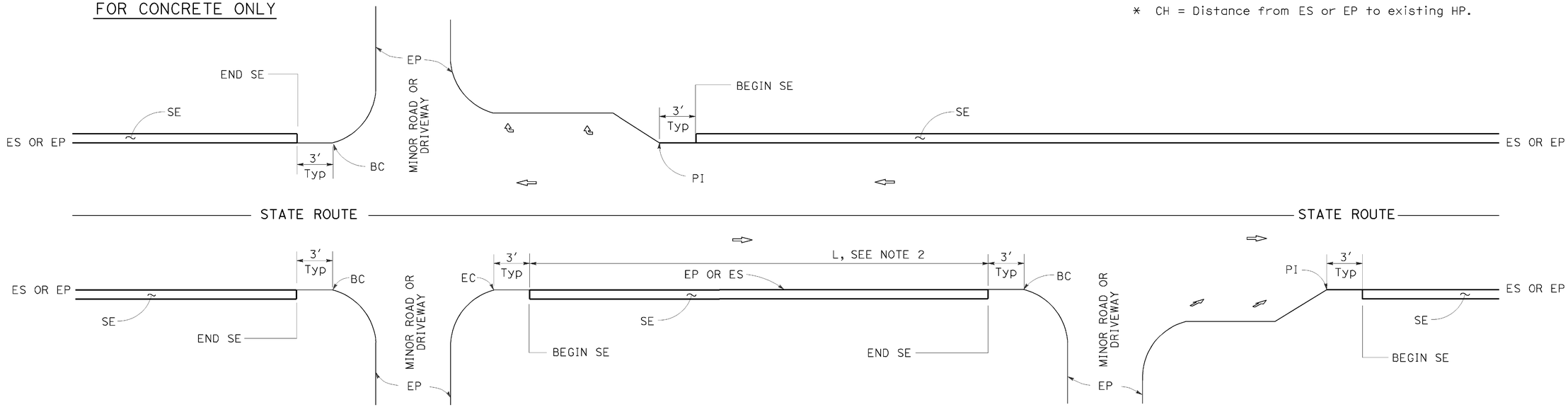

INTERSECTION

MINOR ROADWAY OR DRIVEWAY

DRIVEWAY AND INTERSECTION

NOTES:

1. For details not shown, see Revised Standard Plans RSP P75 and RSP P76.
2. Safety edge is optional when L is less than 30′.

STATE OF CALIFORNIA
DEPARTMENT OF TRANSPORTATION

PAVEMENT EDGE TREATMENTS

NO SCALE

RSP P74 DATED NOVEMBER 15, 2013 SUPERSEDES RSP P74 DATED JANUARY 20, 2012 THAT SUPPLEMENTS THE STANDARD PLANS BOOK DATED 2010.

REVISED STANDARD PLAN RSP P74

2010 REVISED STANDARD PLAN RSP P74

DATE PLOTTED => 01-DEC-2014
TIME PLOTTED => 15:29

DIST	COUNTY	ROUTE	POST MILES TOTAL PROJECT	SHEET No.	TOTAL SHEETS
02	Mod	299	39.3/40.5	75	88

REGISTERED CIVIL ENGINEER

November 15, 2013
PLANS APPROVAL DATE

REGISTERED PROFESSIONAL ENGINEER Cornelis M. Hakim No. C55610 Exp. 12-31-14 CIVIL STATE OF CALIFORNIA

THE STATE OF CALIFORNIA OR ITS OFFICERS OR AGENTS SHALL NOT BE RESPONSIBLE FOR THE ACCURACY OR COMPLETENESS OF SCANNED COPIES OF THIS PLAN SHEET.

TO ACCOMPANY PLANS DATED 11-26-14

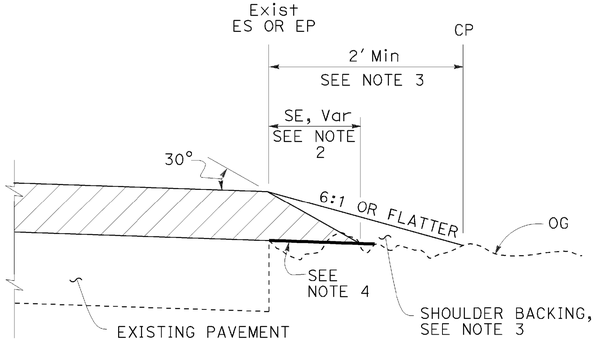

CASE A
Safety Edge

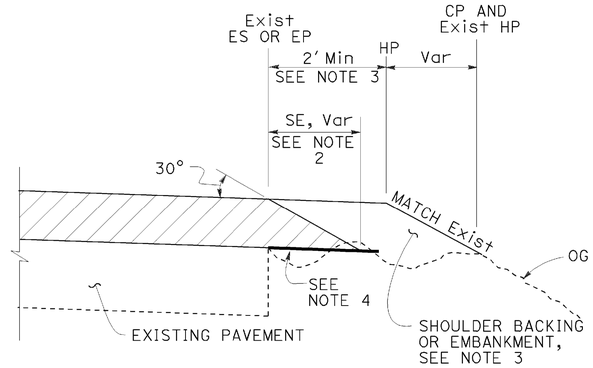

CASE B
Safety Edge

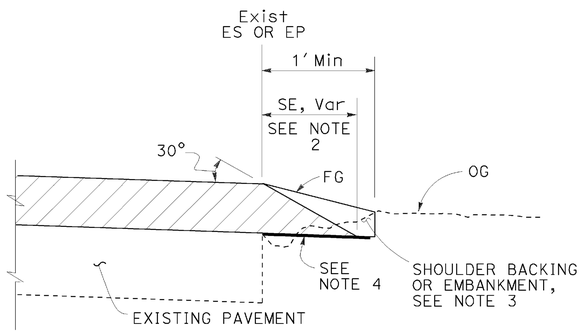

CASE C
Safety Edge

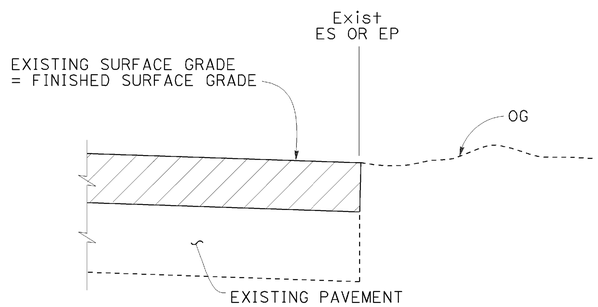

CASE D
Vertical Edge

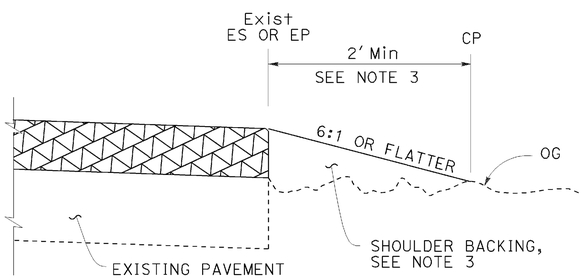

CASE E
Vertical Edge

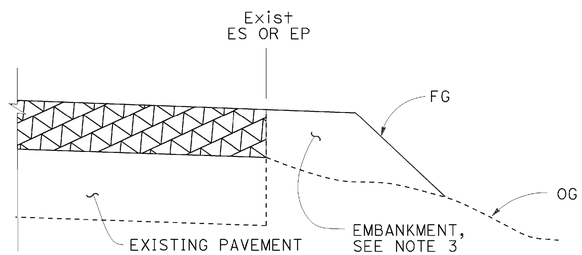

CASE F
Vertical Edge
* See Table A and Revised Std Plan RSP P74

LEGEND:

- HMA OVERLAY
- HMA OR CONCRETE OVERLAY
- CONCRETE OVERLAY

ABBREVIATIONS:

SE SAFETY EDGE
TT TOTAL THICKNESS OF SE

TABLE A
EDGE TREATMENT FOR VARIOUS OVERLAY THICKNESS AND CONDITIONS

	OVERLAY THICKNESS	
FIELD CONDITION	LESS THAN 0.15'	0.15' OR MORE
Exist SLOPE 6:1 OR FLATTER	CASE E	CASE A
Exist SLOPE 3:1 TO 6:1	CASE E	CASE B
Exist SLOPE STEEPER THAN 3:1	CASE F	CASE F
CUT SECTION (REPLACE, COLD PLANE, MILL PAVEMENT)	CASE D	CASE C

ADDITIONAL HMA OR CONCRETE QUANTITIES FOR SE/SIDE/MILE

TYPICAL CROSS SECTION	TT	TOTAL ADDITIONAL MATERIAL FOR SE/SIDE/MILE		
		HMA (TON)	CONCRETE (CY)*	CONCRETE (CY)**
TT	0.15'	NA	NA	NA
	0.20'	13.7	NA	NA
	0.30'	30.9	NA	NA
	0.40'	54.9	NA	NA
	0.45'	69.4	NA	NA
TT 0.43'	0.50'	84.2	NA	NA
	0.60'	113.9	NA	NA
	0.70'	143.6	70.9	94.2
	0.80'	173.3	85.6	112.2
	0.90'	203.0	100.3	130.2
	1.00'	232.7	114.9	148.2
	1.10'	262.4	129.6	166.2
	1.20'	292.1	144.3	184.2

* For Detail "A"
** For Optional Detail "A"

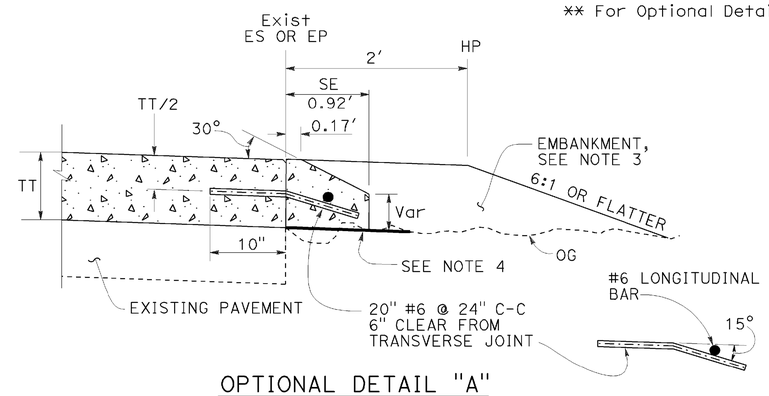

OPTIONAL DETAIL "A"
For concrete overlay
See Note 5

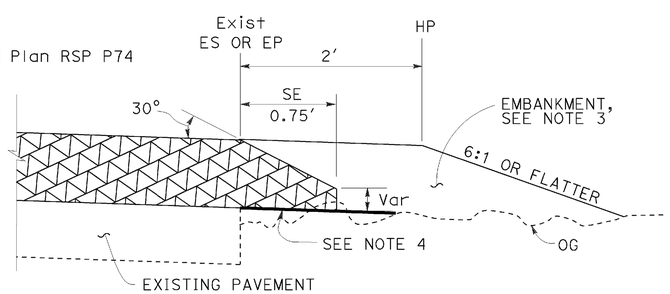

DETAIL "A"
For HMA overlay thickness more than 0.43' or concrete overlay

NOTES:

1. For limits of safety edge and vertical edge treatments, see Revised Standard Plan RSP P74.
2. Details shown for HMA overlay thickness less than 0.43'. See Detail "A" for HMA overlay thickness more than 0.43' or concrete overlay.
3. For locations and limits of shoulder backing or embankment see project plans.
4. Grade existing ground to place safety edge. 1' minimum width
5. Safety edge transverse joint must match overlay transverse joint. End of #6 longitudinal bar must be 2" ±½" clear from transverse joint.
6. Safety edge is not needed in the area of MGS, barrier, right turn lane and acceleration lane. See Revised Standard Plan RSP P74.

STATE OF CALIFORNIA
DEPARTMENT OF TRANSPORTATION

PAVEMENT EDGE TREATMENTS-OVERLAYS

NO SCALE

RSP P75 DATED NOVEMBER 15, 2013 SUPERSEDES RSP P75 DATED JANUARY 20, 2012 THAT SUPPLEMENTS THE STANDARD PLANS BOOK DATED 2010.

REVISED STANDARD PLAN RSP P75

2010 REVISED STANDARD PLAN RSP P75

DATE PLOTTED => 01-DEC-2014
TIME PLOTTED => 15:29

DIST	COUNTY	ROUTE	POST MILES TOTAL PROJECT	SHEET No.	TOTAL SHEETS
02	Mod	299	39.3/40.5	76	88

REGISTERED CIVIL ENGINEER

November 15, 2013
PLANS APPROVAL DATE

REGISTERED PROFESSIONAL ENGINEER Cornelis M. Hakim No. C55610 Exp. 12-31-14 CIVIL STATE OF CALIFORNIA

THE STATE OF CALIFORNIA OR ITS OFFICERS OR AGENTS SHALL NOT BE RESPONSIBLE FOR THE ACCURACY OR COMPLETENESS OF SCANNED COPIES OF THIS PLAN SHEET.

TO ACCOMPANY PLANS DATED 11-26-14

LEGEND:

- HMA PAVEMENT
- HMA OR CONCRETE PAVEMENT
- CONCRETE PAVEMENT

ABBREVIATIONS:

SE SAFETY EDGE
TT TOTAL THICKNESS OF SE
HW HINGE WIDTH, DISTANCE FROM ES OR EP TO HP

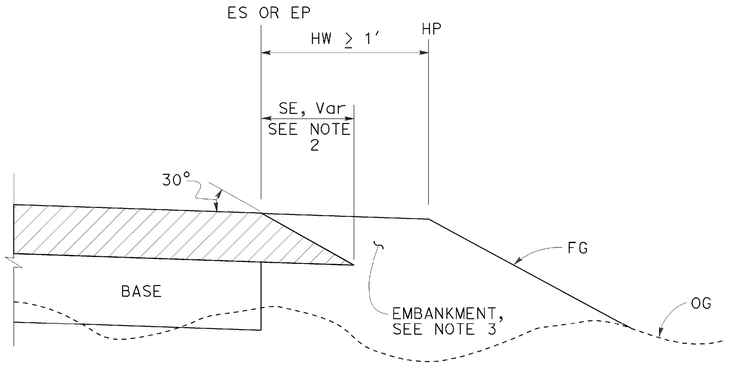

CASE K
Safety Edge - Fill Section, HW ≥ 1′

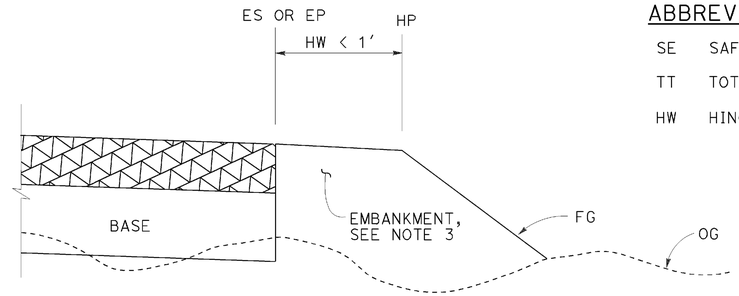

CASE L
Vertical Edge - Fill Section, HW < 1′

FILL SECTION

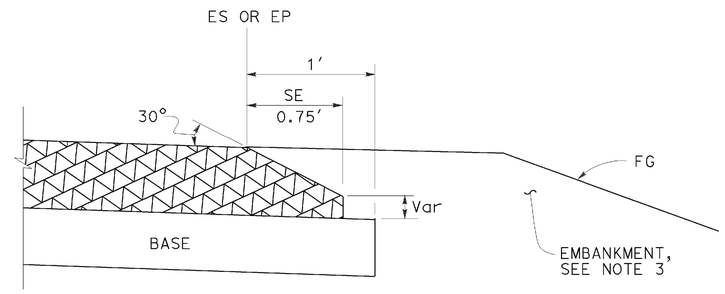

DETAIL "B"
For HMA pavement thickness more than 0.43′ or concrete pavement

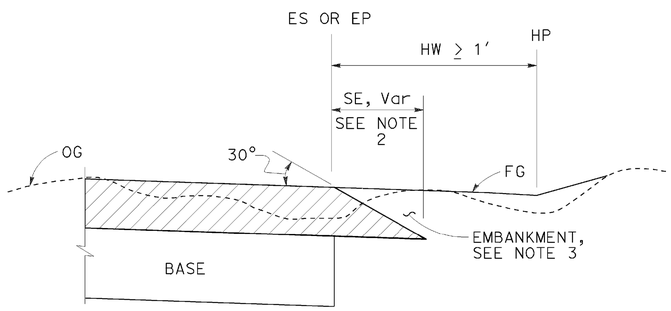

CASE M
Safety Edge - Cut Section, HW ≥ 1′

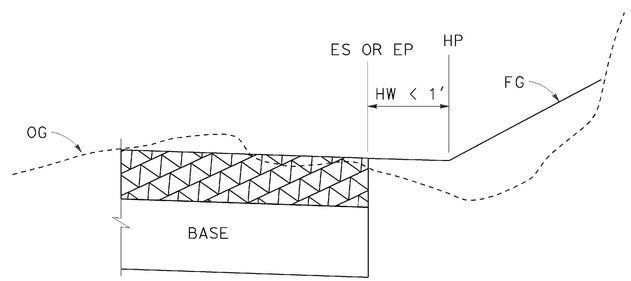

CASE N
Vertical Edge - Cut Section, HW < 1′

CUT SECTION

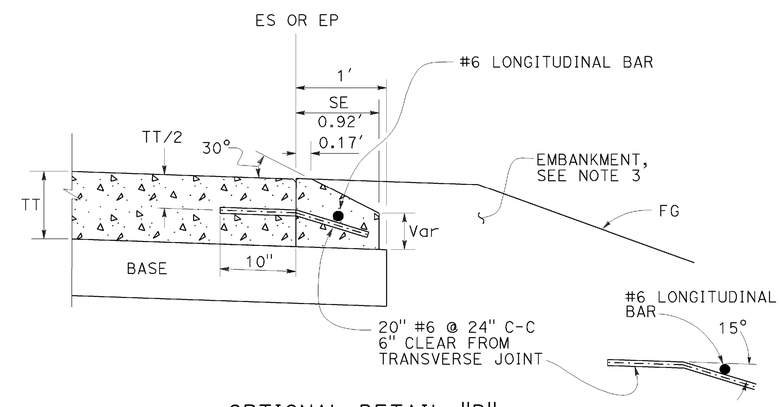

OPTIONAL DETAIL "B"
For concrete pavement
See Note 4

NOTES:

1. For limits of safety edge and vertical edge treatments, see Revised Standard Plan RSP P74
2. Details shown for HMA pavement thickness less than 0.43′. See Detail "B" for HMA pavement thickness more than 0.43′ or concrete pavement.
3. For locations and limits of embankment see project plans.
4. Safety edge transverse joint must match pavement transverse joint. End of #6 longitudinal bar must be 2" ±½" clear from transverse joint.
5. Safety edge is not needed in the area of MGS, barrier, right turn lane and acceleration lane. See Revised Standard Plan RSP P74.

STATE OF CALIFORNIA
DEPARTMENT OF TRANSPORTATION

PAVEMENT EDGE TREATMENTS-NEW CONSTRUCTION

NO SCALE

RSP P76 DATED NOVEMBER 15, 2013 SUPERSEDES RSP P76 DATED JANUARY 20, 2012 THAT SUPPLEMENTS THE STANDARD PLANS BOOK DATED 2010.

REVISED STANDARD PLAN RSP P76

2010 REVISED STANDARD PLAN RSP P76

DATE PLOTTED => 01-DEC-2014
TIME PLOTTED => 15:29

TO ACCOMPANY PLANS DATED 11-26-14

Dist	COUNTY	ROUTE	POST MILES TOTAL PROJECT	SHEET No.	TOTAL SHEETS
02	Mod	299	39.3/40.5	77	88

Glenn DeCou
REGISTERED CIVIL ENGINEER

October 19, 2012
PLANS APPROVAL DATE

REGISTERED PROFESSIONAL ENGINEER Glenn DeCou No. C34547 Exp. 9-30-13 CIVIL STATE OF CALIFORNIA

THE STATE OF CALIFORNIA OR ITS OFFICERS OR AGENTS SHALL NOT BE RESPONSIBLE FOR THE ACCURACY OR COMPLETENESS OF SCANNED COPIES OF THIS PLAN SHEET.

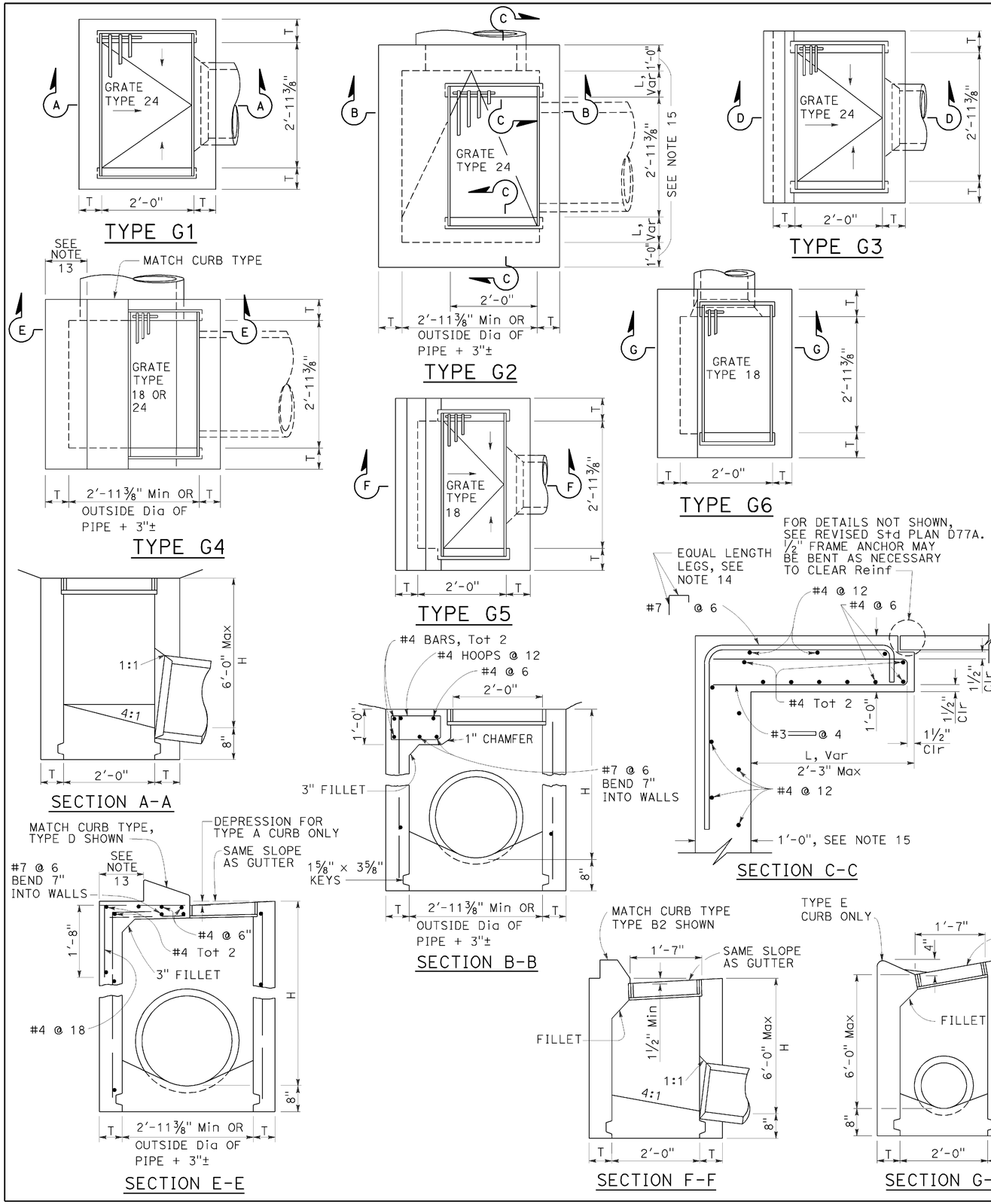

NOTES:

1. "H" is the difference in elevation between the outlet pipe flow line and the normal gutter grade line undepressed.
2. For "T" wall thickness, see Table A below.
3. Wall reinforcing not required when "H" is 8'-0" or less and the unsupported width or length is 7'-0" or less. Walls exceeding these limits shall be reinforced with #4 bars @ 1'-6" ± centers placed 1½" clear to inside of box unless otherwise shown.
4. Inlet bottom reinforcing not required. See Standard Plan D74C for alternative reinforced bottom and alternative half round bottom.
5. Steps-None required where "H" is less than 2'-6". Where "H" is 2'-6" or more, install steps with lowest rung 1'-0" above the floor and highest rung not more than 6" below top of inlet. The distance between steps shall not exceed 1'-0" and shall be uniform throughout the length of the wall. Place steps in the wall without an opening. Steps inserts may be substituted for the bar steps. Step inserts shall comply with State Industrial Safety requirements. See Standard Plan D74C for step details.
6. Details shown apply to both metal and concrete pipe.
7. Pipe(s) can be placed in any wall.
8. Curb section shall match adjacent curb.
9. Basin floors shall have wood trowel finish and a minimum slope of 12:3 from all directions toward outlet pipe.
10. Set inlet so that grate bars are parallel to direction of principal surface flow.
11. See Revised Standard Plans D77A and D77B for grate and frame details and weights of miscellaneous iron and steel.
12. See Standard Plan D78A for gutter depression details.
13. This dimenison will vary with different grates, curbs types, box width and wall thickness.
14. Bar may be rotated as necessary to clear opening. Where "L" is 6" or less, bar may be omitted.
15. Where "L" is 6" or less, wall thickness shall be as shown in Table A.
16. Cast-in-place inlets to be formed around all pipes/stubs intersecting the inlet, and concrete poured in one continuous operation. Precast inlets shall have mortared connections conforming to details for Type GCP Inlet shown on Standard Plan D75B. See Standard Specifications for mortar composition.

TABLE A

CONCRETE QUANTITIES				
TYPE	H=3'-0" TO 8'-0" (T=6")		H=8'-1" TO 20'-0" (T=8")	
	H=3'-0" (CY)	ADDITIONAL PCC PER FOOT (CY)	H=8'-1" (CY)	ADDITIONAL PCC PER FOOT (CY)
G-1	0.95	0.220	See Note A	SEE NOTE A
G-2*	1.31	0.255	3.50	0.357
G-3	1.03	0.220	See Note A	SEE NOTE A
G-4* (TYPE 24)	1.27	0.255	3.48	0.357
G-4* (TYPE 18)	1.30	0.255	3.50	0.357
G-5	1.02	0.220	SEE NOTE A	SEE NOTE A
G-6	1.04	0.220	SEE NOTE A	SEE NOTE A

TABLE BASED ON 8" FLOOR SLAB. NO DEDUCTIONS ARE TO BE MADE TO THESE QUANTITIES BECAUSE OF PIPE OPENINGS, DIFFERENT FLOOR ALTERNATIVES OR DIFFERENT CURB TYPES. * QUANTITIES FOR TYPE G-2 AND G-4 INLETS BASED ON THE MINIMUM INTERIOR DIMENSIONS.

NOTE A:

Maximum allowable height 6'-0".

STATE OF CALIFORNIA
DEPARTMENT OF TRANSPORTATION

DRAINAGE INLETS

NO SCALE

RSP D73 DATED OCTOBER 19, 2012 SUPERSEDES STANDARD PLAN D73 DATED MAY 20, 2011 - PAGE 156 OF THE STANDARD PLANS BOOK DATED 2010.

REVISED STANDARD PLAN RSP D73

2010 REVISED STANDARD PLAN RSP D73

DATE PLOTTED => 01-DEC-2014
TIME PLOTTED => 15:29

Dist	COUNTY	ROUTE	POST MILES TOTAL PROJECT	SHEET No.	TOTAL SHEETS
02	Mod	299	39.3/40.5	78	88

Raymond Don Tsztoo
REGISTERED CIVIL ENGINEER

April 19, 2013
PLANS APPROVAL DATE

REGISTERED PROFESSIONAL ENGINEER Raymond Don Tsztoo No. C37332 Exp. 6-30-14 CIVIL STATE OF CALIFORNIA

THE STATE OF CALIFORNIA OR ITS OFFICERS OR AGENTS SHALL NOT BE RESPONSIBLE FOR THE ACCURACY OR COMPLETENESS OF SCANNED COPIES OF THIS PLAN SHEET.

TO ACCOMPANY PLANS DATED 11-26-14

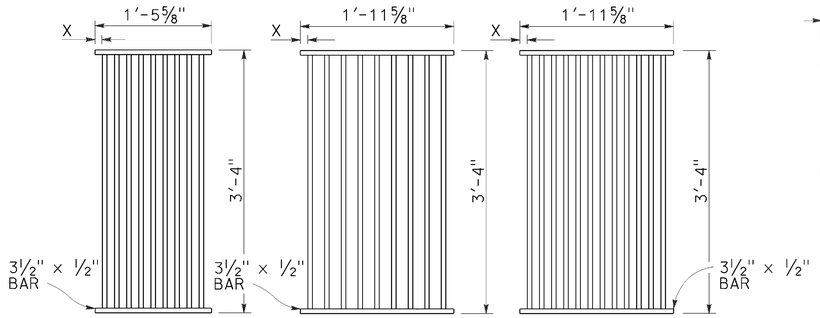

TYPE 18-9
1⅜" Clear spacing. Use within the roadbed on highways where bicycles and pedestrians are excluded.

TYPE 24-9
2" Clear spacing. Use in locations off the roadbed on all types of highways.

TYPE 24-12
1⅜" Clear spacing. Use within the roadbed on highways where bicycles and pedestrians are excluded.

RECTANGULAR GRATE DETAILS
(See table below)

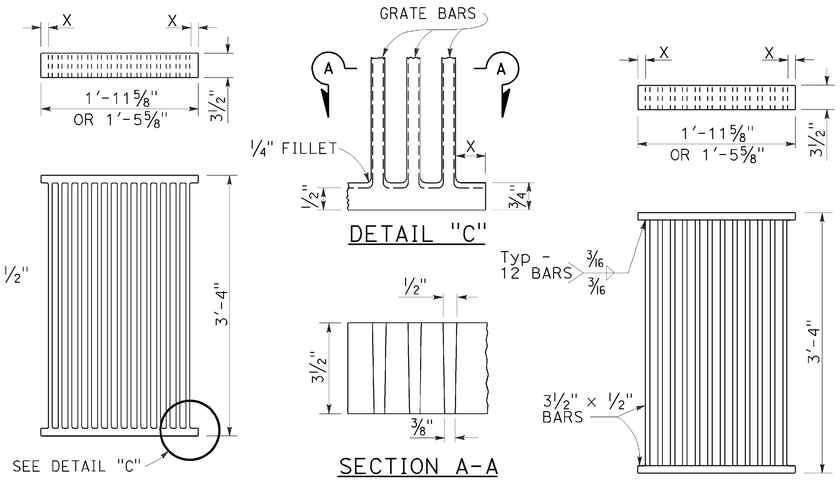

ALTERNATIVE CAST DUCTILE IRON GRATE OR CAST CARBON STEEL GRATE

ALTERNATIVE WELDED GRATE

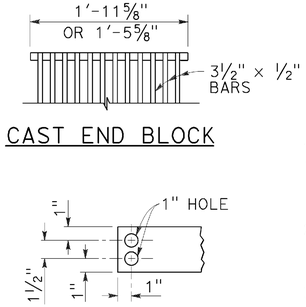

CAST END BLOCK

END OF BAR

NOTES:

1. Grate type numbers refer to approximate width of grate in inches and number of bars, respectively.
2. Contractor has the option of using cast ductile iron, cast carbon steel, welded, bolted, or cast end block grate.
3. Rounded top of bars optional on all grates.
4. Pipe inlets with a grate shall be placed so that bars parallel direction of principle surface flow.
5. Complete joint penetration butt welds may be substituted for the fillet welds on all anchors.
6. Standard square, hexagon, round or equivalent headed anchors may be substituted for the right angle hooks on the anchors shown on this plan.
7. Grate and frame weights are based on welded grates (weights of face angles, steps, protection bars, etc. are not included).
8. Connect chain to grate and frame only at locations shown on the plans. When chain is required, do not use cast ductile iron grates.

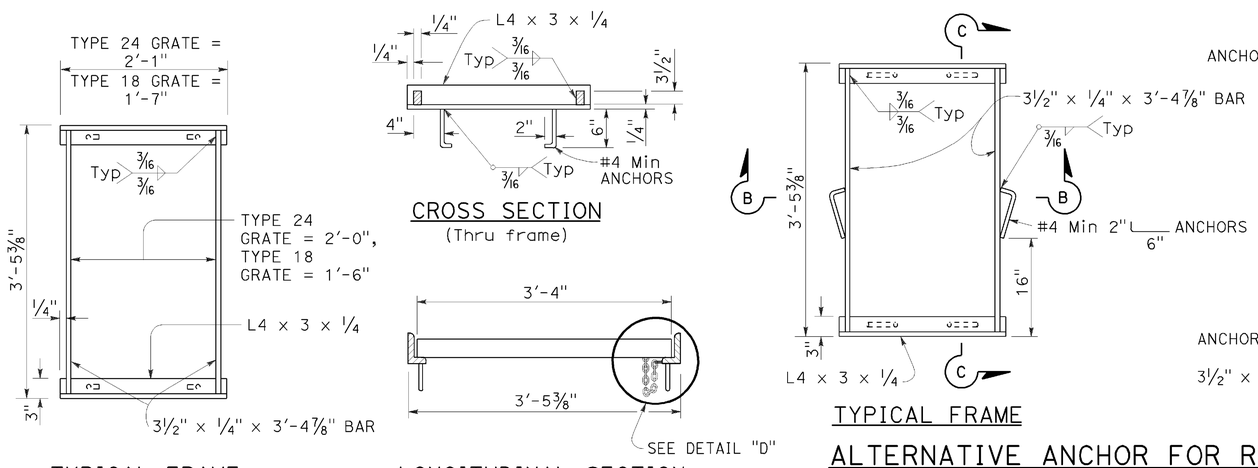

TYPICAL FRAME

RECTANGULAR FRAME DETAILS
(For all rectangular grates)

ALTERNATIVE ANCHOR FOR RECTANGULAR FRAME
(For details not shown, See Rectangular Frame Details)

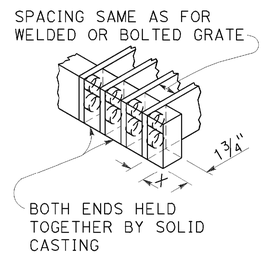

ALTERNATIVE CAST DUCTILE IRON OR CAST CARBON STEEL END BLOCK GRATE

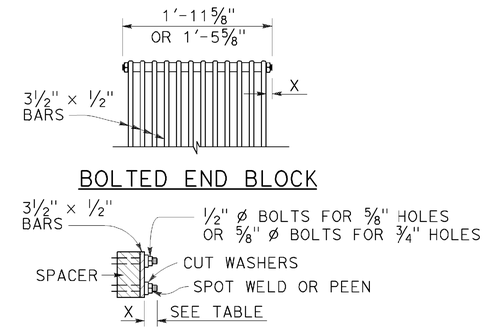

ALTERNATIVE BOLTED GRATE

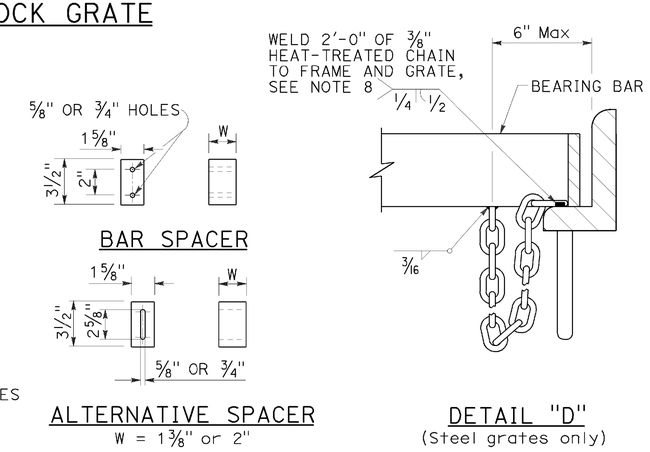

GRATE BAR SPACING TABLE

TYPE	No. OF BARS	CLEAR BAR SPACING	X
18-9	9	1⅜"	1 1/16"
24-9	9	2"	1 9/16"
24-12	12	1⅜"	1¼"

INLET TYPE	COVER TYPE	WEIGHT LB
OS	PLATE	174
OL-7	PLATE	170
OL-10	PLATE	170
OL-14	PLATE	170
OL-21	PLATE	170
OCP	PLATE	112
OCPI	PLATE	112
OCPI	REDWOOD	42
OMP	PLATE	177
OMPI	PLATE	177

INLET TYPE	GRATE TYPE	No. OF GRATES	WEIGHT LB
GDO	24-12	2	634
GOL-7	24-12	1	326
GOL-10	24-12	1	326
GO,G1,G2,G3,G4 (TYPE 24)	24-9	1	263
	24-12	1	326
G4 (TYPE 18),G5,G6	18-9	1	249
GT1	18-9	2	498
GT2	18-9	2	498
GT3	24-12	2	652
GT4	24-12	2	652
TRASH RACK			22
GRATE CHAIN			3

BASIS FOR Misc IRON & STEEL FINAL PAY WEIGHTS FOR DRAINAGE INLETS
(See Note 7)

STATE OF CALIFORNIA
DEPARTMENT OF TRANSPORTATION

GRATE DETAILS No. 1

NO SCALE

RSP D77A DATED APRIL 19, 2013 SUPERSEDES RSP D77A DATED JULY 20, 2012 AND STANDARD PLAN D77A DATED MAY 20, 2011 - PAGE 164 OF THE STANDARD PLANS BOOK DATED 2010.

REVISED STANDARD PLAN RSP D77A

2010 REVISED STANDARD PLAN RSP D77A

DATE PLOTTED => 01-DEC-2014
TIME PLOTTED => 15:30

Dist	COUNTY	ROUTE	POST MILES TOTAL PROJECT	SHEET No.	TOTAL SHEETS
02	Mod	299	39.3/40.5	79	88

Raymond Don Tsztoo
REGISTERED CIVIL ENGINEER

April 19, 2013
PLANS APPROVAL DATE

REGISTERED PROFESSIONAL ENGINEER Raymond Don Tsztoo No. C37332 Exp. 6-30-14 CIVIL STATE OF CALIFORNIA

THE STATE OF CALIFORNIA OR ITS OFFICERS OR AGENTS SHALL NOT BE RESPONSIBLE FOR THE ACCURACY OR COMPLETENESS OF SCANNED COPIES OF THIS PLAN SHEET.

TO ACCOMPANY PLANS DATED 11-26-14

2010 REVISED STANDARD PLAN RSP D77B

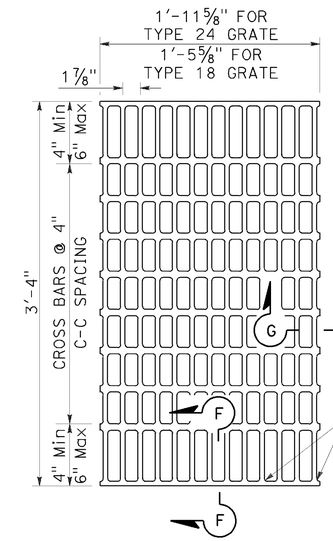

NOTES:

Bearing bars to be 3½" × ¼" bars on 1⅞" centers.

⅜"± ø Cross bars may be fillet welded, resistance welded or electroforged to bearing bars.

Weight of Type 24 grate = 141 LBS.

Weight of Type 18 grate = 107 LBS. (Type 24 grate shown).

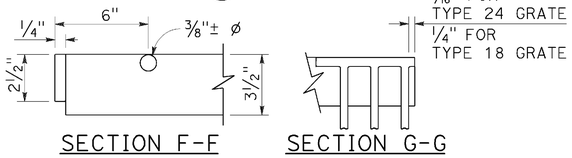

SECTION F-F SECTION G-G

TYPE 18-10 AND 24-13 GRATE

(Welded Steel)

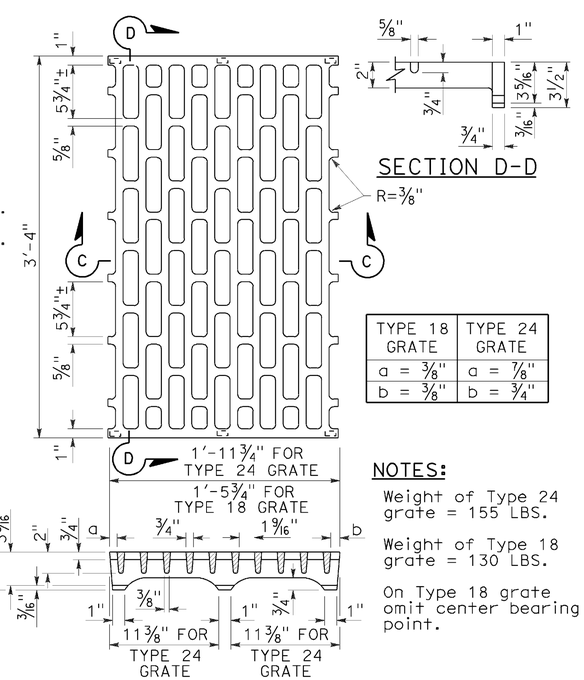

TYPE 18 GRATE	TYPE 24 GRATE
a = ⅜"	a = ⅞"
b = ⅜"	b = ¾"

NOTES:

Weight of Type 24 grate = 155 LBS.

Weight of Type 18 grate = 130 LBS.

On Type 18 grate omit center bearing point.

SECTION C-C

TYPE 18-8C AND 24-10C GRATE

(Cast ductile iron)

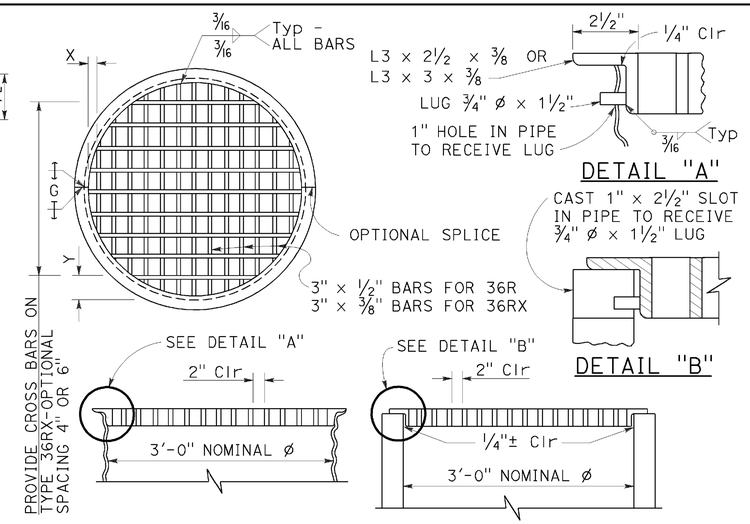

DETAIL "A"

DETAIL "B"

TYPE 36R AND 36RX GRATE DETAILS

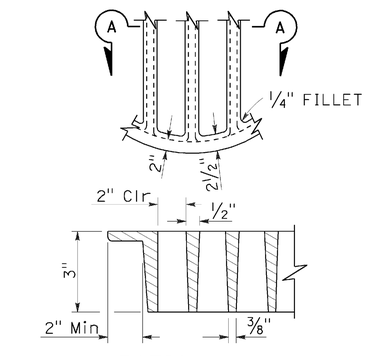

SECTION A-A

ALTERNATIVE CAST DUCTILE IRON GRATE OR CAST CARBON STEEL GRATE TYPE 36R AND 36RX

BASIS FOR Misc IRON AND STEEL FINAL PAY WEIGHTS FOR DRAINAGE INLETS

INLET TYPE	GRATE TYPE	No. OF GRATES	WEIGHT LB
GDO (SEE NOTE 4)	24-10C	2	391
	24-10S	2	456
	24-12X	2	473
	24-13	2	374
GO,GOL,G1,G2, G3,G4 (TYPE 24)	24-10C	1	202
	24-10S	1	229
	24-12X	1	239
	24-13	1	188
G4 (TYPE 18) G5,G6	18-8S	1	187
	18-9X	1	187
	18-10	1	149
GT1,GT2	18-8S	2	374
	18-9X	2	374
	18-10	2	298
GT3,GT4	24-10C	2	404
	24-10S	2	458
	24-12X	2	478
	24-13	2	376
ODI	36RX (Mod)	1	196
GMP,GCP,GCPI	36RX	1	215
ODI	36R (Mod)	1	220
GMP,GCP,GCPI	36R	1	236
TRASH RACK			22
GRATE CHAIN			3

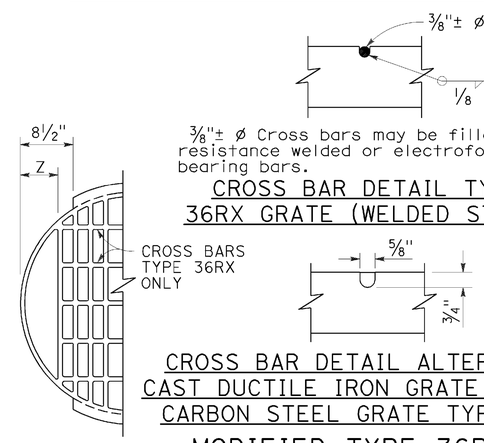

CROSS BAR DETAIL TYPE 36RX GRATE (WELDED STEEL)

CROSS BAR DETAIL ALTERNATIVE CAST DUCTILE IRON GRATE OR CAST CARBON STEEL GRATE TYPE 36RX

MODIFIED TYPE 36R AND 36RX GRATE FOR ODI INLET

NOTES:

1. When alternative grates are allowed - Final pay based on alternative with the lesser weight.
2. Use frame shown on Standard Plan D74A, D74B or RSP D77A as appropriate.
3. When Type 24-10S, 24-12X or 24-13 grates are used with GDO Inlets, a ¼" × 3½" × 3'-4⅞" steel bar shall be welded across the center of inlet frame to separate the individual grates.
4. See Revised Standard Plan RSP D77A for connecting chain to welded grate and frame. When chain is required, do not use cast ductile iron grate.

GRATE BAR SPACING TABLE

TYPE	No. OF BARS	CLEAR BAR SPACING	X	Y 4" SPACING	Y 6" SPACING	Z
36R	13	2"	2⅛"	–	–	–
36RX (STEEL)	15	2"	9/16"	3¾"	5¾"	–
36RX (CAST)	13	2"	2⅛"	3¾"	5¾"	–
36R Mod	12	2"	2⅛"	–	–	5"
36RX Mod (STEEL)	13	2"	9/16"	3¾"	5¾"	5 11/16"
36RX Mod (CAST)	12	2"	2⅛"	3¾"	5¾"	5"

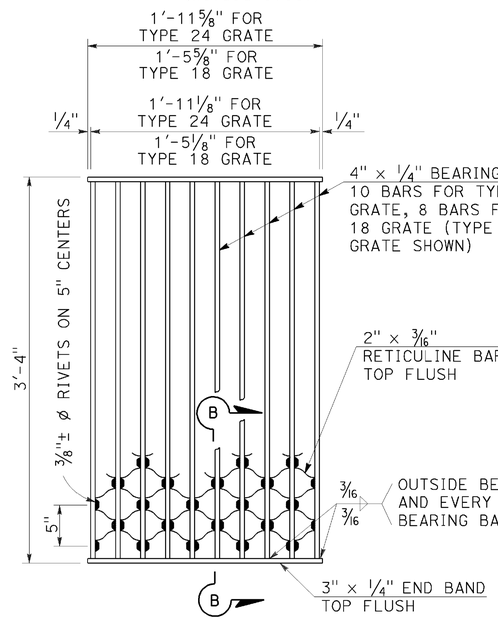

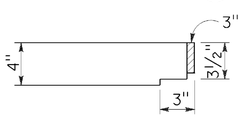

NOTES:

Weight of Type 24 grate = 182 LBS.
Weight of Type 18 grate = 145 LBS.

SECTION B-B

TYPE 18-8S AND 24-10S GRATE

(Welded Steel) Reticuline type

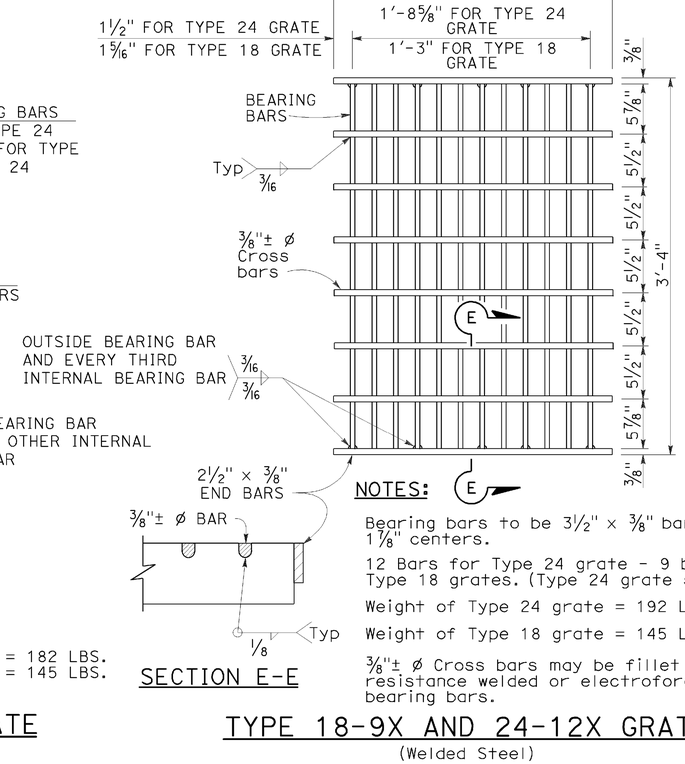

SECTION E-E

NOTES:

Bearing bars to be 3½" × ⅜" bars on 1⅞" centers.

12 Bars for Type 24 grate - 9 bars for Type 18 grates. (Type 24 grate shown).

Weight of Type 24 grate = 192 LBS.

Weight of Type 18 grate = 145 LBS.

⅜"± ø Cross bars may be fillet welded, resistance welded or electroforged to bearing bars.

TYPE 18-9X AND 24-12X GRATE

(Welded Steel)

STATE OF CALIFORNIA
DEPARTMENT OF TRANSPORTATION

GRATE DETAILS No. 2

NO SCALE

RSP D77B DATED APRIL 19, 2013 SUPERSEDES RSP D77B DATED JULY 20, 2012 AND STANDARD PLAN D77B DATED MAY 20, 2011 - PAGE 165 OF THE STANDARD PLANS BOOK DATED 2010.

REVISED STANDARD PLAN RSP D77B

DATE PLOTTED => 01-DEC-2014
TIME PLOTTED => 15:30

Dist	COUNTY	ROUTE	POST MILES TOTAL PROJECT	SHEET No.	TOTAL SHEETS
02	Mod	299	39.3/40.5	80	88

REGISTERED CIVIL ENGINEER

July 19, 2013
PLANS APPROVAL DATE

REGISTERED PROFESSIONAL ENGINEER Gurinderpal Bhullar No. C48815 Exp. 9-30-14 CIVIL STATE OF CALIFORNIA

THE STATE OF CALIFORNIA OR ITS OFFICERS OR AGENTS SHALL NOT BE RESPONSIBLE FOR THE ACCURACY OR COMPLETENESS OF SCANNED COPIES OF THIS PLAN SHEET.

TO ACCOMPANY PLANS DATED 11-26-14

TABLE 1

TAPER LENGTH CRITERIA AND CHANNELIZING DEVICE SPACING

SPEED (S)	MINIMUM TAPER LENGTH * FOR WIDTH OF OFFSET 12 FEET (W)				MAXIMUM CHANNELIZING DEVICE SPACING		
					X	Y	Z **
	TANGENT 2L	MERGING L	SHIFTING L/2	SHOULDER L/3	TAPER	TANGENT	CONFLICT
mph	ft	ft	ft	ft	ft	ft	ft
20	160	80	40	27	20	40	10
25	250	125	63	42	25	50	12
30	360	180	90	60	30	60	15
35	490	245	123	82	35	70	17
40	640	320	160	107	40	80	20
45	1080	540	270	180	45	90	22
50	1200	600	300	200	50	100	25
55	1320	660	330	220	55	110	27
60	1440	720	360	240	60	120	30
65	1560	780	390	260	65	130	32
70	1680	840	420	280	70	140	35

* - For other offsets, use the following merging taper length formula for L:
For speed of 40 mph or less, $L = WS^2/60$
For speed of 45 mph or more, $L = WS$

Where: L = Taper length in feet
W = Width of offset in feet
S = Posted speed limit, off-peak 85th-percentile speed prior to work starting, or the anticipated operating speed in mph

** - Use for taper and tangent sections where there are no pavement markings or where there is a conflict between existing pavement markings and channelizers (CA).

TABLE 2

LONGITUDINAL BUFFER SPACE AND FLAGGER STATION SPACING

SPEED *	Min D **	DOWNGRADE Min D ***		
		-3%	-6%	-9%
mph	ft	ft	ft	ft
20	115	116	120	126
25	155	158	165	173
30	200	205	215	227
35	250	257	271	287
40	305	315	333	354
45	360	378	400	427
50	425	446	474	507
55	495	520	553	593
60	570	598	638	686
65	645	682	728	785
70	730	771	825	891

* - Speed is posted speed limit, off-peak 85th-percentile speed prior to work starting, or the anticipated operating speed in mph

** - Longitudinal buffer space or flagger station spacing

*** - Use on sustained downgrade steeper than -3 percent and longer than 1 mile.

TABLE 3

ADVANCE WARNING SIGN SPACING

ROAD TYPE	DISTANCE BETWEEN SIGNS *		
	A	B	C
	ft	ft	ft
URBAN - 25 mph OR LESS	100	100	100
URBAN - MORE THAN 25 mph TO 40 mph	250	250	250
URBAN - MORE THAN 40 mph	350	350	350
RURAL	500	500	500
EXPRESSWAY / FREEWAY	1000	1500	2640

* - The distances are approximate, are intended for guidance purposes only, and should be applied with engineering judgment. These distances should be adjusted by the Engineer for field conditions, if necessary, by increasing or decreasing the recommmended distances.

STATE OF CALIFORNIA
DEPARTMENT OF TRANSPORTATION

TRAFFIC CONTROL SYSTEM TABLES FOR LANE AND RAMP CLOSURES

NO SCALE

RSP T9 DATED JULY 19, 2013 SUPERSEDES RSP T9 DATED APRIL 19, 2013 THAT SUPPLEMENTS THE STANDARD PLANS BOOK DATED 2010.

REVISED STANDARD PLAN RSP T9

2010 REVISED STANDARD PLAN RSP T9

DATE PLOTTED => 01-DEC-2014
TIME PLOTTED => 15:30

Dist	COUNTY	ROUTE	POST MILES TOTAL PROJECT	SHEET No.	TOTAL SHEETS
02	Mod	299	39.3/40.5	81	88

Devinder Singh
REGISTERED CIVIL ENGINEER

October 17, 2014
PLANS APPROVAL DATE

REGISTERED PROFESSIONAL ENGINEER
Devinder Singh
No. C50470
Exp. 6-30-15
CIVIL
STATE OF CALIFORNIA

THE STATE OF CALIFORNIA OR ITS OFFICERS OR AGENTS SHALL NOT BE RESPONSIBLE FOR THE ACCURACY OR COMPLETENESS OF SCANNED COPIES OF THIS PLAN SHEET.

TO ACCOMPANY PLANS DATED 11-26-14

NOTES:

See Revised Standard Plan RSP T9 for tables.

Use cone spacing X for taper segment, Y for tangent segment or Z for conflict situations, as approriate, per Table 1, unless X, Y, or Z cone spacing is shown on this sheet.

Unless otherwise specified in the special provisions, all temporary warning signs shall have black legend on fluorescent orange background.

California codes are designated by (CA). Otherwise, Federal (MUTCD) codes are shown.

TYPICAL LANE CLOSURE WITH REVERSIBLE CONTROL

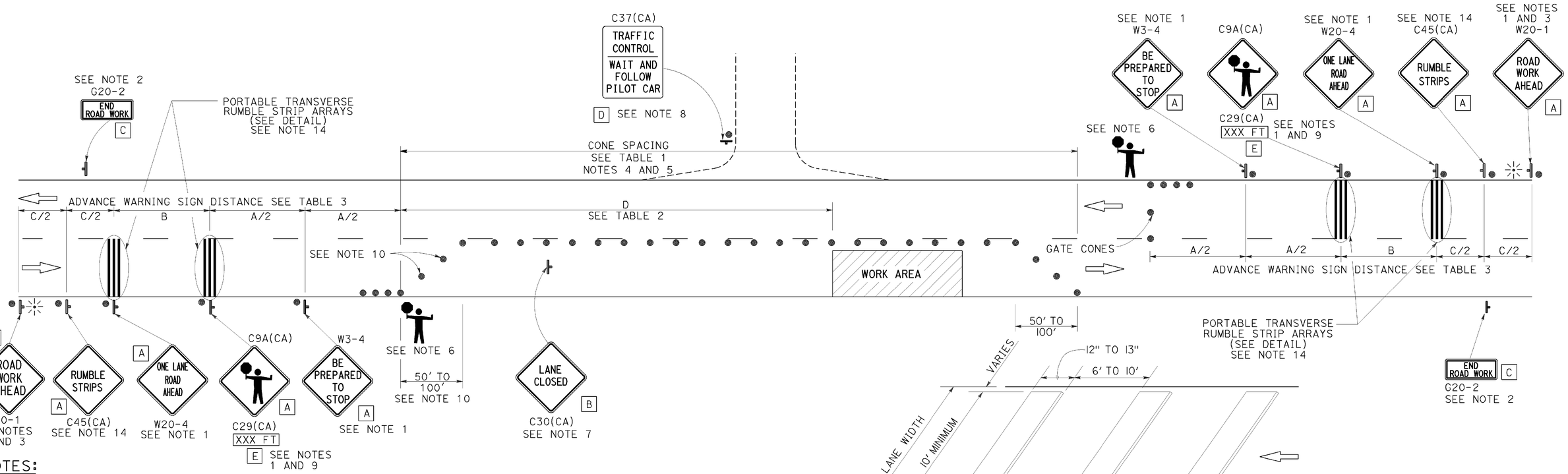

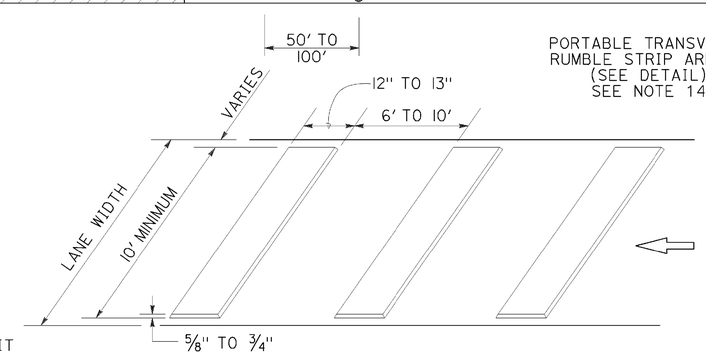

PORTABLE TRANSVERSE RUMBLE STRIP ARRAY DETAIL

NOTES:

1. Each advance warning sign in each direction of travel shall be equipped with at least two flags for daytime closure. Each flag shall be at least 16" x 16" in size and shall be orange or fluorescent red-orange in color. Flashing beacons shall be placed at the locations indicated for lane closure during hours of darkness.
2. A G20-2 "END ROAD WORK" sign, as appropriate, shall be placed at the end of the lane control unless the end of work area is obvious, or ends within a larger project's limits.
3. If the W20-1 sign would follow within 2000' of a stationary W20-1 or G20-1 "ROAD WORK NEXT _____ MILES", use a W20-4 sign for the first advance warning sign.
4. All cones used for lane closures during the hours of darkness shall be fitted with retroreflective bands (or sleeves) as specified in the specifications.
5. Portable delineators, placed at one-half the spacing indicated for traffic cones, may be used instead of cones for daytime closures only.
6. Additional advance flaggers may be required. Flagger should stand in a conspicuous place, be visible to approaching traffic as well as approaching vehicles after the first vehicle has stopped. During the hours of darkness, the flagging-station and flagger shall be illuminated and clearly visible to approaching traffic. The illumination footprint of the lighting on the ground shall be at least 20' in diameter. Place a minimum of four cones at 50' intervals in advance of flagger station as shown.
7. Place C30(CA) "LANE CLOSED" sign at 500' to 1000' intervals throughout extended work areas. They are optional if the work area is visible from the flagger station.
8. When a pilot car is used, place a C37(CA) "TRAFFIC CONTROL-WAIT AND FOLLOW PILOT CAR" sign with black legend on white background at all intersections, driveways and alleys without a flagger within traffic control area. Signs shall be clean and visible at all times. Where traffic can not be effectively self-regulated, at least one flagger shall be used at each intersection within traffic control area.
9. An optional C29(CA) sign may be placed below the C9A(CA) sign.
10. Either traffic cones or barricades shall be placed on the taper. Barricades shall be Type I, II, or III.
11. The color of the portable transverse rumble strips shall be black or orange. Use 2 arrays, each array shall consist of 3 rumble strips.
12. Portable transverse rumble strips shall not be placed on sharp horizontal or vertical curves nor shall they be placed through pedestrian crossings.
13. If the portable transverse rumble strips become out of alignment (skewed) by more than 6 inches, measured from one end to the other, they shall be readjusted to bring the placement back to the original location.
14. Portable transverse rumble strips are not required if any one of the following conditions is satisfied:
    A. Work duration occupies a location for four hours or less
    B. Posted speed limit is below 45 MPH
    C. Work is of emergency nature
    D. Work zone is in snow or icy weather conditions

LEGEND

- TRAFFIC CONE
- TEMPORARY TRAFFIC CONTROL SIGN
- PORTABLE FLASHING BEACON
- FLAGGER

SIGN PANEL SIZE (Min)

A	48" x 48"
B	30" x 30"
C	36" x 18"
D	36" x 42"
E	20" x 7"

STATE OF CALIFORNIA
DEPARTMENT OF TRANSPORTATION

TRAFFIC CONTROL SYSTEM FOR LANE CLOSURE ON TWO LANE CONVENTIONAL HIGHWAYS

NO SCALE

RSP T13 DATED OCTOBER 17, 2014 SUPERSEDES RSP T13 DATED JULY 18, 2014 AND RSP T13 DATED APRIL 19, 2013 AND STANDARD PLAN T13 DATED MAY 20, 2011 - PAGE 241 OF THE STANDARD PLANS BOOK DATED 2010.

REVISED STANDARD PLAN RSP T13

2010 REVISED STANDARD PLAN RSP T13

DATE PLOTTED => 01-DEC-2014
TIME PLOTTED => 15:30

Dist	COUNTY	ROUTE	POST MILES TOTAL PROJECT	SHEET No.	TOTAL SHEETS
02	Mod	299	39.3/40.5	82	88

Theresa Gabriel
REGISTERED ELECTRICAL ENGINEER

July 19, 2013
PLANS APPROVAL DATE

REGISTERED PROFESSIONAL ENGINEER Theresa Aziz Gabriel No. E15129 Exp. 6-30-14 ELECTRICAL STATE OF CALIFORNIA

THE STATE OF CALIFORNIA OR ITS OFFICERS OR AGENTS SHALL NOT BE RESPONSIBLE FOR THE ACCURACY OR COMPLETENESS OF SCANNED COPIES OF THIS PLAN SHEET.

TO ACCOMPANY PLANS DATED 11-26-14

LEGEND:

AB	ABANDON. IF APPLIED TO CONDUIT, REMOVE CONDUCTORS
BC	INSTALL PULL BOX IN EXISTING CONDUIT RUN
BP	PEDESTRIAN BARRICADE, TYPE AS INDICATED ON PLAN
CB	INSTALL CONDUIT INTO EXISTING PULL BOX
CC	CONNECT NEW AND EXISTING CONDUIT. REMOVE EXISTING CONDUCTORS AND INSTALL CONDUCTORS AS INDICATED
CF	CONDUIT TO REMAIN FOR FUTURE USE. REMOVE CONDUCTORS. INSTALL PULL TAPE
DH	DETECTOR HANDHOLE
FA	FOUNDATION TO BE ABANDONED
IS	INSTALL SIGN ON SIGNAL MAST ARM
NS	NO SLIP BASE ON STANDARD
PEC	PHOTOELECTRIC CONTROL
PEU	PHOTOELECTRIC UNIT
RC	EQUIPMENT OR MATERIAL TO BE REMOVED AND BECOME THE PROPERTY OF THE CONTRACTOR
RE	REMOVE ELECTROLIER, FUSES AND BALLAST. TAPE ENDS OF CONDUCTORS
RL	RELOCATE EQUIPMENT
RR	REMOVE AND REUSE EQUIPMENT
RS	REMOVE AND SALVAGE EQUIPMENT
SC	SPLICE NEW TO EXISTING CONDUCTORS
SD	SERVICE DISCONNECT
TSP	TELEPHONE SERVICE POINT

ABBREVIATIONS

APS	ACCESSIBLE PEDESTRIAN SIGNAL
BBS	BATTERY BACKUP SYSTEM
BC	BOLT CIRCLE
BPB	BICYCLE PUSH BUTTON
C	CONDUIT
CB	CIRCUIT BREAKER
CCTV	CLOSED CIRCUIT TELEVISION
Ckt	CIRCUIT
CMS	CHANGEABLE MESSAGE SIGN
Ctid	CALTRANS IDENTIFICATION
Comm	COMMUNICATION
DLC	LOOP DETECTOR LEAD-IN CABLE
EMS	EXTINGUISHABLE MESSAGE SIGN
EVUC	EMERGENCY VEHICLE UNIT CABLE
EVUD	EMERGENCY VEHICLE UNIT DETECTOR
FB	FLASHING BEACON
FBCA	FLASHING BEACON CONTROL ASSEMBLY
FBS	FLASHING BEACON WITH SLIP BASE
FO	FIBER OPTIC
G	EQUIPMENT GROUNDING CONDUCTOR
GB	GROUND BUS
GFCI	GROUND FAULT CIRCUIT INTERRUPTER
HAR	HIGHWAY ADVISORY RADIO
Hex	HEXAGONAL
HPS	HIGH PRESSURE SODIUM
IISNS	INTERNALLY ILLUMINATED STREET NAME SIGN
ISL	INDUCTION SIGN LIGHTING
LED	LIGHT EMITTING DIODE
LMA	LUMINAIRE MAST ARM
LPS	LOW PRESSURE SODIUM
Ltg	LIGHTING
Lum	LUMINAIRE
M	METERED
MAT	MAST ARM MOUNTING TOP ATTACHMENT
MAS	MAST ARM MOUNTING SIDE ATTACHMENT
M/M	MULTIPLE TO MULTIPLE TRANSFORMER
Mtg	MOUNTING
MV	MERCURY VAPOR LIGHTING FIXTURE
MVDS	MICROWAVE VEHICLE DETECTION SYSTEM
N	NEUTRAL (GROUNDED CONDUCTOR)
NB	NEUTRAL BUS
NC	NORMALLY CLOSE
NO	NORMALLY OPEN
P	CIRCUIT BREAKER'S POLE
PB	PULL BOX
PBA	PUSH BUTTON ASSEMBLY
PEC	PHOTOELECTRIC CONTROL
Ped	PEDESTRIAN
PEU	PHOTOELECTRIC UNIT
PT	CONDUIT WITH PULL TAPE
RE	RELOCATED EQUIPMENT
RM	RAMP METERING
RWIS	ROADSIDE WEATHER INFORMATION SYSTEM
SB	SLIP BASE
SIC	SIGNAL INTERCONNECT CABLE
Sig	SIGNAL
SMA	SIGNAL MAST ARM
SNS	STREET NAME SIGN
SP	SERVICE POINT
TDC	TELEPHONE DEMARCATION CABINET
TMS	TRAFFIC MONITORING STATION
TOS	TRAFFIC OPERATIONS SYSTEM
Veh	VEHICLE
VIVDS	VIDEO IMAGE VEHICLE DETECTION SYSTEM
WIM	WEIGH-IN-MOTION
Xfmr	TRANSFORMER

SOFFIT AND WALL MOUNTED LUMINAIRES

PENDANT, 70 W HPS UNLESS OTHERWISE SPECIFIED

FLUSH, 70 W HPS UNLESS OTHERWISE SPECIFIED

WALL SURFACE, 70 W HPS UNLESS OTHERWISE SPECIFIED

EXISTING SOFFIT OR WALL LUMINAIRE TO REMAIN UNMODIFIED

EXISTING SOFFIT OR WALL LUMINAIRE TO BE MODIFIED AS SPECIFIED

NOTE:

Arrow indicates "street side" of luminaire.

COMMONLY USED SYMBOLS FOR UNITED STATES CUSTOMARY UNITS OF MEASUREMENT:

SYMBOL USED	DEFINITIONS
Ω	OHMS
min	MINUTE
s	SECOND
bps	BITS PER SECOND
Bps	BYTES PER SECOND
A	AMPERE
V	VOLT
V(dc)	VOLT (DIRECT CURRENT)
V(ac)	VOLT (ALTERNATING CURRENT)
FC	FOOT - CANDLE
W	WATTS
VA	VOLT-AMPERE
M	MEGA
k	KILO
m	MILLI
μ	MICRO
P	PICO
Hz	HERTZ

MISCELLANEOUS ELECTROLIERS

NEW	EXISTING	
		LUMINAIRE ON WOOD POLE
		NON-STANDARD ELECTROLIER (SEE PROJECT NOTES OR PROJECT PLANS)
		CITY ELECTROLIER
		ELECTROLIER FOUNDATION (FUTURE INSTALLATION)

NOTES:

1. HPS luminaires shall be 310 W HPS when installed on Type 21, 21D, 30, 31 and 32 Standards, unless otherwise specified. HPS luminaires shall be 200 W when installed on other type standards or poles, unless otherwise specified.
2. LED luminaires shall be 235 W when installed on Type 21, 21D, 30, 31 and 32 Standards, unless otherwise specified. LED luminaires shall be 165 W when installed on other type standards or poles, unless otherwise specified.
3. Luminaires shall be the cutoff type, ANSI Type III medium cutoff lighting distribution, unless otherwise specified.

STANDARD ELECTROLIER

NEW	EXISTING	STANDARD TYPE
		15
		15D
		15 STRUCTURE
		15D STRUCTURE
		21
		21D
		21 STRUCTURE
		21D STRUCTURE
		30
		31
		32

STATE OF CALIFORNIA
DEPARTMENT OF TRANSPORTATION

ELECTRICAL SYSTEMS (LEGEND AND ABBREVIATIONS)

NO SCALE

RSP ES-1A DATED JULY 19, 2013 SUPERSEDES STANDARD PLAN ES-1A DATED MAY 20, 2011 - PAGE 425 OF THE STANDARD PLANS BOOK DATED 2010.

REVISED STANDARD PLAN RSP ES-1A

2010 REVISED STANDARD PLAN RSP ES-1A

DATE PLOTTED => 01-DEC-2014
TIME PLOTTED => 15:30

Dist	COUNTY	ROUTE	POST MILES TOTAL PROJECT	SHEET No.	TOTAL SHEETS
02	Mod	299	39.3/40.5	83	88

Theresa Gabriel
REGISTERED ELECTRICAL ENGINEER

July 19, 2013
PLANS APPROVAL DATE

REGISTERED PROFESSIONAL ENGINEER
Theresa Aziz Gabriel
No. E15129
Exp. 6-30-14
ELECTRICAL
STATE OF CALIFORNIA

THE STATE OF CALIFORNIA OR ITS OFFICERS OR AGENTS SHALL NOT BE RESPONSIBLE FOR THE ACCURACY OR COMPLETENESS OF SCANNED COPIES OF THIS PLAN SHEET.

TO ACCOMPANY PLANS DATED 11-26-14

CONDUIT

NEW	EXISTING	
		LIGHTING CONDUIT, UNLESS OTHERWISE INDICATED OR NOTED
		TRAFFIC SIGNAL CONDUIT
C	c	COMMUNICATION CONDUIT
T	t	TELEPHONE CONDUIT
F	f	FIRE ALARM CONDUIT
FO	fo	FIBER OPTIC CONDUIT
		CONDUIT TERMINATION
R	r	CONDUIT RISER ATTACHED TO THE STRUCTURE OR SERVICE POLE

SERVICE EQUIPMENT

NEW	EXISTING	
OH	oh	OVERHEAD LINES
U	U	WOOD POLE, "U" INDICATES UTILITY OWNED
		POLE GUY WITH ANCHOR
		UTILITY TRANSFORMER - GROUND MOUNTED
III	III	SERVICE EQUIPMENT ENCLOSURE TYPE. DOOR INDICATES FRONT OF ENCLOSURE
T	t	TELEPHONE DEMARCATION CABINET

POLE-MOUNTED SERVICE DESIGNATION

TYPE H SERVICE, 28'-10" — TYPE OF INSTALLATION AND POLE HEIGHT ABOVE GRADE

FLASHING BEACON

NEW	EXISTING	
R	R	FLASHING BEACON (ONE VEHICLE SIGNAL HEAD WITH BACKPLATE AND VISOR) "R" INDICATES RED INDICATION, "Y" INDICATES YELLOW INDICATION
Y Y	Y Y	FLASHING BEACON WITH TYPE 15-FBS STANDARD AND A SIGN.
R R	R R	FLASHING BEACON WITH TYPES 9, 9A OR 9B SIGN UNLESS OTHERWISE SPECIFIED OR INDICATED

SIGNAL EQUIPMENT

NEW	EXISTING	
C	C	PEDESTRIAN SIGNAL HEAD "C" INDICATES COUNTDOWN PEDESTRIAN HEAD
		PUSH BUTTON ASSEMBLY POST
		PEDESTRIAN BARRICADE
		VEHICLE SIGNAL HEAD (WITH BACKPLATE AND 3-SECTIONS: RED, YELLOW AND GREEN)
		VEHICLE SIGNAL HEAD WITH ANGLE VISOR
PV	PV	MODIFICATIONS OF BASIC SYMBOL: "L" INDICATES ALL NON-ARROW SECTIONS LOUVERED "LG" INDICATES LOUVERED GREEN SECTION ONLY "PV" INDICATES ALL 12" SECTIONS PROGRAMMED VISIBILITY "8" INDICATES ALL 8" SECTIONS (ONLY WHEN SPECIFIED)
		VEHICLE SIGNAL HEAD CONSISTING OF RED, YELLOW AND GREEN LEFT ARROW SECTIONS
		VEHICLE SIGNAL HEAD CONSISTING OF RED AND YELLOW SECTIONS WITH AN UP GREEN ARROW SECTION
		VEHICLE SIGNAL HEAD (5 SECTION) CONSISTING OF RED, YELLOW AND GREEN SECTIONS WITH YELLOW AND GREEN RIGHT ARROW SECTIONS
		TYPE 15TS STANDARD WITH VEHICLE SIGNAL HEAD AND LUMINAIRE
		TYPE 21TS STANDARD WITH VEHICLE SIGNAL HEAD AND LUMINAIRE
		STANDARD WITH LUMINAIRE AND SIGNAL MAST ARMS AND ATTACHED VEHICLE SIGNAL HEADS
		TYPE 1 STANDARD WITH ATTACHED VEHICLE SIGNAL HEADS
		STANDARD WITH A SIGNAL MAST ARM, ATTACHED VEHICLE SIGNAL HEADS AND INTERNALLY ILLUMINATED STREET NAME SIGN
		CONTROLLER ASSEMBLY. DOOR INDICATES FRONT OF CABINET

SIGNAL EQUIPMENT Cont

NEW	EXISTING	
		GUARD POST
		TYPE 1 STANDARD WITH RAMP METERING SIGN
		OPTICAL DETECTOR FOR THE EMERGENCY VEHICLE DETECTION SYSTEM

NOTES:

1. All signal sections shall be 12" unless shown otherwise.
2. Signal heads shall be provided with backplates unless shown otherwise.

ILLUMINATED OVERHEAD SIGN

NEW	EXISTING	
		SINGLE POST, SINGLE ILLUMINATED SIGN, BALANCED BUTTERFLY
		SINGLE POST, DOUBLE ILLUMINATED SIGN, BALANCED BUTTERFLY
		SINGLE POST, SINGLE ILLUMINATED SIGN, FULL CANTILEVER
		DOUBLE POST, SINGLE ILLUMINATED SIGN
		SINGLE ILLUMINATED SIGN MOUNTED ON STRUCTURE
		DOUBLE POST, SINGLE ILLUMINATED SIGN WITH ELECTROLIER

STATE OF CALIFORNIA
DEPARTMENT OF TRANSPORTATION

ELECTRICAL SYSTEMS (LEGEND AND ABBREVIATIONS)

NO SCALE

RSP ES-1B DATED JULY 19, 2013 SUPERSEDES STANDARD PLAN ES-1B DATED MAY 20, 2011 - PAGE 426 OF THE STANDARD PLANS BOOK DATED 2010.

REVISED STANDARD PLAN RSP ES-1B

2010 REVISED STANDARD PLAN RSP ES-1B

DATE PLOTTED => 01-DEC-2014
TIME PLOTTED => 15:31

Dist	COUNTY	ROUTE	POST MILES TOTAL PROJECT	SHEET No.	TOTAL SHEETS
02	Mod	299	39.3/40.5	84	88

Theresa Gabriel
REGISTERED ELECTRICAL ENGINEER

July 19, 2013
PLANS APPROVAL DATE

REGISTERED PROFESSIONAL ENGINEER Theresa Aziz Gabriel No. E15129 Exp. 6-30-14 ELECTRICAL STATE OF CALIFORNIA

THE STATE OF CALIFORNIA OR ITS OFFICERS OR AGENTS SHALL NOT BE RESPONSIBLE FOR THE ACCURACY OR COMPLETENESS OF SCANNED COPIES OF THIS PLAN SHEET.

TO ACCOMPANY PLANS DATED 11-26-14

EQUIPMENT IDENTIFICATION

ILLUMINATED SIGN IDENTIFICATION NUMBER:

SIGN No. 12345

10 ISL SCI 1.0

- SIGN NUMBER - PLACE ON POST OR STRUCTURE
- TRANSFORMER RATING (kVA)
- LIGHTING CONTROL TYPE
- NUMBER AND TYPE OF FIXTURES

} DO NOT PLACE ON STANDARD OR STRUCTURE

ELECTROLIER OR EQUIPMENT IDENTIFICATION NUMBER:

12345 - 15'-0"

- MAST ARM LENGTH, IF SHOWN. DO NOT PLACE ON STANDARD OR STRUCTURE
- EQUIPMENT NUMBER - PLACE ON STANDARD OR STRUCTURE. EXISTING EQUIPMENT NUMBERS ARE SHOWN IN PARENTHESIS

CONDUIT AND CONDUCTOR IDENTIFICATION:

1½"C, 2#10, 15#14, 2 DLC, 12P#18 (PAIR)

- NUMBER AND SIZE OF CONDUCTORS AND CABLES
- SIZE OF CONDUIT IN INCHES

ø1, ø2, ø2P, etc.	TRAFFIC PHASE IDENTIFICATION FOR SIGNAL FACES, DETECTORS AND PHASE DIAGRAMS
1 2 3	LEGEND NUMBERS
A B C	EQUIPMENT, SIGNAL POLES, INSTALLATION OR ITEMS
1 2 3	CONDUIT RUN NUMBERS

SIGNAL AND LIGHTING STANDARD (TYPICAL DESIGNATION):

19A - 3 - 100

- WIND VELOCITY = 100 mph
- CASE 3 ARM LOADING
- STANDARD TYPE
- STANDARD PLAN SHEET NUMBER
- DETAIL, NUMBER, SECTION, TYPE OR ELEVATION

MISCELLANEOUS EQUIPMENT

NEW	EXISTING	
CMS	cms	CHANGEABLE MESSAGE SIGN
		CLOSED CIRCUIT TELEVISION CAMERA
		HIGHWAY ADVISORY RADIO POLE AND ANTENNA
EMS	ems	EXTINGUISHABLE MESSAGE SIGN
M V	m v	DETECTION DEVICE M = MICROWAVE SENSOR V = VIDEO IMAGE SENSOR

WIRING DIAGRAM LEGEND

- EXTERNAL CONDUCTOR
- CONDUCTOR OR BUS
- TIE POINT
- CONTACTOR COIL
- CONTACTOR, NO CONTACT
- TERMINAL BLOCKS
- CONTACTOR, NC CONTACT
- ENCLOSURE BOND
- GROUNDING ELECTRODE
- CIRCUIT BREAKER
- RECEPTACLE

PULL BOXES

NEW	EXISTING	
		PULL BOX, No. 5 UNLESS OTHERWISE INDICATED OR NOTED
3	9A(21)	PULL BOX, ADDITIONAL DESIGNATIONS OR DESCRIPTIONS

3 No. 3½ PULL BOX
5 No. 5 PULL BOX
6 No. 6 PULL BOX
7 No. 7 (CEILING PULL BOX)
8 No. 8 (PENDANT SOFFIT PULL BOX)
9 No. 9 PULL BOX
9A No. 9A PULL BOX

(C) COMMUNICATIONS PULL BOX
(E) PULL BOX WITH EXTENSION
(S) SPRINKLER CONTROL PULL BOX
(21) ANCHOR BOLTS AND CONDUIT FOR FUTURE INSTALLATION OF TYPE 21 STANDARD
(T) TRAFFIC PULL BOX

VEHICLE DETECTORS

5 J 9 U

- VEHICLE DETECTOR DESIGNATION
- U = UPPER
  L = LOWER
- SLOT NUMBER IN INPUT FILE
- INPUT FILE (I OR J)
- PHASE

NEW	EXISTING	
		TYPE A DETECTOR LOOP. OUTLINE OF SAWCUT SHOWN
		TYPE B DETECTOR LOOP. OUTLINE OF SAWCUT SHOWN
		TYPE C DETECTOR LOOP. OUTLINE OF SAWCUT SHOWN
		TYPE D DETECTOR LOOP. OUTLINE OF SAWCUT SHOWN
		TYPE E DETECTOR LOOP. OUTLINE OF SAWCUT SHOWN
		TYPE Q DETECTOR LOOP. OUTLINE OF SAWCUT SHOWN
		MAGNETIC DETECTOR
DH	dh	DETECTOR HANDHOLE
		MICROWAVE OR VIDEO DETECTION ZONE

STATE OF CALIFORNIA
DEPARTMENT OF TRANSPORTATION

ELECTRICAL SYSTEMS (LEGEND AND ABBREVIATIONS)

NO SCALE

RSP ES-1C DATED JULY 19, 2013 SUPERSEDES STANDARD PLAN ES-1C DATED MAY 20, 2011 - PAGE 427 OF THE STANDARD PLANS BOOK DATED 2010.

REVISED STANDARD PLAN RSP ES-1C

2010 REVISED STANDARD PLAN RSP ES-1C

DATE PLOTTED => 01-DEC-2014
TIME PLOTTED => 15:31

Dist	COUNTY	ROUTE	POST MILES TOTAL PROJECT	SHEET No.	TOTAL SHEETS
02	Mod	299	39.3/40.5	85	88

Theresa Gabriel
REGISTERED ELECTRICAL ENGINEER

July 19, 2013
PLANS APPROVAL DATE

REGISTERED PROFESSIONAL ENGINEER Theresa Aziz Gabriel No. E15129 Exp. 6-30-14 ELECTRICAL STATE OF CALIFORNIA

THE STATE OF CALIFORNIA OR ITS OFFICERS OR AGENTS SHALL NOT BE RESPONSIBLE FOR THE ACCURACY OR COMPLETENESS OF SCANNED COPIES OF THIS PLAN SHEET.

TO ACCOMPANY PLANS DATED 11-26-14

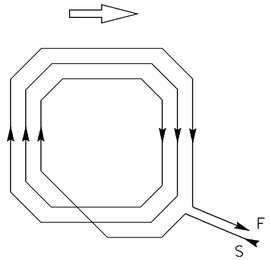

WINDING DETAIL

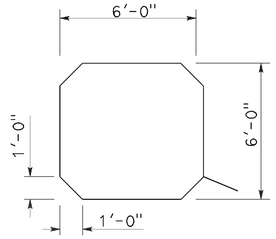

SAWCUT DETAIL

TYPE A LOOP DETECTOR CONFIGURATION

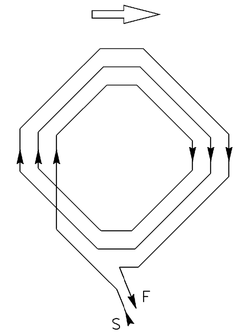

WINDING DETAIL

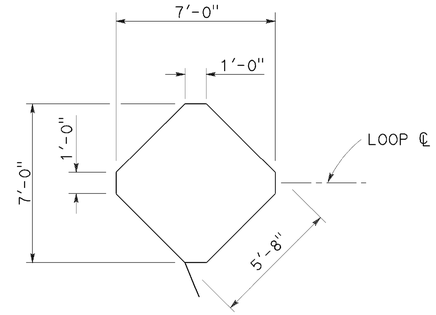

SAWCUT DETAIL

TYPE B LOOP DETECTOR CONFIGURATION

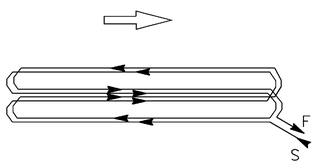

WINDING DETAIL

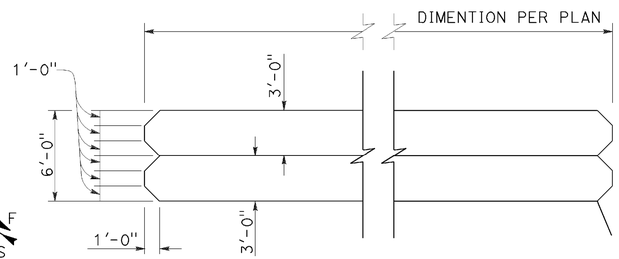

SAWCUT DETAIL

TYPE C LOOP DETECTOR CONFIGURATION

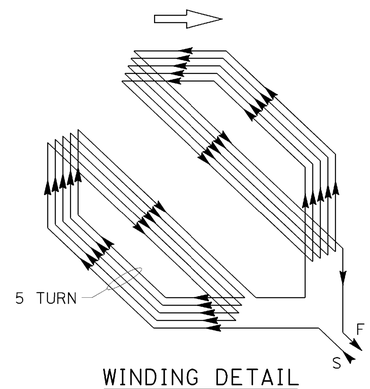

WINDING DETAIL

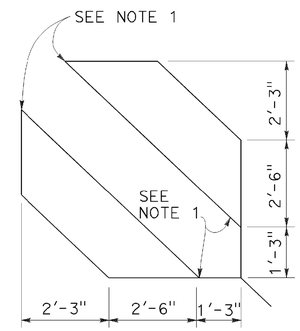

SAWCUT DETAIL

TYPE D LOOP DETECTOR CONFIGURATION

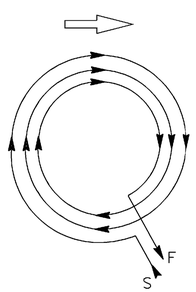

WINDING DETAIL

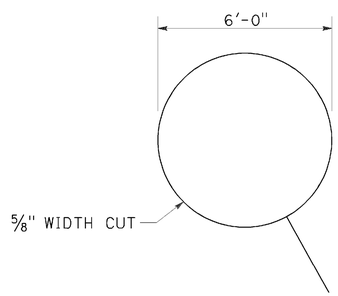

SAWCUT DETAIL

TYPE E LOOP DETECTOR CONFIGURATION

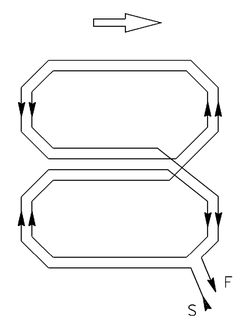

WINDING DETAIL

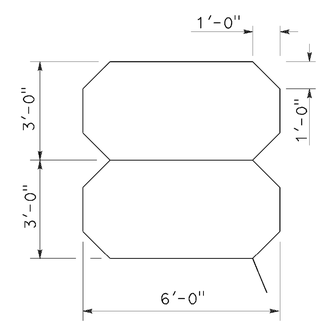

SAWCUT DETAIL

TYPE Q LOOP DETECTOR CONFIGURATION

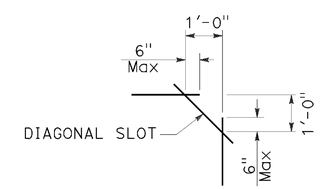

PLAN VIEW OF DIAGONAL SLOT AT CORNERS

NOTES:

1. Round corners of acute angle sawcuts to prevent damage to conductors.
2. Typical distance separating loops from edge to edge is 10' for Type A, B, D and E installation in single lane.

STATE OF CALIFORNIA
DEPARTMENT OF TRANSPORTATION

ELECTRICAL SYSTEMS (DETECTORS)

NO SCALE

RSP ES-5B DATED JULY 19, 2013 SUPERSEDES STANDARD PLAN ES-5B DATED MAY 20, 2011 - PAGE 449 OF THE STANDARD PLANS BOOK DATED 2010.

REVISED STANDARD PLAN RSP ES-5B

2010 REVISED STANDARD PLAN RSP ES-5B

DATE PLOTTED => 01-DEC-2014
TIME PLOTTED => 15:31

Dist	COUNTY	ROUTE	POST MILES TOTAL PROJECT	SHEET No.	TOTAL SHEETS
02	Mod	299	39.3/40.5	86	88

Theresa Gabriel
REGISTERED ELECTRICAL ENGINEER

July 19, 2013
PLANS APPROVAL DATE

REGISTERED PROFESSIONAL ENGINEER Theresa Aziz Gabriel No. E15129 Exp. 6-30-14 ELECTRICAL STATE OF CALIFORNIA

THE STATE OF CALIFORNIA OR ITS OFFICERS OR AGENTS SHALL NOT BE RESPONSIBLE FOR THE ACCURACY OR COMPLETENESS OF SCANNED COPIES OF THIS PLAN SHEET.

TO ACCOMPANY PLANS DATED 11-26-14

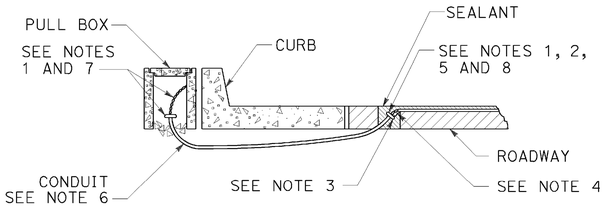

TYPE A
CURB TERMINATION DETAIL

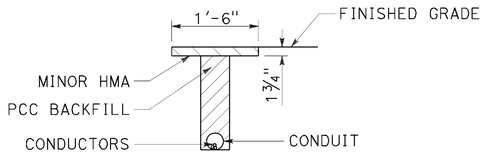

"T" TRENCH
DETAIL T

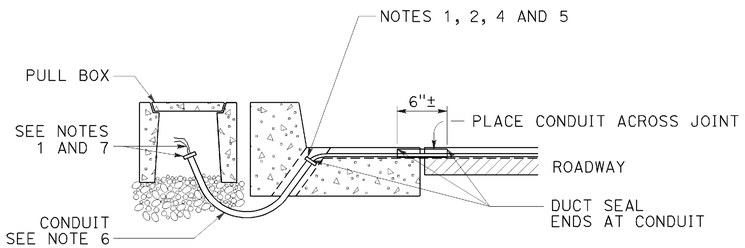

CROSS SECTION

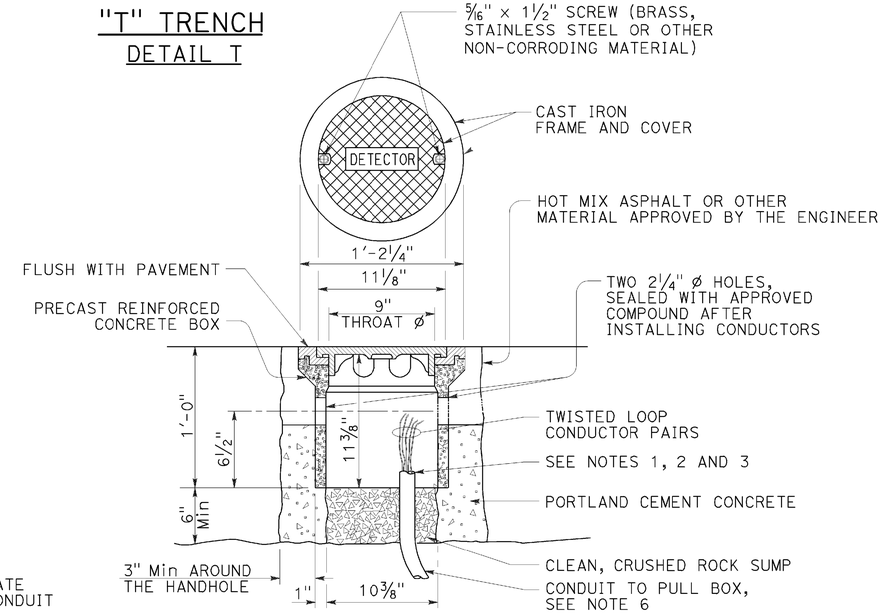

DETECTOR HANDHOLE DETAIL

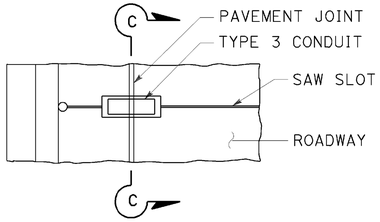

PLAN VIEW

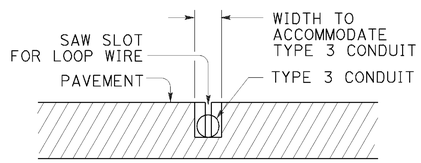

SECTION C-C

TYPE B
CURB TERMINATION DETAIL

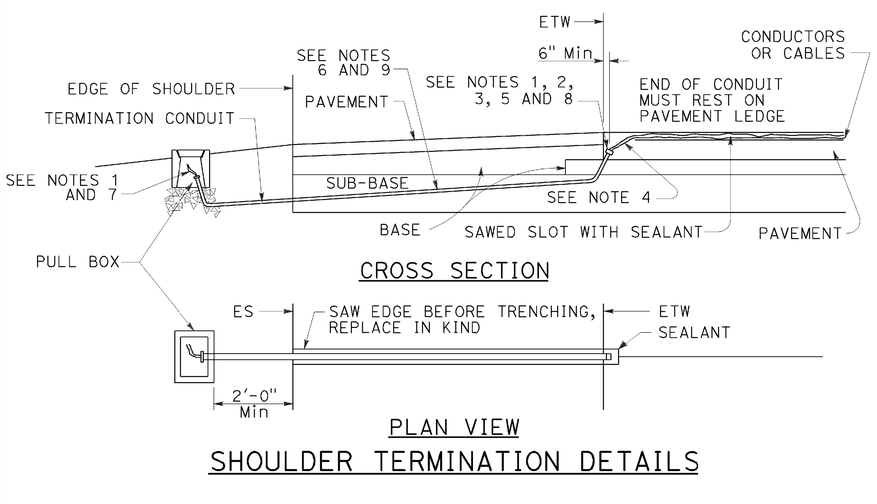

CROSS SECTION

PLAN VIEW

SHOULDER TERMINATION DETAILS

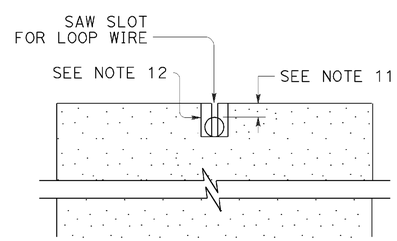

SECTION A-A

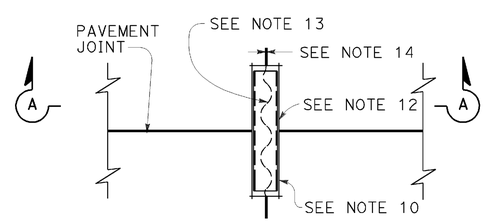

PLAN VIEW

TYPICAL LOOP LEAD-IN DETAIL AT PAVEMENT JOINT

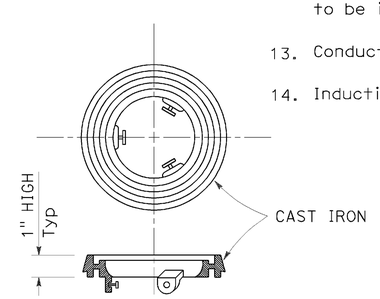

LOCKING GRADE RING

NOTES:

1. Bushing shall be used at end of conduit.
2. Tape detector conductors or cables 3" each side of bushings.
3. Install duct seal compound to each end of termination conduit before installing sealant.
4. Round all sharp edges where detector conductors or cables have to pass.
5. End of conduit shall be 3⅛" below roadway surface.
6. Conduit size / Loop conductors
   - 1"C minimum — 1 to 2 pairs
   - 1½"C minimum — 3 to 4 pairs
   - 2"C minimum — 5 or more pairs
7. Splice detector conductors or cables to detector lead-in-cable.
8. Location of detector handhole when shown on plans.
9. When the shoulder and traveled way are paved with the same material and there is no joint between them, the conduit shall extend only 2'-0" into the shoulder pavement.
10. ¾"C, Type 3 conduit 6" long minimum, plug both ends with duct compound to keep out sealant.
11. ½" Minimum between top of conduit and pavement surface.
12. Sawcut shall not exceed 1" in width and ⅛" longer than conduit to be installed.
13. Conductors with ½" minimum slack inside conduit.
14. Inductive loop detector saw slot.

STATE OF CALIFORNIA
DEPARTMENT OF TRANSPORTATION

ELECTRICAL SYSTEMS (CURB TERMINATION AND HANDHOLE)

NO SCALE

RSP ES-5D DATED JULY 19, 2013 SUPERSEDES STANDARD PLAN ES-5D DATED MAY 20, 2011 - PAGE 451 OF THE STANDARD PLANS BOOK DATED 2010.

REVISED STANDARD PLAN RSP ES-5D

2010 REVISED STANDARD PLAN RSP ES-5D

DATE PLOTTED => 01-DEC-2014
TIME PLOTTED => 15:31

Dist	COUNTY	ROUTE	POST MILES TOTAL PROJECT	SHEET No.	TOTAL SHEETS
02	Mod	299	39.3/40.5	87	88

REGISTERED CIVIL ENGINEER

July 19, 2013
PLANS APPROVAL DATE

REGISTERED PROFESSIONAL ENGINEER Stanley P. Johnson No. C57793 Exp. 3-31-14 CIVIL STATE OF CALIFORNIA

THE STATE OF CALIFORNIA OR ITS OFFICERS OR AGENTS SHALL NOT BE RESPONSIBLE FOR THE ACCURACY OR COMPLETENESS OF SCANNED COPIES OF THIS PLAN SHEET.

TO ACCOMPANY PLANS DATED 11-26-14

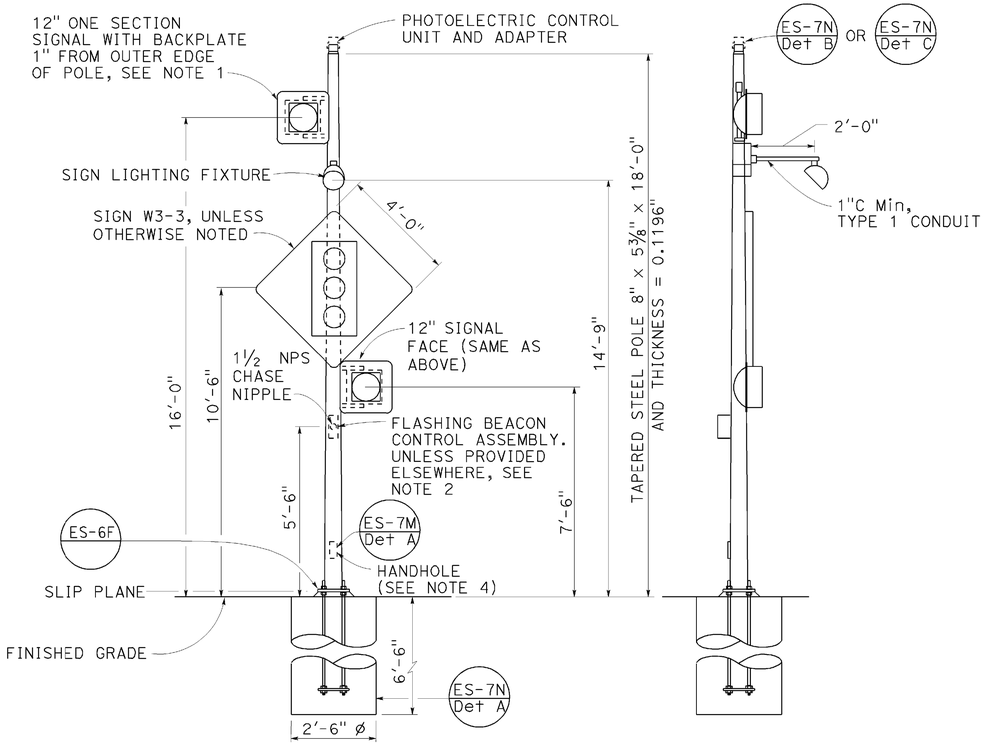

FRONT VIEW

SIDE VIEW

TYPE 15-FBS
ADVANCE FLASHING BEACON WITH SLIP BASE INSTALLATION
DETAIL A

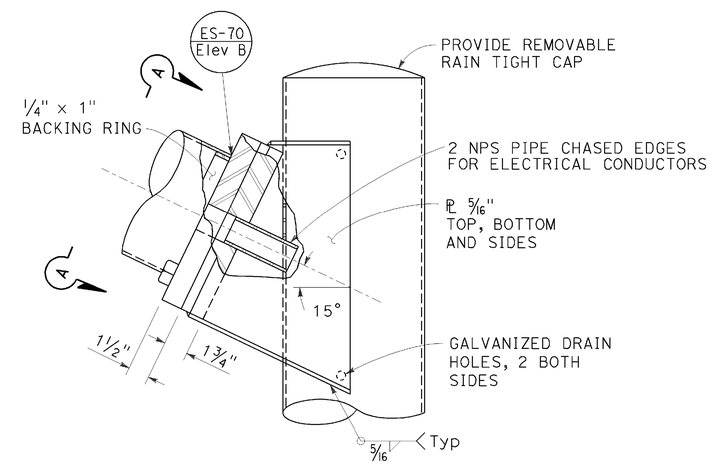

ELEVATION B

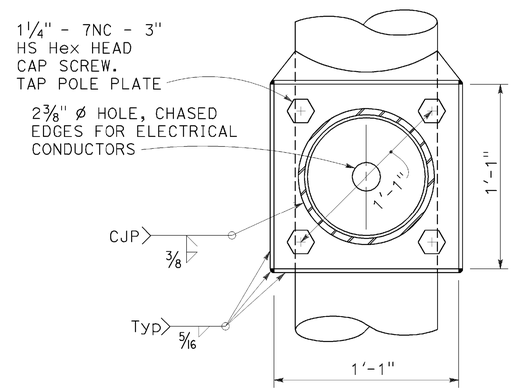

VIEW A-A

FLASHING BEACON MAST ARM CONNECTION DETAIL
DETAIL B

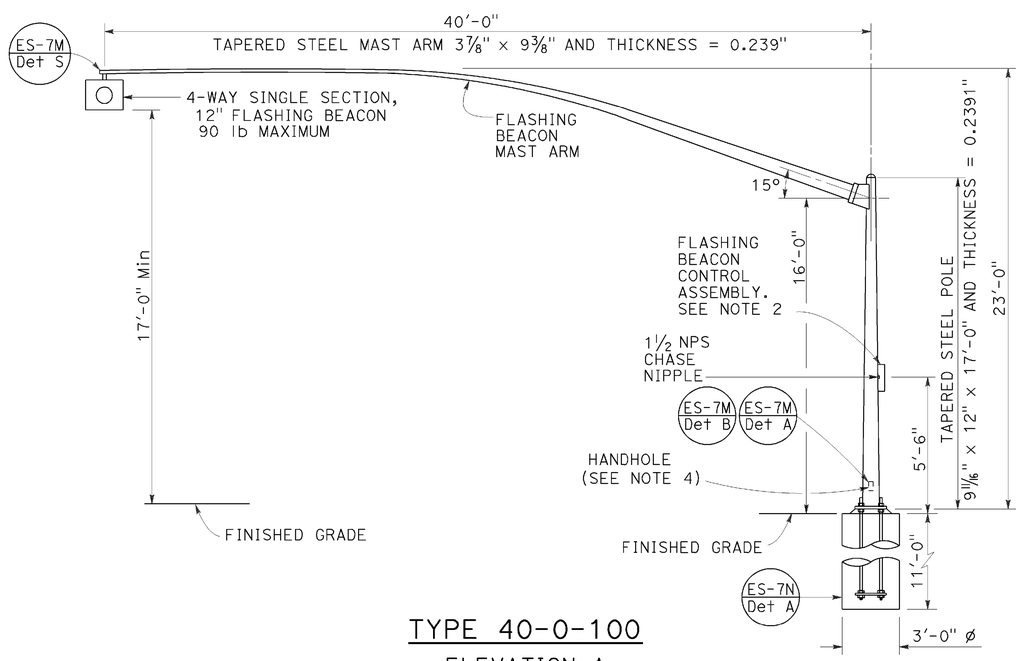

TYPE 40-0-100
ELEVATION A

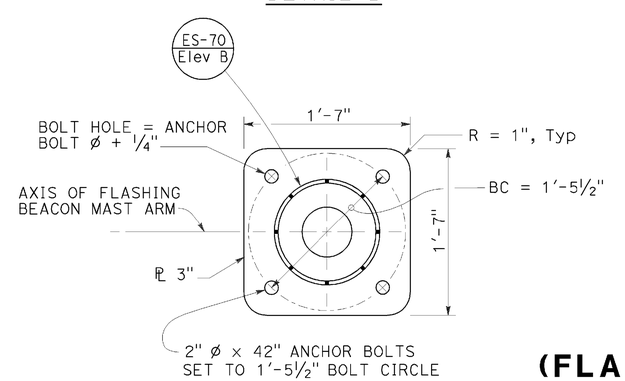

BASE PLATE
DETAIL C

NOTES:

1. See Revised Standard Plan RSP ES-4A and Standard Plan ES-4D for attachment fitting details.
2. For wiring diagram, see Standard Plan ES-14B.
3. For additional notes and details, see Standard Plans ES-7M and ES-7N.
4. Handhole shall be located on the downstream side of traffic.
5. See project plans for type of standard to be installed.

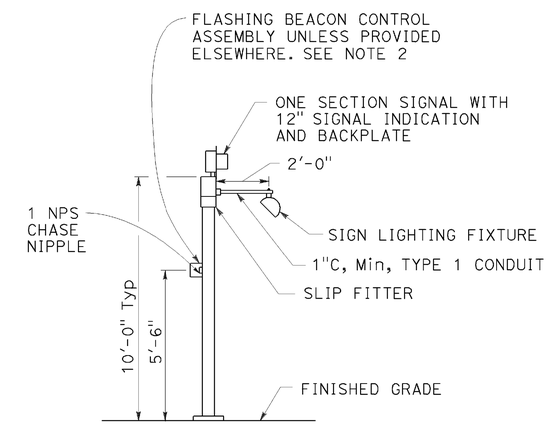

TYPE 1-A, 1-B, 1-C AND 1-D
ADVANCE FLASHING BEACON INSTALLATION
DETAIL D
See Note 5

STATE OF CALIFORNIA
DEPARTMENT OF TRANSPORTATION

ELECTRICAL SYSTEMS (FLASHING BEACON ON A TYPE 1, TYPE 15-FBS AND TYPE 40 STANDARD)

NO SCALE

RSP ES-7J DATED JULY 19, 2013 SUPERSEDES STANDARD PLAN ES-7J DATED MAY 20, 2011 - PAGE 471 OF THE STANDARD PLANS BOOK DATED 2010.

REVISED STANDARD PLAN RSP ES-7J

2010 REVISED STANDARD PLAN RSP ES-7J

DATE PLOTTED => 01-DEC-2014
TIME PLOTTED => 15:32

DIST	COUNTY	ROUTE	POST MILES TOTAL PROJECT	SHEET NO.	TOTAL SHEETS
02	Mod	299	39.3/40.5	88	88

Theresa Gabriel
REGISTERED ELECTRICAL ENGINEER

July 19, 2013
PLANS APPROVAL DATE

REGISTERED PROFESSIONAL ENGINEER
Theresa Aziz Gabriel
No. E15129
Exp. 6-30-14
ELECTRICAL
STATE OF CALIFORNIA

THE STATE OF CALIFORNIA OR ITS OFFICERS OR AGENTS SHALL NOT BE RESPONSIBLE FOR THE ACCURACY OR COMPLETENESS OF SCANNED COPIES OF THIS PLAN SHEET.

TO ACCOMPANY PLANS DATED 11-26-14

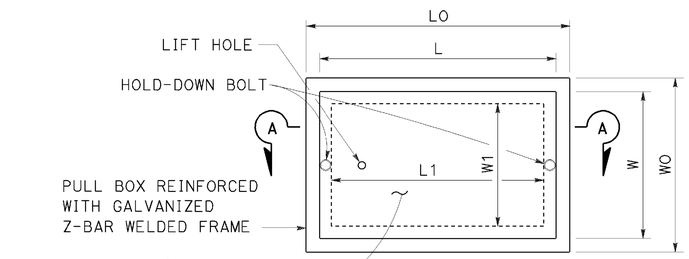

TOP VIEW

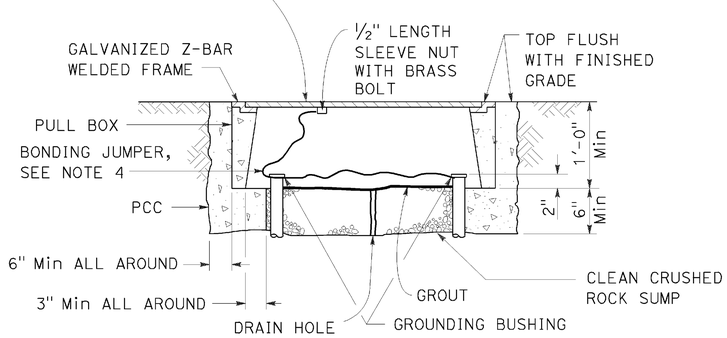

SECTION A-A

No. 3½(T), No. 5(T) AND No. 6(T) TRAFFIC PULL BOX

NOTES:

1. Traffic pull box shall be provided with steel cover and special concrete footing. Steel cover shall have embossed non-skid pattern.
2. Steel reinforcing shall be as regularly used in the standard products of the respective manufacturer.
3. Pull box covers shall be marked as follows: "SERVICE" Service circuits between service point and service disconnect; "SPRINKLER-CONTROL" Sprinkler control circuits, 50 V or less; "CALTRANS" On all pull boxes, except pull boxes marked "SPRINKLER-CONTROL"; and "TELEPHONE" Telephone service.
   - A) No. 3½(T) pull box.
     - 1) "SIGNAL" - Traffic signal circuits with or without lighting or sign lighting circuits.
     - 2) "LIGHTING" - Lighting or sign lighting circuits where voltage is under 600 V.
   - B) No. 5(T) or 6(T) pull box.
     - 1) "TRAFFIC SIGNAL" - Traffic signal circuits with or without lighting or sign lighting circuits.
     - 2) "LIGHTING" - Lighting or sign lighting circuits where voltage is under 600 V.
     - 3) "LIGHTING-HIGH VOLTAGE" - Lighting or sign lighting circuits where voltage is above 600 V.
     - 4) "IRRIGATION" - Circuits to irrigation controller 120 V or more.
     - 5) "RAMP METER" - Ramp meter circuits.
     - 6) "COUNT STATION" - Count or speed monitor circuits.
     - 7) "COMMUNICATION" - Communication circuits.
     - 8) "TOS COMMUNICATIONS" - TOS communications line.
     - 9) "TOS POWER" - TOS power.
     - 10) "TDC POWER" - Telephone demarcation cabinet power.
     - 11) "CCTV" - Closed circuit television circuits.
     - 12) "TMS" - Traffic monitoring station circuits.
     - 13) "CMS" - Changeable message sign circuits.
     - 14) "HAR" - Highway advisory radio circuits.
     - 15) "BOOSTER PUMP" - Booster pump circuit.
4. Bonding jumper for metal covers shall be 3' long, minimum.
5. The nominal dimensions of the opening in which the cover sets shall be the same as the cover dimensions except the length and width dimensions shall be ⅛" greater.
6. Covers and boxes shall be interchangeable with California standard male and female gages. When interchanged with a standard male or female gage, the top surfaces shall be flush within ⅛".

DIMENSION TABLE

PULL BOX	PULL BOX						COVER				
	MINIMUM * THICKNESS	MINIMUM DEPTH BOX AND EXTENSION	WO	LO	L1	W1	L **	W **	R	EDGE THICKNESS	EDGE TAPER
No. 3½(T)	1½"	1'-0"	1'-5"± 1"	1'-8⅞"±	1'-2½"±	10⅝"± 1"	1'-8"±	1'-1¾"±	0"	½"	NONE
No. 5(T)	1¾"	1'-0"	1'-11½"± 1"	2'-5½"±	1'-7"±	1'-1"± 1"	2'-3"±	1'-4"±	0"	½"	NONE
No. 6(T)	2"	1'-0"	2'-6"± 1"	2'-11½"±	1'-11½"±	1'-5"± 1"	2'-9"±	1'-8"±	0"	½"	NONE

* EXCLUDING CONDUIT WEB ** TOP DIMENSION

STATE OF CALIFORNIA
DEPARTMENT OF TRANSPORTATION

ELECTRICAL SYSTEMS (TRAFFIC PULL BOX)

NO SCALE

RSP ES-8B DATED JULY 19, 2013 SUPERSEDES RSP ES-8B DATED JANUARY 20, 2012 THAT SUPPLEMENTS THE STANDARD PLANS BOOK DATED 2010.

REVISED STANDARD PLAN RSP ES-8B

2010 REVISED STANDARD PLAN RSP ES-8B

DATE PLOTTED => 01-DEC-2014
TIME PLOTTED => 15:32