Dist	COUNTY	ROUTE	POST MILES TOTAL PROJECT	SHEET No.	TOTAL SHEETS
02	Las	395	36.4/47.0	1	25

ACSTPNH-P395(258)E

STATE OF CALIFORNIA
DEPARTMENT OF TRANSPORTATION

PROJECT PLANS FOR CONSTRUCTION ON
STATE HIGHWAY

IN LASSEN COUNTY AT AND NEAR MILFORD FROM 3.0 MILES SOUTH OF MILFORD GRADE ROAD TO 1.8 MILES SOUTH OF LAKECREST DRIVE

TO BE SUPPLEMENTED BY STANDARD PLANS DATED 2010

INDEX OF PLANS

SHEET No.	DESCRIPTION
1	TITLE AND LOCATION MAP
2	TYPICAL CROSS SECTIONS
3-8	CONSTRUCTION DETAILS
9	CONSTRUCTION AREA SIGNS
10	PAVEMENT DELINEATION DETAILS
11	PAVEMENT DELINEATION QUANTITIES
12	SUMMARY OF QUANTITIES
13-25	REVISED STANDARD PLANS

THE STANDARD PLANS LIST APPLICABLE TO THIS CONTRACT IS INCLUDED IN THE NOTICE TO BIDDERS AND SPECIAL PROVISIONS BOOK.

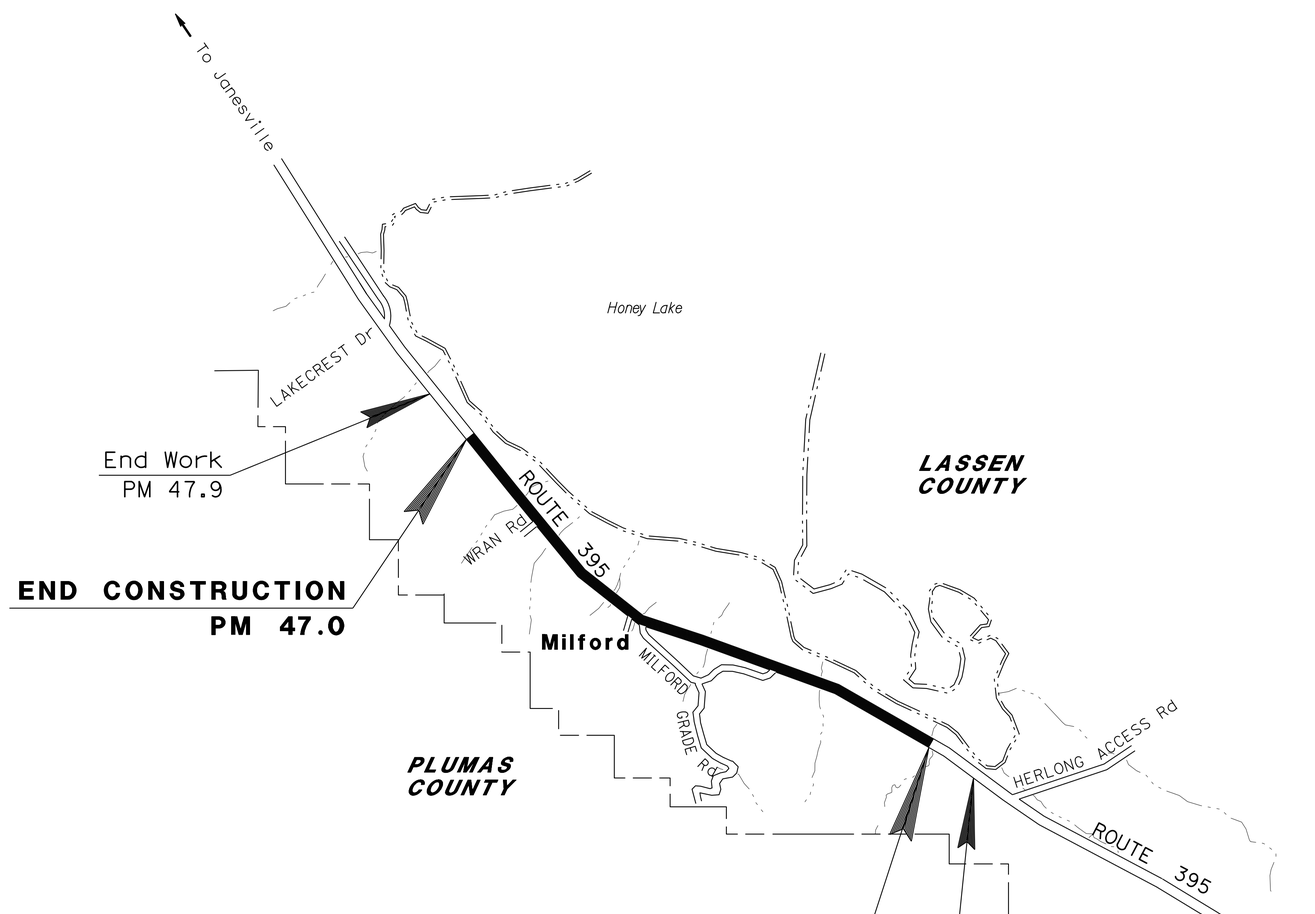

NO SCALE

THE CONTRACTOR SHALL POSSESS THE CLASS (OR CLASSES) OF LICENSE AS SPECIFIED IN THE "NOTICE TO BIDDERS."

11-30-15
PROJECT ENGINEER DATE
REGISTERED CIVIL ENGINEER

November 17, 2015
PLANS APPROVAL DATE

REGISTERED PROFESSIONAL ENGINEER MATTHEW R. GOWAN No. C52309 Exp. 12-31-16 CIVIL STATE OF CALIFORNIA

THE STATE OF CALIFORNIA OR ITS OFFICERS OR AGENTS SHALL NOT BE RESPONSIBLE FOR THE ACCURACY OR COMPLETENESS OF SCANNED COPIES OF THIS PLAN SHEET.

CONTRACT No.	02-1H0004
PROJECT ID	0215000094

PROJECT MANAGER: MICHAEL CONNER
DESIGN ENGINEER: MICHAEL CONNER

P:\proj3\02\1h000_plans\pse\21h000ab001.dgn

LAST REVISION 11-30-15
DATE PLOTTED => 22-DEC-2015
TIME PLOTTED => 09:03

Dist	COUNTY	ROUTE	POST MILES TOTAL PROJECT	SHEET No.	TOTAL SHEETS
02	Las	395	36.4/47.0	2	25

REGISTERED CIVIL ENGINEER 11-17-15 DATE

11-17-15
PLANS APPROVAL DATE

REGISTERED PROFESSIONAL ENGINEER MATTHEW R. GOWAN No. C52309 Exp. 12-31-16 CIVIL STATE OF CALIFORNIA

THE STATE OF CALIFORNIA OR ITS OFFICERS OR AGENTS SHALL NOT BE RESPONSIBLE FOR THE ACCURACY OR COMPLETENESS OF SCANNED COPIES OF THIS PLAN SHEET.

NOTES:

1. DIMENSIONS OF THE PAVEMENT STRUCTURES (STRUCTURAL SECTIONS) ARE SUBJECT TO TOLERANCES SPECIFIED IN THE STANDARD SPECIFICATIONS.
2. FOR ACCURATE RIGHT OF WAY DATA, CONTACT RIGHT OF WAY ENGINEERING AT THE DISTRICT OFFICE.
3. EXISTING UTILITY FACILITIES HAVE NOT BEEN INCLUDED ON THESE PLANS.
4. REMOVE PAVEMENT MARKERS PRIOR TO PAVING.

PAVEMENT CLIMATE REGION

HIGH DESERT

ABBREVIATIONS:

RHMA-G RUBBERIZED HOT MIX ASPHALT (GAP GRADED)

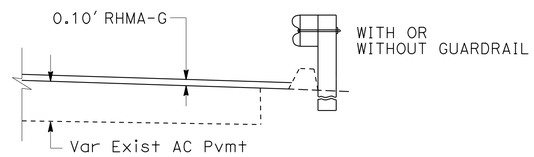

DIKE DETAILS
(TYPICAL BOTH DIRECTIONS)

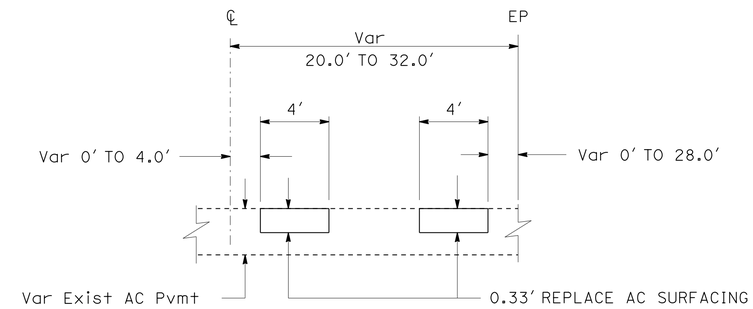

REPLACE ASPHALT CONCRETE SURFACING
(TYPICAL BOTH DIRECTIONS)

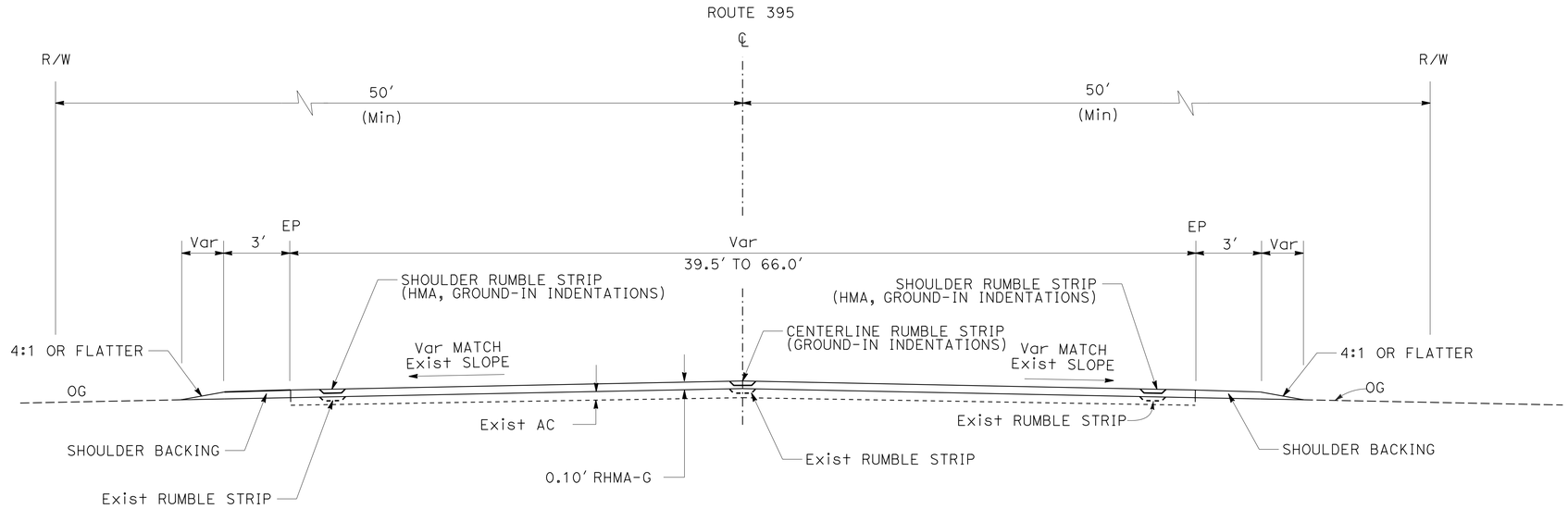

TYPICAL CROSS SECTION
PM R36.4/R47.0

TYPICAL CROSS SECTIONS
NO SCALE

X-1

REVISED BY | DATE REVISED
MATTHEW R. GOWAN | KARLIE J. SMITH
CALCULATED-DESIGNED BY | CHECKED BY
FUNCTIONAL SUPERVISOR: MICHAEL CONNER

STATE OF CALIFORNIA - DEPARTMENT OF TRANSPORTATION
Caltrans® MAINTENANCE

P:\proj3\02\1h000_plans\pse\21h000ca001.dgn

LAST REVISION 11-17-15 | DATE PLOTTED => 30-NOV-2015 | TIME PLOTTED => 12:06

Dist	COUNTY	ROUTE	POST MILES TOTAL PROJECT	SHEET No.	TOTAL SHEETS
02	Las	395	36.4/47.0	3	25

REGISTERED CIVIL ENGINEER 11-17-15 DATE

11-17-15
PLANS APPROVAL DATE

REGISTERED PROFESSIONAL ENGINEER MATTHEW R. GOWAN No. C52309 Exp. 12-31-16 CIVIL STATE OF CALIFORNIA

THE STATE OF CALIFORNIA OR ITS OFFICERS OR AGENTS SHALL NOT BE RESPONSIBLE FOR THE ACCURACY OR COMPLETENESS OF SCANNED COPIES OF THIS PLAN SHEET.

NOTES:

1. FOR TEMPORARY CONSTRUCTION TAPERS, GRIND EXISTING SURFACES TO ACCOMMODATE A MINIMUM TAPER THICKNESS OF 0.10′ WHEN EITHER:
   A. HMA MATERIAL SUCH AS RUBBERIZED, POLYMER MODIFIED OR OPEN GRADED IS UNSUITABLE FOR RAKING TO A MAXIMUM 0.02′ THICKNESS AT THE CONFORM.
   B. TEMPORARY TAPER WILL BE IN PLACE FOR MORE THAN 14 DAYS.
2. PERMANENT SURFACE MAY BE EXISTING OR NEW PAVEMENT.
3. ROADWAY SURFACE IS THE TOP OF EXISTING SURFACE OR THE TOP OF THE PLANED SURFACE.
4. EXISTING UTILITY FACILITIES HAVE NOT BEEN INCLUDED ON THESE PLANS.

LEGEND:

- COLD PLANE AC PAVEMENT
- HMA MATERIAL (TEMPORARY TAPER)
- IF NECESSARY, COLD PLANE ASPHALT CONCRETE PAVEMENT AND PLACE HMA MATERIAL (SEE NOTE 1)

ABBREVIATIONS:

RHMA-G RUBBERIZED HOT MIX ASPHALT (GAP GRADED)

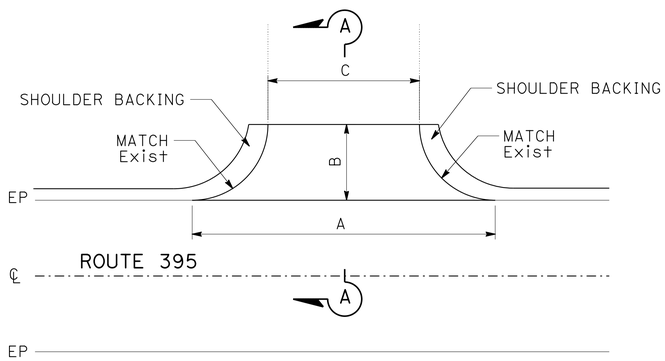

TYPICAL ROAD CONNECTION/DRIVEWAY DETAIL

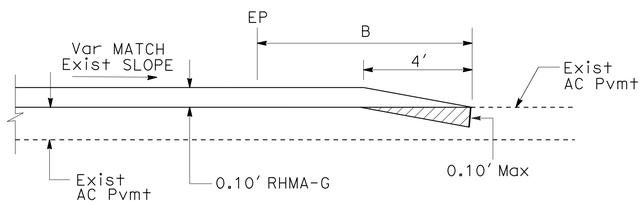

CASE A
SECTION A-A

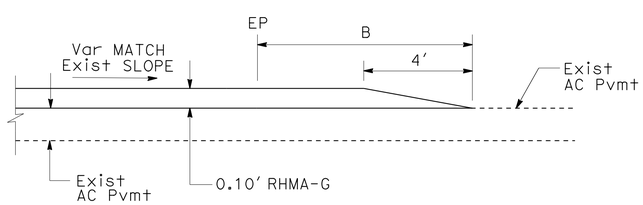

CASE B
SECTION A-A

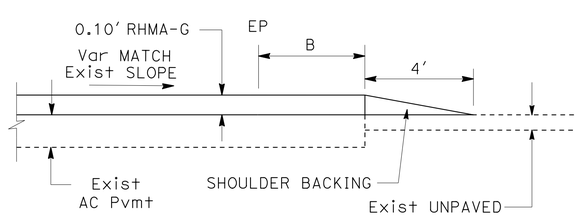

CASE C
SECTION A-A

ROAD CONNECTION/DRIVEWAY LOCATIONS

TYPE	SIDE	POST MILE	DIMENSIONS (LF)			CASE
			A	B	C	
DRIVEWAY	R+	36.41	117	24	35	B
DRIVEWAY	L+	36.48	88	20	34	C
DRIVEWAY	R+	36.55	50	24	16	C
DRIVEWAY	L+	36.87	102	24	37	C
ROAD CONNECTION	L+	37.62	108	25	37	B
DRIVEWAY	R+	37.70	62	26	22	C
DRIVEWAY	L+	37.73	75	27	17	C
DRIVEWAY	R+	37.75	53	24	17	C
DRIVEWAY	L+	38.45	61	24	16	C
DRIVEWAY	R+	38.45	106	25	32	B
KNIFE RIVER	L+	38.56	106	60	21	B
DRIVEWAY	R+	38.90	36	42	13	B
MILFORD GRADE Rd	L+	39.35	106	54	31	C
DRIVEWAY	R+	39.35	99	80	15	C
ROAD CONNECTION	L+	41.00	109	53	20	B
DRIVEWAY	R+	41.09	69	47	19	C
DRIVEWAY	R+	41.12	62	45	22	C
DRIVEWAY	R+	41.16	53	47	16	C
DRIVEWAY	R+	41.17	47	33	14	C
DRIVEWAY	R+	41.23	85	43	24	B
DRIVEWAY	R+	41.32	102	30	33	C
DRIVEWAY	R+	41.47	54	47	15	C
WEMPLE LANE	R+	41.57	168	26	86	C
DRIVEWAY	R+	41.73	40	22	16	C
LAUFMAN Rd	L+	41.74	188	114	31	A
DRIVEWAY	R+	41.75	51	23	21	C
DRIVEWAY	R+	41.83	45	25	14	C
MILL St	L+	41.93	216	21	113	B
DRIVEWAY	R+	41.98	49	10	15	C
DRIVEWAY	L+	41.99	52	19	16	C
DRIVEWAY	R+	42.02	64	17	29	C
MILFORD CEMETARY Rd	L+	42.13	83	46	10	C
DRIVEWAY	L+	42.20	48	25	17	C
DRIVEWAY	L+	42.28	58	20	26	C
DRIVEWAY	L+	42.34	53	22	15	C
DRIVEWAY	R+	42.84	265	26	129	C
DRIVEWAY	L+	42.84	79	13	39	C
DRIVEWAY	L+	43.25	74	25	23	C
DRIVEWAY	R+	43.26	52	25	16	C
ROAD CONNECTION	L+	43.31	80	38	20	B
DRIVEWAY	R+	43.38	50	16	32	C
DRIVEWAY	L+	43.40	56	26	15	C
DRIVEWAY	R+	43.49	100	23	26	C
DRIVEWAY	L+	43.83	155	10	88	C
DRIVEWAY	R+	43.83	68	28	28	C
LOUNSBURY Ln	L+	43.91	165	48	40	C
DEER TRAIL	L+	44.32	103	41	35	B
WRAN Rd	L+	44.59	117	39	32	A
LUPIN Ln	L+	44.87	85	23	30	B
DRIVEWAY	R+	44.87	80	12	32	B
RAKER Rd	L+	45.27	57	24	19	C
DRIVEWAY	R+	45.27	77	20	23	C
DRIVEWAY	L+	45.51	55	27	17	B
DRIVEWAY	R+	45.51	75	15	22	B
DRIVEWAY	L+	46.34	61	25	22	B
LITTLE RANCH Rd	R+	46.34	69	24	17	B
DRIVEWAY	L+	46.89	98	22	56	B
DESERT PINE TRAIL	R+	46.89	60	24	18	B

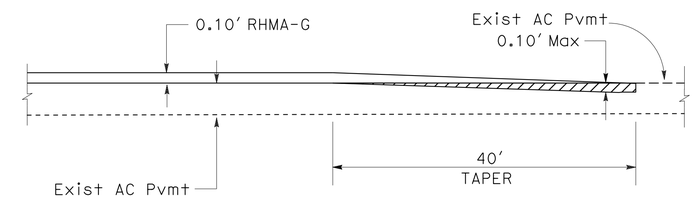

MAINLINE CONFORM TAPER

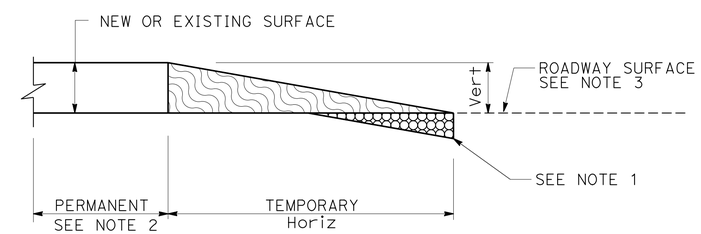

Vert	SLOPE RATIO Horiz/Vert
0-0.10′	70:1
GREATER THAN 0.10′	160:1

TYPICAL PAVING CONFORM FOR TEMPORARY CONSTRUCTION TAPERS

CONSTRUCTION DETAILS

NO SCALE

C-1

REVISED BY | DATE REVISED
MATTHEW R. GOWAN | KARLIE J. SMITH
CALCULATED-DESIGNED BY | CHECKED BY
FUNCTIONAL SUPERVISOR: MICHAEL CONNER

STATE OF CALIFORNIA - DEPARTMENT OF TRANSPORTATION
Caltrans MAINTENANCE

P:\proj3\02\1h000_plans\pse\21h000ga001.dgn

LAST REVISION 11-17-15 | DATE PLOTTED => 30-NOV-2015 | TIME PLOTTED => 12:06

Dist	COUNTY	ROUTE	POST MILES TOTAL PROJECT	SHEET No.	TOTAL SHEETS
02	Las	395	36.4/47.0	4	25

Matthew R. Gowan 11-17-15
REGISTERED CIVIL ENGINEER DATE

11-17-15
PLANS APPROVAL DATE

REGISTERED PROFESSIONAL ENGINEER MATTHEW R. GOWAN No. C52309 Exp. 12-31-16 CIVIL STATE OF CALIFORNIA

THE STATE OF CALIFORNIA OR ITS OFFICERS OR AGENTS SHALL NOT BE RESPONSIBLE FOR THE ACCURACY OR COMPLETENESS OF SCANNED COPIES OF THIS PLAN SHEET.

NOTES:

1. EXISTING UTILITY FACILITIES HAVE NOT BEEN INCLUDED ON THESE PLANS.
2. REPLACE RUMBLE STRIP IN KIND.

LEGEND:

TRAFFIC STRIPE

PAVEMENT MARKER (RETROREFLECTIVE - RECESSED)

RUMBLE STRIP (GROUND-IN INDENTATIONS)

ABBREVIATIONS:

RHMA-G RUBBERIZED HOT MIX ASPHALT (GAP GRADED)

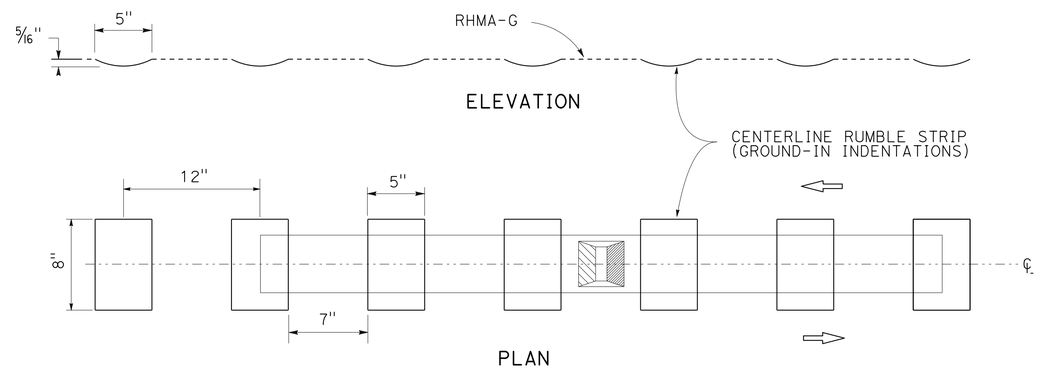

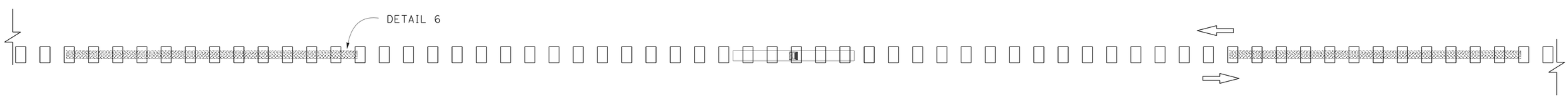

ALIGNED WITH DETAIL 6

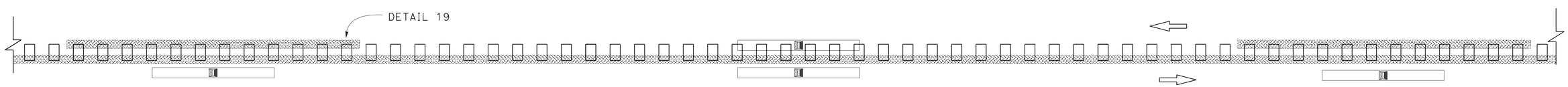

ALIGNED WITH DETAIL 19

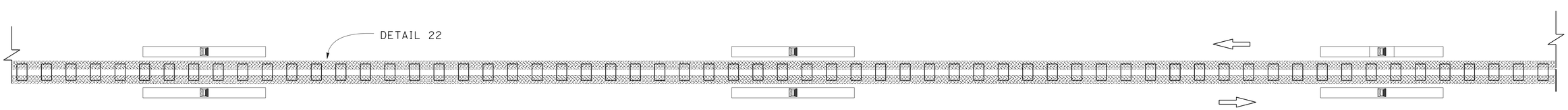

ALIGNED WITH DETAIL 22

CENTERLINE RUMBLE STRIP

CONSTRUCTION DETAILS

NO SCALE

C-2

REVISED BY	DATE REVISED

CALCULATED-DESIGNED BY	CHECKED BY
MATTHEW R. GOWAN	KARLIE J. SMITH

FUNCTIONAL SUPERVISOR: MICHAEL CONNER

STATE OF CALIFORNIA - DEPARTMENT OF TRANSPORTATION
Caltrans® MAINTENANCE

P:\proj3\02\1h000_plans\pse\21h000ga002.dgn

LAST REVISION 11-17-15
DATE PLOTTED => 30-NOV-2015
TIME PLOTTED => 12:06

Dist	COUNTY	ROUTE	POST MILES TOTAL PROJECT	SHEET No.	TOTAL SHEETS
02	Las	395	36.4/47.0	5	25

REGISTERED CIVIL ENGINEER 11-17-15 DATE

11-17-15
PLANS APPROVAL DATE

REGISTERED PROFESSIONAL ENGINEER MATTHEW R. GOWAN No. C52309 Exp. 12-31-16 CIVIL STATE OF CALIFORNIA

THE STATE OF CALIFORNIA OR ITS OFFICERS OR AGENTS SHALL NOT BE RESPONSIBLE FOR THE ACCURACY OR COMPLETENESS OF SCANNED COPIES OF THIS PLAN SHEET.

NOTES:

1. EXISTING UTILITY FACILITIES HAVE NOT BEEN INCLUDED ON THESE PLANS.
2. REPLACE RUMBLE STRIP IN KIND.
3. SHOULDER RUMBLE STRIP NOT SHOWN FOR CLARITY.

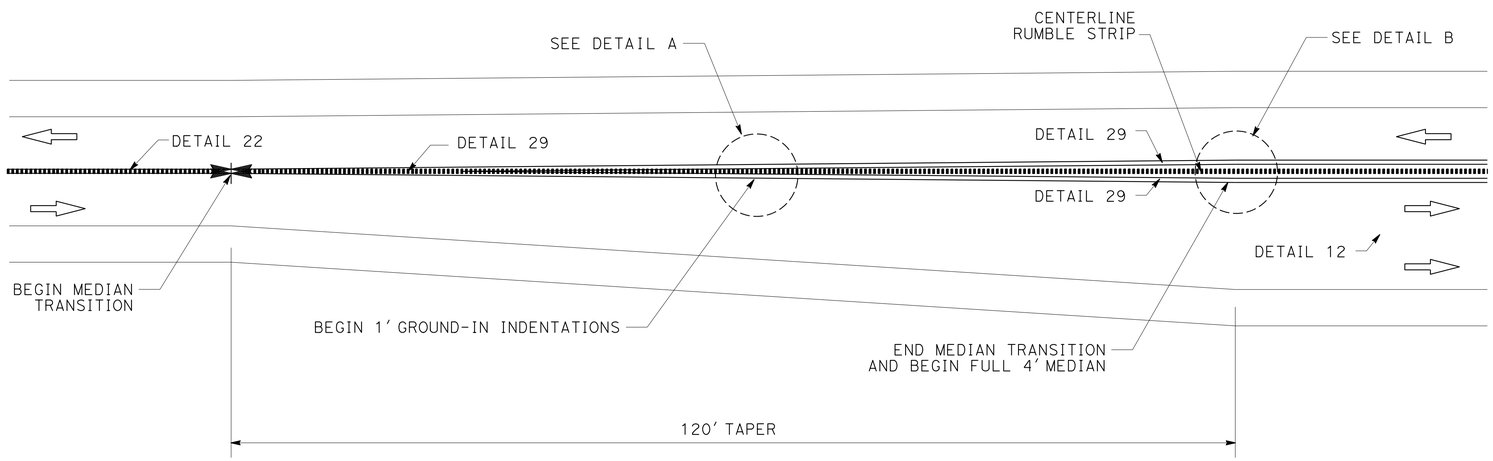

CENTERLINE RUMBLE STRIP AT BEGINNING OF PASSING LANE

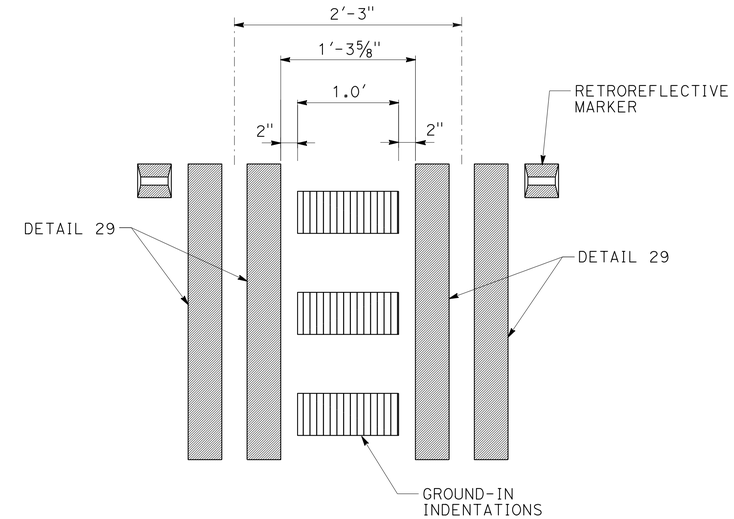

DETAIL A

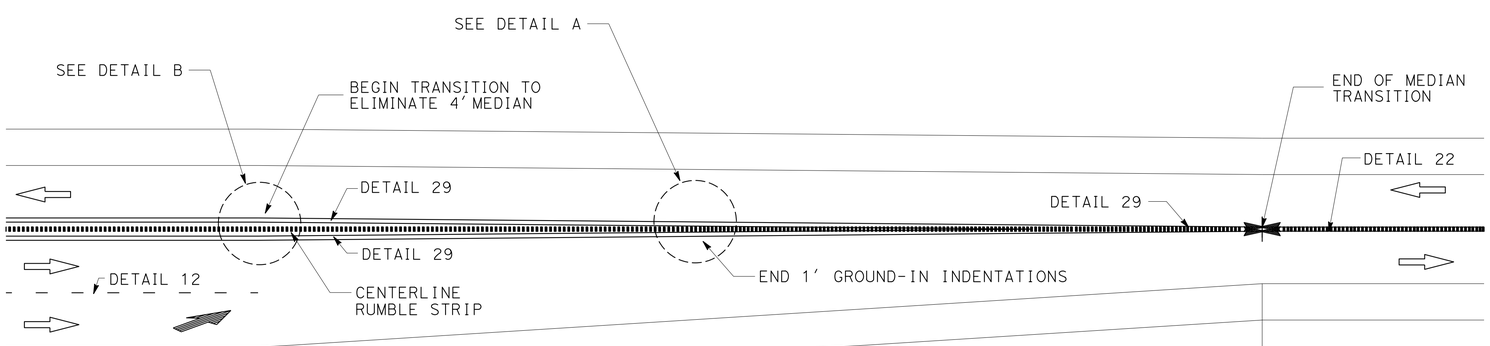

CENTERLINE RUMBLE STRIP AT END OF PASSING LANE

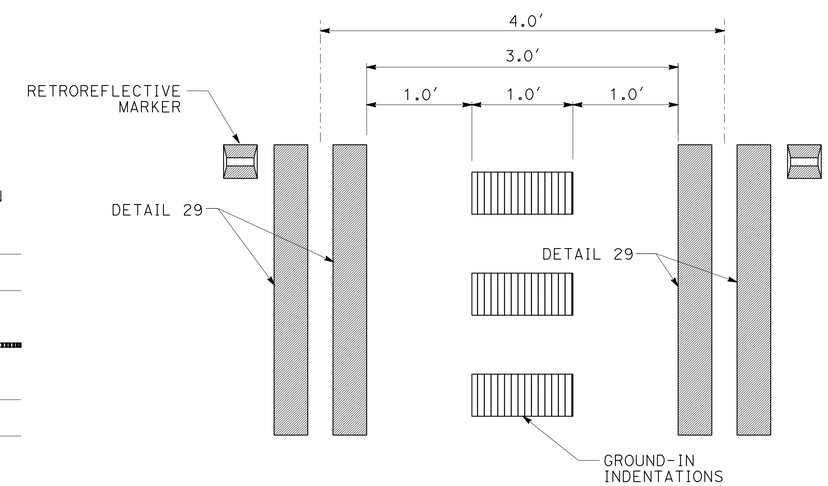

DETAIL B

CONSTRUCTION DETAILS

NO SCALE

C-3

REVISED BY | DATE REVISED

MATTHEW R. GOWAN | KARLIE J. SMITH

CALCULATED-DESIGNED BY | CHECKED BY

FUNCTIONAL SUPERVISOR: MICHAEL CONNER

STATE OF CALIFORNIA - DEPARTMENT OF TRANSPORTATION

Caltrans® MAINTENANCE

P:\proj3\02\1h000_plans\pse\21h000ga003.dgn

LAST REVISION 11-17-15 | DATE PLOTTED => 30-NOV-2015 | TIME PLOTTED => 12:06

Dist	COUNTY	ROUTE	POST MILES TOTAL PROJECT	SHEET No.	TOTAL SHEETS
02	Las	395	36.4/47.0	6	25

Matthew R. Gowan 11-17-15
REGISTERED CIVIL ENGINEER DATE

11-17-15
PLANS APPROVAL DATE

REGISTERED PROFESSIONAL ENGINEER MATTHEW R. GOWAN No. C52309 Exp. 12-31-16 CIVIL STATE OF CALIFORNIA

THE STATE OF CALIFORNIA OR ITS OFFICERS OR AGENTS SHALL NOT BE RESPONSIBLE FOR THE ACCURACY OR COMPLETENESS OF SCANNED COPIES OF THIS PLAN SHEET.

NOTES:

1. EXISTING UTILITY FACILITIES HAVE NOT BEEN INCLUDED ON THESE PLANS.
2 REPLACE RUMBLE STRIP IN KIND.

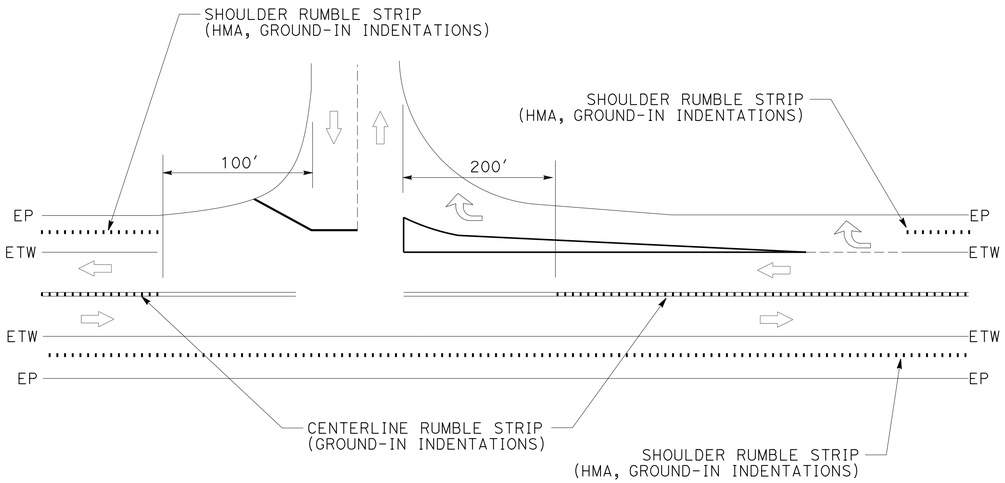

RUMBLE STRIP
AT INTERSECTION WITH RIGHT TURN LANE

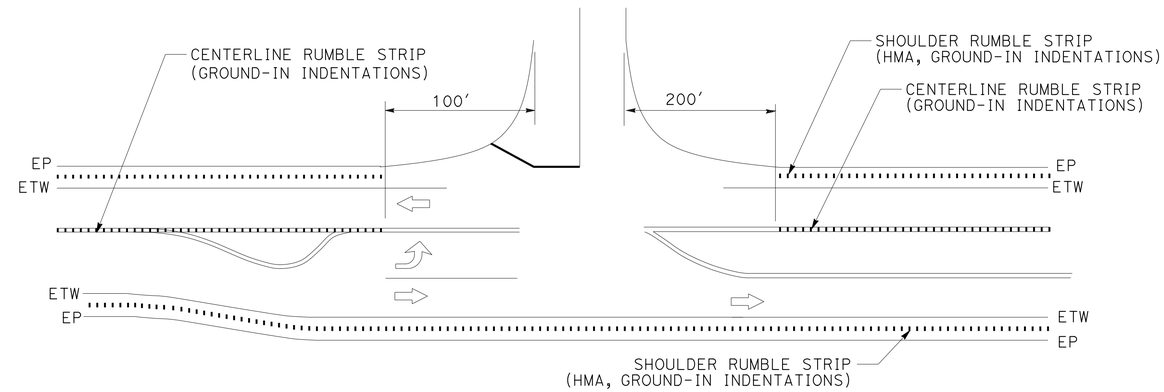

RUMBLE STRIP
AT INTERSECTION WITH ONE LEFT TURN POCKET

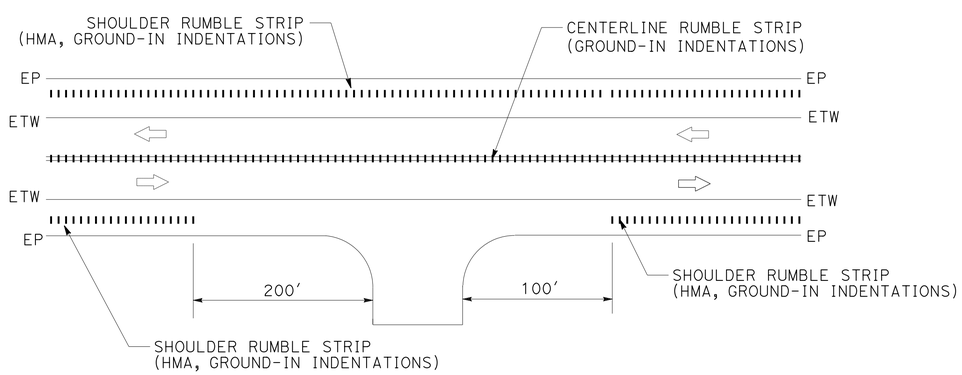

RUMBLE STRIP
AT DRIVEWAY/PRIVATE ROAD CONNECTION

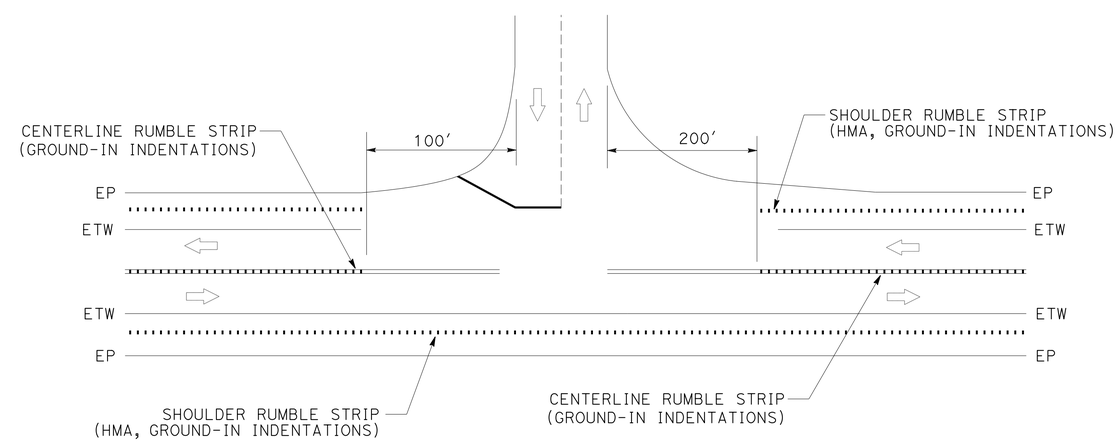

RUMBLE STRIP
AT PUBLIC ROAD CONNECTION

CONSTRUCTION DETAILS

NO SCALE

C-4

REVISED BY | DATE REVISED
MATTHEW R. GOWAN | KARLIE J. SMITH
CALCULATED-DESIGNED BY | CHECKED BY
FUNCTIONAL SUPERVISOR
MICHAEL CONNER

STATE OF CALIFORNIA - DEPARTMENT OF TRANSPORTATION
Caltrans® MAINTENANCE

P:\proj3\02\1h000_plans\pse\21h000ga004.dgn

LAST REVISION 11-17-15 | DATE PLOTTED => 30-NOV-2015 | TIME PLOTTED => 12:06

Dist	COUNTY	ROUTE	POST MILES TOTAL PROJECT	SHEET No.	TOTAL SHEETS
02	Las	395	36.4/47.0	7	25

Dwight D Winterlin 11-17-15
REGISTERED CIVIL ENGINEER DATE

11-17-15
PLANS APPROVAL DATE

REGISTERED PROFESSIONAL ENGINEER DWIGHT WINTERLIN No. C68438 Exp. 9-30-17 CIVIL STATE OF CALIFORNIA

THE STATE OF CALIFORNIA OR ITS OFFICERS OR AGENTS SHALL NOT BE RESPONSIBLE FOR THE ACCURACY OR COMPLETENESS OF SCANNED COPIES OF THIS PLAN SHEET.

NOTES:

1. MAXIMUM 10:1 SLOPE IN FRONT OF GUARDRAIL.
2. FOR POST AND BLOCK DETAILS SEE RSP A77N2. FOR RAIL ELEMENT AND HARDWARE DETAILS, USE MGS DETAILS SHOWN ON A77L2 AND A77M1.
3. WHEN THERE IS A BREAK POINT IN FRONT OF GUARDRAIL BETWEEN 4'-8' THE HEIGHT WILL BE DETERMINED BY THE ENGINEER.
4. PLACE RUB RAIL (GUARDRAIL ELEMENT) AND ATTACH TO POST WITH NO BLOCK WHEN HEIGHT OF GUARDRAIL IS MORE THAN 31" ABOVE FINISH GRADE UNDER FACE OF RAIL.
5. BLOCKS MUST HAVE MEANS TO RESIST ROTATION OTHER THAN THROUGH BOLT.
6. FOR PARABOLIC FLARE OFFSETS, SEE RSP A77P1.
7. FOR CURB AND DIKE DETAILS, SEE REVISED STANDARD PLANS RSP A87A AND RSP A87B.
8. ONLY TYPE C DIKE MAY BE USED UNDER OR IN FRONT OF TERMINAL SYSTEMS, OR WHEN DIKE IS PLACED MORE THAN 2" IN FRONT OF FACE OF MBGR.
9. THE MAXIMUM HEIGHT OF THE DIKE OR CURB SHALL BE 4" FOR MBGR.
10. IF THE PAVED SHOULDER IS REDUCED APPROACHING A FIXED OBJECT, PLACE A "P" MARKER INSTEAD OF THE L-1 MARKER.
11. IF THE L-1 MARKER IS WITHIN 50' OF THE END OF A STRUTURE AND NOT IN SNOW COUNTRY, THE G-11 BFIDGE SIGN AND L-1 MARKER CAN BE COMBINED AND PLACE AT THE L-1 MARKER LOCATION.
12. EXISTING UTILITY FACILITIES HAVE NOT BEEN INCLUDED ON THESE PLANS.

ABBREVIATIONS:

MGS MIDWEST GUARDRAIL SYSTEM

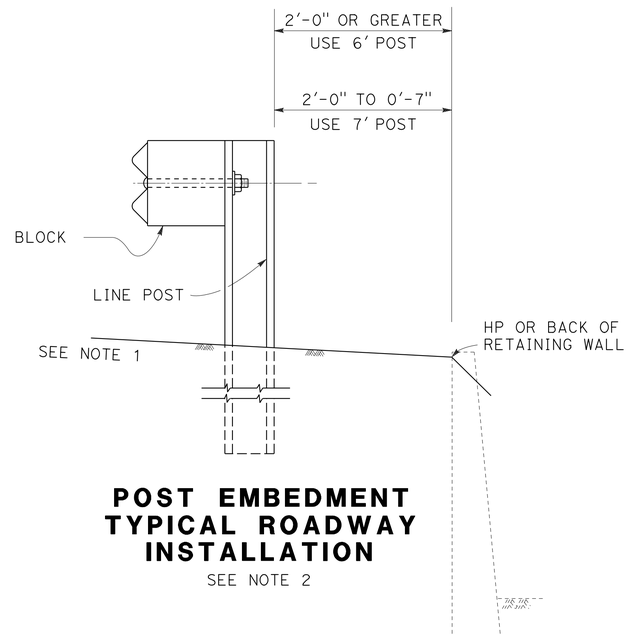

POST EMBEDMENT TYPICAL ROADWAY INSTALLATION

SEE NOTE 2

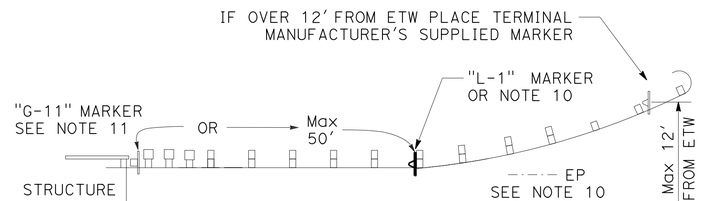

GUARDRAIL DELINEATION

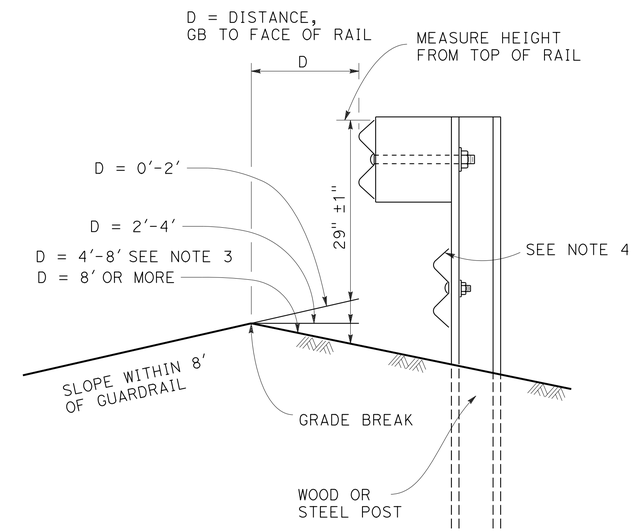

MEASURE HEIGHT DETAIL AT GRADE BREAK (GB)

NOTE:
WHEN THERE IS A GRADE BREAK IN FRONT OF GUARDRAIL MEASURE HEIGHT OF GUARDRAIL BASED ON DISTANCE FROM GRADE BREAK TO ADJUST FOR TRAJECTORY.

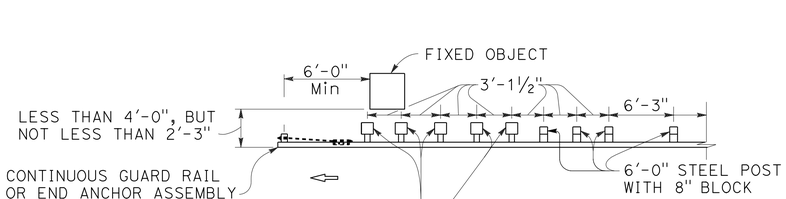

STRENGTHENED RAILING SECTIONS FOR FIXED OBJECT

NOTE A:
FOR A SERIES OF FIXED OBJECTS (BRIDGE COLUMNS, OVERHEAD SIGN SUPPORTS, ETC.) ADDITIONAL 8'-0" POST WITH BLOCKS AT 3'-1 ½" CENTER TO CENTER SPACING ARE TO BE USED BETWEEN FIXED OBJECTS.

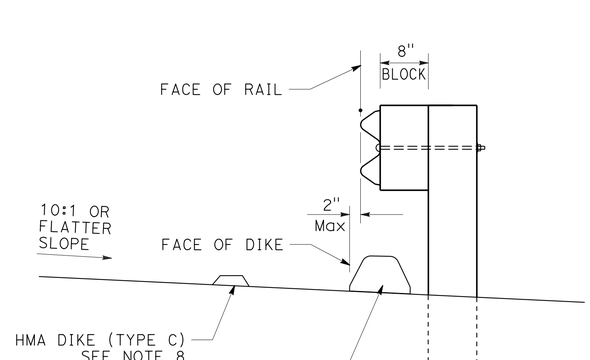

MBGR DIKE POSITIONING

CONSTRUCTON DETAILS METAL BEAM GUARD RAILING

NO SCALE

C-5

REVISED BY	DATE REVISED
DWIGHT WINTERLIN	JOHN HART

CALCULATED-DESIGNED BY | CHECKED BY

FUNCTIONAL SUPERVISOR: MICHAEL CONNER

STATE OF CALIFORNIA - DEPARTMENT OF TRANSPORTATION
Caltrans® MAINTENANCE

P:\proj3\02\1h000_plans\pse\21h000ga005.dgn

LAST REVISION 11-17-15 | DATE PLOTTED => 30-NOV-2015 | TIME PLOTTED => 12:06

Dist	COUNTY	ROUTE	POST MILES TOTAL PROJECT	SHEET No.	TOTAL SHEETS
02	Las	395	36.4/47.0	8	25

Dwight D Winterlin 11-17-15
REGISTERED CIVIL ENGINEER DATE

11-17-15
PLANS APPROVAL DATE

REGISTERED PROFESSIONAL ENGINEER DWIGHT WINTERLIN No. C68438 Exp. 9-30-17 CIVIL STATE OF CALIFORNIA

THE STATE OF CALIFORNIA OR ITS OFFICERS OR AGENTS SHALL NOT BE RESPONSIBLE FOR THE ACCURACY OR COMPLETENESS OF SCANNED COPIES OF THIS PLAN SHEET.

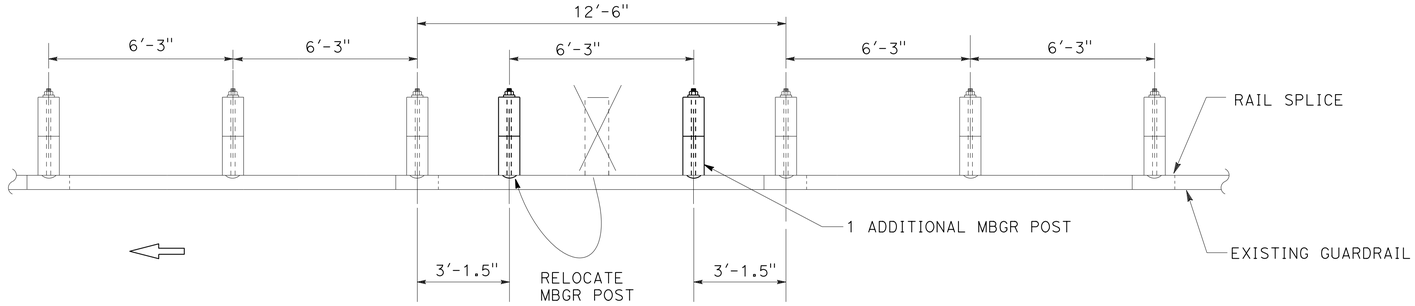

CASE 1

(ONE POST CONFLICT, MOVE THE POST and ADD ONE POST)
(NO NESTED RAIL REQUIRED)

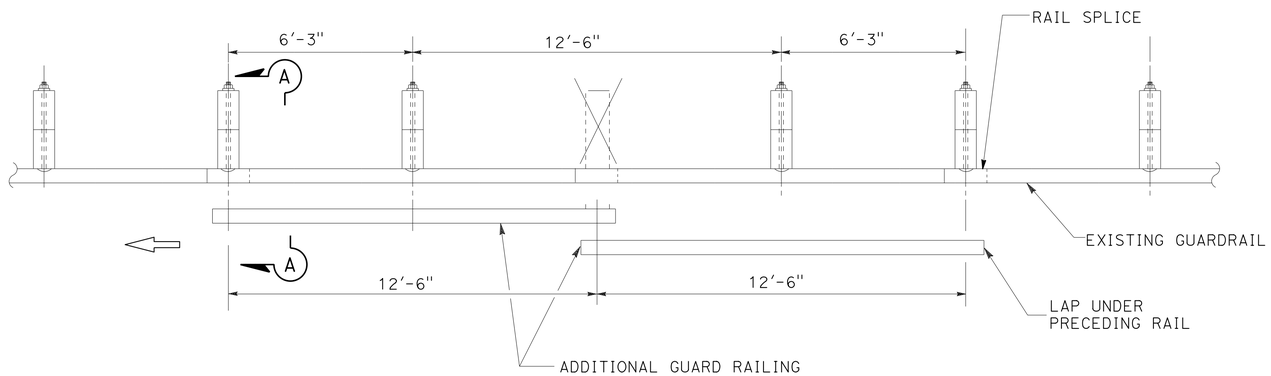

CASE 2

(ONE POST OMITTED AT JUNCTION OF TWO ELEMENTS)
(NEST TWO LENGTHS OF RAIL REQUIRED)

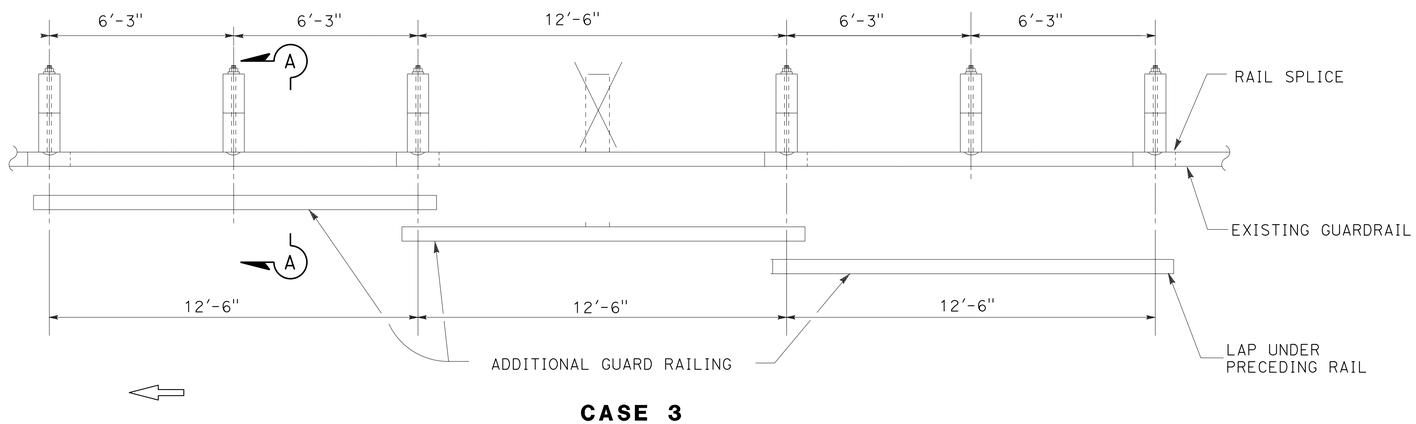

CASE 3

(ONE POST OMITTED AT CENTER OF ELEMENT)
(NEST THREE LENGTHS OF RAIL REQUIRED)
(ONE ADDITIONAL POST MAY BE OMITTED SEE NOTE 3)

LONG SPAN NESTED GUARD RAILING

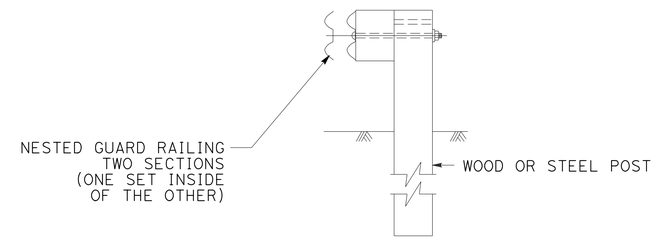

SECTION A-A

TYPICAL RAILING OVERLAP INSTALLATION AT POST

NOTES:

1. NEST ALL RAILS AT EXISTING RAIL LAPS.
2. WHEN A POST IS REMOVED AND THE RAIL ELEMENTS ARE NESTED, THE NESTED ELEMENTS MUST BE SUPPORTED BY A Min OF 2 POSTS EACH SIDE OF THE MISSING POST OR ADD ADDITIONAL LENGTH OF NESTED ELEMENTS.
3. USING CASE 3, A SECOND ADJACENT POST CAN BE REMOVED IF THE NESTED RAIL ELEMENTS ARE SUPPORTED BY A Min OF 2 POSTS EACH SIDE OF THE MISSING POSTS. THE 2-POST OPTION USES CASE 3 BUT NOT SHOWN.
4. EXISTING UTILITY FACILITIES HAVE NOT BEEN INCLUDED ON THESE PLANS.

CONSTRUCTION DETAILS METAL BEAM GUARD RAILING REMOVE POST OPTIONS

NO SCALE

C-6

REVISED BY | DATE REVISED
DWIGHT WINTERLIN | JOHN HART
CALCULATED-DESIGNED BY | CHECKED BY
FUNCTIONAL SUPERVISOR
MICHAEL CONNER

STATE OF CALIFORNIA - DEPARTMENT OF TRANSPORTATION
Caltrans MAINTENANCE

P:\proj3\02\1h000_plans\pse\21h000ga006.dgn

LAST REVISION 11-17-15 | DATE PLOTTED => 30-NOV-2015 | TIME PLOTTED => 12:06

Dist	COUNTY	ROUTE	POST MILES TOTAL PROJECT	SHEET No.	TOTAL SHEETS
02	Las	395	36.4/47.0	9	25

REGISTERED CIVIL ENGINEER 11-17-15 DATE

11-17-15
PLANS APPROVAL DATE

REGISTERED PROFESSIONAL ENGINEER MATTHEW R. GOWAN No. C52309 Exp. 12-31-16 CIVIL STATE OF CALIFORNIA

THE STATE OF CALIFORNIA OR ITS OFFICERS OR AGENTS SHALL NOT BE RESPONSIBLE FOR THE ACCURACY OR COMPLETENESS OF SCANNED COPIES OF THIS PLAN SHEET.

NOTES:

1. EXACT SIGN LOCATION TO BE DETERMINED BY THE ENGINEER.
2. EXISTING UTILITY FACILITIES HAVE NOT BEEN INCLUDED ON THESE PLANS.
3. INTERMEDIATE C11(CA) SIGNS TO BE PLACED APPROXIMATELY EVERY 5 MILES.

CONSTRUCTION AREA SIGNS (STATIONARY MOUNTED)

TYPE	CODE	PANEL SIZE	SIGN MESSAGE	NUMBER AND SIZE OF POST	No. OF SIGNS
A	C11(CA) C23B(CA)	60" x 36" 36" x 18"	ROAD CONSTRUCTION NEXT XX MILES PAVEMENT MAINTENANCE	2-4" x 6"	2
B	W20-1	48" x 48"	ROAD WORK AHEAD	1-4" x 6"	16
C	G20-2	36" x 18"	END ROAD WORK	1-4" x 4"	2
D	C11(CA)	60" X 36"	ROAD CONSTRUCTION NEXT XX MILES	2-4" X 6"	2

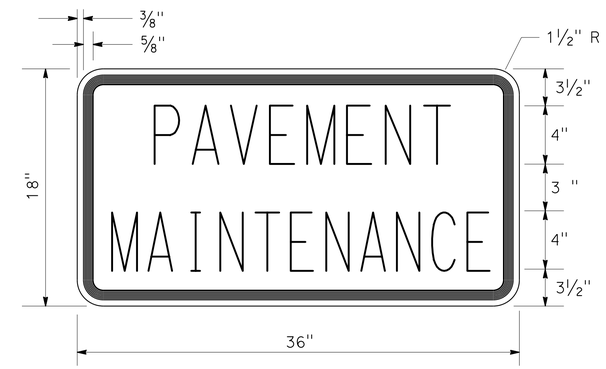

C23B(CA) SIGN PANEL DETAIL

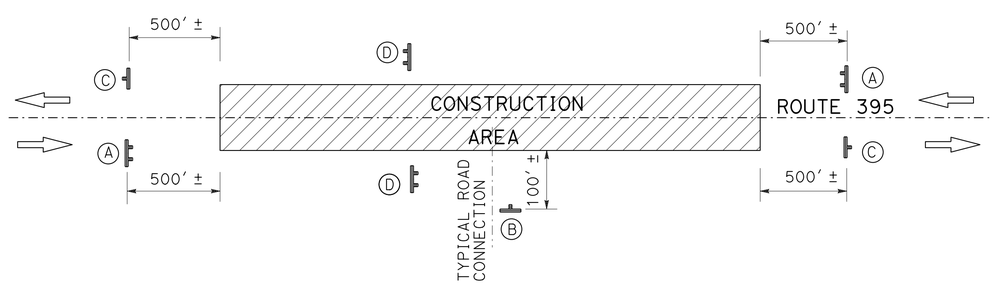

CONSTRUCTION AREA SIGNS (STATIONARY MOUNTED)

ROAD CONNECTIONS

Co	Rte	PM	DESCRIPTION
Las	395	37.62	ROAD CONNECTION - L†
		38.56	KNIFE RIVER - L†
		39.35	MILFORD GRADE ROAD - L†
		41.00	ROAD CONNECTION - L†
		41.57	WEMPLE LANE - R†
		41.74	LAUFMAN ROAD - L†
		41.93	MILL STREET - L†
		42.13	MILFORD CEMETERY ROAD - L†
		43.31	ROAD CONNECTION - L†
		43.91	LOUNSBURY LANE - L†
		44.32	DEER TRAIL - L†
		44.59	WRAN ROAD - L†
		44.87	LUPIN LANE - L†
		45.27	RAKER ROAD - L†
		46.34	LITTLE RANCH ROAD - R†
		46.89	DESERT PINE TRAIL - R†

CONSTRUCTION AREA SIGNS

NO SCALE

CS-1

REVISED BY | DATE REVISED
MATTHEW R. GOWAN | KARLIE J. SMITH
CALCULATED-DESIGNED BY | CHECKED BY
FUNCTIONAL SUPERVISOR: MICHAEL CONNER

STATE OF CALIFORNIA - DEPARTMENT OF TRANSPORTATION
Caltrans® MAINTENANCE

P:\proj3\02\1h000_plans\pse\21h0001a001.dgn

LAST REVISION 11-17-15 | DATE PLOTTED => 30-NOV-2015 TIME PLOTTED => 12:06

Dist	COUNTY	ROUTE	POST MILES TOTAL PROJECT	SHEET No.	TOTAL SHEETS
02	Las	395	36.4/47.0	10	25

REGISTERED CIVIL ENGINEER 11-17-15 DATE

11-17-15
PLANS APPROVAL DATE

REGISTERED PROFESSIONAL ENGINEER MATTHEW R. GOWAN No. C52309 Exp. 12-31-16 CIVIL STATE OF CALIFORNIA

THE STATE OF CALIFORNIA OR ITS OFFICERS OR AGENTS SHALL NOT BE RESPONSIBLE FOR THE ACCURACY OR COMPLETENESS OF SCANNED COPIES OF THIS PLAN SHEET.

NOTE:

1. EXISTING UTILITY FACILITIES HAVE NOT BEEN INCLUDED ON THESE PLANS.
2. RUMBLE STRIPS NOT SHOWN FOR CLARITY.

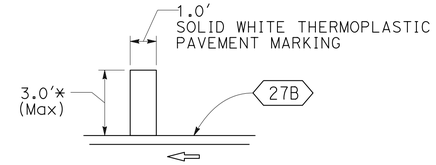

DETAIL A

* ACTUAL LENGTH MAY VARY DUE TO PAVEMENT WIDTH

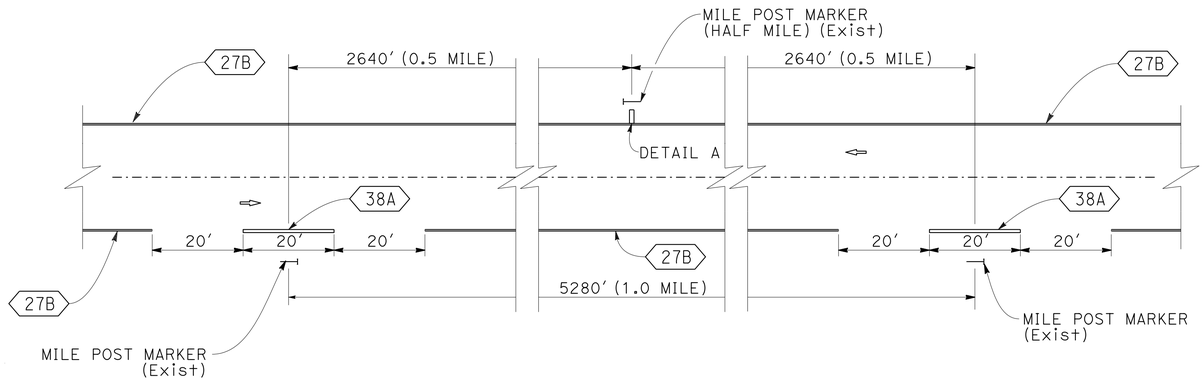

TYPICAL HALF MILE AND MILE POST STRIPE (CONVENTIONAL ROADWAY)

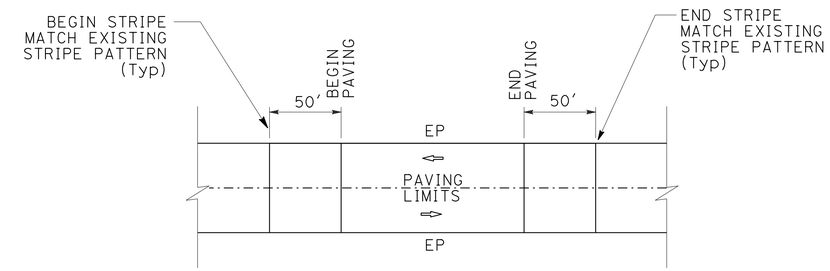

TRAFFIC STRIPE MATCH DETAIL

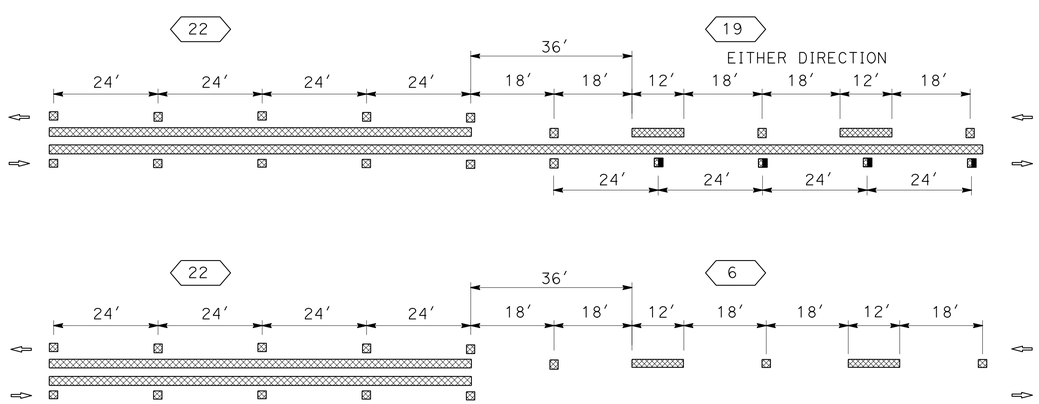

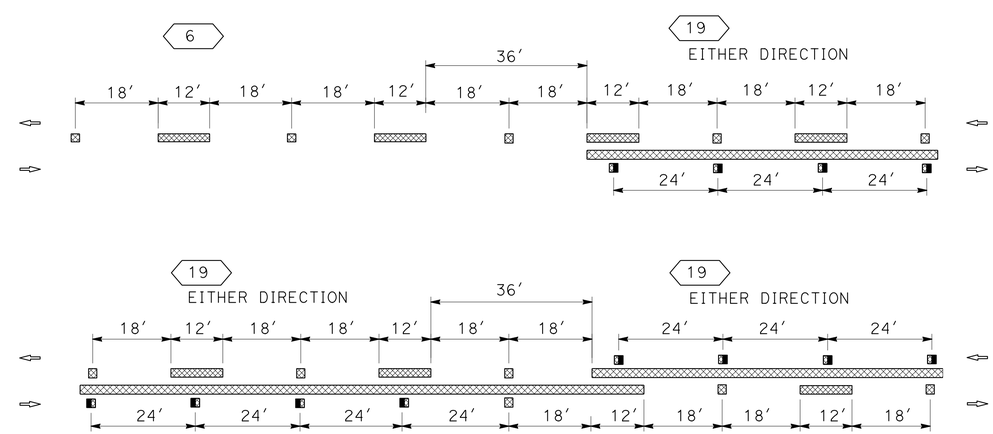

TYPICAL STRIPE TRANSITION DETAILS

PAVEMENT DELINEATION DETAILS (CONVENTIONAL ROADWAY)

NO SCALE

PDD-1

REVISED BY	DATE REVISED
MATTHEW R. GOWAN	KARLIE J. SMITH
CALCULATED-DESIGNED BY	CHECKED BY
FUNCTIONAL SUPERVISOR	MICHAEL CONNER

STATE OF CALIFORNIA - DEPARTMENT OF TRANSPORTATION
Caltrans® MAINTENANCE

P:\proj3\02\1h000_plans\pse\21h000nb001.dgn

LAST REVISION 11-17-15 | DATE PLOTTED => 30-NOV-2015 | TIME PLOTTED => 12:06

Dist	COUNTY	ROUTE	POST MILES TOTAL PROJECT	SHEET No.	TOTAL SHEETS
02	Las	395	36.4/47.0	11	25

REGISTERED CIVIL ENGINEER DATE 11-17-15

PLANS APPROVAL DATE 11-17-15

REGISTERED PROFESSIONAL ENGINEER MATTHEW R. GOWAN No. C52309 Exp. 12-31-16 CIVIL STATE OF CALIFORNIA

THE STATE OF CALIFORNIA OR ITS OFFICERS OR AGENTS SHALL NOT BE RESPONSIBLE FOR THE ACCURACY OR COMPLETENESS OF SCANNED COPIES OF THIS PLAN SHEET.

NOTES:

1. (N) NOT A SEPARATE PAY ITEM, FOR INFORMATION ONLY.
2. EXISTING UTILITY FACILITIES HAVE NOT BEEN INCLUDED ON THESE PLANS.

REMOVE THERMOPLASTIC PAVEMENT MARKING

Co-Rte	POST MILE	Lt	Rt	(N) EA	SQFT	REMARKS
Las 395	37.62	X		1	22.0	STOP
	37.62	X		1	64.0	ROAD CONNECTION LIMIT LINE
	38.56	X		1	32.0	ROAD CONNECTION LIMIT LINE
	38.56	X		1	22.0	STOP
	38.57	X		1	42.0	TYPE III (R) ARROW
	38.64	X		1	42.0	TYPE III (R) ARROW
	39.35	X		1	22.0	STOP
	39.35	X		1	32.0	ROAD CONNECTION LIMIT LINE
	40.27	X		1	42.0	TYPE VI ARROW
	40.31	X		1	42.0	TYPE VI ARROW
	40.35	X		1	42.0	TYPE VI ARROW
	41.00	X		1	22.0	STOP
	41.00	X		1	32.0	ROAD CONNECTION LIMIT LINE
	41.66		X	1	42.0	TYPE III (L) ARROW
	41.73		X	1	42.0	TYPE III (L) ARROW
	41.74	X		1	22.0	STOP
	41.74	X		1	56.0	ROAD CONNECTION LIMIT LINE
	41.76	X		1	42.0	TYPE III (R) ARROW
	41.84	X		1	42.0	TYPE III (R) ARROW
	43.31	X		1	22.0	STOP
	43.31	X		1	28.0	ROAD CONNECTION LIMIT LINE
	43.91	X		1	22.0	STOP
	43.91	X		1	30.0	ROAD CONNECTION LIMIT LINE
	44.32	X		1	22.0	STOP
	44.32	X		1	32.0	ROAD CONNECTION LIMIT LINE
	44.59	X		1	22.0	STOP
	44.59	X		1	39.0	ROAD CONNECTION LIMIT LINE
	46.44		X	1	42.0	TYPE VI ARROW
	46.48		X	1	42.0	TYPE VI ARROW
	46.52		X	1	42.0	TYPE VI ARROW
TOTAL					1047.0	

THERMOPLASTIC PAVEMENT MARKING

Co-Rte	POST MILE	Lt	Rt	(N) EA	SQFT	REMARKS
Las 395	37.62	X		1	22.0	STOP
	37.62	X		1	64.0	ROAD CONNECTION LIMIT LINE
	38.56	X		1	32.0	ROAD CONNECTION LIMIT LINE
	38.56	X		1	22.0	STOP
	38.57	X		1	42.0	TYPE III (R) ARROW
	38.64	X		1	42.0	TYPE III (R) ARROW
	39.35	X		1	22.0	STOP
	39.35	X		1	32.0	ROAD CONNECTION LIMIT LINE
	40.27	X		1	42.0	TYPE VI ARROW
	40.31	X		1	42.0	TYPE VI ARROW
	40.35	X		1	42.0	TYPE VI ARROW
	41.00	X		1	22.0	STOP
	41.00	X		1	32.0	ROAD CONNECTION LIMIT LINE
	41.66		X	1	42.0	TYPE III (L) ARROW
	41.73		X	1	42.0	TYPE III (L) ARROW
	41.74	X		1	22.0	STOP
	41.74	X		1	56.0	ROAD CONNECTION LIMIT LINE
	41.76	X		1	42.0	TYPE III (R) ARROW
	41.84	X		1	42.0	TYPE III (R) ARROW
	43.31	X		1	22.0	STOP
	43.31	X		1	28.0	ROAD CONNECTION LIMIT LINE
	43.91	X		1	22.0	STOP
	43.91	X		1	30.0	ROAD CONNECTION LIMIT LINE
	44.32	X		1	22.0	STOP
	44.32	X		1	32.0	ROAD CONNECTION LIMIT LINE
	44.59	X		1	22.0	STOP
	44.59	X		1	39.0	ROAD CONNECTION LIMIT LINE
	46.44		X	1	42.0	TYPE VI ARROW
	46.48		X	1	42.0	TYPE VI ARROW
	46.52		X	1	42.0	TYPE VI ARROW
	VAR	X		11	33.0	DETAIL A
TOTAL					1080.0	

TEMPORARY PAVEMENT MARKING (TAPE)

Co-Rte	POST MILE	Lt	Rt	(N) EA	SQFT	REMARKS
Las 395	37.62	X		1	64.0	ROAD CONNECTION LIMIT LINE
	38.56	X		1	32.0	ROAD CONNECTION LIMIT LINE
	38.57	X		1	42.0	TYPE III (R) ARROW
	38.64	X		1	42.0	TYPE III (R) ARROW
	39.35	X		1	32.0	ROAD CONNECTION LIMIT LINE
	40.27	X		1	42.0	TYPE VI ARROW
	40.31	X		1	42.0	TYPE VI ARROW
	40.35	X		1	42.0	TYPE VI ARROW
	41.00	X		1	32.0	ROAD CONNECTION LIMIT LINE
	41.66		X	1	42.0	TYPE III (L) ARROW
	41.73		X	1	42.0	TYPE III (L) ARROW
	41.74	X		1	56.0	ROAD CONNECTION LIMIT LINE
	41.76	X		1	42.0	TYPE III (R) ARROW
	41.84	X		1	42.0	TYPE III (R) ARROW
	43.31	X		1	28.0	ROAD CONNECTION LIMIT LINE
	43.91	X		1	30.0	ROAD CONNECTION LIMIT LINE
	44.32	X		1	32.0	ROAD CONNECTION LIMIT LINE
	44.59	X		1	39.0	ROAD CONNECTION LIMIT LINE
	46.44		X	1	42.0	TYPE VI ARROW
	46.48		X	1	42.0	TYPE VI ARROW
	46.52		X	1	42.0	TYPE VI ARROW
TOTAL					849.0	

THERMOPLASTIC TRAFFIC STRIPE (SPRAYABLE)

Co-Rte	POST MILE LIMITS	DETAIL 6	DETAIL 12	DETAIL 19	DETAIL 21	DETAIL 22	DETAIL 27B	DETAIL 27C	DETAIL 29	DETAIL 38A	DETAIL 39
	PM - PM	LF	LF	LF	LF	LF	LF	LF	LF	LF	LF
Las 395	36.4-47.0	31,100	8607	6653	472	8449	110,435	1502	10,402	906	951
TOTAL		179,477									

PAVEMENT MARKER (RETROREFLECTIVE-RECESSED)

Co-Rte	POST MILE LIMITS	TYPE D	TYPE G	TYPE H
		EA	EA	EA
Las 395	36.4-47.0	2364	181	279
TOTAL		2824		

REMOVE PAVEMENT MARKER (N)

Co-Rte	POST MILE LIMITS	TYPE D	TYPE G	TYPE H
		EA	EA	EA
Las 395	36.4-47.0	2364	181	279
TOTAL		2824		

PAVEMENT DELINEATION QUANTITIES
PDQ-1

REVISED BY | DATE REVISED

MATTHEW R. GOWAN | KARLIE J. SMITH

CALCULATED-DESIGNED BY | CHECKED BY

FUNCTIONAL SUPERVISOR: MICHAEL CONNER

STATE OF CALIFORNIA - DEPARTMENT OF TRANSPORTATION

Caltrans® MAINTENANCE

P:\proj3\02\1h000_plans\pse\21h000nc001.dgn

LAST REVISION 11-17-15 | DATE PLOTTED => 30-NOV-2015 | TIME PLOTTED => 12:06

Dist	COUNTY	ROUTE	POST MILES TOTAL PROJECT	SHEET No.	TOTAL SHEETS
02	Las	395	36.4/47.0	12	25

Matthew R. Gowan 11-17-15
REGISTERED CIVIL ENGINEER DATE

11-17-15
PLANS APPROVAL DATE

REGISTERED PROFESSIONAL ENGINEER MATTHEW R. GOWAN No. C52309 Exp. 12-31-16 CIVIL STATE OF CALIFORNIA

THE STATE OF CALIFORNIA OR ITS OFFICERS OR AGENTS SHALL NOT BE RESPONSIBLE FOR THE ACCURACY OR COMPLETENESS OF SCANNED COPIES OF THIS PLAN SHEET.

NOTES:

1. (N) NOT A SEPARATE PAY ITEM, FOR INFORMATION ONLY.
2. EXISTING UTILITY FACILITIES HAVE NOT BEEN INCLUDED ON THESE PLANS.
3. EXACT LOCATIONS AND NUMBER OF REPLACE ASPHALT CONCRETE SURFACING TO BE DETERMINED BY THE ENGINEER.

ABBREVIATIONS:

RHMA-G RUBBERIZED HOT MIX ASPHALT (GAP GRADED)

REPLACE ASPHALT CONCRETE SURFACING

Co-Rte	POST MILE LIMITS	(N) APPROXIMATE NUMBER OF DIGOUTS	(N) AVERAGE LENGTH	(N) WIDTH	(N) DEPTH	REPLACE ASPHALT CONCRETE SURFACING
	PM - PM		LF	LF	LF	CY
Las 395	36.4-37.0	5	100	4	0.33	25
	37.0-38.0	10	100	4	0.33	49
	38.0-39.0	10	100	4	0.33	49
	39.0-40.0	10	100	4	0.33	49
	40.0-41.0	10	100	4	0.33	49
	41.0-42.0	10	100	4	0.33	49
	42.0-43.0	10	100	4	0.33	49
	43.0-44.0	10	100	4	0.33	49
	44.0-45.0	10	100	4	0.33	49
	45.0-46.0	10	100	4	0.33	49
	46.0-47.0	10	100	4	0.33	49
				TOTAL		515

PREPAVING GRINDING DAY

Co-Rte	POST MILE LIMITS	EA
Las 395	36.4-47.0	4
TOTAL		4

GUARDRAIL ITEMS

Co-Rte	BEGIN POST MILE	SIDE	RECONSTRUCT GUARDRAIL	RECONSTRUCT TERMINAL SYSTEM (TYPE SRT)	ALTERNATE FLARED TERMINAL SYSTEM	RESET OBJECT MARKER	OBJECT MARKER (TYPE L-1)	TREATED WOOD WASTE
		Rt/Lt	LF	EA	EA	EA	EA	LB
Las 395	40.00	Rt	512	2		1	1	7340
	40.02	Lt	112		2	2		1675
	40.08	Lt	125		2	2		1859
	40.59	Lt	325	2		2		4691
	40.59	Rt	200	2		2		2921
	40.86	Rt	62	2		2		967
	41.87	Lt	25	2		2		443
	41.88	Rt	25	2		2		443
	43.74	Rt	150	2		2		2213
	44.09	Rt	175	2		2		2567
	44.09	Lt	175	2		2		2567
	45.28	Rt	75	2		2		1151
	45.28	Lt	75	2		2		1151
	45.54	Lt	75	2		2		1151
	45.54	Rt	75	2		2		1151
	46.23	Rt	50	2		2		797
	46.23	Lt	50	2		2		797
	TOTAL		2286	30	4	33	1	33,884

RUMBLE STRIP (HMA, GROUND-IN INDENTATIONS)

Co-Rte	POST MILE LIMITS	CENTERLINE	SHOULDER RT & LT
	PM - PM	Sta	Sta
Las 395	36.40-36.60	11	21
	36.60-36.85	13	26
	36.85-39.96	164	323
	39.96-39.98	1	2
	39.98-40.08	5	11
	40.08-40.27	10	20
	40.27-40.81	29	57
	40.81-41.08	14	27
	41.08-41.13	3	5
	41.13-41.50	20	39
	41.50-41.57	4	7
	41.57-41.58	1	1
	41.58-41.66	4	8
	41.66-41.75	5	8
	41.75-41.84	5	10
	41.84-41.86	1	1
	41.86-41.90	2	4
	41.90-41.98	4	8
	41.98-42.17	10	20
	42.17-42.33	8	17
	42.33-42.41	4	8
	42.41-42.48	4	7
	42.48-42.60	6	13
	42.60-43.86	67	132
	43.86-44.00	7	13
	44.00-44.25	13	26
	44.25-44.36	6	11
	44.36-44.59	12	24
	44.59-44.65	3	5
	44.65-45.54	47	94
	45.54-45.63	5	10
	45.63-45.70	4	7
	45.70-46.52	43	87
	46.52-46.55	2	3
	46.55-46.70	8	16
	46.70-46.78	4	8
	46.78-47.00	12	23
	TOTAL	561	1102

ROADWAY QUANTITY SUMMARY

Co-Rte	POST MILE LIMITS	(N) LENGTH	(N) WIDTH	RHMA-G	SHOULDER BACKING	TACK COAT
	PM - PM	LF	LF	TON	TON	TON
Las 395	36.40-36.50	528	45.0-40.0	18,315	4298	91
	36.50-37.00	2460	40.0-39.5			
	37.00-37.50	2460	39.5-40.5			
	37.50-38.00	2460	40.5-40.0			
	38.00-38.50	2460	40.0-40.0			
	38.50-38.55	264	40.0-45.0			
	38.55-38.57	106	45.0-56.5			
	38.57-38.70	686	56.5-42.0			
	38.70-39.00	1584	42.0-40.0			
	39.00-39.50	2640	40.0-40.0			
	39.50-40.00	2640	40.0-40.0			
	40.00-40.08	422	40.0-40.0			
	40.08-40.27	1003	40.0-55.0			
	40.27-40.50	1214	55.0-55.0			
	40.50-41.00	2640	55.0-55.0			
	41.00-41.13	686	55.0-43.0			
	41.13-41.50	1954	43.0-43.0			
	41.50-41.63	686	43.0-58.0			
	41.63-41.66	158	58.0-51.0			
	41.66-41.72	317	51.0-66.0			
	41.72-41.76	211	66.0-65.0			
	41.76-41.84	422	65.0-57.0			
	41.84-41.86	106	57.0-48.0			
	41.86-41.90	211	48.0-44.0			
	41.90-41.91	53	44.0-49.0			
	41.91-41.98	370	49.0-52.0			
	41.98-42.00	106	52.0-40.0			
	42.00-42.50	2640	40.0-40.0			
	42.50-43.00	2640	40.0-39.5			
	43.00-43.50	2640	39.5-41.5			
	43.50-44.00	2640	41.5-40.0			
	44.00-44.50	2640	40.0-40.0			
	44.50-45.00	2640	40.0-40.0			
	45.00-45.50	2640	40.0-40.0			
	45.50-45.63	686	40.0-42.0			
	45.63-45.70	370	42.0-55.0			
	45.70-46.00	1584	55.0-55.0			
	46.00-46.50	2640	55.0-55.0			
	46.50-46.70	1056	55.0-40.0			
	46.70-47.00	1584	40.0-40.0			
	ROAD CONNECTIONS/PULLOUTS			1343	358	8
			TOTAL	19,658	4656	99

COLD PLANE ASPHALT CONCRETE PAVEMENT

Co-Rte	POST MILE	(N) LENGTH	(N) WIDTH	AREA	REMARKS
		LF	LF	SQYD	
Las 395	36.4	40	45	200	MAINLINE CONFORM TAPER AT BEGINING OF PROJECT
	41.7	4	31	124	ROADWAY CONNECTION
	44.6	4	32	128	ROADWAY CONNECTION
	47.0	40	40	178	MAINLINE CONFORM TAPER AT END OF PROJECT
		TOTAL		630	

SUMMARY OF QUANTITIES
Q-1

REVISED BY | DATE REVISED
MATTHEW R. GOWAN | KARLIE J. SMITH
CALCULATED-DESIGNED BY | CHECKED BY
FUNCTIONAL SUPERVISOR: MICHAEL CONNER

STATE OF CALIFORNIA - DEPARTMENT OF TRANSPORTATION
Caltrans MAINTENANCE

P:\proj3\02\1h000_plans\pse\21h000pa001.dgn

LAST REVISION 11-17-15 | DATE PLOTTED => 30-NOV-2015 | TIME PLOTTED => 12:06

M

Maint	MAINTENANCE
Max	MAXIMUM
MB	METAL BEAM
MBB	METAL BEAM BARRIER
MBGR	METAL BEAM GUARD RAILING
Med	MEDIAN
MGS	MIDWEST GUARDRAIL SYSTEM
MH	MANHOLE
Min	MINIMUM
Misc	MISCELLANEOUS
Misc I & S	MISCELLANEOUS IRON AND STEEL
Mkr	MARKER
Mod	MODIFIED,
	MODIFY
Mon	MONUMENT
MP	METAL PLATE
MPGR	METAL PLATE GUARD RAILING
MR	MOVEMENT RATING
MSE	MECHANICALLY STABILIZED EMBANKMENT
Mt	MOUNTAIN, MOUNT
Mtl	MATERIAL
MVP	MAINTENANCE VEHICLE PULLOUT

N

N	NORTH
NB	NORTHBOUND
No.	NUMBER (MUST HAVE PERIOD)
Nos.	NUMBERS (MUST HAVE PERIOD)
NPS	NOMINAL PIPE SIZE
NS	NEAR SIDE
NSP	NEW STANDARD PLAN
NTS	NOT TO SCALE

O

Oblr	OBLITERATE
OC	OVERCROSSING
OD	OUTSIDE DIAMETER
OF	OUTSIDE FACE
OG	ORIGINAL GROUND
OGAC	OPEN GRADED ASPHALT CONCRETE
OGFC	OPEN GRADED FRICTION COURSE
OH	OVERHEAD
OHWM	ORDINARY HIGH WATER MARK
O-O	OUT TO OUT
Opp	OPPOSITE
OSD	OVERSIDE DRAIN

P

P	PAGE
PAP	PERFORATED ALUMINUM PIPE
PB	PULL BOX
PC	POINT OF CURVATURE,
	PRECAST
PCC	POINT OF COMPOUND CURVE,
	PORTLAND CEMENT CONCRETE
PCMS	PORTABLE CHANGEABLE MESSAGE SIGN
PCP	PERFORATED CONCRETE PIPE,
	PRESTRESSED CONCRETE PIPE
PCVC	POINT OF COMPOUND VERTICAL CURVE
PEC	PERMIT TO ENTER AND CONSTRUCT
Ped	PEDESTRIAN
Ped OC	PEDESTRIAN OVERCROSSING
Ped UC	PEDESTRIAN UNDERCROSSING
Perm Mtl	PERMEABLE MATERIAL

P continued

PG	PROFILE GRADE
PI	POINT OF INTERSECTION
PJP	PARTIAL JOINT PENETRATION
Pkwy	PARKWAY
₱,PL	PLATE
P/L	PROPERTY LINE
PM	POST MILE,
	TIME FROM NOON TO MIDNIGHT
PN	PAVING NOTCH
POC	POINT OF HORIZONTAL CURVE
POT	POINT OF TANGENT
POVC	POINT OF VERTICAL CURVE
PP	PIPE PILE,
	PLASTIC PIPE,
	POWER POLE
PPL	PREFORMED PERMEABLE LINER
PPP	PERFORATED PLASTIC PIPE
PRC	POINT OF REVERSE CURVE
PRF	PAVEMENT REINFORCING FABRIC
PRVC	POINT OF REVERSE VERTICAL CURVE
PS&E	PLANS, SPECIFICATIONS AND ESTIMATES
PS, P/S	PRESTRESSED
PSP	PERFORATED STEEL PIPE
PT	POINT OF TANGENCY
PVC	POLYVINYL CHLORIDE
Pvmt	PAVEMENT

Q

Qty	QUANTITY

R

R	RADIUS
R & D	REMOVE AND DISPOSE
R & S	REMOVE AND SALVAGE
R/C	RATE OF CHANGE
RCA	REINFORCED CONCRETE ARCH
RCB	REINFORCED CONCRETE BOX
RCP	REINFORCED CONCRETE PIPE
RCPA	REINFORCED CONCRETE PIPE ARCH
Rd	ROAD
Reinf	REINFORCED,
	REINFORCEMENT,
	REINFORCING
Rel	RELOCATE
Repl	REPLACEMENT
Ret	RETAINING
Rev	REVISED, REVISION
Rdwy	ROADWAY
RHMA	RUBBERIZED HOT MIX ASPHALT
Riv	RIVER
RM	ROAD-MIXED
RP	RADIUS POINT,
	REFERENCE POINT
RR	RAILROAD
RSP	ROCK SLOPE PROTECTION,
	REVISED STANDARD PLAN
Rt	RIGHT
Rte	ROUTE
RW	REDWOOD,
	RETAINING WALL
R/W	RIGHT OF WAY
Rwy	RAILWAY

S

S	SOUTH,
	SUPPLEMENT
SAE	STRUCTURE APPROACH EMBANKMENT
Salv	SALVAGE
SAPP	STRUCTURAL ALUMINUM PLATE PIPE
SB	SOUTHBOUND
SC	SAND CUSHION
SCSP	SLOTTED CORRUGATED STEEL PIPE
SD	STORM DRAIN
Sec	SECOND,
	SECTION
Sep	SEPARATION
SG	SUBGRADE
Shld	SHOULDER
Sht	SHEET
Sim	SIMILAR
℄	STATION LINE
SM	SELECTED MATERIAL
Spec	SPECIAL,
	SPECIFICATIONS
SPP	SLOTTED PLASTIC PIPE
SS	SLOPE STAKE
SSBM	STRAP AND SADDLE BRACKET METHOD
SSD	STRUCTURAL SECTION DRAIN
SSPA	STRUCTURAL STEEL PLATE ARCH
SSPP	STRUCTURAL STEEL PLATE PIPE
SSPPA	STRUCTURAL STEEL PLATE PIPE ARCH
SSRP	STEEL SPIRAL RIB PIPE
St	STREET
Sta	STATION
STBB	SINGLE THRIE BEAM BARRIER
Std	STANDARD
Str	STRUCTURE
Surf	SURFACING
SW	SIDEWALK,
	SOUND WALL
Swr	SEWER
Sym	SYMMETRICAL
S4S	SURFACE 4 SIDES

T

T	SEMI-TANGENT
Tan	TANGENT
TBB	THRIE BEAM BARRIER
Tbr	TIMBER
TC	TOP OF CURB
TCB	TRAFFIC CONTROL BOX
TCE	TEMPORARY CONSTRUCTION EASEMENT
Tel	TELEPHONE
Temp	TEMPORARY
TG	TOP OF GRADE
Tot	TOTAL
TP	TELEPHONE POLE
TPB	TREATED PERMEABLE BASE
TPM	TREATED PERMEABLE MATERIAL
Trans	TRANSITION

T continued

TS	TRANSVERSE,
	TRAFFIC SIGNAL,
	TUBULAR STEEL
Typ	TYPICAL

U

UC	UNDERCROSSING
UD	UNDERDRAIN
UG	UNDERGROUND
UON	UNLESS OTHERWISE NOTED
UP	UNDERPASS

V

V	VALVE,
	DESIGN SPEED
Var	VARIABLE,
	VARIES
VC	VERTICAL CURVE
VCP	VITRIFIED CLAY PIPE
Vert	VERTICAL
Via	VIADUCT
Vol	VOLUME

W

W	WEST,
	WIDTH
WB	WESTBOUND
WH	WEEP HOLE
WM	WIRE MESH
WS	WATER SURFACE
WSP	WELDED STEEL PIPE
Wt	WEIGHT
WV	WATER VALVE
WW	WINGWALL
WWLOL	WINGWALL LAYOUT LINE

X

X Sec	CROSS SECTION
Xing	CROSSING

Y

Yr	YEAR
Yrs	YEARS

Dist	COUNTY	ROUTE	POST MILES TOTAL PROJECT	SHEET No.	TOTAL SHEETS
02	Las	395	36.4/47.0	13	25

Grace M. Tsushima
REGISTERED CIVIL ENGINEER

July 19, 2013
PLANS APPROVAL DATE

REGISTERED PROFESSIONAL ENGINEER Grace M. Tsushima No. C49814 Exp. 9-30-14 CIVIL STATE OF CALIFORNIA

THE STATE OF CALIFORNIA OR ITS OFFICERS OR AGENTS SHALL NOT BE RESPONSIBLE FOR THE ACCURACY OR COMPLETENESS OF SCANNED COPIES OF THIS PLAN SHEET.

TO ACCOMPANY PLANS DATED 11-17-15

UNIT OF MEASUREMENT SYMBOLS:

Some of the symbols used in the project plan quantity tables and in the Bid Item List are:

TABLE A

SYMBOL USED	DEFINITIONS
ACRE	ACRE
CF	CUBIC FOOT
CY	CUBIC YARD
EA	EACH
GAL	GALLON
LB	POUND
LF	LINEAR FOOT
SQFT	SQUARE FOOT
SQYD	SQUARE YARD
STA	100 FEET
TAB	TABLET
TON	2,000 POUNDS

Some of the symbols used in the plans other than in the project plan quantity tables are:

TABLE B

SYMBOL USED	DEFINITIONS
ksi	KIPS PER SQUARE INCH
ksf	KIPS PER SQUARE FOOT
psi	POUNDS PER SQUARE INCH
psf	POUNDS PER SQUARE FOOT
lb/ft^3, pcf	POUNDS PER CUBIC FOOT
tsf	TONS PER SQUARE FOOT
mph, MPH *	MILES PER HOUR
ø	NOMINAL DIAMETER
oz	OUNCE
lb	POUND
kip	1,000 POUNDS
cal	CALORIE
ft	FOOT OR FEET
gal	GALLON

* For use on a sign panel only

STATE OF CALIFORNIA
DEPARTMENT OF TRANSPORTATION

ABBREVIATIONS (SHEET 2 OF 2)

NO SCALE

RSP A10B DATED JULY 19, 2013 SUPERSEDES STANDARD PLAN A10B DATED MAY 20, 2011 - PAGE 2 OF THE STANDARD PLANS BOOK DATED 2010.

REVISED STANDARD PLAN RSP A10B

2010 REVISED STANDARD PLAN RSP A10B

DATE PLOTTED => 30-NOV-2015
TIME PLOTTED => 12:06

Dist	COUNTY	ROUTE	POST MILES TOTAL PROJECT	SHEET No.	TOTAL SHEETS
02	Las	395	36.4/47.0	14	25

REGISTERED CIVIL ENGINEER

April 20, 2012
PLANS APPROVAL DATE

REGISTERED PROFESSIONAL ENGINEER
Roberta L. McLaughlin
No. C40375
Exp. 3-31-13
CIVIL
STATE OF CALIFORNIA

THE STATE OF CALIFORNIA OR ITS OFFICERS OR AGENTS SHALL NOT BE RESPONSIBLE FOR THE ACCURACY OR COMPLETENESS OF SCANNED COPIES OF THIS PLAN SHEET.

TO ACCOMPANY PLANS DATED 11-17-15

2010 REVISED STANDARD PLAN RSP A24A

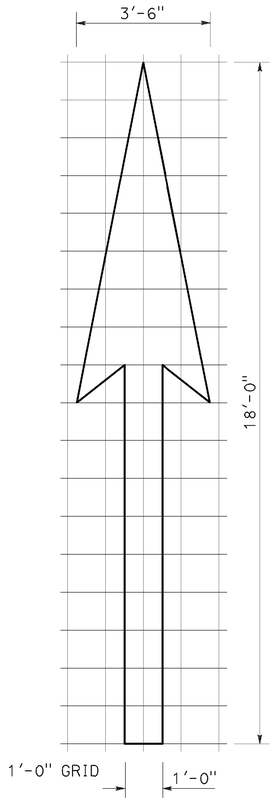

A=25 ft^2

TYPE I 18'-0" ARROW

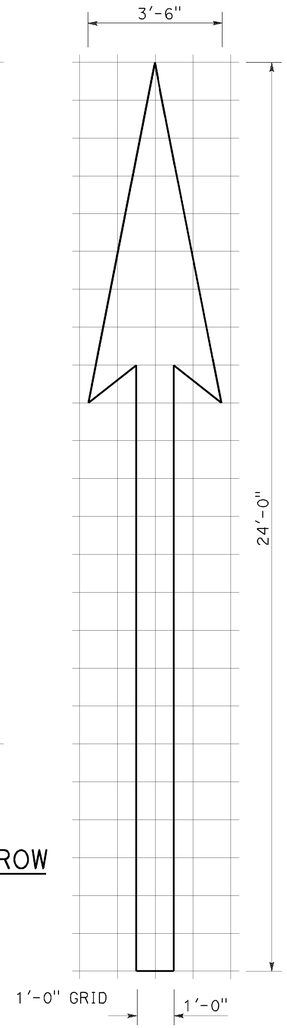

A=31 ft^2

TYPE I 24'-0" ARROW

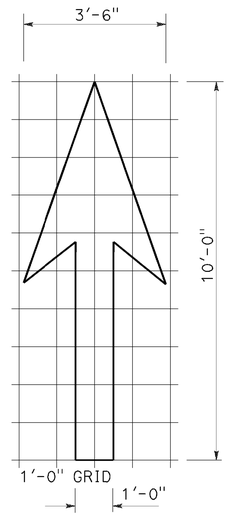

A=14 ft^2

TYPE I 10'-0" ARROW

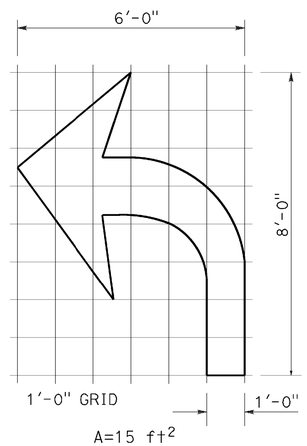

A=15 ft^2

TYPE IV (L) ARROW

(For Type IV (R) arrow, use mirror image)

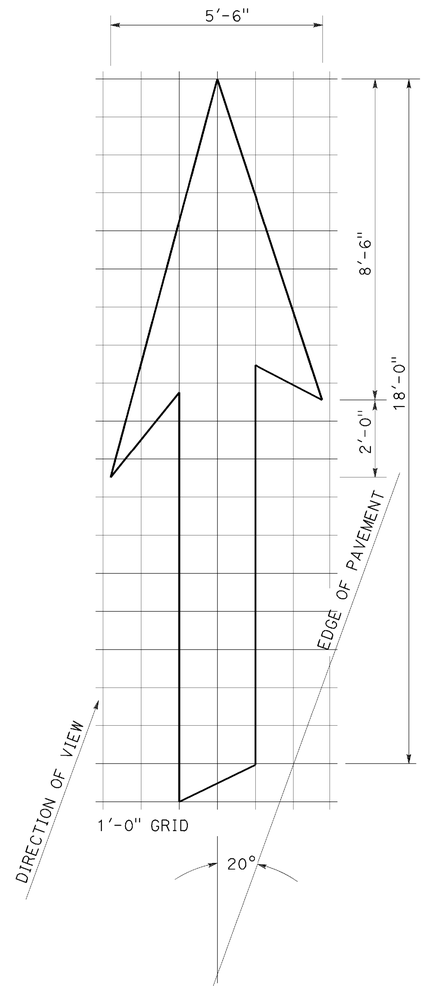

A=42 ft^2

TYPE VI ARROW

Right lane drop arrow
(For left lane, use mirror image)

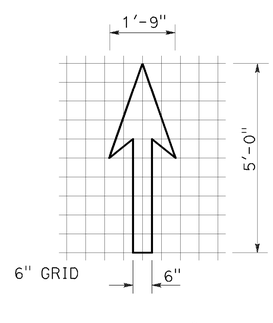

A=3.5 ft^2

BIKE LANE ARROW

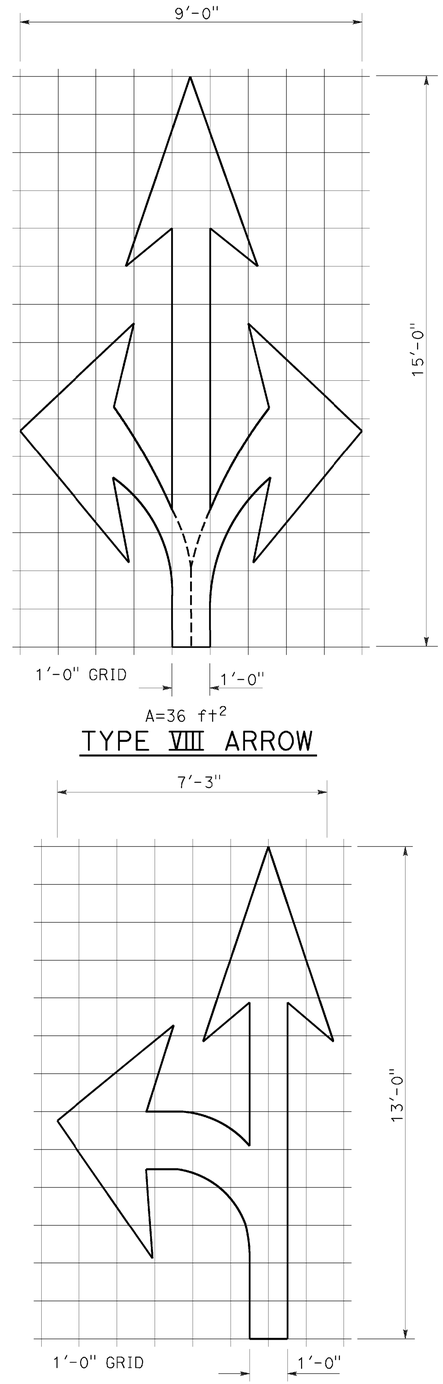

A=36 ft^2

TYPE VIII ARROW

A=27 ft^2

TYPE VII (L) ARROW

(For Type VII (R) arrow, use mirror image)

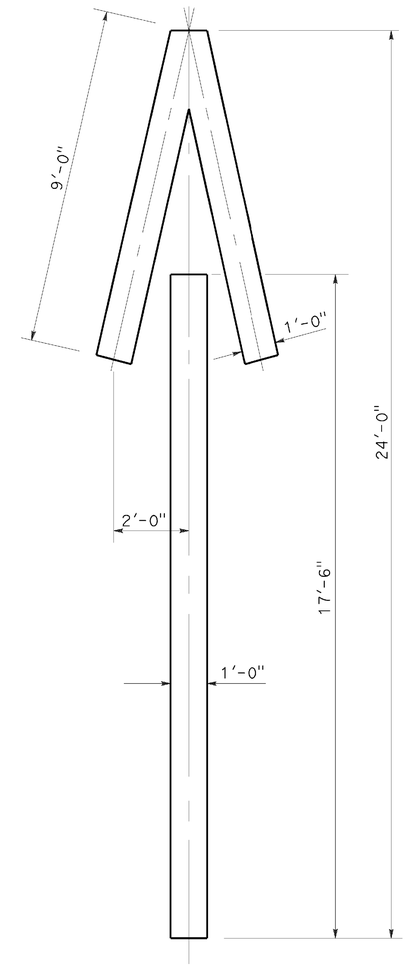

A=33 ft^2

TYPE V ARROW

NOTE:
Minor variations in dimensions may be accepted by the Engineer.

STATE OF CALIFORNIA
DEPARTMENT OF TRANSPORTATION

PAVEMENT MARKINGS ARROWS

NO SCALE

RSP A24A DATED APRIL 20, 2012 SUPERSEDES STANDARD PLAN A24A DATED MAY 20, 2011 - PAGE 13 OF THE STANDARD PLANS BOOK DATED 2010.

REVISED STANDARD PLAN RSP A24A

DATE PLOTTED => 30-NOV-2015
TIME PLOTTED => 12:07

Dist	COUNTY	ROUTE	POST MILES TOTAL PROJECT	SHEET No.	TOTAL SHEETS
02	Las	395	36.4/47.0	15	25

REGISTERED CIVIL ENGINEER

October 19, 2012
PLANS APPROVAL DATE

REGISTERED PROFESSIONAL ENGINEER
Roberta L. McLaughlin
No. C40375
Exp. 3-31-13
CIVIL
STATE OF CALIFORNIA

THE STATE OF CALIFORNIA OR ITS OFFICERS OR AGENTS SHALL NOT BE RESPONSIBLE FOR THE ACCURACY OR COMPLETENESS OF SCANNED COPIES OF THIS PLAN SHEET.

NOTE: TO ACCOMPANY PLANS DATED 11-17-15

Minor variations in dimensions may be accepted by the Engineer.

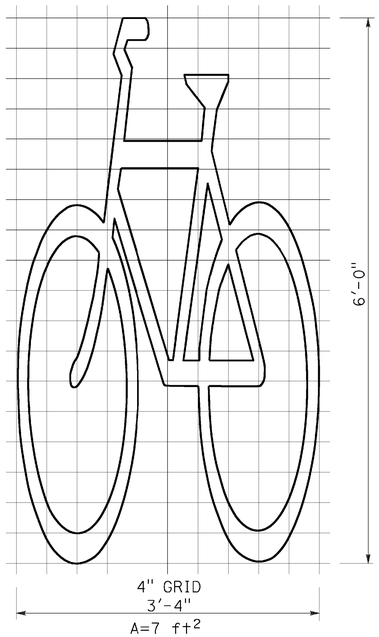

BIKE LANE SYMBOL WITHOUT PERSON

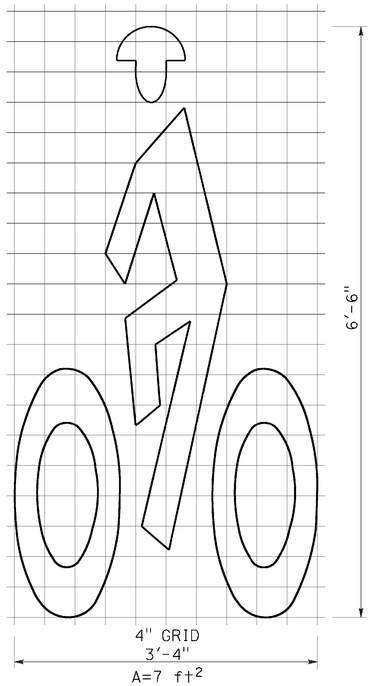

BIKE LANE SYMBOL WITH PERSON

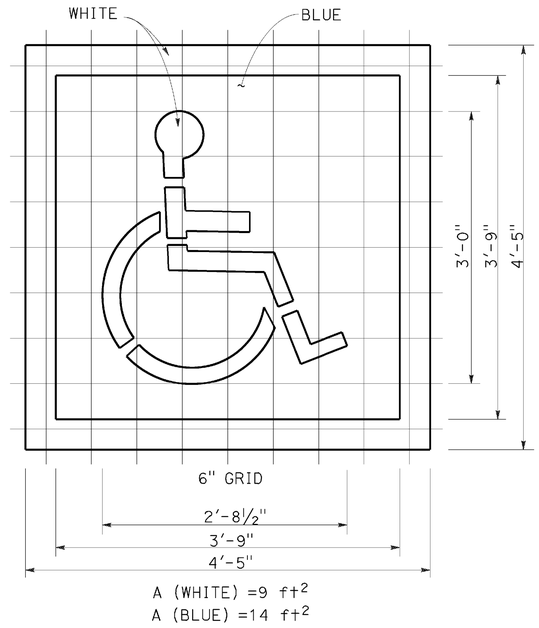

INTERNATIONAL SYMBOL OF ACCESSIBILITY (ISA) MARKING

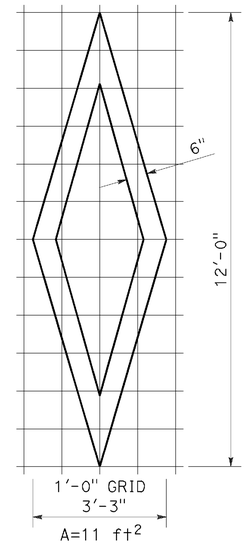

DIAMOND SYMBOL

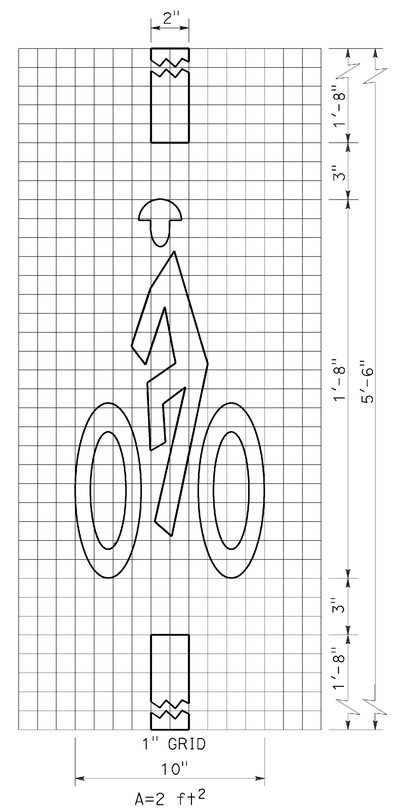

BICYCLE LOOP DETECTOR SYMBOL

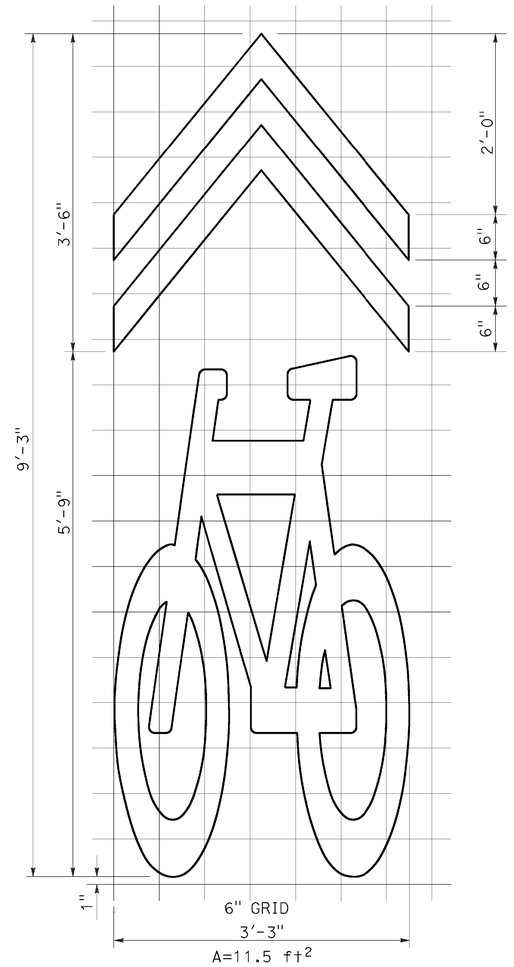

SHARED ROADWAY BICYCLE MARKING

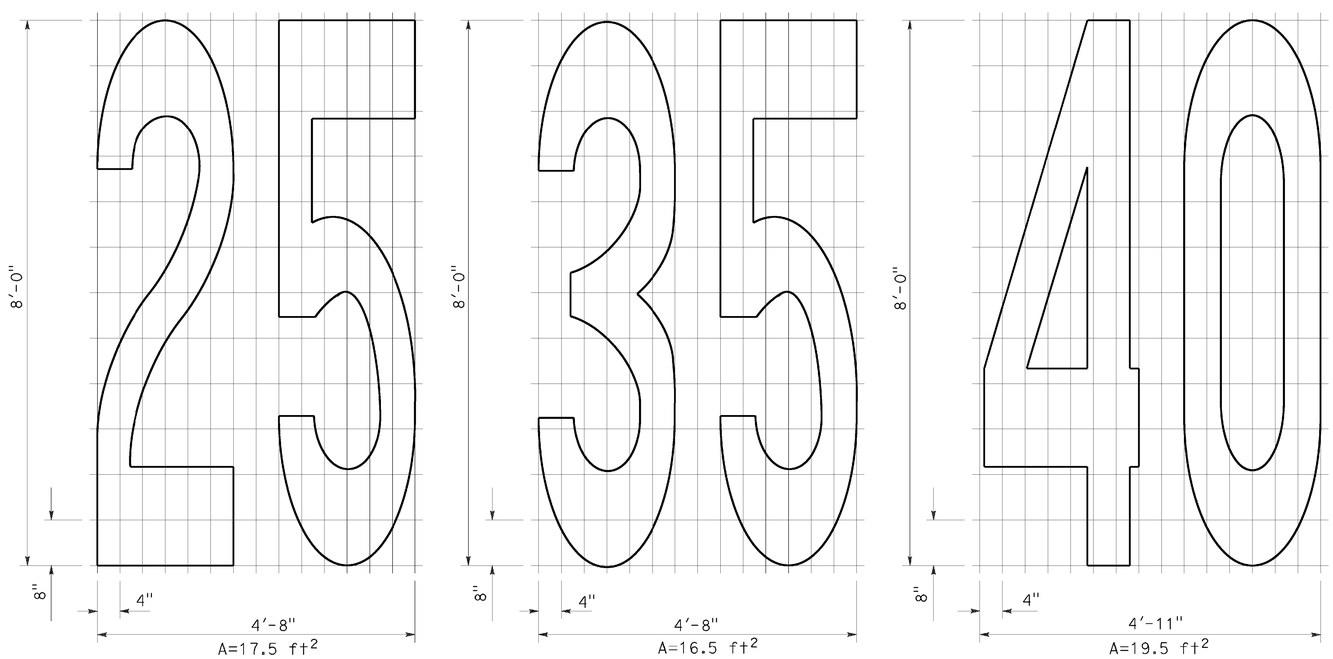

NUMERALS

STATE OF CALIFORNIA
DEPARTMENT OF TRANSPORTATION

PAVEMENT MARKINGS SYMBOLS AND NUMERALS

NO SCALE

RSP A24C DATED OCTOBER 19, 2012 SUPERSEDES STANDARD PLAN A24C DATED MAY 20, 2011 - PAGE 15 OF THE STANDARD PLANS BOOK DATED 2010.

REVISED STANDARD PLAN RSP A24C

2010 REVISED STANDARD PLAN RSP A24C

DATE PLOTTED => 30-NOV-2015
TIME PLOTTED => 12:07

Dist	COUNTY	ROUTE	POST MILES TOTAL PROJECT	SHEET No.	TOTAL SHEETS
02	Las	395	36.4/47.0	16	25

REGISTERED CIVIL ENGINEER

July 20, 2012
PLANS APPROVAL DATE

REGISTERED PROFESSIONAL ENGINEER
Roberta L. McLaughlin
No. C40375
Exp. 3-31-13
CIVIL
STATE OF CALIFORNIA

THE STATE OF CALIFORNIA OR ITS OFFICERS OR AGENTS SHALL NOT BE RESPONSIBLE FOR THE ACCURACY OR COMPLETENESS OF SCANNED COPIES OF THIS PLAN SHEET.

TO ACCOMPANY PLANS DATED 11-17-15

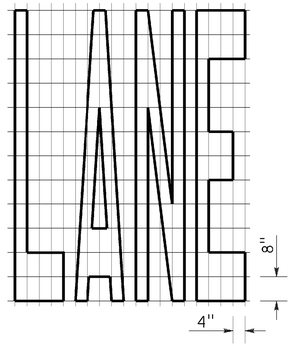

A=24 ft²

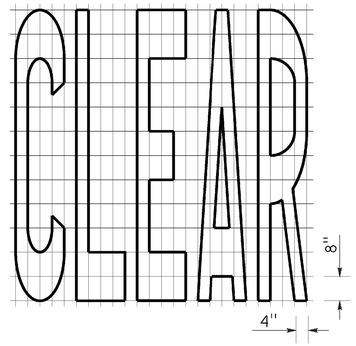

A=27 ft²

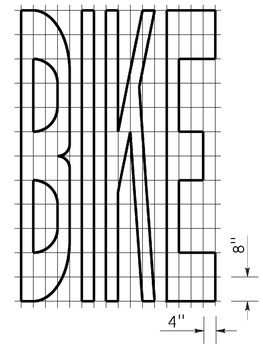

A=21 ft²

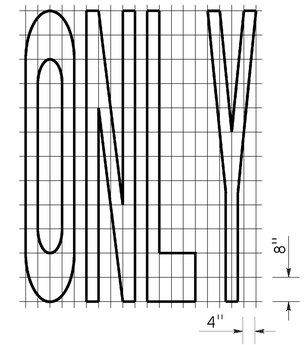

A=22 ft²

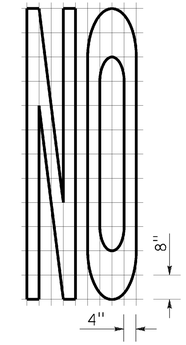

A=14 ft²

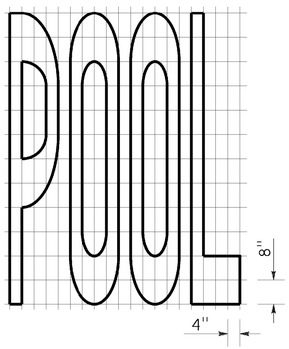

A=23 ft²

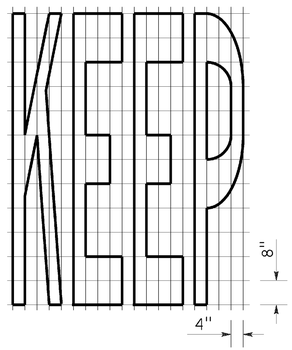

A=24 ft²

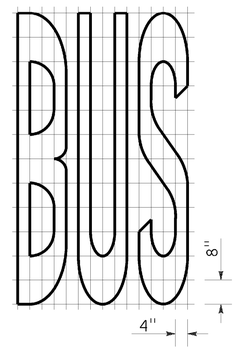

A=20 ft²

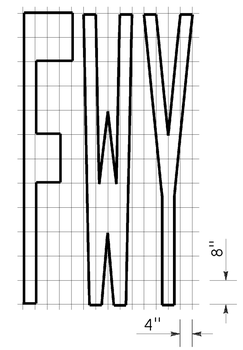

A=16 ft²

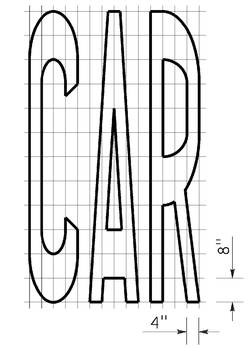

A=17 ft²

WORD MARKINGS			
ITEM	ft²	ITEM	ft²
LANE	24	NO	14
POOL	23	BIKE	21
CAR	17	BUS	20
CLEAR	27	ONLY	22
KEEP	24	FWY	16

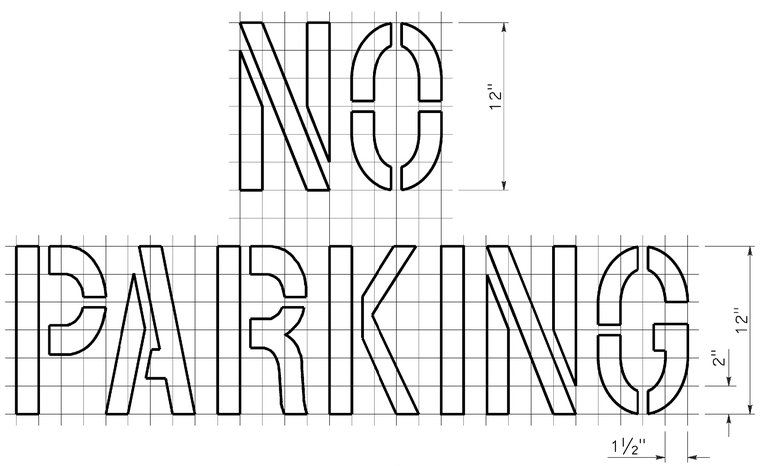

A=2 ft²
See Notes 6 and 7

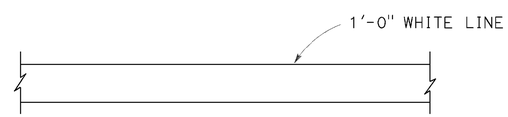

LIMIT LINE (STOP LINE)

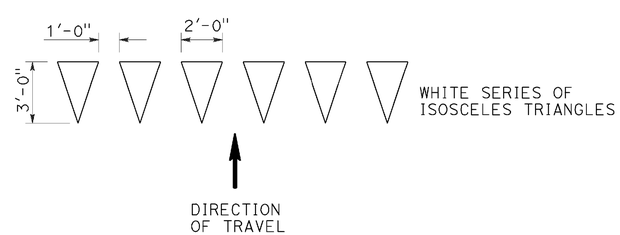

YIELD LINE

NOTES:

1. If a message consists of more than one word, it should read "UP", i.e., the first word should be nearest the driver.
2. The space between words should be at least four times the height of the characters for low speed roads, but not more than ten times the height of the characters. The space may be reduced appropriately where there is limited space because of local conditions.
3. Minor variations in dimensions may be accepted by the Engineer.
4. Portions of a letter, number or symbol may be separated by connecting segments not to exceed 2" in width.
5. The words "NO PARKING" pavement marking is to be used for parking facilities. For typical locations of markings, see Standard Plans A90A and A90B.
6. The words "NO PARKING", shall be painted in white letters no less than 1'-0" high on a contrasting background and located so that it is visible to traffic enforcement officials.

STATE OF CALIFORNIA
DEPARTMENT OF TRANSPORTATION

PAVEMENT MARKINGS WORDS, LIMIT AND YIELD LINES

NO SCALE

RSP A24E DATED JULY 20, 2012 SUPERSEDES STANDARD PLAN A24E
DATED MAY 20, 2011 - PAGE 17 OF THE STANDARD PLANS BOOK DATED 2010.

REVISED STANDARD PLAN RSP A24E

2010 REVISED STANDARD PLAN RSP A24E

DATE PLOTTED => 30-NOV-2015
TIME PLOTTED => 12:07

Dist	COUNTY	ROUTE	POST MILES TOTAL PROJECT	SHEET No.	TOTAL SHEETS
02	Las	395	36.4/47.0	17	25

REGISTERED CIVIL ENGINEER

July 19, 2013
PLANS APPROVAL DATE

REGISTERED PROFESSIONAL ENGINEER
Gurinderpal Bhullar
No. C48815
Exp. 9-30-14
CIVIL
STATE OF CALIFORNIA

THE STATE OF CALIFORNIA OR ITS OFFICERS OR AGENTS SHALL NOT BE RESPONSIBLE FOR THE ACCURACY OR COMPLETENESS OF SCANNED COPIES OF THIS PLAN SHEET.

TO ACCOMPANY PLANS DATED 11-17-15

2010 REVISED STANDARD PLAN RSP T9

TABLE 1

TAPER LENGTH CRITERIA AND CHANNELIZING DEVICE SPACING

SPEED (S)	MINIMUM TAPER LENGTH * FOR WIDTH OF OFFSET 12 FEET (W)				MAXIMUM CHANNELIZING DEVICE SPACING		
					X	Y	Z **
	TANGENT 2L	MERGING L	SHIFTING L/2	SHOULDER L/3	TAPER	TANGENT	CONFLICT
mph	ft	ft	ft	ft	ft	ft	ft
20	160	80	40	27	20	40	10
25	250	125	63	42	25	50	12
30	360	180	90	60	30	60	15
35	490	245	123	82	35	70	17
40	640	320	160	107	40	80	20
45	1080	540	270	180	45	90	22
50	1200	600	300	200	50	100	25
55	1320	660	330	220	55	110	27
60	1440	720	360	240	60	120	30
65	1560	780	390	260	65	130	32
70	1680	840	420	280	70	140	35

* - For other offsets, use the following merging taper length formula for L:
For speed of 40 mph or less, $L = WS^2/60$
For speed of 45 mph or more, $L = WS$

Where: L = Taper length in feet
W = Width of offset in feet
S = Posted speed limit, off-peak 85th-percentile speed prior to work starting, or the anticipated operating speed in mph

** - Use for taper and tangent sections where there are no pavement markings or where there is a conflict between existing pavement markings and channelizers (CA).

TABLE 2

LONGITUDINAL BUFFER SPACE AND FLAGGER STATION SPACING

SPEED *	Min D **	DOWNGRADE Min D ***		
		-3%	-6%	-9%
mph	ft	ft	ft	ft
20	115	116	120	126
25	155	158	165	173
30	200	205	215	227
35	250	257	271	287
40	305	315	333	354
45	360	378	400	427
50	425	446	474	507
55	495	520	553	593
60	570	598	638	686
65	645	682	728	785
70	730	771	825	891

* - Speed is posted speed limit, off-peak 85th-percentile speed prior to work starting, or the anticipated operating speed in mph

** - Longitudinal buffer space or flagger station spacing

*** - Use on sustained downgrade steeper than -3 percent and longer than 1 mile.

TABLE 3

ADVANCE WARNING SIGN SPACING

ROAD TYPE	DISTANCE BETWEEN SIGNS *		
	A	B	C
	ft	ft	ft
URBAN - 25 mph OR LESS	100	100	100
URBAN - MORE THAN 25 mph TO 40 mph	250	250	250
URBAN - MORE THAN 40 mph	350	350	350
RURAL	500	500	500
EXPRESSWAY / FREEWAY	1000	1500	2640

* - The distances are approximate, are intended for guidance purposes only, and should be applied with engineering judgment. These distances should be adjusted by the Engineer for field conditions, if necessary, by increasing or decreasing the recommmended distances.

STATE OF CALIFORNIA
DEPARTMENT OF TRANSPORTATION

TRAFFIC CONTROL SYSTEM TABLES FOR LANE AND RAMP CLOSURES

NO SCALE

RSP T9 DATED JULY 19, 2013 SUPERSEDES RSP T9 DATED APRIL 19, 2013 THAT SUPPLEMENTS THE STANDARD PLANS BOOK DATED 2010.

REVISED STANDARD PLAN RSP T9

DATE PLOTTED => 30-NOV-2015
TIME PLOTTED => 12:08

Dist	COUNTY	ROUTE	POST MILES TOTAL PROJECT	SHEET No.	TOTAL SHEETS
02	Las	395	36.4/47.0	18	25

REGISTERED CIVIL ENGINEER

April 19, 2013
PLANS APPROVAL DATE

REGISTERED PROFESSIONAL ENGINEER Gurinderpal Bhullar No. C48815 Exp. 9-30-14 CIVIL STATE OF CALIFORNIA

THE STATE OF CALIFORNIA OR ITS OFFICERS OR AGENTS SHALL NOT BE RESPONSIBLE FOR THE ACCURACY OR COMPLETENESS OF SCANNED COPIES OF THIS PLAN SHEET.

TO ACCOMPANY PLANS DATED 11-17-15

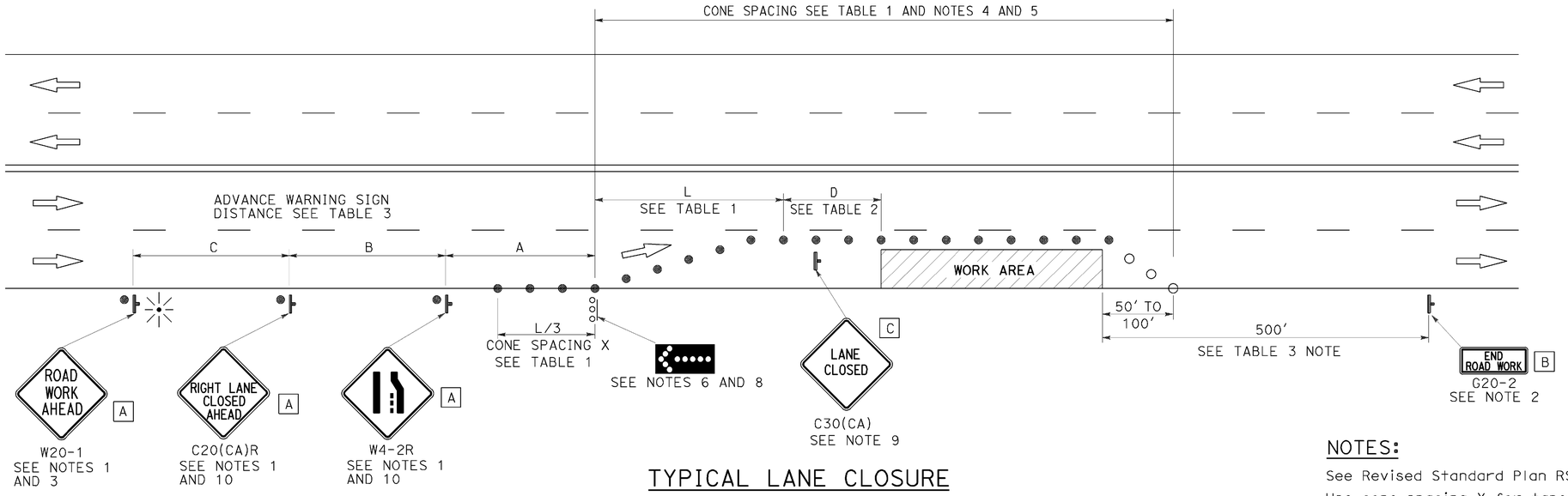

TYPICAL LANE CLOSURE

NOTES:

See Revised Standard Plan RSP T9 for tables.

Use cone spacing X for taper segment, Y for tangent segment or Z for conflict situations, as approriate, per Table 1, unless X, Y, or Z cone spacing is shown on this sheet.

Unless otherwise specified in the special provisions, all temporary warning signs shall have black legend on fluorescent orange background.

California codes are designated by (CA). Otherwise, Federal (MUTCD) codes are shown.

NOTES:

1. Each advance warning sign shall be equipped with at least two flags for daytime closure. Each flag shall be at least 16" x 16" in size and shall be orange or fluorescent red-orange in color. Flashing beacons shall be placed at the locations indicated for lane closure during hours of darkness.
2. A G20-2 "END ROAD WORK" sign, as appropriate, shall be placed at the end of the lane closure unless the end of work area is obvious, or ends within a larger project's limits.
3. If the W20-1 sign would follow within 2000' of a stationary W20-1 or G20-1 "ROAD WORK NEXT _____ MILES", use a C20(CA) sign for the first advance warning sign.
4. All cones used for lane closures during the hours of darkness shall be fitted with retroreflective bands (or sleeves) as specified in the specifications.
5. Portable delineators, placed at one-half the spacing indicated for traffic cones, may be used instead of cones for daytime closures only.
6. Flashing arrow sign shall be either Type I or Type II.
7. For approach speeds over 50 mph, use the "Traffic Control System for Lane Closure On Freeways And Expressways" plan for lane closure details and requirements.
8. A minimum 1500' of sight distance shall be provided where possible for vehicles approaching the first flashing arrow sign. Lane closures shall not begin at the top of crest vertical curve or on a horizontal curve.
9. Place a C30(CA) sign every 2000' throughout length of lane closure.
10. Median lane closures shall conform to the details as shown except that C20(CA)L and W4-2L signs shall be used.
11. At least one person shall be assigned to provide full time maintenance of traffic control devices for lane closure unless, otherwise directed by the Engineer.

LEGEND

- TRAFFIC CONE
- TRAFFIC CONE (OPTIONAL TAPER)
- TEMPORARY TRAFFIC CONTROL SIGN
- FLASHING ARROW SIGN (FAS)
- FAS SUPPORT OR TRAILER
- PORTABLE FLASHING BEACON

SIGN PANEL SIZE (Min)

A	48" x 48"
B	36" x 18"
C	30" x 30"

STATE OF CALIFORNIA
DEPARTMENT OF TRANSPORTATION

TRAFFIC CONTROL SYSTEM FOR LANE CLOSURE ON MULTILANE CONVENTIONAL HIGHWAYS

NO SCALE

RSP T11 DATED APRIL 19, 2013 SUPERSEDES STANDARD PLAN T11 DATED MAY 20, 2011 - PAGE 239 OF THE STANDARD PLANS BOOK DATED 2010.

REVISED STANDARD PLAN RSP T11

2010 REVISED STANDARD PLAN RSP T11

DATE PLOTTED => 30-NOV-2015
TIME PLOTTED => 12:08

Dist	COUNTY	ROUTE	POST MILES TOTAL PROJECT	SHEET No.	TOTAL SHEETS
02	Las	395	36.4/47.0	19	25

Devinder Singh
REGISTERED CIVIL ENGINEER

October 30, 2015
PLANS APPROVAL DATE

REGISTERED PROFESSIONAL ENGINEER
Devinder Singh
No. C50470
Exp. 6-30-17
CIVIL
STATE OF CALIFORNIA

THE STATE OF CALIFORNIA OR ITS OFFICERS OR AGENTS SHALL NOT BE RESPONSIBLE FOR THE ACCURACY OR COMPLETENESS OF SCANNED COPIES OF THIS PLAN SHEET.

TO ACCOMPANY PLANS DATED 11-17-15

NOTES:

See Revised Standard Plan RSP T9 for tables.

Use cone spacing X for taper segment, Y for tangent segment or Z for conflict situations, as approriate, per Table 1, unless X, Y, or Z cone spacing is shown on this sheet.

Unless otherwise specified in the special provisions, all temporary warning signs shall have black legend on fluorescent orange background.

California codes are designated by (CA). Otherwise, Federal (MUTCD) codes are shown.

TYPICAL LANE CLOSURE WITH REVERSIBLE CONTROL

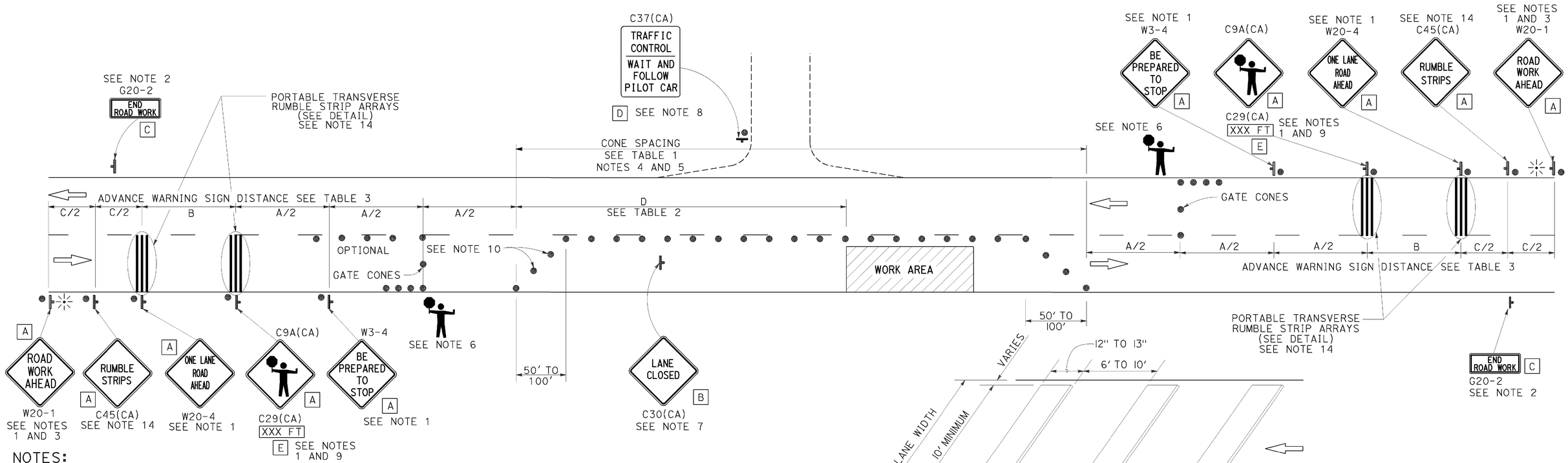

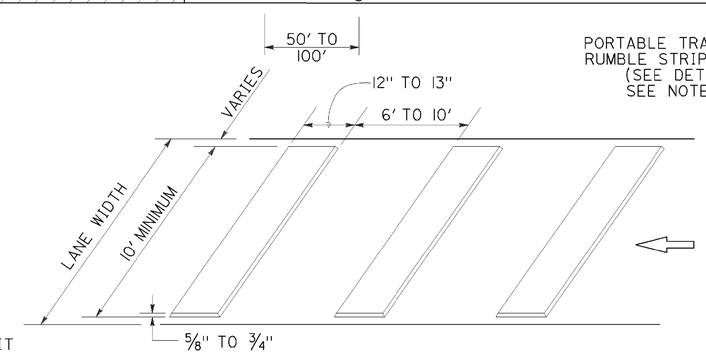

PORTABLE TRANSVERSE RUMBLE STRIP ARRAY DETAIL

NOTES:

1. Each advance warning sign in each direction of travel shall be equipped with at least two flags for daytime closure. Each flag shall be at least 16" x 16" in size and shall be orange or fluorescent red-orange in color. Flashing beacons shall be placed at the locations indicated for lane closure during hours of darkness.
2. A G20-2 "END ROAD WORK" sign, as appropriate, shall be placed at the end of the lane control unless the end of work area is obvious, or ends within a larger project's limits.
3. If the W20-1 sign would follow within 2000' of a stationary W20-1 or G20-1 "ROAD WORK NEXT _____ MILES", use a W20-4 sign for the first advance warning sign.
4. All cones used for lane closures during the hours of darkness shall be fitted with retroreflective bands (or sleeves) as specified in the specifications.
5. Portable delineators, placed at one-half the spacing indicated for traffic cones, may be used instead of cones for daytime closures only.
6. Additional advance flaggers may be required. Flagger should stand in a conspicuous place, be visible to approaching traffic as well as approaching vehicles after the first vehicle has stopped. During the hours of darkness, the flagging-station and flagger shall be illuminated and clearly visible to approaching traffic. The illumination footprint of the lighting on the ground shall be at least 20' in diameter. Place a minimum of four cones at 50' intervals in advance of flagger station as shown.
7. Place C30(CA) "LANE CLOSED" sign at 500' to 1000' intervals throughout extended work areas. They are optional if the work area is visible from the flagger station.
8. When a pilot car is used, place a C37(CA) "TRAFFIC CONTROL-WAIT AND FOLLOW PILOT CAR" sign with black legend on white background at all intersections, driveways and alleys without a flagger within traffic control area. Signs shall be clean and visible at all times. Where traffic can not be effectively self-regulated, at least one flagger shall be used at each intersection within traffic control area.
9. An optional C29(CA) sign may be placed below the C9A(CA) sign.
10. Either traffic cones or barricades shall be placed on the taper. Barricades shall be Type I, II, or III.
11. The color of the portable transverse rumble strips shall be black or orange. Use 2 arrays, each array shall consist of 3 rumble strips.
12. Portable transverse rumble strips shall not be placed on sharp horizontal or vertical curves nor shall they be placed through pedestrian crossings.
13. If the portable transverse rumble strips become out of alignment (skewed) by more than 6 inches, measured from one end to the other, they shall be readjusted to bring the placement back to the original location.
14. Portable transverse rumble strips are not required if any one of the following conditions is satisfied:
    A. Work duration occupies a location for four hours or less
    B. Posted speed limit is below 45 MPH
    C. Work is of emergency nature
    D. Work zone is in snow or icy weather conditions

SIGN PANEL SIZE (Min)

A	48" x 48"
B	30" x 30"
C	36" x 18"
D	36" x 42"
E	20" x 7"

LEGEND

- TRAFFIC CONE
- TEMPORARY TRAFFIC CONTROL SIGN
- PORTABLE FLASHING BEACON
- FLAGGER

STATE OF CALIFORNIA
DEPARTMENT OF TRANSPORTATION

TRAFFIC CONTROL SYSTEM FOR LANE CLOSURE ON TWO LANE CONVENTIONAL HIGHWAYS

NO SCALE

RSP T13 DATED OCTOBER 30, 2015 SUPERSEDES RSP T13 DATED OCTOBER 17, 2014, RSP T13 DATED JULY 18, 2014 AND RSP T13 DATED APRIL 19, 2013 AND STANDARD PLAN T13 DATED MAY 20, 2011 - PAGE 241 OF THE STANDARD PLANS BOOK DATED 2010.

REVISED STANDARD PLAN RSP T13

2010 REVISED STANDARD PLAN RSP T13

DATE PLOTTED => 30-NOV-2015
TIME PLOTTED => 12:08

Dist	COUNTY	ROUTE	POST MILES TOTAL PROJECT	SHEET No.	TOTAL SHEETS
02	Las	395	36.4/47.0	20	25

Randell D. Hiatt
REGISTERED CIVIL ENGINEER

July 19, 2013
PLANS APPROVAL DATE

REGISTERED PROFESSIONAL ENGINEER Randell D. Hiatt No. C50200 Exp. 6-30-15 CIVIL STATE OF CALIFORNIA

THE STATE OF CALIFORNIA OR ITS OFFICERS OR AGENTS SHALL NOT BE RESPONSIBLE FOR THE ACCURACY OR COMPLETENESS OF SCANNED COPIES OF THIS PLAN SHEET.

TO ACCOMPANY PLANS DATED 11-17-15

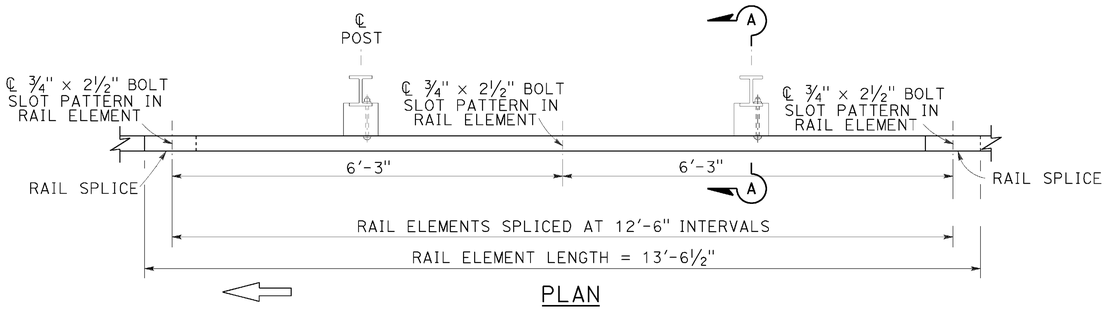

PLAN

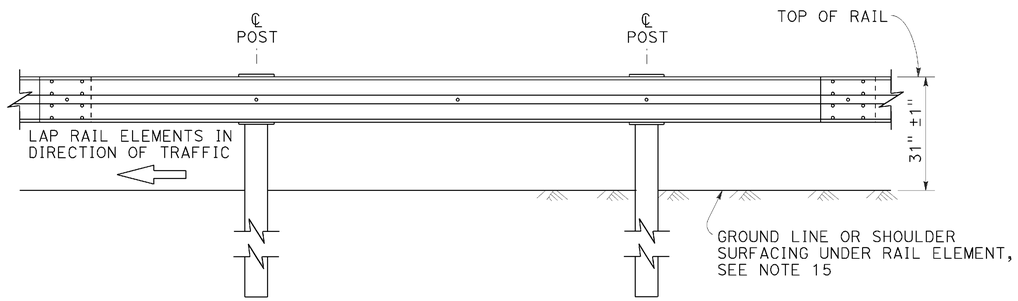

ELEVATION

MIDWEST GUARDRAIL SYSTEM WITH STEEL POSTS AND NOTCHED WOOD OR NOTCHED RECYCLED PLASTIC BLOCKS

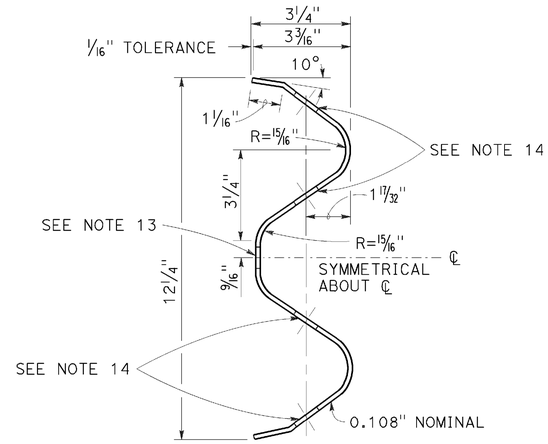

SECTION THRU RAIL ELEMENT

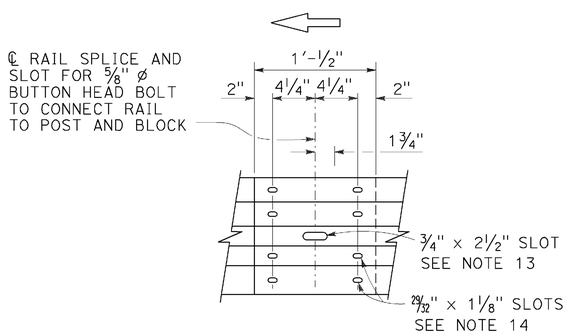

ELEVATION

RAIL ELEMENT SPLICE DETAIL

a) Connect the over lapped end of the rail elements with ⅝" ø × 1⅜" button head oval shoulder splice bolts inserted into the 29⁄32" × 1⅛" slots and bolted together with ⅝" ø recessed hex nuts. Recess of hex nut points toward rail element. A total of 8 bolts and nuts are to be used at each rail splice connection.

b) The ends of the rail elements are to be overlapped in the direction of traffic (see details).

c) Where end cap is to be attached to the end of a rail element, a total of 4 of the above described splice bolts and nuts are to be used.

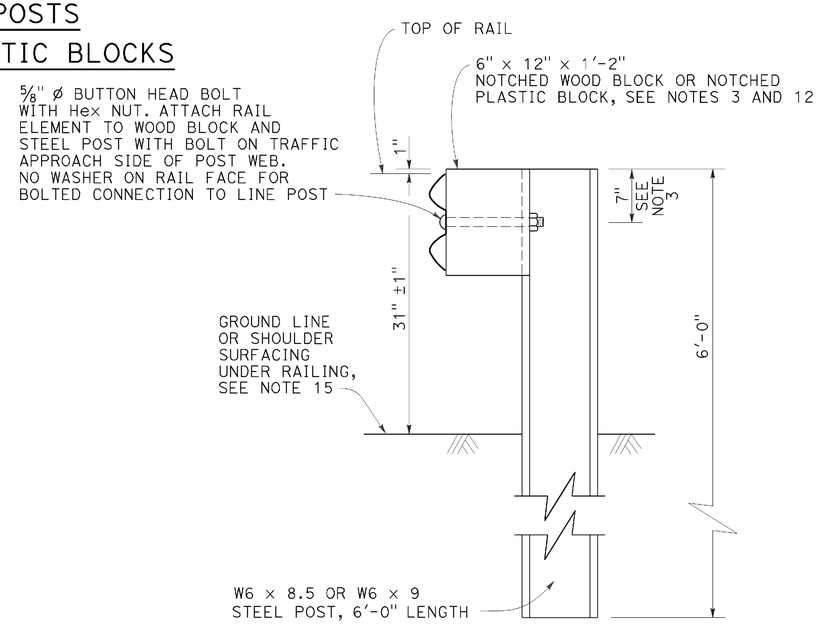

SECTION A-A

TYPICAL STEEL LINE POST INSTALLATION

See Note 4

NOTES:

1. For details of wood post installations, see Revised Standard Plan RSP A77L1.
2. For details of standard hardware used to construct MGS, see Revised Standard Plan RSP A77M1.
3. For details of steel posts and notched wood blocks used to construct MGS, see Revised Standard Plan RSP A77N2.
4. For additional installation details, see Revised Standard Plan RSP A77N3.
5. MGS post spacing to be 6'-3" center to center, except as otherwise noted.
6. For MGS typical layouts, see the A77P, A77Q and A77R Series of Standard Plans.
7. If railing is connected to terminal system end treatment, use 31" height terminal system end treatment.
8. For MGS end anchor details, see Revised Standard Plans RSP A77S1 and RSP A77T2.
9. For details of MGS transition to bridge railing, see Revised Standard Plan RSP A77U4.
10. For additional details of MGS connection to bridge railings, see Revised Standard Plans RSP A77U1, RSP A77U2 and RSP A77V1.
11. For dike positioning and MGS delineation details, see Revised Standard Plan RSP A77N4.
12. Notched face of block faces steel post.
13. Slotted hole for bolted connection of rail element to block and post. See "Section Thru Rail Element".
14. Slotted holes for splice bolts to overlap ends of rail element. See "Section Thru Rail Element".
15. Install posts in soil.

STATE OF CALIFORNIA
DEPARTMENT OF TRANSPORTATION

MIDWEST GUARDRAIL SYSTEM STANDARD RAILING SECTION (STEEL POST WITH NOTCHED WOOD OR NOTCHED RECYCLED PLASTIC BLOCK)

NO SCALE

RSP A77L2 DATED JULY 19, 2013 SUPPLEMENTS THE STANDARD PLANS BOOK DATED 2010.

REVISED STANDARD PLAN RSP A77L2

2010 REVISED STANDARD PLAN RSP A77L2

DATE PLOTTED => 30-NOV-2015
TIME PLOTTED => 12:09

Dist	COUNTY	ROUTE	POST MILES TOTAL PROJECT	SHEET No.	TOTAL SHEETS
02	Las	395	36.4/47.0	21	25

Randell D. Hiatt
REGISTERED CIVIL ENGINEER

July 19, 2013
PLANS APPROVAL DATE

REGISTERED PROFESSIONAL ENGINEER
Randell D. Hiatt
No. C50200
Exp. 6-30-15
CIVIL
STATE OF CALIFORNIA

THE STATE OF CALIFORNIA OR ITS OFFICERS OR AGENTS SHALL NOT BE RESPONSIBLE FOR THE ACCURACY OR COMPLETENESS OF SCANNED COPIES OF THIS PLAN SHEET.

TO ACCOMPANY PLANS DATED 11-17-15

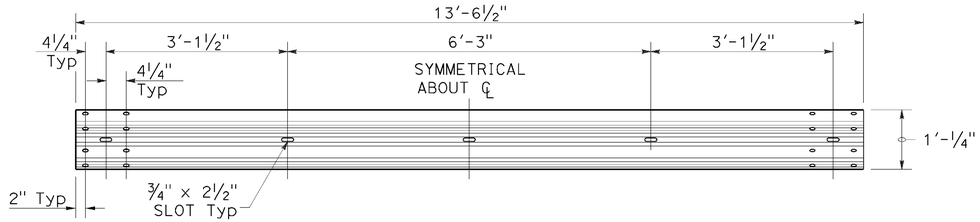

TYPICAL RAIL ELEMENT

NOTE:

1. Slotted holes for splice bolts to overlap ends of rail element.

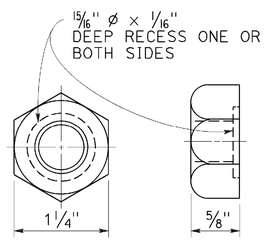

⅝" Ø RECESS NUT

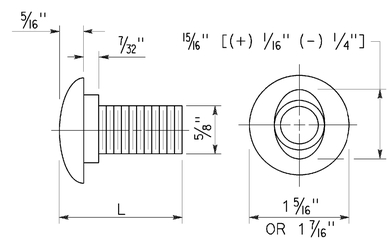

⅝" Ø BUTTON HEAD BOLT

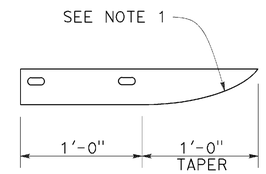

PLAN

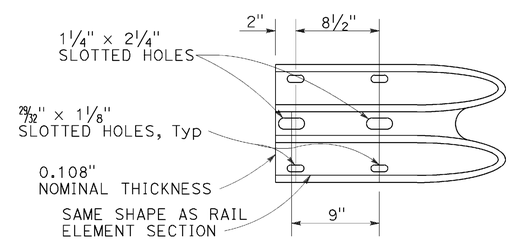

ELEVATION

END CAP (TYPE A)

BUTTON HEAD BOLT

L	THREAD LENGTH
1⅜"	FULL THREAD LENGTH
2"	FULL THREAD LENGTH
10"	4" Min THREAD LENGTH
18"	4" Min THREAD LENGTH
20"	4" Min THREAD LENGTH
22"	4" Min THREAD LENGTH
26"	4" Min THREAD LENGTH
36"	4" Min THREAD LENGTH
** 2¾"	2" Min THREAD LENGTH
** 19"	4" Min THREAD LENGTH

** For nested rail applications.

STATE OF CALIFORNIA
DEPARTMENT OF TRANSPORTATION

MIDWEST GUARDRAIL SYSTEM STANDARD HARDWARE

NO SCALE

RSP A77M1 DATED JULY 19, 2013 SUPPLEMENTS THE STANDARD PLANS BOOK DATED 2010.

REVISED STANDARD PLAN RSP A77M1

2010 REVISED STANDARD PLAN RSP A77M1

DATE PLOTTED => 30-NOV-2015
TIME PLOTTED => 12:09

Dist	COUNTY	ROUTE	POST MILES TOTAL PROJECT	SHEET No.	TOTAL SHEETS
02	Las	395	36.4/47.0	22	25

Randell D. Hiatt
REGISTERED CIVIL ENGINEER

November 15, 2013
PLANS APPROVAL DATE

REGISTERED PROFESSIONAL ENGINEER
Randell D. Hiatt
No. C50200
Exp. 6-30-15
CIVIL
STATE OF CALIFORNIA

THE STATE OF CALIFORNIA OR ITS OFFICERS OR AGENTS SHALL NOT BE RESPONSIBLE FOR THE ACCURACY OR COMPLETENESS OF SCANNED COPIES OF THIS PLAN SHEET.

TO ACCOMPANY PLANS DATED 11-17-15

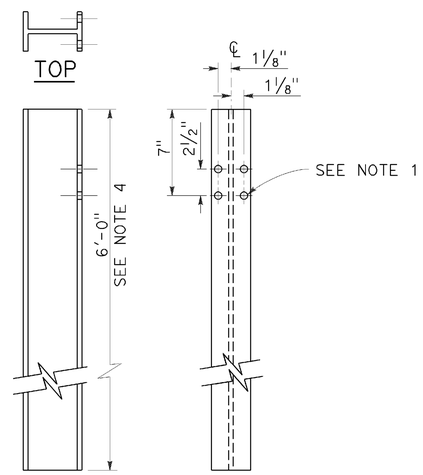

W6 x 9 OR W6 x 8.5
STEEL POST
See Note 4

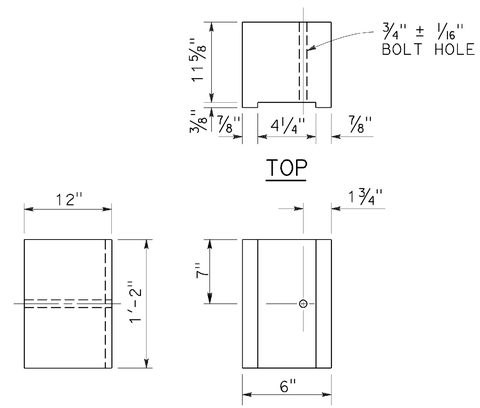

6" x 12"
NOTCHED WOOD BLOCK
See Notes 2 and 3

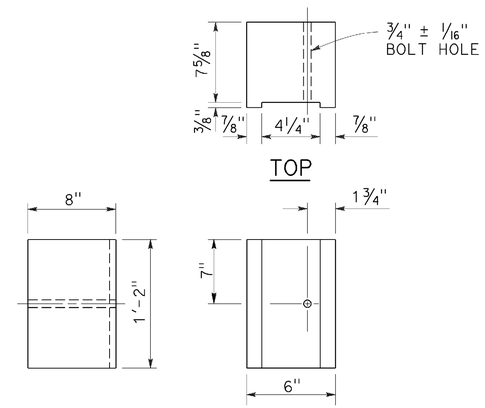

6" x 8"
NOTCHED WOOD BLOCK
Only for use with metal beam guard railing. See Note 5

NOTES:

1. All holes in steel post shall be 13/16" Dia maximum.
2. Dimensions shown for wood block are nominal.
3. Notched face of block faces steel post.
4. 6'-0" length posts to be used for typical roadway installation. See Revised Standard Plan RSP A77N3.
5. See Revised Standard Plan RSP A77L3 for use of 6" x 8" and 8" x 8" notched wood blocks.
6. This post and 8" x 12" block combination to be used for line post sections of MGS on narrow roadways and where strengthened line post sections of MGS are warranted to shield fixed objects.

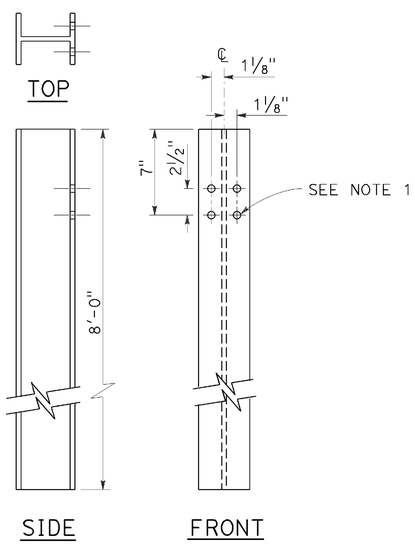

W6 x 15
STEEL POST
See Note 6

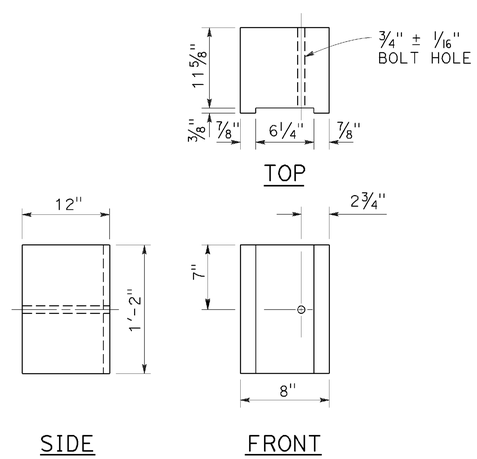

8" x 12"
NOTCHED WOOD BLOCK
See Notes 2 and 3

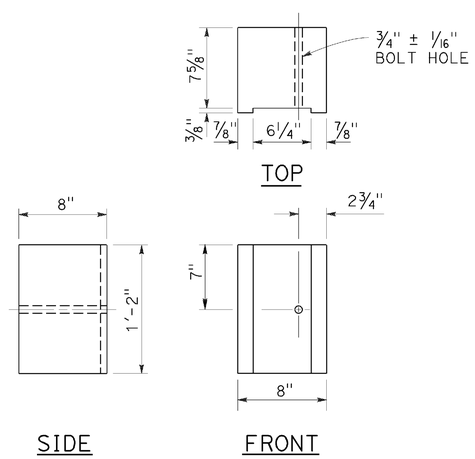

8" x 8"
NOTCHED WOOD BLOCK
Only for use with metal beam guard railing. See Note 5

STATE OF CALIFORNIA
DEPARTMENT OF TRANSPORTATION

MIDWEST GUARDRAIL SYSTEM STEEL POST AND NOTCHED WOOD BLOCK DETAILS

NO SCALE

RSP A77N2 DATED NOVEMBER 15, 2013 SUPERSEDES RSP A77N2
DATED JULY 19, 2013 THAT SUPPLEMENTS THE STANDARD PLANS BOOK DATED 2010.

REVISED STANDARD PLAN RSP A77N2

2010 REVISED STANDARD PLAN RSP A77N2

DATE PLOTTED => 30-NOV-2015
TIME PLOTTED => 12:10

Dist	COUNTY	ROUTE	POST MILES TOTAL PROJECT	SHEET No.	TOTAL SHEETS
02	Las	395	36.4/47.0	23	25

Randell D. Hiatt
REGISTERED CIVIL ENGINEER

November 15, 2013
PLANS APPROVAL DATE

REGISTERED PROFESSIONAL ENGINEER
Randell D. Hiatt
No. C50200
Exp. 6-30-15
CIVIL
STATE OF CALIFORNIA

THE STATE OF CALIFORNIA OR ITS OFFICERS OR AGENTS SHALL NOT BE RESPONSIBLE FOR THE ACCURACY OR COMPLETENESS OF SCANNED COPIES OF THIS PLAN SHEET.

TO ACCOMPANY PLANS DATED 11-17-15

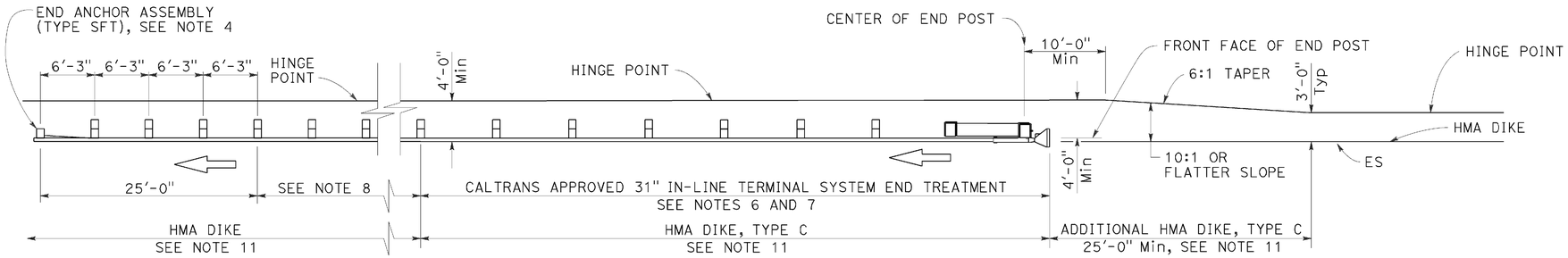

TYPE 11A LAYOUT

(Embankment MGS installation with 31" in-line end treatment at traffic approach end of railing) see Note 5

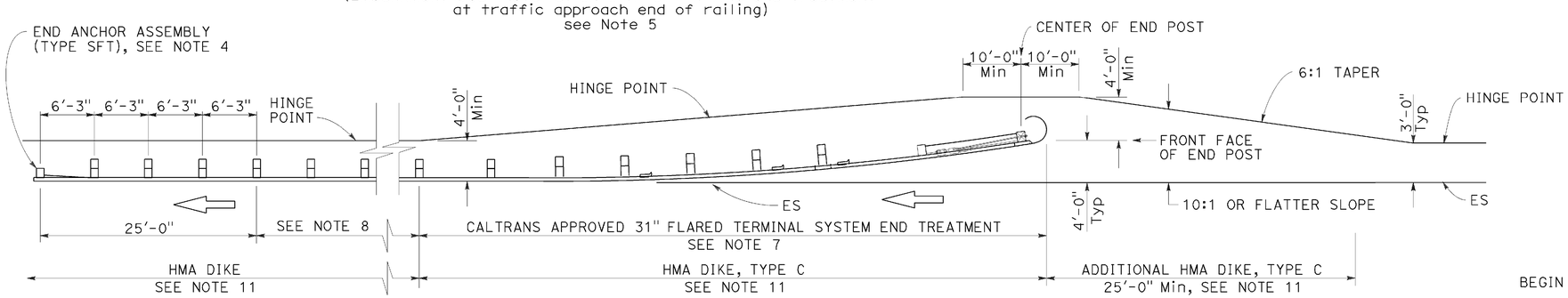

TYPE 11B LAYOUT

(Embankment MGS installation with 31" flared end treatment at traffic approach end of railing) see Note 5

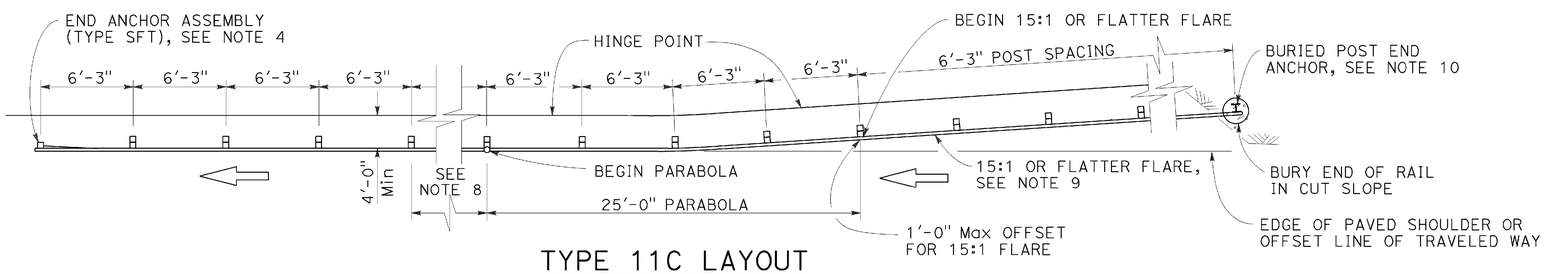

TYPE 11C LAYOUT

(Embankment MGS installation with buried end anchor treatment at traffic approach end of railing) see Notes 5 and 11

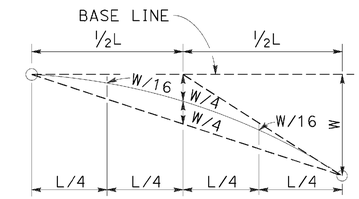

TYPICAL PARABOLIC LAYOUT

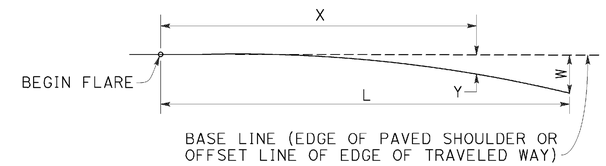

$$Y = \frac{WX^2}{L^2}$$

Y = OFFSET FROM BASE LINE
W = MAXIMUM OFFSET
X = DISTANCE ALONG BASE LINE
L = LENGTH OF FLARE

PARABOLIC FLARE OFFSETS

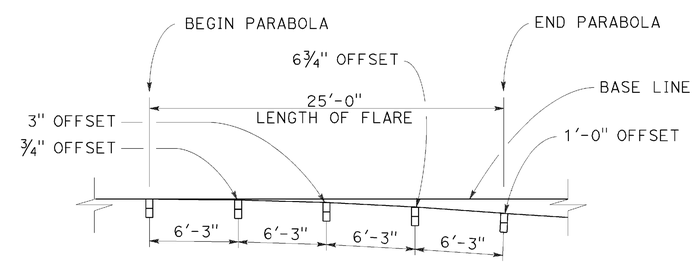

TYPICAL FLARE OFFSETS FOR 1 FOOT Max END OFFSET

NOTES:

1. Line post, blocks and hardware to be used are shown on Revised Standard Plans RSP A77L1, RSP A77L2, RSP A77M1, RSP A77N1 and RSP A77N2.
2. MGS post spacing to be 6'-3" center to center, except as otherwise noted.
3. Except as noted, line posts are 6" x 8" x 6'-0" wood with 6" x 12" x 1'-2" wood blocks. W6 x 8.5 or W6 x 9 steel posts, 6'-0" in length, with 6" x 12" x 1'-2" notched wood blocks or recycled plastic blocks may be used for 6" x 8" x 6'-0" wood post with 6" x 12" x 1'-2" wood blocks where applicable and when specified.
4. For End Anchor Assembly (Type SFT) details, see Revised Standard Plan RSP A77S1.
5. Layout Types 11A, 11B or 11C are typically used where MGS is recommended to shield embankment slopes and a crashworthy end treatment is required for only one direction of traffic.
6. 31" in-line terminal system end treatments are used where site conditions will not accommodate a flared end treatment.
7. The type of 31" terminal system end treatment to be used will be shown on the Project Plans.
8. Dependent on site conditions (embankment height and side slope), construction of additional MGS (length equal to multiples of 12'-6" with 6'-3" post spacing) may be advisable.
9. The 15:1 or flatter flare used with buried end anchors is based on the edge of the paved shoulder or offset line of edge of the traveled way. The length of MGS within the 15:1 or flatter flare is based on site conditions and should be a length equal to multiples of 12'-6".
10. For details of the buried post end anchor used with Type 11C Layout, see Revised Standard Plan RSP A77T2.
11. Where placement of dike is required with MGS installations, see Revised Standard Plan RSP A77N4 for dike positioning details.

STATE OF CALIFORNIA
DEPARTMENT OF TRANSPORTATION

MIDWEST GUARDRAIL SYSTEM TYPICAL LAYOUTS FOR EMBANKMENTS

NO SCALE

RSP A77P1 DATED NOVEMBER 15, 2013 SUPERSEDES RSP A77P1 DATED JULY 19, 2013 THAT SUPPLEMENTS THE STANDARD PLANS BOOK DATED 2010.

REVISED STANDARD PLAN RSP A77P1

2010 REVISED STANDARD PLAN RSP A77P1

DATE PLOTTED => 30-NOV-2015
TIME PLOTTED => 12:10

Dist	COUNTY	ROUTE	POST MILES TOTAL PROJECT	SHEET No.	TOTAL SHEETS
02	Las	395	36.4/47.0	24	25

REGISTERED CIVIL ENGINEER

July 19, 2013
PLANS APPROVAL DATE

REGISTERED PROFESSIONAL ENGINEER
Michael Janzen
No. 44788
Exp. 03-31-14
CIVIL
STATE OF CALIFORNIA

THE STATE OF CALIFORNIA OR ITS OFFICERS OR AGENTS SHALL NOT BE RESPONSIBLE FOR THE ACCURACY OR COMPLETENESS OF SCANNED COPIES OF THIS PLAN SHEET.

TO ACCOMPANY PLANS DATED 11-17-15

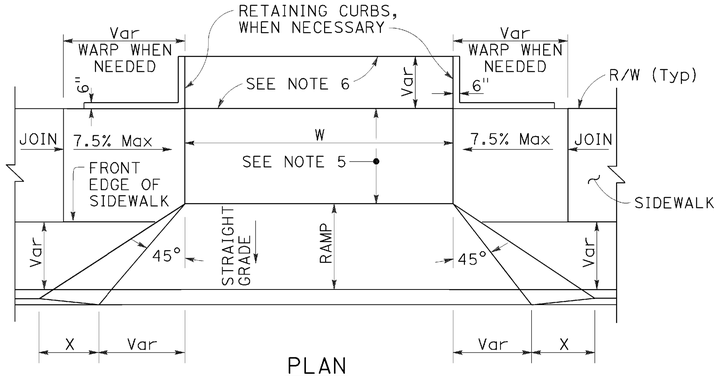

PLAN

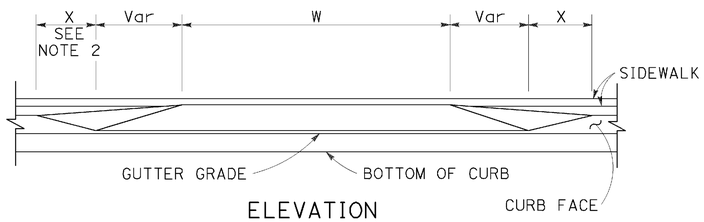

ELEVATION

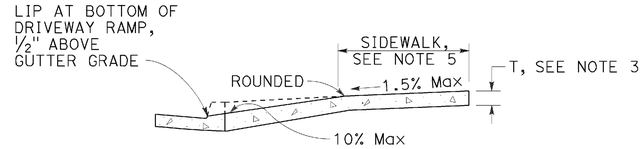

CASE A

Typical driveway, sidewalk not depressed

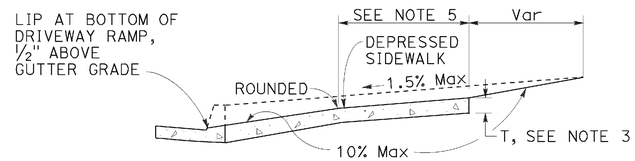

CASE B

Driveway with depressed sidewalk

SECTIONS

TABLE A

CURB TYPE	DIMENSIONS			
	"H1"	"H2"	"W1"	"W2"
A1-6	1'-2"	6"	7½"	1½"
A1-8	1'-4"	8"	8"	2"
A2-6	1'-0"	6"	2'-7½"	1½"
A2-8	1'-2"	8"	2'-8"	2"
A3-6	6"	5"	7¼"	1¼"
A3-8	8"	7"	7¾"	1¾"
B1-4	1'-0"	4"	7½"	2½"
B1-6	1'-2"	6"	9"	4"
B2-4	10"	4"	2'-7½"	2½"
B2-6	1'-0"	6"	2'-9"	4"
B3-4	4"	3"	7"	2"
B3-6	6"	5"	8½"	3½"
D-4	10"	4"	1'-6"	1'-1"
D-6	1'-0"	6"	2'-2"	1'-9"

CURB QUANTITIES

TYPE	CUBIC YARDS PER LINEAR FOOT
A1-6	0.02585
A1-8	0.03084
A2-6	0.05903
A2-8	0.06379
A3-6	0.01036
A3-8	0.01435
B1-4	0.02185
B1-6	0.02930
B2-4	0.05515
B2-6	0.06171
B3-4	0.00641
B3-6	0.01074
B4	0.05709
D-4	0.04083
D-6	0.06804
E	0.06661

DRIVEWAYS

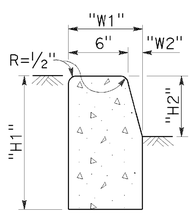

TYPE A1 CURBS

See Table A

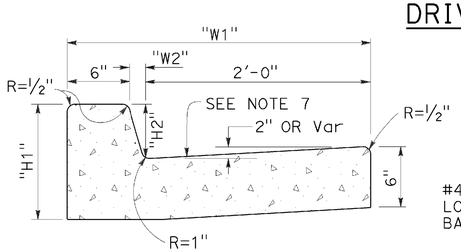

TYPE A2 CURBS

See Table A

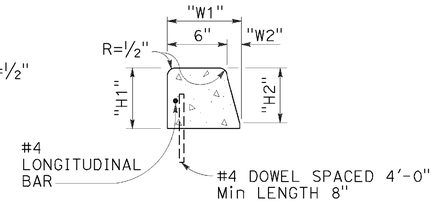

TYPE A3 CURBS

Superimposed on existing pavement
See Table A

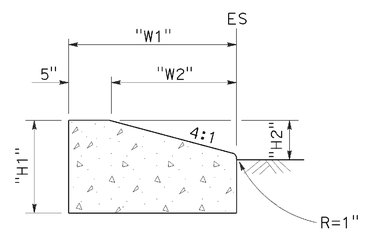

TYPE D CURBS

See Table A

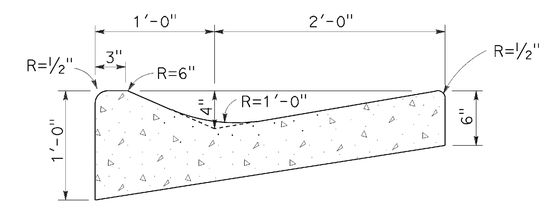

TYPE E CURB

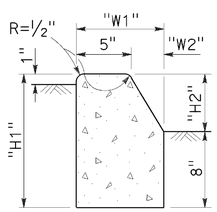

TYPE B1 CURBS

See Table A

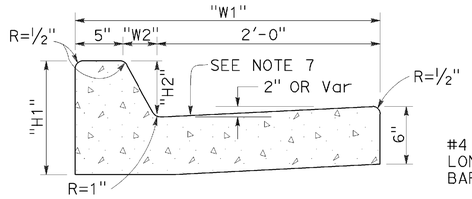

TYPE B2 CURBS

See Table A

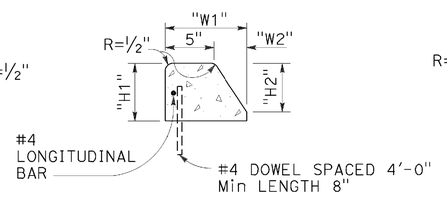

TYPE B3 CURBS

Superimposed on existing pavement
See Table A

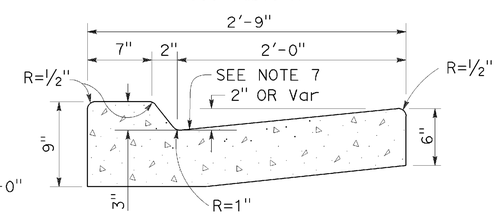

TYPE B4 CURBS

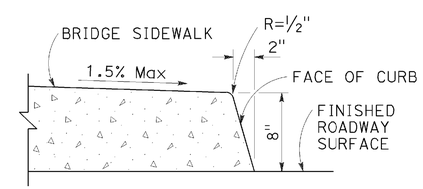

TYPE H CURB

On Bridges

CURBS

NOTES:

1. Case A driveway section typically applies.
2. X=3'-0" except for curb heights over 10" where 4:1 slopes shall be used on curb slope.
3. Sidewalk and ramp thickness "T" at driveway shall be 4" for residental and 6" for commercial.
4. Difference in slope of the driveway ramp and the slope of a line between the gutter and a point on the roadway 5'-0" from gutter line shall not exceed 15%. Reduce driveway ramp slope, not gutter slope, where required.
5. Minimum width of clear passageway for sidewalk shall be 4'-2".
6. Retaining curbs and acquisition of construction easement may be necessary for narrow sidewalks or curb heights in excess of 6".
7. Across the pedestrian route at curb ramp locations, the gutter pan slope shall not exceed 1" of depth for each 2'-0" of width.

STATE OF CALIFORNIA
DEPARTMENT OF TRANSPORTATION

CURBS AND DRIVEWAYS

NO SCALE

RSP A87A DATED JULY 19, 2013 SUPERSEDES STANDARD PLAN A87A
DATED MAY 20, 2011 - PAGE 119 OF THE STANDARD PLANS BOOK DATED 2010.

REVISED STANDARD PLAN RSP A87A

2010 REVISED STANDARD PLAN RSP A87A

DATE PLOTTED => 30-NOV-2015
TIME PLOTTED => 12:10

Dist	COUNTY	ROUTE	POST MILES TOTAL PROJECT	SHEET No.	TOTAL SHEETS
02	Las	395	36.4/47.0	25	25

REGISTERED CIVIL ENGINEER

July 19, 2013
PLANS APPROVAL DATE

REGISTERED PROFESSIONAL ENGINEER
Michael Janzen
No. 44788
Exp. 03-31-14
CIVIL
STATE OF CALIFORNIA

THE STATE OF CALIFORNIA OR ITS OFFICERS OR AGENTS SHALL NOT BE RESPONSIBLE FOR THE ACCURACY OR COMPLETENESS OF SCANNED COPIES OF THIS PLAN SHEET.

TO ACCOMPANY PLANS DATED 11-17-15

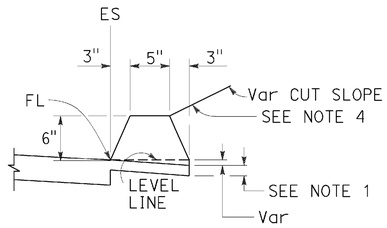

TYPE A
See Note 3

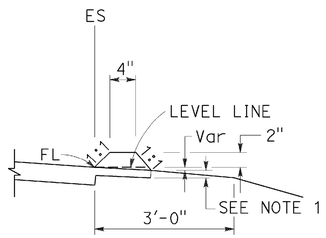

TYPE C

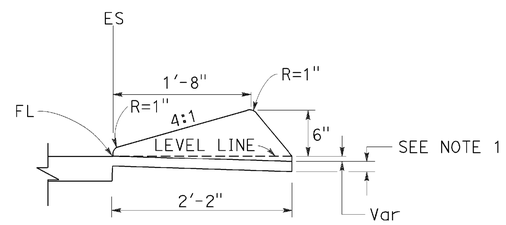

TYPE D

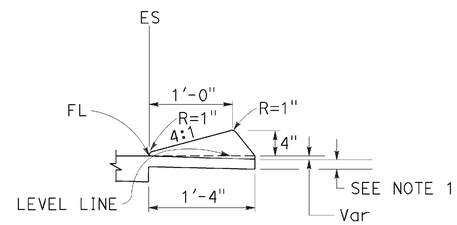

TYPE E

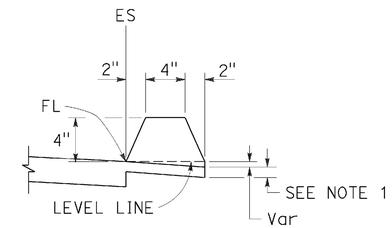

TYPE F
See Note 5

DIKES

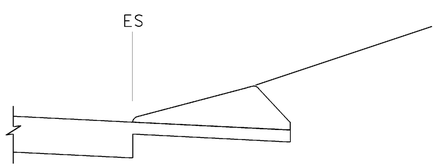

CASE C-1
Cut Slope

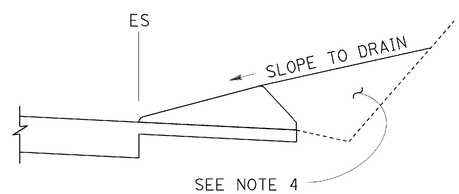

CASE C-2
Cut Slope

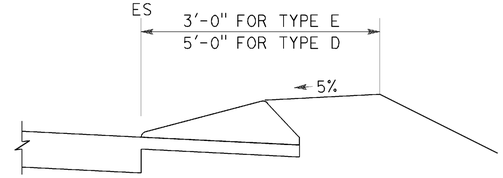

CASE F

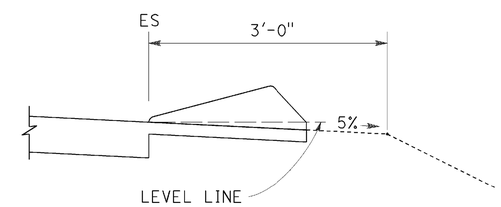

CASE R
See Note 2

TYPE D AND E BACKFILL DETAILS

NOTES:

1. For HMA shoulders only, extend top layer of HMA placed on the shoulder under dike with no joint at the ES. For projects with OGFC shoulders, do not extend OGFC under dike. See project plans for modified dike detail.
2. Case R applies to retrofit only projects where restrictive conditions do not provide enough width for Case F backfill.
3. Type A dike only to be used where restrictive slope conditions do not provide enough width to use Type D or Type E dike.
4. Fill and compact with excavated material to top of dike.
5. Use Type F dike, where dike is required with guard railing installations. See Revised Standard Plan RSP A77N4 for dike positioning details.

DIKE QUANTITIES

TYPE	CUBIC YARDS PER LINEAR FOOT
A	0.0135
C	0.0038
D	0.0293
E	0.0130
F	0.0066

Quantities based on 5% cross slope.

STATE OF CALIFORNIA
DEPARTMENT OF TRANSPORTATION

HOT MIX ASPHALT DIKES

NO SCALE

RSP A87B DATED JULY 19, 2013 SUPERSEDES STANDARD PLAN A87B
DATED MAY 20, 2011 - PAGE 120 OF THE STANDARD PLANS BOOK DATED 2010.

REVISED STANDARD PLAN RSP A87B

2010 REVISED STANDARD PLAN RSP A87B

DATE PLOTTED => 30-NOV-2015
TIME PLOTTED => 12:11