Dist	COUNTY	ROUTE	POST MILES TOTAL PROJECT	SHEET No.	TOTAL SHEETS
02	Teh	36	85.8/87.5	1	30

INDEX OF PLANS

SHEET No.	DESCRIPTION
1	TITLE SHEET
2-4	TYPICAL CROSS SECTIONS
5-7	LAYOUT
8-9	CONSTRUCTION DETAILS
10	DRAINAGE PROFILES
11	DRAINAGE DETAILS
12	CONSTRUCTION AREA SIGNS
13	TRAFFIC HANDLING PLAN
14-17	PAVEMENT DELINEATION AND SIGN PLANS
18	SUMMARY OF QUANTITIES
19-30	NEW AND REVISED STANDARD PLANS

STATE OF CALIFORNIA

DEPARTMENT OF TRANSPORTATION

PROJECT PLANS FOR CONSTRUCTION ON

STATE HIGHWAY

IN TEHAMA COUNTY NEAR MINERAL FROM 1.4 MILES EAST OF PAYNES CREEK ROAD TO 0.1 MILES WEST OF 36/89 JUNCTION

TO BE SUPPLEMENTED BY STANDARD PLANS DATED MAY 2006

LOCATION MAP

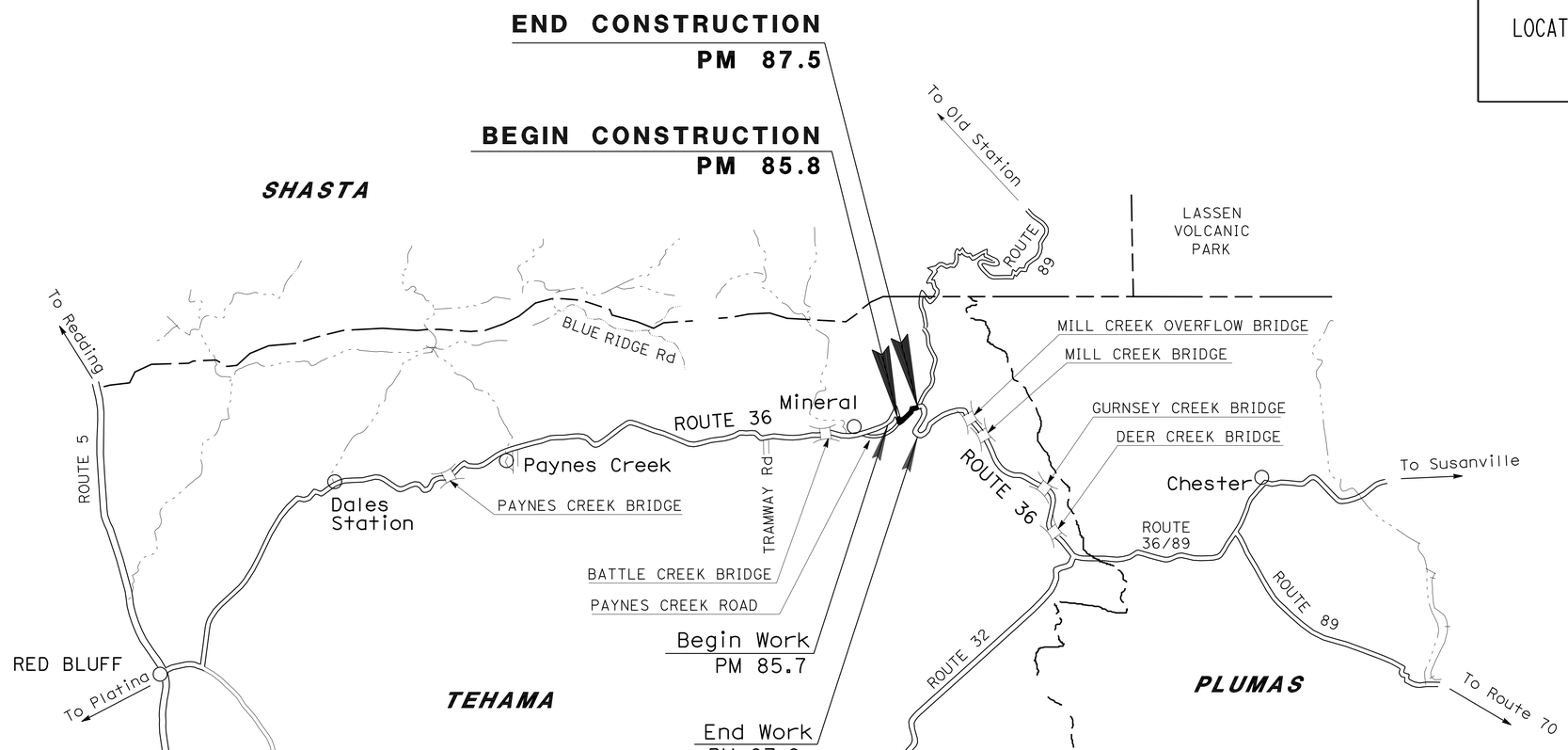

NO SCALE

THE CONTRACTOR SHALL POSSESS THE CLASS (OR CLASSES) OF LICENSE AS SPECIFIED IN THE "NOTICE TO BIDDERS."

Thomas Penick 10-12-10

PROJECT ENGINEER DATE
REGISTERED CIVIL ENGINEER

October 13, 2010

PLANS APPROVAL DATE

REGISTERED PROFESSIONAL ENGINEER TOM PENICK No. C61068 Exp. 12-31-10 CIVIL STATE OF CALIFORNIA

THE STATE OF CALIFORNIA OR ITS OFFICERS OR AGENTS SHALL NOT BE RESPONSIBLE FOR THE ACCURACY OR COMPLETENESS OF SCANNED COPIES OF THIS PLAN SHEET.

CONTRACT No.	02-1E8204
PROJECT ID	0200000133

LAST REVISION 10-12-10 DATE PLOTTED => 12-OCT-2010 TIME PLOTTED => 14:24

PROJECT MANAGER STEVE ROGERS

DESIGN ENGINEER ROB BURNETT

P:\proj2\02\1E820_plans\pse\21e820ab001.dgn

Dist	COUNTY	ROUTE	POST MILES TOTAL PROJECT	SHEET No.	TOTAL SHEETS
02	Teh	36	85.8/87.5	2	30

Thomas Penick 10-12-10
REGISTERED CIVIL ENGINEER DATE

10-13-10
PLANS APPROVAL DATE

REGISTERED PROFESSIONAL ENGINEER TOM PENICK No. C61068 Exp. 12-31-10 CIVIL STATE OF CALIFORNIA

THE STATE OF CALIFORNIA OR ITS OFFICERS OR AGENTS SHALL NOT BE RESPONSIBLE FOR THE ACCURACY OR COMPLETENESS OF SCANNED COPIES OF THIS PLAN SHEET.

NOTES:

1. DIMENSIONS OF THE PAVEMENT STRUCTURES (STRUCTURAL SECTIONS) ARE SUBJECT TO TOLERANCES SPECIFIED IN THE STANDARD SPECIFICATIONS.
2. SUPERELEVATIONS AS SHOWN OR AS DETERMINED BY THE ENGINEER.

DESIGN DESIGNATION:

2005 ADT=1,400 D=63%
2028 ADT=1,650 T=14%
2028 DHV=310 V=55 MPH

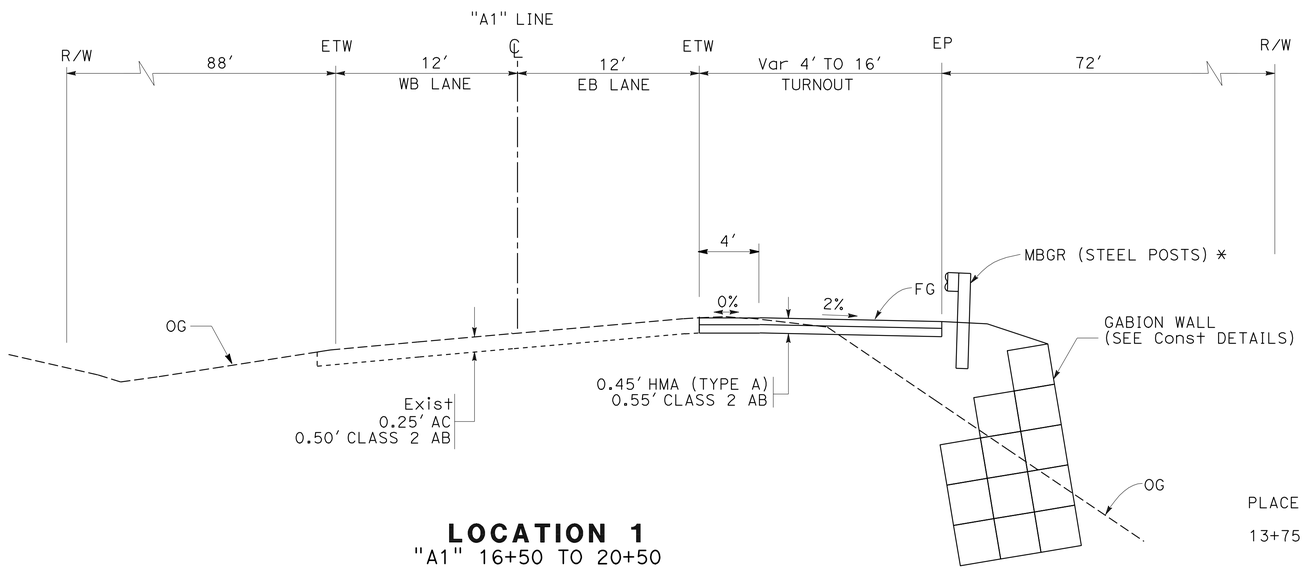

LOCATION 1
"A1" 16+50 TO 20+50

* SEE LAYOUT FOR MBGR LOCATION

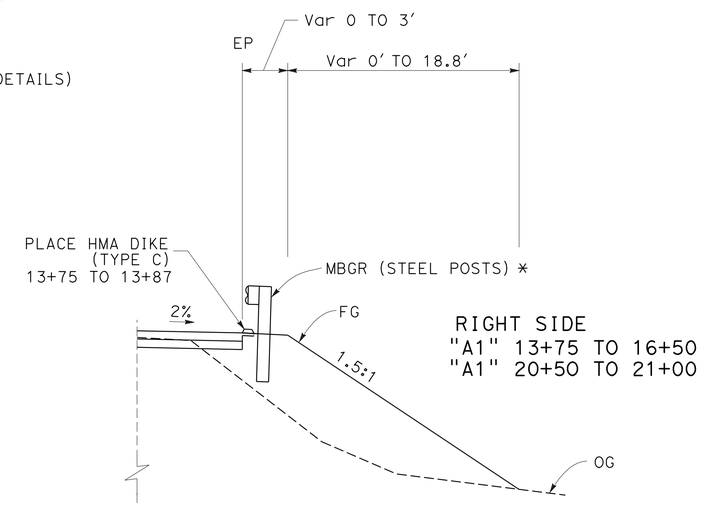

RIGHT SIDE
"A1" 13+75 TO 16+50
"A1" 20+50 TO 21+00

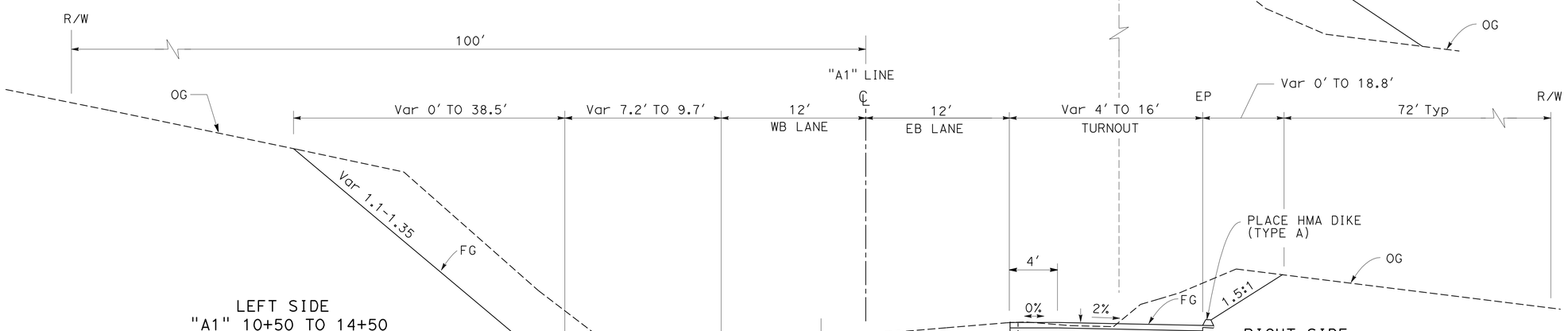

LEFT SIDE
"A1" 10+50 TO 14+50

RIGHT SIDE
"A1" 10+50 TO 13+75

LOCATION 1
"A1" 10+50 TO 14+50

TYPICAL CROSS SECTIONS
NO SCALE

X-1

REVISED BY	DATE REVISED

CALCULATED-DESIGNED BY: TOM PENICK
CHECKED BY: STEVE ALAWAR
FUNCTIONAL SUPERVISOR: ROB BURNETT

STATE OF CALIFORNIA - DEPARTMENT OF TRANSPORTATION
Caltrans® DESIGN

P:\proj2\02\1E820_plans\pse\21e820ca001.dgn

LAST REVISION 10-12-10
DATE PLOTTED => 12-OCT-2010
TIME PLOTTED => 14:24

Dist	COUNTY	ROUTE	POST MILES TOTAL PROJECT	SHEET No.	TOTAL SHEETS
02	Teh	36	85.8/87.5	3	30

Thomas Penick 10-12-10
REGISTERED CIVIL ENGINEER DATE

10-13-10
PLANS APPROVAL DATE

REGISTERED PROFESSIONAL ENGINEER
TOM PENICK
No. C61068
Exp. 12-31-10
CIVIL
STATE OF CALIFORNIA

THE STATE OF CALIFORNIA OR ITS OFFICERS OR AGENTS SHALL NOT BE RESPONSIBLE FOR THE ACCURACY OR COMPLETENESS OF SCANNED COPIES OF THIS PLAN SHEET.

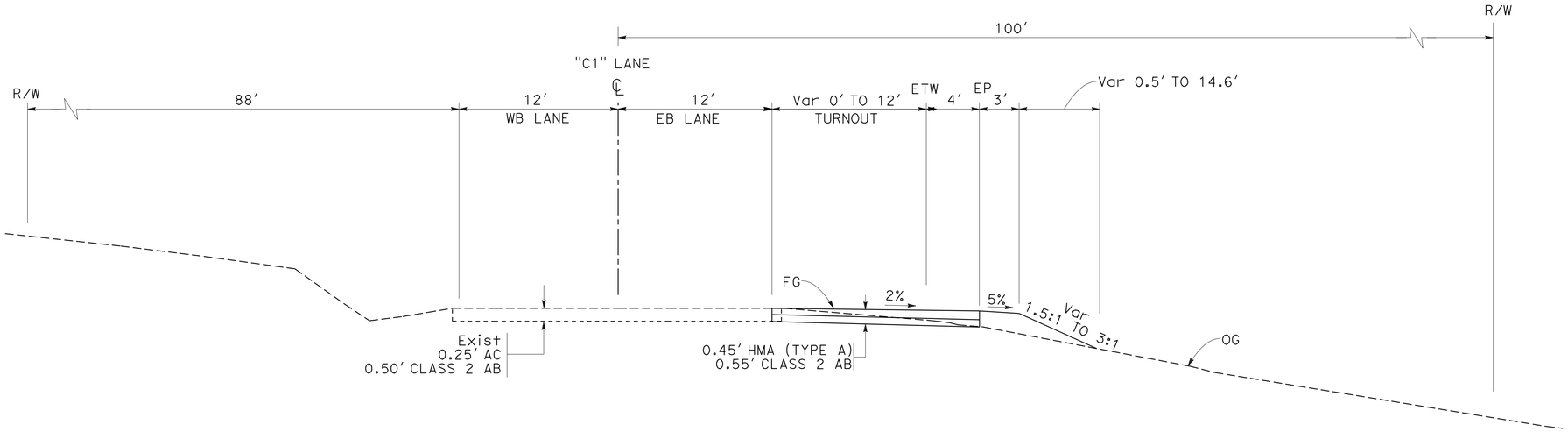

LOCATION 3
"C1" 31+50 TO 40+50

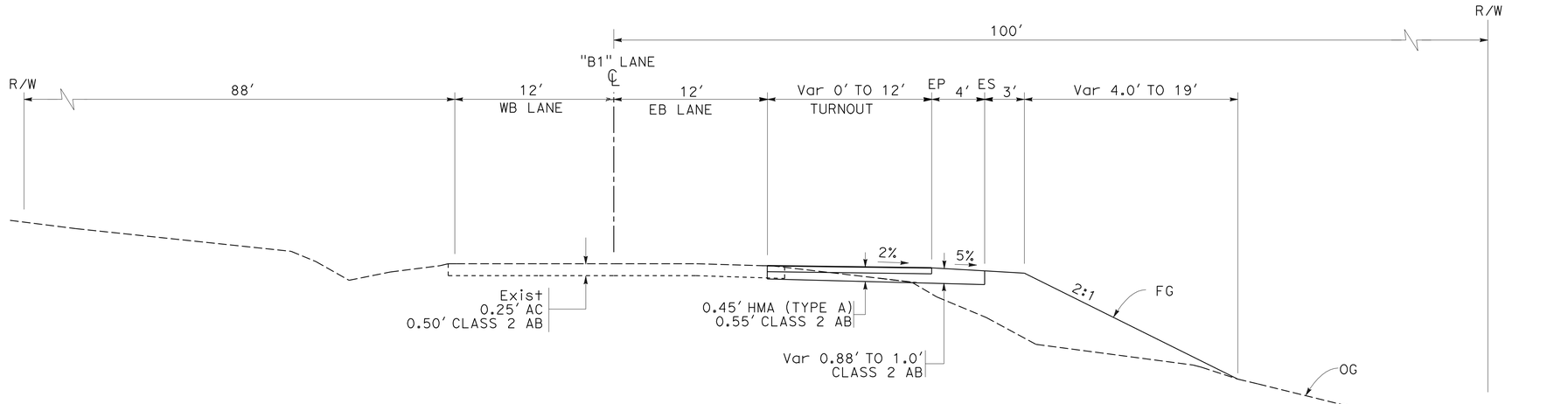

LOCATION 2
"B1" 21+30 TO 25+50

TYPICAL CROSS SECTIONS
NO SCALE

X-2

REVISED BY	DATE REVISED
TOM PENICK	STEVE ALAWAR
CALCULATED-DESIGNED BY	CHECKED BY
FUNCTIONAL SUPERVISOR	ROB BURNETT

STATE OF CALIFORNIA - DEPARTMENT OF TRANSPORTATION
Caltrans
DESIGN

P:\proj2\02\1E820\plans\pse\21e820ca002.dgn

LAST REVISION 10-12-10
DATE PLOTTED => 12-OCT-2010
TIME PLOTTED => 14:24

Dist	COUNTY	ROUTE	POST MILES TOTAL PROJECT	SHEET No.	TOTAL SHEETS
02	Teh	36	85.8/87.5	4	30

Thomas Penick 10-12-10
REGISTERED CIVIL ENGINEER DATE

10-13-10
PLANS APPROVAL DATE

REGISTERED PROFESSIONAL ENGINEER
TOM PENICK
No. C61068
Exp. 12-31-10
CIVIL
STATE OF CALIFORNIA

THE STATE OF CALIFORNIA OR ITS OFFICERS OR AGENTS SHALL NOT BE RESPONSIBLE FOR THE ACCURACY OR COMPLETENESS OF SCANNED COPIES OF THIS PLAN SHEET.

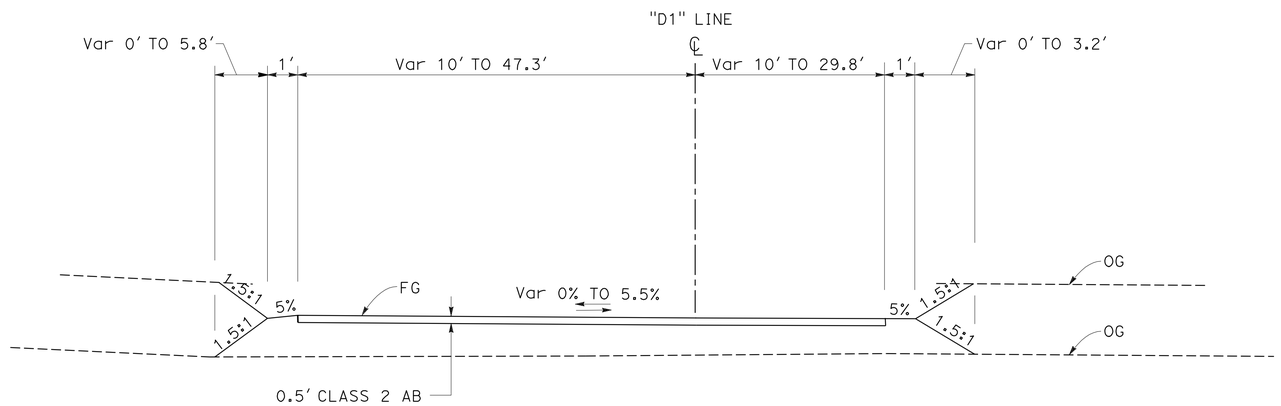

LOCATION 2
CONARD GROVE LOOP ROAD CONNECTION
"D1" 10+24.4 TO 13+00

TYPICAL CROSS SECTIONS
NO SCALE

X-3

REVISED BY	TOM PENICK
DATE REVISED	STEVE ALAWAR
CALCULATED-DESIGNED BY	
CHECKED BY	
FUNCTIONAL SUPERVISOR	ROB BURNETT

STATE OF CALIFORNIA - DEPARTMENT OF TRANSPORTATION
Caltrans
DESIGN

P:\proj2\02\1E820_plans\pse\21e820ca003.dgn

LAST REVISION 10-12-10 | DATE PLOTTED => 12-OCT-2010 | TIME PLOTTED => 14:24

Dist	COUNTY	ROUTE	POST MILES TOTAL PROJECT	SHEET No.	TOTAL SHEETS
02	Teh	36	85.8/87.5	5	30

Thomas Penick 10-12-10
REGISTERED CIVIL ENGINEER DATE

10-13-10
PLANS APPROVAL DATE

REGISTERED PROFESSIONAL ENGINEER TOM PENICK No. C61068 Exp. 12-31-10 CIVIL STATE OF CALIFORNIA

THE STATE OF CALIFORNIA OR ITS OFFICERS OR AGENTS SHALL NOT BE RESPONSIBLE FOR THE ACCURACY OR COMPLETENESS OF SCANNED COPIES OF THIS PLAN SHEET.

NOTE:

1. FOR COMPLETE RIGHT OF WAY, SEE RIGHT OF WAY RECORD MAPS AT THE DISTRICT OFFICE.

LEGEND

- DRAINAGE SYSTEM No.
- DRAINAGE UNIT
- CONSTRUCT TURNOUT
- GABION WALL

CURVE DATA

No.	R	Δ	T	L
1	487.35′	61°48′05"	291.68′	525.67′
2	526.54′	51°56′17"	256.46′	477.30′

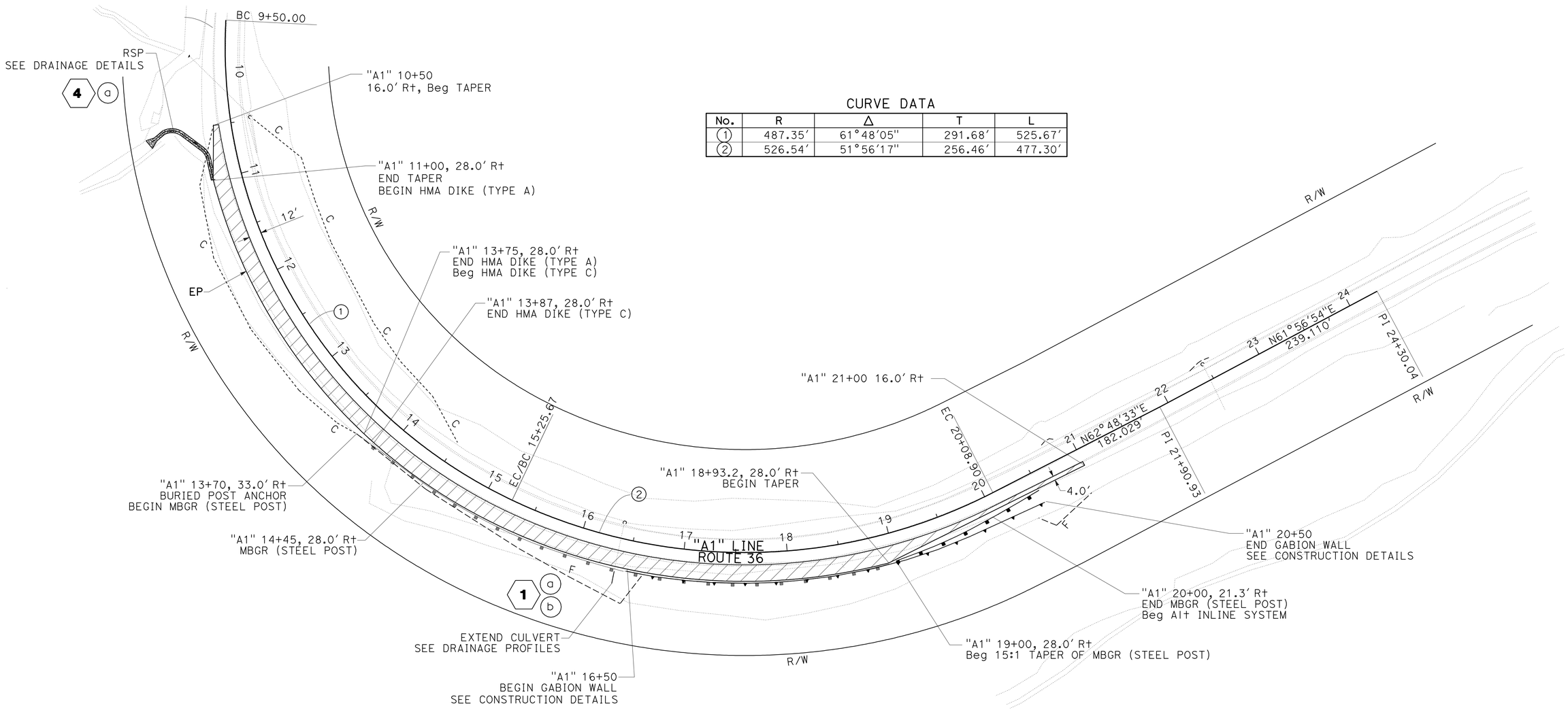

LOCATION 1
PM 85.8

LAYOUT
SCALE: 1" = 50′

L-1

STATE OF CALIFORNIA - DEPARTMENT OF TRANSPORTATION
Caltrans®
DESIGN
FUNCTIONAL SUPERVISOR: ROB BURNETT
CALCULATED-DESIGNED BY: STEVE ALAWAR
CHECKED BY: TOM PENICK
REVISED BY
DATE REVISED

P:\proj2\02\1E820_plans\pse\21E820ea001.dgn

LAST REVISION 10-12-10
DATE PLOTTED => 12-OCT-2010
TIME PLOTTED => 14:24

Dist	COUNTY	ROUTE	POST MILES TOTAL PROJECT	SHEET No.	TOTAL SHEETS
02	Teh	36	85.8/87.5	6	30

Thomas Penick 10-12-10
REGISTERED CIVIL ENGINEER DATE

10-13-10
PLANS APPROVAL DATE

REGISTERED PROFESSIONAL ENGINEER
TOM PENICK
No. C61068
Exp. 12-31-10
CIVIL
STATE OF CALIFORNIA

THE STATE OF CALIFORNIA OR ITS OFFICERS OR AGENTS SHALL NOT BE RESPONSIBLE FOR THE ACCURACY OR COMPLETENESS OF SCANNED COPIES OF THIS PLAN SHEET.

NOTE:

1. FOR COMPLETE RIGHT OF WAY, SEE RIGHT OF WAY RECORD MAPS AT THE DISTRICT OFFICE.

CURVE DATA

No.	R	Δ	T	L
1	711.15′	26°30′30″	167.51′	329.02′
2	730.17′	24°20′47″	157.51′	310.26′

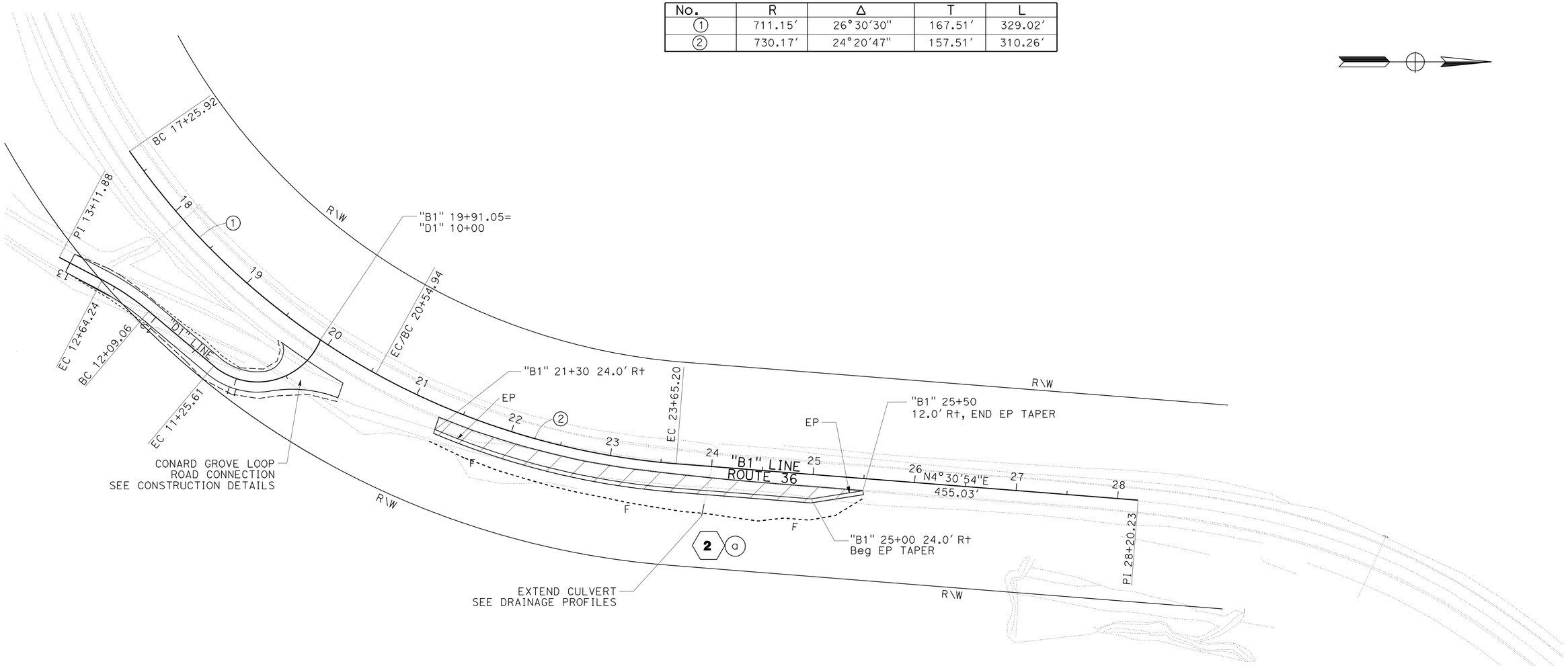

LOCATION 2
PM 86.7

LAYOUT
SCALE: 1" = 50′

L-2

REVISED BY | DATE REVISED
TOM PENICK | STEVE ALAWAR
CALCULATED-DESIGNED BY | CHECKED BY
FUNCTIONAL SUPERVISOR
ROB BURNETT

STATE OF CALIFORNIA - DEPARTMENT OF TRANSPORTATION
Caltrans
DESIGN

P:\proj2\02\1E820_plans\pse\21E820ea002.dgn

LAST REVISION 10-12-10 | DATE PLOTTED => 12-OCT-2010 | TIME PLOTTED => 14:24

Dist	COUNTY	ROUTE	POST MILES TOTAL PROJECT	SHEET No.	TOTAL SHEETS
02	Teh	36	85.8/87.5	7	30

Thomas Penick 10-12-10
REGISTERED CIVIL ENGINEER DATE

10-13-10
PLANS APPROVAL DATE

REGISTERED PROFESSIONAL ENGINEER TOM PENICK No. C61068 Exp. 12-31-10 CIVIL STATE OF CALIFORNIA

THE STATE OF CALIFORNIA OR ITS OFFICERS OR AGENTS SHALL NOT BE RESPONSIBLE FOR THE ACCURACY OR COMPLETENESS OF SCANNED COPIES OF THIS PLAN SHEET.

NOTE:

1. FOR COMPLETE RIGHT OF WAY, SEE RIGHT OF WAY RECORD MAPS AT THE DISTRICT OFFICE.

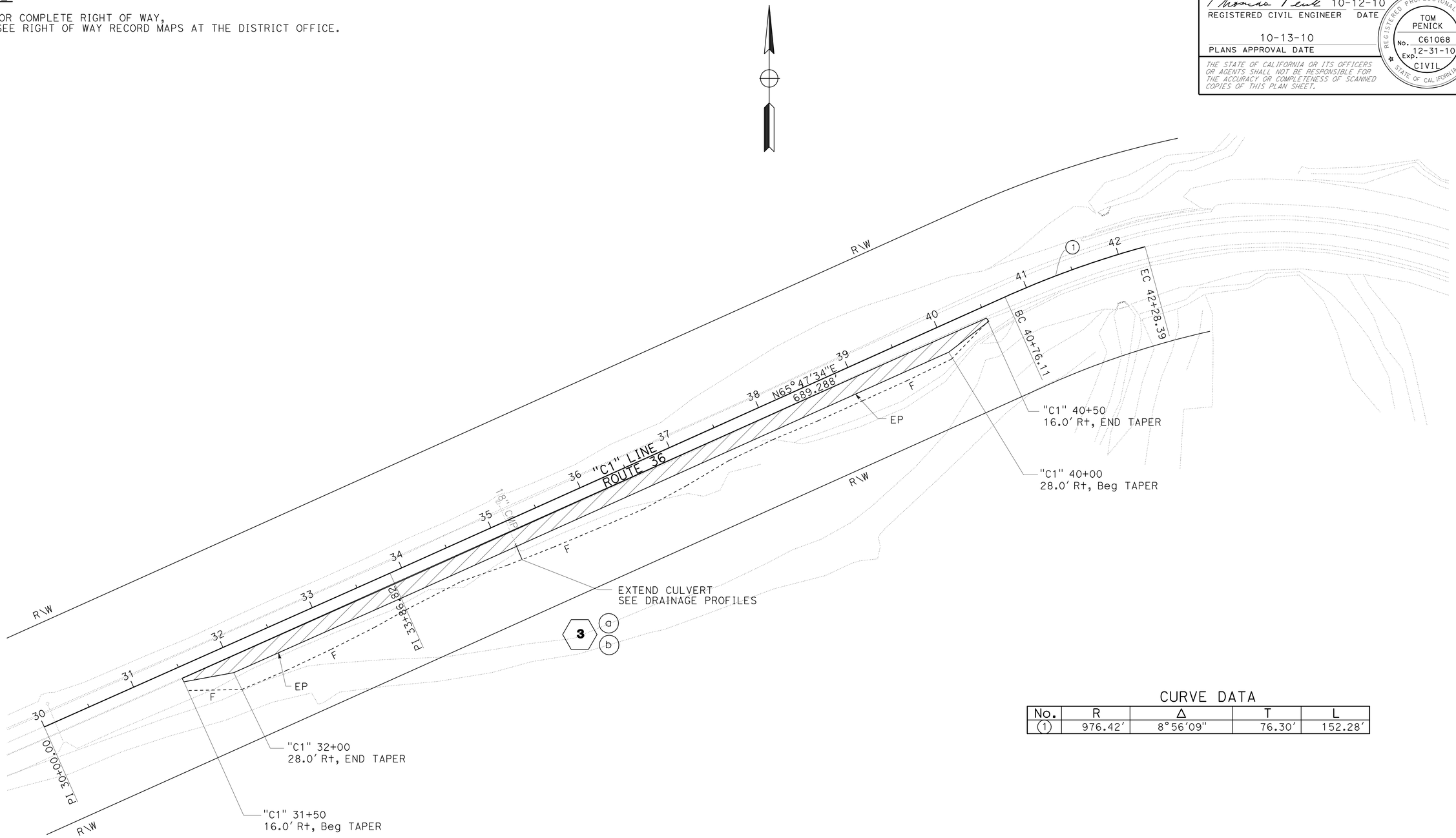

CURVE DATA

No.	R	Δ	T	L
1	976.42'	8°56'09"	76.30'	152.28'

LOCATION 3
PM 87.4

LAYOUT
SCALE 1" = 50'

L-3

REVISED BY | DATE REVISED
TOM PENICK | STEVE ALAWAR
CALCULATED-DESIGNED BY | CHECKED BY
FUNCTIONAL SUPERVISOR: ROB BURNETT
STATE OF CALIFORNIA - DEPARTMENT OF TRANSPORTATION
Caltrans
DESIGN

P:\proj2\02\1E820_plans\pse\21E820ea003.dgn

LAST REVISION 10-12-10 | DATE PLOTTED => 12-OCT-2010 | TIME PLOTTED => 14:25

Dist	COUNTY	ROUTE	POST MILES TOTAL PROJECT	SHEET No.	TOTAL SHEETS
02	Teh	36	85.8/87.5	8	30

Thomas Penick 10-12-10
REGISTERED CIVIL ENGINEER DATE

10-13-10
PLANS APPROVAL DATE

REGISTERED PROFESSIONAL ENGINEER
TOM PENICK
No. C61068
Exp. 12-31-10
CIVIL
STATE OF CALIFORNIA

THE STATE OF CALIFORNIA OR ITS OFFICERS OR AGENTS SHALL NOT BE RESPONSIBLE FOR THE ACCURACY OR COMPLETENESS OF SCANNED COPIES OF THIS PLAN SHEET.

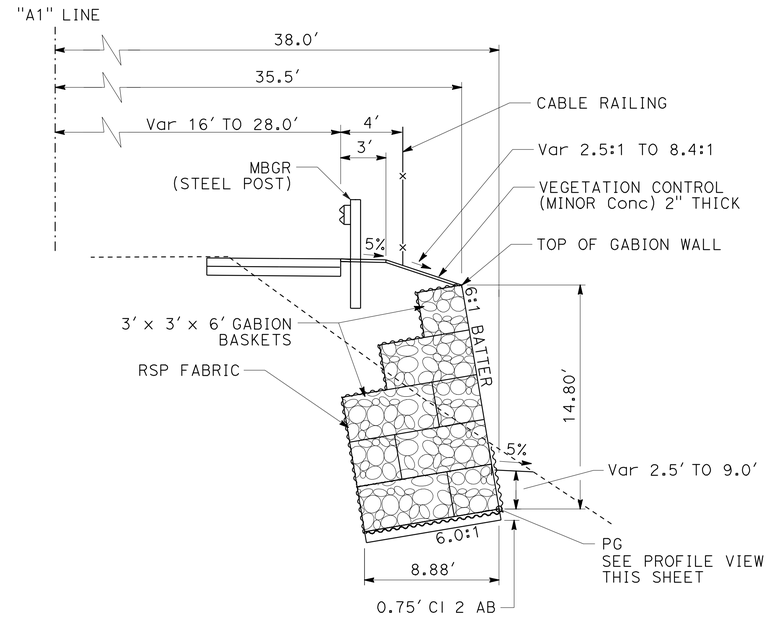

TYPICAL SECTION

GABION WALL DETAIL

"A1" 16+50 TO 20+50
NO SCALE

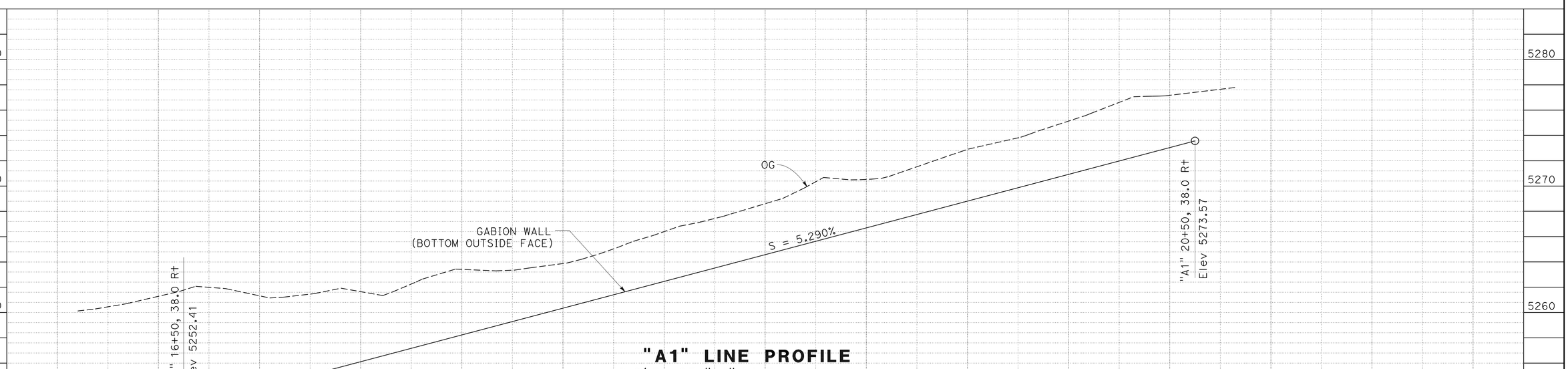

"A1" LINE PROFILE

38.0' Rt OF "A1" LINE, GABION WALL

SCALE: 1"= 20' Horiz
1"= 4' Vert

CONSTRUCTION DETAILS

SCALE: AS NOTED

C-1

STATION		TOTAL
CY	Exc	
	Emb	

REVISED BY | DATE REVISED
TOM PENICK | STEVE ALAWAR
CALCULATED-DESIGNED BY | CHECKED BY
FUNCTIONAL SUPERVISOR: ROB BURNETT

STATE OF CALIFORNIA - DEPARTMENT OF TRANSPORTATION
Caltrans
DESIGN

P:\proj2\02\1E820_plans\pse\21E820ga001.dgn

LAST REVISION 10-12-10 | DATE PLOTTED => 12-OCT-2010 | TIME PLOTTED => 14:25

Dist	COUNTY	ROUTE	POST MILES TOTAL PROJECT	SHEET No.	TOTAL SHEETS
02	Teh	36	85.8/87.5	9	30

Thomas Penick 10-12-10
REGISTERED CIVIL ENGINEER DATE

10-13-10
PLANS APPROVAL DATE

REGISTERED PROFESSIONAL ENGINEER TOM PENICK No. C61068 Exp. 12-31-10 CIVIL STATE OF CALIFORNIA

THE STATE OF CALIFORNIA OR ITS OFFICERS OR AGENTS SHALL NOT BE RESPONSIBLE FOR THE ACCURACY OR COMPLETENESS OF SCANNED COPIES OF THIS PLAN SHEET.

CURVE DATA

No. ⊕	R	Δ	T	L
1	166.88′	107°48′54"	228.91′	314.02′
2	634.38′	12°27′37"	69.25′	137.96′

NOTE:

1. FOR COMPLETE RIGHT OF WAY AND ACCURATE ACCESS DATA, SEE RIGHT OF WAY RECORD MAPS AT THE DISTRICT OFFICE.

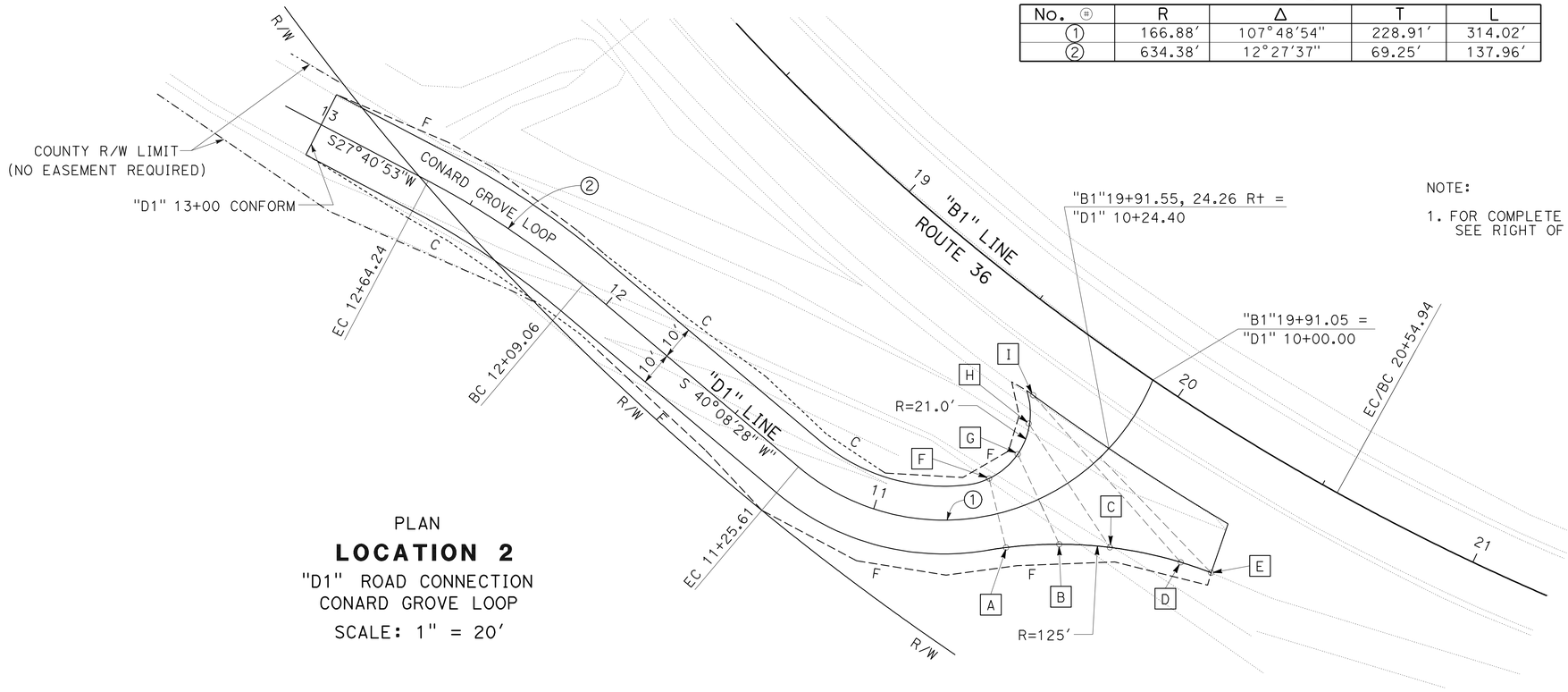

PLAN

LOCATION 2

"D1" ROAD CONNECTION
CONARD GROVE LOOP

SCALE: 1" = 20′

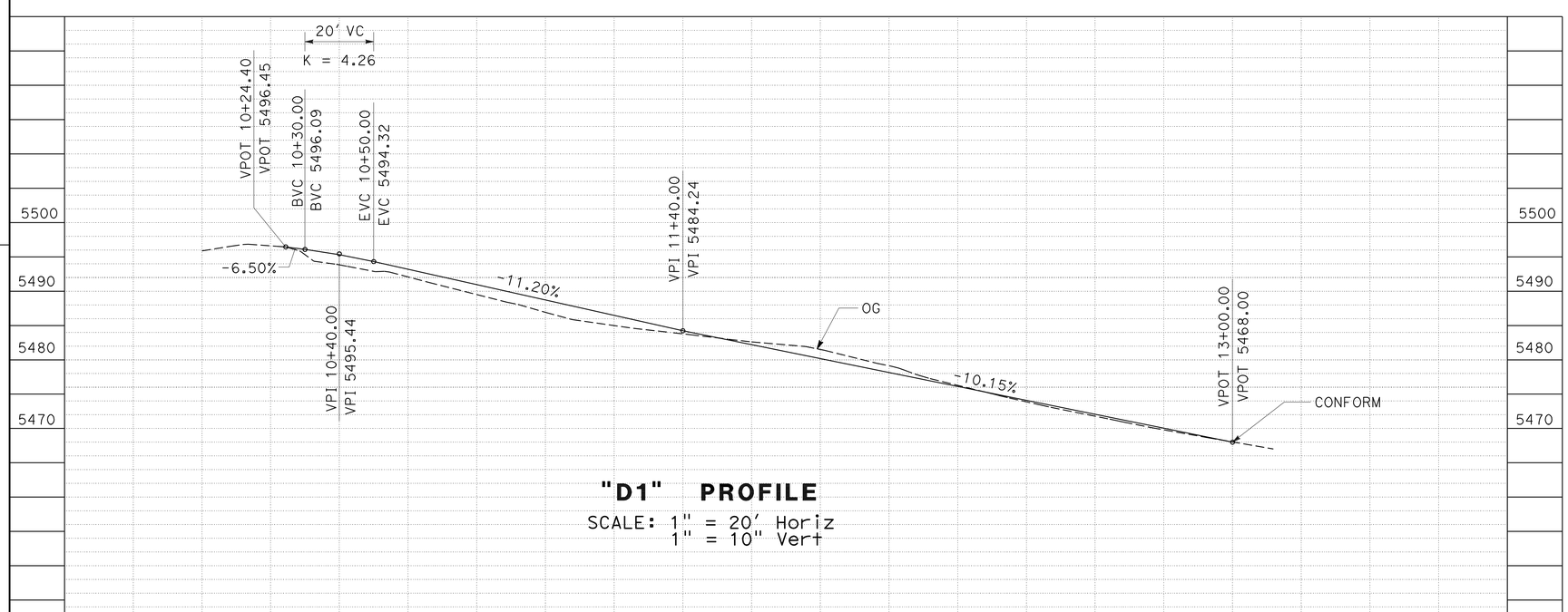

"D1" PROFILE

SCALE: 1" = 20′ Horiz
1" = 10" Vert

LEGEND:

POINT	STATION	OFFSET	Elev
A	"D1" 10+63.00	10.32′	5493.38
B	"D1" 10+50.00	14.61′	5495.05
C	"D1" 10+40.00	22.69′	5496.57
D	"D1" 10+31.00	38.96′	5498.03
E	"D1" 10+27.00	47.10′	MATCH Exist
F	"D1" 10+63.00	10.25′	5492.35
G	"D1" 10+50.00	14.70′	5493.58
H	"D1" 10+40.00	21.10′	5494.38
I	"D1" 10+31.00	26.90′	MATCH Exist

CONSTRUCTION DETAILS

SCALE: AS SHOWN

C-2

REVISED BY | DATE REVISED
TOM PENICK | STEVE ALAWAR
CALCULATED-DESIGNED BY | CHECKED BY
FUNCTIONAL SUPERVISOR: ROB BURNETT

STATE OF CALIFORNIA - DEPARTMENT OF TRANSPORTATION
Caltrans
DESIGN

P:\proj2\02\1E820_plans\pse\21E820ga002.dgn

LAST REVISION | DATE PLOTTED => 12-OCT-2010 | TIME PLOTTED => 14:25
10-12-10

Dist	COUNTY	ROUTE	POST MILES TOTAL PROJECT	SHEET No.	TOTAL SHEETS
02	Teh	36	85.8/87.5	10	30

Thomas Penick 10-12-10
REGISTERED CIVIL ENGINEER DATE

10-13-10
PLANS APPROVAL DATE

REGISTERED PROFESSIONAL ENGINEER TOM PENICK No. C61068 Exp. 12-31-10 CIVIL STATE OF CALIFORNIA

THE STATE OF CALIFORNIA OR ITS OFFICERS OR AGENTS SHALL NOT BE RESPONSIBLE FOR THE ACCURACY OR COMPLETENESS OF SCANNED COPIES OF THIS PLAN SHEET.

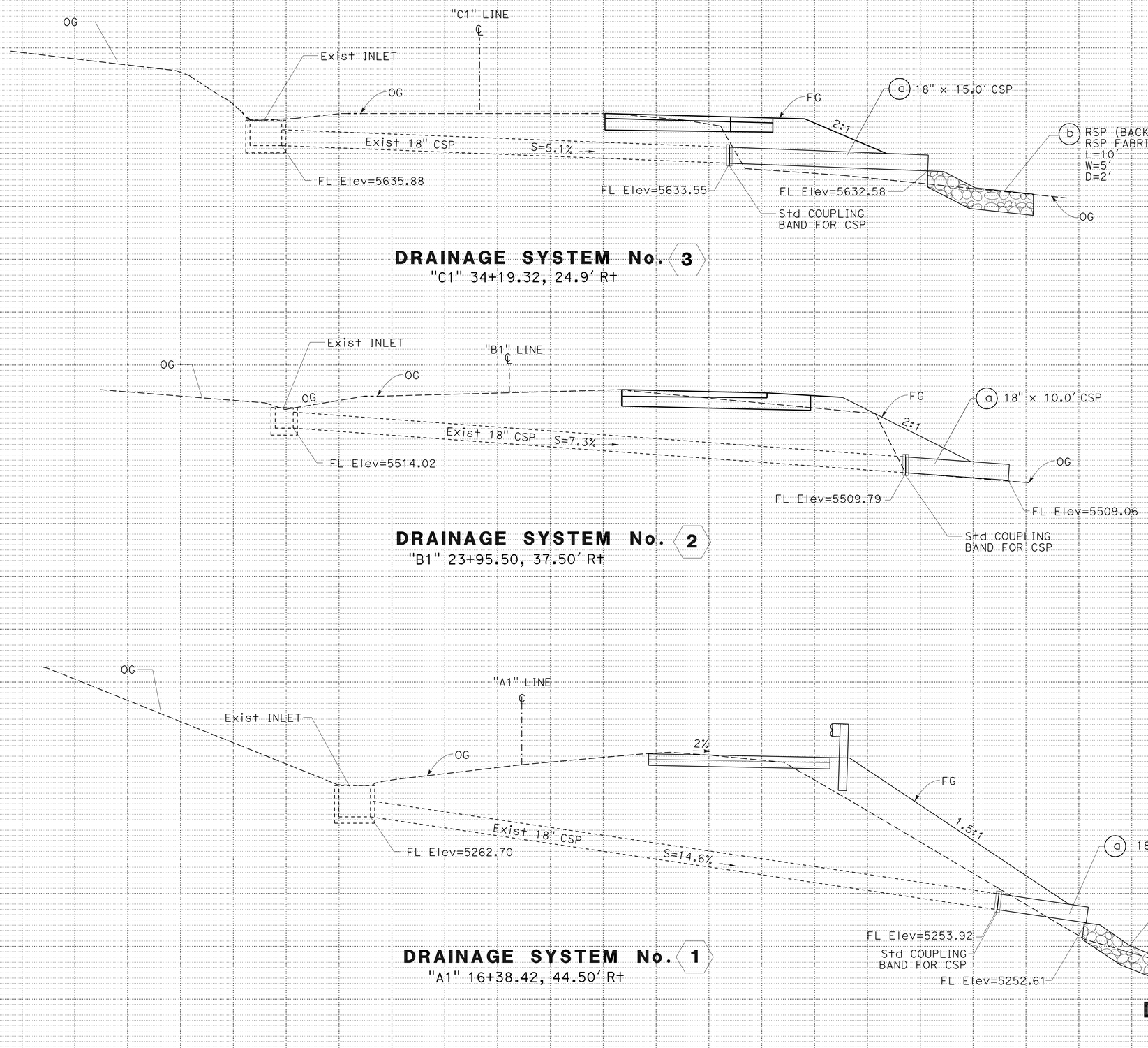

DRAINAGE PROFILES

SCALE: 1" = 5'

DP-1

REVISED BY | DATE REVISED
TOM PENICK | STEVE ALAWAR
CALCULATED-DESIGNED BY | CHECKED BY
FUNCTIONAL SUPERVISOR: ROB BURNETT

STATE OF CALIFORNIA - DEPARTMENT OF TRANSPORTATION
DESIGN
Caltrans

P:\proj2\02\1E820_plans\pse\21e820ib001.dgn

LAST REVISION 10-12-10 | DATE PLOTTED => 12-OCT-2010 | TIME PLOTTED => 14:25

Dist	COUNTY	ROUTE	POST MILES TOTAL PROJECT	SHEET No.	TOTAL SHEETS
02	Teh	36	85.8/87.5	11	30

Thomas Penick 10-12-10
REGISTERED CIVIL ENGINEER DATE

10-13-10
PLANS APPROVAL DATE

REGISTERED PROFESSIONAL ENGINEER
TOM PENICK
No. C61068
Exp. 12-31-10
CIVIL
STATE OF CALIFORNIA

THE STATE OF CALIFORNIA OR ITS OFFICERS OR AGENTS SHALL NOT BE RESPONSIBLE FOR THE ACCURACY OR COMPLETENESS OF SCANNED COPIES OF THIS PLAN SHEET.

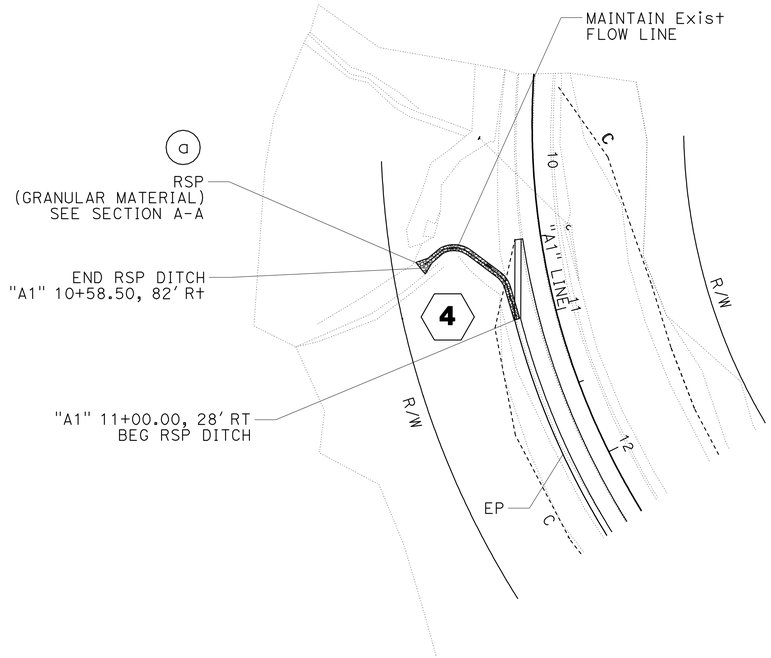

PLAN

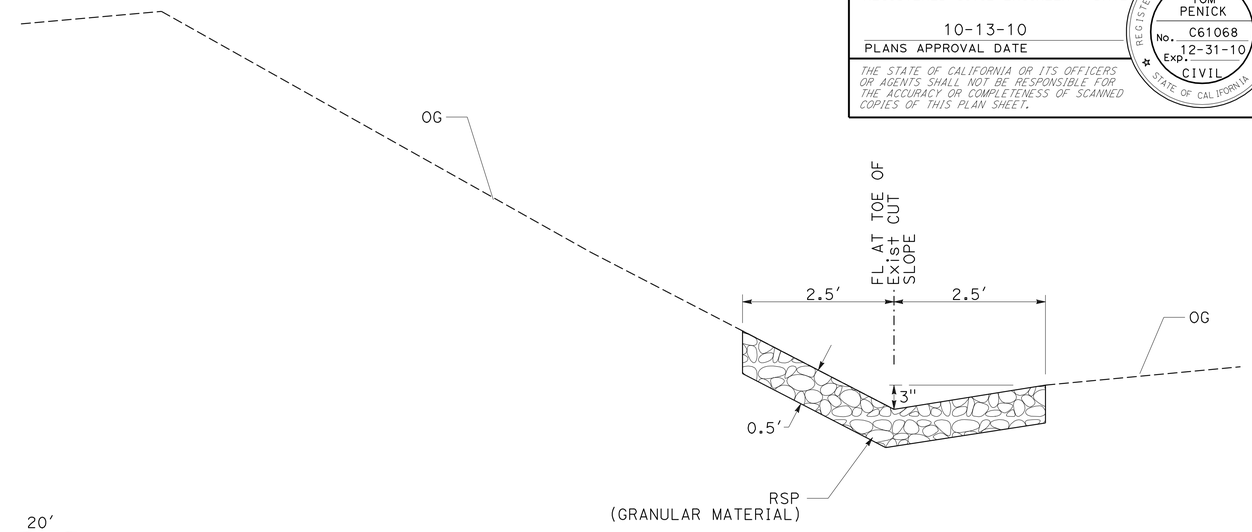

SECTION A-A

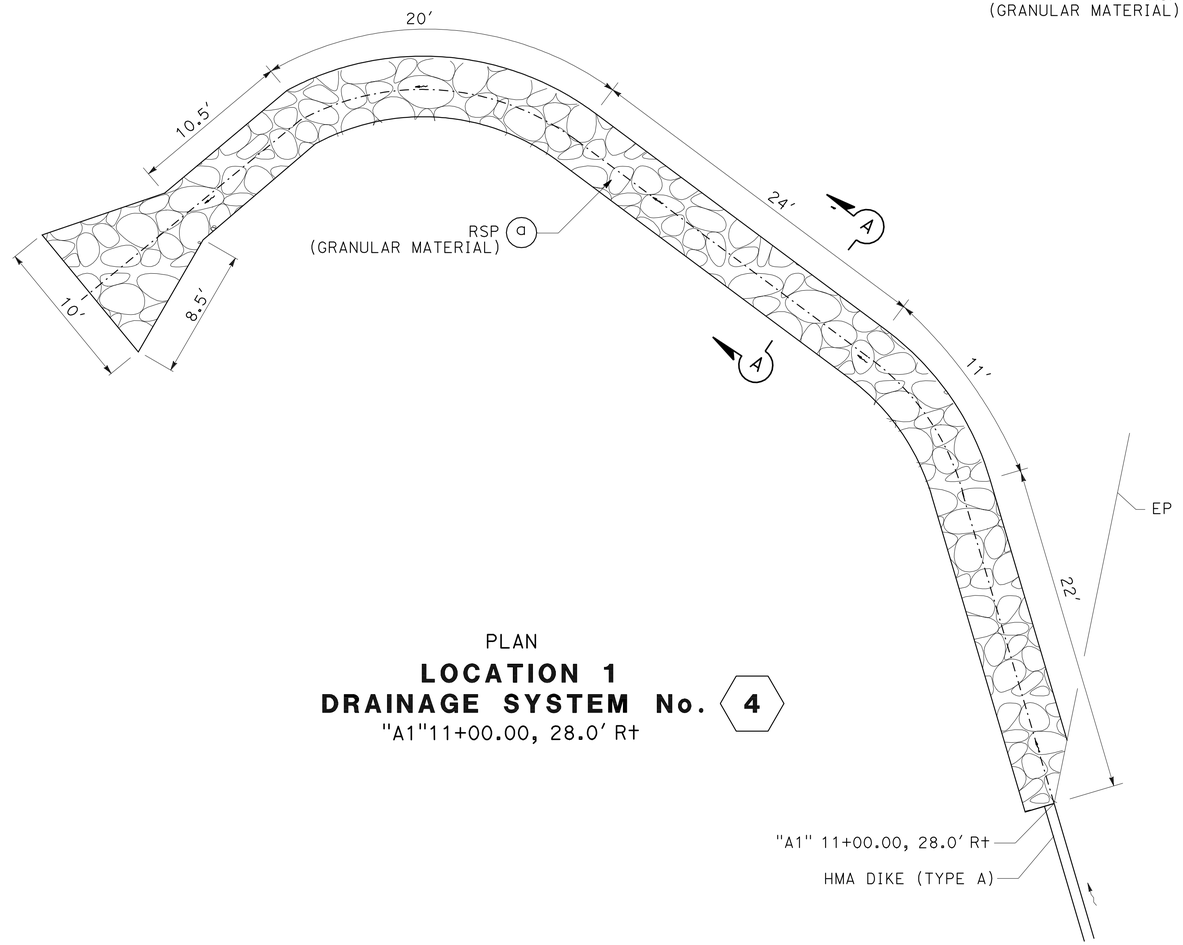

PLAN

LOCATION 1
DRAINAGE SYSTEM No. 4
"A1"11+00.00, 28.0' Rt

DRAINAGE DETAILS
NO SCALE

DD-1

REVISED BY	DATE REVISED
TOM PENICK	STEVE ALAWAR

CALCULATED-DESIGNED BY
CHECKED BY

FUNCTIONAL SUPERVISOR
ROB BURNETT

STATE OF CALIFORNIA - DEPARTMENT OF TRANSPORTATION
Caltrans
DESIGN

P:\proj2\02\1E820_plans\pse\21e820ic001.dgn

LAST REVISION | DATE PLOTTED => 12-OCT-2010
10-12-10 | TIME PLOTTED => 14:25

Dist	COUNTY	ROUTE	POST MILES TOTAL PROJECT	SHEET No.	TOTAL SHEETS
02	Teh	36	85.8/87.5	12	30

Thomas Penick 10-12-10
REGISTERED CIVIL ENGINEER DATE

10-13-10
PLANS APPROVAL DATE

REGISTERED PROFESSIONAL ENGINEER
TOM PENICK
No. C61068
Exp. 12-31-10
CIVIL
STATE OF CALIFORNIA

THE STATE OF CALIFORNIA OR ITS OFFICERS OR AGENTS SHALL NOT BE RESPONSIBLE FOR THE ACCURACY OR COMPLETENESS OF SCANNED COPIES OF THIS PLAN SHEET.

NOTES:

1. EXACT SIGN LOCATIONS TO BE DETERMINED BY THE ENGINEER.
2. SIGNS SHOWN WITH (CA) INDICATE CALIFORNIA SIGN CODE, OTHERWISE FEDERAL SIGN CODES ARE SHOWN.

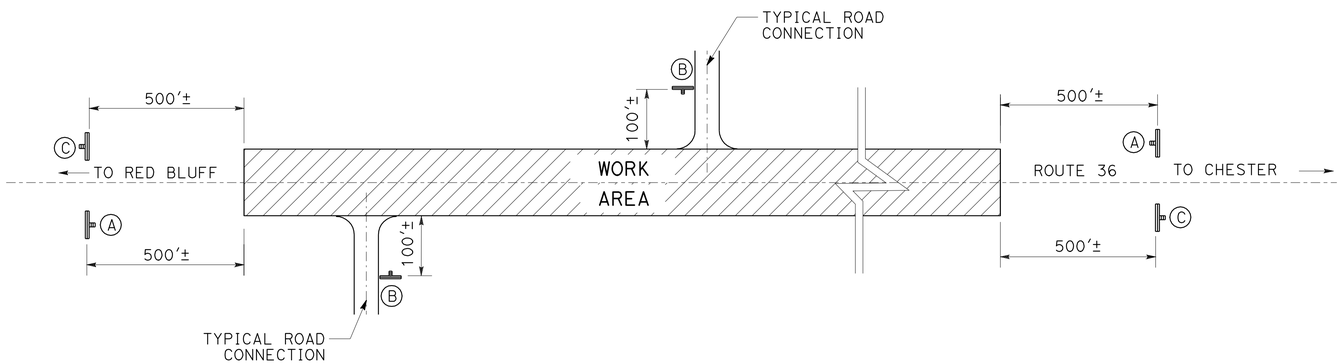

CONSTRUCTION AREA SIGNS

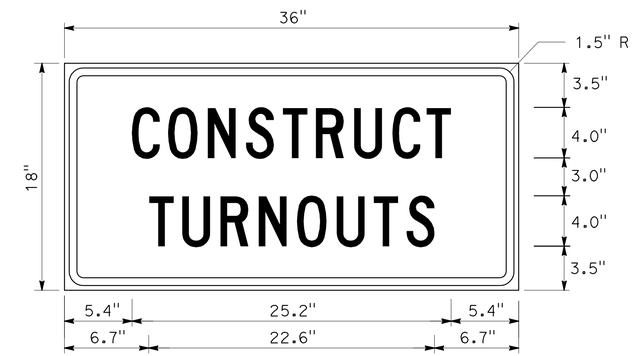

C23B(CA) SIGN PANEL DETAIL

CONSTRUCTION AREA SIGNS (STATIONARY MOUNTED)

TYPE	SIGN CODE	PANEL SIZE	SIGN MESSAGE	NUMBER AND SIZE OF POST	No. OF SIGNS
A	W20-1 C23B(CA)	36" x 36" 36" x 18"	ROAD WORK AHEAD CONSTRUCT TURNOUTS	1 - 4" x 6"	2
B	W20-1	36" x 36"	ROAD WORK AHEAD	1 - 4" x 6"	2
C	G20-2	36" x 18"	END ROAD WORK	1 - 4" x 4"	2

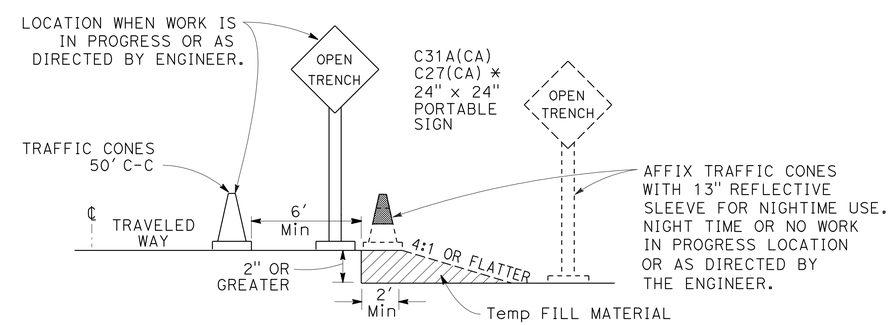

OPEN TRENCH SIGNING AND MARKING

* PLACE AT 250' INTERVALS THROUGH THE OPEN TRENCH AREA-ALTERNATE C27(CA) (OPEN TRENCH) AND C31A(CA) (NO SHOULDER) SIGNS

CONSTRUCTION AREA SIGNS

NO SCALE

CS-1

REVISED BY | DATE REVISED
TOM PENICK | STEVE ALAWAR
CALCULATED-DESIGNED BY | CHECKED BY
FUNCTIONAL SUPERVISOR: ROB BURNETT
STATE OF CALIFORNIA - DEPARTMENT OF TRANSPORTATION
Caltrans DESIGN
P:\proj2\02\1E820_plans\pse\21e8201a001.dgn

LAST REVISION 10-12-10 | DATE PLOTTED => 12-OCT-2010 | TIME PLOTTED => 14:25

Dist	COUNTY	ROUTE	POST MILES TOTAL PROJECT	SHEET No.	TOTAL SHEETS
02	Teh	36	85.8/87.5	13	30

Thomas Penick 10-12-10
REGISTERED CIVIL ENGINEER DATE

10-13-10
PLANS APPROVAL DATE

REGISTERED PROFESSIONAL ENGINEER
TOM PENICK
No. C61068
Exp. 12-31-10
CIVIL
STATE OF CALIFORNIA

THE STATE OF CALIFORNIA OR ITS OFFICERS OR AGENTS SHALL NOT BE RESPONSIBLE FOR THE ACCURACY OR COMPLETENESS OF SCANNED COPIES OF THIS PLAN SHEET.

NOTE:

1. FOR LOCATION 1, USE TEMPORARY RAILING (TYPE K) DURING CONSTRUCTION OF GABION WALL.

LEGEND

- WORK AREA
- Temp RAILING (TYPE K)
- Temp RAILING (TYPE K)
- DIRECTION OF TRAFFIC

TYPICAL SECTION
LOCATION 1

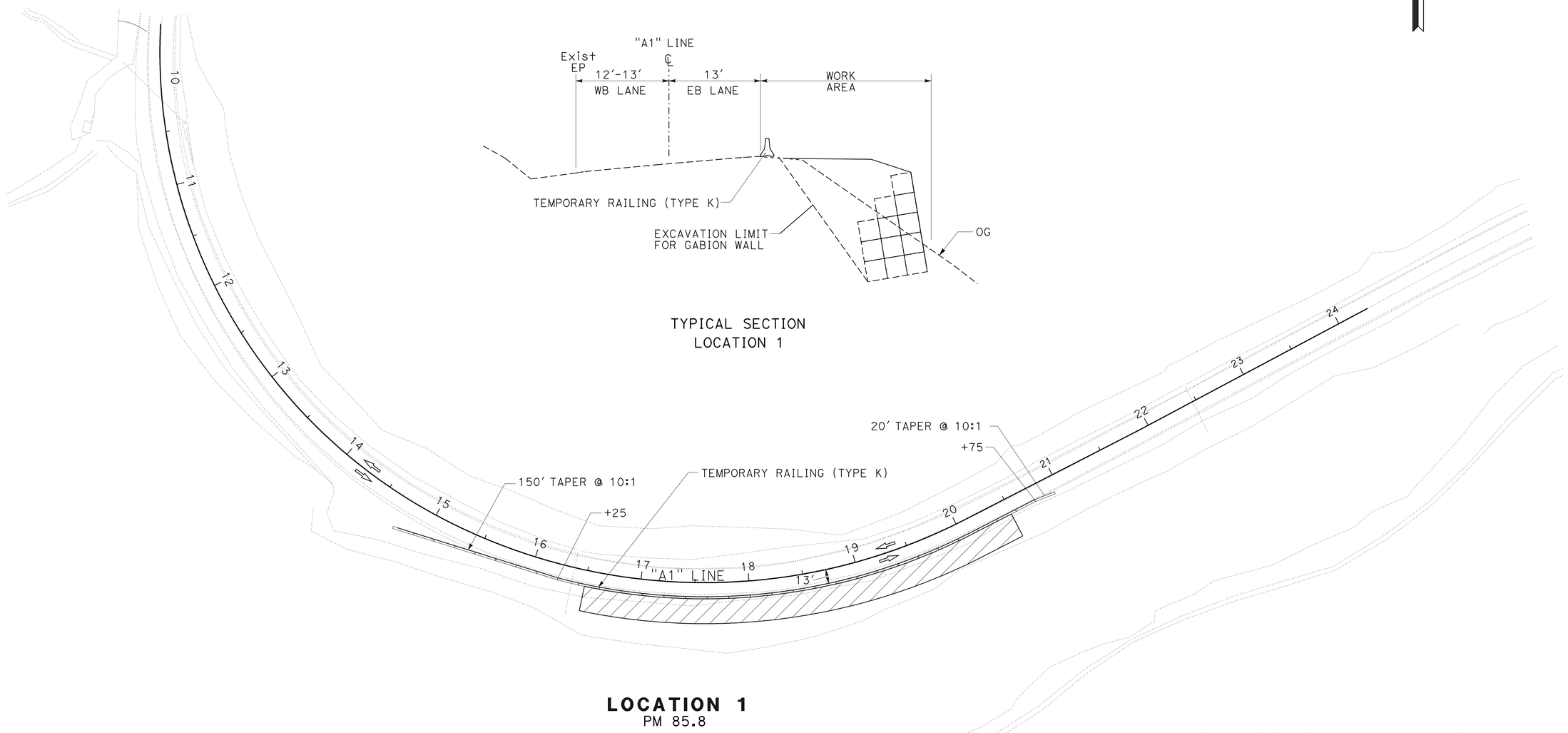

LOCATION 1
PM 85.8

THIS PLAN ACCURATE FOR TRAFFIC HANDLING ONLY

TRAFFIC HANDLING PLAN
NO SCALE

TH-1

REVISED BY	
DATE REVISED	
TOM PENICK	
STEVE ALAWAR	
CALCULATED-DESIGNED BY	
CHECKED BY	
FUNCTIONAL SUPERVISOR	
ROB BURNETT	

STATE OF CALIFORNIA - DEPARTMENT OF TRANSPORTATION
Caltrans
DESIGN

P:\proj2\02\1E820_plans\pse\21E820md001.dgn

LAST REVISION 10-12-10 | DATE PLOTTED => 12-OCT-2010 | TIME PLOTTED => 14:25

Dist	COUNTY	ROUTE	POST MILES TOTAL PROJECT	SHEET No.	TOTAL SHEETS
02	Teh	36	85.8/87.5	14	30

Thomas Penick 10-12-10
REGISTERED CIVIL ENGINEER DATE

10-13-10
PLANS APPROVAL DATE

REGISTERED PROFESSIONAL ENGINEER
TOM PENICK
No. C61068
Exp. 12-31-10
CIVIL
STATE OF CALIFORNIA

THE STATE OF CALIFORNIA OR ITS OFFICERS OR AGENTS SHALL NOT BE RESPONSIBLE FOR THE ACCURACY OR COMPLETENESS OF SCANNED COPIES OF THIS PLAN SHEET.

NOTES:

1. R50 (CA) ROADSIDE SIGNS TO BE PLACED 1/4 MILE IN ADVANCE OF TURNOUT.
2. EXACT LOCATIONS TO BE DETERMINED BY THE ENGINEER.
3. SIGNS SHOWN WITH (CA) INDICATE CALIFORNIA SIGN CODE, OTHERWISE FEDERAL SIGN CODES ARE SHOWN.

LEGEND

- DETAIL NO.
- MARKER (CULVERT)
- REMOVE ROADSIDE SIGN
- REMOVE MARKER
- REMOVE DELINEATOR
- (X-X) ROADSIDE SIGN
- HIGHWAY POST MARKER
- GUARD RAILING DELINEATOR (TYPE E)
- DELINEATOR (TYPE E-2)
- ROAD SIGN (1 POST)
- DIRECTION OF TRAVEL

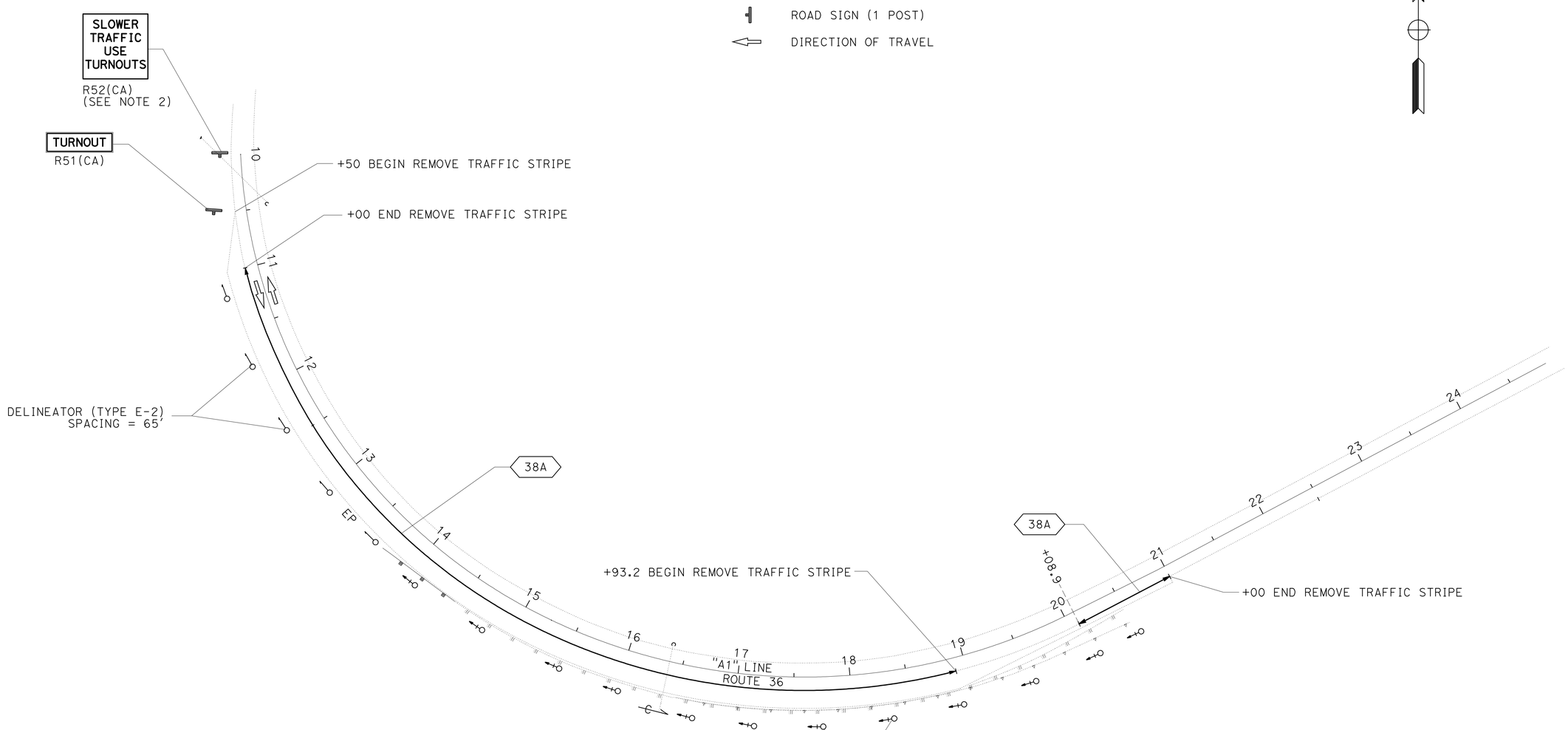

LOCATION No. 1
PM 85.8

PAVEMENT DELINEATION AND SIGN PLAN

SCALE 1" = 50'

PD-1

THIS PLAN ACCURATE FOR PAVEMENT DELINEATION AND SIGN WORK ONLY

REVISED BY | DATE REVISED
TOM PENICK | STEVE ALAWAR
CALCULATED-DESIGNED BY | CHECKED BY
FUNCTIONAL SUPERVISOR: ROB BURNETT

STATE OF CALIFORNIA - DEPARTMENT OF TRANSPORTATION
Caltrans
DESIGN

P:\proj2\02\1E820_plans\pse\21E820na001.dgn

LAST REVISION | DATE PLOTTED => 12-OCT-2010 | TIME PLOTTED => 14:25
10-12-10

Dist	COUNTY	ROUTE	POST MILES TOTAL PROJECT	SHEET No.	TOTAL SHEETS
02	Teh	36	85.8/87.5	15	30

Thomas Penick 10-12-10
REGISTERED CIVIL ENGINEER DATE

10-13-10
PLANS APPROVAL DATE

REGISTERED PROFESSIONAL ENGINEER
TOM PENICK
No. C61068
Exp. 12-31-10
CIVIL
STATE OF CALIFORNIA

THE STATE OF CALIFORNIA OR ITS OFFICERS OR AGENTS SHALL NOT BE RESPONSIBLE FOR THE ACCURACY OR COMPLETENESS OF SCANNED COPIES OF THIS PLAN SHEET.

NOTES:

1. R50 (CA) ROADSIDE SIGNS TO BE PLACED 1/4 MILE IN ADVANCE OF TURNOUT.
2. EXACT LOCATIONS TO BE DETERMINED BY THE ENGINEER.
3. SIGNS SHOWN WITH (CA) INDICATE CALIFORNIA SIGN CODE, OTHERWISE FEDERAL SIGN CODES ARE SHOWN.

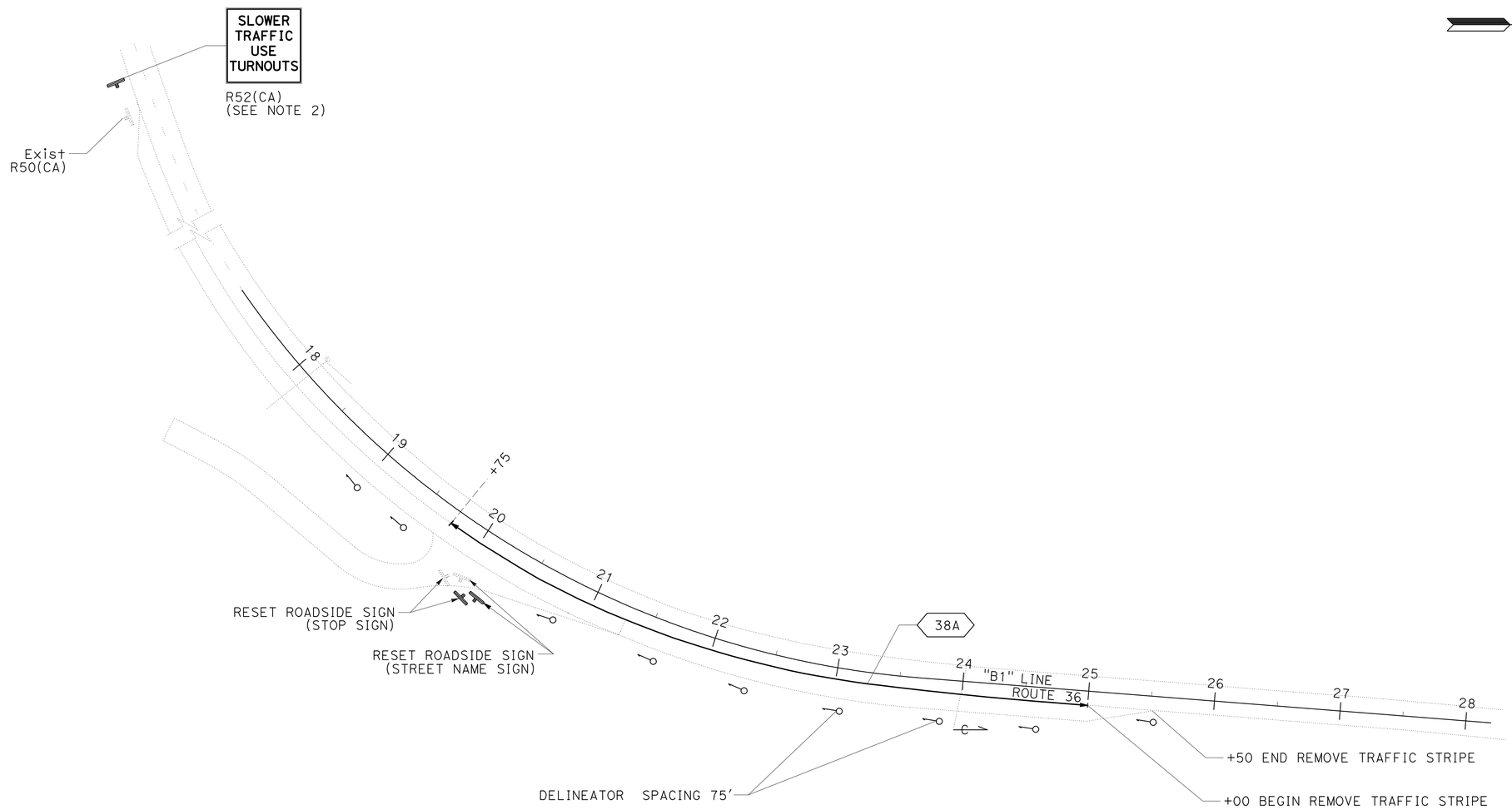

LOCATION 2
PM 86.7

PAVEMENT DELINEATION AND SIGN PLAN

SCALE: 1" = 50'

PD-2

THIS PLAN ACCURATE FOR PAVEMENT DELINEATION AND SIGN WORK ONLY

REVISED BY	DATE REVISED

CALCULATED-DESIGNED BY	TOM PENICK
CHECKED BY	STEVE ALAWAR
FUNCTIONAL SUPERVISOR	ROB BURNETT

STATE OF CALIFORNIA - DEPARTMENT OF TRANSPORTATION
Caltrans
DESIGN

P:\proj2\02\1E820_plans\pse\21E820na002.dgn

LAST REVISION | DATE PLOTTED => 12-OCT-2010
10-12-10 | TIME PLOTTED => 14:26

Dist	COUNTY	ROUTE	POST MILES TOTAL PROJECT	SHEET No.	TOTAL SHEETS
02	Teh	36	85.8/87.5	16	30

Thomas Penick 10-12-10
REGISTERED CIVIL ENGINEER DATE

10-13-10
PLANS APPROVAL DATE

REGISTERED PROFESSIONAL ENGINEER
TOM PENICK
No. C61068
Exp. 12-31-10
CIVIL
STATE OF CALIFORNIA

THE STATE OF CALIFORNIA OR ITS OFFICERS OR AGENTS SHALL NOT BE RESPONSIBLE FOR THE ACCURACY OR COMPLETENESS OF SCANNED COPIES OF THIS PLAN SHEET.

NOTES:

1. R50 (CA) ROADSIDE SIGNS TO BE PLACED ¼ MILE IN ADVANCE OF TURNOUT.
2. EXACT LOCATIONS TO BE DETERMINED BY THE ENGINEER.
3. SIGNS SHOWN WITH (CA) INDICATE CALIFORNIA SIGN CODE, OTHERWISE FEDERAL SIGN CODES ARE SHOWN.

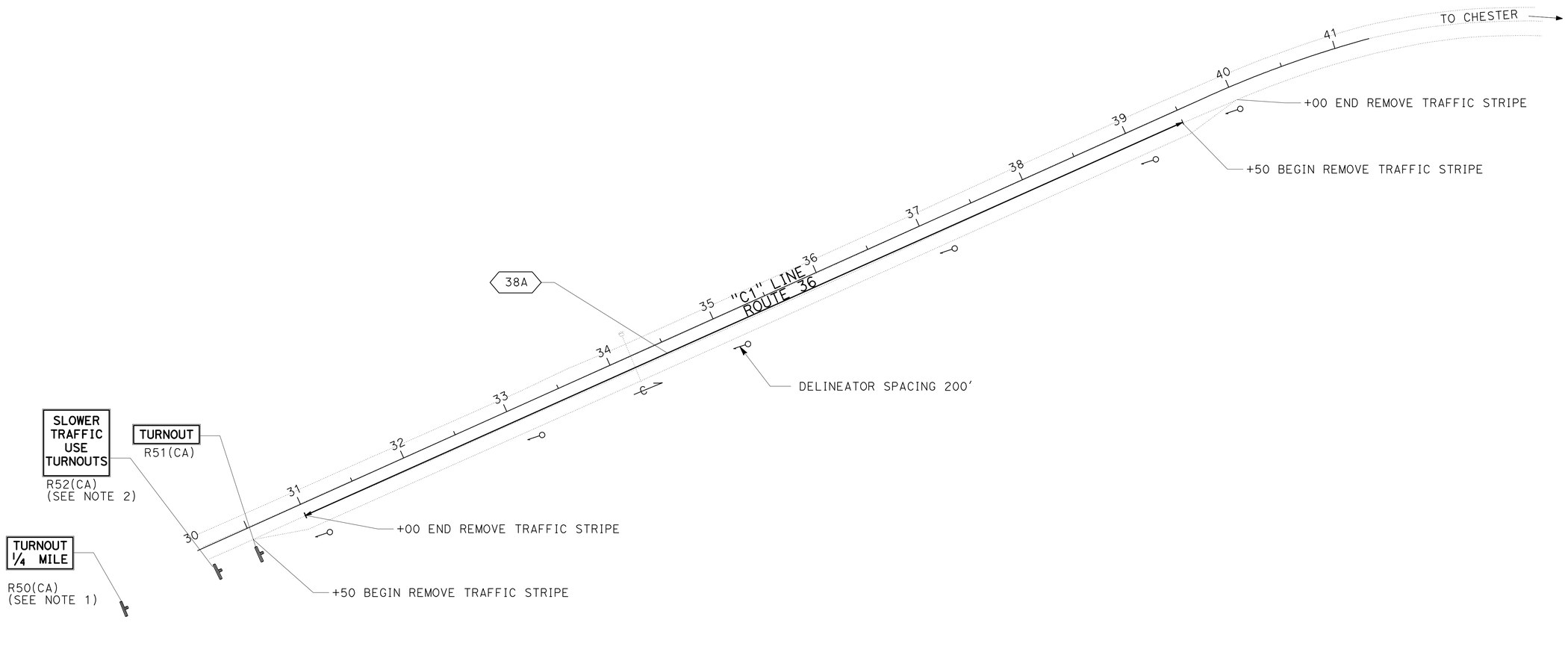

LOCATION 3
PM 87.4

PAVEMENT DELINEATION AND SIGN PLAN

SCALE: 1" = 50'

PD-3

THIS PLAN ACCURATE FOR PAVEMENT DELINEATION AND SIGN WORK ONLY

REVISED BY	DATE REVISED

CALCULATED-DESIGNED BY: TOM PENICK
CHECKED BY: STEVE ALAWAR
FUNCTIONAL SUPERVISOR: ROB BURNETT

STATE OF CALIFORNIA - DEPARTMENT OF TRANSPORTATION
Caltrans
DESIGN

P:\proj2\02\1E820_plans\pse\21E820na003.dgn

LAST REVISION 10-12-10 | DATE PLOTTED => 12-OCT-2010 | TIME PLOTTED => 14:26

Dist	COUNTY	ROUTE	POST MILES TOTAL PROJECT	SHEET No.	TOTAL SHEETS
02	Teh	36	85.8/87.5	17	30

Thomas Penick 10-12-10
REGISTERED CIVIL ENGINEER DATE

10-13-10
PLANS APPROVAL DATE

REGISTERED PROFESSIONAL ENGINEER
TOM PENICK
No. C61068
Exp. 12-31-10
CIVIL
STATE OF CALIFORNIA

THE STATE OF CALIFORNIA OR ITS OFFICERS OR AGENTS SHALL NOT BE RESPONSIBLE FOR THE ACCURACY OR COMPLETENESS OF SCANNED COPIES OF THIS PLAN SHEET.

REMOVE THERMOPLASTIC TRAFFIC STRIPE

Loc	PM	STATION	WHITE STRIPE (LF)
1	85.8	"A1" 10+50 TO 11+00	50
		"A1" 18+93 TO 21+00	207
2	86.7	"B1" 25+00 TO 25+50	50
3	87.4	"C1" 30+50 TO 31+00	50
		"C1" 39+50 TO 40+00	50
		TOTAL	407

MARKERS AND DELINEATORS

Loc	MARKERS (CULVERT)		DELINEATOR (CLASS 2)	GUARD RAILING DELINEATOR
			(TYPE E-2)	(TYPE E)
	POST MILE	EA	EA	EA
1	85.8	1	5	12
2	86.7	1	9	
3	87.4	1	6	
	TOTAL	3	20	12

PAVEMENT DELINEATION QUANTITIES

SHEET No.	LOCATION	POST MILE	STATION LIMITS	THERMOPLASTIC TRAFFIC STRIPE (SPRAYABLE) DETAIL 38A
				LF
PD-1	1	85.8	"A1" 11+00 TO 18+93	793
PD-1	1	85.8	"A1" 20+09 TO 21+00	207
PD-2	2	86.7	"B1" 19+75 TO 25+00	525
PD-3	3	87.4	"C1" 31+00 TO 39+50	850
			TOTAL	2375

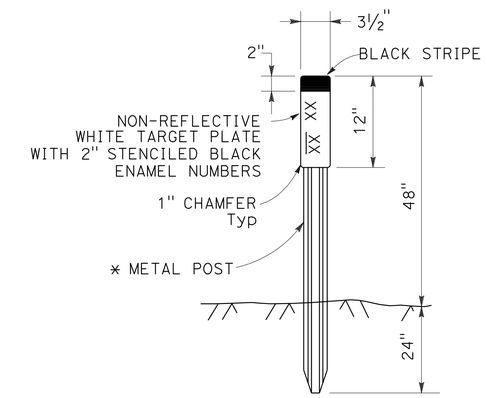

CULVERT (MARKER)

* SEE STANDARD PLANS FOR METAL POST DETAILS

CONTRACTOR FURNISHED SIGN PANELS AND ROADSIDE SIGNS

Loc	Approx STATION OR POST MILE	SIGN CODE	PANEL SIZE	SINGLE FACED	SIGN FACING MATERIAL: BACKGROUND SHEETING COLOR	BACKGROUND RETRO-REFLECTIVE ASTM TYPE	LEGEND SHEETING COLOR	LEGEND RETRO-REFLECTIVE ASTM TYPE	SIGN PANEL MATERIAL*	WOOD POST SIZE AND LENGTH (N)	RESET ROADSIDE SIGN (1 POST)	ROADSIDE SIGN (ONE POST)	SIGN MESSAGE OR SYMBOL
									SQFT	4" x 4"	EA	EA	
1	"A1" 10+50, R†	R51 (CA)	30" x 12"	X	WHITE	III	BLACK	II	2.50	10.0′		1	TURNOUT
	"A1" 9+50, R†	R52 (CA)	36" x 30"	X	WHITE	III	BLACK	II	7.50	9.5′		1	SLOWER TRAFFIC USE TURNOUT
2	PM 86.3, R†	R52 (CA)	36" x 30"	X	WHITE	III	BLACK	II	7.50	9.5′		1	SLOWER TRAFFIC USE TURNOUT
3	PM 87.0, R†	R50 (CA)	30" x 20"	X	WHITE	III	BLACK	II	4.175	10.5′		1	TURNOUT ¼ MILE
	"C1" 30+50, R†	R51 (CA)	30" x 12"	X	WHITE	III	BLACK	II	2.50	9.5′		1	TURNOUT
	"C1" 29+50, R†	R52 (CA)	36" x 30"	X	WHITE	III	BLACK	II	7.50	9.5′		1	SLOWER TRAFFIC USE TURNOUT
2	"B1" 20+20, R†										1		RESET STOP SIGN
	"B1" 20+20, R†										1		RESET STREET SIGN
								TOTAL	31.68		2	7	

* SIGN PANEL SUBSTRATE MATERIAL TO BE 0.063" SINGLE SHEET UNFRAMED ALUMINUM.

PAVEMENT DELINEATION QUANTITIES AND SIGN QUANTITIES

NO SCALE

PDQ-1

REVISED BY | DATE REVISED
TOM PENICK | STEVE ALAWAR
CALCULATED-DESIGNED BY | CHECKED BY
FUNCTIONAL SUPERVISOR: ROB BURNETT
STATE OF CALIFORNIA - DEPARTMENT OF TRANSPORTATION
Caltrans® DESIGN
P:\proj2\02\1E820_plans\pse\21E820nc001.dgn

LAST REVISION 10-12-10 | DATE PLOTTED => 12-OCT-2010 | TIME PLOTTED => 14:26

Dist	COUNTY	ROUTE	POST MILES TOTAL PROJECT	SHEET No.	TOTAL SHEETS
02	Teh	36	85.8/87.5	18	30

Thomas Penick 10-12-10
REGISTERED CIVIL ENGINEER DATE

10-13-10
PLANS APPROVAL DATE

REGISTERED PROFESSIONAL ENGINEER TOM PENICK No. C61068 Exp. 12-31-10 CIVIL STATE OF CALIFORNIA

THE STATE OF CALIFORNIA OR ITS OFFICERS OR AGENTS SHALL NOT BE RESPONSIBLE FOR THE ACCURACY OR COMPLETENESS OF SCANNED COPIES OF THIS PLAN SHEET.

NOTE:

1. (N) - NOT A SEPARATE PAY ITEM, FOR INFORMATION ONLY

DRAINAGE QUANTITIES

PLAN SHEET No.	LOCATION No.	DRAINAGE SYSTEM No. ⬡	DRAINAGE ITEM No. ◯	18" CORRUGATED STEEL PIPE (.109" THICK)	ROCK SLOPE PROTECTION (BACKING NO. 1, METHOD B)	ROCK SLOPE PROTECTION (GRANULAR MATERIAL)	ROCK SLOPE PROTECTION FABRIC	DESCRIPTION	STATION
				LF	CY	CY	SQYD		
L-1	1	1	a	9.0			14	18" X 9.0' CSP	"A1"16+38.42, R+
			b		3.7			RSP (BACKING NO. 1, METHOD B)	
L-2	2	2	a	10.0				18" X 10.0' CSP	"B1"23+95.50, R+
L-3	3	3	a	15.0				18" X 15.0' CSP	"C1" 34+19.32, R+
			b		3.7		14	RSP (BACKING NO. 1, METHOD B)	
L-1	4	4	a			9.0		RSP (3 INCH, METHOD B)	"A1" 11+00.00, R+
		TOTAL		34	7.4	9.0	28		

EROSION CONTROL (BONDED FIBER MATRIX)

LOCATION	SIDE	SQFT
1	L+	13,505
1	R+	6,098
2	R+	6,098
3	R+	10,018
	TOTAL	35,719

CABLE RAILING

LOCATION	STATION	CABLE RAILING
		LF
1	"A1" 16+50 TO 20+50, R+	400
	TOTAL	400

ROADWAY QUANTITIES

LOCATION	STATION	ROADWAY EXCAVATION	(N) EMBANKMENT	GABION	PLACE HMA DIKE (TYPE C)	PLACE HMA DIKE (TYPE A)	HMA (TYPE A)	CLASS 2 AGGREGATE BASE	VEGETATION CONTROL (MINOR CONCRETE)	TEMPORARY RAILING (TYPE K)
		CY	CY	CY	LF	LF	TON	CY	SQYD	LF
1	"A1" 10+50 TO 20+50, R+/L+	2623	1010	1600	12	275	520	410	340	620
2	"B1" 21+30 TO 25+50, R+	104	486				158	156		
2	"D1" 31+50 TO 40+50, R+	114	124					122		
3	"C1" 31+50 TO 40+50, R+	195	985				454	278		
	TOTAL	3036	2605	1600	12	275	1132	966	340	620

TEMPORARY WATER POLLUTION CONTROL

	Temp FIBER ROLL	Temp DRAINAGE INLET PROTECTION	LOCATIONS
	LF	EA	
	2100		1, 2, 3
			1
		1	1
TOTAL	2100	1	

METAL BEAM GUARD RAILING

LOCATION	STATION	METAL BEAM GUARD RAIL (STEEL POST)	ALTERNATIVE IN-LINE TERMINAL SYSTEM	(N) BURIED POST ANCHOR
		LF	EA	EA
1	"A1" 13+70 TO 20+00, R+	630	1	1
	TOTAL	630	1	1

SUMMARY OF QUANTITIES

Q-1

REVISED BY	DATE REVISED
TOM PENICK	STEVE ALAWAR

CALCULATED-DESIGNED BY	CHECKED BY

FUNCTIONAL SUPERVISOR: ROB BURNETT

STATE OF CALIFORNIA - DEPARTMENT OF TRANSPORTATION
Caltrans® DESIGN

P:\proj2\02\1E820_plans\pse\21E820pa001.dgn

LAST REVISION 10-12-10 | DATE PLOTTED => 12-OCT-2010 | TIME PLOTTED => 14:26

DIST	COUNTY	ROUTE	POST MILLS TOTAL PROJECT	SHEET NO.	TOTAL SHEETS
02	Teh	36	85.8/87.5	19	30

Robert B Schott
LICENSED LANDSCAPE ARCHITECT

August 15, 2008
PLANS Approval DATE

LICENSED LANDSCAPE ARCHITECT
Robert B. Schott 3685
Signature
11-04-08
Renewal Date
08-11-08
Date
STATE OF CALIFORNIA

The State of California or its officers or agents shall not be responsible for the accuracy or completeness of electronic copies of this plan sheet.

To accompany plans dated 10-13-10

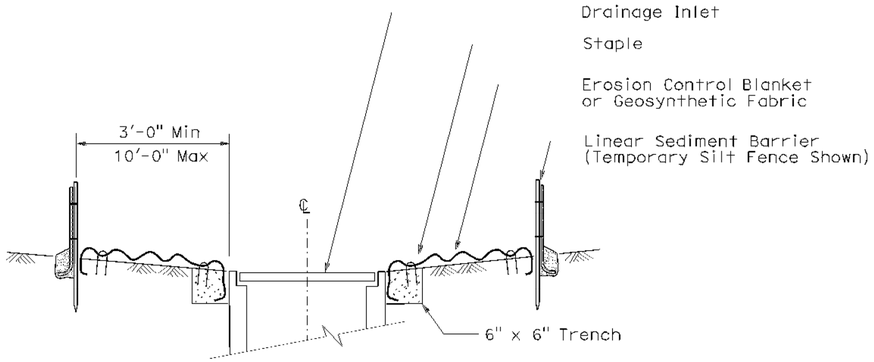

SECTION A-A

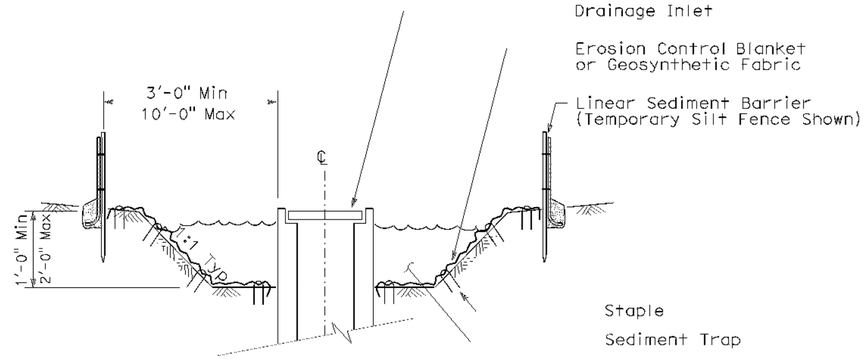

SECTION B-B

NOTES:

1. See Standard Plan T51 for Temporary Silt Fence.
2. Dimensions may vary to fit field conditions.

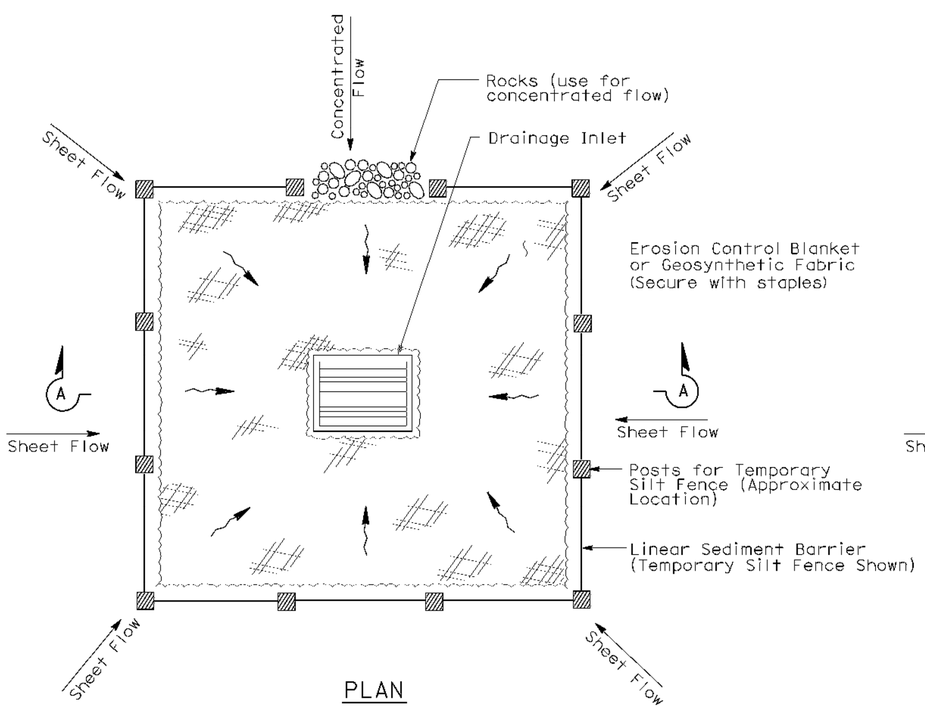

PLAN

TEMPORARY DRAINAGE INLET PROTECTION (TYPE 1)

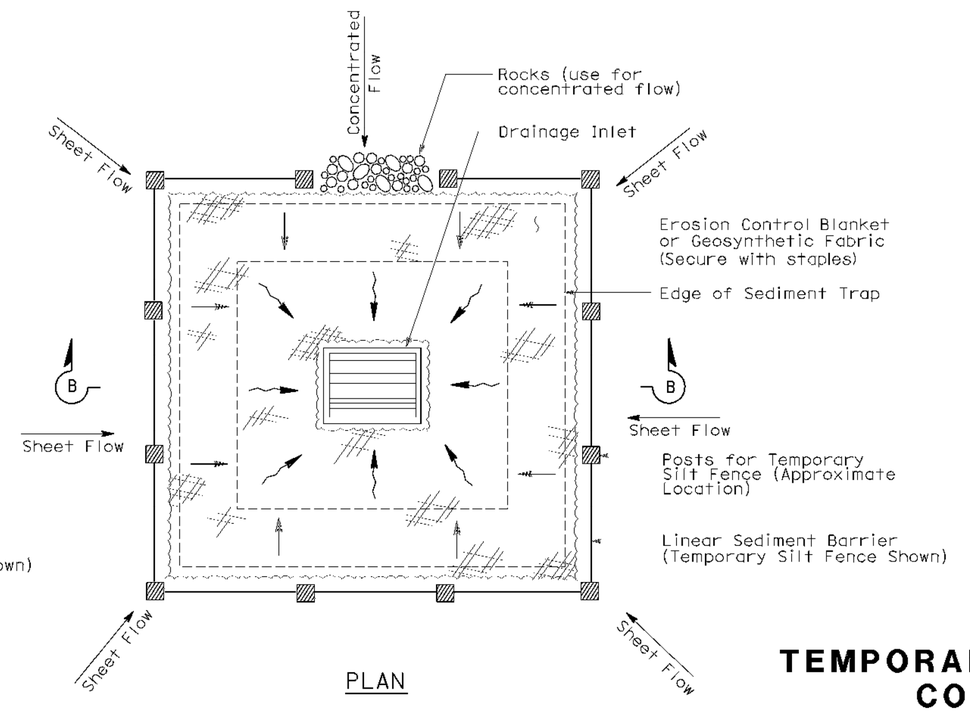

PLAN

TEMPORARY DRAINAGE INLET PROTECTION (TYPE 2) (EXCAVATED SEDIMENT TRAP)

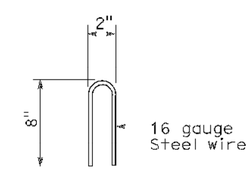

STAPLE DETAIL

STATE OF CALIFORNIA
DEPARTMENT OF TRANSPORTATION

TEMPORARY WATER POLLUTION CONTROL DETAILS (TEMPORARY DRAINAGE INLET PROTECTION)

NO SCALE

Nsp t61 dated august 15, 2008 supplements the standard plans book dated may 2006.

NEW STANDARD PLAN NSP T61

2006 NEW STANDARD PLAN NSP T61

P:\proj2\02\1E820_plans\pse\21e820va001.dgn

DIST	COUNTY	ROUTE	POST MILES TOTAL PROJECT	SHEET NO.	TOTAL SHEETS
02	Teh	36	85.8/87.5	20	30

Robert B Schott
LICENSED LANDSCAPE ARCHITECT

August 15, 2008
PLANS APPROVAL DATE

LICENSED LANDSCAPE ARCHITECT Robert B. Schott 3685 Signature 11-04-08 Renewal Date 08-11-08 Date STATE OF CALIFORNIA

The State of California or its officers or agents shall not be responsible for the accuracy or completeness of electronic copies of this plan sheet.

To accompany plans dated 10-13-10

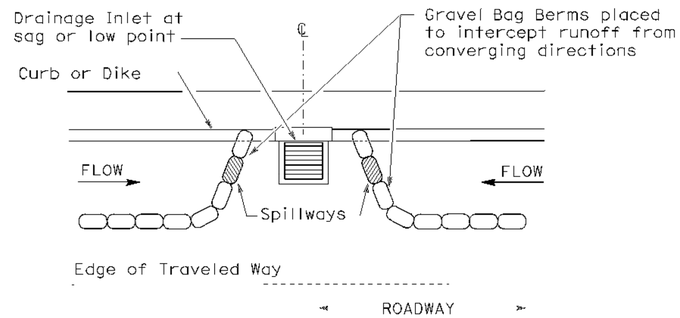

PLAN

CONFIGURATION FOR SAG POINT INLET (GRAVEL BAG BERM)

GRAVEL BAG BERM (TYPE 3A) SPACING TABLE

SLOPE OF ROADWAY (PERCENT)	1 to 3.9	4 to 5.9	6 to 7.9	8 to 10	10+
INTERVAL BETWEEN BERM	100'	75'	50'	25'	12'

For slope of less than 1%, install barriers only if erosion/sediment is prevalent

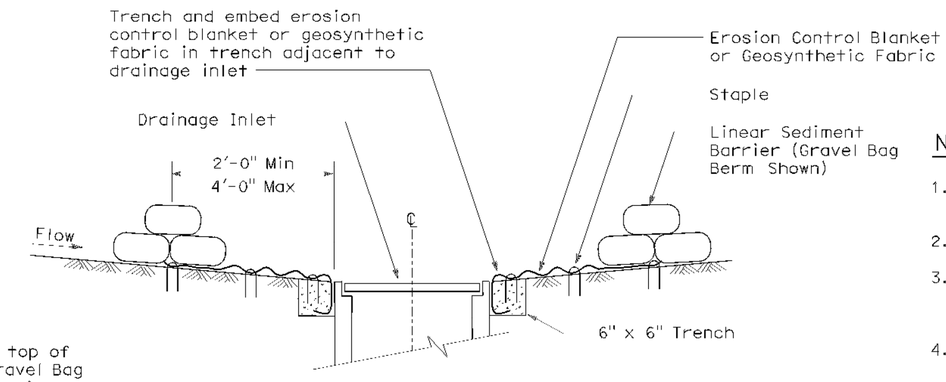

SECTION A-A

NOTES:

1. Place safety cones adjacent to drainage inlet protection.
2. Dimensions may vary to fit field conditions.
3. Install a minimum of 3 gravel bag berms upstream of each drainage inlet to be protected.
4. Position erosion control blanket or geosynthetic fabric at edge of concrete apron and secure in trench.
5. Erosion control blanket or geosynthetic fabric is not required if the area adjacent to the drainage inlet is vegetated or paved.

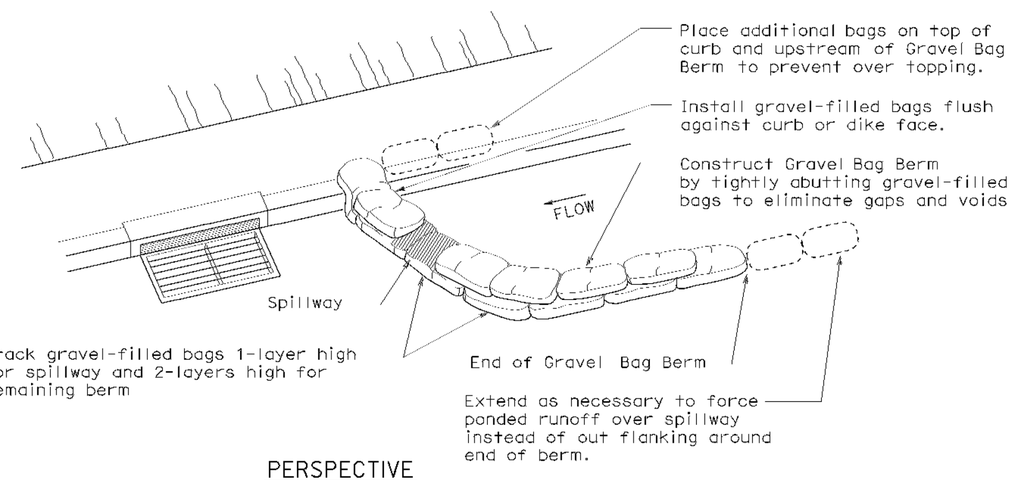

PERSPECTIVE

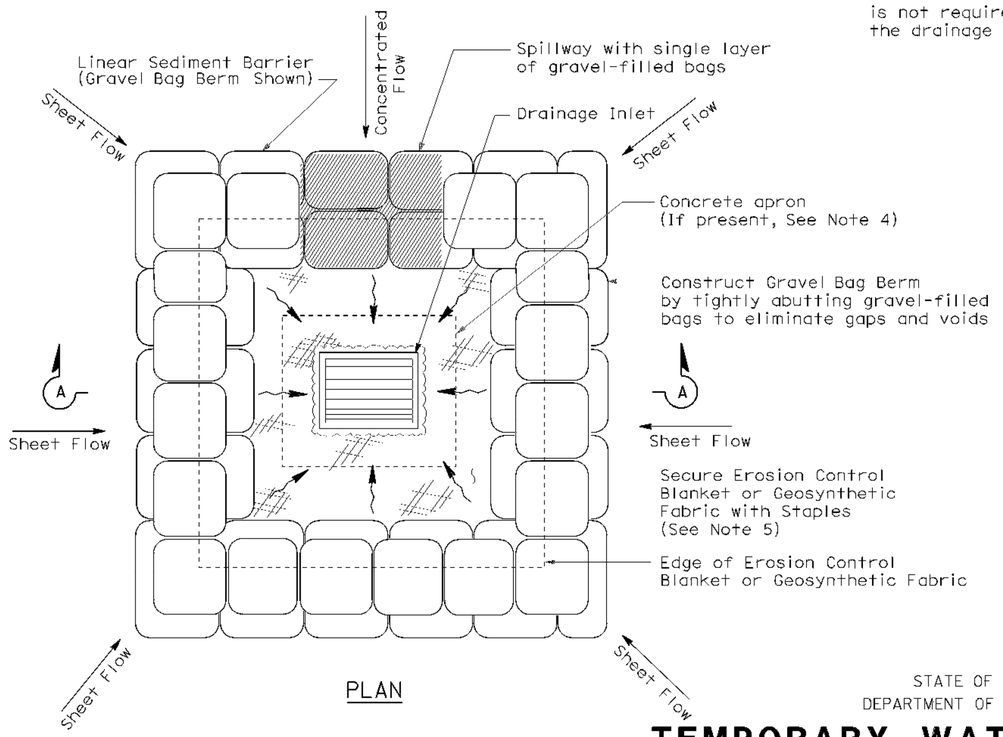

PLAN

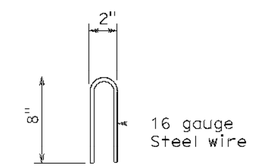

STAPLE DETAIL

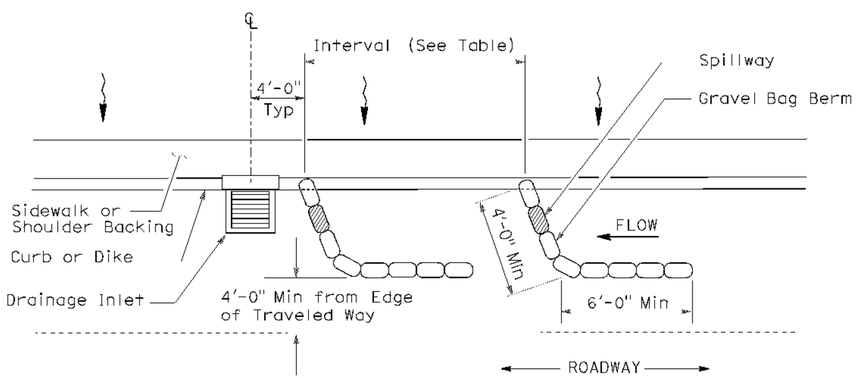

PLAN

TEMPORARY DRAINAGE INLET PROTECTION (TYPE 3A) (GRAVEL BAG BERM)

TEMPORARY DRAINAGE INLET PROTECTION (TYPE 3B)

STATE OF CALIFORNIA
DEPARTMENT OF TRANSPORTATION

TEMPORARY WATER POLLUTION CONTROL DETAILS (TEMPORARY DRAINAGE INLET PROTECTION)

NO SCALE

NSP T62 DATED AUGUST 15, 2008 SUPPLEMENTS
THE STANDARD PLANS BOOK DATED MAY 2006.

NEW STANDARD PLAN NSP T62

2006 NEW STANDARD PLAN NSP T62

P:\proj2\02\1E820_plans\pse\21e820va002.dgn

DIST	COUNTY	ROUTE	POST MILES TOTAL PROJECT	SHEET NO.	TOTAL SHEETS
02	Teh	36	85.8/87.5	21	30

Robert B Schott
LICENSED LANDSCAPE ARCHITECT

August 15, 2008
PLANS APPROVAL DATE

LICENSED LANDSCAPE ARCHITECT
Robert B. Schott 3655
Signature
11-04-08
Renewal Date
08-11-08
Date
STATE OF CALIFORNIA

The State of California or its officers or agents shall not be responsible for the accuracy or completeness of electronic copies of this plan sheet.

To accompany plans dated 10-13-10

FLEXIBLE SEDIMENT BARRIER SPACING TABLE

SLOPE OF ROADWAY (PERCENT)	0 to 0.9	1 to 1.9	2 to 2.9	3 to 4	5+
INTERVAL BETWEEN BARRIERS	50′	35′	30′	25′	20′
ANGLE FROM FACE OF CURB	70°	70°	70°	45°	45°
SUGGESTED BARRIER LENGTH	6′	6′	6′	6′	6′

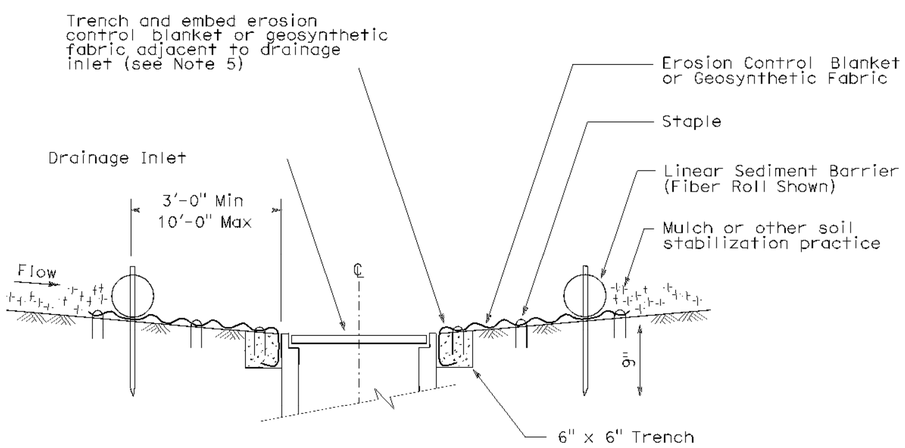

SECTION A-A

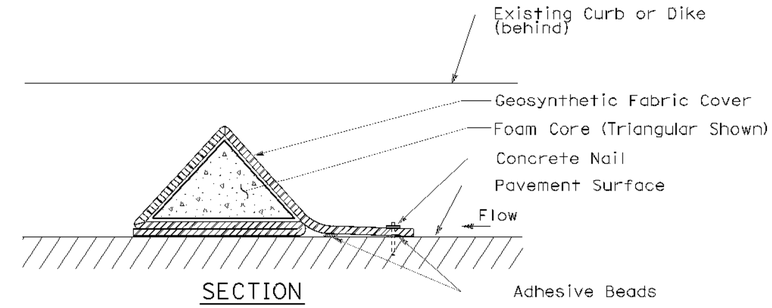

SECTION

FLEXIBLE SEDIMENT BARRIER DETAIL
(FOAM BARRIER SHOWN)

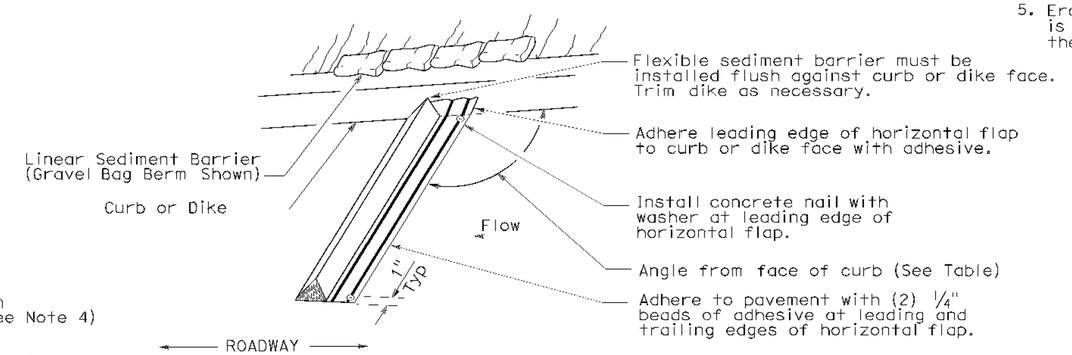

PERSPECTIVE

NOTES:

1. See Standard Plan T51 for Temporary Silt Fence.
2. Dimensions may vary to fit field conditions.
3. Install a minimum of 3 flexible sediment barriers upstream of each drainage inlet to be protected.
4. Position erosion control blanket or geosynthetic fabric at edge of concrete apron and secure in trench.
5. Erosion control blanket or geosynthetic fabric is not required if the area adjacent to the drainage inlet is vegetated.

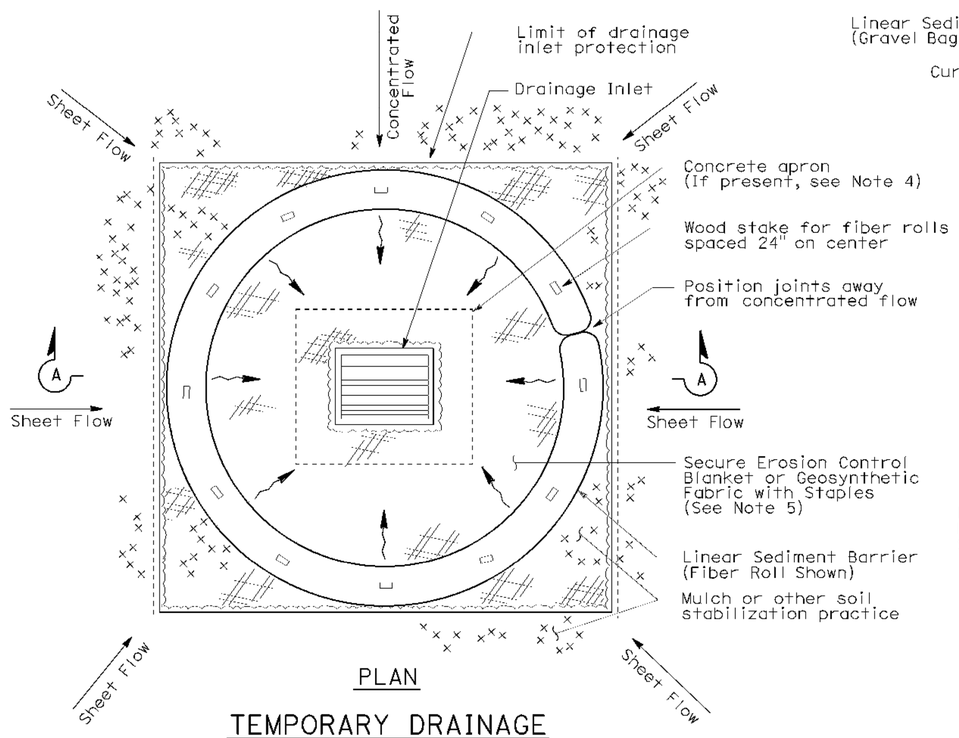

PLAN

TEMPORARY DRAINAGE
INLET PROTECTION (TYPE 4A)

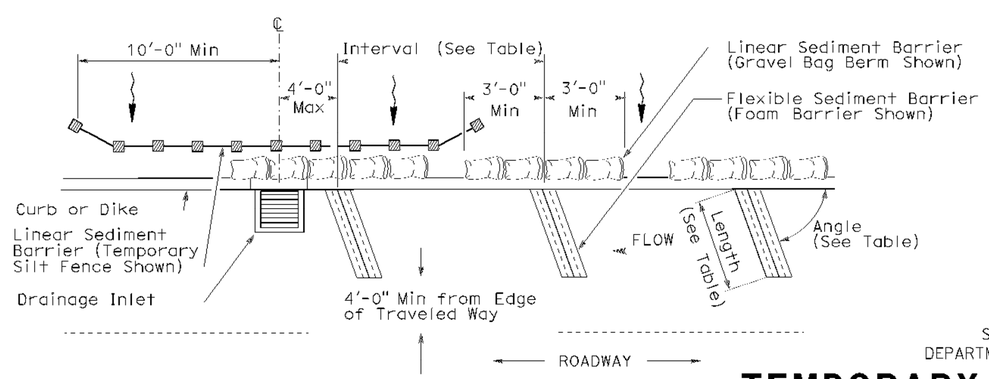

PLAN

TEMPORARY DRAINAGE
INLET PROTECTION (TYPE 4B)
FLEXIBLE SEDIMENT BARRIER

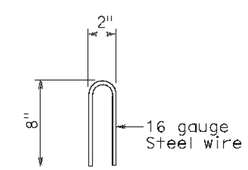

STAPLE DETAIL

STATE OF CALIFORNIA
DEPARTMENT OF TRANSPORTATION

TEMPORARY WATER POLLUTION CONTROL DETAILS (TEMPORARY DRAINAGE INLET PROTECTION)

NO SCALE

NSP T63 DATED AUGUST 15, 2008 SUPPLEMENTS
THE STANDARD PLANS BOOK DATED MAY 2006.

NEW STANDARD PLAN NSP T63

2006 NEW STANDARD PLAN NSP T63

P:\proj2\02\1E820_plans\pse\21e820va003.dgn

DIST	COUNTY	ROUTE	POST MILES TOTAL PROJECT	SHEET NO.	TOTAL SHEETS
02	Teh	36	85.8/87.5	22	30

Robert B Schott
LICENSED LANDSCAPE ARCHITECT

August 15, 2008
PLANS APPROVAL DATE

LICENSED LANDSCAPE ARCHITECT
Robert B. Schott 3685
Signature
11-04-08
Renewal Date
08-11-08
Date
STATE OF CALIFORNIA

The State of California or its officers or agents shall not be responsible for the accuracy or completeness of electronic copies of this plan sheet.

To accompany plans dated 10-13-10

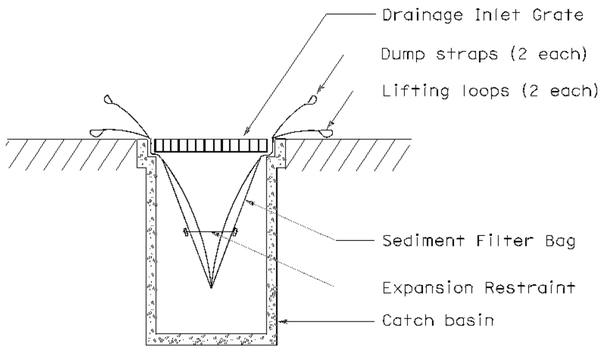

SECTION B-B

SEDIMENT FILTER BAG DETAIL

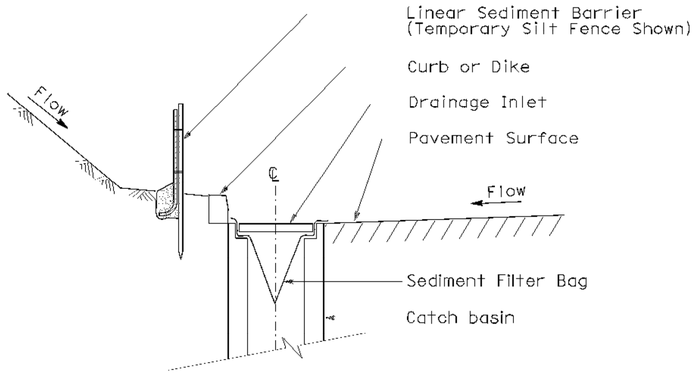

SECTION A-A

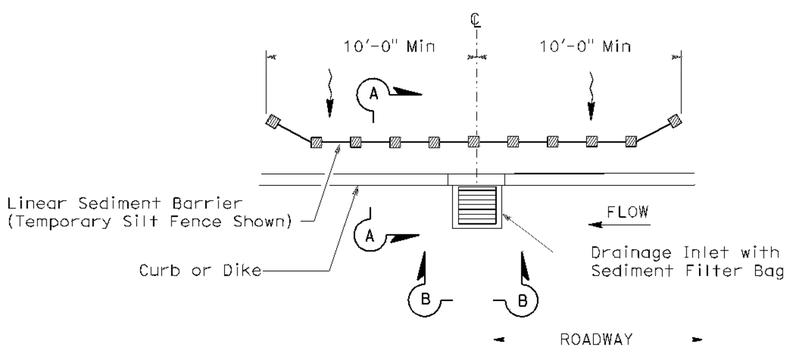

PLAN

TEMPORARY DRAINAGE INLET PROTECTION (TYPE 5) (SEDIMENT FILTER BAG)

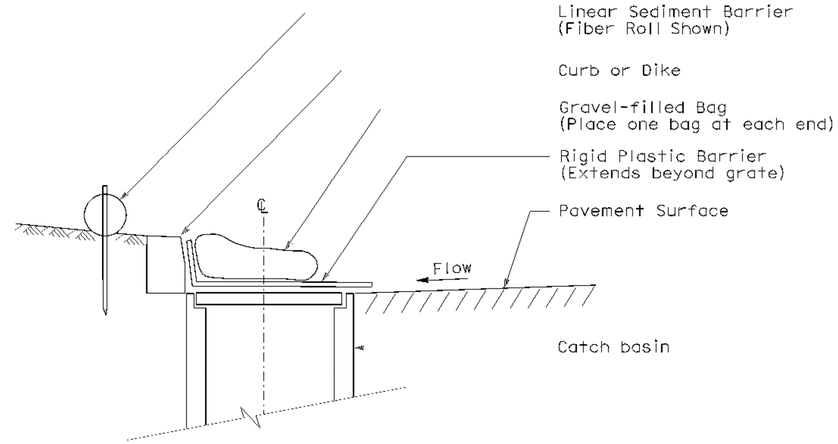

SECTION

TEMPORARY DRAINAGE INLET PROTECTION (TYPE 6A) (CATCH BASIN WITH GRATE)

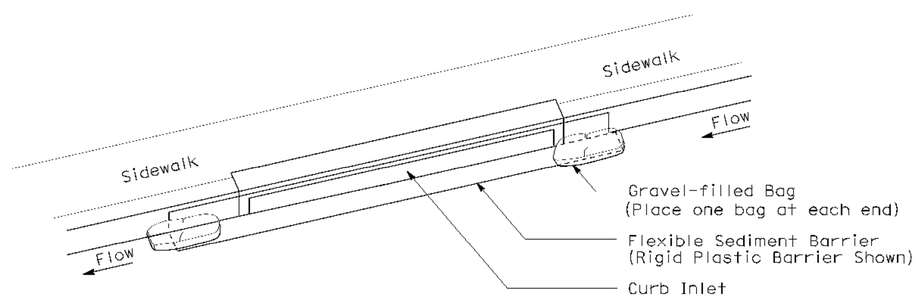

PERSPECTIVE

TEMPORARY DRAINAGE INLET PROTECTION (TYPE 6B) (CURB INLET WITHOUT GRATE)

NOTES:

1. See Standard Plan T51 for Temporary Silt Fence.
2. Dimensions may vary to fit field conditions.

STATE OF CALIFORNIA
DEPARTMENT OF TRANSPORTATION

TEMPORARY WATER POLLUTION CONTROL DETAILS (TEMPORARY DRAINAGE INLET PROTECTION)

NO SCALE

NSP T64 DATED AUGUST 15, 2008 SUPPLEMENTS
THE STANDARD PLANS BOOK DATED MAY 2006.

NEW STANDARD PLAN NSP T64

2006 NEW STANDARD PLAN NSP T64

P:\proj2\02\1E820_plans\pse\21e820va004.dgn

DIST	COUNTY	ROUTE	POST MILES TOTAL PROJECT	SHEET NO.	TOTAL SHEETS
02	Teh	36	85.8/87.5	23	30

Randell D. Hiatt
REGISTERED CIVIL ENGINEER

June 6, 2008
PLANS APPROVAL DATE

REGISTERED PROFESSIONAL ENGINEER
Randell D. Hiatt
No. C50200
Exp. 6-30-09
CIVIL
STATE OF CALIFORNIA

The State of California or its officers or agents shall not be responsible for the accuracy or completeness of electronic copies of this plan sheet.

To accompany plans dated 10-13-10

NOTES:

1. When necessary to place dike in front of face of guard railing, only Type C dike may be used. For dike details, see Standard Plan A87B.
2. For standard railing post embedment, see Standard Plans A77C3.
3. Guard railing delineation to be used where shown on the Project Plans.
4. When dike or curb is placed under guard railing, the maximum height of the dike or curb shall be 4". Mountable dike should not be used. For dike and curb details, see Revised Standard Plans RSP A87A and Standard Plan A87B.
5. For details of typical distance between the face of rail and hinge point, see Standard Plan A77C3.

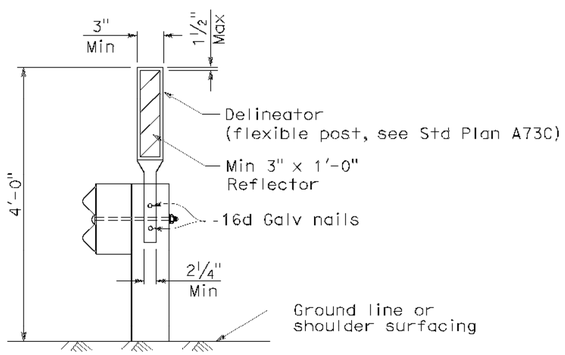

GUARD RAILING DELINEATION

See Note 3

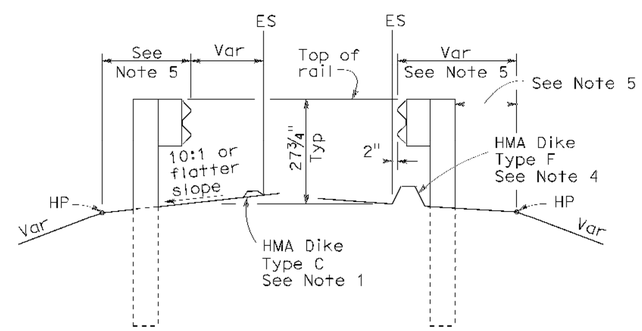

DIKE POSITIONING

See Note 1

STATE OF CALIFORNIA
DEPARTMENT OF TRANSPORTATION

METAL BEAM GUARD RAILING TYPICAL RAILING DELINEATION AND DIKE POSITIONING DETAILS

NO SCALE

RSP A77C4 DATED JUNE 6, 2008 SUPERSEDES STANDARD PLAN A77C4
DATED MAY 1, 2006 - PAGE 47 OF THE STANDARD PLANS BOOK DATED MAY 2006.

REVISED STANDARD PLAN RSP A77C4

2006 REVISED STANDARD PLAN RSP A77C4

P:\proj2\02\1E820_plans\pse\21e820va005.dgn

12 10 07

DIST	COUNTY	ROUTE	POST MILES TOTAL PROJECT	SHEET NO.	TOTAL SHEETS
02	Teh	36	85.8/87.5	24	30

Randell D. Hiatt
REGISTERED CIVIL ENGINEER

June 6, 2008
PLANS APPROVAL DATE

REGISTERED PROFESSIONAL ENGINEER Randell D. Hiatt No. C50200 Exp. 6-30-09 CIVIL STATE OF CALIFORNIA

The State of California or its officers or agents shall not be responsible for the accuracy or completeness of electronic copies of this plan sheet.

To accompany plans dated 10-13-10

2006 REVISED STANDARD PLAN RSP A77E3

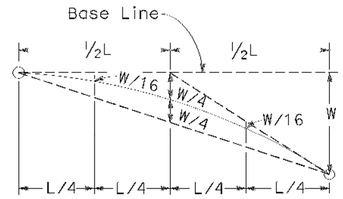

TYPICAL PARABOLIC LAYOUT

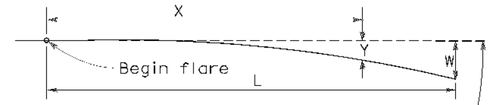

Base Line (Edge of paved shoulder or offset line of edge of traveled way)

$$Y = \frac{WX^2}{L^2}$$

Y = Offset from base line
W = Maximum offset
X = Distance along base line
L = Length of flare

PARABOLIC FLARE OFFSETS

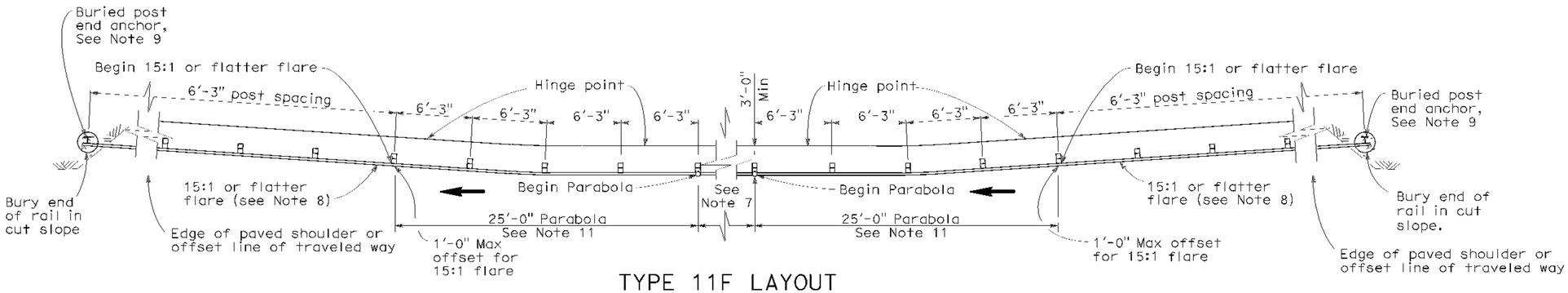

TYPE 11F LAYOUT

(EMBANKMENT GUARD RAILING INSTALLATION WITH A BURIED END ANCHOR TREATMENT AT EACH END OF RAILING)
See Notes 5 and 10

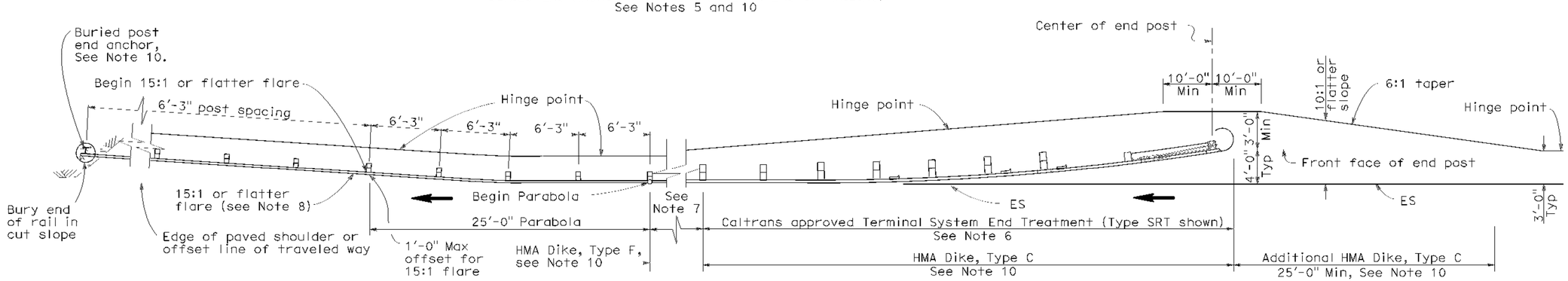

TYPE 11G LAYOUT

(EMBANKMENT GUARD RAILING INSTALLATION WITH FLARED END TREATMENT AND A BURIED END ANCHOR TREATMENT AT THE ENDS OF RAILING)
See Notes 5 and 10

NOTES:

1. Line post, blocks and hardware to be used are shown on Standard Plans A77A1, A77A2, A77B1, A77C1 and A77C2.
2. Guard rail post spacing to be 6'-3" center to center, except as otherwise noted.
3. Except as noted, line posts are 6" x 8" x 6'-0" wood with 6" x 8" x 1'-2" wood blocks. W6 x 9 steel posts, 6'-0" in length, with 6" x 8" x 1'-2" notched wood blocks or plastic blocks may be used for 6" x 8" x 6'-0" wood post with 6" x 8" x 1'-2" wood blocks where applicable and when specified.
4. Direction of adjacent traffic indicated by ⟶.
5. Layout Types 11D through 11L, shown on the A77E Series of Revised Standard Plans, are typically used where guard railing is recommended to shield embankment slopes and a crashworthy end treatment is required for both directions of traffic.
6. The type of terminal system end treatment to be used will be shown on the Project Plans.
7. Dependent on site conditions (embankment height and side slope), construction of additional guard railing (length equal to multiples of 12'-6" with 6'-3" post spacing) may be advisable.
8. The 15:1 or flatter flare used with buried end anchors is based on the edge of the paved shoulder or offset line of edge of the traveled way. The length of guard railing within the 15:1 or flatter flare is based on site conditions and should be a length equal to multiples of 12'-6".
9. For details of the buried post end anchor used with Type 11F and 11G Layouts, see Standard Plan A77I2.
10. Where placement of dike is required with guard railing installations, see Revised Standard Plan RSP A77C4 for dike positioning details.
11. For typical flare offsets for 25'-0" length parabola with maximum offset of 1'-0", see Revised Standard Plan RSP A77E1.

STATE OF CALIFORNIA
DEPARTMENT OF TRANSPORTATION

METAL BEAM GUARD RAILING TYPICAL LAYOUTS FOR EMBANKMENTS

NO SCALE

RSP A77E3 DATED JUNE 6, 2008 SUPERSEDES STANDARD PLAN A77E3 DATED MAY 1, 2006 - PAGE 50 OF THE STANDARD PLANS BOOK DATED MAY 2006.

REVISED STANDARD PLAN RSP A77E3

P:\proj2\02\1E820_plans\pse\21e820va006.dgn

12 10 07

DIST	COUNTY	ROUTE	POST MILES TOTAL PROJECT	SHEET NO.	TOTAL SHEETS
02	Teh	36	85.8/87.5	25	30

Raymond Don Tsztoo
REGISTERED CIVIL ENGINEER

June 6, 2008
PLANS APPROVAL DATE

REGISTERED PROFESSIONAL ENGINEER
Raymond Don Tsztoo
No. C37332
Exp. 6-30-08
CIVIL
STATE OF CALIFORNIA

The State of California or its officers or agents shall not be responsible for the accuracy or completeness of electronic copies of this plan sheet.

To accompany plans dated 10-13-10

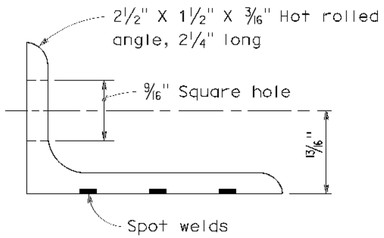

ANGLE

NOTES:

1. All ferrous metal coupling band connection hardware shall be galvanized or electroplated in accordance with the Standard Specifications.
2. Dimensions and thicknesses shown are minimum.
3. Spot welds shall develop minimum required strength of strap.
4. Fillet welds of equivalent strength may be substituted for spot welds or rivets.
5. Dimension depends upon whether end condition is lips up or lips down.

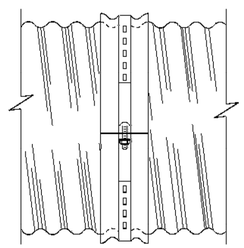

SIDE VIEW
ANGLE

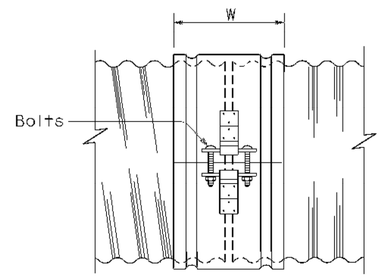

SIDE VIEW
SINGLE BAR AND STRAP

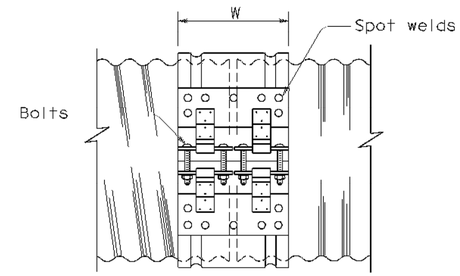

SIDE VIEW
DOUBLE BAR AND STRAP

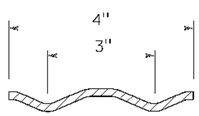

SECTION

H-4 HUGGER BAND

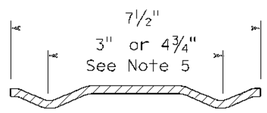

SECTION

H-7 HUGGER BAND

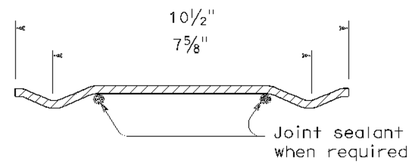

SECTION

H-10 HUGGER BAND

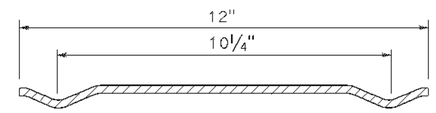

SECTION

H-12 HUGGER BAND

HUGGER COUPLING BANDS

STATE OF CALIFORNIA
DEPARTMENT OF TRANSPORTATION

CORRUGATED METAL PIPE COUPLING DETAILS No. 4 HUGGER COUPLING BANDS

NO SCALE

RSP D97D DATED JUNE 6, 2008 SUPERSEDES STANDARD PLAN D97D
DATED MAY 1, 2006 - PAGE 186 OF THE STANDARD PLANS BOOK DATED MAY 2006.

REVISED STANDARD PLAN RSP D97D

2006 REVISED STANDARD PLAN RSP D97D

P:\proj2\02\1E820_plans\pse\21e820va007.dgn

5 24 08

DIST	COUNTY	ROUTE	POST MILES TOTAL PROJECT	SHEET NO.	TOTAL SHEETS
02	Teh	36	85.8/87.5	26	30

Raymond Don Tsztoo
REGISTERED CIVIL ENGINEER

June 6, 2008
PLANS APPROVAL DATE

REGISTERED PROFESSIONAL ENGINEER Raymond Don Tsztoo No. C37332 Exp. 6-30-08 CIVIL STATE OF CALIFORNIA

The State of California or its officers or agents shall not be responsible for the accuracy or completeness of electronic copies of this plan sheet.

ANNULAR AND HELICAL PROFILE

COUPLING TYPE	PIPE CORRUGATION	PIPE SIZE	W OR A	PIPE WALL THICKNESS CSP	PIPE WALL THICKNESS CAP	BAND THICKNESS CSP	BAND THICKNESS CAP	BAR AND STRAP (CSP ONLY) STRAP THICKNESS	BOLTS Dia	BAR Dia	BAR YIELD STRENGTH	ANGLE DIMENSIONS CSP	ANGLE DIMENSIONS CAP	BOLTS (No.- Dia) CSP	BOLTS (No.- Dia) CAP	RIVETS ANGLE TO BAND CSP	RIVETS ANGLE TO BAND CAP	SPOT WELDS ANGLE TO BAND CSP
TWO PIECE INTEGRAL FLANGE	1½′ × ¼"	6"-10"	7"	0.052"-0.079"	0.048"-0.060"	0.052"	0.060"							2-⅜"	2-⅜"			
		12"-18"	7"	0.052"-0.079"		0.064"								2-½"				
	2⅔" × ½"	12"-24"	7"	0.052"-0.079"	0.060"-0.105"	0.064"	0.060"							2-½"	2-½"			
UNIVERSAL	2⅔" × ½"	THROUGH 36"	12"	0.052"-0.138"	0.060"-0.135"	0.052"	0.060"					2" × 2" × 3/16"	2" × 2" × 3/16"	3-½"	3-½"	3-⅜"	3-⅜"	3-½"
		42"-60"	12"	0.052"-0.168"	0.075"-0.164"	0.052"	0.060"					2" × 2" × 3/16"	2" × 2" × 3/16"	3-½"	3-½"	3-⅜"	3-⅜"	5-½"
		THROUGH 72"	12"	0.052"-0.168"	0.164"	0.052"	0.105"	0.079"	½"	⅞"	32 ksi	2" × 2" × 3/16"	2" × 2" × 3/16"	3-½"	3-½"	3-⅜"	3-⅜"	5-½"
		78"-84"	16¼"	0.168"		0.079"		DOUBLE 0.079"	½"	⅞"	32 ksi							
ANNULAR	2⅔" × ½"	THROUGH 36"	7"	0.064"-0.138"	0.060"-0.135"	0.052"	0.060"	0.079"	½"	⅞"	32 ksi	2" × 2" × 3/16"	2" × 2" × 3/16"	2-½"	2-½"	3-⅜"	3-⅜"	3-½"
		42"-72"	12"	0.064"-0.168"	0.075"-0.164"	0.052"	0.105"	0.079"	½"	⅞"	32 ksi	2" × 2" × 3/16"	2" × 2" × 3/16"	3-½"	3-½"	3-⅜"	3-⅜"	5-½"
		78"-84"	12"	0.168"		0.079"		0.109"	½"	⅞"	45 ksi	2" × 2" × 3/16"		3-½"		3-⅜"		5-½"
	3" × 1"	48"-90"	14"	0.064"-0.109"		0.052"		0.079"	½"	⅞"	32 ksi	2" × 2" × 3/16"		3-½"		3-⅜"		5-½"
		96"-120"	14"	0.079"-0.109"		0.052"		0.109"	½"	⅞"	45 ksi	2" × 2" × 3/16"		3-½"		4-⅜"		
		42"-108"	14"		0.060"-0.135"		0.060"						2" × 2" × 3/16"		3-½"		3-⅜"	
HELICAL	2⅔" × ½"	THROUGH 36"	12"	0.052"-0.138"	0.060"-0.135"	0.052"	0.060"	0.079"	½"	⅞"	32 ksi	2" × 2" × 3/16"	2" × 2" × 3/16"	3-½"	3-½"	3-⅜"	3-⅜"	3-½"
		42"-72"	12"	0.052"-0.168"	0.075"-0.164"	0.052"	0.060"	0.079"	½"	⅞"	32 ksi	2" × 2" × 3/16"	2" × 2" × 3/16"	3-½"	3-½"	3-⅜"	3-⅜"	5-½"
		78"-84"	12"	0.168"		0.079"		0.109"	½"	⅞"	45 ksi	2" × 2" × 3/16"		3-½"		3-⅜"		5-½"
	3" × 1"	48"-90"	14"	0.064"-0.109"		0.052"		0.079"	½"	⅞"	32 ksi	2" × 2" × 3/16"		3-½"		3-⅜"		5-½"
		96"-120"	14"	0.079"-0.109"		0.052"		0.109"	½"	⅞"	45 ksi	2" × 2" × 3/16"		3-½"		4-⅜"		
		42"-108"	14"		0.060"-0.135"		0.060"						2" × 2" × 3/16"		3-½"		3-⅜"	
HUGGER	2⅔" × ½" REROLLED END	12"-54"	4"	0.052"-0.109"		0.052"						2½" × 1½" × 3/16"	2½" × 1½" × 3/16"	1-½"				3-½"
		60"-66"	4"	0.109"		0.064"						2½" × 1½" × 3/16"	2½" × 1½" × 3/16"	1-½"				3-½"
		36"-48"	4"	0.138"		0.064"						2½" × 1½" × 3/16"	2½" × 1½" × 3/16"	1-½"				3-½"
		THROUGH 72"	10½"	0.052"-0.168"		0.052"		0.079"	½"	⅞"	32 ksi							
		78"-84"	10½"	0.168"		0.079"		0.109"	½"	⅞"	45 ksi							
	3" × 1" REROLLED END	48"-90"	10½"	0.064"-0.109"		0.052"		0.079"	½"	⅞"	32 ksi							
		96"-120"	10½"	0.079"-0.109"		0.052"		0.109"	½"	⅞"	45 ksi							
	5" × 1" REROLLED END	48"-66"	7½"	0.064"-0.109"		0.064"		0.079"	½"	⅞"	32 ksi	2½" × 1½" × 3/16"	2½" × 1½" × 3/16"	1-½"				3-½"
		72"-90"	7½"	0.064"-0.079"		0.064"		0.079"	½"	⅞"	32 ksi	2½" × 1½" × 3/16"	2½" × 1½" × 3/16"	1-½"				3-½"
		48"-90"	7½"	0.064"-0.138"		0.064"		0.079"	½"	⅞"	32 ksi							
		48"-120"	12" SEE	0.064"-0.109"		0.064"		0.079"	½"	⅞"	32 ksi							
		48"-84"	12" NOTE	0.138"		0.064"		0.079"	½"	⅞"	32 ksi							
		90"-120"	12" 11	0.138"		0.064"		DOUBLE 0.079"	½"	⅞"	32 ksi							

SPIRAL RIB PROFILE

COUPLING TYPE	PIPE CORRUGATION	PIPE SIZE	W	PIPE WALL THICKNESS SSRP	PIPE WALL THICKNESS ASRP	BAND THICKNESS SSRP	BAND THICKNESS ASRP	BAR AND STRAP (SSRP ONLY) STRAP THICKNESS	BOLTS Dia	BAR Dia	BAR YIELD STRENGTH	ANGLE DIMENSIONS SSRP	ANGLE DIMENSIONS ASRP	BOLTS (No.- Dia) SSRP	BOLTS (No.- Dia) ASRP	RIVETS ANGLE TO BAND SSRP	RIVETS ANGLE TO BAND ASRP	SPOT WELDS ANGLE TO BAND SSRP
ANNULAR	2⅔" × ½" * REROLLED END	24"-36"	12"	0.064"-0.109"	0.060"-0.105"	0.052"	0.060"	0.079"	½"	⅞"	32 ksi	2" × 2" × 3/16"	2" × 2" × 3/16"	3-½"	3-½"	3-⅜"	3-⅜"	5-½"
		42"-60"	12"	0.064"-0.109"	0.075"-0.105"	0.052"	0.105"	0.079"	½"	⅞"	32 ksi	2" × 2" × 3/16"	2" × 2" × 3/16"	3-½"	3-½"	3-⅜"	3-⅜"	5-½"
		66"-72"	12"	0.064"-0.109"		0.052"		0.079"	½"	⅞"	32 ksi	2" × 2" × 3/16"	2" × 2" × 3/16"	3-½"	3-½"	3-⅜"	3-⅜"	5-½"
		78"-114"	12"	0.079"-0.109"		0.079"		0.109"	½"	⅞"	45 ksi	2" × 2" × 3/16"	2" × 2" × 3/16"	3-½"	3-½"	3-⅜"	3-⅜"	5-½"
HUGGER	2⅔" × ½" * REROLLED END	24"-72"	10½"	0.064"-0.109"		0.052"		0.079"	½"	⅞"	32 ksi							
		78"-84"	10½"	0.109"		0.079"		0.109"	½"	⅞"	45 ksi							

* See Note 14.

14. All profiles of Spiral Rib Pipe (¾" × ¾" ribs at 7½" pitch and ¾" × 1" ribs at 11½" pitch in both steel and aluminum and ¾" × 1" ribs at 8½" pitch in steel only) shall be manufactured with rerolled ends. Corrugation profile of the rerolled ends shall be 2⅔" × ½" annual corrugations with a minimum of two full corrugations at each end.

NOTES:

To accompany plans dated 10-13-10

1. All ferrous metal coupling band connection hardware shall be galvanized or electroplated in accordance with the Standard Specifications.
2. For helically corrugated coupling bands, the connection angles may be oriented parallel to the pipe axis, provided connecting holes are slotted lengthwise sufficiently to allow adjustment for the helix angle.
3. Tension strap may be connected to band with either spot welds or fillet welds that develop minimum required strength of strap.
4. Use 1¼" gage line dimension on attached angle leg for rivets and spot welds.
5. Band thickness shall not be less than:
   a. 3 standard thicknesses lighter than the thickness of the pipe for Corrugated Steel Pipe.
   b. 2 standard thicknesses lighter than the thickness of the pipe and in no case lighter than 0.060" for Corrugated Aluminum Pipe.
6. Dimensions, thicknesses and strengths shown are minimum.
7. For pipe arches use same width band as for round pipe of equal periphery.
8. Fillet welds of equivalent strenght may be substituted for spot welds or rivets.
9. Spot welds shall develop minimum required strength of strap.
10. Pipe with rerolled ends having at least two 2⅔" × ½" annular corrugations at each end with or without an upturned flange may be connected with any of the annular coupling bands shown for pipe of the same diameter and wall thickness and having 2⅔" × ½" corrugations.
11. In the case of H-12 huggerbands, two piece bands are required for diameters through 96" and three piece bands are required for diameters 102" through 120".
12. Two piece bands are required for pipes greater than 42" diameter.
13. The 2¼" × 2" × 0.109" thick galvanized die-formed angle connector may be used in lieu of the 2" × 2" × 3/16" angle connector for standard joints only on pipes through 72" diameter.

STATE OF CALIFORNIA
DEPARTMENT OF TRANSPORTATION

CORRUGATED METAL PIPE COUPLING DETAILS No. 5 STANDARD JOINT

NO SCALE

RSP D97E DATED JUNE 6, 2008 SUPERSEDES STANDARD PLAN D97E DATED MAY 1, 2006 - PAGE 187 OF THE STANDARD PLANS BOOK DATED MAY 2006.

REVISED STANDARD PLAN RSP D97E

2006 REVISED STANDARD PLAN RSP D97E

P:\proj2\02\1E820_plans\pse\21e820va008.dgn

4 7 08

DIST	COUNTY	ROUTE	POST MILES TOTAL PROJECT	SHEET NO.	TOTAL SHEETS
02	Teh	36	85.8/87.5	27	30

Randell D. Hiatt
REGISTERED CIVIL ENGINEER

June 6, 2008
PLANS APPROVAL DATE

REGISTERED PROFESSIONAL ENGINEER
Randell D. Hiatt
No. C50200
Exp. 6-30-09
CIVIL
STATE OF CALIFORNIA

The State of California or its officers or agents shall not be responsible for the accuracy or completeness of electronic copies of this plan sheet.

To accompany plans dated 10-13-10

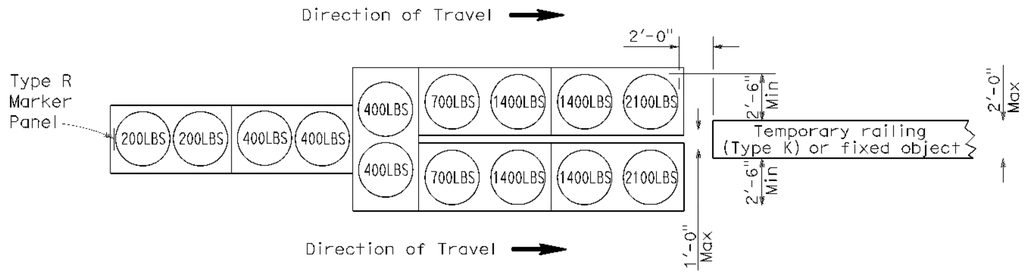

ARRAY 'TU14'

Approach speed 45 mph or more

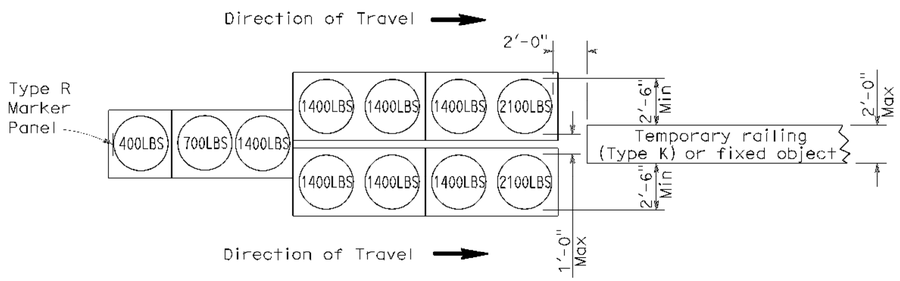

ARRAY 'TU11'

Approach speed less than 45 mph

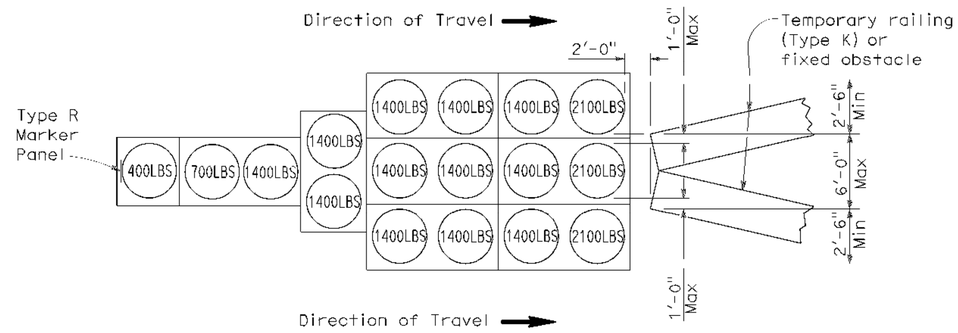

ARRAY 'TU17'

Approach speed less than 45 mph

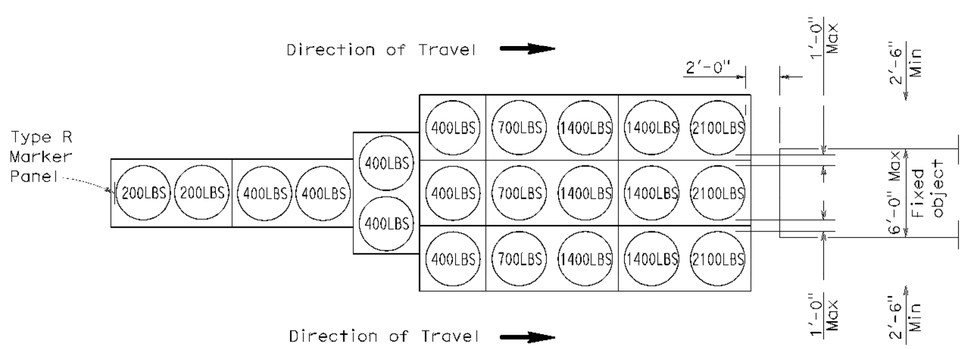

ARRAY 'TU21'

Approach speed 45 mph or more

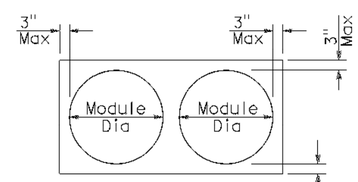

PLAN

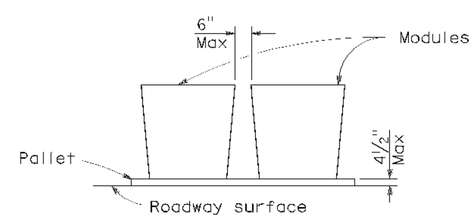

ELEVATION

CRASH CUSHION PALLET DETAIL

See Note 7

NOTES:

1. (XXX) Indicates sand filled module location and weight of sand in pounds for each module. Module spacing is based on the greater diameter of the module.
2. All sand weights are nominal.
3. Temporary crash cushion arrays shall not encroach on the traveled way.
4. Place the top of Type R marker panel 1" below the module lid.
5. Refer to Standard Plan A73B for marker details.
6. Approach speeds indicated conform to NCHRP 350 Report criteria.
7. Use of pallets is optional.

STATE OF CALIFORNIA
DEPARTMENT OF TRANSPORTATION

TEMPORARY CRASH CUSHION, SAND FILLED (UNIDIRECTIONAL)

NO SCALE

RSP T1A DATED JUNE 6, 2008 SUPERSEDES STANDARD PLAN T1A DATED MAY 1, 2006 - PAGE 211 OF THE STANDARD PLANS BOOK DATED MAY 2006.

REVISED STANDARD PLAN RSP T1A

2006 REVISED STANDARD PLAN RSP T1A

P:\proj2\02\1E820_plans\pse\21e820va009.dgn

5 15 08

DIST	COUNTY	ROUTE	POST MILES TOTAL PROJECT	SHEET NO.	TOTAL SHEETS
02	Teh	36	85.8/87.5	28	30

Randell D. Hiatt
REGISTERED CIVIL ENGINEER

June 6, 2008
PLANS APPROVAL DATE

REGISTERED PROFESSIONAL ENGINEER
Randell D. Hiatt
No. C50200
Exp. 6-30-09
CIVIL
STATE OF CALIFORNIA

The State of California or its officers or agents shall not be responsible for the accuracy or completeness of electronic copies of this plan sheet.

To accompany plans dated 10-13-10

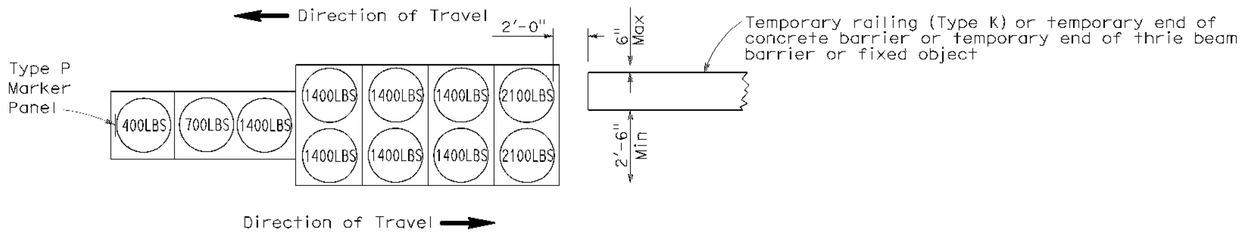

ARRAY 'TB11'

Approach speed less than 45 mph

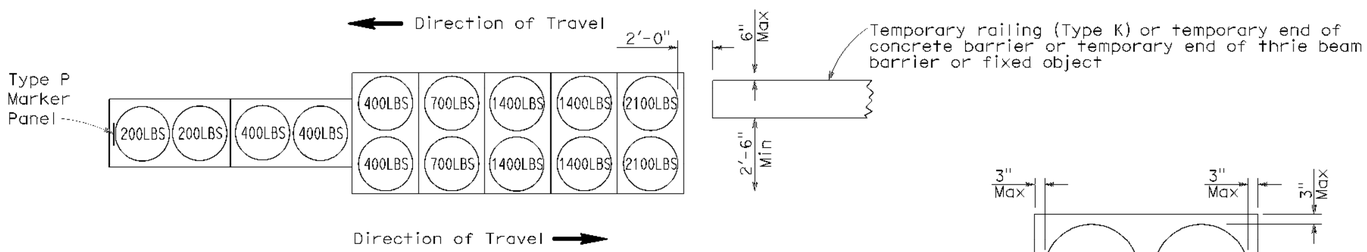

ARRAY 'TB14'

Approach speed 45 mph or more

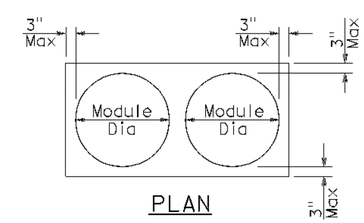

PLAN

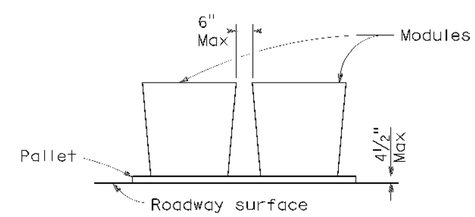

ELEVATION

CRASH CUSHION PALLET DETAIL

See Note 7

NOTES:

1. (XXX) Indicates sand filled module location and weight of sand in pounds for each module. Module spacing is based on the greater diameter of the module.
2. All sand weights are nominal.
3. Temporary crash cushion arrays shall not encroach on the traveled way.
4. Place the Type P marker panel so that the bottom of the panel rests upon the pallet.
5. Refer to Standard Plan A73B for marker details.
6. Approach speeds indicated conform to NCHRP 350 Report criteria.
7. Use of pallets is optional.

STATE OF CALIFORNIA
DEPARTMENT OF TRANSPORTATION

TEMPORARY CRASH CUSHION, SAND FILLED (BIDIRECTIONAL)

NO SCALE

RSP T1B DATED JUNE 6, 2008 SUPERSEDES STANDARD PLAN T1B
DATED MAY 1, 2006 - PAGE 212 OF THE STANDARD PLANS BOOK DATED MAY 2006.

REVISED STANDARD PLAN RSP T1B

2006 REVISED STANDARD PLAN RSP T1B

P:\proj2\02\1E820_plans\pse\21e820va010.dgn

5 15 08

DIST	COUNTY	ROUTE	POST MILES TOTAL PROJECT	SHEET NO.	TOTAL SHEETS
02	Teh	36	85.8/87.5	29	30

Randell D. Hiatt
REGISTERED CIVIL ENGINEER

June 6, 2008
PLANS APPROVAL DATE

REGISTERED PROFESSIONAL ENGINEER
Randell D. Hiatt
No. C50200
Exp. 6-30-09
CIVIL
STATE OF CALIFORNIA

The State of California or its officers or agents shall not be responsible for the accuracy or completeness of electronic copies of this plan sheet.

To accompany plans dated 10-13-10

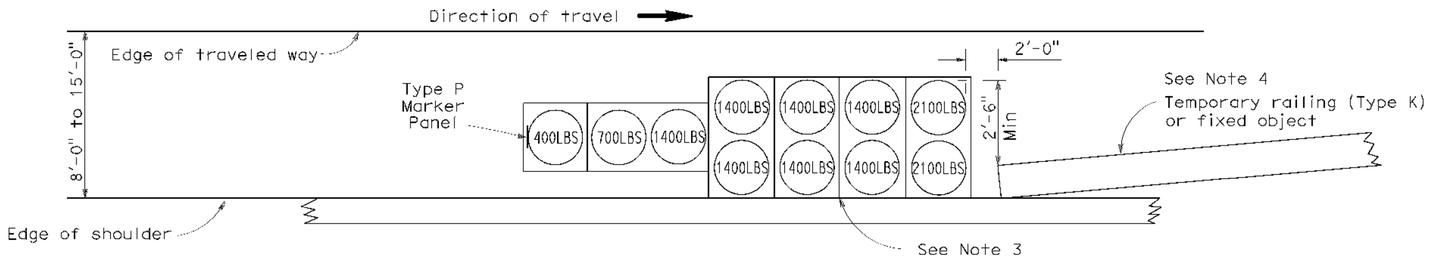

ARRAY 'TS11'

Approach speed less than 45 mph
See Note 9

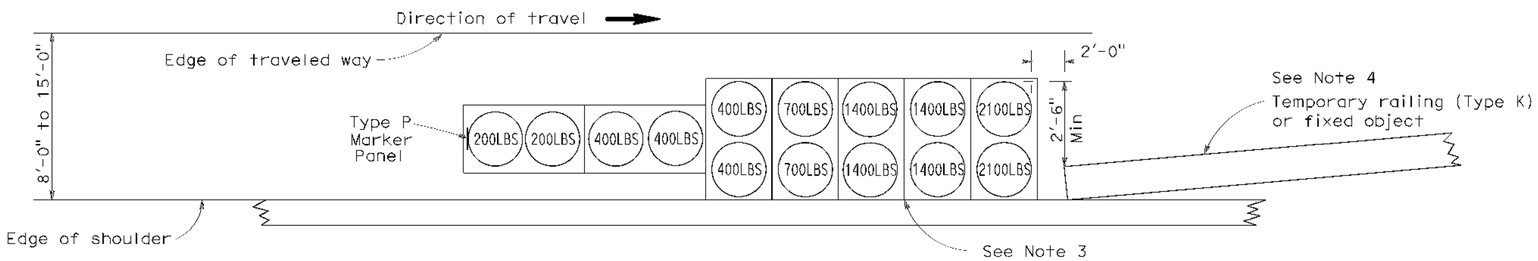

ARRAY 'TS14'

Approach speed 45 mph or more
See Note 9

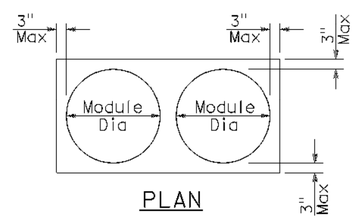

PLAN

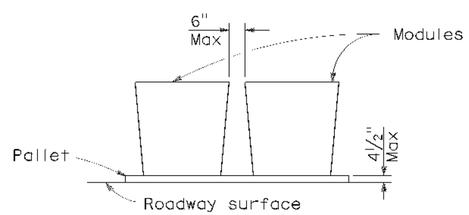

ELEVATION

CRASH CUSHION PALLET DETAIL

See Note 11

NOTES:

1. (XXX) Indicates sand filled module location and weight of sand in pounds for each module. Module spacing is based on the greater diameter of the module.
2. All sand weights are nominal.
3. The temporary crash cushion arrays shown on this plan shall be used only in locations where there will be traffic on one side of the temporary crash cushion array.
4. If the fixed object or approach end of the temporary railing is less than 15'-0" from the edge of traveled way, a temporary crash cushion is required in a construction or work zone.
5. Temporary crash cushion arrays shall not encroach on the traveled way.
6. Arrays for median shoulders shall conform to details shown on this plan for outside shoulders.
7. Place the Type P marker panel so that the bottom of the panel rests upon the pallet and faces traffic.
8. Refer to Standard Plan A73B for marker details.
9. For shoulder widths less than 8'-0", appropriate approved crash cushion protection, other than sand filled modules, shall be provided at fixed objects and at approach ends of temporary railing. The specific type of crash cushion shall be as shown on the project plans or as specified in the Special Provisions, or if not shown on the project plans or specified in the Special Provisions, shall be as approved by the Engineer.
10. Approach speeds indicated conform to NCHRP 350 Report criteria.
11. Use of pallets is optional.

STATE OF CALIFORNIA
DEPARTMENT OF TRANSPORTATION

TEMPORARY CRASH CUSHION, SAND FILLED (SHOULDER INSTALLATIONS)

NO SCALE

RSP T2 DATED JUNE 6, 2008 SUPERSEDES STANDARD PLAN T2
DATED MAY 1, 2006 - PAGE 213 OF THE STANDARD PLANS BOOK DATED MAY 2006.

REVISED STANDARD PLAN RSP T2

2006 REVISED STANDARD PLAN RSP T2

P:\proj2\02\1E820_plans\pse\21e820va011.dgn

5 15 08

DIST	COUNTY	ROUTE	POST MILES TOTAL PROJECT	SHEET NO.	TOTAL SHEETS
02	Teh	36	85.8/87.5	30	30

LICENSED LANDSCAPE ARCHITECT

April 3, 2009
PLANS APPROVAL DATE

The State of California or its officers or agents shall not be responsible for the accuracy or completeness of electronic copies of this plan sheet.

LICENSED LANDSCAPE ARCHITECT — Robert B. Schott — Signature — 11-30-10 Renewal Date — 2-25-09 Date — STATE OF CALIFORNIA

To accompany plans dated 10-13-10

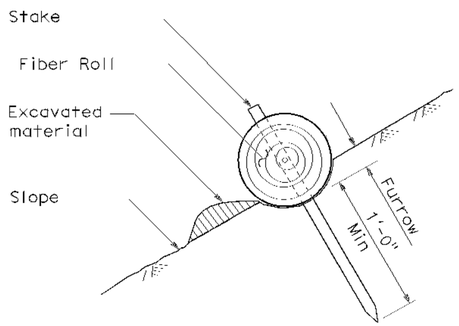

SECTION

TEMPORARY FIBER ROLL (TYPE 1)

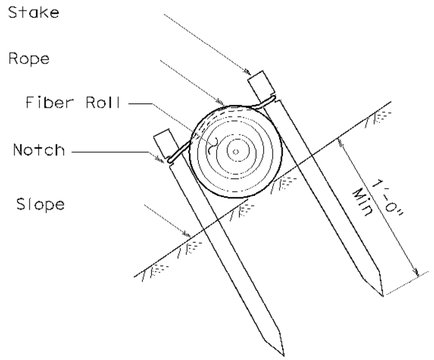

SECTION

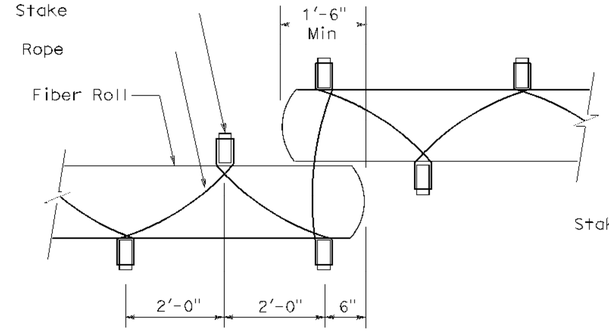

PLAN

TEMPORARY FIBER ROLL (TYPE 2)

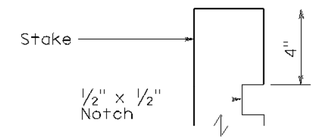

ELEVATION

STAKE NOTCH DETAIL

NOTES:

1. Temporary fiber roll spacing varies depending upon slope inclination.
2. Installations shown in the perspectives are for slope inclination of 10:1 and steeper.

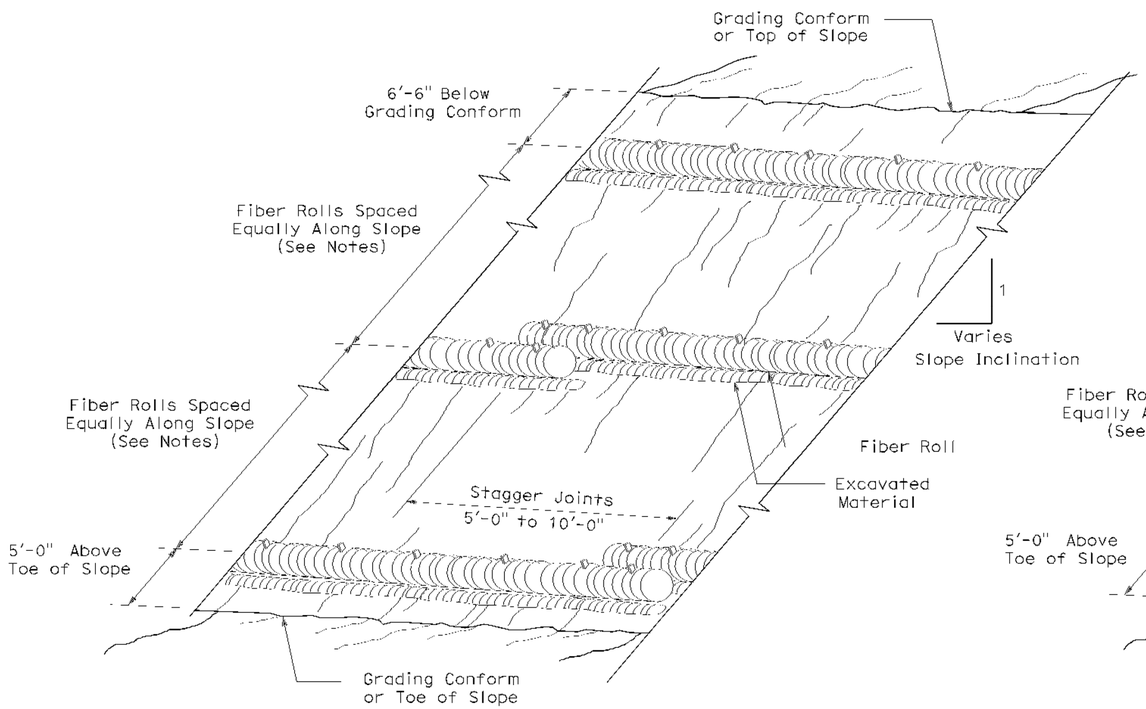

PERSPECTIVE

TEMPORARY FIBER ROLL (TYPE 1)

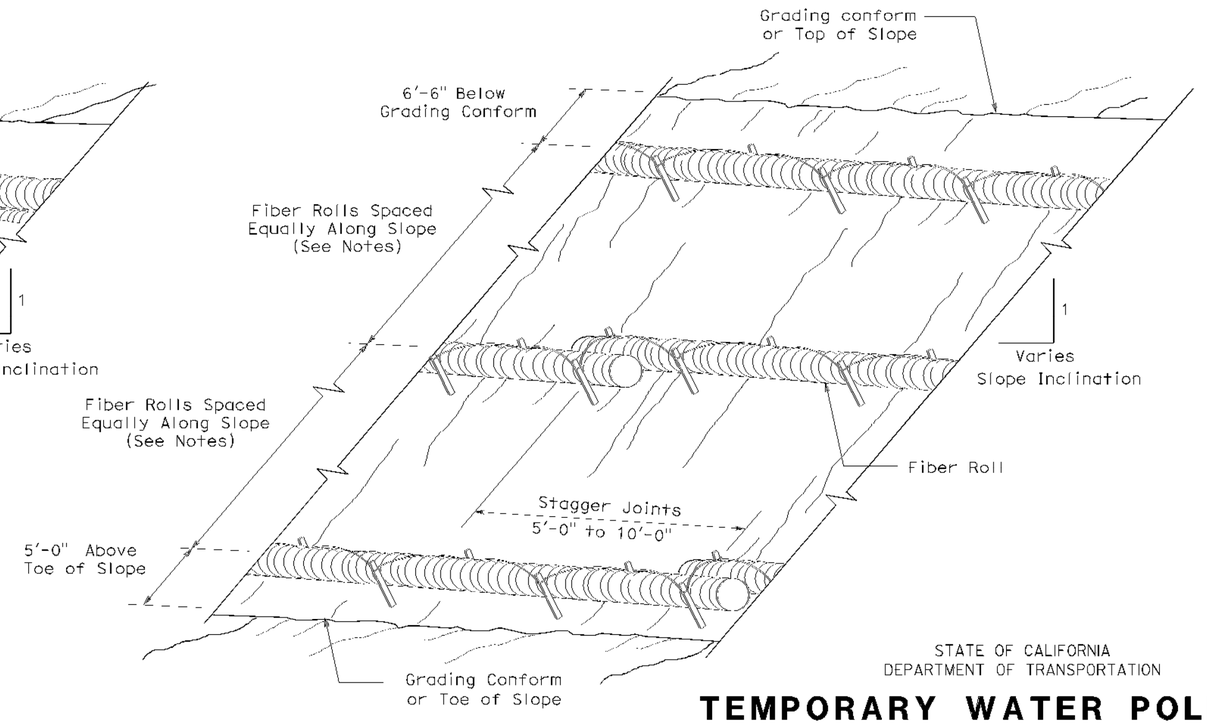

PERSPECTIVE

TEMPORARY FIBER ROLL (TYPE 2)

STATE OF CALIFORNIA
DEPARTMENT OF TRANSPORTATION

TEMPORARY WATER POLLUTION CONTROL DETAILS (TEMPORARY FIBER ROLL)

NO SCALE

RSP T56 DATED APRIL 3, 2009 SUPERSEDES STANDARD PLAN T56
DATED MAY 1, 2006 - PAGE 232 OF THE STANDARD PLANS BOOK DATED MAY 2006.

REVISED STANDARD PLAN RSP T56

2006 REVISED STANDARD PLAN RSP T56

232

P:\proj2\02\1E820_plans\pse\21e820va012.dgn

2 23 09