Dist	COUNTY	ROUTE	POST MILES TOTAL PROJECT	SHEET No.	TOTAL SHEETS
02	Sha	44	R14.4/34.0	1	35

STATE OF CALIFORNIA

DEPARTMENT OF TRANSPORTATION

ACSTPNH-P044(052)E

PROJECT PLANS FOR CONSTRUCTION ON

STATE HIGHWAY

IN SHASTA COUNTY AT AND NEAR SHINGLETOWN FROM BEAR CREEK BRIDGE TO SANDHOUSE ROAD

TO BE SUPPLEMENTED BY STANDARD PLANS DATED MAY 2010

INDEX OF PLANS

SHEET No.	DESCRIPTION
1	TITLE AND LOCATION MAP
2	TYPICAL CROSS SECTIONS
3-8	CONSTRUCTION DETAILS
9	CONSTRUCTION AREA SIGNS
10	PAVEMENT DELINEATION DETAILS
11-12	PAVEMENT DELINEATION QUANTITIES
13-14	SUMMARY OF QUANTITIES
15-18	ELECTRICAL PLANS
19-35	REVISED STANDARD PLANS

THE STANDARD PLANS LIST APPLICABLE TO THIS CONTRACT IS INCLUDED IN THE NOTICE TO BIDDERS AND SPECIAL PROVISIONS BOOK.

LOCATION MAP

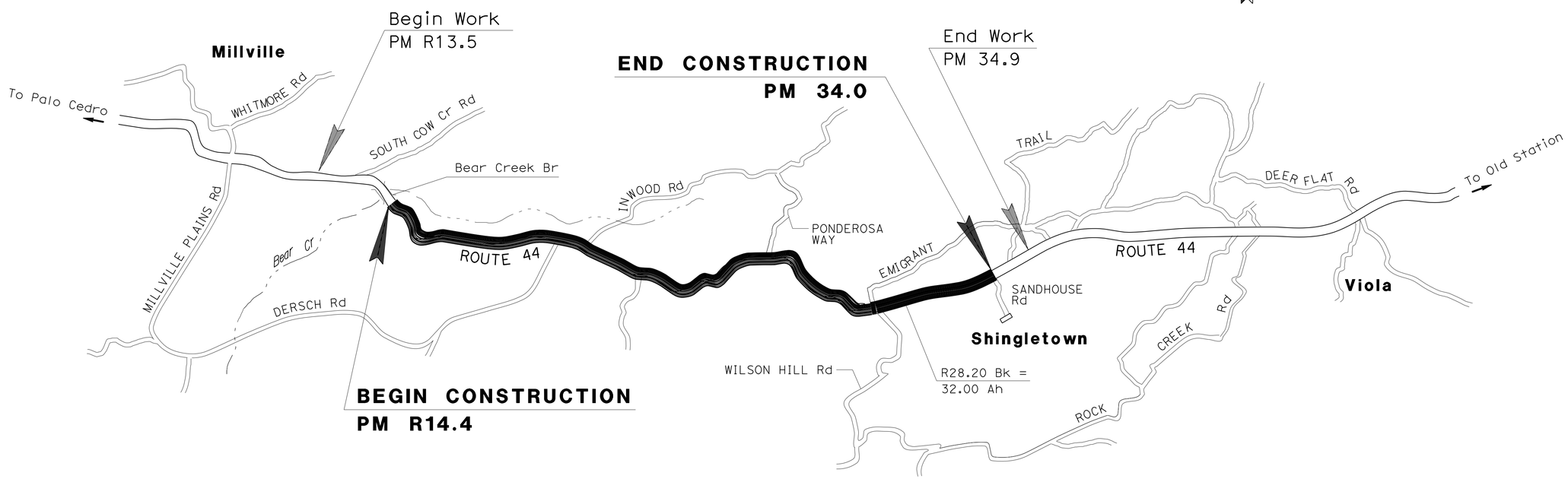

NO SCALE

THE CONTRACTOR SHALL POSSESS THE CLASS (OR CLASSES) OF LICENSE AS SPECIFIED IN THE "NOTICE TO BIDDERS."

Denise Fuzeré 02-12-15
PROJECT ENGINEER DATE
REGISTERED CIVIL ENGINEER

February 12, 2015
PLANS APPROVAL DATE

REGISTERED PROFESSIONAL ENGINEER DENISE FUZERE No. C69865 Exp. 09-30-16 CIVIL STATE OF CALIFORNIA

THE STATE OF CALIFORNIA OR ITS OFFICERS OR AGENTS SHALL NOT BE RESPONSIBLE FOR THE ACCURACY OR COMPLETENESS OF SCANNED COPIES OF THIS PLAN SHEET.

CONTRACT No.	02-0H3004
PROJECT ID	0214000160

PROJECT MANAGER: LANCE BROWN
DESIGN ENGINEER: LANCE BROWN

P:\proj3\02\0h300_plans\pse\20h300ab001.dgn

LAST REVISION 02-12-15 DATE PLOTTED => 17-FEB-2015 TIME PLOTTED => 06:52

Dist	COUNTY	ROUTE	POST MILES TOTAL PROJECT	SHEET No.	TOTAL SHEETS
02	Sha	44	R14.4/34.0	2	35

Denise Fuzere 02-12-15
REGISTERED CIVIL ENGINEER DATE

02-12-15
PLANS APPROVAL DATE

REGISTERED PROFESSIONAL ENGINEER DENISE FUZERE No. C69865 Exp. 09-30-16 CIVIL STATE OF CALIFORNIA

THE STATE OF CALIFORNIA OR ITS OFFICERS OR AGENTS SHALL NOT BE RESPONSIBLE FOR THE ACCURACY OR COMPLETENESS OF SCANNED COPIES OF THIS PLAN SHEET.

NOTES:

1. DIMENSIONS OF THE PAVEMENT STRUCTURES (STRUCTURAL SECTIONS) ARE SUBJECT TO TOLERANCES SPECIFIED IN THE STANDARD SPECIFICATIONS.
2. EXISTING UTILITY FACILITIES HAVE NOT BEEN INCLUDED ON THESE PLANS.
3. FOR ACCURATE RIGHT OF WAY DATA, CONTACT RIGHT OF WAY ENGINEERING AT THE DISTRICT OFFICE.

LEGEND:

RUMBLE STRIP — CENTER LINE RUMBLE STRIP (HMA, GROUND-IN INDENDATIONS)

PAVEMENT CLIMATE ZONES:

LOW MOUNTAIN
HIGH MOUNTAIN

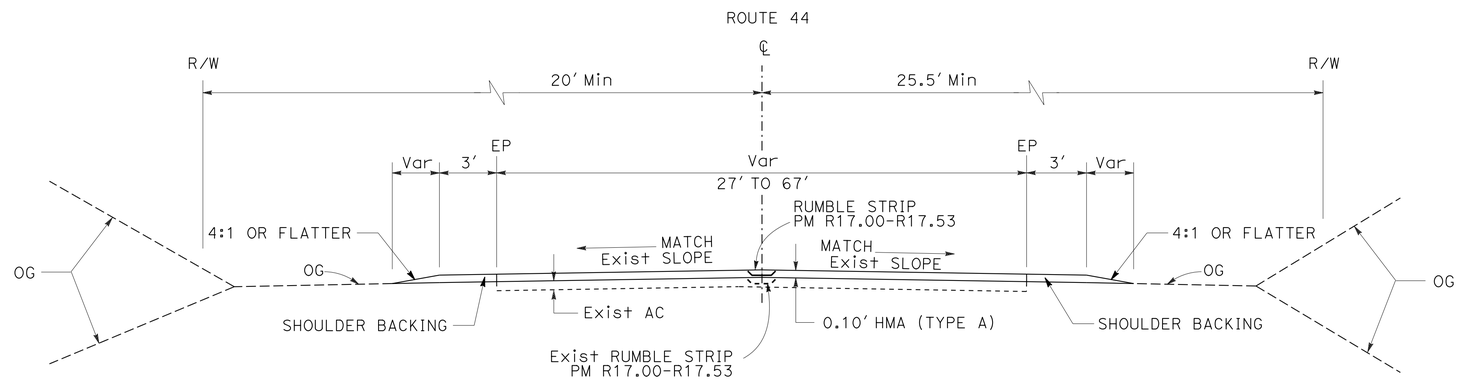

TYPICAL CROSS SECTION
PM R14.4-34.0

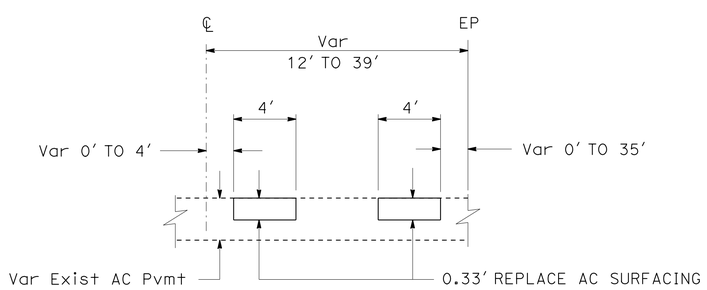

REPLACE AC SURFACING
(TYPICAL BOTH DIRECTIONS)

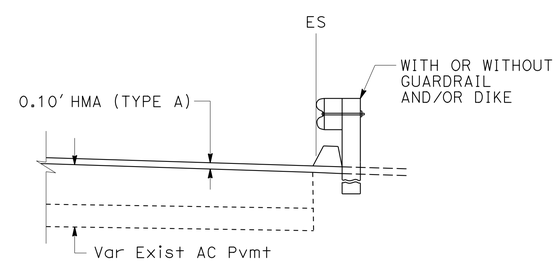

DIKE DETAILS

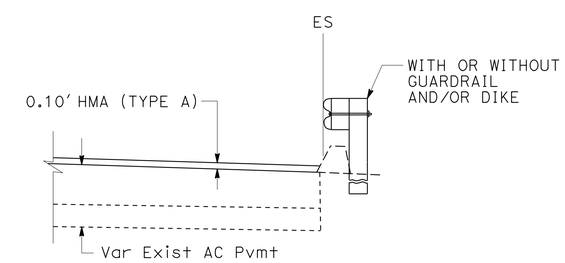

DIKE DETAILS
PM R18.34/R18.57 BOTH SIDES

TYPICAL CROSS SECTIONS

NO SCALE

X-1

REVISED BY | DATE REVISED
DENISE FUZERE' | KARLIE SMITH
CALCULATED-DESIGNED BY | CHECKED BY
FUNCTIONAL SUPERVISOR | LANCE BROWN

STATE OF CALIFORNIA - DEPARTMENT OF TRANSPORTATION
Caltrans® MAINTENANCE

P:\proj3\02\0h300_plans\pse\20h300ca001.dgn

LAST REVISION 02-12-15 | DATE PLOTTED => 17-FEB-2015 | TIME PLOTTED => 06:52

Dist	COUNTY	ROUTE	POST MILES TOTAL PROJECT	SHEET No.	TOTAL SHEETS
02	Sha	44	R14.4/34.0	3	35

Denise Fuzere' 02-12-15
REGISTERED CIVIL ENGINEER DATE

02-12-15
PLANS APPROVAL DATE

REGISTERED PROFESSIONAL ENGINEER DENISE FUZERE' No. C69865 Exp. 09-30-16 CIVIL STATE OF CALIFORNIA

THE STATE OF CALIFORNIA OR ITS OFFICERS OR AGENTS SHALL NOT BE RESPONSIBLE FOR THE ACCURACY OR COMPLETENESS OF SCANNED COPIES OF THIS PLAN SHEET.

NOTES:

1. FOR DETAILS OF STANDARD HARDWARE USED TO CONSTRUCT GUARDRAIL, SEE REVISD STANDARD PLAN RSP A77M1. HARDWARE POSTS AND RAIL ELEMENTS FOR MIDEWEST GUARDRAIL ARE VALID FOR METAL BEAM GUARDRAIL.
2. GRIND EXISTING SURFACES TO ACCOMMODATE A MINIMUM TAPER THICKNESS OF 0.10' WHEN EITHER:
   A. HMA MATERIAL SUCH AS RUBBERIZED, POLYMER MODIFIED OR OPEN GRADED IS UNSUITABIE FOR RAKING TO A MAXIMUM 0.02' THICKNESS AT THE CONFORM.
   B. TEMPORARY TAPER WILL BE IN PLACE FOR MORE THAN 14 DAYS.
3. PERMANENT SURFACE MAY BE EXISTING OR NEW PAVEMENT.
4. ROADWAY SURFACE IS THE TOP OF EXISTING SURFACE OR THE TOP OF THE PLANED SURFACE.
5. IF AUTHORIZED, YOU MAY USE ALTERNATIVE MATERIALS OR METHODS TO PRODUCE THE REQUIRED TAPER.
6. EXISTING UTILITY FACILITIES HAVE NOT BEEN INCLUDED ON THESE PLANS.

LEGEND:

- COLD PLANE AC PAVEMENT (0.00' TO 0.10')
- HMA MATERIAL (TEMPORARY TAPER) (SEE NOTE 5)
- IF NECESSARY, COLD PLANE AC PAVEMENT AND PLACE HMA MATERIAL (SEE NOTE 2)

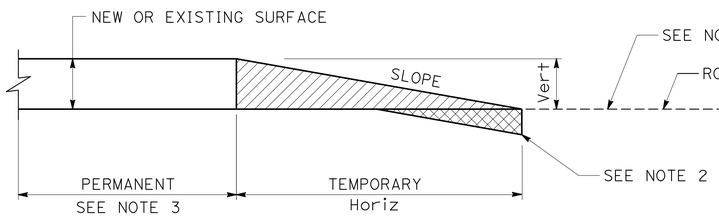

Vert	SLOPE RATIO Horiz/Vert
0-0.10'	70:1
GREATER THAN 0.10'	160:1

TYPICAL PAVING CONFORM FOR TEMPORARY CONSTRUCTION TAPERS

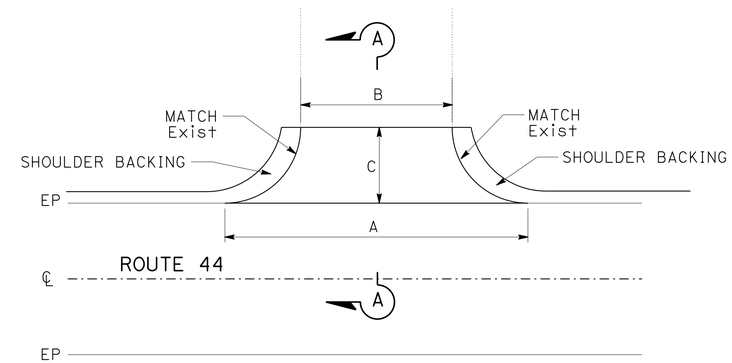

ROAD CONNECTIONS AND DRIVEWAYS

SEE CONSTRUCTION DETAILS SHEET C-2 FOR CASE A, B & C DIMENSIONS

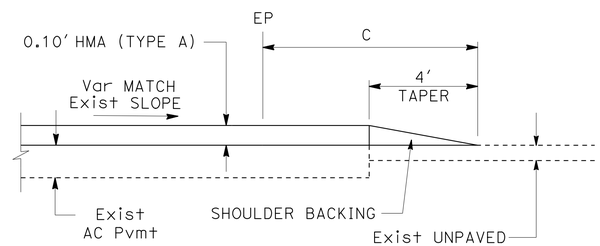

CASE C
SECTION A-A

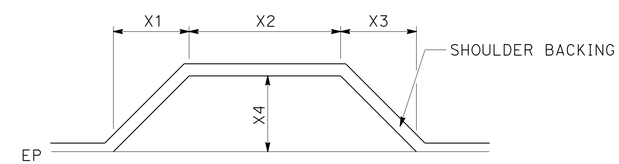

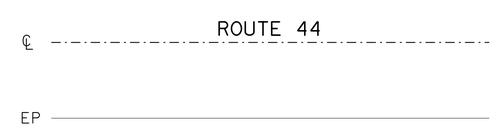

PULLOUT DETAIL

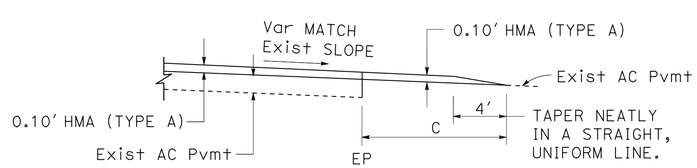

CASE B
SECTION A-A

PULLOUTS

POST MILE	SIDE	DIMENSIONS (LF)			
		X1	X2	X3	X4
R19.42	L+	80	235	140	25
R22.54	R+	140	150	75	25

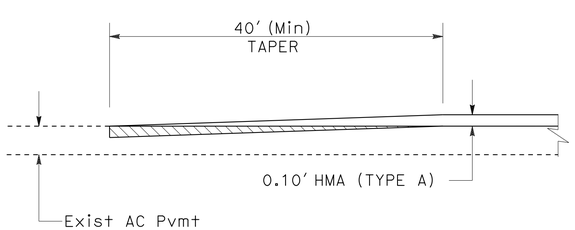

MAINLINE CONFORM TAPER

PM R14.50
PM 34.00

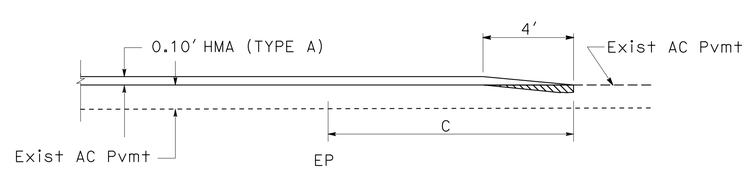

CASE A
SECTION A-A

CONSTRUCTION DETAILS

NO SCALE

C-1

REVISED BY | DATE REVISED
DENISE FUZERE' | KARLIE SMITH
CALCULATED-DESIGNED BY | CHECKED BY
FUNCTIONAL SUPERVISOR | LANCE BROWN
STATE OF CALIFORNIA - DEPARTMENT OF TRANSPORTATION
Caltrans® MAINTENANCE

P:\proj3\02\0h300_plans\pse\20h300ga001.dgn

LAST REVISION 02-12-15 | DATE PLOTTED => 17-FEB-2015 | TIME PLOTTED => 06:52

Dist	COUNTY	ROUTE	POST MILES TOTAL PROJECT	SHEET No.	TOTAL SHEETS
02	Sha	44	R14.4/34.0	4	35

Denise Fuzere 02-12-15
REGISTERED CIVIL ENGINEER DATE

02-12-15
PLANS APPROVAL DATE

REGISTERED PROFESSIONAL ENGINEER DENISE FUZERE No. C69865 Exp. 09-30-16 CIVIL STATE OF CALIFORNIA

THE STATE OF CALIFORNIA OR ITS OFFICERS OR AGENTS SHALL NOT BE RESPONSIBLE FOR THE ACCURACY OR COMPLETENESS OF SCANNED COPIES OF THIS PLAN SHEET.

NOTE:

1. EXISTING UTILITY FACILITIES HAVE NOT BEEN INCLUDED ON THESE PLANS.

ROAD CONNECTIONS AND DRIVEWAYS

ROAD CONNECTION	SIDE	POST MILE	DIMENSIONS (LF) A	B	C	CASE
ROAD CONNECTION	R†	R14.75	100	25	40	C
DRIVEWAY	L†	R15.31	92	20	20	B
CHERTH BROOK Dr	R†	R15.34	159	35	20	A
DRIVEWAY	L†	R15.40	100	20	25	B
MERRILEA Ln	R†	R15.46	115	40	20	B
DRIVEWAY	L†	R15.83	25	10	15	B
DRIVEWAY	L†	R16.09	100	20	25	B
DRIVEWAY	R†	R16.13	100	20	20	B
McWEBTH WAY	R†	R16.23	113	10	40	A
DRIVEWAY	L†	R16.24	45	25	15	B
DRIVEWAY	R†	R16.29	48	25	15	A
DRIVEWAY	R†	R16.31	50	26	17	B
FIRE ESCAPE Rd	R†	R16.44	50	16	28	B
DRIVEWAY	L†	R16.44	36	16	16	B
DRIVEWAY	R†	R16.49	45	28	22	B
BRADY Ln	R†	R16.55	40	20	30	A
DRIVEWAY	L†	R16.57	47	18	20	B
GREY RIDGE Ln	R†	R16.65	44	20	18	C
DRIVEWAY	L†	R16.69	38	16	20	B
DRIVEWAY	R†	R16.78	38	17	20	B
DRIVEWAY	L†	R16.79	45	19	20	B
FISHER Rd	R†	R16.90	40	18	20	B
FLINT RIDGE Rd	L†	R17.05	33	18	16	B
DRIVEWAY	L†	R17.14	40	20	23	B
DRIVEWAY	L†	R17.30	41	13	33	B
DRIVEWAY	L†	R17.82	56	23	33	B
DRIVEWAY	R†	R17.99	58	18	34	A
DRIVEWAY	L†	R18.58	50	13	50	B
DRIVEWAY	R†	R18.63	45	14	35	B
DERSCH Rd	R†	R19.01	230	33	100	A
DRIVEWAY	L†	R19.10	38	20	12	B
CAMINO ORO	R†	R19.18	140	36	30	A
CAMINO VISTA	R†	R19.43	200	50	30	A
ELMER'S WAY	L†	R19.58	50	20	20	B
DRIVEWAY	R†	R19.64	43	20	15	B
DRIVEWAY	L†	R19.68	100	20	20	B
DRIVEWAY	L†	R19.79	38	15	15	B
DRIVEWAY	R†	R19.80	100	20	30	A
DRIVEWAY	L†	R19.85	51	15	15	B
DRIVEWAY	L†	R19.88	95	17	30	B
DRIVEWAY	R†	R19.95	65	20	12	B
DRIVEWAY	L†	R20.05	75	30	25	B
CAMINO REAL	R†	R20.05	165	50	30	A
DRIVEWAY	L†	R20.14	113	25	20	B
DRIVEWAY	R†	R20.19	50	20	15	B
DRIVEWAY	L†	R20.19	60	23	20	B
DRIVEWAY	L†	R20.21	70	25	20	B
DRIVEWAY	L†	R20.22	75	25	20	B
DRIVEWAY	R†	R20.28	100	20	15	B
DRIVEWAY	L†	R20.28	37	20	17	C
DRIVEWAY	L†	R20.29	80	20	15	B
DRIVEWAY	L†	R20.34	100	25	23	A
DRIVEWAY	R†	R20.37	50	25	23	B
DRIVEWAY	R†	R20.39	50	20	20	B
DRIVEWAY	R†	R20.43	100	17	30	C
DRIVEWAY	L†	R20.43	100	20	30	C
DRIVEWAY	R†	R20.46	100	20	20	C
DRIVEWAY	L†	R20.47	100	25	15	C
DRIVEWAY	R†	R20.50	100	25	15	C
DRIVEWAY	L†	R20.51	75	18	15	B
DRIVEWAY	L†	R20.52	82	19	21	B
DRIVEWAY	L†	R20.56	86	23	25	B
DRIVEWAY	L†	R20.63	100	17	23	B
PURSELL Rd	L†	R20.65	100	30	30	A

ROAD CONNECTIONS AND DRIVEWAYS

ROAD CONNECTION	SIDE	POST MILE	DIMENSIONS (LF) A	B	C	CASE
DRIVEWAY	R†	R20.73	70	20	25	A
INWOOD Rd	L†	R20.80	166	35	65	A
DRIVEWAY	R†	R20.86	79	40	10	C
DRIVEWAY	R†	R20.88	73	15	29	B
DRIVEWAY	L†	R20.93	93	19	32	C
ALLY GOLD WAY	R†	R21.03	115	20	25	B
DRIVEWAY	L†	R21.08	45	22	22	B
DRIVEWAY	L†	R21.14	50	22	22	C
HAYDON Ln	L†	R21.17	290	200	25	A
BLACK BUTTE Rd	R†	R21.17	100	22	32	A
DREAMSCAPE Ln	L†	R21.50	125	30	30	B
DRIVEWAY	L†	R21.59	63	22	30	C
DRIVEWAY	L†	R21.64	110	20	25	B
DRIVEWAY	L†	R21.68	60	20	25	B
DRIVEWAY	R†	R21.74	108	31	19	B
DRIVEWAY	R†	R21.79	90	20	30	B
DRIVEWAY	R†	R21.86	70	15	32	B
DRIVEWAY	R†	R21.90	62	23	17	B
DRIVEWAY	R†	R21.97	61	18	23	A
PINE BLUFF Dr	R†	R22.06	162	46	50	A
DRIVEWAY	L†	R22.18	100	21	17	B
DRIVEWAY	R†	R22.35	70	20	25	C
VISTA LA VEGA	R†	R22.45	100	30	22	C
SHINGLE CREEK Ln	L†	R22.65	90	25	25	B
MIDWAY PINES Dr	L†	R22.76	75	30	15	B
DRIVEWAY	R†	R22.76	45	15	24	B
DRIVEWAY	L†	R22.84	50	23	30	B
DRIVEWAY	R†	R22.90	65	23	17	B
DRIVEWAY	R†	R22.96	38	16	20	B
DRIVEWAY	L†	R22.98	68	45	17	B
LAUREL TREE Ln	L†	R23.03	74	41	16	B
RING TAIL Ln	R†	R23.03	70	48	16	C
DRIVEWAY	L†	R23.13	38	20	25	B
DRIVEWAY	L†	R23.22	58	27	19	B
OGBURN Rd	L†	R23.25	67	18	15	B
DRIVEWAY	R†	R23.25	71	33	16	B
DRIVEWAY	R†	R23.31	36	32	20	B
DRIVEWAY	L†	R23.33	54	48	13	B
BOULDER RIDGE	L†	R23.37	43	20	15	B
DRIVEWAY	L†	R23.38	30	20	15	B
OGBURN/INWOOD CEM Rd	L†	R23.51	50	20	25	B
MILLER RANCH Rd	L†	R23.58	70	23	30	B
DRIVEWAY	L†	R23.62	60	18	32	B
DRIVEWAY	L†	R23.67	79	23	20	B
DRIVEWAY	L†	R23.72	64	20	30	B
DRIVEWAY	L†	R23.90	55	30	30	B
DRIVEWAY	L†	R23.97	105	30	23	B
DRIVEWAY	R†	R24.00	120	26	50	B
DRIVEWAY	L†	R24.06	70	20	30	B
DRIVEWAY	R†	R24.09	50	30	35	B
DRIVEWAY	L†	R24.11	50	20	38	B
DRIVEWAY	R†	R24.16	65	50	15	B
DRIVEWAY	L†	R24.17	80	20	20	B
DRIVEWAY	R†	R24.22	35	17	15	B
DRIVEWAY	L†	R24.30	55	27	40	B
DRIVEWAY	R†	R24.30	50	20	20	B
100 Rd	L†	R24.35	60	25	30	B
DRIVEWAY	L†	R24.38	90	40	35	B
DRIVEWAY	L†	R24.40	50	23	30	B
ALBERS FOREST Dr	R†	R24.42	60	25	30	C
PONDERSOA WAY WEST	L†	R24.45	150	30	60	A
PONDEROSA WAY EAST	L†	R24.56	50	20	20	A
DRIVEWAY	L†	R24.58	110	30	60	A
DRIVEWAY	R†	R24.61	66	20	30	B
DRIVEWAY	L†	R24.66	66	17	58	B
DRIVEWAY	R†	R24.68	52	20	45	B
DRIVEWAY	R†	R24.78	50	13	22	B
DRIVEWAY	L†	R24.93	60	28	20	B

ROAD CONNECTIONS AND DRIVEWAYS

ROAD CONNECTION	SIDE	POST MILE	DIMENSIONS (LF) A	B	C	CASE
DRIVEWAY	R†	R24.93	60	28	20	B
DRIVEWAY	L†	R24.97	50	18	30	B
MILLER'S Rd WEST	L†	R25.19	100	25	50	A
MILLER'S Rd EAST	L†	R25.57	115	30	50	A
DRIVEWAY	R†	R25.67	121	45	43	B
WATER LEAF Rd	R†	R26.02	125	20	50	A
CIELO Rd	L†	R26.24	40	15	26	C
SHASTA FOREST Dr	L†	R26.41	80	35	50	A
DRIVEWAY	R†	R26.42	45	20	15	B
SHINGLETOWN RIDGE Rd	R†	R26.51	100	25	50	A
DRIVEWAY	L†	R26.53	42	20	20	B
DRIVEWAY	L†	R26.55	42	20	20	B
KAYSIE RAE Ct	L†	R26.70	75	15	20	B
DRIVEWAY	R†	R26.77	45	20	15	B
LISA GLEN Ct	L†	R26.84	45	18	20	B
SQUAW CARPET	R†	R26.84	64	25	25	C
DANDELION/MOBILE PARK Dr	R†	R27.11	100	42	28	A
DRIVEWAY	R†	R27.28	80	30	25	B
SHINGLE GLEN TRAIL	L†	R27.45	25	12	15	B
DRIVEWAY (BUSINESS)	L†	R27.49	80	42	25	C
EMIGRANT TRAIL (BUSINESS)	L†	R27.56	65	22	35	C
DRIVEWAY (BUSINESS)	R†	R27.57	150	115	15	C
DRIVEWAY	R†	R27.65	43	25	17	B
DRIVEWAY (BUSINESS)	L†	R27.67	125	115	18	C
DRIVEWAY	R†	R27.73	53	25	10	B
WILSON HILL Rd	R†	R27.76	67	60	25	A
EMIGRANT TRAIL	L†	R27.76	53	33	20	A
ALPINE MEADOWS Rd	R†	R28.04	150	65	31	A
GOOSE CHASE Rd	L†	32.20	37	22	10	B
DRIVEWAY	L†	32.21	40	16	20	B
BENT HILL Rd	L†	32.42	75	35	40	C
BLUSH OAK Ln	R†	32.42	50	25	25	B
DRIVEWAY	L†	32.47	34	10	15	B
DRIVEWAY	L†	32.50	25	16	10	B
DRIVEWAY	L†	32.53	50	16	10	B
DRIVEWAY	L†	32.61	55	30	17	B
BRUSH CREEK Ln	R†	32.77	38	20	20	B
GRACE LAKE RESORT Rd	R†	32.91	50	12	12	B
MONTGOMERY Rd	L†	33.07	80	42	42	B
ALWARD Rd	R†	33.13	63	25	25	C
ALWARD Rd	L†	33.13	80	25	25	C
DRIVEWAY	R†	33.40	65	30	30	B
DRIVEWAY	R†	33.60	75	40	40	B
BIG WHEELS FS CAMP Rd	R†	33.62	70	30	30	B
DRIVEWAY	L†	33.71	70	40	40	C
MILL CREEK Rd	R†	33.73	80	65	65	C
DRIVEWAY	L†	33.77	70	35	35	C
DRIVEWAY	R†	33.78	50	20	20	B
YEW WOOD Ln	L†	33.91	66	20	20	C
SQUAW SPRINGS Rd	R†	33.91	70	25	25	C
SANDHOUSE Rd	R†	33.94	60	30	30	C

CONSTRUCTION DETAILS

NO SCALE

C-2

REVISED BY | DATE REVISED
DENISE FUZERE' | KARLIE SMITH
CALCULATED-DESIGNED BY | CHECKED BY
FUNCTIONAL SUPERVISOR
LANCE BROWN

STATE OF CALIFORNIA - DEPARTMENT OF TRANSPORTATION
Caltrans MAINTENANCE

P:\proj3\02\0h300_plans\pse\20h300ga002.dgn

LAST REVISION 02-12-15 | DATE PLOTTED => 17-FEB-2015 | TIME PLOTTED => 06:52

Dist	COUNTY	ROUTE	POST MILES TOTAL PROJECT	SHEET No.	TOTAL SHEETS
02	Sha	44	R14.4/34.0	5	35

Denise Fuzere' 02-12-15
REGISTERED CIVIL ENGINEER DATE

02-12-15
PLANS APPROVAL DATE

REGISTERED PROFESSIONAL ENGINEER DENISE FUZERE' No. C69865 Exp. 09-30-16 CIVIL STATE OF CALIFORNIA

THE STATE OF CALIFORNIA OR ITS OFFICERS OR AGENTS SHALL NOT BE RESPONSIBLE FOR THE ACCURACY OR COMPLETENESS OF SCANNED COPIES OF THIS PLAN SHEET.

NOTES:

1. EXISTING UTILITY FACILITIES HAVE NOT BEEN INCLUDED ON THESE PLANS.
2 DO NOT PLACE RUMBLE STRIP ON BRIDGE DECK.
3. REPLACE RUMBLE STRIP IN KIND.

LEGEND:

TRAFFIC STRIPE

CENTERLINE RUMBLE STRIP (HMA, GROUND-IN INDENTATIONS)

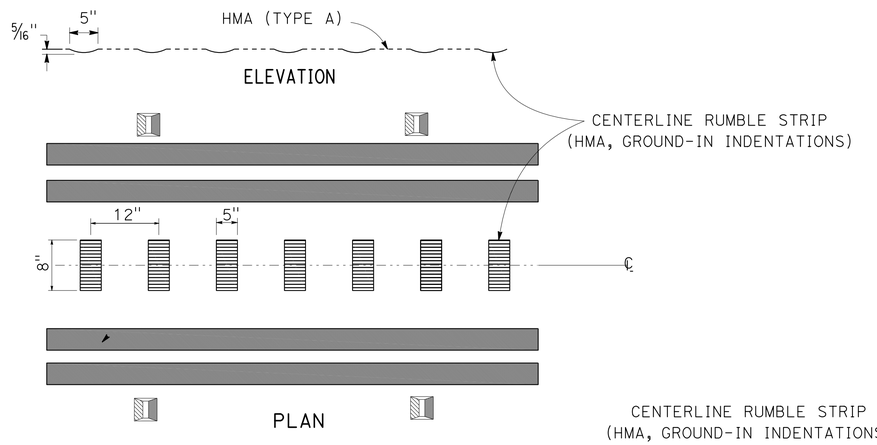

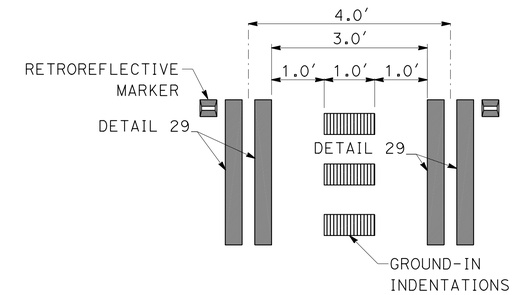

DETAIL A

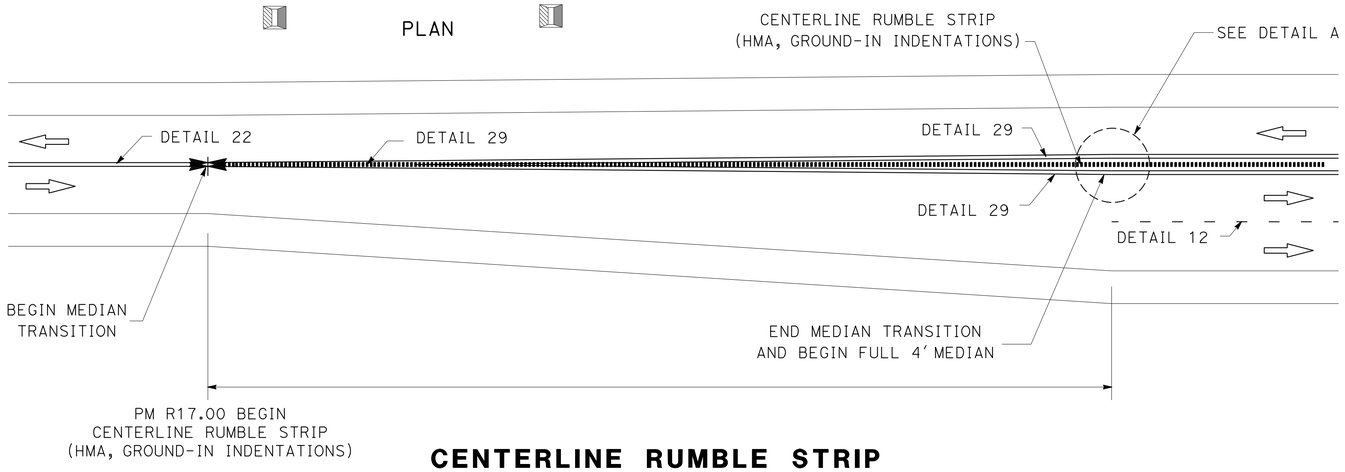

CENTERLINE RUMBLE STRIP AT BEGINNING OF PASSING LANE

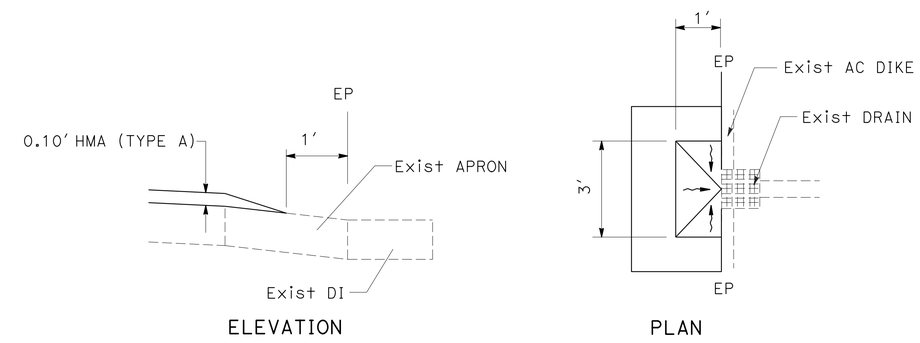

TYPICAL DRAINAGE INLET CONFORM

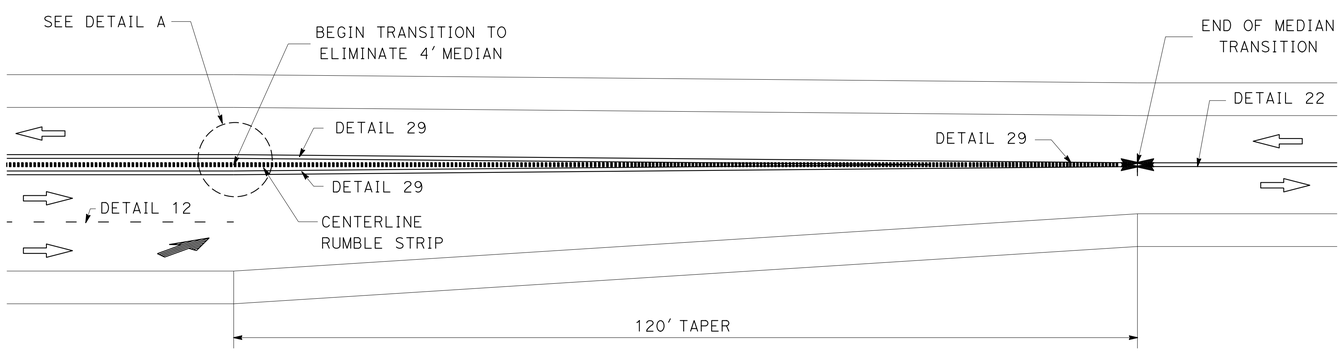

CENTERLINE RUMBLE STRIP AT END OF PASSING LANE

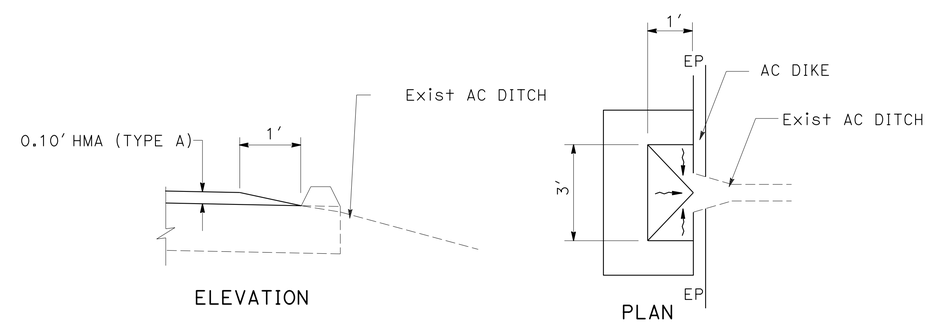

TYPICAL AC DITCH CONFORM

CONSTRUCTION DETAILS

NO SCALE

C-3

REVISED BY	DATE REVISED

CALCULATED-DESIGNED BY	CHECKED BY
DENISE FUZERE'	KARLIE SMITH

FUNCTIONAL SUPERVISOR: LANCE BROWN

STATE OF CALIFORNIA - DEPARTMENT OF TRANSPORTATION
Caltrans® MAINTENANCE

P:\proj3\02\0h300_plans\pse\20h300ga003.dgn

LAST REVISION 02-12-15 | DATE PLOTTED => 17-FEB-2015 | TIME PLOTTED => 06:52

Dist	COUNTY	ROUTE	POST MILES TOTAL PROJECT	SHEET No.	TOTAL SHEETS
02	Sha	44	R14.4/34.0	6	35

Denise Fuzere 02-12-15
REGISTERED CIVIL ENGINEER DATE

02-12-15
PLANS APPROVAL DATE

REGISTERED PROFESSIONAL ENGINEER DENISE FUZERE No. C69865 Exp. 09-30-16 CIVIL STATE OF CALIFORNIA

THE STATE OF CALIFORNIA OR ITS OFFICERS OR AGENTS SHALL NOT BE RESPONSIBLE FOR THE ACCURACY OR COMPLETENESS OF SCANNED COPIES OF THIS PLAN SHEET.

NOTES:

1. FOR DETAILS OF WOOD POSTS AND WOOD BLOCKS, USED TO CONSTRUCT GUARDRAIL SEE REVISED STANDARD PLANS A77N1.
2. IF AUTHORIZED, A SINGLE LINE POST MAY BE MOVED UP TO 12" ALONG THE GUARDRAIL TO AVOID OBSTACLES. IF POST IS MOVED BOLT THROUGH THE BLOCK AND POST ONLY.
3. PLACE TYPE F DIKE UNDER GUARDRAIL AND PLACE TYPE C DIKE IF TOE OF DIKE IS MORE THAN 2" IN FRONT OF THE FACE OF GUARDRAIL.
4. TO CONNECT RAILING TO TERMINAL SYSTEM END TREATMENT, TRANSITION THE TOP OF RAILING HEIGHT AT A RATIO OF 120:1 TO TERMINAL SYSTEM END TREATMENT HEIGHT PLUS ONE 12'-6" STANDARD RAILING SECTION AT THE TERMINAL HEIGHT.
5. ADDITIONAL HOLE IN UPPERMOST PORTION OF LINE POST IS FOR POTENTIAL FUTURE ADJUSTMENTS OF RAILING HEIGHT. SEE REVISED STANDARD PLAN A77N1.
6. FOR WOOD POST, TOENAIL BLOCKS TO POST WITH 2-16D GALVANIZED NAILS.
7. DIMENSIONS FOR POST AND BLOCKS ARE NOMINAL.
8. SLOTTED HOLE FOR BOLTED CONNECTION OF RAIL ELEMENT TO BLOCK AND POST, SEE "RAIL ELEMENT SPLICE DETAIL."
9. SLOTTED HOLES FOR SPLICE BOLTS TO OVERLAP ENDS OF RAIL ELEMENT, SEE "SECTION THRU RAIL ELEMENT."
10. INSTALL POSTS IN SOIL
11. EXISTING UTILITY FACILITIES HAVE NOT BEEN INCLUDED ON THESE PLANS.
12. PLACE RUB RAIL (GUARDRAIL ELEMENT) AND ATTACH TO POST WITH NO BLOCK WHEN HEIGHT OF GUARDRAIL IS 32" OR MORE ABOVE FINISHED GRADE UNDER FACE OF RAIL.

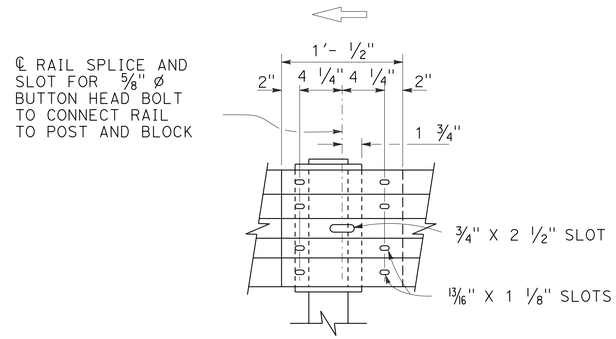

ELEVATION

RAIL ELEMENT SPLICE DETAIL

A. CONNECT THE OVER LAPPED END OF THE RAIL ELEMENTS WITH 5/8" ø X 1 3/8" BUTTON HEAD OVAL SHOULDER SPLICE BOLTS INSERTED INTO THE 13/16" X 1 1/8" SLOTS AND BOLTED TOGETHER WITH 5/8" ø RECESSED HEX NUTS. RECESS OF HEX NUT POINTS TOWARD RAIL ELEMENT. A TOTAL OF 8 BOLTS AND NUTS ARE TO BE USED AT EACH RAIL SPLICE CONNECTION.

B. THE ENDS OF THE RAIL ELEMENTS ARE TO BE OVERLAPPED IN THE DIRECTION OF TRAFFIC (SEE DETAILS).

C. WHERE END CAP IS TO BE ATTACHED TO THE END OF A RAIL ELEMENT, A TOTAL OF 4 OF THE ABOVE DESCRIBED SPLICE BOLTS AND NUTS ARE TO BE USED.

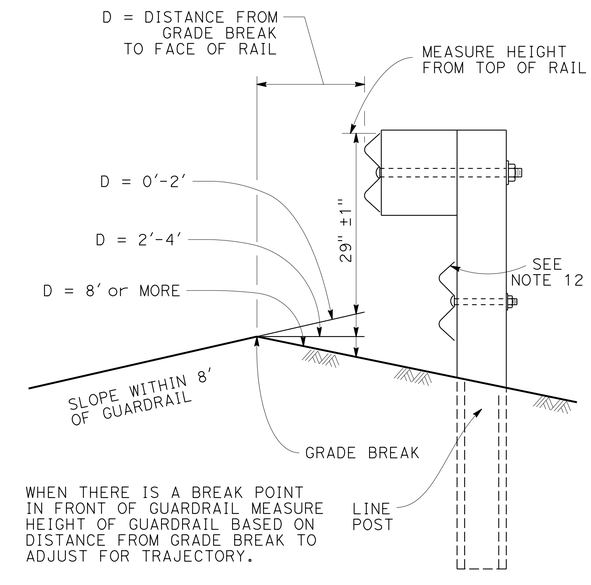

MEASURE HEIGHT DETAIL AT GRADE BREAK

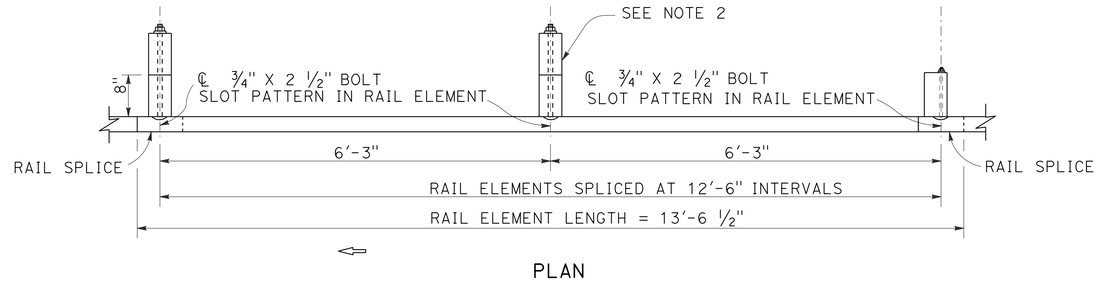

PLAN

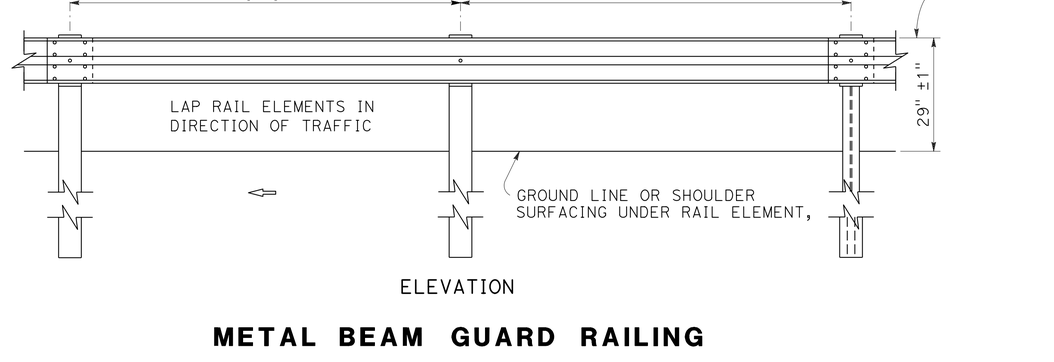

ELEVATION

METAL BEAM GUARD RAILING

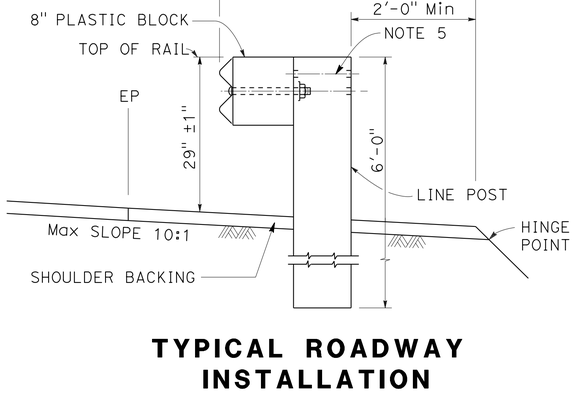

TYPICAL ROADWAY INSTALLATION

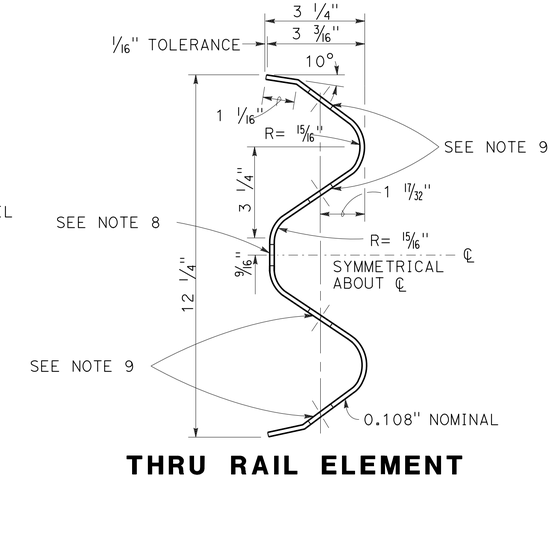

THRU RAIL ELEMENT

CONSTRUCTION DETAILS

NO SCALE

C-4

STATE OF CALIFORNIA - DEPARTMENT OF TRANSPORTATION
Caltrans® MAINTENANCE

CALCULATED-DESIGNED BY	CHECKED BY	FUNCTIONAL SUPERVISOR	REVISED BY	DATE REVISED
DENISE FUZERE	KARLIE SMITH	LANCE BROWN		

P:\proj13\02\0h300_plans\pse\20h300ga004.dgn

LAST REVISION 02-12-15 | DATE PLOTTED => 17-FEB-2015 | TIME PLOTTED => 06:52

Dist	COUNTY	ROUTE	POST MILES TOTAL PROJECT	SHEET No.	TOTAL SHEETS
02	Sha	44	R14.4/34.0	7	35

Denise Fuzere' 02-12-15
REGISTERED CIVIL ENGINEER DATE

02-12-15
PLANS APPROVAL DATE

REGISTERED PROFESSIONAL ENGINEER DENISE FUZERE' No. C69865 Exp. 09-30-16 CIVIL STATE OF CALIFORNIA

THE STATE OF CALIFORNIA OR ITS OFFICERS OR AGENTS SHALL NOT BE RESPONSIBLE FOR THE ACCURACY OR COMPLETENESS OF SCANNED COPIES OF THIS PLAN SHEET.

NOTES:

1. FOR DIKE DETAILS, SEE REVISED STANDARD PLAN A87B.
2. ONLY TYPE C DIKE MAY BE USED UNDER OR IN FRONT OF TERMINAL SYSTEMS, AND ONLY 25' IN ADVANCE OF TERMINAL.
3. DIKE OR CURB MUST BE PLACED IN THE STANDARD POSITION UNLESS OTHERWISE SHOWN. THE MAXIMUM HEIGHT OF THE DIKE OR CURB IS 4" FOR MBGR, AND 6" FOR MGS.
4. LEAVE OUT AREA MAY BE RETANGULAR OR ROUND AS LONG AS THE CLEARANCES SHOWN ARE MAINTAINED.
5. FOR WOOD POST SIZES, SEE REVISED STANDARD PLAN A77N1.
6. USE Max. 120 PSI COMPRESSIVE STRENGTH FOR CONTROLLED LOW STRENGTH MATERIAL.
7. EXISTING UTILITY FACILITIES HAVE NOT BEEN INCLUDED ON THESE PLANS.

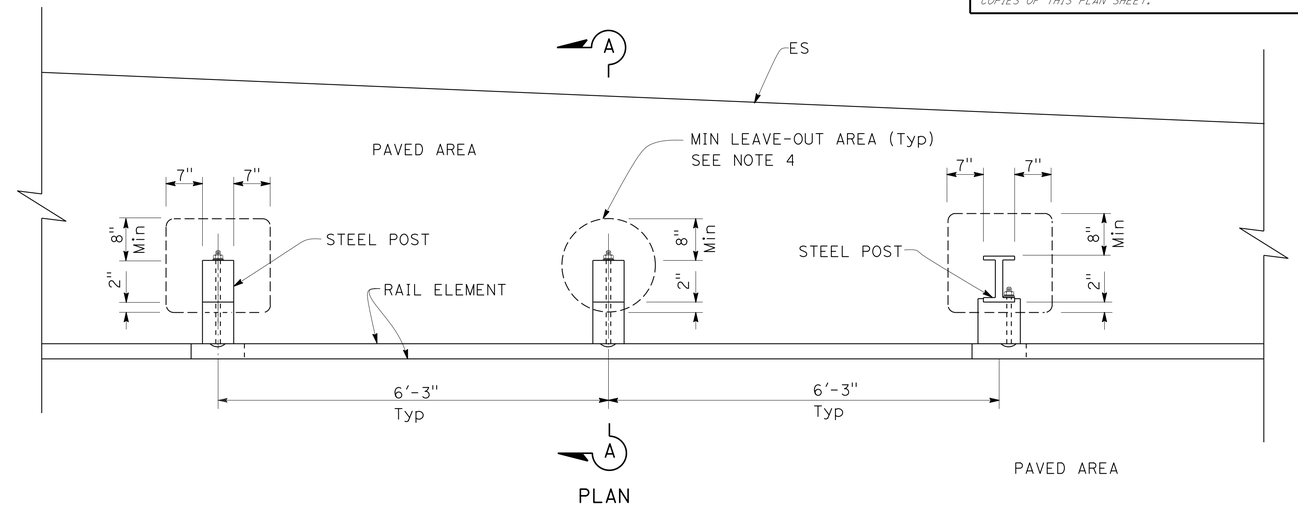

PLAN

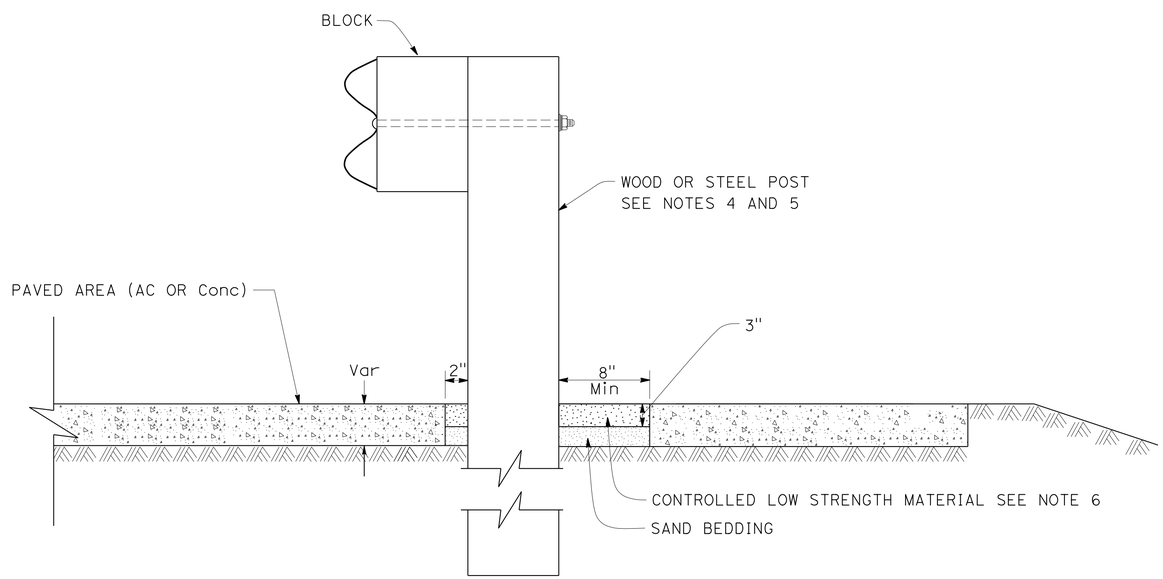

SECTION A-A

TYPICAL LEAVE OUT AREA THROUGH EXISTING PAVEMENT

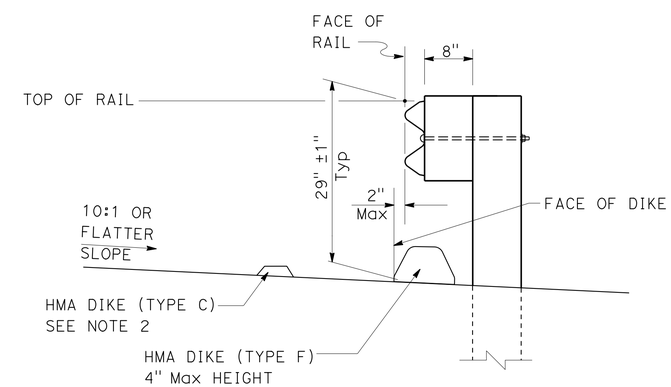

GUARDRAIL DIKE POSITIONING

CONSTRUCTION DETAILS

NO SCALE

C-5

REVISED BY	DATE REVISED

CALCULATED-DESIGNED BY	DENISE FUZERE'
CHECKED BY	KARLIE SMITH
FUNCTIONAL SUPERVISOR	LANCE BROWN

STATE OF CALIFORNIA - DEPARTMENT OF TRANSPORTATION
Caltrans® **MAINTENANCE**

P:\proj3\02\0h300_plans\pse\20h300ga005.dgn

LAST REVISION 02-12-15 | DATE PLOTTED => 17-FEB-2015 | TIME PLOTTED => 06:52

Dist	COUNTY	ROUTE	POST MILES TOTAL PROJECT	SHEET No.	TOTAL SHEETS
02	Sha	44	R14.4/34.0	8	35

Denise Fuzeré 02-12-15
REGISTERED CIVIL ENGINEER DATE

02-12-15
PLANS APPROVAL DATE

REGISTERED PROFESSIONAL ENGINEER DENISE FUZERE' No. C69865 Exp. 09-30-16 CIVIL STATE OF CALIFORNIA

THE STATE OF CALIFORNIA OR ITS OFFICERS OR AGENTS SHALL NOT BE RESPONSIBLE FOR THE ACCURACY OR COMPLETENESS OF SCANNED COPIES OF THIS PLAN SHEET.

NOTE:

1. FOR DETAILS OF THE ANCHOR PLATE AND ¾" CABLE, SEE STANDARD PLAN A77H3 OR A77S3.

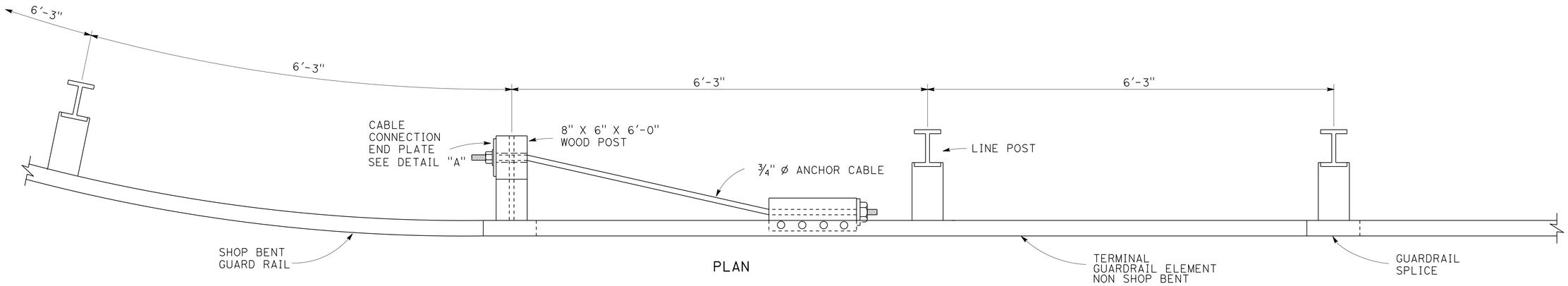

PLAN

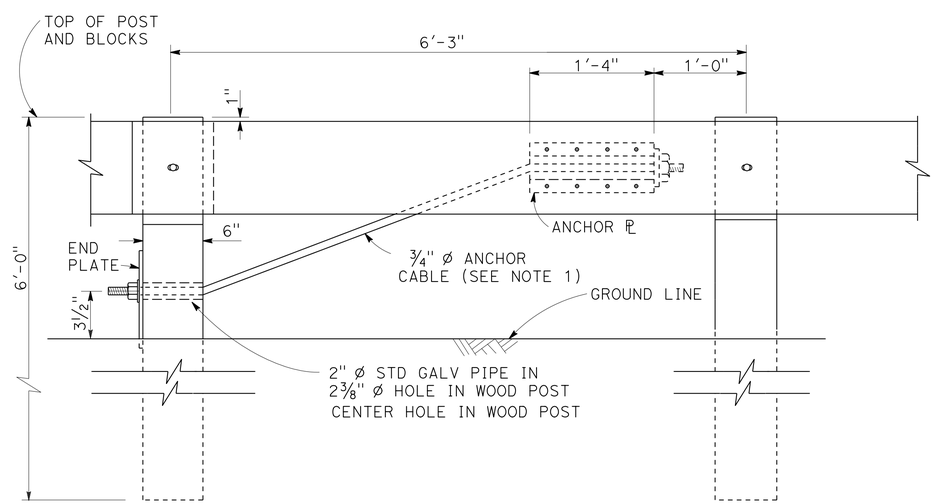

ELEVATION

INTERMEDIATE ANCHOR ASSEMBLY

SEE NOTE 1

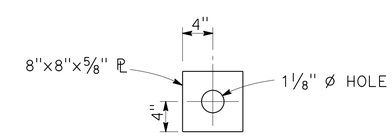

DETAIL A
CABLE CONNECTION END PLATE

CONSTRUCTION DETAILS

NO SCALE

C-6

REVISED BY	DATE REVISED

DENISE FUZERE' — KARLIE SMITH — CALCULATED-DESIGNED BY — CHECKED BY

FUNCTIONAL SUPERVISOR: LANCE BROWN

STATE OF CALIFORNIA - DEPARTMENT OF TRANSPORTATION — Caltrans® MAINTENANCE

P:\proj13\02\0h300_plans\pse\20h300ga006.dgn

LAST REVISION 02-12-15 — DATE PLOTTED => 17-FEB-2015 — TIME PLOTTED => 06:52

Dist	COUNTY	ROUTE	POST MILES TOTAL PROJECT	SHEET No.	TOTAL SHEETS
02	Sha	44	R14.4/34.0	9	35

Denise Fuzere' 02-12-15
REGISTERED CIVIL ENGINEER DATE

02-12-15
PLANS APPROVAL DATE

REGISTERED PROFESSIONAL ENGINEER DENISE FUZERE' No. C69865 Exp. 09-30-16 CIVIL STATE OF CALIFORNIA

THE STATE OF CALIFORNIA OR ITS OFFICERS OR AGENTS SHALL NOT BE RESPONSIBLE FOR THE ACCURACY OR COMPLETENESS OF SCANNED COPIES OF THIS PLAN SHEET.

NOTES:

1. EXACT LOCATION OF ALL SIGNS TO BE DETERMINED BY THE ENGINEER.
2. CALIFORNIA CODES ARE DESIGNATED BY (CA), OTHERWISE FEDERAL CODES ARE SHOWN.
3. INTERMEDIATE C11(CA) SIGNS SHOULD BE PLACED EVERY 3 TO 5 MILES AS NECESSARY.
4. EXISTING UTILITY FACILITIES HAVE NOT BEEN INCLUDED ON THESE PLANS

ROAD CONNECTIONS

POST MILE	DESCRIPTION	SIDE	(B)	(D)
R14.75	ROAD CONNECTION	R+	1	
R15.34	CHERTH BROOK Dr	R+	1	
R15.46	MERRILEA Ln	R+	1	
R16.23	McWEBTH WAY	R+	1	
R16.44	FIRE ESCAPE Rd	R+	1	
R16.55	BRADY Ln	R+	1	
R16.65	GREY RIDGE Ln	R+	1	
R16.90	FISHER Rd	R+	1	
R19.01	DERSCH Rd	R+	1	1
R19.18	CAMINO ORO	R+	1	
R19.43	CAMINO VISTA	R+	1	
R19.58	ELMER'S WAY	L+	1	
R20.05	CAMINO REAL	R+	1	
R20.65	PURSELL Rd	L+	1	
R20.80	INWOOD Rd	L+	1	
R21.03	ALLY GOLD WAY	R+	1	
R21.17	HAYDON Ln	L+	1	
R21.17	BLACK BUTTE Rd	R+	1	
R21.50	DREAMSCAPE Ln	L+	1	
R22.06	PINE BLUFF Dr	R+	1	
R22.45	VISTA LA VEGA	R+	1	
R22.65	SHINGLE CREEK Ln	L+	1	
R22.76	MIDWAY PINES Dr	L+	1	
R23.03	RINGTAIL Ln	R+	1	
R23.03	LAUREL TREE Ln	L+	1	
R23.25	OGBURN Rd	L+	1	
R23.37	BOULDER RIDGE	L+	1	
R24.35	100 Rd	L+	1	
R24.42	ALBERS FOREST Dr	R+	1	
R24.45	PONDEROSA WAY WEST	L+	1	1
R24.56	PONDEROSA WAY EAST	L+	1	1
R25.19	MILLER'S Rd WEST	L+	1	1
R26.02	WATER LEAF Rd	R+	1	1
R26.24	CIELO Dr	L+	1	
R26.31	SHASTA FOREST Dr	L+	1	1
R26.51	SHINGLETOWN RIDGE Rd	R+	1	
R26.70	KAYSIE RAE Ct	L+	1	
R26.84	LISA GLEN Ct	R+	1	1
R27.11	DANDELION Ln/MOBILE PARK Dr	R+	1	
R27.45	SHINGLE GLEN TRAIL	L+	1	1
R27.76	EMIGRANT TRAIL	L+	1	1
R27.76	WILSON HILL Rd	R+	1	
R28.04	ALPINE MEADOWS Rd	R+	1	
32.20	GOOSE CHASE Rd	L+	1	1
32.42	BENT HILL Rd	L+	1	1
32.42	BLUSH OAK Ln	R+	1	1
32.77	BRUSH CREEK Ln	R+	1	
32.91	GRACE LAKE RESORT Rd	R+	1	1
33.13	ALWARD WAY	R+	1	
33.62	BIG WHEELS FS CAMP Rd	R+	1	1
33.73	MILL CREEK Rd	R+	1	1
33.91	YEW WOOD Ln	L+	1	
33.91	SQUAW SPRINGS Rd	R+	1	
33.94	SANDHOUSE Rd	R+	1	

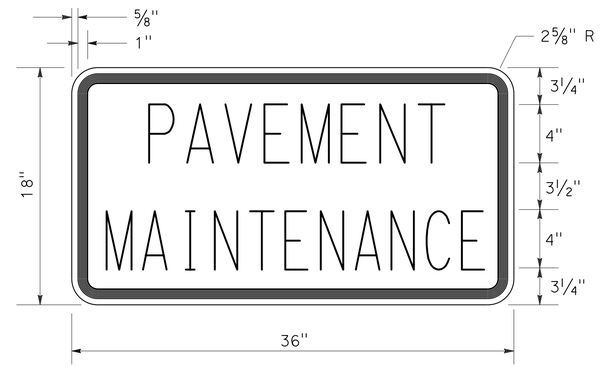

C23B(CA) SIGN PANEL DETAIL

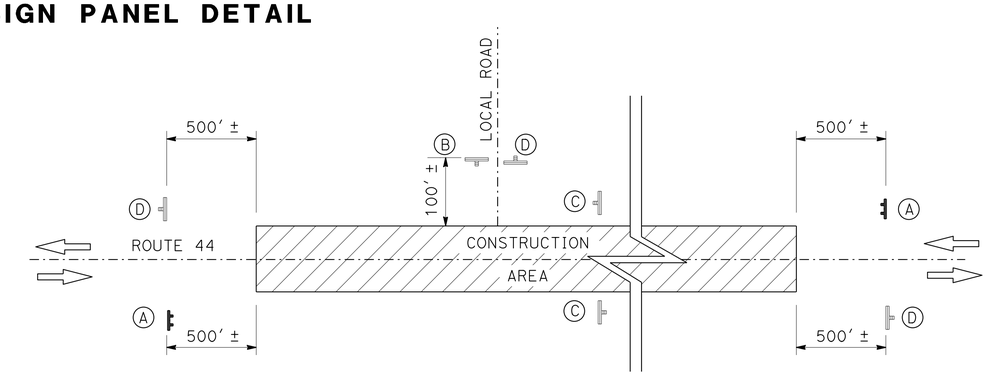

CONSTRUCTION AREA SIGNS (STATIONARY MOUNTED)

CONSTRUCTION AREA SIGNS (STATIONARY MOUNTED)

TYPE	CODE	PANEL SIZE	SIGN MESSAGE	NUMBER AND SIZE OF POST	No. OF SIGNS
(A)	CA11(CA) C23B(CA)	60" x 18" 36" x 18"	ROAD CONSTRUCTION NEXT XX MILES PAVEMENT MAINTENANCE	2-4" x 6"	2
(B)	W20-1	48" x 48"	ROAD WORK AHEAD	1-4" x 6"	54
(C)	CA11(CA)	60" x 18"	ROAD CONSTRUCTION NEXT XX MILES	2-4" x 4"	6
(D)	G20-2	36" x 18"	END ROAD WORK	1-4" x 4"	17

CONSTRUCTION AREA SIGNS

NO SCALE

CS-1

REVISED BY | DATE REVISED
DENISE FUZERE' | KARLIE SMITH
CALCULATED-DESIGNED BY | CHECKED BY
FUNCTIONAL SUPERVISOR | LANCE BROWN
STATE OF CALIFORNIA - DEPARTMENT OF TRANSPORTATION
Caltrans® MAINTENANCE

P:\proj3\02\0h300_plans\pse\20h3001a001.dgn

LAST REVISION 02-12-15 | DATE PLOTTED => 17-FEB-2015 | TIME PLOTTED => 06:52

Dist	COUNTY	ROUTE	POST MILES TOTAL PROJECT	SHEET No.	TOTAL SHEETS
02	Sha	44	R14.4/34.0	10	35

Denise Fuzere' 02-12-15
REGISTERED CIVIL ENGINEER DATE

02-12-15
PLANS APPROVAL DATE

REGISTERED PROFESSIONAL ENGINEER DENISE FUZERE' No. C69865 Exp. 09-30-16 CIVIL STATE OF CALIFORNIA

THE STATE OF CALIFORNIA OR ITS OFFICERS OR AGENTS SHALL NOT BE RESPONSIBLE FOR THE ACCURACY OR COMPLETENESS OF SCANNED COPIES OF THIS PLAN SHEET.

NOTES:

1. EXISTING UTILITY FACILITIES HAVE NOT BEEN INCLUDED ON THESE PLANS.
2. STRIPING QUANTITIES INCLUDES THE LENGTH TO EXTEND APPROXIMATELY 50 FEET BEYOND PAVING TO MATCH THE EXISTING STRIPE DETAILS.

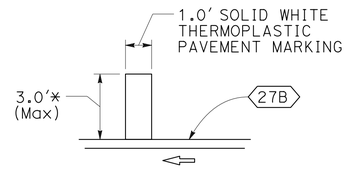

DETAIL A

* ACTUAL LENGTH MAY VARY DUE TO PAVEMENT WIDTH

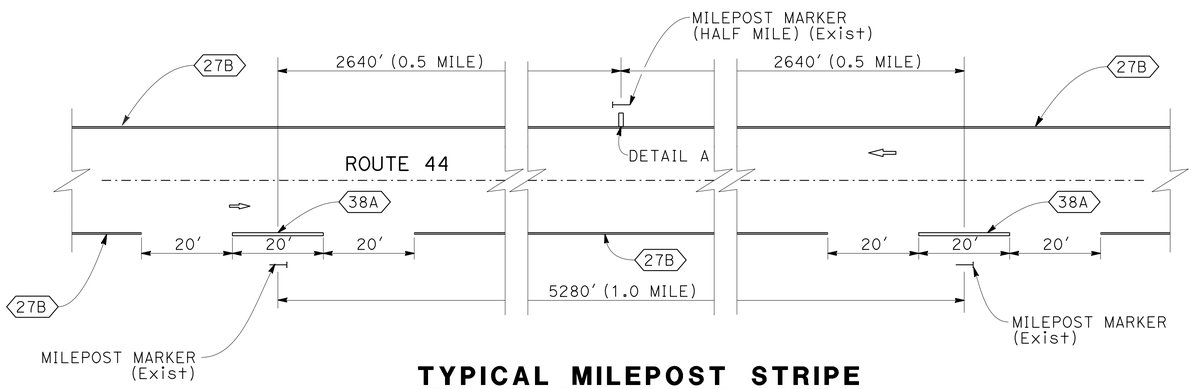

TYPICAL MILEPOST STRIPE (CONVENTIONAL ROADWAY)

NO HALF MILE STRIPE WITHIN AN EQUATION

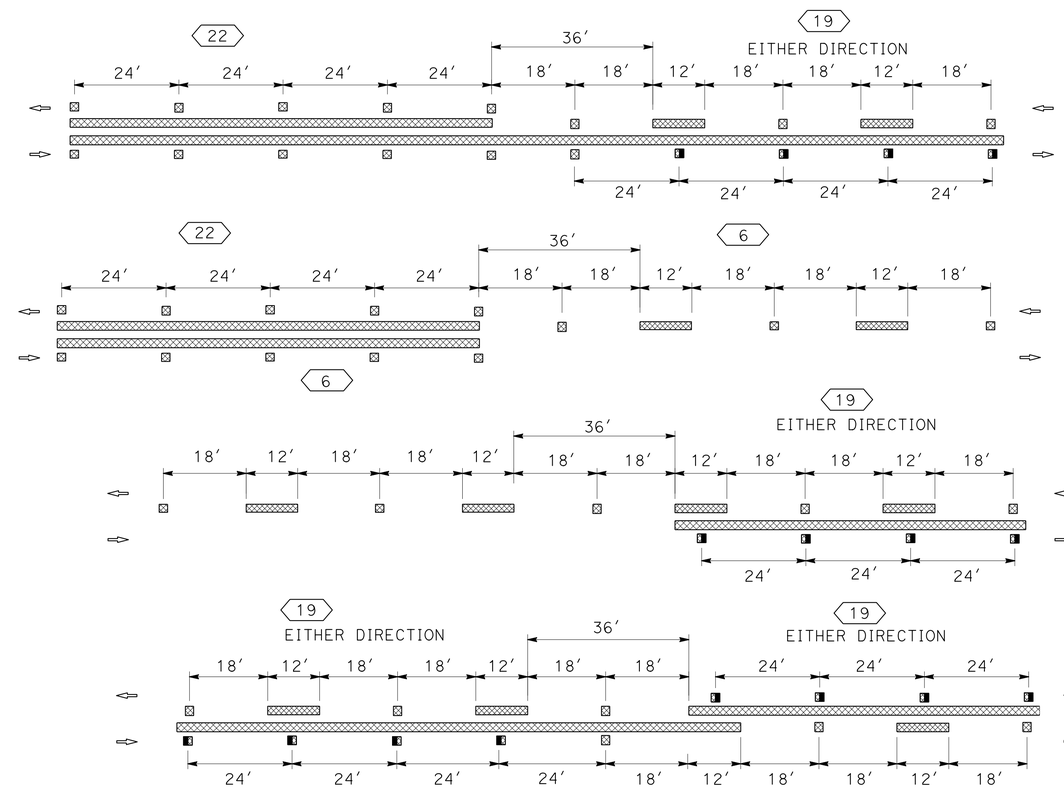

TYPICAL STRIPE TRANSITION DETAILS

PAVEMENT DELINEATION DETAILS

NO SCALE

PDD-1

STATE OF CALIFORNIA - DEPARTMENT OF TRANSPORTATION
Caltrans® MAINTENANCE

FUNCTIONAL SUPERVISOR: LANCE BROWN
CALCULATED-DESIGNED BY: DENISE FUZERE'
CHECKED BY: KARLIE SMITH
REVISED BY
DATE REVISED

P:\proj3\02\0h300_plans\pse\20h300nb001.dgn

LAST REVISION 02-12-15 | DATE PLOTTED => 17-FEB-2015 | TIME PLOTTED => 06:52

Dist	COUNTY	ROUTE	POST MILES TOTAL PROJECT	SHEET No.	TOTAL SHEETS
02	Sha	44	R14.4/34.0	11	35

Denise Fuzere' 02-12-15
REGISTERED CIVIL ENGINEER DATE

02-12-15
PLANS APPROVAL DATE

REGISTERED PROFESSIONAL ENGINEER DENISE FUZERE' No. C69865 Exp. 09-30-16 CIVIL STATE OF CALIFORNIA

THE STATE OF CALIFORNIA OR ITS OFFICERS OR AGENTS SHALL NOT BE RESPONSIBLE FOR THE ACCURACY OR COMPLETENESS OF SCANNED COPIES OF THIS PLAN SHEET.

NOTE:

1. (N) NOT A SEPARATE PAY ITEM, FOR INFORMATION ONLY.

ABBREVIATIONS;

Mid MIDDLE

THERMOPLASTIC PAVEMENT MARKING

POST MILE LIMITS	L+	Mid	R+	(N) EA	SQFT	REMARKS
R14.75			X	1	22	STOP
R14.75			X	1	33	ROAD CONNECTION LIMIT LINE
R15.34			X	1	23	ROAD CONNECTION LIMIT LINE
R17.47			X	1	42	TYPE VI ARROW
R17.51			X	1	42	TYPE VI ARROW
R17.54			X	1	42	TYPE VI ARROW
R18.95		X		1	42	TYPE III (L) ARROW
R19.01		X		1	42	TYPE III (L) ARROW
R19.01			X	2	44	STOP
R19.01			X	1	50	ROAD CONNECTION LIMIT LINE
R19.18			X	1	22	STOP
R19.18			X	1	28	ROAD CONNECTION LIMIT LINE
R19.43			X	1	22	STOP
R19.43			X	1	48	ROAD CONNECTION LIMIT LINE
R20.05			X	1	22	STOP
R20.05			X	1	38	ROAD CONNECTION LIMIT LINE
R20.34	X			1	22	STOP
R20.34	X			1	24	ROAD CONNECTION LIMIT LINE
R20.79		X		1	42	TYPE III (L) ARROW
R20.80	X			1	22	STOP
R20.80	X			1	42	ROAD CONNECTION LIMIT LINE
R21.03	X			1	22	STOP
R21.03	X			1	28	ROAD CONNECTION LIMIT LINE
R21.17	X			1	22	STOP
R21.17	X			1	29	ROAD CONNECTION LIMIT LINE
R21.50	X			1	24	ROAD CONNECTION LIMIT LINE
R21.59		X		1	42	TYPE VI ARROW
R22.06			X	1	22	STOP
R22.06			X	1	50	ROAD CONNECTION LIMIT LINE
R24.44		X		1	42	TYPE III (L) ARROW
R24.45		X		1	42	TYPE III (L) ARROW
R24.45	X			1	22	STOP
R24.45	X			1	45	ROAD CONNECTION LIMIT LINE
R24.56	X			1	22	STOP
R24.56	X			1	34	ROAD CONNECTION LIMIT LINE
R24.57	X			1	42	TYPE III (R) ARROW
R24.60	X			1	42	TYPE III (R) ARROW
SUBTOTAL					1244	

THERMOPLASTIC PAVEMENT MARKING

POST MILE LIMITS	L+	Mid	R+	(N) EA	SQFT	REMARKS
R24.63	X			1	42	TYPE III (R) ARROW
R25.19	X			1	22	STOP
R25.19	X			1	25	ROAD CONNECTION LIMIT LINE
R25.57	X			1	22	STOP
R25.57	X			1	41	ROAD CONNECTION LIMIT LINE
R26.02			X	1	22	STOP
R26.02			X	1	42	ROAD CONNECTION LIMIT LINE
R26.19	X			1	42	TYPE VI ARROW
R26.22	X			1	42	TYPE VI ARROW
R26.23		X		1	42	TYPE III (L) ARROW
R26.24	X			1	42	TYPE VI ARROW
R26.30		X		1	42	TYPE III (L) ARROW
R26.41	X			1	22	STOP
R26.41	X			1	35	ROAD CONNECTION LIMIT LINE
R26.32-R26.35	X			1	457	DELINEATED ISLAND
R26.33	X			1	42	TYPE III (R) ARROW
R26.35	X			1	42	TYPE III (R) ARROW
R26.42			X	1	22	STOP
R26.42			X	1	43	ROAD CONNECTION LIMIT LINE
R26.42		X		1	42	TYPE III (L) ARROW
R26.43	X			1	42	TYPE VI ARROW
R26.48	X			1	42	TYPE VI ARROW
R26.49		X		1	42	TYPE III (L) ARROW
R26.52	X			1	42	TYPE VI ARROW
R26.84	X			1	27	ROAD CONNECTION LIMIT LINE
R27.11			X	1	22	STOP
R27.11			X	1	40	ROAD CONNECTION LIMIT LINE
R27.46		X		1	42	TYPE III (L) ARROW
R27.49	X			1	22	STOP
R27.49	X			1	35	ROAD CONNECTION LIMIT LINE
R27.50	X			1	42	TYPE III (R) ARROW
R27.55	X			1	42	TYPE III (R) ARROW
R27.71		X		1	42	TYPE III (L) ARROW
R27.72		X		1	42	TYPE III (L) ARROW
R27.84		X		1	42	TYPE III (L) ARROW
R27.86			X	1	42	TYPE III (R) ARROW
R27.88			X	1	33	TYPE I 24'-0" ARROW
SUBTOTAL					1772	

THERMOPLASTIC PAVEMENT MARKING

POST MILE LIMITS	L+	Mid	R+	(N) EA	SQFT	REMARKS
R27.76	X			2	44	STOP
R27.76	X			1	40	ROAD CONNECTION LIMIT LINE
R27.76	X			1	15	TYPE IV (L) ARROW
R27.76	X			1	27	TYPE VII (R) ARROW
R27.76			X	1	22	STOP
R27.76			X	1	33	ROAD CONNECTION LIMIT LINE
R27.90		X		1	33	TYPE I 24'-0" ARROW
R27.91		X		1	42	TYPE III (L) ARROW
R27.92			X	1	42	TYPE III (R) ARROW
R27.96		X		1	42	TYPE III (L) ARROW
R27.98	X			1	42	TYPE III (R) ARROW
R28.04			X	1	22	STOP
R28.04			X	1	46	ROAD CONNECTION LIMIT LINE
32.42	X			1	22	STOP
32.42	X			1	35	ROAD CONNECTION LIMIT LINE
32.77			X	1	35	ROAD CONNECTION LIMIT LINE
33.07	X			1	30	ROAD CONNECTION LIMIT LINE
33.13	X			1	22	STOP
33.13	X			1	30	ROAD CONNECTION LIMIT LINE
33.13			X	1	22	STOP
33.13			X	1	30	ROAD CONNECTION LIMIT LINE
33.71			X	1	35	ROAD CONNECTION LIMIT LINE
R14.40-R19.00	X			5	15	DETAIL A
SUBTOTAL					726	
TOTAL					3742	

(N) REMOVE PAVEMENT MARKER

POST MILE LIMITS	EA
R14.4/34.0	6885

PAVEMENT MARKER (RETROREFLECTIVE-RECESSED)

POST MILE LIMITS	TYPE D	TYPE G	TYPE H
	EA	EA	EA
R14.4/34.0	6093	503	289
TOTAL	6885		

THERMOPLASTIC TRAFFIC STRIPE (SPRAYABLE)

POST MILE LIMITS	DETAIL 6	DETAIL 12	DETAIL 19	DETAIL 22	DETAIL 27B	DETAIL 27C	DETAIL 29	DETAIL 38	DETAIL 38A
	LF	LF	LF	LF	LF	LF	LF	LF	LF
R14.40/34.00	10,007	3010	6901	61,423	152,746	12,044	7393	10,497	340
TOTAL	264,361								

PAVEMENT DELINEATION QUANTITIES
PDQ-1

REVISED BY | DATE REVISED
DENISE FUZERE' | KARLIE SMITH
CALCULATED-DESIGNED BY | CHECKED BY
FUNCTIONAL SUPERVISOR | LANCE BROWN
STATE OF CALIFORNIA - DEPARTMENT OF TRANSPORTATION
Caltrans® MAINTENANCE

P:\proj3\02\0h300_plans\pse\20h300nc001.dgn

LAST REVISION 02-12-15 | DATE PLOTTED => 17-FEB-2015 TIME PLOTTED => 06:52

Dist	COUNTY	ROUTE	POST MILES TOTAL PROJECT	SHEET No.	TOTAL SHEETS
02	Sha	44	R14.4/34.0	12	35

Denise Fuzere' 02-12-15
REGISTERED CIVIL ENGINEER DATE

02-12-15
PLANS APPROVAL DATE

REGISTERED PROFESSIONAL ENGINEER DENISE FUZERE' No. C69865 Exp. 09-30-16 CIVIL STATE OF CALIFORNIA

THE STATE OF CALIFORNIA OR ITS OFFICERS OR AGENTS SHALL NOT BE RESPONSIBLE FOR THE ACCURACY OR COMPLETENESS OF SCANNED COPIES OF THIS PLAN SHEET.

NOTE:

1. (N) NOT A SEPARATE PAY ITEM, FOR INFORMATION ONLY.

REMOVE THERMOPLASTIC PAVEMENT MARKING

POST MILE LIMITS	L†	Mid	R†	(N) EA	SQFT	REMARKS
R14.75			X	1	22	STOP
R14.75			X	1	33	ROAD CONNECTION LIMIT LINE
R15.34			X	1	23	ROAD CONNECTION LIMIT LINE
R17.47			X	1	42	TYPE VI ARROW
R17.51			X	1	42	TYPE VI ARROW
R17.54			X	1	42	TYPE VI ARROW
R18.95		X		1	42	TYPE III (L) ARROW
R19.01		X		1	42	TYPE III (L) ARROW
R19.01			X	2	44	STOP
R19.01			X	1	50	ROAD CONNECTION LIMIT LINE
R19.18			X	1	22	STOP
R19.18			X	1	28	ROAD CONNECTION LIMIT LINE
R19.43			X	1	22	STOP
R19.43			X	1	48	ROAD CONNECTION LIMIT LINE
R20.05			X	1	22	STOP
R20.05			X	1	38	ROAD CONNECTION LIMIT LINE
R20.34	X			1	22	STOP
R20.34	X			1	24	ROAD CONNECTION LIMIT LINE
R20.79		X		1	42	TYPE III (L) ARROW
R20.80	X			1	22	STOP
R20.80	X			1	42	ROAD CONNECTION LIMIT LINE
R21.03	X			1	22	STOP
R21.03	X			1	28	ROAD CONNECTION LIMIT LINE
R21.17	X			1	22	STOP
R21.17	X			1	29	ROAD CONNECTION LIMIT LINE
R21.50	X			1	24	ROAD CONNECTION LIMIT LINE
R21.59		X		1	42	TYPE VI ARROW
R22.06			X	1	22	STOP
R22.06			X	1	50	ROAD CONNECTION LIMIT LINE
R24.44		X		1	42	TYPE III (L) ARROW
R24.45		X		1	42	TYPE III (L) ARROW
R24.45	X			1	22	STOP
R24.45	X			1	45	ROAD CONNECTION LIMIT LINE
R24.56	X			1	22	STOP
R24.56	X			1	34	ROAD CONNECTION LIMIT LINE
R24.57	X			1	42	TYPE III (R) ARROW
R24.60	X			1	42	TYPE III (R) ARROW
SUBTOTAL					1244	

REMOVE THERMOPLASTIC PAVEMENT MARKING

POST MILE LIMITS	L†	Mid	R†	(N) EA	SQFT	REMARKS
R24.63	X			1	42	
R25.19	X			1	22	
R25.19	X			1	25	
R25.57	X			1	22	
R25.57	X			1	41	
R26.02			X	1	22	
R26.02			X	1	42	
R26.19	X			1	42	
R26.22	X			1	42	
R26.23		X		1	42	
R26.24	X			1	42	
R26.30		X		1	42	
R26.41	X			1	22	
R26.41	X			1	35	
R26.32-R26.35	X			1	457	
R26.33	X			1	42	
R26.35	X			1	42	
R26.42			X	1	22	
R26.42			X	1	43	
R26.42		X		1	42	
R26.43	X			1	42	
R26.48	X			1	42	
R26.49		X		1	42	
R26.52	X			1	42	
R26.84	X			1	27	
R27.11			X	1	22	
R27.11			X	1	40	
R27.46		X		1	42	
R27.49	X			1	22	
R27.49	X			1	35	
R27.50	X			1	42	
R27.55	X			1	42	
R27.71		X		1	42	
R27.72		X		1	42	
R27.84		X		1	42	
R27.86			X	1	42	
R27.88			X	1	33	
SUBTOTAL					1772	

REMOVE THERMOPLASTIC PAVEMENT MARKING

POST MILE LIMITS	L†	Mid	R†	(N) EA	SQFT	REMARKS
R27.76	X			2	44	STOP
R27.76	X			1	40	ROAD CONNECTION LIMIT LINE
R27.76	X			1	15	TYPE IV (L) ARROW
R27.76	X			1	27	TYPE VII (R) ARROW
R27.76			X	1	22	STOP
R27.76			X	1	33	ROAD CONNECTION LIMIT LINE
R27.90		X		1	33	TYPE I 24'-0" ARROW
R27.91		X		1	42	TYPE III (L) ARROW
R27.92			X	1	42	TYPE III (R) ARROW
R27.96		X		1	42	TYPE III (L) ARROW
R27.98	X			1	42	TYPE III (R) ARROW
R28.04			X	1	22	STOP
R28.04			X	1	46	ROAD CONNECTION LIMIT LINE
32.42	X			1	22	STOP
32.42	X			1	35	ROAD CONNECTION LIMIT LINE
32.77			X	1	35	ROAD CONNECTION LIMIT LINE
33.07	X			1	30	ROAD CONNECTION LIMIT LINE
33.13	X			1	22	STOP
33.13	X			1	30	ROAD CONNECTION LIMIT LINE
33.13			X	1	22	STOP
33.13			X	1	30	ROAD CONNECTION LIMIT LINE
33.71			X	1	35	ROAD CONNECTION LIMIT LINE
SUBTOTAL					711	
TOTAL					3727	

PAVEMENT DELINEATION QUANTITIES
PDQ-2

REVISED BY | DATE REVISED
DENISE FUZERE' | KARLIE SMITH
CALCULATED-DESIGNED BY | CHECKED BY
FUNCTIONAL SUPERVISOR | LANCE BROWN

Caltrans® STATE OF CALIFORNIA - DEPARTMENT OF TRANSPORTATION
MAINTENANCE

P:\proj3\02\0h300_plans\pse\20h300nc002.dgn

LAST REVISION 02-12-15 | DATE PLOTTED => 17-FEB-2015 | TIME PLOTTED => 06:52

Dist	COUNTY	ROUTE	POST MILES TOTAL PROJECT	SHEET No.	TOTAL SHEETS
02	Sha	44	R14.4/34.0	13	35

Denise Fuzere 02-12-15
REGISTERED CIVIL ENGINEER DATE

02-12-15
PLANS APPROVAL DATE

REGISTERED PROFESSIONAL ENGINEER DENISE FUZERE No. C69865 Exp. 09-30-16 CIVIL STATE OF CALIFORNIA

THE STATE OF CALIFORNIA OR ITS OFFICERS OR AGENTS SHALL NOT BE RESPONSIBLE FOR THE ACCURACY OR COMPLETENESS OF SCANNED COPIES OF THIS PLAN SHEET.

NOTES:

1. (N) - NOT A SEPARATE PAY ITEM, FOR INFORMATION ONLY
2. EXACT LOCATIONS OF REPLACE AC SURFACING TO BE DETERMINED BY THE ENGINEER.

ROADWAY QUANTITIES

POST MILE LIMITS	(N) WIDTH	(N) LENGTH	HOT MIX ASPHALT (TYPE A)	TACK COAT	SHOULDER BACKING
PM - PM	LF	LF	TON	TON	TON
R14.40 - R14.64	32.0-28.0	1267.2			
R14.64 - R14.84	28.0-38.0	1056.0			
R14.84 - R14.98	38.0-27.0	739.2			
R14.98 - R16.23	27.0-42.0	6600.0			
R16.23 - R16.38	42.0-58.0	792.0			
R16.38 - R16.43	58.0-40.0	264.0			
R16.43 - R17.00	40.0-48.0	3009.6			
R17.00 - R17.10	48.0-50.0	528.0			
R17.10 - R17.55	50.0-48.0	2376.0			
R17.55 - R17.70	48.0-46.0	792.0			
R17.70 - R17.80	46.0-40.0	528.0			
R17.80 - R18.24	40.0-47.0	2323.2			
R18.24 - R18.31	47.0-42.0	369.6			
R18.31 - R18.57	42.0-40.0	1372.8			
R18.57 - R18.85	40.0-46.0	1478.4			
R18.85 - R19.12	46.0-30.0	1425.6			
R19.12 - R19.29	30.0-40.0	897.6			
R19.29 - R19.31	40.0-57.0	105.6			
R19.31 - R19.35	57.0-30.0	211.2			
R19.35 - R20.65	30.0-40.0	6864.0	22,567	97.5	4847
R20.65 - R20.71	40.0-33.0	316.8			
R20.71 - R21.15	33.0-47.0	2323.2			
R21.15 - R21.25	47.0-40.0	528.0			
R21.25 - R21.28	40.0-46.0	158.4			
R21.28 - R21.47	46.0-30.0	1003.2			
R21.47 - R23.64	30.0-41.0	11457.6			
R23.64 - R23.78	41.0-30.0	739.2			
R23.78 - R24.25	30.0-48.0	2481.6			
R24.25 - R24.90	48.0-43.0	3432.0			
R24.90 - R25.13	43.0-48.0	1214.4			
R25.13 - R25.20	48.0-32.0	369.6			
R25.20 - R25.43	32.0-58.0	1214.4			
R25.43 - R26.15	58.0-67.0	3801.6			
R26.15 - R26.50	67.0-55.0	1848.0			
R26.50 - R27.00	55.0-33.0	2640.0			
R27.00 - R27.41	33.0-54.0	2164.8			
R27.41 - R27.68	54.0-39.0	1425.6			
R27.68 - R27.78	39.0-66.0	528.0			
R27.78 - R27.85	66.0-60.0	369.6			
R27.85 - R28.16	60.0-31.0	1636.8			
32.00 - 34.00	31.0-31.0	10560.0			
ROAD CONNECTIONS/DRIVEWAYS/PULL-OUTS			2258	26.4	374
AC DIKE			42	0.1	
TOTAL			24,867	124	5221

COLD PLANE ASPHALT CONCRETE PAVEMENT

POST MILE	(N) LENGTH	(N) WIDTH	AREA	REMARKS
	LF	LF	SQYD	
R14.50	30.0	40.0	1200	MAINLINE CONFORM - BEGIN PROJECT
R15.34	20.0	4.0	388	CHERTH BROOK Dr
R16.23	40.0	4.0	246	McWEBTH WAY
R16.29	15.0	4.0	146	DRIVEWAY
R16.55	30.0	4.0	120	BRADY Ln
R17.99	34.0	4.0	152	DRIVEWAY
R18.94	100.0	4.0	526	DERSCH Rd
R19.18	30.0	4.0	352	CAMINO ORO
R19.43	30.0	4.0	500	CAMINO VISTA
R19.80	30.0	4.0	240	DRIVEWAY
R20.05	30.0	4.0	430	CAMINO REAL
R20.34	23.0	4.0	250	DRIVEWAY
R20.65	30.0	4.0	260	PURSELL Rd
R20.73	25.0	4.0	180	DRIVEWAY
R20.80	65.0	4.0	402	INWOOD Rd
R21.39	25.0	4.0	980	HAYDON Ln
R21.39	32.0	4.0	244	BLACK BUTTE Rd
R21.97	23.0	4.0	158	DRIVEWAY
R22.06	50.0	4.0	416	PINE BLUFF Dr
R24.45	60.0	4.0	360	PONDEROSA WAY WEST
R24.56	20.0	4.0	140	PONDEROSA WAY EAST
R24.58	60.0	4.0	280	DRIVEWAY
R25.16	50.0	4.0	250	MILLER'S Rd WEST
R25.52	50.0	4.0	290	MILLER'S Rd EAST
R26.02	50.0	4.0	290	WATER LEAF Rd
R26.31	50.0	4.0	230	SHASTA FOREST DR
R26.51	50.0	4.0	250	SHINGLETOWN RIDGE Rd
R27.11	28.0	4.0	284	DANDELION/MOBILE PARK Dr
R27.88	25.0	4.0	254	WILSON HILL Rd
R27.88	20.0	4.0	172	EMIGRANT TRAIL
R28.04	31.0	4.0	430	ALPINE MEADOWS Rd
34.00	35.0	40.0	1400	MAINLINE CONFORM - END PROJECT
TOTAL			11,820	

GUARDRAIL QUANTITIES

POST MILE LIMITS	SIDE EB/WB	ADJUST GUARDRAIL	RECONSTRUCT TERMINAL SYSTEM		RECONSTRUCT END ANCHOR (TYPE SFT)	(N) BURIED END ANCHOR	(N) INTERMEDIATE ANCHOR	TREATED WOOD WASTE
		LF	EA	TYPE	EA	EA	EA	LB
R18.37-R18.63	EB	1375.0	1	SRT		1		2200
R18.39-R18.58	WB	1012.5			1	1	1	
R18.58-R18.63	WB	275.0	1	SRT	1		1	
R25.27-R25.37	EB	537.5	1	SRT		1		
TOTAL		3200.0	3		2			2200

SUMMARY OF QUANTITIES

Q-1

REVISED BY | DATE REVISED
DENISE FUZERE' | KARLIE SMITH
CALCULATED-DESIGNED BY | CHECKED BY
FUNCTIONAL SUPERVISOR | LANCE BROWN
STATE OF CALIFORNIA - DEPARTMENT OF TRANSPORTATION
Caltrans® MAINTENANCE

P:\proj13\02\0h300_plans\pse\20h300pa001.dgn

LAST REVISION 02-12-15 | DATE PLOTTED => 17-FEB-2015 | TIME PLOTTED => 06:52

Dist	COUNTY	ROUTE	POST MILES TOTAL PROJECT	SHEET No.	TOTAL SHEETS
02	Sha	44	R14.4/34.0	14	35

Denise Fuzere' 02-12-15
REGISTERED CIVIL ENGINEER DATE

02-12-15
PLANS APPROVAL DATE

REGISTERED PROFESSIONAL ENGINEER DENISE FUZERE' No. C69865 Exp. 09-30-16 CIVIL STATE OF CALIFORNIA

THE STATE OF CALIFORNIA OR ITS OFFICERS OR AGENTS SHALL NOT BE RESPONSIBLE FOR THE ACCURACY OR COMPLETENESS OF SCANNED COPIES OF THIS PLAN SHEET.

NOTES:

1. (N) - NOT A SEPARATE PAY ITEM, FOR INFORMATION ONLY
2. EXACT LOCATIONS OF REPLACE AC SURFACING TO BE DETERMINED BY THE ENGINEER.
3. EXISTING UTILITY FACILITIES HAVE NOT BEEN INCLUDED ON THESE PLANS.

DIKE QUANTITIES

POST MILE LIMITS	SIDE	PLACE HMA DIKE (TYPE C)	PLACE HMA DIKE (TYPE A)	PLACE HMA DIKE (TYPE E)	PLACE HMA DIKE (TYPE F)	REMOVE AC DIKE	NOTES
		LF	LF	LF	LF	LF	
R14.50-R14.70	R†		1056			1056	
R16.30-R16.54	L†/R†			2534		2534	
R16.54-R16.64	L†			528		528	
R16.64-R16.76	L†/R†			1267		1267	
R16.76-R16.82	L†			317		317	
R16.82-R17.68	L†/R†			9082		9082	
R17.68-R17.76	L†			422		422	
R17.76-R18.20	L†/R†			4646		4646	
R18.20-R18.31	L†/R†	25	1162			1187	25' BEFORE GUARDRAIL
R18.31-R18.57	L†/R†				2746	2746	UNDER GUARDRAIL
R18.57-R18.76	L†/R†			2006		2006	
R24.20-R24.35	L†			792		792	
R24.35-R24.51	R†			845		845	
R24.51-R24.57	L†/R†			634		634	
R24.57-R24.72	R†			792		792	
R24.72-R24.82	R†		528			528	
R24.82-R24.95	L†		686			686	
R24.98-R25.15	R†			898		898	
R25.31-R25.88	L†/R†			6019		6019	
R25.88-R26.30	R†			2218		2218	
R26.30-R26.37	L†		370			370	
R26.37-R26.71	L†/R†			3590		3590	
R26.71-R26.79	L†		845			845	
R26.82-R26.84	R†			106		106	
TOTAL		25	4646	36,696	2746	44,113	

REPLACE ASPHALT CONCRETE SURFACING

POST MILE LIMITS	(N) Approx No. OF DIGOUTS	(N) LENGTH Avg	(N) WIDTH	(N) DEPTH	REPLACE ASPHALT CONCRETE SURFACING
PM - PM		LF	LF	LF	CY
R14.44 - R15.00	10	100	4	0.33	48.9
R15.00 - R16.00	10	100	4	0.33	48.9
R16.00 - R17.00	10	100	4	0.33	48.9
R17.00 - R18.00	10	100	4	0.33	48.9
R18.00 - R19.00	10	100	4	0.33	48.9
R19.00 - R20.00	10	100	4	0.33	48.9
R20.00 - R21.00	10	100	4	0.33	48.9
R21.00 - R22.00	10	100	4	0.33	48.9
R22.00 - R23.00	10	100	4	0.33	48.9
R23.00 - R24.00	10	100	4	0.33	48.9
R24.00 - R25.00	10	100	4	0.33	48.9
R25.00 - R26.00	10	100	4	0.33	48.9
R26.00 - R27.00	10	100	4	0.33	48.9
R27.00 - R28.20	10	100	4	0.33	48.9
32.00 - 33.00	10	100	4	0.33	48.9
33.00 - 34.00	10	100	4	0.33	48.9
TOTAL					782.2

PREPAVING GRINDING DAY

POST MILE LIMITS	EA
R14.4-34.0	3
TOTAL	3

CENTERLINE RUMBLE STRIP (HMA, GROUND-IN INDENDATIONS)

POST MILE LIMITS	Sta
R17.00-R17.53	28.0

SUMMARY OF QUANTITIES

Q-2

REVISED BY | DATE REVISED
DENISE FUZERE' | KARLIE SMITH
CALCULATED-DESIGNED BY | CHECKED BY
FUNCTIONAL SUPERVISOR | LANCE BROWN

STATE OF CALIFORNIA - DEPARTMENT OF TRANSPORTATION
Caltrans MAINTENANCE

P:\proj3\02\0h300_plans\pse\20h300pa002.dgn

LAST REVISION 02-12-15 | DATE PLOTTED => 17-FEB-2015 | TIME PLOTTED => 06:52

Dist	COUNTY	ROUTE	POST MILES TOTAL PROJECT	SHEET No.	TOTAL SHEETS
02	Sha	44	R14.4/34.0	15	35

ART 02-12-15
REGISTERED ELECTRICAL ENGINEER DATE

02-12-15
PLANS APPROVAL DATE

REGISTERED PROFESSIONAL ENGINEER A.P. ROBLES No. E15293 Exp. 3-31-15 ELECTRICAL STATE OF CALIFORNIA

THE STATE OF CALIFORNIA OR ITS OFFICERS OR AGENTS SHALL NOT BE RESPONSIBLE FOR THE ACCURACY OR COMPLETENESS OF SCANNED COPIES OF THIS PLAN SHEET.

NOTES:

1. FOR ACCURATE RIGHT OF WAY DATA, CONTACT RIGHT OF WAY ENGINEERING AT THE DISTRICT OFFICE.
2. EXISTING UTILITY FACILITITES HAVE NOT BEEN INCLUDED ON THESE PLANS.

LEGEND:

(pb) Exist OBJECT MARKER (TYPE PB)

—— PIEZO-ELECTRIC AXLE SENSOR

ABBREVIATIONS;

TCS TRAFFIC COUNT STATION
STC SCREENED TRANSMISSION CABLE

LEGEND (THIS SHEET):

1 REUSE SHOULDER TERMINATION.

2 COIL 10′ OF WIRES IN PULL BOX.

3 REPLACE PB. USE PB WITH TAMPER RESISTANT COVER.

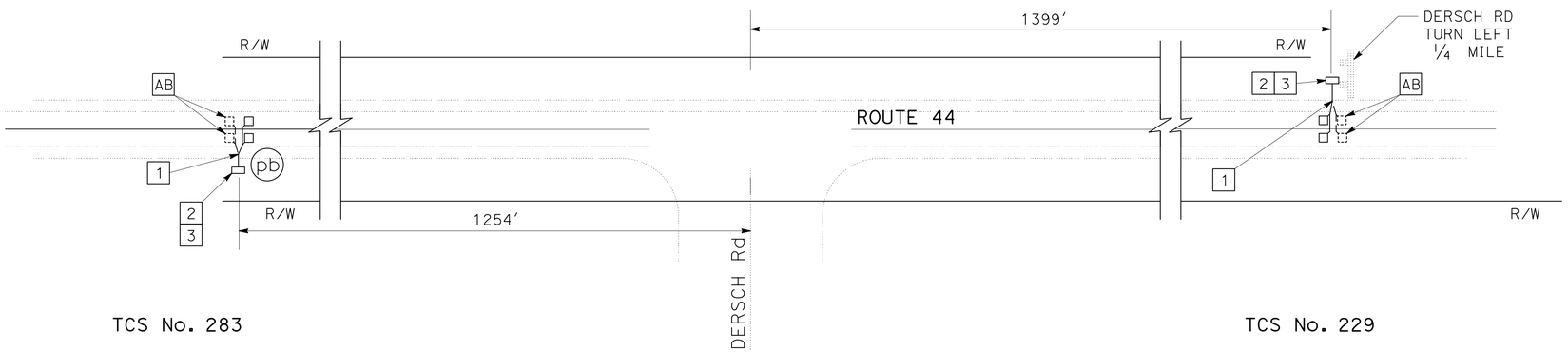

MODIFY TRAFFIC COUNT STATION

NO SCALE

APPROVED FOR ELECTRICAL WORK ONLY

E-1

REVISED BY | DATE REVISED
ARTURO P. ROBLES | KAREN LAW
CALCULATED-DESIGNED BY | CHECKED BY
FUNCTIONAL SUPERVISOR: ROB STINGER

STATE OF CALIFORNIA - DEPARTMENT OF TRANSPORTATION
Caltrans® ELECTRICAL DESIGN

P:\proj3\02\0h300_plans\pse\20h300ua001.dgn

LAST REVISION 02-04-15 | DATE PLOTTED => 17-FEB-2015 | TIME PLOTTED => 06:52

Dist	COUNTY	ROUTE	POST MILES TOTAL PROJECT	SHEET No.	TOTAL SHEETS
02	Sha	44	R14.4/34.0	16	35

ART 02-12-15
REGISTERED ELECTRICAL ENGINEER DATE

02-12-15
PLANS APPROVAL DATE

REGISTERED PROFESSIONAL ENGINEER A.P. ROBLES No. E15293 Exp. 3-31-15 ELECTRICAL STATE OF CALIFORNIA

THE STATE OF CALIFORNIA OR ITS OFFICERS OR AGENTS SHALL NOT BE RESPONSIBLE FOR THE ACCURACY OR COMPLETENESS OF SCANNED COPIES OF THIS PLAN SHEET.

NOTES:

1. FOR ACCURATE RIGHT OF WAY DATA, CONTACT RIGHT OF WAY ENGINEERING AT THE DISTRICT OFFICE.
2. EXISTING UTILITY FACILITITES HAVE NOT BEEN INCLUDED ON THESE PLANS.

LEGEND (THIS SHEET):

1 AB Exist LOOP DETECTORS AND AXLE SENSORS.

2 REUSE SHOULDER TERMINATION.

3 Exist 1½"C, 2 DLC, 4 STC. REPLACE WITH 4 DLC AND 2 STC.

4 COIL 10' OF CABLES IN TCS CABINET.

5 SEE TYPICAL AXLE SENSOR INSTALLATION DETAIL, SHEET E-3

6 PB AND TAMPER RESISTANT COVER.

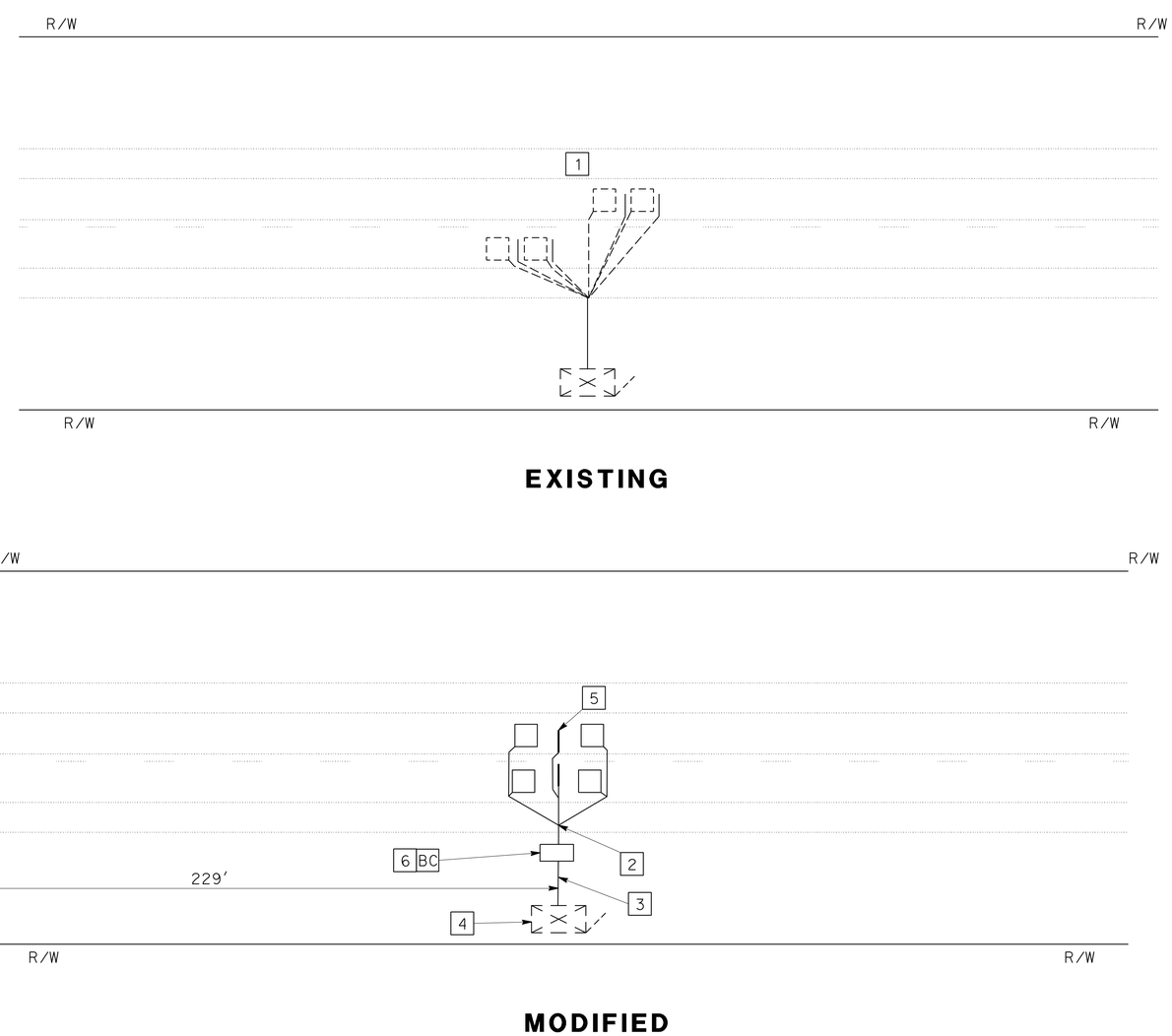

TCS No. 284

MODIFY TRAFFIC COUNT STATION

NO SCALE

E-2

APPROVED FOR ELECTRICAL WORK ONLY

REVISED BY | DATE REVISED

ARTURO P. ROBLES | KAREN LAW

CALCULATED-DESIGNED BY | CHECKED BY

FUNCTIONAL SUPERVISOR: ROB STINGER

STATE OF CALIFORNIA - DEPARTMENT OF TRANSPORTATION

Caltrans® ELECTRICAL DESIGN

P:\proj3\02\0h300_plans\pse\20h300ua002.dgn

LAST REVISION 02-04-15 | DATE PLOTTED => 17-FEB-2015 TIME PLOTTED => 06:52

Dist	COUNTY	ROUTE	POST MILES TOTAL PROJECT	SHEET No.	TOTAL SHEETS
02	Sha	44	R14.4/34.0	17	35

ART 02-12-15
REGISTERED ELECTRICAL ENGINEER DATE

02-12-15
PLANS APPROVAL DATE

REGISTERED PROFESSIONAL ENGINEER
A.P. ROBLES
No. E15293
Exp. 3-31-15
ELECTRICAL
STATE OF CALIFORNIA

THE STATE OF CALIFORNIA OR ITS OFFICERS OR AGENTS SHALL NOT BE RESPONSIBLE FOR THE ACCURACY OR COMPLETENESS OF SCANNED COPIES OF THIS PLAN SHEET.

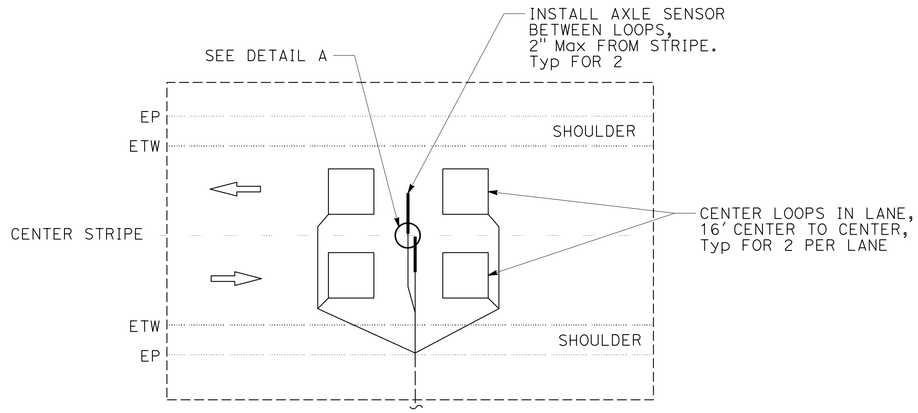

TYPICAL AXLE SENSOR INSTALLATION

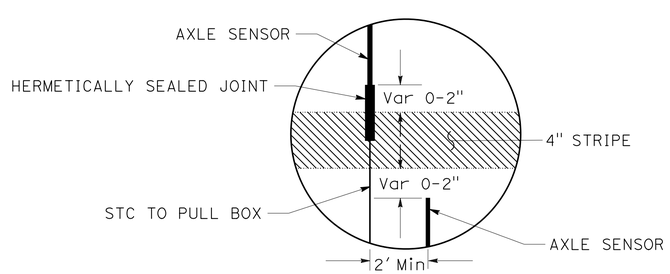

DETAIL A

ELECTRICAL DETAILS

NO SCALE **E-3**

REVISED BY	DATE REVISED

CALCULATED-DESIGNED BY	CHECKED BY
ARTURO P. ROBLES	KAREN LAW

FUNCTIONAL SUPERVISOR: ROB STINGER

STATE OF CALIFORNIA - DEPARTMENT OF TRANSPORTATION
Caltrans® ELECTRICAL DESIGN

P:\proj3\02\0h300_plans\pse\20h300ua003.dgn

LAST REVISION 02-04-15 | DATE PLOTTED => 17-FEB-2015 | TIME PLOTTED => 06:52

Dist	COUNTY	ROUTE	POST MILES TOTAL PROJECT	SHEET No.	TOTAL SHEETS
02	Sha	44	R14.4/34.0	18	35

ART 02-12-15
REGISTERED ELECTRICAL ENGINEER DATE

02-12-15
PLANS APPROVAL DATE

REGISTERED PROFESSIONAL ENGINEER A.P. ROBLES No. E15293 Exp. 3-31-15 ELECTRICAL STATE OF CALIFORNIA

THE STATE OF CALIFORNIA OR ITS OFFICERS OR AGENTS SHALL NOT BE RESPONSIBLE FOR THE ACCURACY OR COMPLETENESS OF SCANNED COPIES OF THIS PLAN SHEET.

MODIFY TRAFFIC COUNT STATION

SHEET No.	TYPE A LOOP DETECTOR	PIEZO-ELECTRIC AXLE SENSOR	DLC	STC	No. 5 PULL BOX
	EA	EA	LF	LF	EA
E-1	4				
E-2	4	2	200	100	1

ITEMS ON THIS TABLE ARE NOT SEPARATE PAY ITEMS. FOR INFORMATION ONLY.

MAINTAINING EXISTING TRAFFIC MANAGEMENT SYSTEM ELEMENTS DURING CONSTRUCTION

ELEMENT	LOCATION	DESCRIPTION
CCTV	Sha-44-R27.88	NW CORNER EMIGRANT Tr/WILSON HILL Rd

ELECTRICAL QUANTITIES

E-4

REVISED BY | DATE REVISED

ARTURO P. ROBLES | KAREN LAW

CALCULATED-DESIGNED BY | CHECKED BY

FUNCTIONAL SUPERVISOR: ROB STINGER

STATE OF CALIFORNIA - DEPARTMENT OF TRANSPORTATION
Caltrans ELECTRICAL DESIGN

P:\proj3\02\0h300_plans\pse\20h300ua004.dgn

LAST REVISION 02-04-15 | DATE PLOTTED => 17-FEB-2015 | TIME PLOTTED => 06:52

M

Maint	MAINTENANCE
Max	MAXIMUM
MB	METAL BEAM
MBB	METAL BEAM BARRIER
MBGR	METAL BEAM GUARD RAILING
Med	MEDIAN
MGS	MIDWEST GUARDRAIL SYSTEM
MH	MANHOLE
Min	MINIMUM
Misc	MISCELLANEOUS
Misc I & S	MISCELLANEOUS IRON AND STEEL
Mkr	MARKER
Mod	MODIFIED, MODIFY
Mon	MONUMENT
MP	METAL PLATE
MPGR	METAL PLATE GUARD RAILING
MR	MOVEMENT RATING
MSE	MECHANICALLY STABILIZED EMBANKMENT
Mt	MOUNTAIN, MOUNT
Mtl	MATERIAL
MVP	MAINTENANCE VEHICLE PULLOUT

N

N	NORTH
NB	NORTHBOUND
No.	NUMBER (MUST HAVE PERIOD)
Nos.	NUMBERS (MUST HAVE PERIOD)
NPS	NOMINAL PIPE SIZE
NS	NEAR SIDE
NSP	NEW STANDARD PLAN
NTS	NOT TO SCALE

O

Oblr	OBLITERATE
OC	OVERCROSSING
OD	OUTSIDE DIAMETER
OF	OUTSIDE FACE
OG	ORIGINAL GROUND
OGAC	OPEN GRADED ASPHALT CONCRETE
OGFC	OPEN GRADED FRICTION COURSE
OH	OVERHEAD
OHWM	ORDINARY HIGH WATER MARK
O-O	OUT TO OUT
Opp	OPPOSITE
OSD	OVERSIDE DRAIN

P

P	PAGE
PAP	PERFORATED ALUMINUM PIPE
PB	PULL BOX
PC	POINT OF CURVATURE, PRECAST
PCC	POINT OF COMPOUND CURVE, PORTLAND CEMENT CONCRETE
PCMS	PORTABLE CHANGEABLE MESSAGE SIGN
PCP	PERFORATED CONCRETE PIPE, PRESTRESSED CONCRETE PIPE
PCVC	POINT OF COMPOUND VERTICAL CURVE
PEC	PERMIT TO ENTER AND CONSTRUCT
Ped	PEDESTRIAN
Ped OC	PEDESTRIAN OVERCROSSING
Ped UC	PEDESTRIAN UNDERCROSSING
Perm Mtl	PERMEABLE MATERIAL

P continued

PG	PROFILE GRADE
PI	POINT OF INTERSECTION
PJP	PARTIAL JOINT PENETRATION
Pkwy	PARKWAY
ℙ,PL	PLATE
P/L	PROPERTY LINE
PM	POST MILE, TIME FROM NOON TO MIDNIGHT
PN	PAVING NOTCH
POC	POINT OF HORIZONTAL CURVE
POT	POINT OF TANGENT
POVC	POINT OF VERTICAL CURVE
PP	PIPE PILE, PLASTIC PIPE, POWER POLE
PPL	PREFORMED PERMEABLE LINER
PPP	PERFORATED PLASTIC PIPE
PRC	POINT OF REVERSE CURVE
PRF	PAVEMENT REINFORCING FABRIC
PRVC	POINT OF REVERSE VERTICAL CURVE
PS&E	PLANS, SPECIFICATIONS AND ESTIMATES
PS, P/S	PRESTRESSED
PSP	PERFORATED STEEL PIPE
PT	POINT OF TANGENCY
PVC	POLYVINYL CHLORIDE
Pvmt	PAVEMENT

Q

Qty	QUANTITY

R

R	RADIUS
R & D	REMOVE AND DISPOSE
R & S	REMOVE AND SALVAGE
R/C	RATE OF CHANGE
RCA	REINFORCED CONCRETE ARCH
RCB	REINFORCED CONCRETE BOX
RCP	REINFORCED CONCRETE PIPE
RCPA	REINFORCED CONCRETE PIPE ARCH
Rd	ROAD
Reinf	REINFORCED, REINFORCEMENT, REINFORCING
Rel	RELOCATE
Repl	REPLACEMENT
Ret	RETAINING
Rev	REVISED, REVISION
Rdwy	ROADWAY
RHMA	RUBBERIZED HOT MIX ASPHALT
Riv	RIVER
RM	ROAD-MIXED
RP	RADIUS POINT, REFERENCE POINT
RR	RAILROAD
RSP	ROCK SLOPE PROTECTION, REVISED STANDARD PLAN
Rt	RIGHT
Rte	ROUTE
RW	REDWOOD, RETAINING WALL
R/W	RIGHT OF WAY
Rwy	RAILWAY

S

S	SOUTH, SUPPLEMENT
SAE	STRUCTURE APPROACH EMBANKMENT
Salv	SALVAGE
SAPP	STRUCTURAL ALUMINUM PLATE PIPE
SB	SOUTHBOUND
SC	SAND CUSHION
SCSP	SLOTTED CORRUGATED STEEL PIPE
SD	STORM DRAIN
Sec	SECOND, SECTION
Sep	SEPARATION
SG	SUBGRADE
Shld	SHOULDER
Sht	SHEET
Sim	SIMILAR
℄	STATION LINE
SM	SELECTED MATERIAL
Spec	SPECIAL, SPECIFICATIONS
SPP	SLOTTED PLASTIC PIPE
SS	SLOPE STAKE
SSBM	STRAP AND SADDLE BRACKET METHOD
SSD	STRUCTURAL SECTION DRAIN
SSPA	STRUCTURAL STEEL PLATE ARCH
SSPP	STRUCTURAL STEEL PLATE PIPE
SSPPA	STRUCTURAL STEEL PLATE PIPE ARCH
SSRP	STEEL SPIRAL RIB PIPE
St	STREET
Sta	STATION
STBB	SINGLE THRIE BEAM BARRIER
Std	STANDARD
Str	STRUCTURE
Surf	SURFACING
SW	SIDEWALK, SOUND WALL
Swr	SEWER
Sym	SYMMETRICAL
S4S	SURFACE 4 SIDES

T

T	SEMI-TANGENT
Tan	TANGENT
TBB	THRIE BEAM BARRIER
Tbr	TIMBER
TC	TOP OF CURB
TCB	TRAFFIC CONTROL BOX
TCE	TEMPORARY CONSTRUCTION EASEMENT
Tel	TELEPHONE
Temp	TEMPORARY
TG	TOP OF GRADE
Tot	TOTAL
TP	TELEPHONE POLE
TPB	TREATED PERMEABLE BASE
TPM	TREATED PERMEABLE MATERIAL
Trans	TRANSITION

T continued

TS	TRANSVERSE, TRAFFIC SIGNAL, TUBULAR STEEL
Typ	TYPICAL

U

UC	UNDERCROSSING
UD	UNDERDRAIN
UG	UNDERGROUND
UON	UNLESS OTHERWISE NOTED
UP	UNDERPASS

V

V	VALVE, DESIGN SPEED
Var	VARIABLE, VARIES
VC	VERTICAL CURVE
VCP	VITRIFIED CLAY PIPE
Vert	VERTICAL
Via	VIADUCT
Vol	VOLUME

W

W	WEST, WIDTH
WB	WESTBOUND
WH	WEEP HOLE
WM	WIRE MESH
WS	WATER SURFACE
WSP	WELDED STEEL PIPE
Wt	WEIGHT
WV	WATER VALVE
WW	WINGWALL
WWLOL	WINGWALL LAYOUT LINE

X

X Sec	CROSS SECTION
Xing	CROSSING

Y

Yr	YEAR
Yrs	YEARS

Dist	COUNTY	ROUTE	POST MILES TOTAL PROJECT	SHEET No.	TOTAL SHEETS
02	Sha	44	R14.4/34.0	19	35

Grace M. Tsushima
REGISTERED CIVIL ENGINEER

July 19, 2013
PLANS APPROVAL DATE

REGISTERED PROFESSIONAL ENGINEER Grace M. Tsushima No. C49814 Exp. 9-30-14 CIVIL STATE OF CALIFORNIA

THE STATE OF CALIFORNIA OR ITS OFFICERS OR AGENTS SHALL NOT BE RESPONSIBLE FOR THE ACCURACY OR COMPLETENESS OF SCANNED COPIES OF THIS PLAN SHEET.

TO ACCOMPANY PLANS DATED 02-12-15

2010 REVISED STANDARD PLAN RSP A10B

UNIT OF MEASUREMENT SYMBOLS:

Some of the symbols used in the project plan quantity tables and in the Bid Item List are:

TABLE A

SYMBOL USED	DEFINITIONS
ACRE	ACRE
CF	CUBIC FOOT
CY	CUBIC YARD
EA	EACH
GAL	GALLON
LB	POUND
LF	LINEAR FOOT
SQFT	SQUARE FOOT
SQYD	SQUARE YARD
STA	100 FEET
TAB	TABLET
TON	2,000 POUNDS

Some of the symbols used in the plans other than in the project plan quantity tables are:

TABLE B

SYMBOL USED	DEFINITIONS
ksi	KIPS PER SQUARE INCH
ksf	KIPS PER SQUARE FOOT
psi	POUNDS PER SQUARE INCH
psf	POUNDS PER SQUARE FOOT
lb/ft^3, pcf	POUNDS PER CUBIC FOOT
tsf	TONS PER SQUARE FOOT
mph, MPH *	MILES PER HOUR
ø	NOMINAL DIAMETER
oz	OUNCE
lb	POUND
kip	1,000 POUNDS
cal	CALORIE
ft	FOOT OR FEET
gal	GALLON

* For use on a sign panel only

STATE OF CALIFORNIA
DEPARTMENT OF TRANSPORTATION

ABBREVIATIONS (SHEET 2 OF 2)

NO SCALE

RSP A10B DATED JULY 19, 2013 SUPERSEDES STANDARD PLAN A10B DATED MAY 20, 2011 - PAGE 2 OF THE STANDARD PLANS BOOK DATED 2010.

REVISED STANDARD PLAN RSP A10B

DATE PLOTTED => 17-FEB-2015
TIME PLOTTED => 08:52

Dist	COUNTY	ROUTE	POST MILES TOTAL PROJECT	SHEET No.	TOTAL SHEETS
02	Sha	44	R14.4/34.0	20	35

REGISTERED CIVIL ENGINEER

July 19, 2013
PLANS APPROVAL DATE

REGISTERED PROFESSIONAL ENGINEER Roberta L. McLaughlin No. C40375 Exp. 3-31-15 CIVIL STATE OF CALIFORNIA

THE STATE OF CALIFORNIA OR ITS OFFICERS OR AGENTS SHALL NOT BE RESPONSIBLE FOR THE ACCURACY OR COMPLETENESS OF SCANNED COPIES OF THIS PLAN SHEET.

TO ACCOMPANY PLANS DATED 02-12-15

EXIT RAMP NEUTRAL AREA (GORE) TREATMENT

DETAIL 36

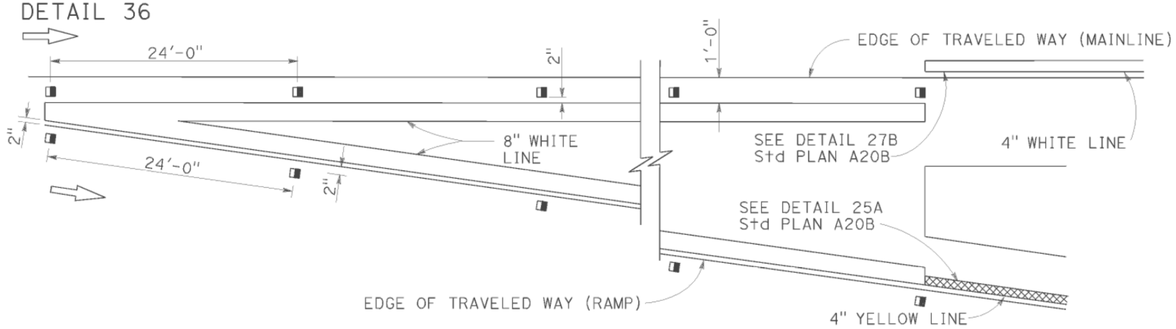

ENTRANCE RAMP NEUTRAL AREA (MERGE) TREATMENT

DETAIL 36A

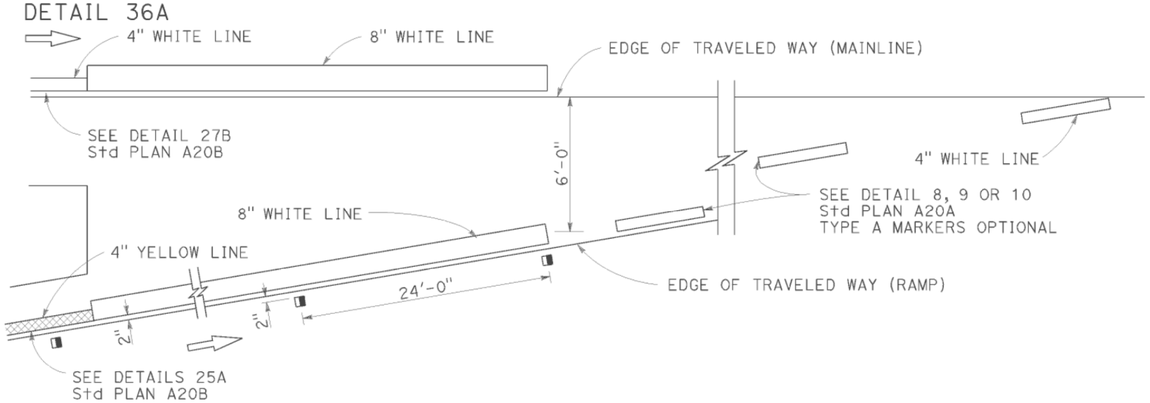

ENTRANCE RAMP NEUTRAL AREA (ACCELERATION LANE) TREATMENT

DETAIL 36B

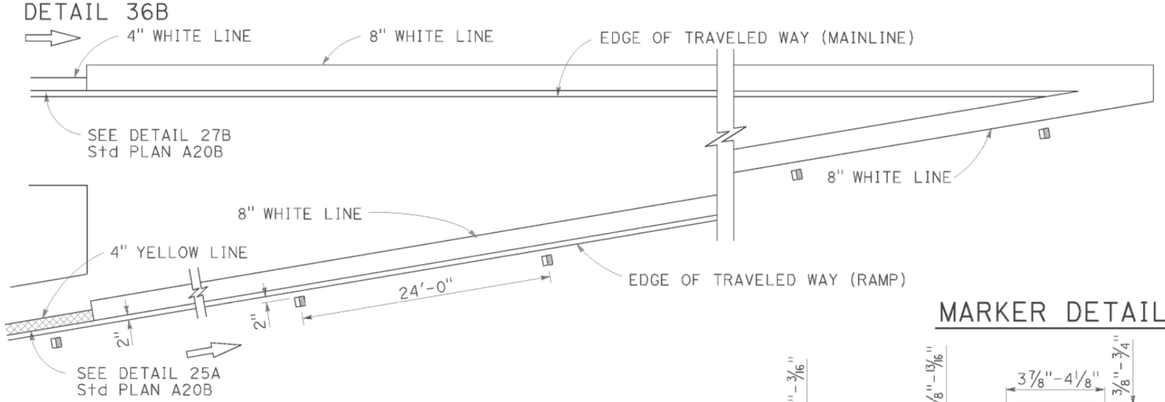

MARKER DETAILS

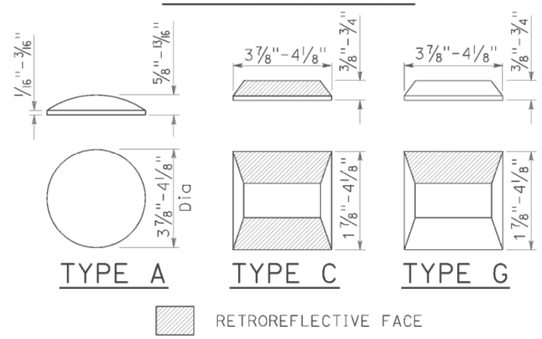

LEGEND:

MARKERS

- ○ TYPE A WHITE NON-REFLECTIVE
- ⊟ TYPE C RED-CLEAR RETROREFLECTIVE
- ◨ TYPE G ONE-WAY CLEAR RETROREFLECTIVE

LANE DROP AT EXIT RAMPS

DETAIL 37

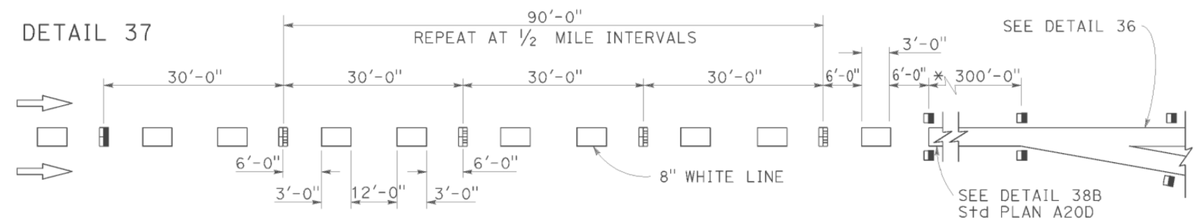

DETAIL 37A

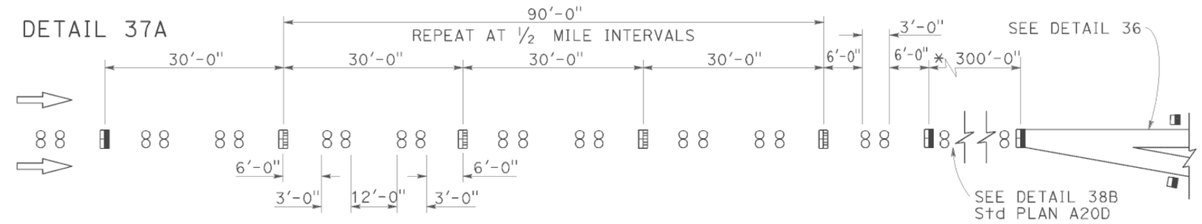

* The solid channelizing line shown may be omitted on short auxiliary lanes where weaving length is critical.

LANE DROP AT INTERSECTIONS

DETAIL 37B

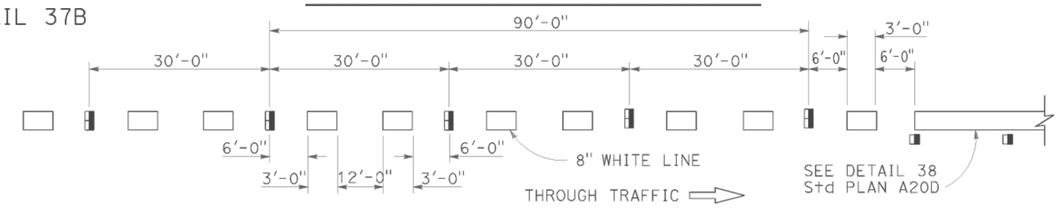

DETAIL 37C

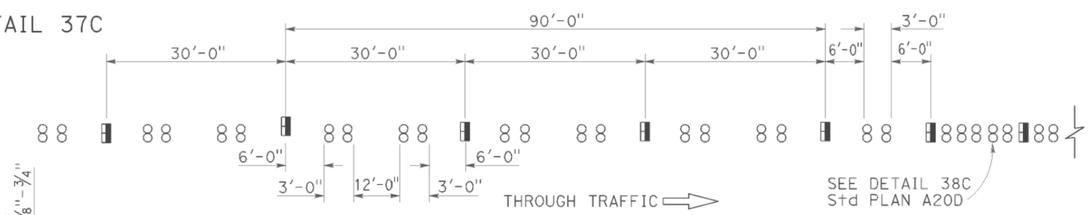

STATE OF CALIFORNIA
DEPARTMENT OF TRANSPORTATION

PAVEMENT MARKERS AND TRAFFIC LINE TYPICAL DETAILS

NO SCALE

RSP A20C DATED JULY 19, 2013 SUPERSEDES STANDARD PLAN A20C DATED MAY 20, 2011 - PAGE 11 OF THE STANDARD PLANS BOOK DATED 2010.

REVISED STANDARD PLAN RSP A20C

2010 REVISED STANDARD PLAN RSP A20C

DATE PLOTTED => 17-FEB-2015
TIME PLOTTED => 08:52

Dist	COUNTY	ROUTE	POST MILES TOTAL PROJECT	SHEET No.	TOTAL SHEETS
02	Sha	44	R14.4/34.0	21	35

REGISTERED CIVIL ENGINEER

April 20, 2012
PLANS APPROVAL DATE

REGISTERED PROFESSIONAL ENGINEER
Roberta L. McLaughlin
No. C40375
Exp. 3-31-13
CIVIL
STATE OF CALIFORNIA

THE STATE OF CALIFORNIA OR ITS OFFICERS OR AGENTS SHALL NOT BE RESPONSIBLE FOR THE ACCURACY OR COMPLETENESS OF SCANNED COPIES OF THIS PLAN SHEET.

TO ACCOMPANY PLANS DATED 02-12-15

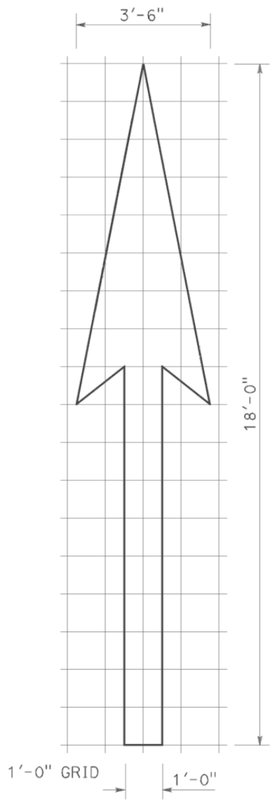

A=25 ft^2

TYPE I 18'-0" ARROW

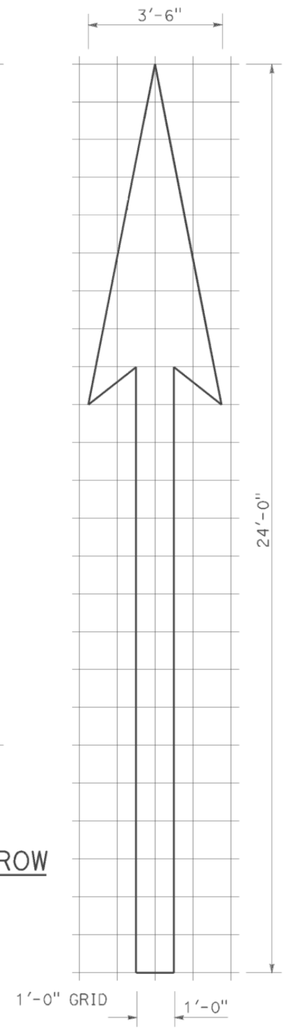

A=31 ft^2

TYPE I 24'-0" ARROW

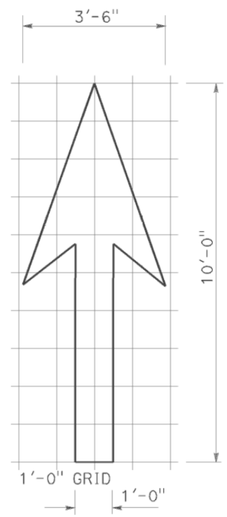

A=14 ft^2

TYPE I 10'-0" ARROW

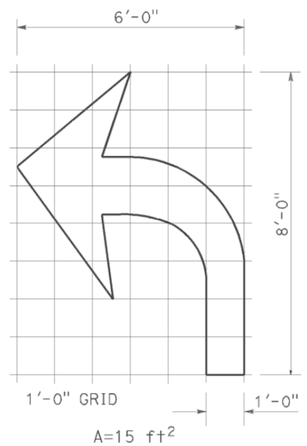

A=15 ft^2

TYPE IV (L) ARROW

(For Type IV (R) arrow, use mirror image)

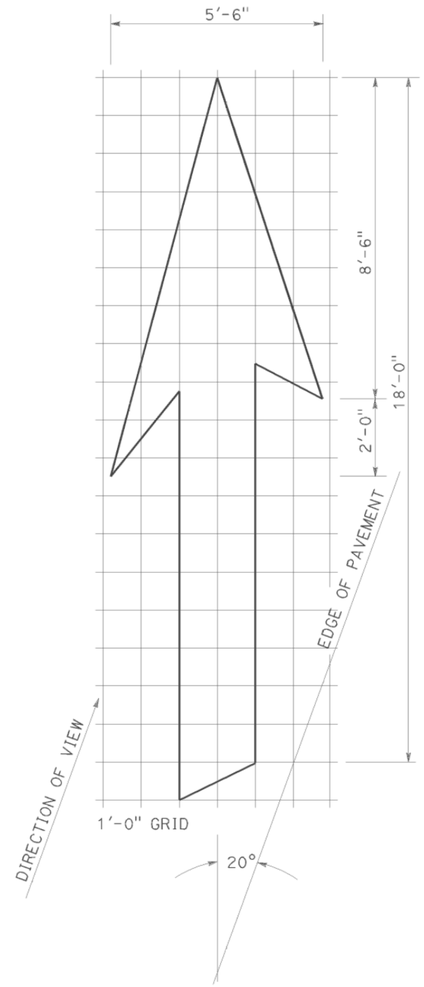

A=42 ft^2

TYPE VI ARROW

Right lane drop arrow
(For left lane, use mirror image)

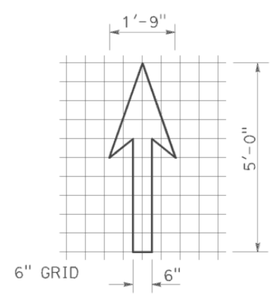

A=3.5 ft^2

BIKE LANE ARROW

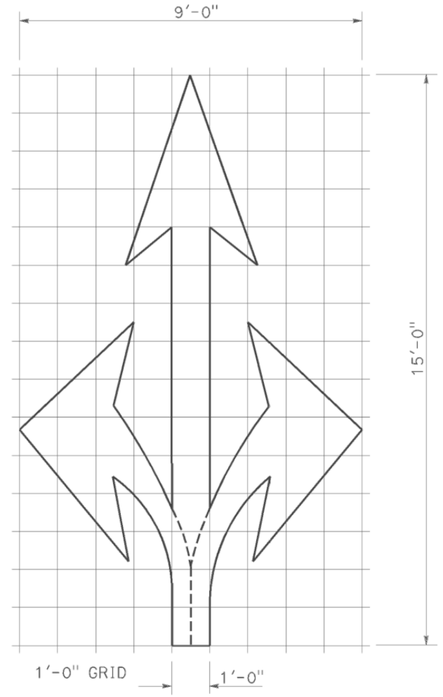

A=36 ft^2

TYPE VIII ARROW

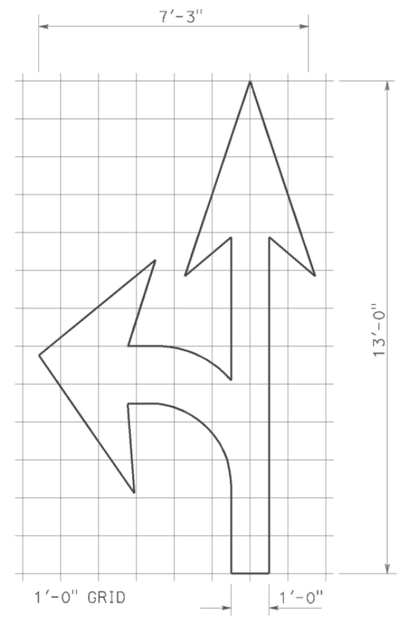

A=27 ft^2

TYPE VII (L) ARROW

(For Type VII (R) arrow, use mirror image)

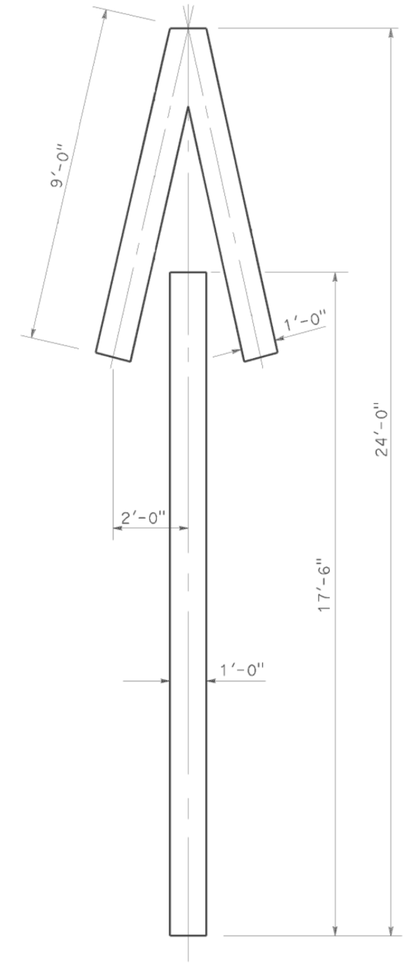

A=33 ft^2

TYPE V ARROW

NOTE:
Minor variations in dimensions may be accepted by the Engineer.

STATE OF CALIFORNIA
DEPARTMENT OF TRANSPORTATION

PAVEMENT MARKINGS ARROWS

NO SCALE

RSP A24A DATED APRIL 20, 2012 SUPERSEDES STANDARD PLAN A24A DATED MAY 20, 2011 - PAGE 13 OF THE STANDARD PLANS BOOK DATED 2010.

REVISED STANDARD PLAN RSP A24A

2010 REVISED STANDARD PLAN RSP A24A

DATE PLOTTED => 17-FEB-2015
TIME PLOTTED => 08:52

Dist	COUNTY	ROUTE	POST MILES TOTAL PROJECT	SHEET No.	TOTAL SHEETS
02	Sha	44	R14.4/34.0	22	35

REGISTERED CIVIL ENGINEER

July 20, 2012
PLANS APPROVAL DATE

REGISTERED PROFESSIONAL ENGINEER
Roberta L. McLaughlin
No. C40375
Exp. 3-31-13
CIVIL
STATE OF CALIFORNIA

THE STATE OF CALIFORNIA OR ITS OFFICERS OR AGENTS SHALL NOT BE RESPONSIBLE FOR THE ACCURACY OR COMPLETENESS OF SCANNED COPIES OF THIS PLAN SHEET.

TO ACCOMPANY PLANS DATED 02-12-15

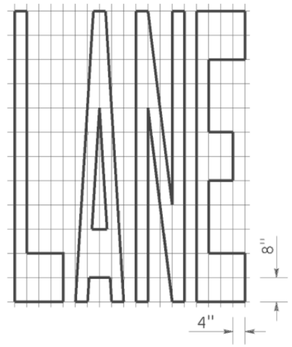

A=24 ft^2

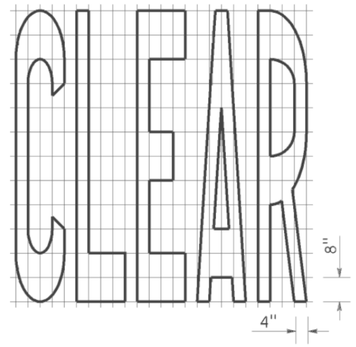

A=27 ft^2

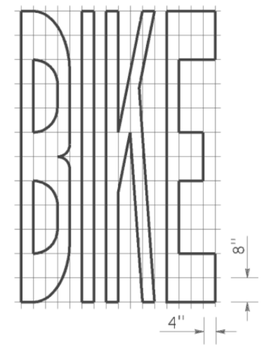

A=21 ft^2

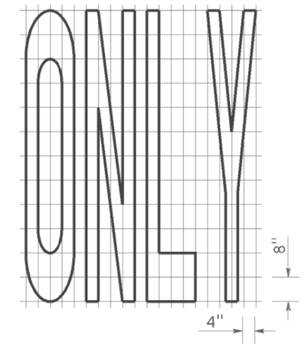

A=22 ft^2

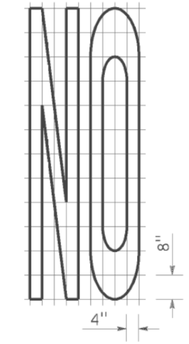

A=14 ft^2

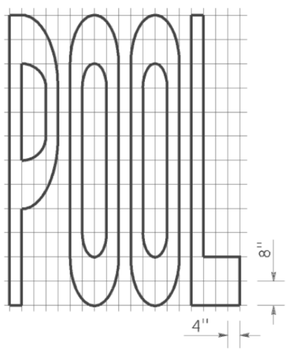

A=23 ft^2

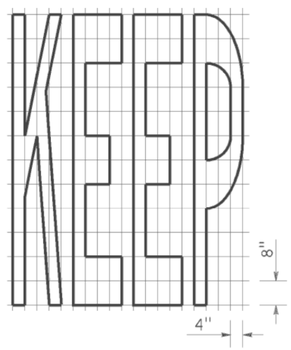

A=24 ft^2

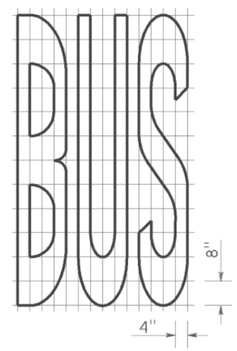

A=20 ft^2

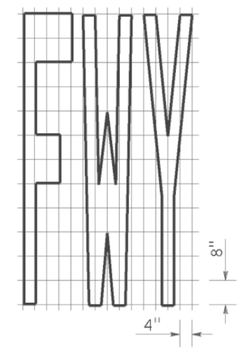

A=16 ft^2

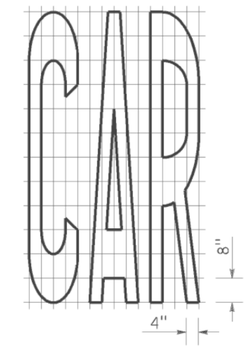

A=17 ft^2

WORD MARKINGS			
ITEM	ft^2	ITEM	ft^2
LANE	24	NO	14
POOL	23	BIKE	21
CAR	17	BUS	20
CLEAR	27	ONLY	22
KEEP	24	FWY	16

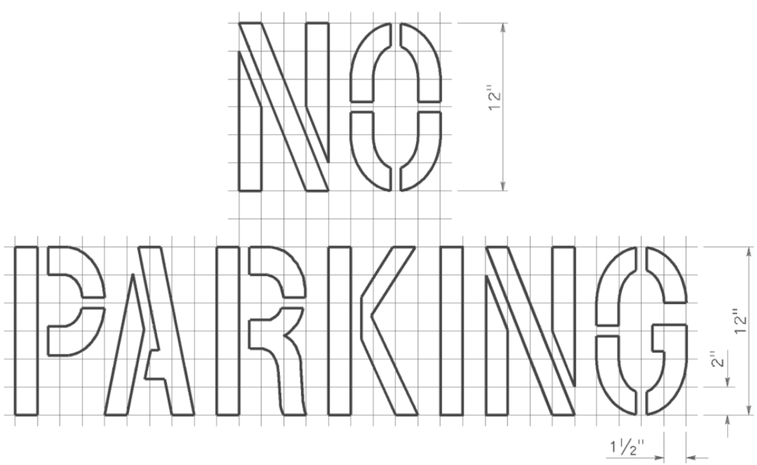

A=2 ft^2
See Notes 6 and 7

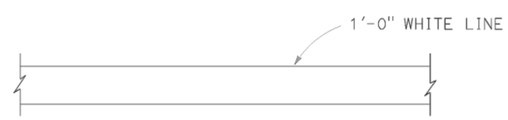

LIMIT LINE (STOP LINE)

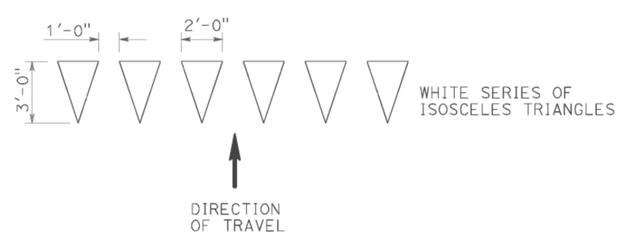

YIELD LINE

NOTES:

1. If a message consists of more than one word, it should read "UP", i.e., the first word should be nearest the driver.
2. The space between words should be at least four times the height of the characters for low speed roads, but not more than ten times the height of the characters. The space may be reduced appropriately where there is limited space because of local conditions.
3. Minor variations in dimensions may be accepted by the Engineer.
4. Portions of a letter, number or symbol may be separated by connecting segments not to exceed 2" in width.
5. The words "NO PARKING" pavement marking is to be used for parking facilities. For typical locations of markings, see Standard Plans A90A and A90B.
6. The words "NO PARKING", shall be painted in white letters no less than 1'-0" high on a contrasting background and located so that it is visible to traffic enforcement officials.

STATE OF CALIFORNIA
DEPARTMENT OF TRANSPORTATION

PAVEMENT MARKINGS
WORDS, LIMIT AND YIELD LINES

NO SCALE

RSP A24E DATED JULY 20, 2012 SUPERSEDES STANDARD PLAN A24E
DATED MAY 20, 2011 - PAGE 17 OF THE STANDARD PLANS BOOK DATED 2010.

REVISED STANDARD PLAN RSP A24E

2010 REVISED STANDARD PLAN RSP A24E

DATE PLOTTED => 17-FEB-2015
TIME PLOTTED => 06:53

Dist	COUNTY	ROUTE	POST MILES TOTAL PROJECT	SHEET No.	TOTAL SHEETS
02	Sha	44	R14.4/34.0	23	35

Randell D. Hiatt
REGISTERED CIVIL ENGINEER

July 19, 2013
PLANS APPROVAL DATE

REGISTERED PROFESSIONAL ENGINEER
Randell D. Hiatt
No. C50200
Exp. 6-30-15
CIVIL
STATE OF CALIFORNIA

THE STATE OF CALIFORNIA OR ITS OFFICERS OR AGENTS SHALL NOT BE RESPONSIBLE FOR THE ACCURACY OR COMPLETENESS OF SCANNED COPIES OF THIS PLAN SHEET.

TO ACCOMPANY PLANS DATED 02-12-15

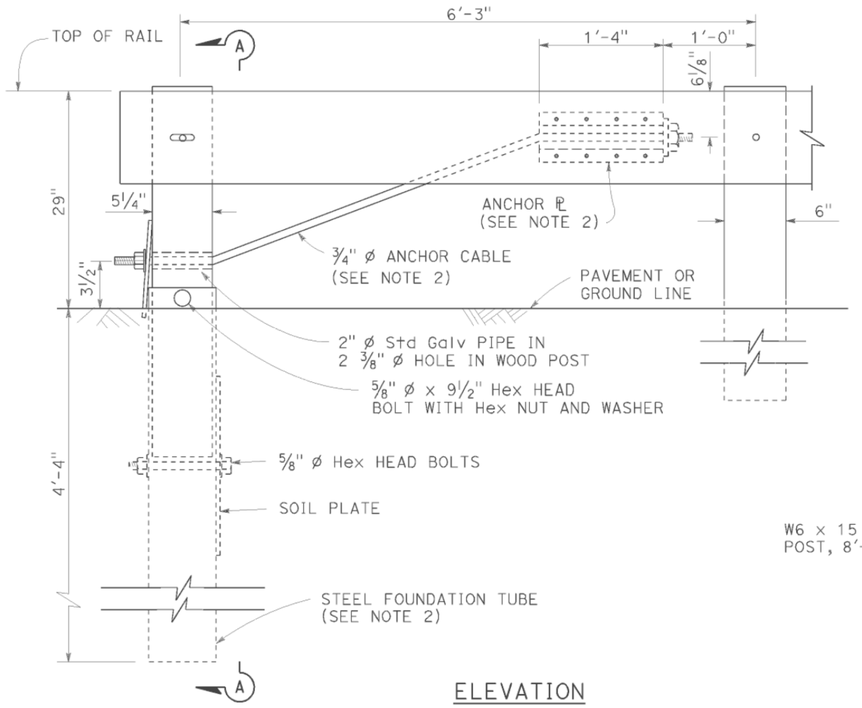

ELEVATION
END ANCHOR
ASSEMBLY (TYPE SFT)

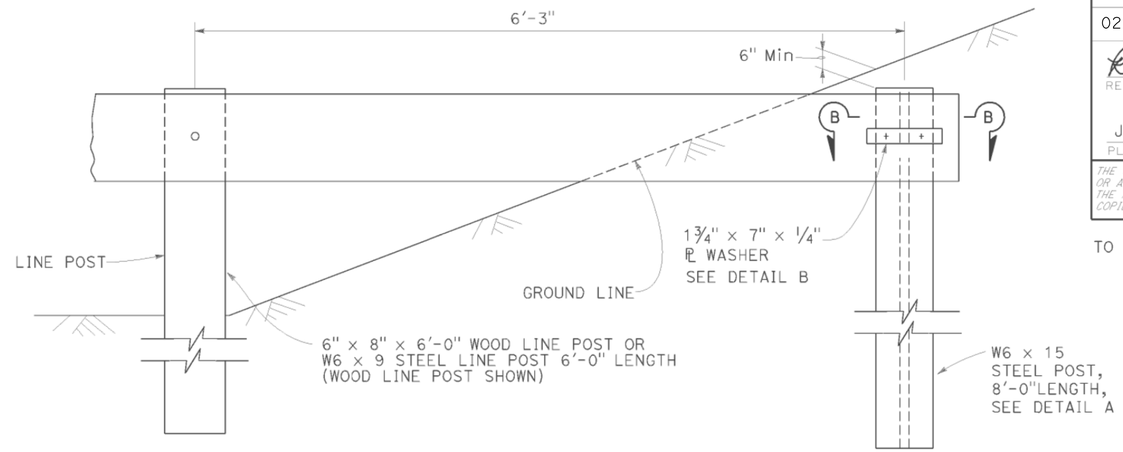

BURIED POST END ANCHOR

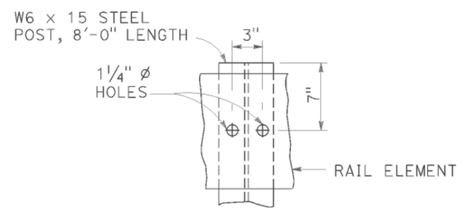

DETAIL A

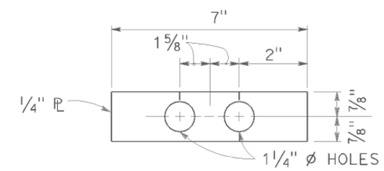

DETAIL B

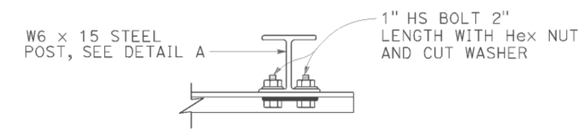

SECTION B-B

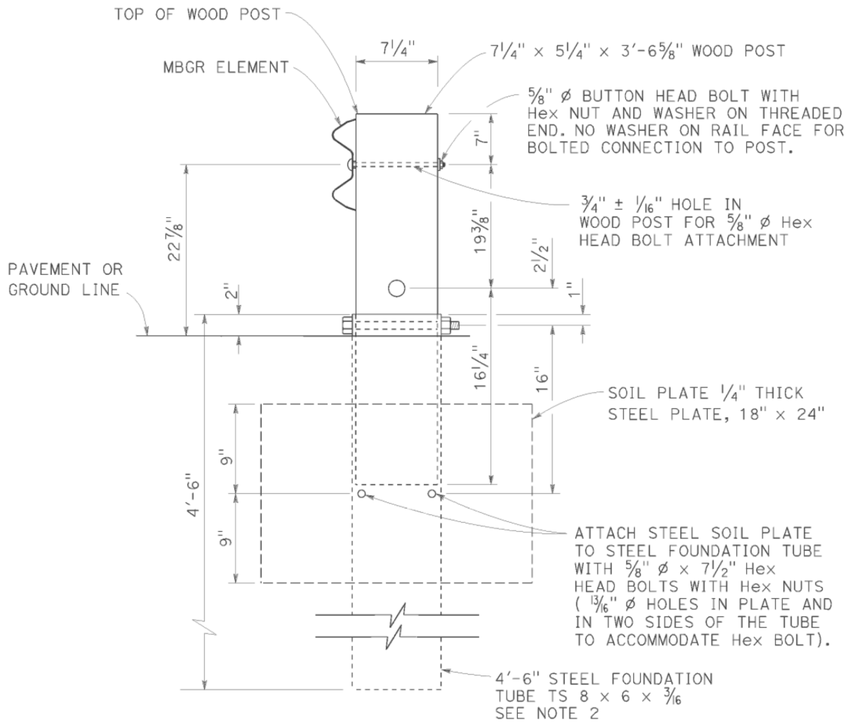

SECTION A-A

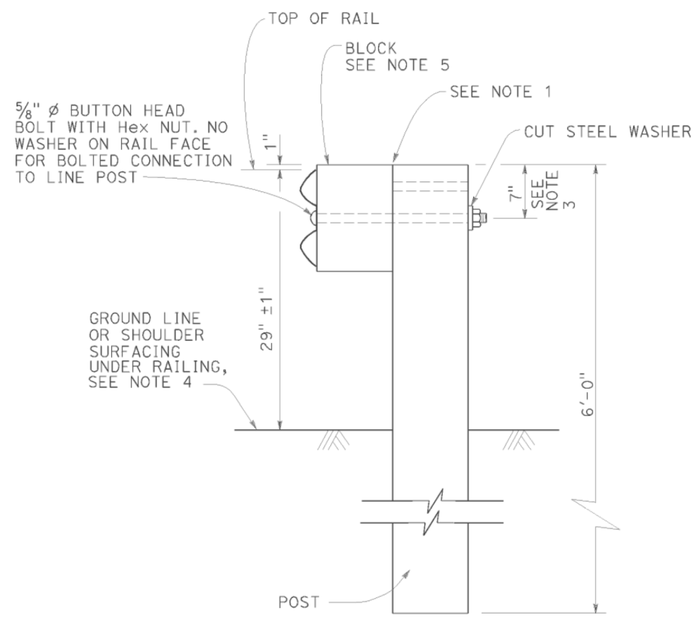

TYPICAL LINE
POST INSTALLATION

NOTES:

1. For wood post and wood block, toenail with 2-16d Galv nails in top of block. For steel post and notched wood or plastic block, notched face of block faces steel post.
2. A 6'-0" Length steel foundation tube, TS 8 x 6 x 3/16, without a soil plate, may be furnished and installed in place of the 4'-6" length steel foundation tube and soil plate shown, Minimum embadment of the 6'-0" length tube shall be 5'-9". A 5/8" ø Hex head bolt and nut shall be installed in the hole in the 6'-0" length tube to keep the wood post from dropping into the tube.
3. To connect railing to 27" terminal system end treatment, transition the top of railing height at a ratio of 120:1 to terminal system end treatment height plus one 12'-6" standard railing section at the transitioned height for a horizontal connection to the end treatment.
4. Install posts in soil.
5. See Revised Standard Plans RSP A77N1 and RSP A77N2 for details.
6. Holes excavation in the slope to construct the buried post end anchor shall be backfilled with selected earth, placed in layers approximately 1'-0" thick. Each layer shall be moistened and thoroughly compacted.

STATE OF CALIFORNIA
DEPARTMENT OF TRANSPORTATION

METAL BEAM GUARD RAILING RECONSTRUCT INSTALLATION

NO SCALE

RSP A77L3 DATED JULY 19, 2013 SUPPLEMENTS THE STANDARD PLANS BOOK DATED 2010.

REVISED STANDARD PLAN RSP A77L3

2010 REVISED STANDARD PLAN RSP A77L3

DATE PLOTTED => 17-FEB-2015
TIME PLOTTED => 06:53

Dist	COUNTY	ROUTE	POST MILES TOTAL PROJECT	SHEET No.	TOTAL SHEETS
02	Sha	44	R14.4/34.0	24	35

Randell D. Hiatt
REGISTERED CIVIL ENGINEER

July 19, 2013
PLANS APPROVAL DATE

REGISTERED PROFESSIONAL ENGINEER
Randell D. Hiatt
No. C50200
Exp. 6-30-15
CIVIL
STATE OF CALIFORNIA

THE STATE OF CALIFORNIA OR ITS OFFICERS OR AGENTS SHALL NOT BE RESPONSIBLE FOR THE ACCURACY OR COMPLETENESS OF SCANNED COPIES OF THIS PLAN SHEET.

TO ACCOMPANY PLANS DATED 02-12-15

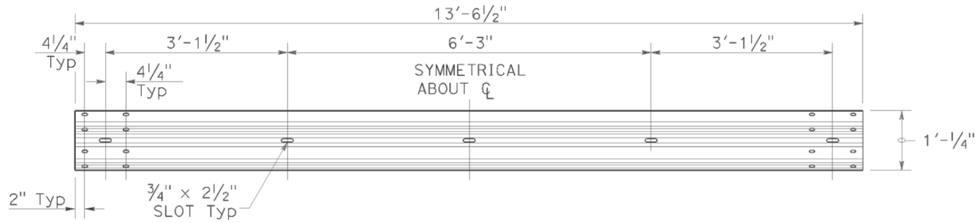

TYPICAL RAIL ELEMENT

NOTE:

1. Slotted holes for splice bolts to overlap ends of rail element.

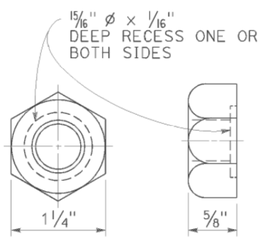

⅝" Ø RECESS NUT

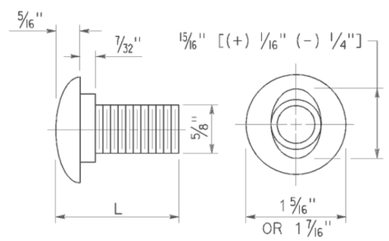

⅝" Ø BUTTON HEAD BOLT

BUTTON HEAD BOLT

L	THREAD LENGTH
1⅜"	FULL THREAD LENGTH
2"	FULL THREAD LENGTH
10"	4" Min THREAD LENGTH
18"	4" Min THREAD LENGTH
20"	4" Min THREAD LENGTH
22"	4" Min THREAD LENGTH
26"	4" Min THREAD LENGTH
36"	4" Min THREAD LENGTH
** 2¾"	2" Min THREAD LENGTH
** 19"	4" Min THREAD LENGTH

** For nested rail applications.

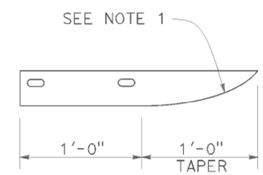

PLAN

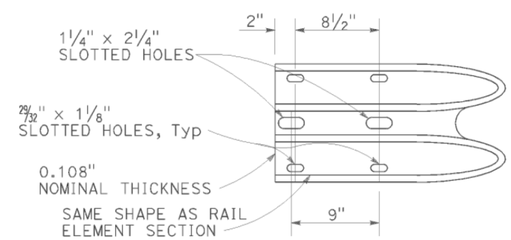

ELEVATION

END CAP
(TYPE A)

STATE OF CALIFORNIA
DEPARTMENT OF TRANSPORTATION

MIDWEST GUARDRAIL SYSTEM STANDARD HARDWARE

NO SCALE

RSP A77M1 DATED JULY 19, 2013 SUPPLEMENTS THE STANDARD PLANS BOOK DATED 2010.

REVISED STANDARD PLAN RSP A77M1

2010 REVISED STANDARD PLAN RSP A77M1

DATE PLOTTED => 17-FEB-2015
TIME PLOTTED => 06:53

Dist	COUNTY	ROUTE	POST MILES TOTAL PROJECT	SHEET No.	TOTAL SHEETS
02	Sha	44	R14.4/34.0	25	35

Randell D. Hiatt
REGISTERED CIVIL ENGINEER

July 19, 2013
PLANS APPROVAL DATE

REGISTERED PROFESSIONAL ENGINEER
Randell D. Hiatt
No. C50200
Exp. 6-30-15
CIVIL
STATE OF CALIFORNIA

THE STATE OF CALIFORNIA OR ITS OFFICERS OR AGENTS SHALL NOT BE RESPONSIBLE FOR THE ACCURACY OR COMPLETENESS OF SCANNED COPIES OF THIS PLAN SHEET.

TO ACCOMPANY PLANS DATED 02-12-15

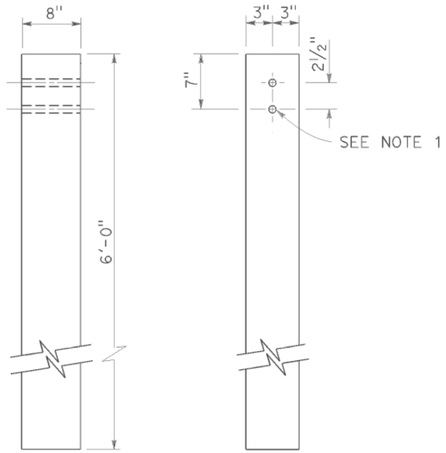

SIDE FRONT

6" x 8" WOOD POST
See Note 3

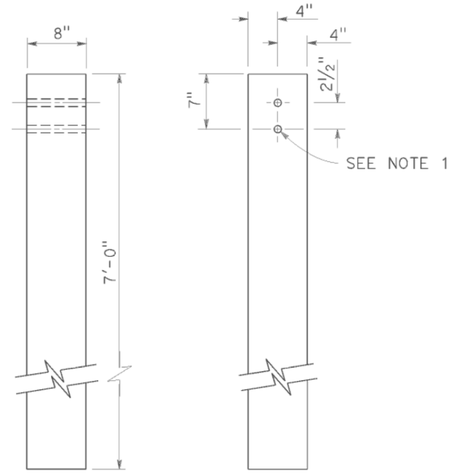

SIDE FRONT

8" x 8" WOOD POST
See Note 4

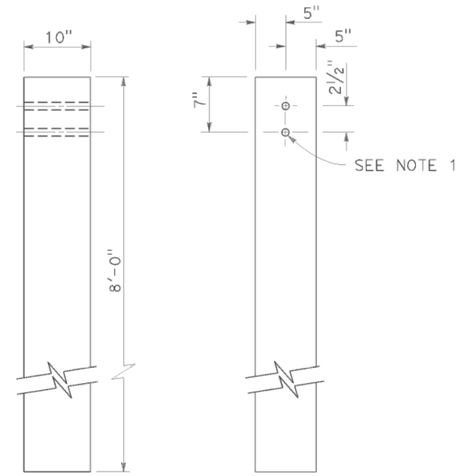

SIDE FRONT

10" x 10" WOOD POST
See Note 5

NOTES:

1. All holes in wood posts and blocks shall be ¾" Dia ± 1/16".
2. Dimensions shown for wood post are nominal.
3. This post and block combination used for standard line post sections of MGS.
4. This post and 8" x 12" block combination used for line post sections of MGS on narrow roadways.
5. This post and 8" x 12" block combination is typically used where strengthened line post sections of MGS are warranted to shield fixed objects.
6. See Revised Standard Plan RSP A77L3 for use of 6" x 8" and 8" x 8" wood blocks.

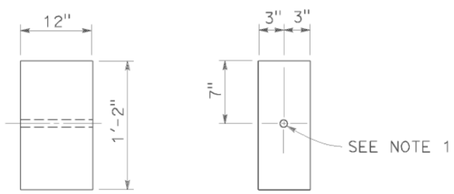

SIDE FRONT

6" x 12" WOOD BLOCK
See Note 3

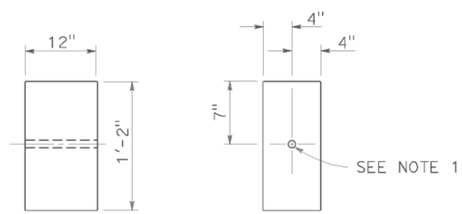

SIDE FRONT

8" x 12" WOOD BLOCK

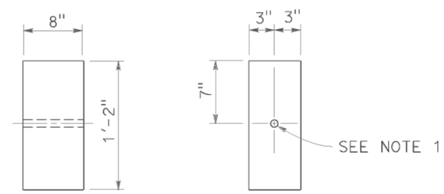

SIDE FRONT

6" x 8" WOOD BLOCK
Only for use with metal beam guard rail see Note 6

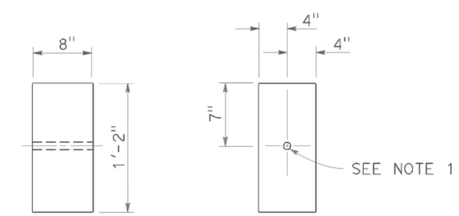

SIDE FRONT

8" x 8" WOOD BLOCK
Only for use with metal beam guard rail see Note 6

STATE OF CALIFORNIA
DEPARTMENT OF TRANSPORTATION

MIDWEST GUARDRAIL SYSTEM WOOD POST AND WOOD BLOCK DETAILS

NO SCALE

RSP A77N1 DATED JULY 19, 2013 SUPPLEMENTS THE STANDARD PLANS BOOK DATED 2010.

REVISED STANDARD PLAN RSP A77N1

2010 REVISED STANDARD PLAN RSP A77N1

DATE PLOTTED => 17-FEB-2015
TIME PLOTTED => 06:53

Dist	COUNTY	ROUTE	POST MILES TOTAL PROJECT	SHEET No.	TOTAL SHEETS
02	Sha	44	R14.4/34.0	26	35

REGISTERED CIVIL ENGINEER

July 19, 2013
PLANS APPROVAL DATE

REGISTERED PROFESSIONAL ENGINEER
Michael Janzen
No. 44788
Exp. 03-31-14
CIVIL
STATE OF CALIFORNIA

THE STATE OF CALIFORNIA OR ITS OFFICERS OR AGENTS SHALL NOT BE RESPONSIBLE FOR THE ACCURACY OR COMPLETENESS OF SCANNED COPIES OF THIS PLAN SHEET.

TO ACCOMPANY PLANS DATED 02-12-15

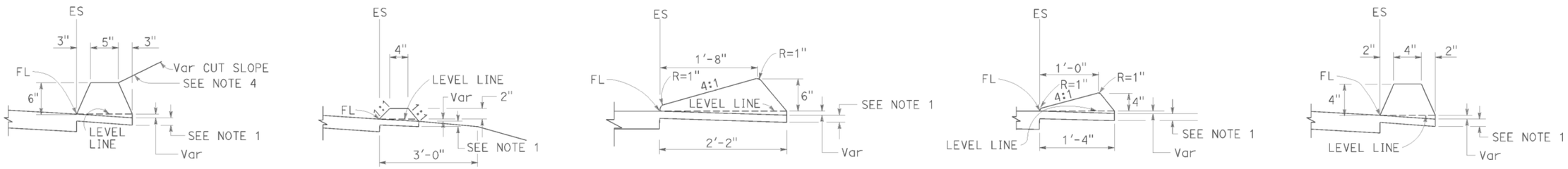

TYPE A
See Note 3

TYPE C

TYPE D

TYPE E

TYPE F
See Note 5

DIKES

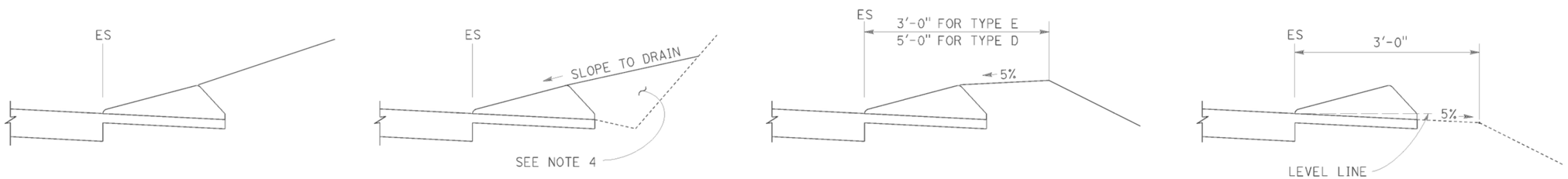

CASE C-1
Cut Slope

CASE C-2
Cut Slope

CASE F

CASE R
See Note 2

TYPE D AND E BACKFILL DETAILS

NOTES:

1. For HMA shoulders only, extend top layer of HMA placed on the shoulder under dike with no joint at the ES. For projects with OGFC shoulders, do not extend OGFC under dike. See project plans for modified dike detail.
2. Case R applies to retrofit only projects where restrictive conditions do not provide enough width for Case F backfill.
3. Type A dike only to be used where restrictive slope conditions do not provide enough width to use Type D or Type E dike.
4. Fill and compact with excavated material to top of dike.
5. Use Type F dike, where dike is required with guard railing installations. See Revised Standard Plan RSP A77N4 for dike positioning details.

DIKE QUANTITIES

TYPE	CUBIC YARDS PER LINEAR FOOT
A	0.0135
C	0.0038
D	0.0293
E	0.0130
F	0.0066

Quantities based on 5% cross slope.

STATE OF CALIFORNIA
DEPARTMENT OF TRANSPORTATION

HOT MIX ASPHALT DIKES

NO SCALE

RSP A87B DATED JULY 19, 2013 SUPERSEDES STANDARD PLAN A87B
DATED MAY 20, 2011 - PAGE 120 OF THE STANDARD PLANS BOOK DATED 2010.

REVISED STANDARD PLAN RSP A87B

2010 REVISED STANDARD PLAN RSP A87B

DATE PLOTTED => 17-FEB-2015
TIME PLOTTED => 06:53

Dist	COUNTY	ROUTE	POST MILES TOTAL PROJECT	SHEET No.	TOTAL SHEETS
02	Sha	44	R14.4/34.0	27	35

REGISTERED CIVIL ENGINEER

July 19, 2013
PLANS APPROVAL DATE

REGISTERED PROFESSIONAL ENGINEER
Gurinderpal Bhullar
No. C48815
Exp. 9-30-14
CIVIL
STATE OF CALIFORNIA

THE STATE OF CALIFORNIA OR ITS OFFICERS OR AGENTS SHALL NOT BE RESPONSIBLE FOR THE ACCURACY OR COMPLETENESS OF SCANNED COPIES OF THIS PLAN SHEET.

TO ACCOMPANY PLANS DATED 02-12-15

2010 REVISED STANDARD PLAN RSP T9

TABLE 1

TAPER LENGTH CRITERIA AND CHANNELIZING DEVICE SPACING

SPEED (S)	MINIMUM TAPER LENGTH * FOR WIDTH OF OFFSET 12 FEET (W)				MAXIMUM CHANNELIZING DEVICE SPACING		
					X	Y	Z **
	TANGENT 2L	MERGING L	SHIFTING L/2	SHOULDER L/3	TAPER	TANGENT	CONFLICT
mph	ft	ft	ft	ft	ft	ft	ft
20	160	80	40	27	20	40	10
25	250	125	63	42	25	50	12
30	360	180	90	60	30	60	15
35	490	245	123	82	35	70	17
40	640	320	160	107	40	80	20
45	1080	540	270	180	45	90	22
50	1200	600	300	200	50	100	25
55	1320	660	330	220	55	110	27
60	1440	720	360	240	60	120	30
65	1560	780	390	260	65	130	32
70	1680	840	420	280	70	140	35

* - For other offsets, use the following merging taper length formula for L:
For speed of 40 mph or less, $L = WS^2/60$
For speed of 45 mph or more, $L = WS$

Where: L = Taper length in feet
W = Width of offset in feet
S = Posted speed limit, off-peak 85th-percentile speed prior to work starting, or the anticipated operating speed in mph

** - Use for taper and tangent sections where there are no pavement markings or where there is a conflict between existing pavement markings and channelizers (CA).

TABLE 2

LONGITUDINAL BUFFER SPACE AND FLAGGER STATION SPACING

SPEED *	Min D **	DOWNGRADE Min D ***		
		-3%	-6%	-9%
mph	ft	ft	ft	ft
20	115	116	120	126
25	155	158	165	173
30	200	205	215	227
35	250	257	271	287
40	305	315	333	354
45	360	378	400	427
50	425	446	474	507
55	495	520	553	593
60	570	598	638	686
65	645	682	728	785
70	730	771	825	891

* - Speed is posted speed limit, off-peak 85th-percentile speed prior to work starting, or the anticipated operating speed in mph

** - Longitudinal buffer space or flagger station spacing

*** - Use on sustained downgrade steeper than -3 percent and longer than 1 mile.

TABLE 3

ADVANCE WARNING SIGN SPACING

ROAD TYPE	DISTANCE BETWEEN SIGNS *		
	A	B	C
	ft	ft	ft
URBAN - 25 mph OR LESS	100	100	100
URBAN - MORE THAN 25 mph TO 40 mph	250	250	250
URBAN - MORE THAN 40 mph	350	350	350
RURAL	500	500	500
EXPRESSWAY / FREEWAY	1000	1500	2640

* - The distances are approximate, are intended for guidance purposes only, and should be applied with engineering judgment. These distances should be adjusted by the Engineer for field conditions, if necessary, by increasing or decreasing the recommmended distances.

STATE OF CALIFORNIA
DEPARTMENT OF TRANSPORTATION

TRAFFIC CONTROL SYSTEM TABLES FOR LANE AND RAMP CLOSURES

NO SCALE

RSP T9 DATED JULY 19, 2013 SUPERSEDES RSP T9 DATED APRIL 19, 2013 THAT SUPPLEMENTS THE STANDARD PLANS BOOK DATED 2010.

REVISED STANDARD PLAN RSP T9

DATE PLOTTED => 17-FEB-2015
TIME PLOTTED => 06:53

Dist	COUNTY	ROUTE	POST MILES TOTAL PROJECT	SHEET No.	TOTAL SHEETS
02	Sha	44	R14.4/34.0	28	35

Devinder Singh
REGISTERED CIVIL ENGINEER

October 17, 2014
PLANS APPROVAL DATE

REGISTERED PROFESSIONAL ENGINEER
Devinder Singh
No. C50470
Exp. 6-30-15
CIVIL
STATE OF CALIFORNIA

THE STATE OF CALIFORNIA OR ITS OFFICERS OR AGENTS SHALL NOT BE RESPONSIBLE FOR THE ACCURACY OR COMPLETENESS OF SCANNED COPIES OF THIS PLAN SHEET.

TO ACCOMPANY PLANS DATED 02-12-15

NOTES:

See Revised Standard Plan RSP T9 for tables.

Use cone spacing X for taper segment, Y for tangent segment or Z for conflict situations, as approriate, per Table 1, unless X, Y, or Z cone spacing is shown on this sheet.

Unless otherwise specified in the special provisions, all temporary warning signs shall have black legend on fluorescent orange background.

California codes are designated by (CA). Otherwise, Federal (MUTCD) codes are shown.

TYPICAL LANE CLOSURE WITH REVERSIBLE CONTROL

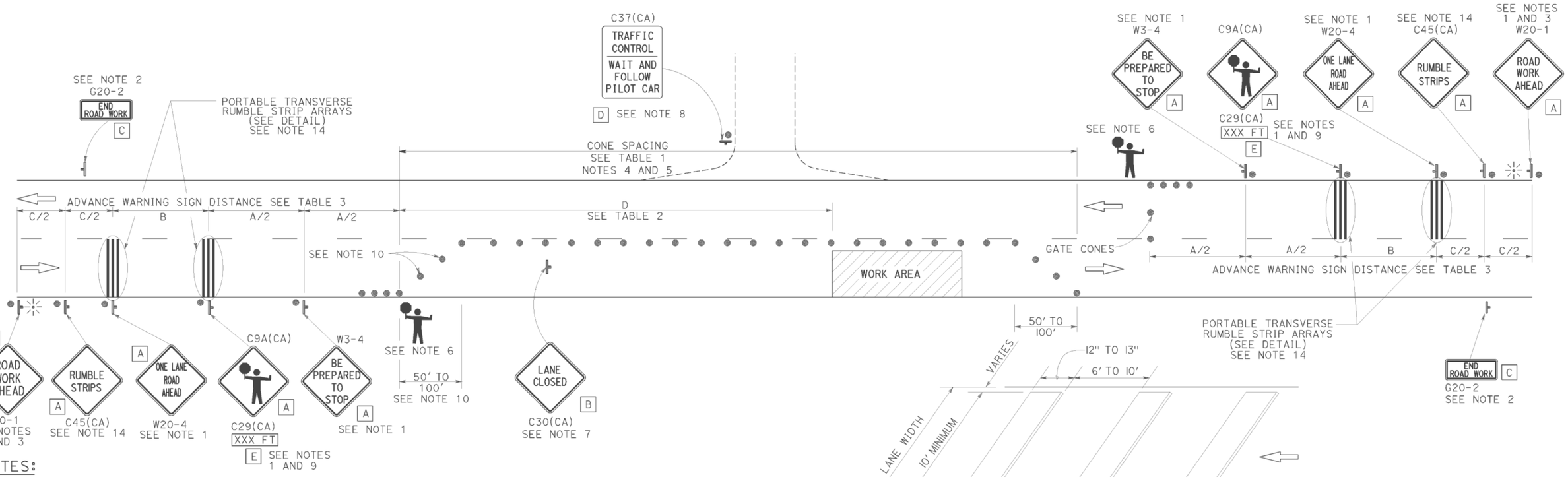

NOTES:

1. Each advance warning sign in each direction of travel shall be equipped with at least two flags for daytime closure. Each flag shall be at least 16" x 16" in size and shall be orange or fluorescent red-orange in color. Flashing beacons shall be placed at the locations indicated for lane closure during hours of darkness.
2. A G20-2 "END ROAD WORK" sign, as appropriate, shall be placed at the end of the lane control unless the end of work area is obvious, or ends within a larger project's limits.
3. If the W20-1 sign would follow within 2000' of a stationary W20-1 or G20-1 "ROAD WORK NEXT _____ MILES", use a W20-4 sign for the first advance warning sign.
4. All cones used for lane closures during the hours of darkness shall be fitted with retroreflective bands (or sleeves) as specified in the specifications.
5. Portable delineators, placed at one-half the spacing indicated for traffic cones, may be used instead of cones for daytime closures only.
6. Additional advance flaggers may be required. Flagger should stand in a conspicuous place, be visible to approaching traffic as well as approaching vehicles after the first vehicle has stopped. During the hours of darkness, the flagging-station and flagger shall be illuminated and clearly visible to approaching traffic. The illumination footprint of the lighting on the ground shall be at least 20' in diameter. Place a minimum of four cones at 50' intervals in advance of flagger station as shown.
7. Place C30(CA) "LANE CLOSED" sign at 500' to 1000' intervals throughout extended work areas. They are optional if the work area is visible from the flagger station.
8. When a pilot car is used, place a C37(CA) "TRAFFIC CONTROL-WAIT AND FOLLOW PILOT CAR" sign with black legend on white background at all intersections, driveways and alleys without a flagger within traffic control area. Signs shall be clean and visible at all times. Where traffic can not be effectively self-regulated, at least one flagger shall be used at each intersection within traffic control area.
9. An optional C29(CA) sign may be placed below the C9A(CA) sign.
10. Either traffic cones or barricades shall be placed on the taper. Barricades shall be Type I, II, or III.
11. The color of the portable transverse rumble strips shall be black or orange. Use 2 arrays, each array shall consist of 3 rumble strips.
12. Portable transverse rumble strips shall not be placed on sharp horizontal or vertical curves nor shall they be placed through pedestrian crossings.
13. If the portable transverse rumble strips become out of alignment (skewed) by more than 6 inches, measured from one end to the other, they shall be readjusted to bring the placement back to the original location.
14. Portable transverse rumble strips are not required if any one of the following conditions is satisfied:
    A. Work duration occupies a location for four hours or less
    B. Posted speed limit is below 45 MPH
    C. Work is of emergency nature
    D. Work zone is in snow or icy weather conditions

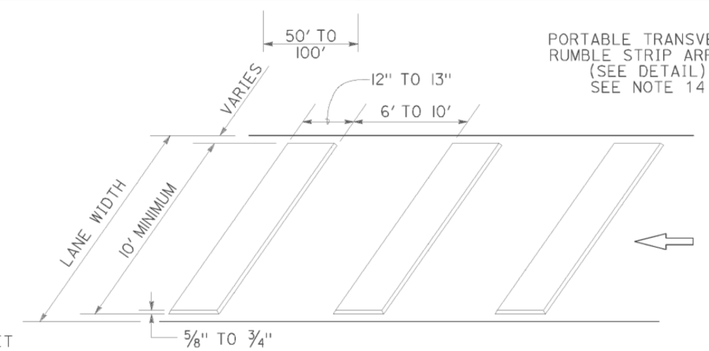

PORTABLE TRANSVERSE RUMBLE STRIP ARRAY DETAIL

LEGEND

- TRAFFIC CONE
- TEMPORARY TRAFFIC CONTROL SIGN
- PORTABLE FLASHING BEACON
- FLAGGER

SIGN PANEL SIZE (Min)

A	48" x 48"
B	30" x 30"
C	36" x 18"
D	36" x 42"
E	20" x 7"

STATE OF CALIFORNIA
DEPARTMENT OF TRANSPORTATION

TRAFFIC CONTROL SYSTEM FOR LANE CLOSURE ON TWO LANE CONVENTIONAL HIGHWAYS

NO SCALE

RSP T13 DATED OCTOBER 17, 2014 SUPERSEDES RSP T13 DATED JULY 18, 2014 AND RSP T13 DATED APRIL 19, 2013 AND STANDARD PLAN T13 DATED MAY 20, 2011 - PAGE 241 OF THE STANDARD PLANS BOOK DATED 2010.

REVISED STANDARD PLAN RSP T13

2010 REVISED STANDARD PLAN RSP T13

DATE PLOTTED => 17-FEB-2015
TIME PLOTTED => 08:53

Dist	COUNTY	ROUTE	POST MILES TOTAL PROJECT	SHEET No.	TOTAL SHEETS
02	Sha	44	R14.4/34.0	29	35

REGISTERED CIVIL ENGINEER

April 19, 2013
PLANS APPROVAL DATE

REGISTERED PROFESSIONAL ENGINEER Gurinderpal Bhullar No. C48815 Exp. 9-30-14 CIVIL STATE OF CALIFORNIA

THE STATE OF CALIFORNIA OR ITS OFFICERS OR AGENTS SHALL NOT BE RESPONSIBLE FOR THE ACCURACY OR COMPLETENESS OF SCANNED COPIES OF THIS PLAN SHEET.

TO ACCOMPANY PLANS DATED 02-12-15

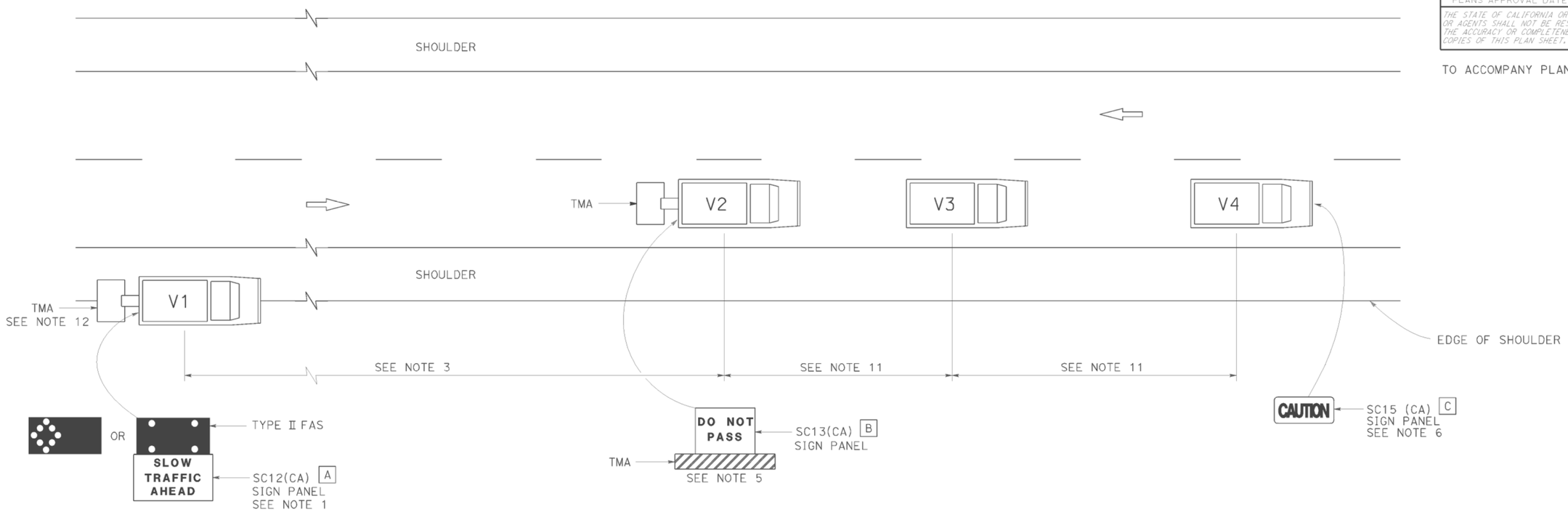

LEGEND

V1	SIGN VEHICLE
V2	SHADOW VEHICLE
V3	WORK/APPLICATION VEHICLE
V4	SIGN VEHICLE
TMA	TRUCK-MOUNTED ATTENUATOR
	FLASHING ARROW SIGN (FAS) IN FLASHING CAUTION MODE
	FLASHING ARROW SIGN (FAS) IN ALTERNATING DIAMOND CAUTION

SIGN PANEL SIZE (Min)

A	72" x 42"
B	54" x 42"
C	54" x 24"

NOTES:

1. Either a changeable message sign or a SC12(CA) "SLOW TRAFFIC AHEAD" sign shall be mounted on the rear of sign vehicle V1. The changeable message sign shall be sequenced to show the "CAUTION" message first, follow by the "SLOW TRAFFIC AHEAD" message. A Type II flashing arrow sign may be used with the SC12(CA) sign panel.
2. Sign vehicle V1 should be positioned where highly visible when shoulders are not available.
3. If traffic queues develop, sign vehicle V1 should be positioned upstream from the end of queue.
4. Vehicle-mounted sign panels shall have Type III or above retroreflective sheeting, black on white, or black on fluorescent orange, with 6" minimum series D letters per Caltrans sign specifications.
5. Shadow vehicle shall be equipped with a truck-mounted attenuator. The sign panel shown shall be mounted on the rear of shadow vehicle V2. The message "LANE CLOSED" may be used in place of the "DO NOT PASS" message.
6. The sign panel shown shall be mounted on the front of sign vehicle V4, facing opposing traffic.
7. All vehicles shall be equipped with flashing or rotating amber lights.
8. Sign vehicle V4 will not be required when the work and vehicles V2 and V3 are 2' or more from the centerline of the highway during the work or application operations.
9. All vehicles used for lane closures shall be equipped with two-way radios and the vehicle operators shall maintain communication during the work or application operation.
10. This plan shall not be used where workers would be on foot in the work area. Use a stationary type lane closure (Revised Standard Plan T13) for this condition.
11. Minimize spacing between vehicles V2 and V3 and vehicles V3 and V4 to deter road users from driving in between them.
12. If sign vehicle V1 encroaches into the traffic lane due to insufficient shoulder width, sign vehicle V1 shall be equipped with a truck-mounted attenuator. Sign vehicle V1 shall stay as close to the edge of shoulder as practicable.

STATE OF CALIFORNIA
DEPARTMENT OF TRANSPORTATION

TRAFFIC CONTROL SYSTEM FOR MOVING LANE CLOSURE ON TWO LANE HIGHWAYS

NO SCALE

RSP T17 DATED APRIL 19, 2013 SUPERSEDES STANDARD PLAN T17
DATED MAY 20, 2011 - PAGE 245 OF THE STANDARD PLANS BOOK DATED 2010.

REVISED STANDARD PLAN RSP T17

2010 REVISED STANDARD PLAN RSP T17

DATE PLOTTED => 17-FEB-2015
TIME PLOTTED => 06:53

Dist	COUNTY	ROUTE	POST MILES TOTAL PROJECT	SHEET No.	TOTAL SHEETS
02	Sha	44	R14.4/34.0	30	35

Theresa Gabriel
REGISTERED ELECTRICAL ENGINEER

July 19, 2013
PLANS APPROVAL DATE

REGISTERED PROFESSIONAL ENGINEER Theresa Aziz Gabriel No. E15129 Exp. 6-30-14 ELECTRICAL STATE OF CALIFORNIA

THE STATE OF CALIFORNIA OR ITS OFFICERS OR AGENTS SHALL NOT BE RESPONSIBLE FOR THE ACCURACY OR COMPLETENESS OF SCANNED COPIES OF THIS PLAN SHEET.

TO ACCOMPANY PLANS DATED 02-12-15

LEGEND:

AB	ABANDON. IF APPLIED TO CONDUIT, REMOVE CONDUCTORS
BC	INSTALL PULL BOX IN EXISTING CONDUIT RUN
BP	PEDESTRIAN BARRICADE, TYPE AS INDICATED ON PLAN
CB	INSTALL CONDUIT INTO EXISTING PULL BOX
CC	CONNECT NEW AND EXISTING CONDUIT. REMOVE EXISTING CONDUCTORS AND INSTALL CONDUCTORS AS INDICATED
CF	CONDUIT TO REMAIN FOR FUTURE USE. REMOVE CONDUCTORS. INSTALL PULL TAPE
DH	DETECTOR HANDHOLE
FA	FOUNDATION TO BE ABANDONED
IS	INSTALL SIGN ON SIGNAL MAST ARM
NS	NO SLIP BASE ON STANDARD
PEC	PHOTOELECTRIC CONTROL
PEU	PHOTOELECTRIC UNIT
RC	EQUIPMENT OR MATERIAL TO BE REMOVED AND BECOME THE PROPERTY OF THE CONTRACTOR
RE	REMOVE ELECTROLIER, FUSES AND BALLAST. TAPE ENDS OF CONDUCTORS
RL	RELOCATE EQUIPMENT
RR	REMOVE AND REUSE EQUIPMENT
RS	REMOVE AND SALVAGE EQUIPMENT
SC	SPLICE NEW TO EXISTING CONDUCTORS
SD	SERVICE DISCONNECT
TSP	TELEPHONE SERVICE POINT

ABBREVIATIONS

APS	ACCESSIBLE PEDESTRIAN SIGNAL
BBS	BATTERY BACKUP SYSTEM
BC	BOLT CIRCLE
BPB	BICYCLE PUSH BUTTON
C	CONDUIT
CB	CIRCUIT BREAKER
CCTV	CLOSED CIRCUIT TELEVISION
Ckt	CIRCUIT
CMS	CHANGEABLE MESSAGE SIGN
Ctid	CALTRANS IDENTIFICATION
Comm	COMMUNICATION
DLC	LOOP DETECTOR LEAD-IN CABLE
EMS	EXTINGUISHABLE MESSAGE SIGN
EVUC	EMERGENCY VEHICLE UNIT CABLE
EVUD	EMERGENCY VEHICLE UNIT DETECTOR
FB	FLASHING BEACON
FBCA	FLASHING BEACON CONTROL ASSEMBLY
FBS	FLASHING BEACON WITH SLIP BASE
FO	FIBER OPTIC
G	EQUIPMENT GROUNDING CONDUCTOR
GB	GROUND BUS
GFCI	GROUND FAULT CIRCUIT INTERRUPTER
HAR	HIGHWAY ADVISORY RADIO
Hex	HEXAGONAL
HPS	HIGH PRESSURE SODIUM
IISNS	INTERNALLY ILLUMINATED STREET NAME SIGN
ISL	INDUCTION SIGN LIGHTING
LED	LIGHT EMITTING DIODE
LMA	LUMINAIRE MAST ARM
LPS	LOW PRESSURE SODIUM
Ltg	LIGHTING
Lum	LUMINAIRE
M	METERED
MAT	MAST ARM MOUNTING TOP ATTACHMENT
MAS	MAST ARM MOUNTING SIDE ATTACHMENT
M/M	MULTIPLE TO MULTIPLE TRANSFORMER
Mtg	MOUNTING
MV	MERCURY VAPOR LIGHTING FIXTURE
MVDS	MICROWAVE VEHICLE DETECTION SYSTEM
N	NEUTRAL (GROUNDED CONDUCTOR)
NB	NEUTRAL BUS
NC	NORMALLY CLOSE
NO	NORMALLY OPEN
P	CIRCUIT BREAKER'S POLE
PB	PULL BOX
PBA	PUSH BUTTON ASSEMBLY
PEC	PHOTOELECTRIC CONTROL
Ped	PEDESTRIAN
PEU	PHOTOELECTRIC UNIT
PT	CONDUIT WITH PULL TAPE
RE	RELOCATED EQUIPMENT
RM	RAMP METERING
RWIS	ROADSIDE WEATHER INFORMATION SYSTEM
SB	SLIP BASE
SIC	SIGNAL INTERCONNECT CABLE
Sig	SIGNAL
SMA	SIGNAL MAST ARM
SNS	STREET NAME SIGN
SP	SERVICE POINT
TDC	TELEPHONE DEMARCATION CABINET
TMS	TRAFFIC MONITORING STATION
TOS	TRAFFIC OPERATIONS SYSTEM
Veh	VEHICLE
VIVDS	VIDEO IMAGE VEHICLE DETECTION SYSTEM
WIM	WEIGH-IN-MOTION
Xfmr	TRANSFORMER

SOFFIT AND WALL MOUNTED LUMINAIRES

PENDANT, 70 W HPS UNLESS OTHERWISE SPECIFIED

FLUSH, 70 W HPS UNLESS OTHERWISE SPECIFIED

WALL SURFACE, 70 W HPS UNLESS OTHERWISE SPECIFIED

EXISTING SOFFIT OR WALL LUMINAIRE TO REMAIN UNMODIFIED

EXISTING SOFFIT OR WALL LUMINAIRE TO BE MODIFIED AS SPECIFIED

NOTE:
Arrow indicates "street side" of luminaire.

COMMONLY USED SYMBOLS FOR UNITED STATES CUSTOMARY UNITS OF MEASUREMENT:

SYMBOL USED	DEFINITIONS
Ω	OHMS
min	MINUTE
s	SECOND
bps	BITS PER SECOND
Bps	BYTES PER SECOND
A	AMPERE
V	VOLT
V(dc)	VOLT (DIRECT CURRENT)
V(ac)	VOLT (ALTERNATING CURRENT)
FC	FOOT - CANDLE
W	WATTS
VA	VOLT-AMPERE
M	MEGA
k	KILO
m	MILLI
μ	MICRO
P	PICO
Hz	HERTZ

MISCELLANEOUS ELECTROLIERS

NEW	EXISTING	
		LUMINAIRE ON WOOD POLE
		NON-STANDARD ELECTROLIER (SEE PROJECT NOTES OR PROJECT PLANS)
		CITY ELECTROLIER
		ELECTROLIER FOUNDATION (FUTURE INSTALLATION)

NOTES:

1. HPS luminaires shall be 310 W HPS when installed on Type 21, 21D, 30, 31 and 32 Standards, unless otherwise specified. HPS luminaires shall be 200 W when installed on other type standards or poles, unless otherwise specified.
2. LED luminaires shall be 235 W when installed on Type 21, 21D, 30, 31 and 32 Standards, unless otherwise specified. LED luminaires shall be 165 W when installed on other type standards or poles, unless otherwise specified.
3. Luminaires shall be the cutoff type, ANSI Type III medium cutoff lighting distribution, unless otherwise specified.

STANDARD ELECTROLIER

NEW	EXISTING	STANDARD TYPE
		15
		15D
		15 STRUCTURE
		15D STRUCTURE
		21
		21D
		21 STRUCTURE
		21D STRUCTURE
		30
		31
		32

STATE OF CALIFORNIA
DEPARTMENT OF TRANSPORTATION

ELECTRICAL SYSTEMS (LEGEND AND ABBREVIATIONS)

NO SCALE

RSP ES-1A DATED JULY 19, 2013 SUPERSEDES STANDARD PLAN ES-1A DATED MAY 20, 2011 - PAGE 425 OF THE STANDARD PLANS BOOK DATED 2010.

REVISED STANDARD PLAN RSP ES-1A

2010 REVISED STANDARD PLAN RSP ES-1A

DATE PLOTTED => 17-FEB-2015
TIME PLOTTED => 06:53

Dist	COUNTY	ROUTE	POST MILES TOTAL PROJECT	SHEET No.	TOTAL SHEETS
02	Sha	44	R14.4/34.0	31	35

Theresa Gabriel
REGISTERED ELECTRICAL ENGINEER

July 19, 2013
PLANS APPROVAL DATE

REGISTERED PROFESSIONAL ENGINEER Theresa Aziz Gabriel No. E15129 Exp. 6-30-14 ELECTRICAL STATE OF CALIFORNIA

THE STATE OF CALIFORNIA OR ITS OFFICERS OR AGENTS SHALL NOT BE RESPONSIBLE FOR THE ACCURACY OR COMPLETENESS OF SCANNED COPIES OF THIS PLAN SHEET.

TO ACCOMPANY PLANS DATED 02-12-15

CONDUIT

NEW	EXISTING	
		LIGHTING CONDUIT, UNLESS OTHERWISE INDICATED OR NOTED
		TRAFFIC SIGNAL CONDUIT
C	c	COMMUNICATION CONDUIT
T	t	TELEPHONE CONDUIT
F	f	FIRE ALARM CONDUIT
FO	fo	FIBER OPTIC CONDUIT
		CONDUIT TERMINATION
R	r	CONDUIT RISER ATTACHED TO THE STRUCTURE OR SERVICE POLE

SERVICE EQUIPMENT

NEW	EXISTING	
OH	oh	OVERHEAD LINES
U	U	WOOD POLE, "U" INDICATES UTILITY OWNED
		POLE GUY WITH ANCHOR
		UTILITY TRANSFORMER - GROUND MOUNTED
III	III	SERVICE EQUIPMENT ENCLOSURE TYPE. DOOR INDICATES FRONT OF ENCLOSURE
T	t	TELEPHONE DEMARCATION CABINET

POLE-MOUNTED SERVICE DESIGNATION

TYPE H SERVICE, 28'-10" — TYPE OF INSTALLATION AND POLE HEIGHT ABOVE GRADE

FLASHING BEACON

NEW	EXISTING	
R	R	FLASHING BEACON (ONE VEHICLE SIGNAL HEAD WITH BACKPLATE AND VISOR) "R" INDICATES RED INDICATION, "Y" INDICATES YELLOW INDICATION
Y Y	Y Y	FLASHING BEACON WITH TYPE 15-FBS STANDARD AND A SIGN.
R R	R R	FLASHING BEACON WITH TYPES 9, 9A OR 9B SIGN UNLESS OTHERWISE SPECIFIED OR INDICATED

SIGNAL EQUIPMENT

NEW	EXISTING	
C	C	PEDESTRIAN SIGNAL HEAD "C" INDICATES COUNTDOWN PEDESTRIAN HEAD
		PUSH BUTTON ASSEMBLY POST
		PEDESTRIAN BARRICADE
		VEHICLE SIGNAL HEAD (WITH BACKPLATE AND 3-SECTIONS: RED, YELLOW AND GREEN)
		VEHICLE SIGNAL HEAD WITH ANGLE VISOR
PV	PV	MODIFICATIONS OF BASIC SYMBOL: "L" INDICATES ALL NON-ARROW SECTIONS LOUVERED "LG" INDICATES LOUVERED GREEN SECTION ONLY "PV" INDICATES ALL 12" SECTIONS PROGRAMMED VISIBILITY "8" INDICATES ALL 8" SECTIONS (ONLY WHEN SPECIFIED)
		VEHICLE SIGNAL HEAD CONSISTING OF RED, YELLOW AND GREEN LEFT ARROW SECTIONS
		VEHICLE SIGNAL HEAD CONSISTING OF RED AND YELLOW SECTIONS WITH AN UP GREEN ARROW SECTION
		VEHICLE SIGNAL HEAD (5 SECTION) CONSISTING OF RED, YELLOW AND GREEN SECTIONS WITH YELLOW AND GREEN RIGHT ARROW SECTIONS
		TYPE 15TS STANDARD WITH VEHICLE SIGNAL HEAD AND LUMINAIRE
		TYPE 21TS STANDARD WITH VEHICLE SIGNAL HEAD AND LUMINAIRE
		STANDARD WITH LUMINAIRE AND SIGNAL MAST ARMS AND ATTACHED VEHICLE SIGNAL HEADS
		TYPE 1 STANDARD WITH ATTACHED VEHICLE SIGNAL HEADS
		STANDARD WITH A SIGNAL MAST ARM, ATTACHED VEHICLE SIGNAL HEADS AND INTERNALLY ILLUMINATED STREET NAME SIGN
		CONTROLLER ASSEMBLY. DOOR INDICATES FRONT OF CABINET

SIGNAL EQUIPMENT Cont

NEW	EXISTING	
		GUARD POST
		TYPE 1 STANDARD WITH RAMP METERING SIGN
		OPTICAL DETECTOR FOR THE EMERGENCY VEHICLE DETECTION SYSTEM

NOTES:

1. All signal sections shall be 12" unless shown otherwise.
2. Signal heads shall be provided with backplates unless shown otherwise.

ILLUMINATED OVERHEAD SIGN

NEW	EXISTING	
		SINGLE POST, SINGLE ILLUMINATED SIGN, BALANCED BUTTERFLY
		SINGLE POST, DOUBLE ILLUMINATED SIGN, BALANCED BUTTERFLY
		SINGLE POST, SINGLE ILLUMINATED SIGN, FULL CANTILEVER
		DOUBLE POST, SINGLE ILLUMINATED SIGN
		SINGLE ILLUMINATED SIGN MOUNTED ON STRUCTURE
		DOUBLE POST, SINGLE ILLUMINATED SIGN WITH ELECTROLIER

STATE OF CALIFORNIA
DEPARTMENT OF TRANSPORTATION

ELECTRICAL SYSTEMS (LEGEND AND ABBREVIATIONS)

NO SCALE

RSP ES-1B DATED JULY 19, 2013 SUPERSEDES STANDARD PLAN ES-1B DATED MAY 20, 2011 - PAGE 426 OF THE STANDARD PLANS BOOK DATED 2010.

REVISED STANDARD PLAN RSP ES-1B

2010 REVISED STANDARD PLAN RSP ES-1B

DATE PLOTTED => 17-FEB-2015
TIME PLOTTED => 06:54

Dist	COUNTY	ROUTE	POST MILES TOTAL PROJECT	SHEET No.	TOTAL SHEETS
02	Sha	44	R14.4/34.0	32	35

Theresa Gabriel
REGISTERED ELECTRICAL ENGINEER

July 19, 2013
PLANS APPROVAL DATE

REGISTERED PROFESSIONAL ENGINEER
Theresa Aziz Gabriel
No. E15129
Exp. 6-30-14
ELECTRICAL
STATE OF CALIFORNIA

THE STATE OF CALIFORNIA OR ITS OFFICERS OR AGENTS SHALL NOT BE RESPONSIBLE FOR THE ACCURACY OR COMPLETENESS OF SCANNED COPIES OF THIS PLAN SHEET.

TO ACCOMPANY PLANS DATED 02-12-15

2010 REVISED STANDARD PLAN RSP ES-1C

EQUIPMENT IDENTIFICATION

ILLUMINATED SIGN IDENTIFICATION NUMBER:

SIGN No. 12345
10 ISL SCI 1.0

- SIGN NUMBER - PLACE ON POST OR STRUCTURE
- TRANSFORMER RATING (kVA)
- LIGHTING CONTROL TYPE
- NUMBER AND TYPE OF FIXTURES

DO NOT PLACE ON STANDARD OR STRUCTURE

ELECTROLIER OR EQUIPMENT IDENTIFICATION NUMBER:

12345 - 15'-0"

- MAST ARM LENGTH, IF SHOWN. DO NOT PLACE ON STANDARD OR STRUCTURE
- EQUIPMENT NUMBER - PLACE ON STANDARD OR STRUCTURE. EXISTING EQUIPMENT NUMBERS ARE SHOWN IN PARENTHESIS

CONDUIT AND CONDUCTOR IDENTIFICATION:

1½"C, 2#10, 15#14, 2 DLC, 12P#18

- PAIR
- NUMBER AND SIZE OF CONDUCTORS AND CABLES
- SIZE OF CONDUIT IN INCHES

ø1, ø2, ø2P, etc.	TRAFFIC PHASE IDENTIFICATION FOR SIGNAL FACES, DETECTORS AND PHASE DIAGRAMS
1 2 3	LEGEND NUMBERS
A B C	EQUIPMENT, SIGNAL POLES, INSTALLATION OR ITEMS
1 2 3	CONDUIT RUN NUMBERS

SIGNAL AND LIGHTING STANDARD (TYPICAL DESIGNATION):

19A - 3 - 100

- WIND VELOCITY = 100 mph
- CASE 3 ARM LOADING
- STANDARD TYPE
- STANDARD PLAN SHEET NUMBER
- DETAIL, NUMBER, SECTION, TYPE OR ELEVATION

MISCELLANEOUS EQUIPMENT

NEW	EXISTING	
CMS	cms	CHANGEABLE MESSAGE SIGN
		CLOSED CIRCUIT TELEVISION CAMERA
		HIGHWAY ADVISORY RADIO POLE AND ANTENNA
EMS	ems	EXTINGUISHABLE MESSAGE SIGN
M V	m v	DETECTION DEVICE M = MICROWAVE SENSOR V = VIDEO IMAGE SENSOR

WIRING DIAGRAM LEGEND

- EXTERNAL CONDUCTOR
- CONDUCTOR OR BUS
- TIE POINT
- CONTACTOR COIL
- CONTACTOR, NO CONTACT
- TERMINAL BLOCKS
- CONTACTOR, NC CONTACT
- ENCLOSURE BOND
- GROUNDING ELECTRODE
- CIRCUIT BREAKER
- RECEPTACLE

PULL BOXES

NEW	EXISTING	
		PULL BOX, No. 5 UNLESS OTHERWISE INDICATED OR NOTED
3	9A(21)	PULL BOX, ADDITIONAL DESIGNATIONS OR DESCRIPTIONS

3 No. 3½ PULL BOX
5 No. 5 PULL BOX
6 No. 6 PULL BOX
7 No. 7 (CEILING PULL BOX)
8 No. 8 (PENDANT SOFFIT PULL BOX)
9 No. 9 PULL BOX
9A No. 9A PULL BOX

(C) COMMUNICATIONS PULL BOX
(E) PULL BOX WITH EXTENSION
(S) SPRINKLER CONTROL PULL BOX
(21) ANCHOR BOLTS AND CONDUIT FOR FUTURE INSTALLATION OF TYPE 21 STANDARD
(T) TRAFFIC PULL BOX

VEHICLE DETECTORS

5 J 9 U

- VEHICLE DETECTOR DESIGNATION
- U = UPPER
  L = LOWER
- SLOT NUMBER IN INPUT FILE
- INPUT FILE (I OR J)
- PHASE

NEW	EXISTING	
		TYPE A DETECTOR LOOP. OUTLINE OF SAWCUT SHOWN
		TYPE B DETECTOR LOOP. OUTLINE OF SAWCUT SHOWN
		TYPE C DETECTOR LOOP. OUTLINE OF SAWCUT SHOWN
		TYPE D DETECTOR LOOP. OUTLINE OF SAWCUT SHOWN
		TYPE E DETECTOR LOOP. OUTLINE OF SAWCUT SHOWN
		TYPE Q DETECTOR LOOP. OUTLINE OF SAWCUT SHOWN
		MAGNETIC DETECTOR
DH	dh	DETECTOR HANDHOLE
		MICROWAVE OR VIDEO DETECTION ZONE

STATE OF CALIFORNIA
DEPARTMENT OF TRANSPORTATION

ELECTRICAL SYSTEMS (LEGEND AND ABBREVIATIONS)

NO SCALE

RSP ES-1C DATED JULY 19, 2013 SUPERSEDES STANDARD PLAN ES-1C DATED MAY 20, 2011 - PAGE 427 OF THE STANDARD PLANS BOOK DATED 2010.

REVISED STANDARD PLAN RSP ES-1C

DATE PLOTTED => 17-FEB-2015
TIME PLOTTED => 08:54

Dist	COUNTY	ROUTE	POST MILES TOTAL PROJECT	SHEET No.	TOTAL SHEETS
02	Sha	44	R14.4/34.0	33	35

Theresa Gabriel
REGISTERED ELECTRICAL ENGINEER

July 19, 2013
PLANS APPROVAL DATE

REGISTERED PROFESSIONAL ENGINEER
Theresa Aziz Gabriel
No. E15129
Exp. 6-30-14
ELECTRICAL
STATE OF CALIFORNIA

THE STATE OF CALIFORNIA OR ITS OFFICERS OR AGENTS SHALL NOT BE RESPONSIBLE FOR THE ACCURACY OR COMPLETENESS OF SCANNED COPIES OF THIS PLAN SHEET.

TO ACCOMPANY PLANS DATED 02-12-15

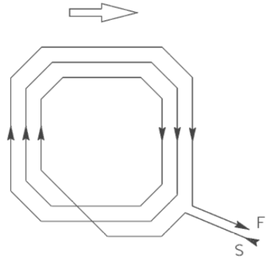

WINDING DETAIL

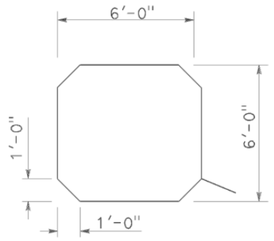

SAWCUT DETAIL

TYPE A LOOP DETECTOR CONFIGURATION

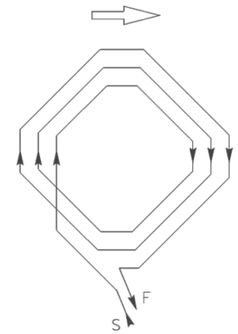

WINDING DETAIL

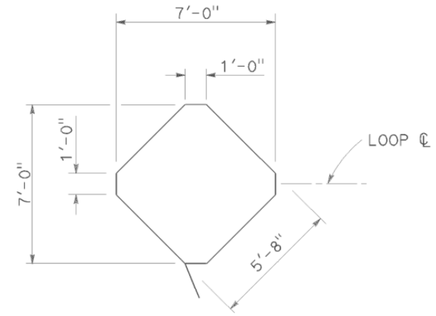

SAWCUT DETAIL

TYPE B LOOP DETECTOR CONFIGURATION

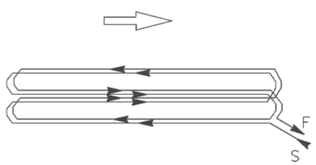

WINDING DETAIL

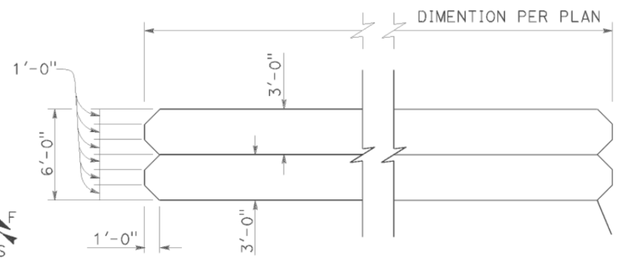

SAWCUT DETAIL

TYPE C LOOP DETECTOR CONFIGURATION

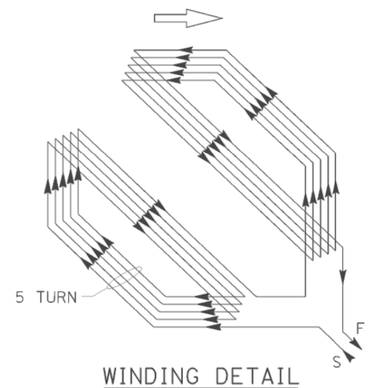

WINDING DETAIL

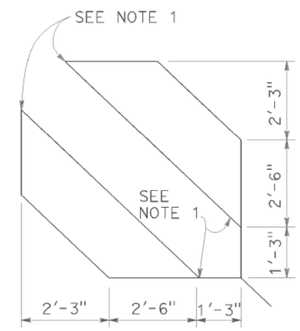

SAWCUT DETAIL

TYPE D LOOP DETECTOR CONFIGURATION

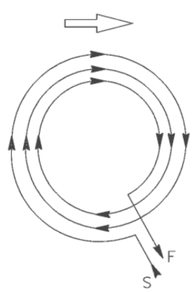

WINDING DETAIL

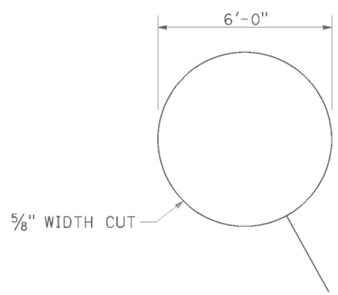

SAWCUT DETAIL

TYPE E LOOP DETECTOR CONFIGURATION

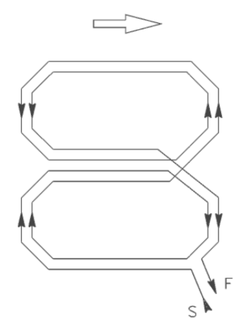

WINDING DETAIL

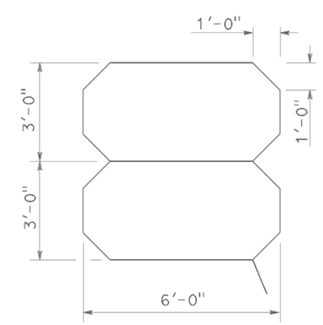

SAWCUT DETAIL

TYPE Q LOOP DETECTOR CONFIGURATION

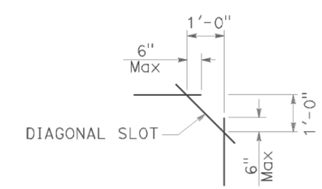

PLAN VIEW OF DIAGONAL SLOT AT CORNERS

NOTES:

1. Round corners of acute angle sawcuts to prevent damage to conductors.
2. Typical distance separating loops from edge to edge is 10' for Type A, B, D and E installation in single lane.

STATE OF CALIFORNIA
DEPARTMENT OF TRANSPORTATION

ELECTRICAL SYSTEMS (DETECTORS)

NO SCALE

RSP ES-5B DATED JULY 19, 2013 SUPERSEDES STANDARD PLAN ES-5B DATED MAY 20, 2011 - PAGE 449 OF THE STANDARD PLANS BOOK DATED 2010.

REVISED STANDARD PLAN RSP ES-5B

2010 REVISED STANDARD PLAN RSP ES-5B

DATE PLOTTED => 17-FEB-2015
TIME PLOTTED => 06:54

Dist	COUNTY	ROUTE	POST MILES TOTAL PROJECT	SHEET No.	TOTAL SHEETS
02	Sha	44	R14.4/34.0	34	35

Theresa Gabriel
REGISTERED ELECTRICAL ENGINEER

July 19, 2013
PLANS APPROVAL DATE

REGISTERED PROFESSIONAL ENGINEER Theresa Aziz Gabriel No. E15129 Exp. 6-30-14 ELECTRICAL STATE OF CALIFORNIA

THE STATE OF CALIFORNIA OR ITS OFFICERS OR AGENTS SHALL NOT BE RESPONSIBLE FOR THE ACCURACY OR COMPLETENESS OF SCANNED COPIES OF THIS PLAN SHEET.

TO ACCOMPANY PLANS DATED 02-12-15

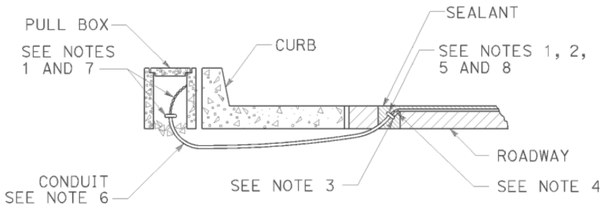

TYPE A
CURB TERMINATION DETAIL

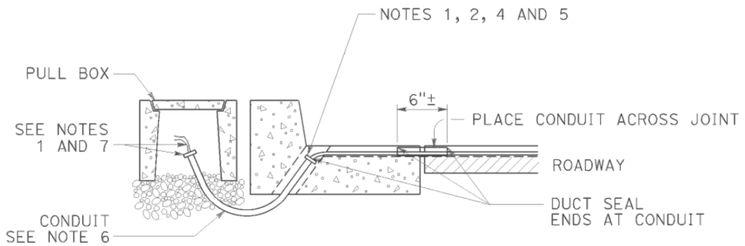

CROSS SECTION

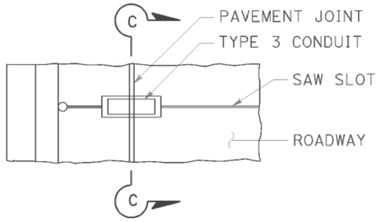

PLAN VIEW

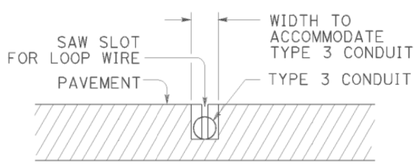

SECTION C-C

TYPE B
CURB TERMINATION DETAIL

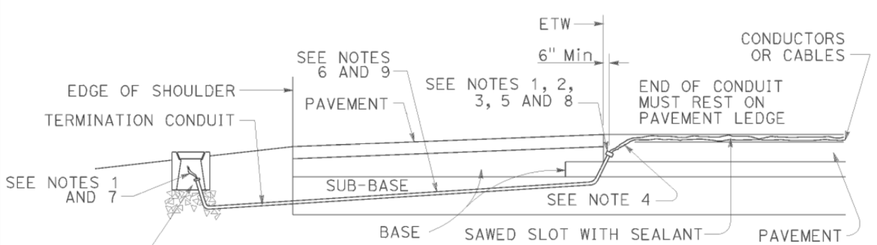

CROSS SECTION

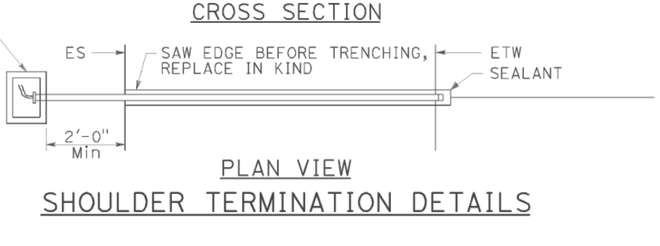

PLAN VIEW

SHOULDER TERMINATION DETAILS

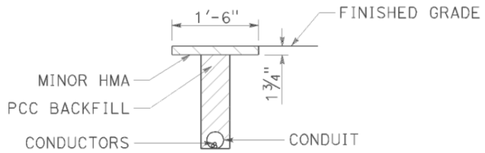

"T" TRENCH
DETAIL T

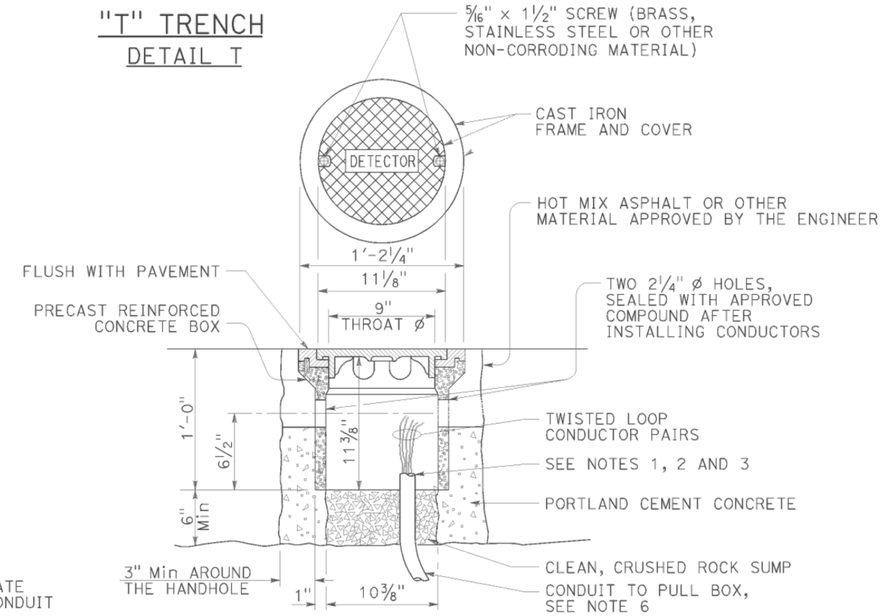

DETECTOR HANDHOLE DETAIL

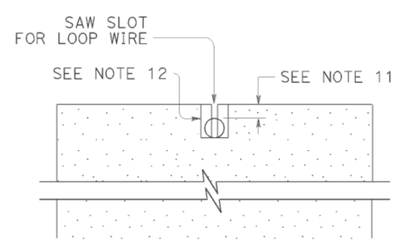

SECTION A-A

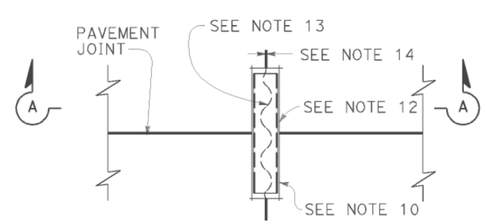

PLAN VIEW

TYPICAL LOOP LEAD-IN DETAIL AT PAVEMENT JOINT

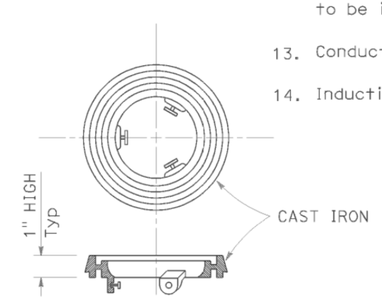

LOCKING GRADE RING

NOTES:

1. Bushing shall be used at end of conduit.
2. Tape detector conductors or cables 3" each side of bushings.
3. Install duct seal compound to each end of termination conduit before installing sealant.
4. Round all sharp edges where detector conductors or cables have to pass.
5. End of conduit shall be 3⅛" below roadway surface.
6.

Conduit size	Loop conductors
1"C minimum	1 to 2 pairs
1½"C minimum	3 to 4 pairs
2"C minimum	5 or more pairs

7. Splice detector conductors or cables to detector lead-in-cable.
8. Location of detector handhole when shown on plans.
9. When the shoulder and traveled way are paved with the same material and there is no joint between them, the conduit shall extend only 2'-0" into the shoulder pavement.
10. ¾"C, Type 3 conduit 6" long minimum, plug both ends with duct compound to keep out sealant.
11. ½" Minimum between top of conduit and pavement surface.
12. Sawcut shall not exceed 1" in width and ⅛" longer than conduit to be installed.
13. Conductors with ½" minimum slack inside conduit.
14. Inductive loop detector saw slot.

STATE OF CALIFORNIA
DEPARTMENT OF TRANSPORTATION

ELECTRICAL SYSTEMS (CURB TERMINATION AND HANDHOLE)

NO SCALE

RSP ES-5D DATED JULY 19, 2013 SUPERSEDES STANDARD PLAN ES-5D DATED MAY 20, 2011 - PAGE 451 OF THE STANDARD PLANS BOOK DATED 2010.

REVISED STANDARD PLAN RSP ES-5D

2010 REVISED STANDARD PLAN RSP ES-5D

DATE PLOTTED => 17-FEB-2015
TIME PLOTTED => 06:54

DIST	COUNTY	ROUTE	POST MILES TOTAL PROJECT	SHEET NO.	TOTAL SHEETS
02	Sha	44	R14.4/34.0	35	35

Theresa Gabriel
REGISTERED ELECTRICAL ENGINEER

July 19, 2013
PLANS APPROVAL DATE

REGISTERED PROFESSIONAL ENGINEER Theresa Aziz Gabriel No. E15129 Exp. 6-30-14 ELECTRICAL STATE OF CALIFORNIA

THE STATE OF CALIFORNIA OR ITS OFFICERS OR AGENTS SHALL NOT BE RESPONSIBLE FOR THE ACCURACY OR COMPLETENESS OF SCANNED COPIES OF THIS PLAN SHEET.

TO ACCOMPANY PLANS DATED 02-12-15

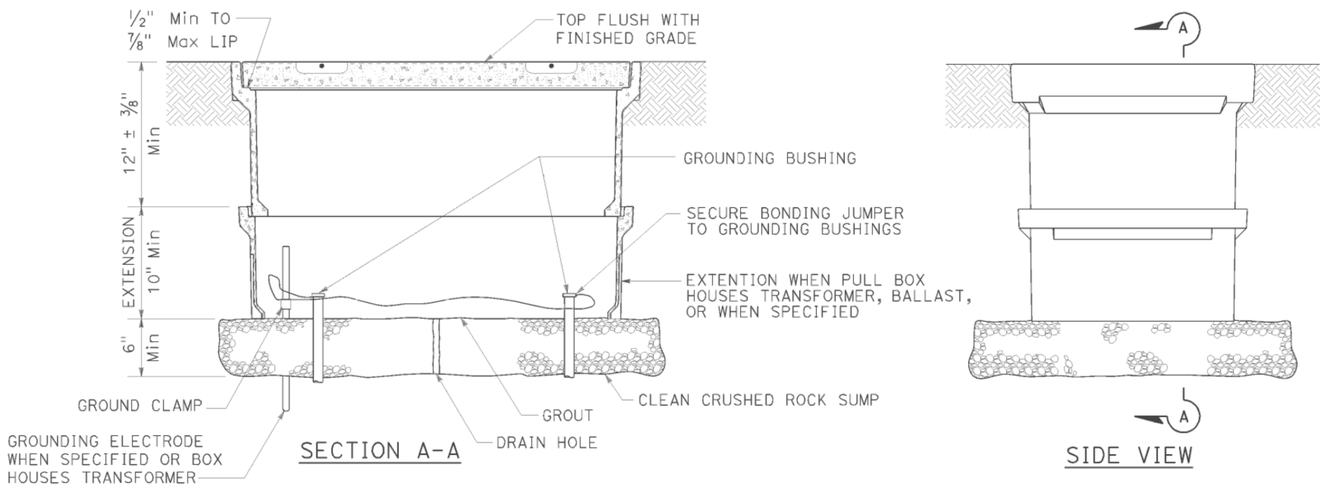

SECTION A-A

SIDE VIEW

INSTALLATION DETAILS

DETAIL A

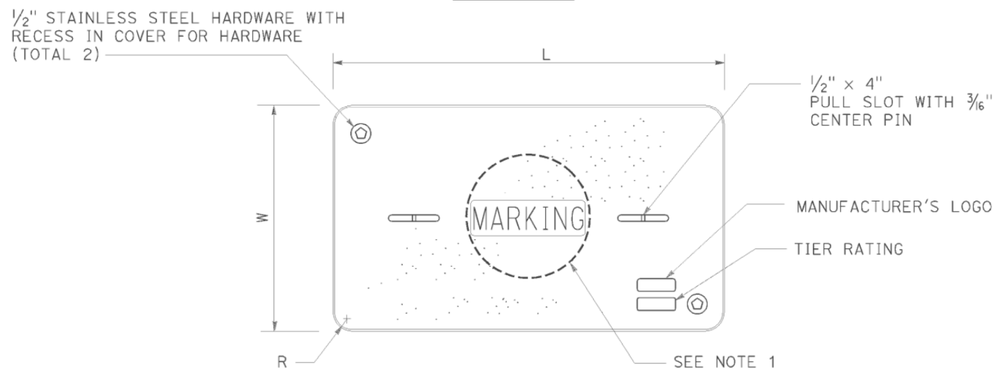

COVER TOP VIEW

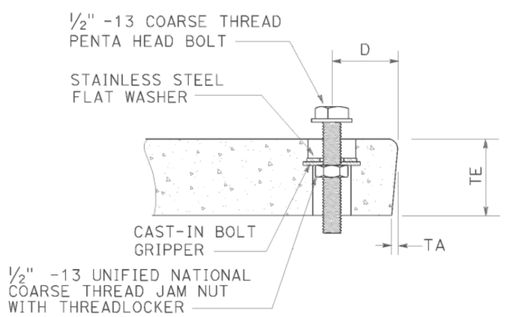

TYPICAL COVER CAPTIVE BOLT

OR SIMILAR

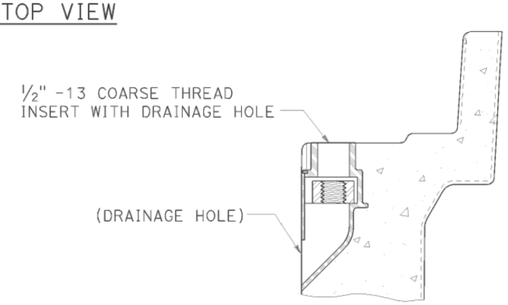

TYPICAL THREADED INSERT

OR SIMILAR

DIMENSION TABLE

PULL BOX	PULL BOX			COVER						
	MINIMUM DEPTH BOX	MINIMUM DEPTH EXTENSION	MAXIMUM WEIGHT	L	W	R	TE	TA	D	MAXIMUM WEIGHT
No. 3½	12"	N/A	40 lb	1′ - 3⅜"	10⅛"	1⅜"	2"	⅛"	1¾"	30 lb
No. 5	12"	10"	55 lb	1′ - 11¼"	1′ - 1¾"	1⅜"	2"	⅛"	1¾"	60 lb
No. 6	12"	10"	70 lb	2′ - 6½"	1′ - 5½"	1⅜"	2"	⅛"	2"	85 lb

NOTES:

1. Pull box covers shall be marked as follows: "SERVICE" Service circuits between service point and service disconnect; "SPRINKLER-CONTROL" sprinkler control circuits, 50 V or less; "CALTRANS" on all pull boxes, except pull boxes marked "SPRINKLER-CONTROL"; and "TELEPHONE" Telephone service;

   A) No. 3½ pull box.
      1) "SIGNAL" - Traffic signal circuits with or without lighting or sign lighting circuits.
      2) "LIGHTING" - Lighting or sign lighting circuits where voltage is under 600 V.

   B) No. 5, 6, 9 or 9A pull box.
      1) "TRAFFIC SIGNAL" - Traffic signal circuits with or without lighting or sign lighting circuits.
      2) "LIGHTING" - Lighting or sign lighting circuits where voltage is under 600 V.
      3) "LIGHTING-HIGH VOLTAGE" - Lighting or sign lighting circuits where voltage is above 600 V.
      4) "IRRIGATION" - Circuits to irrigation controller 120 V or more.
      5) "RAMP METER" - Ramp meter circuits.
      6) "COUNT STATION" - Count or speed monitor circuits.
      7) "COMMUNICATIONS" - Communication circuits.
      8) "TOS COMMUNICATIONS" - TOS communication line.
      9) "TOS POWER" - TOS power.
      10) "TDC POWER" - Telephone demarcation cabinet power.
      11) "CCTV" - Closed circuit television circuits.
      12) "TMS" - Traffic monitoring station circuits.
      13) "CMS" - Changeable message sign circuits.
      14) "HAR" - Highway advisory radio circuits.
      15) "BOOSTER PUMP" - Booster pump circuit.

2. The nominal dimensions of the opening in which the cover sets shall be the same as the cover dimensions except the length and width dimensions shall be ⅛" greater.

3. Covers and boxes shall be interchangeable with California standard male and female gages. When interchanged with a standard male or female gage, the top surfaces shall be flush within ⅛". Top outside radius of covers and pull boxes shall have a ⅛" radius.

4. Pull box extension may be another pull box as long as the bottom edge of the pull box can fit into the cover opening.

5. All dimensions for the cover for non-traffic pull box are nominal values.

STATE OF CALIFORNIA
DEPARTMENT OF TRANSPORTATION

ELECTRICAL SYSTEMS (NON-TRAFFIC PULL BOX)

NO SCALE

RSP ES-8A DATED JULY 19, 2013 SUPERSEDES RSP ES-8A DATED JANUARY 20, 2012 THAT SUPPLEMENTS THE STANDARD PLANS BOOK DATED 2010.

REVISED STANDARD PLAN RSP ES-8A

2010 REVISED STANDARD PLAN RSP ES-8A

DATE PLOTTED => 17-FEB-2015
TIME PLOTTED => 06:54