| Dist | COUNTY | ROUTE | POST MILES TOTAL PROJECT | SHEET No. | TOTAL SHEETS |
|---|---|---|---|---|---|
| 02 | Sha | 5,273 | R16.2/R19.0<br>19.7/20.0 | 1 | 48 |

INDEX OF PLANS


| SHEET No. | DESCRIPTION |
|---|---|
| 1 | TITLE AND LOCATION MAP |
| 2-3 | TYPICAL CROSS SECTIONS |
| 4-10 | CONSTRUCTION DETAILS |
| 11-12 | CONSTRUCTION AREA SIGNS |
| 13-17 | DETOUR PLANS |
| 18-19 | PAVEMENT DELINEATION DETAILS |
| 20 | PAVEMENT DELINEATION QUANTITIES |
| 21 | SUMMARY OF QUANTITIES |
| 22-23 | MODIFY SIGNAL |
| 24-26 | MODIFY TRAFFIC MONITORING STATION (COUNT) |
| 27 | ELECTRICAL QUANTITIES |
| 28-48 | REVISED STANDARD PLANS |


THE STANDARD PLANS LIST APPLICABLE TO THIS CONTRACT IS INCLUDED IN THE NOTICE TO BIDDERS AND SPECIAL PROVISIONS BOOK.

STATE OF CALIFORNIA

# DEPARTMENT OF TRANSPORTATION

## PROJECT PLANS FOR CONSTRUCTION ON

# STATE HIGHWAY

## IN SHASTA COUNTY IN AND NEAR REDDING ON ROUTE 5 FROM HILLTOP DRIVE OVERCROSSING TO CHURN CREEK BRIDGE AND ON ROUTE 273 FROM 0.1 MILE SOUTH OF CATERPILLAR ROAD TO ROUTE 5

TO BE SUPPLEMENTED BY STANDARD PLANS DATED MAY 2010

LOCATION MAP

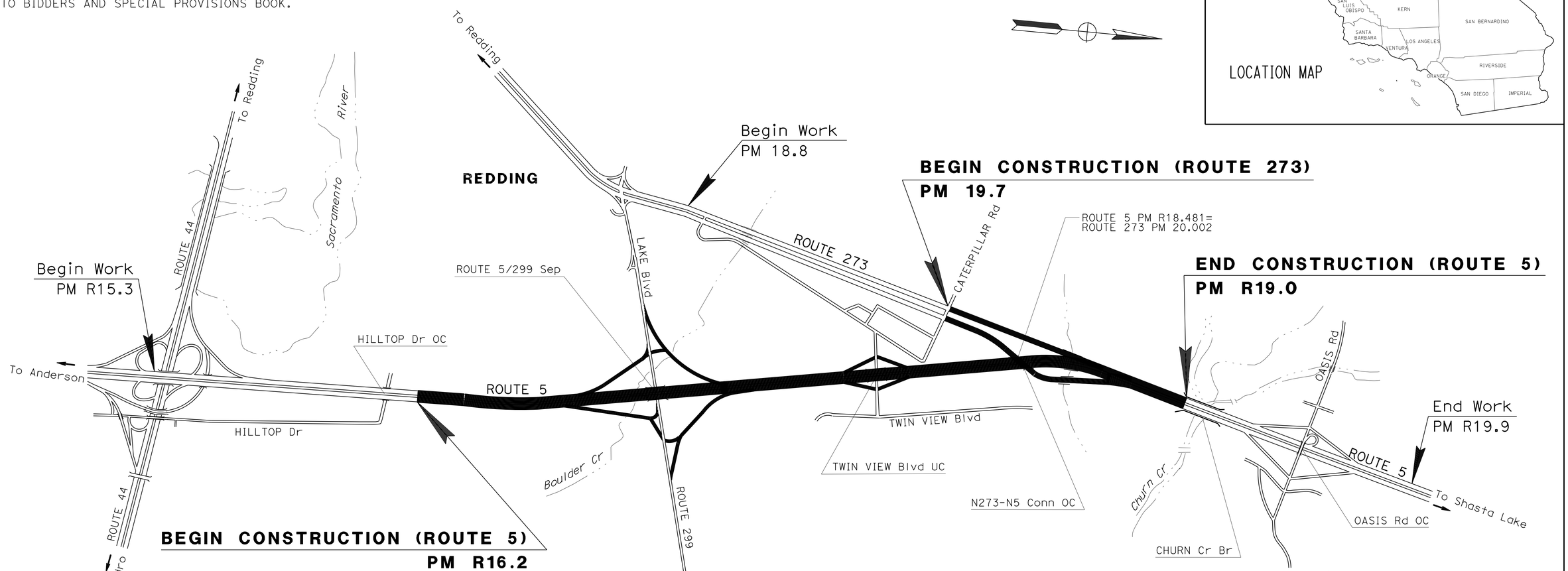


THE CONTRACTOR SHALL POSSESS THE CLASS (OR CLASSES) OF LICENSE AS SPECIFIED IN THE "NOTICE TO BIDDERS."

NO SCALE

01-08-15
PROJECT ENGINEER DATE
REGISTERED CIVIL ENGINEER

January 8, 2015
PLANS APPROVAL DATE

REGISTERED PROFESSIONAL ENGINEER MICHAEL A. CONNER No. C73123 Exp. 12-31-16 CIVIL STATE OF CALIFORNIA

*THE STATE OF CALIFORNIA OR ITS OFFICERS OR AGENTS SHALL NOT BE RESPONSIBLE FOR THE ACCURACY OR COMPLETENESS OF SCANNED COPIES OF THIS PLAN SHEET.*

| CONTRACT No. | 02-0H0004 |
|---|---|
| PROJECT ID | 0214000152 |

PROJECT MANAGER: LANCE BROWN
DESIGN ENGINEER: LANCE BROWN

P:\proj3\02\0H000_plans\pse\20h000ab001.dgn

LAST REVISION 01-05-14 | DATE PLOTTED => 09-JAN-2015 | TIME PLOTTED => 14:26

| Dist | COUNTY | ROUTE | POST MILES TOTAL PROJECT | SHEET No. | TOTAL SHEETS |
|---|---|---|---|---|---|
| 02 | Sha | 5,273 | R16.2/R19.0 19.7/20.0 | 2 | 48 |

REGISTERED CIVIL ENGINEER 01-08-15 DATE

PLANS APPROVAL DATE 01-08-15

REGISTERED PROFESSIONAL ENGINEER MICHAEL A. CONNER No. C73123 Exp. 12-31-16 CIVIL STATE OF CALIFORNIA

*THE STATE OF CALIFORNIA OR ITS OFFICERS OR AGENTS SHALL NOT BE RESPONSIBLE FOR THE ACCURACY OR COMPLETENESS OF SCANNED COPIES OF THIS PLAN SHEET.*

## NOTES:

1. DIMENSIONS OF THE PAVEMENT STRUCTURES (STRUCTURAL SECTIONS) ARE SUBJECT TO TOLERANCES SPECIFIED IN THE STANDARD SPECIFICATIONS.
2. EXISTING UTILITY FACILITIES HAVE NOT BEEN INCLUDED ON THESE PLANS.
3. FOR ACCURATE RIGHT OF WAY DATA, CONTACT RIGHT OF WAY ENGINEERING AT THE DISTRICT OFFICE.
4. SUPERELEVATIONS AS SHOWN OR AS DIRECTED BY THE ENGINEER.
5. SEE CONSTRUCTION DETAILS FOR RAMP PAVING LIMITS AND RAMPS TO BE PAVED.
6. EXACT LOCATIONS AND TYPES OF HMA DIKES AND GUARDRAIL ARE SHOWN ON THE SUMMARY OF QUANTITIES SHEET.

## ABBREVIATIONS:

RHMA-O RUBBERIZED HOT MIX ASPHALT-OPEN GRADED (OPEN GRADED FRICTION COURSE)

RAC-O RUBBERIZED ASPHALT CONCRETE (TYPE O)

## LEGEND:

COLD PLANE ASPHALT CONCRETE PAVEMENT (0.08′ ± 0.02′)

## PAVEMENT CLIMATE REGION

INLAND VALLEY

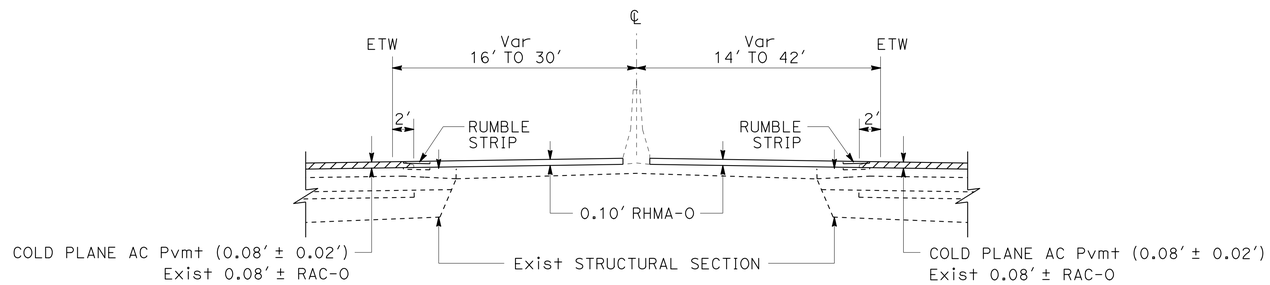


R18.60 TO R19.00

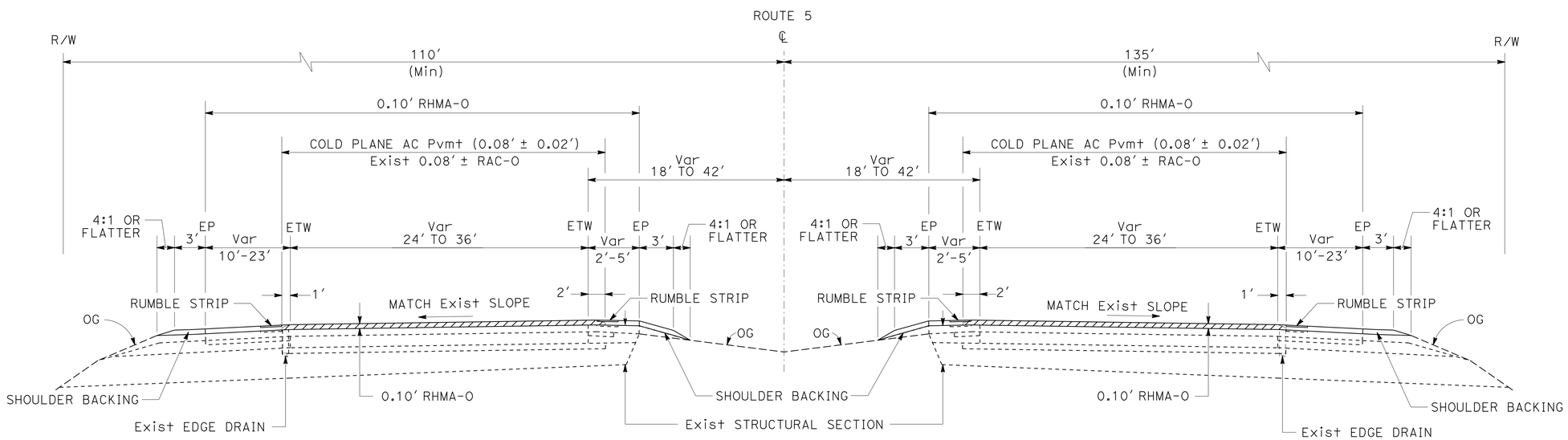


R16.20 TO R19.00 (SB)

R16.50 TO R19.00 (NB)

**ROUTE 5**

# TYPICAL CROSS SECTIONS

NO SCALE

**X-1**

REVISED BY | DATE REVISED

MICHAEL CONNER | KARLIE SMITH

CALCULATED-DESIGNED BY | CHECKED BY

FUNCTIONAL SUPERVISOR: LANCE BROWN

STATE OF CALIFORNIA - DEPARTMENT OF TRANSPORTATION

Caltrans® MAINTENANCE

P:\proj3\02\0h000_plans\pse\20h000ca001.dgn

LAST REVISION 01-08-15 | DATE PLOTTED => 09-JAN-2015 | TIME PLOTTED => 14:27

| Dist | COUNTY | ROUTE | POST MILES TOTAL PROJECT | SHEET No. | TOTAL SHEETS |
|---|---|---|---|---|---|
| 02 | Sha | 5,273 | R16.2/R19.0 19.7/20.0 | 3 | 48 |

REGISTERED CIVIL ENGINEER 01-08-15 DATE

01-08-15
PLANS APPROVAL DATE

REGISTERED PROFESSIONAL ENGINEER MICHAEL A. CONNER No. C73123 Exp. 12-31-16 CIVIL STATE OF CALIFORNIA

*THE STATE OF CALIFORNIA OR ITS OFFICERS OR AGENTS SHALL NOT BE RESPONSIBLE FOR THE ACCURACY OR COMPLETENESS OF SCANNED COPIES OF THIS PLAN SHEET.*

NOTES:

1. EXISTING UTILITY FACILITIES HAVE NOT BEEN INCLUDED ON THESE PLANS.
2. DO NOT SKIN PATCH DIKE UNDER TERMINAL SYSTEM.

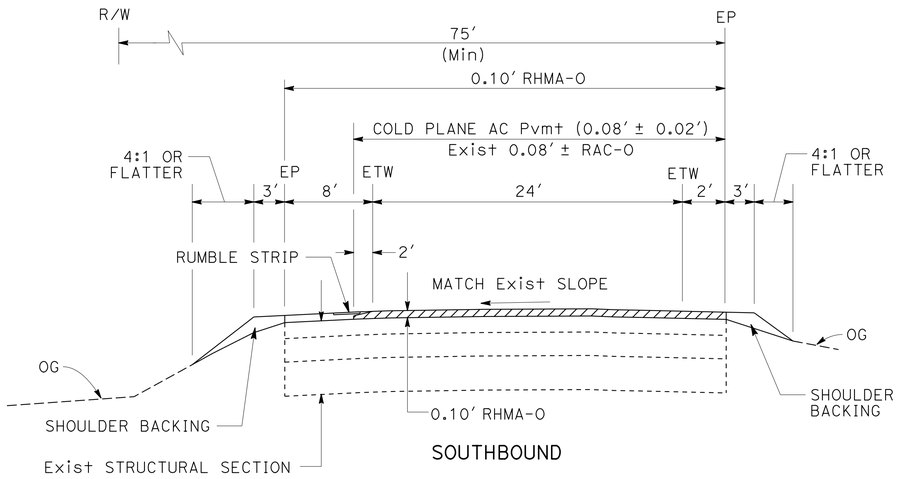


SOUTHBOUND

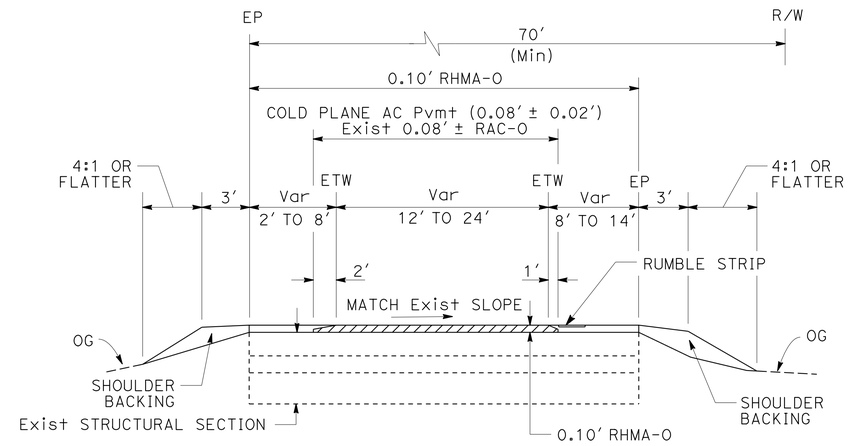


NORTHBOUND

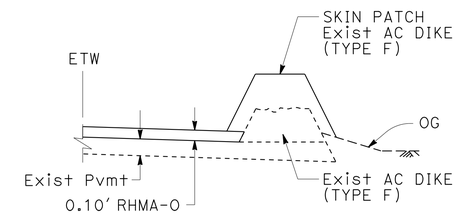


TYPE F

PM 19.77 TO 20.03

**ROUTE 273**

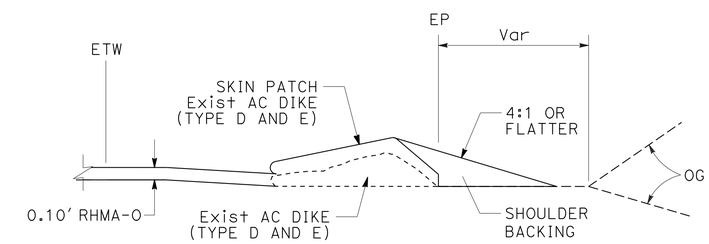


TYPE D AND E

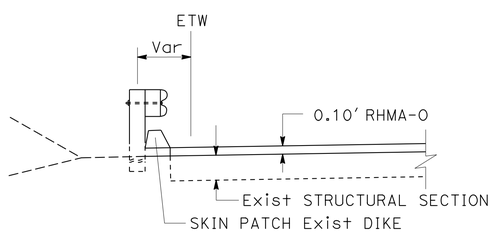


**GUARDRAIL LOCATION**
WITH DIKE
(TYPICAL BOTH DIRECTIONS)

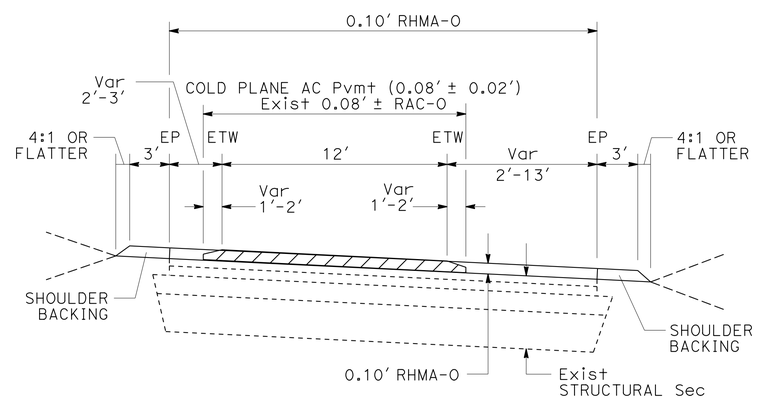


**ENTRANCE/EXIT RAMPS**

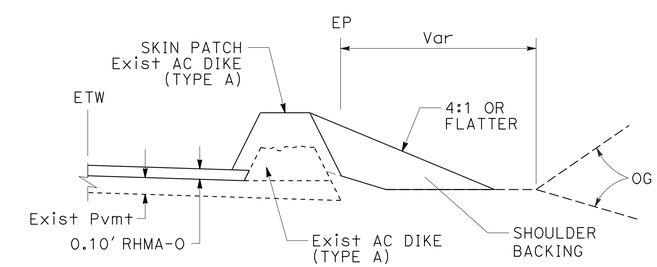


TYPE A

**TYPICAL SKIN PATCH EXISTING ASPHALT CONCRETE DIKE**

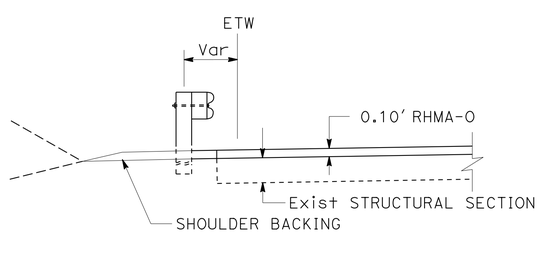


**GUARDRAIL LOCATION**
WITHOUT DIKE
(TYPICAL BOTH DIRECTIONS)

**TYPICAL CROSS SECTIONS**

NO SCALE

**X-2**

REVISED BY | DATE REVISED
MICHAEL CONNER | KARLIE SMITH
CALCULATED-DESIGNED BY | CHECKED BY
FUNCTIONAL SUPERVISOR | LANCE BROWN

STATE OF CALIFORNIA - DEPARTMENT OF TRANSPORTATION
Caltrans® **MAINTENANCE**

P:\proj3\02\0h000_plans\pse\20h000ca002.dgn

LAST REVISION 01-08-15 | DATE PLOTTED => 09-JAN-2015 | TIME PLOTTED => 14:27

| Dist | COUNTY | ROUTE | POST MILES TOTAL PROJECT | SHEET No. | TOTAL SHEETS |
|---|---|---|---|---|---|
| 02 | Sha | 5,273 | R16.2/R19.0 19.7/20.0 | 4 | 48 |

REGISTERED CIVIL ENGINEER 01-08-15 DATE

01-08-15
PLANS APPROVAL DATE

REGISTERED PROFESSIONAL ENGINEER MICHAEL A. CONNER No. C73123 Exp. 12-31-16 CIVIL STATE OF CALIFORNIA

*THE STATE OF CALIFORNIA OR ITS OFFICERS OR AGENTS SHALL NOT BE RESPONSIBLE FOR THE ACCURACY OR COMPLETENESS OF SCANNED COPIES OF THIS PLAN SHEET.*

## NOTES:

1. THE 0.10′ DEPTH COLD PLANE AC PAVEMENT SHALL BE A MINIMUM OF 66′ IN LENGTH MEASURED ALONG THE ETW.
2. SEE TYPICAL CROSS SECTIONS FOR EXISTING STRUCTURAL SECTION.
3. EXISTING UTILITY FACILITIES HAVE NOT BEEN INCLUDED ON THESE PLANS.
4. SHOULDER IS 0.08′± LOWER THAN TRAVELED WAY DUE TO RAC-O. COLD PLANE DEPTH TAKEN IN TRAVELED WAY. THE Exist RAC-O TRANSITIONS OUT TO EP-EP WITHIN THE 50′ TAPER SHOWN.

## LEGEND:

- COLD PLANE AC PAVEMENT (0.08′ TO 0.10′)
- COLD PLANE AC PAVEMENT (0.08′ ± 0.02′) (TYPICAL)
- COLD PLANE AC PAVEMENT (0.00′ TO 0.10′)

## ABBREVIATIONS:

| | |
|---|---|
| RHMA-O | RUBBERIZED HOT MIX ASPHALT-OPEN GRADED (OPEN GRADED FRICTION COURSE) |
| RAC-O | RUBBERIZED ASPHALT CONCRETE (TYPE O) |

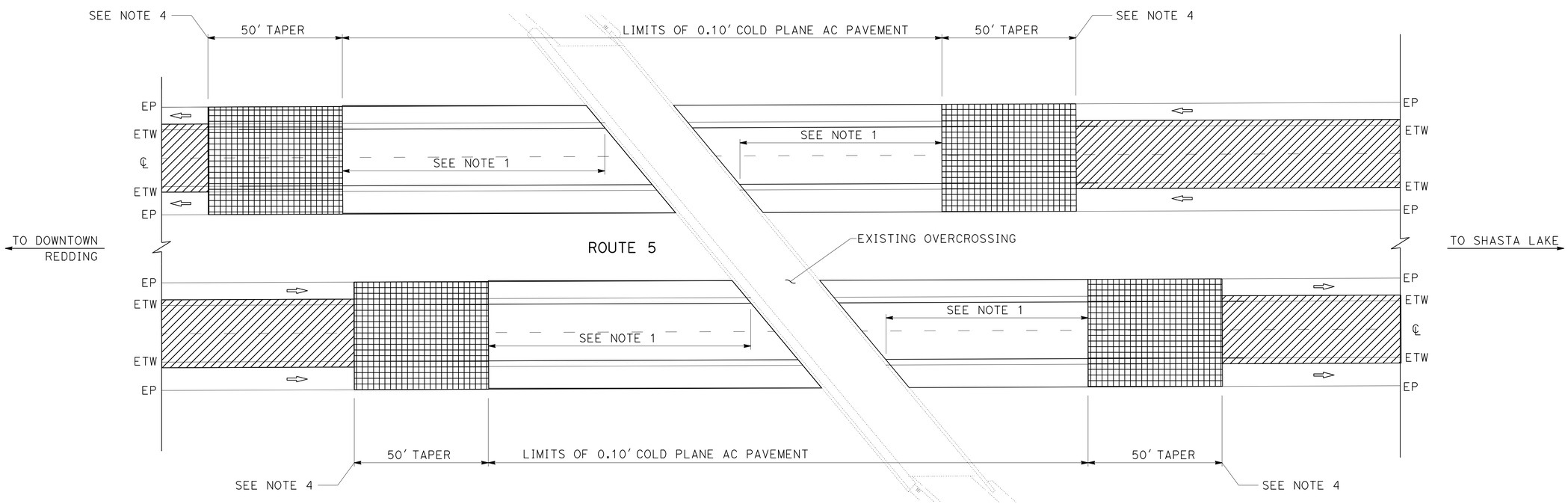


PLAN

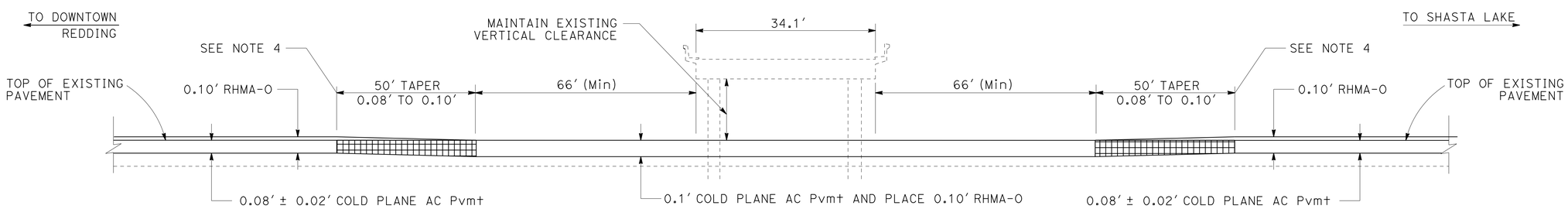


ELEVATION

# OVERCROSSING PAVEMENT OVERLAY TAPER

N Hwy 273 TO ROUTE 5 Conn OC PM R18.48

# CONSTRUCTION DETAILS

NO SCALE

C-1

REVISED BY | DATE REVISED
MICHAEL CONNER | KARLIE SMITH
CALCULATED-DESIGNED BY | CHECKED BY
FUNCTIONAL SUPERVISOR
LANCE BROWN

STATE OF CALIFORNIA - DEPARTMENT OF TRANSPORTATION
Caltrans® MAINTENANCE

P:\proj3\02\0h000_plans\pse\20h000ga001.dgn

LAST REVISION 01-08-15 | DATE PLOTTED => 09-JAN-2015 | TIME PLOTTED => 14:27

| Dist | COUNTY | ROUTE | POST MILES TOTAL PROJECT | SHEET No. | TOTAL SHEETS |
|---|---|---|---|---|---|
| 02 | Sha | 5,273 | R16.2/R19.0 19.7/20.0 | 5 | 48 |

REGISTERED CIVIL ENGINEER 01-08-15 DATE

01-08-15
PLANS APPROVAL DATE

REGISTERED PROFESSIONAL ENGINEER MICHAEL A. CONNER No. C73123 Exp. 12-31-16 CIVIL STATE OF CALIFORNIA

*THE STATE OF CALIFORNIA OR ITS OFFICERS OR AGENTS SHALL NOT BE RESPONSIBLE FOR THE ACCURACY OR COMPLETENESS OF SCANNED COPIES OF THIS PLAN SHEET.*

NOTE:

1. EXISTING UTILITY FACILITIES HAVE NOT BEEN INCLUDED ON THESE PLANS.

## RAMPS

| OVERCROSSING/ UNDERCROSSING | DIRECTION OF TRAVEL | | ENTRANCE RAMP | EXIT RAMP | POST MILE | DIMENSIONS | | | | | | | | | | | | | |
|---|---|---|---|---|---|---|---|---|---|---|---|---|---|---|---|---|---|---|---|
| | | | | | | WIDTH IN FEET | | | | | | | | LENGTH IN FEET | | | | | |
| | NB | SB | | | | W-1 | W-2 | W-3 | W-4 | W-5 | W-6 | W-7 | W-8 | L-1 | L-2 | L-3 | L-4 | L-5 | L-6 |
| 5/299 Jct | | X | X | | R17.05 | 58 | 24 | 40 | | 31 | 34 | 65 | 24 | 1890 | 1145 | | 130 | 290 | 82 |
| | X | | | X | R17.11 | 40 | 25 | 25 | | 25 | 37 | 45 | 20 | 480 | 360 | | 475 | 185 | 90 |
| | | X | | X | R17.53 | 36 | 26 | 34 | | 22 | 25 | 24 | 24 | 445 | 1220 | | 165 | 60 | 36 |
| | X | | X | | R17.57 | 40 | 25 | 24 | | 26 | 26 | 34 | 24 | 810 | 850 | | 315 | 430 | 170 |
| TWIN VIEW Blvd | | X | X | | R17.92 | 27 | 22 | 24 | 160 | | | | | 800 | 640 | 93 | | | |
| | X | | | X | R17.93 | 36 | 28 | 40 | 135 | | | | | 420 | 675 | 74 | | | |
| | | X | | X | R18.22 | 31 | 22 | 26 | 150 | | | | | 375 | 720 | 64 | | | |
| | X | | X | | R18.22 | 40 | 24 | 25 | 105 | | | | | 700 | 568 | 88 | | | |
| 5/273 Jct | | X | | X | R18.73 | * | * | * | * | * | * | * | * | * | * | * | * | * | * |
| | X | | X | | R18.78 | * | * | * | * | * | * | * | * | * | * | * | * | * | * |

* SEE Jct 5/273 RAMPS DETAIL BELOW

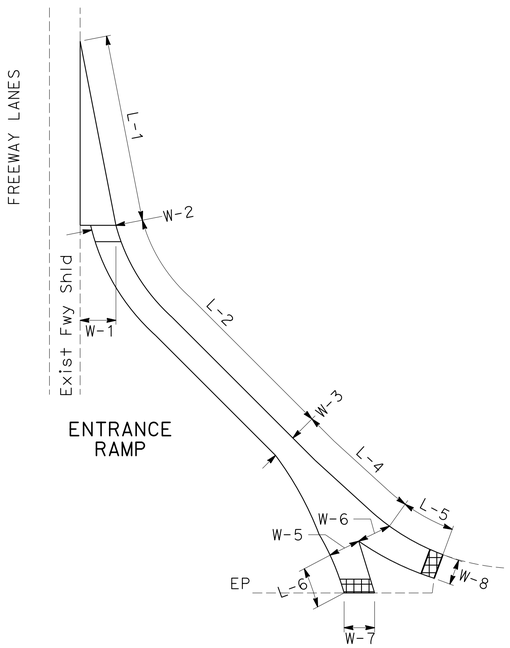


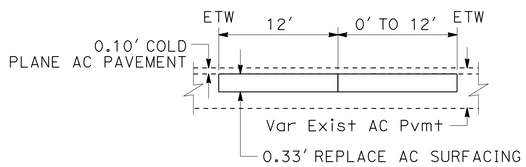


## REPLACE AC SURFACING

LAKE Blvd NORTHBOUND EXIT RAMP
TWIN VIEW Blvd NORTHBOUND EXIT RAMP

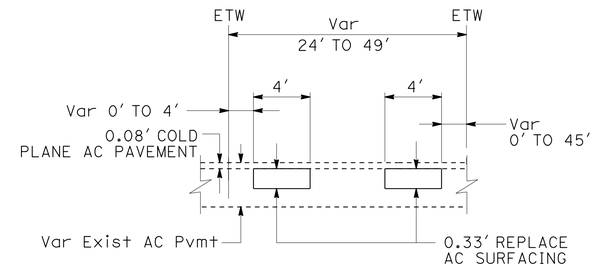


## REPLACE AC SURFACING

(TYPICAL BOTH DIRECTIONS)

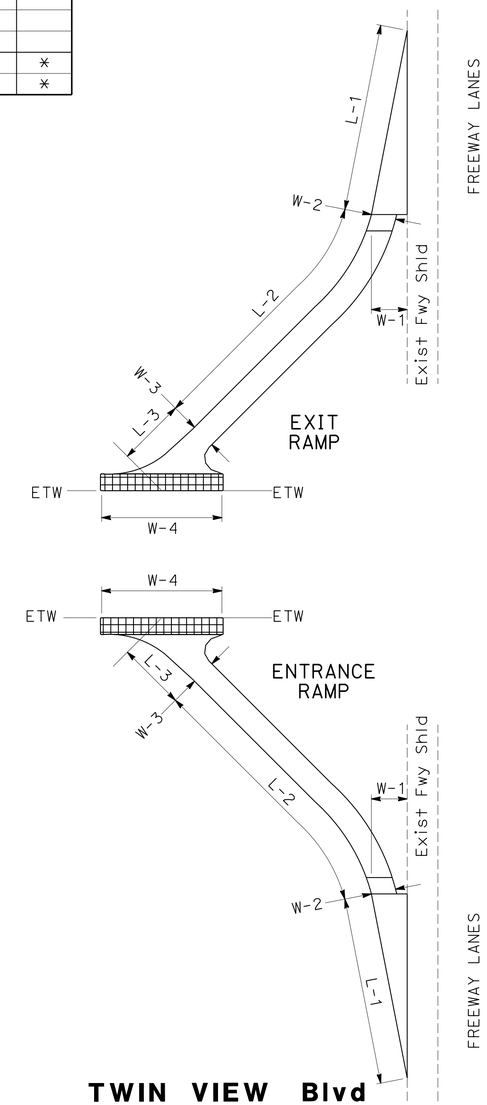


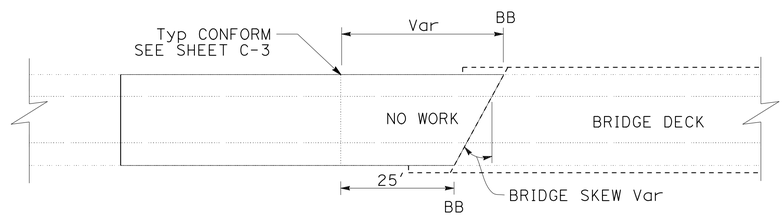


## PAVEMENT CONFORM DETAIL

NORTH REDDING SEPARATION
APPROACH SHOWN
DEPARTURE SIMILAR

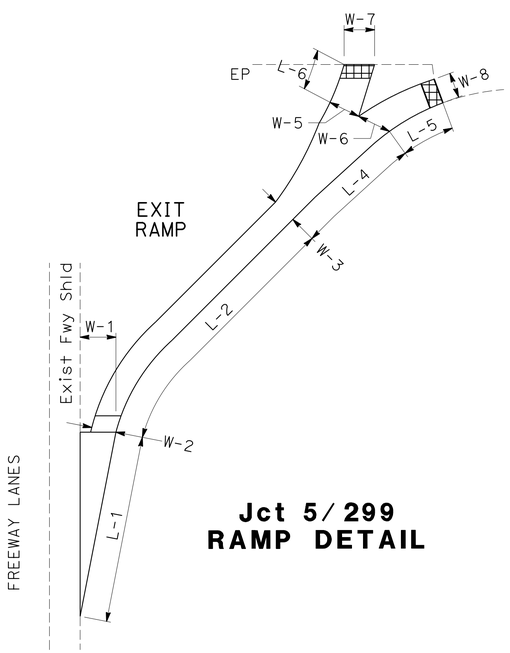


## Jct 5/299 RAMP DETAIL

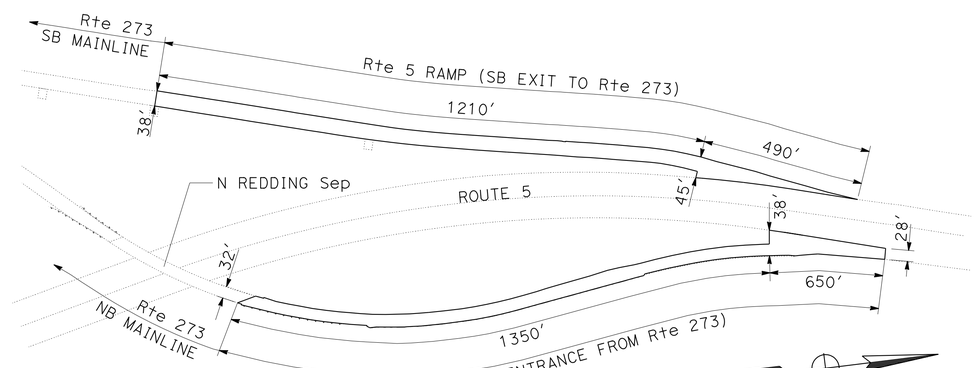


## Jct 5/273 RAMPS

## TWIN VIEW Blvd RAMP DETAIL

# CONSTRUCTION DETAILS

NO SCALE

C-2

STATE OF CALIFORNIA - DEPARTMENT OF TRANSPORTATION
Caltrans MAINTENANCE

FUNCTIONAL SUPERVISOR: LANCE BROWN
CALCULATED-DESIGNED BY: MICHAEL CONNER
CHECKED BY: KARLIE SMITH
REVISED BY
DATE REVISED

P:\proj3\02\0h000_plans\pse\20h000ga002.dgn

LAST REVISION 01-08-15
DATE PLOTTED => 09-JAN-2015
TIME PLOTTED => 14:27

| Dist | COUNTY | ROUTE | POST MILES TOTAL PROJECT | SHEET No. | TOTAL SHEETS |
|---|---|---|---|---|---|
| 02 | Sha | 5,273 | R16.2/R19.0 19.7/20.0 | 6 | 48 |

REGISTERED CIVIL ENGINEER 01-08-15 DATE

PLANS APPROVAL DATE 01-08-15

REGISTERED PROFESSIONAL ENGINEER MICHAEL A. CONNER No. C73123 Exp. 12-31-16 CIVIL STATE OF CALIFORNIA

*THE STATE OF CALIFORNIA OR ITS OFFICERS OR AGENTS SHALL NOT BE RESPONSIBLE FOR THE ACCURACY OR COMPLETENESS OF SCANNED COPIES OF THIS PLAN SHEET.*

## NOTES:

1. FOR TEMPORARY CONSTRUCTION TAPERS, GRIND EXISTING SURFACES TO ACCOMMODATE A MINIMUM TAPER THICKNESS OF 0.10′ WHEN EITHER:
   A. HMA MATERIAL SUCH AS RUBBERIZED, POLYMER MODIFIED OR OPEN GRADED IS UNSUITABLE FOR RAKING TO A MAXIMUM 0.02′ THICKNESS AT THE CONFORM.
   B. TEMPORARY TAPER WILL BE IN PLACE FOR MORE THAN 14 DAYS.
2. PERMANENT SURFACE MAY BE EXISTING OR NEW PAVEMENT.
3. ROADWAY SURFACE IS THE TOP OF EXISTING SURFACE OR THE TOP OF THE PLANED SURFACE.
4. EXISTING UTILITY FACILITIES HAVE NOT BEEN INCLUDED ON THESE PLANS.
5. SHOULDER IS 0.08′ ± LOWER THAN TRAVELED WAY DUE TO RAC-O. COLD PLANE DEPTH TAKEN IN TRAVELED WAY. THE Exist RAC-O TRANSITIONS OUT TO EP-EP WITHIN THE TAPERS SHOWN.
6. IF AUTHORIZED, YOU MAY USE ALTERNATIVE MATERIALS OR METHODS TO PRODUCE THE REQUIRED TAPER.

## LEGEND:

HMA MATERIAL (TEMPORARY TAPER)

IF NECESSARY, COLD PLANE AC PAVEMENT AND PLACE HMA MATERIAL (SEE NOTE 1)

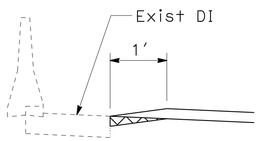


**SECTION A-A**

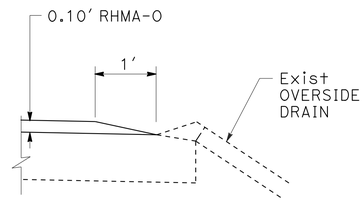


ELEVATION VIEW

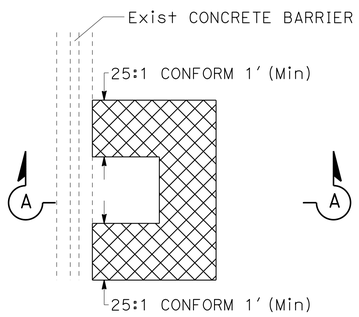


**MEDIAN INLET COLD PLANING DETAIL**

PM R18.80, R18.77, R18.72, R18.67

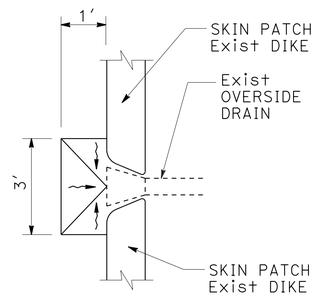


PLAN VIEW

**TYPICAL OVERSIDE DRAIN CONFORM**

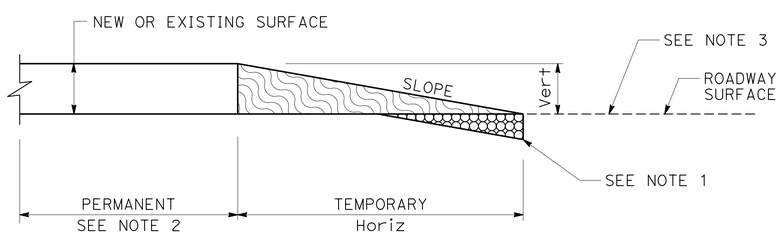


| Vert | SLOPE RATIO Horiz/Vert |
|---|---|
| 0-0.10′ | 70:1 |
| GREATER THAN 0.10′ | 160:1 |

**TYPICAL PAVING CONFORM FOR TEMPORARY CONSTRUCTION TAPERS**

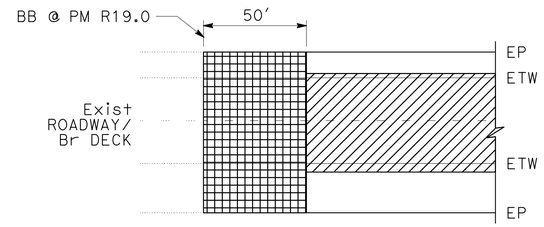


**CONFORM TAPER (TYPICAL)**

MAINLINE AND 5/273 RAMP

SEE NOTE 5

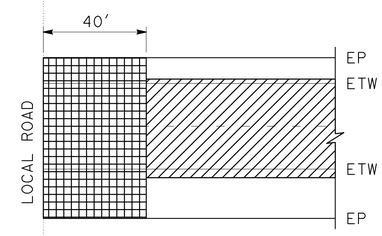


**CONFORM TAPER (TYPICAL)**

RAMP TERMINI

SEE NOTE 5

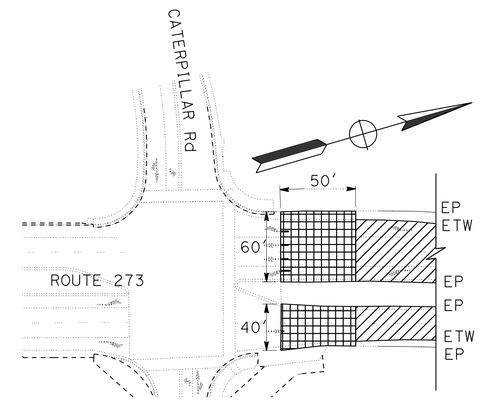


**CONFORM TAPER (TYPICAL)**

MAINLINE (ROUTE 273)

SEE NOTE 5

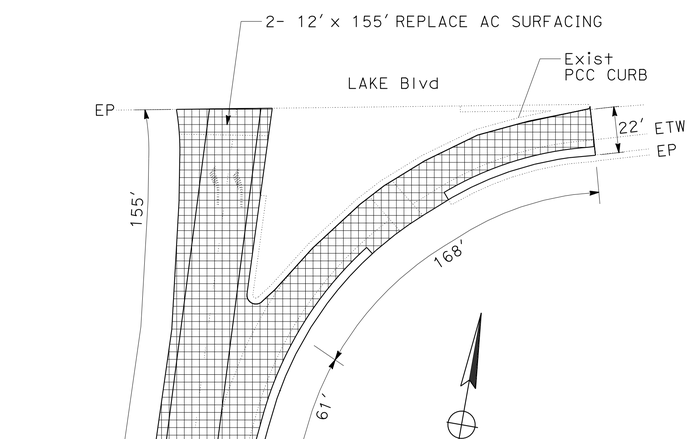


**LAKE Blvd NB EXIT**

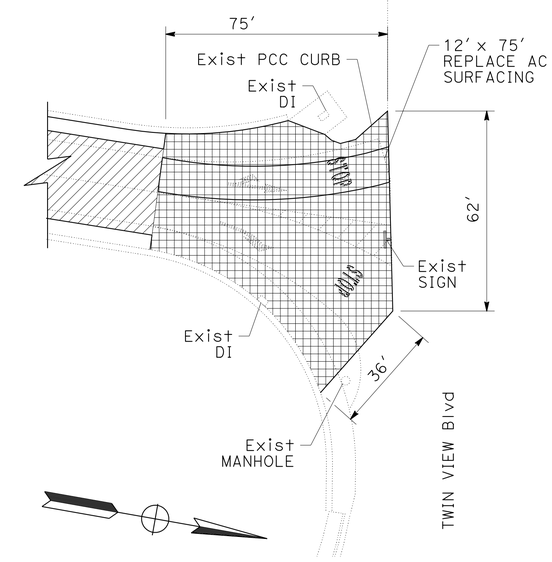


**TWIN VIEW Blvd NB EXIT**

**CONSTRUCTION DETAILS**

NO SCALE

C-3

REVISED BY | DATE REVISED

MICHAEL CONNER | KARLIE SMITH

CALCULATED-DESIGNED BY | CHECKED BY

FUNCTIONAL SUPERVISOR | LANCE BROWN

STATE OF CALIFORNIA - DEPARTMENT OF TRANSPORTATION

Caltrans® MAINTENANCE

P:\proj3\02\0H000_plans\pse\20h000ga003.dgn

LAST REVISION 01-08-15 | DATE PLOTTED => 09-JAN-2015 | TIME PLOTTED => 14:27

| Dist | COUNTY | ROUTE | POST MILES TOTAL PROJECT | SHEET No. | TOTAL SHEETS |
|---|---|---|---|---|---|
| 02 | Sha | 5,273 | R16.2/R19.0 19.7/20.0 | 7 | 48 |

REGISTERED CIVIL ENGINEER 01-08-15 DATE

01-08-15
PLANS APPROVAL DATE

REGISTERED PROFESSIONAL ENGINEER MICHAEL A. CONNER No. C73123 Exp. 12-31-16 CIVIL STATE OF CALIFORNIA

*THE STATE OF CALIFORNIA OR ITS OFFICERS OR AGENTS SHALL NOT BE RESPONSIBLE FOR THE ACCURACY OR COMPLETENESS OF SCANNED COPIES OF THIS PLAN SHEET.*

## NOTES:

1. FOR DIKE DETAILS, SEE REVISED STANDARD PLANS RSP A87B.
2. ONLY TYPE C DIKE MAY BE USED UNDER OR IN FRONT OF TERMINAL SYSTEMS, OR WHEN DIKE IS PLACED MORE THAN 2" IN FRONT OF FACE OF MBGR, OR MORE THAN 7" IN FRONT OF FACE OF MGS.
3. EXISTING MOUNTABLE TYPE E DIKE MAY REMAIN UNDER GUARDRAIL, BUT NO NEW MOUNTABLE DIKE SHOULD BE PLACED UNDER GUARDRAIL.
4. GUARDRAIL DELINEATION TO BE USED WHERE SHOWN ON THE PROJECT PLANS.
5. FOR STEEL LINE POSTS, USE 1/4 - 20 SELF-TAPPING SCREWS IN 0.22" DIAMETER HOLES OR 1/4" BOLTS IN 9/32" DIAMETER HOLES.
6. SEE MEASURE HEIGHT AT GRADE BREAK DETAIL C-5.
7. FOR DETAILS OF STANDARD HARDWARE USED TO CONSTRUCT GUARDRAIL, SEE REVISED STANDARD PLAN RSP A77M1. RSP A77M1 APPLIES TO MBGR.
8. FOR DETAILS OF POSTS (WOOD OR STEEL) AND BLOCKS (WOOD OR COMPOSITE/PLASTIC) USED TO CONSTRUCT GUARDRAIL, SEE REVISED STANDARD PLAN RSP A77N1 OR RSP A77N2. RSP A77N1 OR RSP A77N2 APPLIES TO MBGR.
9. IF AUTHORIZED, A SINGLE LINE POST POST MAY BE MOVED UP TO 12" ALONG THE GUARDRAIL TO AVOID OBSTACLES. IF POST IS MOVED, BOLT THROUGH THE POST AND BLOCK ONLY.
10. SEE TYPICAL LEAVOUT AREA SHEET C-6 WHEN INSTALLING POST THROUGH PAVEMENT. POST NEED SPACE TO ROTATE DURING IMPACTS.
11. PLACE TYPE F DIKE UNDER GUARDRAIL AND PLACE TYPE C DIKE IF MORE THAN 2" IN FRONT OF FACE OF GUARDRAIL.
12. FOR BOLTED CONNECTION OF RAIL ELEMENT TO BLOCK AND POST, SEE "RAIL ELEMENT SPLICE DETAIL" AND "SECTON THRU RAIL ELEMENT", REVISED STANDARD PLAN RSP A77L1.
13. TO CONNECT RAILING TO TERMINAL SYSTEM END TREATMENT, TRANSITION THE TOP OF RAILING HEIGHT AT A RATIO OF 120:1 TO TERMINAL SYSTEM END TREATMENT HEIGHT PLUS ONE 12'-6" STANDARD RAILING SECTION AT THE TRANSITIONED HEIGHT FOR A HORIZONTAL CONNECTION TO THE END TREATMENT.
14. ADDITIONAL HOLE IN UPPERMOST PORTION OF LINE POST IS FOR POTENTIAL FUTURE ADJUSTMENTS OF RAILING HEIGHT. SEE REVISED STANDARD PLAN RSP A77N1, RSP A77N2.
15. DIMENSIONS FOR POST AND BLOCKS ARE NOMINAL.
16. EXISTING UTILITY FACILITIES HAVE NOT BEEN INCLUDED ON THESE PLANS.

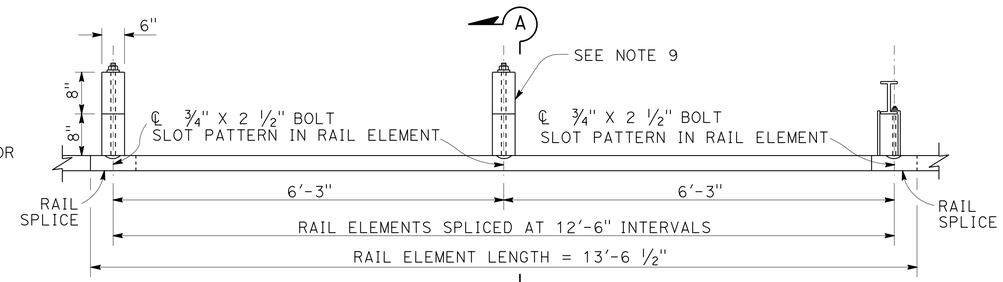


PLAN

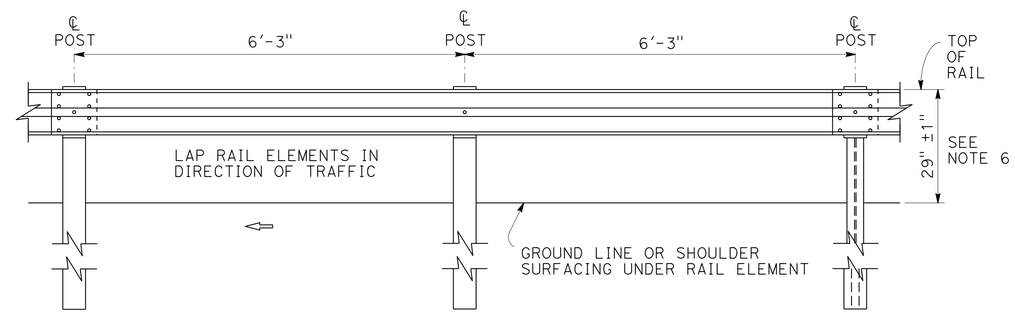


ELEVATION
**GUARDRAIL**

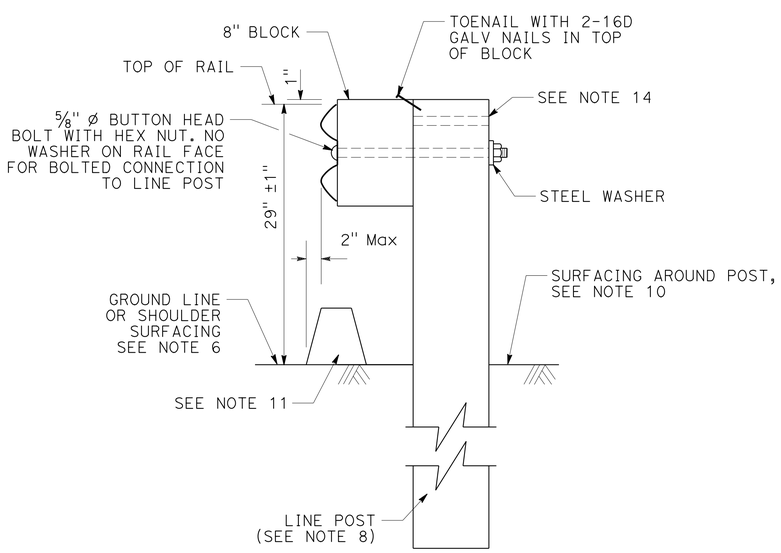


**SECTION A-A**
**TYPICAL LINE POST INSTALLATION**
SEE NOTE 9

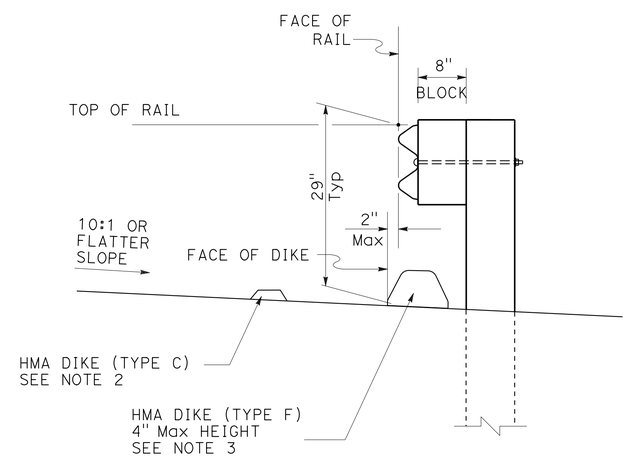


**GUARDRAIL DIKE POSITIONING**

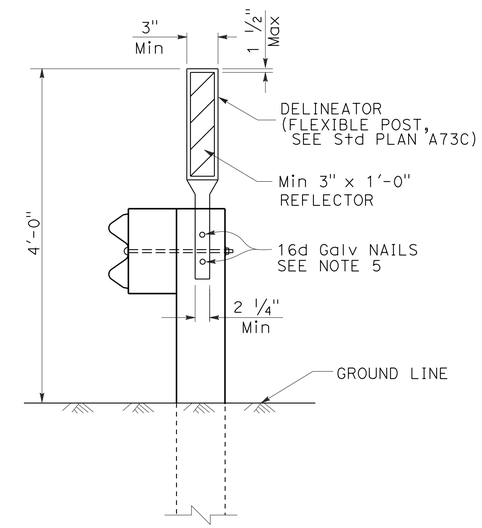


**GUARDRAIL DELINEATION**
SEE NOTE 4

# CONSTRUCTION DETAILS

NO SCALE

**C-4**

REVISED BY | DATE REVISED
MICHAEL CONNER | KARLIE SMITH
CALCULATED-DESIGNED BY | CHECKED BY
FUNCTIONAL SUPERVISOR: LANCE BROWN
STATE OF CALIFORNIA - DEPARTMENT OF TRANSPORTATION
Caltrans® MAINTENANCE
P:\proj3\02\0h000_plans\pse\20h000ga004.dgn

LAST REVISION 01-08-15 | DATE PLOTTED => 09-JAN-2015 | TIME PLOTTED => 14:27

| Dist | COUNTY | ROUTE | POST MILES TOTAL PROJECT | SHEET No. | TOTAL SHEETS |
|---|---|---|---|---|---|
| 02 | Sha | 5,273 | R16.2/R19.0 19.7/20.0 | 8 | 48 |

REGISTERED CIVIL ENGINEER 01-08-15 DATE

PLANS APPROVAL DATE 01-08-15

REGISTERED PROFESSIONAL ENGINEER MICHAEL A. CONNER No. C73123 Exp. 12-31-16 CIVIL STATE OF CALIFORNIA

*THE STATE OF CALIFORNIA OR ITS OFFICERS OR AGENTS SHALL NOT BE RESPONSIBLE FOR THE ACCURACY OR COMPLETENESS OF SCANNED COPIES OF THIS PLAN SHEET.*

NOTES:

1. Max 10:1 SLOPE IN FRONT OF GUARDRAIL.
2. FOR POST AND BLOCK DETAILS SEE REVISED STANDARD PLANS RSP A77N1 AND RSP A77N2. RSP A77N1 AND RSP A77N2 APPLIES TO MBGR.
3. FOR 8' POST USE W6 X 15 STEEL OR 10" x 10" WOOD POST.
4. BLOCKS MUST HAVE MEANS TO RESIST ROTATION OTHER THAN THROUGH BOLT.
5. PLACE RUB RAIL (GUARDRAIL ELEMENT) AND ATTACH TO POST WITH NO BLOCK WHEN HEIGHT OF GUARDRAIL IS OVER 32" ABOVE FINISH GRADE UNDER FACE OF RAIL.
6. EXISTING UTILITY FACILITIES HAVE NOT BEEN INCLUDED ON THESE PLANS.

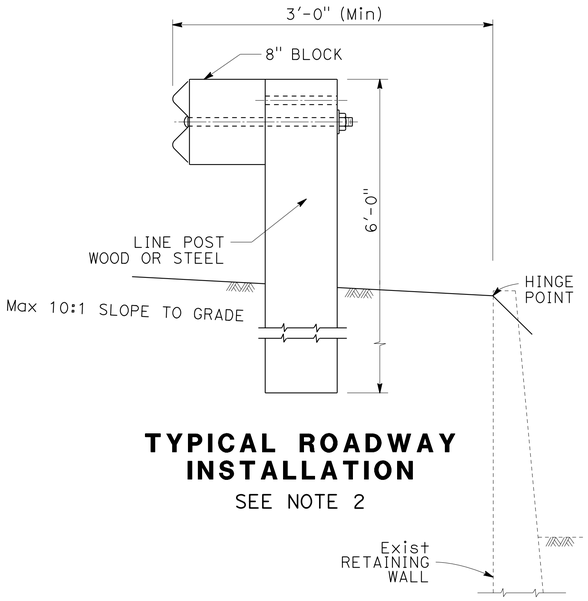


**TYPICAL ROADWAY INSTALLATION**
SEE NOTE 2

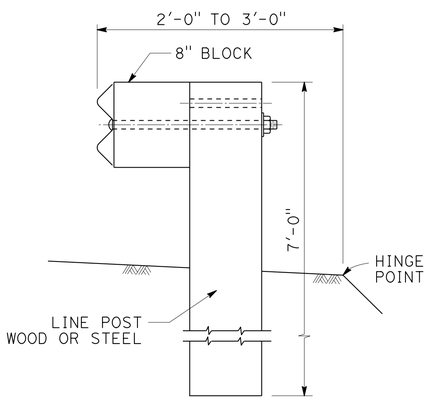


**NARROW ROADWAY INSTALLATION**
SEE NOTE 2

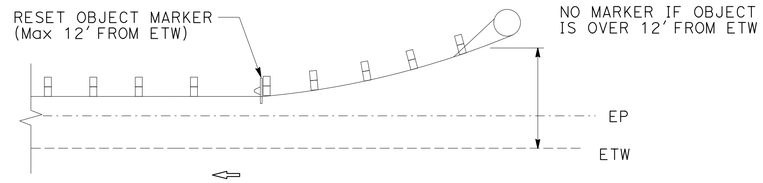


**TYPICAL GUARDRAIL OBJECT MARKERS**

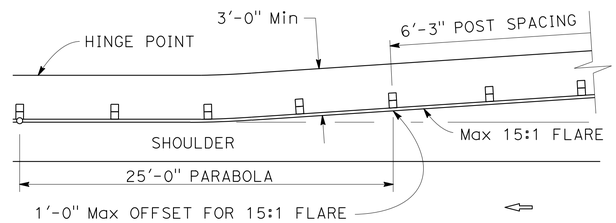


**GUARDRAIL WITH FLARED ALIGNMENT**

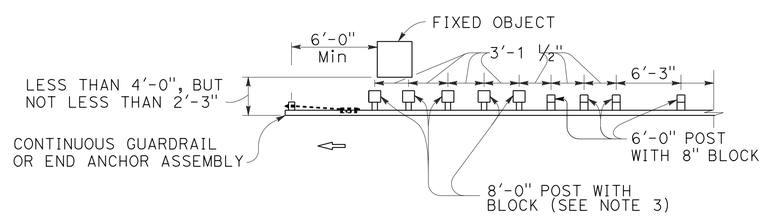


NOTE A:

FOR A SERIES OF FIXED OBJECTS (BRIDGE COLUMNS, OVERHEAD SIGN SUPPORTS, ETC.) ADDITIONAL 8'-0" POST WITH BLOCKS AT 3'-1 1/2" CENTER TO CENTER SPACING ARE TO BE USED BETWEEN FIXED OBJECTS.

**STRENGTHENED RAILING SECTIONS FOR FIXED OBJECT**

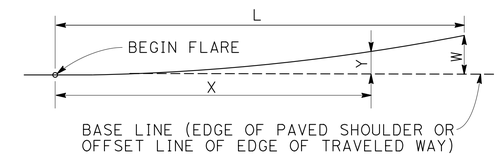


$$Y = \frac{WX^2}{L^2}$$

Y = OFFSET FROM BASE LINE
W = MAXIMUM OFFSET
X = DISTANCE ALONG BASE LINE
L = LENGTH OF FLARE

**PARABOLIC FLARE OFFSETS**

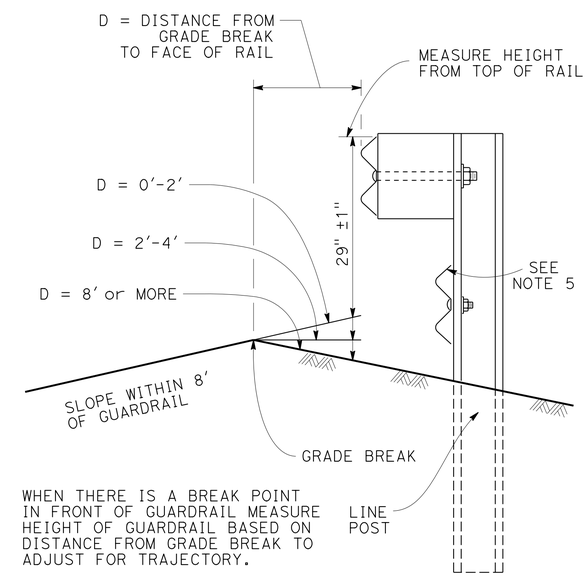


WHEN THERE IS A BREAK POINT IN FRONT OF GUARDRAIL MEASURE HEIGHT OF GUARDRAIL BASED ON DISTANCE FROM GRADE BREAK TO ADJUST FOR TRAJECTORY.

**MEASURE HEIGHT DETAIL AT GRADE BREAK**

**POST EMBEDMENT**

**CONSTRUCTION DETAILS**

NO SCALE

C-5

STATE OF CALIFORNIA - DEPARTMENT OF TRANSPORTATION
Caltrans MAINTENANCE

FUNCTIONAL SUPERVISOR: LANCE BROWN
CALCULATED-DESIGNED BY: MICHAEL CONNER
CHECKED BY: KARLIE SMITH
REVISED BY / DATE REVISED

P:\proj3\02\0h000_plans\pse\20h000ga005.dgn

LAST REVISION 01-08-15 | DATE PLOTTED => 09-JAN-2015 | TIME PLOTTED => 14:27

| Dist | COUNTY | ROUTE | POST MILES TOTAL PROJECT | SHEET No. | TOTAL SHEETS |
|---|---|---|---|---|---|
| 02 | Sha | 5,273 | R16.2/R19.0 19.7/20.0 | 9 | 48 |

REGISTERED CIVIL ENGINEER 01-08-15 DATE

01-08-15
PLANS APPROVAL DATE

REGISTERED PROFESSIONAL ENGINEER MICHAEL A. CONNER No. C73123 Exp. 12-31-16 CIVIL STATE OF CALIFORNIA

*THE STATE OF CALIFORNIA OR ITS OFFICERS OR AGENTS SHALL NOT BE RESPONSIBLE FOR THE ACCURACY OR COMPLETENESS OF SCANNED COPIES OF THIS PLAN SHEET.*

## NOTES:

1. LEAVE-OUT AREA MAY BE RETANGULAR OR ROUND SO LONG AS THE CLEARANCES SHOWN ARE MAINTAINED.
2. FOR WOOD POST SIZES, SEE REVISED STANDARD PLAN RSP A77N1. RSP A77N1 APPLIES TO MBGR.
3. FOR STEEL POST SIZES, SEE REVISED STANDARD PLAN RSP A77N2. RSP A77N2 APPLIES TO MBGR.
4. REVISED STANDARD PLANS RSP A77L1 OR RSP A77L2 RAIL ELEMENT DETAILS APPLIES TO MBGR.
5. USE Max 120 PSI COMPRESSIVE STRENGTH FOR CONTROLLED LOW STRENGTH MATERIAL.
6. EXISTING UTILITY FACILITIES HAVE NOT BEEN INCLUDED ON THESE PLANS.
7. LAP ALL RAILS AT EXISTING RAIL LAPS.
8. A 2-POST OPTION IS AVAILABLE, BUT NOT SHOWN.
9. LAPPED ELEMENTS MUST BE SUPPORTED BY A Min OF 2 POSTS ON EACH SIDE OF THE OMITTED POST(S).

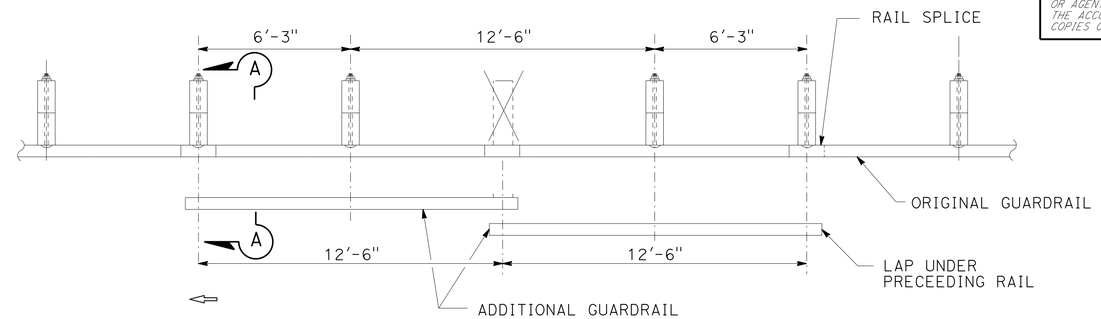


**CASE 1** (ONE POST OMITTED AT JUNCTION OF TWO ELEMENTS)

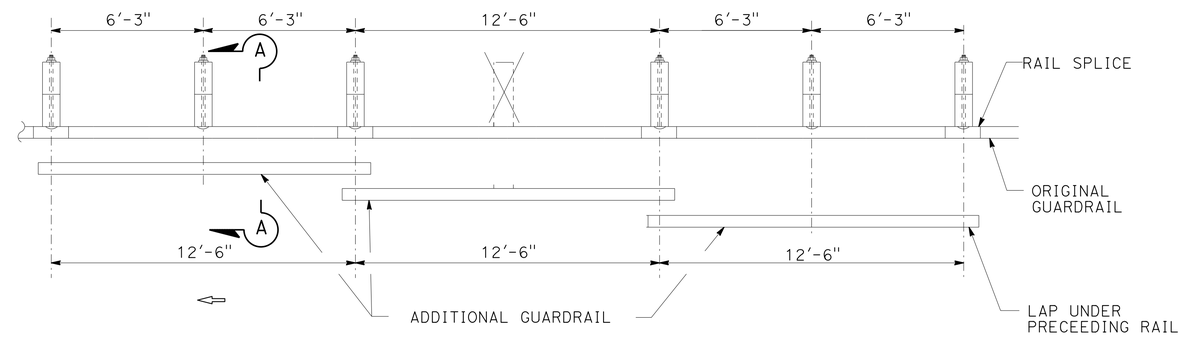


**CASE 2** (ONE POST OMITTED AT CENTER OF ELEMENT)

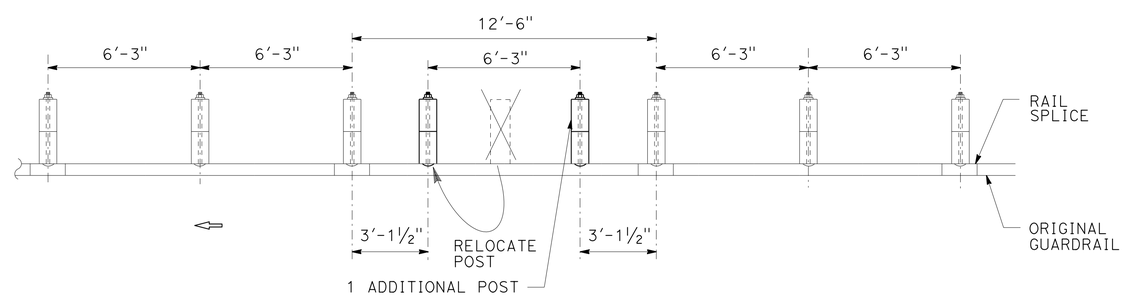


**CASE 3** (ONE POST OMITTED, MOVE THE POST AND ADD ONE POST) (NO NESTED RAIL REQUIRED)

**LONG SPAN NESTED GUARDRAIL**

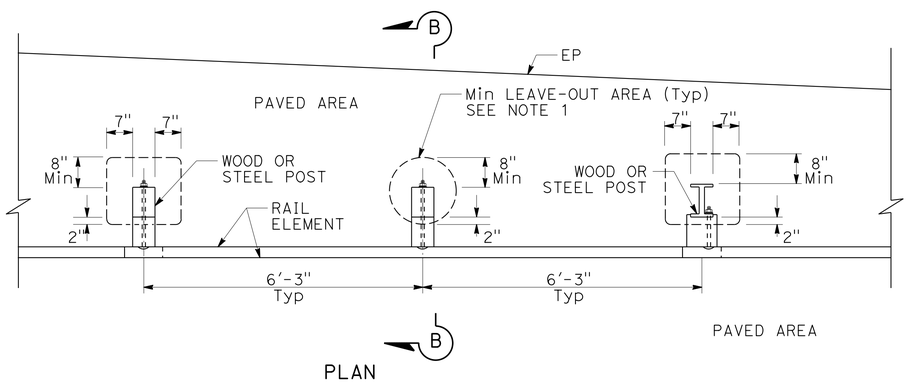


PLAN

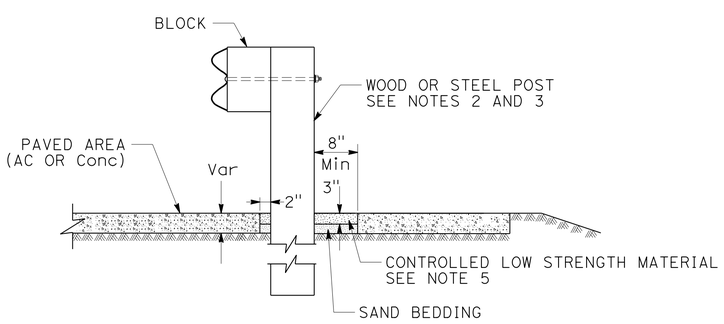


SECTION B-B

**TYPICAL LEAVE OUT AREA THROUGH EXISTING PAVEMENT**

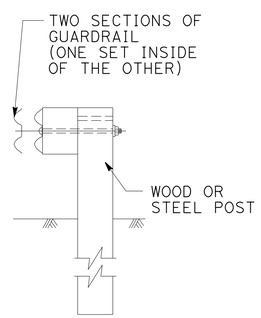


SECTION A-A

**TYPIC AL RAILING OVERLAP INSTALLATION AT POST**

# CONSTRUCTION DETAILS

NO SCALE

C-6

STATE OF CALIFORNIA - DEPARTMENT OF TRANSPORTATION
Caltrans® MAINTENANCE

FUNCTIONAL SUPERVISOR: LANCE BROWN
CALCULATED-DESIGNED BY: MICHAEL CONNER
CHECKED BY: KARLIE SMITH
REVISED BY
DATE REVISED

P:\proj3\02\0h000_plans\pse\20h000ga006.dgn

LAST REVISION 01-08-15
DATE PLOTTED => 09-JAN-2015
TIME PLOTTED => 14:27

| Dist | COUNTY | ROUTE | POST MILES TOTAL PROJECT | SHEET No. | TOTAL SHEETS |
|---|---|---|---|---|---|
| 02 | Sha | 5,273 | R16.2/R19.0 19.7/20.0 | 10 | 48 |

REGISTERED CIVIL ENGINEER 01-08-15 DATE

01-08-15
PLANS APPROVAL DATE

REGISTERED PROFESSIONAL ENGINEER MICHAEL A. CONNER No. C73123 Exp. 12-31-16 CIVIL STATE OF CALIFORNIA

*THE STATE OF CALIFORNIA OR ITS OFFICERS OR AGENTS SHALL NOT BE RESPONSIBLE FOR THE ACCURACY OR COMPLETENESS OF SCANNED COPIES OF THIS PLAN SHEET.*

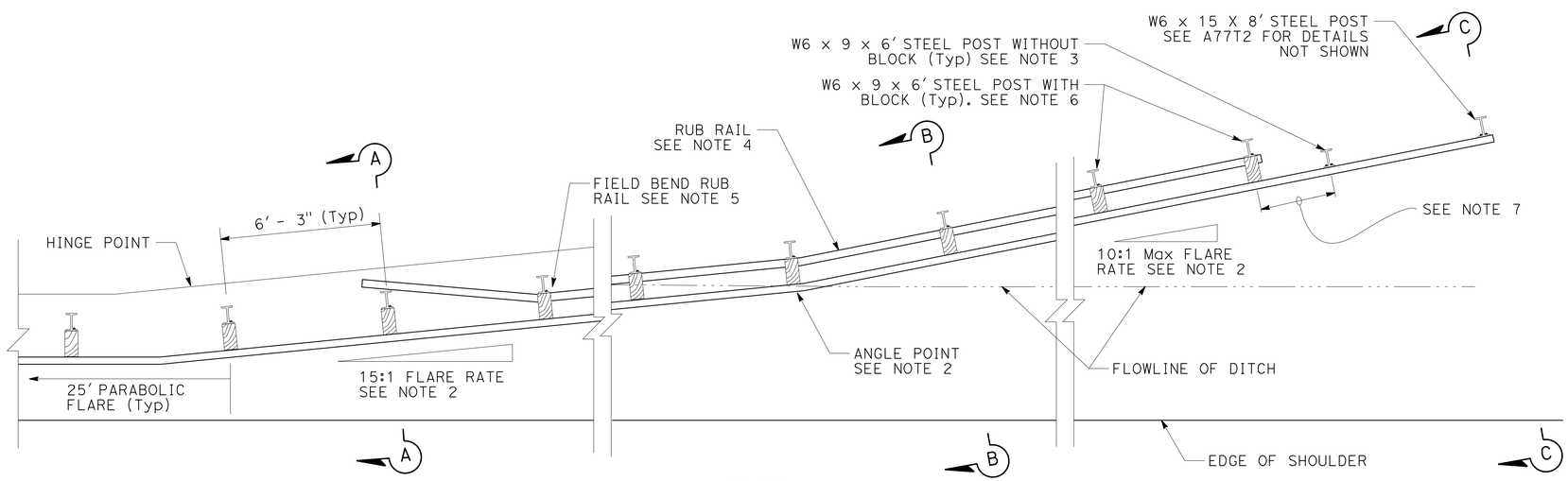


PLAN

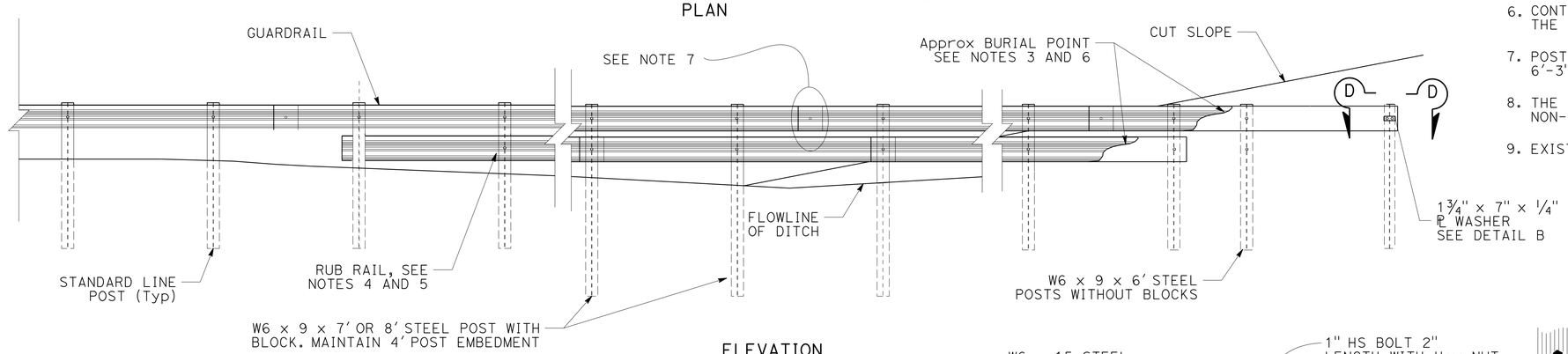


ELEVATION
(PROFILE ALONG RAIL)

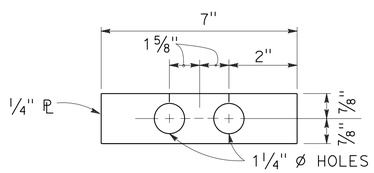


DETAIL B

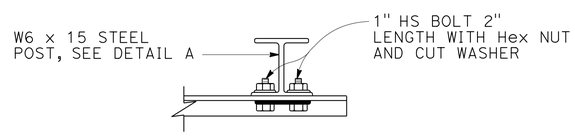


SECTION D-D

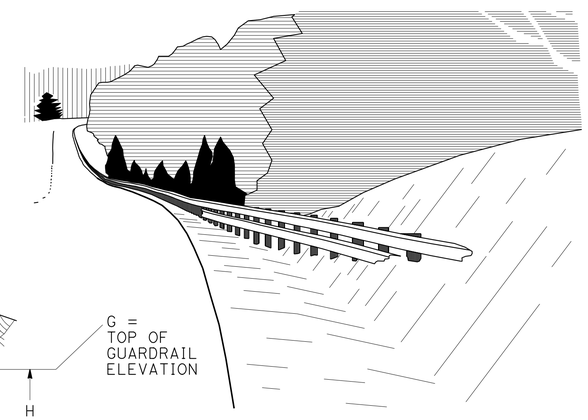

PERSPECTIVE

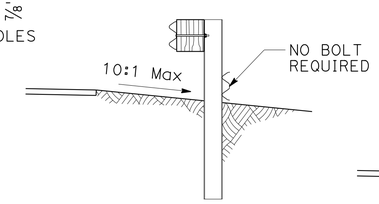


SECTION A-A

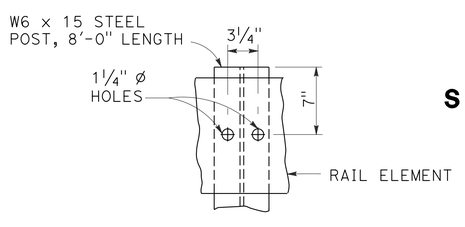


DETAIL A

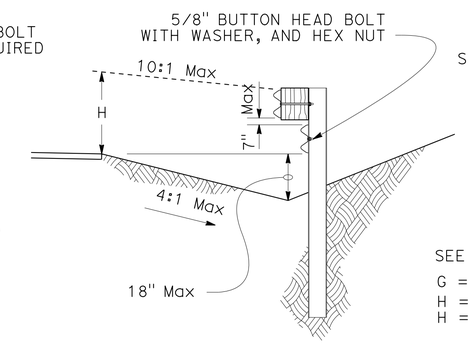


SECTION B-B

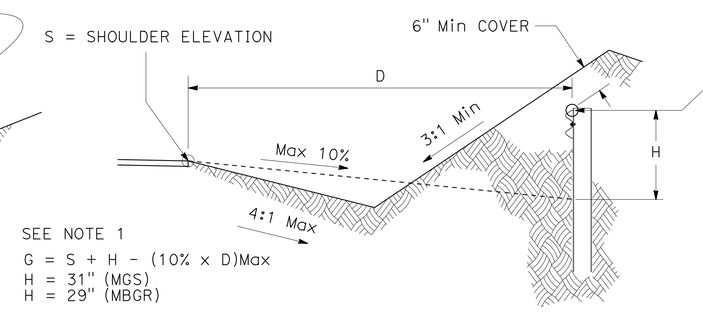


SECTION C-C

## NOTES:

1. ELEVATION OF THE GUARDRAIL SHOULD FOLLOW THE PROFILE GRADE OF THE SHOULDER AND BE NO LOWER THAN 10% OF THE OFFSET FROM THE SHOULDER TO THE RAIL. SEE SECTION B-B AND SECTION C-C.
2. MAXIMUM FLARE RATE OF GUARDRAIL FROM THE SHOULDER TO THE FLOWLINE IS 15:1. FLARE RATE CAN BE INCREASED UP TO 10:1 AFTER CROSSING THE DITCH FLOWLINE.
3. NO BLOCKS ON POSTS WHERE BLOCKS ARE IN CONTACT WITH SOIL.
4. USE STANDARD GUARDRAIL ELEMENTS WITH NO BLOCKS FOR RUB RAIL.
5. BEGIN RUB RAIL WHEN THE HEIGHT OF THE GUARDRAIL IS MORE THAN 32" ABOVE THE GROUND DIRECTLY BELOW THE RAIL.
6. CONTINUE RUB RAIL UNTIL TOP OF RUB RAIL BURIED IN THE BACKSLOPE.
7. POST SPACING AND ELEMENT SPLICES SHOWN FOR MGS. MAINTAIN 6'-3" SPACING AND SPLICE ELEMENTS AT POSTS FOR MBGR.
8. THE BURIED POST END ANCHOR SHOULD BE INSTALLED IN A NON-TRAVERSABLE SLOPE.
9. EXISTING UTILITY FACILITIES ARE NOT SHOWN ON THESE PLANS.

# GUARDRAIL MODIFIED BURIED POST END ANCHOR

# CONSTRUCTION DETAILS

NO SCALE

C-7

REVISED BY | DATE REVISED
MICHAEL CONNER | KARLIE SMITH
CALCULATED-DESIGNED BY | CHECKED BY
FUNCTIONAL SUPERVISOR: LANCE BROWN

STATE OF CALIFORNIA - DEPARTMENT OF TRANSPORTATION
Caltrans MAINTENANCE

P:\proj3\02\0h000_plans\pse\20h000ga007.dgn

LAST REVISION 01-08-15 | DATE PLOTTED => 09-JAN-2015 | TIME PLOTTED => 14:27

| Dist | COUNTY | ROUTE | POST MILES TOTAL PROJECT | SHEET No. | TOTAL SHEETS |
|---|---|---|---|---|---|
| 02 | Sha | 5,273 | R16.2/R19.0 19.7/20.0 | 11 | 48 |

REGISTERED CIVIL ENGINEER 01-08-15 DATE

01-08-15
PLANS APPROVAL DATE

REGISTERED PROFESSIONAL ENGINEER MICHAEL A. CONNER No. C73123 Exp. 12-31-16 CIVIL STATE OF CALIFORNIA

*THE STATE OF CALIFORNIA OR ITS OFFICERS OR AGENTS SHALL NOT BE RESPONSIBLE FOR THE ACCURACY OR COMPLETENESS OF SCANNED COPIES OF THIS PLAN SHEET.*

NOTES:

1. EXACT LOCATION OF ALL SIGNS TO BE DETERMINED BY THE ENGINEER.
2. ALL SIGNS SHALL BE BLACK ON ORANGE EXCEPT C40 (CA), WHICH IS BLACK ON WHITE.
3. CALIFORNIA CODES ARE DESIGNATED BY (CA), OTHERWISE FEDERAL CODES ARE SHOWN.
4. EXISTING UTILITY FACILITIES HAVE NOT BEEN INCLUDED ON THESE PLANS.

LEGEND:

BARRIER MOUNTED SIGN

## ENTRANCE/EXIT RAMPS

| Rte | PM | LOCATION |
|---|---|---|
| 5 | R17.05 | 5/299 Jct SB ENTRANCE |
| | R17.11 | 5/299 Jct NB EXIT |
| | R17.53 | 5/299 Jct SB EXIT |
| | R17.57 | 5/299 Jct NB ENTRANCE |
| | R17.92 | TWIN VIEW Blvd SB ENTRANCE |
| | R17.93 | TWIN VIEW Blvd NB EXIT |
| | R18.22 | TWIN VIEW Blvd SB EXIT |
| | R18.22 | TWIN VIEW Blvd NB ENTRANCE |
| | R18.73 | 5/273 Jct SB EXIT |
| | R18.78 | 5/273 Jct NB ENTRANCE |
| 273 | 19.77 | CATERPILLAR Rd |

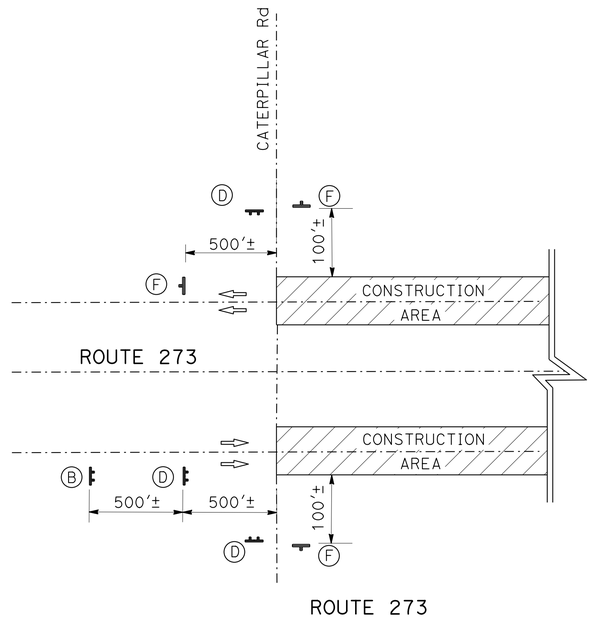


## CONSTRUCTION AREA SIGNS (STATIONARY MOUNTED)

| ○ | TYPE | PANEL SIZE INCHES | SIGN MESSAGE | No. OF POSTS AND SIZE | No. OF SIGNS |
|---|---|---|---|---|---|
| A | C40(CA) | 108" x 42" | TRAFFIC FINES DOUBLED IN CONSTRUCTION ZONES | 2- 4" x 6" | 2 |
| B | C40(CA) | 72" x 36" | TRAFFIC FINES DOUBLED IN CONSTRUCTION ZONES | 2- 4" x 6" | 1 |
| C | W20-1<br>C23B(CA) | 48" x 48"<br>54" x 24" | ROAD WORK AHEAD<br>"PAVEMENT MAINTENANCE" | 2- 4" x 6" OR BARRIER MOUNT | 9 |
| D | W20-1<br>C23B(CA) | 48" x 48"<br>36" x 18" | ROAD WORK AHEAD<br>"PAVEMENT MAINTENANCE" | 2- 4" x 6" | 3 |
| E | C14(CA) | 48" x 24" | END ROAD WORK | 1- 4" x 4" OR BARRIER MOUNT | 9 |
| F | C14(CA) | 36" x 18" | END ROAD WORK | 1- 4" x 4" | 3 |

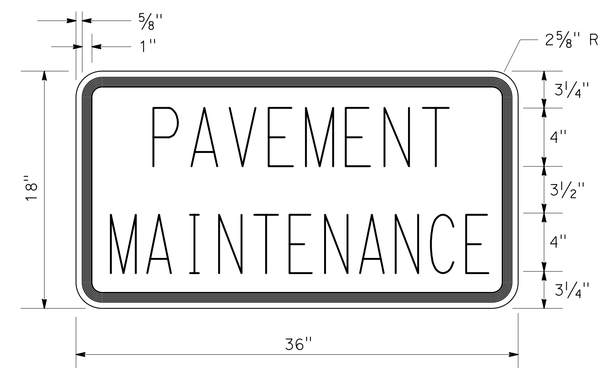


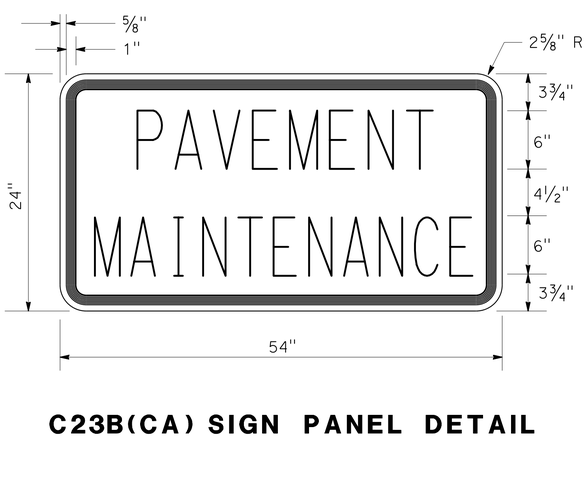


**C23B(CA) SIGN PANEL DETAIL**

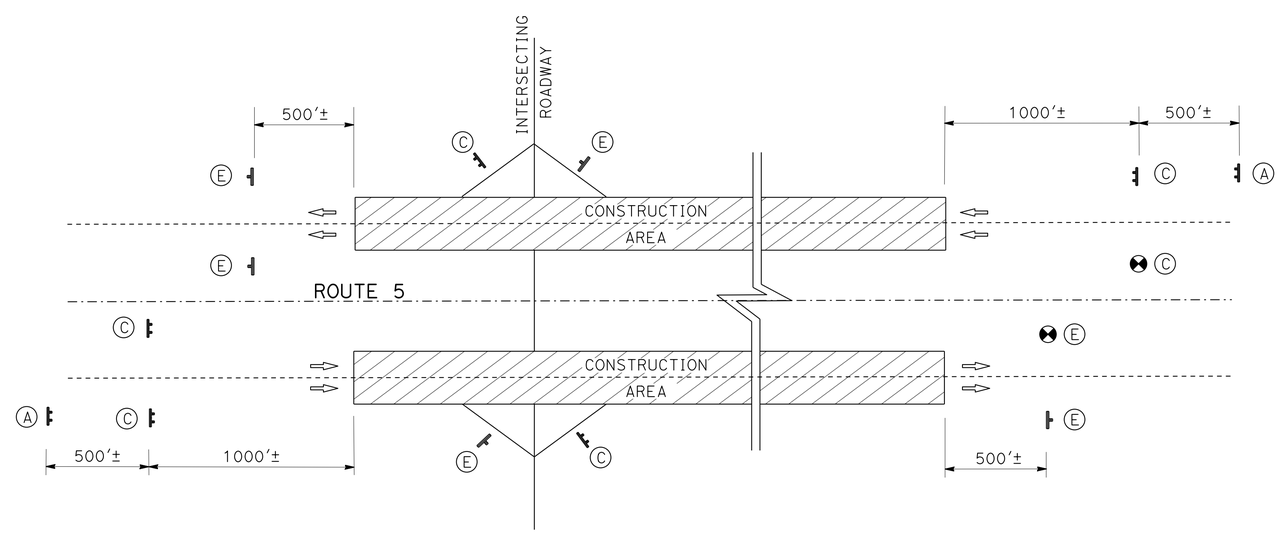


**CONSTRUCTION AREA SIGNS**

**CONSTRUCTION AREA SIGNS**

NO SCALE

**CS-1**

MICHAEL CONNER — REVISED BY
KARLIE SMITH — DATE REVISED
CALCULATED-DESIGNED BY
CHECKED BY
FUNCTIONAL SUPERVISOR
LANCE BROWN

STATE OF CALIFORNIA - DEPARTMENT OF TRANSPORTATION
Caltrans® MAINTENANCE

P:\proj3\02\0h000_plans\pse\20h0001a001.dgn

LAST REVISION 01-08-15
DATE PLOTTED => 09-JAN-2015
TIME PLOTTED => 14:27

| Dist | COUNTY | ROUTE | POST MILES TOTAL PROJECT | SHEET No. | TOTAL SHEETS |
|---|---|---|---|---|---|
| 02 | Sha | 5,273 | R16.2/R19.0 19.7/20.0 | 12 | 48 |

REGISTERED CIVIL ENGINEER 01-08-15 DATE

01-08-15
PLANS APPROVAL DATE

REGISTERED PROFESSIONAL ENGINEER MICHAEL A. CONNER No. C73123 Exp. 12-31-16 CIVIL STATE OF CALIFORNIA

*THE STATE OF CALIFORNIA OR ITS OFFICERS OR AGENTS SHALL NOT BE RESPONSIBLE FOR THE ACCURACY OR COMPLETENESS OF SCANNED COPIES OF THIS PLAN SHEET.*

## NOTES:

1. EXACT SIGN & PCMS LOCATIONS TO BE DETERMINED BY ENGINEER.
2. SEE STANDARD PLANS FOR TRAFFIC CONTROL SYSTEM FOR LANE CLOSURE.
3. COVER EXISTING SPEED LIMIT SIGNS WITHIN THE REDUCED SPEED ZONE.
4. EXISTING UTILITY FACILITIES HAVE NOT BEEN INCLUDED ON THESE PLANS.

## LEGEND:

PORTABLE CHANGEABLE MESSAGE SIGN (PCMS)

TRAFFIC CONE

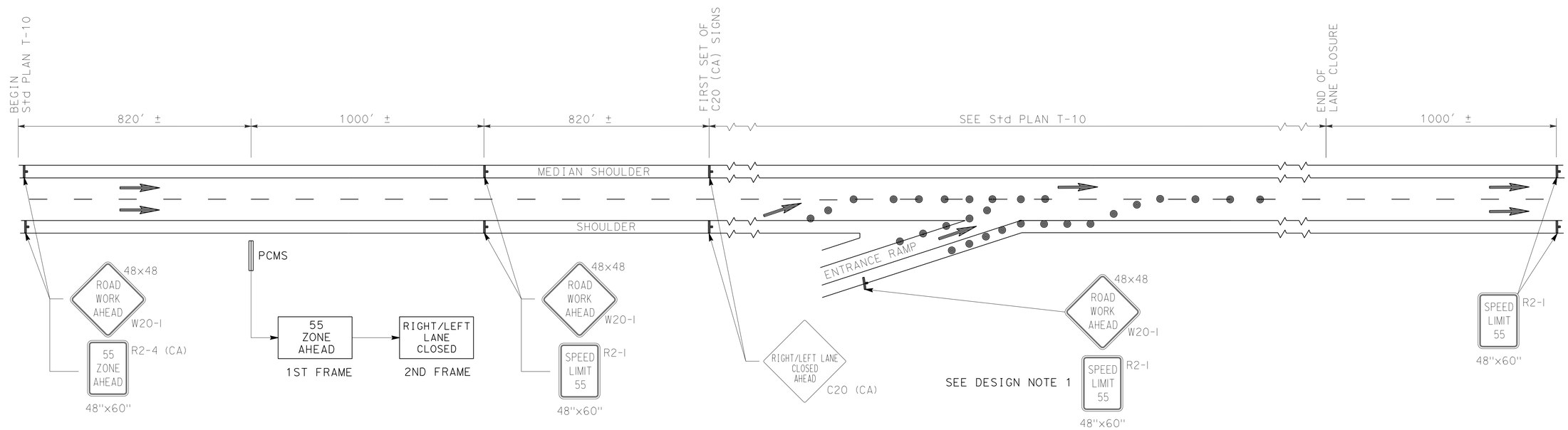


# TYPICAL SIGN LAYOUT FOR TEMPORARY REDUCED SPEED ZONE

## CONSTRUCTION AREA SIGNS

NO SCALE

**CS-2**

| REVISED BY | DATE REVISED |
|---|---|
| MICHAEL CONNER | KARLIE SMITH |

CALCULATED-DESIGNED BY / CHECKED BY

FUNCTIONAL SUPERVISOR: LANCE BROWN

STATE OF CALIFORNIA - DEPARTMENT OF TRANSPORTATION
Caltrans MAINTENANCE

P:\proj13\02\0h000_plans\pse\20h0001a002.dgn

LAST REVISION 01-08-15 | DATE PLOTTED => 09-JAN-2015 | TIME PLOTTED => 14:27

| Dist | COUNTY | ROUTE | POST MILES TOTAL PROJECT | SHEET No. | TOTAL SHEETS |
|---|---|---|---|---|---|
| 02 | Sha | 5,273 | R16.2/R19.0 19.7/20.0 | 13 | 48 |

REGISTERED CIVIL ENGINEER 01-08-15 DATE

01-08-15
PLANS APPROVAL DATE

REGISTERED PROFESSIONAL ENGINEER MICHAEL A. CONNER No. C73123 Exp. 12-31-16 CIVIL STATE OF CALIFORNIA

*THE STATE OF CALIFORNIA OR ITS OFFICERS OR AGENTS SHALL NOT BE RESPONSIBLE FOR THE ACCURACY OR COMPLETENESS OF SCANNED COPIES OF THIS PLAN SHEET.*

## NOTES:

① PRE-NOTIFICATION PCMS: PLACE NEAR RAMP AND ACTIVATE APPROXIMATELY 12 HOURS PRIOR TO RAMP CLOSURE.

| EXIT WILL BE CLOSED | TODAY (or TONIGHT) XX:XXPM - XX:XXAM |
|---|---|
| FRAME 1 | FRAME 2 |

② RAMP CLOSED PCMS: MOVE PRE-NOTIFICATION PCMS APPROXIMATELY 1000 FEET BEFORE RAMP AND ACTIVATE DURING RAMP CLOSURE.

| EXIT XXX CLOSED | FOLLOW DETOUR |
|---|---|
| FRAME 1 | FRAME 2 |

③ PLACE 7 DAYS PRIOR TO RAMP CLOSURE.

4. IF AVAILABLE, EXISTING ROUTE SHIELDS AND DIRECTIONS MAY BE USED IN PLACE OF SIGNS SHOWN.

⑤ RAMP CLOSED PCMS: PLACE BEFORE OPEN ENTRANCE RAMP AND ACTIVATE DURING RAMP CLOSURE.

| NB (OR SB) I-5 ONRAMP CLOSED | FOLLOW DETOUR |
|---|---|
| FRAME 1 | FRAME 2 |

6. EXIT NUMBER SHOWN AS FOLLOWS.

| EXIT NAME | EXIT NUMBER | |
|---|---|---|
| | SB | NB |
| Jct 299/LAKE Blvd | 680 | 680 |
| TWIN VIEW Blvd | 681A | 681 |
| Jct 273/MARKET St | 681B | |

7. EXACT LOCATION OF ALL SIGNS TO BE DETERMINED BY THE ENGINEER.

8. EXISTING UTILITY FACILITIES HAVE NOT BEEN INCLUDED ON THESE PLANS.

## CONSTRUCTION AREA SIGNS (PORTABLE)

| CODE | PANEL SIZE | PANEL MESSAGE |
|---|---|---|
| G27-2 (5) (CA) | 24" x 24" | I-5 |
| M3-1 | 24" x 12" | NORTH |
| M3-3 | 24" x 12" | SOUTH |
| M4-8A | 24" x 18" | END DETOUR |
| M4-10L | 48" x 18" | DETOUR (Lt ARROW) |
| M4-10R | 48" x 18" | DETOUR (Rt ARROW) |
| SC3 (CA) | 48" x 18" | DETOUR (UP ARROW) |
| SC6-3 (CA) | 48" x 48" | RAMP CLOSED |
| SP1 | 24" x 30" | EXIT XXX |

## LEGEND:

PORTABLE CHANGABLE MESSAGE SIGN

CONSTRUCTION AREA SIGN (PORTABLE)

DIRECTION OF TRAFFIC

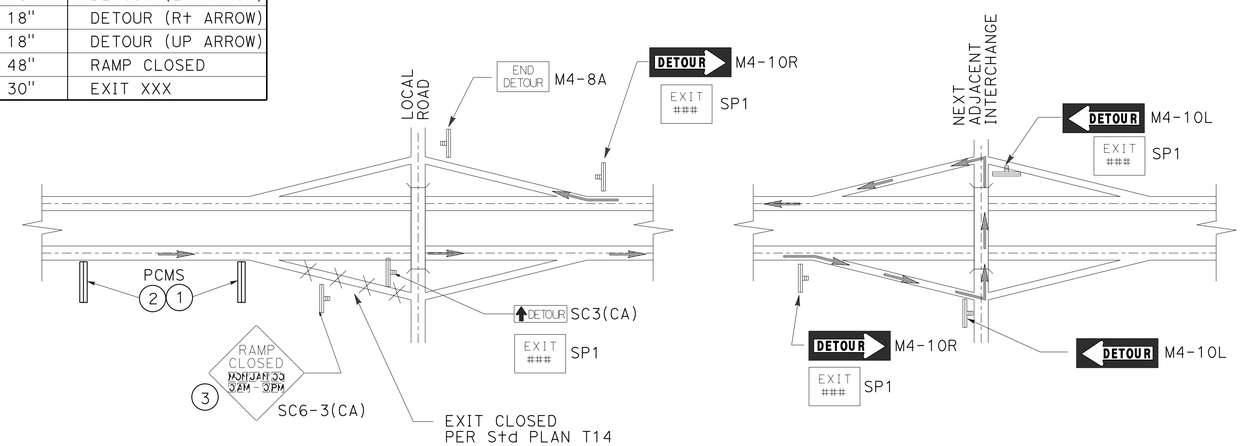


## TYPICAL EXIT-RAMP DETOUR SIGNING

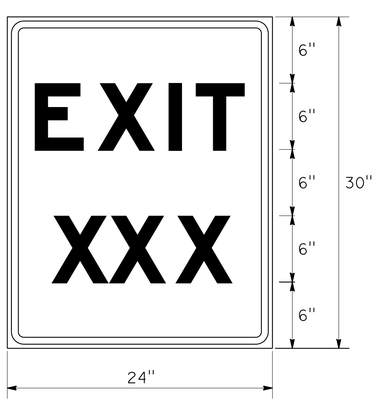


1.5" Radius, 0.6" Border, 0.4" Indent, Black on Orange; [EXIT] E Mod; [XXX] E Mod;

## EXIT NUMBER SIGN (SP1) DETAIL
(SEE NOTE 6)

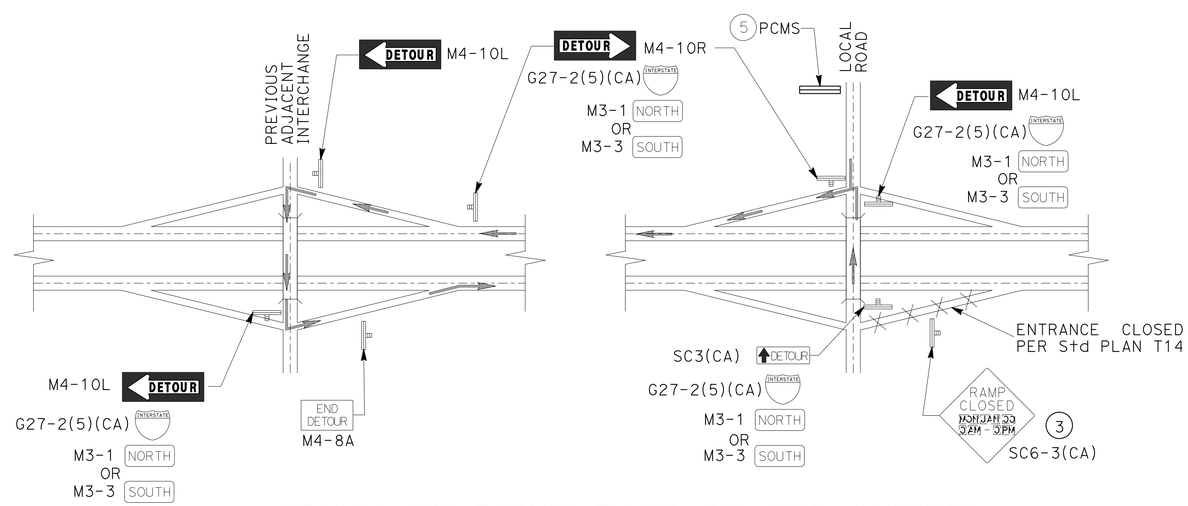


## TYPICAL ENTRANCE-RAMP DETOUR SIGNING

## DETOUR PLAN

NO SCALE

**DE-1**

| REVISED BY | DATE REVISED |
|---|---|
| MICHAEL CONNER | KARLIE SMITH |
| CALCULATED-DESIGNED BY | CHECKED BY |
| FUNCTIONAL SUPERVISOR | LANCE BROWN |

STATE OF CALIFORNIA - DEPARTMENT OF TRANSPORTATION
Caltrans® MAINTENANCE

P:\proj3\02\0h000_plans\pse\20h000mg001.dgn

LAST REVISION 01-08-15
DATE PLOTTED => 09-JAN-2015
TIME PLOTTED => 14:27

| Dist | COUNTY | ROUTE | POST MILES TOTAL PROJECT | SHEET No. | TOTAL SHEETS |
|---|---|---|---|---|---|
| 02 | Sha | 5,273 | R16.2/R19.0 19.7/20.0 | 14 | 48 |

REGISTERED CIVIL ENGINEER 01-08-15 DATE

01-08-15
PLANS APPROVAL DATE

REGISTERED PROFESSIONAL ENGINEER MICHAEL A. CONNER No. C73123 Exp. 12-31-16 CIVIL STATE OF CALIFORNIA

*THE STATE OF CALIFORNIA OR ITS OFFICERS OR AGENTS SHALL NOT BE RESPONSIBLE FOR THE ACCURACY OR COMPLETENESS OF SCANNED COPIES OF THIS PLAN SHEET.*

NOTE:

1. EXISTING UTILITY FACILITIES HAVE NOT BEEN INCLUDED ON THESE PLANS.

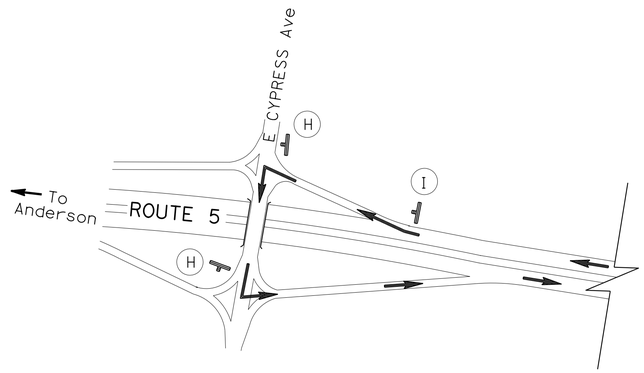


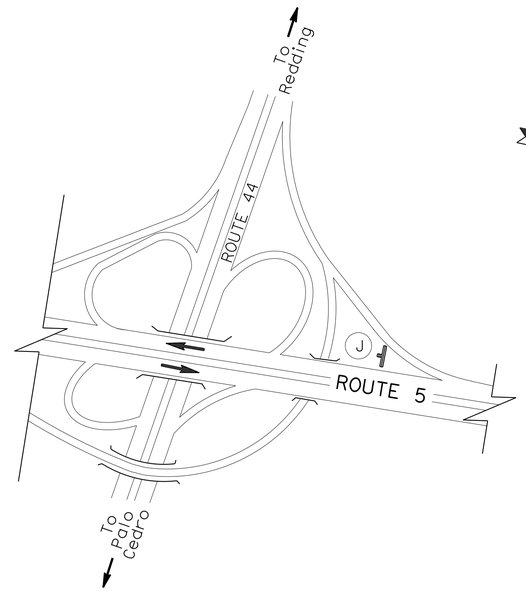


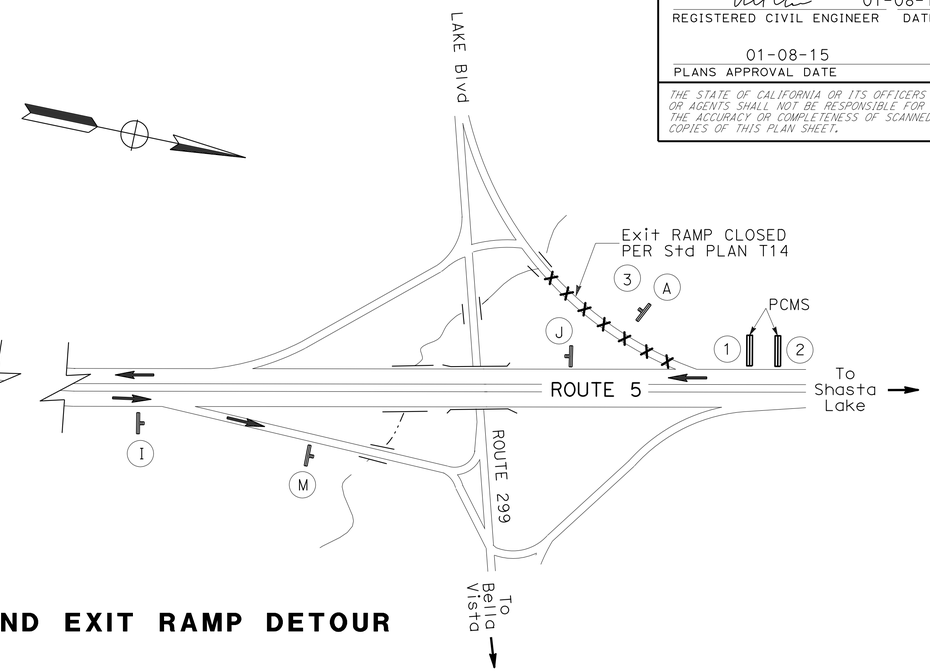


## SR 299/LAKE Blvd SOUTHBOUND EXIT RAMP DETOUR

## CONSTRUCTION AREA SIGNS (PORTABLE SIGNS)

| SIGN No. ◯ | CODE | PANEL SIZE (INCH) | REMARKS | No. (EA) |
|---|---|---|---|---|
| Ⓐ * | SC6-3 (CA) | 48" x 48" | "RAMP CLOSED" "DATE-TIME" | 2 |
| Ⓑ | M4-10L G27-2 (5) (CA) M3-1 | 48" x 18" 24" x 24" 24" x 12" | DETOUR (Lt ARROW) ROUTE SHIELD (5) NORTH | |
| Ⓒ | M4-10R G27-2 (5) (CA) M3-1 | 48" x 18" 24" x 24" 24" x 12" | DETOUR (Rt ARROW) ROUTE SHIELD (5) NORTH | |
| Ⓓ | SC3 (CA) G27-2 (5) (CA) M3-1 | 48" x 18" 24" x 24" 24" x 12" | DETOUR (UP ARROW) ROUTE SHIELD (5) NORTH | |
| Ⓔ | M4-10L G27-2 (5) (CA) M3-3 | 48" x 18" 24" x 24" 24" x 12" | DETOUR (Lt ARROW) ROUTE SHIELD (5) SOUTH | 3 |
| Ⓕ | M4-10R G27-2 (5) (CA) M3-3 | 48" x 18" 24" x 24" 24" x 12" | DETOUR (Rt ARROW) ROUTE SHIELD (5) SOUTH | 2 |
| Ⓖ | SC3 (CA) G27-2 (5) (CA) M3-3 | 48" x 18" 24" x 24" 24" x 12" | DETOUR (UP ARROW) ROUTE SHIELD (5) SOUTH | 1 |
| Ⓗ | M4-10L SP1 | 48" x 18" 24" x 30" | DETOUR (Lt ARROW) EXIT XXX | 2 |
| Ⓘ | M4-10R SP1 | 48" x 18" 24" x 30" | DETOUR (Rt ARROW) EXIT XXX | 2 |
| Ⓙ | SC3 (CA) SP1 | 48" x 18" 24" x 30" | DETOUR (UP ARROW) EXIT XXX | 2 |
| Ⓚ | M4-10R G28-2 (273) (CA) M3-3 | 48" x 18" 24" x 24" 24" x 12" | DETOUR (Rt ARROW) ROUTE SHIELD (273) NORTH | |
| Ⓛ | SC3 (CA) G28-2 (273) (CA) M3-3 | 48" x 18" 24" x 24" 24" x 12" | DETOUR (UP ARROW) ROUTE SHIELD (273) NORTH | |
| Ⓜ | M4-8A | 24" x 18" | END DETOUR | 2 |
| | | | TOTAL | 16 |

* PLACE 7 DAYS PRIOR TO RAMP CLOSURE

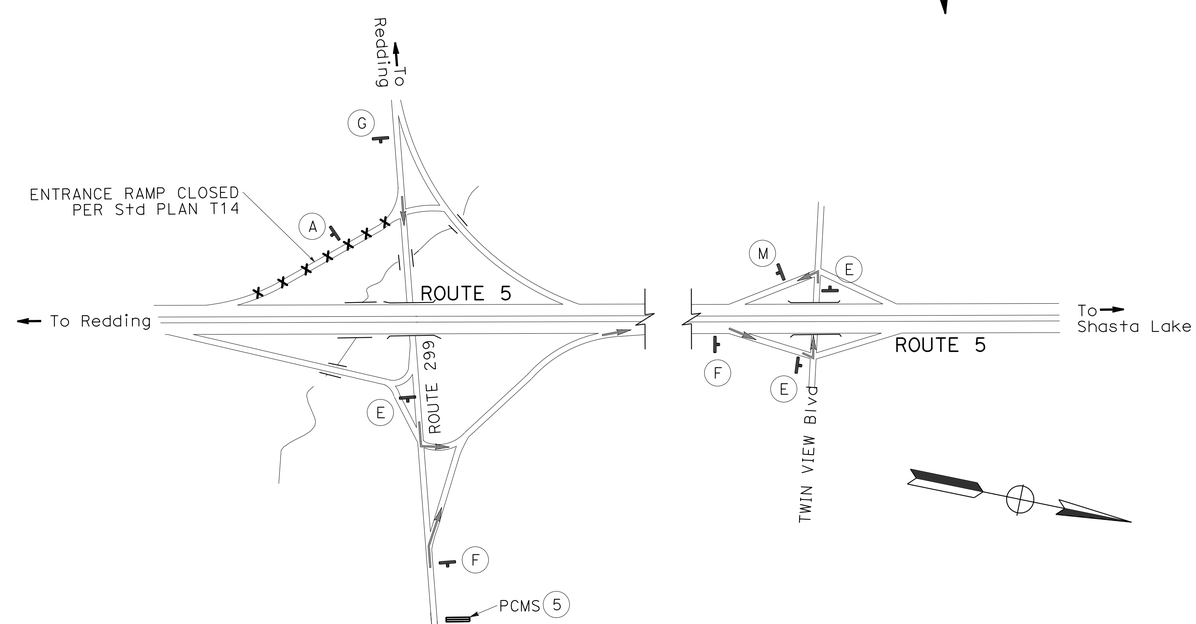


## ROUTE 299/LAKE Blvd SOUTHBOUND ENTRANCE RAMP DETOUR

# DETOUR PLAN

NO SCALE

**DE-2**

| REVISED BY | DATE REVISED |
|---|---|
| | |

| CALCULATED-DESIGNED BY | CHECKED BY |
|---|---|
| MICHAEL CONNER | KARLIE SMITH |

FUNCTIONAL SUPERVISOR: LANCE BROWN

STATE OF CALIFORNIA - DEPARTMENT OF TRANSPORTATION
Caltrans® MAINTENANCE

P:\proj3\02\0H000_plans\pse\20h000mg002.dgn

LAST REVISION 01-08-15 | DATE PLOTTED => 09-JAN-2015 | TIME PLOTTED => 14:27

| Dist | COUNTY | ROUTE | POST MILES TOTAL PROJECT | SHEET No. | TOTAL SHEETS |
|---|---|---|---|---|---|
| 02 | Sha | 5,273 | R16.2/R19.0 19.7/20.0 | 15 | 48 |

REGISTERED CIVIL ENGINEER 01-08-15 DATE

01-08-15
PLANS APPROVAL DATE

REGISTERED PROFESSIONAL ENGINEER MICHAEL A. CONNER No. C73123 Exp. 12-31-16 CIVIL STATE OF CALIFORNIA

*THE STATE OF CALIFORNIA OR ITS OFFICERS OR AGENTS SHALL NOT BE RESPONSIBLE FOR THE ACCURACY OR COMPLETENESS OF SCANNED COPIES OF THIS PLAN SHEET.*

## NOTES:

1. FOR LABELS (5) AND (7) SEE SHEET DE-1.
2. EXACT PLACEMENT TO BE DETERMINED BY THE ENGINEER. PCMS TO READ AS BELOW OR AS DIRECTED BY THE ENGINEER:

| FRAME 1 | FRAME 2 |
|---|---|
| I5 NB ON RAMP CLOSED AHEAD | USE RTE 273 ON RAMP |

3. EXISTING UTILITY FACILITIES HAVE NOT BEEN INCLUDED ON THESE PLANS.

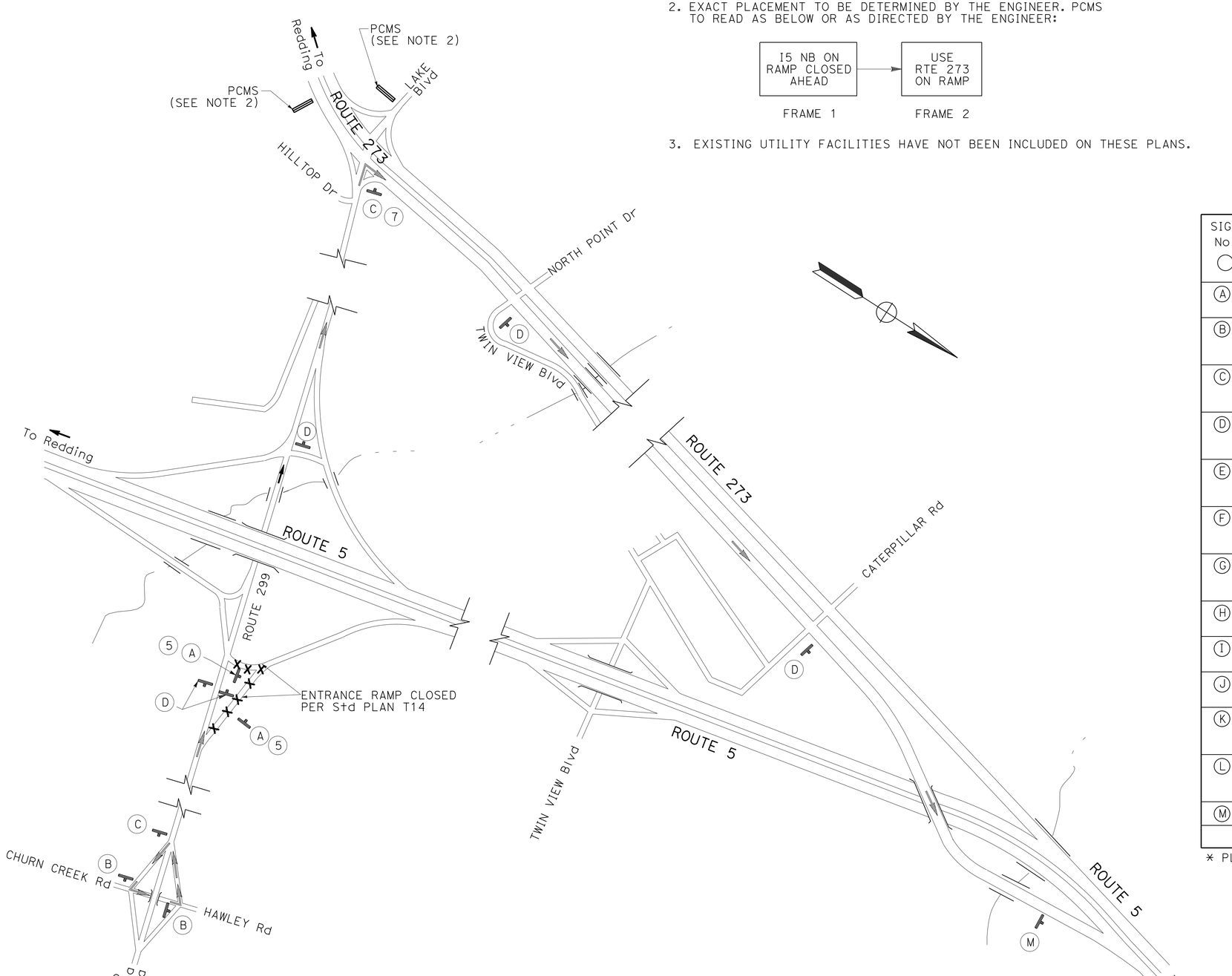


## CONSTRUCTION AREA SIGNS (PORTABLE SIGNS)

| SIGN No. ◯ | CODE | PANEL SIZE (INCH) | REMARKS | No. (EA) |
|---|---|---|---|---|
| (A) * | SC6-3 (CA) | 48" x 48" | "RAMP CLOSED" "DATE-TIME" | 2 |
| (B) | M4-10L G27-2 (5) (CA) M3-1 | 48" x 18" 24" x 24" 24" x 12" | DETOUR (L↑ ARROW) ROUTE SHIELD (5) NORTH | 2 |
| (C) | M4-10R G27-2 (5) (CA) M3-1 | 48" x 18" 24" x 24" 24" x 12" | DETOUR (R↑ ARROW) ROUTE SHIELD (5) NORTH | 2 |
| (D) | SC3 (CA) G27-2 (5) (CA) M3-1 | 48" x 18" 24" x 24" 24" x 12" | DETOUR (UP ARROW) ROUTE SHIELD (5) NORTH | 5 |
| (E) | M4-10L G27-2 (5) (CA) M3-3 | 48" x 18" 24" x 24" 24" x 12" | DETOUR (L↑ ARROW) ROUTE SHIELD (5) SOUTH | |
| (F) | M4-10R G27-2 (5) (CA) M3-3 | 48" x 18" 24" x 24" 24" x 12" | DETOUR (R↑ ARROW) ROUTE SHIELD (5) SOUTH | |
| (G) | SC3 (CA) G27-2 (5) (CA) M3-3 | 48" x 18" 24" x 24" 24" x 12" | DETOUR (UP ARROW) ROUTE SHIELD (5) SOUTH | |
| (H) | M4-10L SP1 | 48" x 18" 24" x 30" | DETOUR (L↑ ARROW) EXIT XXX | |
| (I) | M4-10R SP1 | 48" x 18" 24" x 30" | DETOUR (R↑ ARROW) EXIT XXX | |
| (J) | SC3 (CA) SP1 | 48" x 18" 24" x 30" | DETOUR (UP ARROW) EXIT XXX | |
| (K) | M4-10R G28-2 (273) (CA) M3-3 | 48" x 18" 24" x 24" 24" x 12" | DETOUR (R↑ ARROW) ROUTE SHIELD (273) NORTH | |
| (L) | SC3 (CA) G28-2 (273) (CA) M3-3 | 48" x 18" 24" x 24" 24" x 12" | DETOUR (UP ARROW) ROUTE SHIELD (273) NORTH | |
| (M) | M4-8A | 24" x 18" | END DETOUR | 1 |
| | | | TOTAL | 12 |

* PLACE 7 DAYS PRIOR TO RAMP CLOSURE

# ROUTE 299/LAKE Blvd NORTHBOUND ENTRANCE RAMP DETOUR

## DETOUR PLAN

NO SCALE

**DE-3**

| REVISED BY | DATE REVISED |
|---|---|
| MICHAEL CONNER | KARLIE SMITH |
| CALCULATED-DESIGNED BY | CHECKED BY |
| FUNCTIONAL SUPERVISOR | LANCE BROWN |

STATE OF CALIFORNIA - DEPARTMENT OF TRANSPORTATION
Caltrans® MAINTENANCE

P:\proj3\02\0h000_plans\pse\20h000mg003.dgn

LAST REVISION 01-08-15 | DATE PLOTTED => 09-JAN-2015 | TIME PLOTTED => 14:27

| Dist | COUNTY | ROUTE | POST MILES TOTAL PROJECT | SHEET No. | TOTAL SHEETS |
|---|---|---|---|---|---|
| 02 | Sha | 5,273 | R16.2/R19.0 19.7/20.0 | 16 | 48 |

REGISTERED CIVIL ENGINEER 01-08-15 DATE

01-08-15
PLANS APPROVAL DATE

REGISTERED PROFESSIONAL ENGINEER MICHAEL A. CONNER No. C73123 Exp. 12-31-16 CIVIL STATE OF CALIFORNIA

*THE STATE OF CALIFORNIA OR ITS OFFICERS OR AGENTS SHALL NOT BE RESPONSIBLE FOR THE ACCURACY OR COMPLETENESS OF SCANNED COPIES OF THIS PLAN SHEET.*

NOTE:

1. EXISTING UTILITY FACILITIES HAVE NOT BEEN INCLUDED ON THESE PLANS.

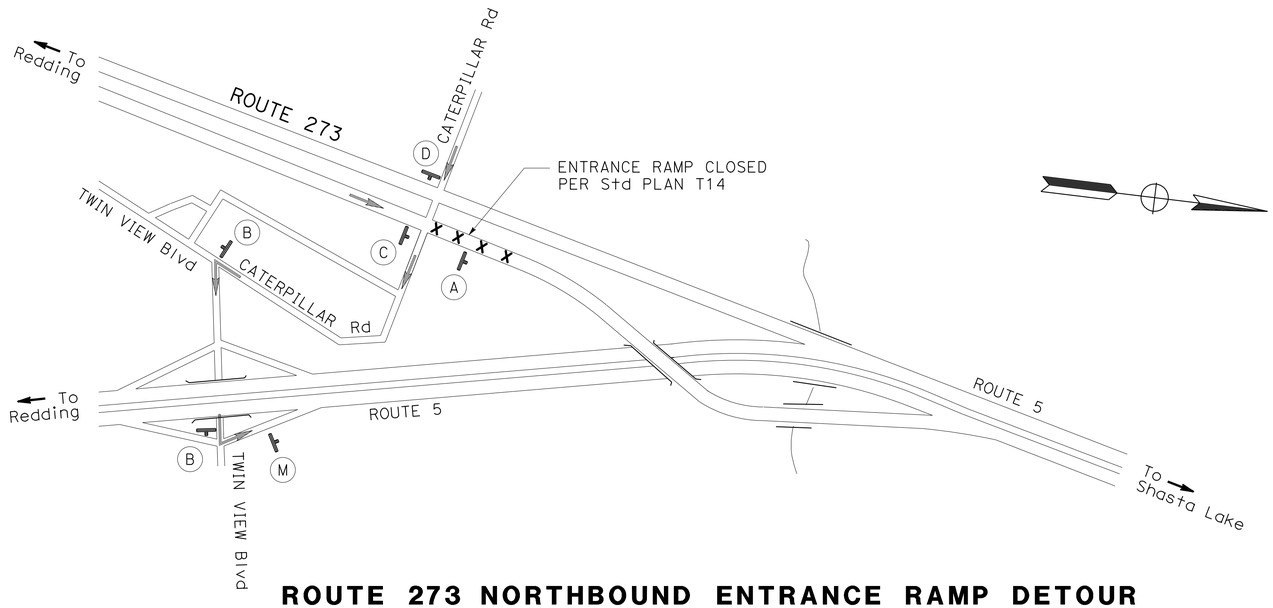


## ROUTE 273 NORTHBOUND ENTRANCE RAMP DETOUR

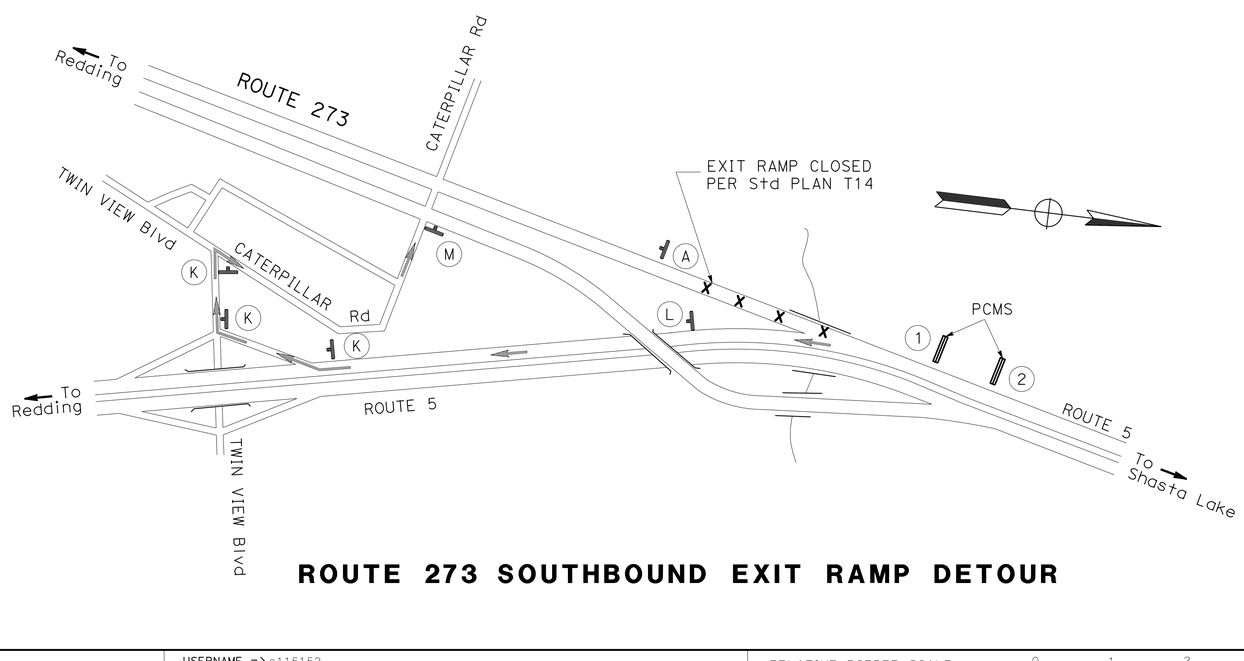


## ROUTE 273 SOUTHBOUND EXIT RAMP DETOUR

## CONSTRUCTION AREA SIGNS (PORTABLE SIGNS)

| SIGN No. ◯ | CODE | PANEL SIZE (INCH) | REMARKS | No. (EA) |
|---|---|---|---|---|
| Ⓐ * | SC6-3 (CA) | 48" x 48" | "RAMP CLOSED" "DATE-TIME" | 2 |
| Ⓑ | M4-10L G27-2 (5) (CA) M3-1 | 48" x 18" 24" x 24" 24" x 12" | DETOUR (L+ ARROW) ROUTE SHIELD (5) NORTH | 2 |
| Ⓒ | M4-10R G27-2 (5) (CA) M3-1 | 48" x 18" 24" x 24" 24" x 12" | DETOUR (R+ ARROW) ROUTE SHIELD (5) NORTH | 1 |
| Ⓓ | SC3 (CA) G27-2 (5) (CA) M3-1 | 48" x 18" 24" x 24" 24" x 12" | DETOUR (UP ARROW) ROUTE SHIELD (5) NORTH | 1 |
| Ⓔ | M4-10L G27-2 (5) (CA) M3-3 | 48" x 18" 24" x 24" 24" x 12" | DETOUR (L+ ARROW) ROUTE SHIELD (5) SOUTH | |
| Ⓕ | M4-10R G27-2 (5) (CA) M3-3 | 48" x 18" 24" x 24" 24" x 12" | DETOUR (R+ ARROW) ROUTE SHIELD (5) SOUTH | |
| Ⓖ | SC3 (CA) G27-2 (5) (CA) M3-3 | 48" x 18" 24" x 24" 24" x 12" | DETOUR (UP ARROW) ROUTE SHIELD (5) SOUTH | |
| Ⓗ | M4-10L SP1 | 48" x 18" 24" x 30" | DETOUR (L+ ARROW) EXIT XXX | |
| Ⓘ | M4-10R SP1 | 48" x 18" 24" x 30" | DETOUR (R+ ARROW) EXIT XXX | |
| Ⓙ | SC3 (CA) SP1 | 48" x 18" 24" x 30" | DETOUR (UP ARROW) EXIT XXX | |
| Ⓚ | M4-10R G28-2 (273) (CA) M3-3 | 48" x 18" 24" x 24" 24" x 12" | DETOUR (R+ ARROW) ROUTE SHIELD (273) NORTH | 3 |
| Ⓛ | SC3 (CA) G28-2 (273) (CA) M3-3 | 48" x 18" 24" x 24" 24" x 12" | DETOUR (UP ARROW) ROUTE SHIELD (273) NORTH | 1 |
| Ⓜ | M4-8A | 24" x 18" | END DETOUR | 2 |
| | | | TOTAL | 12 |

* PLACE 7 DAYS PRIOR TO RAMP CLOSURE

# DETOUR PLAN

NO SCALE

**DE-4**

STATE OF CALIFORNIA - DEPARTMENT OF TRANSPORTATION
Caltrans® MAINTENANCE

FUNCTIONAL SUPERVISOR: LANCE BROWN
CALCULATED-DESIGNED BY: MICHAEL CONNER
CHECKED BY: KARLIE SMITH
REVISED BY / DATE REVISED

P:\proj3\02\0h000_plans\pse\20h000mg004.dgn

LAST REVISION 01-08-15 | DATE PLOTTED => 09-JAN-2015 | TIME PLOTTED => 14:27

| Dist | COUNTY | ROUTE | POST MILES TOTAL PROJECT | SHEET No. | TOTAL SHEETS |
|---|---|---|---|---|---|
| 02 | Sha | 5,273 | R16.2/R19.0 19.7/20.0 | 17 | 48 |

REGISTERED CIVIL ENGINEER 01-08-15 DATE

01-08-15
PLANS APPROVAL DATE

REGISTERED PROFESSIONAL ENGINEER MICHAEL A. CONNER No. C73123 Exp. 12-31-16 CIVIL STATE OF CALIFORNIA

*THE STATE OF CALIFORNIA OR ITS OFFICERS OR AGENTS SHALL NOT BE RESPONSIBLE FOR THE ACCURACY OR COMPLETENESS OF SCANNED COPIES OF THIS PLAN SHEET.*

NOTE:

1. EXISTING UTILITY FACILITIES HAVE NOT BEEN INCLUDED ON THESE PLANS.

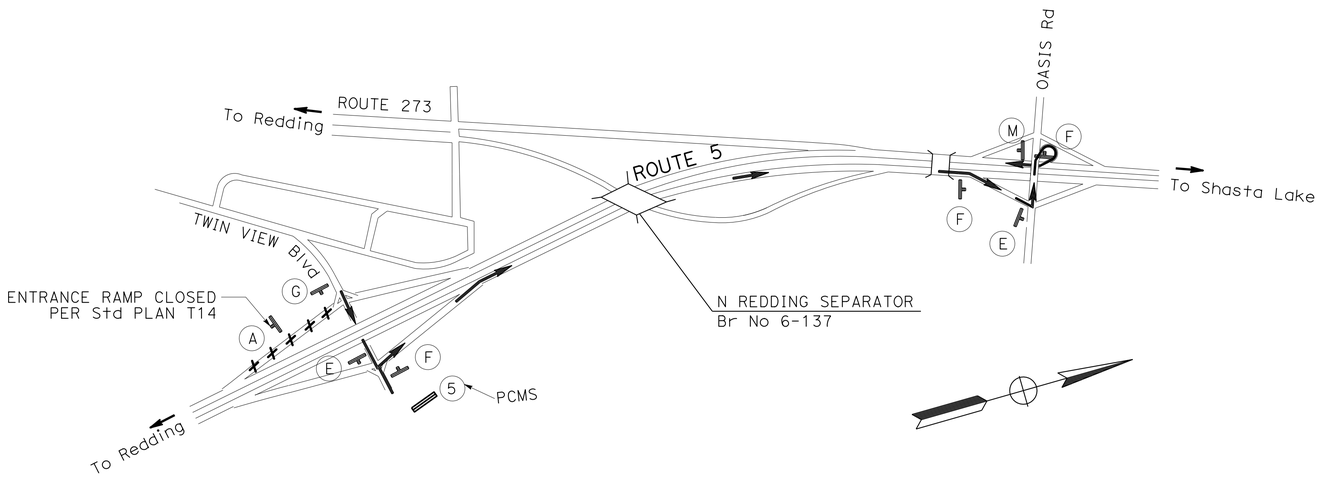


## TWIN VIEW Blvd SOUTHBOUND ENTRANCE RAMP DETOUR

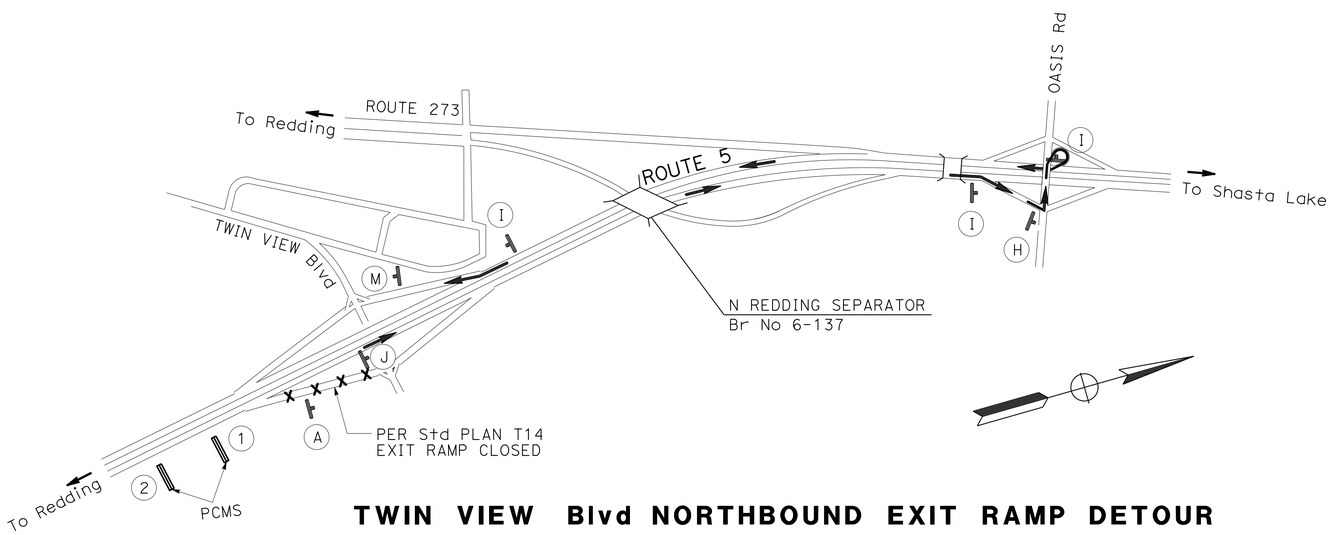


## TWIN VIEW Blvd NORTHBOUND EXIT RAMP DETOUR

## CONSTRUCTION AREA SIGNS (PORTABLE SIGNS)

| SIGN No. ◯ | CODE | PANEL SIZE (INCH) | REMARKS | No. (EA) |
|---|---|---|---|---|
| Ⓐ * | SC6-3 (CA) | 48" x 48" | "RAMP CLOSED" "DATE-TIME" | 2 |
| Ⓑ | M4-10L G27-2 (5) (CA) M3-1 | 48" x 18" 24" x 24" 24" x 12" | DETOUR (L† ARROW) ROUTE SHIELD (5) NORTH | |
| Ⓒ | M4-10R G27-2 (5) (CA) M3-1 | 48" x 18" 24" x 24" 24" x 12" | DETOUR (R† ARROW) ROUTE SHIELD (5) NORTH | |
| Ⓓ | SC3 (CA) G27-2 (5) (CA) M3-1 | 48" x 18" 24" x 24" 24" x 12" | DETOUR (UP ARROW) ROUTE SHIELD (5) NORTH | |
| Ⓔ | M4-10L G27-2 (5) (CA) M3-3 | 48" x 18" 24" x 24" 24" x 12" | DETOUR (L† ARROW) ROUTE SHIELD (5) SOUTH | 2 |
| Ⓕ | M4-10R G27-2 (5) (CA) M3-3 | 48" x 18" 24" x 24" 24" x 12" | DETOUR (R† ARROW) ROUTE SHIELD (5) SOUTH | 3 |
| Ⓖ | SC3 (CA) G27-2 (5) (CA) M3-3 | 48" x 18" 24" x 24" 24" x 12" | DETOUR (UP ARROW) ROUTE SHIELD (5) SOUTH | 1 |
| Ⓗ | M4-10L SP1 | 48" x 18" 24" x 30" | DETOUR (L† ARROW) EXIT XXX | 1 |
| Ⓘ | M4-10R SP1 | 48" x 18" 24" x 30" | DETOUR (R† ARROW) EXIT XXX | 3 |
| Ⓙ | SC3 (CA) SP1 | 48" x 18" 24" x 30" | DETOUR (UP ARROW) EXIT XXX | 1 |
| Ⓚ | M4-10R G28-2 (273) (CA) M3-3 | 48" x 18" 24" x 24" 24" x 12" | DETOUR (R† ARROW) ROUTE SHIELD (273) NORTH | |
| Ⓛ | SC3 (CA) G28-2 (273) (CA) M3-3 | 48" x 18" 24" x 24" 24" x 12" | DETOUR (UP ARROW) ROUTE SHIELD (273) NORTH | |
| Ⓜ | M4-8A | 24" x 18" | END DETOUR | 2 |
| | | | TOTAL | 15 |

* PLACE 7 DAYS PRIOR TO RAMP CLOSURE

# DETOUR PLAN

NO SCALE

**DE-5**

REVISED BY | DATE REVISED
MICHAEL CONNER | KARLIE SMITH
CALCULATED-DESIGNED BY | CHECKED BY
FUNCTIONAL SUPERVISOR | LANCE BROWN
STATE OF CALIFORNIA - DEPARTMENT OF TRANSPORTATION
Caltrans® MAINTENANCE

P:\proj3\02\0h000_plans\pse\20h000mg005.dgn

LAST REVISION 01-08-15 | DATE PLOTTED => 09-JAN-2015 | TIME PLOTTED => 14:27

| Dist | COUNTY | ROUTE | POST MILES TOTAL PROJECT | SHEET No. | TOTAL SHEETS |
|---|---|---|---|---|---|
| 02 | Sha | 5,273 | R16.2/R19.0 19.7/20.0 | 18 | 48 |

REGISTERED CIVIL ENGINEER 01-08-15 DATE

01-08-15
PLANS APPROVAL DATE

REGISTERED PROFESSIONAL ENGINEER MICHAEL A. CONNER No. C73123 Exp. 12-31-16 CIVIL STATE OF CALIFORNIA

*THE STATE OF CALIFORNIA OR ITS OFFICERS OR AGENTS SHALL NOT BE RESPONSIBLE FOR THE ACCURACY OR COMPLETENESS OF SCANNED COPIES OF THIS PLAN SHEET.*

NOTE:

1. EXISTING UTILITY FACILITIES HAVE NOT BEEN INCLUDED ON THESE PLANS.

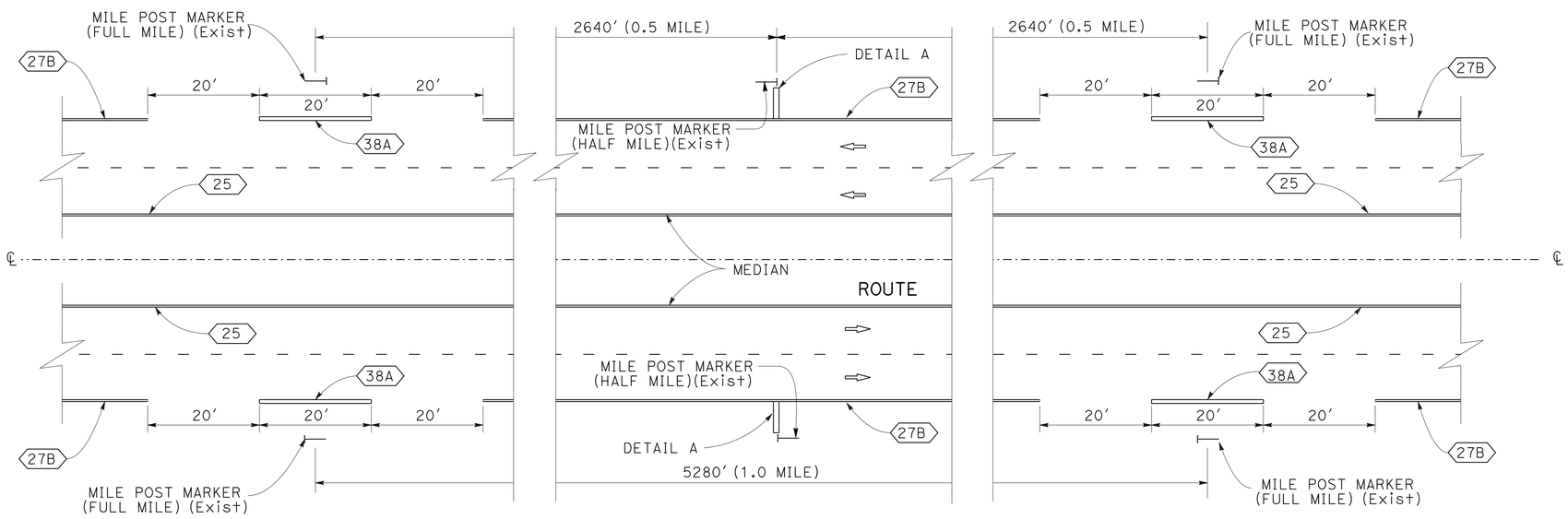


**TYPICAL HALF MILE AND MILE POST STRIPE (FREEWAYS)**

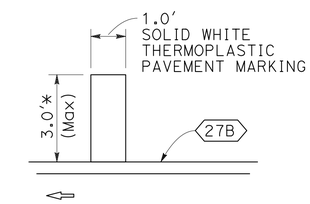


DETAIL A

* ACTUAL LENGTH MAY VARY DUE TO PAVEMENT WIDTH

# PAVEMENT DELINEATION DETAILS

NO SCALE

**PDD-1**

| REVISED BY | DATE REVISED |
|---|---|
| | |

CALCULATED-DESIGNED BY: MICHAEL CONNER
CHECKED BY: KARLIE SMITH
FUNCTIONAL SUPERVISOR: LANCE BROWN

STATE OF CALIFORNIA - DEPARTMENT OF TRANSPORTATION
Caltrans® MAINTENANCE

P:\proj3\02\0h000_plans\pse\20h000nb001.dgn

LAST REVISION 01-08-15 | DATE PLOTTED => 09-JAN-2015 | TIME PLOTTED => 14:27

| Dist | COUNTY | ROUTE | POST MILES TOTAL PROJECT | SHEET No. | TOTAL SHEETS |
|---|---|---|---|---|---|
| 02 | Sha | 5,273 | R16.2/R19.0 19.7/20.0 | 19 | 48 |

REGISTERED CIVIL ENGINEER 01-08-15 DATE

PLANS APPROVAL DATE 01-08-15

REGISTERED PROFESSIONAL ENGINEER MICHAEL A. CONNER No. C73123 Exp. 12-31-16 CIVIL STATE OF CALIFORNIA

*THE STATE OF CALIFORNIA OR ITS OFFICERS OR AGENTS SHALL NOT BE RESPONSIBLE FOR THE ACCURACY OR COMPLETENESS OF SCANNED COPIES OF THIS PLAN SHEET.*

NOTES:

1. NO RUMBLE STRIP TO BE INSTALLED ON CONCRETE BRIDGES OR APPROACH SLABS.
2. EXISTING UTILITY FACILITIES HAVE NOT BEEN INCLUDED ON THESE PLANS.

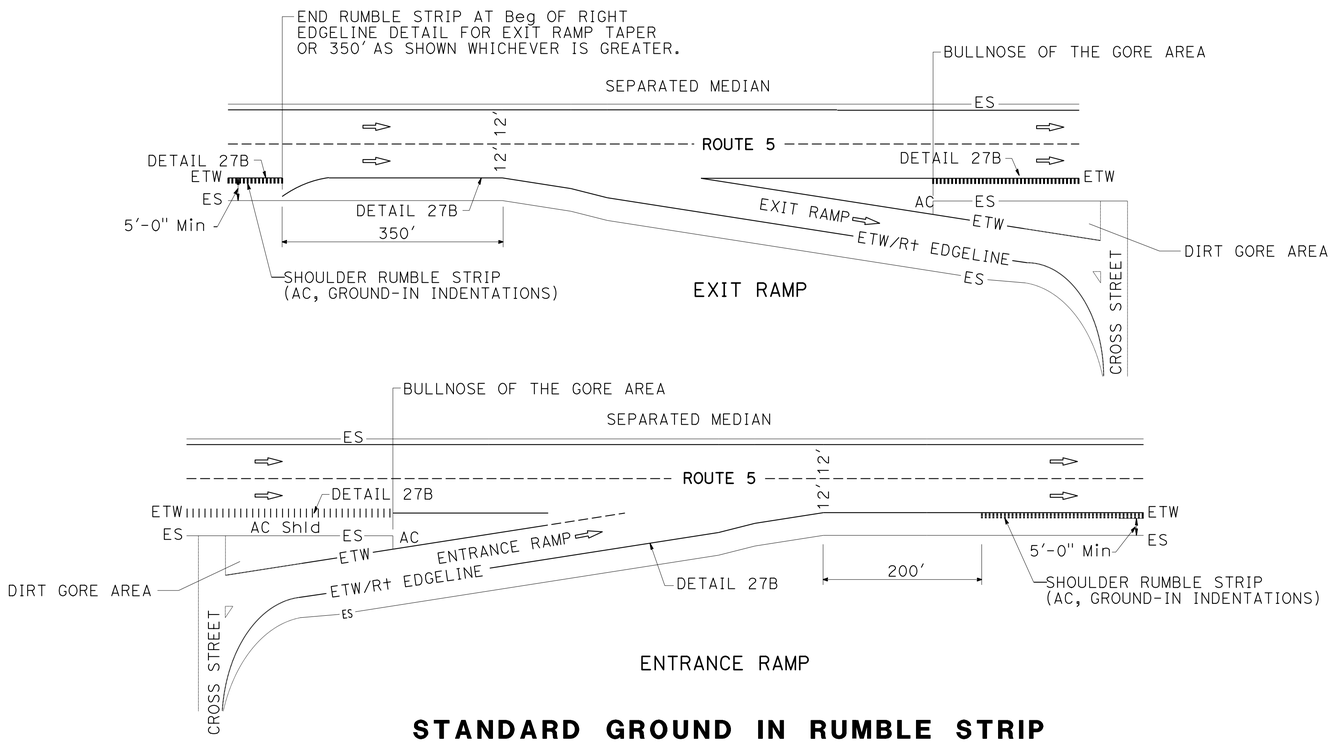


**STANDARD GROUND IN RUMBLE STRIP**

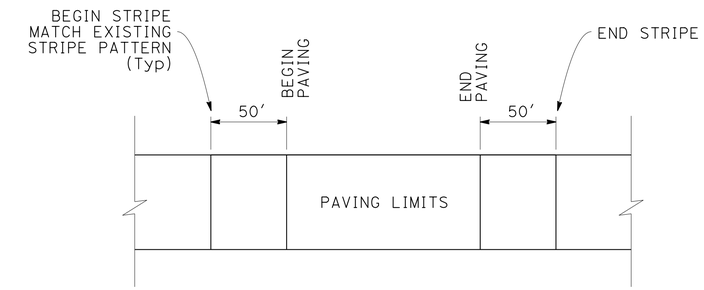


**TRAFFIC STRIPE MATCH DETAIL**

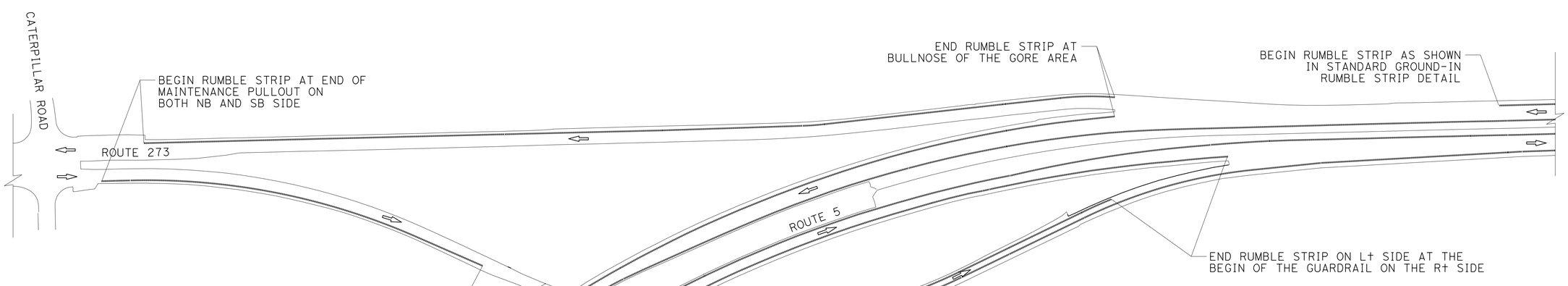


**GROUND IN RUMBLE STRIP AT 5/273 Jct**

**PAVEMENT DELINEATION DETAILS**

NO SCALE

**PDD-2**

STATE OF CALIFORNIA - DEPARTMENT OF TRANSPORTATION

Caltrans® **MAINTENANCE**

FUNCTIONAL SUPERVISOR: LANCE BROWN

CALCULATED-DESIGNED BY: MICHAEL CONNER

CHECKED BY: KARLIE SMITH

REVISED BY / DATE REVISED

P:\proj13\02\0h000_plans\pse\20h000nb002.dgn

LAST REVISION 01-08-15 | DATE PLOTTED => 09-JAN-2015 | TIME PLOTTED => 14:27

| Dist | COUNTY | ROUTE | POST MILES TOTAL PROJECT | SHEET No. | TOTAL SHEETS |
|---|---|---|---|---|---|
| 02 | Sha | 5,273 | R16.2/R19.0 19.7/20.0 | 20 | 48 |

REGISTERED CIVIL ENGINEER 01-08-15 DATE

01-08-15
PLANS APPROVAL DATE

REGISTERED PROFESSIONAL ENGINEER MICHAEL A. CONNER No. C73123 Exp. 12-31-16 CIVIL STATE OF CALIFORNIA

*THE STATE OF CALIFORNIA OR ITS OFFICERS OR AGENTS SHALL NOT BE RESPONSIBLE FOR THE ACCURACY OR COMPLETENESS OF SCANNED COPIES OF THIS PLAN SHEET.*

NOTE:

1. EXISTING UTILITY FACILITIES HAVE NOT BEEN INCLUDED ON THESE PLANS.

ABBREVIATIONS:

Dir DIRECTION

## THERMOPLASTIC PAVEMENT MARKING

| Rte | Dir | DESCRIPTION | PM | EA | SQFT | REMARKS |
|---|---|---|---|---|---|---|
| 5 | NB | MAINLINE | R16.50 | 1 | 3.0 | DETAIL A |
| | | 5/299 Jct EXIT | R17.11 | 1 | 33.0 | TYPE V ARROW |
| | | | | 4 | 168.0 | TYPE III (L) ARROW |
| | | | | 1 | 42.0 | TYPE III (R) ARROW |
| | | | | 1 | 87.0 | CROSSWALK |
| | | 5/299 Jct ENTRANCE | R17.50 | 1 | 3.0 | DETAIL A |
| | | MAINLINE | R17.57 | 1 | 25.0 | TYPE I 18'-0" ARROW |
| | | TWIN VIEW Blvd EXIT | R17.93 | 2 | 66.0 | TYPE V ARROW |
| | | | | 2 | 90.0 | TYPE II (L) ARROW |
| | | | | 2 | 84.0 | TYPE III (R) ARROW |
| | | | | 2 | 44.0 | STOP |
| | | | | 1 | 65.0 | LIMIT LINE |
| | | | | 1 | 29.0 | DELINEATED ISLAND |
| | | TWIN VIEW Blvd ENTRANCE | R18.22 | 1 | 33.0 | TYPE V ARROW |
| | | MAINLINE | R18.50 | 1 | 3.0 | DETAIL A |
| | SB | MAINLINE | R16.50 | 1 | 3.0 | DETAIL A |
| | | 5/299 Jct ENTRANCE | R17.05 | 3 | 126.0 | TYPE VI ARROW |
| | | | | 1 | 94.0 | CROSSWALK |
| | | | | 1 | 25.0 | TYPE I 18'-0" ARROW |
| | | MAINLINE | R17.50 | 1 | 3.0 | DETAIL A |
| | | 5/299 Jct EXIT | R17.53 | 1 | 33.0 | TYPE V ARROW |
| | | | | 2 | 84.0 | TYPE III (R) ARROW |
| | | | | 3 | 135.0 | TYPE II (L) ARROW |
| | | | | 1 | 15.0 | LIMIT LINE |
| | | TWIN VIEW Blvd ENTRANCE | R17.92 | 1 | 25.0 | TYPE I 18'-0" ARROW |
| | | TWIN VIEW Blvd EXIT | R18.22 | 2 | 66.0 | TYPE V ARROW |
| | | | | 1 | 22.0 | STOP |
| | | | | 1 | 83.0 | LIMIT LINE |
| | | MAINLINE | R18.50 | 1 | 3.0 | DETAIL A |
| | | | R18.67 | 1 | 42.0 | TYPE VI ARROW |
| | | | R18.70 | 1 | 42.0 | TYPE VI ARROW |
| | | | R18.74 | 1 | 42.0 | TYPE VI ARROW |
| 273 | NB | MAINLINE | R19.78 | 1 | 25.0 | TYPE I 18'-0" ARROW |
| | | | R19.79 | 1 | 42.0 | TYPE VI ARROW |
| | | | R19.80 | 1 | 42.0 | TYPE VI ARROW |
| | | | R19.81 | 1 | 42.0 | TYPE VI ARROW |
| | SB | MAINLINE | R19.78 | 1 | 42.0 | TYPE III (R) ARROW |
| | | | | 1 | 42.0 | TYPE III (L) ARROW |
| | | | | 2 | 66.0 | TYPE V ARROW |
| | | | R19.79 | 1 | 42.0 | TYPE III (R) ARROW |
| | | | | 1 | 42.0 | TYPE III (L) ARROW |
| | | | R19.80 | 1 | 42.0 | TYPE III (L) ARROW |
| | | | R19.81 | 2 | 66.0 | TYPE V ARROW |
| TOTAL | | | | | 2111.0 | |

## REMOVE THERMOPLASTIC PAVEMENT MARKING

| Rte | Dir | DESCRIPTION | PM | EA | SQFT | REMARKS |
|---|---|---|---|---|---|---|
| 273 | NB | MAINLINE | 19.78 | 1 | 25.0 | TYPE I 18'-0" ARROW |
| | SB | MAINLINE | 19.78 | 1 | 42.0 | TYPE III (R) ARROW |
| | | | | 1 | 42.0 | TYPE III (L) ARROW |
| | | | | 2 | 66.0 | TYPE V ARROW |
| TOTAL | | | | | 175.0 | |

## PAVEMENT MARKER (RETROREFLECTIVE)

| Rte | DESCRIPTION | TYPE G | TYPE H |
|---|---|---|---|
| | | EA | EA |
| 273 | MAINLINE | 71 | 60 |
| TOTAL | | 131 | |

## PAVEMENT MARKER (RETROREFLECTIVE-RECESSED)

| Rte | DESCRIPTION | TYPE C | TYPE G | TYPE H |
|---|---|---|---|---|
| | | EA | EA | EA |
| 5 | MAINLINE | | 641 | 585 |
| | RAMPS | 24 | 385 | 501 |
| SUBTOTAL | | 24 | 1026 | 1086 |
| TOTAL | | 2136 | | |

## THERMOPLASTIC TRAFFIC STRIPE (SPRAYABLE)

| Rte | DESCRIPTION | DETAIL 9 | DETAIL 12 | DETAIL 14A | DETAIL 25 | DETAIL 25A | DETAIL 27B | DETAIL 36 | DETAIL 36A | DETAIL 36B | DETAIL 38 | DETAIL 38A | DETAIL 38B |
|---|---|---|---|---|---|---|---|---|---|---|---|---|---|
| | | LF | LF | LF | LF | LF | LF | LF | LF | LF | LF | LF | LF |
| 5 | MAINLINE | | 30,308 | | 27,984 | | 27,984 | | | | | 120 | |
| | RAMPS | 1843 | 1957 | 864 | | 11,960 | 17,565 | 2466 | 327 | 650 | 678 | 275 | 266 |
| 273 | MAINLINE | | 2113 | | 2746 | | 2746 | | | | | | 212 |
| SUBTOTAL | | 1843 | 34,378 | 864 | 30,730 | 11,960 | 48,295 | 2466 | 327 | 650 | 678 | 395 | 478 |
| TOTAL | | 133,064 | | | | | | | | | | | |

# PAVEMENT DELINEATION QUANTITIES

**PDQ-1**

STATE OF CALIFORNIA - DEPARTMENT OF TRANSPORTATION
Caltrans® MAINTENANCE

FUNCTIONAL SUPERVISOR: LANCE BROWN
CALCULATED-DESIGNED BY: MICHAEL CONNER
CHECKED BY: KARLIE SMITH
REVISED BY
DATE REVISED

P:\proj3\02\0h000_plans\pse\20h000nc001.dgn

LAST REVISION 01-08-15
DATE PLOTTED => 09-JAN-2015
TIME PLOTTED => 14:27

| Dist | COUNTY | ROUTE | POST MILES TOTAL PROJECT | SHEET No. | TOTAL SHEETS |
|---|---|---|---|---|---|
| 02 | Sha | 5,273 | R16.2/R19.0<br>19.7/20.0 | 21 | 48 |

REGISTERED CIVIL ENGINEER 01-08-15 DATE

01-08-15
PLANS APPROVAL DATE

REGISTERED PROFESSIONAL ENGINEER MICHAEL A. CONNER No. C73123 Exp. 12-31-16 CIVIL STATE OF CALIFORNIA

*THE STATE OF CALIFORNIA OR ITS OFFICERS OR AGENTS SHALL NOT BE RESPONSIBLE FOR THE ACCURACY OR COMPLETENESS OF SCANNED COPIES OF THIS PLAN SHEET.*

NOTES:

1. (N) - NOT A SEPARATE PAY ITEM, FOR INFORMATION ONLY
2. NO RUMBLE STRIP TO BE INSTALLED ON CONCRETE BRIDGES OR APPROACH SLABS.
3. EXISTING UTILITY FACILITIES HAVE NOT BEEN INCLUDED ON THESE PLANS.

ABBREVIATIONS:

| | |
|---|---|
| RHMA-O | RUBBERIZED HOT MIX ASPHALT-OPEN GRADED (OPEN GRADED FRICTION COURSE) |
| RAC-O | RUBBERIZED ASPHALT CONCRTE (TYPE O) |
| Dir | DIRECTION |

## REPLACE ASPHALT CONCRETE SURFACING

| Rte | Dir | POST MILE LIMITS | (N) No. OF DIGOUTS | (N) Avg LENGTH | (N) WIDTH | (N) DEPTH | REPLACE AC SURFACING |
|---|---|---|---|---|---|---|---|
| | | PM - PM | | LF | LF | LF | CY |
| 5 | NB | R16.50-R17.00 | 16 | 100 | 4 | 0.33 | 79 |
| | | R17.11 | 2 | 155 | 12 | 0.33 | 46 |
| | | R17.93 | 1 | 75 | 12 | 0.33 | 11 |
| | | R17.00-R18.00 | 16 | 100 | 4 | 0.33 | 79 |
| | | R18.00-R19.00 | 16 | 100 | 4 | 0.33 | 79 |
| | SB | R16.20-R17.00 | 16 | 100 | 4 | 0.33 | 79 |
| | | R17.00-R18.00 | 16 | 100 | 4 | 0.33 | 79 |
| | | R18.00-R19.00 | 16 | 100 | 4 | 0.33 | 79 |
| 273 | NB | 19.70-20.03 | 4 | 100 | 4 | 0.33 | 20 |
| | SB | 19.70-20.03 | 4 | 100 | 4 | 0.33 | 20 |
| TOTAL | | | | | | | 571 |

## SKIN PATCH EXISTING ASPHALT CONCRETE DIKE

| Rte | Dir | POST MILE LIMITS | MAINLINE | RAMP | Lt | Rt | PLACE HMA DIKE (TYPE A) | PLACE HMA DIKE (TYPE D) | PLACE HMA DIKE (TYPE E) | PLACE HMA DIKE (TYPE F) | HMA (TYPE A) |
|---|---|---|---|---|---|---|---|---|---|---|---|
| | | | | | | | LF | LF | LF | LF | TON |
| 5 | NB | R17.03-R17.11 | X | X | | X | 817 | | | | 180 |
| | | R17.57-R17.87 | X | X | | X | 1300 | | | | |
| | | R18.78 | | X | | X | | | | 505 | |
| | | R16.22-R17.05 | X | X | | X | 2650 | | 1750 | 155 | |
| | | R17.09-R17.30 | X | | | X | | | 1100 | | |
| | SB | R17.35-R17.53 | X | | | X | | | 695 | 320 | |
| | | R17.53 | | X | X | | 1325 | | | | |
| | | R17.53 | X | X | | X | | | 670 | | |
| | | R18.30-R18.37 | X | | | X | 370 | | | | |
| | | R18.49-R18.59 | X | | | X | 544 | | | | |
| | | R18.76-R18.89 | X | | | X | 800 | | 126 | | |
| | | R18.73 | | X | | X | | 295 | | | |
| TOTAL | | | | | | | 7806 | 295 | 4341 | 980 | 180 |

## RUMBLE STRIP

| Rte | Dir | POST MILE LIMITS | Sta | REMARKS |
|---|---|---|---|---|
| 5 | NB | R16.50-R19.00 | 264 | MAINLINE |
| | | R18.78 | 31 | RAMP |
| | SB | R16.20-R19.00 | 296 | MAINLINE |
| | | R18.73 | 17 | RAMP |
| 273 | NB | 19.78-20.03 | 14 | MAINLINE |
| | SB | 19.78-20.03 | 14 | MAINLINE |
| TOTAL | | | 636 | |

## ROADWAY QUANTITIES

| Rte | Dir | POST MILE LIMITS | DESCRIPTION | (N) LENGTH | (N) WIDTH | RHMA-O | SHOULDER BACKING | TACK COAT |
|---|---|---|---|---|---|---|---|---|
| | | | | LF | LF | TON | TON | TON |
| 5 | NB | R16.50-R19.00 | MAINLINE | 13,200 | 40-75 | 3856 | 469 | 26 |
| | | R17.11 | 5/299 Jct EXIT RAMP | | | 322 | 21 | 2 |
| | | R17.57 | 5/299 Jct ENTRANCE RAMP | | | 441 | 98 | 3 |
| | | R17.93 | TWIN VIEW Blvd EXIT RAMP | | | 222 | 24 | 2 |
| | | R18.22 | TWIN VIEW Blvd ENTRANCE RAMP | | | 225 | 68 | 2 |
| | | R18.78 | 5/273 Jct ENTRANCE RAMP | | | 520 | 45 | 4 |
| | SB | R16.20-R19.00 | MAINLINE | 14,784 | 40-76 | 4432 | 540 | 30 |
| | | R17.05 | 5/299 Jct ENTRANCE RAMP | | | 685 | 111 | 5 |
| | | R17.53 | 5/299 Jct EXIT RAMP | | | 329 | 59 | 2 |
| | | R17.92 | TWIN VIEW Blvd ENTRANCE RAMP | | | 226 | 49 | 2 |
| | | R18.22 | TWIN VIEW Blvd EXIT RAMP | | | 184 | 65 | 1 |
| | | R18.73 | 5/273 Jct EXIT RAMP | | | 385 | 98 | 3 |
| 273 | NB | 19.78-20.03 | MAINLINE | 1320 | 34-40 | 311 | 89 | 2 |
| | SB | 19.78-20.03 | MAINLINE | 1320 | 38-60 | 354 | 89 | 2 |
| TOTAL | | | | | | 12,492 | 1825 | 86 |

## COLD PLANE ASPHALT CONCRETE PAVEMENT

| Rte | Dir | POST MILE | DESCRIPTION | AREA | REMARKS |
|---|---|---|---|---|---|
| | | | | SQYD | |
| 5 | NB | R16.50-R19.00 | MAINLINE | 40,347 | GRIND Exist RAC-O OVERLAY |
| | | R17.11 | 5/299 Jct EXIT RAMP | 3790 | GRIND Exist RAC-O OVERLAY |
| | | R17.57 | 5/299 Jct ENTRANCE RAMP | 4503 | GRIND Exist RAC-O OVERLAY |
| | | R17.93 | TWIN VIEW Blvd EXIT RAMP | 2657 | GRIND Exist RAC-O OVERLAY |
| | | R18.22 | TWIN VIEW Blvd ENTRANCE RAMP | 2125 | GRIND Exist RAC-O OVERLAY |
| | | R18.78 | 5/273 Jct ENTRANCE RAMP | 4861 | GRIND Exist RAC-O OVERLAY |
| | SB | R16.20-R19.00 | MAINLINE | 42,588 | GRIND Exist RAC-O OVERLAY |
| | | R17.05 | 5/299 Jct ENTRANCE RAMP | 5414 | GRIND Exist RAC-O OVERLAY |
| | | R17.53 | 5/299 Jct EXIT RAMP | 3775 | GRIND Exist RAC-O OVERLAY |
| | | R17.92 | TWIN VIEW Blvd ENTRANCE RAMP | 2064 | GRIND Exist RAC-O OVERLAY |
| | | R18.22 | TWIN VIEW Blvd EXIT RAMP | 2020 | GRIND Exist RAC-O OVERLAY |
| | | R18.73 | 5/273 Jct EXIT RAMP | 4793 | GRIND Exist RAC-O OVERLAY |
| | | R18.67-R18.80 | MAINLINE | 4 | CONFORM AT 4 MEDIAN DI |
| 273 | NB | 19.78-20.03 | MAINLINE | 3639 | GRIND Exist RAC-O OVERLAY |
| | SB | 19.78-20.03 | MAINLINE | 4231 | GRIND Exist RAC-O OVERLAY |
| TOTAL | | | | 126,811 | |

## GUARDRAIL ITEMS

| Rte | Dir | POST MILE LIMITS | MAINLINE | RAMP | SIDE | ADJUST GUARDRAIL | RECONSTRUCT GUARDRAIL | RECONSTRUCT GUARDRAIL (7' POST) | SALVAGE GUARDRAIL (STEEL POST) | RECONSTRUCT TERMINAL SYSTEM | RECONSTRUCT END ANCHOR (TYPE SFT) | (N) Exist BURIED POST END ANCHOR | RESET OBJECT MARKER | TREATED WOOD WASTE | COMMENT |
|---|---|---|---|---|---|---|---|---|---|---|---|---|---|---|---|
| | | | | | Rt/Lt | LF | LF | LF | LF | EA | EA | EA | EA | LB | |
| 5 | NB | R18.09-R18.14 | X | | Rt | | | | 250 | | | | | | |
| | | R18.28-R18.31 | X | | Rt | 150 | | | | FLEAT | 1 | | | | |
| | | R18.38-R18.43 | X | | Rt | 175 | | 100 | | | | 2 | 1 | | ADJUST SAND BEDDING |
| | | R18.46-R18.48 | | X | Rt | | 162.5 | | | | 1 | | 2 | 2389 | |
| | | R18.70-R18.80 | | X | Rt | 500 | | | | FLEAT | 1 | | | | |
| | | R18.94-R19.00 | X | | Rt | 215 | | | | SRT-8 | | | | | |
| | SB | R16.22-R16.54 | X | | Rt | 1750 | | | | | 1 | 1 | | | |
| | | R17.05 | | X | Rt | | 225 | | | SRT-8 | 1 | | 2 | 3274 | |
| | | R17.11-R17.30 | X | | Rt | 900 | | 100 | | | 1 | | 1 | | |
| | | R17.34-R17.40 | X | | Rt | | 300 | | | | | 1 | 2 | 4336 | |
| | | R18.09-R18.14 | X | | Rt | 200 | | | | SRT-8 | | | | | |
| | | R18.36-R18.40 | X | | Rt | 150 | | | | | | 2 | | | |
| | | R18.47-R18.50 | X | | Rt | 75 | | | | | | 1 | | | ADJUST SAND BEDDING |
| | | R18.75-R18.79 | X | | Rt | 100 | | | | | 1 | 1 | | | ADJUST SAND BEDDING |
| TOTAL | | | | | | 4215 | 687.5 | 200 | 250 | 5 | 7 | | 8 | 9999 | |

## SUMMARY OF QUANTITIES

Q-1

REVISED BY | DATE REVISED
MICHAEL CONNER | KARLIE SMITH
CALCULATED-DESIGNED BY | CHECKED BY
FUNCTIONAL SUPERVISOR
LANCE BROWN

STATE OF CALIFORNIA - DEPARTMENT OF TRANSPORTATION
Caltrans MAINTENANCE

P:\proj3\02\0h000_plans\pse\20h000pa001.dgn

LAST REVISION 01-08-15 | DATE PLOTTED => 09-JAN-2015 | TIME PLOTTED => 14:27

| Dist | COUNTY | ROUTE | POST MILES TOTAL PROJECT | SHEET No. | TOTAL SHEETS |
|---|---|---|---|---|---|
| 02 | Sha | 5,273 | R16.2/R19.0 19.7/20.0 | 22 | 48 |

REGISTERED CIVIL ENGINEER 01-08-15 DATE

01-08-15
PLANS APPROVAL DATE

REGISTERED PROFESSIONAL ENGINEER THERESA ANDERSON No. C77957 Exp. 6-30-15 CIVIL STATE OF CALIFORNIA

*THE STATE OF CALIFORNIA OR ITS OFFICERS OR AGENTS SHALL NOT BE RESPONSIBLE FOR THE ACCURACY OR COMPLETENESS OF SCANNED COPIES OF THIS PLAN SHEET.*

NOTES:

1. FOR ACCURATE RIGHT OF WAY DATA, CONTACT RIGHT OF WAY ENGINEERING AT THE DISTRICT OFFICE.
2. EXISTING UTILITY FACILITIES HAVE NOT BEEN INCLUDED ON THESE PLANS.

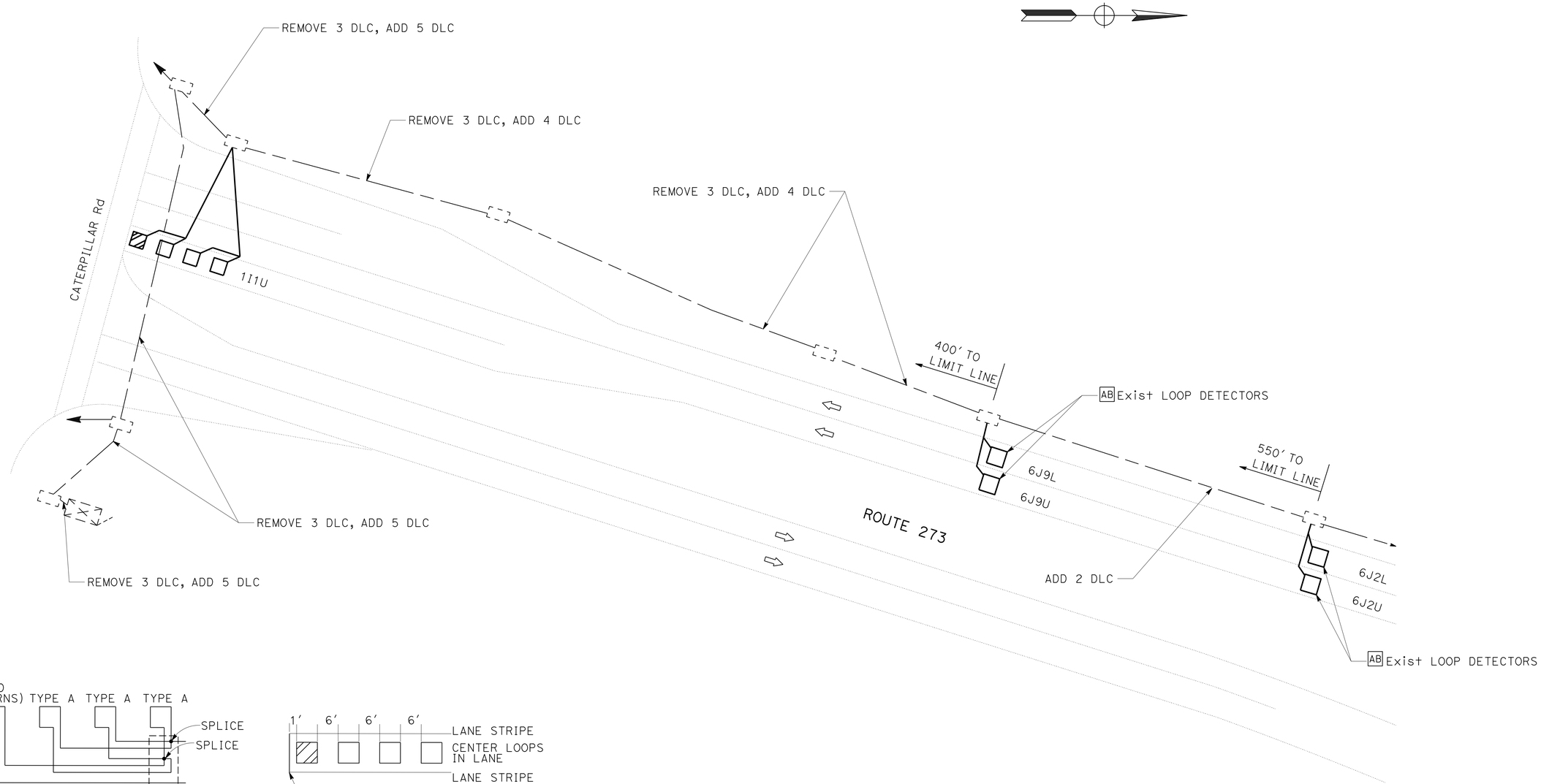


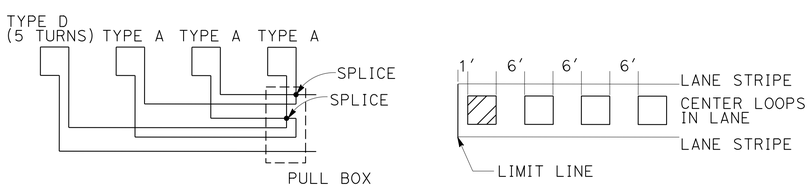


**TYPE D/TYPE A LOOP ARRAY**

NO SCALE

**MODIFY SIGNAL**

SCALE: 1" = 20'

*APPROVED FOR ELECTRICAL WORK ONLY*

**E-1**

REVISED BY | DATE REVISED
TERI ANDERSON | BEN PAULL
CALCULATED-DESIGNED BY | CHECKED BY
FUNCTIONAL SUPERVISOR: ROB STINGER

STATE OF CALIFORNIA - DEPARTMENT OF TRANSPORTATION
Caltrans® ELECTRICAL DESIGN

P:\proj3\02\0h000_plans\pse\20h000ua001.dgn

LAST REVISION 01-08-15 | DATE PLOTTED => 09-JAN-2015 | TIME PLOTTED => 14:27

| Dist | COUNTY | ROUTE | POST MILES TOTAL PROJECT | SHEET No. | TOTAL SHEETS |
|---|---|---|---|---|---|
| 02 | Sha | 5,273 | R16.2/R19.0 19.7/20.0 | 23 | 48 |

REGISTERED CIVIL ENGINEER 01-08-15 DATE

01-08-15
PLANS APPROVAL DATE

REGISTERED PROFESSIONAL ENGINEER THERESA ANDERSON No. C77957 Exp. 6-30-15 CIVIL STATE OF CALIFORNIA

*THE STATE OF CALIFORNIA OR ITS OFFICERS OR AGENTS SHALL NOT BE RESPONSIBLE FOR THE ACCURACY OR COMPLETENESS OF SCANNED COPIES OF THIS PLAN SHEET.*

## NOTES:

1. FOR ACCURATE RIGHT OF WAY AND ACCESS DATA, CONTACT RIGHT OF WAY ENGINEERING AT THE DISTRICT OFFICE.
2. EXISTING UTILITY FACILITIES HAVE NOT BEEN INCLUDED ON THESE PLANS.

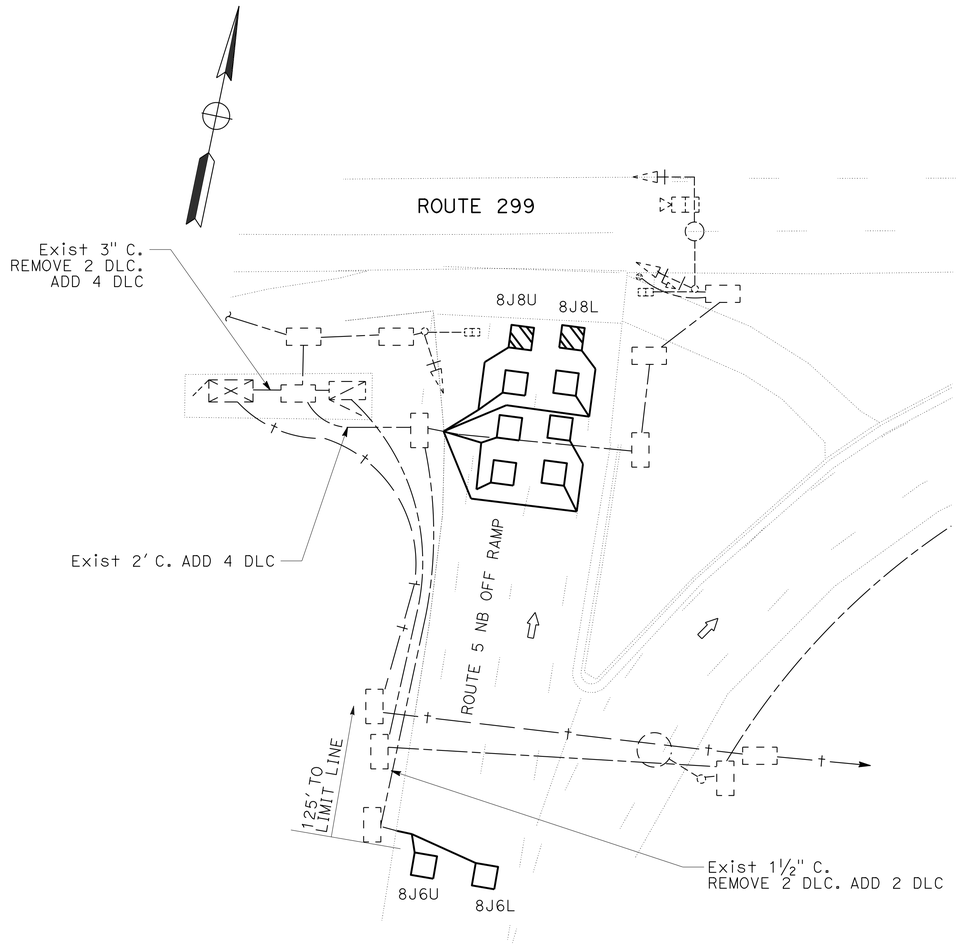


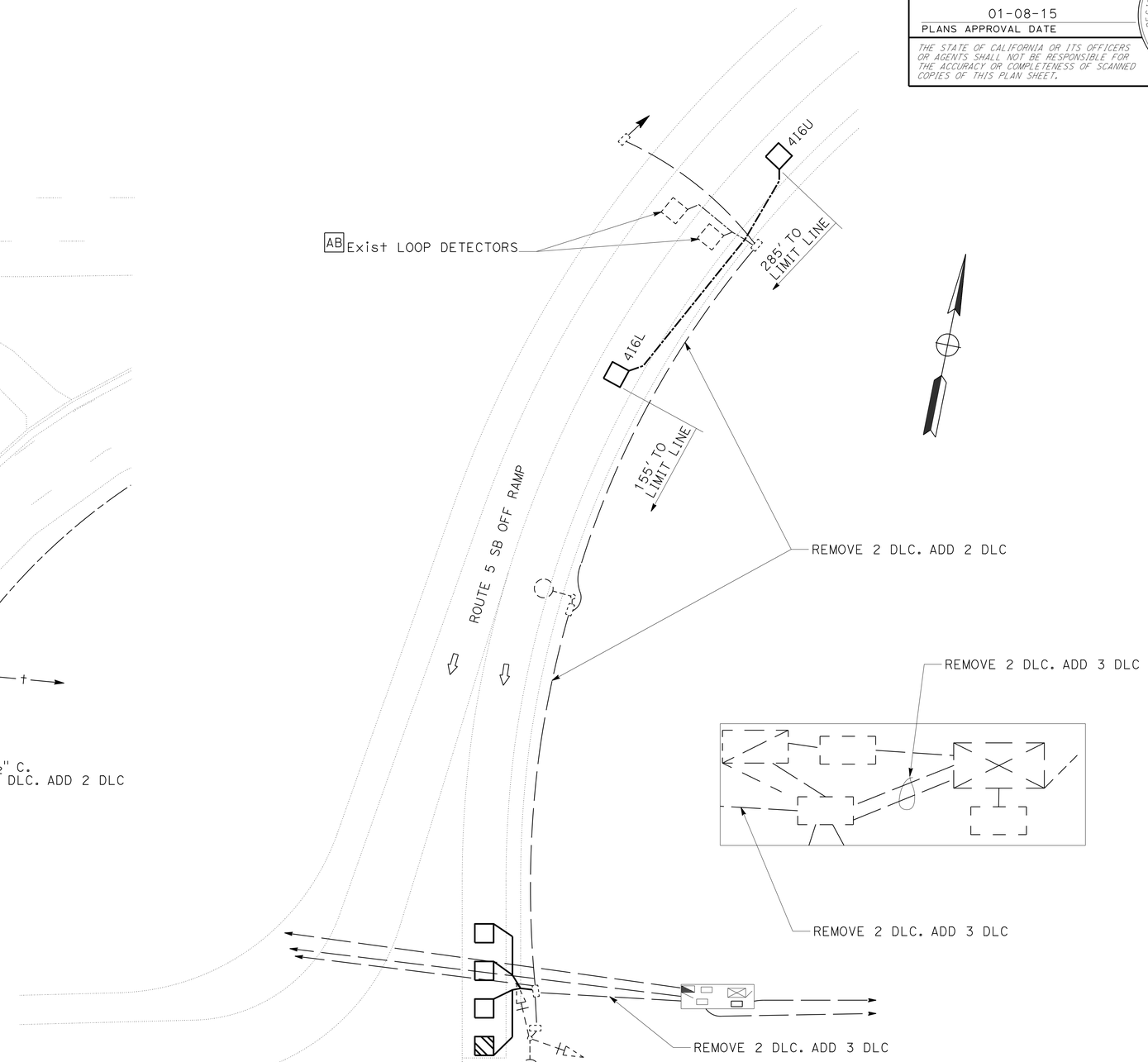


# MODIFY SIGNAL

NO SCALE

**E-2**

*APPROVED FOR ELECTRICAL WORK ONLY*

STATE OF CALIFORNIA - DEPARTMENT OF TRANSPORTATION
Caltrans® ELECTRICAL DESIGN

FUNCTIONAL SUPERVISOR: ROB STINGER
CALCULATED-DESIGNED BY: TERI ANDERSON
CHECKED BY: BEN PAULL
REVISED BY
DATE REVISED

P:\proj3\02\0h000_plans\pse\20h000ua002.dgn

LAST REVISION 01-08-15 | DATE PLOTTED => 09-JAN-2015 | TIME PLOTTED => 14:27

BORDER LAST REVISED 7/2/2010 | USERNAME => s115152 | DGN FILE => 20h000ua002.dgn | RELATIVE BORDER SCALE IS IN INCHES 0 1 2 3 | UNIT 0147 | PROJECT NUMBER & PHASE 02-1400-0152-1 | EA: 02-0H0001

| Dist | COUNTY | ROUTE | POST MILES TOTAL PROJECT | SHEET No. | TOTAL SHEETS |
|---|---|---|---|---|---|
| 02 | Sha | 5,273 | R16.2/R19.0<br>19.7/20.0 | 24 | 48 |

REGISTERED CIVIL ENGINEER 01-08-15 DATE

01-08-15
PLANS APPROVAL DATE

REGISTERED PROFESSIONAL ENGINEER
THERESA ANDERSON
No. C77957
Exp. 6-30-15
CIVIL
STATE OF CALIFORNIA

*THE STATE OF CALIFORNIA OR ITS OFFICERS OR AGENTS SHALL NOT BE RESPONSIBLE FOR THE ACCURACY OR COMPLETENESS OF SCANNED COPIES OF THIS PLAN SHEET.*

## NOTES (THIS SHEET):

1. FOR ACCURATE RIGHT OF WAY AND ACCESS DATA, CONTACT RIGHT OF WAY ENGINEERING AT THE DISTRICT OFFICE.
2. EXISTING UTILITY FACILITIES HAVE NOT BEEN INCLUDED ON THESE PLANS.
3. LOOP LOCATIONS ARE APPROXIMATE. FINAL LOCATION WILL BE DETERMINED BY THE ENGINEER.
4. AB Exist LOOP DETECTORS.
5. CENTER LOOP IN LANE.
6. COIL 10' OF CABLES IN THE PULL BOX.

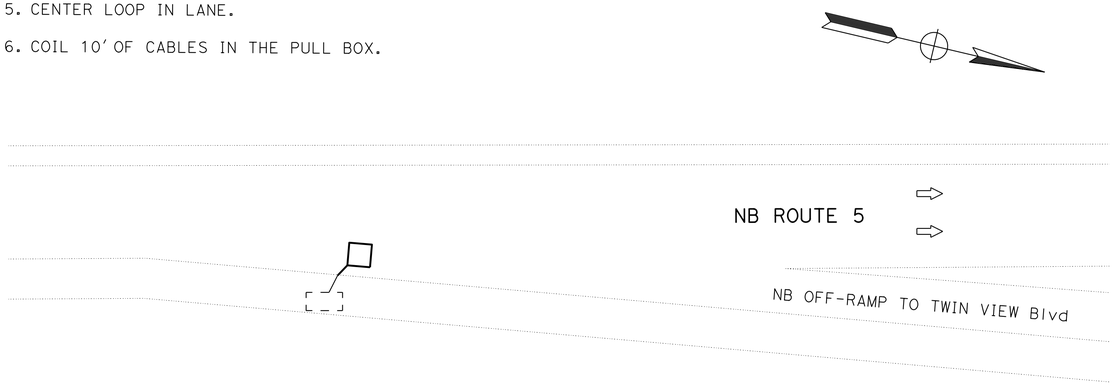


ID No. R11
PM R17.93

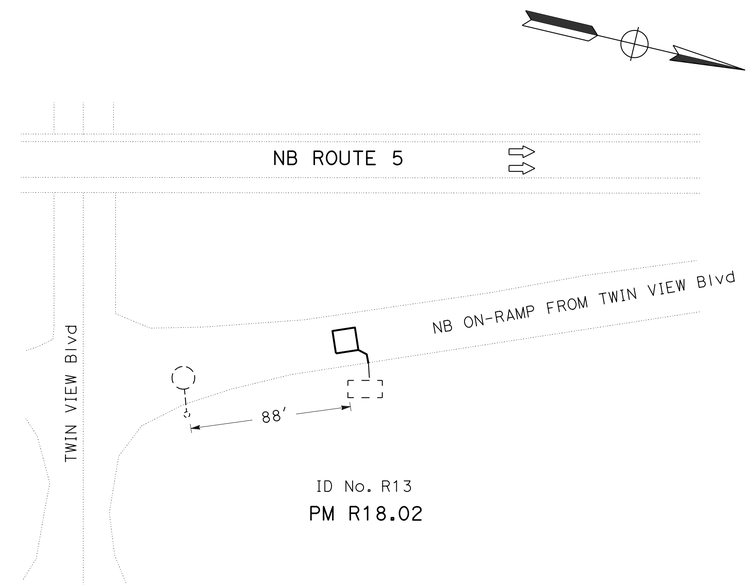


ID No. R13
PM R18.02

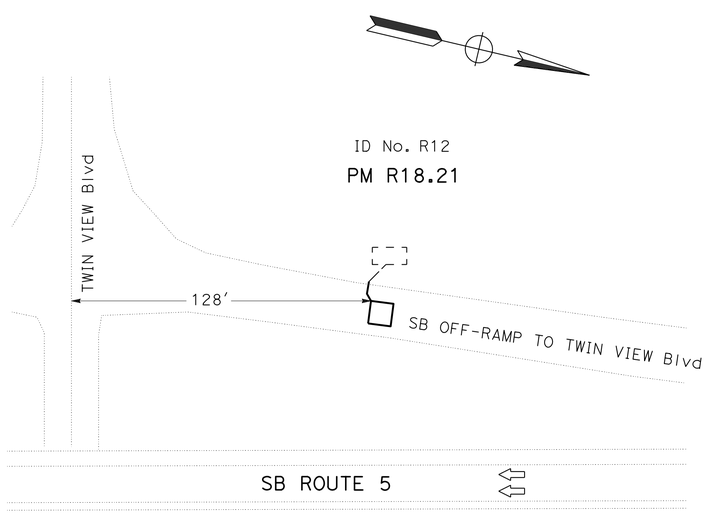


ID No. R12
PM R18.21

# MODIFY TRAFFIC MONITORING STATION (COUNT)

NO SCALE

**E-3**

*APPROVED FOR ELECTRICAL WORK ONLY*

REVISED BY | DATE REVISED
TERI ANDERSON | BEN PAULL
CALCULATED-DESIGNED BY | CHECKED BY
FUNCTIONAL SUPERVISOR: ROB STINGER

STATE OF CALIFORNIA - DEPARTMENT OF TRANSPORTATION
Caltrans® ELECTRICAL DESIGN

P:\proj3\02\0h000_plans\pse\20h000ua003.dgn

LAST REVISION 01-08-15 | DATE PLOTTED => 09-JAN-2015 | TIME PLOTTED => 14:27

| Dist | COUNTY | ROUTE | POST MILES TOTAL PROJECT | SHEET No. | TOTAL SHEETS |
|---|---|---|---|---|---|
| 02 | Sha | 5,273 | R16.2/R19.0 19.7/20.0 | 25 | 48 |

REGISTERED CIVIL ENGINEER 01-08-15 DATE

01-08-15
PLANS APPROVAL DATE

REGISTERED PROFESSIONAL ENGINEER THERESA ANDERSON No. C77957 Exp. 6-30-15 CIVIL STATE OF CALIFORNIA

*THE STATE OF CALIFORNIA OR ITS OFFICERS OR AGENTS SHALL NOT BE RESPONSIBLE FOR THE ACCURACY OR COMPLETENESS OF SCANNED COPIES OF THIS PLAN SHEET.*

## NOTES (THIS SHEET):

1. FOR ACCURATE RIGHT OF WAY DATA, CONTACT RIGHT OF WAY ENGINEERING AT THE DISTRICT OFFICE.
2. EXISTING UTILITY FACILITIES HAVE NOT BEEN INCLUDED ON THESE PLANS.
3. LOOP LOCATIONS ARE APPROXIMATE. FINAL LOCATION WILL BE DETERMINED BY THE ENGINEER.
4. AB Exist LOOP DETECTORS.
5. CENTER LOOP IN LANE.
6. COIL 10' OF CABLES IN THE PULL BOX.

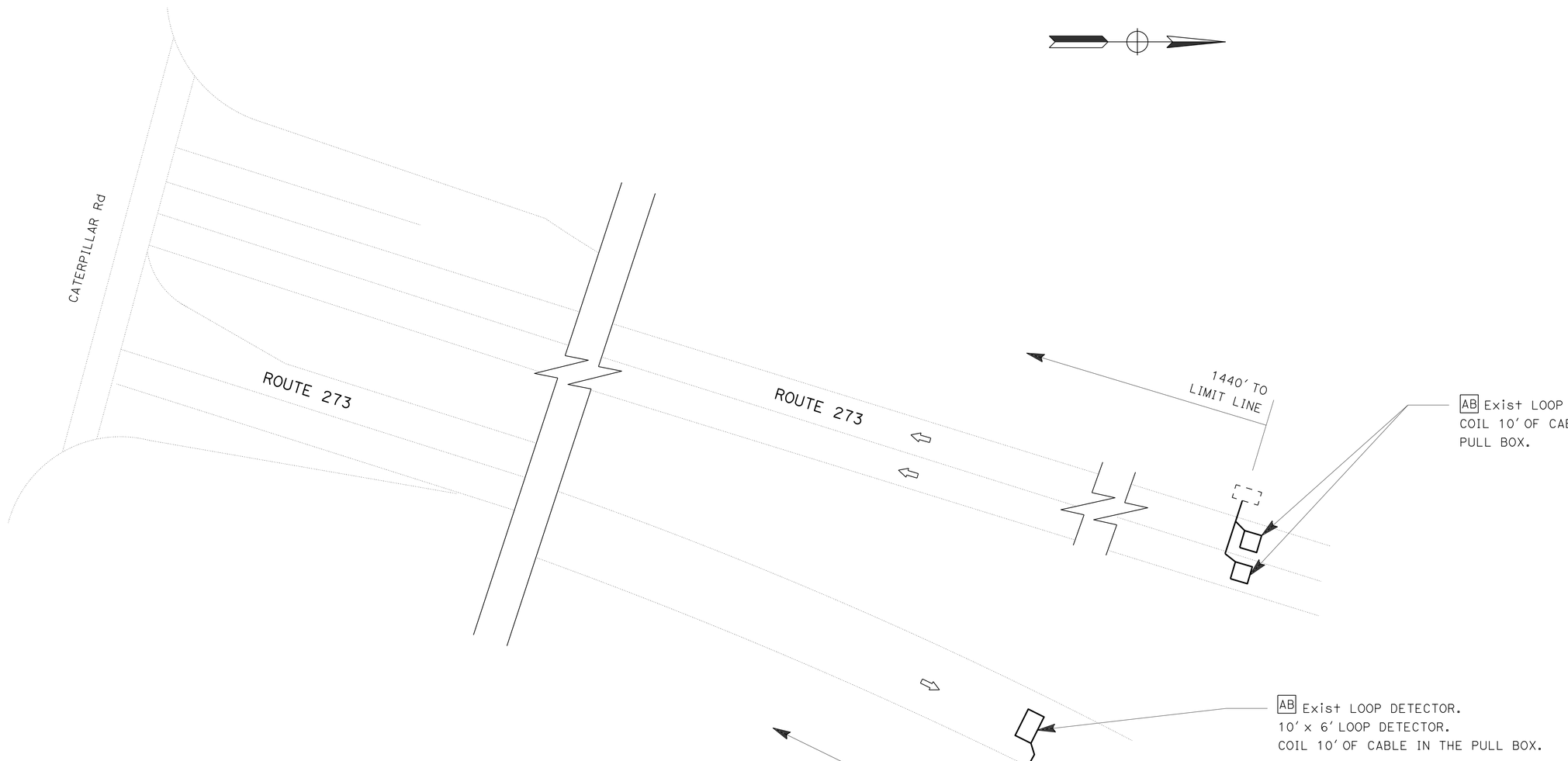


# MODIFY TRAFFIC MONITORING STATION (COUNT)

NO SCALE

**E-4**

*APPROVED FOR ELECTRICAL WORK ONLY*

| REVISED BY | DATE REVISED |
|---|---|
| | |

CALCULATED-DESIGNED BY: TERI ANDERSON
CHECKED BY: BEN PAULL
FUNCTIONAL SUPERVISOR: ROB STINGER

STATE OF CALIFORNIA - DEPARTMENT OF TRANSPORTATION
Caltrans® ELECTRICAL DESIGN

P:\proj3\02\0h000_plans\pse\20h000ua004.dgn

LAST REVISION 01-08-15 | DATE PLOTTED => 09-JAN-2015 | TIME PLOTTED => 14:27

| Dist | COUNTY | ROUTE | POST MILES TOTAL PROJECT | SHEET No. | TOTAL SHEETS |
|---|---|---|---|---|---|
| 02 | Sha | 5,273 | R16.2/R19.0 19.7/20.0 | 26 | 48 |

REGISTERED CIVIL ENGINEER 01-08-15 DATE

01-08-15
PLANS APPROVAL DATE

REGISTERED PROFESSIONAL ENGINEER THERESA ANDERSON No. C77957 Exp. 6-30-15 CIVIL STATE OF CALIFORNIA

*THE STATE OF CALIFORNIA OR ITS OFFICERS OR AGENTS SHALL NOT BE RESPONSIBLE FOR THE ACCURACY OR COMPLETENESS OF SCANNED COPIES OF THIS PLAN SHEET.*

## NOTES (THIS SHEET):

1. FOR ACCURATE RIGHT OF WAY AND ACCESS DATA, CONTACT RIGHT OF WAY ENGINEERING AT THE DISTRICT OFFICE.
2. EXISTING UTILITY FACILITIES HAVE NOT BEEN INCLUDED ON THESE PLANS.
3. LOOP LOCATIONS ARE APPROXIMATE. FINAL LOCATION WILL BE DETERMINED BY THE ENGINEER.
4. AB Exist LOOP DETECTORS.
5. CENTER LOOP IN LANE.
6. COIL 10' OF CABLES IN THE PULL BOX.

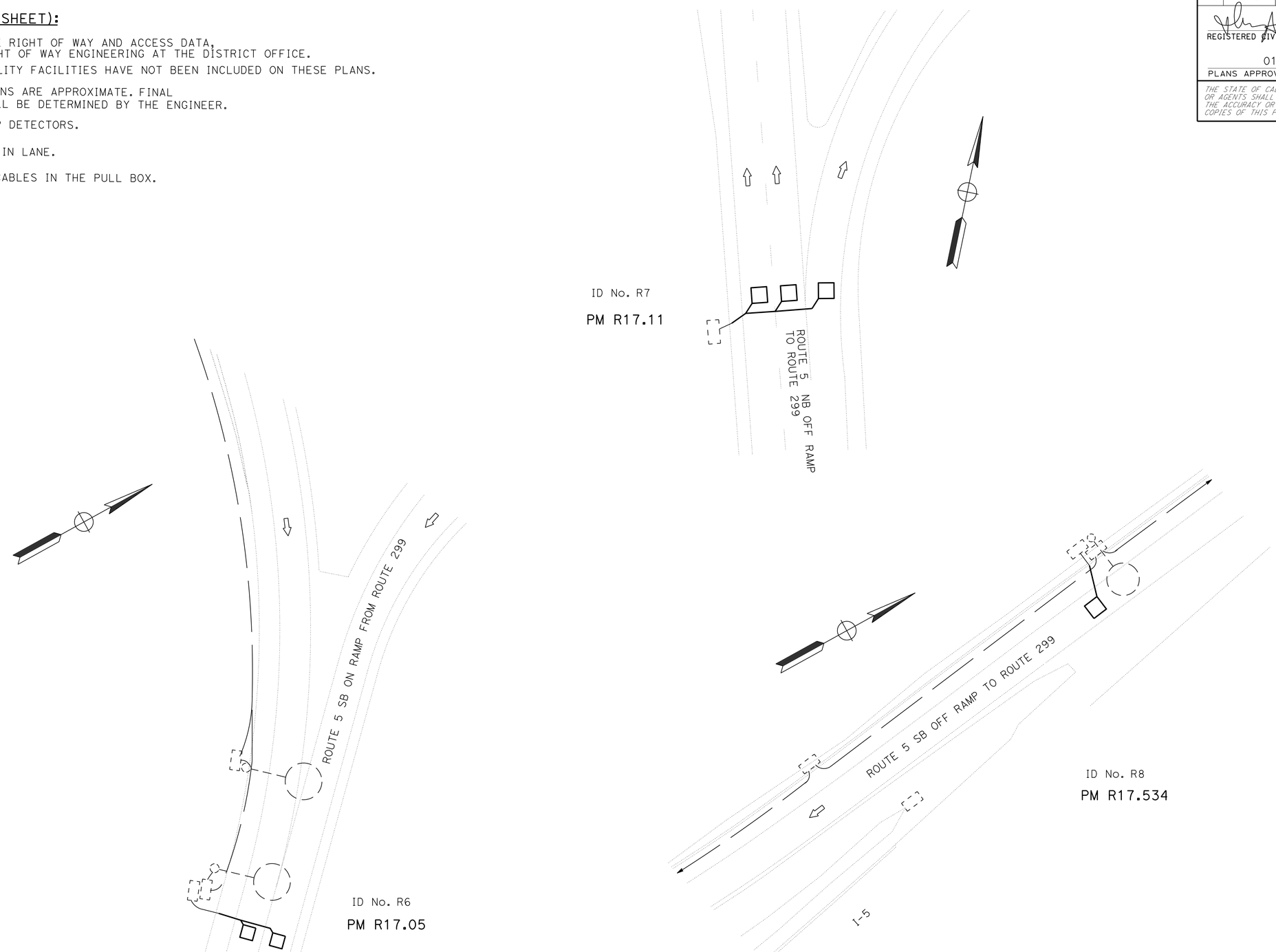


# MODIFY TRAFFIC MONITORING STATION (COUNT)

NO SCALE

**E-5**

*APPROVED FOR ELECTRICAL WORK ONLY*

STATE OF CALIFORNIA - DEPARTMENT OF TRANSPORTATION
Caltrans® ELECTRICAL DESIGN

FUNCTIONAL SUPERVISOR: ROB STINGER
CALCULATED-DESIGNED BY: TERI ANDERSON
CHECKED BY: BEN PAULL
REVISED BY
DATE REVISED

P:\proj3\02\0h000_plans\pse\20h000ua005.dgn

LAST REVISION 01-08-15
DATE PLOTTED => 09-JAN-2015
TIME PLOTTED => 14:27

| Dist | COUNTY | ROUTE | POST MILES TOTAL PROJECT | SHEET No. | TOTAL SHEETS |
|---|---|---|---|---|---|
| 02 | Sha | 5,273 | R16.2/R19.0 19.7/20.0 | 27 | 48 |

REGISTERED CIVIL ENGINEER 01-08-15 DATE

01-08-15
PLANS APPROVAL DATE

REGISTERED PROFESSIONAL ENGINEER THERESA ANDERSON No. C77957 Exp. 6-30-15 CIVIL STATE OF CALIFORNIA

*THE STATE OF CALIFORNIA OR ITS OFFICERS OR AGENTS SHALL NOT BE RESPONSIBLE FOR THE ACCURACY OR COMPLETENESS OF SCANNED COPIES OF THIS PLAN SHEET.*

## MODIFY SIGNAL

| SHEET No. | DLC | TYPE D LOOP | TYPE A LOOP |
|---|---|---|---|
| | FT | EA | EA |
| E-1 | 2,950 | 1 | 7 |
| E-2 | 1,110 | 3 | 13 |

ITEMS SHOWN IN THIS TABLE ARE NOT A SEPARATE PAY ITEM, FOR INFORMATION ONLY

## MODIFY TRAFFIC MONITORING STATION (COUNT)

| SHEET No. | TYPE A LOOP | 10′ x 6′ LOOP DETECTOR |
|---|---|---|
| | EA | EA |
| E-3 | 3 | |
| E-4 | 2 | 1 |
| E-5 | 6 | |

ITEMS SHOWN IN THIS TABLE ARE NOT A SEPARATE PAY ITEM, FOR INFORMATION ONLY

## MAINTAINING EXISTING TRAFFIC MANAGEMENT SYSTEM ELEMENTS DURING CONSTRUCTION

| TYPE | PM | DESCRIPTION |
|---|---|---|
| HAR | Sha-5-PM R16.13 | I-5 AT HILLTOP OVERCROSSING |
| CCTV | Sha-5-PM R17.3 | NEAR I-5/299 INTERCHANGE |
| CCTV | Sha-5-PM R18.6 | NEAR I-5/273 INTERCHANGE |
| FIBER OPTIC | Sha-5-PM R16.2/R18.6 | LOCATED IN THE MEDIAN |

# ELECTRICAL QUANTITIES

E-6

REVISED BY | DATE REVISED
TERI ANDERSON | BEN PAULL
CALCULATED-DESIGNED BY | CHECKED BY
FUNCTIONAL SUPERVISOR: ROB STINGER

STATE OF CALIFORNIA - DEPARTMENT OF TRANSPORTATION
Caltrans® ELECTRICAL DESIGN

P:\proj3\02\0h000_plans\pse\20h000ua006.dgn

LAST REVISION 01-08-15 | DATE PLOTTED => 09-JAN-2015 | TIME PLOTTED => 14:27

## M

| | |
|---|---|
| Maint | MAINTENANCE |
| Max | MAXIMUM |
| MB | METAL BEAM |
| MBB | METAL BEAM BARRIER |
| MBGR | METAL BEAM GUARD RAILING |
| Med | MEDIAN |
| MGS | MIDWEST GUARDRAIL SYSTEM |
| MH | MANHOLE |
| Min | MINIMUM |
| Misc | MISCELLANEOUS |
| Misc I & S | MISCELLANEOUS IRON AND STEEL |
| Mkr | MARKER |
| Mod | MODIFIED, |
| | MODIFY |
| Mon | MONUMENT |
| MP | METAL PLATE |
| MPGR | METAL PLATE GUARD RAILING |
| MR | MOVEMENT RATING |
| MSE | MECHANICALLY STABILIZED EMBANKMENT |
| Mt | MOUNTAIN, MOUNT |
| Mtl | MATERIAL |
| MVP | MAINTENANCE VEHICLE PULLOUT |

## N

| | |
|---|---|
| N | NORTH |
| NB | NORTHBOUND |
| No. | NUMBER (MUST HAVE PERIOD) |
| Nos. | NUMBERS (MUST HAVE PERIOD) |
| NPS | NOMINAL PIPE SIZE |
| NS | NEAR SIDE |
| NSP | NEW STANDARD PLAN |
| NTS | NOT TO SCALE |

## O

| | |
|---|---|
| Oblr | OBLITERATE |
| OC | OVERCROSSING |
| OD | OUTSIDE DIAMETER |
| OF | OUTSIDE FACE |
| OG | ORIGINAL GROUND |
| OGAC | OPEN GRADED ASPHALT CONCRETE |
| OGFC | OPEN GRADED FRICTION COURSE |
| OH | OVERHEAD |
| OHWM | ORDINARY HIGH WATER MARK |
| O-O | OUT TO OUT |
| Opp | OPPOSITE |
| OSD | OVERSIDE DRAIN |

## P

| | |
|---|---|
| P | PAGE |
| PAP | PERFORATED ALUMINUM PIPE |
| PB | PULL BOX |
| PC | POINT OF CURVATURE, |
| | PRECAST |
| PCC | POINT OF COMPOUND CURVE, |
| | PORTLAND CEMENT CONCRETE |
| PCMS | PORTABLE CHANGEABLE MESSAGE SIGN |
| PCP | PERFORATED CONCRETE PIPE, |
| | PRESTRESSED CONCRETE PIPE |
| PCVC | POINT OF COMPOUND VERTICAL CURVE |
| PEC | PERMIT TO ENTER AND CONSTRUCT |
| Ped | PEDESTRIAN |
| Ped OC | PEDESTRIAN OVERCROSSING |
| Ped UC | PEDESTRIAN UNDERCROSSING |
| Perm Mtl | PERMEABLE MATERIAL |

## P continued

| | |
|---|---|
| PG | PROFILE GRADE |
| PI | POINT OF INTERSECTION |
| PJP | PARTIAL JOINT PENETRATION |
| Pkwy | PARKWAY |
| ₱,PL | PLATE |
| P/L | PROPERTY LINE |
| PM | POST MILE, |
| | TIME FROM NOON TO MIDNIGHT |
| PN | PAVING NOTCH |
| POC | POINT OF HORIZONTAL CURVE |
| POT | POINT OF TANGENT |
| POVC | POINT OF VERTICAL CURVE |
| PP | PIPE PILE, |
| | PLASTIC PIPE, |
| | POWER POLE |
| PPL | PREFORMED PERMEABLE LINER |
| PPP | PERFORATED PLASTIC PIPE |
| PRC | POINT OF REVERSE CURVE |
| PRF | PAVEMENT REINFORCING FABRIC |
| PRVC | POINT OF REVERSE VERTICAL CURVE |
| PS&E | PLANS, SPECIFICATIONS AND ESTIMATES |
| PS, P/S | PRESTRESSED |
| PSP | PERFORATED STEEL PIPE |
| PT | POINT OF TANGENCY |
| PVC | POLYVINYL CHLORIDE |
| Pvmt | PAVEMENT |

## Q

| | |
|---|---|
| Qty | QUANTITY |

## R

| | |
|---|---|
| R | RADIUS |
| R & D | REMOVE AND DISPOSE |
| R & S | REMOVE AND SALVAGE |
| R/C | RATE OF CHANGE |
| RCA | REINFORCED CONCRETE ARCH |
| RCB | REINFORCED CONCRETE BOX |
| RCP | REINFORCED CONCRETE PIPE |
| RCPA | REINFORCED CONCRETE PIPE ARCH |
| Rd | ROAD |
| Reinf | REINFORCED, |
| | REINFORCEMENT, |
| | REINFORCING |
| Rel | RELOCATE |
| Repl | REPLACEMENT |
| Ret | RETAINING |
| Rev | REVISED, REVISION |
| Rdwy | ROADWAY |
| RHMA | RUBBERIZED HOT MIX ASPHALT |
| Riv | RIVER |
| RM | ROAD-MIXED |
| RP | RADIUS POINT, |
| | REFERENCE POINT |
| RR | RAILROAD |
| RSP | ROCK SLOPE PROTECTION, |
| | REVISED STANDARD PLAN |
| Rt | RIGHT |
| Rte | ROUTE |
| RW | REDWOOD, |
| | RETAINING WALL |
| R/W | RIGHT OF WAY |
| Rwy | RAILWAY |

## S

| | |
|---|---|
| S | SOUTH, |
| | SUPPLEMENT |
| SAE | STRUCTURE APPROACH EMBANKMENT |
| Salv | SALVAGE |
| SAPP | STRUCTURAL ALUMINUM PLATE PIPE |
| SB | SOUTHBOUND |
| SC | SAND CUSHION |
| SCSP | SLOTTED CORRUGATED STEEL PIPE |
| SD | STORM DRAIN |
| Sec | SECOND, |
| | SECTION |
| Sep | SEPARATION |
| SG | SUBGRADE |
| Shld | SHOULDER |
| Sht | SHEET |
| Sim | SIMILAR |
| ₤ | STATION LINE |
| SM | SELECTED MATERIAL |
| Spec | SPECIAL, |
| | SPECIFICATIONS |
| SPP | SLOTTED PLASTIC PIPE |
| SS | SLOPE STAKE |
| SSBM | STRAP AND SADDLE BRACKET METHOD |
| SSD | STRUCTURAL SECTION DRAIN |
| SSPA | STRUCTURAL STEEL PLATE ARCH |
| SSPP | STRUCTURAL STEEL PLATE PIPE |
| SSPPA | STRUCTURAL STEEL PLATE PIPE ARCH |
| SSRP | STEEL SPIRAL RIB PIPE |
| St | STREET |
| Sta | STATION |
| STBB | SINGLE THRIE BEAM BARRIER |
| Std | STANDARD |
| Str | STRUCTURE |
| Surf | SURFACING |
| SW | SIDEWALK, |
| | SOUND WALL |
| Swr | SEWER |
| Sym | SYMMETRICAL |
| S4S | SURFACE 4 SIDES |

## T

| | |
|---|---|
| T | SEMI-TANGENT |
| Tan | TANGENT |
| TBB | THRIE BEAM BARRIER |
| Tbr | TIMBER |
| TC | TOP OF CURB |
| TCB | TRAFFIC CONTROL BOX |
| TCE | TEMPORARY CONSTRUCTION EASEMENT |
| Tel | TELEPHONE |
| Temp | TEMPORARY |
| TG | TOP OF GRADE |
| Tot | TOTAL |
| TP | TELEPHONE POLE |
| TPB | TREATED PERMEABLE BASE |
| TPM | TREATED PERMEABLE MATERIAL |
| Trans | TRANSITION |

## T continued

| | |
|---|---|
| TS | TRANSVERSE, |
| | TRAFFIC SIGNAL, |
| | TUBULAR STEEL |
| Typ | TYPICAL |

## U

| | |
|---|---|
| UC | UNDERCROSSING |
| UD | UNDERDRAIN |
| UG | UNDERGROUND |
| UON | UNLESS OTHERWISE NOTED |
| UP | UNDERPASS |

## V

| | |
|---|---|
| V | VALVE, |
| | DESIGN SPEED |
| Var | VARIABLE, |
| | VARIES |
| VC | VERTICAL CURVE |
| VCP | VITRIFIED CLAY PIPE |
| Vert | VERTICAL |
| Via | VIADUCT |
| Vol | VOLUME |

## W

| | |
|---|---|
| W | WEST, |
| | WIDTH |
| WB | WESTBOUND |
| WH | WEEP HOLE |
| WM | WIRE MESH |
| WS | WATER SURFACE |
| WSP | WELDED STEEL PIPE |
| Wt | WEIGHT |
| WV | WATER VALVE |
| WW | WINGWALL |
| WWLOL | WINGWALL LAYOUT LINE |

## X

| | |
|---|---|
| X Sec | CROSS SECTION |
| Xing | CROSSING |

## Y

| | |
|---|---|
| Yr | YEAR |
| Yrs | YEARS |

| Dist | COUNTY | ROUTE | POST MILES TOTAL PROJECT | SHEET No. | TOTAL SHEETS |
|---|---|---|---|---|---|
| 02 | Sha | 5,273 | R16.2/R19.0<br>19.7/20.0 | 28 | 48 |

Grace M. Tsushima
REGISTERED CIVIL ENGINEER

July 19, 2013
PLANS APPROVAL DATE

REGISTERED PROFESSIONAL ENGINEER
Grace M. Tsushima
No. C49814
Exp. 9-30-14
CIVIL
STATE OF CALIFORNIA

*THE STATE OF CALIFORNIA OR ITS OFFICERS OR AGENTS SHALL NOT BE RESPONSIBLE FOR THE ACCURACY OR COMPLETENESS OF SCANNED COPIES OF THIS PLAN SHEET.*

TO ACCOMPANY PLANS DATED 01-08-15

### UNIT OF MEASUREMENT SYMBOLS:

Some of the symbols used in the project plan quantity tables and in the Bid Item List are:

TABLE A

| SYMBOL USED | DEFINITIONS |
|---|---|
| ACRE | ACRE |
| CF | CUBIC FOOT |
| CY | CUBIC YARD |
| EA | EACH |
| GAL | GALLON |
| LB | POUND |
| LF | LINEAR FOOT |
| SQFT | SQUARE FOOT |
| SQYD | SQUARE YARD |
| STA | 100 FEET |
| TAB | TABLET |
| TON | 2,000 POUNDS |

Some of the symbols used in the plans other than in the project plan quantity tables are:

TABLE B

| SYMBOL USED | DEFINITIONS |
|---|---|
| ksi | KIPS PER SQUARE INCH |
| ksf | KIPS PER SQUARE FOOT |
| psi | POUNDS PER SQUARE INCH |
| psf | POUNDS PER SQUARE FOOT |
| $lb/ft^3$, pcf | POUNDS PER CUBIC FOOT |
| tsf | TONS PER SQUARE FOOT |
| mph, MPH * | MILES PER HOUR |
| ø | NOMINAL DIAMETER |
| oz | OUNCE |
| lb | POUND |
| kip | 1,000 POUNDS |
| cal | CALORIE |
| ft | FOOT OR FEET |
| gal | GALLON |

* For use on a sign panel only

STATE OF CALIFORNIA
DEPARTMENT OF TRANSPORTATION

# ABBREVIATIONS (SHEET 2 OF 2)

NO SCALE

RSP A10B DATED JULY 19, 2013 SUPERSEDES STANDARD PLAN A10B DATED MAY 20, 2011 - PAGE 2 OF THE STANDARD PLANS BOOK DATED 2010.

**REVISED STANDARD PLAN RSP A10B**

**2010 REVISED STANDARD PLAN RSP A10B**

DATE PLOTTED => 09-JAN-2015
TIME PLOTTED => 14:27

| Dist | COUNTY | ROUTE | POST MILES TOTAL PROJECT | SHEET No. | TOTAL SHEETS |
|---|---|---|---|---|---|
| 02 | Sha | 5,273 | R16.2/R19.0 19.7/20.0 | 29 | 48 |

REGISTERED CIVIL ENGINEER

July 19, 2013
PLANS APPROVAL DATE

REGISTERED PROFESSIONAL ENGINEER Roberta L. McLaughlin No. C40375 Exp. 3-31-15 CIVIL STATE OF CALIFORNIA

THE STATE OF CALIFORNIA OR ITS OFFICERS OR AGENTS SHALL NOT BE RESPONSIBLE FOR THE ACCURACY OR COMPLETENESS OF SCANNED COPIES OF THIS PLAN SHEET.

TO ACCOMPANY PLANS DATED 01-08-15

## EXIT RAMP NEUTRAL AREA (GORE) TREATMENT

DETAIL 36

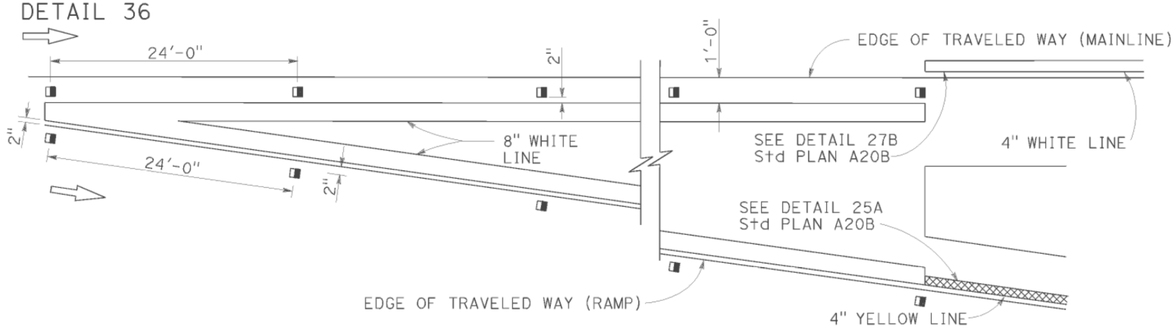


## ENTRANCE RAMP NEUTRAL AREA (MERGE) TREATMENT

DETAIL 36A

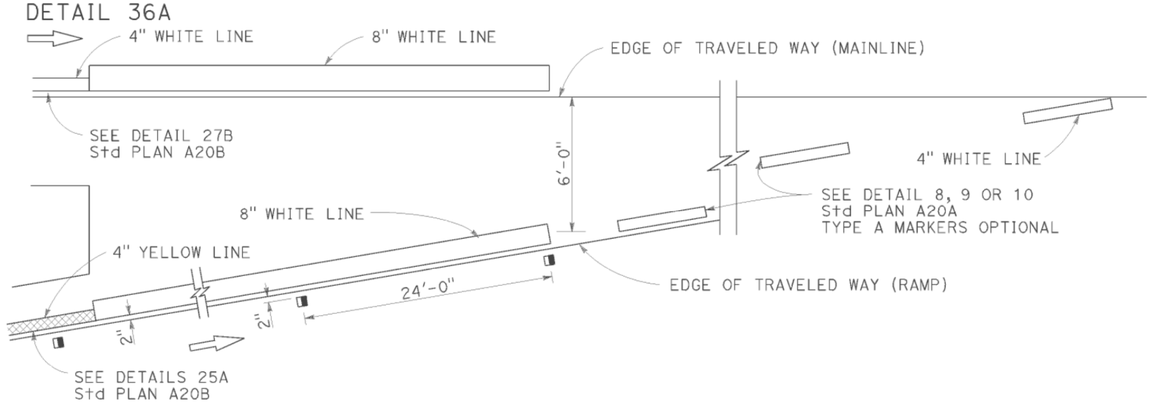


## ENTRANCE RAMP NEUTRAL AREA (ACCELERATION LANE) TREATMENT

DETAIL 36B

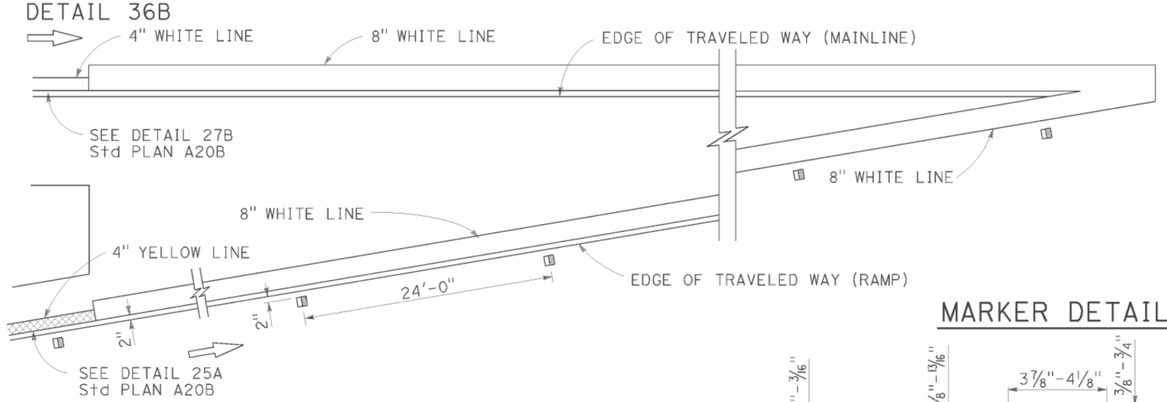


## MARKER DETAILS

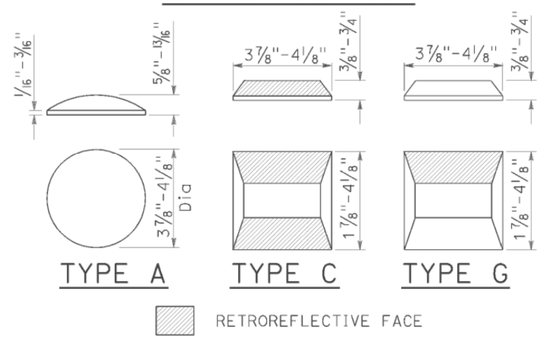


### LEGEND:

MARKERS

- TYPE A WHITE NON-REFLECTIVE
- TYPE C RED-CLEAR RETROREFLECTIVE
- TYPE G ONE-WAY CLEAR RETROREFLECTIVE

## LANE DROP AT EXIT RAMPS

DETAIL 37

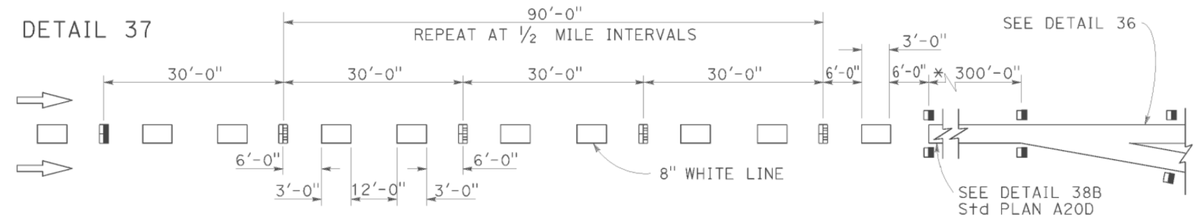


DETAIL 37A

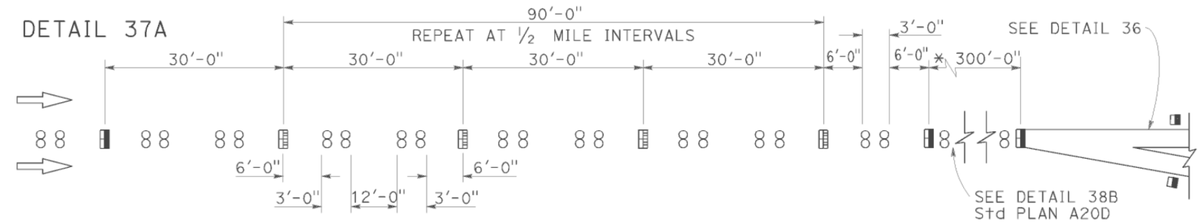


* The solid channelizing line shown may be omitted on short auxiliary lanes where weaving length is critical.

## LANE DROP AT INTERSECTIONS

DETAIL 37B

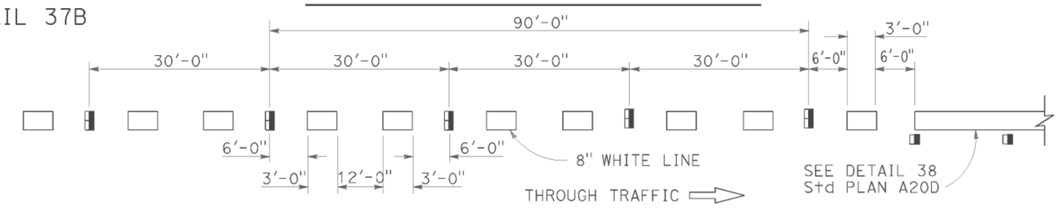


DETAIL 37C

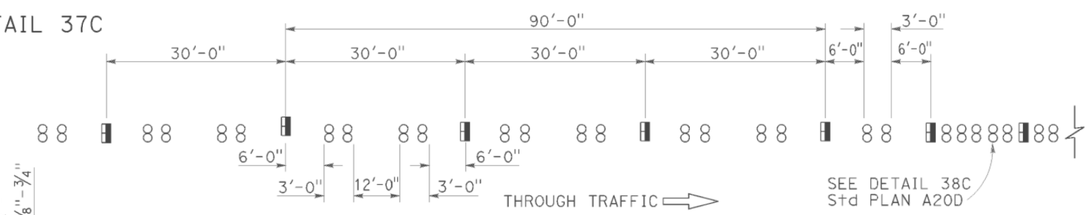


STATE OF CALIFORNIA
DEPARTMENT OF TRANSPORTATION

# PAVEMENT MARKERS AND TRAFFIC LINE TYPICAL DETAILS

NO SCALE

RSP A20C DATED JULY 19, 2013 SUPERSEDES STANDARD PLAN A20C DATED MAY 20, 2011 - PAGE 11 OF THE STANDARD PLANS BOOK DATED 2010.

**REVISED STANDARD PLAN RSP A20C**

**2010 REVISED STANDARD PLAN RSP A20C**

DATE PLOTTED => 09-JAN-2015
TIME PLOTTED => 14:28

| Dist | COUNTY | ROUTE | POST MILES TOTAL PROJECT | SHEET No. | TOTAL SHEETS |
|---|---|---|---|---|---|
| 02 | Sha | 5,273 | R16.2/R19.0 19.7/20.0 | 30 | 48 |

REGISTERED CIVIL ENGINEER

April 20, 2012
PLANS APPROVAL DATE

REGISTERED PROFESSIONAL ENGINEER Roberta L. McLaughlin No. C40375 Exp. 3-31-13 CIVIL STATE OF CALIFORNIA

*THE STATE OF CALIFORNIA OR ITS OFFICERS OR AGENTS SHALL NOT BE RESPONSIBLE FOR THE ACCURACY OR COMPLETENESS OF SCANNED COPIES OF THIS PLAN SHEET.*

TO ACCOMPANY PLANS DATED 01-08-15

**2010 REVISED STANDARD PLAN RSP A24A**

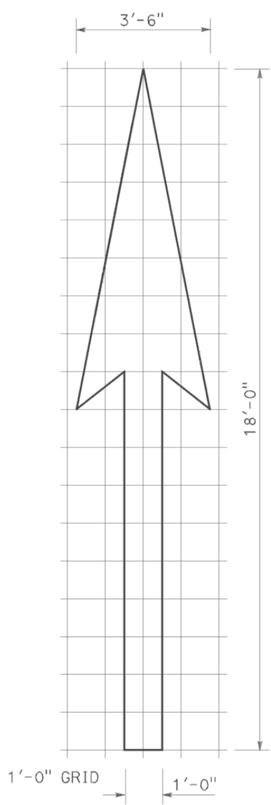


A=25 ft$^2$

TYPE I 18'-0" ARROW

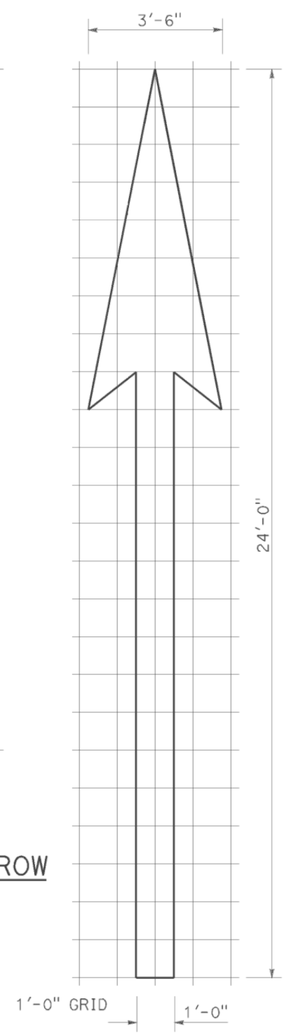


A=31 ft$^2$

TYPE I 24'-0" ARROW

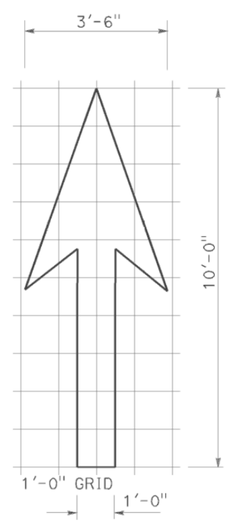


A=14 ft$^2$

TYPE I 10'-0" ARROW

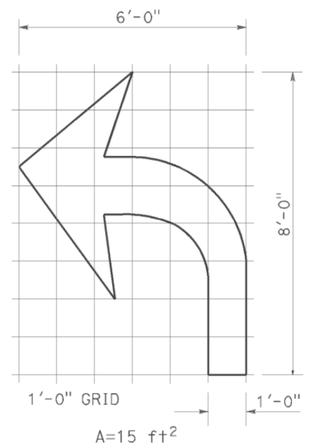


A=15 ft$^2$

TYPE IV (L) ARROW

(For Type IV (R) arrow, use mirror image)

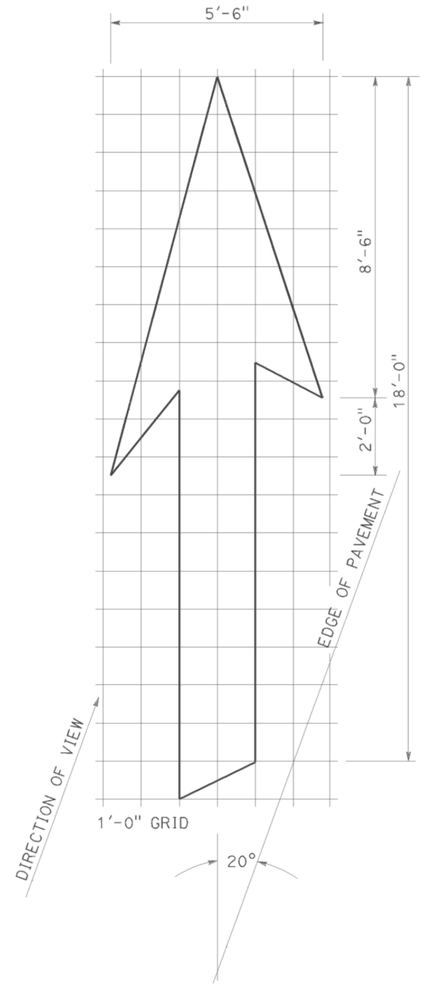


A=42 ft$^2$

TYPE VI ARROW

Right lane drop arrow (For left lane, use mirror image)

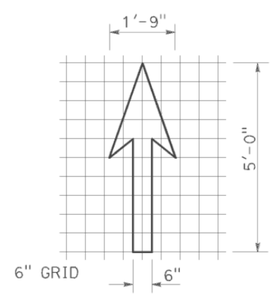


A=3.5 ft$^2$

BIKE LANE ARROW

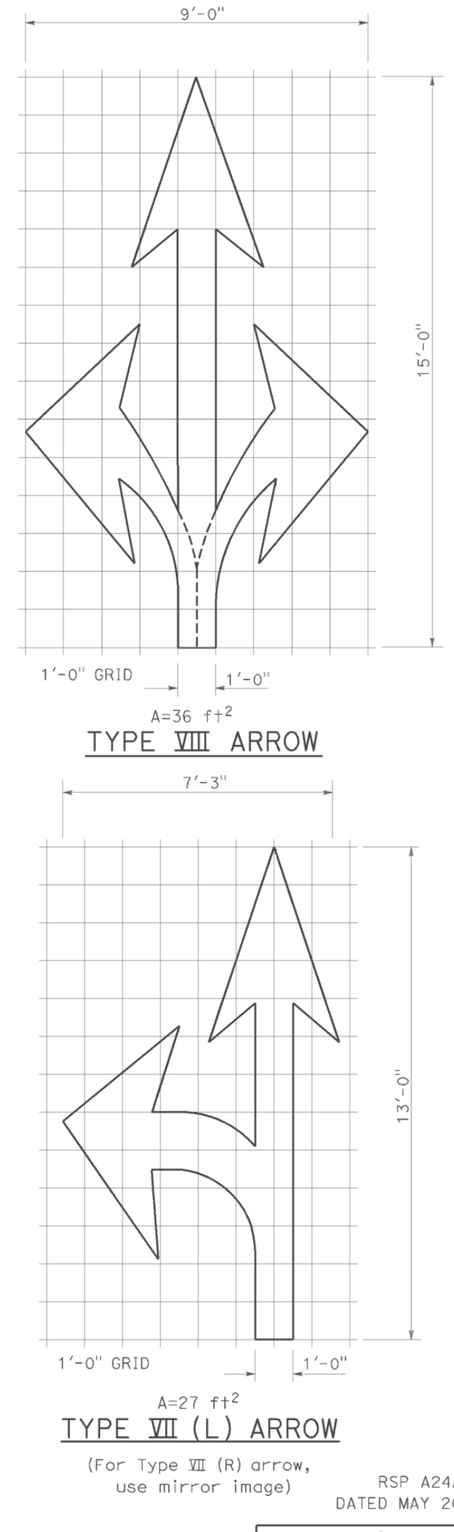


A=36 ft$^2$

TYPE VIII ARROW




A=27 ft$^2$

TYPE VII (L) ARROW

(For Type VII (R) arrow, use mirror image)

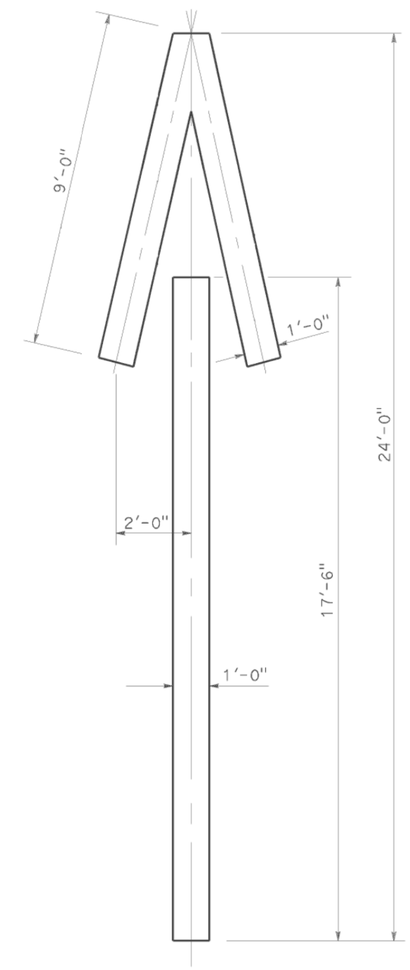


A=33 ft$^2$

TYPE V ARROW

NOTE:
Minor variations in dimensions may be accepted by the Engineer.

STATE OF CALIFORNIA
DEPARTMENT OF TRANSPORTATION

# PAVEMENT MARKINGS ARROWS

NO SCALE

RSP A24A DATED APRIL 20, 2012 SUPERSEDES STANDARD PLAN A24A DATED MAY 20, 2011 - PAGE 13 OF THE STANDARD PLANS BOOK DATED 2010.

**REVISED STANDARD PLAN RSP A24A**

DATE PLOTTED => 09-JAN-2015
TIME PLOTTED => 14:28

| Dist | COUNTY | ROUTE | POST MILES TOTAL PROJECT | SHEET No. | TOTAL SHEETS |
|---|---|---|---|---|---|
| 02 | Sha | 5,273 | R16.2/R19.0 19.7/20.0 | 31 | 48 |

REGISTERED CIVIL ENGINEER

July 20, 2012
PLANS APPROVAL DATE

REGISTERED PROFESSIONAL ENGINEER
Roberta L. McLaughlin
No. C40375
Exp. 3-31-13
CIVIL
STATE OF CALIFORNIA

*THE STATE OF CALIFORNIA OR ITS OFFICERS OR AGENTS SHALL NOT BE RESPONSIBLE FOR THE ACCURACY OR COMPLETENESS OF SCANNED COPIES OF THIS PLAN SHEET.*

TO ACCOMPANY PLANS DATED 01-08-15

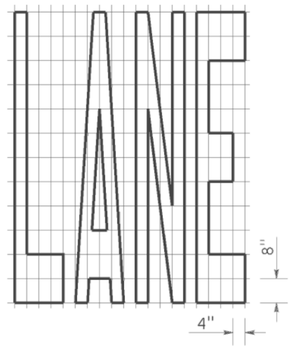


A=24 ft$^2$

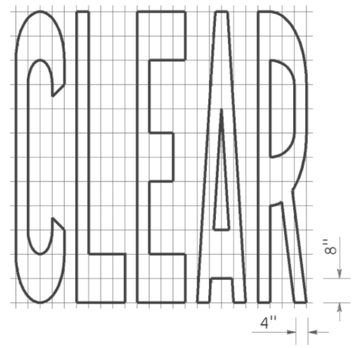


A=27 ft$^2$

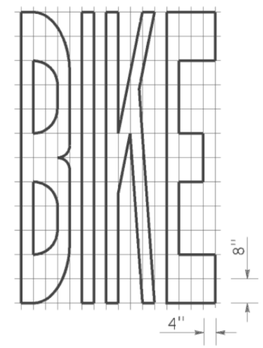


A=21 ft$^2$

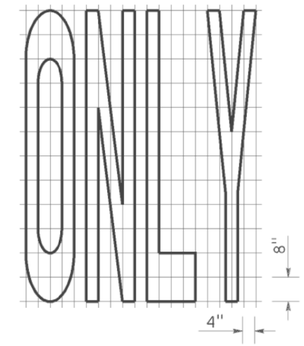


A=22 ft$^2$

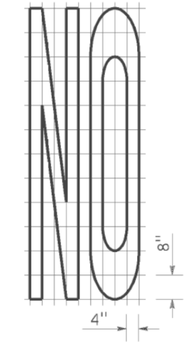


A=14 ft$^2$

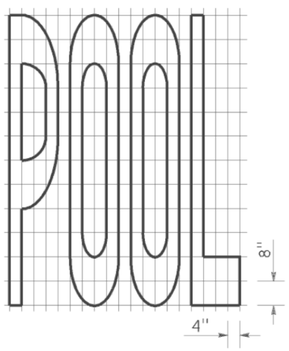


A=23 ft$^2$

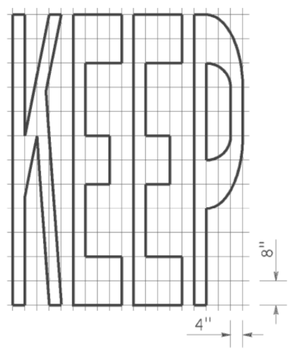


A=24 ft$^2$

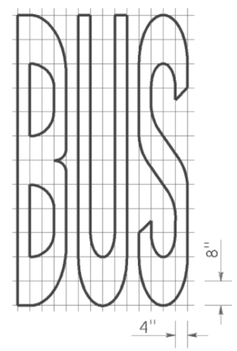


A=20 ft$^2$

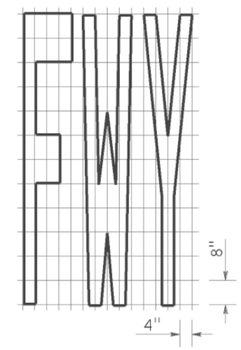


A=16 ft$^2$

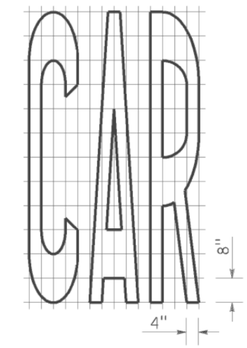


A=17 ft$^2$

| WORD MARKINGS | | | |
|---|---|---|---|
| ITEM | ft$^2$ | ITEM | ft$^2$ |
| LANE | 24 | NO | 14 |
| POOL | 23 | BIKE | 21 |
| CAR | 17 | BUS | 20 |
| CLEAR | 27 | ONLY | 22 |
| KEEP | 24 | FWY | 16 |

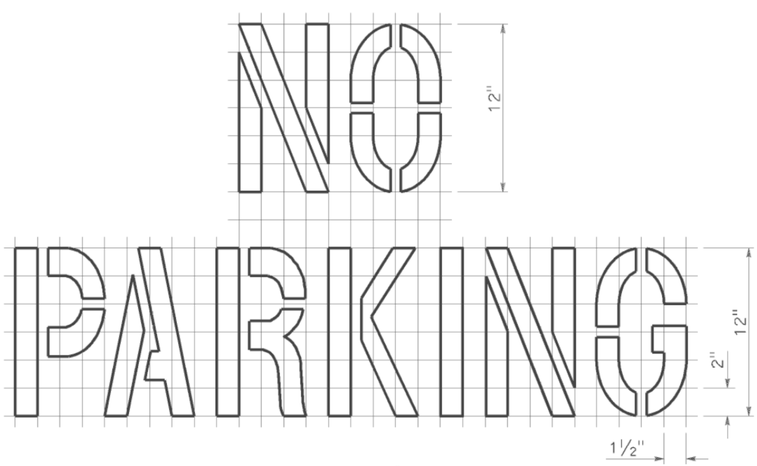


A=2 ft$^2$
See Notes 6 and 7

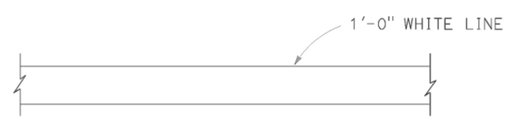


LIMIT LINE (STOP LINE)

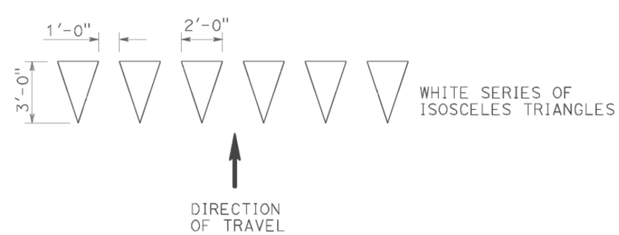


YIELD LINE

NOTES:

1. If a message consists of more than one word, it should read "UP", i.e., the first word should be nearest the driver.
2. The space between words should be at least four times the height of the characters for low speed roads, but not more than ten times the height of the characters. The space may be reduced appropriately where there is limited space because of local conditions.
3. Minor variations in dimensions may be accepted by the Engineer.
4. Portions of a letter, number or symbol may be separated by connecting segments not to exceed 2" in width.
5. The words "NO PARKING" pavement marking is to be used for parking facilities. For typical locations of markings, see Standard Plans A90A and A90B.
6. The words "NO PARKING", shall be painted in white letters no less than 1'-0" high on a contrasting background and located so that it is visible to traffic enforcement officials.

STATE OF CALIFORNIA
DEPARTMENT OF TRANSPORTATION

# PAVEMENT MARKINGS WORDS, LIMIT AND YIELD LINES

NO SCALE

RSP A24E DATED JULY 20, 2012 SUPERSEDES STANDARD PLAN A24E
DATED MAY 20, 2011 - PAGE 17 OF THE STANDARD PLANS BOOK DATED 2010.

**REVISED STANDARD PLAN RSP A24E**

**2010 REVISED STANDARD PLAN RSP A24E**

DATE PLOTTED => 09-JAN-2015
TIME PLOTTED => 14:28

| Dist | COUNTY | ROUTE | POST MILES TOTAL PROJECT | SHEET No. | TOTAL SHEETS |
|---|---|---|---|---|---|
| 02 | Sha | 5,273 | R16.2/R19.0 19.7/20.0 | 32 | 48 |

REGISTERED CIVIL ENGINEER

July 20, 2012
PLANS APPROVAL DATE

REGISTERED PROFESSIONAL ENGINEER Roberta L. McLaughlin No. C40375 Exp. 3-31-13 CIVIL STATE OF CALIFORNIA

*THE STATE OF CALIFORNIA OR ITS OFFICERS OR AGENTS SHALL NOT BE RESPONSIBLE FOR THE ACCURACY OR COMPLETENESS OF SCANNED COPIES OF THIS PLAN SHEET.*

TO ACCOMPANY PLANS DATED 01-08-15

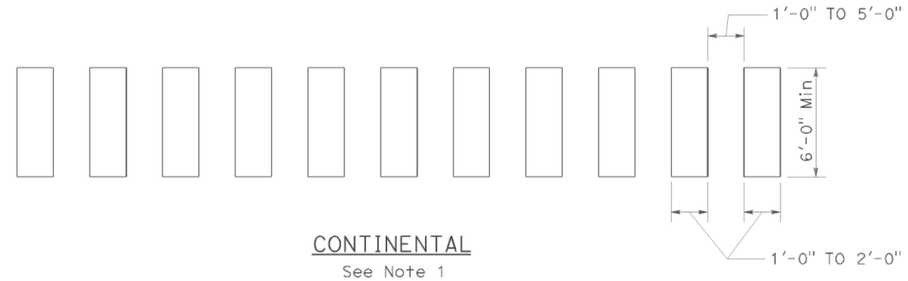


CONTINENTAL
See Note 1

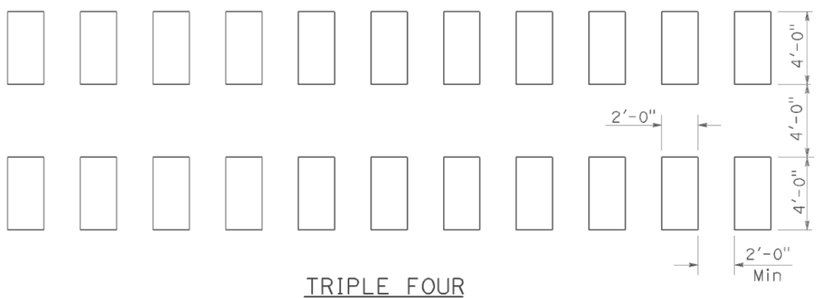


TRIPLE FOUR
See Note 1

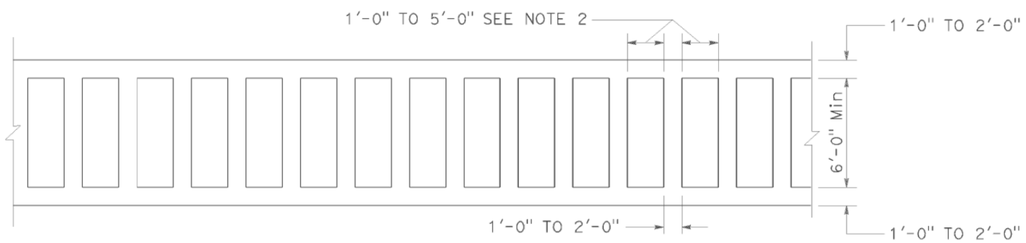


LADDER

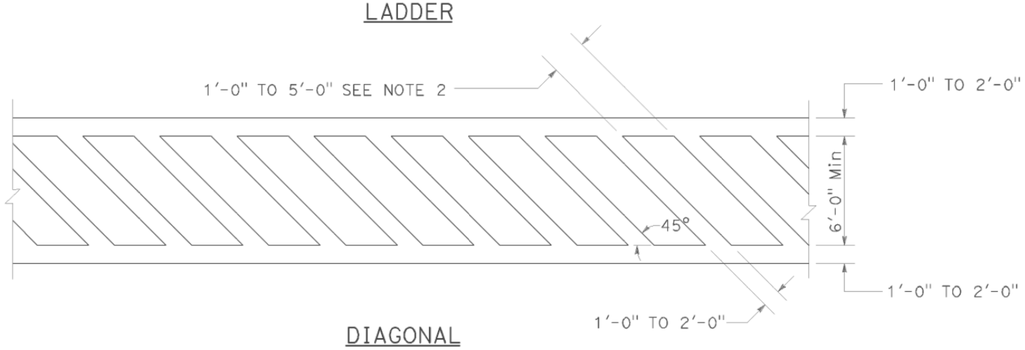


DIAGONAL

HIGHER VISIBILITY CROSSWALKS

NOTES:

1. Spaces between markings should be placed in wheel tracks of each lane.
2. Spacings not to exceed 2.5 times width of longitudinal line.
3. All crosswalk markings must be white except for those near schools must be yellow.

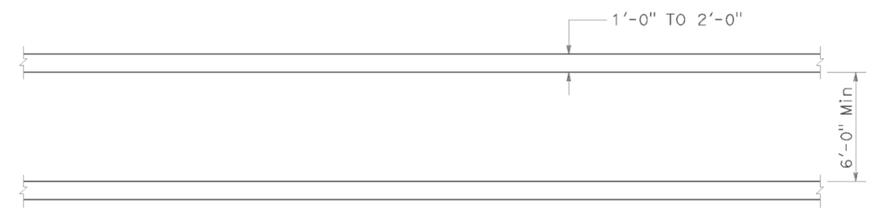


BASIC

STATE OF CALIFORNIA
DEPARTMENT OF TRANSPORTATION

# PAVEMENT MARKINGS CROSSWALKS

NO SCALE

RSP A24F DATED JULY 20, 2012 SUPPLEMENTS THE STANDARD PLANS BOOK DATED 2010.

**REVISED STANDARD PLAN RSP A24F**

**2010 REVISED STANDARD PLAN RSP A24F**

DATE PLOTTED => 09-JAN-2015
TIME PLOTTED => 14:28

| Dist | COUNTY | ROUTE | POST MILES TOTAL PROJECT | SHEET No. | TOTAL SHEETS |
|---|---|---|---|---|---|
| 02 | Sha | 5,273 | R16.2/R19.0 19.7/20.0 | 33 | 48 |

Randell D. Hiatt
REGISTERED CIVIL ENGINEER

July 19, 2013
PLANS APPROVAL DATE

REGISTERED PROFESSIONAL ENGINEER Randell D. Hiatt No. C50200 Exp. 6-30-15 CIVIL STATE OF CALIFORNIA

*THE STATE OF CALIFORNIA OR ITS OFFICERS OR AGENTS SHALL NOT BE RESPONSIBLE FOR THE ACCURACY OR COMPLETENESS OF SCANNED COPIES OF THIS PLAN SHEET.*

TO ACCOMPANY PLANS DATED 01-08-15

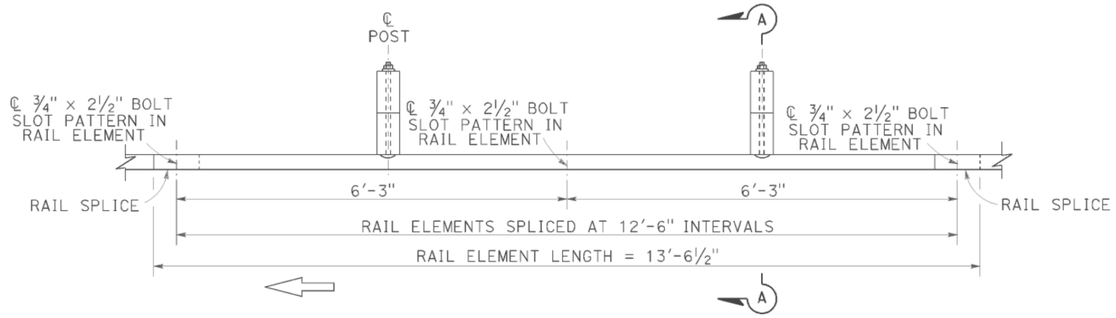


PLAN

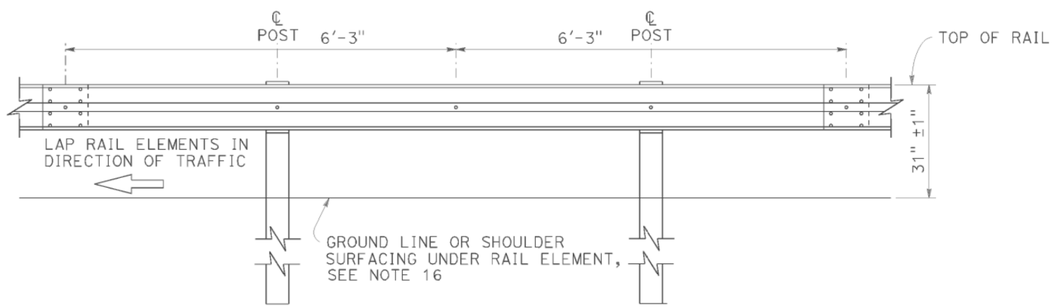


ELEVATION

## MIDWEST GUARDRAIL SYSTEM WITH WOOD POST AND BLOCKS

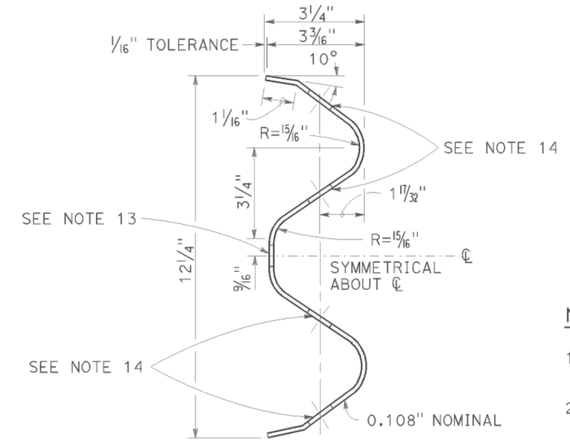


SECTION THRU RAIL ELEMENT

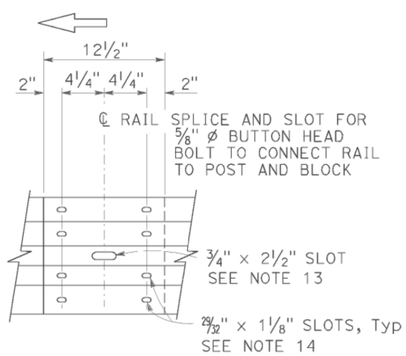


ELEVATION

## RAIL ELEMENT SPLICE DETAIL

a) Connect the over lapped end of the rail elements with ⅝" ø × 1⅜" button head oval shoulder splice bolts inserted into the 29/32" × 1⅛" slots and bolted together with ⅝" ø recessed hex nuts. Recess of hex nut points toward rail element. A total of 8 bolts and nuts are to be used at each rail splice connection.

b) The ends of the rail elements are to be overlapped in the direction of traffic (see details).

c) Where end cap is to be attached to the end of a rail element, a total of 4 of the above described splice bolts and nuts are to be used.

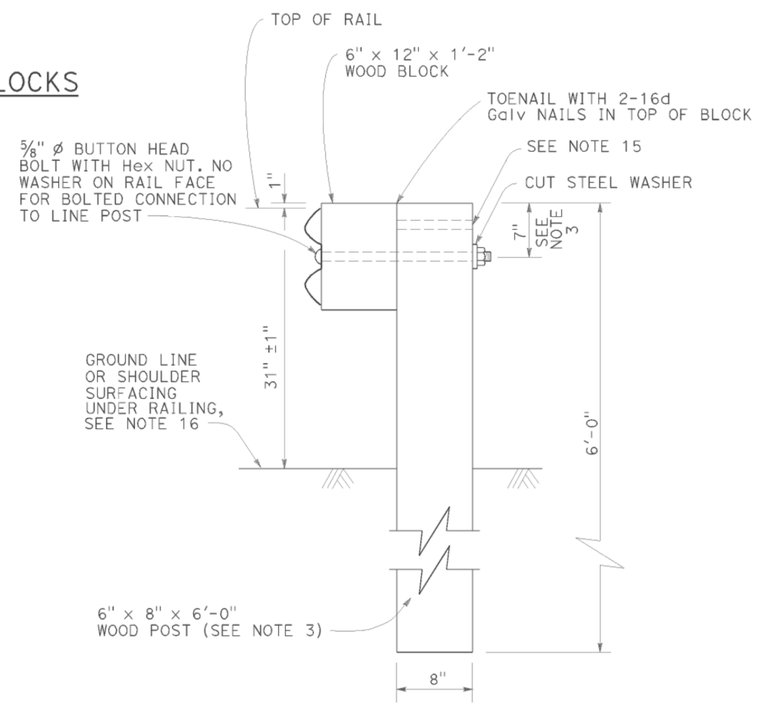


SECTION A-A

TYPICAL WOOD LINE POST INSTALLATION

See Note 4

## NOTES:

1. For details of steel post installations, see Revised Standard Plan RSP A77L2.
2. For details of standard hardware used to construct MGS, see Revised Standard Plan RSP A77M1.
3. For details of wood posts and wood blocks used to construct MGS, see Revised Standard Plan RSP A77N1.
4. For additional installation details, see Revised Standard Plan RSP A77N3.
5. MGS post spacing to be 6'-3" center to center, except as otherwise noted.
6. For MGS typical layouts, see the A77P, A77Q and A77R Series of Standard Plans.
7. If railing is connected to terminal system end treatment, use 31" height terminal system end treatment.
8. For MGS end anchor details, see Revised Standard Plans RSP A77S1 and RSP A77T2.
9. For details of MGS transition to bridge railing, see Revised Standard Plan RSP A77U4.
10. For additional details of MSG connection to bridge railing, see Revised Standard Plans RSP A77U1, RSP A77U2 and RSP A77V1.
11. For MGS connection details to abutments and walls, see Revised Standard Plan RSP A77U3.
12. For typical MGS delineation and dike positioning details, see Revised Standard Plan RSP A77N4.
13. Slotted hole for bolted connection of rail element to block and post. See "Section Thru Rail Element".
14. Slotted holes for splice bolts to overlap ends of rail element. See "Section Thru Rail Element".
15. Additional hole in uppermost portion of line post is for potential future adjustments of railing height. See Revised Standard Plan RSP A77N1.
16. Install posts in soil.

STATE OF CALIFORNIA
DEPARTMENT OF TRANSPORTATION

# MIDWEST GUARDRAIL SYSTEM STANDARD RAILING SECTION (WOOD POST WITH WOOD BLOCK)

NO SCALE

RSP A77L1 DATED JULY 19, 2013 SUPPLEMENTS STANDARD PLANS BOOK DATED 2010.

**REVISED STANDARD PLAN RSP A77L1**

**2010 REVISED STANDARD PLAN RSP A77L1**

DATE PLOTTED => 09-JAN-2015
TIME PLOTTED => 14:28

| Dist | COUNTY | ROUTE | POST MILES TOTAL PROJECT | SHEET No. | TOTAL SHEETS |
|---|---|---|---|---|---|
| 02 | Sha | 5,273 | R16.2/R19.0 19.7/20.0 | 34 | 48 |

Randell D. Hiatt
REGISTERED CIVIL ENGINEER

July 19, 2013
PLANS APPROVAL DATE

REGISTERED PROFESSIONAL ENGINEER
Randell D. Hiatt
No. C50200
Exp. 6-30-15
CIVIL
STATE OF CALIFORNIA

*THE STATE OF CALIFORNIA OR ITS OFFICERS OR AGENTS SHALL NOT BE RESPONSIBLE FOR THE ACCURACY OR COMPLETENESS OF SCANNED COPIES OF THIS PLAN SHEET.*

TO ACCOMPANY PLANS DATED 01-08-15

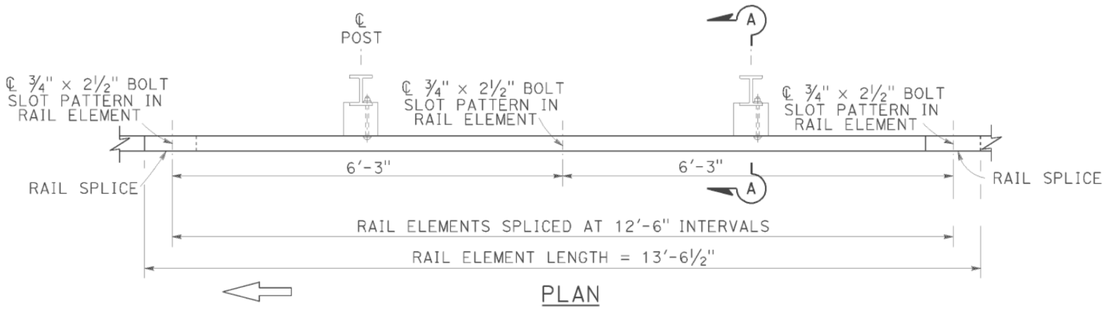


PLAN

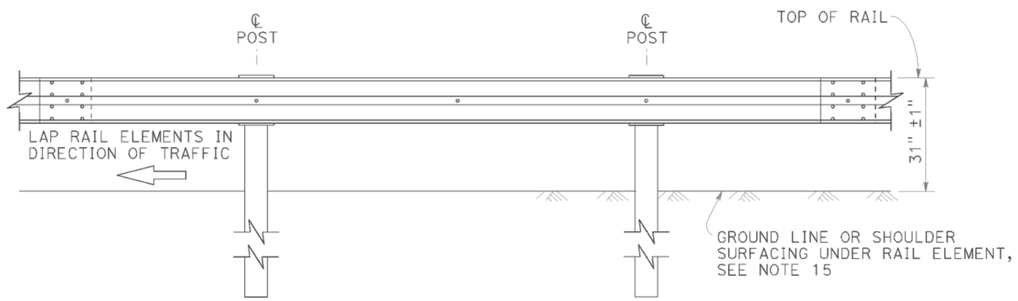


ELEVATION

## MIDWEST GUARDRAIL SYSTEM WITH STEEL POSTS AND NOTCHED WOOD OR NOTCHED RECYCLED PLASTIC BLOCKS

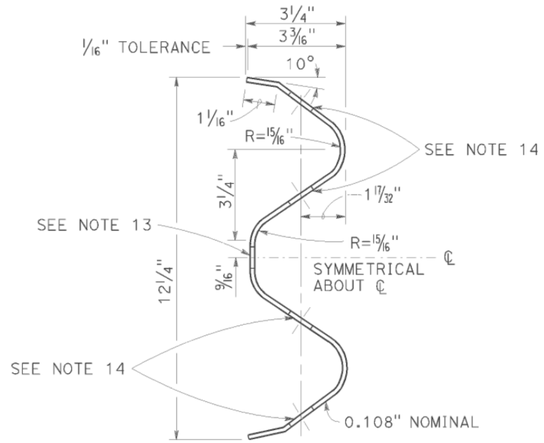


SECTION THRU RAIL ELEMENT

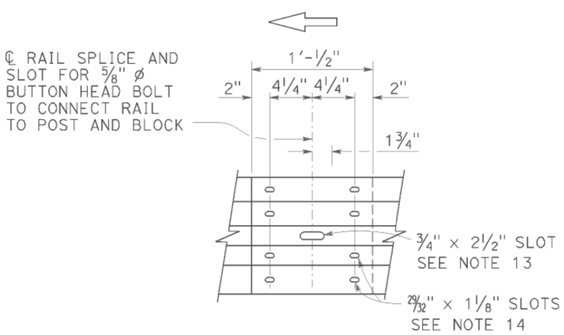


ELEVATION

## RAIL ELEMENT SPLICE DETAIL

a) Connect the over lapped end of the rail elements with 5/8" ø × 1⅜" button head oval shoulder splice bolts inserted into the 29/32" × 1⅛" slots and bolted together with 5/8" ø recessed hex nuts. Recess of hex nut points toward rail element. A total of 8 bolts and nuts are to be used at each rail splice connection.

b) The ends of the rail elements are to be overlapped in the direction of traffic (see details).

c) Where end cap is to be attached to the end of a rail element, a total of 4 of the above described splice bolts and nuts are to be used.

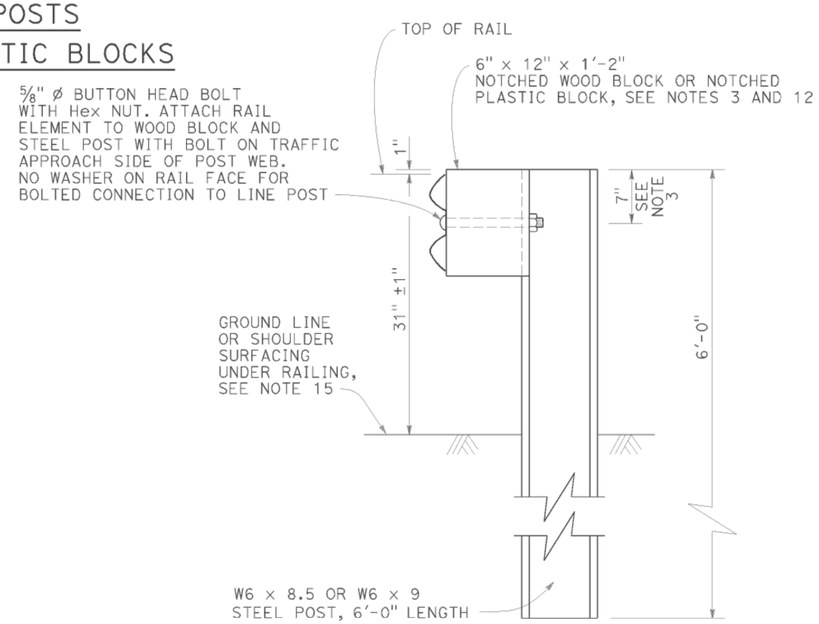


SECTION A-A

## TYPICAL STEEL LINE POST INSTALLATION

See Note 4

NOTES:

1. For details of wood post installations, see Revised Standard Plan RSP A77L1.
2. For details of standard hardware used to construct MGS, see Revised Standard Plan RSP A77M1.
3. For details of steel posts and notched wood blocks used to construct MGS, see Revised Standard Plan RSP A77N2.
4. For additional installation details, see Revised Standard Plan RSP A77N3.
5. MGS post spacing to be 6'-3" center to center, except as otherwise noted.
6. For MGS typical layouts, see the A77P, A77Q and A77R Series of Standard Plans.
7. If railing is connected to terminal system end treatment, use 31" height terminal system end treatment.
8. For MGS end anchor details, see Revised Standard Plans RSP A77S1 and RSP A77T2.
9. For details of MGS transition to bridge railing, see Revised Standard Plan RSP A77U4.
10. For additional details of MGS connection to bridge railings, see Revised Standard Plans RSP A77U1, RSP A77U2 and RSP A77V1.
11. For dike positioning and MGS delineation details, see Revised Standard Plan RSP A77N4.
12. Notched face of block faces steel post.
13. Slotted hole for bolted connection of rail element to block and post. See "Section Thru Rail Element".
14. Slotted holes for splice bolts to overlap ends of rail element. See "Section Thru Rail Element".
15. Install posts in soil.

STATE OF CALIFORNIA
DEPARTMENT OF TRANSPORTATION

# MIDWEST GUARDRAIL SYSTEM STANDARD RAILING SECTION (STEEL POST WITH NOTCHED WOOD OR NOTCHED RECYCLED PLASTIC BLOCK)

NO SCALE

RSP A77L2 DATED JULY 19, 2013 SUPPLEMENTS THE STANDARD PLANS BOOK DATED 2010.

**REVISED STANDARD PLAN RSP A77L2**

**2010 REVISED STANDARD PLAN RSP A77L2**

DATE PLOTTED => 09-JAN-2015
TIME PLOTTED => 14:28

| Dist | COUNTY | ROUTE | POST MILES TOTAL PROJECT | SHEET No. | TOTAL SHEETS |
|---|---|---|---|---|---|
| 02 | Sha | 5,273 | R16.2/R19.0 19.7/20.0 | 35 | 48 |

Randell D. Hiatt
REGISTERED CIVIL ENGINEER

July 19, 2013
PLANS APPROVAL DATE

REGISTERED PROFESSIONAL ENGINEER
Randell D. Hiatt
No. C50200
Exp. 6-30-15
CIVIL
STATE OF CALIFORNIA

*THE STATE OF CALIFORNIA OR ITS OFFICERS OR AGENTS SHALL NOT BE RESPONSIBLE FOR THE ACCURACY OR COMPLETENESS OF SCANNED COPIES OF THIS PLAN SHEET.*

TO ACCOMPANY PLANS DATED 01-08-15

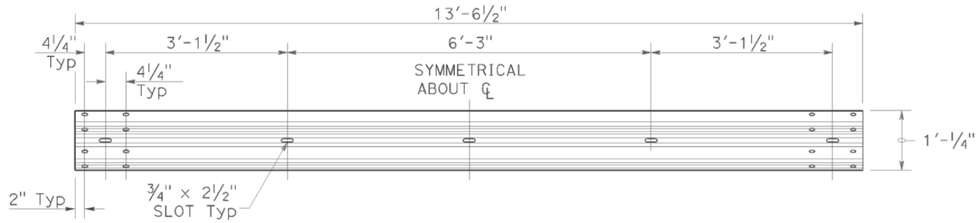


TYPICAL RAIL ELEMENT

NOTE:

1. Slotted holes for splice bolts to overlap ends of rail element.

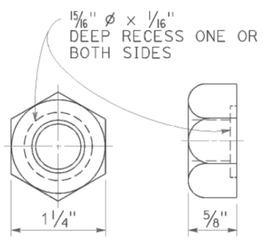


⅝" ø RECESS NUT

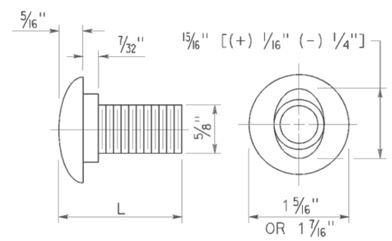


⅝" ø BUTTON HEAD BOLT

BUTTON HEAD BOLT

| L | THREAD LENGTH |
|---|---|
| 1⅜" | FULL THREAD LENGTH |
| 2" | FULL THREAD LENGTH |
| 10" | 4" Min THREAD LENGTH |
| 18" | 4" Min THREAD LENGTH |
| 20" | 4" Min THREAD LENGTH |
| 22" | 4" Min THREAD LENGTH |
| 26" | 4" Min THREAD LENGTH |
| 36" | 4" Min THREAD LENGTH |
| ** 2¾" | 2" Min THREAD LENGTH |
| ** 19" | 4" Min THREAD LENGTH |

** For nested rail applications.

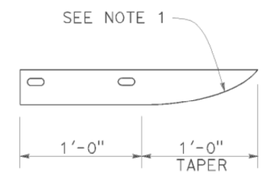


PLAN

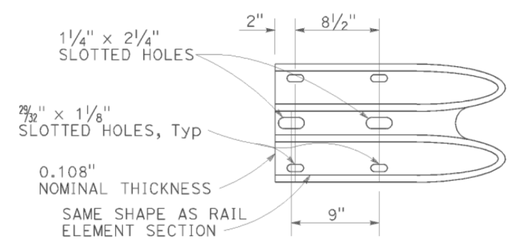


ELEVATION

END CAP
(TYPE A)

STATE OF CALIFORNIA
DEPARTMENT OF TRANSPORTATION

# MIDWEST GUARDRAIL SYSTEM STANDARD HARDWARE

NO SCALE

RSP A77M1 DATED JULY 19, 2013 SUPPLEMENTS THE STANDARD PLANS BOOK DATED 2010.

**REVISED STANDARD PLAN RSP A77M1**

**2010 REVISED STANDARD PLAN RSP A77M1**

DATE PLOTTED => 09-JAN-2015
TIME PLOTTED => 14:28

| Dist | COUNTY | ROUTE | POST MILES TOTAL PROJECT | SHEET No. | TOTAL SHEETS |
|---|---|---|---|---|---|
| 02 | Sha | 5,273 | R16.2/R19.0 19.7/20.0 | 36 | 48 |

Randell D. Hiatt
REGISTERED CIVIL ENGINEER

July 19, 2013
PLANS APPROVAL DATE

REGISTERED PROFESSIONAL ENGINEER
Randell D. Hiatt
No. C50200
Exp. 6-30-15
CIVIL
STATE OF CALIFORNIA

*THE STATE OF CALIFORNIA OR ITS OFFICERS OR AGENTS SHALL NOT BE RESPONSIBLE FOR THE ACCURACY OR COMPLETENESS OF SCANNED COPIES OF THIS PLAN SHEET.*

TO ACCOMPANY PLANS DATED 01-08-15

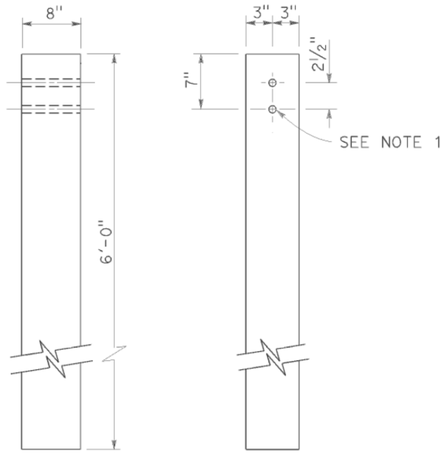


SIDE FRONT

6" x 8" WOOD POST
See Note 3

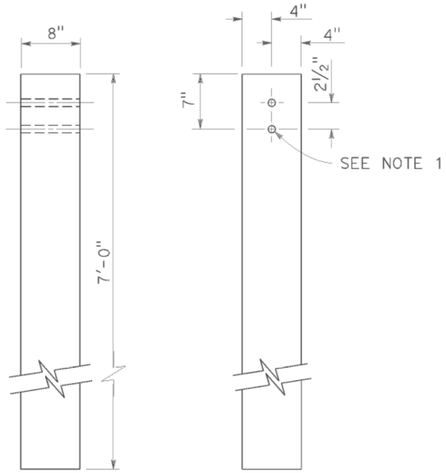


SIDE FRONT

8" x 8" WOOD POST
See Note 4

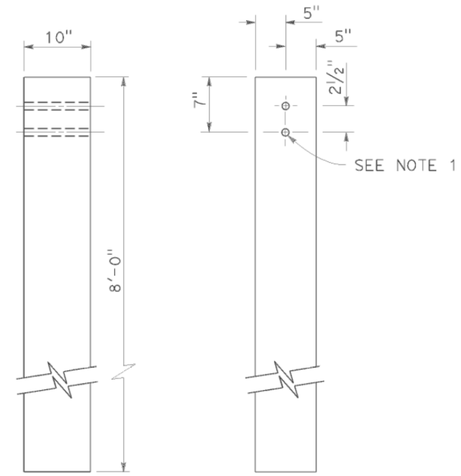


SIDE FRONT

10" x 10" WOOD POST
See Note 5

## NOTES:

1. All holes in wood posts and blocks shall be ¾" Dia ± 1/16".
2. Dimensions shown for wood post are nominal.
3. This post and block combination used for standard line post sections of MGS.
4. This post and 8" x 12" block combination used for line post sections of MGS on narrow roadways.
5. This post and 8" x 12" block combination is typically used where strengthened line post sections of MGS are warranted to shield fixed objects.
6. See Revised Standard Plan RSP A77L3 for use of 6" x 8" and 8" x 8" wood blocks.

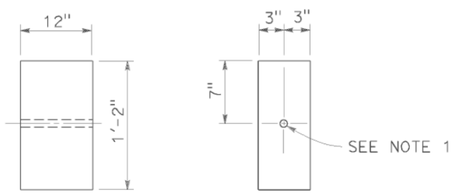


SIDE FRONT

6" x 12" WOOD BLOCK
See Note 3

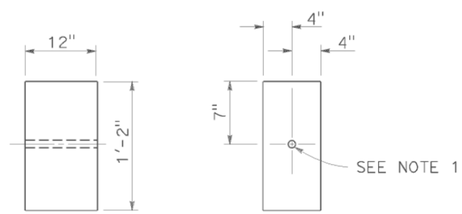


SIDE FRONT

8" x 12" WOOD BLOCK

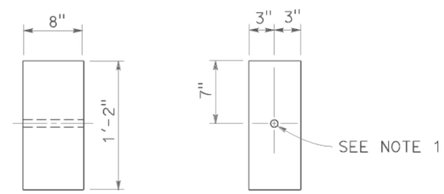


SIDE FRONT

6" x 8" WOOD BLOCK
Only for use with metal beam guard rail see Note 6

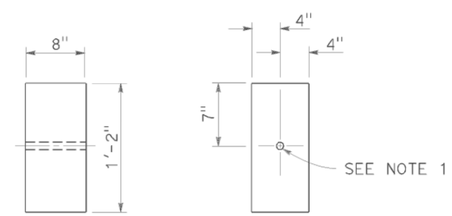


SIDE FRONT

8" x 8" WOOD BLOCK
Only for use with metal beam guard rail see Note 6

STATE OF CALIFORNIA
DEPARTMENT OF TRANSPORTATION

# MIDWEST GUARDRAIL SYSTEM WOOD POST AND WOOD BLOCK DETAILS

NO SCALE

RSP A77N1 DATED JULY 19, 2013 SUPPLEMENTS THE STANDARD PLANS BOOK DATED 2010.

**REVISED STANDARD PLAN RSP A77N1**

**2010 REVISED STANDARD PLAN RSP A77N1**

DATE PLOTTED => 09-JAN-2015
TIME PLOTTED => 14:28

| Dist | COUNTY | ROUTE | POST MILES TOTAL PROJECT | SHEET No. | TOTAL SHEETS |
|---|---|---|---|---|---|
| 02 | Sha | 5,273 | R16.2/R19.0 19.7/20.0 | 37 | 48 |

Randell D. Hiatt
REGISTERED CIVIL ENGINEER

November 15, 2013
PLANS APPROVAL DATE

REGISTERED PROFESSIONAL ENGINEER
Randell D. Hiatt
No. C50200
Exp. 6-30-15
CIVIL
STATE OF CALIFORNIA

*THE STATE OF CALIFORNIA OR ITS OFFICERS OR AGENTS SHALL NOT BE RESPONSIBLE FOR THE ACCURACY OR COMPLETENESS OF SCANNED COPIES OF THIS PLAN SHEET.*

TO ACCOMPANY PLANS DATED 01-08-15

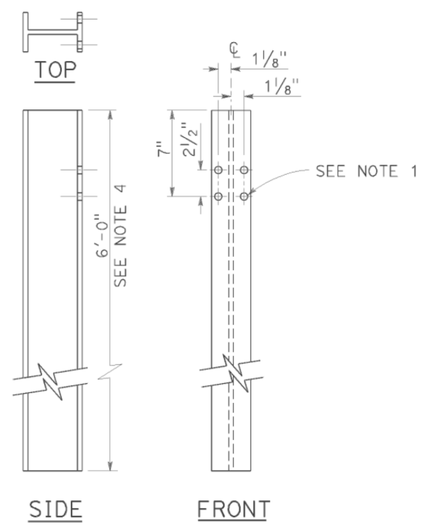


W6 x 9 OR W6 x 8.5
STEEL POST
See Note 4

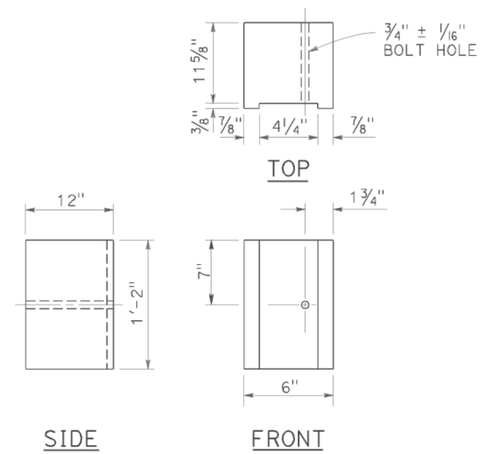


6" x 12"
NOTCHED WOOD BLOCK
See Notes 2 and 3

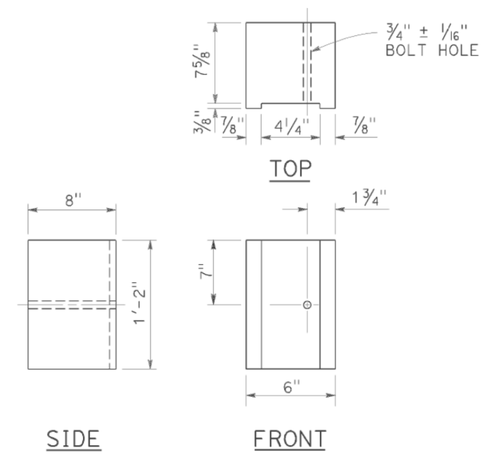


6" x 8"
NOTCHED WOOD BLOCK
Only for use with metal beam guard railing. See Note 5

## NOTES:

1. All holes in steel post shall be 13/16" Dia maximum.
2. Dimensions shown for wood block are nominal.
3. Notched face of block faces steel post.
4. 6'-0" length posts to be used for typical roadway installation. See Revised Standard Plan RSP A77N3.
5. See Revised Standard Plan RSP A77L3 for use of 6" x 8" and 8" x 8" notched wood blocks.
6. This post and 8" x 12" block combination to be used for line post sections of MGS on narrow roadways and where strengthened line post sections of MGS are warranted to shield fixed objects.

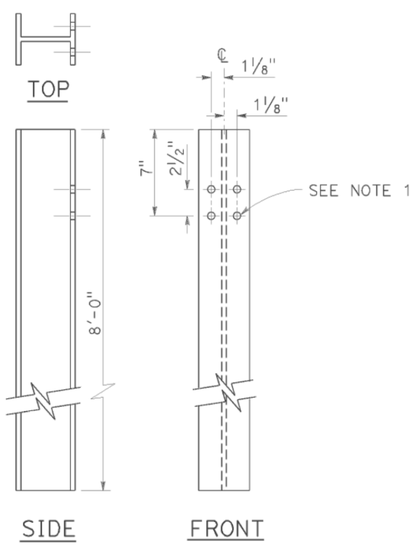


W6 x 15
STEEL POST
See Note 6

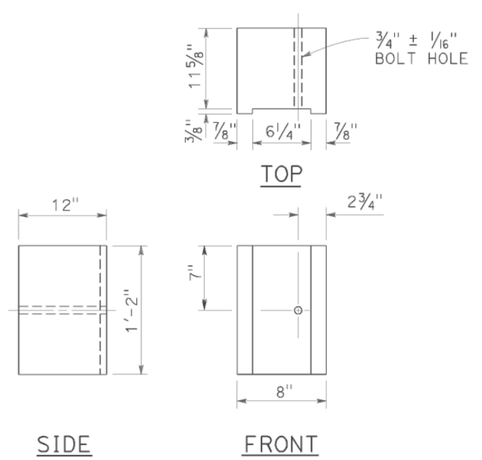


8" x 12"
NOTCHED WOOD BLOCK
See Notes 2 and 3

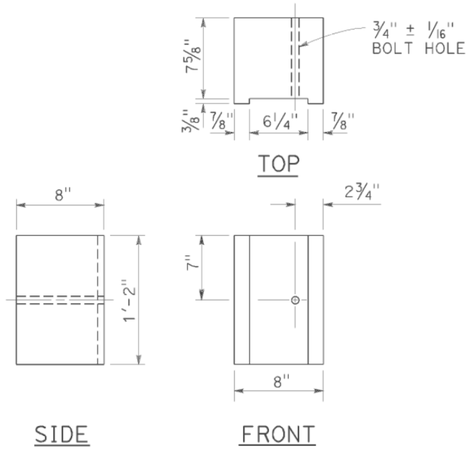


8" x 8"
NOTCHED WOOD BLOCK
Only for use with metal beam guard railing. See Note 5

STATE OF CALIFORNIA
DEPARTMENT OF TRANSPORTATION

# MIDWEST GUARDRAIL SYSTEM STEEL POST AND NOTCHED WOOD BLOCK DETAILS

NO SCALE

RSP A77N2 DATED NOVEMBER 15, 2013 SUPERSEDES RSP A77N2
DATED JULY 19, 2013 THAT SUPPLEMENTS THE STANDARD PLANS BOOK DATED 2010.

**REVISED STANDARD PLAN RSP A77N2**

**2010 REVISED STANDARD PLAN RSP A77N2**

DATE PLOTTED => 09-JAN-2015
TIME PLOTTED => 14:29

| Dist | COUNTY | ROUTE | POST MILES TOTAL PROJECT | SHEET No. | TOTAL SHEETS |
|---|---|---|---|---|---|
| 02 | Sha | 5,273 | R16.2/R19.0 19.7/20.0 | 38 | 48 |

REGISTERED CIVIL ENGINEER

July 19, 2013
PLANS APPROVAL DATE

REGISTERED PROFESSIONAL ENGINEER
Michael Janzen
No. 44788
Exp. 03-31-14
CIVIL
STATE OF CALIFORNIA

*THE STATE OF CALIFORNIA OR ITS OFFICERS OR AGENTS SHALL NOT BE RESPONSIBLE FOR THE ACCURACY OR COMPLETENESS OF SCANNED COPIES OF THIS PLAN SHEET.*

TO ACCOMPANY PLANS DATED 01-08-15

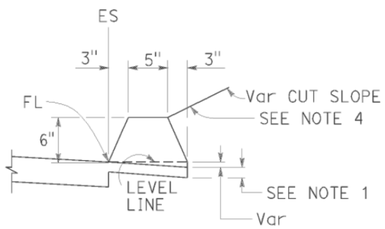


TYPE A
See Note 3

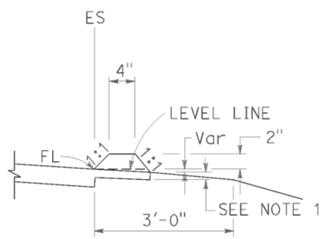


TYPE C

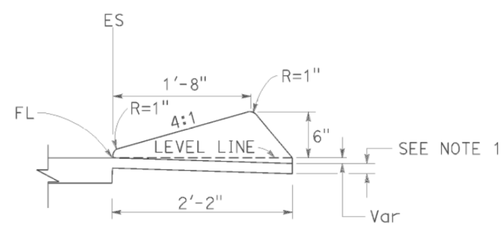


TYPE D

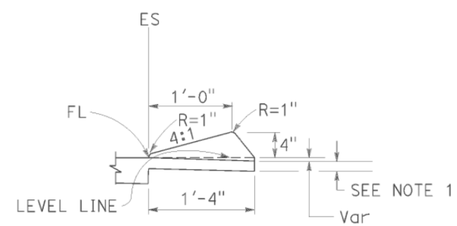


TYPE E

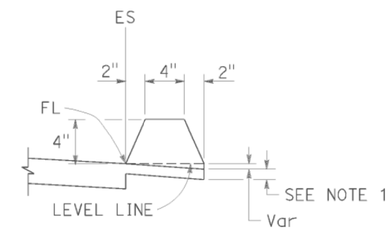


TYPE F
See Note 5

## DIKES

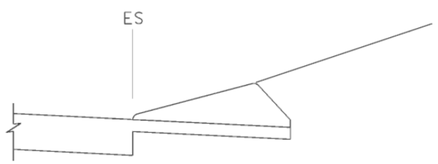


CASE C-1
Cut Slope

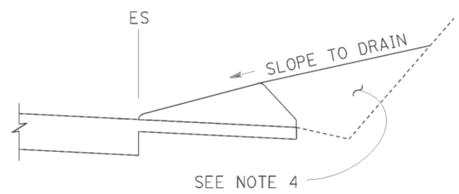


CASE C-2
Cut Slope

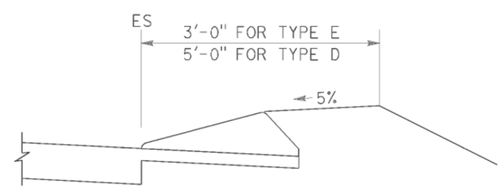


CASE F

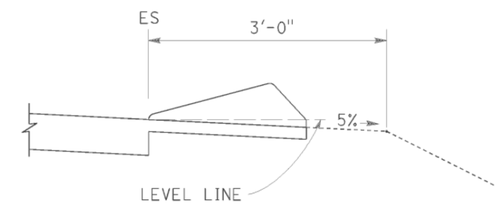


CASE R
See Note 2

## TYPE D AND E BACKFILL DETAILS

### NOTES:

1. For HMA shoulders only, extend top layer of HMA placed on the shoulder under dike with no joint at the ES. For projects with OGFC shoulders, do not extend OGFC under dike. See project plans for modified dike detail.
2. Case R applies to retrofit only projects where restrictive conditions do not provide enough width for Case F backfill.
3. Type A dike only to be used where restrictive slope conditions do not provide enough width to use Type D or Type E dike.
4. Fill and compact with excavated material to top of dike.
5. Use Type F dike, where dike is required with guard railing installations. See Revised Standard Plan RSP A77N4 for dike positioning details.

### DIKE QUANTITIES

| TYPE | CUBIC YARDS PER LINEAR FOOT |
|---|---|
| A | 0.0135 |
| C | 0.0038 |
| D | 0.0293 |
| E | 0.0130 |
| F | 0.0066 |

Quantities based on 5% cross slope.

STATE OF CALIFORNIA
DEPARTMENT OF TRANSPORTATION

# HOT MIX ASPHALT DIKES

NO SCALE

RSP A87B DATED JULY 19, 2013 SUPERSEDES STANDARD PLAN A87B
DATED MAY 20, 2011 - PAGE 120 OF THE STANDARD PLANS BOOK DATED 2010.

**REVISED STANDARD PLAN RSP A87B**

**2010 REVISED STANDARD PLAN RSP A87B**

DATE PLOTTED => 09-JAN-2015
TIME PLOTTED => 14:29

| Dist | COUNTY | ROUTE | POST MILES TOTAL PROJECT | SHEET No. | TOTAL SHEETS |
|---|---|---|---|---|---|
| 02 | Sha | 5,273 | R16.2/R19.0 19.7/20.0 | 39 | 48 |

REGISTERED CIVIL ENGINEER

July 19, 2013
PLANS APPROVAL DATE

REGISTERED PROFESSIONAL ENGINEER Gurinderpal Bhullar No. C48815 Exp. 9-30-14 CIVIL STATE OF CALIFORNIA

THE STATE OF CALIFORNIA OR ITS OFFICERS OR AGENTS SHALL NOT BE RESPONSIBLE FOR THE ACCURACY OR COMPLETENESS OF SCANNED COPIES OF THIS PLAN SHEET.

TO ACCOMPANY PLANS DATED 01-08-15

## TABLE 1

### TAPER LENGTH CRITERIA AND CHANNELIZING DEVICE SPACING

| SPEED (S) | MINIMUM TAPER LENGTH * FOR WIDTH OF OFFSET 12 FEET (W) | | | | MAXIMUM CHANNELIZING DEVICE SPACING | | |
|---|---|---|---|---|---|---|---|
| | | | | | X | Y | Z ** |
| | TANGENT 2L | MERGING L | SHIFTING L/2 | SHOULDER L/3 | TAPER | TANGENT | CONFLICT |
| mph | ft | ft | ft | ft | ft | ft | ft |
| 20 | 160 | 80 | 40 | 27 | 20 | 40 | 10 |
| 25 | 250 | 125 | 63 | 42 | 25 | 50 | 12 |
| 30 | 360 | 180 | 90 | 60 | 30 | 60 | 15 |
| 35 | 490 | 245 | 123 | 82 | 35 | 70 | 17 |
| 40 | 640 | 320 | 160 | 107 | 40 | 80 | 20 |
| 45 | 1080 | 540 | 270 | 180 | 45 | 90 | 22 |
| 50 | 1200 | 600 | 300 | 200 | 50 | 100 | 25 |
| 55 | 1320 | 660 | 330 | 220 | 55 | 110 | 27 |
| 60 | 1440 | 720 | 360 | 240 | 60 | 120 | 30 |
| 65 | 1560 | 780 | 390 | 260 | 65 | 130 | 32 |
| 70 | 1680 | 840 | 420 | 280 | 70 | 140 | 35 |

* - For other offsets, use the following merging taper length formula for L:
For speed of 40 mph or less, $L = WS^2/60$
For speed of 45 mph or more, $L = WS$

Where: L = Taper length in feet
W = Width of offset in feet
S = Posted speed limit, off-peak 85th-percentile speed prior to work starting, or the anticipated operating speed in mph

** - Use for taper and tangent sections where there are no pavement markings or where there is a conflict between existing pavement markings and channelizers (CA).

## TABLE 2

### LONGITUDINAL BUFFER SPACE AND FLAGGER STATION SPACING

| SPEED * | Min D ** | DOWNGRADE Min D *** | | |
|---|---|---|---|---|
| | | -3% | -6% | -9% |
| mph | ft | ft | ft | ft |
| 20 | 115 | 116 | 120 | 126 |
| 25 | 155 | 158 | 165 | 173 |
| 30 | 200 | 205 | 215 | 227 |
| 35 | 250 | 257 | 271 | 287 |
| 40 | 305 | 315 | 333 | 354 |
| 45 | 360 | 378 | 400 | 427 |
| 50 | 425 | 446 | 474 | 507 |
| 55 | 495 | 520 | 553 | 593 |
| 60 | 570 | 598 | 638 | 686 |
| 65 | 645 | 682 | 728 | 785 |
| 70 | 730 | 771 | 825 | 891 |

* - Speed is posted speed limit, off-peak 85th-percentile speed prior to work starting, or the anticipated operating speed in mph

** - Longitudinal buffer space or flagger station spacing

*** - Use on sustained downgrade steeper than -3 percent and longer than 1 mile.

## TABLE 3

### ADVANCE WARNING SIGN SPACING

| ROAD TYPE | DISTANCE BETWEEN SIGNS * | | |
|---|---|---|---|
| | A | B | C |
| | ft | ft | ft |
| URBAN - 25 mph OR LESS | 100 | 100 | 100 |
| URBAN - MORE THAN 25 mph TO 40 mph | 250 | 250 | 250 |
| URBAN - MORE THAN 40 mph | 350 | 350 | 350 |
| RURAL | 500 | 500 | 500 |
| EXPRESSWAY / FREEWAY | 1000 | 1500 | 2640 |

* - The distances are approximate, are intended for guidance purposes only, and should be applied with engineering judgment. These distances should be adjusted by the Engineer for field conditions, if necessary, by increasing or decreasing the recommmended distances.

STATE OF CALIFORNIA
DEPARTMENT OF TRANSPORTATION

# TRAFFIC CONTROL SYSTEM TABLES FOR LANE AND RAMP CLOSURES

NO SCALE

RSP T9 DATED JULY 19, 2013 SUPERSEDES RSP T9 DATED APRIL 19, 2013 THAT SUPPLEMENTS THE STANDARD PLANS BOOK DATED 2010.

**REVISED STANDARD PLAN RSP T9**

**2010 REVISED STANDARD PLAN RSP T9**

DATE PLOTTED => 09-JAN-2015
TIME PLOTTED => 14:29

TO ACCOMPANY PLANS DATED 01-08-15

| Dist | COUNTY | ROUTE | POST MILES TOTAL PROJECT | SHEET No. | TOTAL SHEETS |
|---|---|---|---|---|---|
| 02 | Sha | 5,273 | R16.2/R19.0 19.7/20.0 | 40 | 48 |

REGISTERED CIVIL ENGINEER

April 19, 2013
PLANS APPROVAL DATE

REGISTERED PROFESSIONAL ENGINEER Gurinderpal Bhullar No. C48815 Exp. 9-30-14 CIVIL STATE OF CALIFORNIA

*THE STATE OF CALIFORNIA OR ITS OFFICERS OR AGENTS SHALL NOT BE RESPONSIBLE FOR THE ACCURACY OR COMPLETENESS OF SCANNED COPIES OF THIS PLAN SHEET.*

## NOTES:

See Revised Standard Plan RSP T9 for tables.

Use cone spacing X for taper segment, Y for tangent segment or Z for conflict situations, as approriate, per Table 1, unless X, Y, or Z cone spacing is shown on this sheet.

Unless otherwise specified in the special provisions, all temporary warning signs shall have black legend on fluorescent orange background.

California codes are designated by (CA). Otherwise, Federal (MUTCD) codes are shown.

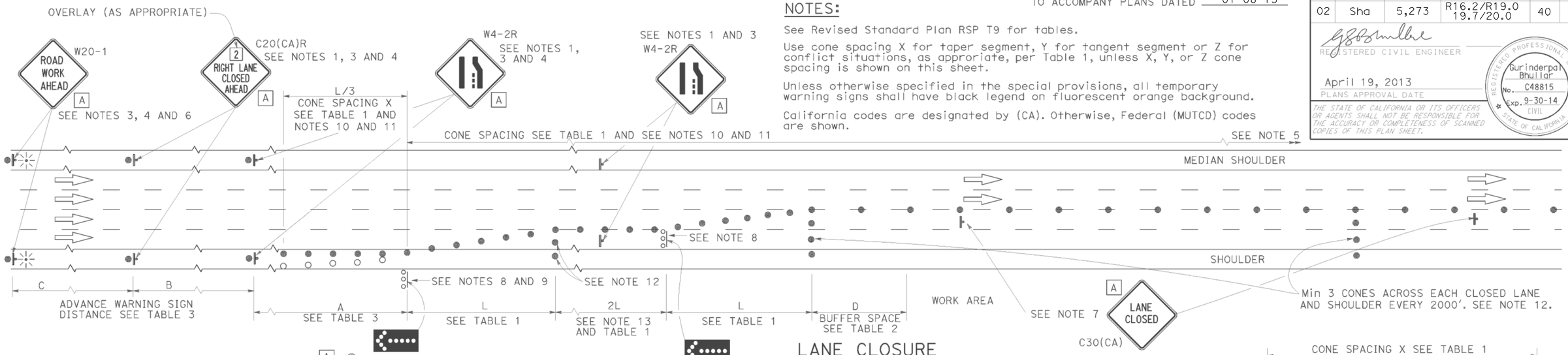


## LANE CLOSURE

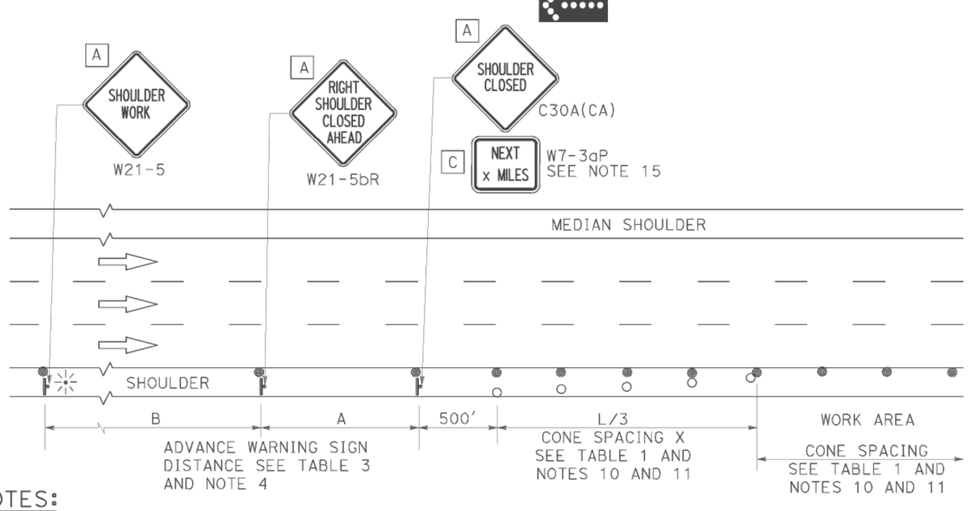


## SHOULDER CLOSURE

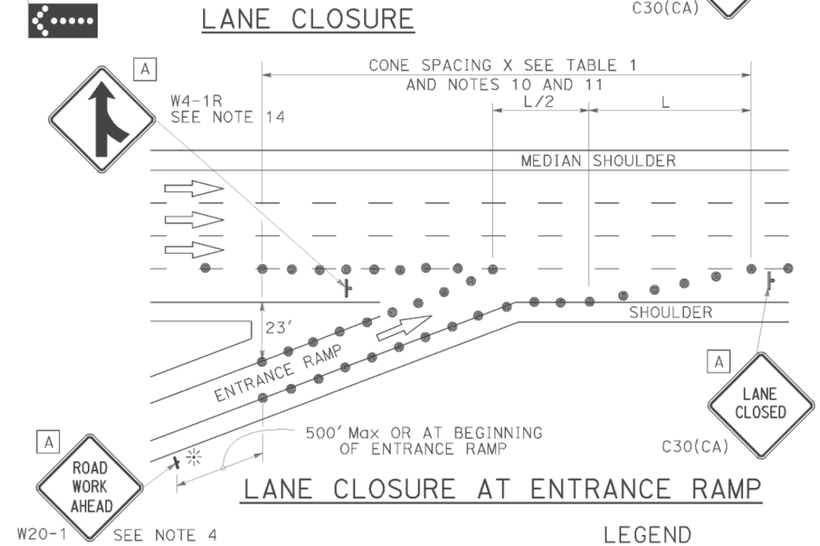


## LANE CLOSURE AT ENTRANCE RAMP

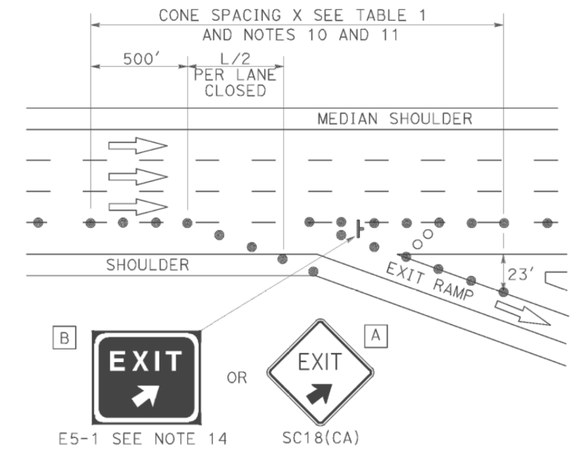


## LANE CLOSURE AT EXIT RAMP

## NOTES:

1. Median lane closures shall conform to the details as shown except that C20(CA)L and W4-2L signs shall be used.
2. At least one person shall be assigned to provide full time maintenance of traffic control devices for lane closures.
3. Duplicate sign installations are not required:
   a) On opposite shoulder if at least one-half of the available lanes remain open to traffic.
   b) In the median if the width of the median shoulder is less than 8' and the outside lanes are to be closed.
4. Each advance warning sign on each side of the roadway shall be equipped with at least two flags for daytime closure. Each flag shall be at least 16" x 16" in size and shall be orange or fluorescent red-orange in color. Flashing beacons shall be placed at the locations indicated for lane closure during hours of darkness.
5. A G20-2 "END ROAD WORK" sign, with minimum size of 48" x 24" as appropriate, shall be placed at the end of the lane closure unless the end of work area is obvious or ends within a larger project's limits.
6. If the W20-1 sign would follow within 2000' of a stationary W20-1 or G20-1 "ROAD WORK NEXT _____ MILES", use a C20(CA) sign for the first advance warning sign.
7. Place a C30(CA) sign every 2000' throughout length of lane closure.
8. One flashing arrow sign for each lane closed. The flashing arrow signs shall be Type I.
9. A minimum 1500' of sight distance shall be provided where possible for vehicles approaching the first flashing arrow sign. Lane closures shall not begin at top of crest vertical curve or on a horizontal curve.
10. All cones used for lane closures during the hours of darkness shall be fitted with retroreflective bands (or sleeves) as specified in the specifications.
11. Portable delineators, placed at one-half the spacing indicated for traffic cones may be used instead of cones for daytime closures only.
12. Unless otherwise specified in the special provisions, a minimum of 3 cones shall be placed transversely across each closed lane and shoulder at each location where a taper across a traffic lane ends and every 2000' as shown on the "Lane Closure" detail. Two Type II barricades may be used instead of the 3 cones. The transverse alignment of the cones or barricades on the closed shoulder may be shifted from the transverse alignment to provide access to the work.
13. Unless otherwise specified in the special provisions, the 2L tangent shown along lane lines shall be used between the L tapers required for each closed traffic lane.
14. Unless otherwise specified in the special provisions, the E5-1 or SC18(CA) and W4-1 signs shall be used as shown.
15. A W7-3aP "NEXT____MILES" plaque must be used if theshoulder closure extends beyond the distance that can be perceived by road users.

## LEGEND

- TRAFFIC CONE
- TRAFFIC CONE (OPTIONAL TAPER)
- TEMPORARY TRAFFIC CONTROL SIGN
- FLASHING ARROW SIGN (FAS)
- FAS SUPPORT OR TRAILER
- PORTABLE FLASHING BEACON

## SIGN PANEL SIZE (Min)

| | |
|---|---|
| A | 48" x 48" |
| B | 72" x 60" |
| C | 36" x 30" |

STATE OF CALIFORNIA
DEPARTMENT OF TRANSPORTATION

# TRAFFIC CONTROL SYSTEM FOR LANE CLOSURE ON FREEWAYS AND EXPRESSWAYS

NO SCALE

RSP T10 DATED APRIL 19, 2013 SUPERSEDES STANDARD PLAN T10 DATED MAY 20, 2011 - PAGE 237 OF THE STANDARD PLANS BOOK DATED 2010.

# REVISED STANDARD PLAN RSP T10

2010 REVISED STANDARD PLAN RSP T10

DATE PLOTTED => 09-JAN-2015
TIME PLOTTED => 14:29

| Dist | COUNTY | ROUTE | POST MILES TOTAL PROJECT | SHEET No. | TOTAL SHEETS |
|---|---|---|---|---|---|
| 02 | Sha | 5,273 | R16.2/R19.0 19.7/20.0 | 41 | 48 |

REGISTERED CIVIL ENGINEER

April 19, 2013
PLANS APPROVAL DATE

REGISTERED PROFESSIONAL ENGINEER Gurinderpal Bhullar No. C48815 Exp. 9-30-14 CIVIL STATE OF CALIFORNIA

*THE STATE OF CALIFORNIA OR ITS OFFICERS OR AGENTS SHALL NOT BE RESPONSIBLE FOR THE ACCURACY OR COMPLETENESS OF SCANNED COPIES OF THIS PLAN SHEET.*

TO ACCOMPANY PLANS DATED 01-08-15

# TYPICAL RAMP CLOSURES

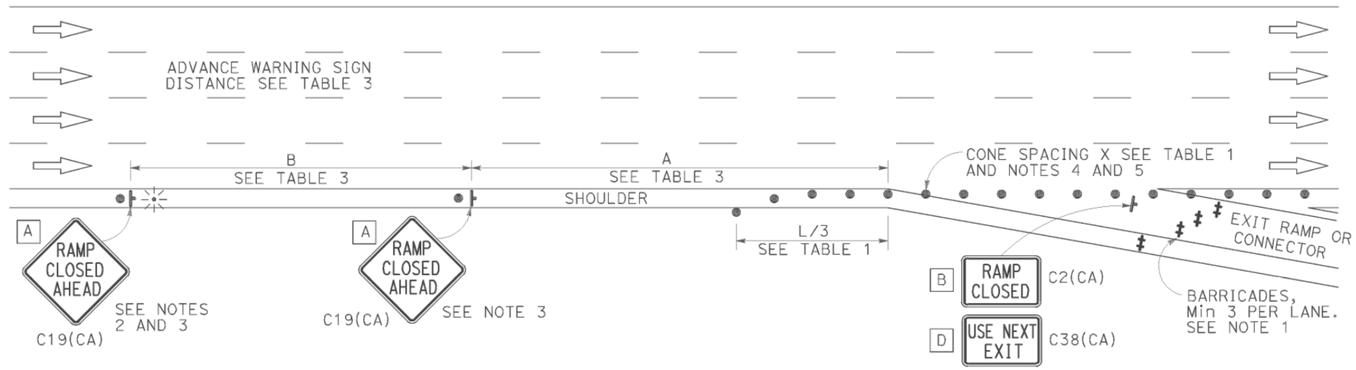


## EXIT RAMP OR CONNECTOR

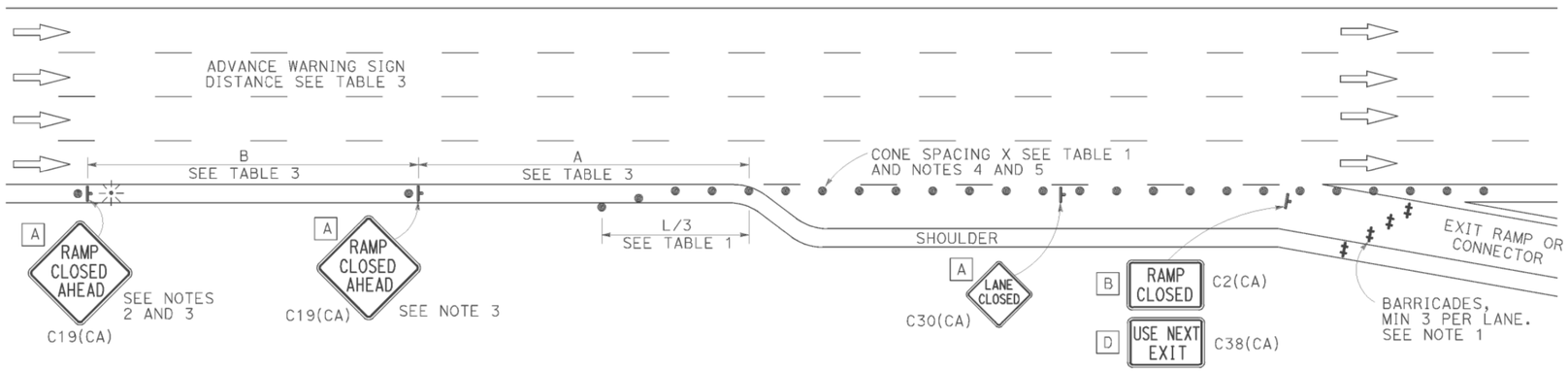


## EXIT RAMP OR CONNECTOR WITH ADDITIONAL LANE

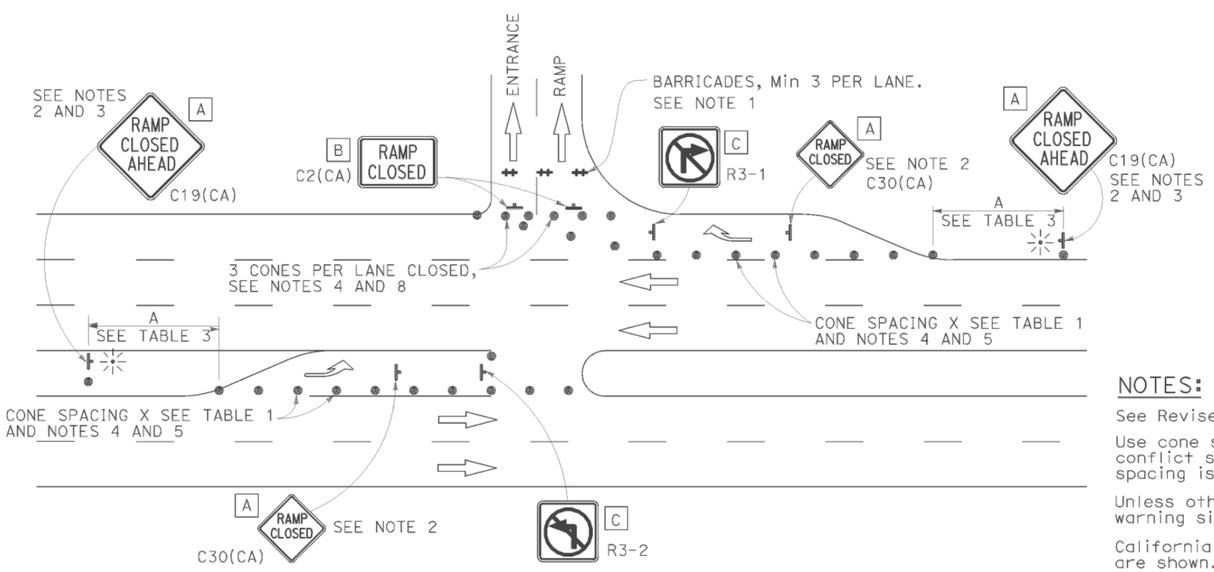


## ENTRANCE RAMP WITH TURNING POCKETS

## SIGN PANEL SIZE (Min)

- A 48" x 48"
- B 48" x 30"
- C 36" x 36"
- D 48" x 36"

## LEGEND

- TRAFFIC CONE
- TEMPORARY TRAFFIC CONTROL SIGN
- BARRICADES
- PORTABLE FLASHING BEACON

## NOTES:

1. Barricades shall be Type I, II, or III for closures lasting one week or less and Type III for closures lasting longer than one week.
2. In addition to placing the C19(CA) "RAMP CLOSED AHEAD" and C30(CA) "RAMP CLOSED" signs, black on orange overlay plates with the word "CLOSED" may be mounted, as directed by the Engineer, on all guide signs that refer to the closed ramp. The letter size on the overlay shall be the same as the guide sign.
3. Each advance C19(CA) "RAMP CLOSED AHEAD" sign shall be equipped with at least two flags for daytime closure. Each flag shall be at least 16" x 16" in size and shall be orange or fluorescent red-orange in color. A flashing beacon shall be placed on top of the first C19(CA) sign during hours of darkness.
4. All cones used for ramp closures during the hours of darkness shall be fitted with retroreflective bands (or sleeves) as specified in the specifications.
5. Portable delineators, placed at one-half the spacing indicated for traffic cones, may be used instead of cones for daytime ramp closures only.
6. At least one person shall be assigned to provide full time maintenance of traffic control devices, unless otherwise directed by the Engineer.
7. The existing "EXIT" signs shall be covered during ramp closures.
8. A minimum of 3 cones shall be placed transversely across each closed lane and shoulder.

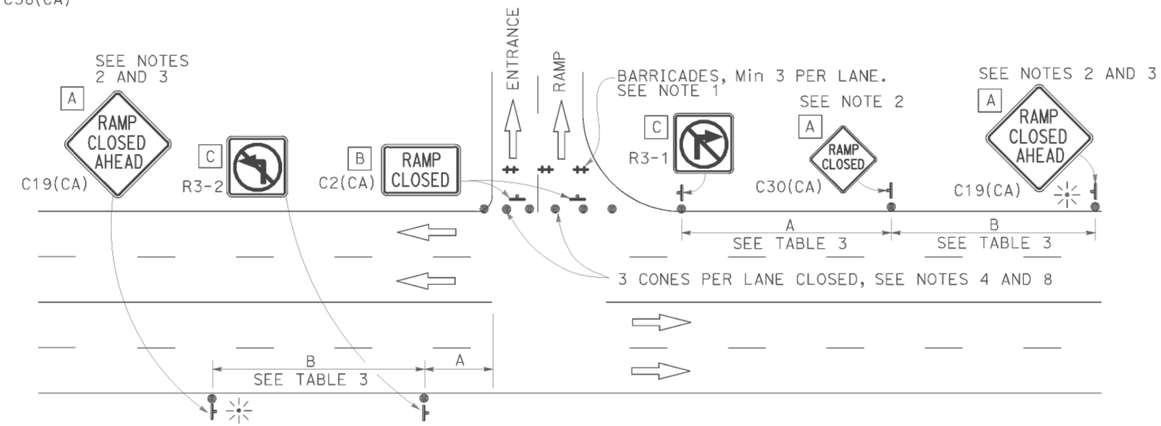


## ENTRANCE RAMP WITHOUT TURNING POCKETS

## NOTES:

See Revised Standard Plan RSP T9 for tables.

Use cone spacing X for taper segment, Y for tangent segment or Z for conflict situations, as approriate, per Table 1, unless X, Y, or Z cone spacing is shown on this sheet.

Unless otherwise specified in the special provisions, all temporary warning signs shall have black legend on fluorescent orange background.

California codes are designated by (CA). Otherwise, Federal (MUTCD) codes are shown.

STATE OF CALIFORNIA
DEPARTMENT OF TRANSPORTATION

# TRAFFIC CONTROL SYSTEM FOR RAMP CLOSURE

NO SCALE

RSP T14 DATED APRIL 19, 2013 SUPERSEDES STANDARD PLAN T14
DATED MAY 20, 2011 - PAGE 242 OF THE STANDARD PLANS BOOK DATED 2010.

# REVISED STANDARD PLAN RSP T14

2010 REVISED STANDARD PLAN RSP T14

DATE PLOTTED => 09-JAN-2015
TIME PLOTTED => 14:29

| Dist | COUNTY | ROUTE | POST MILES TOTAL PROJECT | SHEET No. | TOTAL SHEETS |
|---|---|---|---|---|---|
| 02 | Sha | 5,273 | R16.2/R19.0 19.7/20.0 | 42 | 48 |

Theresa Gabriel
REGISTERED ELECTRICAL ENGINEER

July 19, 2013
PLANS APPROVAL DATE

REGISTERED PROFESSIONAL ENGINEER Theresa Aziz Gabriel No. E15129 Exp. 6-30-14 ELECTRICAL STATE OF CALIFORNIA

THE STATE OF CALIFORNIA OR ITS OFFICERS OR AGENTS SHALL NOT BE RESPONSIBLE FOR THE ACCURACY OR COMPLETENESS OF SCANNED COPIES OF THIS PLAN SHEET.

TO ACCOMPANY PLANS DATED 01-08-15

## LEGEND:

| | |
|---|---|
| AB | ABANDON. IF APPLIED TO CONDUIT, REMOVE CONDUCTORS |
| BC | INSTALL PULL BOX IN EXISTING CONDUIT RUN |
| BP | PEDESTRIAN BARRICADE, TYPE AS INDICATED ON PLAN |
| CB | INSTALL CONDUIT INTO EXISTING PULL BOX |
| CC | CONNECT NEW AND EXISTING CONDUIT. REMOVE EXISTING CONDUCTORS AND INSTALL CONDUCTORS AS INDICATED |
| CF | CONDUIT TO REMAIN FOR FUTURE USE. REMOVE CONDUCTORS. INSTALL PULL TAPE |
| DH | DETECTOR HANDHOLE |
| FA | FOUNDATION TO BE ABANDONED |
| IS | INSTALL SIGN ON SIGNAL MAST ARM |
| NS | NO SLIP BASE ON STANDARD |
| PEC | PHOTOELECTRIC CONTROL |
| PEU | PHOTOELECTRIC UNIT |
| RC | EQUIPMENT OR MATERIAL TO BE REMOVED AND BECOME THE PROPERTY OF THE CONTRACTOR |
| RE | REMOVE ELECTROLIER, FUSES AND BALLAST. TAPE ENDS OF CONDUCTORS |
| RL | RELOCATE EQUIPMENT |
| RR | REMOVE AND REUSE EQUIPMENT |
| RS | REMOVE AND SALVAGE EQUIPMENT |
| SC | SPLICE NEW TO EXISTING CONDUCTORS |
| SD | SERVICE DISCONNECT |
| TSP | TELEPHONE SERVICE POINT |

## ABBREVIATIONS

| | |
|---|---|
| APS | ACCESSIBLE PEDESTRIAN SIGNAL |
| BBS | BATTERY BACKUP SYSTEM |
| BC | BOLT CIRCLE |
| BPB | BICYCLE PUSH BUTTON |
| C | CONDUIT |
| CB | CIRCUIT BREAKER |
| CCTV | CLOSED CIRCUIT TELEVISION |
| Ckt | CIRCUIT |
| CMS | CHANGEABLE MESSAGE SIGN |
| Ctid | CALTRANS IDENTIFICATION |
| Comm | COMMUNICATION |
| DLC | LOOP DETECTOR LEAD-IN CABLE |
| EMS | EXTINGUISHABLE MESSAGE SIGN |
| EVUC | EMERGENCY VEHICLE UNIT CABLE |
| EVUD | EMERGENCY VEHICLE UNIT DETECTOR |
| FB | FLASHING BEACON |
| FBCA | FLASHING BEACON CONTROL ASSEMBLY |
| FBS | FLASHING BEACON WITH SLIP BASE |
| FO | FIBER OPTIC |
| G | EQUIPMENT GROUNDING CONDUCTOR |
| GB | GROUND BUS |
| GFCI | GROUND FAULT CIRCUIT INTERRUPTER |
| HAR | HIGHWAY ADVISORY RADIO |
| Hex | HEXAGONAL |
| HPS | HIGH PRESSURE SODIUM |
| IISNS | INTERNALLY ILLUMINATED STREET NAME SIGN |
| ISL | INDUCTION SIGN LIGHTING |
| LED | LIGHT EMITTING DIODE |
| LMA | LUMINAIRE MAST ARM |
| LPS | LOW PRESSURE SODIUM |
| Ltg | LIGHTING |
| Lum | LUMINAIRE |
| M | METERED |
| MAT | MAST ARM MOUNTING TOP ATTACHMENT |
| MAS | MAST ARM MOUNTING SIDE ATTACHMENT |
| M/M | MULTIPLE TO MULTIPLE TRANSFORMER |
| Mtg | MOUNTING |
| MV | MERCURY VAPOR LIGHTING FIXTURE |
| MVDS | MICROWAVE VEHICLE DETECTION SYSTEM |
| N | NEUTRAL (GROUNDED CONDUCTOR) |
| NB | NEUTRAL BUS |
| NC | NORMALLY CLOSE |
| NO | NORMALLY OPEN |
| P | CIRCUIT BREAKER'S POLE |
| PB | PULL BOX |
| PBA | PUSH BUTTON ASSEMBLY |
| PEC | PHOTOELECTRIC CONTROL |
| Ped | PEDESTRIAN |
| PEU | PHOTOELECTRIC UNIT |
| PT | CONDUIT WITH PULL TAPE |
| RE | RELOCATED EQUIPMENT |
| RM | RAMP METERING |
| RWIS | ROADSIDE WEATHER INFORMATION SYSTEM |
| SB | SLIP BASE |
| SIC | SIGNAL INTERCONNECT CABLE |
| Sig | SIGNAL |
| SMA | SIGNAL MAST ARM |
| SNS | STREET NAME SIGN |
| SP | SERVICE POINT |
| TDC | TELEPHONE DEMARCATION CABINET |
| TMS | TRAFFIC MONITORING STATION |
| TOS | TRAFFIC OPERATIONS SYSTEM |
| Veh | VEHICLE |
| VIVDS | VIDEO IMAGE VEHICLE DETECTION SYSTEM |
| WIM | WEIGH-IN-MOTION |
| Xfmr | TRANSFORMER |

## SOFFIT AND WALL MOUNTED LUMINAIRES

PENDANT, 70 W HPS UNLESS OTHERWISE SPECIFIED

FLUSH, 70 W HPS UNLESS OTHERWISE SPECIFIED

WALL SURFACE, 70 W HPS UNLESS OTHERWISE SPECIFIED

EXISTING SOFFIT OR WALL LUMINAIRE TO REMAIN UNMODIFIED

EXISTING SOFFIT OR WALL LUMINAIRE TO BE MODIFIED AS SPECIFIED

NOTE:
Arrow indicates "street side" of luminaire.

COMMONLY USED SYMBOLS FOR UNITED STATES CUSTOMARY UNITS OF MEASUREMENT:

| SYMBOL USED | DEFINITIONS |
|---|---|
| Ω | OHMS |
| min | MINUTE |
| s | SECOND |
| bps | BITS PER SECOND |
| Bps | BYTES PER SECOND |
| A | AMPERE |
| V | VOLT |
| V(dc) | VOLT (DIRECT CURRENT) |
| V(ac) | VOLT (ALTERNATING CURRENT) |
| FC | FOOT - CANDLE |
| W | WATTS |
| VA | VOLT-AMPERE |
| M | MEGA |
| k | KILO |
| m | MILLI |
| μ | MICRO |
| P | PICO |
| Hz | HERTZ |

## MISCELLANEOUS ELECTROLIERS

| NEW | EXISTING | |
|---|---|---|
| | | LUMINAIRE ON WOOD POLE |
| | | NON-STANDARD ELECTROLIER (SEE PROJECT NOTES OR PROJECT PLANS) |
| | | CITY ELECTROLIER |
| | | ELECTROLIER FOUNDATION (FUTURE INSTALLATION) |

NOTES:

1. HPS luminaires shall be 310 W HPS when installed on Type 21, 21D, 30, 31 and 32 Standards, unless otherwise specified. HPS luminaires shall be 200 W when installed on other type standards or poles, unless otherwise specified.
2. LED luminaires shall be 235 W when installed on Type 21, 21D, 30, 31 and 32 Standards, unless otherwise specified. LED luminaires shall be 165 W when installed on other type standards or poles, unless otherwise specified.
3. Luminaires shall be the cutoff type, ANSI Type III medium cutoff lighting distribution, unless otherwise specified.

## STANDARD ELECTROLIER

| NEW | EXISTING | STANDARD TYPE |
|---|---|---|
| | | 15 |
| | | 15D |
| | | 15 STRUCTURE |
| | | 15D STRUCTURE |
| | | 21 |
| | | 21D |
| | | 21 STRUCTURE |
| | | 21D STRUCTURE |
| | | 30 |
| | | 31 |
| | | 32 |

STATE OF CALIFORNIA
DEPARTMENT OF TRANSPORTATION

# ELECTRICAL SYSTEMS (LEGEND AND ABBREVIATIONS)

NO SCALE

RSP ES-1A DATED JULY 19, 2013 SUPERSEDES STANDARD PLAN ES-1A DATED MAY 20, 2011 - PAGE 425 OF THE STANDARD PLANS BOOK DATED 2010.

**REVISED STANDARD PLAN RSP ES-1A**

2010 REVISED STANDARD PLAN RSP ES-1A

DATE PLOTTED => 09-JAN-2015
TIME PLOTTED => 14:29

| Dist | COUNTY | ROUTE | POST MILES TOTAL PROJECT | SHEET No. | TOTAL SHEETS |
|---|---|---|---|---|---|
| 02 | Sha | 5,273 | R16.2/R19.0 19.7/20.0 | 43 | 48 |

Theresa Gabriel
REGISTERED ELECTRICAL ENGINEER

July 19, 2013
PLANS APPROVAL DATE

REGISTERED PROFESSIONAL ENGINEER Theresa Aziz Gabriel No. E15129 Exp. 6-30-14 ELECTRICAL STATE OF CALIFORNIA

*THE STATE OF CALIFORNIA OR ITS OFFICERS OR AGENTS SHALL NOT BE RESPONSIBLE FOR THE ACCURACY OR COMPLETENESS OF SCANNED COPIES OF THIS PLAN SHEET.*

TO ACCOMPANY PLANS DATED 01-08-15

## CONDUIT

| NEW | EXISTING | |
|---|---|---|
| | | LIGHTING CONDUIT, UNLESS OTHERWISE INDICATED OR NOTED |
| | | TRAFFIC SIGNAL CONDUIT |
| C | c | COMMUNICATION CONDUIT |
| T | t | TELEPHONE CONDUIT |
| F | f | FIRE ALARM CONDUIT |
| FO | fo | FIBER OPTIC CONDUIT |
| | | CONDUIT TERMINATION |
| R | r | CONDUIT RISER ATTACHED TO THE STRUCTURE OR SERVICE POLE |

## SERVICE EQUIPMENT

| NEW | EXISTING | |
|---|---|---|
| OH | oh | OVERHEAD LINES |
| U | U | WOOD POLE, "U" INDICATES UTILITY OWNED |
| | | POLE GUY WITH ANCHOR |
| | | UTILITY TRANSFORMER - GROUND MOUNTED |
| III | III | SERVICE EQUIPMENT ENCLOSURE TYPE. DOOR INDICATES FRONT OF ENCLOSURE |
| T | t | TELEPHONE DEMARCATION CABINET |

## POLE-MOUNTED SERVICE DESIGNATION

TYPE H SERVICE, 28'-10" — TYPE OF INSTALLATION AND POLE HEIGHT ABOVE GRADE

## FLASHING BEACON

| NEW | EXISTING | |
|---|---|---|
| R | R | FLASHING BEACON (ONE VEHICLE SIGNAL HEAD WITH BACKPLATE AND VISOR) "R" INDICATES RED INDICATION, "Y" INDICATES YELLOW INDICATION |
| Y Y | Y Y | FLASHING BEACON WITH TYPE 15-FBS STANDARD AND A SIGN. |
| R R | R R | FLASHING BEACON WITH TYPES 9, 9A OR 9B SIGN UNLESS OTHERWISE SPECIFIED OR INDICATED |

## SIGNAL EQUIPMENT

| NEW | EXISTING | |
|---|---|---|
| C | C | PEDESTRIAN SIGNAL HEAD "C" INDICATES COUNTDOWN PEDESTRIAN HEAD |
| | | PUSH BUTTON ASSEMBLY POST |
| | | PEDESTRIAN BARRICADE |
| | | VEHICLE SIGNAL HEAD (WITH BACKPLATE AND 3-SECTIONS: RED, YELLOW AND GREEN) |
| | | VEHICLE SIGNAL HEAD WITH ANGLE VISOR |
| PV | PV | MODIFICATIONS OF BASIC SYMBOL: "L" INDICATES ALL NON-ARROW SECTIONS LOUVERED "LG" INDICATES LOUVERED GREEN SECTION ONLY "PV" INDICATES ALL 12" SECTIONS PROGRAMMED VISIBILITY "8" INDICATES ALL 8" SECTIONS (ONLY WHEN SPECIFIED) |
| | | VEHICLE SIGNAL HEAD CONSISTING OF RED, YELLOW AND GREEN LEFT ARROW SECTIONS |
| | | VEHICLE SIGNAL HEAD CONSISTING OF RED AND YELLOW SECTIONS WITH AN UP GREEN ARROW SECTION |
| | | VEHICLE SIGNAL HEAD (5 SECTION) CONSISTING OF RED, YELLOW AND GREEN SECTIONS WITH YELLOW AND GREEN RIGHT ARROW SECTIONS |
| | | TYPE 15TS STANDARD WITH VEHICLE SIGNAL HEAD AND LUMINAIRE |
| | | TYPE 21TS STANDARD WITH VEHICLE SIGNAL HEAD AND LUMINAIRE |
| | | STANDARD WITH LUMINAIRE AND SIGNAL MAST ARMS AND ATTACHED VEHICLE SIGNAL HEADS |
| | | TYPE 1 STANDARD WITH ATTACHED VEHICLE SIGNAL HEADS |
| | | STANDARD WITH A SIGNAL MAST ARM, ATTACHED VEHICLE SIGNAL HEADS AND INTERNALLY ILLUMINATED STREET NAME SIGN |
| | | CONTROLLER ASSEMBLY. DOOR INDICATES FRONT OF CABINET |

## SIGNAL EQUIPMENT Cont

| NEW | EXISTING | |
|---|---|---|
| | | GUARD POST |
| | | TYPE 1 STANDARD WITH RAMP METERING SIGN |
| | | OPTICAL DETECTOR FOR THE EMERGENCY VEHICLE DETECTION SYSTEM |

### NOTES:

1. All signal sections shall be 12" unless shown otherwise.
2. Signal heads shall be provided with backplates unless shown otherwise.

## ILLUMINATED OVERHEAD SIGN

| NEW | EXISTING | |
|---|---|---|
| | | SINGLE POST, SINGLE ILLUMINATED SIGN, BALANCED BUTTERFLY |
| | | SINGLE POST, DOUBLE ILLUMINATED SIGN, BALANCED BUTTERFLY |
| | | SINGLE POST, SINGLE ILLUMINATED SIGN, FULL CANTILEVER |
| | | DOUBLE POST, SINGLE ILLUMINATED SIGN |
| | | SINGLE ILLUMINATED SIGN MOUNTED ON STRUCTURE |
| | | DOUBLE POST, SINGLE ILLUMINATED SIGN WITH ELECTROLIER |

STATE OF CALIFORNIA
DEPARTMENT OF TRANSPORTATION

# ELECTRICAL SYSTEMS (LEGEND AND ABBREVIATIONS)

NO SCALE

RSP ES-1B DATED JULY 19, 2013 SUPERSEDES STANDARD PLAN ES-1B DATED MAY 20, 2011 - PAGE 426 OF THE STANDARD PLANS BOOK DATED 2010.

**REVISED STANDARD PLAN RSP ES-1B**

**2010 REVISED STANDARD PLAN RSP ES-1B**

DATE PLOTTED => 09-JAN-2015
TIME PLOTTED => 14:29

| Dist | COUNTY | ROUTE | POST MILES TOTAL PROJECT | SHEET No. | TOTAL SHEETS |
|---|---|---|---|---|---|
| 02 | Sha | 5,273 | R16.2/R19.0 19.7/20.0 | 44 | 48 |

Theresa Gabriel
REGISTERED ELECTRICAL ENGINEER

July 19, 2013
PLANS APPROVAL DATE

REGISTERED PROFESSIONAL ENGINEER Theresa Aziz Gabriel No. E15129 Exp. 6-30-14 ELECTRICAL STATE OF CALIFORNIA

THE STATE OF CALIFORNIA OR ITS OFFICERS OR AGENTS SHALL NOT BE RESPONSIBLE FOR THE ACCURACY OR COMPLETENESS OF SCANNED COPIES OF THIS PLAN SHEET.

TO ACCOMPANY PLANS DATED 01-08-15

2010 REVISED STANDARD PLAN RSP ES-1C

## EQUIPMENT IDENTIFICATION

### ILLUMINATED SIGN IDENTIFICATION NUMBER:

SIGN No. 12345
10 ISL SCI 1.0

- SIGN NUMBER - PLACE ON POST OR STRUCTURE
- TRANSFORMER RATING (kVA)
- LIGHTING CONTROL TYPE
- NUMBER AND TYPE OF FIXTURES

DO NOT PLACE ON STANDARD OR STRUCTURE

### ELECTROLIER OR EQUIPMENT IDENTIFICATION NUMBER:

12345 - 15'-0"

- MAST ARM LENGTH, IF SHOWN. DO NOT PLACE ON STANDARD OR STRUCTURE
- EQUIPMENT NUMBER - PLACE ON STANDARD OR STRUCTURE. EXISTING EQUIPMENT NUMBERS ARE SHOWN IN PARENTHESIS

### CONDUIT AND CONDUCTOR IDENTIFICATION:

1½"C, 2#10, 15#14, 2 DLC, 12P#18

- PAIR
- NUMBER AND SIZE OF CONDUCTORS AND CABLES
- SIZE OF CONDUIT IN INCHES

| | |
|---|---|
| Ø1, Ø2, Ø2P, etc. | TRAFFIC PHASE IDENTIFICATION FOR SIGNAL FACES, DETECTORS AND PHASE DIAGRAMS |
| 1 2 3 | LEGEND NUMBERS |
| A B C | EQUIPMENT, SIGNAL POLES, INSTALLATION OR ITEMS |
| 1 2 3 | CONDUIT RUN NUMBERS |

### SIGNAL AND LIGHTING STANDARD (TYPICAL DESIGNATION):

19A - 3 - 100

- WIND VELOCITY = 100 mph
- CASE 3 ARM LOADING
- STANDARD TYPE
- STANDARD PLAN SHEET NUMBER
- DETAIL, NUMBER, SECTION, TYPE OR ELEVATION

## MISCELLANEOUS EQUIPMENT

| NEW | EXISTING | |
|---|---|---|
| CMS | cms | CHANGEABLE MESSAGE SIGN |
| | | CLOSED CIRCUIT TELEVISION CAMERA |
| | | HIGHWAY ADVISORY RADIO POLE AND ANTENNA |
| EMS | ems | EXTINGUISHABLE MESSAGE SIGN |
| M V | m v | DETECTION DEVICE<br>M = MICROWAVE SENSOR<br>V = VIDEO IMAGE SENSOR |

## WIRING DIAGRAM LEGEND

- EXTERNAL CONDUCTOR
- CONDUCTOR OR BUS
- TIE POINT
- CONTACTOR COIL
- CONTACTOR, NO CONTACT
- TERMINAL BLOCKS
- CONTACTOR, NC CONTACT
- ENCLOSURE BOND
- GROUNDING ELECTRODE
- CIRCUIT BREAKER
- RECEPTACLE

## PULL BOXES

| NEW | EXISTING | |
|---|---|---|
| | | PULL BOX, No. 5 UNLESS OTHERWISE INDICATED OR NOTED |
| 3 | 9A(21) | PULL BOX, ADDITIONAL DESIGNATIONS OR DESCRIPTIONS |

3 No. 3½ PULL BOX
5 No. 5 PULL BOX
6 No. 6 PULL BOX
7 No. 7 (CEILING PULL BOX)
8 No. 8 (PENDANT SOFFIT PULL BOX)
9 No. 9 PULL BOX
9A No. 9A PULL BOX

(C) COMMUNICATIONS PULL BOX
(E) PULL BOX WITH EXTENSION
(S) SPRINKLER CONTROL PULL BOX
(21) ANCHOR BOLTS AND CONDUIT FOR FUTURE INSTALLATION OF TYPE 21 STANDARD
(T) TRAFFIC PULL BOX

## VEHICLE DETECTORS

5 J 9 U

- VEHICLE DETECTOR DESIGNATION
- U = UPPER
  L = LOWER
- SLOT NUMBER IN INPUT FILE
- INPUT FILE (I OR J)
- PHASE

| NEW | EXISTING | |
|---|---|---|
| | | TYPE A DETECTOR LOOP. OUTLINE OF SAWCUT SHOWN |
| | | TYPE B DETECTOR LOOP. OUTLINE OF SAWCUT SHOWN |
| | | TYPE C DETECTOR LOOP. OUTLINE OF SAWCUT SHOWN |
| | | TYPE D DETECTOR LOOP. OUTLINE OF SAWCUT SHOWN |
| | | TYPE E DETECTOR LOOP. OUTLINE OF SAWCUT SHOWN |
| | | TYPE Q DETECTOR LOOP. OUTLINE OF SAWCUT SHOWN |
| | | MAGNETIC DETECTOR |
| DH | dh | DETECTOR HANDHOLE |
| | | MICROWAVE OR VIDEO DETECTION ZONE |

STATE OF CALIFORNIA
DEPARTMENT OF TRANSPORTATION

# ELECTRICAL SYSTEMS (LEGEND AND ABBREVIATIONS)

NO SCALE

RSP ES-1C DATED JULY 19, 2013 SUPERSEDES STANDARD PLAN ES-1C DATED MAY 20, 2011 - PAGE 427 OF THE STANDARD PLANS BOOK DATED 2010.

**REVISED STANDARD PLAN RSP ES-1C**

DATE PLOTTED => 09-JAN-2015
TIME PLOTTED => 14:29

| Dist | COUNTY | ROUTE | POST MILES TOTAL PROJECT | SHEET No. | TOTAL SHEETS |
|---|---|---|---|---|---|
| 02 | Sha | 5,273 | R16.2/R19.0 19.7/20.0 | 45 | 48 |

Theresa Gabriel
REGISTERED ELECTRICAL ENGINEER

July 19, 2013
PLANS APPROVAL DATE

REGISTERED PROFESSIONAL ENGINEER Theresa Aziz Gabriel No. E15129 Exp. 6-30-14 ELECTRICAL STATE OF CALIFORNIA

*THE STATE OF CALIFORNIA OR ITS OFFICERS OR AGENTS SHALL NOT BE RESPONSIBLE FOR THE ACCURACY OR COMPLETENESS OF SCANNED COPIES OF THIS PLAN SHEET.*

TO ACCOMPANY PLANS DATED 01-08-15

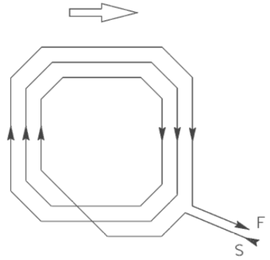


WINDING DETAIL

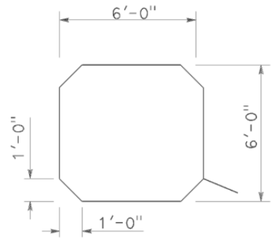


SAWCUT DETAIL

TYPE A LOOP DETECTOR CONFIGURATION

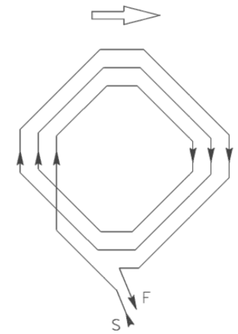


WINDING DETAIL

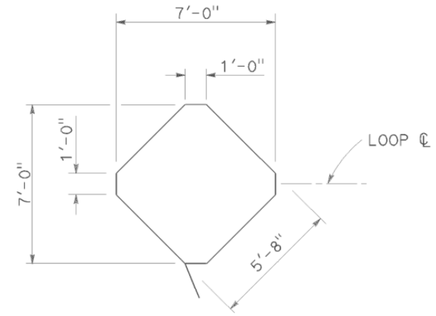


SAWCUT DETAIL

TYPE B LOOP DETECTOR CONFIGURATION

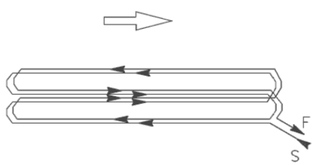


WINDING DETAIL

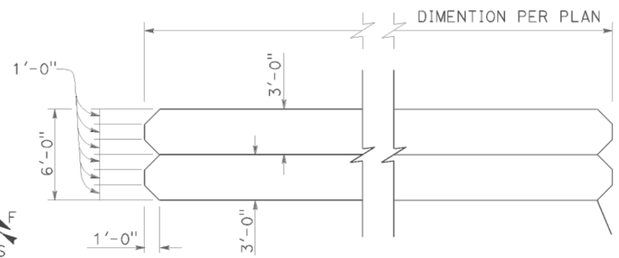


SAWCUT DETAIL

TYPE C LOOP DETECTOR CONFIGURATION

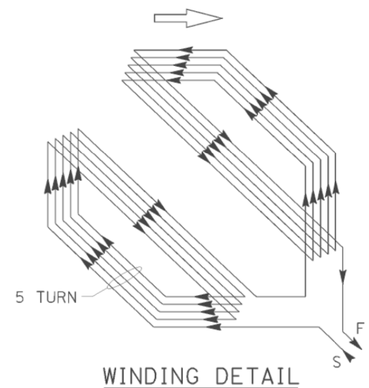


WINDING DETAIL

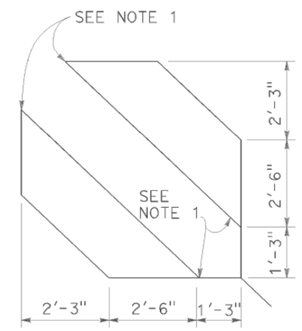


SAWCUT DETAIL

TYPE D LOOP DETECTOR CONFIGURATION

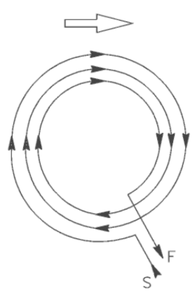


WINDING DETAIL

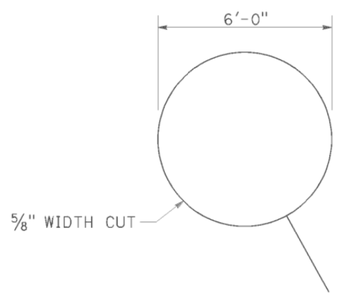


SAWCUT DETAIL

TYPE E LOOP DETECTOR CONFIGURATION

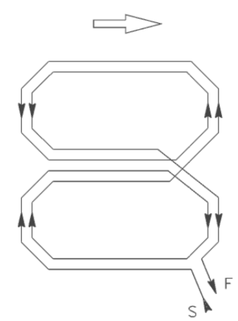


WINDING DETAIL

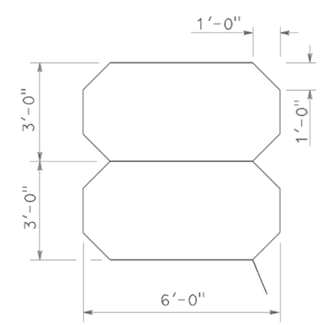


SAWCUT DETAIL

TYPE Q LOOP DETECTOR CONFIGURATION

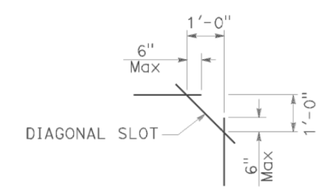


PLAN VIEW OF DIAGONAL SLOT AT CORNERS

NOTES:

1. Round corners of acute angle sawcuts to prevent damage to conductors.
2. Typical distance separating loops from edge to edge is 10' for Type A, B, D and E installation in single lane.

STATE OF CALIFORNIA
DEPARTMENT OF TRANSPORTATION

# ELECTRICAL SYSTEMS (DETECTORS)

NO SCALE

RSP ES-5B DATED JULY 19, 2013 SUPERSEDES STANDARD PLAN ES-5B DATED MAY 20, 2011 - PAGE 449 OF THE STANDARD PLANS BOOK DATED 2010.

**REVISED STANDARD PLAN RSP ES-5B**

**2010 REVISED STANDARD PLAN RSP ES-5B**

DATE PLOTTED => 09-JAN-2015
TIME PLOTTED => 14:29

| Dist | COUNTY | ROUTE | POST MILES TOTAL PROJECT | SHEET No. | TOTAL SHEETS |
|---|---|---|---|---|---|
| 02 | Sha | 5,273 | R16.2/R19.0 19.7/20.0 | 46 | 48 |

Theresa Gabriel
REGISTERED ELECTRICAL ENGINEER

July 19, 2013
PLANS APPROVAL DATE

REGISTERED PROFESSIONAL ENGINEER
Theresa Aziz Gabriel
No. E15129
Exp. 6-30-14
ELECTRICAL
STATE OF CALIFORNIA

*THE STATE OF CALIFORNIA OR ITS OFFICERS OR AGENTS SHALL NOT BE RESPONSIBLE FOR THE ACCURACY OR COMPLETENESS OF SCANNED COPIES OF THIS PLAN SHEET.*

TO ACCOMPANY PLANS DATED 01-08-15

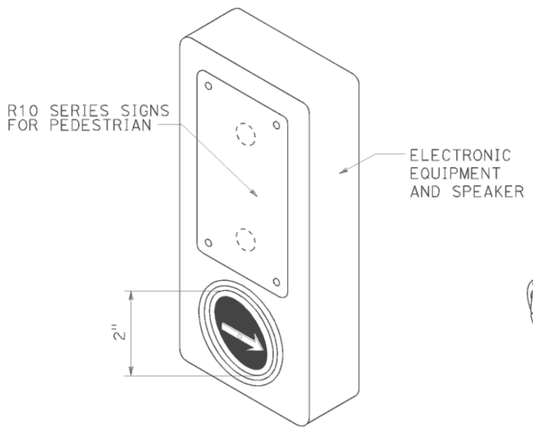


ACCESSIBLE PEDESTRIAN SIGNAL

DETAIL A
(See note 1 to 4)

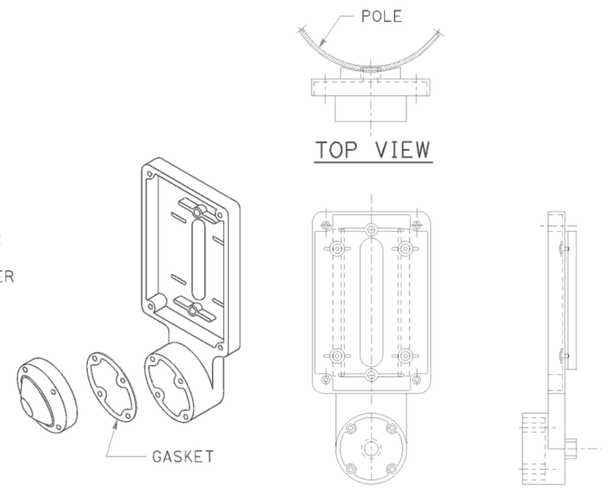


TYPE B PUSH BUTTON ASSEMBLY

DETAIL B
(See note 1 to 4)

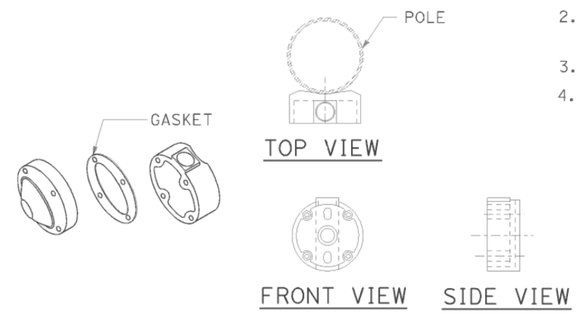


TYPE C PUSH BUTTON ASSEMBLY

DETAIL C
(See note 1 to 4)

NOTES:

1. Back casting shape to fit curvature of pole.
2. Provide cover fitting for top of post, when PBA is mounted on push button assembly post.
3. Install push button on crosswalk side of standard.
4. Use R10 series regulatory signs and plaques for pedestrian and bicycle facilities.

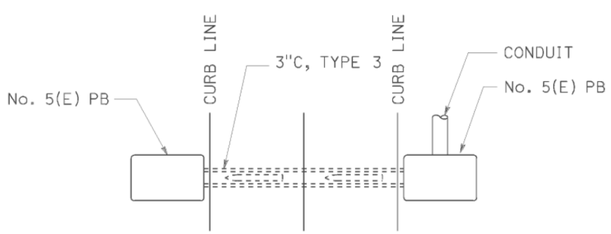


PLAN

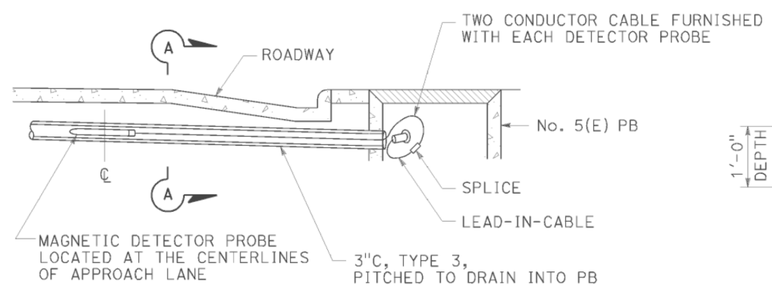


ELEVATION

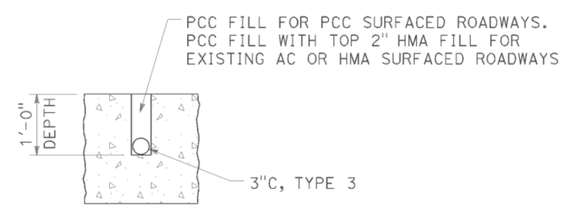


SECTION A-A

MAGNETIC VEHICLE DETECTOR
INSTALLATION DETAILS
DETAIL D

STATE OF CALIFORNIA
DEPARTMENT OF TRANSPORTATION

# ELECTRICAL SYSTEMS (ACCESSIBLE PEDESTRIAN SIGNAL, PUSH BUTTON ASSEMBLIES AND MAGNETIC VEHICLE DETECTOR)

NO SCALE

RSP ES-5C DATED JULY 19, 2013 SUPERSEDES STANDARD PLAN ES-5C
DATED MAY 20, 2011 - PAGE 450 OF THE STANDARD PLANS BOOK DATED 2010.

**REVISED STANDARD PLAN RSP ES-5C**

**2010 REVISED STANDARD PLAN RSP ES-5C**

DATE PLOTTED => 09-JAN-2015
TIME PLOTTED => 14:30

| Dist | COUNTY | ROUTE | POST MILES TOTAL PROJECT | SHEET No. | TOTAL SHEETS |
|---|---|---|---|---|---|
| 02 | Sha | 5,273 | R16.2/R19.0 19.7/20.0 | 47 | 48 |

Theresa Gabriel
REGISTERED ELECTRICAL ENGINEER

July 19, 2013
PLANS APPROVAL DATE

Theresa Aziz Gabriel No. E15129 Exp. 6-30-14 ELECTRICAL — REGISTERED PROFESSIONAL ENGINEER — STATE OF CALIFORNIA

*THE STATE OF CALIFORNIA OR ITS OFFICERS OR AGENTS SHALL NOT BE RESPONSIBLE FOR THE ACCURACY OR COMPLETENESS OF SCANNED COPIES OF THIS PLAN SHEET.*

TO ACCOMPANY PLANS DATED 01-08-15

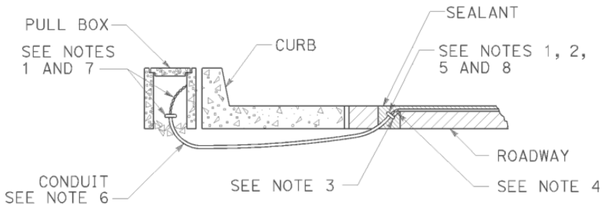


TYPE A
## CURB TERMINATION DETAIL

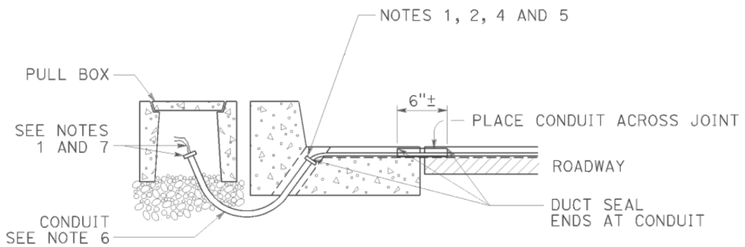


CROSS SECTION

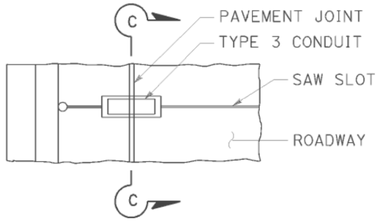


PLAN VIEW

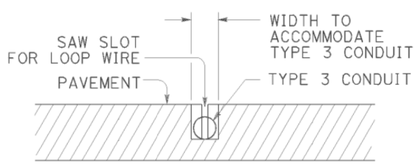


SECTION C-C

TYPE B
## CURB TERMINATION DETAIL

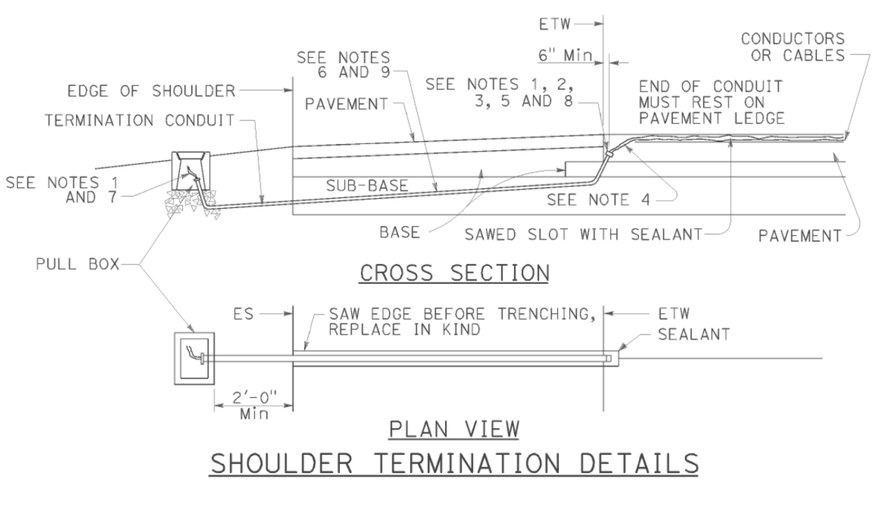


CROSS SECTION

PLAN VIEW

## SHOULDER TERMINATION DETAILS

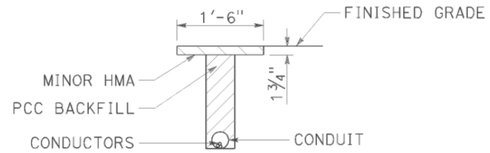


"T" TRENCH
DETAIL T

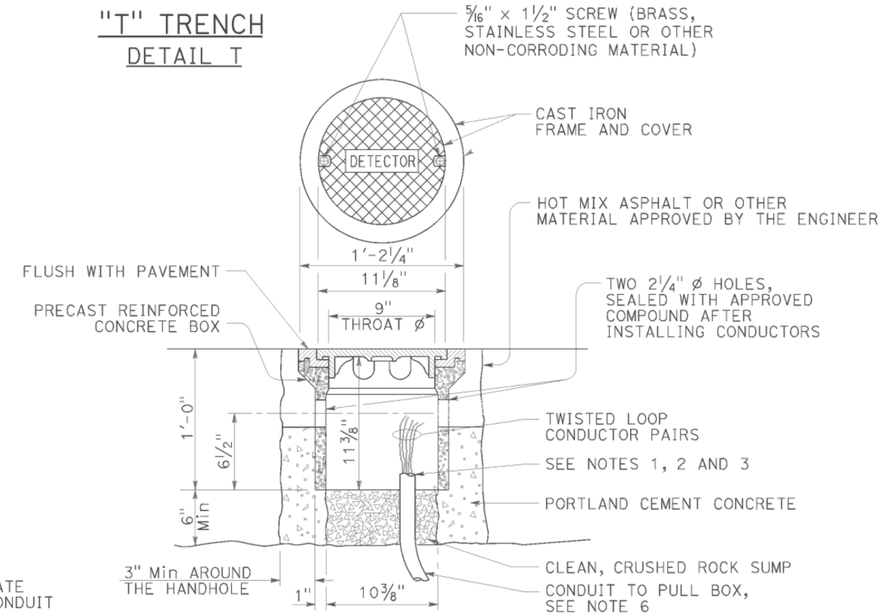


## DETECTOR HANDHOLE DETAIL

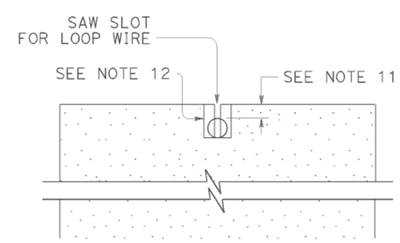


SECTION A-A

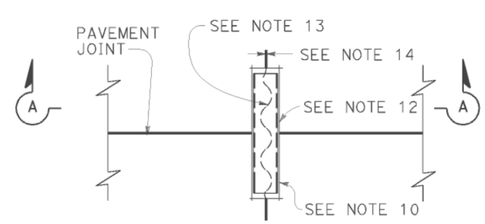


PLAN VIEW

## TYPICAL LOOP LEAD-IN DETAIL AT PAVEMENT JOINT

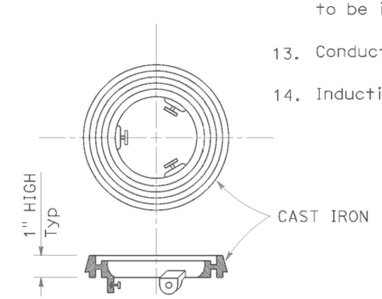


## LOCKING GRADE RING

## NOTES:

1. Bushing shall be used at end of conduit.
2. Tape detector conductors or cables 3" each side of bushings.
3. Install duct seal compound to each end of termination conduit before installing sealant.
4. Round all sharp edges where detector conductors or cables have to pass.
5. End of conduit shall be 3⅛" below roadway surface.
6. 

| Conduit size | Loop conductors |
|---|---|
| 1"C minimum | 1 to 2 pairs |
| 1½"C minimum | 3 to 4 pairs |
| 2"C minimum | 5 or more pairs |

7. Splice detector conductors or cables to detector lead-in-cable.
8. Location of detector handhole when shown on plans.
9. When the shoulder and traveled way are paved with the same material and there is no joint between them, the conduit shall extend only 2'-0" into the shoulder pavement.
10. ¾"C, Type 3 conduit 6" long minimum, plug both ends with duct compound to keep out sealant.
11. ½" Minimum between top of conduit and pavement surface.
12. Sawcut shall not exceed 1" in width and ⅛" longer than conduit to be installed.
13. Conductors with ½" minimum slack inside conduit.
14. Inductive loop detector saw slot.

STATE OF CALIFORNIA
DEPARTMENT OF TRANSPORTATION

# ELECTRICAL SYSTEMS (CURB TERMINATION AND HANDHOLE)

NO SCALE

RSP ES-5D DATED JULY 19, 2013 SUPERSEDES STANDARD PLAN ES-5D DATED MAY 20, 2011 - PAGE 451 OF THE STANDARD PLANS BOOK DATED 2010.

# REVISED STANDARD PLAN RSP ES-5D

2010 REVISED STANDARD PLAN RSP ES-5D

DATE PLOTTED => 09-JAN-2015
TIME PLOTTED => 14:30

| DIST | COUNTY | ROUTE | POST MILES TOTAL PROJECT | SHEET NO. | TOTAL SHEETS |
|---|---|---|---|---|---|
| 02 | Sha | 5,273 | R16.2/R19.0 19.7/20.0 | 48 | 48 |

Theresa Gabriel
REGISTERED ELECTRICAL ENGINEER

July 19, 2013
PLANS APPROVAL DATE

REGISTERED PROFESSIONAL ENGINEER Theresa Aziz Gabriel No. E15129 Exp. 6-30-14 ELECTRICAL STATE OF CALIFORNIA

*THE STATE OF CALIFORNIA OR ITS OFFICERS OR AGENTS SHALL NOT BE RESPONSIBLE FOR THE ACCURACY OR COMPLETENESS OF SCANNED COPIES OF THIS PLAN SHEET.*

TO ACCOMPANY PLANS DATED 01-08-15

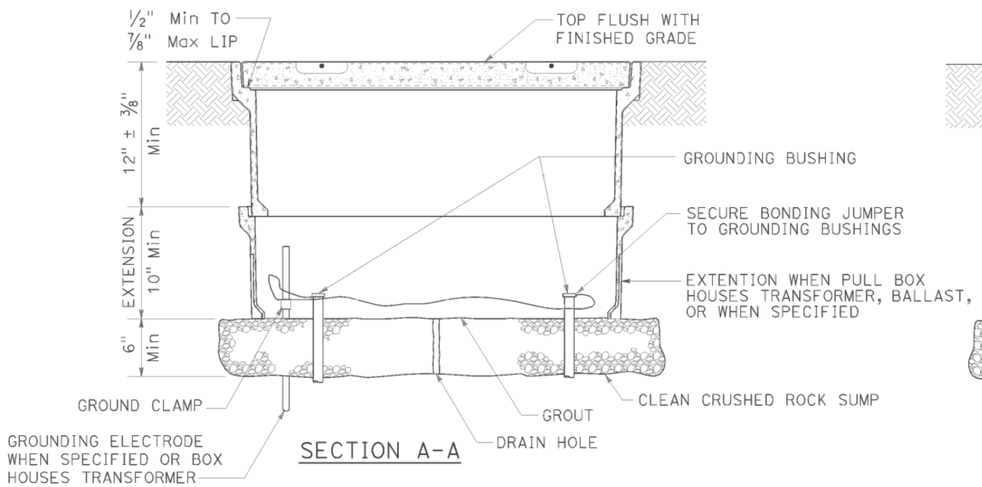


SECTION A-A

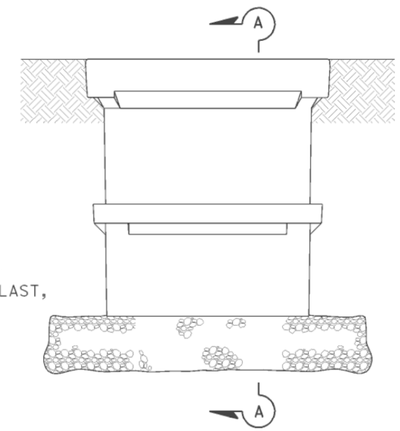


SIDE VIEW

## INSTALLATION DETAILS

### DETAIL A

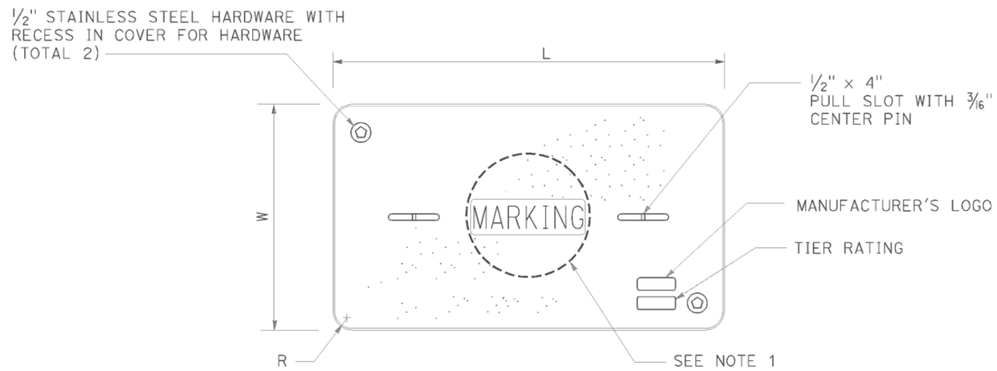


COVER TOP VIEW

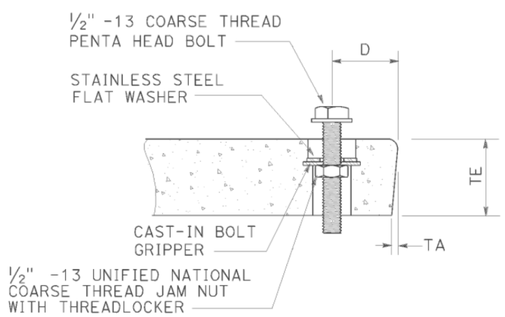


TYPICAL COVER CAPTIVE BOLT

OR SIMILAR

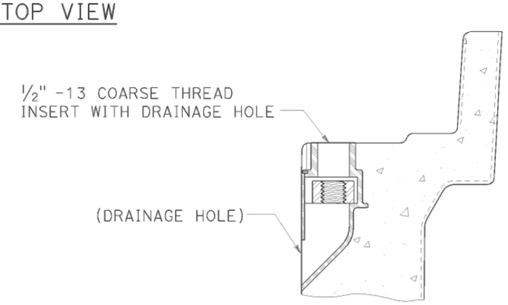


TYPICAL THREADED INSERT

OR SIMILAR

### DIMENSION TABLE

| PULL BOX | PULL BOX | | | COVER | | | | | | |
|---|---|---|---|---|---|---|---|---|---|---|
| | MINIMUM DEPTH BOX | MINIMUM DEPTH EXTENSION | MAXIMUM WEIGHT | L | W | R | TE | TA | D | MAXIMUM WEIGHT |
| No. 3½ | 12" | N/A | 40 lb | 1′ - 3⅜" | 10⅛" | 1⅜" | 2" | ⅛" | 1¾" | 30 lb |
| No. 5 | 12" | 10" | 55 lb | 1′ - 11¼" | 1′ - 1¾" | 1⅜" | 2" | ⅛" | 1¾" | 60 lb |
| No. 6 | 12" | 10" | 70 lb | 2′ - 6½" | 1′ - 5½" | 1⅜" | 2" | ⅛" | 2" | 85 lb |

## NOTES:

1. Pull box covers shall be marked as follows: "SERVICE" Service circuits between service point and service disconnect; "SPRINKLER-CONTROL" sprinkler control circuits, 50 V or less; "CALTRANS" on all pull boxes, except pull boxes marked "SPRINKLER-CONTROL"; and "TELEPHONE" Telephone service;

   A) No. 3½ pull box.
      1) "SIGNAL" - Traffic signal circuits with or without lighting or sign lighting circuits.
      2) "LIGHTING" - Lighting or sign lighting circuits where voltage is under 600 V.

   B) No. 5, 6, 9 or 9A pull box.
      1) "TRAFFIC SIGNAL" - Traffic signal circuits with or without lighting or sign lighting circuits.
      2) "LIGHTING" - Lighting or sign lighting circuits where voltage is under 600 V.
      3) "LIGHTING-HIGH VOLTAGE" - Lighting or sign lighting circuits where voltage is above 600 V.
      4) "IRRIGATION" - Circuits to irrigation controller 120 V or more.
      5) "RAMP METER" - Ramp meter circuits.
      6) "COUNT STATION" - Count or speed monitor circuits.
      7) "COMMUNICATIONS" - Communication circuits.
      8) "TOS COMMUNICATIONS" - TOS communication line.
      9) "TOS POWER" - TOS power.
      10) "TDC POWER" - Telephone demarcation cabinet power.
      11) "CCTV" - Closed circuit television circuits.
      12) "TMS" - Traffic monitoring station circuits.
      13) "CMS" - Changeable message sign circuits.
      14) "HAR" - Highway advisory radio circuits.
      15) "BOOSTER PUMP" - Booster pump circuit.

2. The nominal dimensions of the opening in which the cover sets shall be the same as the cover dimensions except the length and width dimensions shall be ⅛" greater.

3. Covers and boxes shall be interchangeable with California standard male and female gages. When interchanged with a standard male or female gage, the top surfaces shall be flush within ⅛". Top outside radius of covers and pull boxes shall have a ⅛" radius.

4. Pull box extension may be another pull box as long as the bottom edge of the pull box can fit into the cover opening.

5. All dimensions for the cover for non-traffic pull box are nominal values.

STATE OF CALIFORNIA
DEPARTMENT OF TRANSPORTATION

# ELECTRICAL SYSTEMS (NON-TRAFFIC PULL BOX)

NO SCALE

RSP ES-8A DATED JULY 19, 2013 SUPERSEDES RSP ES-8A DATED JANUARY 20, 2012 THAT SUPPLEMENTS THE STANDARD PLANS BOOK DATED 2010.

**REVISED STANDARD PLAN RSP ES-8A**

**2010 REVISED STANDARD PLAN RSP ES-8A**

DATE PLOTTED => 09-JAN-2015
TIME PLOTTED => 14:30