DIST	COUNTY	ROUTE	POST MILES TOTAL PROJECT	SHEET No.	TOTAL SHEETS
02	Sha	5	R29.3/R31.1, R45.0/R45.8	201	248

REGISTERED CIVIL ENGINEER — DATE 4-9-15

5-11-2015
PLANS APPROVAL DATE

REGISTERED PROFESSIONAL ENGINEER — Jose M Aquino III — No. 58386 — Exp. 12-31-16 — CIVIL — STATE OF CALIFORNIA

The State of California or its officers or agents shall not be responsible for the accuracy or completeness of scanned copies of this plan sheet.

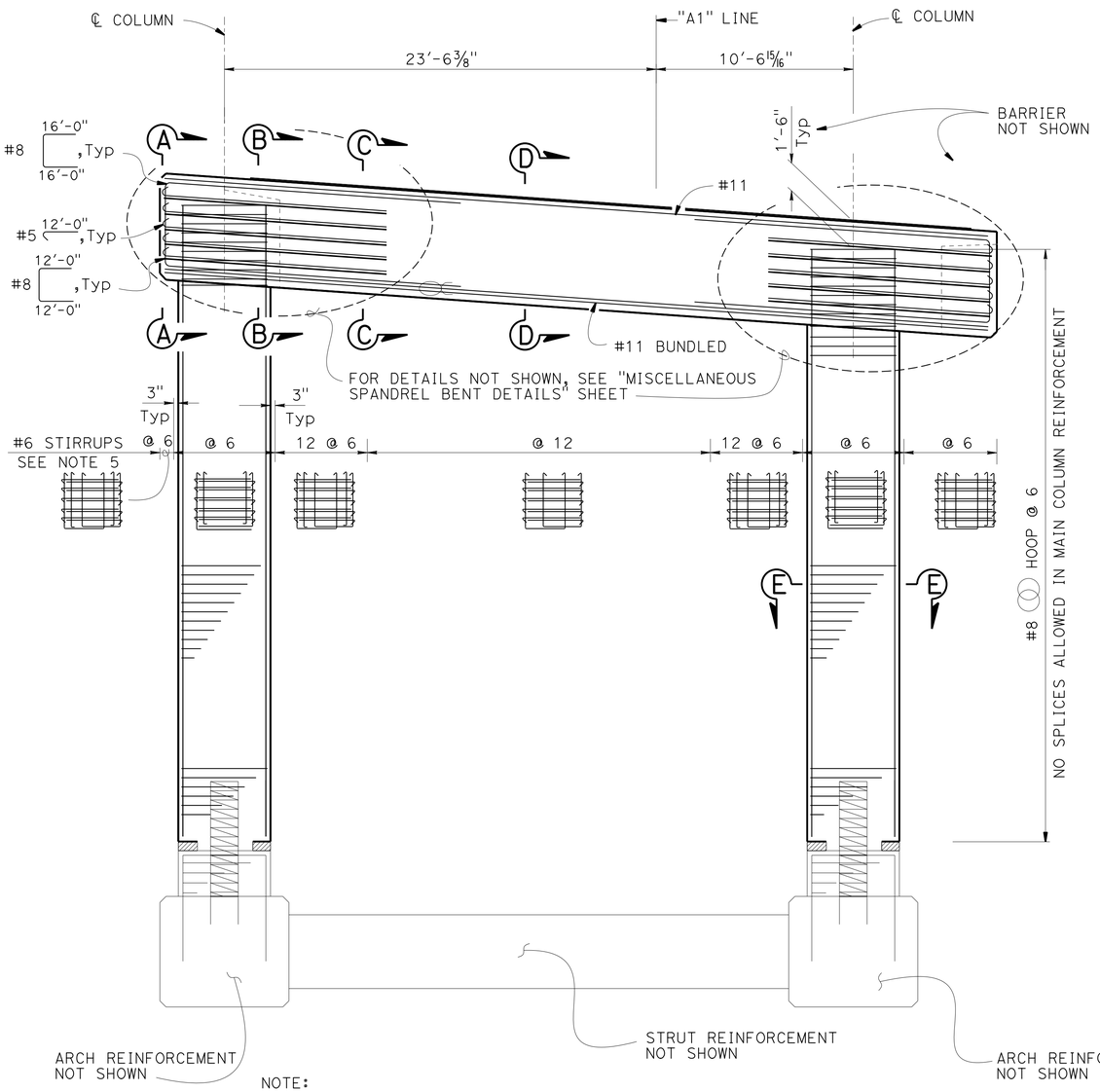

NOTE:

For details not shown, see Arch Details Sheets and "ARCH STRUT DETAIL" sheet

ELEVATION

1/4" = 1'-0"

LEGEND:

Indicates 2" Neoprene Pad
Indicates bundled bars

NOTES:

1. For "SECTION A-A" ,"SECTION B-B", "SECTION C-C" and "SECTION D-D", See "SPANDREL BENT 3 DETAILS NO. 2" sheet
2. For "SECTION E-E", see "SPANDREL BENT 3 DETAILS NO. 3" sheet
3. Only staggered ultimate Butt splices are allowed in main reinforcement
4. All hoops are "ultimate butt" spliced continuous
5. All #6 Stirrups to be Epoxy Coated except for the horizontal ties

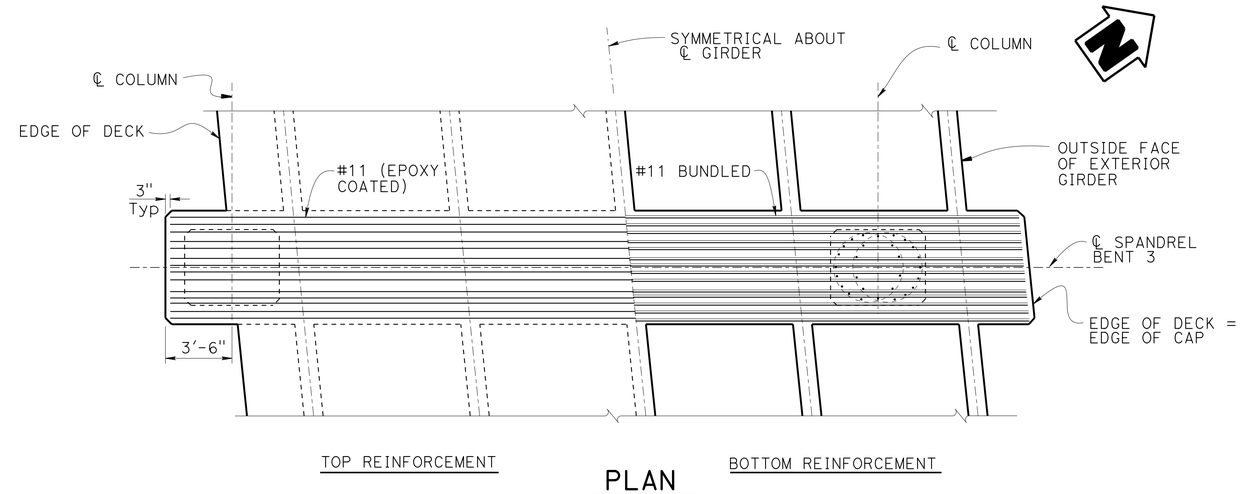

PLAN

1/4" = 1'-0"

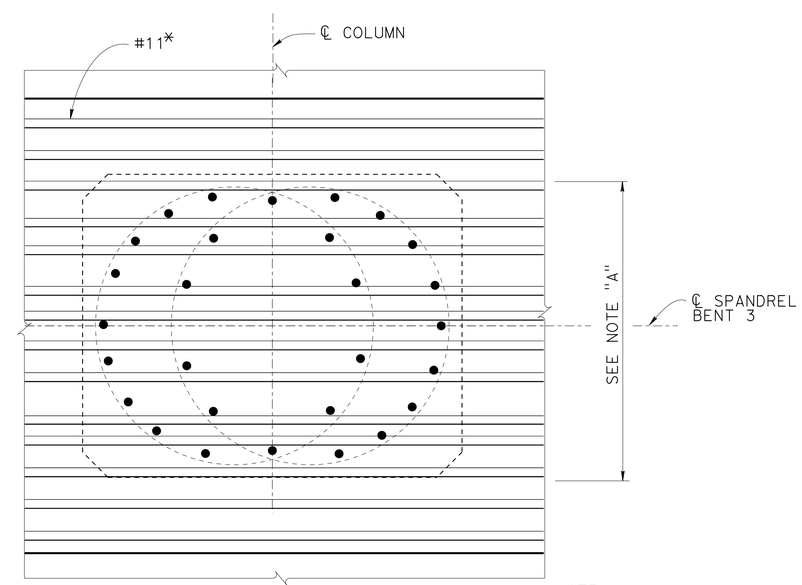

PART PLAN

1/2" = 1'-0"

NOTE A:
Adjust bottom cap reinforcement to clear main column reinforcement

DESIGN	BY Ali Asnaashari	CHECKED Joey Aquino/Ashraf Ahmed	
DETAILS	BY S Motalebi/ L Ma	CHECKED Joey Aquino/Ashraf Ahmed	
QUANTITIES	BY Mufeed Khalaf	CHECKED Quang Nguyen	

STATE OF CALIFORNIA
DEPARTMENT OF TRANSPORTATION

DIVISION OF ENGINEERING SERVICES
STRUCTURE DESIGN
DESIGN BRANCH 3

BRIDGE NO. 06-0212L
POST MILE M29.68

SHASTA VIADUCT (REPLACE)
SPANDREL BENT 3 DETALS NO. 1

STRUCTURES DESIGN DETAIL SHEET (ENGLISH) (REV. 09-01-10)

ORIGINAL SCALE IN INCHES FOR REDUCED PLANS 0 1 2 3

UNIT: 3578
PROJECT NUMBER & PHASE: 02000000161
CONTRACT NO.: 02-0E0904

DISREGARD PRINTS BEARING EARLIER REVISION DATES

REVISION DATES: 4-28-14 11-5-14

SHEET 35 OF 73

FILE => 06-0212l-k-sp-bt3-det01.dgn

USERNAME => s116738 DATE PLOTTED => 29-MAY-2015 TIME PLOTTED => 14:26

DIST	COUNTY	ROUTE	POST MILES TOTAL PROJECT	SHEET No.	TOTAL SHEETS
02	Sha	5	R29.3/R31.1, R45.0/R45.8	202	248

REGISTERED CIVIL ENGINEER — DATE 4-9-15

5-11-2015
PLANS APPROVAL DATE

REGISTERED PROFESSIONAL ENGINEER — Jose M Aquino III — No. 58386 — Exp. 12-31-16 — CIVIL — STATE OF CALIFORNIA

The State of California or its officers or agents shall not be responsible for the accuracy or completeness of scanned copies of this plan sheet.

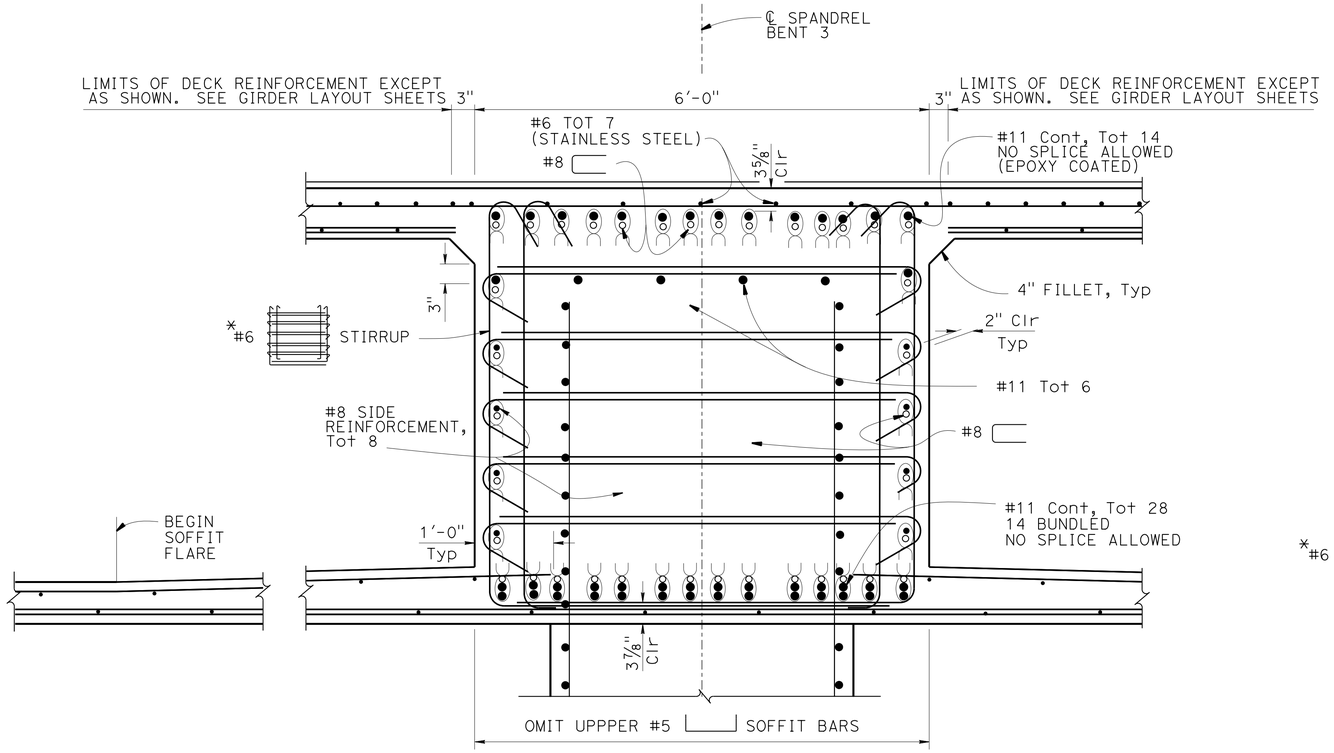

SECTION B-B

1" = 1'-0"

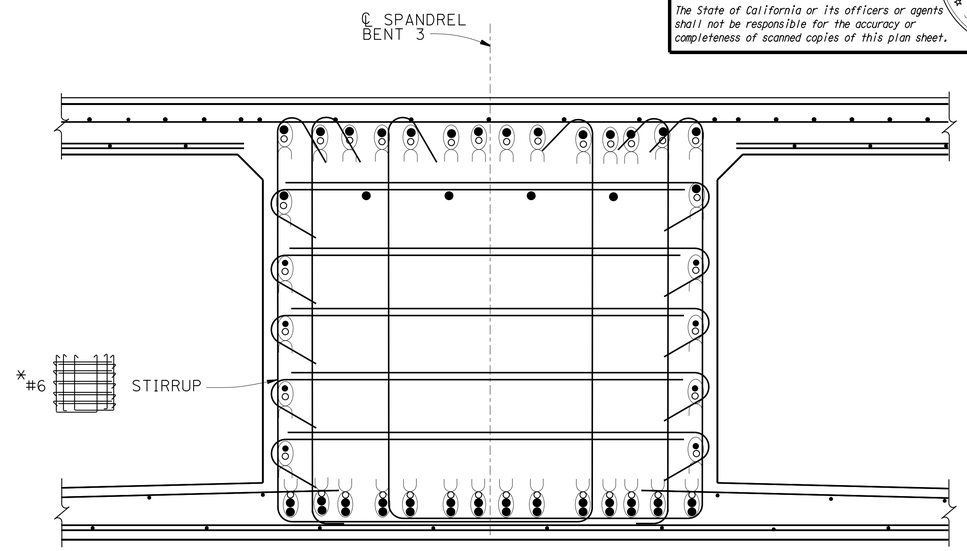

SECTION C-C

1" = 1'-0"

NOTE:

For details not shown, see "Section B-B"

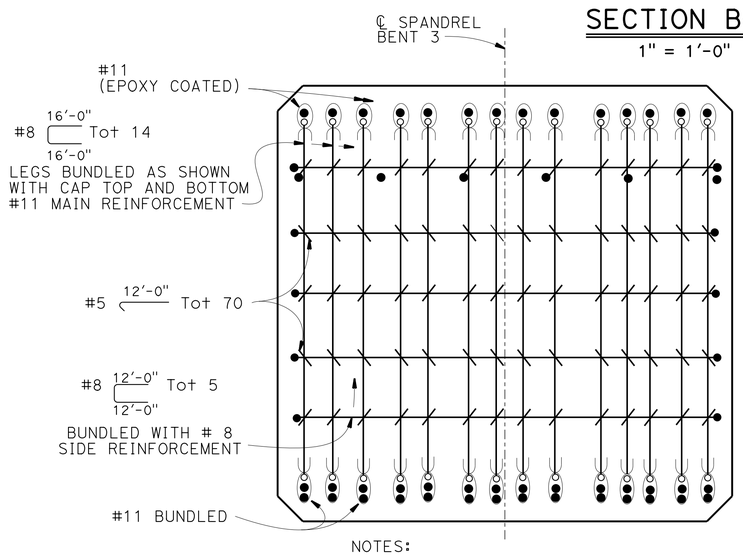

NOTES:

1. #6 stirrups not shown for clarity
2. For details not shown, see "Section B-B"

SECTION A-A

1" = 1'-0"

NOTE:

For location of "SECTION A-A", "SECTION B-B", "SECTION C-C" and "SECTION D-D", see "SPANDREL BENT 3 DETAILS NO. 1" sheet

LEGEND:

Indicates bundled bars

* All #6 Stirrups to be Epoxy Coated except for the ⟺ horizontal ties

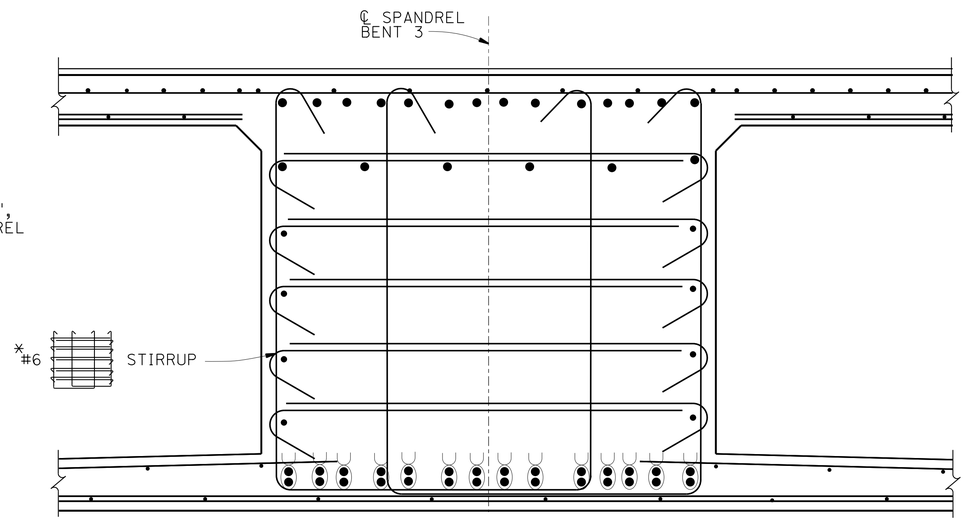

SECTION D-D

1" = 1'-0"

NOTE:

For details not shown, see "Section B-B"

	BY	CHECKED
DESIGN	Ali Asnaashari	Joey Aquino/Ashraf Ahmed
DETAILS	S Motalebi/L Ma	Joey Aquino/Ashraf Ahmed
QUANTITIES	Mufeed Khalaf	Quang Nguyen

STATE OF CALIFORNIA
DEPARTMENT OF TRANSPORTATION

DIVISION OF ENGINEERING SERVICES
STRUCTURE DESIGN
DESIGN BRANCH 3

BRIDGE NO. 06-0212L
POST MILE M29.68

SHASTA VIADUCT (REPLACE)
SPANDREL BENT 3 DETAILS NO. 2

STRUCTURES DESIGN DETAIL SHEET (ENGLISH) (REV. 09-01-10)

ORIGINAL SCALE IN INCHES FOR REDUCED PLANS 0 1 2 3

UNIT: 3578
PROJECT NUMBER & PHASE: 02000000161
CONTRACT NO.: 02-0E0904

DISREGARD PRINTS BEARING EARLIER REVISION DATES

REVISION DATES: 5-2-14 10-1-14 11-5-14

SHEET 36 OF 73

FILE => 06-0212l-k-sp-bt3-det02.dgn

USERNAME => s116738 DATE PLOTTED => 29-MAY-2015 TIME PLOTTED => 14:27

DIST	COUNTY	ROUTE	POST MILES TOTAL PROJECT	SHEET No.	TOTAL SHEETS
02	Sha	5	R29.3/R31.1, R45.0/R45.8	203	248

REGISTERED CIVIL ENGINEER 4-9-15 DATE

5-11-2015
PLANS APPROVAL DATE

REGISTERED PROFESSIONAL ENGINEER
Jose M Aquino III
No. 58386
Exp. 12-31-16
CIVIL
STATE OF CALIFORNIA

The State of California or its officers or agents shall not be responsible for the accuracy or completeness of scanned copies of this plan sheet.

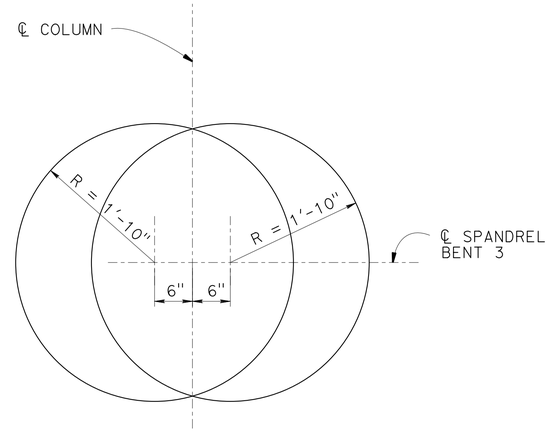

HOOP LAYOUT

1" = 1'-0"

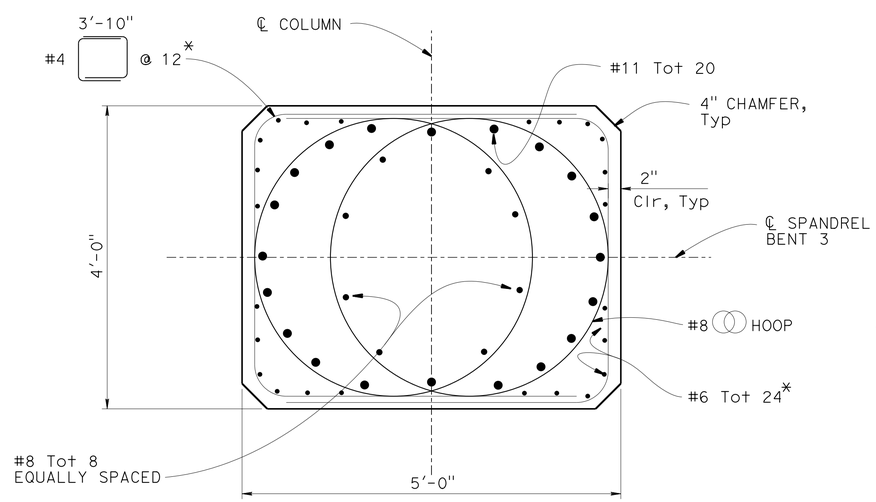

SECTION E-E

1" = 1'-0"

LEGEND:

* These bars terminate at bridge soffit

NOTES:

1. For details not shown , see "SPANDREL BENT 3 DETAILS NO. 1" and "SPANDREL BENT 3 DETAILS No. 2" sheets
2. For location of "SECTION E-E", see "SPANDREL BENT 3 DETAIL NO. 1" sheet

	BY	CHECKED
DESIGN	Ali Asnaashari	Joey Aquino/Ashraf Ahmed
DETAILS	S Motalebi/L Ma	Joey Aquino/Ashraf Ahmed
QUANTITIES	Mufeed Khalaf	Quang Nguyen

STATE OF CALIFORNIA
DEPARTMENT OF TRANSPORTATION

DIVISION OF ENGINEERING SERVICES
STRUCTURE DESIGN
DESIGN BRANCH 3

BRIDGE NO. 06-0212L
POST MILE M29.68

SHASTA VIADUCT (REPLACE)
SPANDREL BENT 3 DETAILS NO. 3

STRUCTURES DESIGN DETAIL SHEET (ENGLISH) (REV. 09-01-10)

ORIGINAL SCALE IN INCHES FOR REDUCED PLANS 0 1 2 3

UNIT: 3578
PROJECT NUMBER & PHASE: 02000000161
CONTRACT NO.: 02-0E0904

DISREGARD PRINTS BEARING EARLIER REVISION DATES

REVISION DATES: 4-28-14 9-2-14 11-5-14

SHEET 37 OF 73

FILE => 06-0212l-k-sp-bt3-det03.dgn

USERNAME => s116738 DATE PLOTTED => 29-MAY-2015 TIME PLOTTED => 14:27

DIST	COUNTY	ROUTE	POST MILES TOTAL PROJECT	SHEET No.	TOTAL SHEETS
02	Sha	5	R29.3/R31.1, R45.0/R45.8	204	248

REGISTERED CIVIL ENGINEER 4-9-15 DATE

5-11-2015
PLANS APPROVAL DATE

REGISTERED PROFESSIONAL ENGINEER
Jose M Aquino III
No. 58386
Exp. 12-31-16
CIVIL
STATE OF CALIFORNIA

The State of California or its officers or agents shall not be responsible for the accuracy or completeness of scanned copies of this plan sheet.

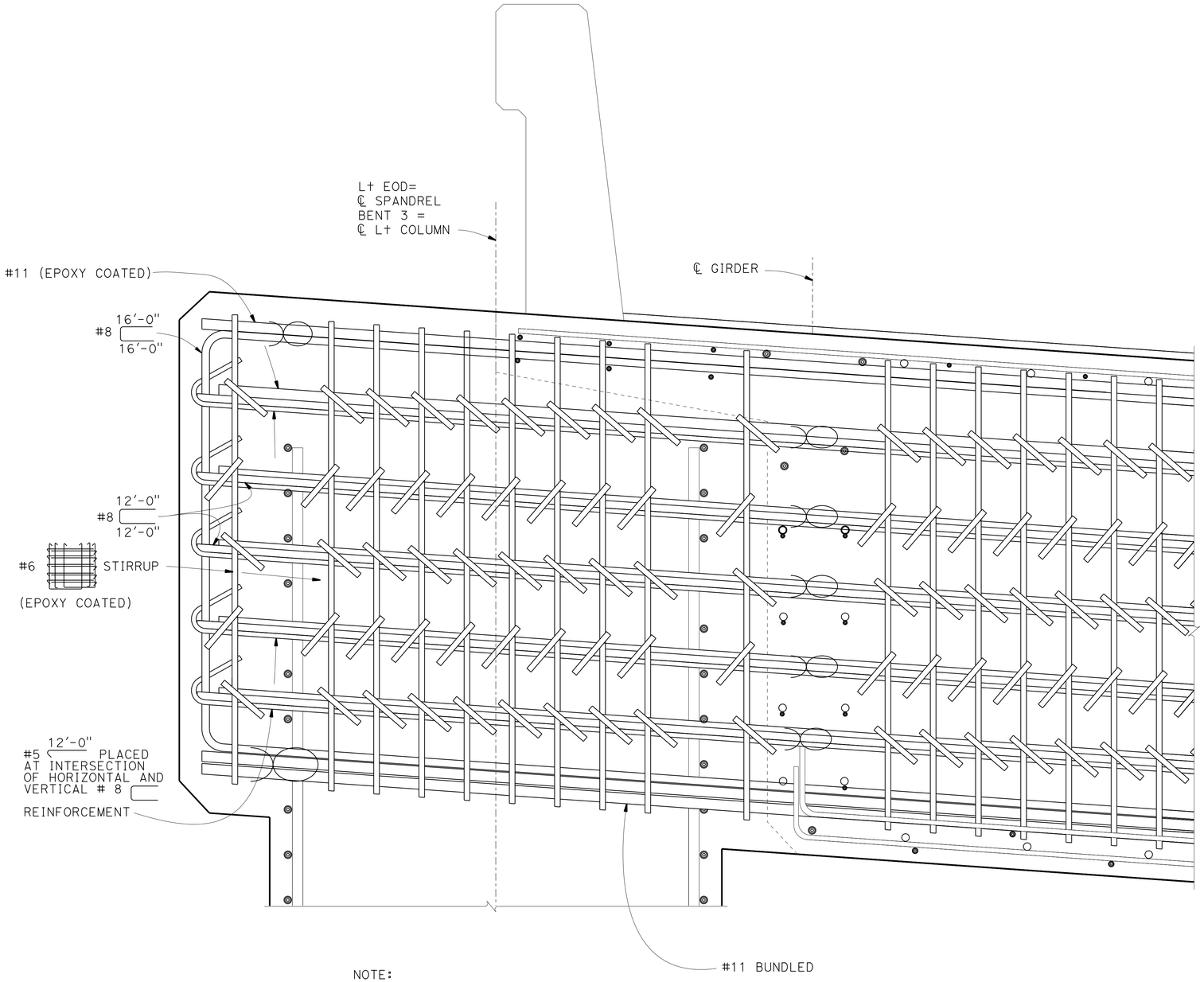

LEGEND:

Indicate Bundled bars

NOTES:

1. Spandrel Bent 3 shown, Spandrel Bent 5 similar
2. For details not shown, see "SPANDREL BENT 3 DETAILS NO. 1", "SPANDREL BENT 3 DETAILS NO. 2" and "SPANDREL BENT 3 DETAILS NO. 3" sheets

NOTE:

Hoop reinforcement not shown for clarity

PART ELEVATION

1½" = 1'-0"

	BY	CHECKED
DESIGN	Ali Asnaashari	Joey Aquino/Ashraf Ahmed
DETAILS	Shadi Motalebi	Joey Aquino/Ashraf Ahmed
QUANTITIES	Mufeed Khalaf	Quang Nguyen

STATE OF CALIFORNIA
DEPARTMENT OF TRANSPORTATION

DIVISION OF ENGINEERING SERVICES
STRUCTURE DESIGN
DESIGN BRANCH 3

BRIDGE NO. 06-0212L
POST MILE M29.68

SHASTA VIADUCT (REPLACE)
MISCELLANEOUS SPANDREL BENT DETAILS

STRUCTURES DESIGN DETAIL SHEET (ENGLISH) (REV. 09-01-10)

ORIGINAL SCALE IN INCHES FOR REDUCED PLANS 0 1 2 3

UNIT: 3578
PROJECT NUMBER & PHASE: 02000000161
CONTRACT NO.: 02-0E0904

DISREGARD PRINTS BEARING EARLIER REVISION DATES 8-20-14

REVISION DATES | SHEET 38 | OF 73

FILE => 06-0212l-k-sp-bt3-det04.dgn

USERNAME => s116738 DATE PLOTTED => 29-MAY-2015 TIME PLOTTED => 14:27

DIST	COUNTY	ROUTE	POST MILES TOTAL PROJECT	SHEET No.	TOTAL SHEETS
02	Sha	5	R29.3/R31.1, R45.0/R45.8	205	248

REGISTERED CIVIL ENGINEER 4-9-15 DATE

5-11-2015
PLANS APPROVAL DATE

REGISTERED PROFESSIONAL ENGINEER Jose M Aquino III No. 58386 Exp. 12-31-16 CIVIL STATE OF CALIFORNIA

The State of California or its officers or agents shall not be responsible for the accuracy or completeness of scanned copies of this plan sheet.

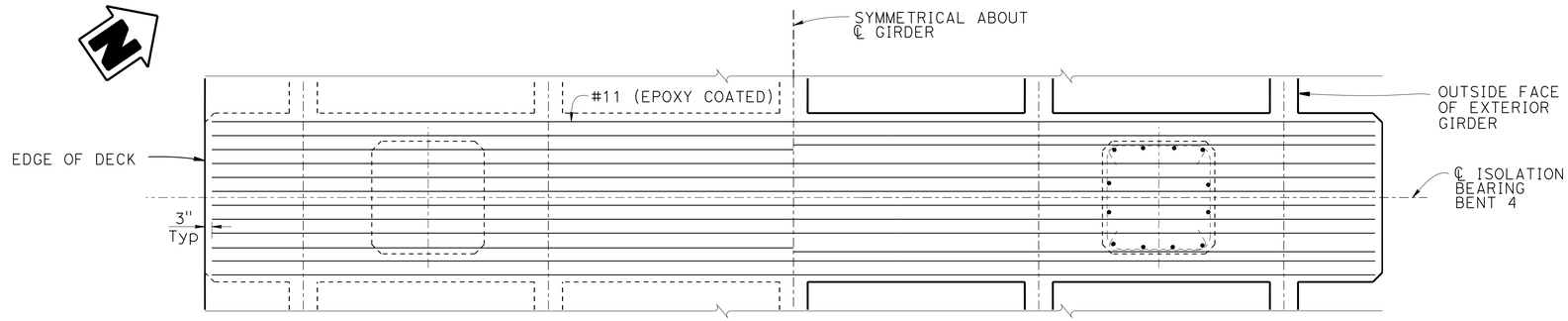

TOP REINFORCEMENT

PLAN

3/8" = 1'-0"

BOTTOM REINFORCEMENT

LEGEND:

Indicate bundled bars

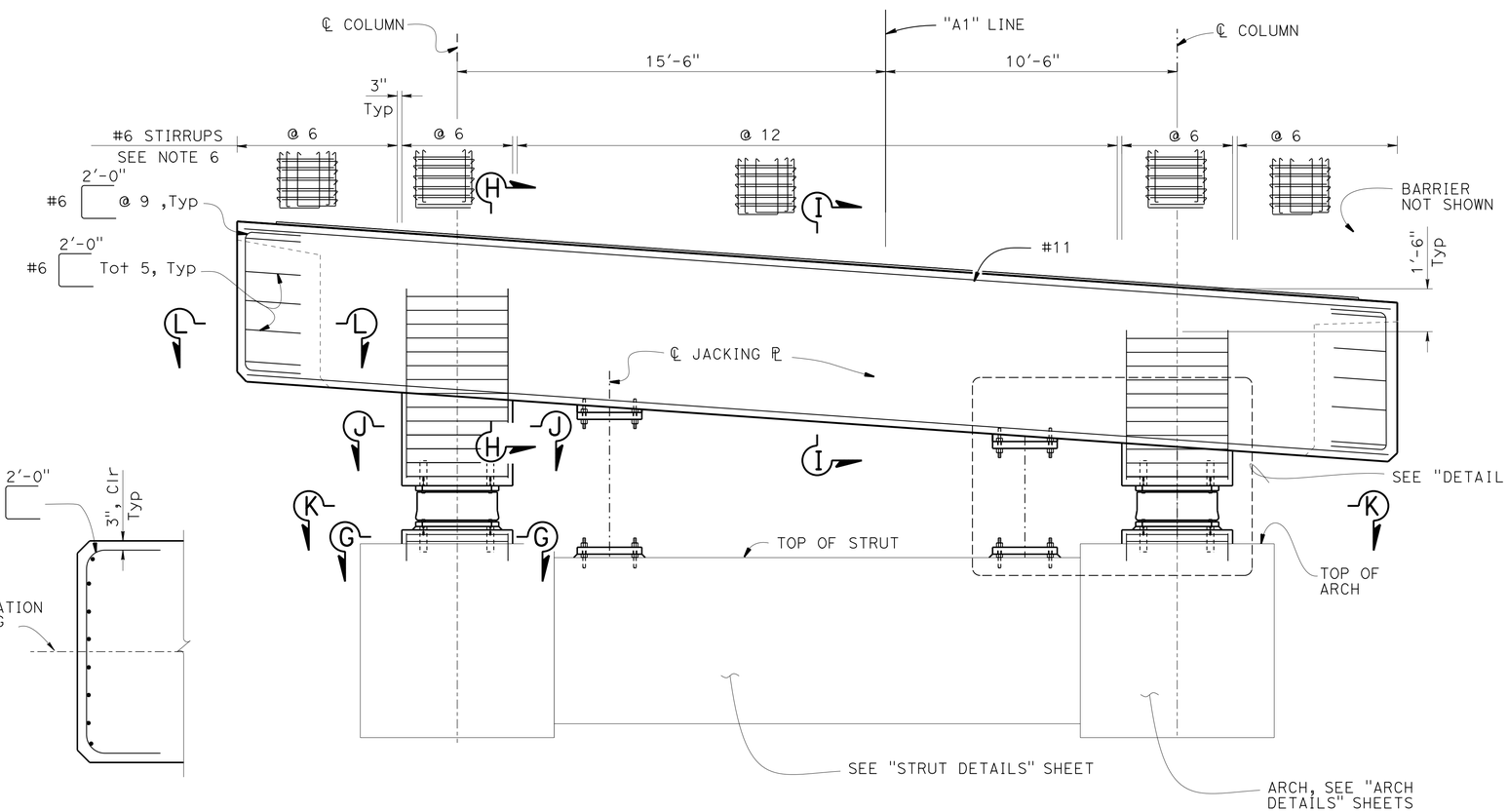

SECTION L-L

1/2" = 1'-0"

ELEVATION

3/8" =1'-0"

NOTES:

1. For "SECTION G-G", "SECTION H-H", "SECTION I-I" and "SECTION J-J", see "ISOLATION BEARING BENT 4 DETAILS NO. 2" sheet
2. For "DETAIL E" and "SECTION K-K", see "ISOLATION BEARING BENT 4 DETAILS NO. 3" sheet
3. For details not shown see Arch Details sheets
4. Only staggered ultimate Butt splices are allowed in main reinforcement in this area
5. All hoops are "ultimate butt" spliced continuos
6. All #6 Stirrups to be Epoxy Coated except for the ⟷ horizontal ties

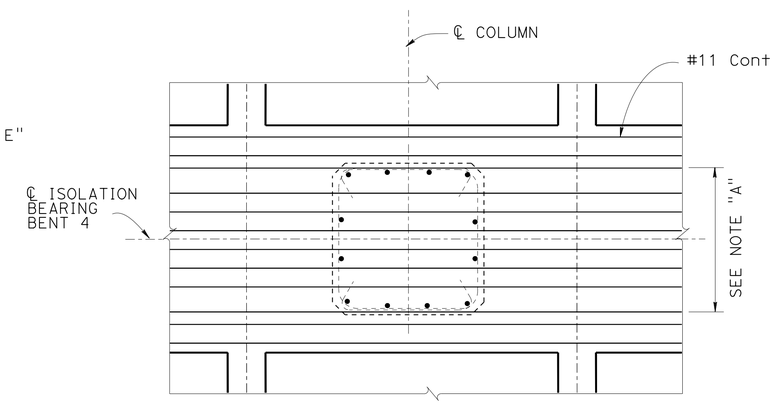

PART PLAN

1/2" = 1'-0"

NOTE A:
Adjust bottom cap reinforcement to clear main column reinforcement

	BY	CHECKED
DESIGN	Ali Asnaashari	Joey Aquino/Ashraf Ahmed
DETAILS	Shadi Motalebi	Joey Aquino/Ashraf Ahmed
QUANTITIES	Mufeed Khalaf	Quang Nguyen

STATE OF CALIFORNIA
DEPARTMENT OF TRANSPORTATION

DIVISION OF ENGINEERING SERVICES
STRUCTURE DESIGN
DESIGN BRANCH 3

BRIDGE NO. 06-0212L
POST MILE M29.68

SHASTA VIADUCT (REPLACE)

ISOLATION BEARING BENT 4 DETAILS NO. 1

STRUCTURES DESIGN DETAIL SHEET (ENGLISH) (REV. 09-01-10)

ORIGINAL SCALE IN INCHES FOR REDUCED PLANS 0 1 2 3

UNIT: 3578
PROJECT NUMBER & PHASE: 02000000161
CONTRACT NO.: 02-0E0904

DISREGARD PRINTS BEARING EARLIER REVISION DATES

REVISION DATES: 4-2-14 3-18-15

SHEET 39 OF 73

FILE => 06-0212l-k-sp-bt4-det01.dgn

USERNAME => s116738 DATE PLOTTED => 29-MAY-2015 TIME PLOTTED => 14:27

DIST	COUNTY	ROUTE	POST MILES TOTAL PROJECT	SHEET No.	TOTAL SHEETS
02	Sha	5	R29.3/R31.1, R45.0/R45.8	206	248

REGISTERED CIVIL ENGINEER 4-9-15 DATE

5-11-2015
PLANS APPROVAL DATE

REGISTERED PROFESSIONAL ENGINEER
Jose M Aquino III
No. 58386
Exp. 12-31-16
CIVIL
STATE OF CALIFORNIA

The State of California or its officers or agents shall not be responsible for the accuracy or completeness of scanned copies of this plan sheet.

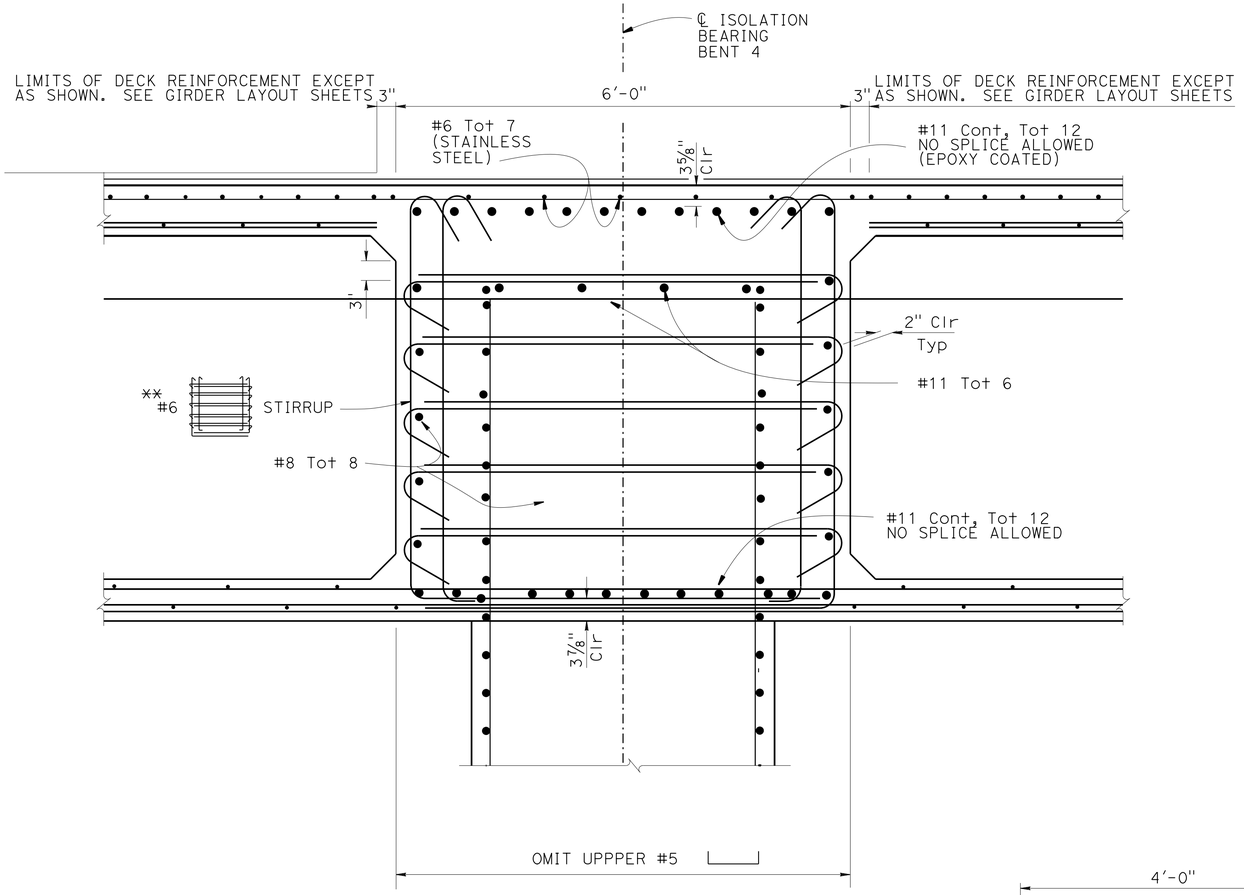

SECTION H-H
1" = 1'-0"

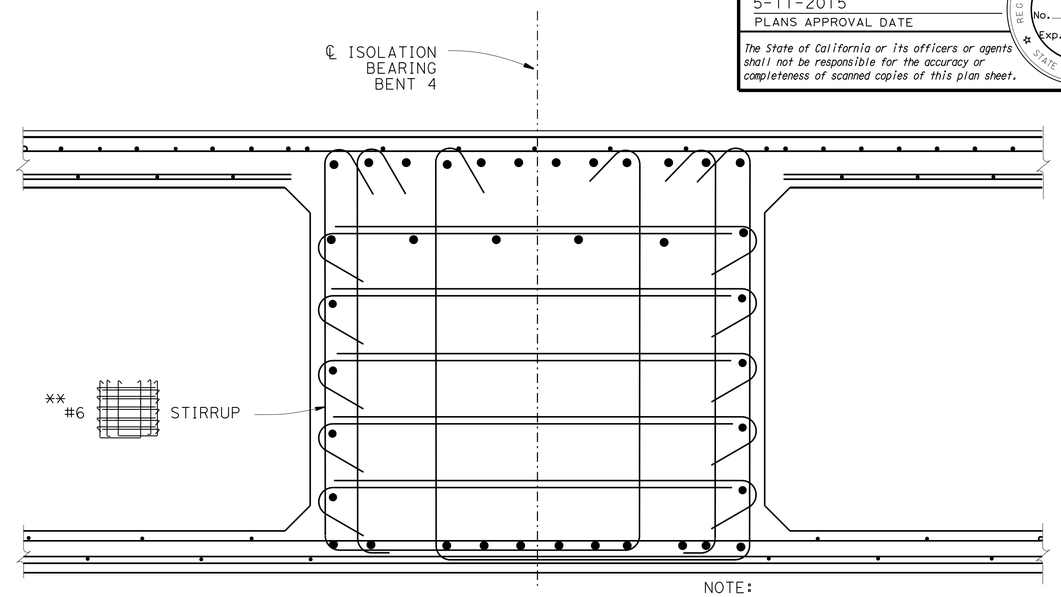

NOTE:

For details not shown, see "Section H-H"

SECTION I-I
1" = 1'-0"

NOTE:

For location of "SECTION G-G", "SECTION H-H", "SECTION I-I" and "SECTION J-J", see "ISOLATION BEARING BENT 4 DETAILS NO. 1" sheet

LEGEND:

Indicate bundled bars

Indicate T head bars

** All #6 Stirrups to be Epoxy Coated except for the horizontal ties

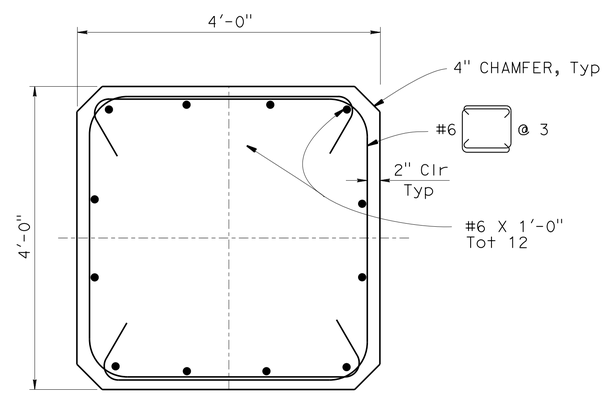

SECTION G-G
1" = 1'-0"

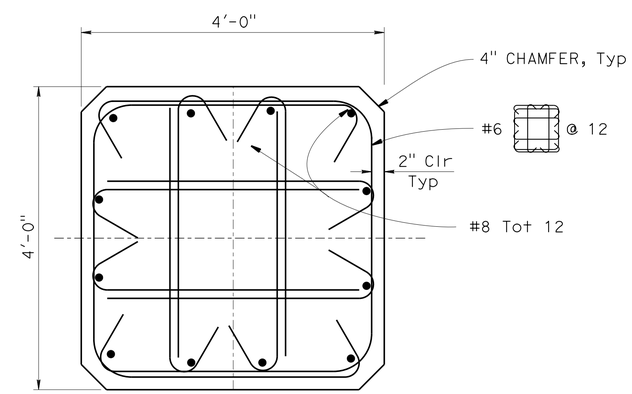

SECTION J-J
1" = 1'-0"

DESIGN	BY Ali Asnaashari	CHECKED Joey Aquino/Ashraf Ahmed	
DETAILS	BY Shadi Motalebi	CHECKED Joey Aquino/Ashraf Ahmed	
QUANTITIES	BY Mufeed Khalaf	CHECKED Quang Nguyen	

STATE OF CALIFORNIA
DEPARTMENT OF TRANSPORTATION

DIVISION OF ENGINEERING SERVICES
STRUCTURE DESIGN
DESIGN BRANCH 3

BRIDGE NO. 06-0212L
POST MILE M29.68

SHASTA VIADUCT (REPLACE)
ISOLATION BEARING BENT 4 DETAILS NO. 2

STRUCTURES DESIGN DETAIL SHEET (ENGLISH) (REV. 09-01-10)

ORIGINAL SCALE IN INCHES FOR REDUCED PLANS 0 1 2 3

UNIT: 3578
PROJECT NUMBER & PHASE: 02000000161
CONTRACT NO.: 02-0E0904

DISREGARD PRINTS BEARING EARLIER REVISION DATES

REVISION DATES 5-16-14 3-18-15

SHEET 40 OF 73

FILE => 06-0212l-k-sp-bt4-det02.dgn

USERNAME => s116738 DATE PLOTTED => 29-MAY-2015 TIME PLOTTED => 14:27

DIST	COUNTY	ROUTE	POST MILES TOTAL PROJECT	SHEET No.	TOTAL SHEETS
02	Sha	5	R29.3/R31.1, R45.0/R45.8	207	248

REGISTERED CIVIL ENGINEER 4-9-15 DATE

5-11-2015
PLANS APPROVAL DATE

REGISTERED PROFESSIONAL ENGINEER Jose M Aquino III No. 58386 Exp. 12-31-16 CIVIL STATE OF CALIFORNIA

The State of California or its officers or agents shall not be responsible for the accuracy or completeness of scanned copies of this plan sheet.

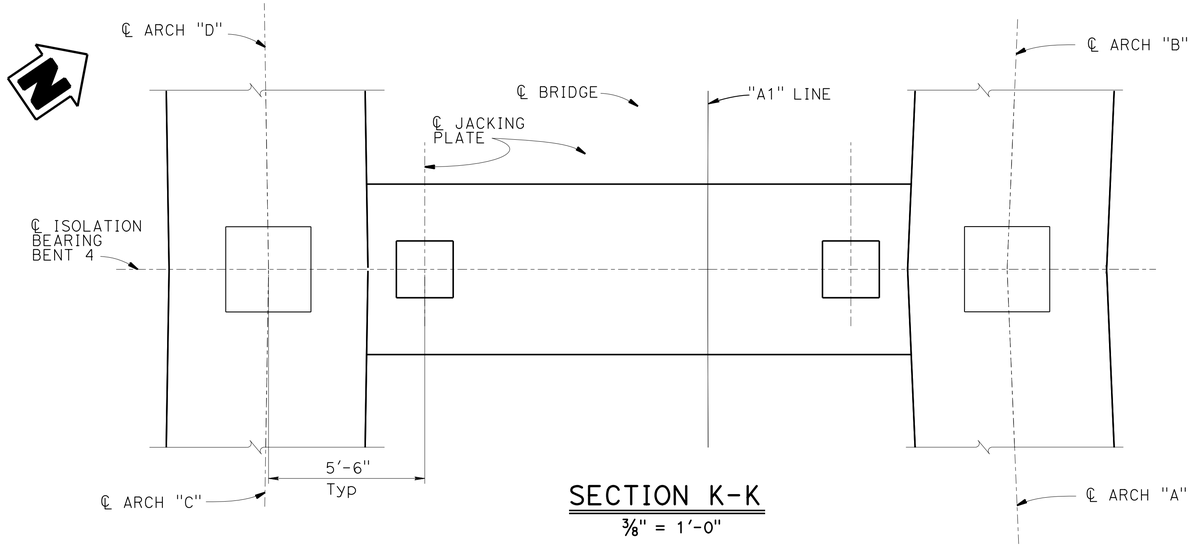

SECTION K-K

3/8" = 1'-0"

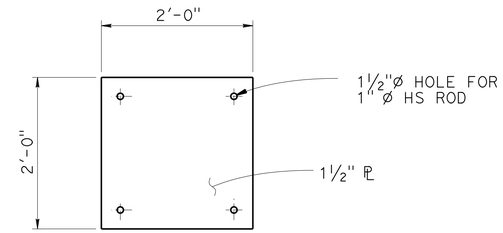

JACKING PLATE

1" = 1'-0"

Future Bearing Maintenance Jacking Loads (Per Jacking Plate)		
Location	Dead Load (Kip)	Live Load* (Kip)
Bent 4	1000	300

Locate Jack at center of plate

* Indicates LRFD service Design Vehicle with Dynamic Allowance

Jacking Plate to be galvanized

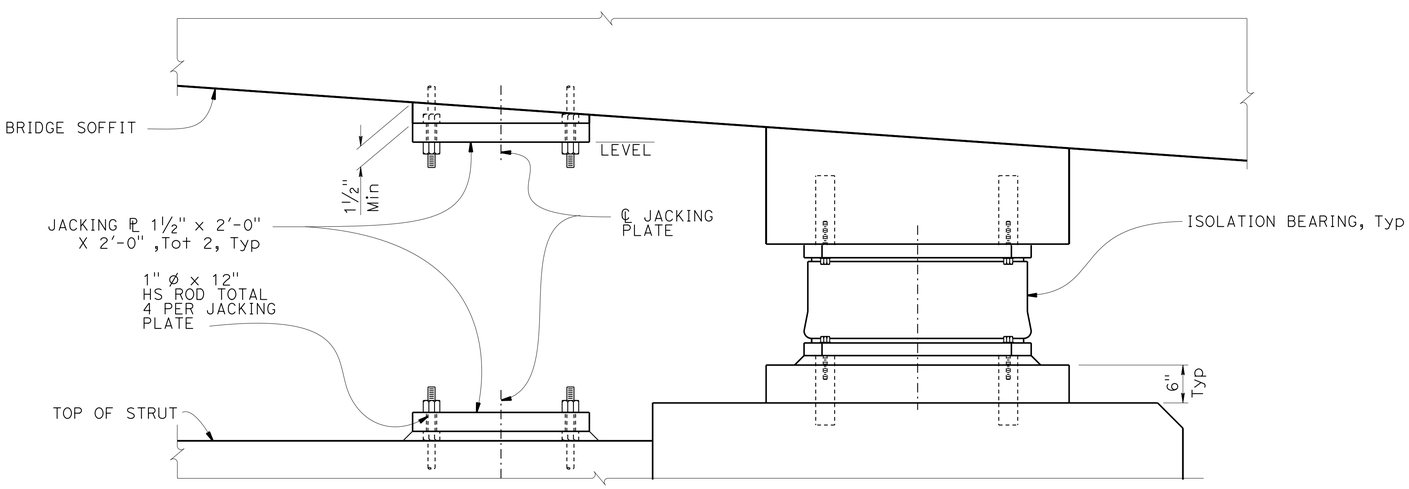

DETAIL-E

1" = 1'-0"

NOTES:

1. For location of "SECTION K-K" and "DETAIL E", see "ISOLATION BEARING BENT 4 DETAILS NO. 1" sheet
2. For details not shown, see "ARCH DETAILS NO. 1" and "ARCH DETAILS NO. 2" sheets
3. For isolation bearing details not shown, see "ISOLATION BEARING DETAILS NO. 1" and "ISOLATION BEARING DETAILS NO. 2" sheets

	BY	CHECKED
DESIGN	Ali Asnaashari	Joey Aquino/Ashraf Ahmed
DETAILS	Shadi Motalebi	Joey Aquino/Ashraf Ahmed
QUANTITIES	Mufeed Khalaf	Quang Nguyen

STATE OF CALIFORNIA DEPARTMENT OF TRANSPORTATION

DIVISION OF ENGINEERING SERVICES STRUCTURE DESIGN DESIGN BRANCH 3

BRIDGE NO. 06-0212L
POST MILE M29.68

SHASTA VIADUCT (REPLACE)
ISOLATION BEARING BENT 4 DETAILS NO. 3

STRUCTURES DESIGN DETAIL SHEET (ENGLISH) (REV. 09-01-10)

ORIGINAL SCALE IN INCHES FOR REDUCED PLANS 0 1 2 3

UNIT: 3578
PROJECT NUMBER & PHASE: 02000000161
CONTRACT NO.: 02-0E0904

DISREGARD PRINTS BEARING EARLIER REVISION DATES → 6-4-14 3-18-15

SHEET 41 OF 73

FILE => 06-0212l-k-sp-bt4-det03.dgn

USERNAME => s116738 DATE PLOTTED => 29-MAY-2015 TIME PLOTTED => 14:27

DIST	COUNTY	ROUTE	POST MILES TOTAL PROJECT	SHEET No.	TOTAL SHEETS
02	Sha	5	R29.3/R31.1, R45.0/R45.8	208	248

REGISTERED CIVIL ENGINEER — DATE 4-9-15

5-11-2015
PLANS APPROVAL DATE

REGISTERED PROFESSIONAL ENGINEER — Jose M Aquino III — No. 58386 — Exp. 12-31-16 — CIVIL — STATE OF CALIFORNIA

The State of California or its officers or agents shall not be responsible for the accuracy or completeness of scanned copies of this plan sheet.

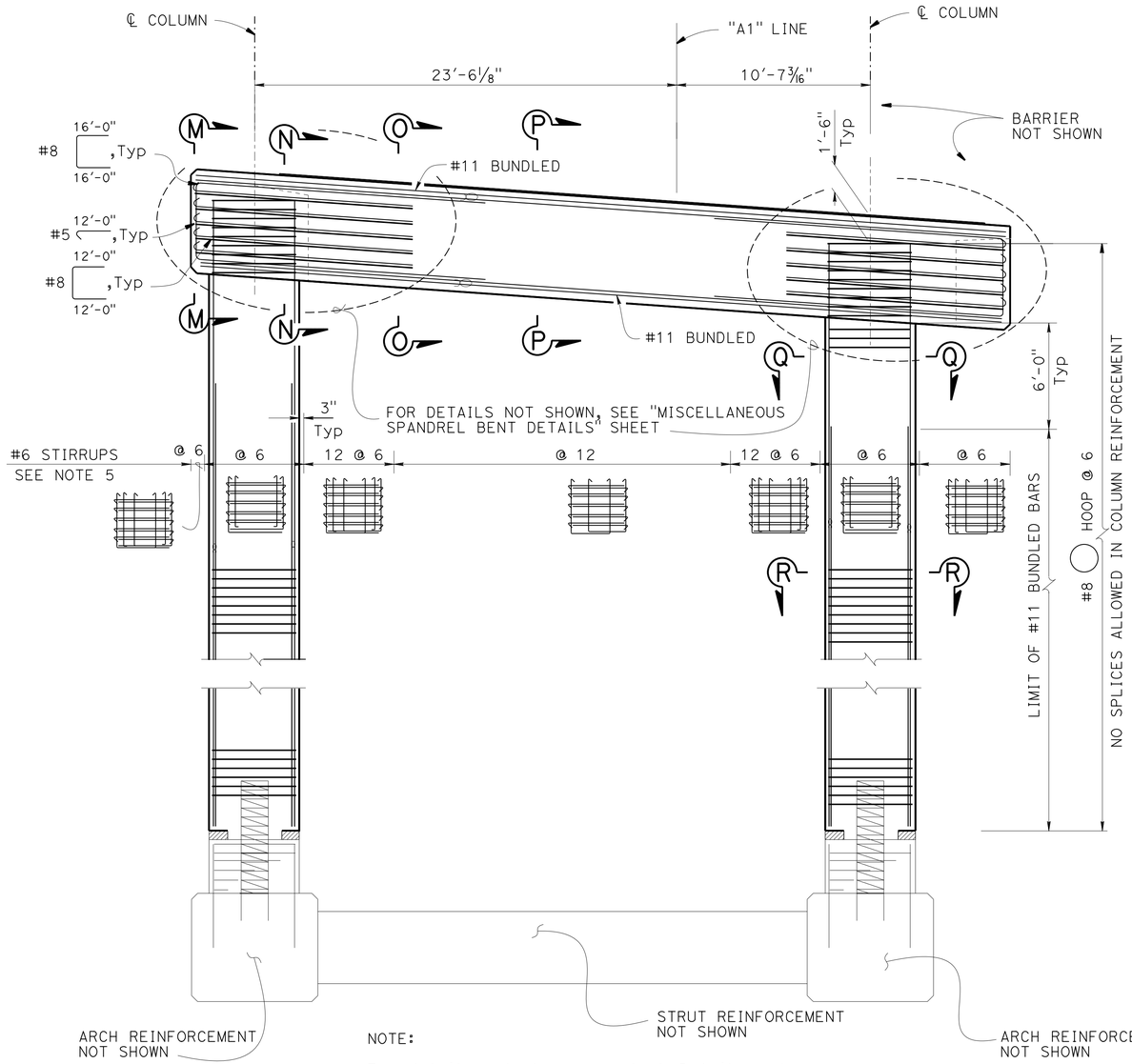

NOTE:

For details not shown, see Arch Details and "ARCH STRUT DETAIL" sheets

ELEVATION

1/4" = 1'-0"

NOTES:

1. For "SECTION M-M" ,"SECTION N-N", "SECTION O-O" and "SECTION P-P", see "SPANDREL BENT 5 DETAIL NO. 2" sheet
2. For "SECTION Q-Q" and "SECTION R-R", see "SPANDREL BENT 5 DETAIL NO. 3" sheet
3. All hoops are "ultimate butt" spliced continuous
4. Only staggered ultimate Butt splices are allowed in main reinforcement
5. All #6 Stirrups to be Epoxy Coated except for the horizontal ties

LEGEND:

Indicate 2" Neoprene Pad
Indicate bundled bars

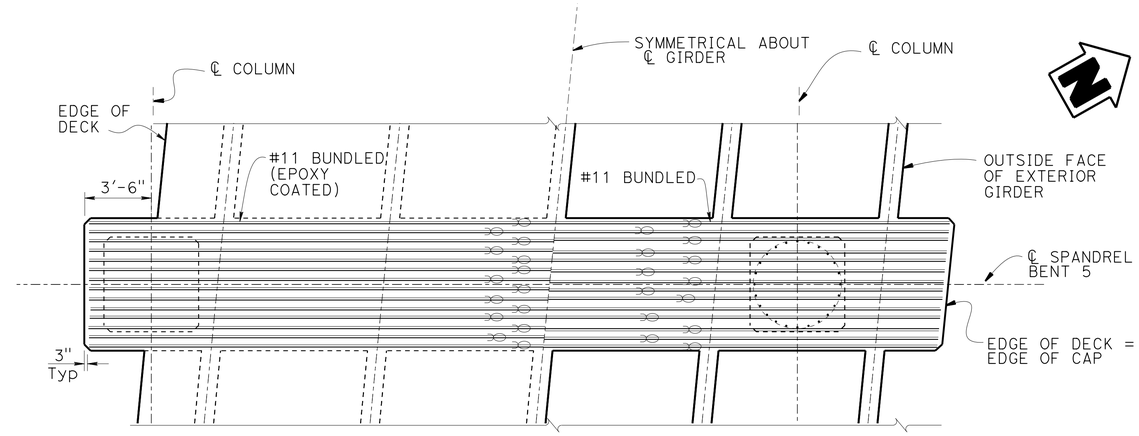

PLAN

1/4" = 1'-0"

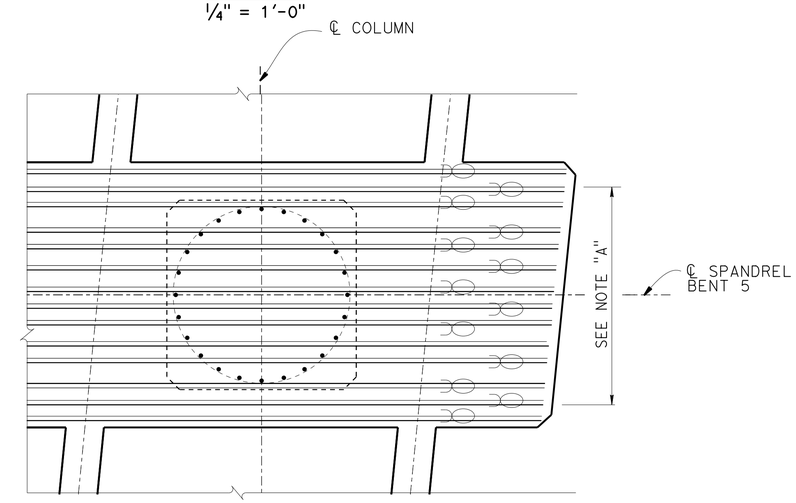

PART PLAN

1/2" = 1'-0"

NOTE A:
Adjust bottom cap reinforcement to clear main column reinforcement

DESIGN	BY Ali Asnaashari	CHECKED Joey Aquino/Ashraf Ahmed	
DETAILS	BY S Motalebi/L Ma	CHECKED Joey Aquino/Ashraf Ahmed	
QUANTITIES	BY Mufeed Khalaf	CHECKED Quang Nguyen	

STATE OF CALIFORNIA
DEPARTMENT OF TRANSPORTATION

DIVISION OF ENGINEERING SERVICES
STRUCTURE DESIGN
DESIGN BRANCH 3

BRIDGE NO. 06-0212L
POST MILE M29.68

SHASTA VIADUCT (REPLACE)
SPANDREL BENT 5 DETAILS NO. 1

STRUCTURES DESIGN DETAIL SHEET (ENGLISH) (REV. 09-01-10)

ORIGINAL SCALE IN INCHES FOR REDUCED PLANS 0 1 2 3

UNIT: 3578
PROJECT NUMBER & PHASE: 02000000161
CONTRACT NO.: 02-0E0904

DISREGARD PRINTS BEARING EARLIER REVISION DATES

REVISION DATES 4-2-14

SHEET 42 OF 73

FILE => 06-0212l-k-sp-bt5-det01.dgn

USERNAME => s116738 DATE PLOTTED => 29-MAY-2015 TIME PLOTTED => 14:27

DIST	COUNTY	ROUTE	POST MILES TOTAL PROJECT	SHEET No.	TOTAL SHEETS
02	Sha	5	R29.3/R31.1, R45.0/R45.8	209	248

REGISTERED CIVIL ENGINEER 4-9-15 DATE

5-11-2015
PLANS APPROVAL DATE

REGISTERED PROFESSIONAL ENGINEER Jose M Aquino III No. 58386 Exp. 12-31-16 CIVIL STATE OF CALIFORNIA

The State of California or its officers or agents shall not be responsible for the accuracy or completeness of scanned copies of this plan sheet.

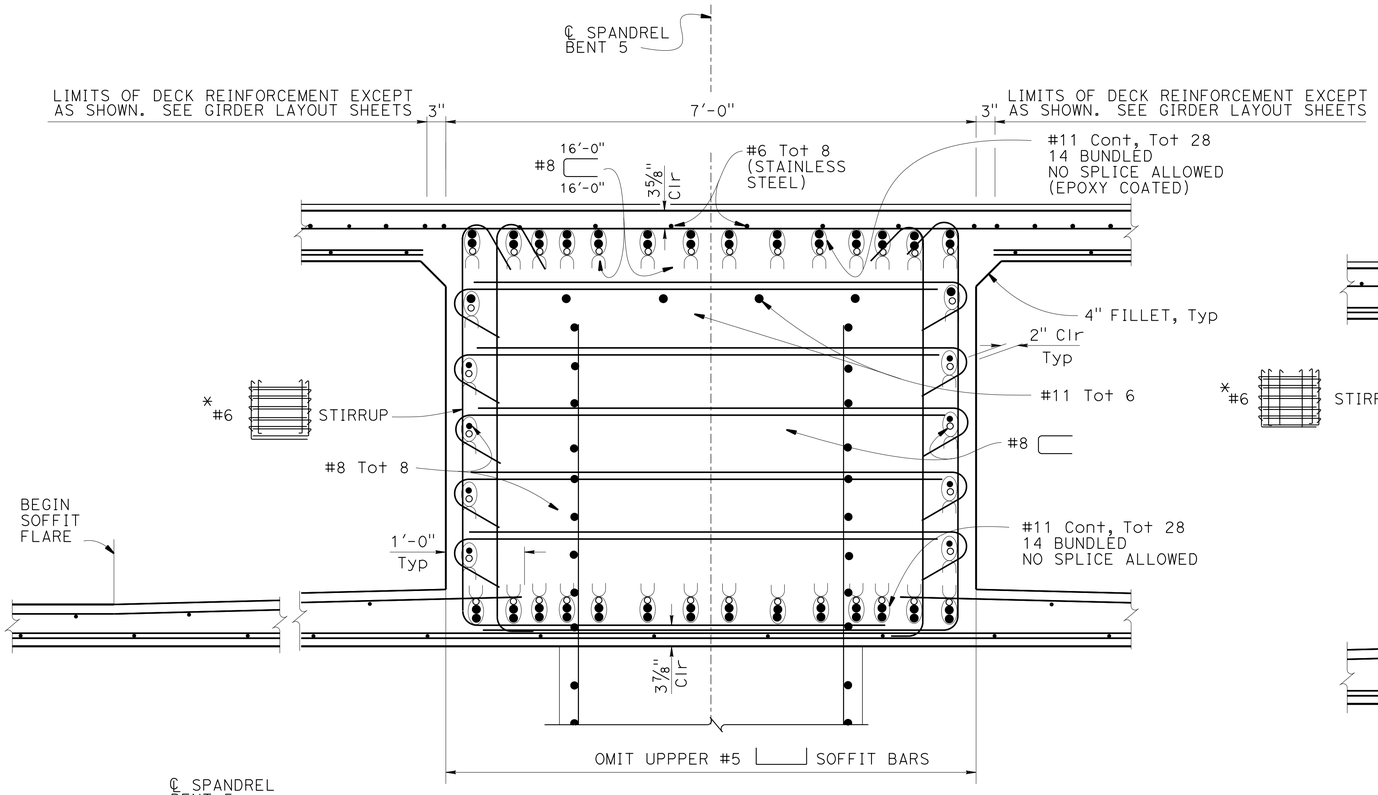

SECTION N-N

1" = 1'-0"

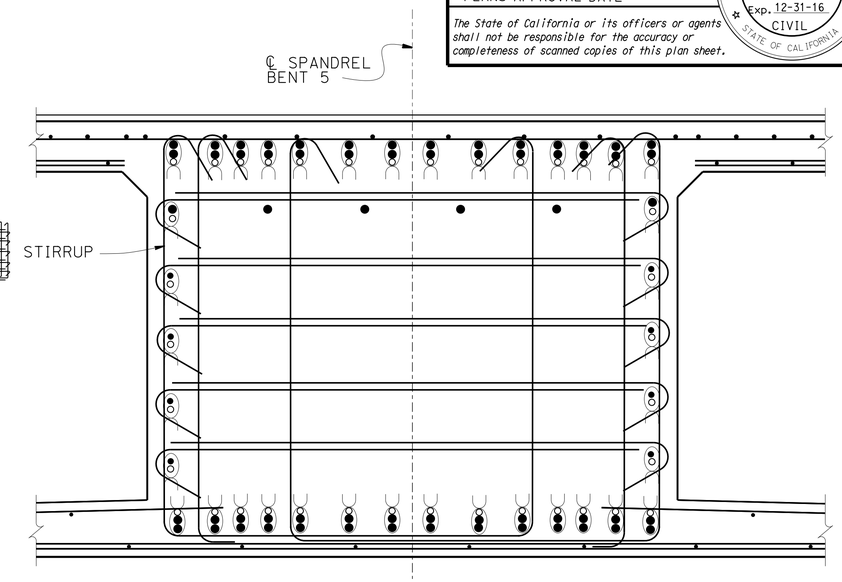

SECTION O-O

1" = 1'-0"

NOTE:

For details not shown, see "SECTION N-N"

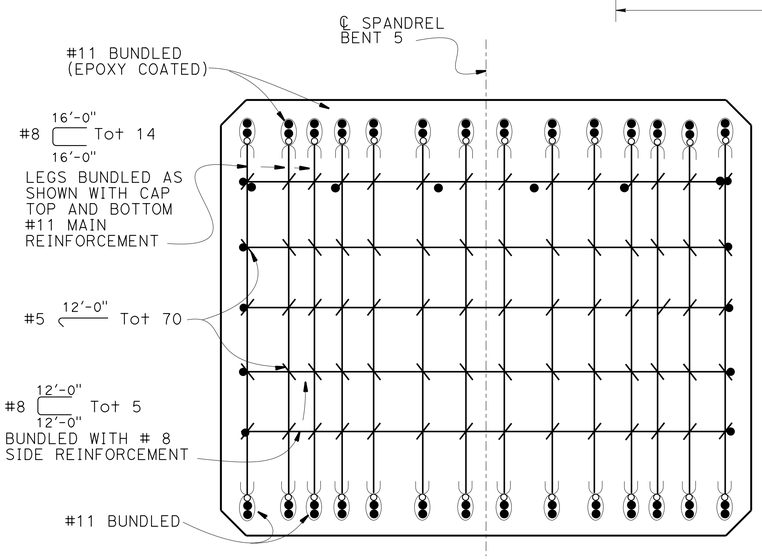

SECTION M M

1" = 1'-0"

NOTES:

1. #6 stirrups not shown for clarity
2. For details not shown, see "SECTION N-N"

LEGEND:

Indicates bundled bars

* All #6 Stirrups to be Epoxy Coated except for the horizontal ties

NOTE:

For location of "SECTION M-M", "SECTION N-N", "SECTION O-O" and "SECTION P-P", see "SPANDREL BENT 5 DETAILS NO. 1" sheet

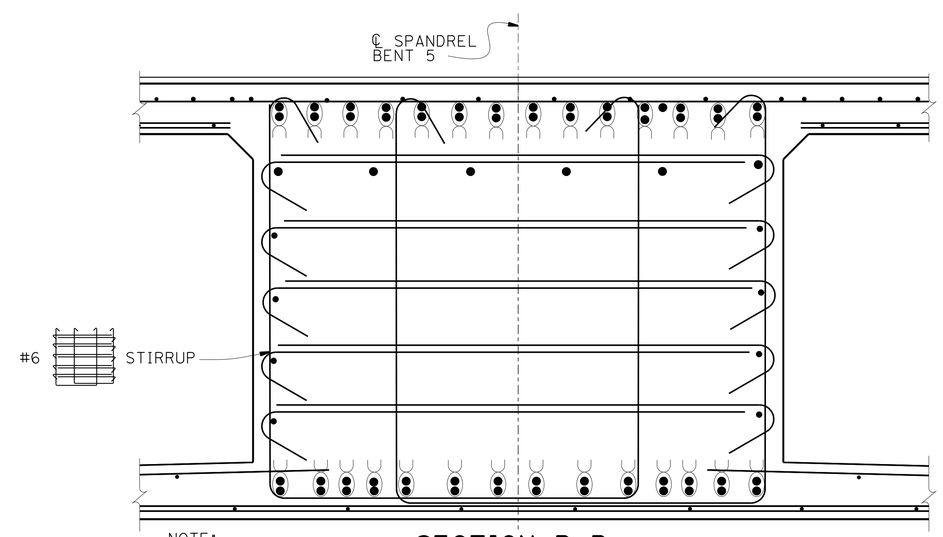

SECTION P-P

1" = 1'-0"

NOTE:

For details not shown, see "SECTION N-N"

DESIGN	BY Ali Asnaashari	CHECKED Joey Aquino/Ashraf Ahmed	
DETAILS	BY S Motalebi/L Ma	CHECKED Joey Aquino/Ashraf Ahmed	
QUANTITIES	BY Mufeed Khalaf	CHECKED Quang Nguyen	

STATE OF CALIFORNIA DEPARTMENT OF TRANSPORTATION

DIVISION OF ENGINEERING SERVICES STRUCTURE DESIGN DESIGN BRANCH 3

BRIDGE NO. 06-0212L
POST MILE M29.68

SHASTA VIADUCT (REPLACE)
SPANDREL BENT 5 DETAILS NO. 2

STRUCTURES DESIGN DETAIL SHEET (ENGLISH) (REV. 09-01-10)

ORIGINAL SCALE IN INCHES FOR REDUCED PLANS 0 1 2 3

UNIT: 3578
PROJECT NUMBER & PHASE: 02000000161
CONTRACT NO.: 02-0E0904

DISREGARD PRINTS BEARING EARLIER REVISION DATES

REVISION DATES 5-5-14

SHEET 43 OF 73

FILE => 06-0212l-k-sp-bt5-det02.dgn

USERNAME => s116738 DATE PLOTTED => 29-MAY-2015 TIME PLOTTED => 14:27

DIST	COUNTY	ROUTE	POST MILES TOTAL PROJECT	SHEET No.	TOTAL SHEETS
02	Sha	5	R29.3/R31.1, R45.0/R45.8	210	248

REGISTERED CIVIL ENGINEER 4-9-15 DATE

5-11-2015
PLANS APPROVAL DATE

REGISTERED PROFESSIONAL ENGINEER
Jose M Aquino III
No. 58386
Exp. 12-31-16
CIVIL
STATE OF CALIFORNIA

The State of California or its officers or agents shall not be responsible for the accuracy or completeness of scanned copies of this plan sheet.

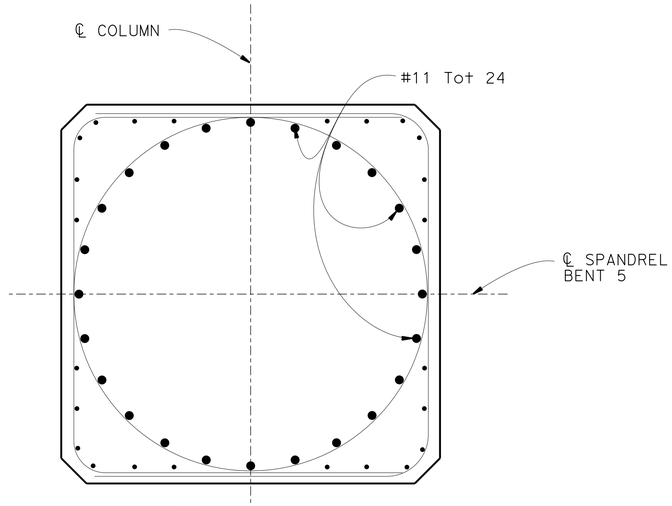

NOTE:

For details not shown, see "SECTION R-R"

SECTION Q-Q

1" = 1'-0"

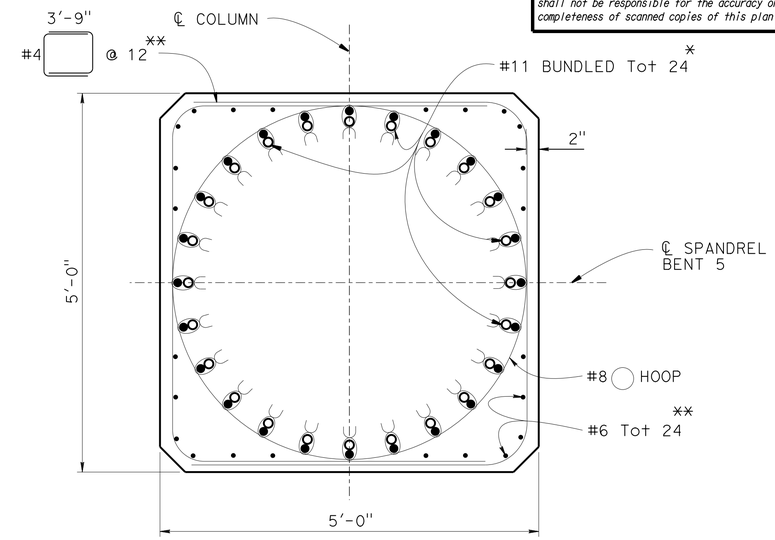

SECTION R-R

1" = 1'-0"

LEGEND:

Indicates bundled bars
* For termination location, see "SPANDREL BENT 5 DETAILS NO. 1" sheet
** Indicates bars terminate at bridge soffit

NOTE:

1. For location of "SECTION Q-Q" and "SECTION R-R", see "SPANDREL BENT 5 DETAIL NO. 1" sheet

	BY	CHECKED
DESIGN	Ali Asnaashari	Joey Aquino/Ashraf Ahmed
DETAILS	S Motalebi/L Ma	Joey Aquino/Ashraf Ahmed
QUANTITIES	Mufeed Khalaf	Quang Nguyen

STATE OF CALIFORNIA
DEPARTMENT OF TRANSPORTATION

DIVISION OF ENGINEERING SERVICES
STRUCTURE DESIGN
DESIGN BRANCH 3

BRIDGE NO. 06-0212L
POST MILE M29.68

SHASTA VIADUCT (REPLACE)
SPANDREL BENT 5 DETAILS NO. 3

STRUCTURES DESIGN DETAIL SHEET (ENGLISH) (REV. 09-01-10)

ORIGINAL SCALE IN INCHES FOR REDUCED PLANS 0 1 2 3

UNIT: 3578
PROJECT NUMBER & PHASE: 02000000161
CONTRACT NO.: 02-0E0904

DISREGARD PRINTS BEARING EARLIER REVISION DATES

REVISION DATES: 5-5-14

SHEET 44 OF 73

FILE => 06-0212l-k-sp-b5-det03.dgn

USERNAME => s116738 DATE PLOTTED => 29-MAY-2015 TIME PLOTTED => 14:27

DIST	COUNTY	ROUTE	POST MILES TOTAL PROJECT	SHEET No.	TOTAL SHEETS
02	Sha	5	R29.3/R31.1, R45.0/R45.8	211	248

REGISTERED CIVIL ENGINEER — DATE 4-9-15

5-11-2015
PLANS APPROVAL DATE

REGISTERED PROFESSIONAL ENGINEER — Jose M Aquino III — No. 58386 — Exp. 12-31-16 — CIVIL — STATE OF CALIFORNIA

The State of California or its officers or agents shall not be responsible for the accuracy or completeness of scanned copies of this plan sheet.

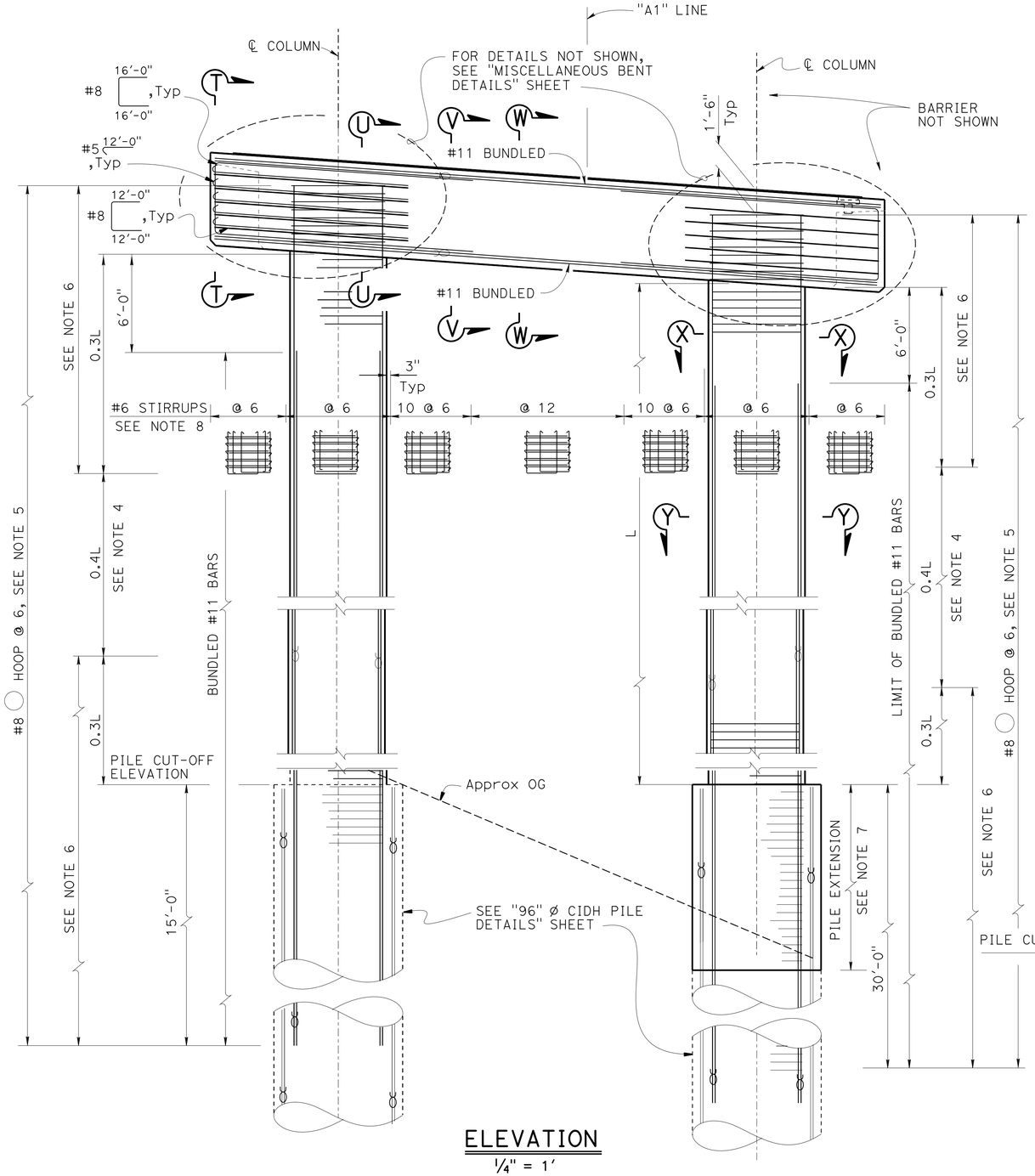

ELEVATION
1/4" = 1'

LEGEND:

Indicate bundled bars

NOTES:

1. Bent 7 Shown, Bent 8 similar
2. For "SECTION T-T" ,"SECTION U-U", "SECTION V-V" and "SECTION W-W", see "BENT 7 & 8 DETAIL NO. 2" sheet
3. For "SECTION X-X" and "SECTION Y-Y", see "BENT 7 & 8 DETAIL NO. 3" sheet
4. Only staggered "Ultimate" butt splices are allowed in main reinforcement
5. All hoops are ultimate butt splice continuous
6. NO splice allowed in main column reinforcement
7. For Pile Cut-Off Elevation and Pile extension, see "96" Ø CIDH PILE DETAILS" sheet
8. All #6 Stirrups to be Epoxy Coated except for the horizontal ties

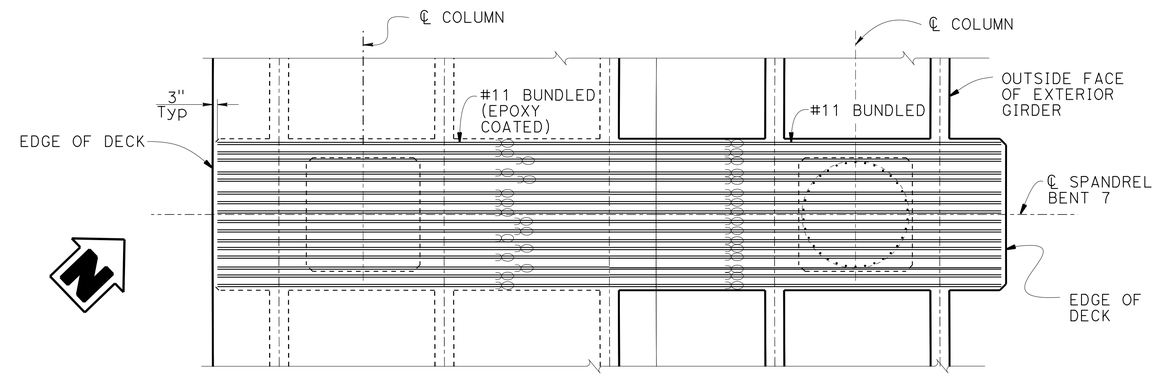

TOP REINFORCEMENT — BOTTOM REINFORCEMENT

PLAN
1/4" = 1'-0"

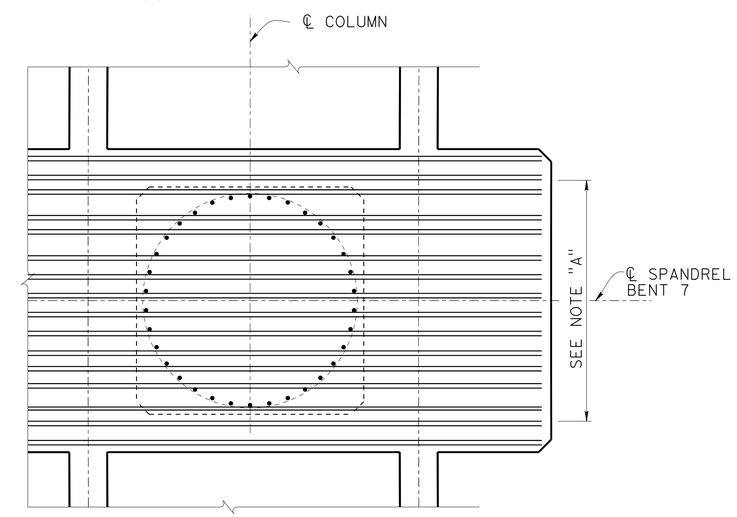

PART PLAN
1/2" = 1'-0"

NOTE A:
Adjust bottom cap reinforcement to clear main column reinforcement

DESIGN	BY Ali Asnaashari	CHECKED Joey Aquino/Ashraf Ahmed	
DETAILS	BY S Motalebi/L Ma	CHECKED Joey Aquino/Ashraf Ahmed	
QUANTITIES	BY Mufeed Khalaf	CHECKED Quang Nguyen	

STATE OF CALIFORNIA
DEPARTMENT OF TRANSPORTATION

DIVISION OF ENGINEERING SERVICES
STRUCTURE DESIGN
DESIGN BRANCH 3

BRIDGE NO. 06-0212L
POST MILE M29.68

SHASTA VIADUCT (REPLACE)
BENT 7 & 8 DETAILS NO. 1

STRUCTURES DESIGN DETAIL SHEET (ENGLISH) (REV. 09-01-10)

ORIGINAL SCALE IN INCHES FOR REDUCED PLANS 0 1 2 3

UNIT: 3578
PROJECT NUMBER & PHASE: 02000000161
CONTRACT NO.: 02-0E0904

DISREGARD PRINTS BEARING EARLIER REVISION DATES

REVISION DATES 5-7-14

SHEET 45 OF 73

FILE => 06-0212l-k-sp-bt7-det01.dgn

USERNAME => s116738 DATE PLOTTED => 29-MAY-2015 TIME PLOTTED => 14:27

DIST	COUNTY	ROUTE	POST MILES TOTAL PROJECT	SHEET No.	TOTAL SHEETS
02	Sha	5	R29.3/R31.1, R45.0/R45.8	212	248

REGISTERED CIVIL ENGINEER 4-9-15 DATE

5-11-2015
PLANS APPROVAL DATE

REGISTERED PROFESSIONAL ENGINEER Jose M Aquino III No. 58386 Exp. 12-31-16 CIVIL STATE OF CALIFORNIA

The State of California or its officers or agents shall not be responsible for the accuracy or completeness of scanned copies of this plan sheet.

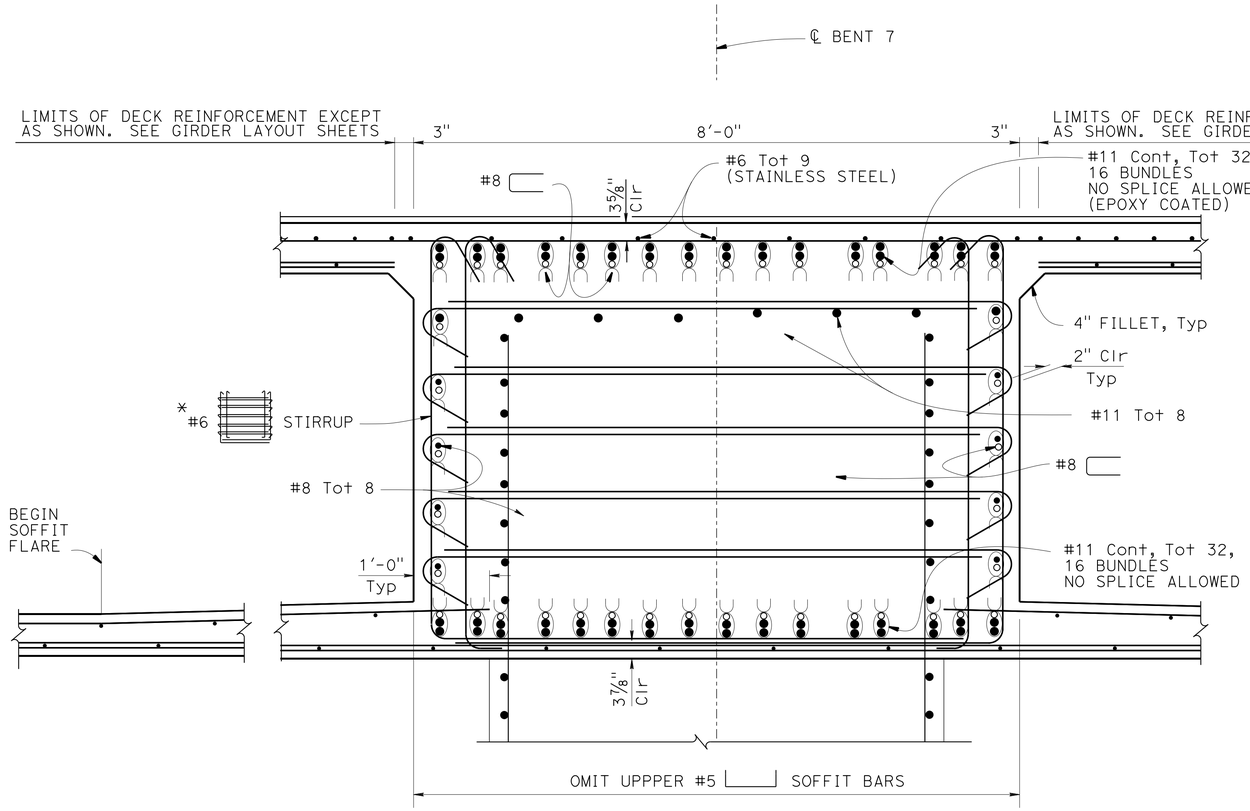

SECTION U-U
1" = 1'-0"

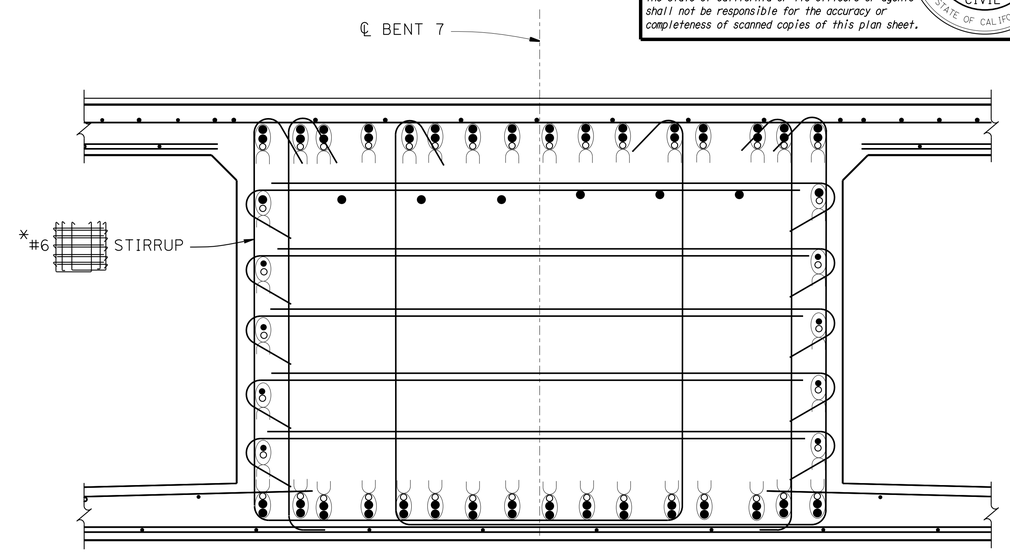

NOTE:

For details not shown, see "SECTION U-U"

SECTION V-V
1" = 1'-0"

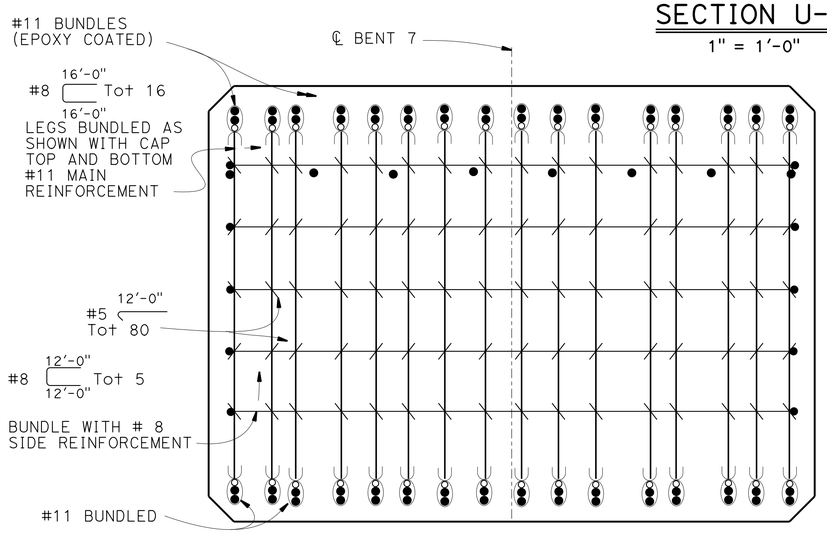

NOTES:

1. #6 stirrups not shown for clarity
2. For details not shown, see "SECTION U-U"

SECTION T-T
1" = 1'-0"

NOTE:

For location of "SECTION T-T", "SECTION U-U", "SECTION V-V" and "SECTION W-W", see "BENT 7 & 8 DETAILS NO. 1" sheet

LEGEND:

Indicates bundled bars

* All #6 Stirrups to be Epoxy Coated except for the horizontal ties

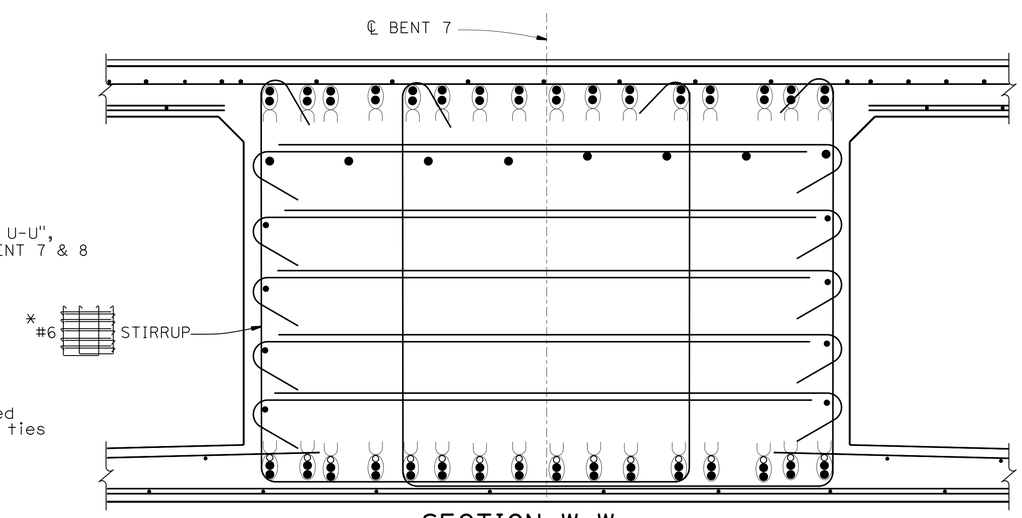

NOTE:

For details not shown, see "SECTION U-U"

SECTION W-W
1" = 1'-0"

DESIGN	BY Ali Asnaashari	CHECKED Joey Aquino/Ashraf Ahmed	
DETAILS	BY Shadi Motalebi	CHECKED Joey Aquino/Ashraf Ahmed	
QUANTITIES	BY Mufeed Khalaf	CHECKED Quang Nguyen	

STATE OF CALIFORNIA
DEPARTMENT OF TRANSPORTATION

DIVISION OF ENGINEERING SERVICES
STRUCTURE DESIGN
DESIGN BRANCH 3

BRIDGE NO. 06-0212L
POST MILE M29.68

SHASTA VIADUCT (REPLACE)
BENT 7 & 8 DETAILS NO. 2

STRUCTURES DESIGN DETAIL SHEET (ENGLISH) (REV. 09-01-10)

ORIGINAL SCALE IN INCHES FOR REDUCED PLANS 0 1 2 3

UNIT: 3578
PROJECT NUMBER & PHASE: 02000000161
CONTRACT NO.: 02-0E0904

DISREGARD PRINTS BEARING EARLIER REVISION DATES

REVISION DATES 5-7-14

SHEET 46 OF 73

FILE => 06-0212l-k-sp-bt7-det02.dgn

USERNAME => s116738 DATE PLOTTED => 29-MAY-2015 TIME PLOTTED => 14:27

DIST	COUNTY	ROUTE	POST MILES TOTAL PROJECT	SHEET No.	TOTAL SHEETS
02	Sha	5	R29.3/R31.1, R45.0/R45.8	213	248

REGISTERED CIVIL ENGINEER 4-9-15 DATE

5-11-2015
PLANS APPROVAL DATE

REGISTERED PROFESSIONAL ENGINEER
Jose M Aquino III
No. 58386
Exp. 12-31-16
CIVIL
STATE OF CALIFORNIA

The State of California or its officers or agents shall not be responsible for the accuracy or completeness of scanned copies of this plan sheet.

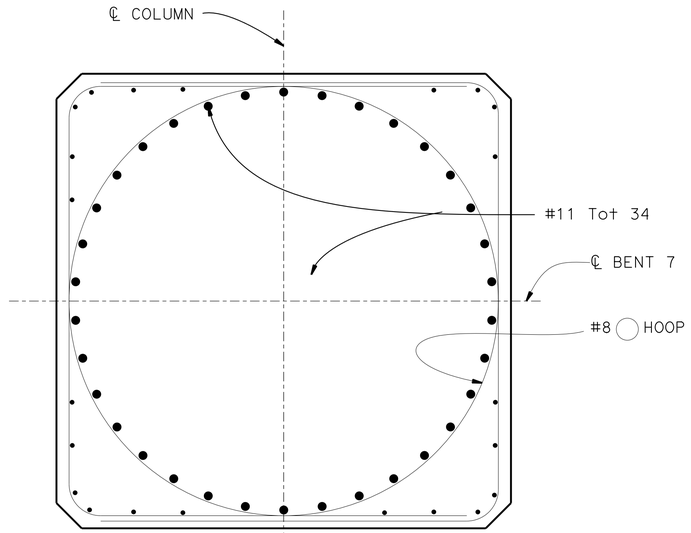

NOTE:

For details not shown, see "SECTION Y-Y"

SECTION X-X

1" = 1'-0"

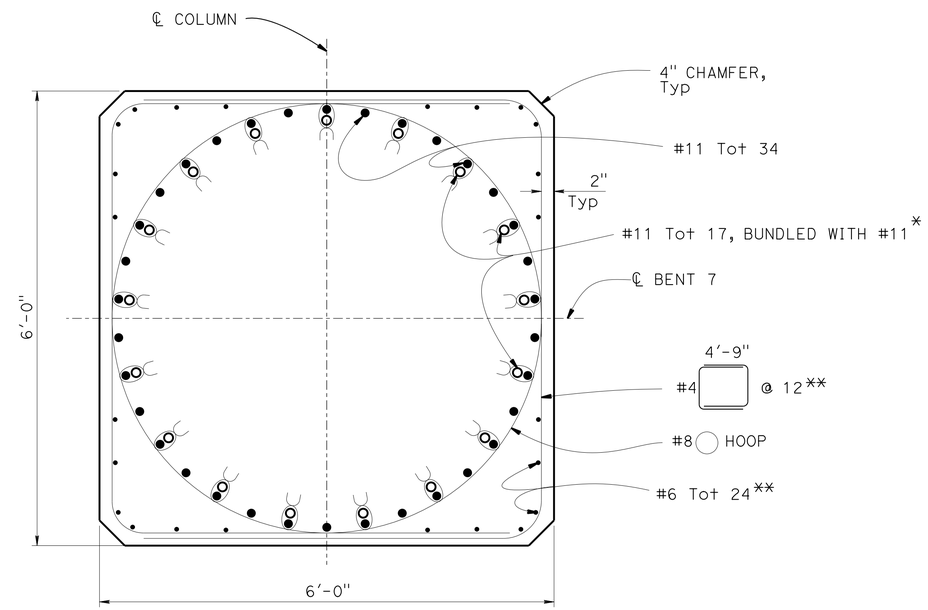

LEGEND:

Indicates bundled bars
* For termination location, see "BENT 7 & 8 DETAILS NO. 1" sheet
** These bars terminate at bridge soffit and at pile cut-off at left column or top of pile extension at right column

NOTE:

1. For location of "SECTION X-X" and "SECTION Y-Y", see "BENT 7 & 8 DETAILS NO. 1" sheet

SECTION Y-Y

1" = 1'-0"

	BY	CHECKED
DESIGN	Ali Asnaashari	Joey Aquino/Ashraf Ahmed
DETAILS	S Motalebi/L Ma	Joey Aquino/Ashraf Ahmed
QUANTITIES	Mufeed Khalaf	Quang Nguyen

STATE OF CALIFORNIA
DEPARTMENT OF TRANSPORTATION

DIVISION OF ENGINEERING SERVICES
STRUCTURE DESIGN
DESIGN BRANCH 3

BRIDGE NO. 06-0212L
POST MILE M29.68

SHASTA VIADUCT (REPLACE)
BENT 7 & 8 DETAILS NO. 3

STRUCTURES DESIGN DETAIL SHEET (ENGLISH) (REV. 09-01-10)

ORIGINAL SCALE IN INCHES FOR REDUCED PLANS 0 1 2 3

UNIT: 3578
PROJECT NUMBER & PHASE: 02000000161
CONTRACT NO.: 02-0E0904

DISREGARD PRINTS BEARING EARLIER REVISION DATES

REVISION DATES 5-7-14

SHEET 47 OF 73

FILE => 06-0212l-k-sp-bt7-det03.dgn

USERNAME => s116738 DATE PLOTTED => 29-MAY-2015 TIME PLOTTED => 14:27

DIST	COUNTY	ROUTE	POST MILES TOTAL PROJECT	SHEET No.	TOTAL SHEETS
02	Sha	5	R29.3/R31.1, R45.0/R45.8	214	248

REGISTERED CIVIL ENGINEER — DATE 4-9-15

5-11-2015
PLANS APPROVAL DATE

REGISTERED PROFESSIONAL ENGINEER — Jose M Aquino III — No. 58386 — Exp. 12-31-16 — CIVIL — STATE OF CALIFORNIA

The State of California or its officers or agents shall not be responsible for the accuracy or completeness of scanned copies of this plan sheet.

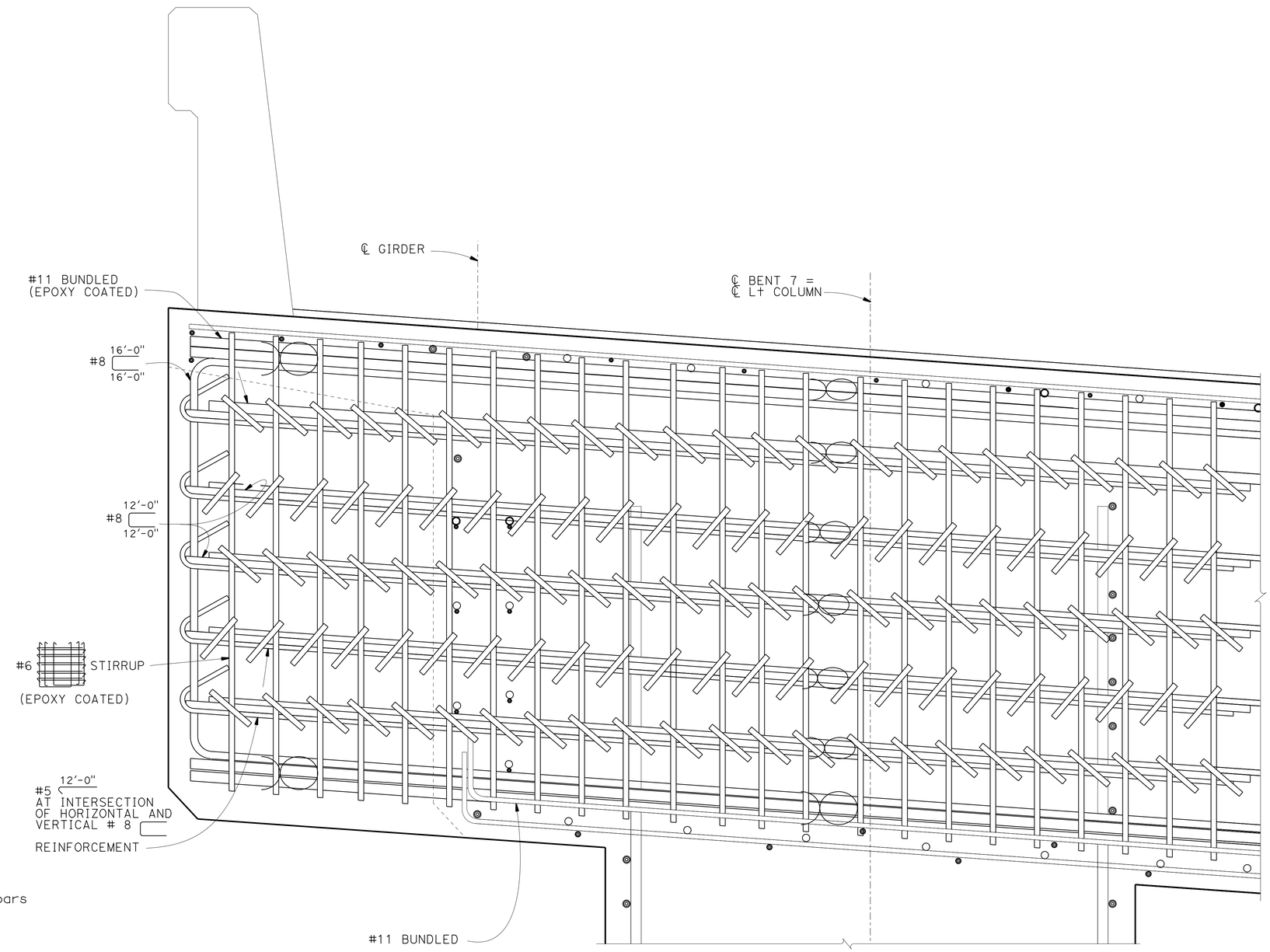

LEGEND:

Indicate Bundled bars

NOTE:

1. Bent 7 shown, Bent 8 similar
2. For details not shown, see "BENT 7 & 8 DETAILS NO. 1", "BENT 7 & 8 DETAILS NO. 2" and "BENT 7 & 8 DETAILS NO. 3" sheets

NOTE:

Hoop reinforcement not shown for clarity

PART ELEVATION

1½" = 1'-0"

DESIGN	BY Ali Asnaashari	CHECKED Joey Aquino/Ashraf Ahmed
DETAILS	BY Shadi Motalebi	CHECKED Joey Aquino/Ashraf Ahmed
QUANTITIES	BY Mufeed Khalaf	CHECKED Quang Nguyen

STATE OF CALIFORNIA
DEPARTMENT OF TRANSPORTATION

DIVISION OF ENGINEERING SERVICES
STRUCTURE DESIGN
DESIGN BRANCH 3

BRIDGE NO. 06-0212L
POST MILE M29.68

SHASTA VIADUCT (REPLACE)
MISCELLANEOUS BENT DETAILS

STRUCTURES DESIGN DETAIL SHEET (ENGLISH) (REV. 09-01-10)

ORIGINAL SCALE IN INCHES FOR REDUCED PLANS 0 1 2 3

UNIT: 3578
PROJECT NUMBER & PHASE: 02000000161
CONTRACT NO.: 02-0E0904

DISREGARD PRINTS BEARING EARLIER REVISION DATES

REVISION DATES: 10-13-14

SHEET 48 OF 73

FILE => 06-0212l-k-sp-bt7-det04.dgn

USERNAME => s116738 DATE PLOTTED => 29-MAY-2015 TIME PLOTTED => 14:27

DIST	COUNTY	ROUTE	POST MILES TOTAL PROJECT	SHEET No.	TOTAL SHEETS
02	Sha	5	R29.3/R31.1, R45.0/R45.8	215	248

REGISTERED CIVIL ENGINEER 4-9-15 DATE

5-11-2015
PLANS APPROVAL DATE

REGISTERED PROFESSIONAL ENGINEER Jose M Aquino III No. 58386 Exp. 12-31-16 CIVIL STATE OF CALIFORNIA

The State of California or its officers or agents shall not be responsible for the accuracy or completeness of scanned copies of this plan sheet.

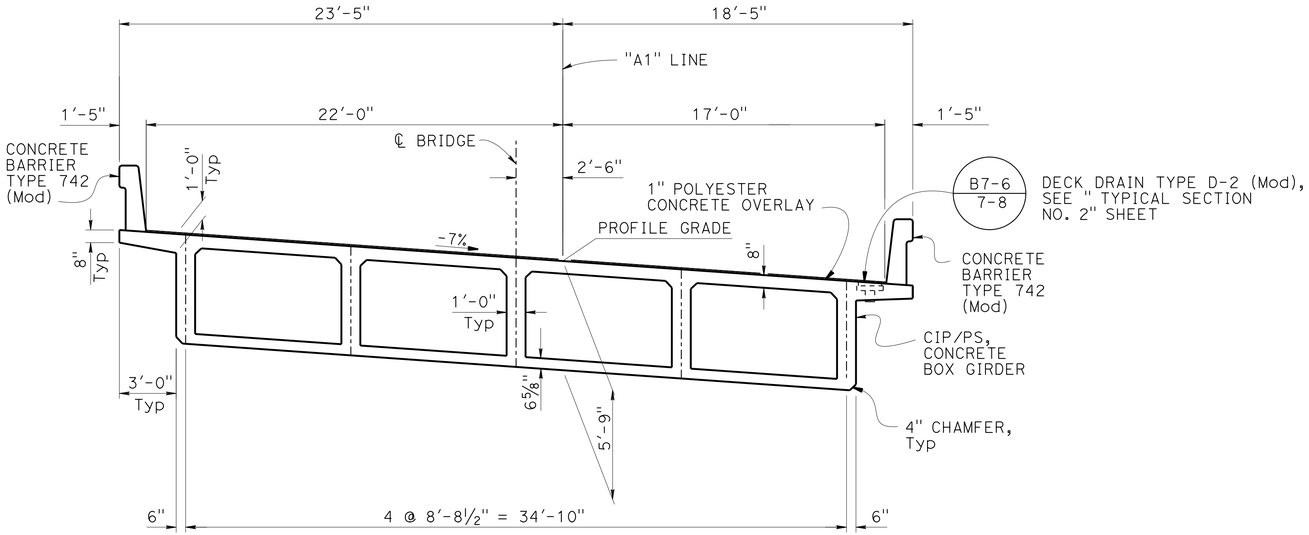

TYPICAL SECTION

1/4" = 1'-0"

LEGEND:

* Denotes Stainless Steel reinforcement
** Only service butt splices are allowed, see "DETAIL A" for typical splice configuration and limitations on "TYPICAL SECTION NO. 2" sheet
Indicates bundled bars

NOTES:

1. For "DETAIL B", see "TYPICAL SECTION No. 2" sheet
2. All Barrier Type 742 (Mod) Reinforcement to be epoxy coated

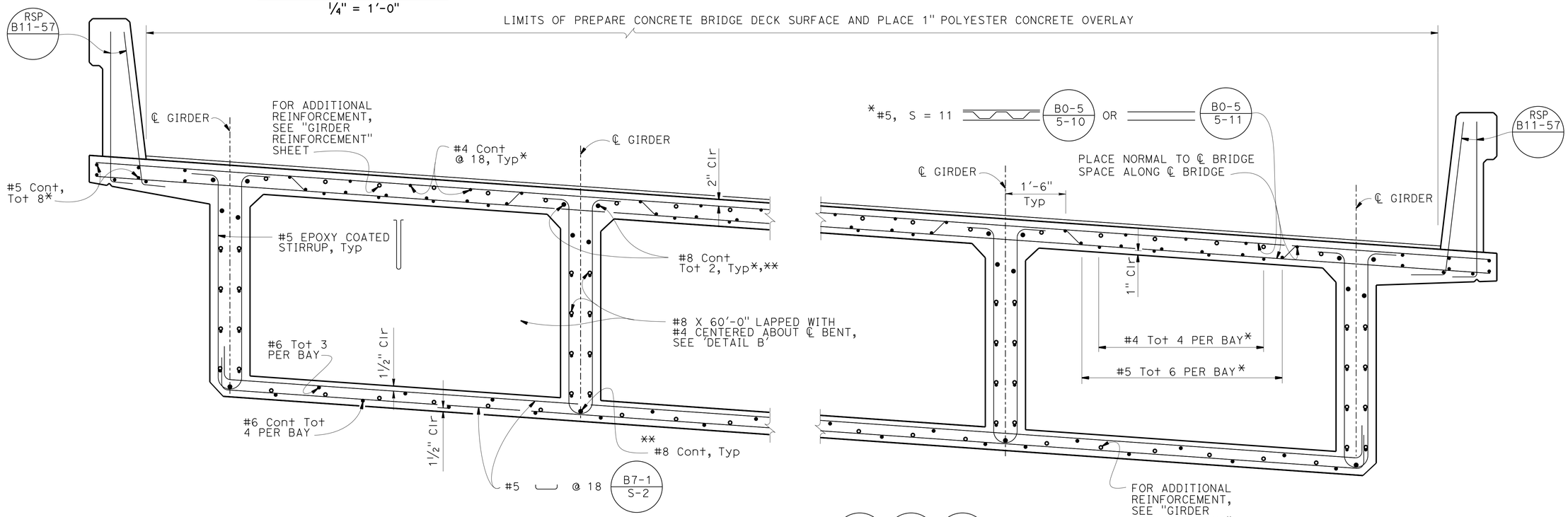

PART TYPICAL SECTION

3/4" = 1'-0"

B0-5 | RSP B8-5 | B7-1 / B-1

DESIGN	BY Ali Asnaashari	CHECKED Joey Aquino/Ashraf Ahmed	
DETAILS	BY Shadi Motalebi	CHECKED Joey Aquino/Ashraf Ahmed	
QUANTITIES	BY Mufeed Khalaf	CHECKED Quang Nguyen	

STATE OF CALIFORNIA
DEPARTMENT OF TRANSPORTATION

DIVISION OF ENGINEERING SERVICES
STRUCTURE DESIGN
DESIGN BRANCH 3

BRIDGE NO. 06-0212L
POST MILE M29.68

SHASTA VIADUCT (REPLACE)
TYPICAL SECTION NO. 1

STRUCTURES DESIGN DETAIL SHEET (ENGLISH) (REV. 09-01-10)

ORIGINAL SCALE IN INCHES FOR REDUCED PLANS 0 1 2 3

UNIT: 3578
PROJECT NUMBER & PHASE: 02000000161
CONTRACT NO.: 02-0E0904

DISREGARD PRINTS BEARING EARLIER REVISION DATES

REVISION DATES: 3-3-14

SHEET 49 OF 73

FILE => 06-0212I-I-typ01.dgn

USERNAME => s116738 DATE PLOTTED => 29-MAY-2015 TIME PLOTTED => 14:27

DIST	COUNTY	ROUTE	POST MILES TOTAL PROJECT	SHEET No.	TOTAL SHEETS
02	Sha	5	R29.3/R31.1, R45.0/R45.8	216	248

REGISTERED CIVIL ENGINEER — DATE 4-9-15

5-11-2015
PLANS APPROVAL DATE

REGISTERED PROFESSIONAL ENGINEER — Jose M Aquino III — No. 58386 — Exp. 12-31-16 — CIVIL — STATE OF CALIFORNIA

The State of California or its officers or agents shall not be responsible for the accuracy or completeness of scanned copies of this plan sheet.

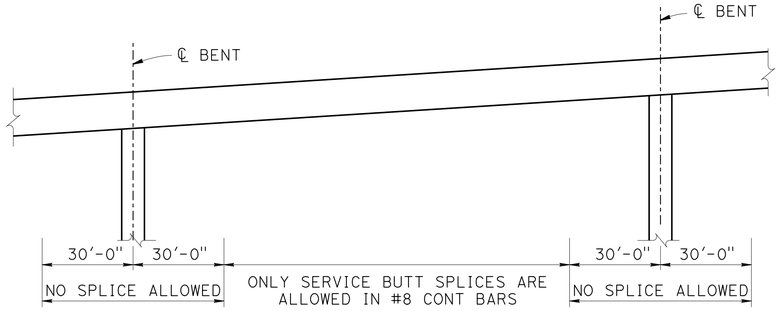

DETAIL A

NO SCALE

LEGEND:

Indicate bundled bars

NOTES:

1. For location of "DETAIL A" and "DETAIL B", see "TYPICAL SECTION NO. 1" sheet
2. For Deck Drain Type D-2 (Mod) locations see "GIRDER LAYOUT NO. 1", "GIRDER LAYOUT NO. 2" and "GIRDER LAYOUT NO. 3" sheets
3. Fabricate Deck Drain Type D-2 (Mod) to match deck cross slope as shown

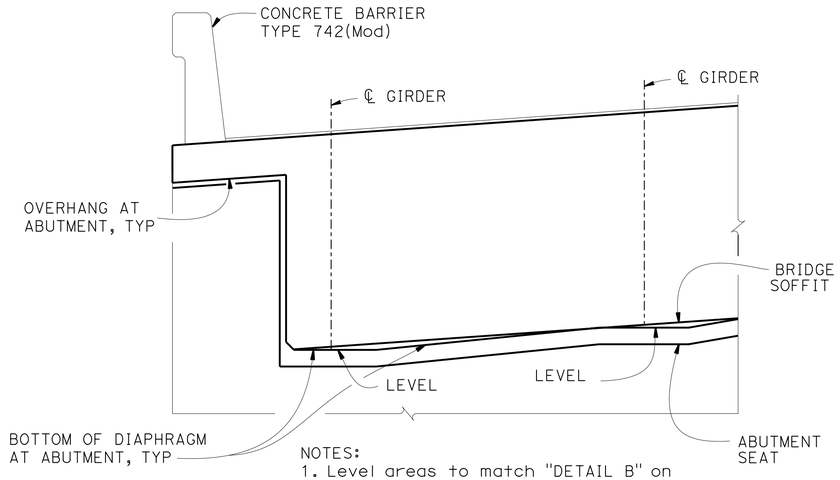

NOTES:
1. Level areas to match "DETAIL B" on "ABUTMENT 9 DETAILS NO. 1" sheet
2. Bearing pads not shown

DETAIL C

NO SCALE

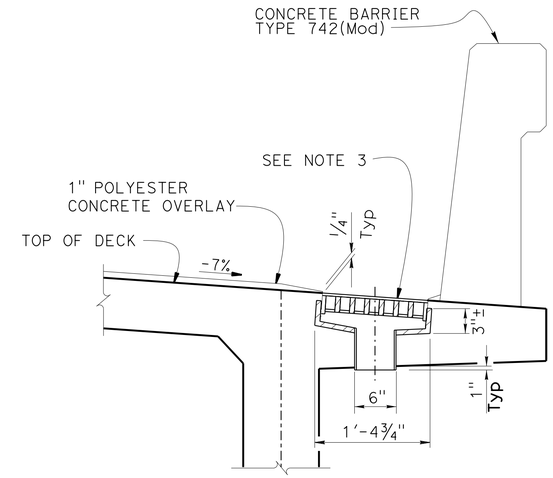

NOTE:
For Type D-2 (Mod) details not shown see B7-6 / 7-8

TYPE D-2 (Mod)

1" = 1'-0"

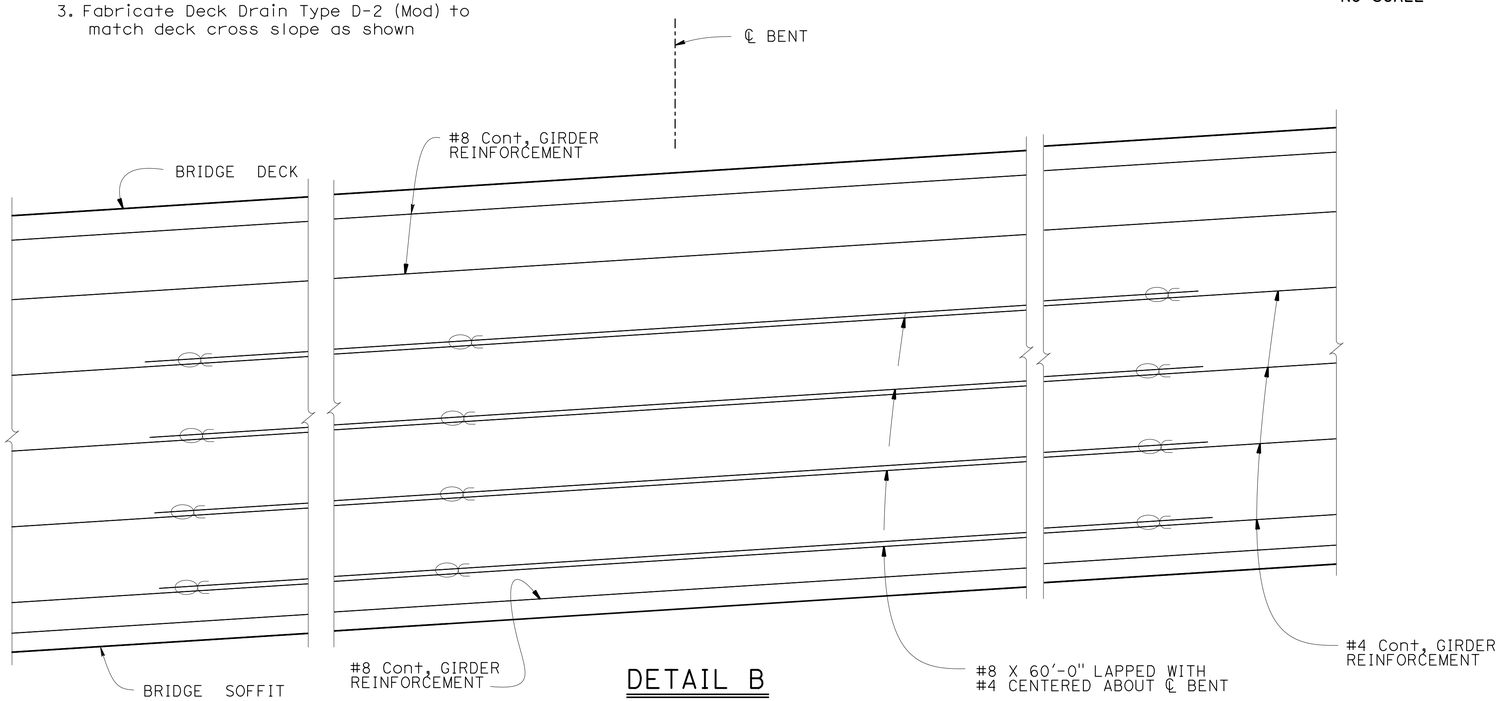

DETAIL B

1" = 1'-0"

FALSEWORK RELEASE

Alternative 1:

Falsework shall be released as soon as permitted by the specifications

Alternative 2:

Falsework shall not be released less than 28 days after the last concrete has been placed.

When Falsework Release Alternative 2 is used, camber values are 0.75 times those shown.

	BY	CHECKED
DESIGN	Ali Asnaashari	Joey Aquino/Ashraf Ahmed
DETAILS	Shadi Motalebi	Joey Aquino/Ashraf Ahmed
QUANTITIES	Mufeed Khalaf	Quang Nguyen

STATE OF CALIFORNIA
DEPARTMENT OF TRANSPORTATION

DIVISION OF ENGINEERING SERVICES
STRUCTURE DESIGN
DESIGN BRANCH 3

BRIDGE NO. 06-0212L
POST MILE M29.68

SHASTA VIADUCT (REPLACE)
TYPICAL SECTION NO. 2

STRUCTURES DESIGN DETAIL SHEET (ENGLISH) (REV. 09-01-10)

ORIGINAL SCALE IN INCHES FOR REDUCED PLANS 0 1 2 3

UNIT: 3578
PROJECT NUMBER & PHASE: 02000000161
CONTRACT NO.: 02-0E0904

DISREGARD PRINTS BEARING EARLIER REVISION DATES → 7-2-14

REVISION DATES | SHEET 50 OF 73

FILE => 06-0212I-1-typ02.dgn

USERNAME => s116738 DATE PLOTTED => 29-MAY-2015 TIME PLOTTED => 14:27

DIST	COUNTY	ROUTE	POST MILES TOTAL PROJECT	SHEET No.	TOTAL SHEETS
02	Sha	5	R29.3/R31.1, R45.0/R45.8	217	248

REGISTERED CIVIL ENGINEER 4-9-15 DATE

5-11-2015
PLANS APPROVAL DATE

REGISTERED PROFESSIONAL ENGINEER
Jose M Aquino III
No. 58386
Exp. 12-31-16
CIVIL
STATE OF CALIFORNIA

The State of California or its officers or agents shall not be responsible for the accuracy or completeness of scanned copies of this plan sheet.

LEGEND:

Indicates girder stem width in inches

Indicates deck drain Type D-2 (Mod)

NOTE:

1. For "CAMBER DIAGRAM" and "SECTION A-A", see "GIRDER DETAILS" sheet

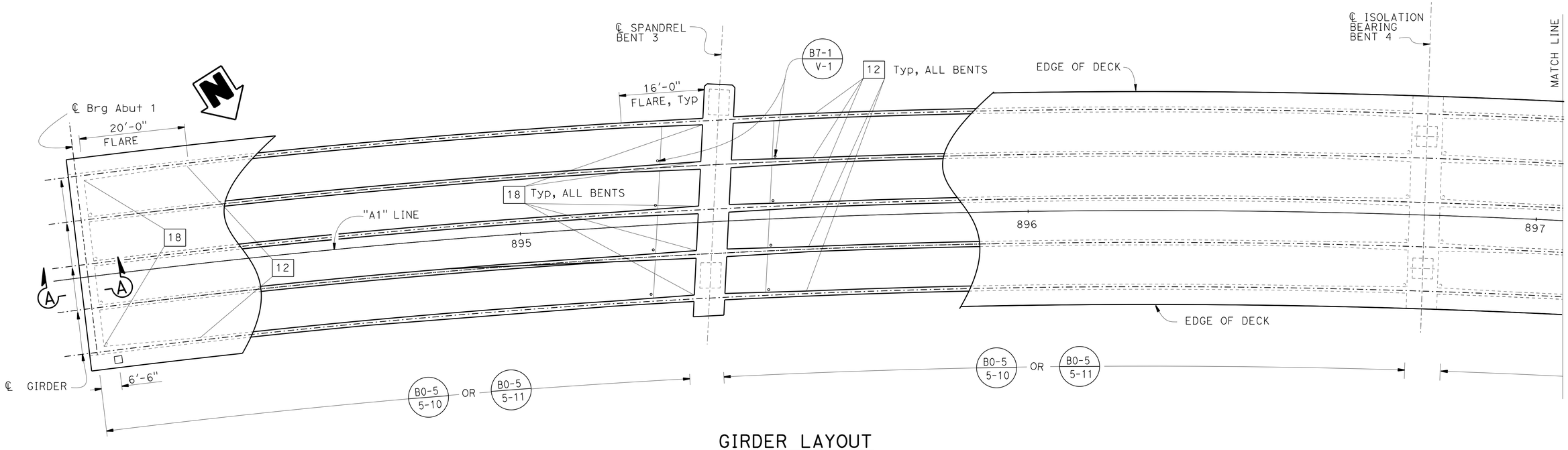

GIRDER LAYOUT

1" =10'

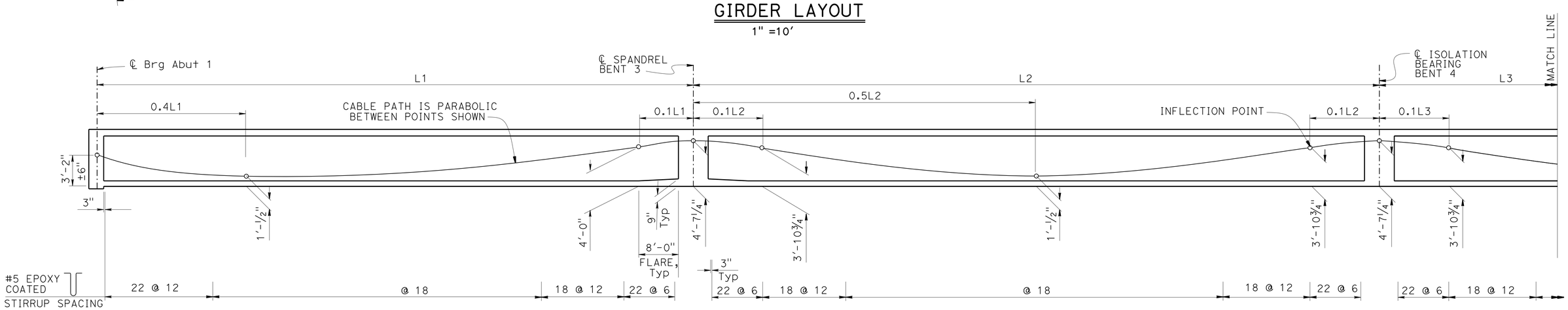

LONGITUDINAL SECTION B8-5

Horz 1" = 10'
Vert 1" = 5'

DESIGN	BY Ali Asnaashari	CHECKED Joey Aquino/Ashraf Ahmed	
DETAILS	BY Shadi Motalebi	CHECKED Joey Aquino/Ashraf Ahmed	
QUANTITIES	BY Mufeed Khalaf	CHECKED Quang Nguyen	

STATE OF CALIFORNIA
DEPARTMENT OF TRANSPORTATION

DIVISION OF ENGINEERING SERVICES
STRUCTURE DESIGN
DESIGN BRANCH 3

BRIDGE NO. 06-0212L
POST MILE M29.68

SHASTA VIADUCT (REPLACE)
GIRDER LAYOUT NO. 1

STRUCTURES DESIGN DETAIL SHEET (ENGLISH) (REV. 09-01-10)

ORIGINAL SCALE IN INCHES FOR REDUCED PLANS 0 1 2 3

UNIT: 3578
PROJECT NUMBER & PHASE: 02000000161
CONTRACT NO.: 02-0E0904

DISREGARD PRINTS BEARING EARLIER REVISION DATES

REVISION DATES: 3-24-14

SHEET 51 OF 73

FILE => 06-0212l-n-gl01.dgn

USERNAME => s116738 DATE PLOTTED => 29-MAY-2015 TIME PLOTTED => 14:27

DIST	COUNTY	ROUTE	POST MILES TOTAL PROJECT	SHEET No.	TOTAL SHEETS
02	Sha	5	R29.3/R31.1, R45.0/R45.8	218	248

REGISTERED CIVIL ENGINEER 4-9-15 DATE

5-11-2015
PLANS APPROVAL DATE

REGISTERED PROFESSIONAL ENGINEER
Jose M Aquino III
No. 58386
Exp. 12-31-16
CIVIL
STATE OF CALIFORNIA

The State of California or its officers or agents shall not be responsible for the accuracy or completeness of scanned copies of this plan sheet.

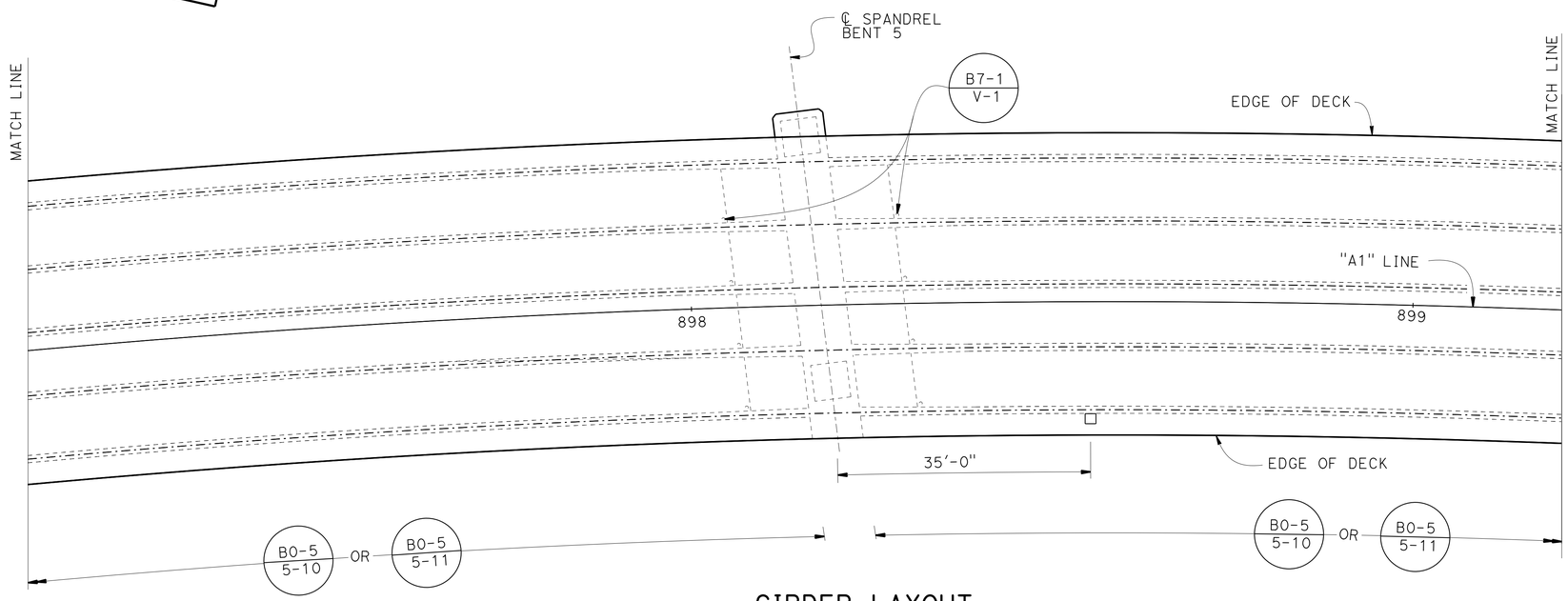

GIRDER LAYOUT

1" =10'

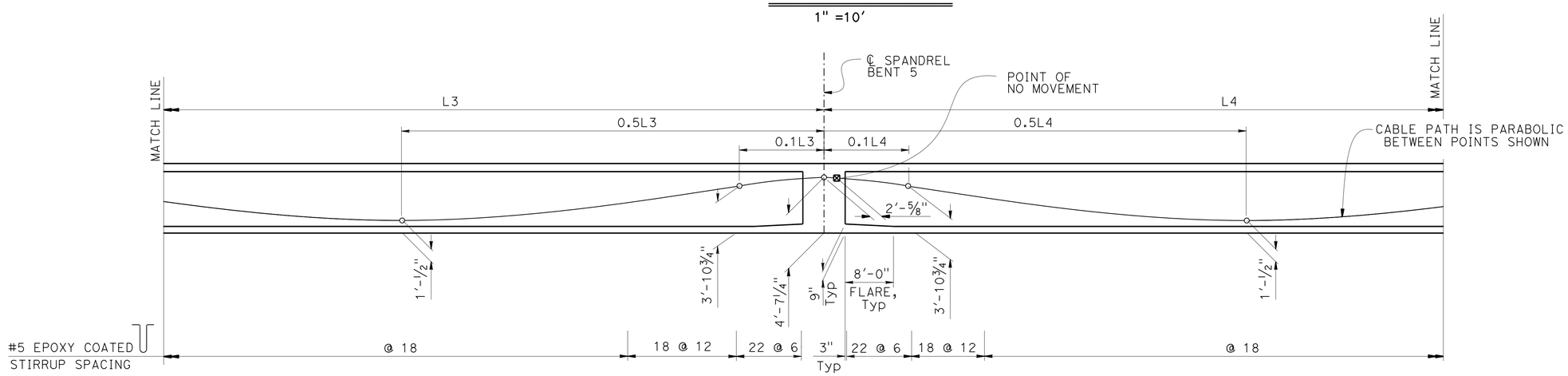

LONGITUDINAL SECTION B8-5

Horz 1" = 10'
Vert 1" = 5'

LEGEND:

☐ Indicates deck drain Type D-2 (Mod)

DESIGN	BY Ali Asnaashari	CHECKED Joey Aquino/Ashraf Ahmed	
DETAILS	BY Shadi Motalebi	CHECKED Joey Aquino/Ashraf Ahmed	
QUANTITIES	BY Mufeed Khalaf	CHECKED Quang Nguyen	

STATE OF CALIFORNIA
DEPARTMENT OF TRANSPORTATION

DIVISION OF ENGINEERING SERVICES
STRUCTURE DESIGN
DESIGN BRANCH 3

BRIDGE NO. 06-0212L
POST MILE M29.68

SHASTA VIADUCT (REPLACE)
GIRDER LAYOUT NO. 2

STRUCTURES DESIGN DETAIL SHEET (ENGLISH) (REV. 09-01-10)

ORIGINAL SCALE IN INCHES FOR REDUCED PLANS 0 1 2 3

UNIT: 3578
PROJECT NUMBER & PHASE: 02000000161
CONTRACT NO.: 02-0E0904

DISREGARD PRINTS BEARING EARLIER REVISION DATES

REVISION DATES: 5-23-14

SHEET 52 OF 73

FILE => 06-0212l-n-gl02.dgn

USERNAME => s116738 DATE PLOTTED => 29-MAY-2015 TIME PLOTTED => 14:27

DIST	COUNTY	ROUTE	POST MILES TOTAL PROJECT	SHEET No.	TOTAL SHEETS
02	Sha	5	R29.3/R31.1, R45.0/R45.8	219	248

REGISTERED CIVIL ENGINEER — DATE 4-9-15

5-11-2015
PLANS APPROVAL DATE

REGISTERED PROFESSIONAL ENGINEER — Jose M Aquino III — No. 58386 — Exp. 12-31-16 — CIVIL — STATE OF CALIFORNIA

The State of California or its officers or agents shall not be responsible for the accuracy or completeness of scanned copies of this plan sheet.

LEGEND:

Indicates girder stem width in inches

☐ Indicates deck drain Type D-2 (Mod)

NOTE:

1. For "CAMBER DIAGRAM" and "SECTION A-A", see "GIRDER DETAILS" sheet

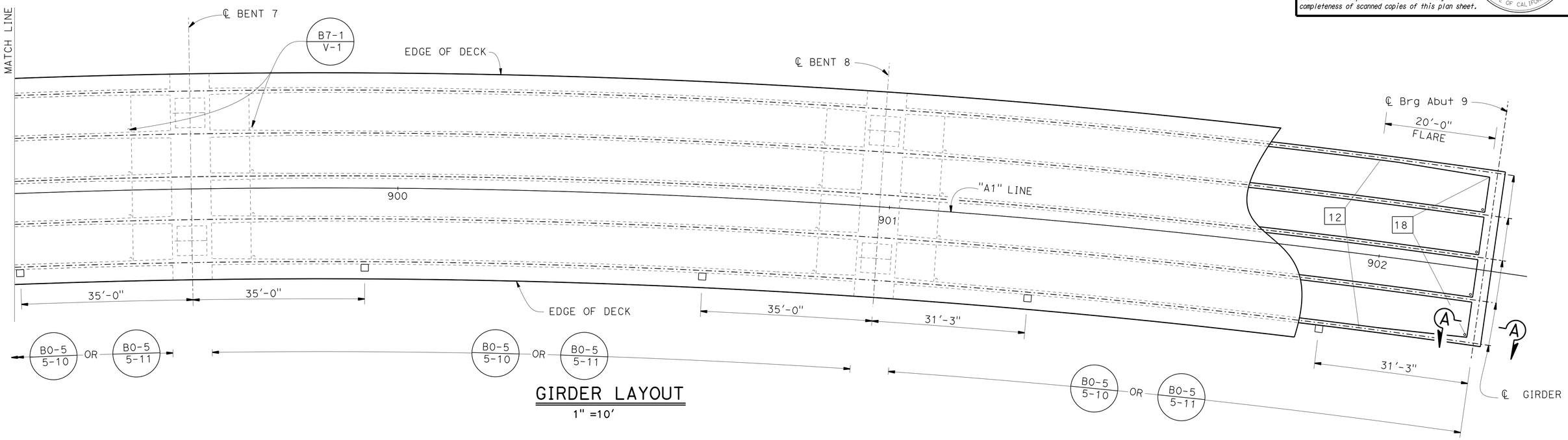

GIRDER LAYOUT

1" =10'

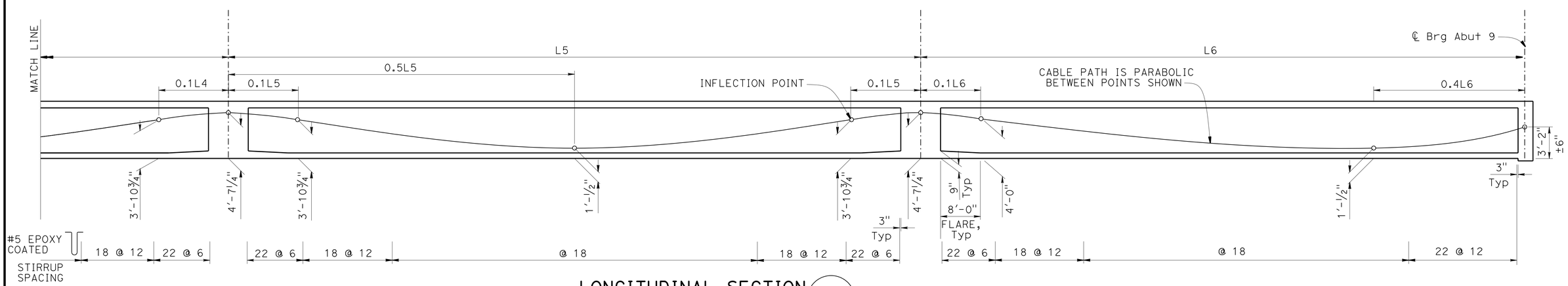

LONGITUDINAL SECTION B8-5

Horz 1" = 10'
Vert 1" = 5'

	BY	CHECKED
DESIGN	Ali Asnaashari	Joey Aquino/Ashraf Ahmed
DETAILS	Shadi Motalebi	Joey Aquino/Ashraf Ahmed
QUANTITIES	Mufeed Khalaf	Quang Nguyen

STATE OF CALIFORNIA
DEPARTMENT OF TRANSPORTATION

DIVISION OF ENGINEERING SERVICES
STRUCTURE DESIGN
DESIGN BRANCH 3

BRIDGE NO. 06-0212L
POST MILE M29.68

SHASTA VIADUCT (REPLACE)
GIRDER LAYOUT NO. 3

STRUCTURES DESIGN DETAIL SHEET (ENGLISH) (REV. 09-01-10)

ORIGINAL SCALE IN INCHES FOR REDUCED PLANS 0 1 2 3

UNIT: 3578
PROJECT NUMBER & PHASE: 02000000161
CONTRACT NO.: 02-0E0904

DISREGARD PRINTS BEARING EARLIER REVISION DATES

REVISION DATES: 3-25-14

SHEET 53 OF 73

FILE => 06-0212l-n-gl03.dgn

USERNAME => s116758 DATE PLOTTED => 29-MAY-2015 TIME PLOTTED => 14:27

DIST	COUNTY	ROUTE	POST MILES TOTAL PROJECT	SHEET No.	TOTAL SHEETS
02	Sha	5	R29.3/R31.1, R45.0/R45.8	220	248

REGISTERED CIVIL ENGINEER 4-9-15 DATE

5-11-2015
PLANS APPROVAL DATE

REGISTERED PROFESSIONAL ENGINEER Jose M Aquino III No. 58386 Exp. 12-31-16 CIVIL STATE OF CALIFORNIA

The State of California or its officers or agents shall not be responsible for the accuracy or completeness of scanned copies of this plan sheet.

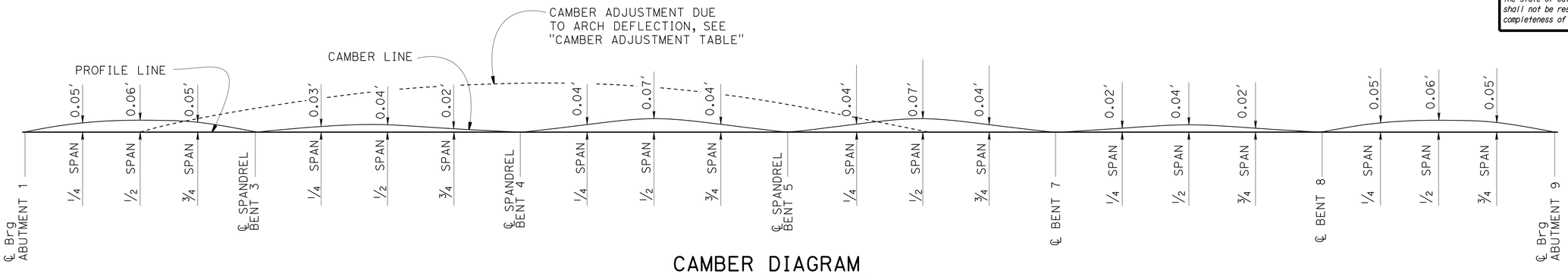

CAMBER DIAGRAM

NO SCALE

Dose not include allowance for falsework settlement

CAMBER ADJUSTMENT TABLE

Location	Stem and Soffit Pour (After Arch Falsework Release)	Deck Pour (Finish Grade Adjustment)
Spandrel Bent 3	0.12′	0.07′
¼ L	0.14′	0.09′
½ L	0.19′	0.10′
¾ L	0.34′	0.20′
Spandrel Bent 4	0.65′	0.47′
¼ L	0.58′	0.40′
½ L	0.50′	0.30′
¾ L	0.48′	0.28′
Spandrel Bent 5	0.47′	0.25′

PRESTRESSING NOTES

270 KSI Low Relaxation Strand:

P_{jack} = 10,500 kips

Anchor Set = ⅜ in

Friction curvature coefficient, μ = 0.15 (1/rad)

Friction wobble coefficient, K = 0.0002 (1/ft)

Assumed long term losses = 25 (ksi)

Total Number of Girders = 5

The final force ratio (larger divided by smaller) between any two girders shall not exceed exceed the ratio of 10 to 9

Concrete: f'_c = 4000 psi @ 28 days

f'_{ci} = 3500 psi @ time of stressing

Contractor shall submit elongation calculations based on initial stress at

⊠ = 0.780 times jacking stress.

Two end stressing must be performed.

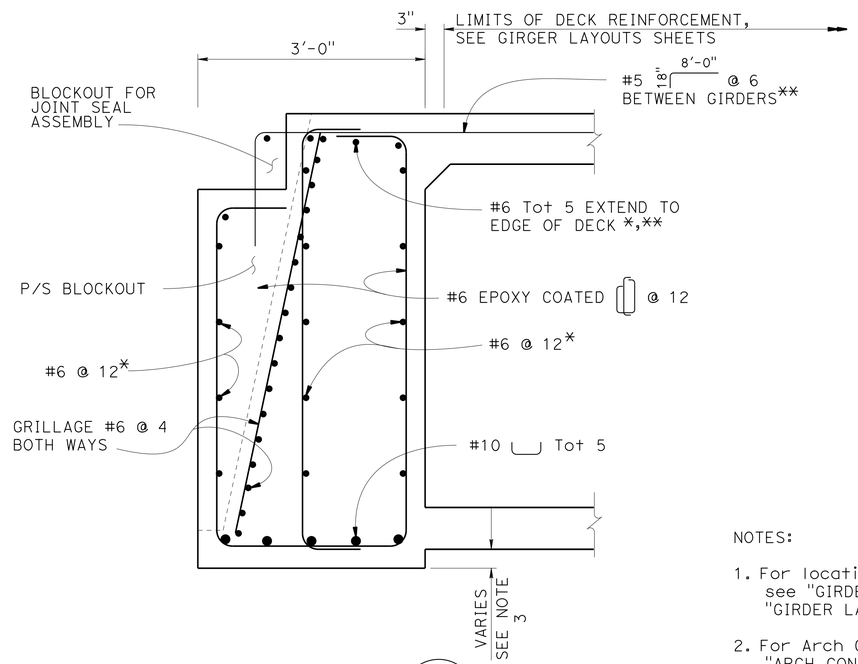

SECTION A-A

1" = 1′-0"

B8-5 / 5-3

NOTES:

1. For location of "SECTION A-A" see "GIRDER LAYOUT NO. 1" and "GIRDER LAYOUT NO. 3" sheets
2. For Arch Camber Diagram, see "ARCH CONSTRUCTION DETAILS" sheet
3. See "DETAIL C" on "TYPICAL SECTION NO. 2" sheet

LEGEND:

* Bars may be spliced or bent to clear prestress anchorage

** Stainless steel reinforcement

	BY	CHECKED
DESIGN	Ali Asnaashari	Joey Aquino/Ashraf Ahmed
DETAILS	Shadi Motalebi	Joey Aquino/Ashraf Ahmed
QUANTITIES	Mufeed Khalaf	Quang Nguyen

STATE OF CALIFORNIA DEPARTMENT OF TRANSPORTATION

DIVISION OF ENGINEERING SERVICES STRUCTURE DESIGN DESIGN BRANCH 3

BRIDGE NO. 06-0212L POST MILE M29.68

SHASTA VIADUCT (REPLACE)

GIRDER DETAILS

STRUCTURES DESIGN DETAIL SHEET (ENGLISH) (REV. 09-01-10)

ORIGINAL SCALE IN INCHES FOR REDUCED PLANS 0 1 2 3

UNIT: 3578
PROJECT NUMBER & PHASE: 02000000161 CONTRACT NO.: 02-0E0904

DISREGARD PRINTS BEARING EARLIER REVISION DATES

REVISION DATES 4-21-14

SHEET 54 OF 73

FILE => 06-0212l-o-gr-det01.dgn

USERNAME => s116738 DATE PLOTTED => 29-MAY-2015 TIME PLOTTED => 14:27

DIST	COUNTY	ROUTE	POST MILES TOTAL PROJECT	SHEET No.	TOTAL SHEETS
02	Sha	5	R29.3/R31.1, R45.0/R45.8	221	248

REGISTERED CIVIL ENGINEER — DATE 4-9-15

5-11-2015
PLANS APPROVAL DATE

REGISTERED PROFESSIONAL ENGINEER — Jose M Aquino III — No. 58386 — Exp. 12-31-16 — CIVIL — STATE OF CALIFORNIA

The State of California or its officers or agents shall not be responsible for the accuracy or completeness of scanned copies of this plan sheet.

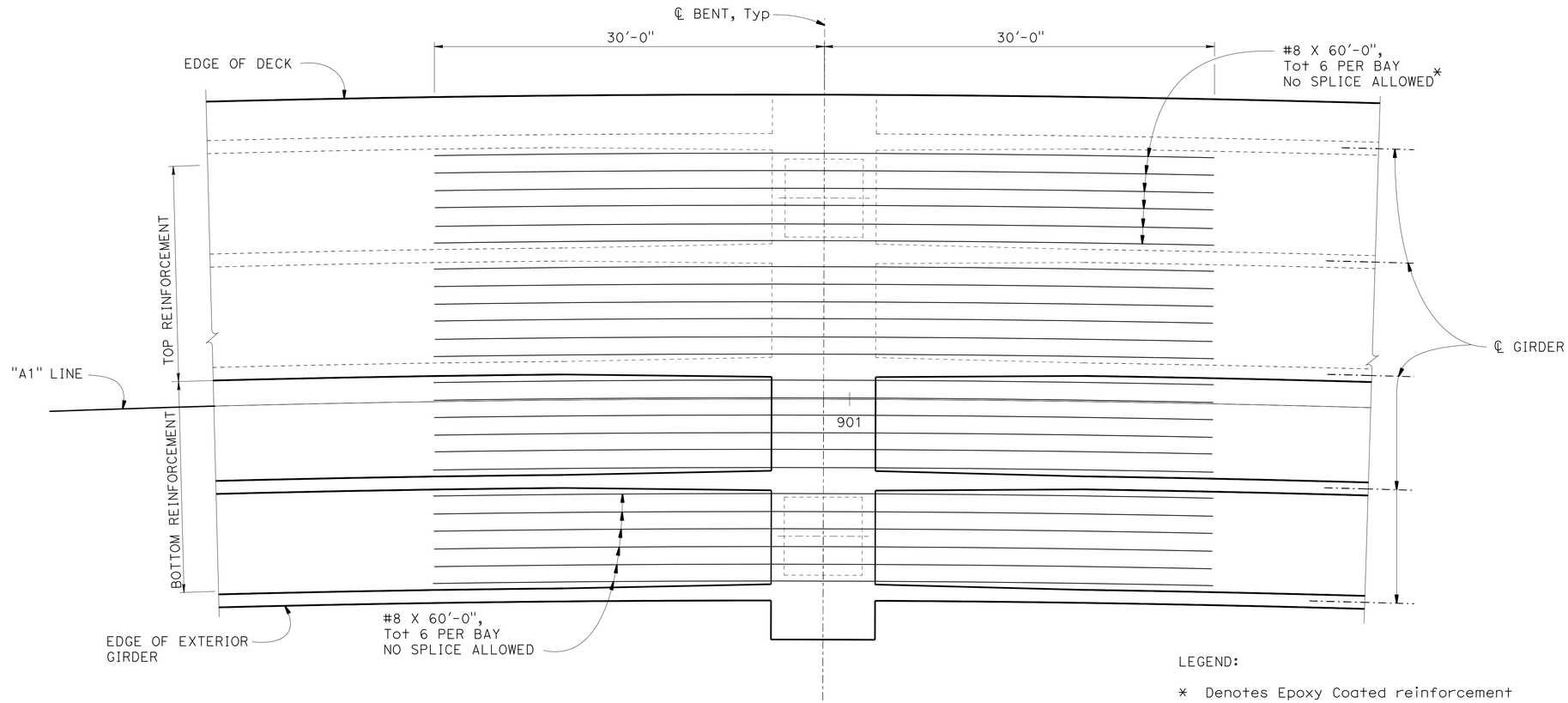

LEGEND:

* Denotes Epoxy Coated reinforcement

NOTE:

All bars must be evenly spaced within limits shown, except bottom #8's to clear column main reinforcement

PART PLAN

1" = 5'

	BY	CHECKED
DESIGN	Ali Asnaashari	Joey Aquino/Ashraf Ahmed
DETAILS	Shadi Motalebi	Joey Aquino/Ashraf Ahmed
QUANTITIES	Mufeed Khalaf	Quang Nguyen

STATE OF CALIFORNIA
DEPARTMENT OF TRANSPORTATION

DIVISION OF ENGINEERING SERVICES
STRUCTURE DESIGN
DESIGN BRANCH 3

BRIDGE NO. 06-0212L
POST MILE M29.68

SHASTA VIADUCT (REPLACE)
GIRDER REINFORCEMENT

STRUCTURES DESIGN DETAIL SHEET (ENGLISH) (REV. 09-01-10)

ORIGINAL SCALE IN INCHES FOR REDUCED PLANS 0 1 2 3

UNIT: 3578
PROJECT NUMBER & PHASE: 02000000161
CONTRACT NO.: 02-0E0904

DISREGARD PRINTS BEARING EARLIER REVISION DATES

REVISION DATES: 6-29-14 10-13-14

SHEET 55 OF 73

FILE => 06-0212l-o-gr-reinf.dgn

USERNAME => s116738 DATE PLOTTED => 29-MAY-2015 TIME PLOTTED => 14:27

DIST	COUNTY	ROUTE	POST MILES TOTAL PROJECT	SHEET No.	TOTAL SHEETS
02	Sha	5	R29.3/R31.1, R45.0/R45.8	222	248

REGISTERED CIVIL ENGINEER — DATE 4-9-15

5-11-2015
PLANS APPROVAL DATE

REGISTERED PROFESSIONAL ENGINEER — Jose M Aquino III — No. 58386 — Exp. 12-31-16 — CIVIL — STATE OF CALIFORNIA

The State of California or its officers or agents shall not be responsible for the accuracy or completeness of scanned copies of this plan sheet.

NOTES:

1. The Contractor shall verify all controlling field dimensions before ordering or fabricating any materials
2. Isolation Bearings as shown are "TRIPLE PENDULUM" sliding bearings with articulated slider elements and concave plates which provide lateral restoring stiffness
3. The force displacement loop shown is for the manufactured isolation bearing. Isolation bearing must have a displacement capacity of 2 x D_D with a stiffness of K_P
4. EDC - the Energy Dissipated per Cycle under vertical dead load (DL) condition, and design seismic lateral displacement D_D. EDC is equal to the area within corresponding hysteresis loop
5. Reported restoring stiffness K_P corresponds to the reported (DL) vertical load condition
6. Max displacement capacity D_M-displacement capacity bearing with K_P stiffness for the manufactured isolation bearing
7. Max displacement capacity at locked position D_{TM}-displacement capacity bearing at locked position with K_{DT} stiffness for the manufactured isolation bearing
8. Seismic lateral force transferred through the isolation bearing, at design displacement D_D under vertical dead load condition (DL)
9. Max seismic lateral force transferred through the isolation bearing at D_{TM} displacement
10. Non-Seismic Lateral Force - the Design Non-Seismic Lateral Force (Wind Load) transferred through the isolation bearing, Fnon, under vertical dead load condition (DL)
11. All holes in mounting plates, housing plates and other connecting plates shall be drilled with matching metal templates
12. Isolation bearing manufacturer shall provide clearance between upper and lower concave units for the specified maximum relative rotation
13. The maximum thermal longitudinal force and displacement are transferred through the isolation bearing under vertical dead load condition (DL)

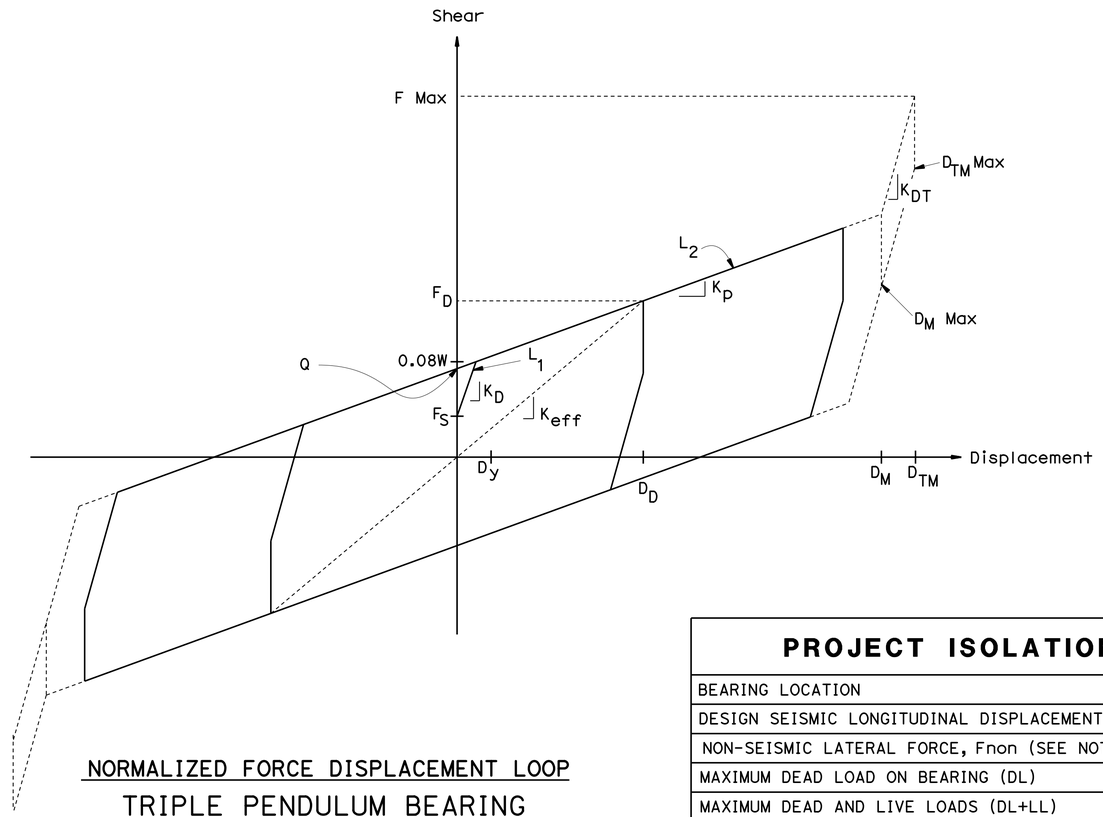

NORMALIZED FORCE DISPLACEMENT LOOP

TRIPLE PENDULUM BEARING

No Scale

LEGEND:

W = Vertical load on the isolation bearing
D_y = Displacement capacity with k_D Stiffness
F_S = Initial sliding force = 0.06w
Q = μW = Characteristic strength
L_1, L_2, L_3 = Equivalent radii of friction isolation bearing
L_1 = 24"
L_2 = 66"
L_3 = 24"

$K_{eff} = F_D / D_D$
$K_D = W / L_1$
$K_P = W / L_2$
$K_{DT} = W / L_3$
μ = Dynamic Coefficient of friction
$F_D = Q + K_P (D_D)$
$F_{Max} = Q + K_P (D_M) + K_{DT}(D_{TM} - D_M)$

PROJECT ISOLATION BEARING DESIGN NOTES

BEARING LOCATION	BENT 4
DESIGN SEISMIC LONGITUDINAL DISPLACEMENT, D_D	4"
NON-SEISMIC LATERAL FORCE, Fnon (SEE NOTE 10)	41 kip
MAXIMUM DEAD LOAD ON BEARING (DL)	900 kip
MAXIMUM DEAD AND LIVE LOADS (DL+LL)	1200 kip
MAXIMUM VERTICAL LOAD (DL+LL+EQ)	1250 kip
MAXIMUM THERMAL LONGITUDINAL DISPLACEMENT (SEE NOTE 13)	1"
MAXIMUM THERMAL LONGITUDINAL FORCE (SEE NOTE 13)	55 kip

MANUFACTURED ISOLATION BEARING PROPERTIES

BEARING TYPE	Triple Friction Pendulum
BEARING HEIGHT, H	15.5"
DYNAMIC COEFFICIENT OF FRICTION μ	7.24 %
STIFFNESS K_{eff}	0.0333 kips/in/kips
EDC (SEE NOTE 4)	5720 kip.in
TARGET PERIOD FOR DEVICE	1.75 Sec
SEISMIC LATERAL FORCE, F_D (SEE NOTE 8)	0.133W
MAXIMUM SEISMIC LATERAL FORCE F_{max} (SEE NOTE 9)	0.367W
MAXIMUM RELATIVE ROTATION (SEE NOTE 12)	2 Deg
MAXIMUM DISPLACEMENT CAPACITY, D_M (SEE NOTE 6)	11.5"
MAXIMUM DISPLACEMENT CAPACITY AT LOCKED POSITION, D_{TM} (SEE NOTE 7)	14.4"

NOTE:

See "ISOLATION BEARING DETAILS NO. 2" sheet for details not shown

	BY	CHECKED
DESIGN	Ali Asnaashari	Joey Aquino/Ashraf Ahmed
DETAILS	Shadi Motalebi	Joey Aquino/Ashraf Ahmed
QUANTITIES	Mufeed Khalaf	Quang Nguyen

STATE OF CALIFORNIA
DEPARTMENT OF TRANSPORTATION

DIVISION OF ENGINEERING SERVICES
STRUCTURE DESIGN
DESIGN BRANCH 3

BRIDGE NO. 06-0212L
POST MILE M29.68

SHASTA VIADUCT (REPLACE)

ISOLATION BEARING DETAILS NO. 1

STRUCTURES DESIGN DETAIL SHEET (ENGLISH) (REV. 09-01-10)

ORIGINAL SCALE IN INCHES FOR REDUCED PLANS 0 1 2 3

UNIT: 3578
PROJECT NUMBER & PHASE: 02000000161
CONTRACT NO.: 02-0E0904

DISREGARD PRINTS BEARING EARLIER REVISION DATES

REVISION DATES: 3-19-14 11-5-14 2-10-15

SHEET 56 OF 73

FILE => 06-0212l-q-isobrg-det01.dgn

USERNAME => s116738 DATE PLOTTED => 29-MAY-2015 TIME PLOTTED => 14:27

DIST	COUNTY	ROUTE	POST MILES TOTAL PROJECT	SHEET No.	TOTAL SHEETS
02	Sha	5	R29.3/R31.1, R45.0/R45.8	223	248

REGISTERED CIVIL ENGINEER 4-9-15 DATE

5-11-2015
PLANS APPROVAL DATE

REGISTERED PROFESSIONAL ENGINEER Jose M Aquino III No. 58386 Exp. 12-31-16 CIVIL STATE OF CALIFORNIA

The State of California or its officers or agents shall not be responsible for the accuracy or completeness of scanned copies of this plan sheet.

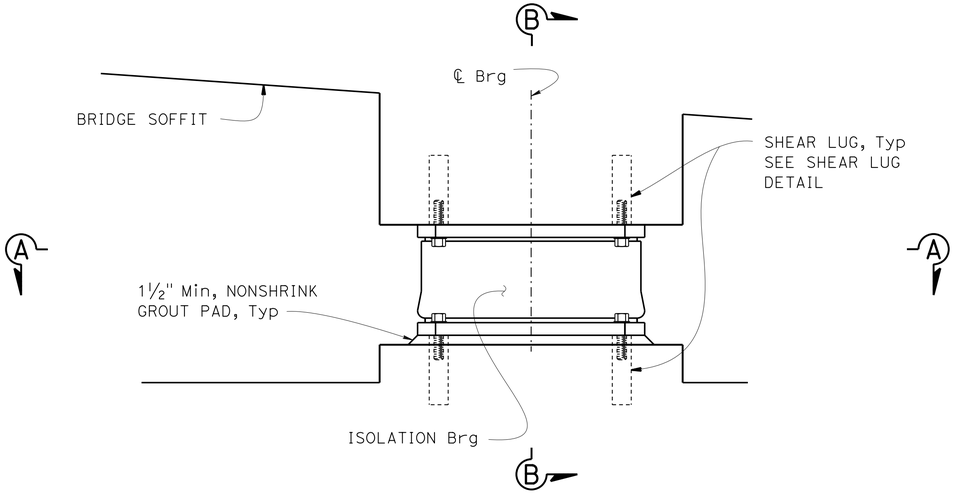

ELEVATION
1" = 1'-0"

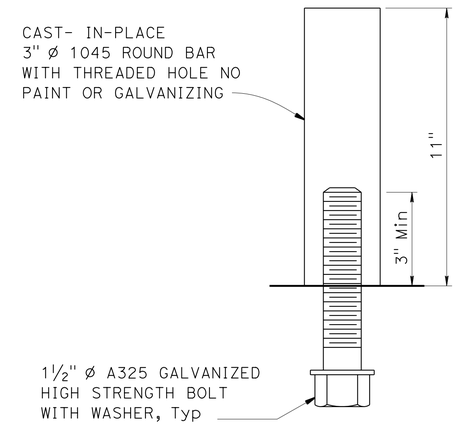

SHEAR LUG DETAIL
NO SCALE

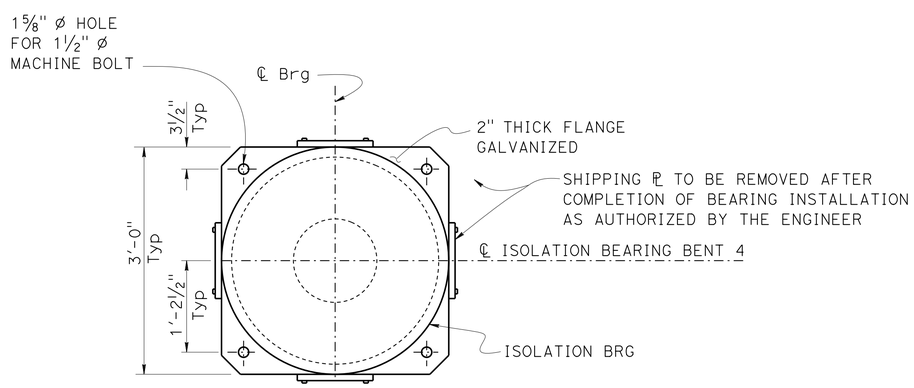

NOTE: Jacking Plates not shown

SECTION A-A
1" = 1'-0"

NOTES:

1. For Isolation Bearing and Jacking ℙ details and location see "ISOLATION BEARING BENT 4 NO. 3" sheet
2. For Bearing Notes, see "ISOLATION BEARING DETAILS NO. 1" sheet
3. Adjust arch and bent 4 strut reinforcement to clear shear lugs

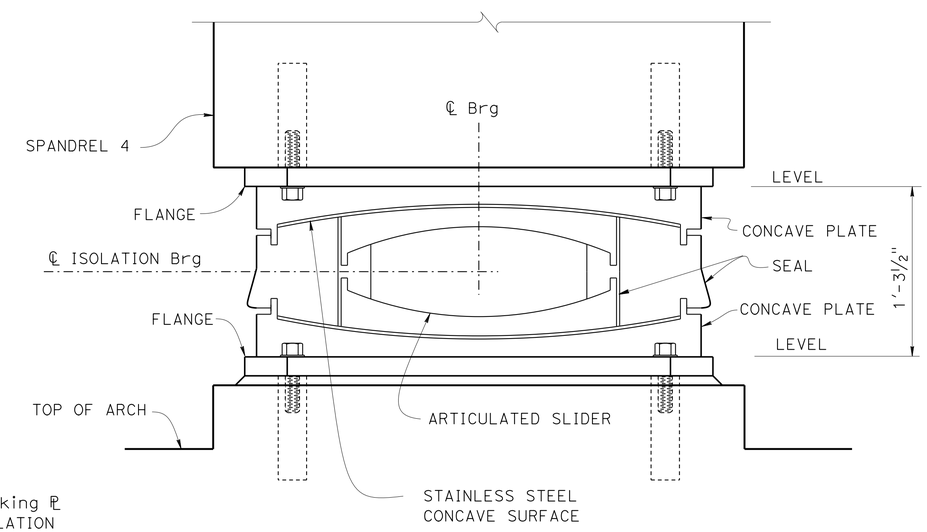

SECTION B-B
No Scale

DESIGN	BY Ali Asnaashari	CHECKED Joey Aquino/Ashraf Ahmed	
DETAILS	BY Shadi Motalebi	CHECKED Joey Aquino/Ashraf Ahmed	
QUANTITIES	BY Mufeed Khalaf	CHECKED Quang Nguyen	

STATE OF CALIFORNIA
DEPARTMENT OF TRANSPORTATION

DIVISION OF ENGINEERING SERVICES
STRUCTURE DESIGN
DESIGN BRANCH 3

BRIDGE NO. 06-0212L
POST MILE M29.68

SHASTA VIADUCT (REPLACE)
ISOLATION BEARING DETAILS NO. 2

STRUCTURES DESIGN DETAIL SHEET (ENGLISH) (REV. 09-01-10)

ORIGINAL SCALE IN INCHES FOR REDUCED PLANS 0 1 2 3

UNIT: 3578
PROJECT NUMBER & PHASE: 02000000161
CONTRACT NO.: 02-0E0904

DISREGARD PRINTS BEARING EARLIER REVISION DATES

REVISION DATES 4-3-14 10-1-14

SHEET 57 OF 73

FILE => 06-0212l-q-isobrg-det02.dgn

USERNAME => s116738 DATE PLOTTED => 29-MAY-2015 TIME PLOTTED => 14:27

DIST	COUNTY	ROUTE	POST MILES TOTAL PROJECT	SHEET No.	TOTAL SHEETS
02	Sha	5	R29.3/R31.1, R45.0/R45.8	224	248

REGISTERED CIVIL ENGINEER 4-9-15 DATE

5-11-2015
PLANS APPROVAL DATE

REGISTERED PROFESSIONAL ENGINEER
Jose M Aquino III
No. 58386
Exp. 12-31-16
CIVIL
STATE OF CALIFORNIA

The State of California or its officers or agents shall not be responsible for the accuracy or completeness of scanned copies of this plan sheet.

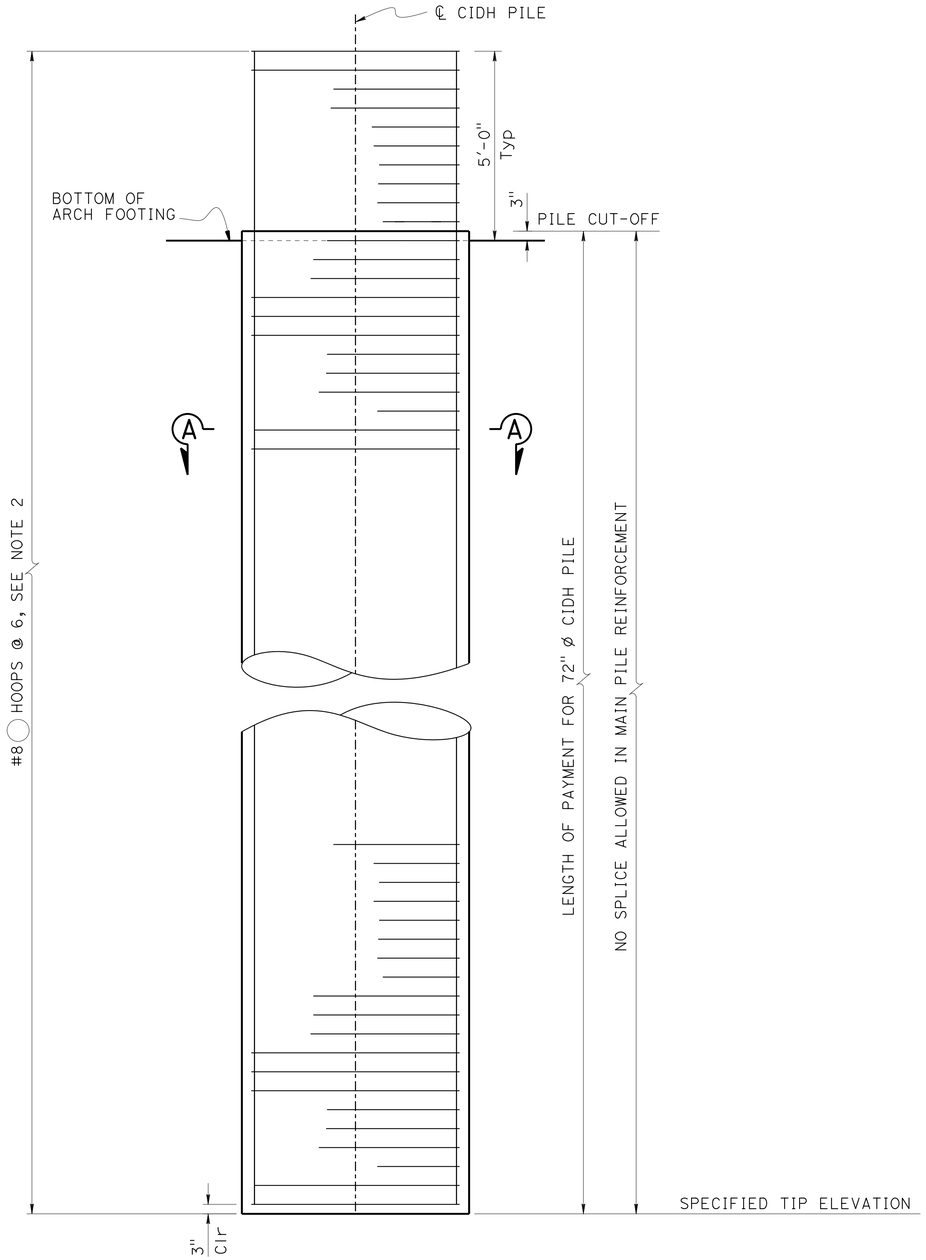

72" ø CIDH PILE

½" = 1'-0"

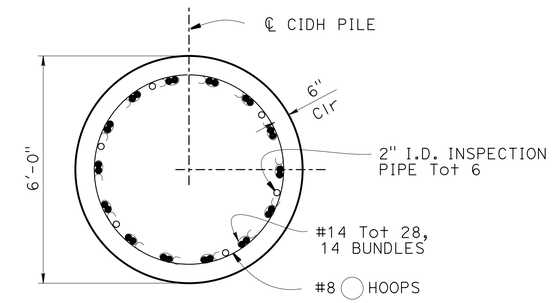

SECTION A-A

½" = 1'-0"

NOTES:
1. For details not shown, see "ARCH FOOTING DETAILS" sheet
2. All hoops are "ultimate butt" splice continuous
3. For "PILE DATA TABLE", see "PILE DATA" sheet

LEGEND:

◯ Indicates bundled bars

DESIGN	BY Ali Asnaashari	CHECKED Joey Aquino/Ashraf Ahmed	
DETAILS	BY Shadi Motalebi	CHECKED Joey Aquino/Ashraf Ahmed	
QUANTITIES	BY Mufeed Khalaf	CHECKED Quang Nguyen	

STATE OF CALIFORNIA
DEPARTMENT OF TRANSPORTATION

DIVISION OF ENGINEERING SERVICES
STRUCTURE DESIGN
DESIGN BRANCH 3

BRIDGE NO. 06-0212L
POST MILE M29.68

SHASTA VIADUCT (REPLACE)
72"Ø CIDH PILE DETAILS

STRUCTURES DESIGN DETAIL SHEET (ENGLISH) (REV. 09-01-10)

ORIGINAL SCALE IN INCHES FOR REDUCED PLANS 0 1 2 3

UNIT: 3578
PROJECT NUMBER & PHASE: 02000000161
CONTRACT NO.: 02-0E0904

DISREGARD PRINTS BEARING EARLIER REVISION DATES

REVISION DATES: 9-4-14 11-5-14

SHEET 58 OF 73

FILE => 06-0212l-r-cidhp01.dgn

USERNAME => s116738 DATE PLOTTED => 29-MAY-2015 TIME PLOTTED => 14:27

DIST	COUNTY	ROUTE	POST MILES TOTAL PROJECT	SHEET No.	TOTAL SHEETS
02	Sha	5	R29.3/R31.1, R45.0/R45.8	225	248

REGISTERED CIVIL ENGINEER 4-9-15 DATE

5-11-2015
PLANS APPROVAL DATE

REGISTERED PROFESSIONAL ENGINEER Jose M Aquino III No. 58386 Exp. 12-31-16 CIVIL STATE OF CALIFORNIA

The State of California or its officers or agents shall not be responsible for the accuracy or completeness of scanned copies of this plan sheet.

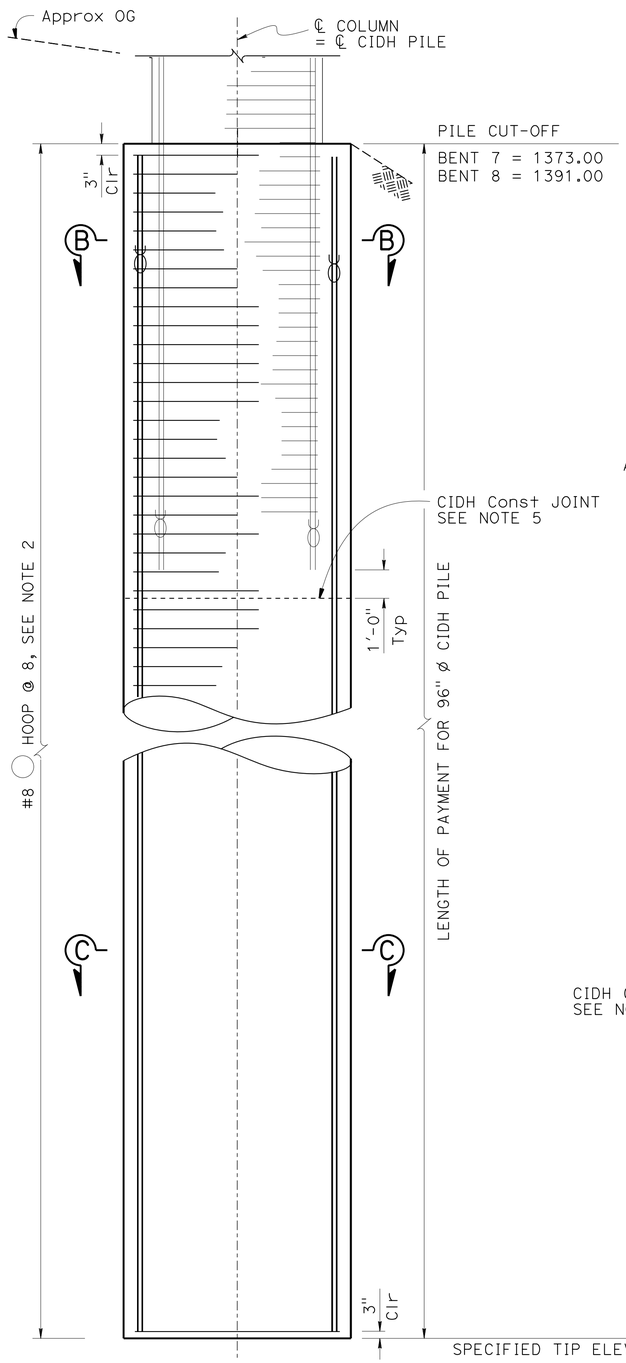

96" ø CIDH PILE (LEFT SIDE)

3/8" = 1'-0"

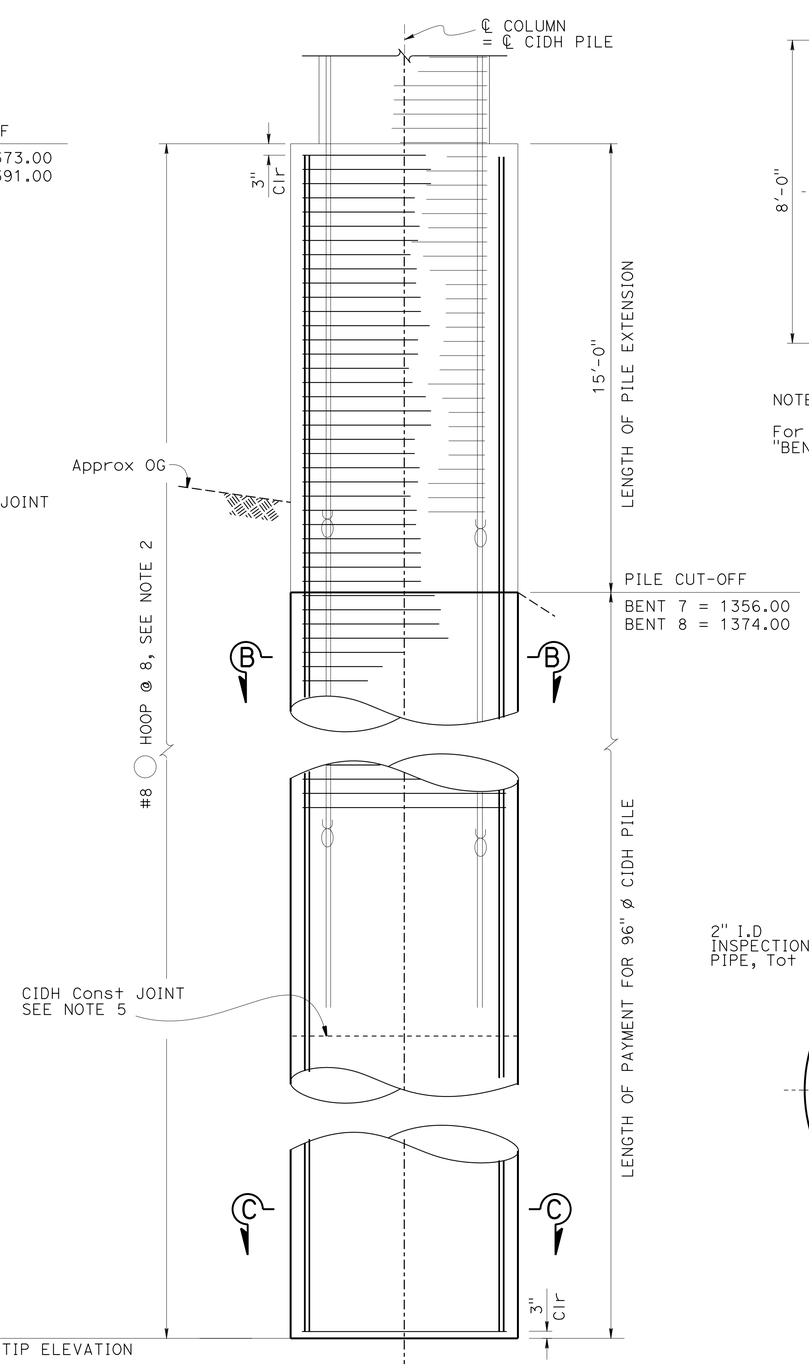

96" ø CIDH PILE (RIGHT SIDE)

3/8" = 1'-0"

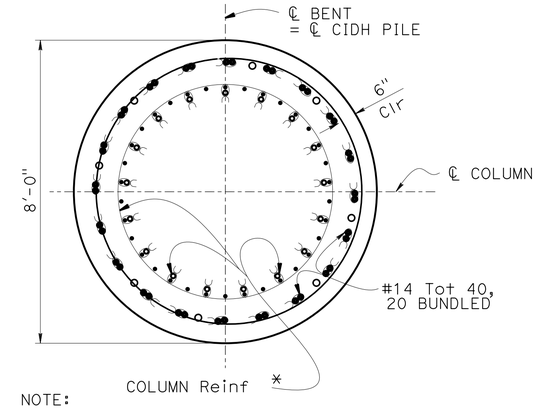

NOTE:

For column details not shown, see "BENT 7 & 8 DETAILS NO. 1" sheet

SECTION B-B

1/2" = 1'-0"

NOTES:

1. For details not shown, see "BENT 7 & 8 DETAILS NO. 1" and "BENT 7 & 8 DETAILS No. 3" sheets
2. All hoops are ultimate butt splice continuous
3. Bent 7 shown, Bent 8 similar
4. For "PILE DATA TABLE", see "PILE DATA" sheet
5. The contractor may elect to eliminate the CIDH construction joint and associated permanent casing, provided that the concrete is not placed under slurry

LEGEND:

Indicates bundled bars

* For termination location, see "BENT 7 & 8 DETAILS NO. 1" sheet

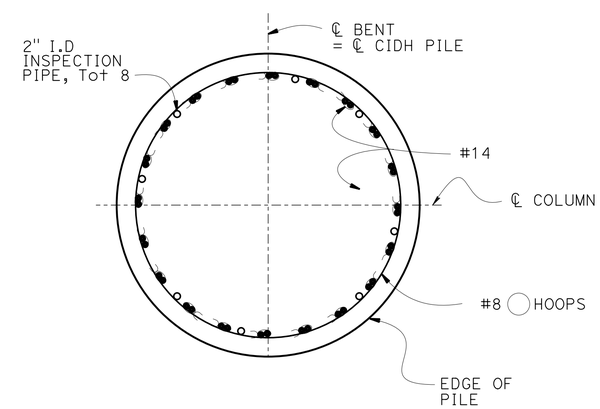

SECTION C-C

1/2" = 1'-0"

	BY	CHECKED
DESIGN	Ali Asnaashari	Joey Aquino/Ashraf Ahmed
DETAILS	Shadi Motalebi	Joey Aquino/Ashraf Ahmed
QUANTITIES	Mufeed Khalaf	Quang Nguyen

STATE OF CALIFORNIA
DEPARTMENT OF TRANSPORTATION

DIVISION OF ENGINEERING SERVICES
STRUCTURE DESIGN
DESIGN BRANCH 3

BRIDGE NO. 06-0212L
POST MILE M29.68

SHASTA VIADUCT (REPLACE)
96" Ø CIDH PILE DETAILS

STRUCTURES DESIGN DETAIL SHEET (ENGLISH) (REV. 09-01-10)

ORIGINAL SCALE IN INCHES FOR REDUCED PLANS 0 1 2 3

UNIT: 3578
PROJECT NUMBER & PHASE: 02000000161
CONTRACT NO.: 02-0E0904

DISREGARD PRINTS BEARING EARLIER REVISION DATES

REVISION DATES 4-25-14 11-5-14

SHEET 59 OF 73

FILE => 06-02121-r-cidhp02.dgn

USERNAME => s116738 DATE PLOTTED => 29-MAY-2015 TIME PLOTTED => 14:27

DIST	COUNTY	ROUTE	POST MILES TOTAL PROJECT	SHEET No.	TOTAL SHEETS
02	Sha	5	R29.3/R31.1, R45.0/R45.8	226	248

REGISTERED CIVIL ENGINEER — DATE 4-9-15

5-11-2015
PLANS APPROVAL DATE

REGISTERED PROFESSIONAL ENGINEER — Jeff Sims — No. C46471 — Exp. 6-30-15 — CIVIL — STATE OF CALIFORNIA

The State of California or its officers or agents shall not be responsible for the accuracy or completeness of electronic copies of this plan sheet.

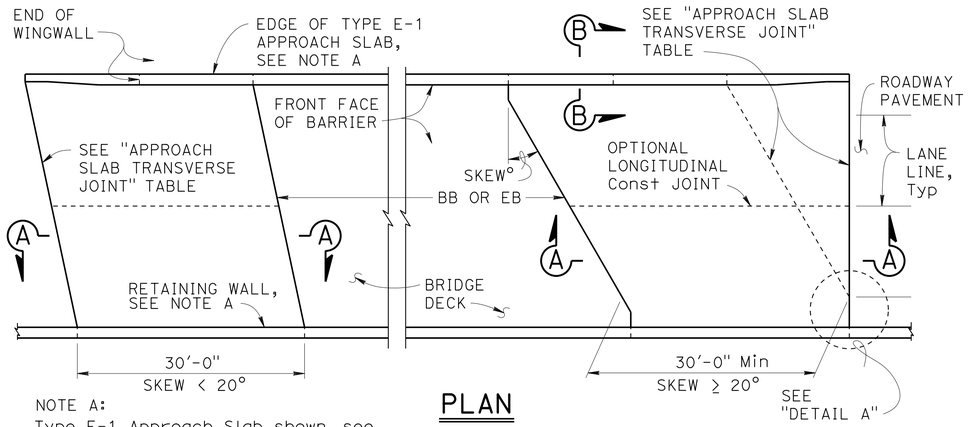

NOTE A:
Type E-1 Approach Slab shown, see "SECTION B-B" for Type E-2 details.

PLAN
1" = 10'

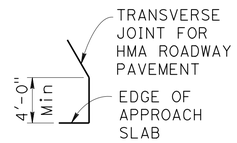

DETAIL A
No Scale

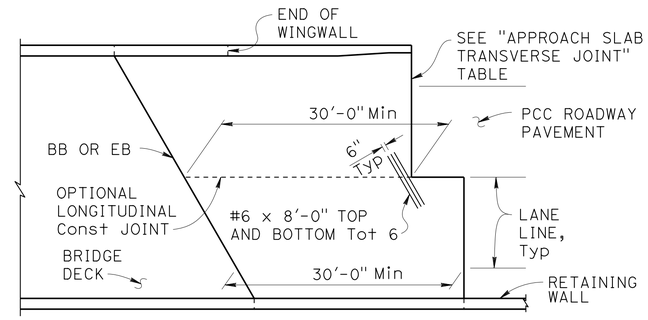

END STAGGER DETAIL
1" = 10'

APPROACH SLAB TRANSVERSE JOINT		
APPROACH SKEW	WITH HMA ROADWAY PAVEMENT	WITH PCC ROADWAY PAVEMENT
< 20°	PARALLEL TO BB OR EB	PARALLEL TO BB OR EB
20° - 45°	PARALLEL TO BB OR EB USE "DETAIL A"	STAGGER AT LANE LINES 24' TO 36' APART, SEE "END STAGGER DETAIL"
> 45°	PARALLEL TO BB OR EB USE "DETAIL A"	STAGGER AT EACH LANE LINE, SEE "END STAGGER DETAIL"

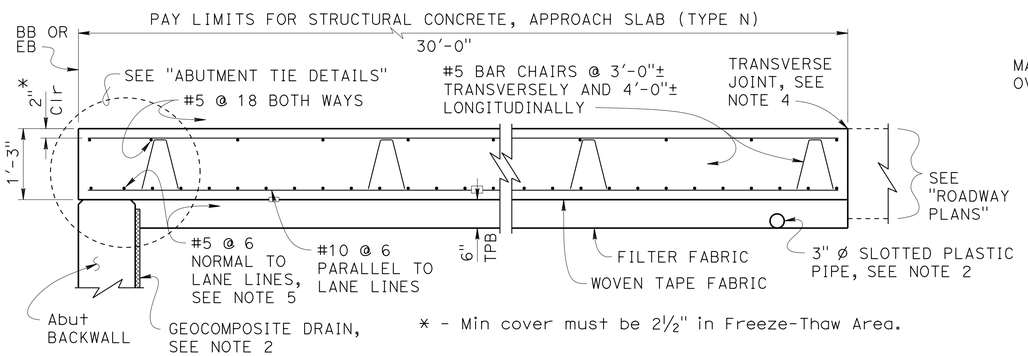

* - Min cover must be 2½" in Freeze-Thaw Area.

SECTION A-A
¾" = 1'-0"

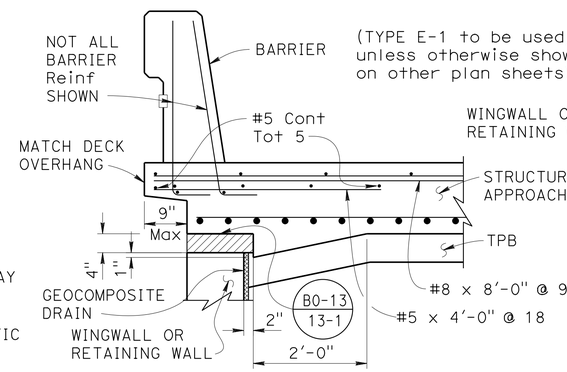

TYPE E-1

Indicates Expanded Polystyrene, remove after concrete is placed.

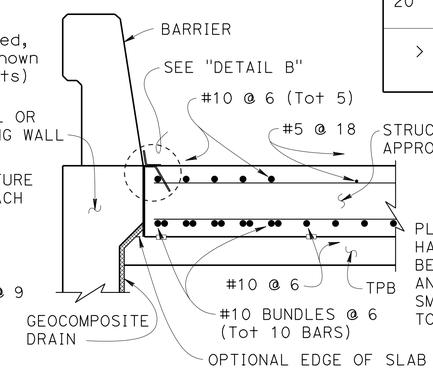

TYPE E-2

SECTION B-B
¾" = 1'-0"

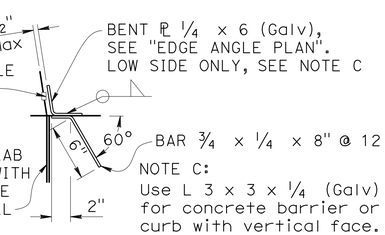

DETAIL B
1½" = 1'-0"

DESIGN NOTES

DESIGN: AASHTO LRFD Bridge Design Specifications, 2012 Edition with Caltrans Amendments, preface dated January 2014

LIMIT STATES: Service I, Strength I & II, Extreme II and Fatigue I (γ_{FAT} = 1.0)

DEAD LOAD: Includes 35 psf for future wearing surface

LIVE LOAD: HL93 and permit design load
Equivalent strip width method: W_1 = 12 ft
Slab span: L_1 = 24.5 ft

REINFORCED CONCRETE:
f_y = 60 ksi
f'_c = 3.6 ksi
n = 8

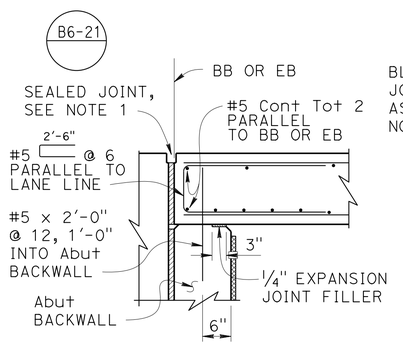

MR ≤ 2"

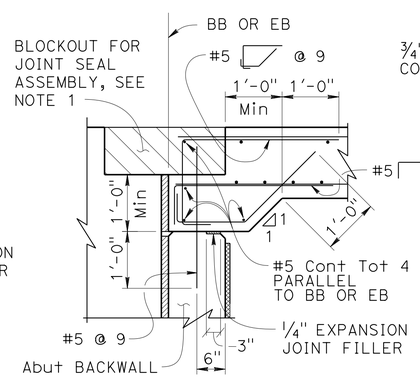

MR > 2"

ABUTMENT TIE DETAILS
¾" = 1'-0"

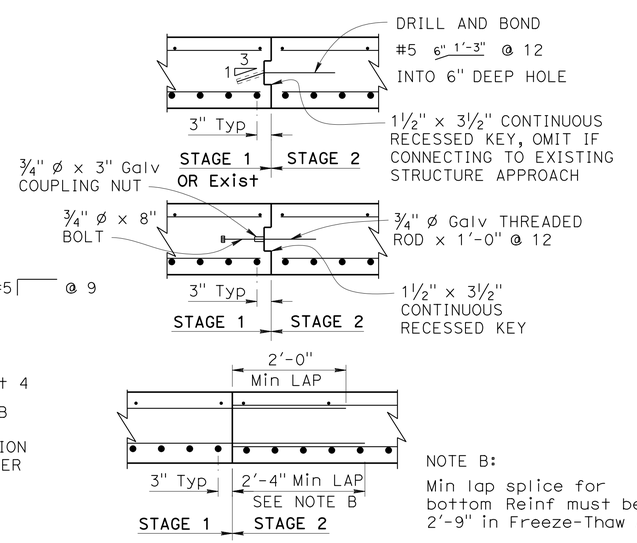

NOTE B:
Min lap splice for bottom Reinf must be 2'-9" in Freeze-Thaw Area.

LONGITUDINAL CONSTRUCTION JOINT ALTERNATIVES
¾" = 1'-0"

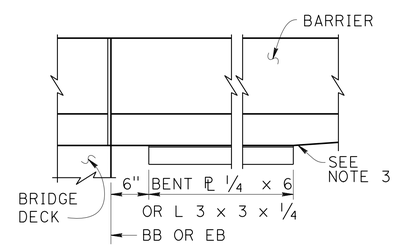

EDGE ANGLE PLAN
1" = 1'-0"

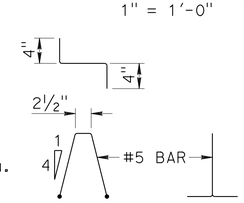

BAR CHAIR DETAIL
1" = 1'-0"

NOTES:

1. For joint protection details, blockout dimensions for joint seal assembly, and other details not shown, see other plan sheets. For MR ≤ 2", adjust reinforcement to clear sawcut for sealed joint. For MR > 2", haunch reinforcement placed for joint seal assembly blockout must be normal to BB or EB and spaced to avoid joint seal assembly anchorage.
2. For drainage details, see "STRUCTURE APPROACH DRAINAGE DETAILS" sheet.
3. End the plate or edge angle at beginning of barrier transition, end of wingwall, or end of structure approach as applicable.
4. Transverse Joint must be a minimum of 5'-0" from an existing or constructed weakened plane joint in approach PCC roadway pavement. Refer to Standard Plans P10 and P14.
5. At the Contractor's option, approach slab transverse reinforcement may be placed parallel to BB or EB. Spacing of transverse reinforcement is measured along ℄ roadway.

STANDARD DRAWING
FILE NO. xs3-120
APPROVAL DATE January 2015

STATE OF CALIFORNIA
DEPARTMENT OF TRANSPORTATION
DIVISION OF ENGINEERING SERVICES

BRIDGE NO. 06-0212L
POST MILE R29.68

SHASTA VIADUCT (REPLACE)
STRUCTURE APPROACH TYPE N (30S)

DS OSD 2147A (ENGLISH STANDARD DRAWING "XS" BORDER REV. (10-01-14)

ORIGINAL SCALE IN INCHES FOR REDUCED PLANS 0 1 2 3

UNIT: 3578
PROJECT NUMBER & PHASE: 02000000161
CONTRACT NO.: 02-0E0904

DISREGARD PRINTS BEARING EARLIER REVISION DATES
REVISION DATES 1-29-15

SHEET 60 OF 73

FILE => 06-0212l-s-appslab.dgn

USERNAME => s116738 DATE PLOTTED => 29-MAY-2015 TIME PLOTTED => 14:27

DIST	COUNTY	ROUTE	POST MILES TOTAL PROJECT	SHEET No.	TOTAL SHEETS
02	Sha	5	R29.3/R31.1, R45.0/R45.8	227	248

REGISTERED CIVIL ENGINEER 4-9-15 DATE

5-11-2015
PLANS APPROVAL DATE

REGISTERED PROFESSIONAL ENGINEER Jeff Sims No. C46471 Exp. 6-30-15 CIVIL STATE OF CALIFORNIA

The State of California or its officers or agents shall not be responsible for the accuracy or completeness of electronic copies of this plan sheet.

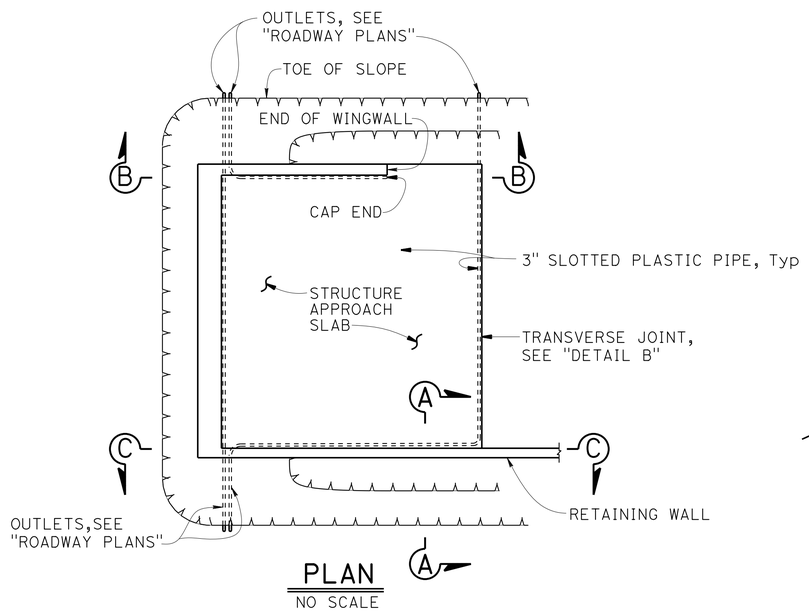

PLAN
NO SCALE

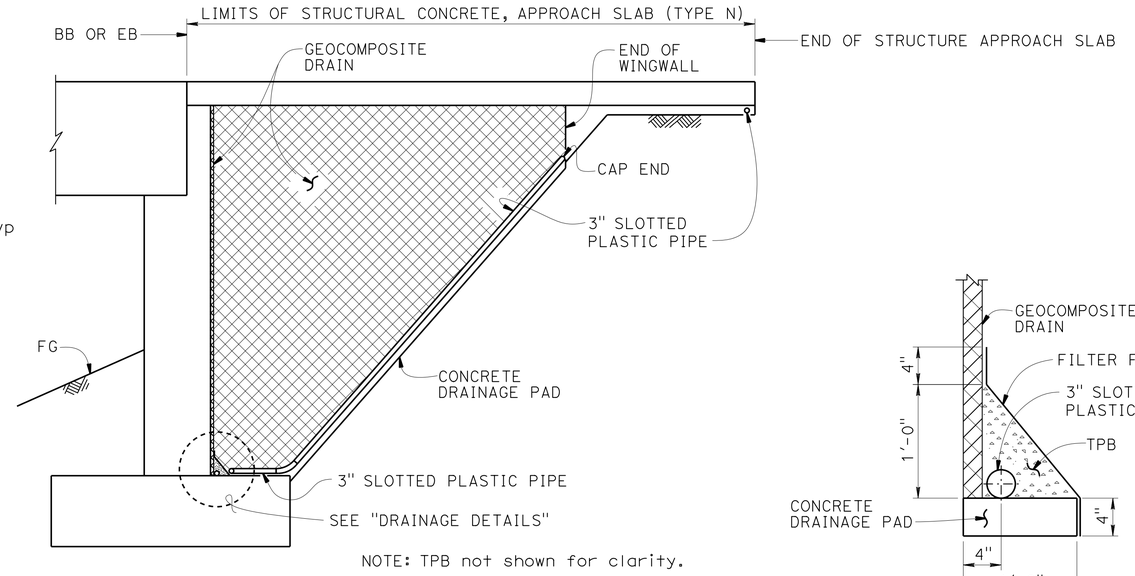

NOTE: TPB not shown for clarity.

SECTION B-B
NO SCALE

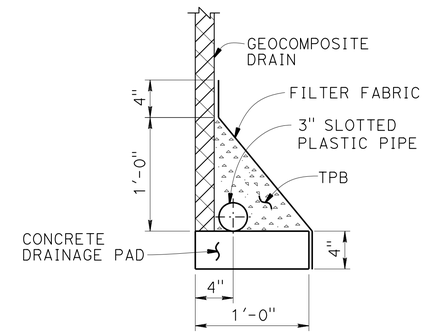

DRAINAGE PAD

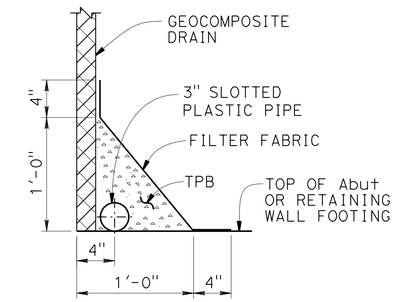

FOOTING

DRAINAGE DETAILS
1½" = 1'-0"

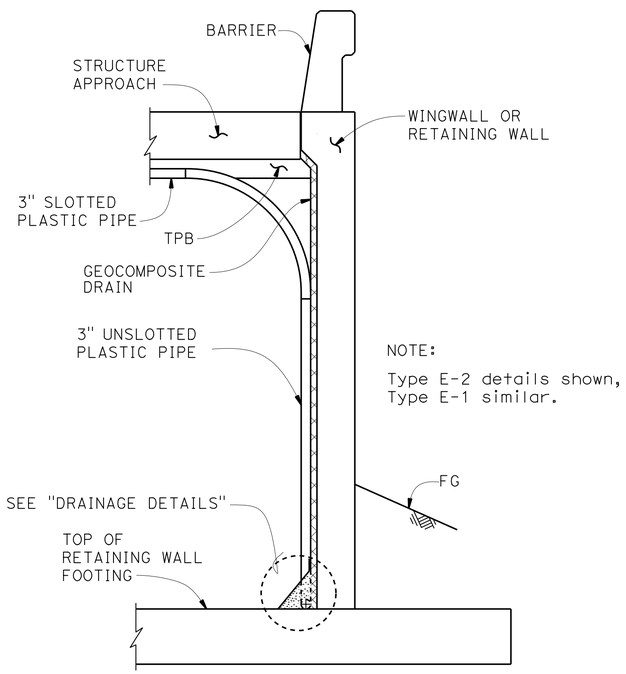

NOTE:

Type E-2 details shown, Type E-1 similar.

SECTION A-A
NO SCALE

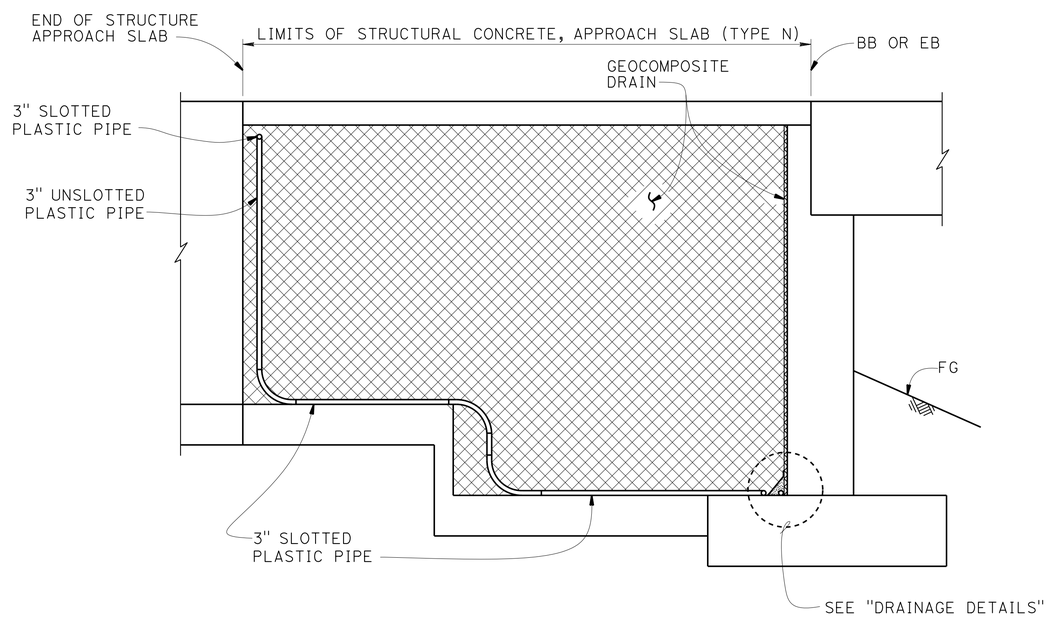

SECTION C-C
NO SCALE

NOTE: TPB not shown for clarity.

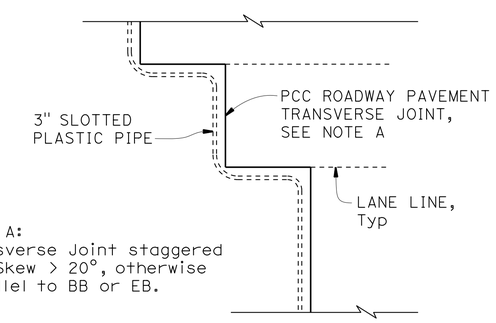

NOTE A:
Transverse Joint staggered for Skew > 20°, otherwise parallel to BB or EB.

DETAIL B
NO SCALE

NOTES:

1. For structural approach and other details not shown, see other plan sheets.
2. All bends in plastic pipe must have 3'-0" minimum radius. Plastic pipe used for bends is not required to be slotted.

STANDARD DRAWING

FILE NO. xs3-110

APPROVAL DATE January 2015

STATE OF CALIFORNIA DEPARTMENT OF TRANSPORTATION

DIVISION OF ENGINEERING SERVICES

BRIDGE NO. 06-0212L

POST MILE R29.68

SHASTA VIADUCT (REPLACE)
STRUCTURE APPROACH DRAINAGE DETAILS

DS OSD 2147A (ENGLISH STANDARD DRAWING "XS" BORDER REV. (10-01-14)

ORIGINAL SCALE IN INCHES FOR REDUCED PLANS 0 1 2 3

UNIT: 3578
PROJECT NUMBER & PHASE: 02000000161
CONTRACT NO.: 02-0E0904

DISREGARD PRINTS BEARING EARLIER REVISION DATES

REVISION DATES 11/19/14

SHEET 61 OF 73

FILE => 06-0212l-s-appslabddt.dgn

USERNAME => s116738 DATE PLOTTED => 29-MAY-2015 TIME PLOTTED => 14:27

DIST	COUNTY	ROUTE	POST MILES TOTAL PROJECT	SHEET No.	TOTAL SHEETS
02	Sha	5	R29.3/R31.1, R45.0/R45.8	228	248

REGISTERED CIVIL ENGINEER 4-9-15 DATE

5-11-2015
PLANS APPROVAL DATE

REGISTERED PROFESSIONAL ENGINEER Jose M Aquino III No. 58386 Exp. 12-31-16 CIVIL STATE OF CALIFORNIA

The State of California or its officers or agents shall not be responsible for the accuracy or completeness of scanned copies of this plan sheet.

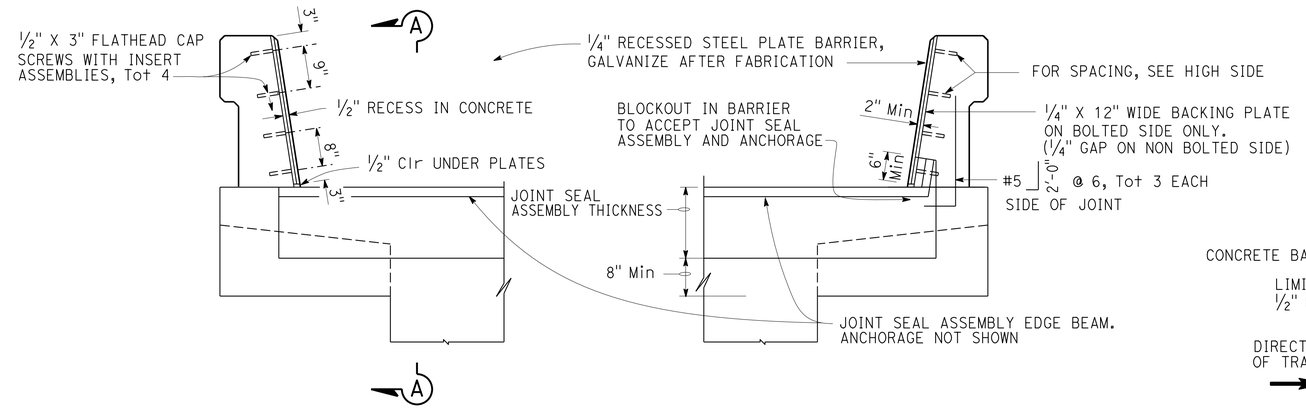

HIGH SIDE OF DECK

LOW SIDE OF DECK

SEAL INSTALLATION

¾" = 1'-0"

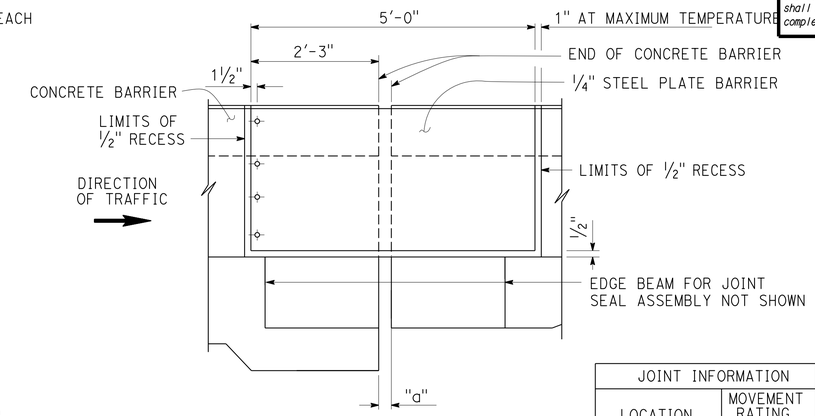

ELEVATION A-A

¾ = 1'-0"

JOINT INFORMATION		"a" DIMENSIONS			
LOCATION	MOVEMENT RATING (MR)	SKEW	WINTER	SPRING & FALL	SUMMER
Abut 1	6	0	5¼"	4"	2¾"
Abut 9	6	0	5¼"	4"	2¾"

NOTES:
1. For details not shown, see Project Plans
2. x is greater than or equal to y

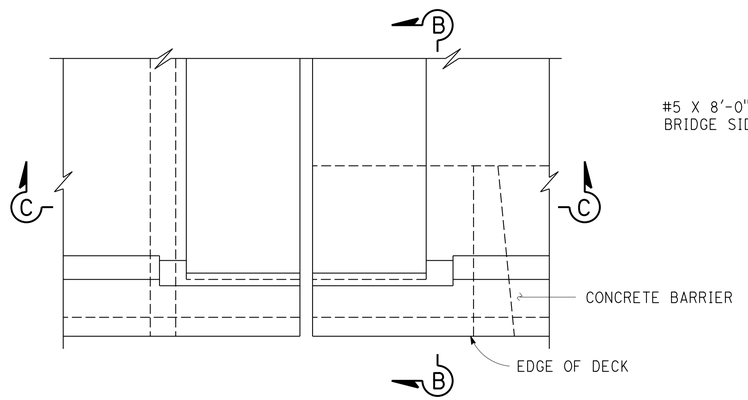

PLAN - DECK JOINT

¾" = 1'-0"

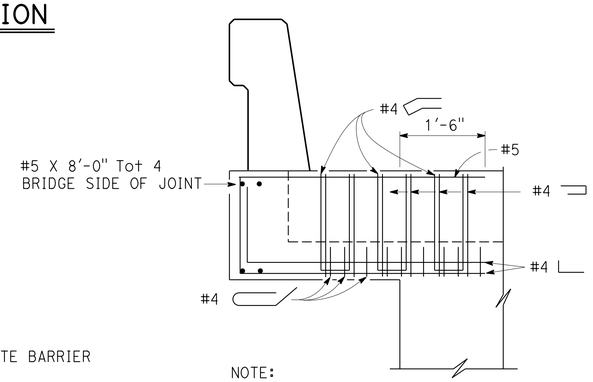

NOTE:
Reinf shown is in addition to slab reinf

SECTION B-B

¾" = 1'-0"

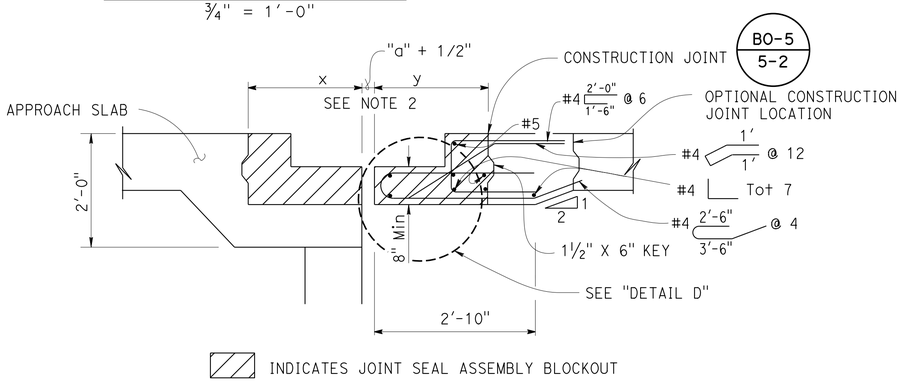

SECTION C-C

¾" = 1'-0"

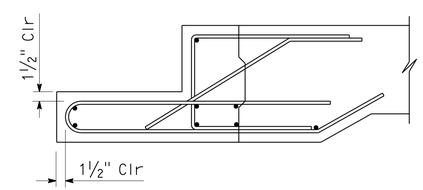

DETAIL D

1" = 1'-0"

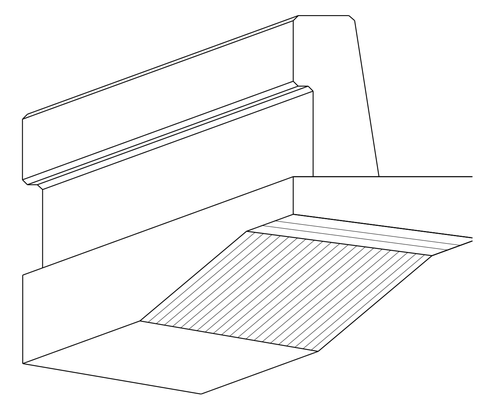

NOTE:
Abutment not shown

DECK OVERHANG AT ABUTMENT

NO SCALE

DESIGN	BY Ali Asnaashari	CHECKED Joey Aquino/Ashraf Ahmed	
DETAILS	BY Jay Reid	CHECKED Joey Aquino/Ashraf Ahmed	
QUANTITIES	BY Mufeed Khalaf	CHECKED Quang Nguyen	

STATE OF CALIFORNIA
DEPARTMENT OF TRANSPORTATION

DIVISION OF ENGINEERING SERVICES
STRUCTURE DESIGN
DESIGN BRANCH 3

BRIDGE NO. 06-0212L
POST MILE M29.68

SHASTA VIADUCT (REPLACE)
ABUTMENT JOINT SEAL DETAILS

STRUCTURES DESIGN DETAIL SHEET (ENGLISH) (REV. 09-01-10)

ORIGINAL SCALE IN INCHES FOR REDUCED PLANS 0 1 2 3

UNIT: 3578
PROJECT NUMBER & PHASE: 02000000161
CONTRACT NO.: 02-0E0904

DISREGARD PRINTS BEARING EARLIER REVISION DATES

REVISION DATES 6-11-14

SHEET 62 OF 73

FILE => 06-0212l-s-jntsl.dgn

USERNAME => s116738 DATE PLOTTED => 29-MAY-2015 TIME PLOTTED => 14:27

DIST	COUNTY	ROUTE	POST MILES TOTAL PROJECT	SHEET No	TOTAL SHEETS
02	Sha	5	R29.3/R31.1, R45.0/R45.8	229	248

CERTIFIED ENGINEERING GEOLOGIST 4-1-15

5-11-2015
PLANS APPROVAL DATE

PROFESSIONAL GEOLOGIST Xing Zheng No. 2130 Exp. 3-31-17 CERTIFIED ENGINEERING GEOLOGIST STATE OF CALIFORNIA

The State of California or its officers or agents shall not be responsible for the accuracy or completeness of electronic copies of this plan sheet.

This LOTB sheet was prepared in accordance with the Caltrans Soil & Rock Logging, Classification, & Presentation Manual (2010 Edition).

See 2010 Standard Plans A10F and A10G for Soil Legend, and A10H for Rock Legend.

BENCH MARK

SURVEY CONTROL
6-5-325
CDH Brass Disc in Conc
8.48 ft Rt Rte 5, "A" Line
Sta 893+76.99
N 2,166,462.04
E6,472,750.22
Elev = 1401.81
NAVD 88

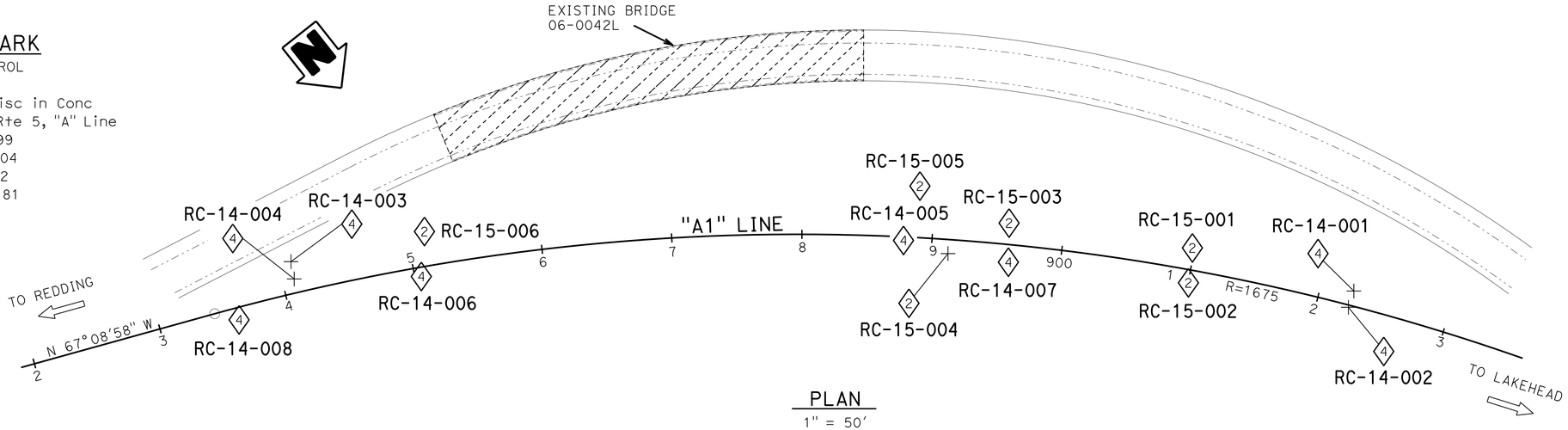

PLAN
1" = 50'

NOTES:

1. The descriptions presented on these LOTBs are based on visual observation.
2. Groundwater was not encountered during field investigation.
3. Unconfined Compressive Strength (UC) tests generally follow the ASTM D7012-Method C. Please note asterisks (**) indicate the test specimen length/diameter ratio was not in compliance with the test method.
4. Point Load tests generally follow the ASTM D5731. Point Load Strength Index $I_{s(50)}$ (psi).
5. Please note that the majority of the rock samples tested for UC and PL broke along healed discontinuities during testing.

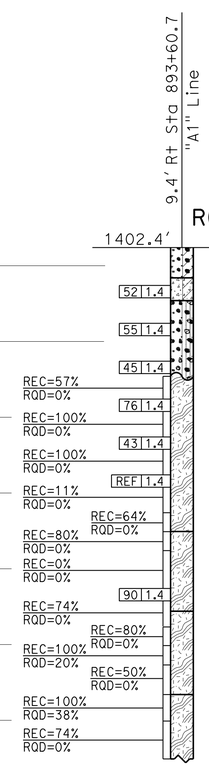

RC-14-008

Elev	Description
1400	(4) Well-graded GRAVEL with CLAY and SAND (GW-GC); medium dense (estimated); yellowish brown; moist; angular GRAVEL (rock fragments); some well-graded SAND; (FILL).
	Well-graded SAND with CLAY and GRAVEL (SW-SC); very dense; yellowish brown; moist; little well-graded angular GRAVEL; (COLLUVIUM).
1390	Well-graded GRAVEL with SILT and SAND (GW-GM); very dense; yellowish brown and reddish brown; moist; angular GRAVEL (intensely fractured and decomposed rock fragments); some well-graded SAND; (COLLUVIUM).
1380	METAMORPHIC ROCK (METASILTSTONE); thickly and very thickly bedded; dark greenish gray and reddish brown; intensely weathered; soft and very soft; intensely and very intensely fractured.
	-intensely weathered; very soft.
1370	-moderately and intensely weathered; moderately soft and moderately hard.
1360	METAMORPHIC ROCK (METASANDSTONE); fine grained; moderately bedded; yellowish brown and reddish brown; intensely weathered; from soft to moderately hard; intensely and very intensely fractured.
	-decomposed to GRAVELLY SILT with SAND (ML); very dense; yellowish brown and reddish brown; moist; little well-graded GRAVEL; little well-graded SAND.
1350	METAMORPHIC ROCK (METASANDSTONE); very fine and fine grained; moderately bedded; yellowish brown and reddish brown; intensely weathered; soft and very soft; intensely and very intensely fractured.
	-greenish black; fresh; hard.
1340	METAMORPHIC ROCK (METASILTSTONE); thickly bedded; dark gray; fresh and moderately weathered; hard; moderately and intensely fractured; strong reddish brown oxide staining on the fracture surfaces.
	-very soft; very intensely fractured (shattered).
1330	

8-6-14
Terminated at Elev 1334.9
ERi = 58%

893+00 894+00 895+00

PROFILE
Horiz: 1" = 10'
Vert: 1" = 10'

ENGINEERING SERVICES	MATERIALS AND GEOTECHNICAL SERVICES	STATE OF CALIFORNIA DEPARTMENT OF TRANSPORTATION	DIVISION OF ENGINEERING SERVICES STRUCTURE DESIGN DESIGN BRANCH 3	BRIDGE NO. 06-0212L POST MILE M29.68	SHASTA VIADUCT (REPLACE) LOG OF TEST BORINGS 1 OF 11
FUNCTIONAL SUPERVISOR NAME: R. Buell	DRAWN BY: I. G-Remmen CHECKED BY: A. Barrie	FIELD INVESTIGATION BY: X. Zheng			

OGS CIVIL LOG OF TEST BORINGS SHEET

ORIGINAL SCALE IN INCHES FOR REDUCED PLANS 0 1 2 3

UNIT: 3650
PROJECT NUMBER & PHASE: 02000000161 CONTRACT NO.: 02-0E0904

DISREGARD PRINTS BEARING EARLIER REVISION DATES

REVISION DATES 12-01-14 03-11-15 04-01-15 SHEET 63 OF 73

FILE => 06-0212l-z-ltb01.dgn

USERNAME => s116738 DATE PLOTTED => 29-MAY-2015 TIME PLOTTED => 14:27

DIST	COUNTY	ROUTE	POST MILES TOTAL PROJECT	SHEET No	TOTAL SHEETS
02	Sha	5	R29.3/R31.1, R45.0/R45.8	230	248

CERTIFIED ENGINEERING GEOLOGIST 4-1-15

5-11-2015
PLANS APPROVAL DATE

PROFESSIONAL GEOLOGIST Xing Zheng No. 2130 Exp. 3-31-17 CERTIFIED ENGINEERING GEOLOGIST STATE OF CALIFORNIA

The State of California or its officers or agents shall not be responsible for the accuracy or completeness of electronic copies of this plan sheet.

This LOTB sheet was prepared in accordance with the Caltrans Soil & Rock Logging, Classification, & Presentation Manual (2010 Edition).

See 2010 Standard Plans A10F and A10G for Soil Legend, and A10H for Rock Legend.

FOR PLAN VIEW, SEE
"LOG OF TEST BORINGS 1 OF 11"

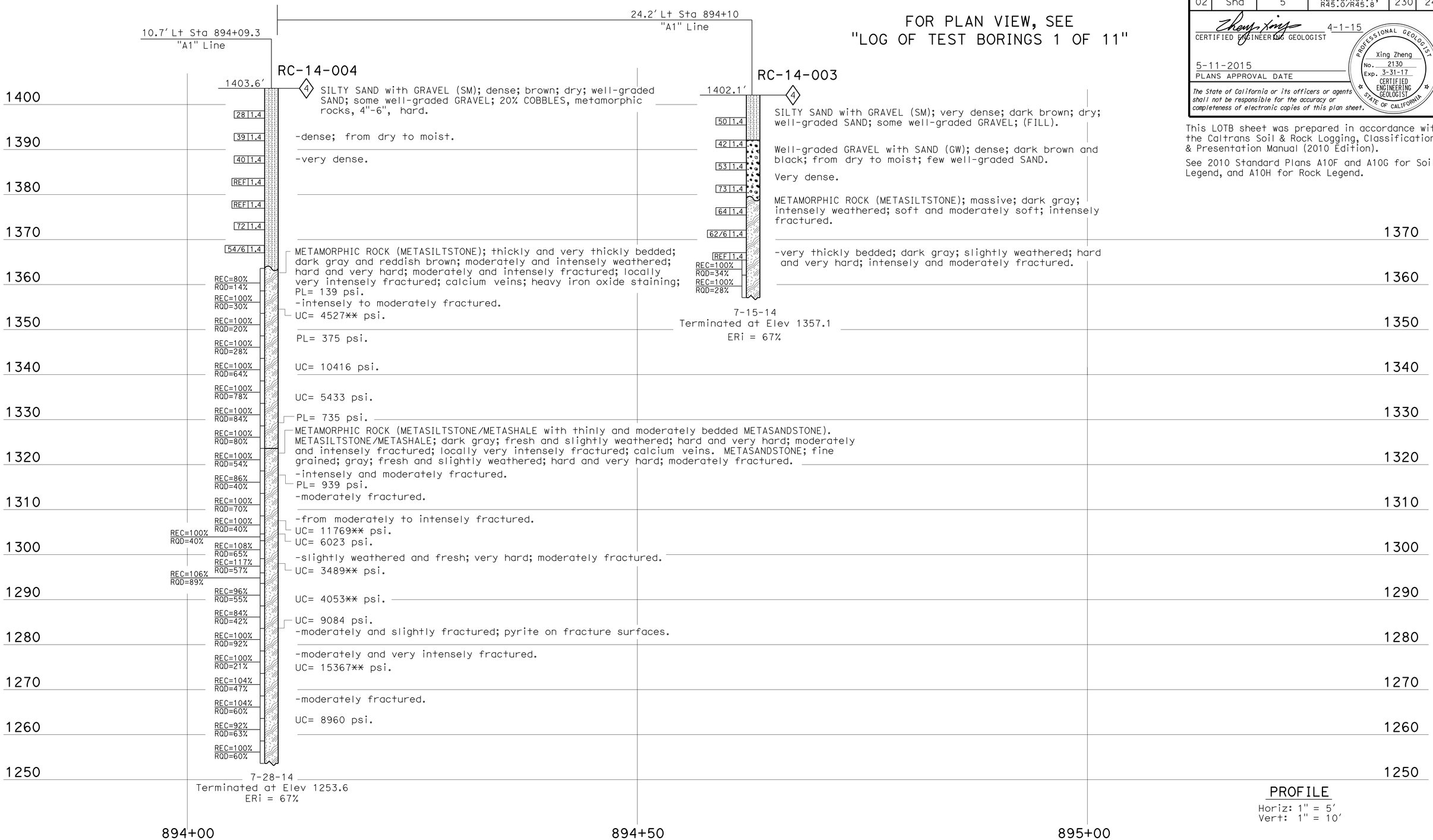

PROFILE
Horiz: 1" = 5'
Vert: 1" = 10'

ENGINEERING SERVICES	MATERIALS AND GEOTECHNICAL SERVICES	STATE OF CALIFORNIA DEPARTMENT OF TRANSPORTATION	DIVISION OF ENGINEERING SERVICES STRUCTURE DESIGN DESIGN BRANCH 3	BRIDGE NO. 06-0212L POST MILE M29.68	SHASTA VIADUCT (REPLACE) LOG OF TEST BORINGS 2 OF 11
FUNCTIONAL SUPERVISOR NAME: R. Buell	DRAWN BY: I. G-Remmen CHECKED BY: A. Barrie	FIELD INVESTIGATION BY: D. Liao, J. Kaump			

OGS CIVIL LOG OF TEST BORINGS SHEET

ORIGINAL SCALE IN INCHES FOR REDUCED PLANS 0 1 2 3

UNIT: 3650
PROJECT NUMBER & PHASE: 02000000161 CONTRACT NO.: 02-0E0904

DISREGARD PRINTS BEARING EARLIER REVISION DATES → REVISION DATES 12-01-14 03-11-15 04-01-15 SHEET 64 OF 73

FILE => 06-0212I-z-ltb02.dgn

USERNAME => s116738 DATE PLOTTED => 29-MAY-2015 TIME PLOTTED => 14:27

DIST	COUNTY	ROUTE	POST MILES TOTAL PROJECT	SHEET No	TOTAL SHEETS
02	Sha	5	R29.3/R31.1, R45.0/R45.8	231	248

CERTIFIED ENGINEERING GEOLOGIST 4-1-15

5-11-2015
PLANS APPROVAL DATE

PROFESSIONAL GEOLOGIST Xing Zheng No. 2130 Exp. 3-31-17 CERTIFIED ENGINEERING GEOLOGIST STATE OF CALIFORNIA

The State of California or its officers or agents shall not be responsible for the accuracy or completeness of electronic copies of this plan sheet.

This LOTB sheet was prepared in accordance with the Caltrans Soil & Rock Logging, Classification, & Presentation Manual (2010 Edition).

See 2010 Standard Plans A10F and A10G for Soil Legend, and A10H for Rock Legend.

FOR PLAN VIEW, SEE
"LOG OF TEST BORINGS 1 OF 11"

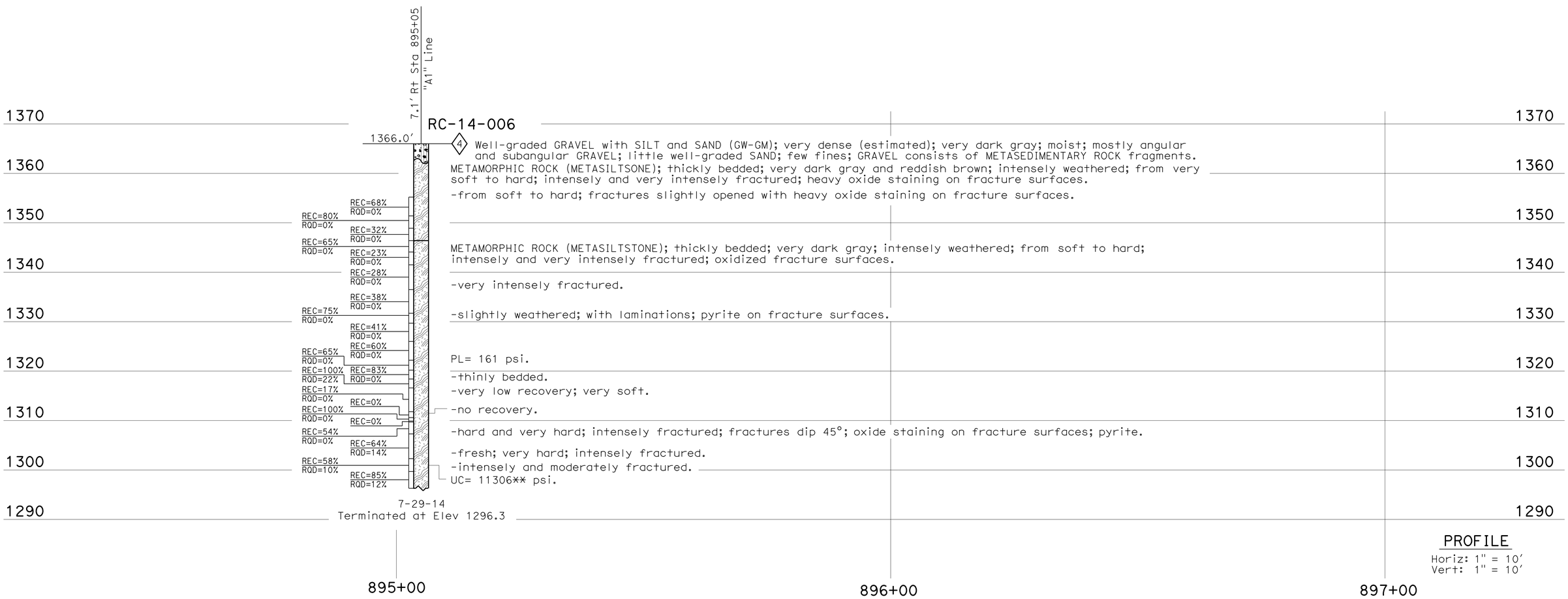

PROFILE
Horiz: 1" = 10'
Vert: 1" = 10'

ENGINEERING SERVICES	MATERIALS AND GEOTECHNICAL SERVICES	STATE OF CALIFORNIA DEPARTMENT OF TRANSPORTATION	DIVISION OF ENGINEERING SERVICES STRUCTURE DESIGN DESIGN BRANCH 3	BRIDGE NO. 06-0212L POST MILE M29.68	SHASTA VIADUCT (REPLACE) LOG OF TEST BORINGS 3 OF 11
FUNCTIONAL SUPERVISOR NAME: R. Buell	DRAWN BY: I. G-Remmen CHECKED BY: A. Barrie	FIELD INVESTIGATION BY: J. Thorne			

OGS CIVIL LOG OF TEST BORINGS SHEET

ORIGINAL SCALE IN INCHES FOR REDUCED PLANS 0 1 2 3

UNIT: 3650
PROJECT NUMBER & PHASE: 02000000161 CONTRACT NO.: 02-0E0904

DISREGARD PRINTS BEARING EARLIER REVISION DATES → REVISION DATES 12-01-14 03-11-15 04-01-15 SHEET 65 OF 73

FILE => 06-0212l-z-lrtb03.dgn

USERNAME => s116738 DATE PLOTTED => 29-MAY-2015 TIME PLOTTED => 14:27

DIST	COUNTY	ROUTE	POST MILES TOTAL PROJECT	SHEET No	TOTAL SHEETS
02	Sha	5	R29.3/R31.1, R45.0/R45.8	232	248

CERTIFIED ENGINEERING GEOLOGIST 4-1-15

5-11-2015
PLANS APPROVAL DATE

PROFESSIONAL GEOLOGIST Xing Zheng No. 2130 Exp. 3-31-17 CERTIFIED ENGINEERING GEOLOGIST STATE OF CALIFORNIA

The State of California or its officers or agents shall not be responsible for the accuracy or completeness of electronic copies of this plan sheet.

This LOTB sheet was prepared in accordance with the Caltrans Soil & Rock Logging, Classification, & Presentation Manual (2010 Edition).

See 2010 Standard Plans A10F and A10G for Soil Legend, and A10H for Rock Legend.

FOR PLAN VIEW, SEE
"LOG OF TEST BORINGS 1 OF 11"

NOTE:
See table for "REC" and "RQD" values.

BORING DEPTH (ft)	REC %	RQD %
4.4-4.7	100	0
4.7-5.0	100	0
5.0-5.3	100	0
5.3-5.6	130	0
5.6-5.9	100	0
5.9-6.5	50	0
6.5-7.3	125	0
7.3-7.7	100	0
7.7-8.0	133	0
8.0-8.9	100	0
8.9-9.2	100	0
9.2-10.1	67	0
10.1-10.4	100	0
10.4-11.2	63	0
11.2-11.7	100	0
11.7-13.5	33	0
13.5-14.0	40	0
14.0-14.7	86	0
14.7-18.0	100	24
18.0-18.5	100	0
18.5-20.7	100	18
20.7-21.3	100	0
21.3-22.3	130	0
22.3-23.0	100	0
23.0-23.7	100	0
23.7-24.5	125	0
24.5-25.1	55	36
25.1-25.5	100	0
25.5-26.5	110	30
26.5-27.3	100	0
27.3-29.3	25	0
29.3-30.8	47	0
30.8-32.4	38	0
32.4-33.0	100	0
33.0-33.3	100	0
33.3-33.8	100	0
33.8-34.1	100	0
34.1-34.8	100	0
34.8-35.1	100	0
35.1-35.6	140	0
35.6-36.1	100	0
36.1-36.7	100	0
36.7-36.8	100	0
36.8-39.3	112	16
39.3-40.8	100	60
40.8-41.7	67	0
41.7-42.1	125	0
42.1-42.3	100	0
42.3-42.8	100	0
42.8-43.1	100	0
43.1-47.0	92	39
47.0-47.5	100	0
47.5-48.9	100	0
48.9-51.7	36	0
51.7-54.8	100	42
54.8-55.2	125	0
55.2-56.1	100	0
56.1-61.2	100	88
61.2-63.3	100	48
63.3-63.5	100	0
63.5-65.8	48	0
65.8-66.5	58	50
66.5-66.8	67	0
66.8-68.9	91	33
68.9-70.0	118	91

PROFILE
Horiz: 1" = 10'
Vert: 1" = 10'

ENGINEERING SERVICES	MATERIALS AND GEOTECHNICAL SERVICES	STATE OF CALIFORNIA DEPARTMENT OF TRANSPORTATION	DIVISION OF ENGINEERING SERVICES STRUCTURE DESIGN DESIGN BRANCH 3	BRIDGE NO. 06-0212L POST MILE M29.68	SHASTA VIADUCT (REPLACE) LOG OF TEST BORINGS 4 OF 11
FUNCTIONAL SUPERVISOR NAME: R. Buell	DRAWN BY: I. G-Remmen CHECKED BY: A. Barrie	FIELD INVESTIGATION BY: J. Thorne			

OGS CIVIL LOG OF TEST BORINGS SHEET

ORIGINAL SCALE IN INCHES FOR REDUCED PLANS 0 1 2 3

UNIT: 3650
PROJECT NUMBER & PHASE: 02000000161 CONTRACT NO.: 02-0E0904

DISREGARD PRINTS BEARING EARLIER REVISION DATES → REVISION DATES 03-10-15 03-11-15 04-01-15

SHEET 66 OF 73

FILE => 06-0212I-z-ltb04.dgn

USERNAME => s116738 DATE PLOTTED => 29-MAY-2015 TIME PLOTTED => 14:27

DIST	COUNTY	ROUTE	POST MILES TOTAL PROJECT	SHEET No	TOTAL SHEETS
02	Sha	5	R29.3/R31.1, R45.0/R45.8	233	248

CERTIFIED ENGINEERING GEOLOGIST 4-1-15

5-11-2015
PLANS APPROVAL DATE

PROFESSIONAL GEOLOGIST Xing Zheng No. 2130 Exp. 3-31-17 CERTIFIED ENGINEERING GEOLOGIST STATE OF CALIFORNIA

The State of California or its officers or agents shall not be responsible for the accuracy or completeness of electronic copies of this plan sheet.

This LOTB sheet was prepared in accordance with the Caltrans Soil & Rock Logging, Classification, & Presentation Manual (2010 Edition).

See 2010 Standard Plans A10F and A10G for Soil Legend, and A10H for Rock Legend.

FOR PLAN VIEW, SEE
"LOG OF TEST BORINGS 1 OF 11"

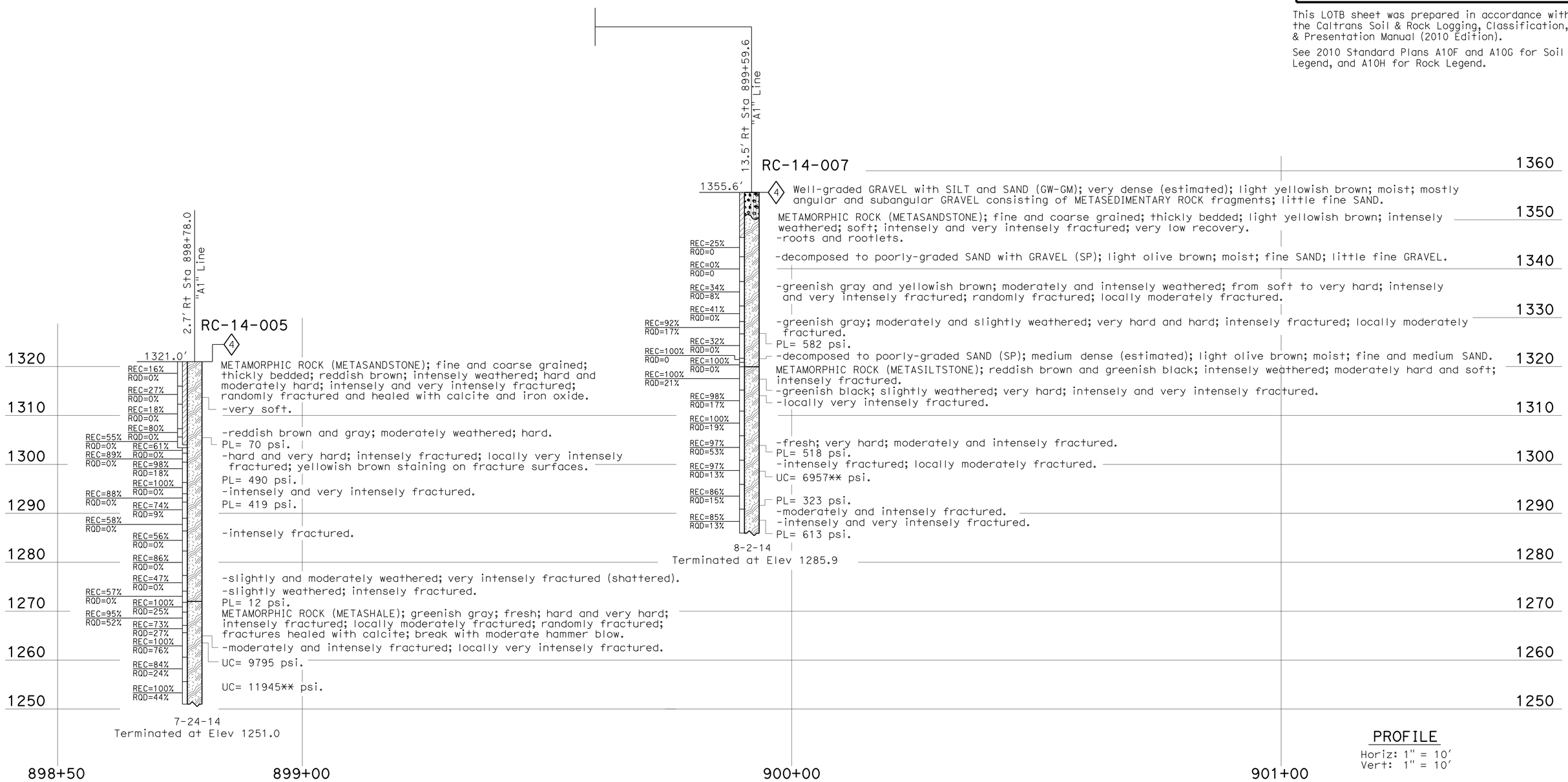

PROFILE
Horiz: 1" = 10'
Vert: 1" = 10'

ENGINEERING SERVICES	MATERIALS AND GEOTECHNICAL SERVICES	STATE OF CALIFORNIA DEPARTMENT OF TRANSPORTATION	DIVISION OF ENGINEERING SERVICES STRUCTURE DESIGN DESIGN BRANCH 3	BRIDGE NO. 06-0212L POST MILE M29.68	SHASTA VIADUCT (REPLACE) LOG OF TEST BORINGS 5 OF 11
FUNCTIONAL SUPERVISOR NAME: R. Buell	DRAWN BY: I. G-Remmen, W. Tang CHECKED BY: A. Barrie	FIELD INVESTIGATION BY: J. Thorne, X. Zheng			

OGS CIVIL LOG OF TEST BORINGS SHEET

ORIGINAL SCALE IN INCHES FOR REDUCED PLANS 0 1 2 3

UNIT: 3650
PROJECT NUMBER & PHASE: 02000000161 CONTRACT NO.: 02-0E0904

DISREGARD PRINTS BEARING EARLIER REVISION DATES → REVISION DATES 12-01-14 03-11-15 04-01-15 SHEET 67 OF 73

FILE => 06-0212I-z-lrb05.dgn

USERNAME => s116738 DATE PLOTTED => 29-MAY-2015 TIME PLOTTED => 14:27

DIST	COUNTY	ROUTE	POST MILES TOTAL PROJECT	SHEET No	TOTAL SHEETS
02	Sha	5	R29.3/R31.1, R45.0/R45.8	234	248

CERTIFIED ENGINEERING GEOLOGIST 4-1-15

5-11-2015
PLANS APPROVAL DATE

PROFESSIONAL GEOLOGIST Xing Zheng No. 2130 Exp. 3-31-17 CERTIFIED ENGINEERING GEOLOGIST STATE OF CALIFORNIA

The State of California or its officers or agents shall not be responsible for the accuracy or completeness of electronic copies of this plan sheet.

This LOTB sheet was prepared in accordance with the Caltrans Soil & Rock Logging, Classification, & Presentation Manual (2010 Edition).

See 2010 Standard Plans A10F and A10G for Soil Legend, and A10H for Rock Legend.

FOR PLAN VIEW, SEE
"LOG OF TEST BORINGS 1 OF 11"

NOTE:
See table for "REC" and "RQD" values.

BORING DEPTH (ft)	REC %	RQD %
2.8-3.3	100	0
3.3-4.2	100	0
4.2-4.4	100	0
4.4-4.8	100	0
4.8-5.6	100	50
5.6-6.1	100	0
6.1-7.5	100	0
7.5-8.0	100	0
8.0-8.5	100	0
8.5-9.1	100	0
9.1-10.1	100	0
10.1-11.6	80	0
11.6-12.5	78	0
12.5-13.0	100	0
13.0-13.3	100	0
13.3-13.8	80	0
13.8-14.4	100	50
14.4-15.1	71	0
15.1-15.5	100	0
15.5-18.8	18	0
18.8-21.3	0	0
21.3-21.6	100	0
21.6-22.1	80	0
22.1-22.7	100	0
22.7-23.1	100	0
23.1-23.4	0	0
23.4-25.2	0	0
25.2-26.0	63	0
26.0-26.5	100	0
26.5-27.0	100	0
27.0-27.3	100	0
27.3-28.5	33	0
28.5-29.0	180	0
29.0-29.5	80	0
29.5-30.8	54	0
30.8-32.3	53	0
32.3-33.4	64	0
33.4-34.0	33	0
34.0-34.7	86	0
34.7-35.0	100	0
35.0-35.7	145	0
35.7-36.2	40	0
36.2-36.8	100	0
36.8-37.1	100	0
37.1-37.9	100	0
37.9-38.4	100	0
38.4-39.4	70	0
39.4-41.1	29	0
41.1-42.4	62	0
42.4-43.1	100	0
43.1-43.5	100	0
43.5-46.9	100	12
46.9-47.5	100	0
47.5-49.2	47	0
49.2-52.6	115	47
52.6-60.0	1	0
60.0-61.4	0	0
61.4-63.5	10	0
63.5-65.1	25	0
65.1-65.3	200	0
65.3-68.1	0	0
68.1-68.8	100	0
68.8-70.0	100	0

PROFILE
Horiz: 1" = 10'
Vert: 1" = 10'

ENGINEERING SERVICES	MATERIALS AND GEOTECHNICAL SERVICES	STATE OF CALIFORNIA DEPARTMENT OF TRANSPORTATION	DIVISION OF ENGINEERING SERVICES STRUCTURE DESIGN DESIGN BRANCH 3	BRIDGE NO. 06-0212L POST MILE M29.68	SHASTA VIADUCT (REPLACE) LOG OF TEST BORINGS 6 OF 11
FUNCTIONAL SUPERVISOR NAME: R. Buell	DRAWN BY: I. G-Remmen CHECKED BY: A. Barrie	FIELD INVESTIGATION BY: J. Thorne			

OGS CIVIL LOG OF TEST BORINGS SHEET

ORIGINAL SCALE IN INCHES FOR REDUCED PLANS 0 1 2 3

UNIT: 3650
PROJECT NUMBER & PHASE: 02000000161 CONTRACT NO.: 02-0E0904

DISREGARD PRINTS BEARING EARLIER REVISION DATES → REVISION DATES 03-16-15 04-01-15 SHEET 68 OF 73

FILE => 06-0212I-z-ltb06.dgn

USERNAME => s116738 DATE PLOTTED => 29-MAY-2015 TIME PLOTTED => 14:27

DIST	COUNTY	ROUTE	POST MILES TOTAL PROJECT	SHEET No	TOTAL SHEETS
02	Sha	5	R29.3/R31.1, R45.0/R45.8	235	248

CERTIFIED ENGINEERING GEOLOGIST 4-1-15

5-11-2015
PLANS APPROVAL DATE

PROFESSIONAL GEOLOGIST Xing Zheng No. 2130 Exp. 3-31-17 CERTIFIED ENGINEERING GEOLOGIST STATE OF CALIFORNIA

The State of California or its officers or agents shall not be responsible for the accuracy or completeness of electronic copies of this plan sheet.

This LOTB sheet was prepared in accordance with the Caltrans Soil & Rock Logging, Classification, & Presentation Manual (2010 Edition).

See 2010 Standard Plans A10F and A10G for Soil Legend, and A10H for Rock Legend.

FOR PLAN VIEW, SEE
"LOG OF TEST BORINGS 1 OF 11"

BORING DEPTH (ft)	REC %	RQD %
3.2 - 6.5	18	0
6.5 - 7.2	71	0
7.2 - 7.7	50	0
7.7 - 8.1	50	0
8.1 - 9.0	100	0
9.0 -10.1	70	0
10.1 -11.8	0	0
11.8 - 12.8	80	0
12.8 - 13.1	100	0
13.1 - 14.6	87	0
14.6 - 15.2	83	0
15.2 - 15.7	80	0
15.7 - 16.1	63	0
16.1 - 17.2	100	32
17.2 - 18.4	150	0
18.4 - 20.1	71	0
20.1 - 21.9	88	0
21.9 - 22.2	67	0
22.2 - 22.4	100	0
22.4 - 22.7	67	0
22.7 - 23.9	83	0
23.9 - 24.1	100	0
24.1 - 25.8	88	0
25.8 - 26.4	50	0
26.4 - 26.8	75	0
26.8 - 27.3	60	0
27.3 - 28.9	38	0
28.9 - 29.6	214	0
29.6 - 30.3	100	0
30.3 - 34.3	100	20
34.3 - 36.6	43	0
36.6 - 37.7	209	0
37.7 - 37.8	100	0
37.8 - 43.0	89	73
43.0 - 44.2	100	83
44.2 - 47.3	100	81
47.3 - 48.4	133	0
48.4 - 52.6	98	38
52.6 - 55.1	96	0
55.1 - 55.8	71	0
55.8 - 56.5	71	0
56.5 - 57.4	56	0
57.4 - 57.8	100	0
57.8 - 61.2	100	71
61.2 - 61.7	70	0
61.7 - 65.3	103	89
65.3 - 67.0	100	0
67.0 - 70.0	83	47

NOTE:
See table for "REC" and "RQD" values.

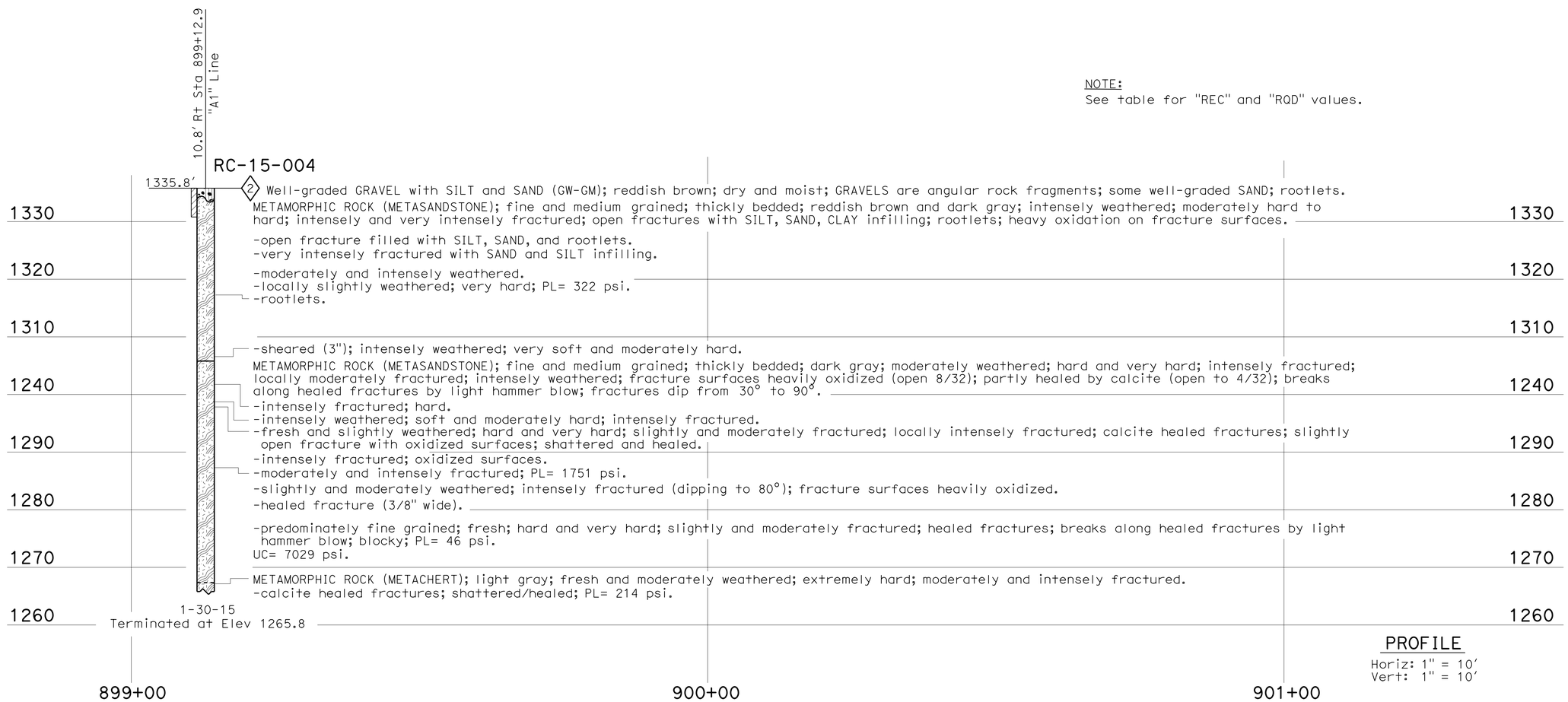

PROFILE
Horiz: 1" = 10'
Vert: 1" = 10'

ENGINEERING SERVICES	MATERIALS AND GEOTECHNICAL SERVICES	STATE OF CALIFORNIA DEPARTMENT OF TRANSPORTATION	DIVISION OF ENGINEERING SERVICES STRUCTURE DESIGN DESIGN BRANCH 3	BRIDGE NO. 06-0212L POST MILE M29.68	SHASTA VIADUCT (REPLACE) LOG OF TEST BORINGS 7 OF 11
FUNCTIONAL SUPERVISOR NAME: R. Buell	DRAWN BY: I. G-Remmen CHECKED BY: A. Barrie	FIELD INVESTIGATION BY: X. Zheng			

OGS CIVIL LOG OF TEST BORINGS SHEET

ORIGINAL SCALE IN INCHES FOR REDUCED PLANS 0 1 2 3

UNIT: 3650
PROJECT NUMBER & PHASE: 02000000161 CONTRACT NO.: 02-0E0904

DISREGARD PRINTS BEARING EARLIER REVISION DATES → REVISION DATES 03-10-15 03-11-15 04-01-15 SHEET 69 OF 73

FILE => 06-0212I-z-ltb07.dgn

USERNAME => s116738 DATE PLOTTED => 29-MAY-2015 TIME PLOTTED => 14:27

DIST	COUNTY	ROUTE	POST MILES TOTAL PROJECT	SHEET No	TOTAL SHEETS
02	Sha	5	R29.3/R31.1, R45.0/R45.8	236	248

CERTIFIED ENGINEERING GEOLOGIST 4-1-15

5-11-2015
PLANS APPROVAL DATE

PROFESSIONAL GEOLOGIST Xing Zheng No. 2130 Exp. 3-31-17 CERTIFIED ENGINEERING GEOLOGIST STATE OF CALIFORNIA

The State of California or its officers or agents shall not be responsible for the accuracy or completeness of electronic copies of this plan sheet.

This LOTB sheet was prepared in accordance with the Caltrans Soil & Rock Logging, Classification, & Presentation Manual (2010 Edition).

See 2010 Standard Plans A10F and A10G for Soil Legend, and A10H for Rock Legend.

FOR PLAN VIEW, SEE
"LOG OF TEST BORINGS 1 OF 11"

BORING DEPTH (ft)	REC %	RQD %
2.0 - 3.0	30	0
3.0 - 3.5	60	0
3.5 - 4.2	57	0
4.2 - 4.7	80	0
4.7 - 5.1	63	0
5.1 - 5.8	29	0
5.8 - 8.6	89	0
9.2 - 13.8	91	0
13.8 - 14.3	60	0
14.3 - 14.8	40	0
14.8 - 15.3	70	0
15.3 - 16.7	36	0
16.7 - 17.4	57	0
17.4 - 18.4	50	0
18.4 - 19.5	36	0
19.5 - 22.1	27	0
22.1 - 24.2	14	0
24.2 - 24.9	71	0
24.9 - 25.3	100	0
25.3 - 26.4	100	0
26.4 - 30.9	96	20
30.9 - 32.7	50	0
32.7 - 33.2	60	0
33.2 - 33.6	100	0
33.6 - 34.0	88	0
34.0 - 35.4	71	32
35.4 - 37.0	100	50
37.0 - 40.1	100	48
40.1 - 42.7	100	0
42.7 - 44.9	95	86
44.9 - 49.0	95	48
49.0 - 51.4	84	80
51.4 - 52.3	33	0
52.3 - 52.7	50	0
52.7 - 54.3	100	28
54.3 - 54.7	38	0
54.7 - 55.1	100	0
55.1 - 57.9	100	71
57.9 - 58.4	60	0
58.4 - 60.9	84	56
60.9 - 61.5	100	0
61.5 - 63.7	91	23
63.7 - 65.3	81	0
65.3 - 65.7	50	0
65.7 - 66.1	10	0
66.1 - 66.7	75	0
66.7 - 68.1	57	0
68.1 - 68.4	67	0
68.4 - 69.7	100	0

NOTE:
See table for "REC" and "RQD" values.

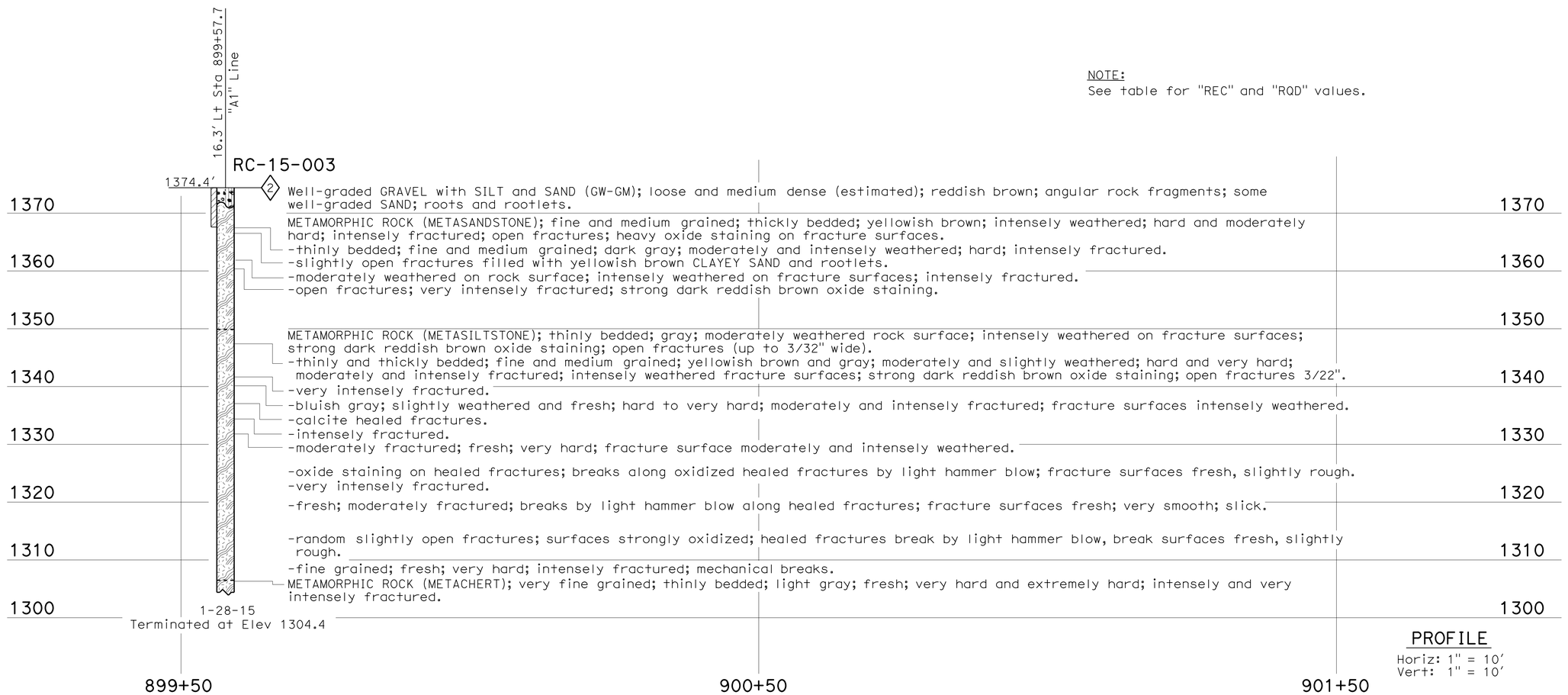

PROFILE
Horiz: 1" = 10'
Vert: 1" = 10'

ENGINEERING SERVICES	MATERIALS AND GEOTECHNICAL SERVICES	STATE OF CALIFORNIA DEPARTMENT OF TRANSPORTATION	DIVISION OF ENGINEERING SERVICES STRUCTURE DESIGN DESIGN BRANCH 3	BRIDGE NO. 06-0212L POST MILE M29.68	SHASTA VIADUCT (REPLACE) LOG OF TEST BORINGS 8 OF 11
FUNCTIONAL SUPERVISOR NAME: R. Buell	DRAWN BY: I. G-Remmen CHECKED BY: A. Barrie	FIELD INVESTIGATION BY: X. Zheng			

OGS CIVIL LOG OF TEST BORINGS SHEET

ORIGINAL SCALE IN INCHES FOR REDUCED PLANS 0 1 2 3

UNIT: 3650
PROJECT NUMBER & PHASE: 02000000161 CONTRACT NO.: 02-0E0904

DISREGARD PRINTS BEARING EARLIER REVISION DATES

REVISION DATES: 03-10-15 03-11-15 04-01-15

SHEET 70 OF 73

FILE => 06-0212l-z-lrb08.dgn

USERNAME => s116738 DATE PLOTTED => 29-MAY-2015 TIME PLOTTED => 14:27

DIST	COUNTY	ROUTE	POST MILES TOTAL PROJECT	SHEET No	TOTAL SHEETS
02	Sha	5	R29.3/R31.1, R45.0/R45.8	237	248

CERTIFIED ENGINEERING GEOLOGIST 4-1-15

5-11-2015
PLANS APPROVAL DATE

PROFESSIONAL GEOLOGIST Xing Zheng No. 2130 Exp. 3-31-17 CERTIFIED ENGINEERING GEOLOGIST STATE OF CALIFORNIA

The State of California or its officers or agents shall not be responsible for the accuracy or completeness of electronic copies of this plan sheet.

This LOTB sheet was prepared in accordance with the Caltrans Soil & Rock Logging, Classification, & Presentation Manual (2010 Edition).

See 2010 Standard Plans A10F and A10G for Soil Legend, and A10H for Rock Legend.

FOR PLAN VIEW, SEE
"LOG OF TEST BORINGS 1 OF 11"

NOTE:
See table for "REC" and "RQD" values.

BORING DEPTH (ft)	REC %	RQD %
6.7-8.7	100	25
8.7-10.1	64	0
10.1-11.0	100	0
11.0-12.3	100	0
12.3-17.2	14	0
17.2-18.1	44	0
18.1-18.7	100	0
18.7-19.8	36	0
19.8-20.6	75	0
20.6-22.0	43	0
22.0-23.1	9	0
23.1-24.3	100	25
24.3-24.9	117	67
24.9-26.4	100	33
26.4-27.3	78	0
27.3-27.9	100	0
27.9-28.6	100	0
28.6-32.0	100	29
32.0-33.1	100	0
33.1-34.0	78	0
34.0-35.4	100	0
35.4-38.0	100	23
38.0-38.7	100	0
38.7-41.4	100	0
41.4-42.1	100	0
42.1-45.9	74	40
45.9-46.3	375	0
46.3-48.5	100	36
48.5-49.3	-	-
49.3-52.5	63	47
52.5-56.3	90	71
56.3-60.2	97	64
60.2-61.9	71	0
61.9-65.5	28	0
65.5-70.0	69	33
70.0-71.8	44	0
71.8-72.3	100	0
72.3-74.2	105	63
74.2-76.7	88	48
76.7-78.8	76	29
78.8-79.2	50	0
79.2-80.0	100	0

PROFILE
Horiz: 1" = 10'
Vert: 1" = 10'

ENGINEERING SERVICES	MATERIALS AND GEOTECHNICAL SERVICES	STATE OF CALIFORNIA DEPARTMENT OF TRANSPORTATION	DIVISION OF ENGINEERING SERVICES STRUCTURE DESIGN DESIGN BRANCH 3	BRIDGE NO. 06-0212L POST MILE M29.68	SHASTA VIADUCT (REPLACE) LOG OF TEST BORINGS 9 OF 11
FUNCTIONAL SUPERVISOR NAME: R. Buell	DRAWN BY: I. G-Remmen CHECKED BY: A. Barrie	FIELD INVESTIGATION BY: J. Thorne			

OGS CIVIL LOG OF TEST BORINGS SHEET

ORIGINAL SCALE IN INCHES FOR REDUCED PLANS 0 1 2 3

UNIT: 3650
PROJECT NUMBER & PHASE: 02000000161 CONTRACT NO.: 02-0E0904

DISREGARD PRINTS BEARING EARLIER REVISION DATES → REVISION DATES 03-10-15 03-31-15 04-01-15

SHEET 71 OF 73

FILE => 06-0212I-z-ltb09.dgn

USERNAME => s116738 DATE PLOTTED => 29-MAY-2015 TIME PLOTTED => 14:27

DIST	COUNTY	ROUTE	POST MILES TOTAL PROJECT	SHEET No	TOTAL SHEETS
02	Sha	5	R29.3/R31.1, R45.0/R45.8	238	248

CERTIFIED ENGINEERING GEOLOGIST 4-1-15

5-11-2015
PLANS APPROVAL DATE

PROFESSIONAL GEOLOGIST Xing Zheng No. 2130 Exp. 3-31-17 CERTIFIED ENGINEERING GEOLOGIST STATE OF CALIFORNIA

The State of California or its officers or agents shall not be responsible for the accuracy or completeness of electronic copies of this plan sheet.

This LOTB sheet was prepared in accordance with the Caltrans Soil & Rock Logging, Classification, & Presentation Manual (2010 Edition).

See 2010 Standard Plans A10F and A10G for Soil Legend, and A10H for Rock Legend.

FOR PLAN VIEW, SEE
"LOG OF TEST BORINGS 1 OF 11"

ENGINEERING SERVICES	MATERIALS AND GEOTECHNICAL SERVICES	STATE OF CALIFORNIA DEPARTMENT OF TRANSPORTATION	DIVISION OF ENGINEERING SERVICES STRUCTURE DESIGN DESIGN BRANCH 3	BRIDGE NO. 06-0212L POST MILE M29.68	SHASTA VIADUCT (REPLACE) LOG OF TEST BORINGS 10 OF 11
FUNCTIONAL SUPERVISOR NAME: R. Buell	DRAWN BY: F. Nguyen CHECKED BY: A. Barrie	FIELD INVESTIGATION BY: J. Thorne			

OGS CIVIL LOG OF TEST BORINGS SHEET

ORIGINAL SCALE IN INCHES FOR REDUCED PLANS 0 1 2 3

UNIT: 3650
PROJECT NUMBER & PHASE: 02000000161 CONTRACT NO.: 02-0E0904

DISREGARD PRINTS BEARING EARLIER REVISION DATES

REVISION DATES 03-10-15 03-11-15 04-01-15

SHEET 72 OF 73

FILE => 06-0212I-z-ltb10.dgn

USERNAME => s116738 DATE PLOTTED => 29-MAY-2015 TIME PLOTTED => 14:27

DIST	COUNTY	ROUTE	POST MILES TOTAL PROJECT	SHEET No	TOTAL SHEETS
02	Sha	5	R29.3/R31.1, R45.0/R45.8	239	248

Xing Zheng 4-1-15
CERTIFIED ENGINEERING GEOLOGIST

5-11-2015
PLANS APPROVAL DATE

PROFESSIONAL GEOLOGIST Xing Zheng No. 2130 Exp. 3-31-17 CERTIFIED ENGINEERING GEOLOGIST STATE OF CALIFORNIA

The State of California or its officers or agents shall not be responsible for the accuracy or completeness of electronic copies of this plan sheet.

This LOTB sheet was prepared in accordance with the Caltrans Soil & Rock Logging, Classification, & Presentation Manual (2010 Edition).

See 2010 Standard Plans A10F and A10G for Soil Legend, and A10H for Rock Legend.

FOR PLAN VIEW, SEE
"LOG OF TEST BORINGS 1 OF 11"

ENGINEERING SERVICES	MATERIALS AND GEOTECHNICAL SERVICES	STATE OF CALIFORNIA DEPARTMENT OF TRANSPORTATION	DIVISION OF ENGINEERING SERVICES STRUCTURE DESIGN DESIGN BRANCH 3	BRIDGE NO. 06-0212L POST MILE M29.68	SHASTA VIADUCT (REPLACE) LOG OF TEST BORINGS 11 OF 11
FUNCTIONAL SUPERVISOR NAME: R. Buell	DRAWN BY: F. Nguyen, I.G-Remmen CHECKED BY: A. Barrie	FIELD INVESTIGATION BY: E. Kretschmer			

OGS CIVIL LOG OF TEST BORINGS SHEET

ORIGINAL SCALE IN INCHES FOR REDUCED PLANS 0 1 2 3

UNIT: 3650
PROJECT NUMBER & PHASE: 02000000161 CONTRACT NO.: 02-0E0904

DISREGARD PRINTS BEARING EARLIER REVISION DATES → REVISION DATES 12-05-14 03-11-15 04-01-15

SHEET 73 OF 73

FILE => 06-0212l-z-ltb11.dgn

USERNAME => s116738 DATE PLOTTED => 29-MAY-2015 TIME PLOTTED => 14:27

DIST	COUNTY	ROUTE	POST MILES TOTAL PROJECT	SHEET No.	TOTAL SHEETS
02	Sha	5	R29.3/R31.1, R45.0/R45.8	240	248

REGISTERED CIVIL ENGINEER — DATE 4-9-15

5-11-2015
PLANS APPROVAL DATE

REGISTERED PROFESSIONAL ENGINEER — Jose M Aquino III — No. 58386 — Exp. 12-31-16 — CIVIL — STATE OF CALIFORNIA

The State of California or its officers or agents shall not be responsible for the accuracy or completeness of scanned copies of this plan sheet.

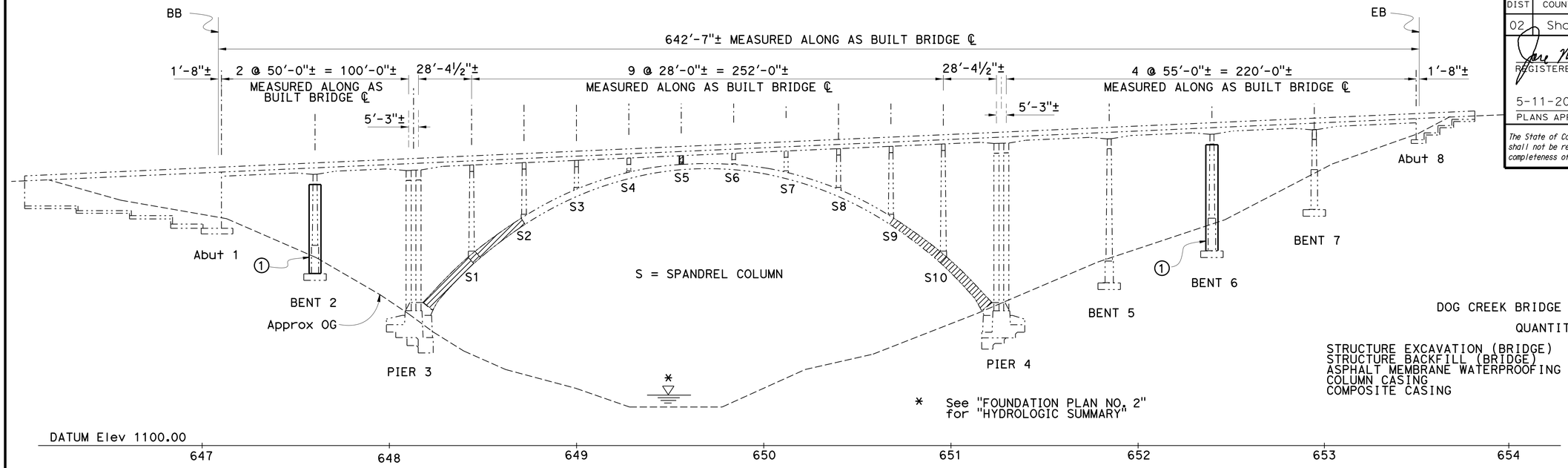

ELEVATION

1" = 30'

DOG CREEK BRIDGE (RETROFIT) #06-0027

QUANTITIES

STRUCTURE EXCAVATION (BRIDGE)	40	CY
STRUCTURE BACKFILL (BRIDGE)	25	CY
ASPHALT MEMBRANE WATERPROOFING	680	SQFT
COLUMN CASING	93,500	LB
COMPOSITE CASING	8,400	SQFT

NOTES:

1. For "TYPICAL SECTION", see "GENERAL PLAN NO. 2" sheet
2. For "INDEX TO PLANS" and "GENERAL NOTES", see "INDEX TO PLANS" sheet
3. Existing Left Bridge not shown

① Steel Column Casing (Class P/F)

LEGEND:

- Indicates Existing Structure
- Indicates New Construction
- Carbon Fiber Reinforced Polymer (CFRP) Casing Retrofit

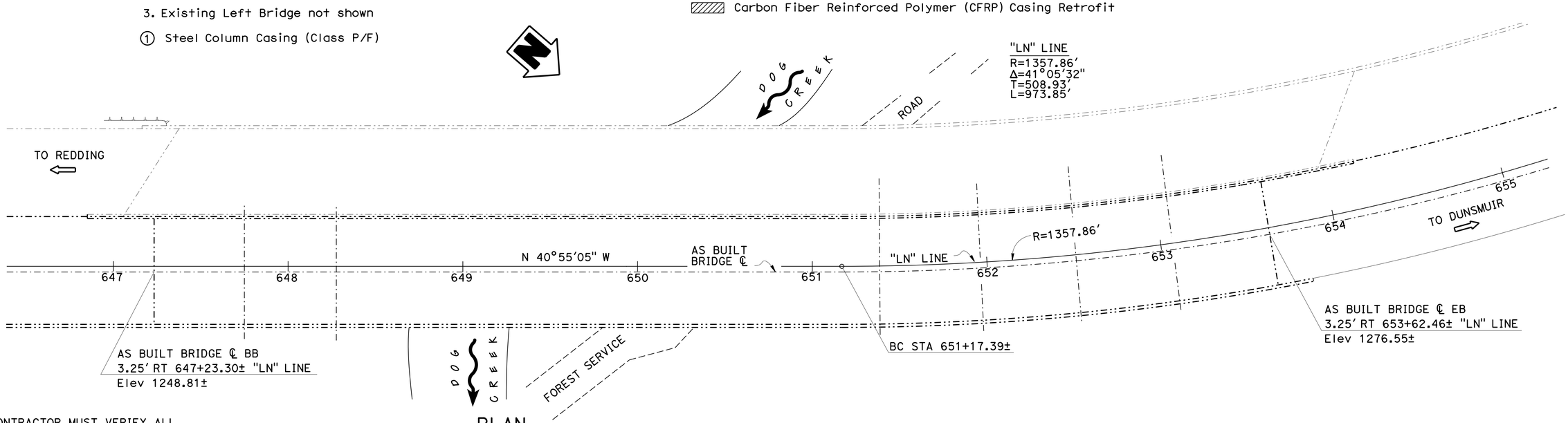

PLAN

1" = 30'

NOTE:
THE CONTRACTOR MUST VERIFY ALL CONTROLLING FIELD DIMENSIONS BEFORE ORDERING OR FABRICATING ANY MATERIAL.

Joseph E Downing
DESIGN ENGINEER

	BY	CHECKED
DESIGN	Sharon Yen	Ashraf Ahmed
DETAILS	S. Motalebi / L. Ma	Ashraf Ahmed
QUANTITIES	Mufeed Khalaf	Quang Nguyen

LOAD & RESISTANCE FACTOR DESIGN — LIVE LOADING: HL93 W/"LOW-BOY"; PERMIT DESIGN VEHICLE

	BY	CHECKED
LAYOUT	Sharon Yen	Joey Aquino
SPECIFICATIONS	Jim Corrado	PLANS AND SPECS COMPARED Jim Corrado

ORIGINAL SCALE IN INCHES FOR REDUCED PLANS 0 1 2 3

STATE OF CALIFORNIA
DEPARTMENT OF TRANSPORTATION

DIVISION OF ENGINEERING SERVICES
STRUCTURE DESIGN
DESIGN BRANCH 3

BRIDGE NO. 06-0027
POST MILE 45.54

DOG CREEK BRIDGE (RETROFIT)
GENERAL PLAN NO. 1

UNIT: 3578
PROJECT NUMBER & PHASE: 02000000161
CONTRACT NO.: 02-0E0904

DISREGARD PRINTS BEARING EARLIER REVISION DATES

REVISION DATES: 7-1-13 | 6-13-14 | 10-17-14 | 11-18-14

SHEET 1 OF 9

STRUCTURES DESIGN GENERAL PLAN SHEET (ENGLISH) (REV.09-01-10)

FILE => 06-0027-a-gp01.dgn

USERNAME => s116738 DATE PLOTTED => 29-MAY-2015 TIME PLOTTED => 14:28

DIST	COUNTY	ROUTE	POST MILES TOTAL PROJECT	SHEET No.	TOTAL SHEETS
02	Sha	5	R29.3/R31.1, R45.0/R45.8	241	248

REGISTERED CIVIL ENGINEER — DATE 4-9-15

5-11-2015
PLANS APPROVAL DATE

REGISTERED PROFESSIONAL ENGINEER — Jose M Aquino III — No. 58386 — Exp. 12-31-16 — CIVIL — STATE OF CALIFORNIA

The State of California or its officers or agents shall not be responsible for the accuracy or completeness of scanned copies of this plan sheet.

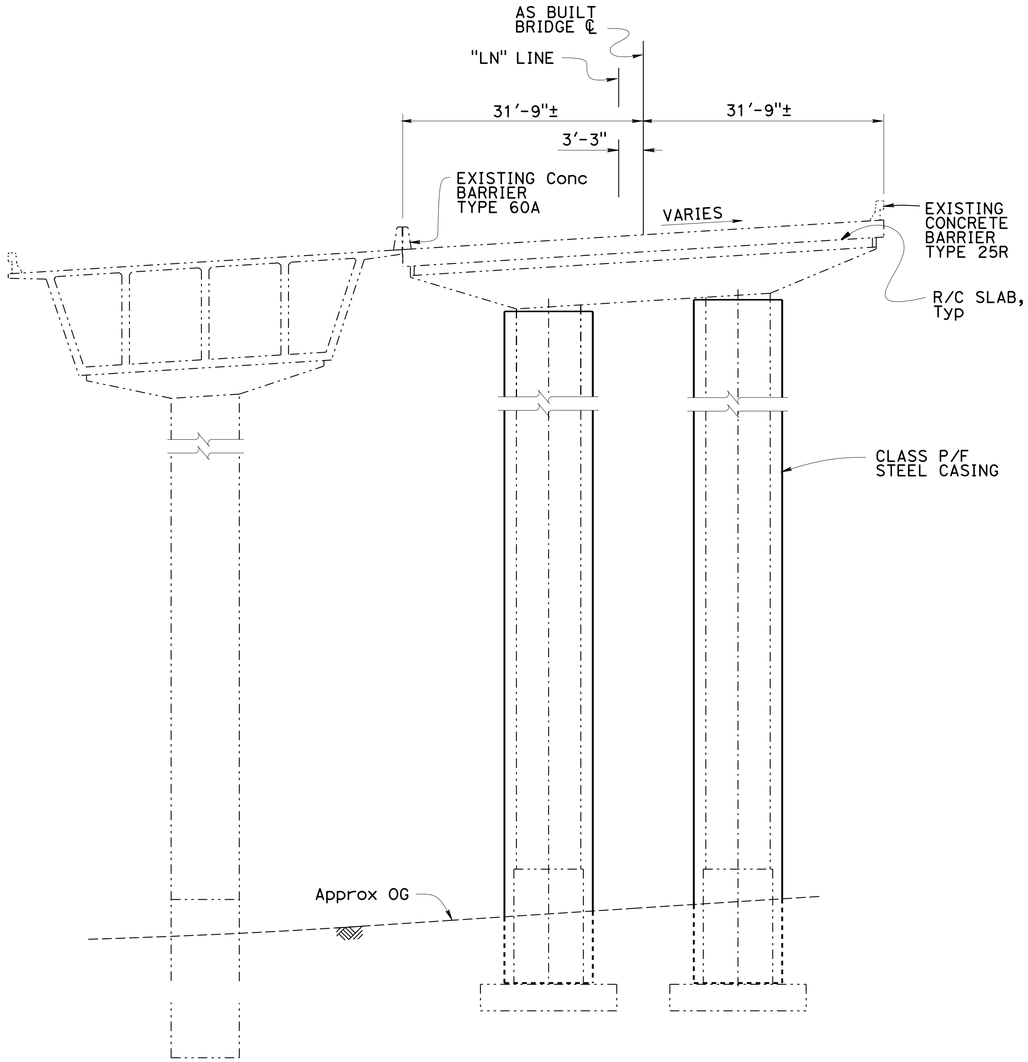

TYPICAL SECTION AT BENTS

1" = 10'

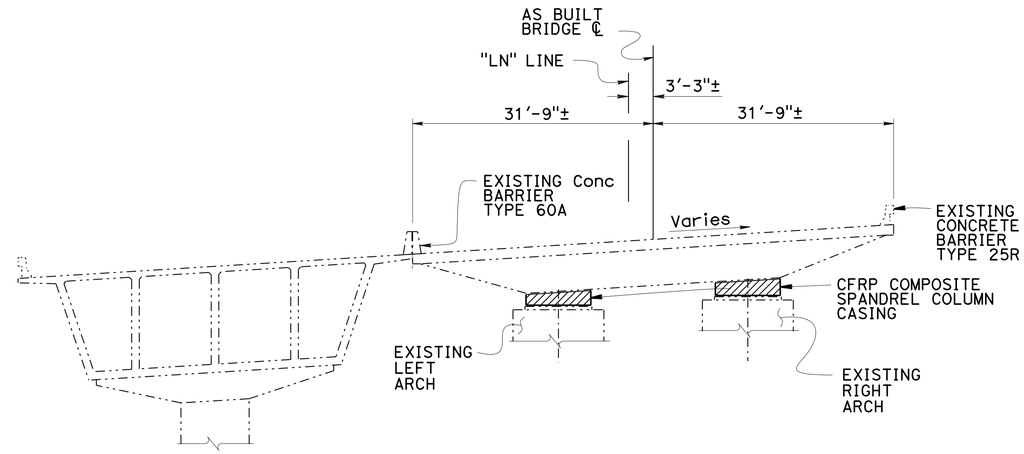

TYPICAL SECTION AT ARCH SPANDREL COLUMN (S5)

1" = 10'

NOTE:
THE CONTRACTOR MUST VERIFY ALL CONTROLLING FIELD DIMENSIONS BEFORE ORDERING OR FABRICATING ANY MATERIAL.

Joseph E Downing, DESIGN ENGINEER	DESIGN	BY Sharon Yen	CHECKED Ashraf Ahmed	LOAD & RESISTANCE FACTOR DESIGN	LIVE LOADING: HL93 W/"LOW-BOY": PERMIT DESIGN VEHICLE
	DETAILS	BY S. Motalebi / L. Ma	CHECKED Ashraf Ahmed	LAYOUT: BY Sharon Yen	CHECKED Joey Aquino
	QUANTITIES	BY Mufeed Khalaf	CHECKED Quang Nguyen	SPECIFICATIONS: BY Jim Corrado	PLANS AND SPECS COMPARED Jim Corrado

ORIGINAL SCALE IN INCHES FOR REDUCED PLANS 0 1 2 3

STATE OF CALIFORNIA
DEPARTMENT OF TRANSPORTATION

DIVISION OF ENGINEERING SERVICES
STRUCTURE DESIGN
DESIGN BRANCH 3

BRIDGE NO. 06-0027
POST MILE 45.54

DOG CREEK BRIDGE (RETROFIT)
GENERAL PLAN NO. 2

UNIT: 3578
PROJECT NUMBER & PHASE: 02000000161
CONTRACT NO.: 02-0E0904

DISREGARD PRINTS BEARING EARLIER REVISION DATES
REVISION DATES: 7-1-13 6-12-14 10-17-14 11-18-14

SHEET 2 OF 9

STRUCTURES DESIGN GENERAL PLAN SHEET (ENGLISH) (REV.09-01-10)

FILE => 06-0027-a-gp02.dgn

USERNAME => s116738 DATE PLOTTED => 29-MAY-2015 TIME PLOTTED => 14:28

DIST	COUNTY	ROUTE	POST MILES TOTAL PROJECT	SHEET No.	TOTAL SHEETS
02	Sha	5	R29.3/R31.1, R45.0/R45.8	242	248

REGISTERED CIVIL ENGINEER — DATE 4-9-15

5-11-2015
PLANS APPROVAL DATE

REGISTERED PROFESSIONAL ENGINEER — Jose M Aquino III — No. 58386 — Exp. 12-31-16 — CIVIL — STATE OF CALIFORNIA

The State of California or its officers or agents shall not be responsible for the accuracy or completeness of scanned copies of this plan sheet.

INDEX TO PLANS

SHEET NO.	TITLE
1	GENERAL PLAN NO. 1
2	GENERAL PLAN NO. 2
3	INDEX TO PLANS
4	FOUNDATION PLAN NO. 1
5	FOUNDATION PLAN NO. 2
6	RETROFIT DETAILS NO. 1
7	RETROFIT DETAILS NO. 2
8	RETROFIT DETAILS NO. 3
9	COLUMN CASING - STEEL

STANDARD PLANS DATED 2010

	A10A	ABBREVIATIONS (SHEET 1 OF 2)
RSP	A10B	ABBREVIATIONS (SHEET 2 OF 2)
	A10C	LINES AND SYMBOLS (SHEET 1 OF 3)
	A10D	LINES AND SYMBOLS (SHEET 2 OF 3)
	A10E	LINES AND SYMBOLS (SHEET 3 OF 3)

STANDARD PLAN SHEET NO.

DETAIL NO.

GENERAL NOTES

SEISMIC DESIGN:
Caltrans Seismic Design Criteria (SDC), Version 1.7 dated March 2013

SEISMIC LOADING:
See "SITE SPECIFIC ARS"

STRUCTURE STEEL FOR STEEL CASING:
Fy = 36 ksi

CARBON FIBER REINFORCED POLYMER (CFRP):
See "RETROFIT DETAILS NO. 2" sheet

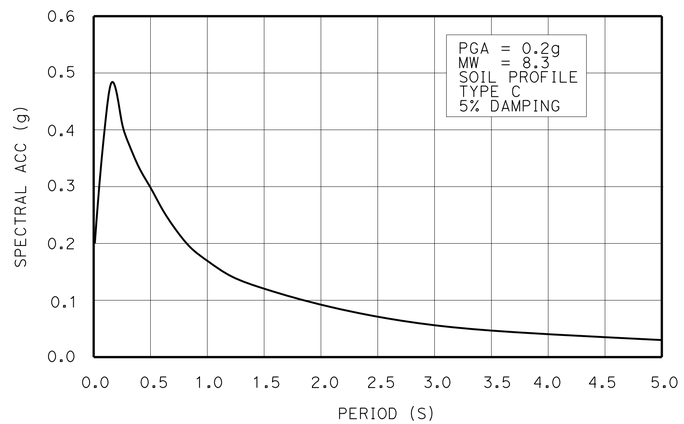

SITE SPECIFIC ARS

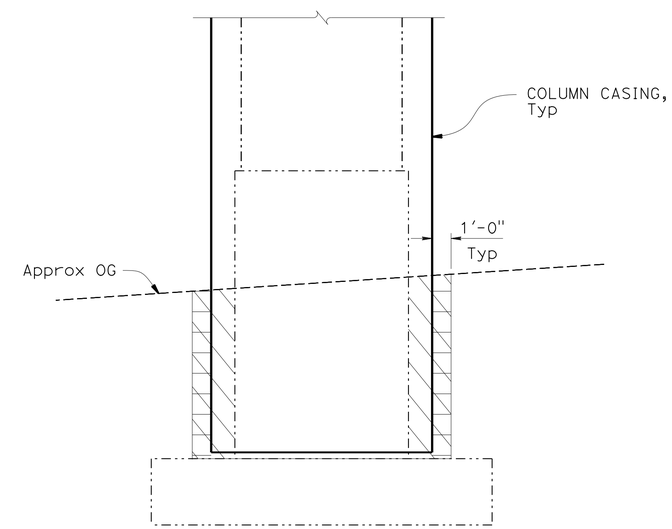

LEGEND:

Indicates Structure Excavation Bridge

Indicates Structure Backfill Bridge

LIMITS OF EXCAVATION AND BACKFILL

NO SCALE

NOTE:
THE CONTRACTOR MUST VERIFY ALL CONTROLLING FIELD DIMENSIONS BEFORE ORDERING OR FABRICATING ANY MATERIAL.

	BY	CHECKED
DESIGN	Ashraf Ahmed	Joey Aquino
DETAILS	S. Motalebi / L. Ma	Ashraf Ahmed
QUANTITIES	Mufeed Khalaf	Quang Nguyen

STATE OF CALIFORNIA
DEPARTMENT OF TRANSPORTATION

DIVISION OF ENGINEERING SERVICES
STRUCTURE DESIGN
DESIGN BRANCH 3

BRIDGE NO. 06-0027
POST MILE 45.54

DOG CREEK BRIDGE (RETROFIT)
INDEX TO PLANS

STRUCTURES DESIGN DETAIL SHEET (ENGLISH) (REV. 09-01-10)

ORIGINAL SCALE IN INCHES FOR REDUCED PLANS 0 1 2 3

UNIT: 3578
PROJECT NUMBER & PHASE: 02000000161
CONTRACT NO.: 02-0E0904

DISREGARD PRINTS BEARING EARLIER REVISION DATES

REVISION DATES: 5-20-14 6-18-14 6-26-14

SHEET 3 OF 9

FILE => 06-0027-a-itp.dgn

USERNAME => s116738 DATE PLOTTED => 29-MAY-2015 TIME PLOTTED => 14:28

DIST	COUNTY	ROUTE	POST MILES TOTAL PROJECT	SHEET No.	TOTAL SHEETS
02	Sha	5	R29.3/R31.1, R45.0/R45.8	243	248

REGISTERED CIVIL ENGINEER — DATE 4-9-15

5-11-2015
PLANS APPROVAL DATE

REGISTERED PROFESSIONAL ENGINEER — Jose M Aquino III — No. 58386 — Exp. 12-31-16 — CIVIL — STATE OF CALIFORNIA

The State of California or its officers or agents shall not be responsible for the accuracy or completeness of electronic copies of this plan sheet.

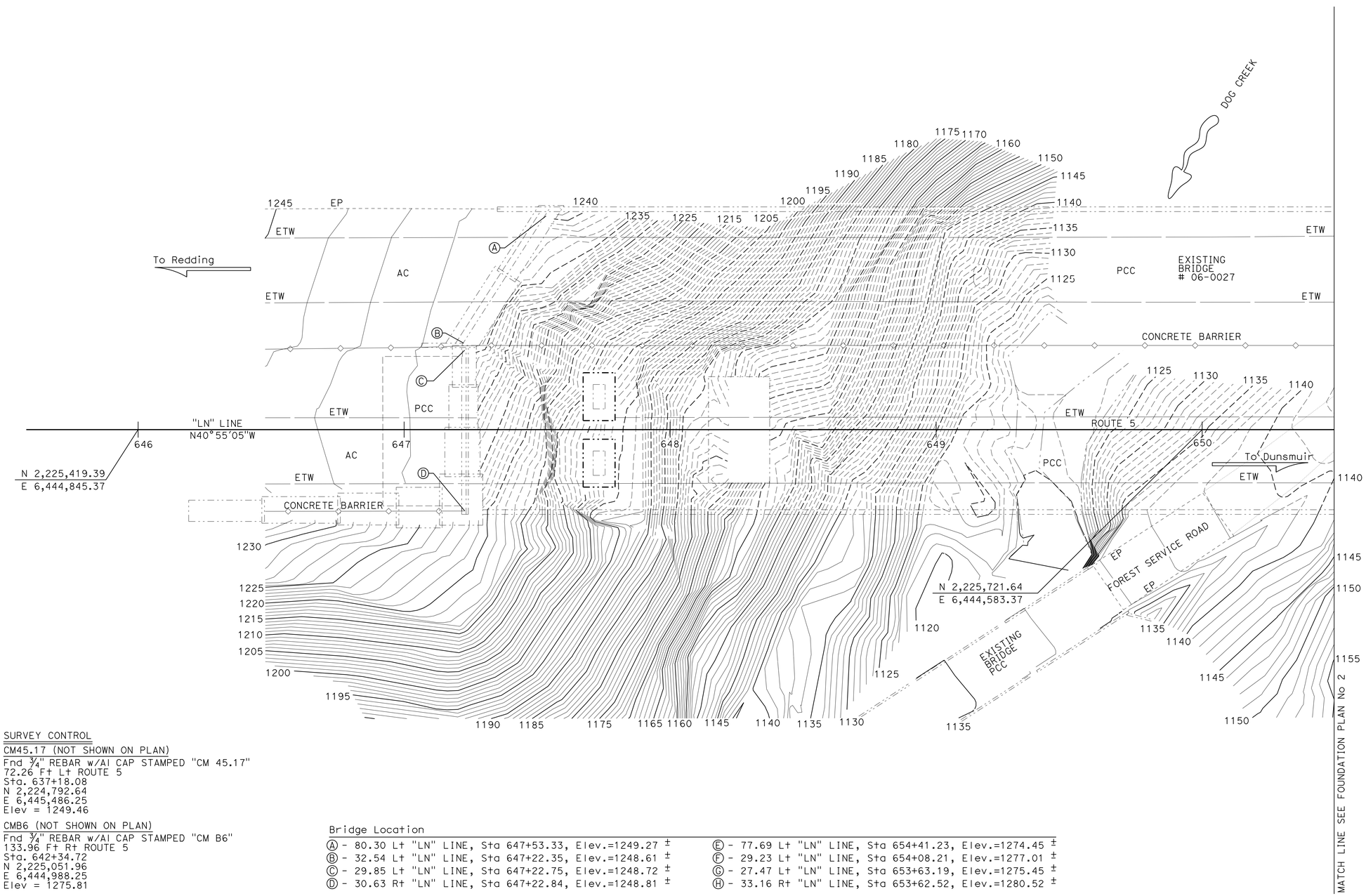

SURVEY CONTROL

CM45.17 (NOT SHOWN ON PLAN)
Fnd ¾" REBAR w/Al CAP STAMPED "CM 45.17"
72.26 Ft Lt ROUTE 5
Sta. 637+18.08
N 2,224,792.64
E 6,445,486.25
Elev = 1249.46

CMB6 (NOT SHOWN ON PLAN)
Fnd ¾" REBAR w/Al CAP STAMPED "CM B6"
133.96 Ft Rt ROUTE 5
Sta. 642+34.72
N 2,225,051.96
E 6,444,988.25
Elev = 1275.81

Bridge Location

Ⓐ - 80.30 Lt "LN" LINE, Sta 647+53.33, Elev.=1249.27 ±
Ⓑ - 32.54 Lt "LN" LINE, Sta 647+22.35, Elev.=1248.61 ±
Ⓒ - 29.85 Lt "LN" LINE, Sta 647+22.75, Elev.=1248.72 ±
Ⓓ - 30.63 Rt "LN" LINE, Sta 647+22.84, Elev.=1248.81 ±
Ⓔ - 77.69 Lt "LN" LINE, Sta 654+41.23, Elev.=1274.45 ±
Ⓕ - 29.23 Lt "LN" LINE, Sta 654+08.21, Elev.=1277.01 ±
Ⓖ - 27.47 Lt "LN" LINE, Sta 653+63.19, Elev.=1275.45 ±
Ⓗ - 33.16 Rt "LN" LINE, Sta 653+62.52, Elev.=1280.52 ±

PRELIMINARY INVESTIGATION SECTION

SCALE	VERT.DATUM NAVD88	PHOTOGRAMMETRY AS OF: N/A			
1"=20'	HORZ.DATUM NAD83 (1991.35)	SURVEYED	BY DISTRICT 03/2013	CHECKED	BY C. FASSETT 09/2014
ALIGNMENT TIES Dist TRAVERSE SHEET		DRAFTED	BY T. ZOLNIKOV 09/2014	CHECKED	BY L. LEW 09/2014

	BY	CHECKED
DESIGN	Sharon Yen	Ashraf Ahmed
DETAILS	Shadi Motalebi	Ashraf Ahmed
QUANTITIES	Mufeed Khalaf	Quang Nguyen

STATE OF CALIFORNIA
DEPARTMENT OF TRANSPORTATION

DIVISION OF ENGINEERING SERVICES
STRUCTURE DESIGN
DESIGN BRANCH 3

BRIDGE NO. 06-0027
POST MILE 45.54

DOG CREEK BRIDGE (RETROFIT)
FOUNDATION PLAN NO. 1

STRUCTURES FOUNDATION PLAN SHEET (ENGLISH) (REV. 09-01-10)

ORIGINAL SCALE IN INCHES FOR REDUCED PLANS 0 1 2 3

UNIT: 3646
PROJECT NUMBER & PHASE: 02000000161
CONTRACT NO.: 02-0E0904

SUBMITTAL DATE	REVISION DATES				SHEET	OF
10/03/14	6-26-14				4	9

FILE => 06-0027-e-fpl01.dgn

USERNAME => s116738 DATE PLOTTED => 29-MAY-2015 TIME PLOTTED => 14:28

DIST	COUNTY	ROUTE	POST MILES TOTAL PROJECT	SHEET No.	TOTAL SHEETS
02	Sha	5	R29.3/R31.1, R45.0/R45.8	244	248

REGISTERED CIVIL ENGINEER — DATE 4-9-15

5-11-2015
PLANS APPROVAL DATE

REGISTERED PROFESSIONAL ENGINEER — Jose M Aquino III — No. 58386 — Exp. 12-31-16 — CIVIL — STATE OF CALIFORNIA

The State of California or its officers or agents shall not be responsible for the accuracy or completeness of electronic copies of this plan sheet.

CURVE DATA

No.	R	Δ	T	L
1	1357.86	41°05'32"	508.93	973.85

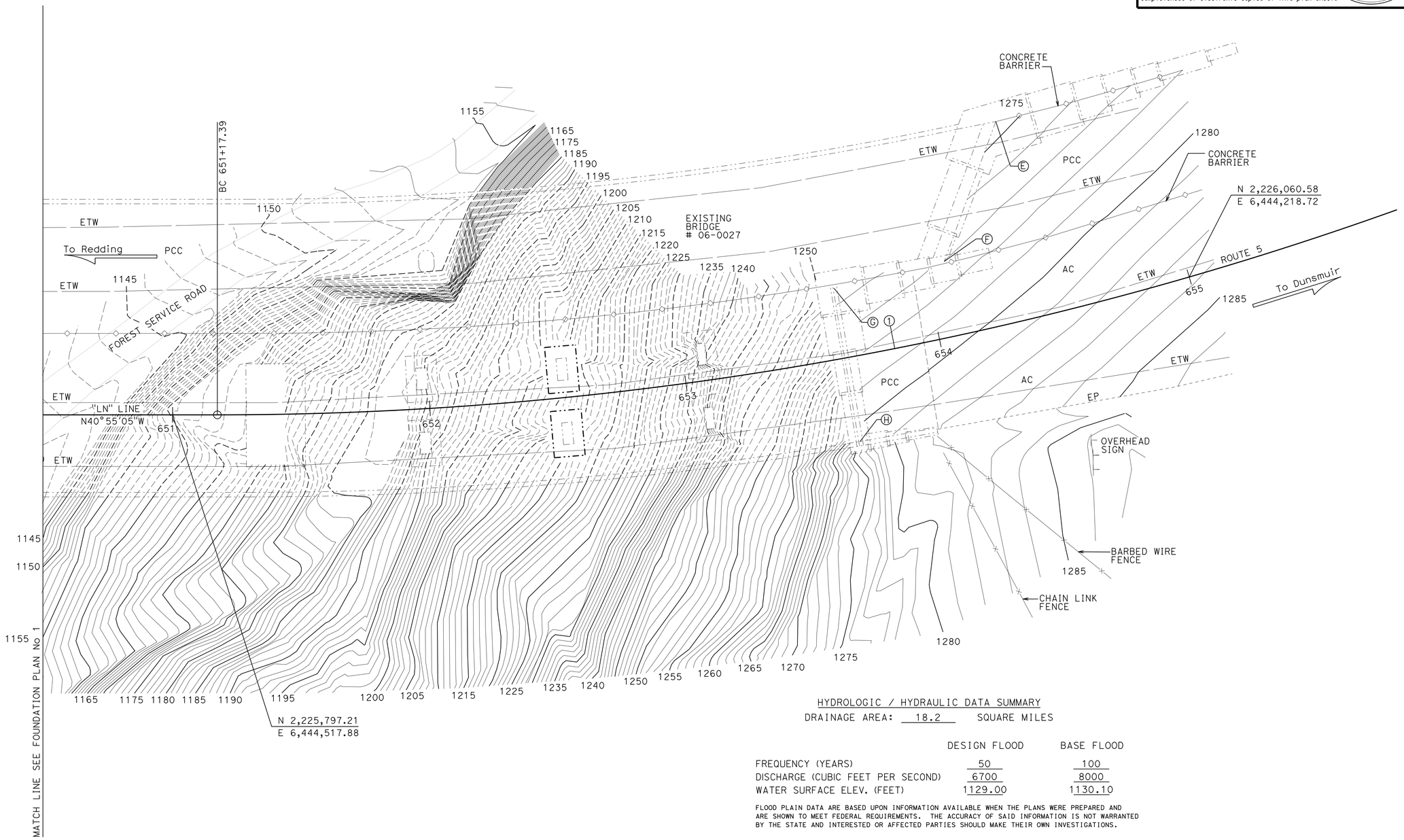

HYDROLOGIC / HYDRAULIC DATA SUMMARY

DRAINAGE AREA: 18.2 SQUARE MILES

	DESIGN FLOOD	BASE FLOOD
FREQUENCY (YEARS)	50	100
DISCHARGE (CUBIC FEET PER SECOND)	6700	8000
WATER SURFACE ELEV. (FEET)	1129.00	1130.10

FLOOD PLAIN DATA ARE BASED UPON INFORMATION AVAILABLE WHEN THE PLANS WERE PREPARED AND ARE SHOWN TO MEET FEDERAL REQUIREMENTS. THE ACCURACY OF SAID INFORMATION IS NOT WARRANTED BY THE STATE AND INTERESTED OR AFFECTED PARTIES SHOULD MAKE THEIR OWN INVESTIGATIONS.

PRELIMINARY INVESTIGATION SECTION

SCALE 1"=20'	VERT.DATUM NAVD88	PHOTOGRAMMETRY AS OF: N/A		
HORZ.DATUM NAD83 (1991.35)	SURVEYED	BY DISTRICT 03/2013	CHECKED	BY C. FASSETT 09/2014
ALIGNMENT TIES Dist TRAVERSE SHEET	DRAFTED	BY T. ZOLNIKOV 09/2014	CHECKED	BY L. LEW 09/2014

DESIGN	BY Sharon Yen	CHECKED Ashraf Ahmed
DETAILS	BY Shadi Motalebi	CHECKED Ashraf Ahmed
QUANTITIES	BY Mufeed Khalaf	CHECKED Quang Nguyen

STATE OF CALIFORNIA
DEPARTMENT OF TRANSPORTATION

DIVISION OF ENGINEERING SERVICES
STRUCTURE DESIGN
DESIGN BRANCH 3

BRIDGE NO. 06-0027
POST MILE 45.54

DOG CREEK BRIDGE (RETROFIT)
FOUNDATION PLAN NO. 2

STRUCTURES FOUNDATION PLAN SHEET (ENGLISH) (REV. 09-01-10)

ORIGINAL SCALE IN INCHES FOR REDUCED PLANS 0 1 2 3

UNIT: 3646
PROJECT NUMBER & PHASE: 02000000161
CONTRACT NO.: 02-0E0904

SUBMITTAL DATE	REVISION DATES				SHEET	OF
10/03/14	6-26-14				5	9

FILE => 06-0027-e-fpl02.dgn

USERNAME => s116738 DATE PLOTTED => 29-MAY-2015 TIME PLOTTED => 14:28

DIST	COUNTY	ROUTE	POST MILES TOTAL PROJECT	SHEET No.	TOTAL SHEETS
02	Sha	5	R29.3/R31.1, R45.0/R45.8	245	248

REGISTERED CIVIL ENGINEER 4-9-15 DATE

5-11-2015
PLANS APPROVAL DATE

REGISTERED PROFESSIONAL ENGINEER
Jose M Aquino III
No. 58386
Exp. 12-31-16
CIVIL
STATE OF CALIFORNIA

The State of California or its officers or agents shall not be responsible for the accuracy or completeness of scanned copies of this plan sheet.

Location	Approximate Column Height	
	Left column	Right column
Bent 2	46'-4"±	47'-6"±
Bent 6	59'-3±	58'-9"±

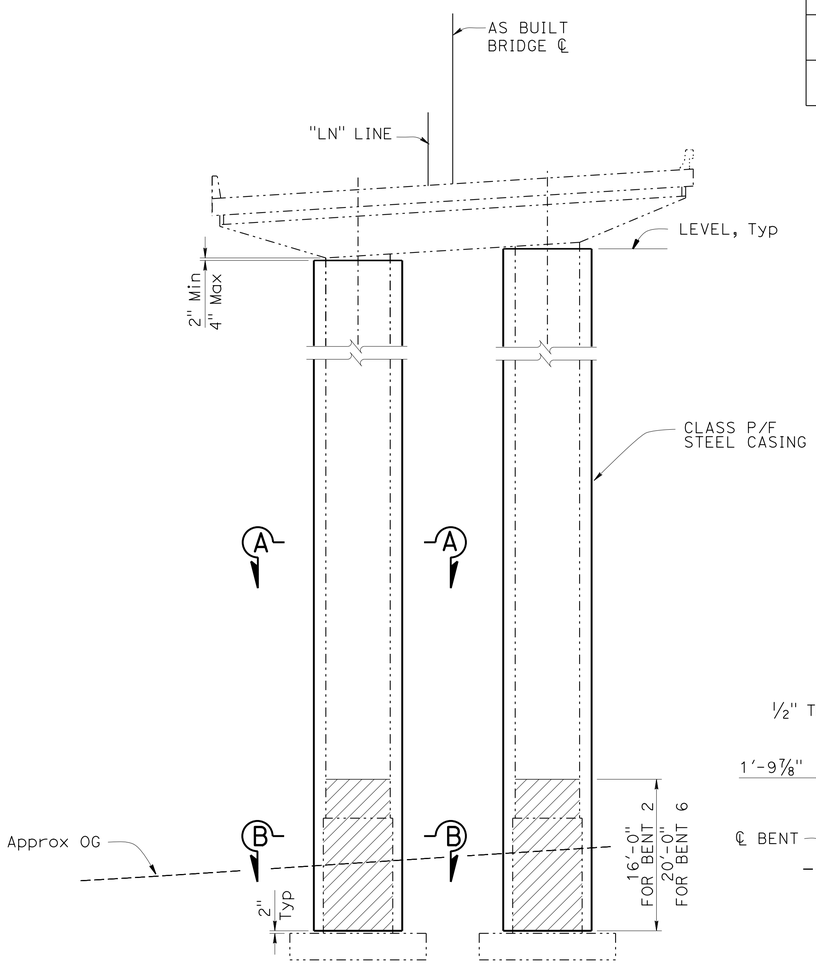

BENT 2 & 6 ELEVATION

1" = 10'

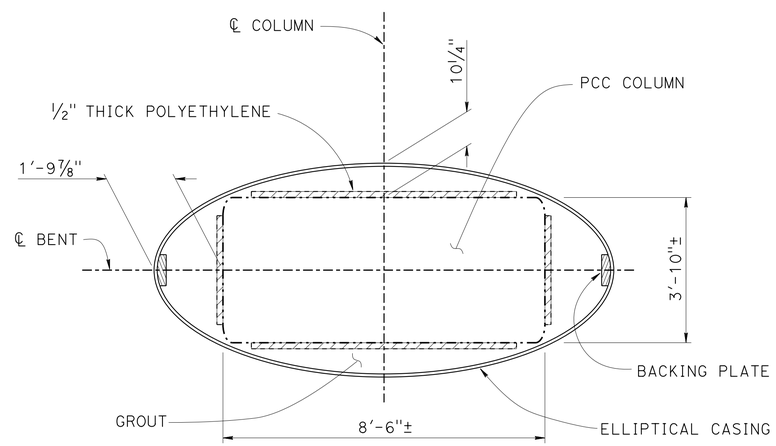

BENT 2

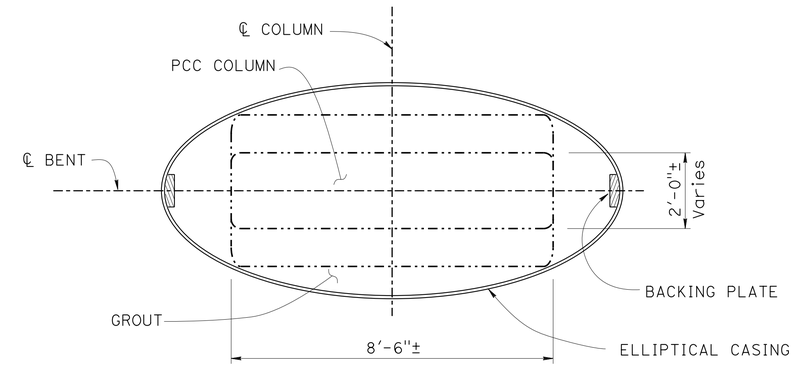

SECTION A-A

¼" = 1'-0"

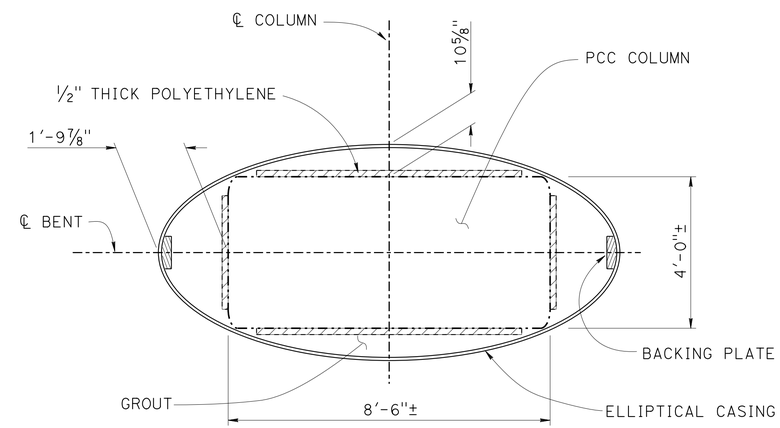

BENT 6

SECTION B-B

¼" = 1'-0"

LEGEND:

- Indicates Existing Structure
- Indicates New Construction
- Limits of ½" thick polyethylene

NOTE:
THE CONTRACTOR MUST VERIFY ALL CONTROLLING FIELD DIMENSIONS BEFORE ORDERING OR FABRICATING ANY MATERIAL.

NOTE:

For column casing notes and details not shown see "COLUMN CASING - STEEL" sheet

	BY	CHECKED
DESIGN	Ashraf Ahmed	Joey Aquino
DETAILS	S. Motalebi / L. Ma	Ashraf Ahmed
QUANTITIES	Mufeed Khalaf	Quang Nguyen

STATE OF CALIFORNIA
DEPARTMENT OF TRANSPORTATION

DIVISION OF ENGINEERING SERVICES
STRUCTURE DESIGN
DESIGN BRANCH 3

BRIDGE NO. 06-0027
POST MILE 45.54

DOG CREEK BRIDGE (RETROFIT)
RETROFIT DETAILS NO. 1

STRUCTURES DESIGN DETAIL SHEET (ENGLISH) (REV. 09-01-10)

ORIGINAL SCALE IN INCHES FOR REDUCED PLANS 0 1 2 3

UNIT: 3578
PROJECT NUMBER & PHASE: 02000000161
CONTRACT NO.: 02-0E0904

DISREGARD PRINTS BEARING EARLIER REVISION DATES

REVISION DATES: 5-20-14 6-18-14

SHEET 6 OF 9

FILE => 06-0027-h-b01dt01.dgn

USERNAME => s116738 DATE PLOTTED => 29-MAY-2015 TIME PLOTTED => 14:28

DIST	COUNTY	ROUTE	POST MILES TOTAL PROJECT	SHEET No.	TOTAL SHEETS
02	Sha	5	R29.3/R31.1, R45.0/R45.8	246	248

REGISTERED CIVIL ENGINEER 4-9-15 DATE

5-11-2015
PLANS APPROVAL DATE

REGISTERED PROFESSIONAL ENGINEER Jose M Aquino III No. 58386 Exp. 12-31-16 CIVIL STATE OF CALIFORNIA

The State of California or its officers or agents shall not be responsible for the accuracy or completeness of scanned copies of this plan sheet.

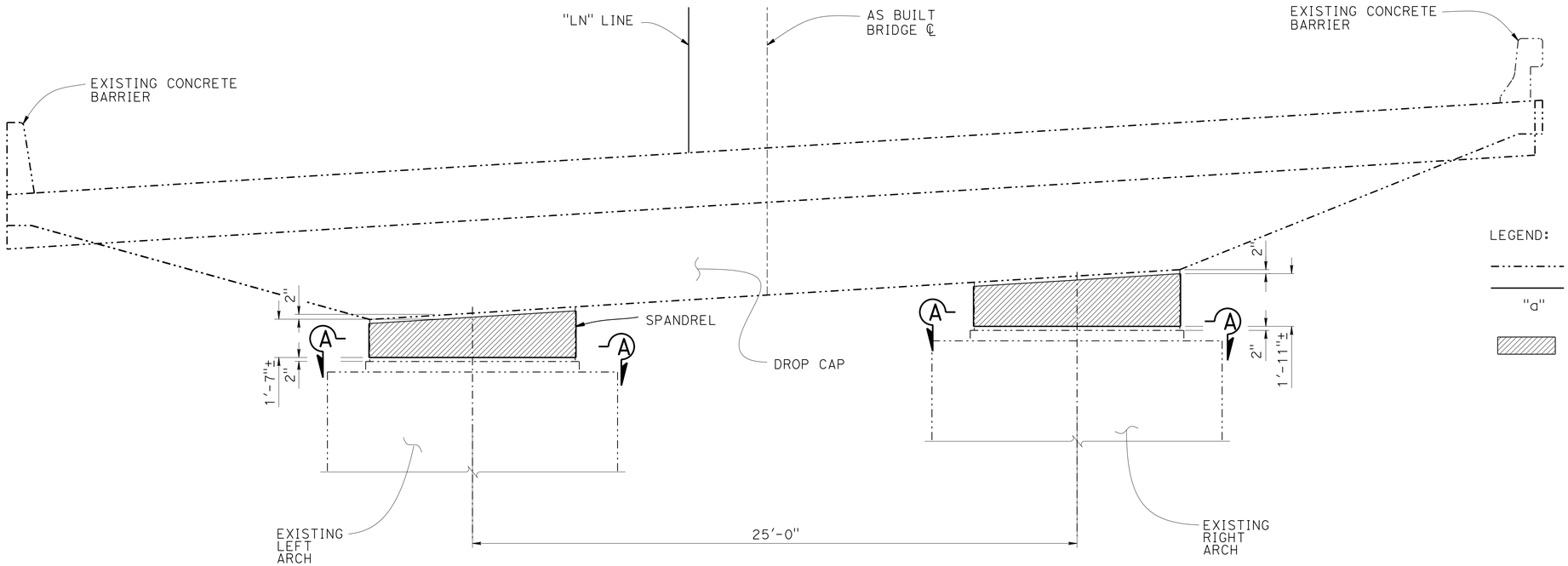

LEGEND:

- Indicates Existing Structure
- Indicates New Construction
- "a" Denotes Minimum CFRP Effective Composite Thickness
- Carbon Fiber Reinforced Polymer (CFRP) Casing Retrofit

TYPICAL SECTION AT SPANDREL S5

3/8" = 1'-0"

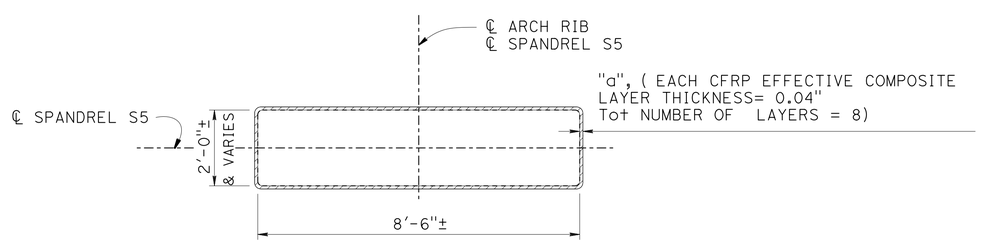

SECTION A-A

1/2" = 1'-0"

NOTE:
THE CONTRACTOR MUST VERIFY ALL CONTROLLING FIELD DIMENSIONS BEFORE ORDERING OR FABRICATING ANY MATERIAL.

CARBON FIBER REINFORCED POLYMER (CFRP) NOTES:

1. For all subsequent notes, surfaces must be defined as the surface to receive the composite. Fabric refers to the unidirectional fiber. Carbon Fiber Reinforced Polymer (CFRP) composite is Carbon fiber and Epoxy resin
2. All surfaces must be prepared for bonding by means of abrasive blasting or grinding
3. All surfaces must be cleaned by hand or by oil-free compressed air. All surfaces must be free of moisture, oils, loose material, debris, or dust
4. All cutting of fabrics, mixing of epoxy, and wetting out of fabric and handling, must be done in a manner to ensure that the composite materials are free of moisture, oils, debris or dust
5. For non-circular columns remove any sharp corners/edges to a 1" radius minimum
6. A primer coat of epoxy must be applied to the surface and allowed to cure for a minimum of one hour
7. Surfaces must be free of voids, protrusions, and sharp edges. Any voids or uneven surfaces must be filled with a thickened epoxy
8. Fabric must be completely saturated prior to application to the surface. No dry fiber placement is allowed, unless fabric used has removable backing or procedure has been approved by prequalification
9. The composite casing must adhere firmly to the existing column surface
10. Detail/feather all fabric edges, including termination points, edges and seams with a thickened epoxy. Detailing/feathering must extend a minimum of 6"
11. Each composite section must be wrapped using continuous fabric not less than 2'-0" in height. All wraps of continuous weave must be terminated a minimum of 12" past the starting point of the initial wrap. Subsequent wraps must be started (butted) at the ending point of the last wrap
12. Existing non-circular column surfaces must be straight or slightly convexed outward at all areas, otherwise, the surface must be filled with thickened epoxy

	BY	CHECKED
DESIGN	Ashraf Ahmed	Joey Aquino
DETAILS	S. Motalebi / L. Ma	Ashraf Ahmed
QUANTITIES	Mufeed Khalaf	Quang Nguyen

STATE OF CALIFORNIA
DEPARTMENT OF TRANSPORTATION

DIVISION OF ENGINEERING SERVICES
STRUCTURE DESIGN
DESIGN BRANCH 3

BRIDGE NO. 06-0027
POST MILE 45.54

DOG CREEK BRIDGE (RETROFIT)
RETROFIT DETAILS NO. 2

STRUCTURES DESIGN DETAIL SHEET (ENGLISH) (REV. 09-01-10)

ORIGINAL SCALE IN INCHES FOR REDUCED PLANS 0 1 2 3

UNIT: 3578
PROJECT NUMBER & PHASE: 02000000161
CONTRACT NO.: 02-0E0904

DISREGARD PRINTS BEARING EARLIER REVISION DATES

REVISION DATES: 5-20-14 6-18-14 12-9-14

SHEET 7 OF 9

FILE => 06-0027-h-b01d+02.dgn

USERNAME => s116738 DATE PLOTTED => 29-MAY-2015 TIME PLOTTED => 14:28

DIST	COUNTY	ROUTE	POST MILES TOTAL PROJECT	SHEET No.	TOTAL SHEETS
02	Sha	5	R29.3/R31.1, R45.0/R45.8	247	248

REGISTERED CIVIL ENGINEER 4-9-15 DATE

5-11-2015
PLANS APPROVAL DATE

REGISTERED PROFESSIONAL ENGINEER
Jose M Aquino III
No. 58386
Exp. 12-31-16
CIVIL
STATE OF CALIFORNIA

The State of California or its officers or agents shall not be responsible for the accuracy or completeness of scanned copies of this plan sheet.

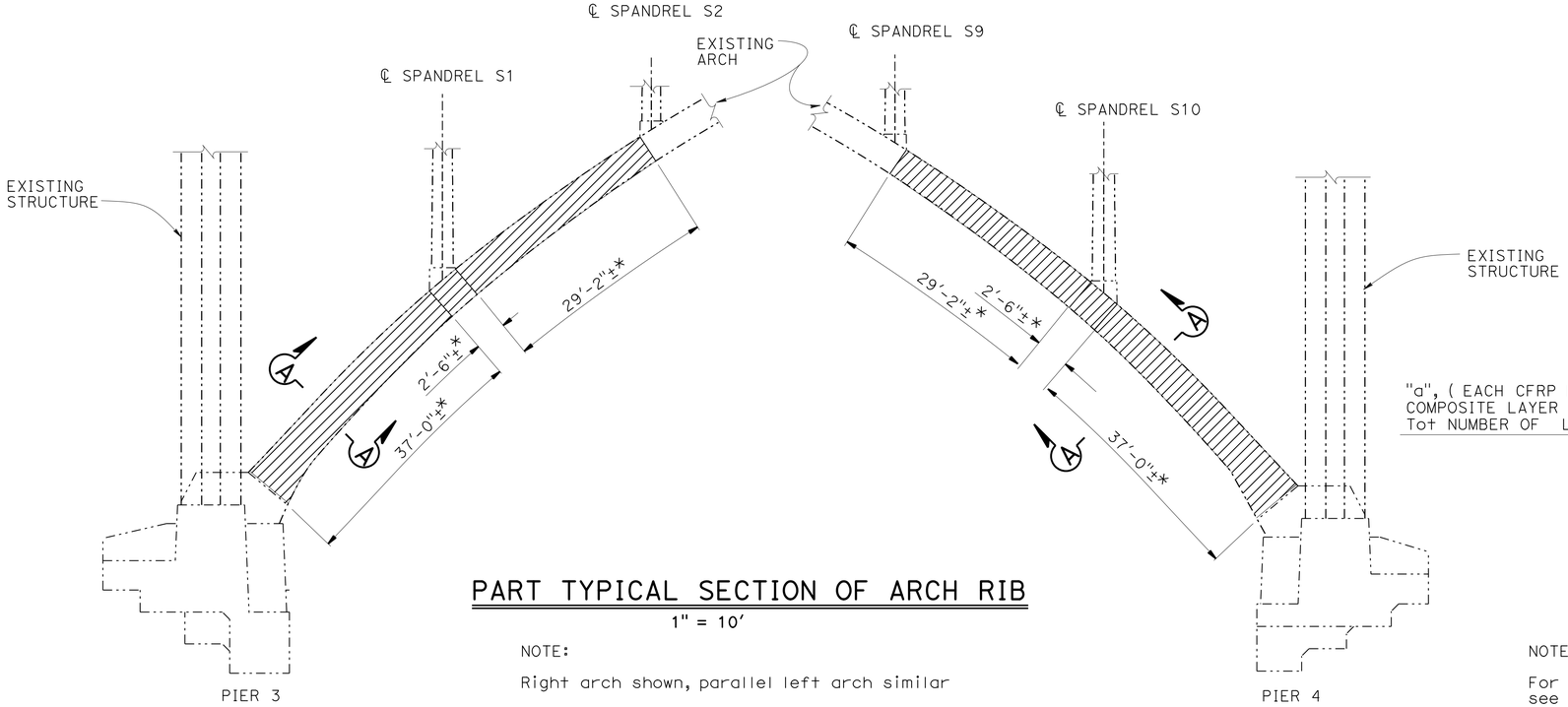

PART TYPICAL SECTION OF ARCH RIB

1" = 10'

NOTE:

Right arch shown, parallel left arch similar

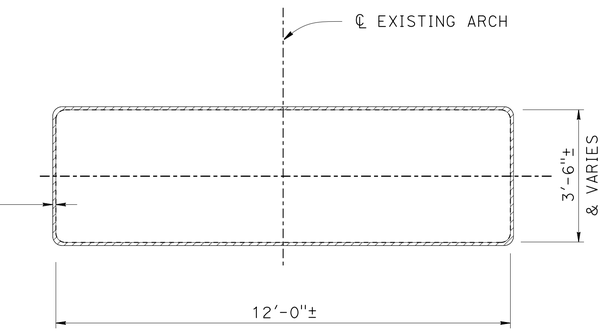

SECTION A-A

½" = 1'-0"

NOTE:

For CARBON FIBER REINFORCEMENT POLYMER (CFRP) NOTES, see "RETROFIT DETAILS NO. 2" sheet

LEGEND:

- Indicates Existing Structure
- Indicates New Construction
- "a" Denotes Minimum CFRP Effective Composite Thickness
- Carbon Fiber Reinforced Polymer (CFRP) Casing Retrofit
- * Measure along ℄ arch

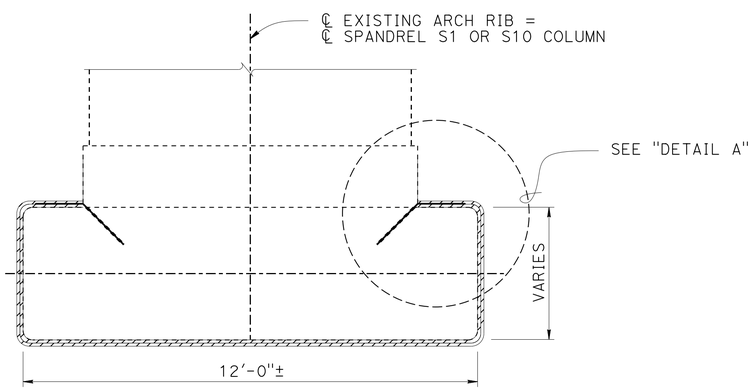

SECTION B-B

½" = 1'-0"

NOTE:
THE CONTRACTOR MUST VERIFY ALL CONTROLLING FIELD DIMENSIONS BEFORE ORDERING OR FABRICATING ANY MATERIAL.

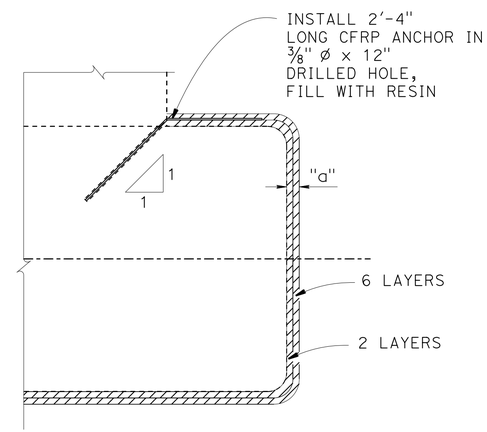

NOTE:

CFRP fiber anchor to be splayed after first 2 layers of CFRP wrap as shown

DETAIL A

NO SCALE

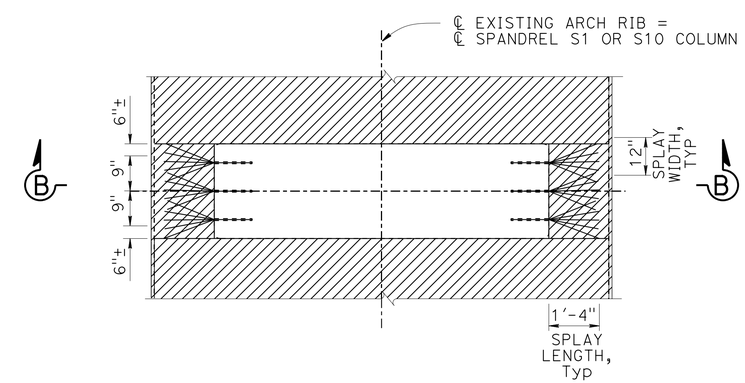

PART PLAN AT SPANDREL LOCATIONS

½" = 1'-0"

DESIGN	BY Ashraf Ahmed	CHECKED Joey Aquino	
DETAILS	BY S. Motalebi / L. Ma	CHECKED Ashraf Ahmed	
QUANTITIES	BY Mufeed Khalaf	CHECKED Quang Nguyen	

STATE OF CALIFORNIA
DEPARTMENT OF TRANSPORTATION

DIVISION OF ENGINEERING SERVICES
STRUCTURE DESIGN
DESIGN BRANCH 3

BRIDGE NO. 06-0027
POST MILE 45.54

DOG CREEK BRIDGE (RETROFIT)
RETROFIT DETAILS NO. 3

STRUCTURES DESIGN DETAIL SHEET (ENGLISH) (REV. 09-01-10)

ORIGINAL SCALE IN INCHES FOR REDUCED PLANS 0 1 2 3

UNIT: 3578
PROJECT NUMBER & PHASE: 02000000161
CONTRACT NO.: 02-0E0904

DISREGARD PRINTS BEARING EARLIER REVISION DATES

REVISION DATES: 5-20-14 6-18-14 12-9-14

SHEET 8 OF 9

FILE => 06-0027-h-b01d+03.dgn

USERNAME => s116738 DATE PLOTTED => 29-MAY-2015 TIME PLOTTED => 14:28

DIST	COUNTY	ROUTE	POST MILES TOTAL PROJECT	SHEET No.	TOTAL SHEETS
02	Sha	5	R29.3/R31.1, R45.0/R45.8	248	248

REGISTERED CIVIL ENGINEER — DATE 4-9-15

5-11-2015
PLANS APPROVAL DATE

REGISTERED PROFESSIONAL ENGINEER — Jose M Aquino III — No. 58386 — Exp. 12-31-16 — CIVIL — STATE OF CALIFORNIA

The State of California or its officers or agents shall not be responsible for the accuracy or completeness of scanned copies of this plan sheet.

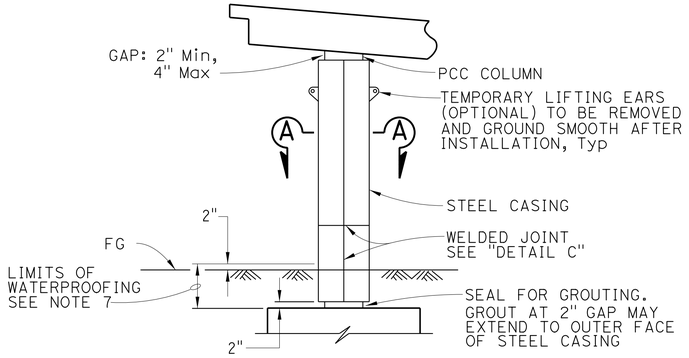

CLASS F COLUMN

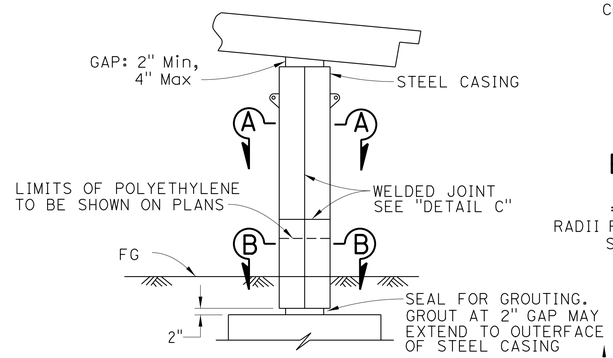

CLASS P/F COLUMN

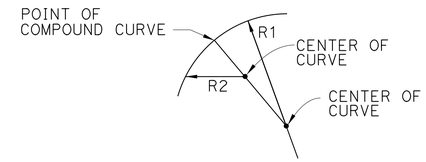

ELLIPTICAL CASING DETAIL
CLASS F AND P/F COLUMN

RADII R1 AND R2 TO BE DETERMINED BY THE CONTRACTOR SUBJECT TO THE APPROVAL OF THE ENGINEER

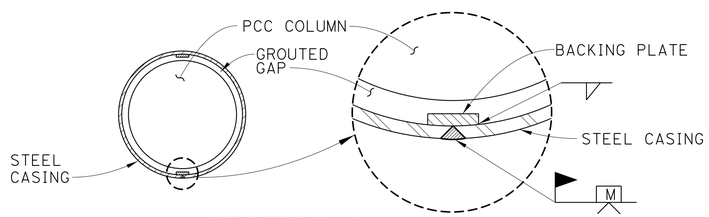

SECTION A-A

MINIMUM INSIDE DIAMETER OF STEEL CASING = 1½" GREATER THAN NOMINAL COLUMN DIAMETER FOR CLASS F AND 2½" FOR CLASS P/F

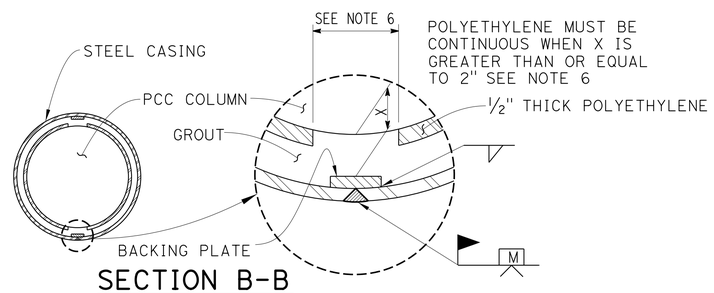

SECTION B-B

MINIMUM INSIDE DIAMETER OF STEEL CASING = 2½" GREATER THAN NOMINAL COLUMN DIAMETER FOR CLASS P/F

ROUND COLUMN

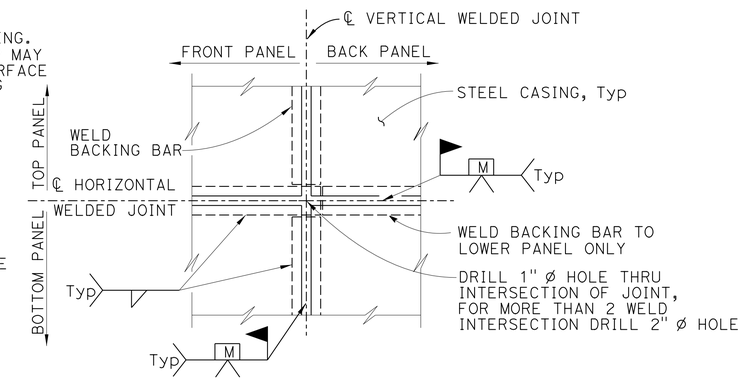

(TWO WELD INTERSECTION JOINT)

DETAIL C

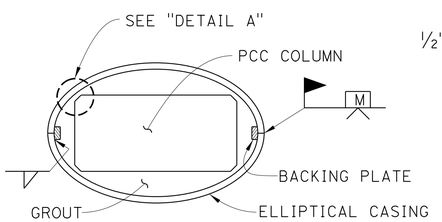

SECTION A-A

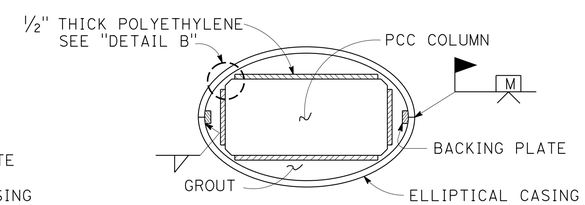

SECTION B-B

RECTANGULAR COLUMN

DETAIL A

DETAIL B

NOTE:
THE CONTRACTOR MUST VERIFY ALL CONTROLLING FIELD DIMENSIONS BEFORE ORDERING OR FABRICATING ANY MATERIAL.

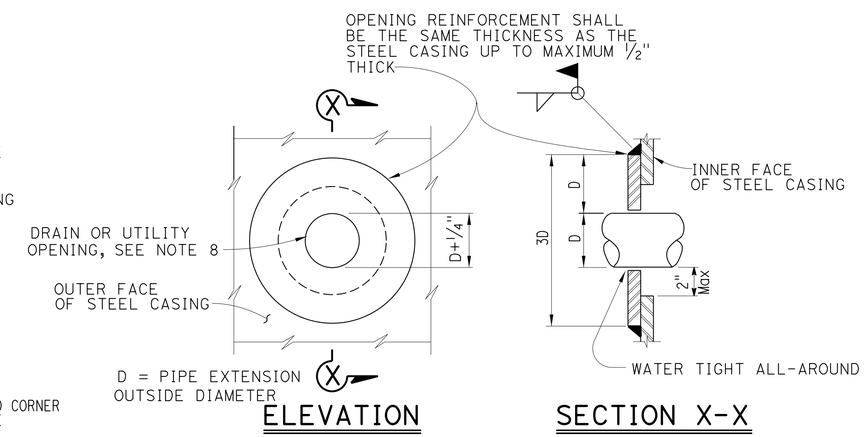

ELEVATION

SECTION X-X

CASING OPENING

NOTE: OPENING REINFORCEMENT REQUIRED FOR DRAIN OR UTILITY OPENINGS LARGER THAN 4"

NOTES:

1. For varying thickness, steel casing inside surface to remain flush. Minimum clearance from PCC column to casing must be maintained
2. Appropriate injection nozzles to be provided on casing, but removed and ground flush following completion of grouting operation
3. All voids between steel casing and polyethylene (Class P/F), and steel casing and PCC column (Class F) to be filled with grout
4. Location and number of vertical and horizontal welds to be determined by the Contractor and subject to the approval of the Engineer. The location of casing welds are for illustration. No skip welds allowed
5. Circular steel casing to be ¼" thick minimum for casings with a 4'-4" diameter or less; all other steel casings to be ⅜" thick unless noted differently on contract plans. Backing plates to be the same thickness as casing up to maximum ⅜" thick
6. Contractor must remove 12" polyethylene strip behind backing plate if backing plate is closer than 2" from face of column
7. Waterproof limits for steel casings. Typical for Class "F" and "P/F"
8. For pipe extensions, opening must be no more than ¼" greater than the pipe extension diameter. For other openings, the opening diameter to be determined by the Engineer

NO SCALE

	BY	CHECKED
DESIGN	Ashraf Ahmed	Joey Aquino
DETAILS	S. Motalebi / L. Ma	Ashraf Ahmed
QUANTITIES	Mufeed Khalaf	Quang Nguyen

STATE OF CALIFORNIA
DEPARTMENT OF TRANSPORTATION

DIVISION OF ENGINEERING SERVICES
STRUCTURE DESIGN
DESIGN BRANCH 3

BRIDGE NO. 06-0027
POST MILE 45.54

DOG CREEK BRIDGE (RETROFIT)
COLUMN CASING - STEEL

STRUCTURES DESIGN DETAIL SHEET (ENGLISH) (REV. 09-01-10)

ORIGINAL SCALE IN INCHES FOR REDUCED PLANS 0 1 2 3

UNIT: 3578
PROJECT NUMBER & PHASE: 02000000161
CONTRACT NO.: 02-0E0904

DISREGARD PRINTS BEARING EARLIER REVISION DATES

REVISION DATES: 5-20-14 6-18-14 9-23-14

SHEET 9 OF 9

FILE => 06-0027-k-colcs.dgn

USERNAME => s116738 DATE PLOTTED => 29-MAY-2015 TIME PLOTTED => 14:28