Dist	COUNTY	ROUTE	POST MILES TOTAL PROJECT	SHEET No.	TOTAL SHEETS
02	Sha	5,44	R3.2/R18.6, L0.3/L1.8	1	120

NH-X089(099)E

STATE OF CALIFORNIA
DEPARTMENT OF TRANSPORTATION

PROJECT PLANS FOR CONSTRUCTION ON
STATE HIGHWAY
IN SHASTA COUNTY
IN AND NEAR ANDERSON AND REDDING ON ROUTE 5
FROM 0.6 MILE SOUTH OF ANDERSON SEPARATION
TO 0.3 MILE NORTH OF TWIN VIEW BOULEVARD UNDERCROSSING
AND ON ROUTE 44
FROM EAST STREET TO EAST REDDING SEPARATION

TO BE SUPPLEMENTED BY STANDARD PLANS DATED MAY 2006

INDEX OF PLANS

SHEET No.	DESCRIPTION
1	TITLE AND LOCATION MAP
2	TYPICAL CROSS SECTIONS
3-12	CONSTRUCTION DETAILS
13-14	CONSTRUCTION AREA SIGNS
15-17	TRAFFIC HANDLING PLANS
18-25	SPECIAL DESIGN SIGNS
26	SUMMARY OF QUANTITIES
27-98	ELECTRICAL PLANS
99	SPECIAL ELECTRICAL STRUCTURES
100-120	REVISED AND NEW STANDARD PLANS

THE STANDARD PLANS LIST APPLICABLE TO THIS CONTRACT IS INCLUDED IN THE NOTICE TO BIDDERS AND SPECIAL PROVISIONS BOOK.

LOCATION MAP

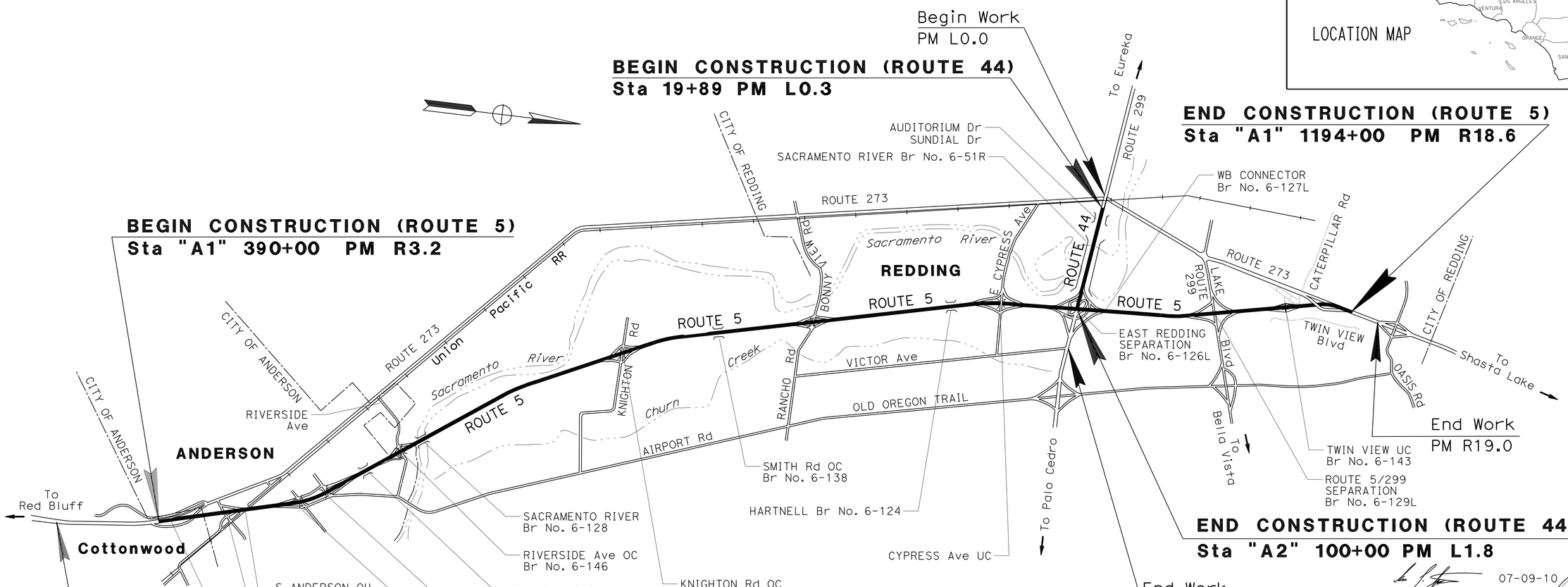

NO SCALE

THE CONTRACTOR SHALL POSSESS THE CLASS (OR CLASSES) OF LICENSE AS SPECIFIED IN THE "NOTICE TO BIDDERS."

PROJECT ENGINEER — DATE: 07-09-10
REGISTERED CIVIL ENGINEER

July 12, 2010
PLANS APPROVAL DATE

REGISTERED PROFESSIONAL ENGINEER — ANDREW P. STECKLEIN — No. C67148 — Exp. 9-30-10 — CIVIL — STATE OF CALIFORNIA

THE STATE OF CALIFORNIA OR ITS OFFICERS OR AGENTS SHALL NOT BE RESPONSIBLE FOR THE ACCURACY OR COMPLETENESS OF SCANNED COPIES OF THIS PLAN SHEET.

CONTRACT No.	02-0C5904
PROJECT ID	0200020000

PROJECT MANAGER: PHIL BAKER
DESIGN ENGINEER: STEVE-TOPAL

P:\proj1\02\0c590_plans\pse\RESUBMIT\20c590ab001.dgn

LAST REVISION 07-09-10 — DATE PLOTTED => 10-AUG-2010 — TIME PLOTTED => 13:12

Dist	COUNTY	ROUTE	POST MILES TOTAL PROJECT	SHEET No.	TOTAL SHEETS
02	Sha	5,44	R3.2/R18.6, L0.3/L1.8	2	120

REGISTERED CIVIL ENGINEER 07-09-10 DATE

7-12-10
PLANS APPROVAL DATE

REGISTERED PROFESSIONAL ENGINEER ANDREW P. STECKLEIN No. C67148 Exp. 9/30/10 CIVIL STATE OF CALIFORNIA

THE STATE OF CALIFORNIA OR ITS OFFICERS OR AGENTS SHALL NOT BE RESPONSIBLE FOR THE ACCURACY OR COMPLETENESS OF SCANNED COPIES OF THIS PLAN SHEET.

NOTES:

1. CONDUIT ATTACHED BELOW DECK AT ALL UNDERCROSSING STRUCTURES.
2. REFER TO FIBER OPTIC SYSTEM PLANS ("E" SHEETS) FOR FOHDPE TRENCH LOCATIONS.
3. LOCATIONS OF EXISTING AND FUTURE MEDIAN BARRIERS VARY GREATLY; ENGINEER TO FIELD VERIFY BARRIER LOCATIONS.
4. EXACT LOCATION OF FIBER OPTIC CABLE TO BE DETERMINED BY THE ENGINEER.
5. EXISTING UTILITIES HAVE NOT BEEN POSITIVELY IDENTIFIED.
6. FOR FOHDPE TRENCH DETAILS, SEE ELECTRICAL DETAILS.
7. WHEN THE BARRIER CROSSES OVER THE CENTER-LINE, MIRROR THE TYPICAL SECTION.

ABBREVIATIONS

FOHDPE FIBER OPTIC HIGH DENSITY POLYETHYLENE

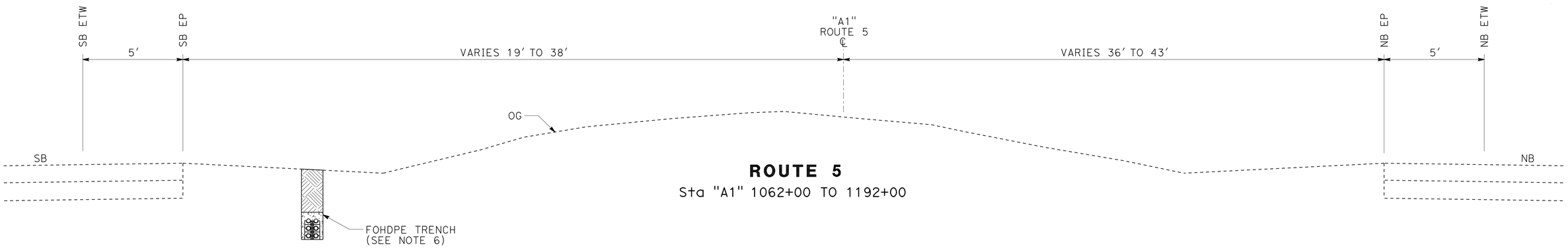

ROUTE 5
Sta "A1" 1062+00 TO 1192+00

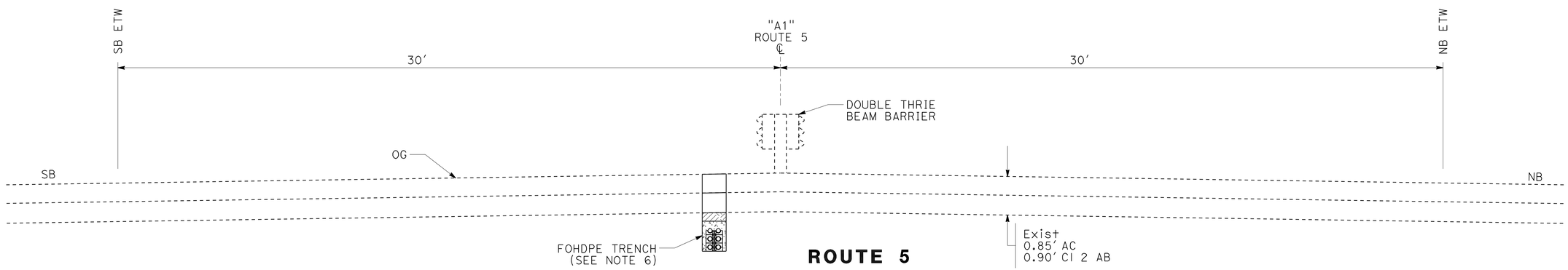

ROUTE 5
Sta "A1" 567+25 TO 599+44

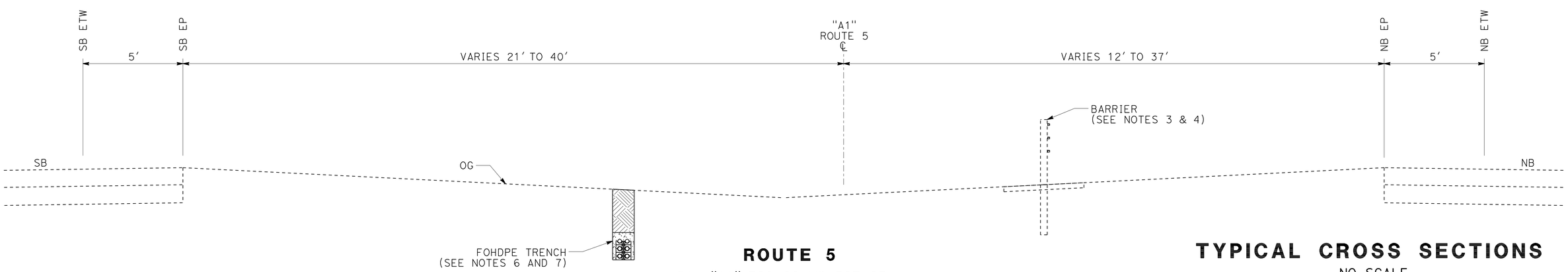

ROUTE 5
Sta "A1" 390+00 TO 567+25
Sta "A1" 599+44 TO 1062+00

TYPICAL CROSS SECTIONS
NO SCALE

X-1

REVISED BY | DATE REVISED
ANDREW STECKLEIN
CALCULATED-DESIGNED BY | CHECKED BY
FUNCTIONAL SUPERVISOR
STEVE TOPAL

STATE OF CALIFORNIA - DEPARTMENT OF TRANSPORTATION
Caltrans DESIGN

P:\proj1\02\0c590_plans\pse\20c590ca001.dgn

LAST REVISION | DATE PLOTTED => 15-JUL-2010 | TIME PLOTTED => 14:33

BORDER LAST REVISED 7/2/2010 | USERNAME => trmariak | DGN FILE => 20c590ca001.dgn | RELATIVE BORDER SCALE IS IN INCHES 0 1 2 3 | UNIT 0319 | PROJECT NUMBER & PHASE 02000200001

Dist	COUNTY	ROUTE	POST MILES TOTAL PROJECT	SHEET No.	TOTAL SHEETS
02	Sha	5,44	R3.2/R18.6, L0.3/L1.8	3	120

REGISTERED CIVIL ENGINEER 07-09-10 DATE

7-12-10
PLANS APPROVAL DATE

REGISTERED PROFESSIONAL ENGINEER ANDREW P. STECKLEIN No. C67148 Exp. 9/30/10 CIVIL STATE OF CALIFORNIA

THE STATE OF CALIFORNIA OR ITS OFFICERS OR AGENTS SHALL NOT BE RESPONSIBLE FOR THE ACCURACY OR COMPLETENESS OF SCANNED COPIES OF THIS PLAN SHEET.

NOTES:

1. ELECTRICAL ENGINEER TO FIELD VERIFY EXACT LOCATION OF CONTROLLER WALKWAY PRIOR TO CONSTRUCTION.
2. EXISTING UTILITIES HAVE NOT BEEN POSITIVELY LOCATED.

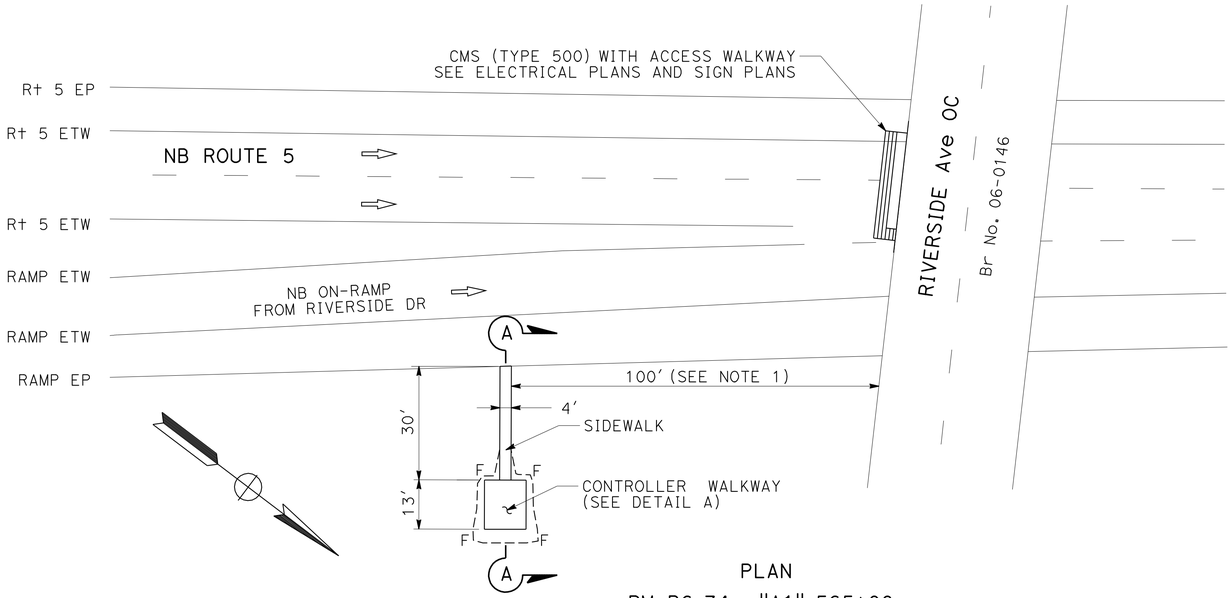

PLAN
PM R6.74, "A1" 565+00

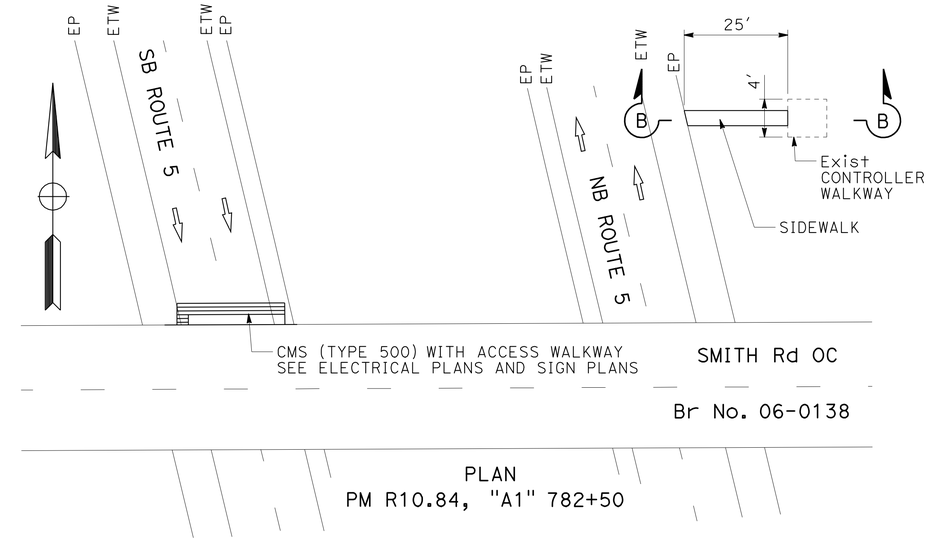

PLAN
PM R10.84, "A1" 782+50

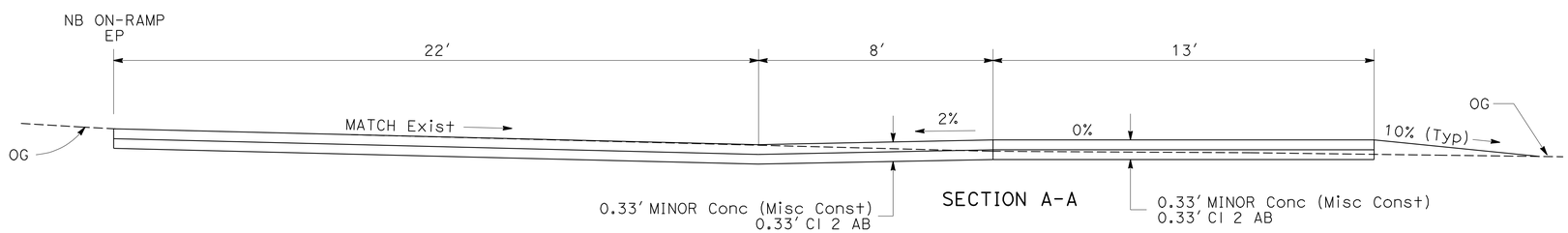

SECTION A-A

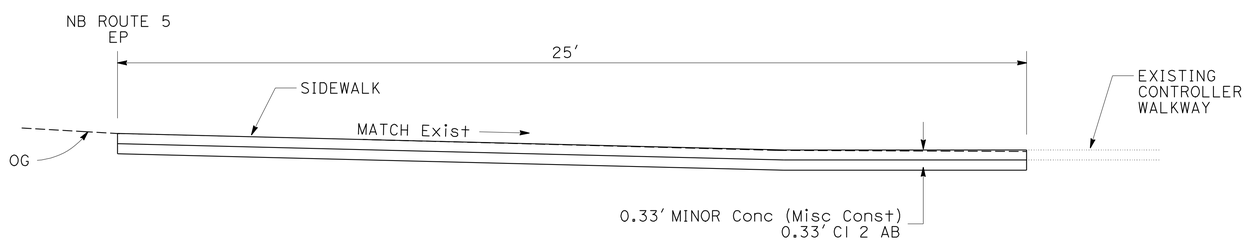

SECTION B-B

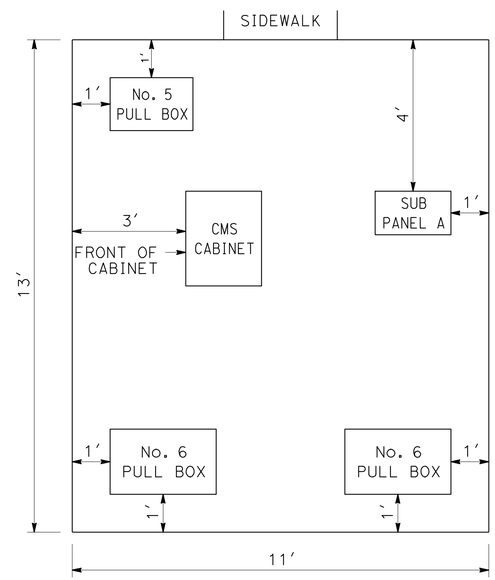

DETAIL A

RIVERSIDE AVENUE CONTROLLER WALKWAY

CHANGEABLE MESSAGE SIGNS, SIDEWALKS, AND CONTROLLER WALKWAY AT RIVERSIDE Ave AND SMITH Rd OVERCROSSINGS

CONSTRUCTION DETAILS

NO SCALE

C-1

REVISED BY | DATE REVISED
TOBY CRAWFORD | ANDREW STECKLEIN
CALCULATED-DESIGNED BY | CHECKED BY
FUNCTIONAL SUPERVISOR | STEVE TOPAL

STATE OF CALIFORNIA - DEPARTMENT OF TRANSPORTATION
Caltrans
DESIGN

P:\proj1\02\0c590_plans\pse\RESUBMIT\20c590ga001.dgn

LAST REVISION 05-14-08 | DATE PLOTTED => 15-JUL-2010 | TIME PLOTTED => 14:33

BORDER LAST REVISED 7/2/2010 | USERNAME => trmariak | DGN FILE => 20c590ga001.dgn | RELATIVE BORDER SCALE IS IN INCHES 0 1 2 3 | UNIT 0319 | PROJECT NUMBER & PHASE 02000200001

Dist	COUNTY	ROUTE	POST MILES TOTAL PROJECT	SHEET No.	TOTAL SHEETS
02	Sha	5,44	R3.2/R18.6, L0.3/L1.8	4	120

REGISTERED CIVIL ENGINEER 07-09-10 DATE

7-12-10
PLANS APPROVAL DATE

REGISTERED PROFESSIONAL ENGINEER ANDREW P. STECKLEIN No. C67148 Exp. 9/30/10 CIVIL STATE OF CALIFORNIA

THE STATE OF CALIFORNIA OR ITS OFFICERS OR AGENTS SHALL NOT BE RESPONSIBLE FOR THE ACCURACY OR COMPLETENESS OF SCANNED COPIES OF THIS PLAN SHEET.

NOTES:

1. SEE CONSTRUCTION DETAILS CONCRETE BARRIER (MODIFIED TYPE 60) FOR ADDITIONAL INFORMATION.
2. EXISTING UTILITIES HAVE NOT BEEN POSITIVELY LOCATED.

LEGEND:

PLACE HMA (Misc AREA)

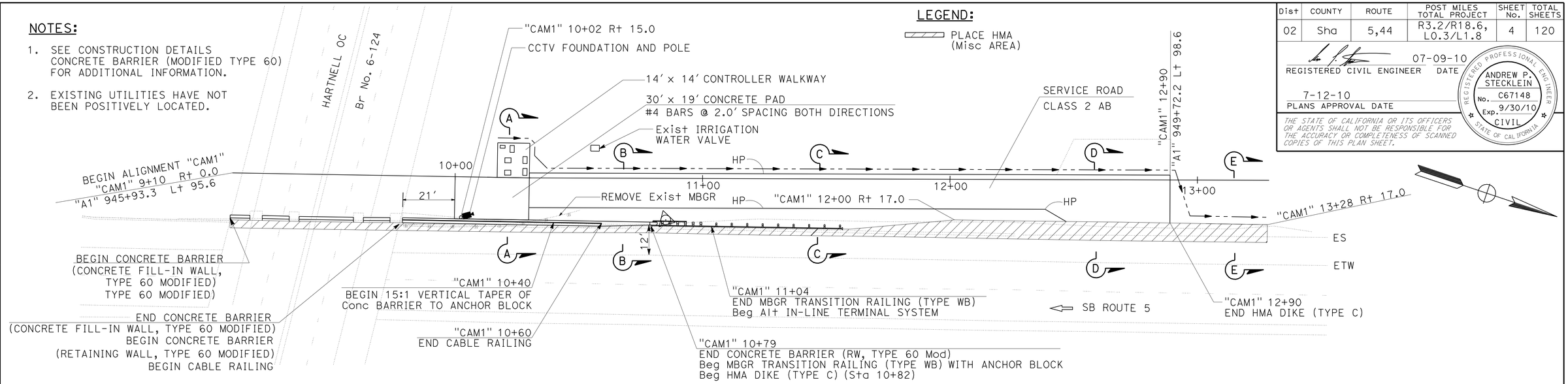

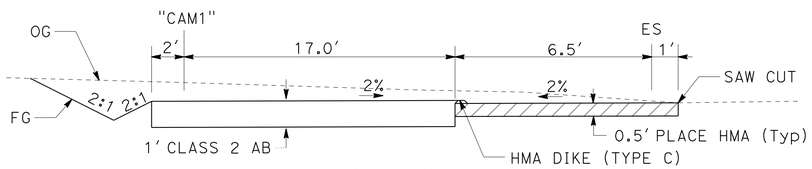

SECTION D-D

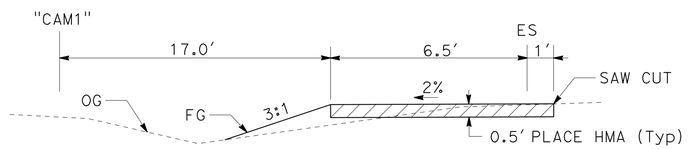

SECTION E-E

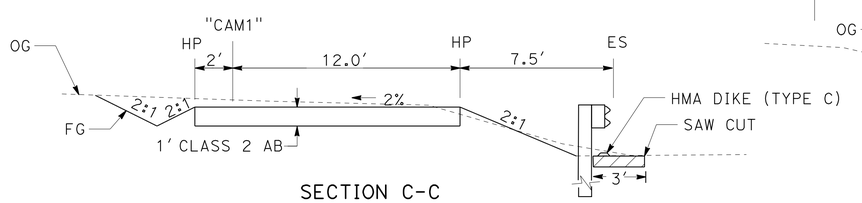

SECTION C-C

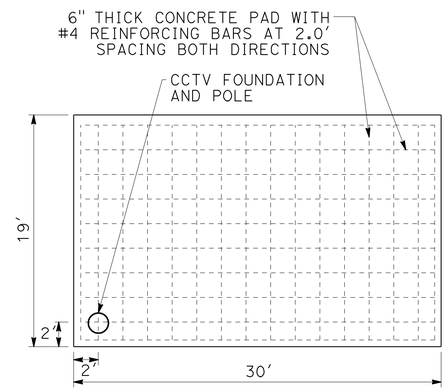

CONCRETE PAD

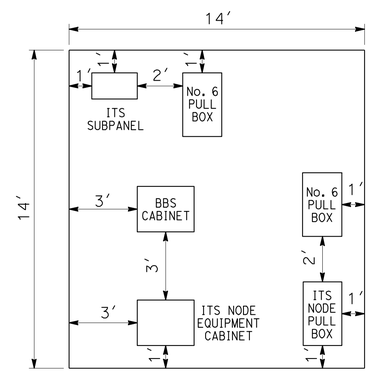

CONTROLLER WALKWAY

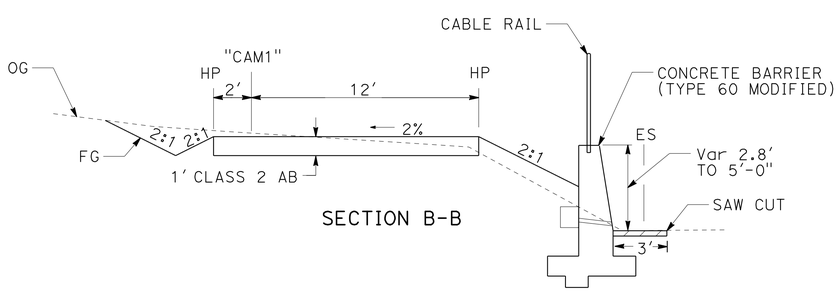

SECTION B-B

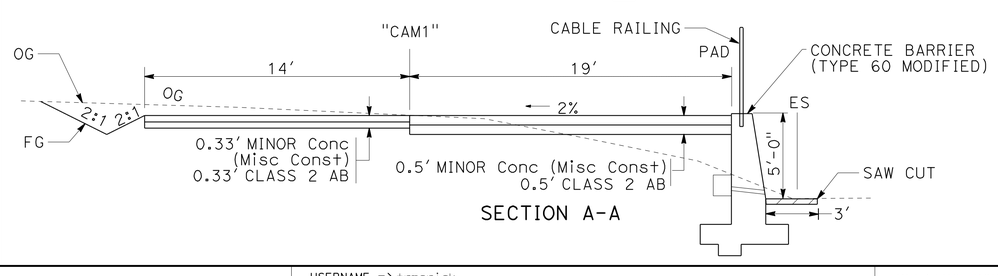

SECTION A-A

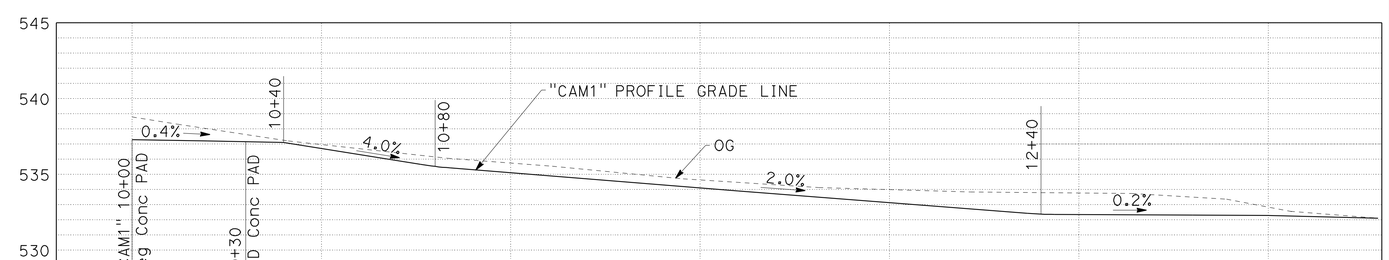

CCTV, ROUTE 5 AT HARTNELL Ave OC
PM 13.95

CONSTRUCTION DETAILS

NO SCALE

C-2

BYRON STANLEY — ANDREW STECKLEIN — REVISED BY — DATE REVISED
CALCULATED-DESIGNED BY — CHECKED BY
FUNCTIONAL SUPERVISOR — STEVE TOPAL
STATE OF CALIFORNIA - DEPARTMENT OF TRANSPORTATION — DESIGN

P:\proj1\02\0c590_plans\pse\20c590ga002.dgn

LAST REVISION 05-14-08 | DATE PLOTTED => 15-JUL-2010 | TIME PLOTTED => 14:33

Dist	COUNTY	ROUTE	POST MILES TOTAL PROJECT	SHEET No.	TOTAL SHEETS
02	Sha	5,44	R3.2/R18.6, L0.3/L1.8	5	120

REGISTERED CIVIL ENGINEER 07-09-10 DATE

7-12-10
PLANS APPROVAL DATE

REGISTERED PROFESSIONAL ENGINEER ANDREW P. STECKLEIN No. C67148 Exp. 9/30/10 CIVIL STATE OF CALIFORNIA

THE STATE OF CALIFORNIA OR ITS OFFICERS OR AGENTS SHALL NOT BE RESPONSIBLE FOR THE ACCURACY OR COMPLETENESS OF SCANNED COPIES OF THIS PLAN SHEET.

NOTE:

1. EXISTING UTILITIES HAVE NOT BEEN POSITIVELY LOCATED.
2. PERMEABLE MATERIAL TO BE PLACED ALONG THE LENGTH OF THE WALL.

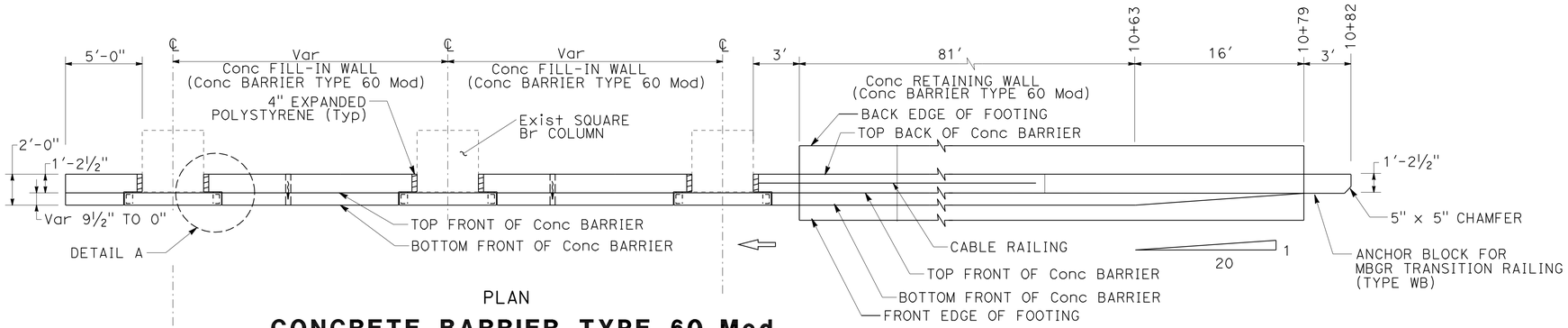

PLAN

CONCRETE BARRIER TYPE 60 Mod

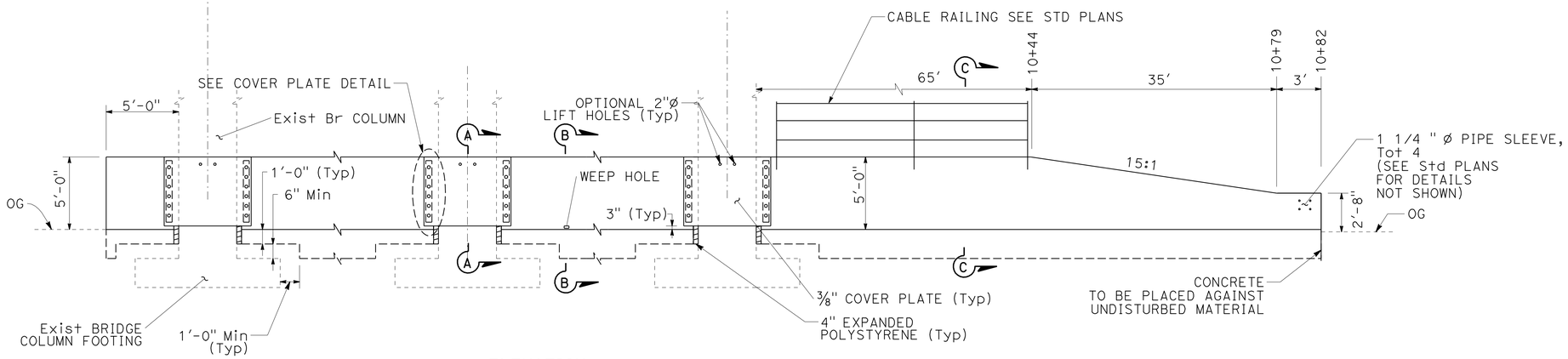

ELEVATION

CONCRETE BARRIER TYPE 60 Mod

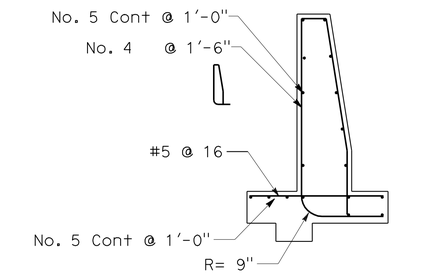

REINFORCING STEEL PLACEMENT AT SECTION C-C

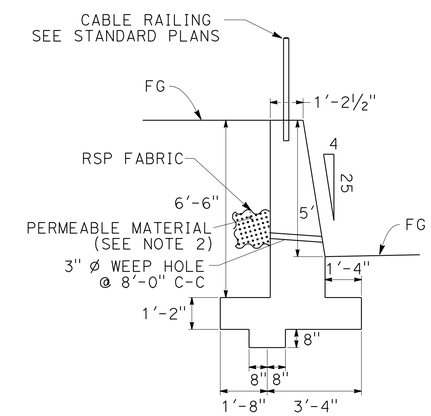

SECTION C-C

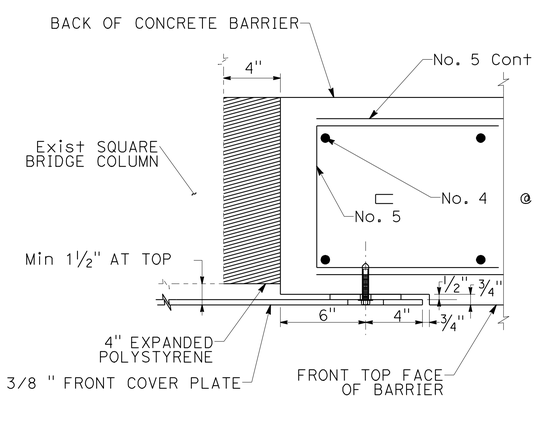

DETAIL A

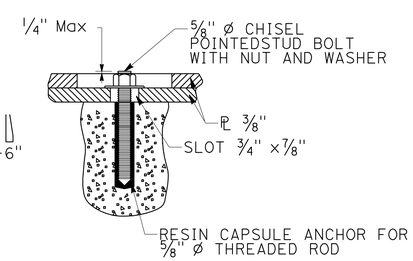

FASTENER DETAIL

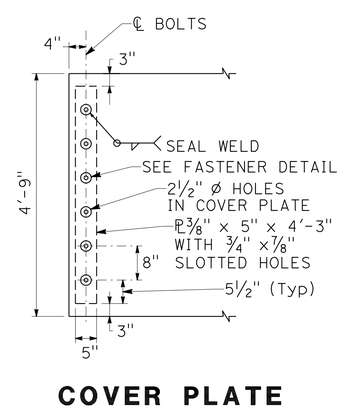

COVER PLATE DETAIL

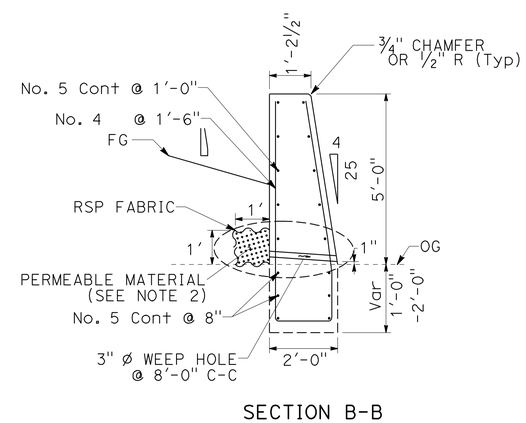

SECTION B-B

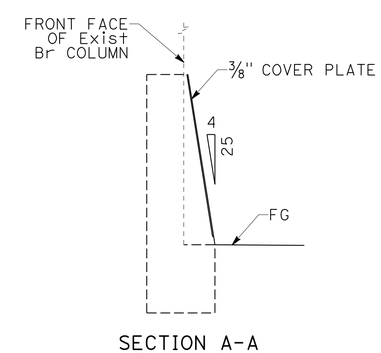

SECTION A-A

CONSTRUCTION DETAILS

NO SCALE

C-3

CCTV, ROUTE 5 AT HARTNELL Ave OC

STATE OF CALIFORNIA - DEPARTMENT OF TRANSPORTATION
Caltrans® DESIGN
FUNCTIONAL SUPERVISOR STEVE TOPAL
CALCULATED-DESIGNED BY ANDREW STECKLEIN
CHECKED BY
REVISED BY
DATE REVISED
P:\proj1\02\0c590_plans\pse\20c590ga003.dgn

LAST REVISION DATE PLOTTED => 15-JUL-2010
TIME PLOTTED => 14:33

Dist	COUNTY	ROUTE	POST MILES TOTAL PROJECT	SHEET No.	TOTAL SHEETS
02	Sha	5,44	R3.2/R18.6, L0.3/L1.8	6	120

REGISTERED CIVIL ENGINEER 07-09-10 DATE

7-12-10
PLANS APPROVAL DATE

REGISTERED PROFESSIONAL ENGINEER ANDREW P. STECKLEIN No. C67148 Exp. 9/30/10 CIVIL STATE OF CALIFORNIA

THE STATE OF CALIFORNIA OR ITS OFFICERS OR AGENTS SHALL NOT BE RESPONSIBLE FOR THE ACCURACY OR COMPLETENESS OF SCANNED COPIES OF THIS PLAN SHEET.

NOTE:

1. EXISTING UTILITIES HAVE NOT BEEN POSITIVELY LOCATED.

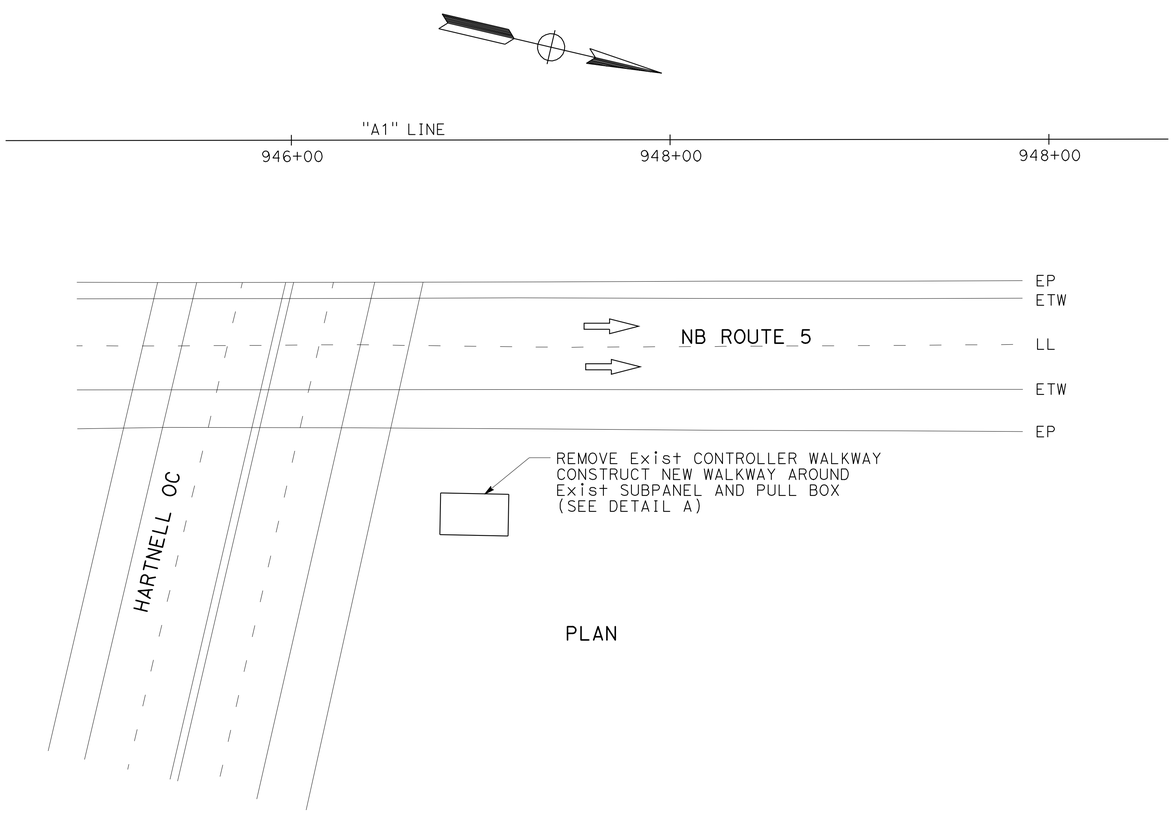

PLAN

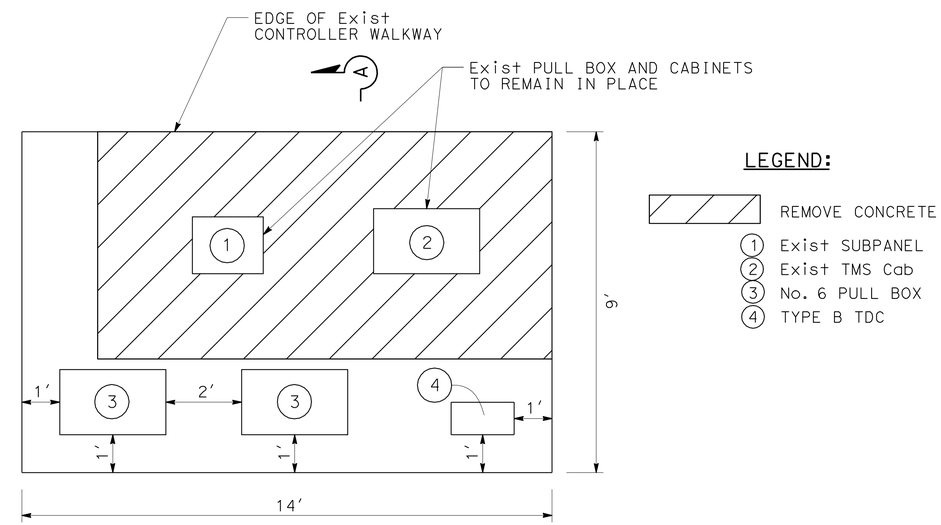

A

DETAIL A

REPLACE EXISTING CONTROLLER WALKWAY

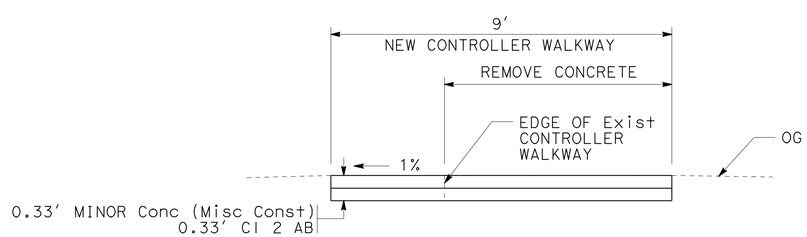

SECTION A-A

PM 13.95
CONTROLLER WALKWAY AT
NB ROUTE 5 AND HARTNELL OC

CONSTRUCTION DETAILS
NO SCALE

C-4

STATE OF CALIFORNIA - DEPARTMENT OF TRANSPORTATION
Caltrans
DESIGN

FUNCTIONAL SUPERVISOR: STEVE TOPAL
CALCULATED-DESIGNED BY: TOBY CRAWFORD
CHECKED BY: ANDREW STECKLEIN
REVISED BY
DATE REVISED

P:\proj\02\0c590_plans\pse\20c590ga004.dgn

LAST REVISION
DATE PLOTTED => 15-JUL-2010
TIME PLOTTED => 14:33

Dist	COUNTY	ROUTE	POST MILES TOTAL PROJECT	SHEET No.	TOTAL SHEETS
02	Sha	5,44	R3.2/R18.6, L0.3/L1.8	7	120

REGISTERED CIVIL ENGINEER 07-09-10 DATE

7-12-10
PLANS APPROVAL DATE

REGISTERED PROFESSIONAL ENGINEER ANDREW P. STECKLEIN No. C67148 Exp. 9/30/10 CIVIL STATE OF CALIFORNIA

THE STATE OF CALIFORNIA OR ITS OFFICERS OR AGENTS SHALL NOT BE RESPONSIBLE FOR THE ACCURACY OR COMPLETENESS OF SCANNED COPIES OF THIS PLAN SHEET.

NOTES:

1. ELEVATION OF ITS PAD CAN BE ADJUSTED AS NECESSARY TO SUIT FIELD CONDITIONS.
2. EXISTING UTLILITES HAVE NOT BEEN POSITIVELY LOCATED.
3. SEE ELECTRICAL SHEETS FOR SPLICE VAULT DETAILS.

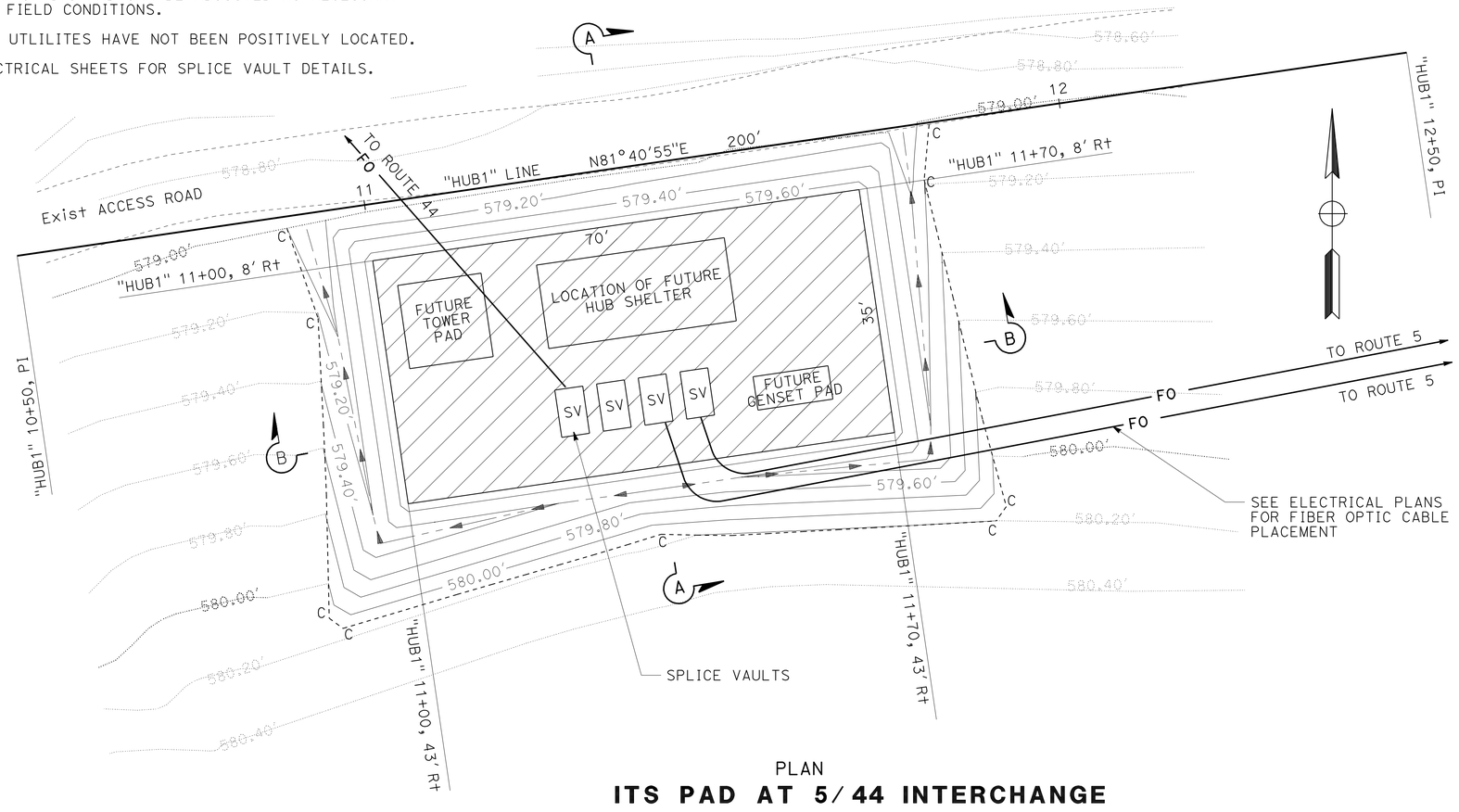

PLAN
ITS PAD AT 5/44 INTERCHANGE
NO SCALE

LEGEND

CLASS 2 AB ITS PAD

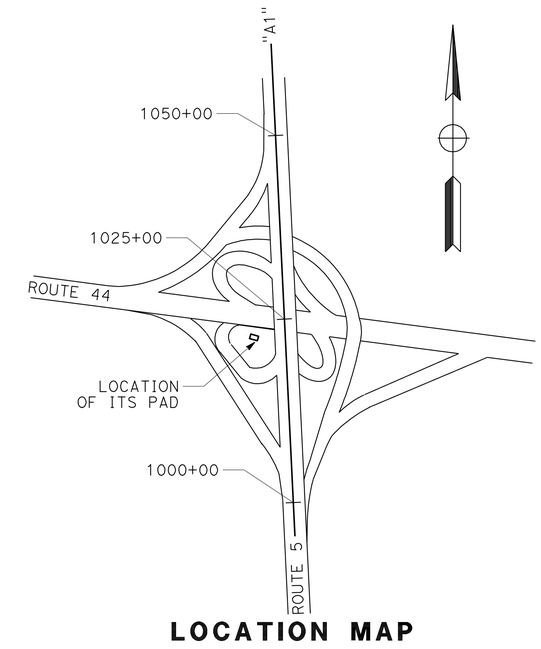

LOCATION MAP
NO SCALE

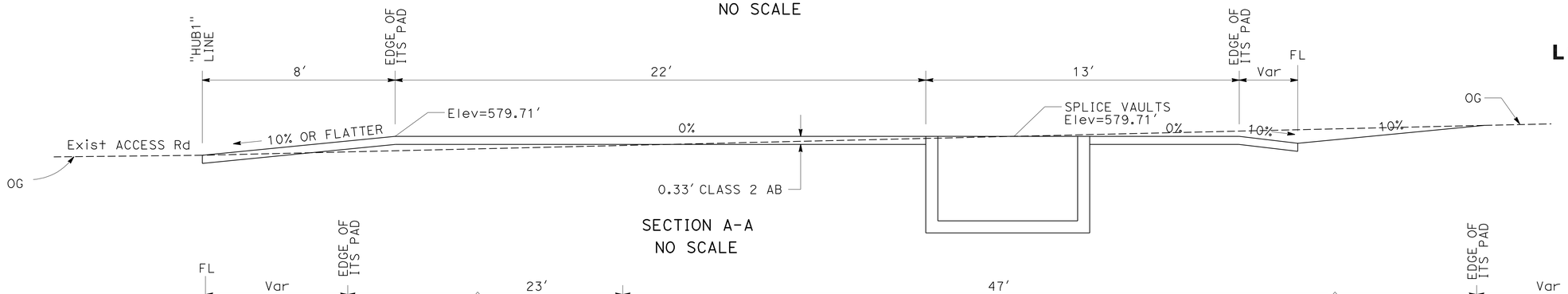

SECTION A-A
NO SCALE

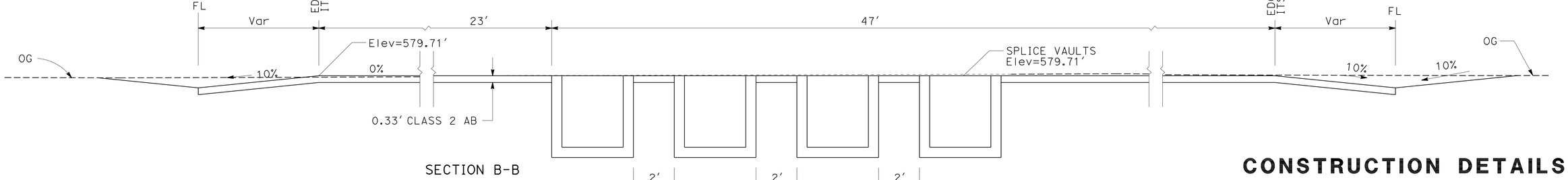

SECTION B-B
NO SCALE

CONSTRUCTION DETAILS
SCALE: AS NOTED

C-5

STATE OF CALIFORNIA - DEPARTMENT OF TRANSPORTATION
Caltrans DESIGN

FUNCTIONAL SUPERVISOR: STEVE TOPAL
CALCULATED-DESIGNED BY: TOBY CRAWFORD
CHECKED BY: ANDREW STECKLEIN
REVISED BY / DATE REVISED

P:\proj1\02\0c590_plans\pse\20c590ga005.dgn

LAST REVISION 06-06-10 | DATE PLOTTED => 15-JUL-2010 | TIME PLOTTED => 14:33

Dist	COUNTY	ROUTE	POST MILES TOTAL PROJECT	SHEET No.	TOTAL SHEETS
02	Sha	5,44	R3.2/R18.6, L0.3/L1.8	8	120

REGISTERED CIVIL ENGINEER 07-09-10 DATE

7-12-10
PLANS APPROVAL DATE

REGISTERED PROFESSIONAL ENGINEER ANDREW P. STECKLEIN No. C67148 Exp. 9/30/10 CIVIL STATE OF CALIFORNIA

THE STATE OF CALIFORNIA OR ITS OFFICERS OR AGENTS SHALL NOT BE RESPONSIBLE FOR THE ACCURACY OR COMPLETENESS OF SCANNED COPIES OF THIS PLAN SHEET.

NOTE:

1. EXISTING UTILITIES HAVE NOT BEEN POSITIVELY LOCATED.

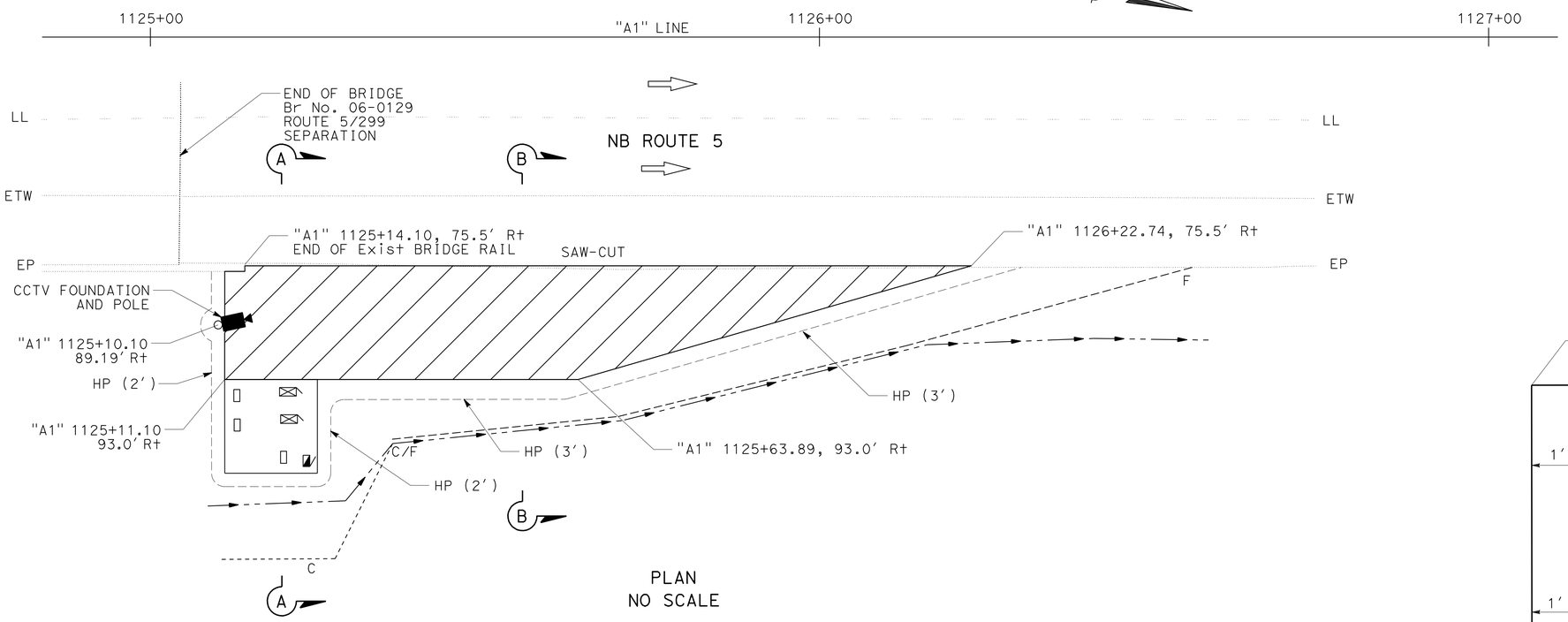

PLAN
NO SCALE

LEGEND:

HMA PAVEMENT (MAINTENANCE PULLOUT)

1. ITS NODE SUB-PANEL
2. No. 6 PULL BOX
3. BBS CABINET
4. ITS NODE EQUIPMENT CABINET
5. ITS NODE PULL BOX

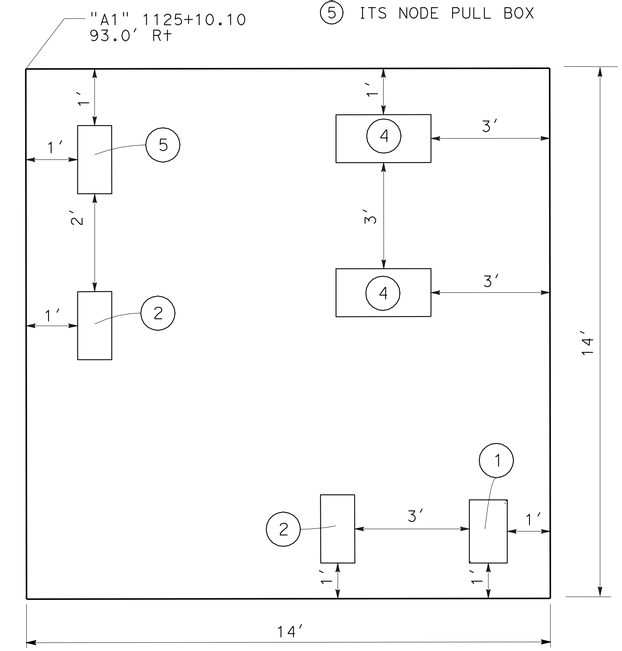

CONTROLLER WALKWAY
NO SCALE

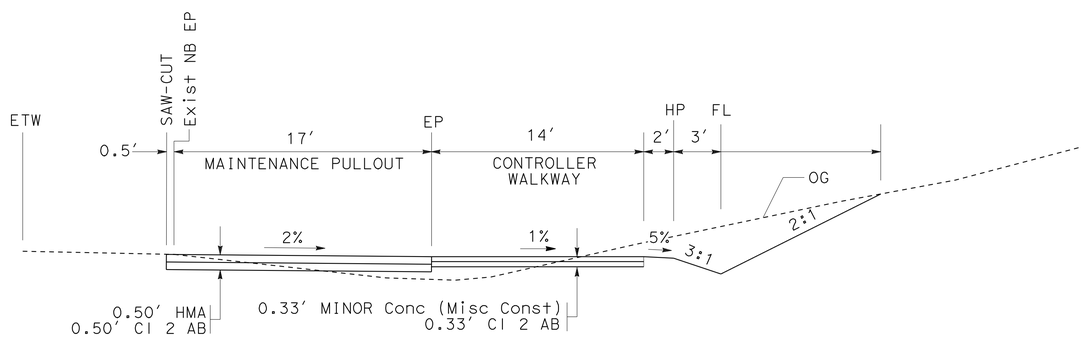

SECTION A-A
NO SCALE

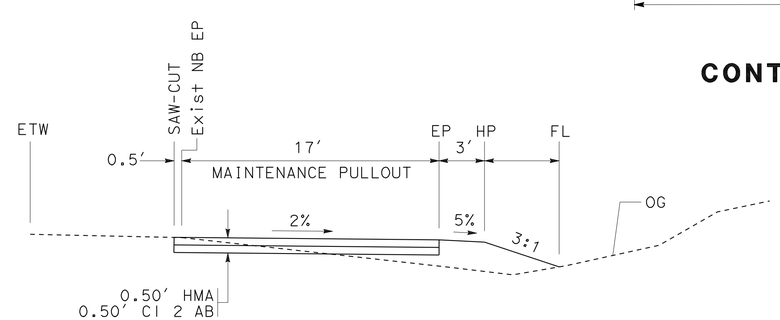

SECTION B-B
NO SCALE

CCTV AT ROUTE 5/299 SEPARATION

CONSTRUCTION DETAILS
NO SCALE

C-6

REVISED BY	DATE REVISED
BYRON STANLEY	ANDREW STECKLEIN
CALCULATED-DESIGNED BY	CHECKED BY
FUNCTIONAL SUPERVISOR	STEVE TOPAL

STATE OF CALIFORNIA - DEPARTMENT OF TRANSPORTATION
Caltrans
DESIGN

P:\proj\02\0c590_plans\pse\20c590ga006.dgn

LAST REVISION | DATE PLOTTED => 15-JUL-2010 | TIME PLOTTED => 14:33

Dist	COUNTY	ROUTE	POST MILES TOTAL PROJECT	SHEET No.	TOTAL SHEETS
02	Sha	5,44	R3.2/R18.6, L0.3/L1.8	9	120

REGISTERED CIVIL ENGINEER 07-09-10 DATE

7-12-10
PLANS APPROVAL DATE

REGISTERED PROFESSIONAL ENGINEER ANDREW P. STECKLEIN No. C67148 Exp. 9/30/10 CIVIL STATE OF CALIFORNIA

THE STATE OF CALIFORNIA OR ITS OFFICERS OR AGENTS SHALL NOT BE RESPONSIBLE FOR THE ACCURACY OR COMPLETENESS OF SCANNED COPIES OF THIS PLAN SHEET.

NOTE:

1. EXISTING UTILITIES HAVE NOT BEEN POSITIVELY LOCATED.

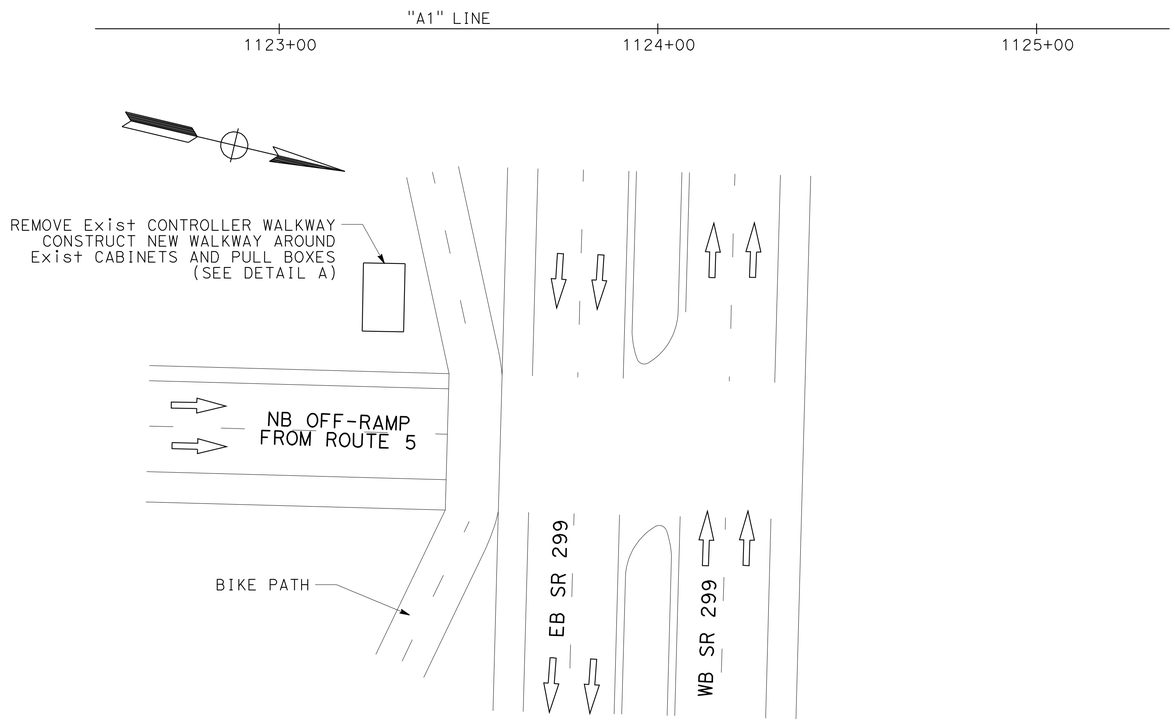

PLAN

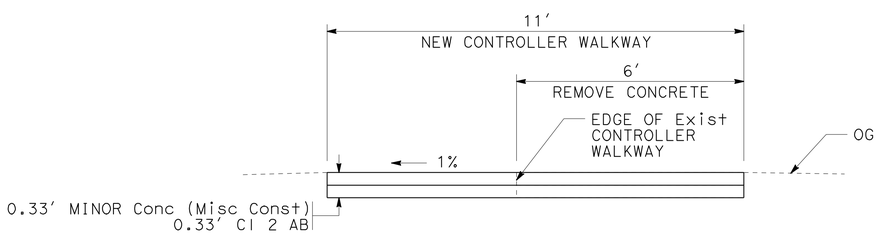

SECTION A-A

LEGEND:

REMOVE CONCRETE

1. Exist No. 6 PULL BOX
2. Exist SUBPANEL
3. Exist SIGNAL Cab
4. No. 6 PULL BOX
5. TYPE B TDC

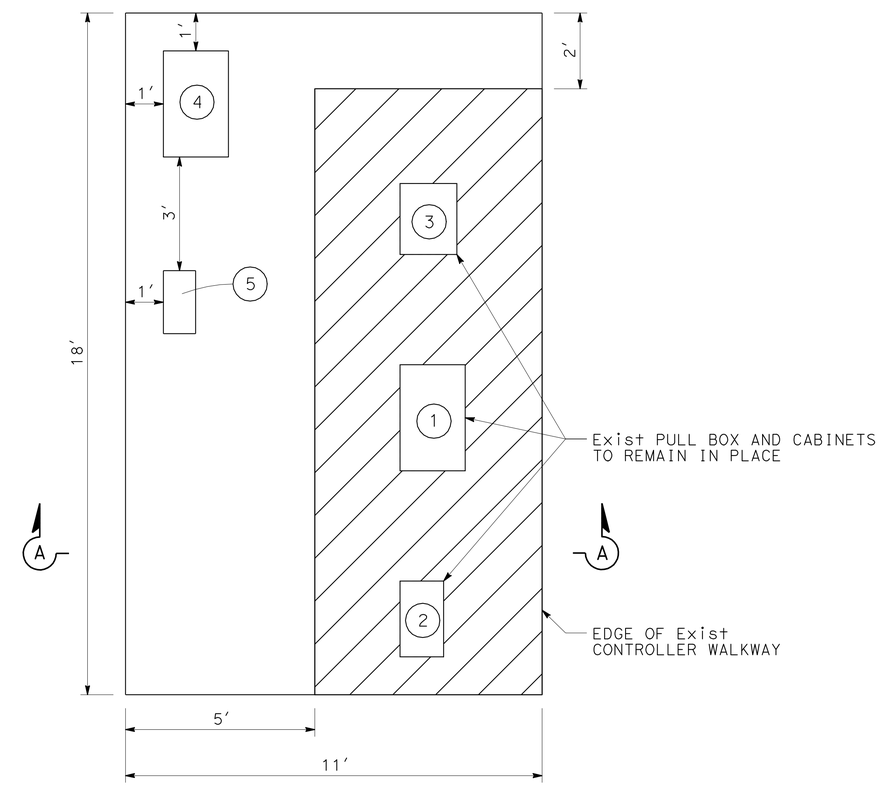

DETAIL A

REPLACE EXISTING CONTROLLER WALKWAY

PM 17.3
CONTROLLER WALKWAY AT ROUTE 5/299 SEPARATION

CONSTRUCTION DETAILS
NO SCALE

C-7

STATE OF CALIFORNIA - DEPARTMENT OF TRANSPORTATION
DESIGN
Caltrans®

FUNCTIONAL SUPERVISOR: STEVE TOPAL
CALCULATED-DESIGNED BY: BYRON STANLEY
CHECKED BY: ANDREW STECKLEIN
REVISED BY
DATE REVISED

P:\proj1\02\0c590_plans\pse\20c590ga007.dgn

LAST REVISION
DATE PLOTTED => 15-JUL-2010
TIME PLOTTED => 14:34

Dist	COUNTY	ROUTE	POST MILES TOTAL PROJECT	SHEET No.	TOTAL SHEETS
02	Sha	5,44	R3.2/R18.6, L0.3/L1.8	10	120

REGISTERED CIVIL ENGINEER 07-09-10 DATE

7-12-10
PLANS APPROVAL DATE

REGISTERED PROFESSIONAL ENGINEER ANDREW P. STECKLEIN No. C67148 Exp. 9/30/10 CIVIL STATE OF CALIFORNIA

THE STATE OF CALIFORNIA OR ITS OFFICERS OR AGENTS SHALL NOT BE RESPONSIBLE FOR THE ACCURACY OR COMPLETENESS OF SCANNED COPIES OF THIS PLAN SHEET.

NOTES:

1. ELEVATION OF ITS PAD IS APPROXIMATELY 0.33′ ABOVE EXISTING GRADE AND CAN BE ADJUSTED AS NECESSARY TO SUIT FIELD CONDITIONS.
2. REFER TO FIBER OPTIC SYSTEM SHEET E-57 FOR ACCESS ROAD ALIGNMENT AND LOW WATER CROSSING.
3. EXISTING UTILITIES HAVE NOT BEEN POSITIVELY LOCATED.

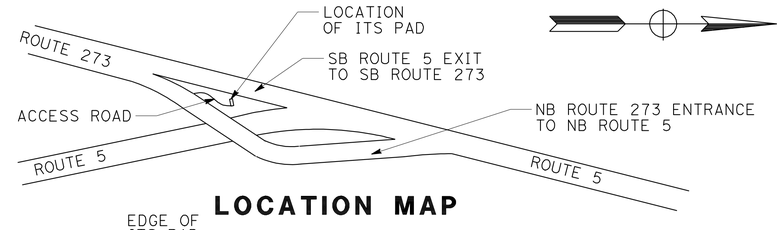

LOCATION MAP

LEGEND

CLASS 2 AB ITS PAD

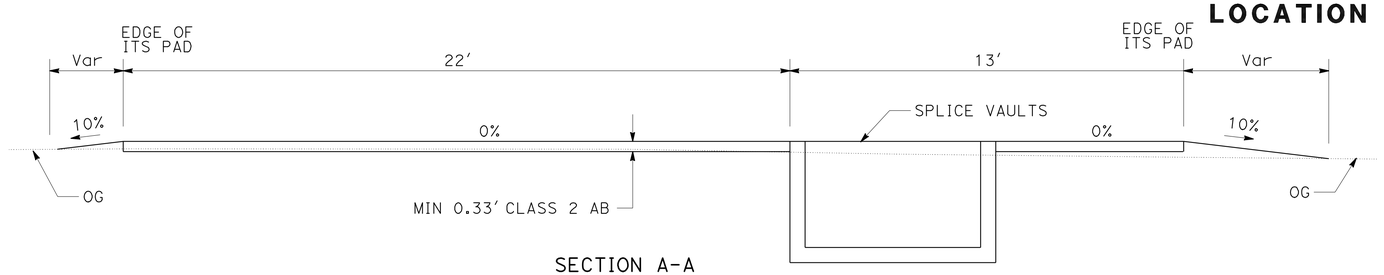

SECTION A-A
NO SCALE

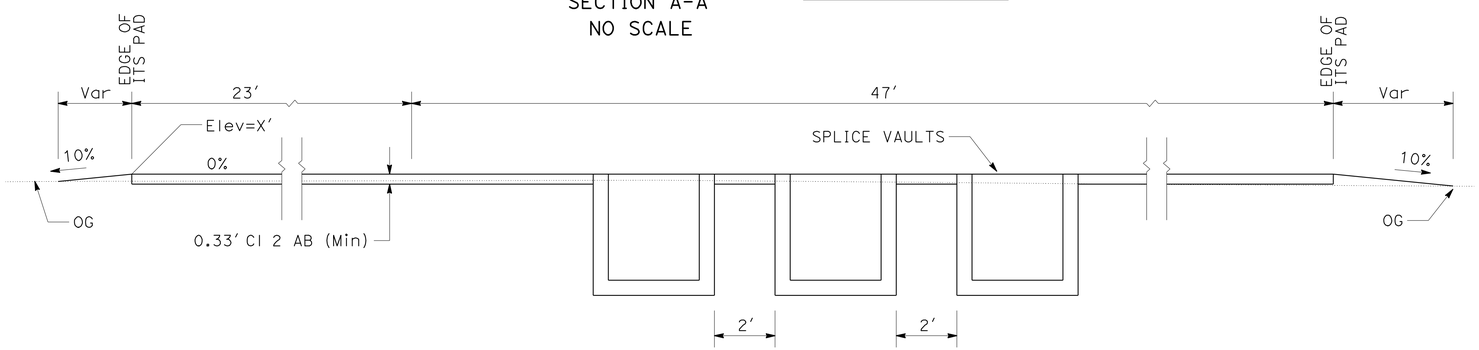

SECTION B-B
NO SCALE

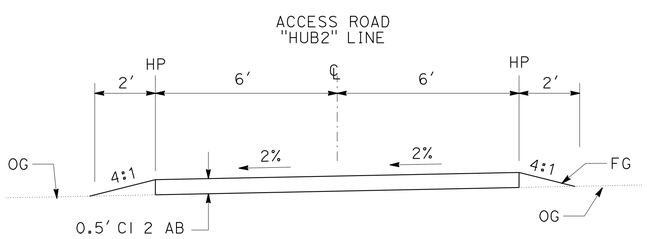

NO SCALE

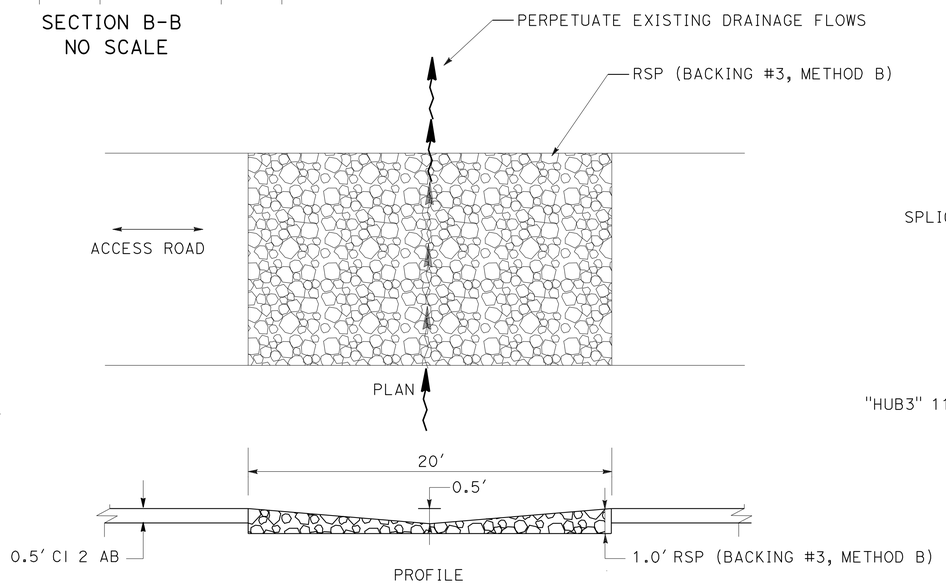

ACCESS ROAD LOW WATER CROSSING
NO SCALE

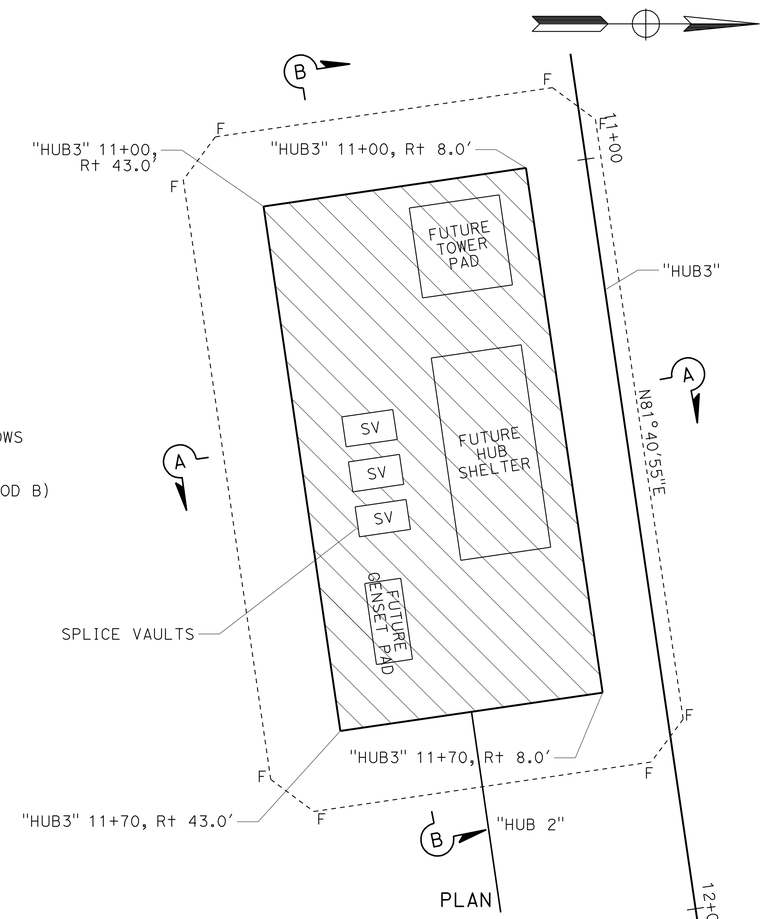

PLAN

SCALE: 1″=10′

ITS PAD AT ROUTE 5/273 SEPARATION

CONSTRUCTION DETAILS

SCALE: AS NOTED

C-8

REVISED BY | DATE REVISED
BYRON STANLEY | ANDREW STECKLEIN
CALCULATED-DESIGNED BY | CHECKED BY
FUNCTIONAL SUPERVISOR: STEVE TOPAL

STATE OF CALIFORNIA - DEPARTMENT OF TRANSPORTATION
Caltrans
DESIGN

P:\proj1\02\0c590_plans\pse\20c590ga008.dgn

LAST REVISION 05-14-08 | DATE PLOTTED => 15-JUL-2010 | TIME PLOTTED => 14:34

BORDER LAST REVISED 7/2/2010 | USERNAME => trmariak | DGN FILE => 20c590ga008.dgn | RELATIVE BORDER SCALE IS IN INCHES 0 1 2 3 | UNIT 0319 | PROJECT NUMBER & PHASE 02000200001

Dist	COUNTY	ROUTE	POST MILES TOTAL PROJECT	SHEET No.	TOTAL SHEETS
02	Sha	5,44	R3.2/R18.6, L0.3/L1.8	11	120

REGISTERED CIVIL ENGINEER 07-09-10 DATE

7-12-10
PLANS APPROVAL DATE

REGISTERED PROFESSIONAL ENGINEER ANDREW P. STECKLEIN No. C67148 Exp. 9/30/10 CIVIL STATE OF CALIFORNIA

THE STATE OF CALIFORNIA OR ITS OFFICERS OR AGENTS SHALL NOT BE RESPONSIBLE FOR THE ACCURACY OR COMPLETENESS OF SCANNED COPIES OF THIS PLAN SHEET.

NOTE:

1. EXISTING UTILITIES HAVE NOT BEEN POSITIVELY LOCATED.

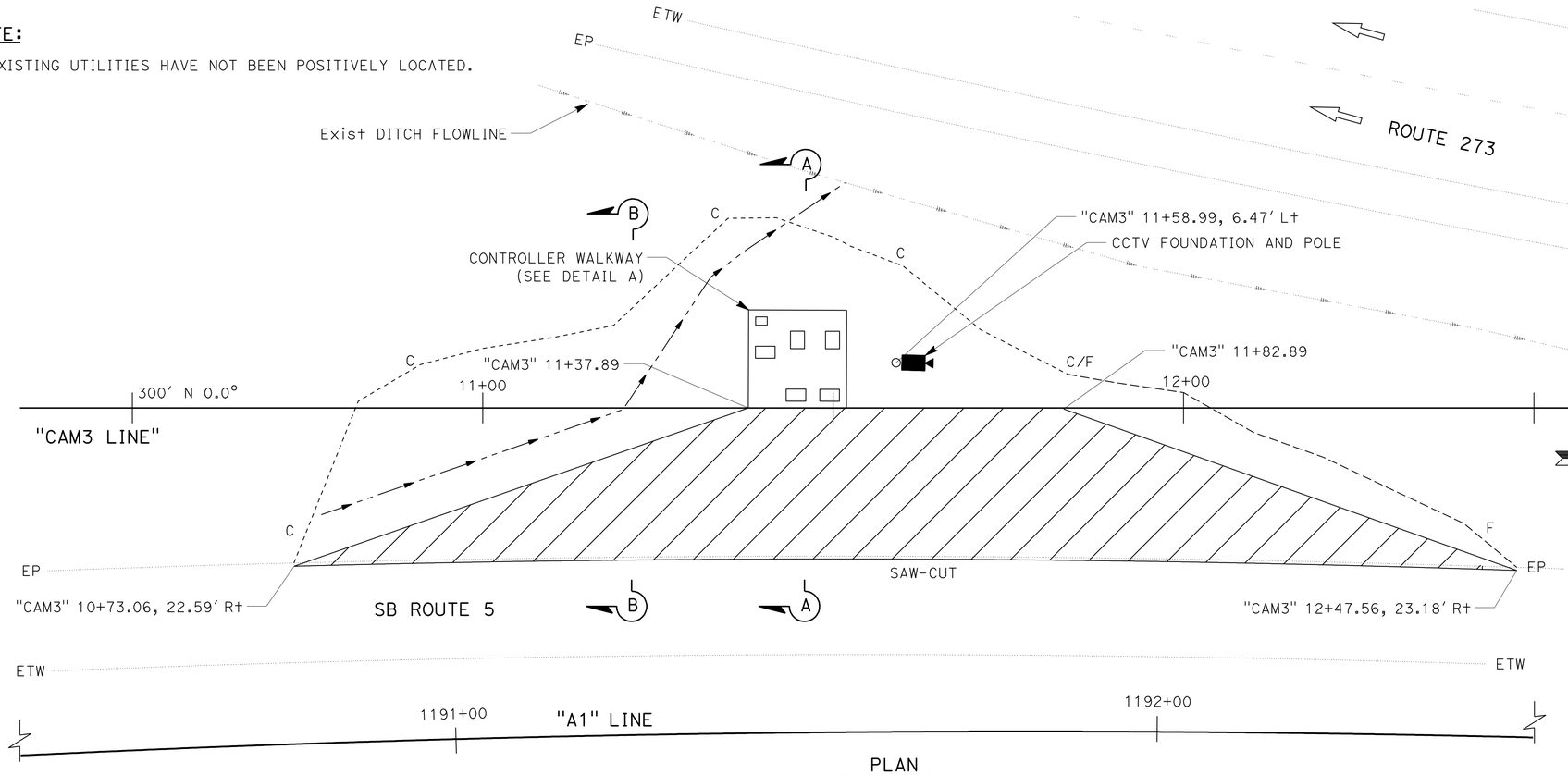

PLAN
PM R18.6

LEGEND

MINOR HMA (MAINTENANCE PULLOUT)

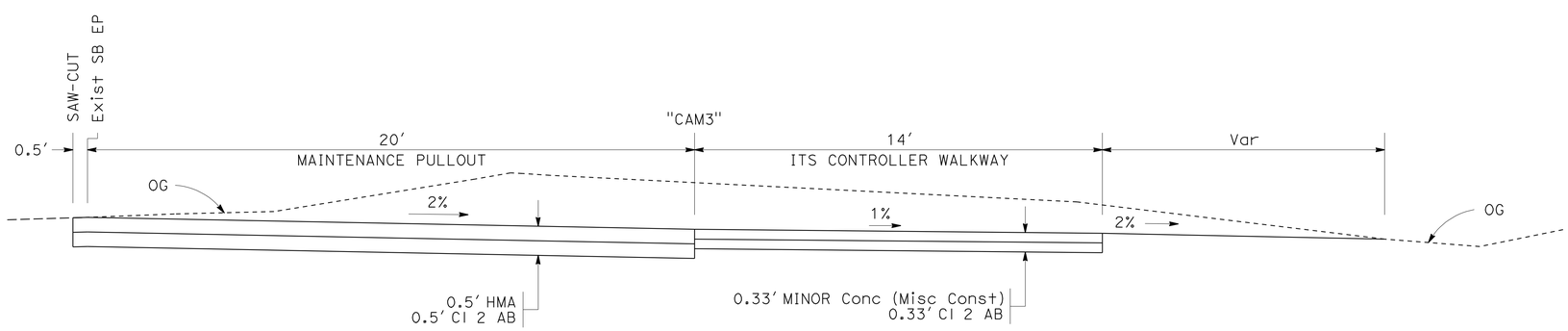

SECTION A-A

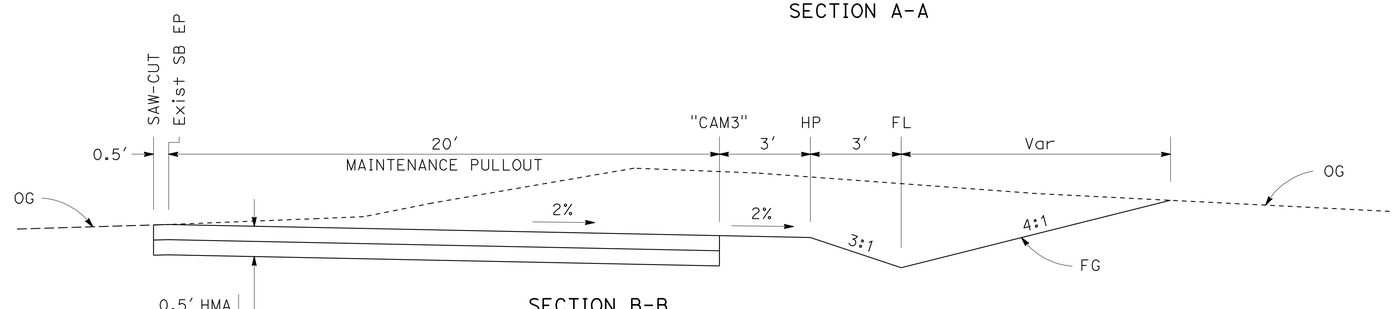

SECTION B-B

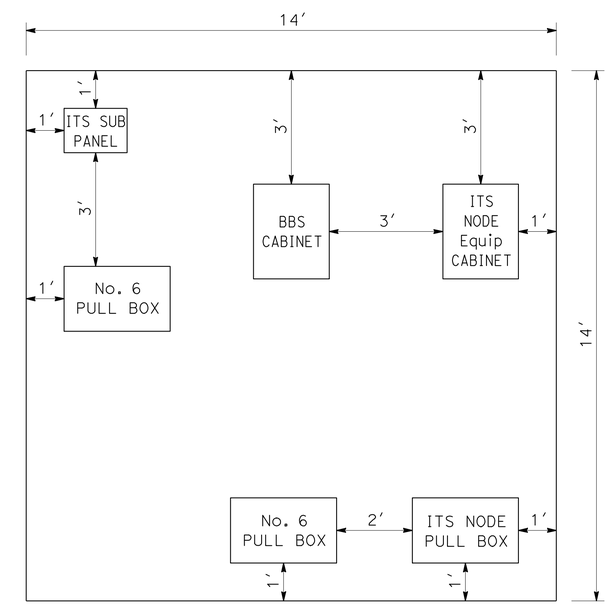

PLAN

DETAIL A

MAINTENANCE PULLOUT AT ROUTE 5/273 SEPARATION

CONSTRUCTION DETAILS

NO SCALE

C-9

STATE OF CALIFORNIA - DEPARTMENT OF TRANSPORTATION
Caltrans® DESIGN

FUNCTIONAL SUPERVISOR: STEVE TOPAL
CALCULATED-DESIGNED BY: ANDREW STECKLEIN
CHECKED BY
REVISED BY: BYRON STANLEY
DATE REVISED

P:\proj\02\0c590_plans\pse\20c590ga009.dgn

LAST REVISION 06-08-10
DATE PLOTTED => 10-AUG-2010
TIME PLOTTED => 13:47

Dist	COUNTY	ROUTE	POST MILES TOTAL PROJECT	SHEET No.	TOTAL SHEETS
02	Sha	5,44	R3.2/R18.6, L0.3/L1.8	12	120

REGISTERED CIVIL ENGINEER 07-09-10 DATE

7-12-10
PLANS APPROVAL DATE

REGISTERED PROFESSIONAL ENGINEER ANDREW P. STECKLEIN No. C67148 Exp. 9/30/10 CIVIL STATE OF CALIFORNIA

THE STATE OF CALIFORNIA OR ITS OFFICERS OR AGENTS SHALL NOT BE RESPONSIBLE FOR THE ACCURACY OR COMPLETENESS OF SCANNED COPIES OF THIS PLAN SHEET.

NOTES:

1. LAP ALL RAILS AT EXISTING RAIL LAPS.
2. A 2-POST OPTION IS AVAILABLE, BUT NOT SHOWN.
3. WHEN A POST IS REMOVED AND THE RAIL ELEMENTS ARE LAPPED, THEN THE LAPPED ELEMENTS MUST BE SUPPORTED BY A MIN OF 2 POST OR ADD ADDITIONAL LENGTH OF LAPPED ELEMENTS.
4. DOES NOT APPLY TO TERMINAL SECTION OR TRANSITION.

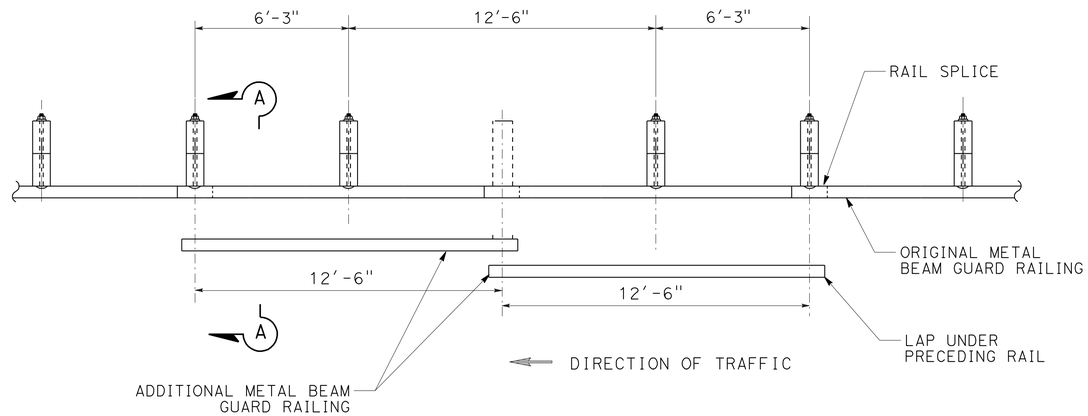

CASE 1

ONE POST OMITTED AT JUNCTION OF TWO ELEMENTS

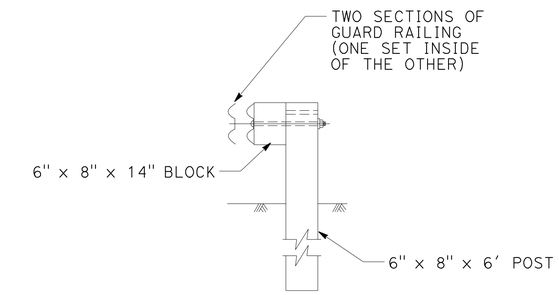

SECTION A-A

TYPICAL RAILING OVERLAP INSTALLATION AT POST

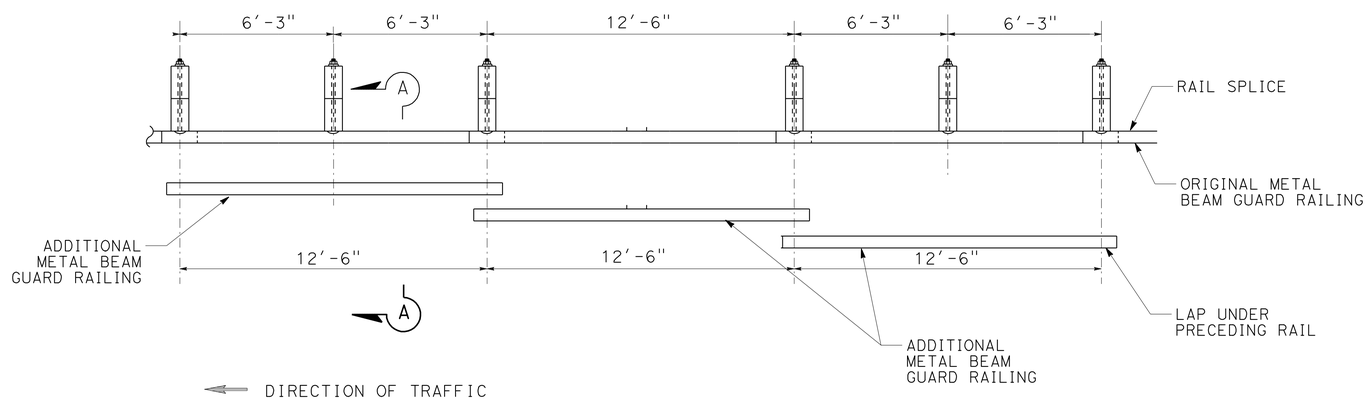

CASE 2

ONE POST OMITTED AT CENTER OF OF ELEMENT

LONG SPAN NESTED GUARD RAILING

CONSTRUCTION DETAILS

NO SCALE

C-10

REVISED BY | DATE REVISED

ANDREW STECKLEIN

CALCULATED-DESIGNED BY | CHECKED BY

FUNCTIONAL SUPERVISOR

STEVE TOPAL

STATE OF CALIFORNIA - DEPARTMENT OF TRANSPORTATION

Caltrans

DESIGN

P:\proj\02\0c590_plans\pse\20c590ga010.dgn

LAST REVISION | DATE PLOTTED => 10-AUG-2010 | TIME PLOTTED => 13:48

Dist	COUNTY	ROUTE	POST MILES TOTAL PROJECT	SHEET No.	TOTAL SHEETS
02	Sha	5,44	R3.2/R18.6, L0.3/L1.8	13	120

REGISTERED CIVIL ENGINEER 07-09-10 DATE

7-12-10
PLANS APPROVAL DATE

REGISTERED PROFESSIONAL ENGINEER ANDREW P. STECKLEIN No. C67148 Exp. 9/30/10 CIVIL STATE OF CALIFORNIA

THE STATE OF CALIFORNIA OR ITS OFFICERS OR AGENTS SHALL NOT BE RESPONSIBLE FOR THE ACCURACY OR COMPLETENESS OF SCANNED COPIES OF THIS PLAN SHEET.

NOTES:

1. EXACT LOCATION OF ALL SIGNS TO BE DETERMINED BY THE ENGINEER.
2. SIGN C40 (CA), IS BLACK ON WHITE
3. CALIFORNIA CODES ARE DESIGNATED BY (CA), OTHERWISE FEDERAL CODES ARE SHOWN.
4. SEE SHEET CS-2 FOR SIGN PLACEMENT AND QUANTITIES.
5. EXISTING UTILITIES HAVE NOT BEEN POSITIVELY LOCATED.

LEGEND:

ONE POST STATIONARY MOUNTED SIGN

TWO POST STATIONARY MOUNTED SIGN

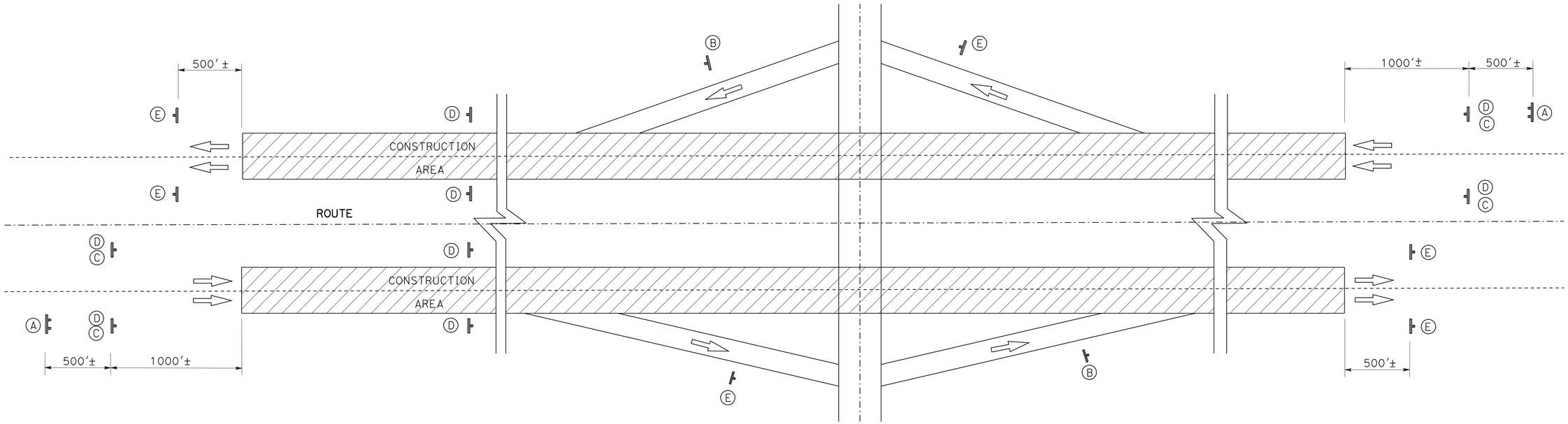

TYPICAL INTERCHANGE

CONSTRUCTION AREA SIGNS (STATIONARY MOUNTED)

SYMBOL	CODE	PANEL SIZE (INCHES)	SIGN MESSAGE	No. OF POSTS AND SIZE
A	C40 (CA)	108" x 42"	TRAFFIC FINES DOUBLED IN WORK AREA	2 - 4" x 6"
B	W20-1	48" x 48"	ROAD WORK AHEAD	1 - 4" x 6"
C	C23B (CA)	48" x 18"	COMMUNICATIONS SYSTEM	2 - 4" x 6"
D	G20-1	36" x 18"	ROAD WORK NEXT XX MILES	
E	G20-2	36" x 18"	END ROAD WORK	1 - 6" x 6"

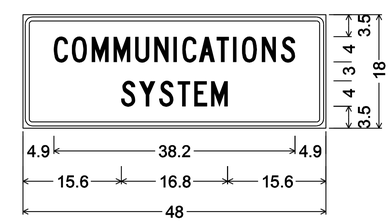

1.5" Radius, 0.6" Border, 0.4" Indent, Black on Orange;
[COMMUNICATIONS] C;
[SYSTEM] C;

C23B (CA) SIGN DETAIL

CONSTRUCTION AREA SIGNS

NO SCALE

CS-1

BYRON STANLEY — ANDREW STECKLEIN — REVISED BY — DATE REVISED
CALCULATED-DESIGNED BY — CHECKED BY
FUNCTIONAL SUPERVISOR — STEVE TOPAL
STATE OF CALIFORNIA - DEPARTMENT OF TRANSPORTATION — DESIGN
Caltrans
P:\proj1\02\0c590_plans\pse\20c5901a001.dgn

LAST REVISION — DATE PLOTTED => 10-AUG-2010 — TIME PLOTTED => 13:48

BORDER LAST REVISED 7/2/2010 | USERNAME => trmikesl | DGN FILE => 20c5901a001.dgn | RELATIVE BORDER SCALE IS IN INCHES 0 1 2 3 | UNIT 0319 | PROJECT NUMBER & PHASE 02000200001

Dist	COUNTY	ROUTE	POST MILES TOTAL PROJECT	SHEET No.	TOTAL SHEETS
02	Sha	5,44	R3.2/R18.6, L0.3/L1.8	14	120

REGISTERED CIVIL ENGINEER 07-09-10 DATE

7-12-10
PLANS APPROVAL DATE

REGISTERED PROFESSIONAL ENGINEER ANDREW P. STECKLEIN No. C67148 Exp. 9/30/10 CIVIL STATE OF CALIFORNIA

THE STATE OF CALIFORNIA OR ITS OFFICERS OR AGENTS SHALL NOT BE RESPONSIBLE FOR THE ACCURACY OR COMPLETENESS OF SCANNED COPIES OF THIS PLAN SHEET.

CONSTRUCTION AREA SIGN PLACEMENT

LOCATION	SIGN CODE	SIGN MESSAGE	No. SIGNS
ROUTE 5 PM R3.0 NB	C40 (CA)	TRAFFIC FINES DOUBLED IN CONSTRUCTION ZONES	1
ROUTE 5 PM R3.0 NB	G20-1	ROAD WORK NEXT 16 MILES	2
	C23B (CA)	COMMUNICATIONS SYSTEM	2
ROUTE 5 PM R3.0 SB	G20-2	END ROAD WORK	2
OFF RAMP TO NB ROUTE 273	G20-2	END ROAD WORK	1
ON RAMP FROM SB ROUTE 273	W20-1	ROAD WORK AHEAD	1
NB ON RAMP FROM DESCHUTES RD	W20-1	ROAD WORK AHEAD	1
SB OFF RAMP TO DESCHUTES RD	G20-2	END ROAD WORK	1
NB OFF RAMP TO BALLS FERRY RD	G20-2	END ROAD WORK	1
SB ON RAMP FROM BALLS FERRY RD	W20-1	ROAD WORK AHEAD	1
NB ON RAMP FROM NORTH ST	W20-1	ROAD WORK AHEAD	1
SB OFF RAMP TO NORTH ST	G20-2	END ROAD WORK	1
NB OFF RAMP TO RIVERSIDE AVE	G20-2	END ROAD WORK	1
SB ON RAMP FROM RIVERSIDE AVE	W20-1	ROAD WORK AHEAD	1
NB LOOP ON RAMP FROM RIVERSIDE AVE	W20-1	ROAD WORK AHEAD	1
SB OFF RAMP TO RIVERSIDE AVE	G20-2	END ROAD WORK	1
ROUTE 5 PM R7.0 NB	G20-1	ROAD WORK NEXT 12 MILES	2
ROUTE 5 PM R7.0 SB	G20-1	ROAD WORK NEXT 4 MILES	2
NB OFF RAMP TO KNIGHTON RD	G20-2	END ROAD WORK	1
SB ON RAMP FROM KNIGHTON RD	W20-1	ROAD WORK AHEAD	1
NB ON RAMP FROM KNIGHTON RD	W20-1	ROAD WORK AHEAD	1
SB OFF RAMP TO KNIGHTON RD	G20-2	END ROAD WORK	1
ROUTE 5 PM R11.0 NB	G20-1	ROAD WORK NEXT 8 MILES	2
ROUTE 5 PM R11.0 SB	G20-1	ROAD WORK NEXT 8 MILES	2
NB OFF RAMP TO SOUTH BONNYVIEW	G20-2	END ROAD WORK	1
SB ON RAMP FROM SOUTH BONNYVIEW	W20-1	ROAD WORK AHEAD	1
NB ON RAMP FROM SOUTH BONNYVIEW	W20-1	ROAD WORK AHEAD	1
SB OFF RAMP TO SOUTH BONNYVIEW	G20-2	END ROAD WORK	1
NB OFF RAMP TO CYPRESS ST	G20-2	END ROAD WORK	1
SB ON RAMP FROM CYPRESS ST	W20-1	ROAD WORK AHEAD	1
NB ON RAMP FROM CYPRESS ST	W20-1	ROAD WORK AHEAD	1
SB OFF RAMP TO CYPRESS ST	G20-2	END ROAD WORK	1
ROUTE 5 PM R 15.0 NB	G20-1	ROAD WORK NEXT 4 MILES	2
ROUTE 5 PM R15.0 SB	G20-1	ROAD WORK NEXT 12 MILES	2
NB OFF RAMP TO EB 44	G20-2	END ROAD WORK	1
NB OFF RAMP TO WB 44	W20-1	ROAD WORK AHEAD	1
SB ON RAMP FROM EB 44	W20-1	ROAD WORK AHEAD	1
SB OFF RAMP TO EB 44	G20-2	END ROAD WORK	1
SB ON RAMP FROM WB 44	W20-1	ROAD WORK AHEAD	1
NB ON RAMP FROM WB 44	W20-1	ROAD WORK AHEAD	1
NB OFF RAMP TO ROUTE 299	G20-2	END ROAD WORK	1
SB ON RAMP FROM ROUTE 299	W20-1	ROAD WORK AHEAD	1
NB ON RAMP FROM ROUTE 299	W20-1	ROAD WORK AHEAD	1
SB OFF RAMP TO ROUTE 299	G20-2	END ROAD WORK	1
NB OFF RAMP TO TWIN VIEW BLVD	G20-2	END ROAD WORK	1
SB ON RAMP FROM TWIN VIEW	W20-1	ROAD WORK AHEAD	1
NB ON RAMP FROM TWIN VIEW BLVD	W20-1	ROAD WORK AHEAD	1
SB OFF RAMP TO TWIN VIEW BLVD	G20-2	END ROAD WORK	1
ROUTE 5 PM R19.0 NB	G20-2	END ROAD WORK	2
ROUTE 5 PM R19.0 SB	G20-1	ROAD WORK NEXT 16 MILES	2
	C23B (CA)	COMMUNICATIONS SYSTEM	2
ROUTE 5 PM R19.0 SB	C40 (CA)	TRAFFIC FINES DOUBLED IN CONSTRUCTION ZONES	1
ROUTE 273 PM 19.5 NB	W20-1	ROAD WORK AHEAD	1
	C23B (CA)	COMMUNICATIONS SYSTEM	1
ROUTE 273 PM 19.5 SB	G20-2	END ROAD WORK	1
CATERPILLAR RD	G20-2	END ROAD WORK	2
CATERPILLAR RD	W20-1	ROAD WORK AHEAD	2
WB ROUTE 44 PM	W20-1	ROAD WORK AHEAD	1
	C23B (CA)	COMMUNICATIONS SYSTEM	1
WB ROUTE 44 PM	C40 (CA)	TRAFFIC FINES DOUBLED IN CONSTRUCTION ZONES	1
LIBERTY ST AT ROUTE 44	W20-1	ROAD WORK AHEAD	1
LIBERTY ST AT ROUTE 44	G20-2	END ROAD WORK	1
WB ROUTE 44 BETWEEN EAST ST AND PINE	G20-2	END ROAD WORK	1
TOTAL			77

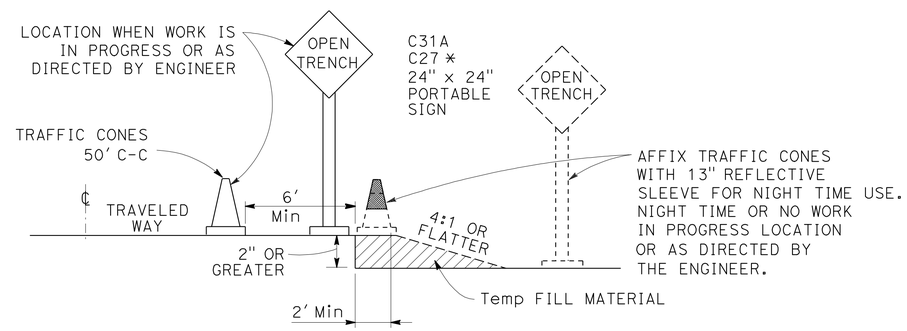

OPEN TRENCH SIGNING AND MARKING

NO SCALE

* PLACE AT 250' INTERVALS THROUGH THE OPEN TRENCH AREA, ALTERNATE C27 (OPEN TRENCH) AND C31A (NO SHOULDER) SIGNS

CONSTRUCTION AREA SIGNS

NO SCALE

CS-2

STATE OF CALIFORNIA - DEPARTMENT OF TRANSPORTATION
Caltrans® DESIGN

BYRON STANLEY — REVISED BY
ANDREW STECKLEIN — DATE REVISED
CALCULATED-DESIGNED BY
CHECKED BY
FUNCTIONAL SUPERVISOR
STEVE TOPAL

P:\proj\02\0c590_plans\pse\20c5901a002.dgn

DATE PLOTTED => 10-AUG-2010
TIME PLOTTED => 13:48
LAST REVISION

Dist	COUNTY	ROUTE	POST MILES TOTAL PROJECT	SHEET No.	TOTAL SHEETS
02	Sha	5,44	R3.2/R18.6, L0.3/L1.8	15	120

REGISTERED CIVIL ENGINEER 07-09-10 DATE

7-12-10
PLANS APPROVAL DATE

REGISTERED PROFESSIONAL ENGINEER
ANDREW P. STECKLEIN
No. C67148
Exp. 9/30/10
CIVIL
STATE OF CALIFORNIA

THE STATE OF CALIFORNIA OR ITS OFFICERS OR AGENTS SHALL NOT BE RESPONSIBLE FOR THE ACCURACY OR COMPLETENESS OF SCANNED COPIES OF THIS PLAN SHEET.

NOTES:

1. EXACT SIGN & PCMS LOCATIONS TO BE DETERMINED BY ENGINEER.
2. SEE STANDARD PLANS FOR LANE CLOSURE REQUIREMENTS.
3. USE THE "ROAD WORK AHEAD" SIGN FRAMES WHEN COZEEP OFFICERS ARE NOT REQUIRED TO BE PRESENT DURING THE ENTIRE DURATION OF THE SPEED ZONE REDUCTION.
4. COVER EXISTING SPEED LIMIT SIGNS WITHIN THE REDUCED SPEED ZONE.

LEGEND:

- PORTABLE SIGN
- DIRECTION OF TRAVEL
- PORTABLE CHANGEABLE MESSAGE SIGN (PCMS)

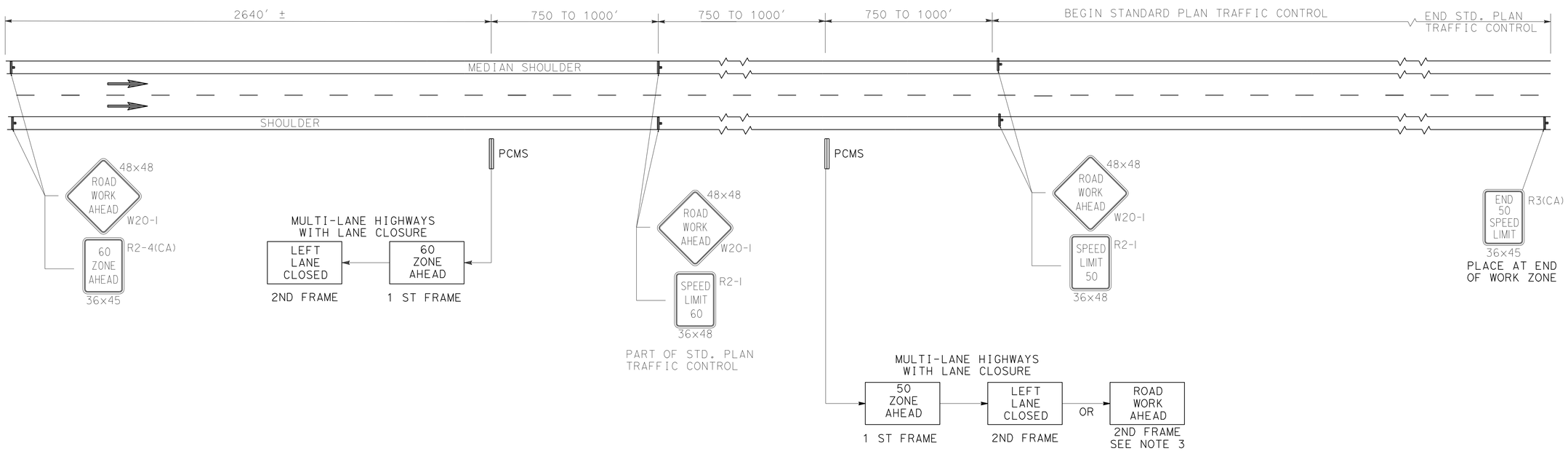

TYPICAL SIGNING FOR A 2 STAGE REDUCED SPEED ZONE

TRAFFIC HANDLING PLAN
SPEED ZONE REDUCTION
NO SCALE

TH-1

REVISED BY	DATE REVISED
BYRON STANLEY	ANDREW STECKLEIN

CALCULATED-DESIGNED BY / CHECKED BY

FUNCTIONAL SUPERVISOR: STEVE TOPAL

STATE OF CALIFORNIA - DEPARTMENT OF TRANSPORTATION
Caltrans DESIGN

P:\proj1\02\0c590_plans\pse\20c590md001.dgn

LAST REVISION DATE PLOTTED => 10-AUG-2010 TIME PLOTTED => 13:48

Dist	COUNTY	ROUTE	POST MILES TOTAL PROJECT	SHEET No.	TOTAL SHEETS
02	Sha	5,44	R3.2/R18.6, L0.3/L1.8	16	120

REGISTERED CIVIL ENGINEER 07-09-10 DATE

7-12-10
PLANS APPROVAL DATE

REGISTERED PROFESSIONAL ENGINEER ANDREW P. STECKLEIN No. C67148 Exp. 9/30/10 CIVIL STATE OF CALIFORNIA

THE STATE OF CALIFORNIA OR ITS OFFICERS OR AGENTS SHALL NOT BE RESPONSIBLE FOR THE ACCURACY OR COMPLETENESS OF SCANNED COPIES OF THIS PLAN SHEET.

NOTE:

1. SEE CONSTRUCTION AREA SIGNS AND STAGE CONSTRUCTION PLANS FOR ADDITIONAL CONSTRUCTION AREA SIGNS AND TRAFFIC HANDLING DETAILS.
2. SEE SHEET TH-1 FOR 2 STAGE SPEED ZONE REDUCTION.
3. FOR DETAILS NOT SHOWN, SEE STANDARD PLAN T10-A

LEGEND

- TRAFFIC CONE
- PORTABLE SIGN
- DIRECTION OF TRAFFIC
- PORTABLE CHANGEABLE MESSAGE SIGN (PCMS)
- PORTABLE RADAR TRAILER

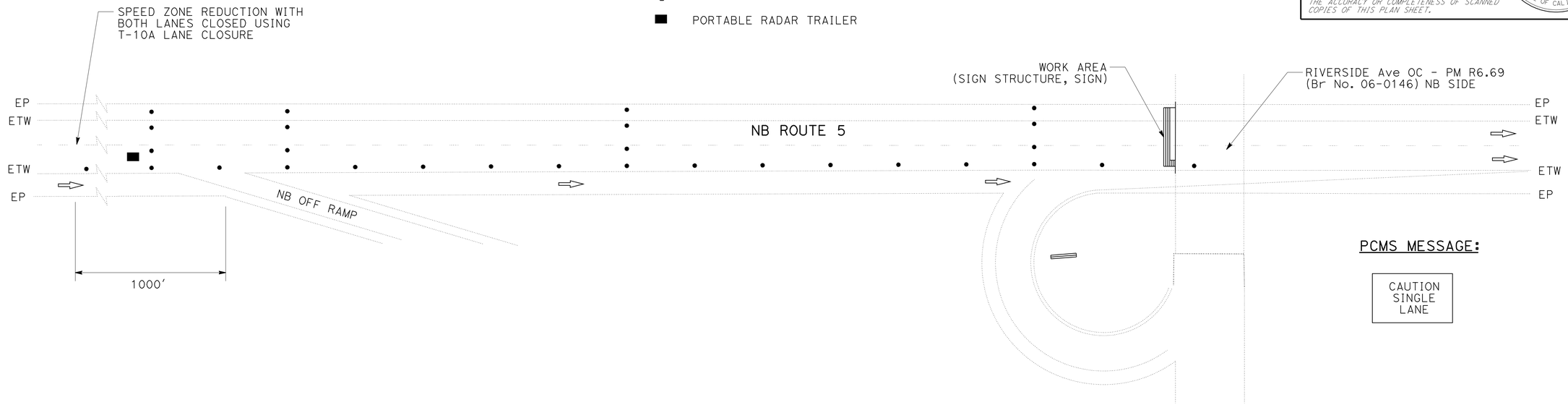

PLACEMENT OF SIGN STRUCTURE AND SIGN AT RIVERSIDE Ave OC

PCMS MESSAGE:

CAUTION
SINGLE
LANE

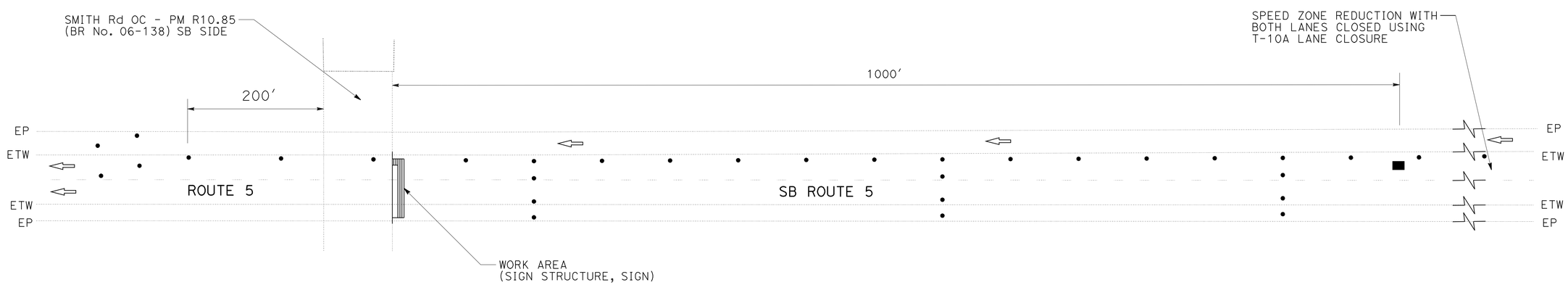

PLACEMENT OF SIGN STRUCTURE AND SIGN AT SMITH Rd OC

THIS PLAN ACCURATE FOR TRAFFIC HANDLING WORK ONLY

TRAFFIC HANDLING PLAN
RIVERSIDE AVENUE AND SMITH ROAD
CHANGEABLE MESSAGE SIGNS

SCALE: 1" = 20′

TH-2

STATE OF CALIFORNIA - DEPARTMENT OF TRANSPORTATION
Caltrans DESIGN

FUNCTIONAL SUPERVISOR: STEVE TOPAL
CALCULATED-DESIGNED BY: BYRON STANLEY
CHECKED BY: ANDREW STECKLEIN
REVISED BY / DATE REVISED

P:\proj1\02\0c590_plans\pse\20c590md002.dgn

LAST REVISION
DATE PLOTTED => 10-AUG-2010
TIME PLOTTED => 13:48

Dist	COUNTY	ROUTE	POST MILES TOTAL PROJECT	SHEET No.	TOTAL SHEETS
02	Sha	5,44	R3.2/R18.6, L0.3/L1.8	17	120

REGISTERED CIVIL ENGINEER 07-09-10 DATE

7-12-10
PLANS APPROVAL DATE

REGISTERED PROFESSIONAL ENGINEER ANDREW P. STECKLEIN No. C67148 Exp. 9/30/10 CIVIL STATE OF CALIFORNIA

THE STATE OF CALIFORNIA OR ITS OFFICERS OR AGENTS SHALL NOT BE RESPONSIBLE FOR THE ACCURACY OR COMPLETENESS OF SCANNED COPIES OF THIS PLAN SHEET.

NOTES:

1. EXACT LOCATION OF TEMPORARY RAILING (TYPE K) AND TEMPORARY CRASH CUSHION (TS14) TO BE DETERMINED BY THE ENGINEER.
2. REFER TO SHEETS C-2 AND C-3 FOR CONSTRUCTION FEATURES NOT SHOWN.

CONSTRUCTION AREA SIGNS (STATIONARY MOUNTED)

SIGN CODE	MESSAGE	POSTS		PANEL SIZE	No. OF SIGNS CS-1
		No.	SIZE		
C30A (CA)	SHOULDER CLOSED	1	4" x 6"	48" x 48"	1
W21-5bR	RIGHT SHOULDER CLOSED AHEAD	1	4" x 6"	48" x 48"	1
				SUBTOTAL	2

LEGEND:

DIRECTION OF TRAFFIC

HMA PAVING

CHANNELIZER (SURFACE MOUNTED)

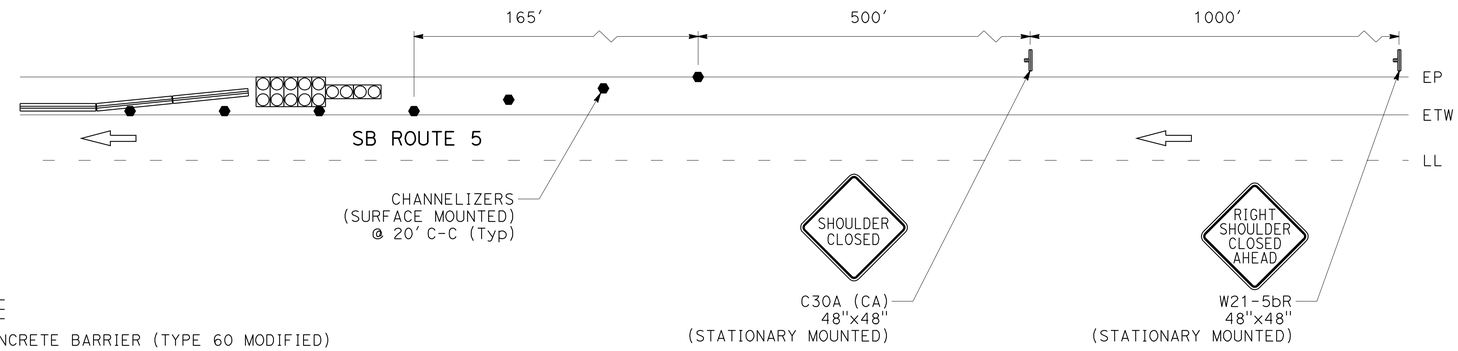

DETAIL A

CHANNELIZERS AND CONSTRUCTION AREA SIGNS

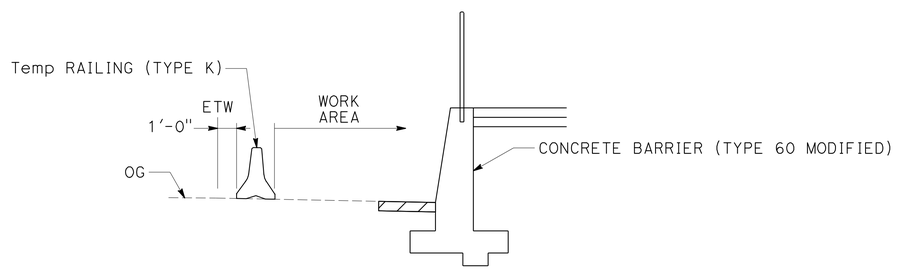

SECTION A-A

TYPICAL PLACEMENT OF TEMPORARY RAILING (TYPE K)

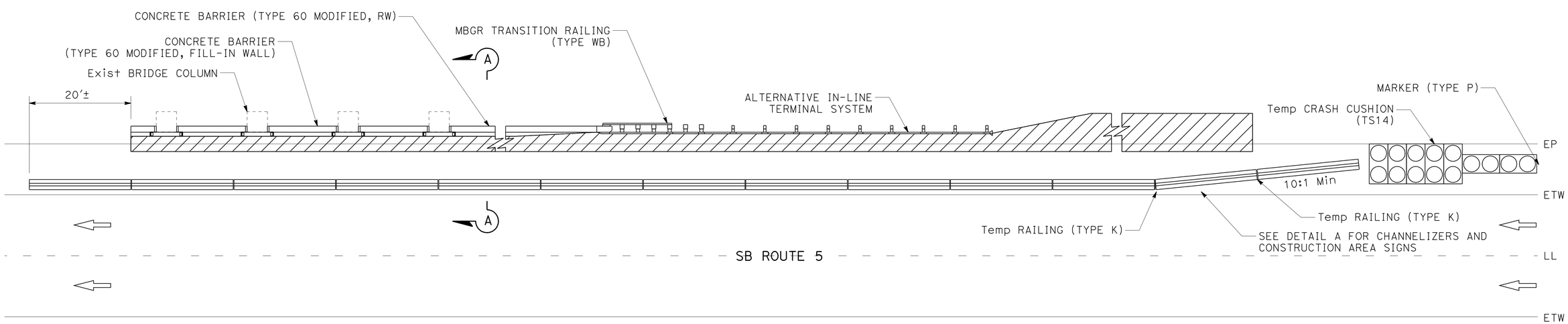

PLAN

TYPICAL TEMPORARY RAILING (TYPE K) LAYOUT FOR HARTNELL OC CONCRETE BARRIER

THIS PLAN ACCURATE FOR TRAFFIC HANDLING INFORMATION ONLY.

TRAFFIC HANDLING PLAN

NO SCALE

TH-3

REVISED BY | DATE REVISED

TOBY CRAWFORD | ANDREW STECKLEIN

CALCULATED-DESIGNED BY | CHECKED BY

FUNCTIONAL SUPERVISOR: STEVE TOPAL

STATE OF CALIFORNIA - DEPARTMENT OF TRANSPORTATION

Caltrans® DESIGN

P:\proj\02\0c590_plans\pse\20c590md003.dgn

LAST REVISION | DATE PLOTTED => 10-AUG-2010 | TIME PLOTTED => 13:48

DIST	COUNTY	ROUTE	POST MILES TOTAL PROJECT	SHEET No	TOTAL SHEETS
02	Sha	5,44	R3.2/R18.6, L0.3/L1.8	18	120

K. C. Liu
REGISTERED CIVIL ENGINEER — 6/1/10 DATE

7-12-10
PLANS APPROVAL DATE

REGISTERED PROFESSIONAL ENGINEER — K.C. LIU — No. C50291 — Exp. 6-30-11 — CIVIL — STATE OF CALIFORNIA

The State of California or its officers or agents shall not be responsible for the accuracy or completeness of electronic copies of this plan sheet.

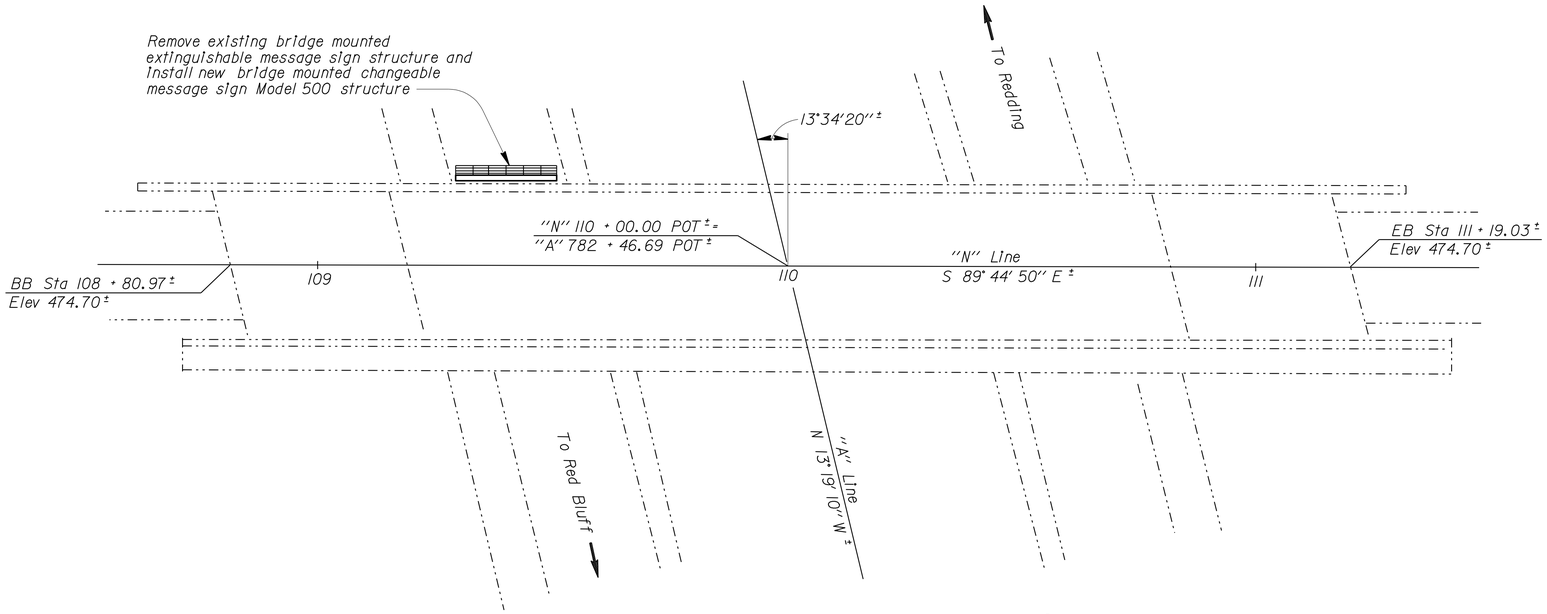

LOCATION PLAN

N

NOTES:

1. For details not shown, see "STANDARD PLANS MAY 2006".
2. All high strength (HS) bolts shall be snug tightened.
3. Minimum size fillet weld is 1/4" or smaller piece thickness unless otherwise noted.
4. Structure shall be galvanized after fabrication.
5. Contractor shall provide resin capsule and anchor bolt layout before bolts are installed.
6. Changeable message sign will be state-furnished.

STANDARD PLANS DATED MAY, 2006

A10A ACRONYMS AND ABBREVIATIONS (SHEET 1 OF 2)
A10B ACRONYMS AND ABBREVIATIONS (SHEET 2 OF 2)

LEGEND

Existing structure
New Installations

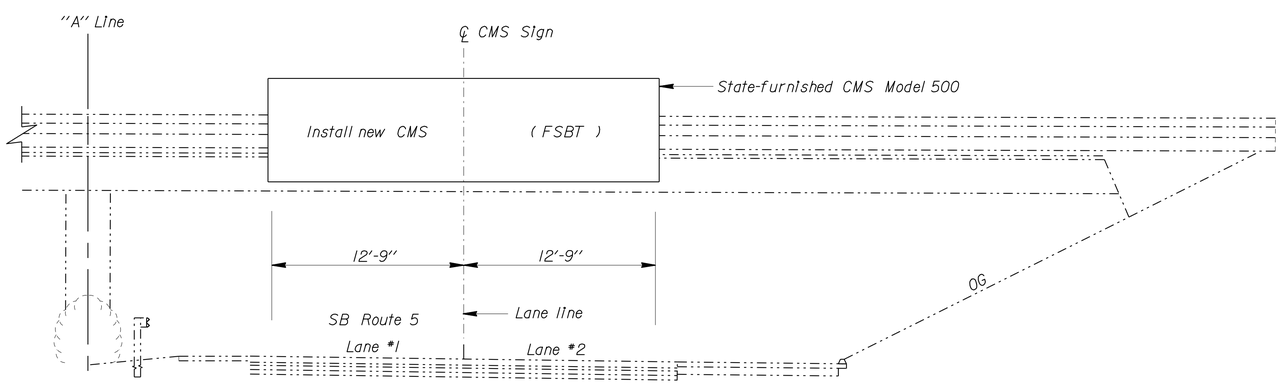

ELEVATION

Smith Road Overcrossing
Bridge No. 06-138

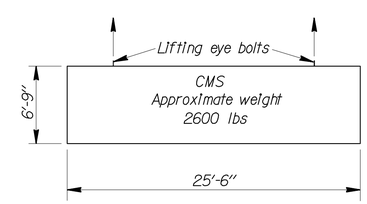

LIFTING DIAGRAM

Note: CMS shall be lifted separately from frame

STANDARD PLAN SHEET NO.
DETAIL NO.

NOTE:
THE CONTRACTOR SHALL VERIFY ALL CONTROLLING FIELD DIMENSIONS BEFORE ORDERING OR FABRICATING ANY MATERIAL.

NO SCALE

BRANCH CHIEF Jeffrey B Woody

	BY	CHECKED
DESIGN	DEVANG VORA	RAHA HEZAR
DETAILS	R. YEE	RAHA HEZAR
QUANTITIES	DEVANG VORA	RAHA HEZAR

STATE OF CALIFORNIA
DEPARTMENT OF TRANSPORTATION

DIVISION OF ENGINEERING SERVICES
DESIGN AND TECHNICAL SERVICES
SPECIAL DESIGNS BRANCH
A

BRIDGE NO. 06-138
POST MILE 10.85

SMITH ROAD OVERCROSSING
CHANGEABLE MESSAGE SIGN MODEL 500 LOCATION PLAN

SDS-1

(ENGLISH) SPECIAL DESIGNS BRANCH BORDER SHEET (REV. 7-1-09)

ORIGINAL SCALE IN INCHES FOR REDUCED PLANS 0 1 2 3

CU 02
EA 0C5901

DISREGARD PRINTS BEARING EARLIER REVISION DATES

REVISION DATES: 5/4/10 5/26/10 5/27/10 5/28/10 6/1/10 7/8/10

SHEET OF

FILE => /2010sd/02-0C5901/sds1.dgn

USERNAME => ttmirkes1 DATE PLOTTED => 10-AUG-2010 TIME PLOTTED => 13:48

DIST	COUNTY	ROUTE	POST MILES TOTAL PROJECT	SHEET No	TOTAL SHEETS
02	Sha	5,44	R3.2/R18.6, L0.3/L1.8	19	120

K. C. Liu 6/1/10
REGISTERED CIVIL ENGINEER DATE

7-12-10
PLANS APPROVAL DATE

REGISTERED PROFESSIONAL ENGINEER K.C. LIU No. C50291 Exp. 6-30-11 CIVIL STATE OF CALIFORNIA

The State of California or its officers or agents shall not be responsible for the accuracy or completeness of electronic copies of this plan sheet.

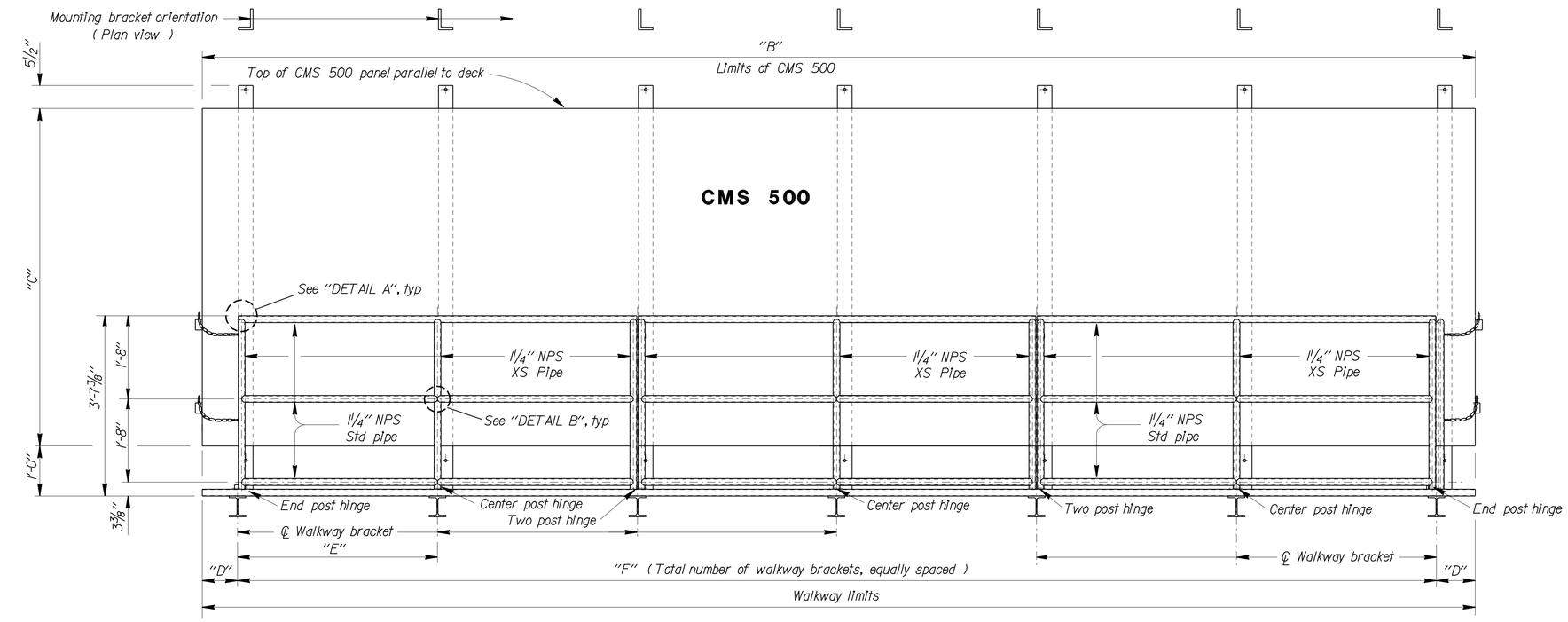

FRONT VIEW

Note: Upper and lower shelf angle not shown

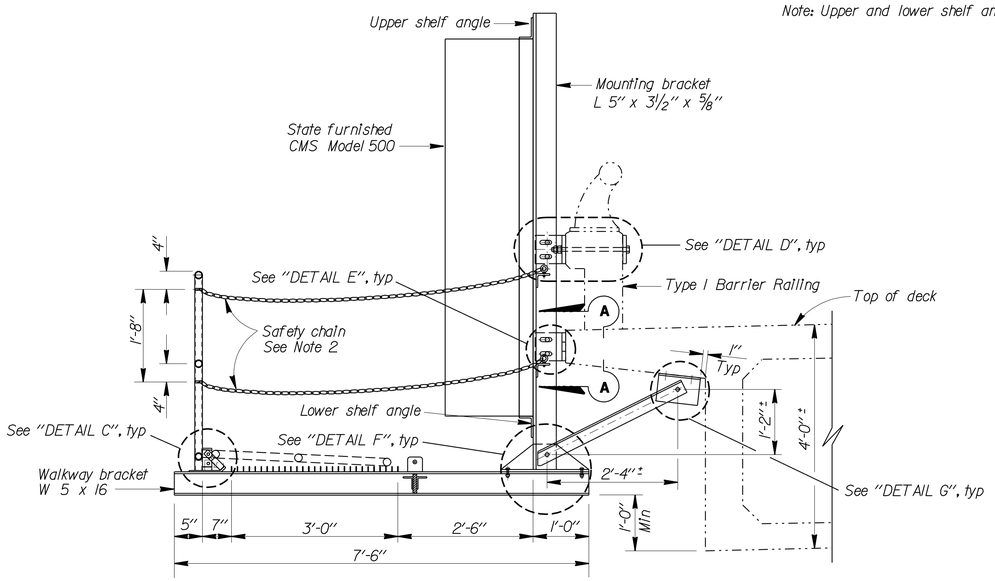

TYPICAL SECTION

Smith Road Overcrossing

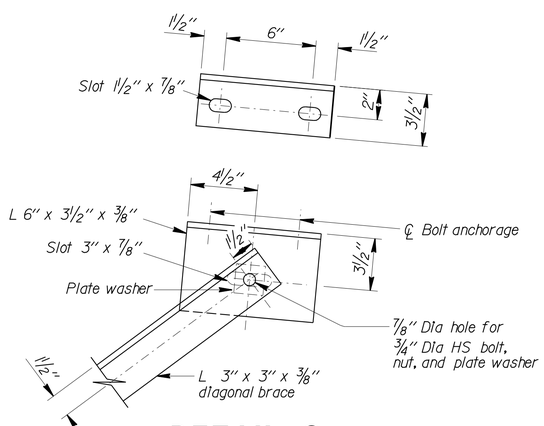

DETAIL G

TABLE						
SIGN	PANEL SIZE	"B"	"C"	"D"	"E"	"F"
CMS	25'-6" x 6'-9"	25'-6"	6'-9"	9"	4'-0"	7

NOTES:

1. Special care shall be taken to insure that the complete hinge and latch assembly will hold the safety railing in a steady manner, free of wobble while in the raised position. Max allowable displacement from vertical at top of railing when latched shall be 1".
2. Safety chain shall be 1/4" galvanized steel coil chain, approximately 12 links per foot. Length shall be min which allows lock-up of safety railing. Attach chain to eye bolt using 1/4" open-end link. Grade 43 high test chain ASTM A413.
3. For "DETAIL A", "DETAIL B", "DETAIL C", "DETAIL D", "DETAIL E" and "SECTION A-A", see "MISCELLANEOUS DETAILS" sheet.
4. For "DETAIL F", see "PANEL ATTACHMENT DETAILS" sheet.
5. 3/8" Drop forged shoulder type eye bolt with hex nut, 2 washers and lock washer. Shank = 1 1/4" long.

STANDARD PLAN SHEET NO.
DETAIL NO.

NOTE:
THE CONTRACTOR SHALL VERIFY ALL CONTROLLING FIELD DIMENSIONS BEFORE ORDERING OR FABRICATING ANY MATERIAL.

NO SCALE

BRANCH CHIEF Jeffrey B Woody

	BY	CHECKED
DESIGN	DEVANG VORA	RAHA HEZAR
DETAILS	R. YEE	RAHA HEZAR
QUANTITIES	DEVANG VORA	RAHA HEZAR

STATE OF CALIFORNIA
DEPARTMENT OF TRANSPORTATION

DIVISION OF ENGINEERING SERVICES
DESIGN AND TECHNICAL SERVICES
SPECIAL DESIGNS BRANCH
A

BRIDGE NO. 06-138
POST MILE 10.9

SMITH ROAD OVERCROSSING
CHANGEABLE MESSAGE SIGN MODEL 500 BRIDGE MOUNTED (FSBT) LAYOUT

SDS-2

(ENGLISH) SPECIAL DESIGNS BRANCH BORDER SHEET (REV. 7-1-09)

ORIGINAL SCALE IN INCHES FOR REDUCED PLANS 0 1 2 3

CU 02
EA 0C5901

DISREGARD PRINTS BEARING EARLIER REVISION DATES

REVISION DATES 5/27/10 5/11/10 5/13/10 5/24/10 7/8/10

SHEET OF

FILE => /2010sd/02-0C5901/sds2.dgn

USERNAME => trmikesi DATE PLOTTED => 10-AUG-2010 TIME PLOTTED => 13:48

DIST	COUNTY	ROUTE	POST MILES TOTAL PROJECT	SHEET No	TOTAL SHEETS
02	Sha	5,44	R3.2/R18.6, L0.3/L1.8	20	120

K. C. Liu 6/1/10
REGISTERED CIVIL ENGINEER DATE

7-12-10
PLANS APPROVAL DATE

REGISTERED PROFESSIONAL ENGINEER K.C. LIU No. C50291 Exp. 6-30-11 CIVIL STATE OF CALIFORNIA

The State of California or its officers or agents shall not be responsible for the accuracy or completeness of electronic copies of this plan sheet.

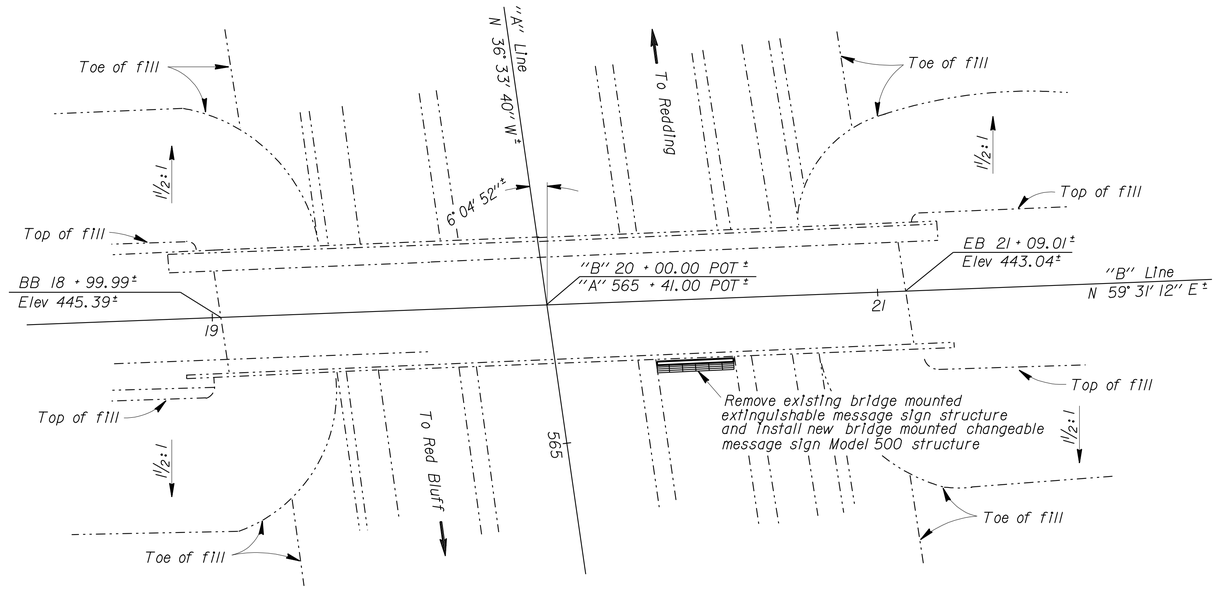

LOCATION PLAN

NOTES:

1. For details not shown, see "STANDARD PLANS MAY 2006".
2. All high strength (HS) bolts shall be snug tightened.
3. Minimum size fillet weld is ¼" or smaller piece thickness unless otherwise noted.
4. Structure shall be galvanized after fabrication.
5. Contractor shall provide resin capsule and anchor bolt layout before bolts are installed.
6. Changeable message sign will be state-furnished.

STANDARD PLANS DATED MAY, 2006

A10A ACRONYMS AND ABBREVIATIONS (SHEET 1 OF 2)
A10B ACRONYMS AND ABBREVIATIONS (SHEET 2 OF 2)

LEGEND

Existing structure
New installations

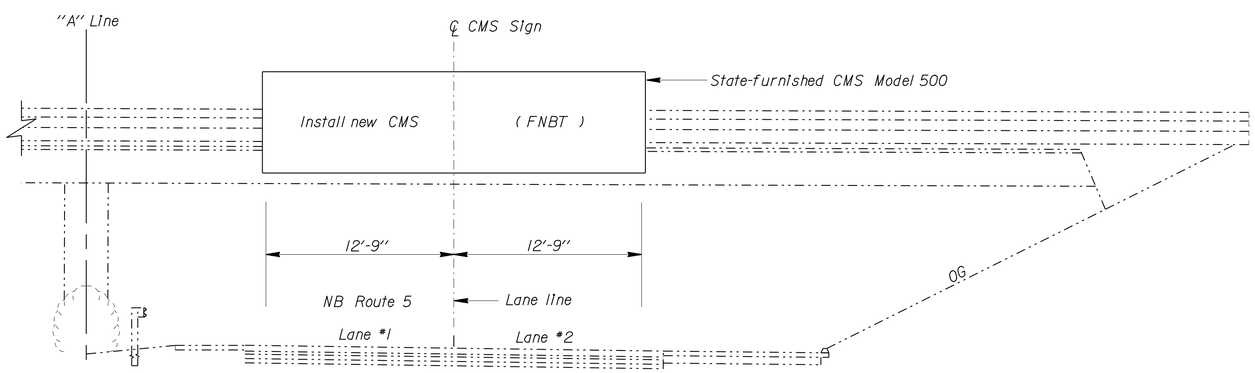

ELEVATION

Riverside Avenue Overcrossing
Bridge No. 06-146

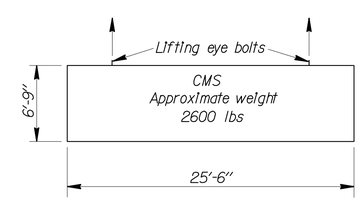

LIFTING DIAGRAM

Note: CMS shall be lifted separately from frame

NOTE:
THE CONTRACTOR SHALL VERIFY ALL CONTROLLING FIELD DIMENSIONS BEFORE ORDERING OR FABRICATING ANY MATERIAL.

STANDARD PLAN SHEET NO.
DETAIL NO.

NO SCALE

BRANCH CHIEF Jeffrey B Woody	DESIGN	BY DEVANG VORA	CHECKED RAHA HEZAR
	DETAILS	BY R. YEE	CHECKED RAHA HEZAR
	QUANTITIES	BY DEVANG VORA	CHECKED RAHA HEZAR

STATE OF CALIFORNIA
DEPARTMENT OF TRANSPORTATION

DIVISION OF ENGINEERING SERVICES
DESIGN AND TECHNICAL SERVICES
SPECIAL DESIGNS BRANCH A

BRIDGE NO. 06-146
POST MILE 6.74

RIVERSIDE AVENUE OVERCROSSING
CHANGEABLE MESSAGE SIGN MODEL 500 LOCATION PLAN

SDS-3

(ENGLISH) SPECIAL DESIGNS BRANCH BORDER SHEET (REV. 7-1-09)

ORIGINAL SCALE IN INCHES FOR REDUCED PLANS 0 1 2 3

CU 02
EA 0C5901

DISREGARD PRINTS BEARING EARLIER REVISION DATES
REVISION DATES 5/4/10 5/13/10 5/20/10 6/3/10 7/8/10

SHEET OF

FILE => /2010sd/02-0C5901/sds3.dgn

USERNAME => trmrkesl DATE PLOTTED => 10-AUG-2010 TIME PLOTTED => 13:49

DIST	COUNTY	ROUTE	POST MILES TOTAL PROJECT	SHEET No	TOTAL SHEETS
02	Sha	5,44	R3.2/R18.6, L0.3/L1.8	21	120

K. C. Liu 6/1/10
REGISTERED CIVIL ENGINEER DATE

7-12-10
PLANS APPROVAL DATE

REGISTERED PROFESSIONAL ENGINEER K.C. LIU No. C50291 Exp. 6-30-11 CIVIL STATE OF CALIFORNIA

The State of California or its officers or agents shall not be responsible for the accuracy or completeness of electronic copies of this plan sheet.

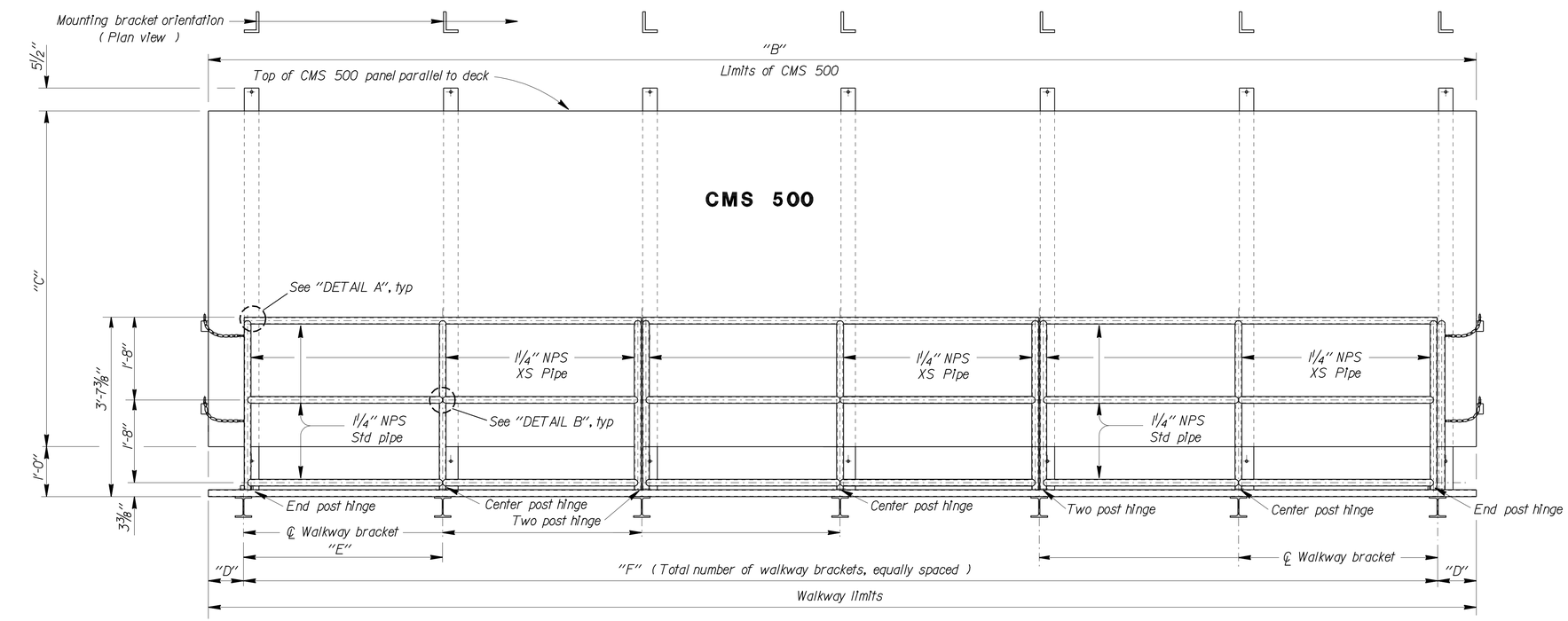

FRONT VIEW

Note: Upper and lower shelf angle not shown

TABLE						
SIGN	PANEL SIZE	"B"	"C"	"D"	"E"	"F"
CMS	25'-6" x 6'-9"	25'-6"	6'-9"	9"	4'-0"	7

NOTES:

1. Special care shall be taken to insure that the complete hinge and latch assembly will hold the safety railing in a steady manner, free of wobble while in the raised position. Max allowable displacement from vertical at top of railing when latched shall be 1".
2. Safety chain shall be ¼" galvanized steel coil chain, approximately 12 links per foot. Length shall be min which allows lock-up of safety railing. Attach chain to eye bolt using ¼" open-end link. Grade 43 high test chain ASTM A413.
3. For "DETAIL A", "DETAIL B", "DETAIL C", "DETAIL D", "DETAIL E" and "SECTION A-A", see "MISCELLANEOUS DETAILS" sheet.
4. For "DETAIL F", see "PANEL ATTACHMENT DETAILS" sheet.
5. ⅜" Drop forged shoulder type eye bolt with hex nut, 2 washers and lock washer. Shank = 1¼" long.

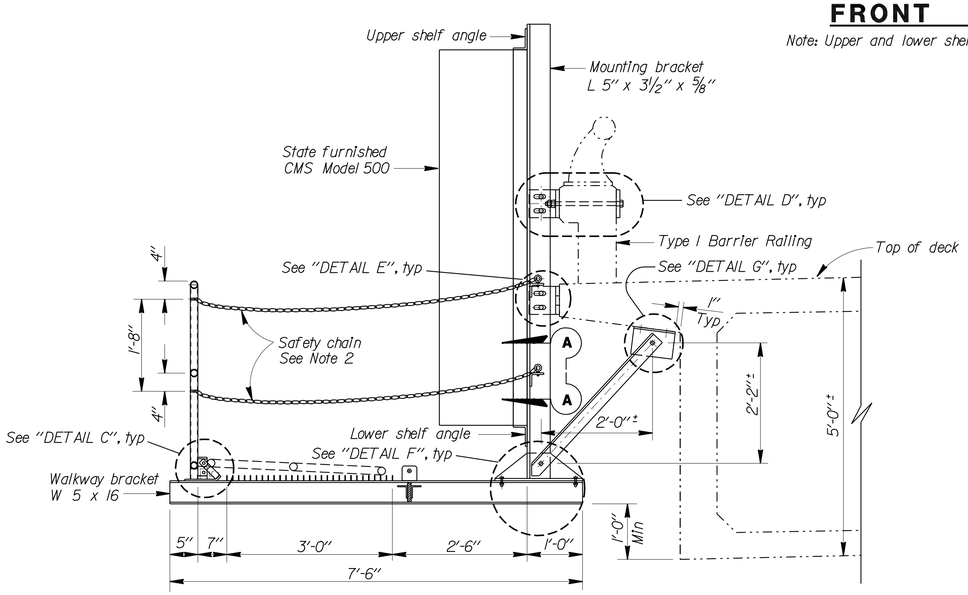

TYPICAL SECTION

Riverside Avenue Overcrossing

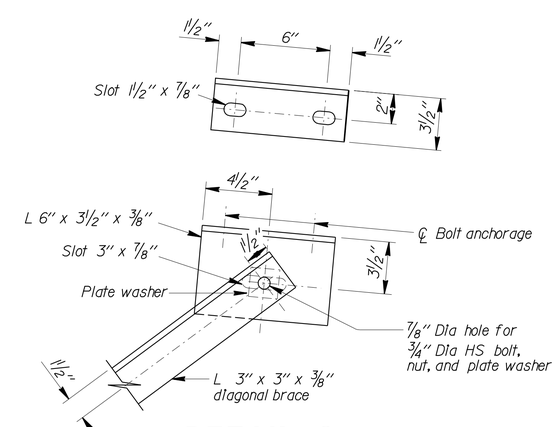

DETAIL G

STANDARD PLAN SHEET NO.

DETAIL NO.

NOTE:
THE CONTRACTOR SHALL VERIFY ALL CONTROLLING FIELD DIMENSIONS BEFORE ORDERING OR FABRICATING ANY MATERIAL.

NO SCALE

BRANCH CHIEF	Jeffrey B Woody			
DESIGN	BY DEVANG VORA	CHECKED RAHA HEZAR		
DETAILS	BY R. YEE	CHECKED RAHA HEZAR		
QUANTITIES	BY DEVANG VORA	CHECKED RAHA HEZAR		

STATE OF CALIFORNIA
DEPARTMENT OF TRANSPORTATION

DIVISION OF ENGINEERING SERVICES
DESIGN AND TECHNICAL SERVICES
SPECIAL DESIGNS BRANCH
A

BRIDGE NO. 06-146
POST MILE 6.74

RIVERSIDE AVENUE OVERCROSSING

CHANGEABLE MESSAGE SIGN MODEL 500 BRIDGE MOUNTED (FNBT) LAYOUT

SDS-4

(ENGLISH) SPECIAL DESIGNS BRANCH BORDER SHEET (REV. 7-1-09)

ORIGINAL SCALE IN INCHES FOR REDUCED PLANS 0 1 2 3

CU 02
EA 0C5901

DISREGARD PRINTS BEARING EARLIER REVISION DATES

REVISION DATES 5/4/10 5/17/10 5/27/10 6/28/10 7/8/10

SHEET OF

FILE => /2010sd/02-0C5901/sds4.dgn

USERNAME => trmikes1 DATE PLOTTED => 10-AUG-2010 TIME PLOTTED => 13:49

DIST	COUNTY	ROUTE	POST MILES TOTAL PROJECT	SHEET No	TOTAL SHEETS
02	Sha	5,44	R3.2/R18.6, L0.3/L1.8	22	120

K. C. Liu
REGISTERED CIVIL ENGINEER 6/1/10 DATE

7-12-10
PLANS APPROVAL DATE

REGISTERED PROFESSIONAL ENGINEER K.C. LIU No. C50291 Exp. 6-30-11 CIVIL STATE OF CALIFORNIA

The State of California or its officers or agents shall not be responsible for the accuracy or completeness of electronic copies of this plan sheet.

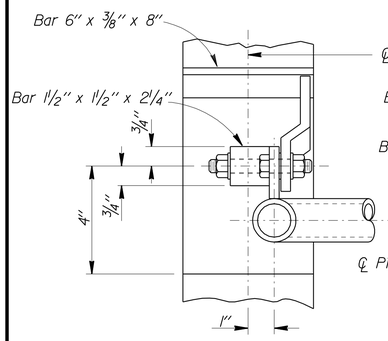

END POST HINGE

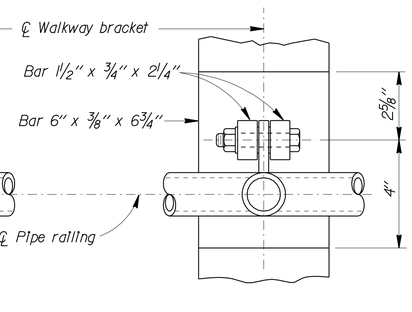

CENTER POST WELDED HINGE - PLAN

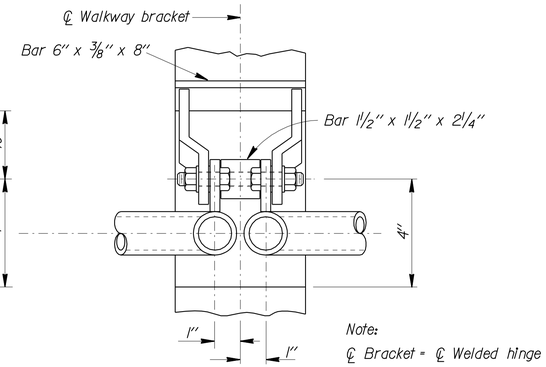

Note:
℄ Bracket = ℄ Welded hinge

TWO POST HINGE

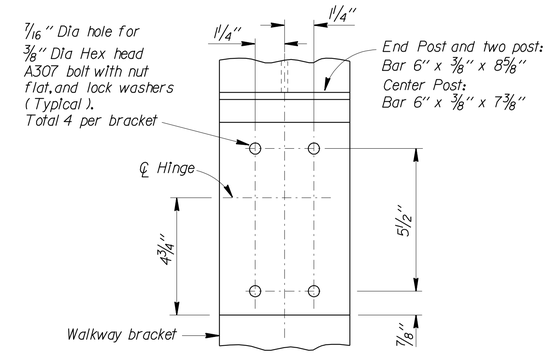

TYPICAL BOLTED (ALTERNATIVE) HINGED CONNECTION

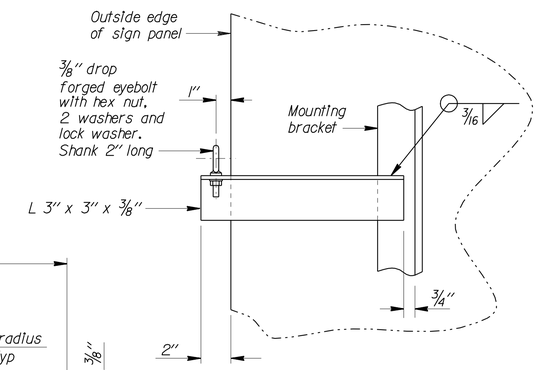

SECTION A-A

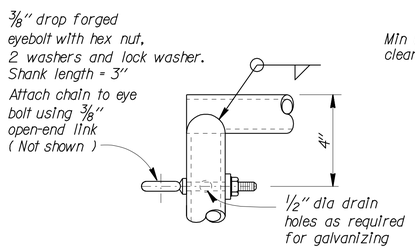

DETAIL A

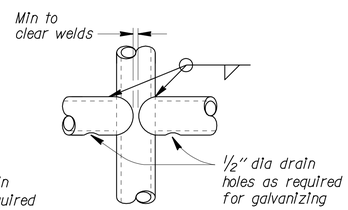

DETAIL B

Note: Alternative venting methods may be used if approved by the Engineer.

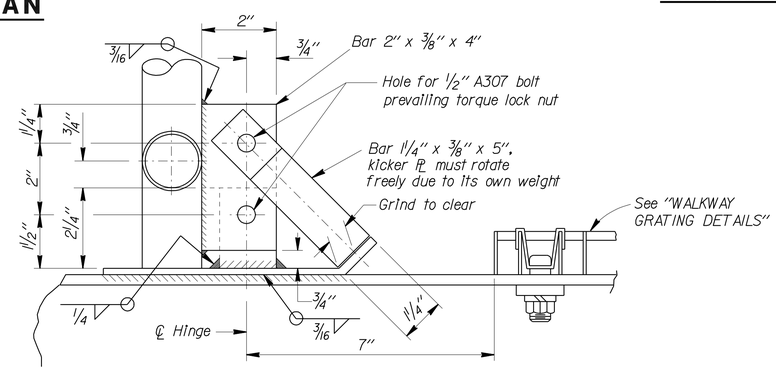

DETAIL C

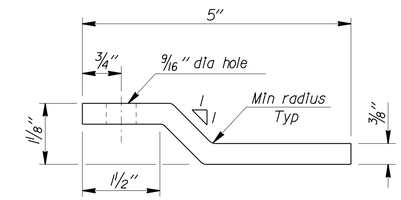

PLAN - KICKER BAR

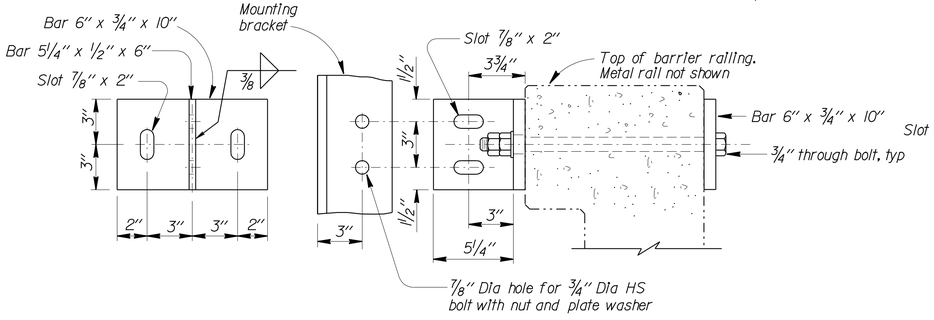

DETAIL D

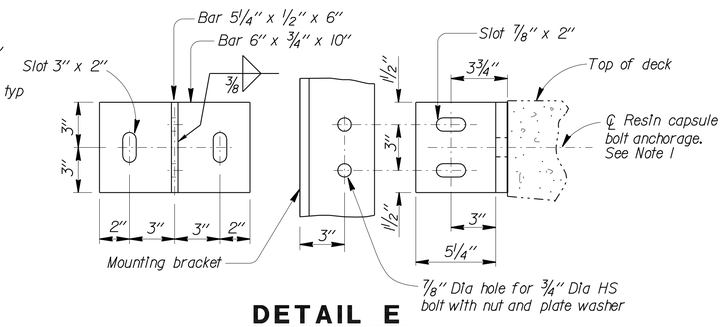

DETAIL E

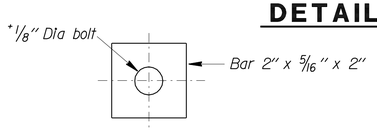

PLATE WASHER

For slotted holes, where noted

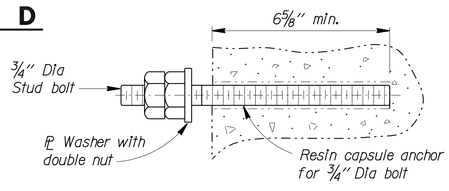

RESIN CAPSULE BOLT ANCHORAGE

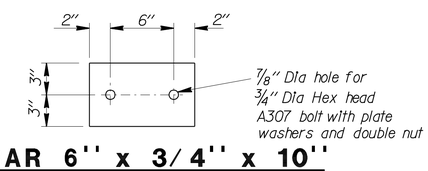

BAR 6" x 3/4" x 10"

NOTES:

1. Resin capsule bolt shall not interfere with existing anchorages.
2. Resin capsule anchorage is subject to approval of Engineer. Installation procedure shall comply with manufacturer's instructions.
3. Where resin capsule bolt anchorage coincides with existing bridge mounted sign anchorage, mounted bracket shall be moved along the edge of deck to create a minimum distance of 6 inches measured from the centerline of nearest resin capsule bolt anchorage to the centerline of existing bridge mounted sign anchorage.
4. Resin capsule bolt anchors shall be installed in sound concrete free of cracks or delamination.
5. Existing bridge mounted sign anchors shall be cut flush with edge of deck by mechanical means. Damage to concrete resulting from cut shall be repaired at the Contractor's expense to the Engineer's satisfaction. Cut ends of anchors shall be coated with 2 coats of zinc rich primer.

NOTE:
THE CONTRACTOR SHALL VERIFY ALL CONTROLLING FIELD DIMENSIONS BEFORE ORDERING OR FABRICATING ANY MATERIAL.

NO SCALE

BRANCH CHIEF Jeffrey B Woody

	BY	CHECKED
DESIGN	DEVANG VORA	RAHA HEZAR
DETAILS	R. YEE	RAHA HEZAR
QUANTITIES	DEVANG VORA	RAHA HEZAR

STATE OF CALIFORNIA
DEPARTMENT OF TRANSPORTATION

DIVISION OF ENGINEERING SERVICES
DESIGN AND TECHNICAL SERVICES
SPECIAL DESIGNS BRANCH
A

BRIDGE NO. Various
POST MILE Various

CHANGEABLE MESSAGE SIGN MODEL 500
MISCELLANEOUS DETAILS

SDS-5

(ENGLISH) SPECIAL DESIGNS BRANCH BORDER SHEET (REV. 7-1-09)

ORIGINAL SCALE IN INCHES FOR REDUCED PLANS 0 1 2 3

CU 02
EA 0C5901

DISREGARD PRINTS BEARING EARLIER REVISION DATES

REVISION DATES 5/1/10 5/11/10 5/27/10 5/28/10 7/8/10

SHEET OF

FILE => /2010sd/02-0C5901/sds5.dgn

USERNAME => trmikesi DATE PLOTTED => 10-AUG-2010 TIME PLOTTED => 13:49

DIST	COUNTY	ROUTE	POST MILES TOTAL PROJECT	SHEET No	TOTAL SHEETS
02	Sha	5,44	R3.2/R18.6, LO.3/L1.8	23	120

K. C. Liu — REGISTERED CIVIL ENGINEER — DATE 6/1/10

7-12-10 — PLANS APPROVAL DATE

REGISTERED PROFESSIONAL ENGINEER K.C. LIU No. C50291 Exp. 6-30-11 CIVIL STATE OF CALIFORNIA

The State of California or its officers or agents shall not be responsible for the accuracy or completeness of electronic copies of this plan sheet.

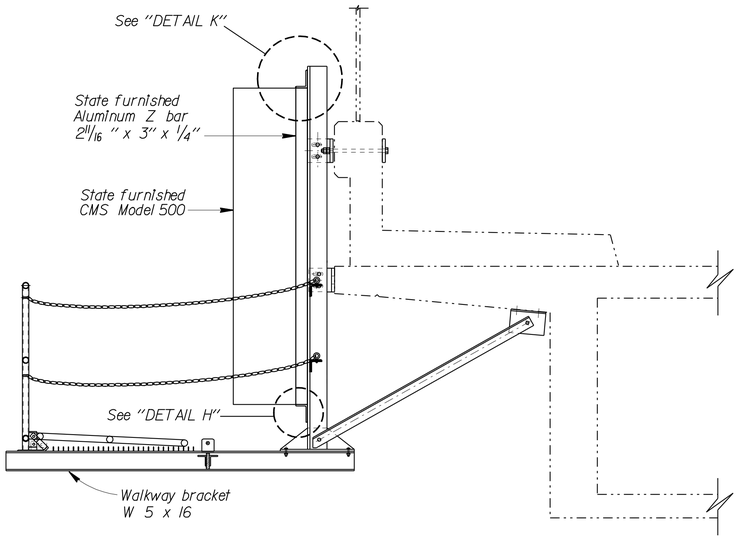

TYPICAL SECTION FRAME

For CMS 500

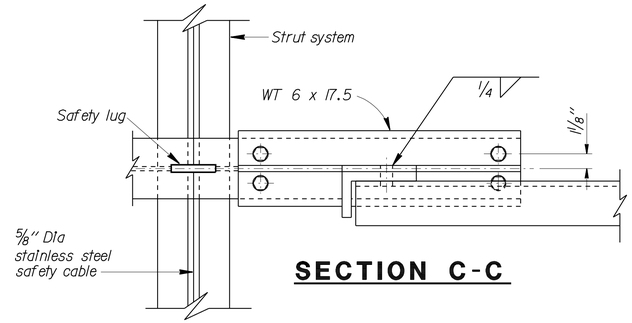

SECTION C-C

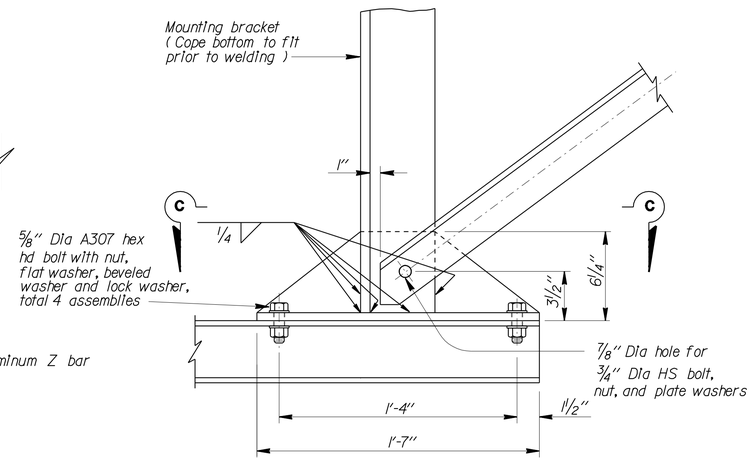

DETAIL F

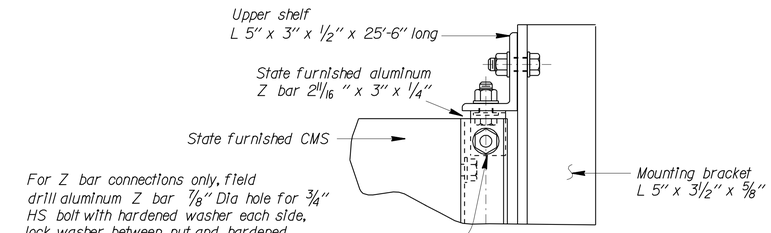

DETAIL K

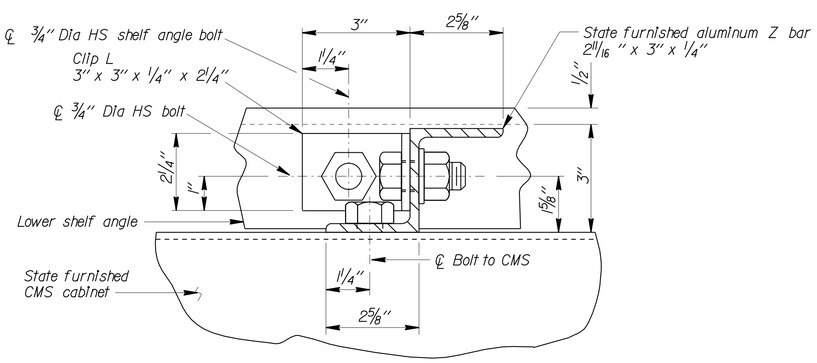

PLAN VIEW Z BAR AT LOWER SHELF ANGLE

Note: Upper shelf angle similar

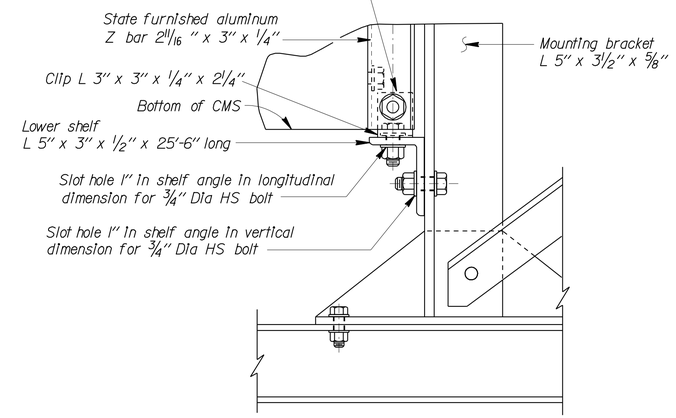

DETAIL H

Note: Walkway grating not shown for clarity

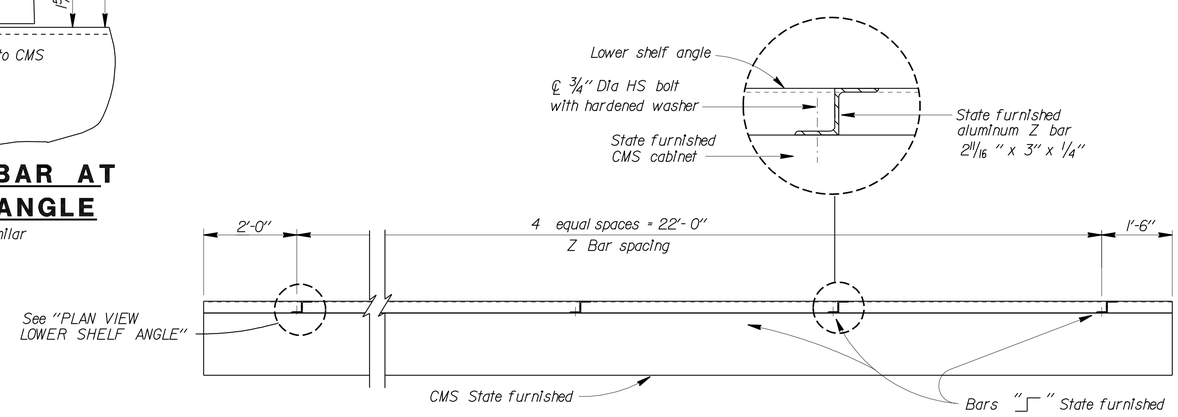

ALUMINUM Z BAR SPACING

Note: Contractor shall verify Z bar spacing prior to drilling holes in shelf angle

NOTE:
THE CONTRACTOR SHALL VERIFY ALL CONTROLLING FIELD DIMENSIONS BEFORE ORDERING OR FABRICATING ANY MATERIAL.

NO SCALE

BRANCH CHIEF Jeffrey B. Woody

	BY	CHECKED
DESIGN	DEVANG VORA	RAHA HEZAR
DETAILS	R. YEE	RAHA HEZAR
QUANTITIES	DEVANG VORA	RAHA HEZAR

STATE OF CALIFORNIA DEPARTMENT OF TRANSPORTATION

DIVISION OF ENGINEERING SERVICES DESIGN AND TECHNICAL SERVICES SPECIAL DESIGNS BRANCH A

BRIDGE NO. Various — POST MILE Various

CHANGEABLE MESSAGE SIGN MODEL 500 PANEL ATTACHMENT DETAILS

SDS-6

(ENGLISH) SPECIAL DESIGNS BRANCH BORDER SHEET (REV. 7-1-09)

ORIGINAL SCALE IN INCHES FOR REDUCED PLANS 0 1 2 3

CU 02 EA 0C5901

DISREGARD PRINTS BEARING EARLIER REVISION DATES — REVISION DATES 5/3/10 5/13/10 5/24/10 5/28/10 7/8/10

SHEET OF

FILE => /2010sd/02-0C5901/sds6.dgn

USERNAME => trmikes1 DATE PLOTTED => 10-AUG-2010 TIME PLOTTED => 13:49

DIST	COUNTY	ROUTE	POST MILES TOTAL PROJECT	SHEET No	TOTAL SHEETS
02	Sha	5,44	R3.2/R18.6, L0.3/L1.8	24	120

K. C. Liu
REGISTERED CIVIL ENGINEER — DATE 6/1/10

7-12-10
PLANS APPROVAL DATE

REGISTERED PROFESSIONAL ENGINEER — K.C. LIU — No. C50291 — Exp. 6-30-11 — CIVIL — STATE OF CALIFORNIA

The State of California or its officers or agents shall not be responsible for the accuracy or completeness of electronic copies of this plan sheet.

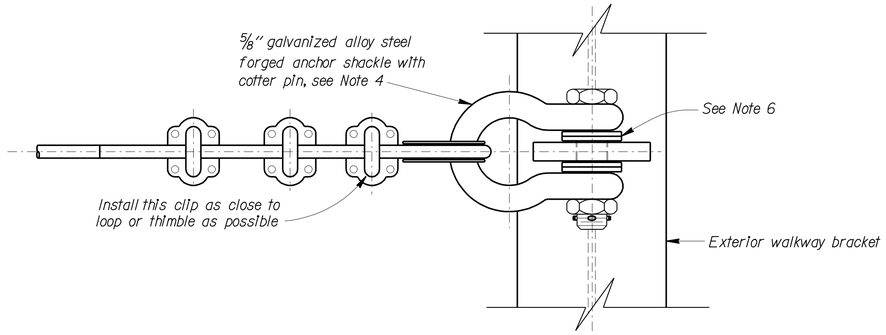

PLAN

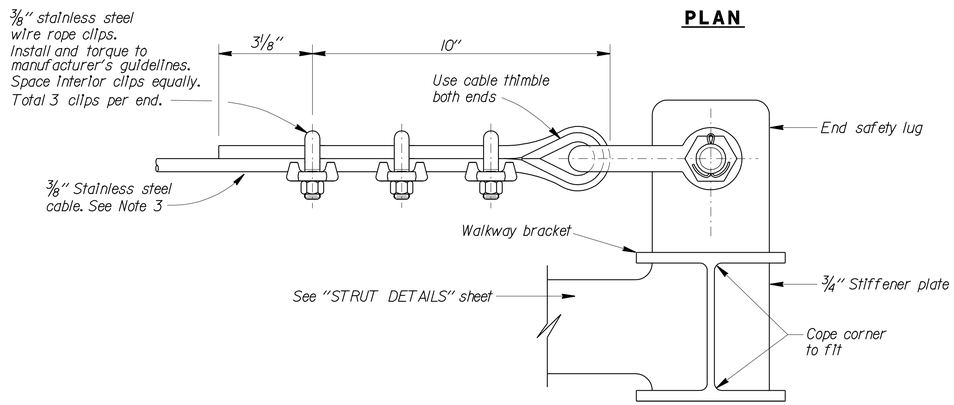

ELEVATION

END VIEW SAFETY CABLE

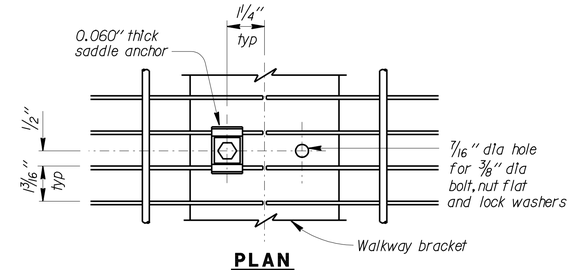

PLAN

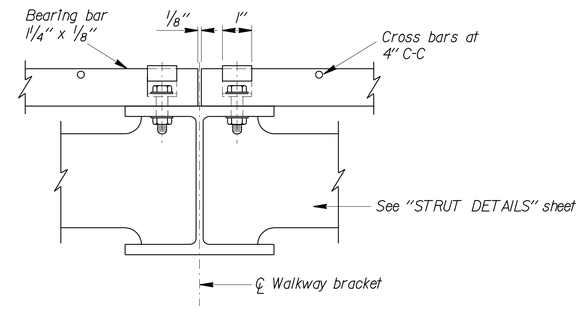

WALKWAY GRATING DETAILS

(Shown at splice)

NOTES:

1. Welded type grating shall have 1 1/4" x 1/8" bearing bars at 1 3/16" centers with 1/4" diameter (or equal) cross bars at 4" centers. If mechanical lock grating is used, it shall be equal in strength to the welded type. Alternative hold-down clips may be submitted for approval.
2. Walkway grating and light fixture mounting channels to be continuous (no splices) over as many walkway brackets as practical and consistent with fabrication, ease of handling and assembly.
3. Stainless steel cable shall be 7 x 19 class strand core construction using Type 302 or 304 alloy stainless steel strands. Minimum cable breaking strength shall be 10,000 pounds. Cable shall be free of kinks, knots, or deformation and shall be continuous between end lugs. Splices not allowed. Safety cable shall not be prestretched.
4. Shackle shall be galvanized steel with working load limit of 10,000 pounds.
5. Place on equal amount of washers on each side to align cable with end lug without restricting shackle bolt rotation or contacting cable.
6. Prior to tightening cable clips at exterior anchorage, slack in cable shall be removed by the full effort of a typical construction worker.
7. Contractor may substitute 1 5/8" x 1 5/8" x .1084" cont-slot steel channel with pre-punched slots not larger than 13/32" x 3". Slots shall be at bottom of channel and shall be parallel to channel. Slots shall be spaced not closer than 4" center to center.

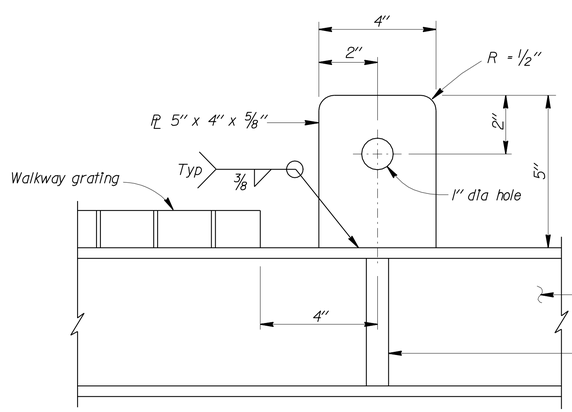

INTERIOR SAFETY LUG DETAIL

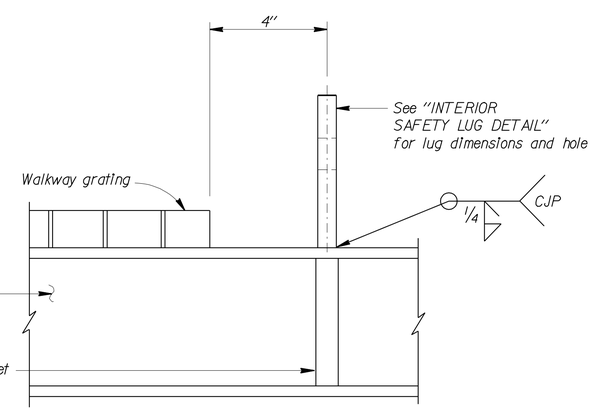

END SAFETY LUG DETAIL

NOTE:
THE CONTRACTOR SHALL VERIFY ALL CONTROLLING FIELD DIMENSIONS BEFORE ORDERING OR FABRICATING ANY MATERIAL.

NO SCALE

BRANCH CHIEF	Geoffrey B. Woody		
DESIGN	BY DEVANG VORA	CHECKED RAHA HEZAR	
DETAILS	BY R. YEE	CHECKED RAHA HEZAR	
QUANTITIES	BY DEVANG VORA	CHECKED RAHA HEZAR	

STATE OF CALIFORNIA
DEPARTMENT OF TRANSPORTATION

DIVISION OF ENGINEERING SERVICES
DESIGN AND TECHNICAL SERVICES
SPECIAL DESIGNS BRANCH

A

BRIDGE NO. Various
POST MILE Various

CHANGEABLE MESSAGE SIGN MODEL 500
WALKWAY DETAILS

SDS-7

(ENGLISH) SPECIAL DESIGNS BRANCH BORDER SHEET (REV. 7-1-09)

ORIGINAL SCALE IN INCHES FOR REDUCED PLANS 0 1 2 3

CU 02
EA 0C5901

DISREGARD PRINTS BEARING EARLIER REVISION DATES

REVISION DATES: 4/30/10 5/26/10 5/27/10 5/28/10 7/8/10

SHEET OF

FILE => /2010sd/02-0C5901/sds7.dgn

USERNAME => trmikesi DATE PLOTTED => 10-AUG-2010 TIME PLOTTED => 13:49

DIST	COUNTY	ROUTE	POST MILES TOTAL PROJECT	SHEET No	TOTAL SHEETS
02	Sha	5,44	R3.2/R18.6, L0.3/L1.8	25	120

K. C. Liu 6/1/10
REGISTERED CIVIL ENGINEER DATE

7-12-10
PLANS APPROVAL DATE

REGISTERED PROFESSIONAL ENGINEER K.C. LIU No. C50291 Exp. 6-30-11 CIVIL STATE OF CALIFORNIA

The State of California or its officers or agents shall not be responsible for the accuracy or completeness of electronic copies of this plan sheet.

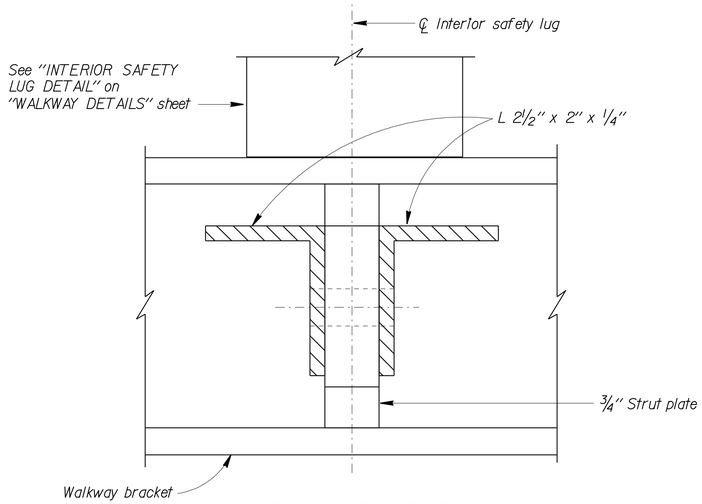

SECTION E-E
NO SCALE

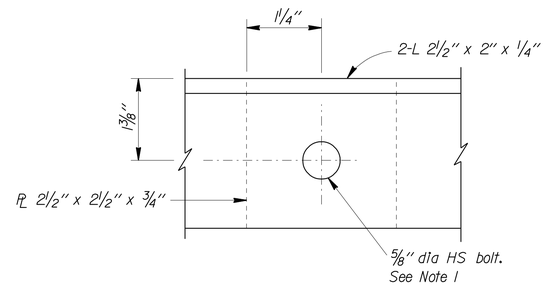

FILLER PLATE (TYP)
NO SCALE

NOTE:

1. Drill ¾" dia hole for ⅝" dia HS bolt, 2 hardened washers and nut.

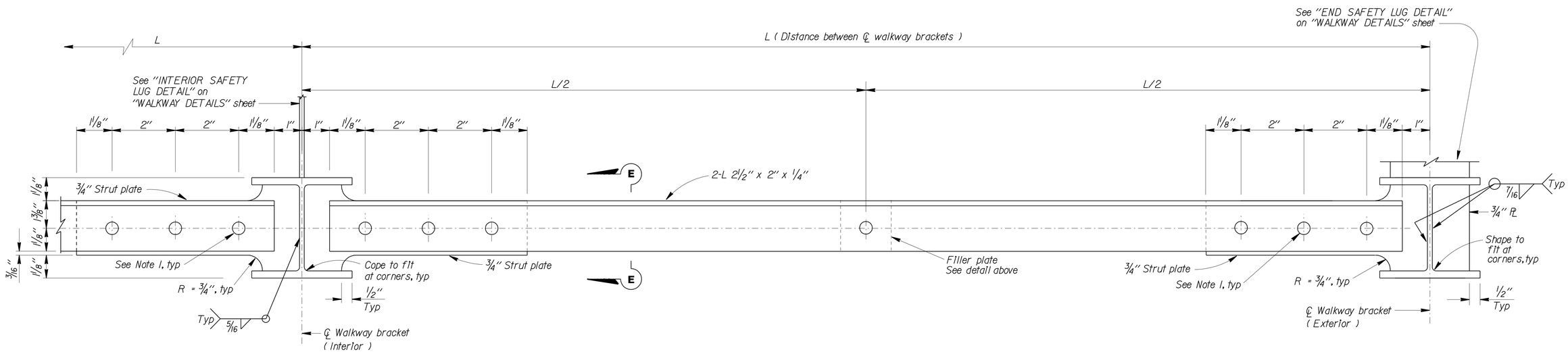

INTERIOR SAFETY LUG LOCATION (TYP)
NO SCALE

STRUT SYSTEM (TYP)
(Continuous between end safety lug locations)
NO SCALE

END SAFETY LUG LOCATION (TYP)
NO SCALE

NOTE:
THE CONTRACTOR SHALL VERIFY ALL CONTROLLING FIELD DIMENSIONS BEFORE ORDERING OR FABRICATING ANY MATERIAL.

BRANCH CHIEF Jeffrey B Woody

	BY	CHECKED
DESIGN	DEVANG VORA	RAHA HEZAR
DETAILS	R. YEE	RAHA HEZAR
QUANTITIES	DEVANG VORA	RAHA HEZAR

STATE OF CALIFORNIA
DEPARTMENT OF TRANSPORTATION

DIVISION OF ENGINEERING SERVICES
DESIGN AND TECHNICAL SERVICES
SPECIAL DESIGNS BRANCH
A

BRIDGE NO. Various
POST MILE Various

CHANGEABLE MESSAGE SIGN MODEL 500
STRUT DETAILS

SDS-8

(ENGLISH) SPECIAL DESIGNS BRANCH BORDER SHEET (REV. 7-1-09)

ORIGINAL SCALE IN INCHES FOR REDUCED PLANS 0 1 2 3

CU 02
EA 0C5901

DISREGARD PRINTS BEARING EARLIER REVISION DATES

REVISION DATES: 6/30/10 7/6/10 7/7/10 7/8/10 7/8/10

SHEET OF

FILE => /2010sd/02-0C5901/sds8.dgn

USERNAME => trmikesl DATE PLOTTED => 10-AUG-2010 TIME PLOTTED => 13:50

Dist	COUNTY	ROUTE	POST MILES TOTAL PROJECT	SHEET No.	TOTAL SHEETS
02	Sha	5,44	R3.2/R18.6, L0.3/L1.8	26	120

REGISTERED CIVIL ENGINEER 07-09-10 DATE

7-12-10
PLANS APPROVAL DATE

REGISTERED PROFESSIONAL ENGINEER ANDREW P. STECKLEIN No. C67148 Exp. 9/30/10 CIVIL STATE OF CALIFORNIA

THE STATE OF CALIFORNIA OR ITS OFFICERS OR AGENTS SHALL NOT BE RESPONSIBLE FOR THE ACCURACY OR COMPLETENESS OF SCANNED COPIES OF THIS PLAN SHEET.

NOTE:

1. (N) - NOT A SEPARATE PAY ITEM, FOR INFORMATION ONLY

SIGN QUANTITIES

LOCATION	REMOVE SIGN STRUCTURE	RESET ROADSIDE SIGN (TWO POST)	FURNISH SIGN STRUCTURE (Br MOUNTED WITH WALKWAY)	INSTALL SIGN STRUCTURE (Br MOUNTED WITH WALKWAY)	DESCRIPTION
	EA	EA	LB	LB	
"A1" 411+50 (PM R4.56)		1			AT 5/273 SEPARATION, FNBT
"A1" 565+00 (PM R6.74)	1		4,706	4,706	RIVERSIDE Ave OC, CMS, FNBT
"A1" 783+00 (PM R10.85)	1		4,683	4,683	SMITH ROAD OC, CMS, FSBT
"A1" 988+80 (PM R14.73)		1			SOUTH OF 5/44 SEPARATION, FNBT
"A1" 999+20 (PM R14.93)		1			SOUTH OF 5/44 SEPARATION, FSBT
"A1" 1150+00 (PM R17.87)		1			SOUTH TWIN OF VIEW UC, FSBT
"A1" 1163+30 (PM R18.08)		1			AT TWIN VIEW UC, FSBT
"A1" 1185+30 (PM R18.48)		1			AT 5/273 SEPARATION, FSBT
TOTAL:	2	6	9389	9389	

TEMPORARY STORM WATER POLLUTION PREVENTION AND EROSION CONTROL QUANTITIES

LOCATION	Temp FIBER ROLL	Temp DRAINAGE INLET PROTECTION	Temp HYDRAULIC MULCH (POLYMER STABILIZED FIBER MATRIX)	Temp SOIL BINDER	EROSION CONTROL (HYDROSEED) (ACRE)
	LF	EA	SQYD	SQYD	ACRE
"A1" 390+00 TO 1194+00	2,000	100	20,000	20,000	10

ROADWAY QUANTITIES

LOCATION	Temp RAILING (TYPE K)	Temp CRASH CUSHION MODULE	REMOVE CONCRETE (Misc)	REMOVE MBGR	ROADWAY EXCAVATION	ROADWAY EMBANKMENT (N)	PERVIOUS BACKFILL MATERIAL	CLASS 2 AGGREGATE BASE	MINOR HOT MIX ASPHALT	SAW CUT (N)	PLACE HOT MIX ASPHALT (Misc AREA)	MINOR Conc (MINOR STRUCTURE)	ROCK SLOPE PROTECTION (BACKING #3, METHOD B)	FILTER FABRIC	MINOR Conc (Misc Const)	Misc IRON AND STEEL	CABLE RAILING	TRANSITION RAILING (TYPE WB)	ALTERNATIVE IN-LINE TERMINAL SYSTEM	PLACE HMA DIKE (TYPE C)	DESCRIPTION
	LF	EA	CY	LF	CY	CY	TON	CY	TON	LF	SQYD	CY	TON	SQYD	CY	LB	LF	EA	EA	LF	
"A1" 565+00 (PM R6.74)								5							4						RIVERSIDE Ave OC, CMS CONTROLLER WALKWAY
"A1" 783+00 (PM R10.85)								2							2						SMITH Rd OC, SIDEWALK TO CMS CONTROLLER WALKWAY
"A1" 945+00 TO 948+00 (PM R13.95)	500	14	1.1	75	400	30	25	157	50	420	205	101		75	5	1620	100	1	1	208	HARTNELL Ave OC, Maint VEHICLE PULLOUT AND CCTV CONTROLLER WALKWAY
"HUB1" 10+00 TO 12+00 (PM R15.43)								35													5/44 SEPARATION (SOUTHWEST QUADRANT), ITS PAD
"A1" 1125+10 TO 1126+23 (PM R17.30)			1.1		20	20		22	40	120					5						5/299 SEPARATION, Maint VEHICLE PULLOUT AND CCTV CONTROLLER WALKWAY
"HUB2" 11+00 TO 11+70 (PM R17.32)								95					20								5/273 SEPARATION (GORE), ITS PAD
"CAM3" 10+00 TO 13+00 (PM R17.60)					215	5		45	95	180					3						5/273 SEPARATION, Maint VEHICLE PULLOUT AND CCTV CONTROLLER WALKWAY
TOTAL:	500	14	2.2	75	635	55	25	361	185	720	205	101	20	75	19	1620	100	1	1	208	

SUMMARY OF QUANTITES

Q-1

REVISED BY R. WEBER
DATE REVISED 07-01-10
ANDREW STECKLEIN
CALCULATED-DESIGNED BY
CHECKED BY
FUNCTIONAL SUPERVISOR STEVE TOPAL

STATE OF CALIFORNIA - DEPARTMENT OF TRANSPORTATION
Caltrans DESIGN

P:\proj\02\0c590_plans\pse\20c590pa001.dgn

LAST REVISION
DATE PLOTTED => 15-JUL-2010
TIME PLOTTED => 14:48

Dist	COUNTY	ROUTE	POST MILES TOTAL PROJECT	SHEET No.	TOTAL SHEETS
02	Sha	5,44	R3.2/R18.6, L0.3/L1.8	27	120

J. Hannigan 07-09-10
REGISTERED ELECTRICAL ENGINEER

7-12-10
PLANS APPROVAL DATE

REGISTERED PROFESSIONAL ENGINEER J.M. HANNIGAN No. E13665 Exp. 6-30-11 ELECTRICAL STATE OF CALIFORNIA

THE STATE OF CALIFORNIA OR ITS OFFICERS OR AGENTS SHALL NOT BE RESPONSIBLE FOR THE ACCURACY OR COMPLETENESS OF ELECTRONIC COPIES OF THIS PLAN SHEET.

PROJECT NOTES:

1. FOR ACCURATE RIGHT OF WAY AND ACCESS DATA, CONTACT RIGHT OF WAY ENGINEERING AT THE DISTRICT OFFICE.
2. EXISTING UTILITIES HAVE NOT BEEN POSITIVELY LOCATED.
3. FOR MEDIAN BARRIER, CHECK COOPERATION CLAUSE OF SPECIAL PROVISIONS.
4. NOT ALL UNDERGROUND OBSTRUCTIONS ARE SHOWN. THE CONTRACTOR SHALL VERIFY THE LOCATION OF ALL UNDERGROUND OBSTRUCTIONS PRIOR TO STARTING TRENCHING.
5. MAINTAIN 4' HORIZONTAL CLEARANCE FROM OBSTRUCTIONS UNLESS SHOWN OTHERWISE ON THE PLANS OR DIRECTED BY THE ENGINEER.
6. PLACE OBJECT MARKERS (TYPE FO) EVERY 100' OVER THE FO CONDUIT RUN.
7. COIL 50' OF EACH FIBER OPTIC CABLE IN EACH SPLICE VAULT UNLESS SHOWN OTHERWISE.

LEGEND:

- MEDIAN BARRIER TO BE CONSTRUCTED BY OTHERS
- SV — SPLICE VAULT
- CABLE BARRIER TO BE CONSTRUCTED BY OTHERS
- METAL BEAM GUARDRAIL TO BE CONSTRUCTED BY OTHERS
- THRIE BEAM TO BE CONSTRUCTED BY OTHERS
- EXISTNG CABLE BARRIER
- EXISTING IRRIGATION
- DI WITH UG Dtn Str
- PB — OBJECT MARKER (TYPE PB) AND PULL BOX PAVING
- SV — OBJECT MARKER (TYPE SV)
- FO — OBJECT MARKER (TYPE FO)
- M — EXISTING MICROWAVE VEHICLE DETECTION SYSTEM

ABBREVIATIONS:

FO	FIBER OPTIC LINE
SV	SPLICE VAULT
FOHDPE	FIBER OPTIC HIGH DENSITY POLYETHYLENE
fohdpe	Exist FIBER OPTIC HIGH DENSITY POLYETHYLENE
DIP	DUCTILE IRON PIPE
UG	UNDERGROUND
Dtn	DETENTION
48 SMFO	48 STRAND SINGLEMODE FIBER OPTIC CABLE
144 SMFO	144 STRAND SINGLEMODE FIBER OPTIC CABLE
MVDS	MICROWAVE VEHICLE DETECTION SYSTEM

EXISTING TRAFFIC MONITORING STATIONS TO BE MAINTAINED (1 OF 2)

Co-Rt-PM	TYPE	DESCRIPTION	STATION NUMBER
Sha-05-PM R3.46	RAMP	5/273 Sep NB OFF TO NB 273	R194
Sha-05-PM R3.46	RAMP	5/273 Sep SB ON FROM SB 273	R195
Sha-05-PM R3.46	CONTROL	Jct Rte 273 N	272
Sha-05-PM R4.43	RAMP	DESCHUTES NB ON-RAMP	R196
Sha-05-PM R4.45	RAMP	DESCHUTES SB OFF-RAMP	R197
Sha-05-PM R5.27	RAMP	BALLS FERRY SB ON-RAMP	R199
Sha-05-PM R5.30	RAMP	BALLS FERRY NB OFF-RAMP	R198
Sha-05-PM R5.71	RAMP	NORTH STREET NB ON-RAMP	R200
Sha-05-PM R5.79	RAMP	NORTH STREET SB OFF-RAMP	R201
Sha-05-PM R6.69	RAMP	RIVERSIDE AVENUE NB OFF-RAMP	R202
Sha-05-PM R6.69	RAMP	RIVERSIDE AVENUE NB ON-RAMP	R204
Sha-05-PM R6.72	RAMP	RIVERSIDE AVENUE SB ON-RAMP	R203
Sha-05-PM R6.78	RAMP	RIVERSIDE AVENUE SB OFF-RAMP	R205
Sha-05-PM R7.8	TREND	0.8 MILES NORTH OF SACRAMENTO RIVER BRIDGE	239
Sha-05-PM R9.69	RAMP	KNIGHTON ROAD NB OFF-RAMP	R206
Sha-05-PM R9.77	RAMP	KNIGHTON ROAD SB ON-RAMP	R207
Sha-05-PM R9.8	RAMP	KNIGHTON ROAD NB ON-RAMP	R208
Sha-05-PM R9.9	RAMP	KNIGHTON ROAD SB OFF-RAMP	R194
Sha-05-PM R12.11	RAMP	SOUTH BONNYVIEW ROAD NB OFF-RAMP	R210
Sha-05-PM R13.97	TREND WITH 8 PIEZOS	HARTNELL AVENUE	298
Sha-05-PM R14.31	RAMP	CYPRESS STREET NB ON-RAMP	R215
Sha-05-PM R14.37	RAMP	CYPRESS STREET NB OFF-RAMP	R214
Sha-05-PM R14.62	RAMP	CYPRESS STREET NB ON-RAMP	R217
Sha-05-PM R14.64	RAMP	CYPRESS STREET SB OFF-RAMP	R216
Sha-05-PM R14.94	TREND	CYPRESS STREET	304
Sha-05-PM R15.26	RAMP	HILLTOP	HILLTOP
Sha-05-PM R15.27	RAMP	HILLTOP NB OFF-RAMP	R3
Sha-05-PM R15.39	RAMP	SB OFF-RAMP TO EB 44	R4
Sha-05-PM R15.48	RAMP	JUNCTION ROUTE 44	196
Sha-05-PM R15.71	RAMP	NB OFF-RAMP TO WB 44	R1
Sha-05-PM R15.71	RAMP	SB OFF-RAMP TO WB 44	R5
Sha-05-PM R17.23	RAMP	Rte 299/LAKE BLVD SB ON-RAMP	R6
Sha-05-PM R17.23	RAMP	Rte 299/LAKE BLVD SB OFF-RAMP	R8
Sha-05-PM R17.90	RAMP	TWINVIEW NB OFF-RAMP	R11
Sha-05-PM R18.02	RAMP	TWINVIEW NB ON-RAMP	R13
Sha-05-PM R18.21	RAMP	TWINVIEW SB OFF-RAMP	R12
Sha-05-PM R18.73	RAMP	Rte 273 SB OFF-RAMP	R14
Sha-05-PM R18.78	RAMP	Rte 273 NB ON-RAMP	R15

EXISTING TRAFFIC MONITORING STATIONS TO BE MAINTAINED (2 OF 2)

Co-Rt-PM	TYPE	DESCRIPTION	STATION NUMBER
Sha-44-PM R0.05	RAMP	EB OFF-RAMP TO NB 5	R90
Sha-44-PM R0.07	RAMP	WB OFF-RAMP TO NB 5	R91
Sha-44-PM R0.07	COUNT	HILLTOP DRIVE AT 44 INTERCHANGE	-
Sha-44-PM R0.15	RAMP	EB OFF-RAMP TO HILLTOP	R92
Sha-44-PM R0.18	RAMP	EB ON-RAMP FROM HILLTOP	R94
Sha-44-PM R0.18	RAMP	EB ON-RAMP FROM NB 5	R2
Sha-44-PM R0.84	RAMP	WB ON-RAMP FROM AUDITORIUM	R113
Sha-44-PM R0.84	RAMP	EB OFF-RAMP TO PARK MARINA	R114
Sha-44-PM R0.85	TREND	BUTTE STREET	302
Sha-44-PM R0.95	RAMP	EB ON-RAMP FROM PARK MARINA	R115
Sha-44-PM R0.96	RAMP	WB OFF-RAMP TO AUDITORIUM	R116
Sha-44-PM L1.56	RAMP	EB OFF-RAMP TO SB 5	R117
Sha-44-PM L1.47	CONTROL	Jct Rte 5	161
Sha-44-PM L1.73	TREND	WB OFF-RAMP TO SB 5	R118
Sha-273-PM 19.91	RAMP	Jct Rte 5	157NB
Sha-273-PM 20.02	RAMP	Jct Rte 5	157SB

EXISTING TRAFFIC MANAGEMENT SYSTEM ELEMENTS TO BE MAINTAINED

Co-Rt-PM	TYPE	DESCRIPTION
Sha-05-PM R4.29	CCTV	DESCHUTES ROAD UC
Sha-05-PM R6.72	CCTV	RIVERSIDE DRIVE OC
Sha-05-PM R6.74	HAR FLASHER	RIVERSIDE DRIVE OC
Sha-05-PM R7.40	TMS	MVDS IN MEDIAN
Sha-05-PM R8.34	TMS	MVDS IN MEDIAN
Sha-05-PM R9.33	TMS	MVDS IN MEDIAN
Sha-05-PM R10.86	CMS	ON SMITH RD OC FOR NB TRAFFIC
Sha-05-PM R10.86	CMS	ON SMITH RD OC FOR SB TRAFFIC
Sha-05-PM R12.15	CCTV	AT BONNYVIEW OC
Sha-05-PM R15.42	CCTV	AT I-5/44 Jct IN MEDIAN
Sha-05-PM R16.13	HAR	WEST END OF HILLTOP OC
Sha-44-PM L0.85	CCTV	AT BUTTE St OC

TRAFFIC MONITORING STATIONS

E-1

THIS PLAN IS ACCURATE FOR ELECTRICAL WORK ONLY.

REVISED BY | DATE REVISED
JAMES M. HANNIGAN | JEREMIAH PEARCE
CALCULATED-DESIGNED BY | CHECKED BY
FUNCTIONAL SUPERVISOR: ROB STINGER

STATE OF CALIFORNIA - DEPARTMENT OF TRANSPORTATION
Caltrans ELECTRICAL DESIGN

P:\proj\02\0c590_plans\pse\20c590ua001.dgn

LAST REVISION 07-09-10 | DATE PLOTTED => 16-JUL-2010 | TIME PLOTTED => 13:35

Dist	COUNTY	ROUTE	POST MILES TOTAL PROJECT	SHEET No.	TOTAL SHEETS
02	Sha	5,44	R3.2/R18.6, L0.3/L1.8	28	120

J. Hannigan 07-09-10
REGISTERED ELECTRICAL ENGINEER

7-12-10
PLANS APPROVAL DATE

REGISTERED PROFESSIONAL ENGINEER J.M. HANNIGAN No. E13665 Exp. 6-30-11 ELECTRICAL STATE OF CALIFORNIA

THE STATE OF CALIFORNIA OR ITS OFFICERS OR AGENTS SHALL NOT BE RESPONSIBLE FOR THE ACCURACY OR COMPLETENESS OF ELECTRONIC COPIES OF THIS PLAN SHEET.

NOTES (THIS SHEET):

1. MAINTAIN 4' HORIZONTAL CLEARANCE FROM OBSTRUCTIONS.
2. FOR ACCURATE RIGHT OF WAY AND ACCESS DATA, CONTACT RIGHT OF WAY ENGINEERING AT THE DISTRICT OFFICE.
3. EXISTING UTILITIES HAVE NOT BEEN POSITIVELY LOCATED.

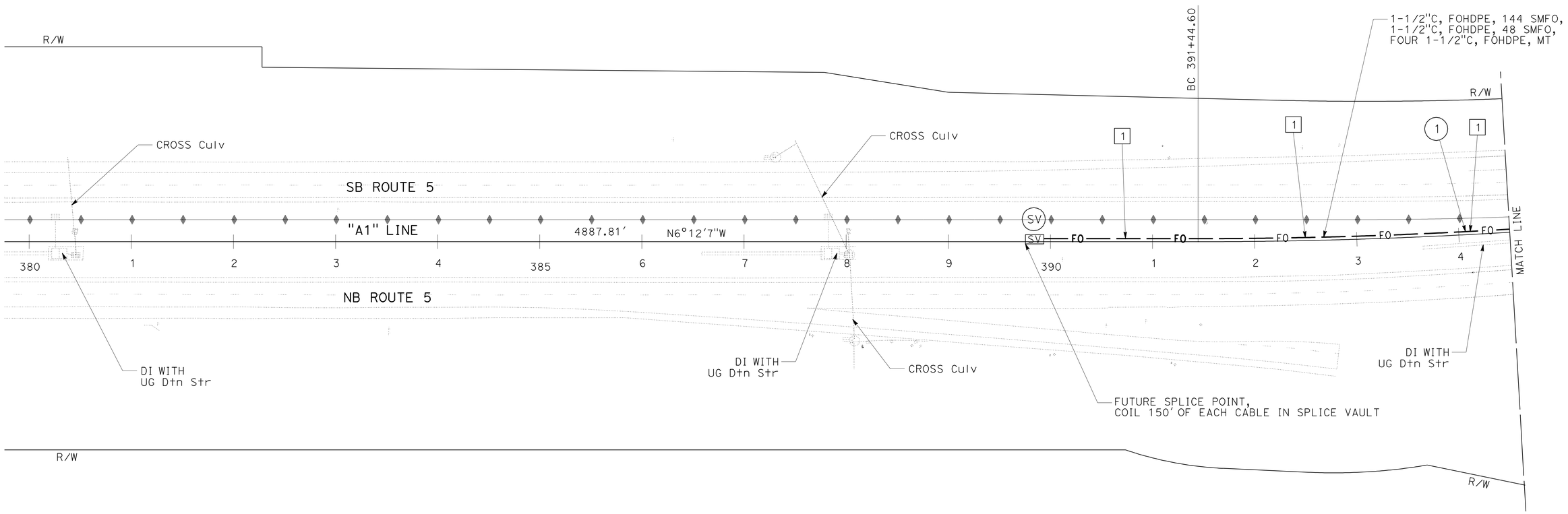

CURVE DATA

No. ⊛	R	Δ	T	L
1	5000'	8°40'53"	379.52'	757.59'

FIBER OPTIC SYSTEM

SCALE: 1" = 50'

E-2

THIS PLAN IS ACCURATE FOR ELECTRICAL WORK ONLY.

REVISED BY | DATE REVISED
JAMES M. HANNIGAN | JEREMIAH PEARCE
CALCULATED-DESIGNED BY | CHECKED BY
FUNCTIONAL SUPERVISOR: ROB STINGER

STATE OF CALIFORNIA - DEPARTMENT OF TRANSPORTATION
Caltrans ELECTRICAL DESIGN

P:\proj1\02\0c590_plans\pse\20c590ua002.dgn

LAST REVISION 07-09-10 | DATE PLOTTED => 15-JUL-2010 | TIME PLOTTED => 14:49

Dist	COUNTY	ROUTE	POST MILES TOTAL PROJECT	SHEET No.	TOTAL SHEETS
02	Sha	5,44	R3.2/R18.6, L0.3/L1.8	29	120

J. Hannigan 07-09-10
REGISTERED ELECTRICAL ENGINEER

7-12-10
PLANS APPROVAL DATE

REGISTERED PROFESSIONAL ENGINEER J.M. HANNIGAN No. E13665 Exp. 6-30-11 ELECTRICAL STATE OF CALIFORNIA

THE STATE OF CALIFORNIA OR ITS OFFICERS OR AGENTS SHALL NOT BE RESPONSIBLE FOR THE ACCURACY OR COMPLETENESS OF ELECTRONIC COPIES OF THIS PLAN SHEET.

NOTES (THIS SHEET):

1. MAINTAIN 4′ HORIZONTAL CLEARANCE FROM OBSTRUCTIONS.
2. FOR ACCURATE RIGHT OF WAY AND ACCESS DATA, CONTACT RIGHT OF WAY ENGINEERING AT THE DISTRICT OFFICE.
3. EXISTING UTILITIES HAVE NOT BEEN POSITIVELY LOCATED.

CURVE DATA

No.	R	Δ	T	L
1	5000′	8°40′53″	379.52′	757.59′

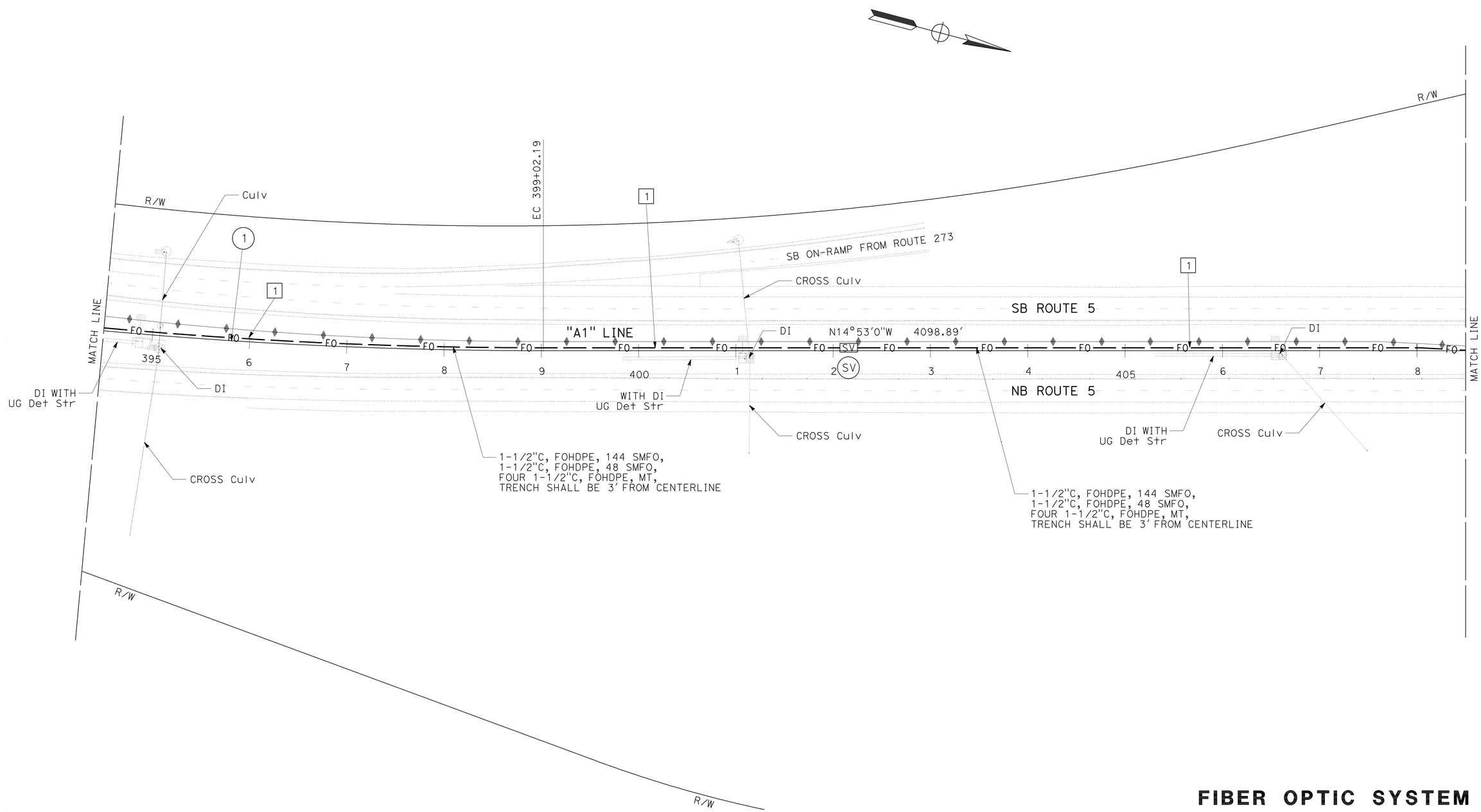

THIS PLAN IS ACCURATE FOR ELECTRICAL WORK ONLY.

FIBER OPTIC SYSTEM

SCALE: 1" = 50′

E-3

REVISED BY	DATE REVISED

CALCULATED-DESIGNED BY	CHECKED BY
JAMES M. HANNIGAN	JEREMIAH PEARCE

FUNCTIONAL SUPERVISOR: ROB STINGER

STATE OF CALIFORNIA - DEPARTMENT OF TRANSPORTATION
Caltrans ELECTRICAL DESIGN

P:\proj1\02\0c590_plans\pse\20c590ua003.dgn

LAST REVISION 07-09-10 | DATE PLOTTED => 15-JUL-2010 | TIME PLOTTED => 14:49

Dist	COUNTY	ROUTE	POST MILES TOTAL PROJECT	SHEET No.	TOTAL SHEETS
02	Sha	5,44	R3.2/R18.6, L0.3/L1.8	30	120

J. Hannigan 07-09-10
REGISTERED ELECTRICAL ENGINEER

7-12-10
PLANS APPROVAL DATE

REGISTERED PROFESSIONAL ENGINEER J.M. HANNIGAN No. E13665 Exp. 6-30-11 ELECTRICAL STATE OF CALIFORNIA

THE STATE OF CALIFORNIA OR ITS OFFICERS OR AGENTS SHALL NOT BE RESPONSIBLE FOR THE ACCURACY OR COMPLETENESS OF ELECTRONIC COPIES OF THIS PLAN SHEET.

NOTES (THIS SHEET):

1. MAINTAIN 4′ HORIZONTAL CLEARANCE FROM OBSTRUCTIONS.
2. FOR ACCURATE RIGHT OF WAY AND ACCESS DATA, CONTACT RIGHT OF WAY ENGINEERING AT THE DISTRICT OFFICE.
3. EXISTING UTILITIES HAVE NOT BEEN POSITIVELY LOCATED.

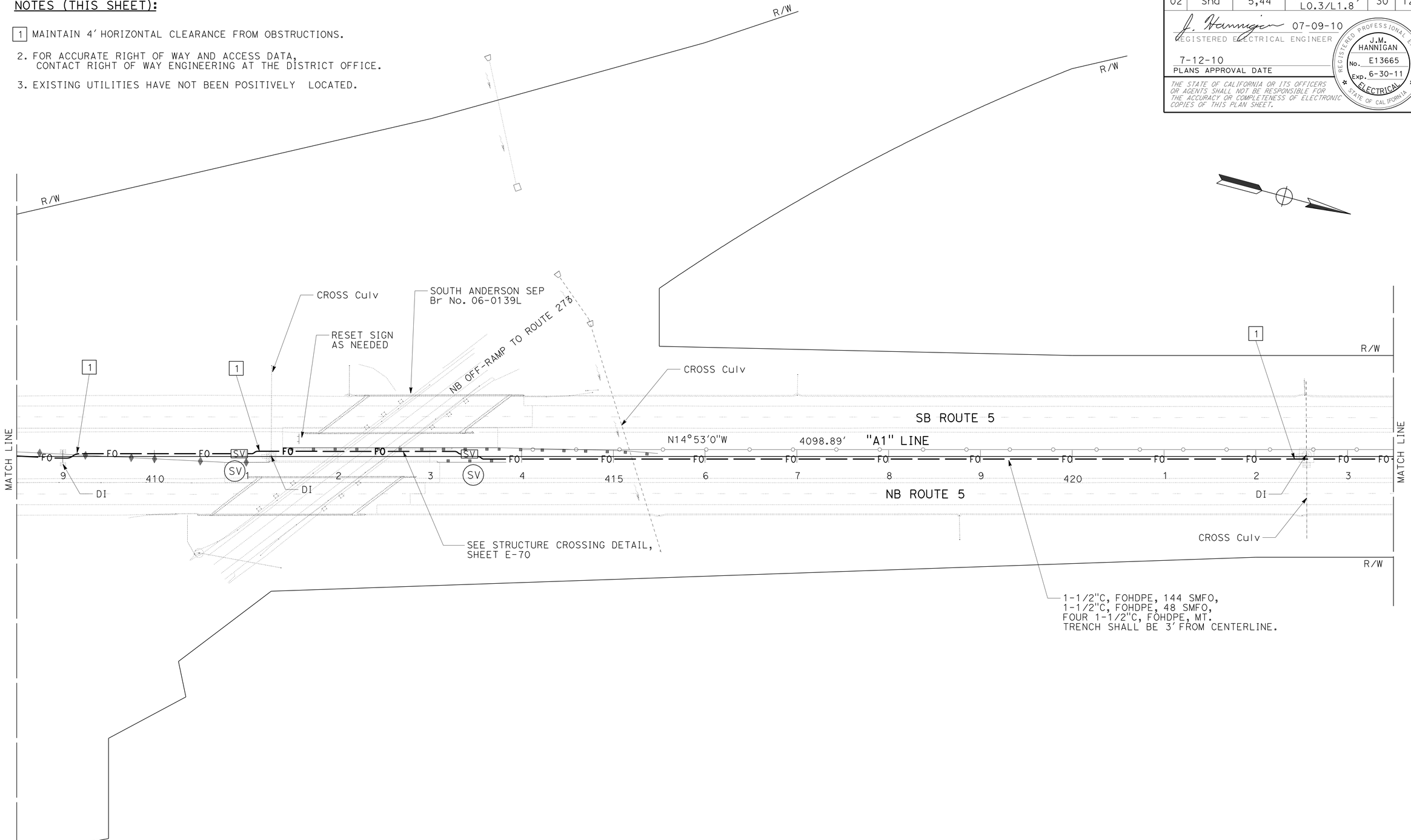

FIBER OPTIC SYSTEM

SCALE: 1" = 50′

E-4

THIS PLAN IS ACCURATE FOR ELECTRICAL WORK ONLY.

REVISED BY	DATE REVISED

CALCULATED-DESIGNED BY: JAMES M. HANNIGAN
CHECKED BY: JEREMIAH PEARCE
FUNCTIONAL SUPERVISOR: ROB STINGER

STATE OF CALIFORNIA - DEPARTMENT OF TRANSPORTATION
Caltrans ELECTRICAL DESIGN

P:\proj1\02\0c590_plans\pse\20c590ua004.dgn

LAST REVISION 07-09-10 | DATE PLOTTED => 15-JUL-2010 | TIME PLOTTED => 14:49

Dist	COUNTY	ROUTE	POST MILES TOTAL PROJECT	SHEET No.	TOTAL SHEETS
02	Sha	5,44	R3.2/R18.6, L0.3/L1.8	31	120

J. Hannigan 07-09-10
REGISTERED ELECTRICAL ENGINEER

7-12-10
PLANS APPROVAL DATE

REGISTERED PROFESSIONAL ENGINEER J.M. HANNIGAN No. E13665 Exp. 6-30-11 ELECTRICAL STATE OF CALIFORNIA

THE STATE OF CALIFORNIA OR ITS OFFICERS OR AGENTS SHALL NOT BE RESPONSIBLE FOR THE ACCURACY OR COMPLETENESS OF ELECTRONIC COPIES OF THIS PLAN SHEET.

NOTES (THIS SHEET):

1. MAINTAIN 4′ HORIZONTAL CLEARANCE FROM OBSTRUCTIONS.
2. FOR ACCURATE RIGHT OF WAY AND ACCESS DATA, CONTACT RIGHT OF WAY ENGINEERING AT THE DISTRICT OFFICE.
3. EXISTING UTILITIES HAVE NOT BEEN POSITIVELY LOCATED.

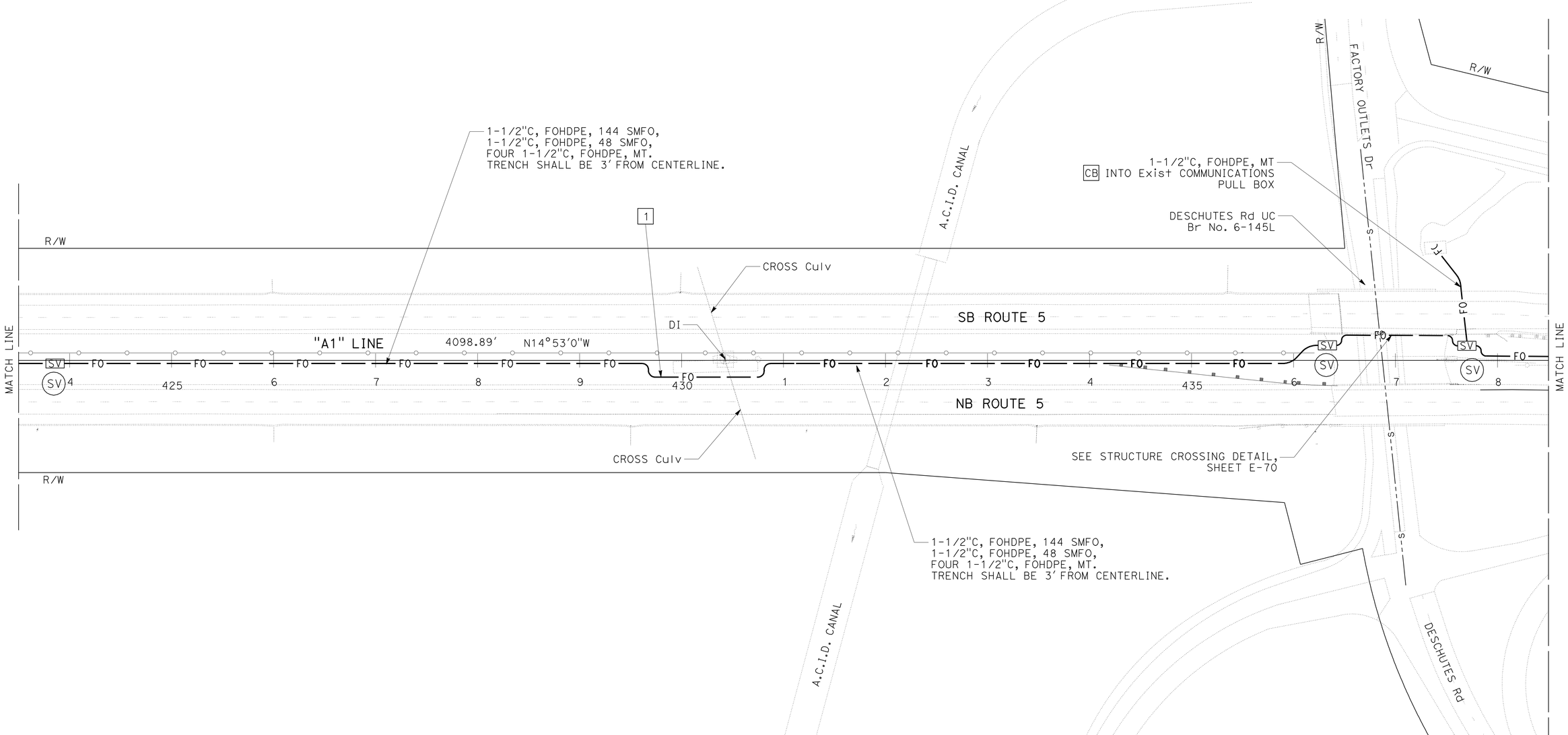

FIBER OPTIC SYSTEM

SCALE: 1" = 50′

E-5

THIS PLAN IS ACCURATE FOR ELECTRICAL WORK ONLY.

REVISED BY	DATE REVISED

CALCULATED-DESIGNED BY	CHECKED BY
JAMES M. HANNIGAN	JEREMIAH PEARCE

FUNCTIONAL SUPERVISOR: ROB STINGER

STATE OF CALIFORNIA - DEPARTMENT OF TRANSPORTATION
Caltrans ELECTRICAL DESIGN

P:\proj1\02\0c590_plans\pse\20c590ua005.dgn

LAST REVISION 07-09-10 | DATE PLOTTED => 15-JUL-2010 | TIME PLOTTED => 14:49

Dist	COUNTY	ROUTE	POST MILES TOTAL PROJECT	SHEET No.	TOTAL SHEETS
02	Sha	5,44	R3.2/R18.6, L0.3/L1.8	32	120

J. Hannigan 07-09-10
REGISTERED ELECTRICAL ENGINEER

7-12-10
PLANS APPROVAL DATE

REGISTERED PROFESSIONAL ENGINEER J.M. HANNIGAN No. E13665 Exp. 6-30-11 ELECTRICAL STATE OF CALIFORNIA

THE STATE OF CALIFORNIA OR ITS OFFICERS OR AGENTS SHALL NOT BE RESPONSIBLE FOR THE ACCURACY OR COMPLETENESS OF ELECTRONIC COPIES OF THIS PLAN SHEET.

NOTES (THIS SHEET):

1. MAINTAIN 4' HORIZONTAL CLEARANCE FROM OBSTRUCTIONS.
2. FOR ACCURATE RIGHT OF WAY AND ACCESS DATA, CONTACT RIGHT OF WAY ENGINEERING AT THE DISTRICT OFFICE.
3. EXISTING UTILITIES HAVE NOT BEEN POSITIVELY LOCATED.

CURVE DATA

No.	R	Δ	T	L
2	5000'	5°42'00"	248.91'	497.42'

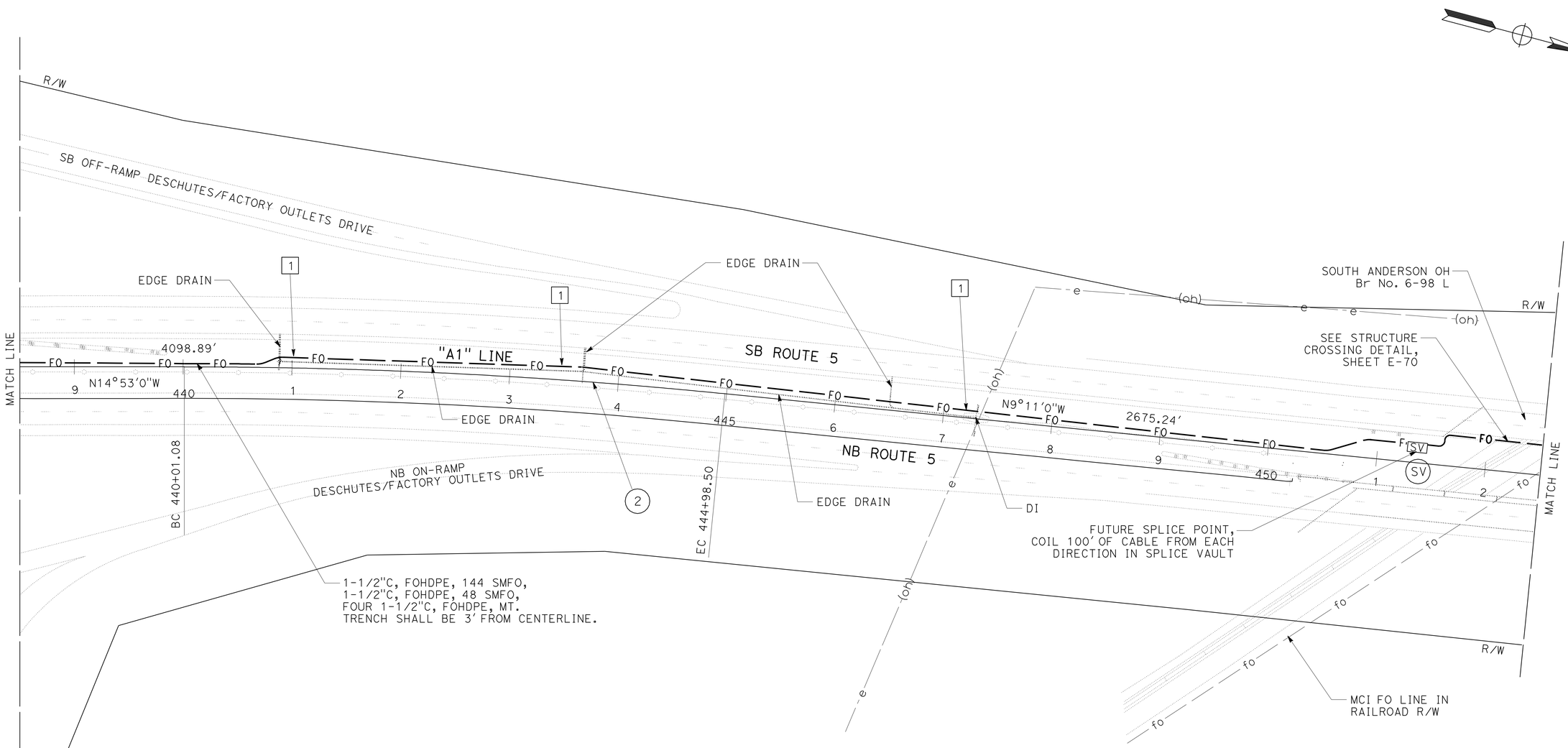

FIBER OPTIC SYSTEM

SCALE: 1" = 50'

E-6

THIS PLAN IS ACCURATE FOR ELECTRICAL WORK ONLY.

CALCULATED-DESIGNED BY: JAMES M. HANNIGAN
CHECKED BY: JEREMIAH PEARCE
REVISED BY
DATE REVISED
FUNCTIONAL SUPERVISOR: ROB STINGER

STATE OF CALIFORNIA - DEPARTMENT OF TRANSPORTATION
Caltrans ELECTRICAL DESIGN

P:\proj\02\0c590_plans\pse\20c590ua006.dgn

LAST REVISION 07-09-10 DATE PLOTTED => 15-JUL-2010 TIME PLOTTED => 14:49

Dist	COUNTY	ROUTE	POST MILES TOTAL PROJECT	SHEET No.	TOTAL SHEETS
02	Sha	5,44	R3.2/R18.6, L0.3/L1.8	33	120

J. Hannigan 07-09-10
REGISTERED ELECTRICAL ENGINEER

7-12-10
PLANS APPROVAL DATE

REGISTERED PROFESSIONAL ENGINEER J.M. HANNIGAN No. E13665 Exp. 6-30-11 ELECTRICAL STATE OF CALIFORNIA

THE STATE OF CALIFORNIA OR ITS OFFICERS OR AGENTS SHALL NOT BE RESPONSIBLE FOR THE ACCURACY OR COMPLETENESS OF ELECTRONIC COPIES OF THIS PLAN SHEET.

NOTES (THIS SHEET):

1. MAINTAIN 4′ HORIZONTAL CLEARANCE FROM OBSTRUCTIONS.
2. FOR ACCURATE RIGHT OF WAY AND ACCESS DATA, CONTACT RIGHT OF WAY ENGINEERING AT THE DISTRICT OFFICE.
3. EXISTING UTILITIES HAVE NOT BEEN POSITIVELY LOCATED.

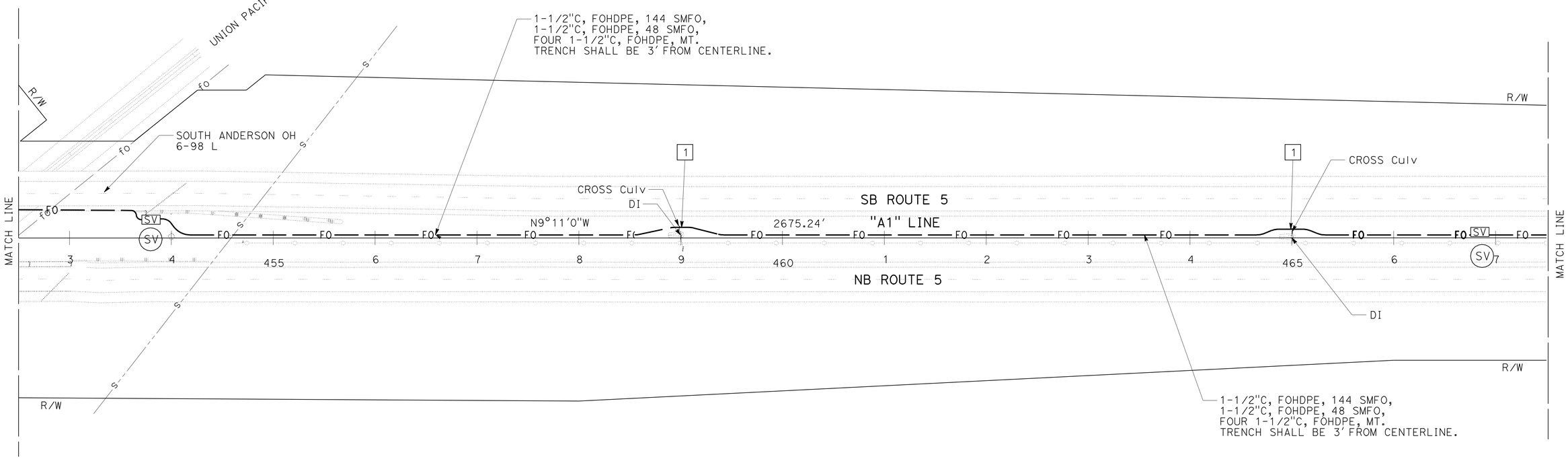

FIBER OPTIC SYSTEM

SCALE: 1" = 50′

E-7

THIS PLAN IS ACCURATE FOR ELECTRICAL WORK ONLY.

STATE OF CALIFORNIA - DEPARTMENT OF TRANSPORTATION
Caltrans ELECTRICAL DESIGN

FUNCTIONAL SUPERVISOR: ROB STINGER
CALCULATED-DESIGNED BY: JAMES M. HANNIGAN
CHECKED BY: JEREMIAH PEARCE
REVISED BY / DATE REVISED

P:\proj1\02\0c590_plans\pse\20c590ua007.dgn

LAST REVISION 07-09-10 | DATE PLOTTED => 15-JUL-2010 | TIME PLOTTED => 14:49

BORDER LAST REVISED 7/2/2010 | USERNAME => trstrk | DGN FILE => 20c590ua007.dgn | RELATIVE BORDER SCALE IS IN INCHES 0 1 2 3 | UNIT 0319 | PROJECT NUMBER & PHASE 02000200001

Dist	COUNTY	ROUTE	POST MILES TOTAL PROJECT	SHEET No.	TOTAL SHEETS
02	Sha	5,44	R3.2/R18.6, L0.3/L1.8	34	120

J. Hannigan 07-09-10
REGISTERED ELECTRICAL ENGINEER

7-12-10
PLANS APPROVAL DATE

REGISTERED PROFESSIONAL ENGINEER J.M. HANNIGAN No. E13665 Exp. 6-30-11 ELECTRICAL STATE OF CALIFORNIA

THE STATE OF CALIFORNIA OR ITS OFFICERS OR AGENTS SHALL NOT BE RESPONSIBLE FOR THE ACCURACY OR COMPLETENESS OF ELECTRONIC COPIES OF THIS PLAN SHEET.

NOTES (THIS SHEET):

1. MAINTAIN 4′ HORIZONTAL CLEARANCE FROM OBSTRUCTIONS.
2. FOR ACCURATE RIGHT OF WAY AND ACCESS DATA, CONTACT RIGHT OF WAY ENGINEERING AT THE DISTRICT OFFICE.
3. EXISTING UTILITIES HAVE NOT BEEN POSITIVELY LOCATED.

CURVE DATA

No. Ⓗ	R	Δ	T	L
3	5000′	27°22′40″	1217.84′	2389.16′

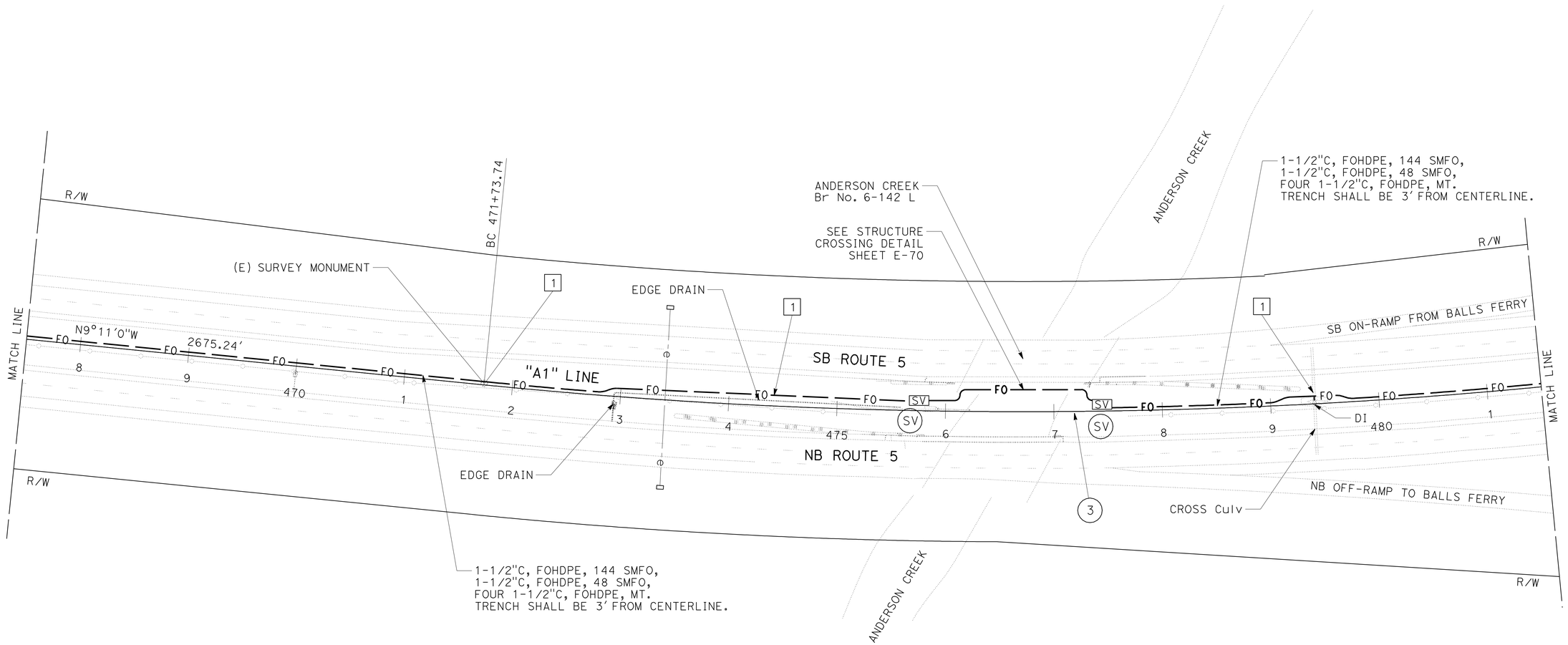

FIBER OPTIC SYSTEM

SCALE: 1″ = 50′

E-8

THIS PLAN IS ACCURATE FOR ELECTRICAL WORK ONLY.

REVISED BY	DATE REVISED

CALCULATED-DESIGNED BY	JAMES M. HANNIGAN
CHECKED BY	JEREMIAH PEARCE
FUNCTIONAL SUPERVISOR	ROB STINGER

STATE OF CALIFORNIA - DEPARTMENT OF TRANSPORTATION
Caltrans ELECTRICAL DESIGN

P:\proj\02\0c590_plans\pse\20c590ua008.dgn

LAST REVISION 07-09-10 | DATE PLOTTED => 15-JUL-2010 | TIME PLOTTED => 14:49

Dist	COUNTY	ROUTE	POST MILES TOTAL PROJECT	SHEET No.	TOTAL SHEETS
02	Sha	5,44	R3.2/R18.6, L0.3/L1.8	35	120

J. Hannigan 07-09-10
REGISTERED ELECTRICAL ENGINEER

7-12-10
PLANS APPROVAL DATE

REGISTERED PROFESSIONAL ENGINEER J.M. HANNIGAN No. E13665 Exp. 6-30-11 ELECTRICAL STATE OF CALIFORNIA

THE STATE OF CALIFORNIA OR ITS OFFICERS OR AGENTS SHALL NOT BE RESPONSIBLE FOR THE ACCURACY OR COMPLETENESS OF ELECTRONIC COPIES OF THIS PLAN SHEET.

NOTES (THIS SHEET):

1. MAINTAIN 4' HORIZONTAL CLEARANCE FROM OBSTRUCTIONS.
2. FOR ACCURATE RIGHT OF WAY AND ACCESS DATA, CONTACT RIGHT OF WAY ENGINEERING AT THE DISTRICT OFFICE.
3. EXISTING UTILITIES HAVE NOT BEEN POSITIVELY LOCATED.
4. Exist IRRIGATION FACILITIES TO BE LOCATED PRIOR TO CONSTRUCTION ACTIVITES.

CURVE DATA

No. ⊕	R	Δ	T	L
3	5000'	27°22'40"	1217.84'	2389.16'

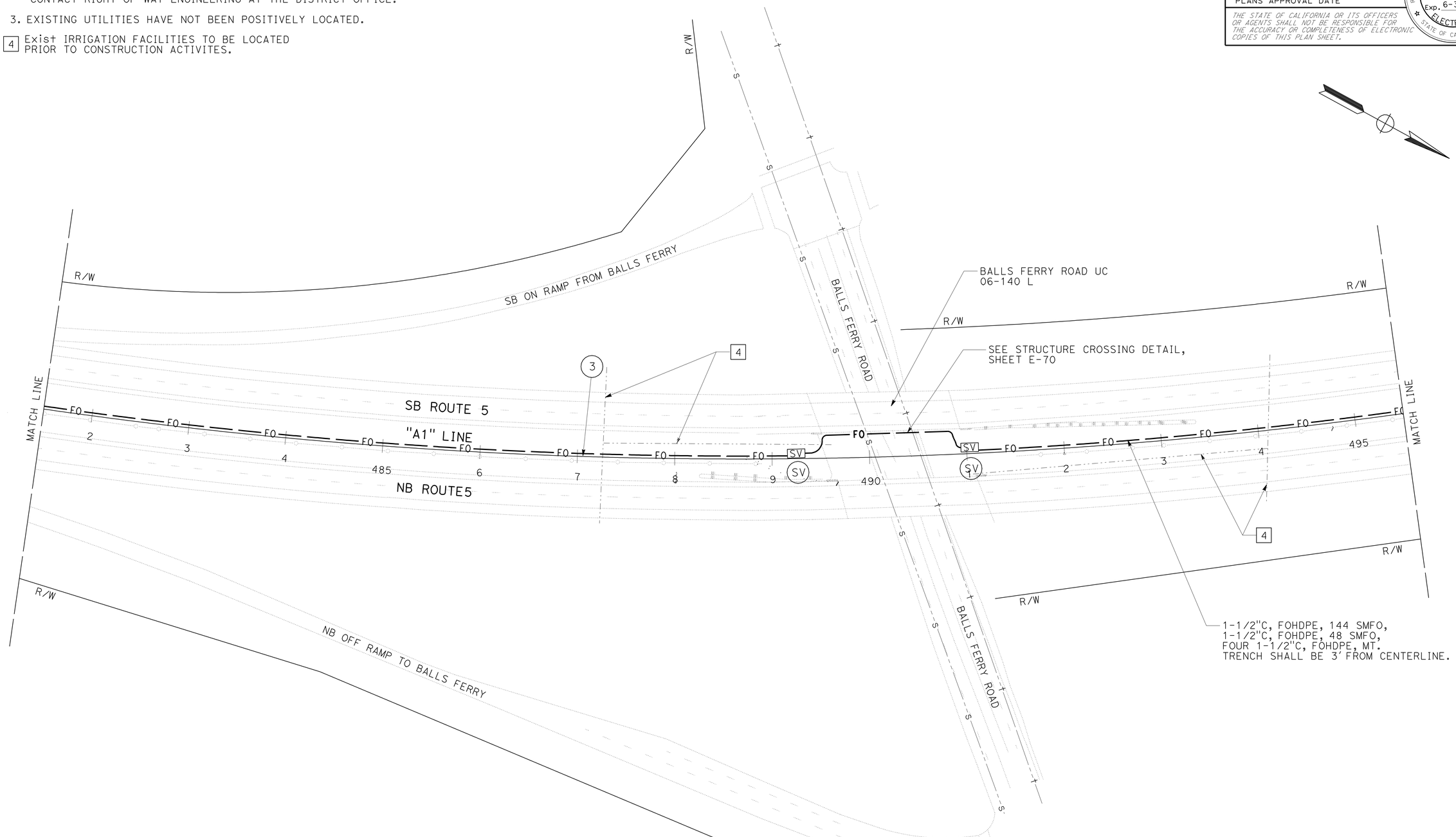

FIBER OPTIC SYSTEM

SCALE: 1" = 50'

E-9

THIS PLAN IS ACCURATE FOR ELECTRICAL WORK ONLY.

REVISED BY | DATE REVISED
JAMES M. HANNIGAN | JEREMIAH PEARCE
CALCULATED-DESIGNED BY | CHECKED BY
FUNCTIONAL SUPERVISOR: ROB STINGER

STATE OF CALIFORNIA - DEPARTMENT OF TRANSPORTATION
Caltrans ELECTRICAL DESIGN

P:\proj1\02\0c590_plans\pse\20c590ua009.dgn

LAST REVISION | DATE PLOTTED => 15-JUL-2010 | TIME PLOTTED => 14:49
07-09-10

BORDER LAST REVISED 7/2/2010 | USERNAME => trstrk | DGN FILE => 20c590ua009.dgn | RELATIVE BORDER SCALE IS IN INCHES 0 1 2 3 | UNIT 0319 | PROJECT NUMBER & PHASE 02000200001

Dist	COUNTY	ROUTE	POST MILES TOTAL PROJECT	SHEET No.	TOTAL SHEETS
02	Sha	5,44	R3.2/R18.6, L0.3/L1.8	36	120

J. Hannigan 07-09-10
REGISTERED ELECTRICAL ENGINEER

7-12-10
PLANS APPROVAL DATE

REGISTERED PROFESSIONAL ENGINEER J.M. HANNIGAN No. E13665 Exp. 6-30-11 ELECTRICAL STATE OF CALIFORNIA

THE STATE OF CALIFORNIA OR ITS OFFICERS OR AGENTS SHALL NOT BE RESPONSIBLE FOR THE ACCURACY OR COMPLETENESS OF ELECTRONIC COPIES OF THIS PLAN SHEET.

NOTES (THIS SHEET):

1. MAINTAIN 4′ HORIZONTAL CLEARANCE FROM OBSTRUCTIONS.
2. FOR ACCURATE RIGHT OF WAY AND ACCESS DATA, CONTACT RIGHT OF WAY ENGINEERING AT THE DISTRICT OFFICE.
3. EXISTING UTILITIES HAVE NOT BEEN POSITIVELY LOCATED.
4. EXISTING IRRIGATION FACILITIES TO BE LOCATED PRIOR TO CONSTRUCTION ACTIVITES.

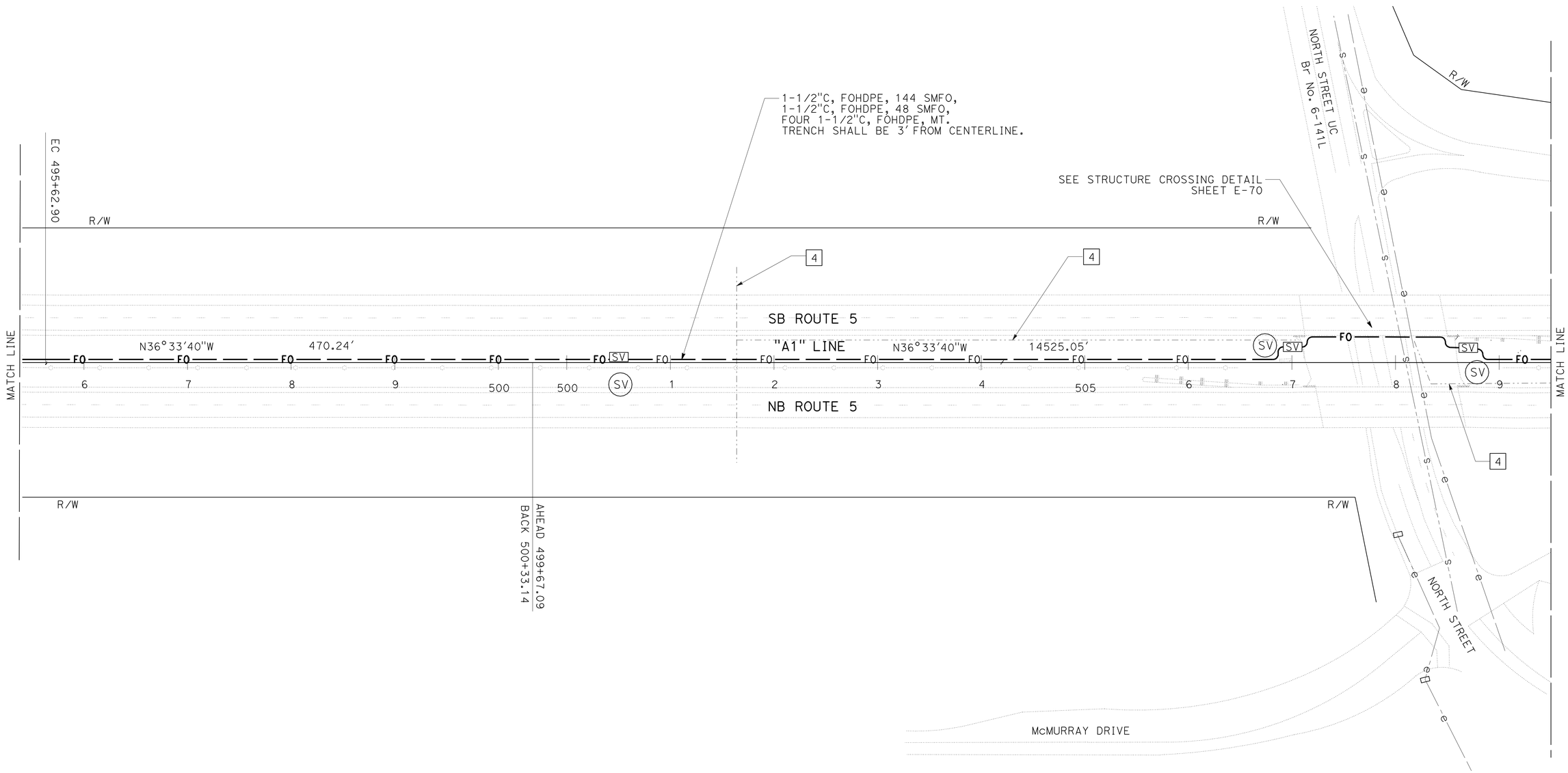

FIBER OPTIC SYSTEM

SCALE: 1" = 50′ **E-10**

THIS PLAN IS ACCURATE FOR ELECTRICAL WORK ONLY.

STATE OF CALIFORNIA - DEPARTMENT OF TRANSPORTATION
Caltrans ELECTRICAL DESIGN

FUNCTIONAL SUPERVISOR: ROB STINGER
CALCULATED-DESIGNED BY: JAMES M. HANNIGAN
CHECKED BY: JEREMIAH PEARCE
REVISED BY / DATE REVISED

P:\proj1\02\0c590_plans\pse\20c590ua010.dgn

LAST REVISION 07-09-10 | DATE PLOTTED => 15-JUL-2010 | TIME PLOTTED => 16:14

BORDER LAST REVISED 7/2/2010 | USERNAME => trrichf | DGN FILE => 20c590ua010.dgn | RELATIVE BORDER SCALE IS IN INCHES 0 1 2 3 | UNIT 0319 | PROJECT NUMBER & PHASE 02000200001

Dist	COUNTY	ROUTE	POST MILES TOTAL PROJECT	SHEET No.	TOTAL SHEETS
02	Sha	5,44	R3.2/R18.6, L0.3/L1.8	37	120

REGISTERED ELECTRICAL ENGINEER 07-09-10

7-12-10
PLANS APPROVAL DATE

REGISTERED PROFESSIONAL ENGINEER J.M. HANNIGAN No. E13665 Exp. 6-30-11 ELECTRICAL STATE OF CALIFORNIA

THE STATE OF CALIFORNIA OR ITS OFFICERS OR AGENTS SHALL NOT BE RESPONSIBLE FOR THE ACCURACY OR COMPLETENESS OF ELECTRONIC COPIES OF THIS PLAN SHEET.

NOTES (THIS SHEET):

1. MAINTAIN 4′ HORIZONTAL CLEARANCE FROM OBSTRUCTIONS.
2. FOR ACCURATE RIGHT OF WAY AND ACCESS DATA, CONTACT RIGHT OF WAY ENGINEERING AT THE DISTRICT OFFICE.
3. EXISTING UTILITIES HAVE NOT BEEN POSITIVELY LOCATED.
4. EXISTING IRRIGATION FACILITIES TO BE LOCATED PRIOR TO CONSTRUCTION ACTIVITES.

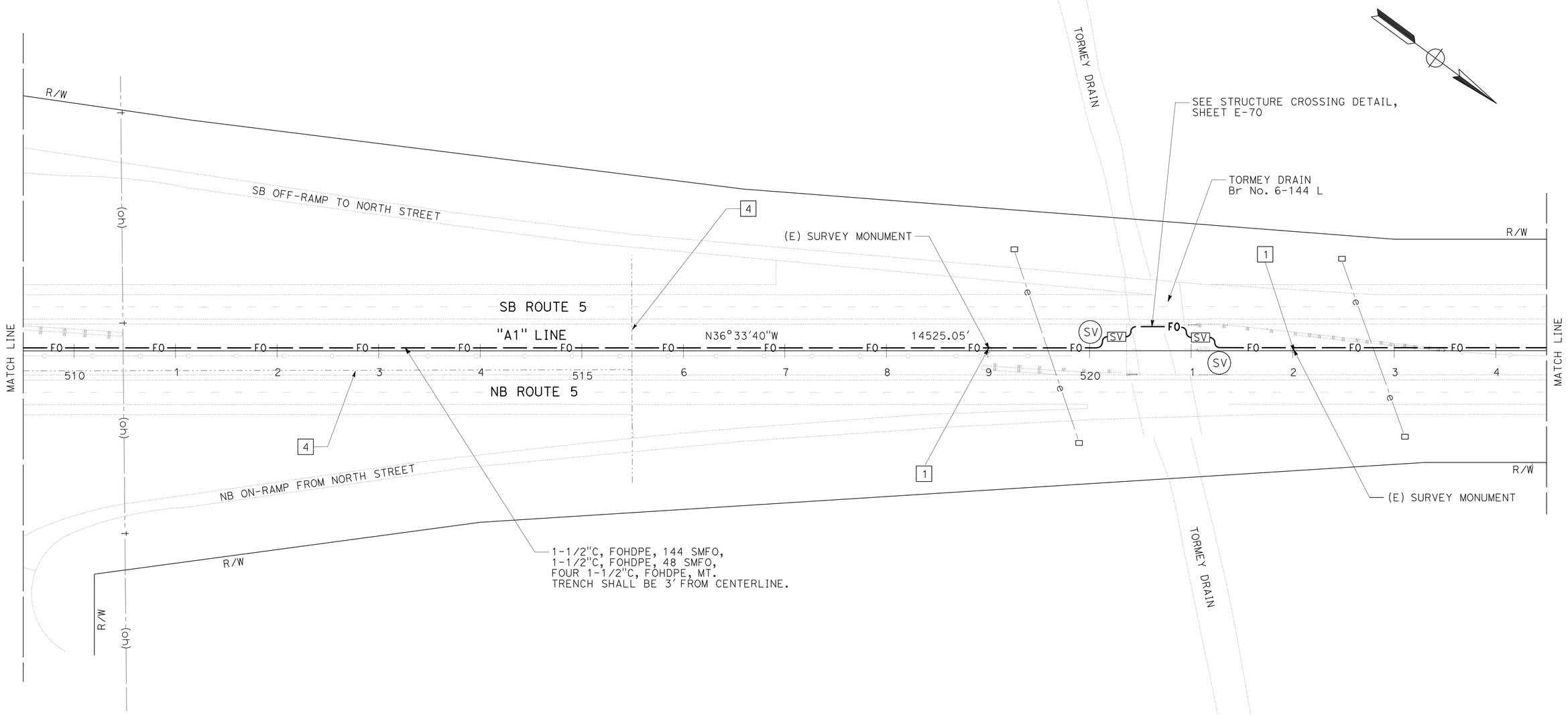

FIBER OPTIC SYSTEM

SCALE: 1" = 50′

E-11

THIS PLAN IS ACCURATE FOR ELECTRICAL WORK ONLY.

STATE OF CALIFORNIA - DEPARTMENT OF TRANSPORTATION
Caltrans ELECTRICAL DESIGN

FUNCTIONAL SUPERVISOR: ROB STINGER
CALCULATED-DESIGNED BY: JAMES M. HANNIGAN
CHECKED BY: JEREMIAH PEARCE
REVISED BY
DATE REVISED

P:\proj\02\0c590_plans\pse\20c590ua011.dgn

LAST REVISION 07-09-10 | DATE PLOTTED => 15-JUL-2010 | TIME PLOTTED => 16:14

Dist	COUNTY	ROUTE	POST MILES TOTAL PROJECT	SHEET No.	TOTAL SHEETS
02	Sha	5,44	R3.2/R18.6, L0.3/L1.8	38	120

J. Hannigan 07-09-10
REGISTERED ELECTRICAL ENGINEER

7-12-10
PLANS APPROVAL DATE

REGISTERED PROFESSIONAL ENGINEER J.M. HANNIGAN No. E13665 Exp. 6-30-11 ELECTRICAL STATE OF CALIFORNIA

THE STATE OF CALIFORNIA OR ITS OFFICERS OR AGENTS SHALL NOT BE RESPONSIBLE FOR THE ACCURACY OR COMPLETENESS OF ELECTRONIC COPIES OF THIS PLAN SHEET.

NOTES (THIS SHEET):

1. MAINTAIN 4' HORIZONTAL CLEARANCE FROM OBSTRUCTIONS.
2. FOR ACCURATE RIGHT OF WAY AND ACCESS DATA, CONTACT RIGHT OF WAY ENGINEERING AT THE DISTRICT OFFICE.
3. EXISTING UTILITIES HAVE NOT BEEN POSITIVELY LOCATED.

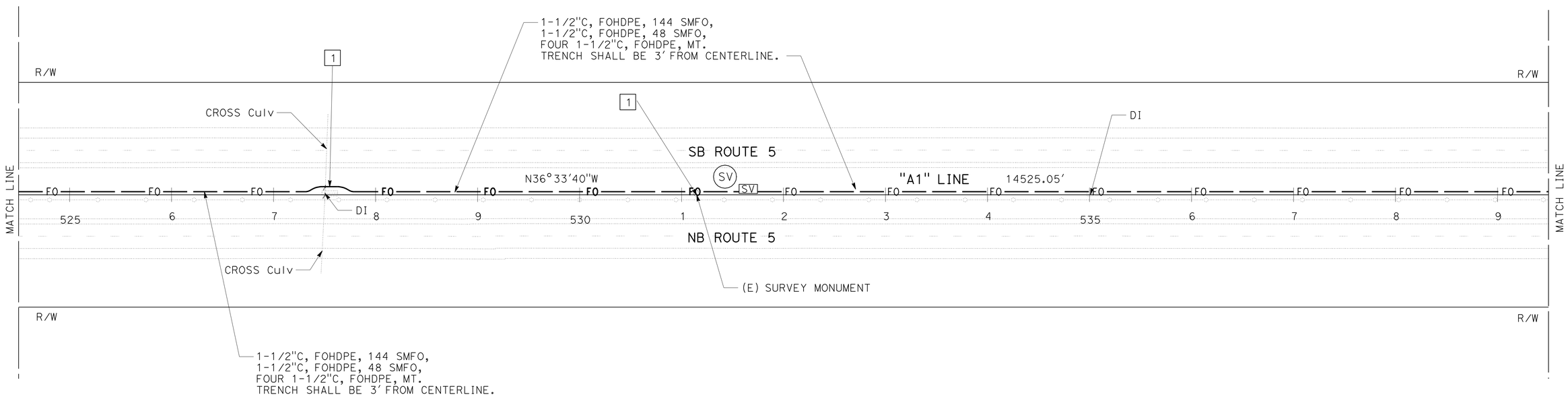

FIBER OPTIC SYSTEM

SCALE: 1" = 50'

E-12

THIS PLAN IS ACCURATE FOR ELECTRICAL WORK ONLY.

REVISED BY	DATE REVISED

CALCULATED-DESIGNED BY	CHECKED BY
JAMES M. HANNIGAN	JEREMIAH PEARCE

FUNCTIONAL SUPERVISOR: ROB STINGER

STATE OF CALIFORNIA - DEPARTMENT OF TRANSPORTATION
Caltrans ELECTRICAL DESIGN

P:\proj\02\0c590_plans\pse\20c590ua012.dgn

LAST REVISION 07-09-10 | DATE PLOTTED => 16-JUL-2010 | TIME PLOTTED => 13:35

Dist	COUNTY	ROUTE	POST MILES TOTAL PROJECT	SHEET No.	TOTAL SHEETS
02	Sha	5,44	R3.2/R18.6, L0.3/L1.8	39	120

J. Hannigan 07-09-10
REGISTERED ELECTRICAL ENGINEER

7-12-10
PLANS APPROVAL DATE

REGISTERED PROFESSIONAL ENGINEER J.M. HANNIGAN No. E13665 Exp. 6-30-11 ELECTRICAL STATE OF CALIFORNIA

THE STATE OF CALIFORNIA OR ITS OFFICERS OR AGENTS SHALL NOT BE RESPONSIBLE FOR THE ACCURACY OR COMPLETENESS OF ELECTRONIC COPIES OF THIS PLAN SHEET.

NOTES (THIS SHEET):

1. MAINTAIN 4′ HORIZONTAL CLEARANCE FROM OBSTRUCTIONS.
2. FOR ACCURATE RIGHT OF WAY AND ACCESS DATA, CONTACT RIGHT OF WAY ENGINEERING AT THE DISTRICT OFFICE.
3. EXISTING UTILITIES HAVE NOT BEEN POSITIVELY LOCATED.

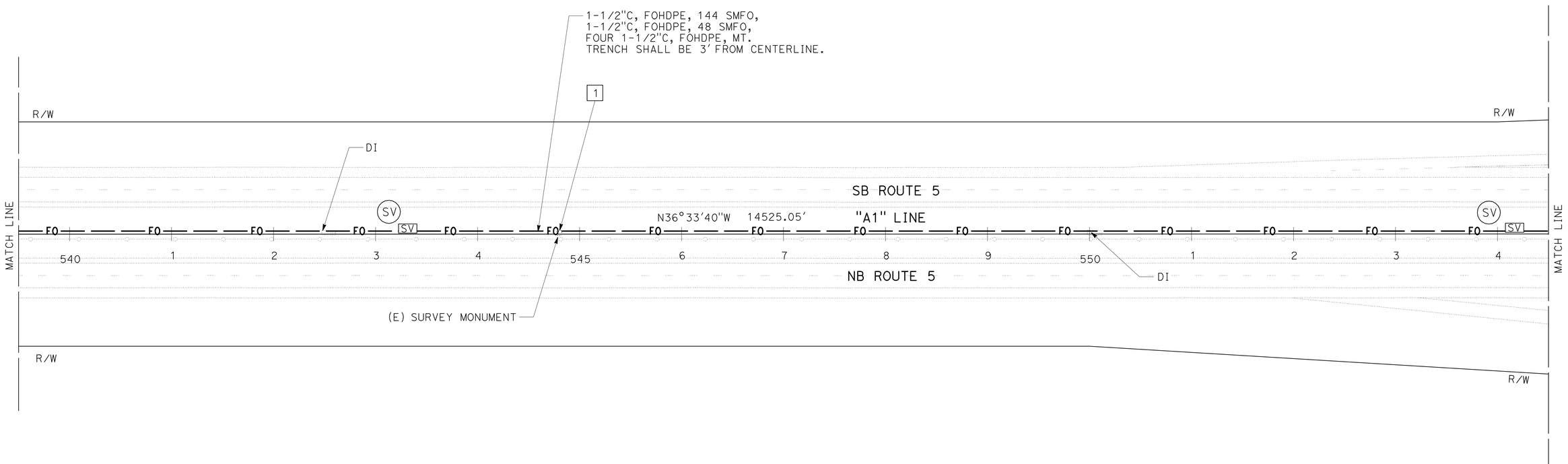

FIBER OPTIC SYSTEM

SCALE: 1" = 50′

E-13

THIS PLAN IS ACCURATE FOR ELECTRICAL WORK ONLY.

REVISED BY	JAMES M. HANNIGAN
DATE REVISED	JEREMIAH PEARCE
CALCULATED-DESIGNED BY	FUNCTIONAL SUPERVISOR
CHECKED BY	ROB STINGER

STATE OF CALIFORNIA - DEPARTMENT OF TRANSPORTATION
Caltrans ELECTRICAL DESIGN

P:\proj1\02\0c590_plans\pse\20c590ua013.dgn

LAST REVISION DATE PLOTTED => 15-JUL-2010
07-09-10 TIME PLOTTED => 16:15

Dist	COUNTY	ROUTE	POST MILES TOTAL PROJECT	SHEET No.	TOTAL SHEETS
02	Sha	5,44	R3.2/R18.6, L0.3/L1.8	40	120

J. Hannigan 07-09-10
REGISTERED ELECTRICAL ENGINEER

7-12-10
PLANS APPROVAL DATE

REGISTERED PROFESSIONAL ENGINEER J.M. HANNIGAN No. E13665 Exp. 6-30-11 ELECTRICAL STATE OF CALIFORNIA

THE STATE OF CALIFORNIA OR ITS OFFICERS OR AGENTS SHALL NOT BE RESPONSIBLE FOR THE ACCURACY OR COMPLETENESS OF ELECTRONIC COPIES OF THIS PLAN SHEET.

NOTES:

1. FOR ACCURATE RIGHT OF WAY AND ACCESS DATA, CONTACT RIGHT OF WAY ENGINEERING AT THE DISTRICT OFFICE.
2. EXISTING UTILITIES HAVE NOT BEEN POSITIVELY LOCATED.

NOTES (SHEET E-14 AND E-15):

1. Exist 2"C, 2#6 (lighting), 2#6 (ems), 2#6 (cctv), ADD 3#2, 1 #2G (SUBPANEL A).
2. Exist 2"C, 2#6 (ems), 4#8 (ems), REMOVE 4#8 (ems).
3. Exist 1-1/2"C, 2#6 (lighting), 4#8 (ems), REMOVE 4#8 (ems).
4. Exist 2"C, 1 tc (ems), 1 tc (cctv), REMOVE 1 tc (ems), ADD 1 TC (SUBPANEL A).
5. Exist 2"C, 1 tc (ems), REMOVE 1 tc (ems).
6. Exist 1-1/2"C, 1 tc (cctv), ADD 1 TC (CMS).
7. 2"C, 3#2, 1#2G (SUBPANEL A).
8. 2"C, 1 TC (CMS Cab).
9. 2"C, 3#6, 1#6G.
10. 2"C, 2 STATE-FURNISHED CABLES.
11. Exist SERVICE EQUIPMENT, SEE SHEET E-63.
12. Exist 1-1/2"C, 2#6 (cctv), ADD 3#2, 1#2G (CMS).
13. Exist 2"C, 2#6 (cctv), ADD 3#2, 1#2G (CMS).
14. Exist 2"C, 1 tc (cctv), ADD 1 TC (CMS).
15. MAINTAIN 4' HORIZONTAL CLEARANCE FROM OBSTRUCTIONS.
16. CONCRETE SIDEWALK, SEE CONSTRUCTION DETAILS.
17. MAINTIAN 4' HORIZANTAL CLEARANCE FROM OBSTRUCTIONS.

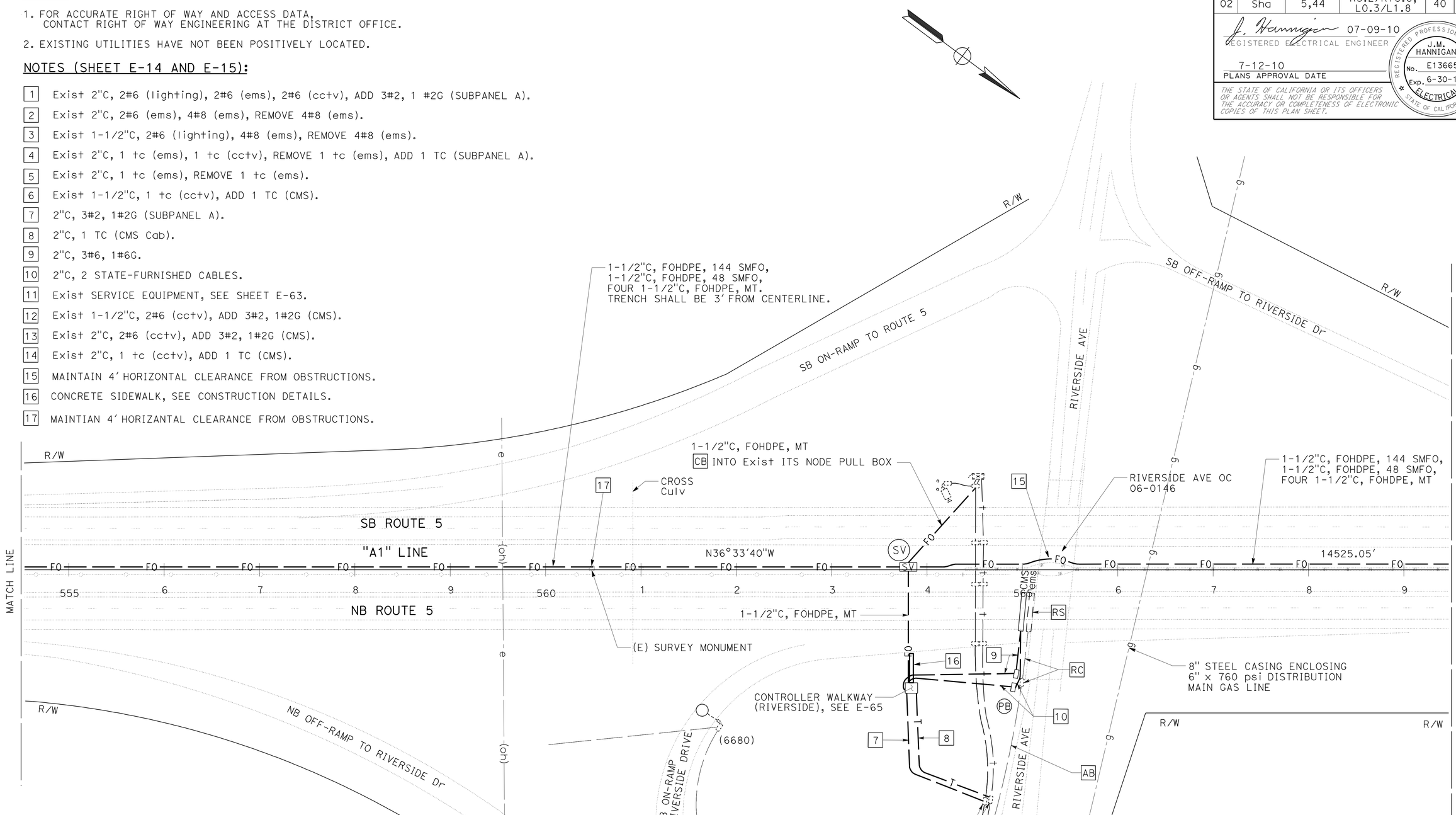

FIBER OPTIC SYSTEM

SCALE: 1" = 50'

E-14

THIS PLAN IS ACCURATE FOR ELECTRICAL WORK ONLY.

REVISED BY | DATE REVISED

JAMES M. HANNIGAN | JEREMIAH PEARCE

CALCULATED-DESIGNED BY | CHECKED BY

FUNCTIONAL SUPERVISOR: ROB STINGER

STATE OF CALIFORNIA - DEPARTMENT OF TRANSPORTATION

Caltrans ELECTRICAL DESIGN

P:\proj\02\0c590_plans\pse\20c590ua014.dgn

LAST REVISION 07-09-10 | DATE PLOTTED => 15-JUL-2010 | TIME PLOTTED => 16:15

BORDER LAST REVISED 7/2/2010 | USERNAME => trrichf | DGN FILE => 20c590ua014.dgn | RELATIVE BORDER SCALE IS IN INCHES 0 1 2 3 | UNIT 0319 | PROJECT NUMBER & PHASE 02000200001

Dist	COUNTY	ROUTE	POST MILES TOTAL PROJECT	SHEET No.	TOTAL SHEETS
02	Sha	5,44	R3.2/R18.6, L0.3/L1.8	41	120

J. Hannigan 07-09-10
REGISTERED ELECTRICAL ENGINEER

7-12-10
PLANS APPROVAL DATE

REGISTERED PROFESSIONAL ENGINEER J.M. HANNIGAN No. E13665 Exp. 6-30-11 ELECTRICAL STATE OF CALIFORNIA

THE STATE OF CALIFORNIA OR ITS OFFICERS OR AGENTS SHALL NOT BE RESPONSIBLE FOR THE ACCURACY OR COMPLETENESS OF ELECTRONIC COPIES OF THIS PLAN SHEET.

NOTES:

1. FOR ACCURATE RIGHT OF WAY AND ACCESS DATA, CONTACT RIGHT OF WAY ENGINEERING AT THE DISTRICT OFFICE.
2. EXISTING UTILITIES HAVE NOT BEEN POSITIVELY LOCATED.

NOTES (SHEET E-14 AND E-15):

1. Exist 2"C, 2#6 (lighting), 2#6 (ems), 2#6 (cctv), ADD 3#2, 1 #2G (SUBPANEL A).
2. Exist 2"C, 2#6 (ems), 4#8 (ems), REMOVE 4#8 (ems).
3. Exist 1-1/2"C, 2#6 (lighting), 4#8 (ems), REMOVE 4#8 (ems).
4. Exist 2"C, 1 tc (ems), 1 tc (cctv), REMOVE 1 tc (ems), ADD 1 TC (SUBPANEL A).
5. Exist 2"C, 1 tc (ems), REMOVE 1 tc (ems).
6. Exist 1-1/2"C, 1 tc (cctv), ADD 1 TC (CMS).
7. 2"C, 3#2, 1#2G (SUBPANEL A).
8. 2"C, 1 TC (CMS Cab).
9. 2"C, 3#6, 1#6G.
10. 2"C, 2 STATE-FURNISHED CABLES.
11. Exist SERVICE EQUIPMENT, SEE SHEET E-63.
12. Exist 1-1/2"C, 2#6 (cctv), ADD 3#2, 1#2G (CMS).
13. Exist 2"C, 2#6 (cctv), ADD 3#2, 1#2G (CMS).
14. Exist 2"C, 1 tc (cctv), ADD 1 TC (CMS).
15. MAINTAIN 4' HORIZONTAL CLEARANCE FROM OBSTRUCTIONS.

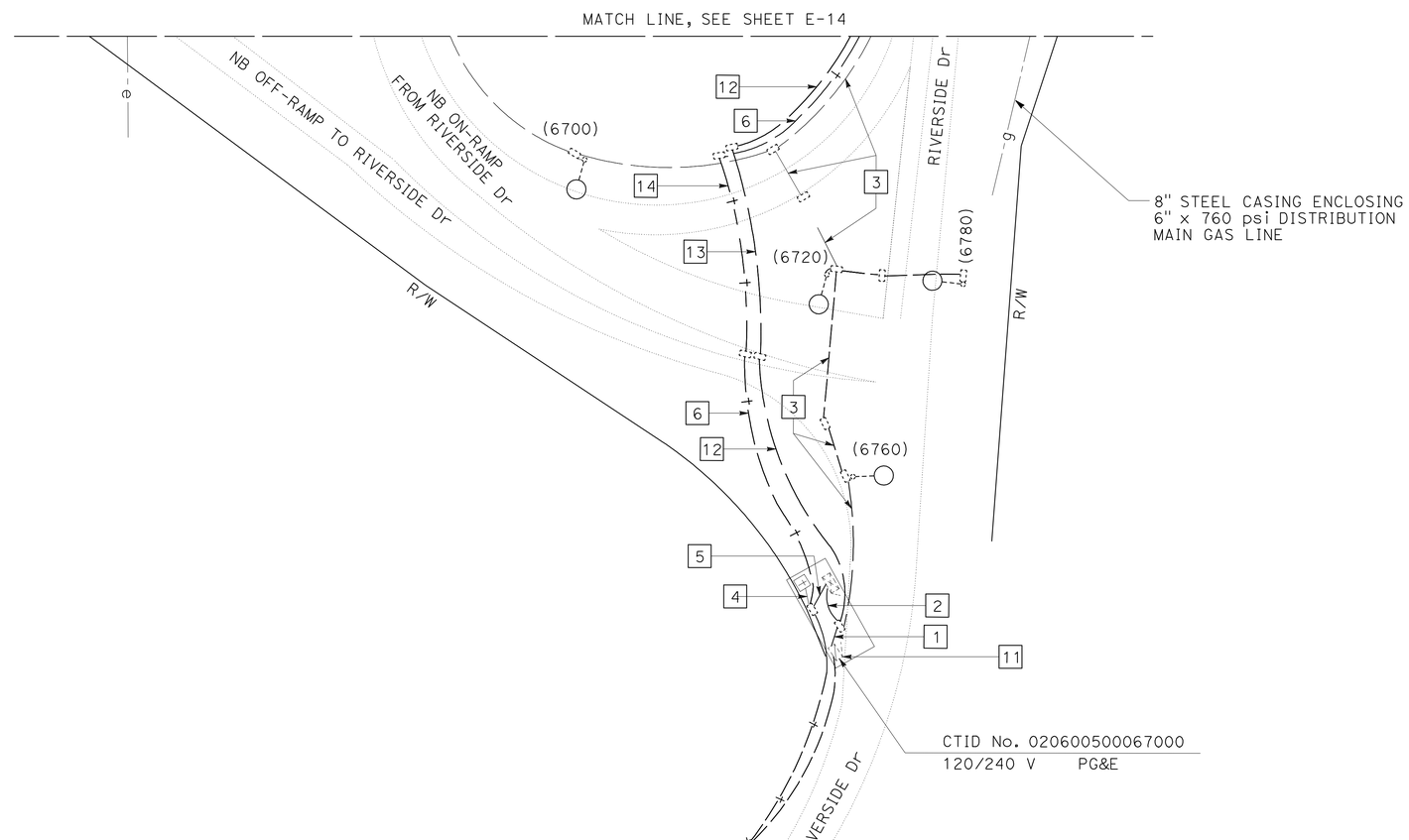

FIBER OPTIC SYSTEM

SCALE: 1" = 50'

E-15

THIS PLAN IS ACCURATE FOR ELECTRICAL WORK ONLY.

REVISED BY | DATE REVISED
JAMES M. HANNIGAN | JEREMIAH PEARCE
CALCULATED-DESIGNED BY | CHECKED BY
FUNCTIONAL SUPERVISOR: ROB STINGER

STATE OF CALIFORNIA - DEPARTMENT OF TRANSPORTATION
Caltrans ELECTRICAL DESIGN

P:\proj1\02\0c590_plans\pse\20c590ua015.dgn

LAST REVISION 07-09-10 | DATE PLOTTED => 15-JUL-2010 | TIME PLOTTED => 16:15

Dist	COUNTY	ROUTE	POST MILES TOTAL PROJECT	SHEET No.	TOTAL SHEETS
02	Sha	5,44	R3.2/R18.6, L0.3/L1.8	42	120

J. Hannigan 07-09-10
REGISTERED ELECTRICAL ENGINEER

7-12-10
PLANS APPROVAL DATE

REGISTERED PROFESSIONAL ENGINEER J.M. HANNIGAN No. E13665 Exp. 6-30-11 ELECTRICAL STATE OF CALIFORNIA

THE STATE OF CALIFORNIA OR ITS OFFICERS OR AGENTS SHALL NOT BE RESPONSIBLE FOR THE ACCURACY OR COMPLETENESS OF ELECTRONIC COPIES OF THIS PLAN SHEET.

NOTES (THIS SHEET):

1. MAINTAIN 4′ HORIZONTAL CLEARANCE FROM OBSTRUCTIONS.
2. FOR ACCURATE RIGHT OF WAY AND ACCESS DATA, CONTACT RIGHT OF WAY ENGINEERING AT THE DISTRICT OFFICE.
3. EXISTING UTILITIES HAVE NOT BEEN POSITIVELY LOCATED.

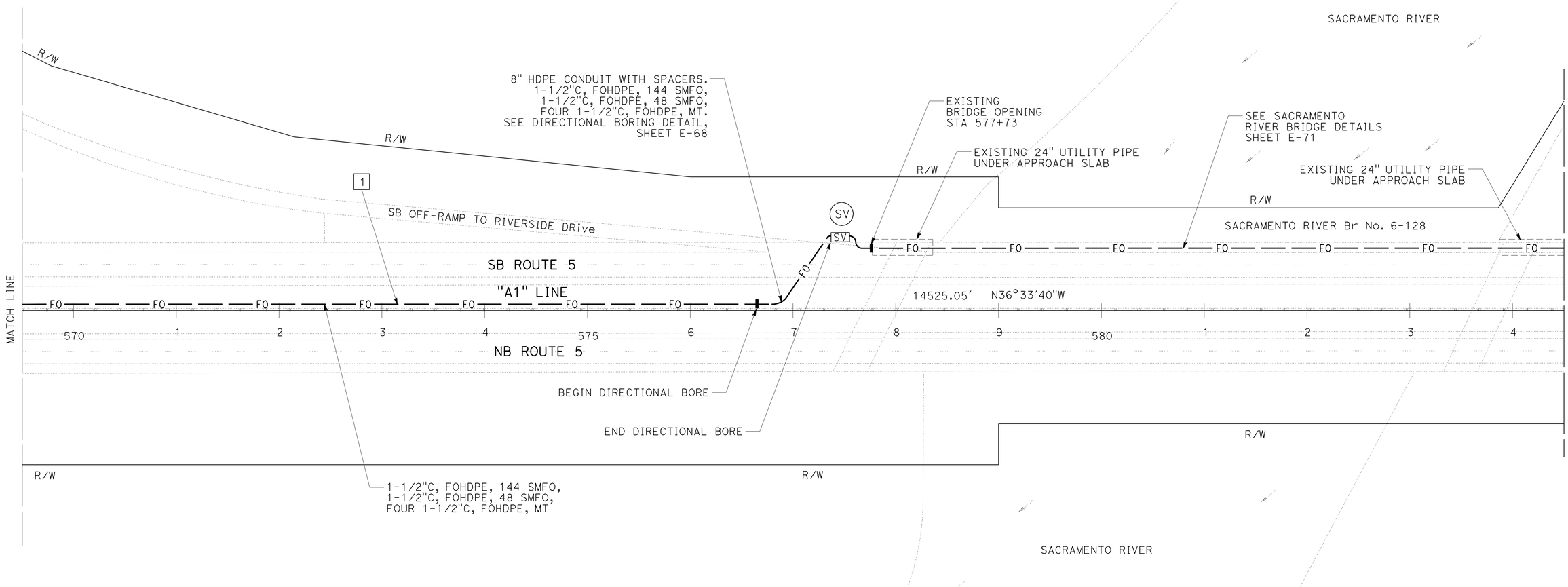

FIBER OPTIC SYSTEM

SCALE: 1" = 50′ **E-16**

THIS PLAN IS ACCURATE FOR ELECTRICAL WORK ONLY.

REVISED BY | DATE REVISED
JAMES M. HANNIGAN | JEREMIAH PEARCE
CALCULATED-DESIGNED BY | CHECKED BY
FUNCTIONAL SUPERVISOR
ROB STINGER

STATE OF CALIFORNIA - DEPARTMENT OF TRANSPORTATION
Caltrans ELECTRICAL DESIGN

P:\proj1\02\0c590_plans\pse\20c590ua016.dgn

LAST REVISION 07-09-10 | DATE PLOTTED => 15-JUL-2010 TIME PLOTTED => 16:15

Dist	COUNTY	ROUTE	POST MILES TOTAL PROJECT	SHEET No.	TOTAL SHEETS
02	Sha	5,44	R3.2/R18.6, L0.3/L1.8	43	120

J. Hannigan 07-09-10
REGISTERED ELECTRICAL ENGINEER

7-12-10
PLANS APPROVAL DATE

REGISTERED PROFESSIONAL ENGINEER J.M. HANNIGAN No. E13665 Exp. 6-30-11 ELECTRICAL STATE OF CALIFORNIA

THE STATE OF CALIFORNIA OR ITS OFFICERS OR AGENTS SHALL NOT BE RESPONSIBLE FOR THE ACCURACY OR COMPLETENESS OF ELECTRONIC COPIES OF THIS PLAN SHEET.

NOTES (THIS SHEET):

1. MAINTAIN 4' HORIZONTAL CLEARANCE FROM OBSTRUCTIONS.
2. FOR ACCURATE RIGHT OF WAY AND ACCESS DATA, CONTACT RIGHT OF WAY ENGINEERING AT THE DISTRICT OFFICE.
3. EXISTING UTILITIES HAVE NOT BEEN POSITIVELY LOCATED.

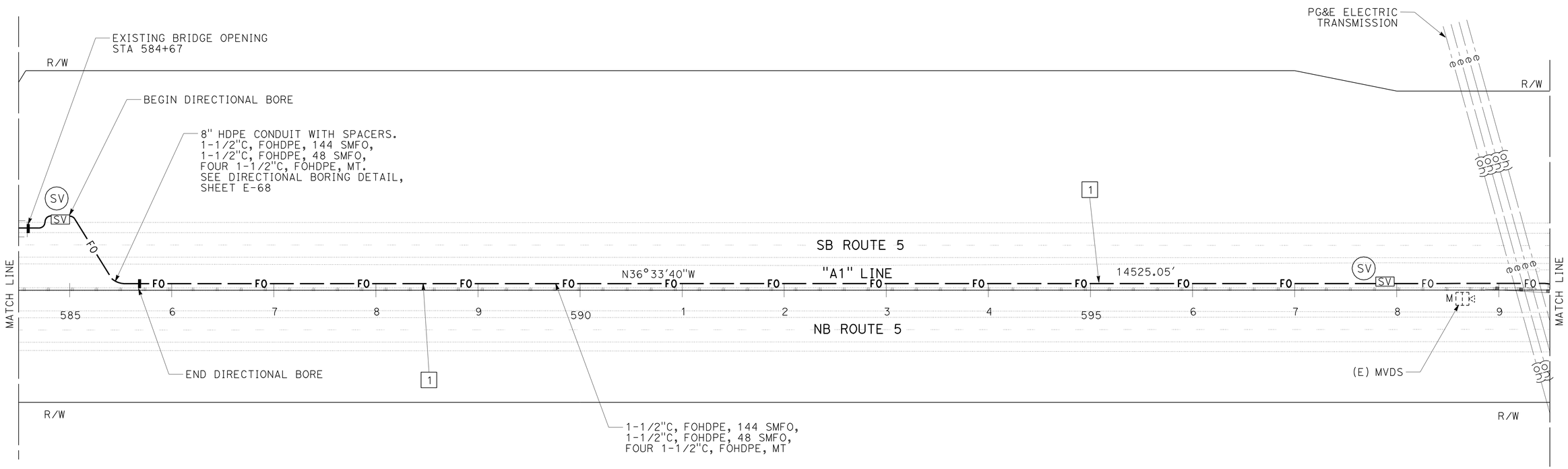

FIBER OPTIC SYSTEM

SCALE: 1" = 50'

E-17

THIS PLAN IS ACCURATE FOR ELECTRICAL WORK ONLY.

REVISED BY	DATE REVISED

CALCULATED-DESIGNED BY: JAMES M. HANNIGAN
CHECKED BY: JEREMIAH PEARCE
FUNCTIONAL SUPERVISOR: ROB STINGER

STATE OF CALIFORNIA - DEPARTMENT OF TRANSPORTATION
Caltrans ELECTRICAL DESIGN

P:\proj1\02\0c590_plans\pse\20c590ua017.dgn

LAST REVISION 07-09-10 | DATE PLOTTED => 15-JUL-2010 | TIME PLOTTED => 16:15

Dist	COUNTY	ROUTE	POST MILES TOTAL PROJECT	SHEET No.	TOTAL SHEETS
02	Sha	5,44	R3.2/R18.6, L0.3/L1.8	44	120

REGISTERED ELECTRICAL ENGINEER 07-09-10

PLANS APPROVAL DATE 7-12-10

REGISTERED PROFESSIONAL ENGINEER J.M. HANNIGAN No. E13665 Exp. 6-30-11 ELECTRICAL STATE OF CALIFORNIA

THE STATE OF CALIFORNIA OR ITS OFFICERS OR AGENTS SHALL NOT BE RESPONSIBLE FOR THE ACCURACY OR COMPLETENESS OF ELECTRONIC COPIES OF THIS PLAN SHEET.

NOTES (THIS SHEET):

1. MAINTAIN 4' HORIZONTAL CLEARANCE FROM OBSTRUCTIONS.
2. FOR ACCURATE RIGHT OF WAY AND ACCESS DATA, CONTACT RIGHT OF WAY ENGINEERING AT THE DISTRICT OFFICE.
3. EXISTING UTILITIES HAVE NOT BEEN POSITIVELY LOCATED.

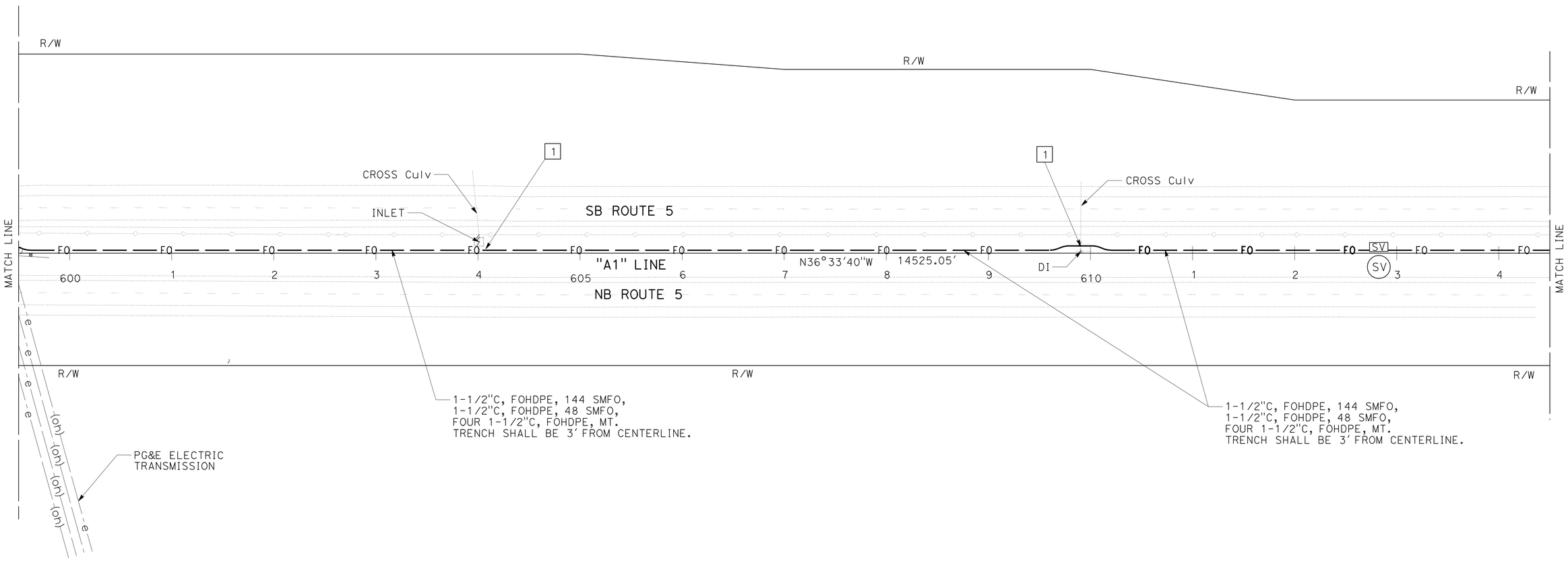

FIBER OPTIC SYSTEM

SCALE: 1" = 50'

E-18

THIS PLAN IS ACCURATE FOR ELECTRICAL WORK ONLY.

CALCULATED-DESIGNED BY	JAMES M. HANNIGAN
CHECKED BY	JEREMIAH PEARCE
FUNCTIONAL SUPERVISOR	ROB STINGER
REVISED BY	
DATE REVISED	

STATE OF CALIFORNIA - DEPARTMENT OF TRANSPORTATION

Caltrans ELECTRICAL DESIGN

P:\proj\02\0c590_plans\pse\20c590ua018.dgn

LAST REVISION 07-09-10 DATE PLOTTED => 15-JUL-2010 TIME PLOTTED => 16:15

Dist	COUNTY	ROUTE	POST MILES TOTAL PROJECT	SHEET No.	TOTAL SHEETS
02	Sha	5,44	R3.2/R18.6, L0.3/L1.8	45	120

J. Hannigan 07-09-10
REGISTERED ELECTRICAL ENGINEER

7-12-10
PLANS APPROVAL DATE

REGISTERED PROFESSIONAL ENGINEER J.M. HANNIGAN No. E13665 Exp. 6-30-11 ELECTRICAL STATE OF CALIFORNIA

THE STATE OF CALIFORNIA OR ITS OFFICERS OR AGENTS SHALL NOT BE RESPONSIBLE FOR THE ACCURACY OR COMPLETENESS OF ELECTRONIC COPIES OF THIS PLAN SHEET.

NOTES (THIS SHEET):

1. MAINTAIN 4′ HORIZONTAL CLEARANCE FROM OBSTRUCTIONS.
2. FOR ACCURATE RIGHT OF WAY AND ACCESS DATA, CONTACT RIGHT OF WAY ENGINEERING AT THE DISTRICT OFFICE.
3. EXISTING UTILITIES HAVE NOT BEEN POSITIVELY LOCATED.

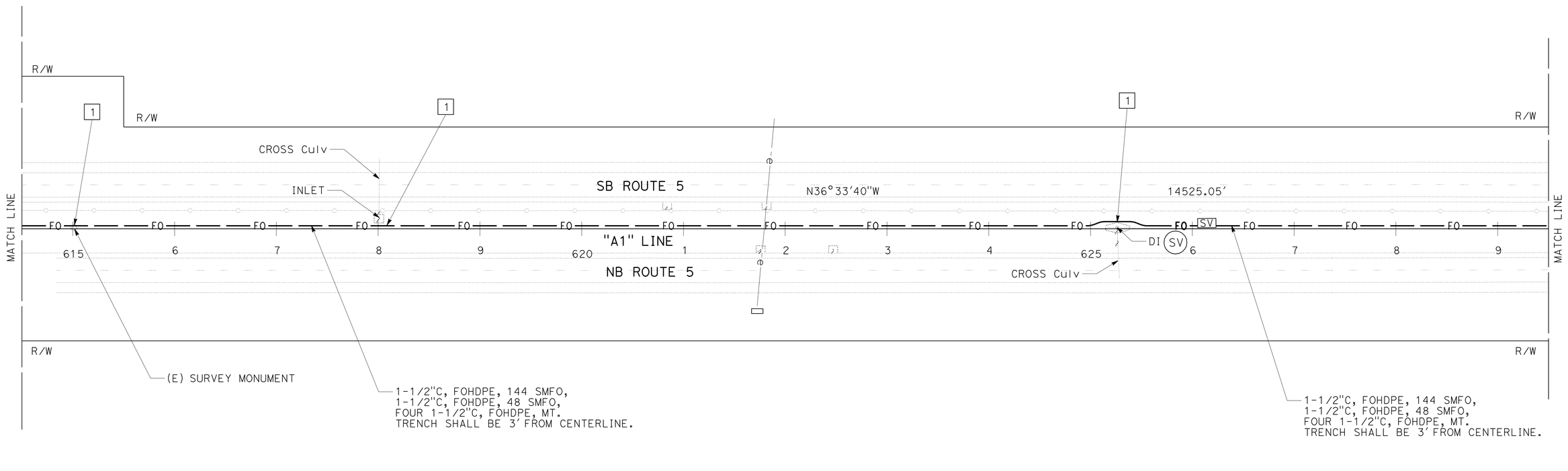

FIBER OPTIC SYSTEM

SCALE: 1" = 50′

E-19

THIS PLAN IS ACCURATE FOR ELECTRICAL WORK ONLY.

REVISED BY	DATE REVISED

CALCULATED-DESIGNED BY: JAMES M. HANNIGAN
CHECKED BY: JEREMIAH PEARCE
FUNCTIONAL SUPERVISOR: ROB STINGER

STATE OF CALIFORNIA - DEPARTMENT OF TRANSPORTATION
Caltrans ELECTRICAL DESIGN

P:\proj1\02\0c590_plans\pse\20c590ua019.dgn

LAST REVISION 07-09-10 | DATE PLOTTED => 15-JUL-2010 | TIME PLOTTED => 16:15

Dist	COUNTY	ROUTE	POST MILES TOTAL PROJECT	SHEET No.	TOTAL SHEETS
02	Sha	5,44	R3.2/R18.6, L0.3/L1.8	46	120

J. Hannigan 07-09-10
REGISTERED ELECTRICAL ENGINEER

7-12-10
PLANS APPROVAL DATE

REGISTERED PROFESSIONAL ENGINEER J.M. HANNIGAN No. E13665 Exp. 6-30-11 ELECTRICAL STATE OF CALIFORNIA

THE STATE OF CALIFORNIA OR ITS OFFICERS OR AGENTS SHALL NOT BE RESPONSIBLE FOR THE ACCURACY OR COMPLETENESS OF ELECTRONIC COPIES OF THIS PLAN SHEET.

NOTES (THIS SHEET):

1. MAINTAIN 4′ HORIZONTAL CLEARANCE FROM OBSTRUCTIONS.
2. FOR ACCURATE RIGHT OF WAY AND ACCESS DATA, CONTACT RIGHT OF WAY ENGINEERING AT THE DISTRICT OFFICE.
3. EXISTING UTILITIES HAVE NOT BEEN POSITIVELY LOCATED.

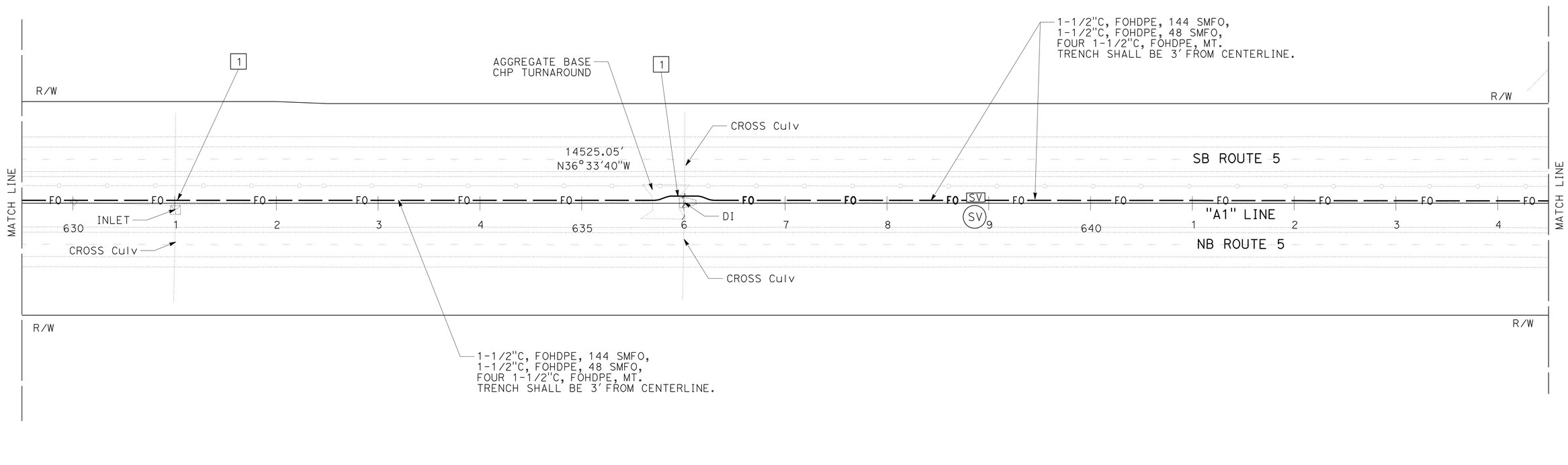

FIBER OPTIC SYSTEM

SCALE: 1" = 50′ **E-20**

THIS PLAN IS ACCURATE FOR ELECTRICAL WORK ONLY.

REVISED BY	
DATE REVISED	
CALCULATED-DESIGNED BY	JAMES M. HANNIGAN
CHECKED BY	JEREMIAH PEARCE
FUNCTIONAL SUPERVISOR	ROB STINGER

STATE OF CALIFORNIA - DEPARTMENT OF TRANSPORTATION
Caltrans ELECTRICAL DESIGN

P:\proj1\02\0c590_plans\pse\20c590ua020.dgn

LAST REVISION 07-09-10 | DATE PLOTTED => 15-JUL-2010 | TIME PLOTTED => 16:15

Dist	COUNTY	ROUTE	POST MILES TOTAL PROJECT	SHEET No.	TOTAL SHEETS
02	Sha	5,44	R3.2/R18.6, L0.3/L1.8	47	120

J. Hannigan 07-09-10
REGISTERED ELECTRICAL ENGINEER

7-12-10
PLANS APPROVAL DATE

REGISTERED PROFESSIONAL ENGINEER J.M. HANNIGAN No. E13665 Exp. 6-30-11 ELECTRICAL STATE OF CALIFORNIA

THE STATE OF CALIFORNIA OR ITS OFFICERS OR AGENTS SHALL NOT BE RESPONSIBLE FOR THE ACCURACY OR COMPLETENESS OF ELECTRONIC COPIES OF THIS PLAN SHEET.

NOTES (THIS SHEET):

1. MAINTAIN 4′ HORIZONTAL CLEARANCE FROM OBSTRUCTIONS.
2. FOR ACCURATE RIGHT OF WAY AND ACCESS DATA, CONTACT RIGHT OF WAY ENGINEERING AT THE DISTRICT OFFICE.
3. EXISTING UTILITIES HAVE NOT BEEN POSITIVELY LOCATED.

CURVE DATA				
No. ⊛	R	Δ	T	L
4	5000′	10°0′40″	437.93′	873.63′

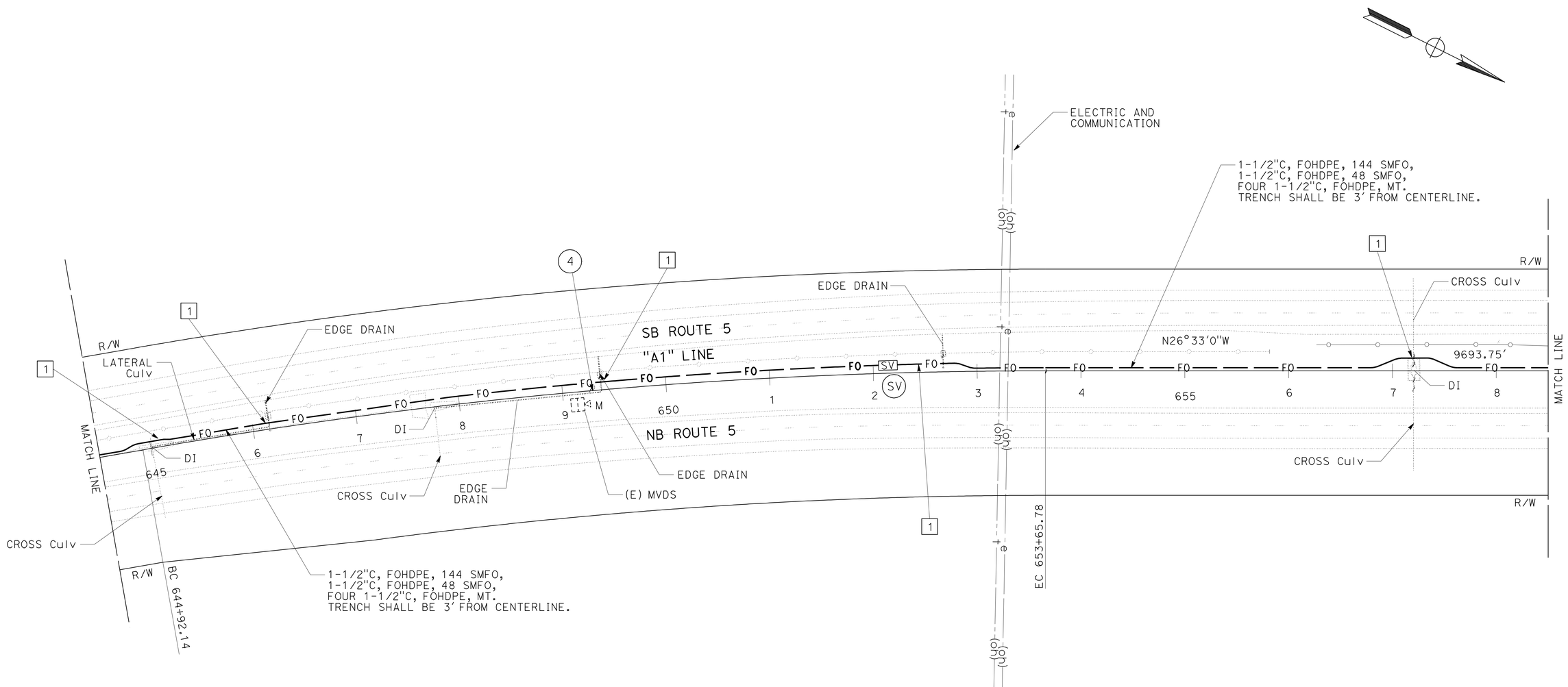

THIS PLAN IS ACCURATE FOR ELECTRICAL WORK ONLY.

FIBER OPTIC SYSTEM

SCALE: 1" = 50′

E-21

STATE OF CALIFORNIA - DEPARTMENT OF TRANSPORTATION
Caltrans **ELECTRICAL DESIGN**

FUNCTIONAL SUPERVISOR: ROB STINGER
CALCULATED-DESIGNED BY: JAMES M. HANNIGAN
CHECKED BY: JEREMIAH PEARCE
REVISED BY / DATE REVISED

P:\proj\02\0c590_plans\pse\20c590ua021.dgn

LAST REVISION 07-09-10 | DATE PLOTTED => 15-JUL-2010 | TIME PLOTTED => 16:15

BORDER LAST REVISED 7/2/2010 | USERNAME => trrichf | DGN FILE => 20c590ua021.dgn | RELATIVE BORDER SCALE IS IN INCHES 0 1 2 3 | UNIT 0319 | PROJECT NUMBER & PHASE 02000200001

Dist	COUNTY	ROUTE	POST MILES TOTAL PROJECT	SHEET No.	TOTAL SHEETS
02	Sha	5,44	R3.2/R18.6, L0.3/L1.8	48	120

J. Hannigan 07-09-10
REGISTERED ELECTRICAL ENGINEER

7-12-10
PLANS APPROVAL DATE

REGISTERED PROFESSIONAL ENGINEER
J.M. HANNIGAN
No. E13665
Exp. 6-30-11
ELECTRICAL
STATE OF CALIFORNIA

THE STATE OF CALIFORNIA OR ITS OFFICERS OR AGENTS SHALL NOT BE RESPONSIBLE FOR THE ACCURACY OR COMPLETENESS OF ELECTRONIC COPIES OF THIS PLAN SHEET.

NOTES (THIS SHEET):

1. MAINTAIN 4′ HORIZONTAL CLEARANCE FROM OBSTRUCTIONS.
2. FOR ACCURATE RIGHT OF WAY AND ACCESS DATA, CONTACT RIGHT OF WAY ENGINEERING AT THE DISTRICT OFFICE.
3. EXISTING UTILITIES HAVE NOT BEEN POSITIVELY LOCATED.

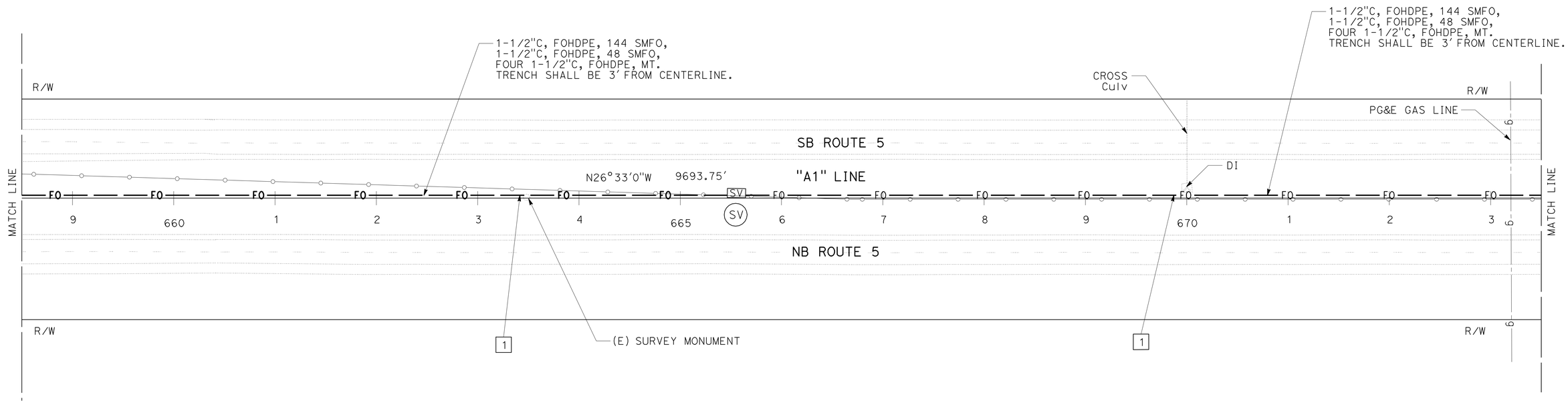

FIBER OPTIC SYSTEM

SCALE: 1" = 50′

E-22

THIS PLAN IS ACCURATE FOR ELECTRICAL WORK ONLY.

REVISED BY	DATE REVISED

CALCULATED-DESIGNED BY: JAMES M. HANNIGAN
CHECKED BY: JEREMIAH PEARCE
FUNCTIONAL SUPERVISOR: ROB STINGER

STATE OF CALIFORNIA - DEPARTMENT OF TRANSPORTATION
Caltrans ELECTRICAL DESIGN

P:\proj\02\0c590_plans\pse\20c590ua022.dgn

LAST REVISION 07-09-10
DATE PLOTTED => 15-JUL-2010
TIME PLOTTED => 16:15

Dist	COUNTY	ROUTE	POST MILES TOTAL PROJECT	SHEET No.	TOTAL SHEETS
02	Sha	5,44	R3.2/R18.6, L0.3/L1.8	49	120

J. Hannigan 07-09-10
REGISTERED ELECTRICAL ENGINEER

7-12-10
PLANS APPROVAL DATE

REGISTERED PROFESSIONAL ENGINEER J.M. HANNIGAN No. E13665 Exp. 6-30-11 ELECTRICAL STATE OF CALIFORNIA

THE STATE OF CALIFORNIA OR ITS OFFICERS OR AGENTS SHALL NOT BE RESPONSIBLE FOR THE ACCURACY OR COMPLETENESS OF ELECTRONIC COPIES OF THIS PLAN SHEET.

NOTES (THIS SHEET):

1. MAINTAIN 4′ HORIZONTAL CLEARANCE FROM OBSTRUCTIONS.
2. FOR ACCURATE RIGHT OF WAY AND ACCESS DATA, CONTACT RIGHT OF WAY ENGINEERING AT THE DISTRICT OFFICE.
3. EXISTING UTILITIES HAVE NOT BEEN POSITIVELY LOCATED.

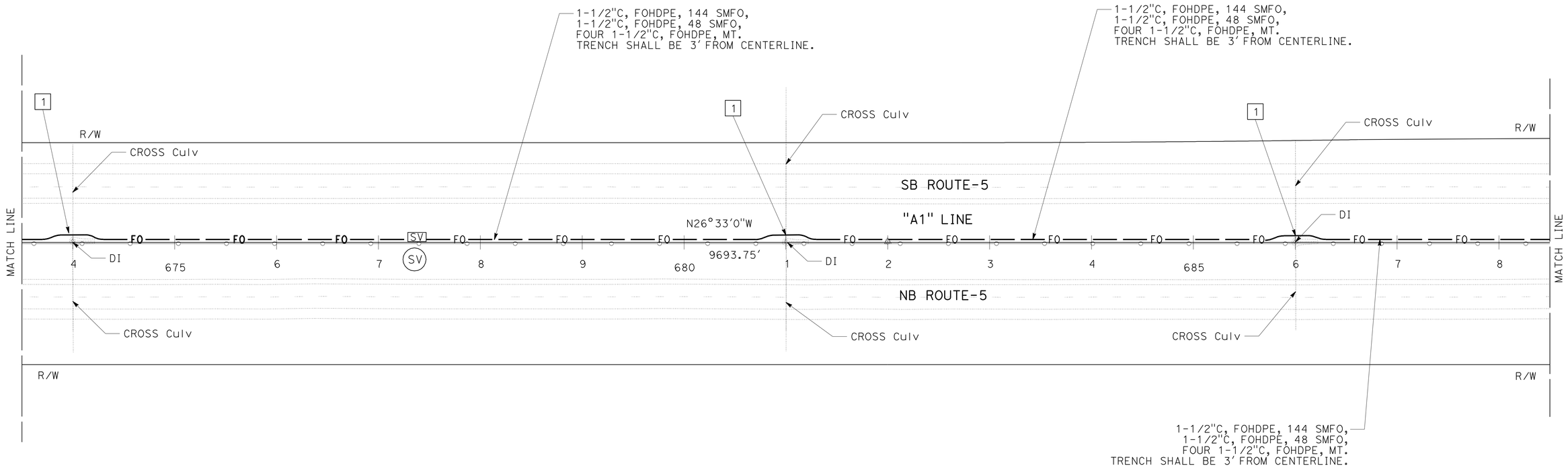

FIBER OPTIC SYSTEM

SCALE: 1" = 50′

E-23

THIS PLAN IS ACCURATE FOR ELECTRICAL WORK ONLY.

REVISED BY | DATE REVISED
JAMES M. HANNIGAN | JEREMIAH PEARCE
CALCULATED-DESIGNED BY | CHECKED BY
FUNCTIONAL SUPERVISOR
ROB STINGER

STATE OF CALIFORNIA - DEPARTMENT OF TRANSPORTATION
Caltrans ELECTRICAL DESIGN

P:\proj1\02\0c590_plans\pse\20c590ua023.dgn

LAST REVISION | DATE PLOTTED => 15-JUL-2010
07-09-10 | TIME PLOTTED => 16:15

Dist	COUNTY	ROUTE	POST MILES TOTAL PROJECT	SHEET No.	TOTAL SHEETS
02	Sha	5,44	R3.2/R18.6, L0.3/L1.8	50	120

J. Hannigan 07-09-10
REGISTERED ELECTRICAL ENGINEER

7-12-10
PLANS APPROVAL DATE

REGISTERED PROFESSIONAL ENGINEER J.M. HANNIGAN No. E13665 Exp. 6-30-11 ELECTRICAL STATE OF CALIFORNIA

THE STATE OF CALIFORNIA OR ITS OFFICERS OR AGENTS SHALL NOT BE RESPONSIBLE FOR THE ACCURACY OR COMPLETENESS OF ELECTRONIC COPIES OF THIS PLAN SHEET.

NOTES (THIS SHEET):

1. MAINTAIN 4′ HORIZONTAL CLEARANCE FROM OBSTRUCTIONS.
2. FOR ACCURATE RIGHT OF WAY AND ACCESS DATA, CONTACT RIGHT OF WAY ENGINEERING AT THE DISTRICT OFFICE.
3. EXISTING UTILITIES HAVE NOT BEEN POSITIVELY LOCATED.

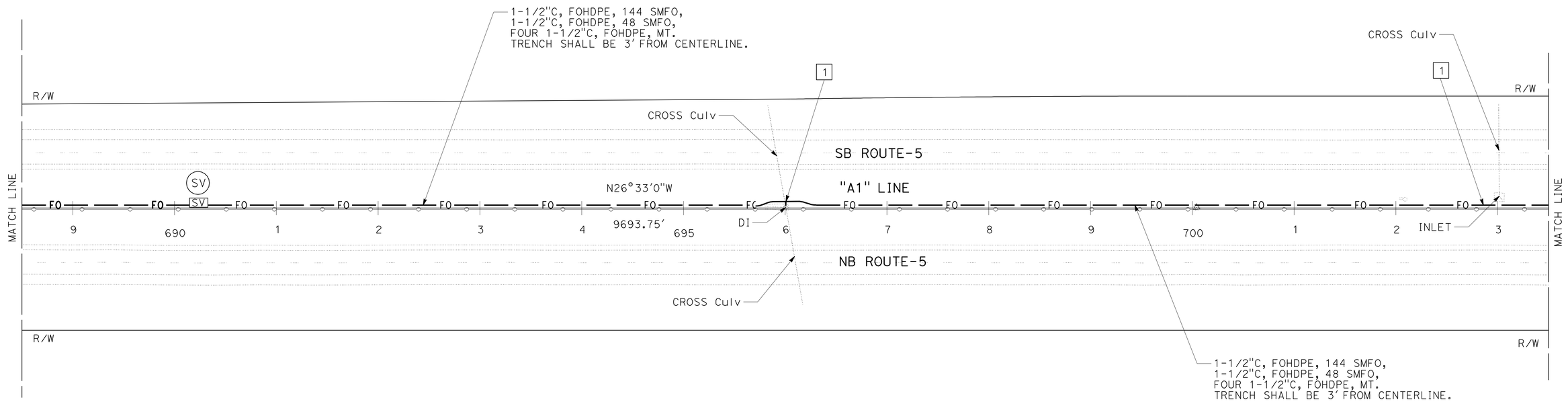

FIBER OPTIC SYSTEM

SCALE: 1" = 50′ **E-24**

THIS PLAN IS ACCURATE FOR ELECTRICAL WORK ONLY.

REVISED BY	DATE REVISED

CALCULATED-DESIGNED BY	CHECKED BY
JAMES M. HANNIGAN	JEREMIAH PEARCE

FUNCTIONAL SUPERVISOR: ROB STINGER

STATE OF CALIFORNIA - DEPARTMENT OF TRANSPORTATION
Caltrans ELECTRICAL DESIGN

P:\proj1\02\0c590_plans\pse\20c590ua024.dgn

LAST REVISION 07-09-10 | DATE PLOTTED => 15-JUL-2010 | TIME PLOTTED => 16:15

Dist	COUNTY	ROUTE	POST MILES TOTAL PROJECT	SHEET No.	TOTAL SHEETS
02	Sha	5,44	R3.2/R18.6, L0.3/L1.8	51	120

J. Hannigan 07-09-10
REGISTERED ELECTRICAL ENGINEER

7-12-10
PLANS APPROVAL DATE

REGISTERED PROFESSIONAL ENGINEER J.M. HANNIGAN No. E13665 Exp. 6-30-11 ELECTRICAL STATE OF CALIFORNIA

THE STATE OF CALIFORNIA OR ITS OFFICERS OR AGENTS SHALL NOT BE RESPONSIBLE FOR THE ACCURACY OR COMPLETENESS OF ELECTRONIC COPIES OF THIS PLAN SHEET.

NOTES (THIS SHEET):

1. MAINTAIN 4′ HORIZONTAL CLEARANCE FROM OBSTRUCTIONS.
2. FOR ACCURATE RIGHT OF WAY AND ACCESS DATA, CONTACT RIGHT OF WAY ENGINEERING AT THE DISTRICT OFFICE.
3. EXISTING UTILITIES HAVE NOT BEEN POSITIVELY LOCATED.

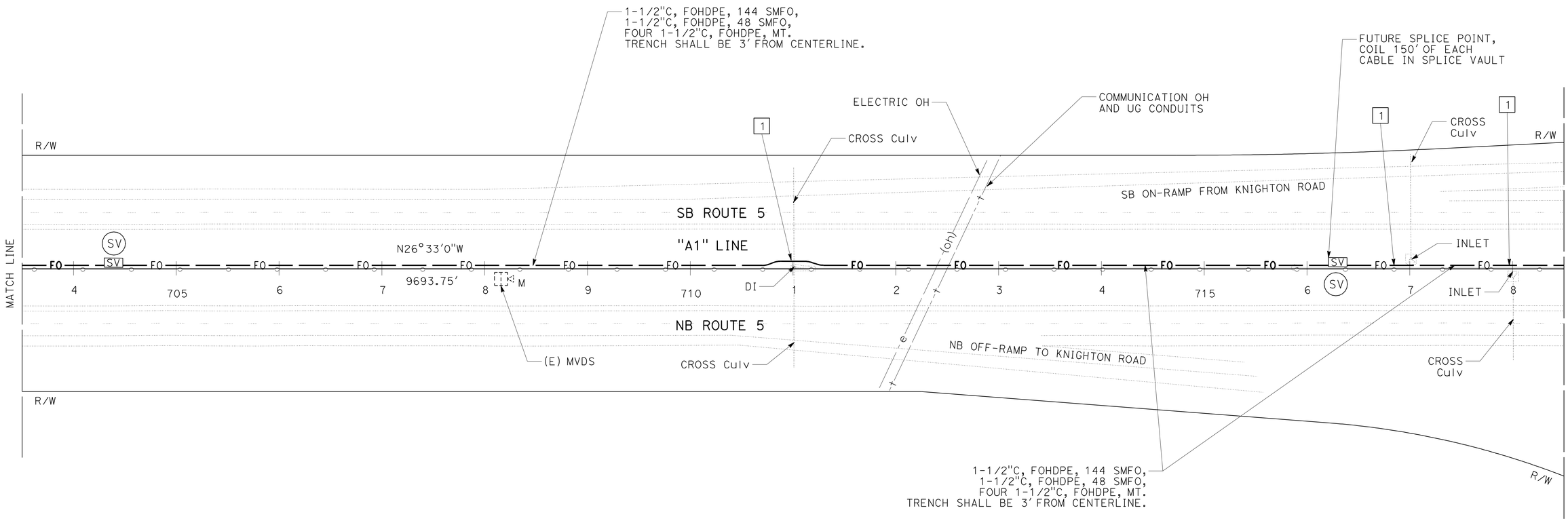

FIBER OPTIC SYSTEM

SCALE: 1" = 50′

E-25

THIS PLAN IS ACCURATE FOR ELECTRICAL WORK ONLY.

REVISED BY	DATE REVISED
JAMES M. HANNIGAN	JEREMIAH PEARCE

CALCULATED-DESIGNED BY | CHECKED BY

FUNCTIONAL SUPERVISOR: ROB STINGER

STATE OF CALIFORNIA - DEPARTMENT OF TRANSPORTATION
Caltrans ELECTRICAL DESIGN

P:\proj\02\0c590_plans\pse\20c590ua025.dgn

LAST REVISION DATE PLOTTED => 15-JUL-2010
TIME PLOTTED => 16:15
07-09-10

Dist	COUNTY	ROUTE	POST MILES TOTAL PROJECT	SHEET No.	TOTAL SHEETS
02	Sha	5,44	R3.2/R18.6, L0.3/L1.8	52	120

J. Hannigan 07-09-10
REGISTERED ELECTRICAL ENGINEER

7-12-10
PLANS APPROVAL DATE

REGISTERED PROFESSIONAL ENGINEER J.M. HANNIGAN No. E13665 Exp. 6-30-11 ELECTRICAL STATE OF CALIFORNIA

THE STATE OF CALIFORNIA OR ITS OFFICERS OR AGENTS SHALL NOT BE RESPONSIBLE FOR THE ACCURACY OR COMPLETENESS OF ELECTRONIC COPIES OF THIS PLAN SHEET.

NOTES (THIS SHEET):

1. MAINTAIN 4′ HORIZONTAL CLEARANCE FROM OBSTRUCTIONS.
2. FOR ACCURATE RIGHT OF WAY AND ACCESS DATA, CONTACT RIGHT OF WAY ENGINEERING AT THE DISTRICT OFFICE.
3. EXISTING UTILITIES HAVE NOT BEEN POSITIVELY LOCATED.

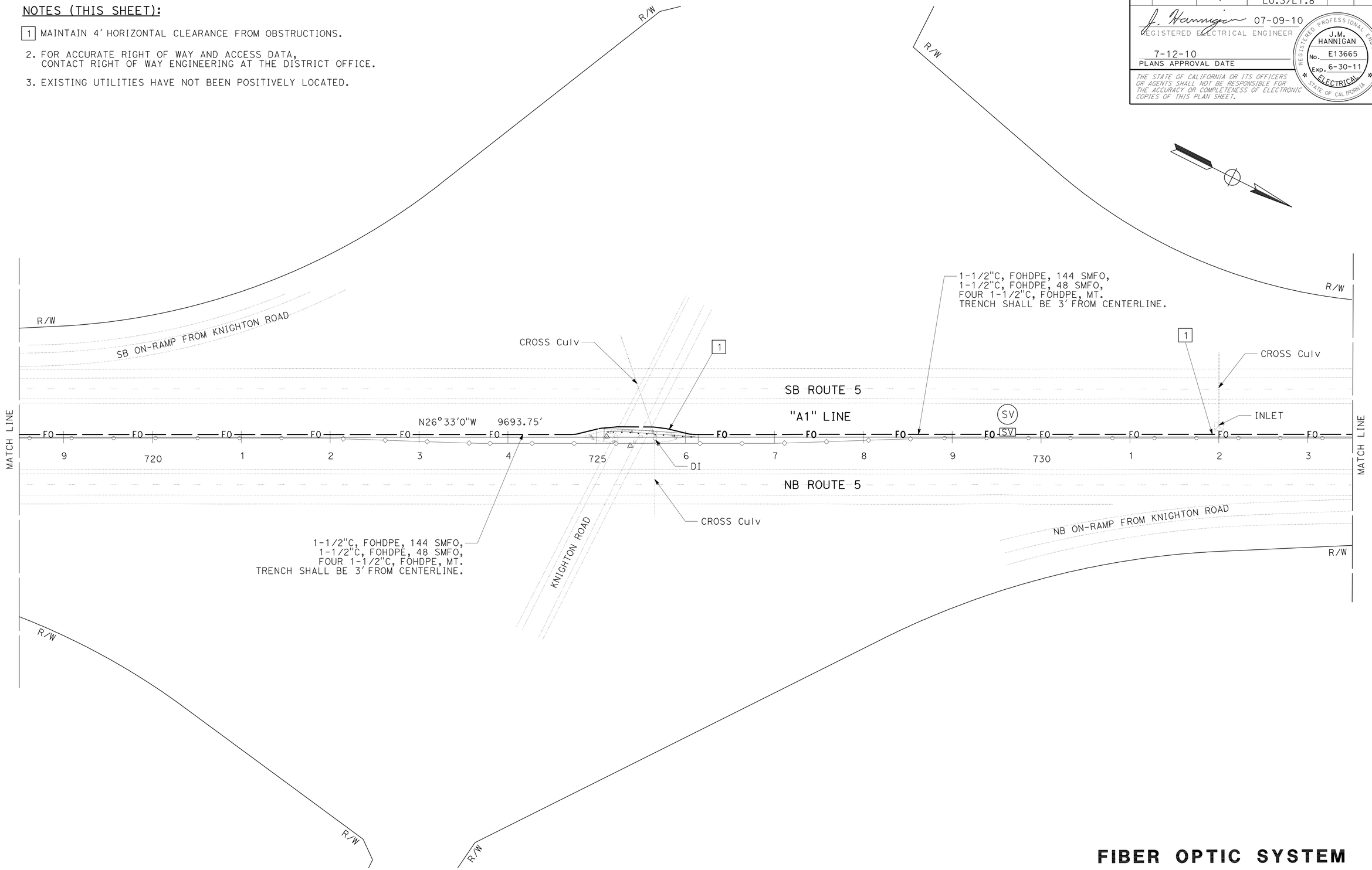

FIBER OPTIC SYSTEM

SCALE: 1" = 50′

E-26

THIS PLAN IS ACCURATE FOR ELECTRICAL WORK ONLY.

REVISED BY	JAMES M. HANNIGAN
DATE REVISED	JEREMIAH PEARCE
CALCULATED-DESIGNED BY	FUNCTIONAL SUPERVISOR
CHECKED BY	ROB STINGER

STATE OF CALIFORNIA - DEPARTMENT OF TRANSPORTATION
Caltrans **ELECTRICAL DESIGN**

P:\proj1\02\0c590_plans\pse\20c590ua026.dgn

LAST REVISION DATE PLOTTED => 15-JUL-2010
TIME PLOTTED => 16:16
07-09-10

Dist	COUNTY	ROUTE	POST MILES TOTAL PROJECT	SHEET No.	TOTAL SHEETS
02	Sha	5,44	R3.2/R18.6, L0.3/L1.8	53	120

J. Hannigan 07-09-10
REGISTERED ELECTRICAL ENGINEER

7-12-10
PLANS APPROVAL DATE

REGISTERED PROFESSIONAL ENGINEER J.M. HANNIGAN No. E13665 Exp. 6-30-11 ELECTRICAL STATE OF CALIFORNIA

THE STATE OF CALIFORNIA OR ITS OFFICERS OR AGENTS SHALL NOT BE RESPONSIBLE FOR THE ACCURACY OR COMPLETENESS OF ELECTRONIC COPIES OF THIS PLAN SHEET.

NOTES (THIS SHEET):

1. MAINTAIN 4′ HORIZONTAL CLEARANCE FROM OBSTRUCTIONS.
2. FOR ACCURATE RIGHT OF WAY AND ACCESS DATA, CONTACT RIGHT OF WAY ENGINEERING AT THE DISTRICT OFFICE.
3. EXISTING UTILITIES HAVE NOT BEEN POSITIVELY LOCATED.

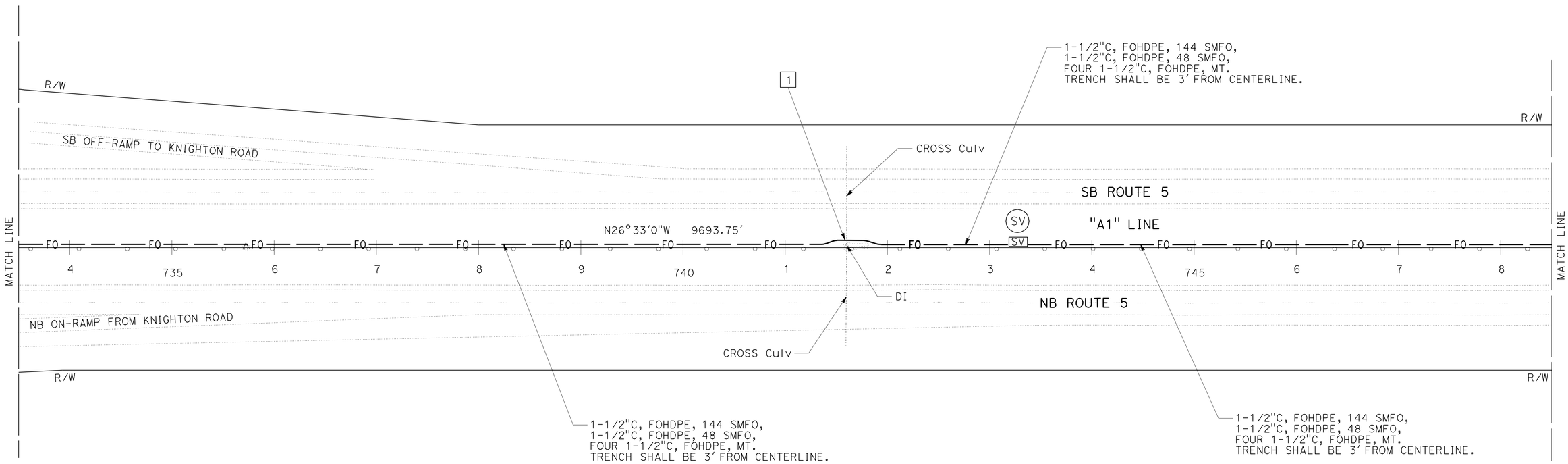

FIBER OPTIC SYSTEM

SCALE: 1" = 50′

E-27

THIS PLAN IS ACCURATE FOR ELECTRICAL WORK ONLY.

REVISED BY	DATE REVISED

CALCULATED-DESIGNED BY: JAMES M. HANNIGAN
CHECKED BY: JEREMIAH PEARCE
FUNCTIONAL SUPERVISOR: ROB STINGER

STATE OF CALIFORNIA - DEPARTMENT OF TRANSPORTATION
Caltrans ELECTRICAL DESIGN

P:\proj1\02\0c590_plans\pse\20c590ua027.dgn

LAST REVISION DATE PLOTTED => 15-JUL-2010
TIME PLOTTED => 16:16
07-09-10

Dist	COUNTY	ROUTE	POST MILES TOTAL PROJECT	SHEET No.	TOTAL SHEETS
02	Sha	5,44	R3.2/R18.6, L0.3/L1.8	54	120

J. Hannigan 07-09-10
REGISTERED ELECTRICAL ENGINEER

7-12-10
PLANS APPROVAL DATE

REGISTERED PROFESSIONAL ENGINEER J.M. HANNIGAN No. E13665 Exp. 6-30-11 ELECTRICAL STATE OF CALIFORNIA

THE STATE OF CALIFORNIA OR ITS OFFICERS OR AGENTS SHALL NOT BE RESPONSIBLE FOR THE ACCURACY OR COMPLETENESS OF ELECTRONIC COPIES OF THIS PLAN SHEET.

NOTES (THIS SHEET):

1. MAINTAIN 4′ HORIZONTAL CLEARANCE FROM OBSTRUCTIONS.
2. FOR ACCURATE RIGHT OF WAY AND ACCESS DATA, CONTACT RIGHT OF WAY ENGINEERING AT THE DISTRICT OFFICE.
3. EXISTING UTILITIES HAVE NOT BEEN POSITIVELY LOCATED.

CURVE DATA				
No. Ⓗ	R	Δ	T	L
5	5000′	13°13′50″	579.87′	1154.58′

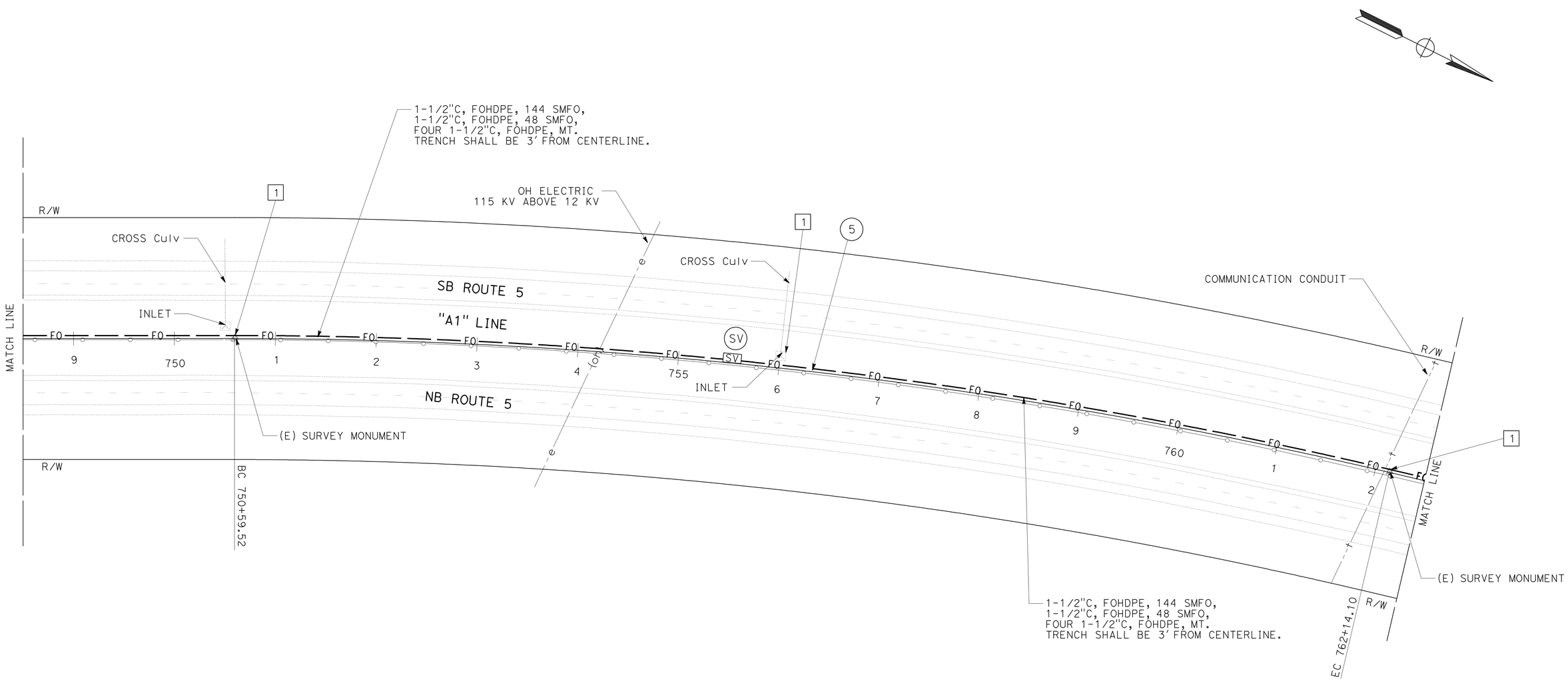

FIBER OPTIC SYSTEM

SCALE: 1" = 50′ **E-28**

THIS PLAN IS ACCURATE FOR ELECTRICAL WORK ONLY.

STATE OF CALIFORNIA - DEPARTMENT OF TRANSPORTATION
Caltrans ELECTRICAL DESIGN

FUNCTIONAL SUPERVISOR: ROB STINGER
CALCULATED-DESIGNED BY: JAMES M. HANNIGAN
CHECKED BY: JEREMIAH PEARCE
REVISED BY
DATE REVISED

P:\proj1\02\0c590_plans\pse\20c590ua028.dgn

LAST REVISION 07-09-10 | DATE PLOTTED => 15-JUL-2010 | TIME PLOTTED => 16:16

Dist	COUNTY	ROUTE	POST MILES TOTAL PROJECT	SHEET No.	TOTAL SHEETS
02	Sha	5,44	R3.2/R18.6, L0.3/L1.8	55	120

J. Hannigan 07-09-10
REGISTERED ELECTRICAL ENGINEER

7-12-10
PLANS APPROVAL DATE

REGISTERED PROFESSIONAL ENGINEER J.M. HANNIGAN No. E13665 Exp. 6-30-11 ELECTRICAL STATE OF CALIFORNIA

THE STATE OF CALIFORNIA OR ITS OFFICERS OR AGENTS SHALL NOT BE RESPONSIBLE FOR THE ACCURACY OR COMPLETENESS OF ELECTRONIC COPIES OF THIS PLAN SHEET.

NOTES (THIS SHEET):

1. MAINTAIN 4′ HORIZONTAL CLEARANCE FROM OBSTRUCTIONS.
2. FOR ACCURATE RIGHT OF WAY AND ACCESS DATA, CONTACT RIGHT OF WAY ENGINEERING AT THE DISTRICT OFFICE.
3. EXISTING UTILITIES HAVE NOT BEEN POSITIVELY LOCATED.

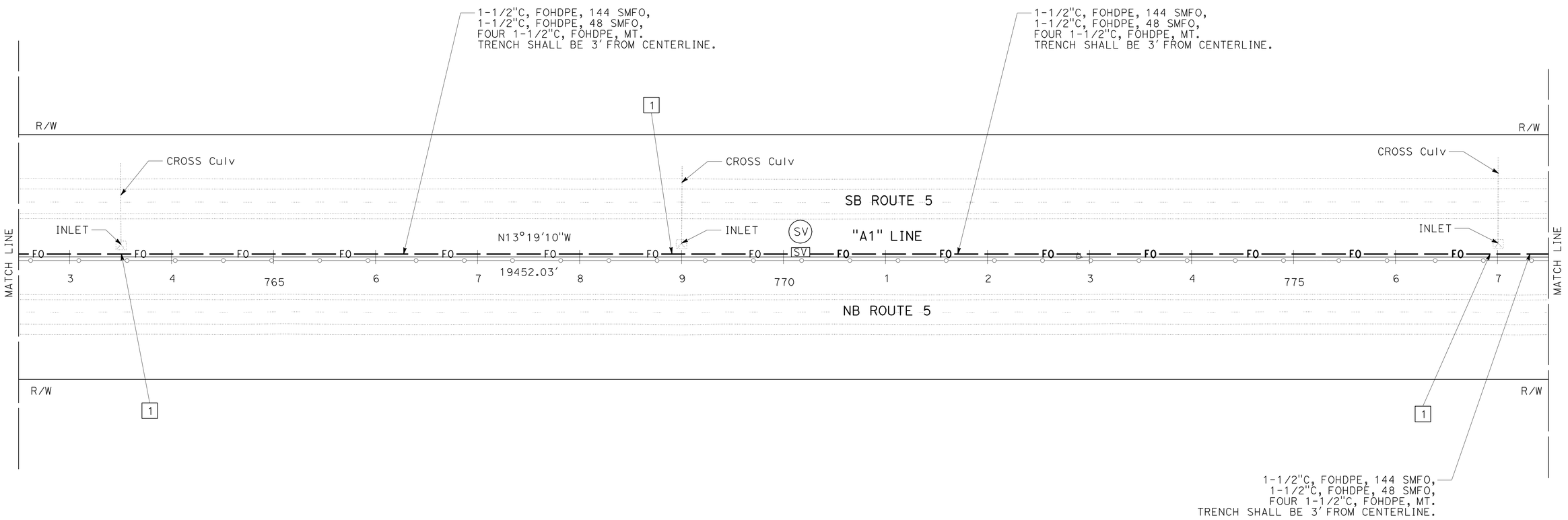

FIBER OPTIC SYSTEM

SCALE: 1" = 50′

E-29

THIS PLAN IS ACCURATE FOR ELECTRICAL WORK ONLY.

REVISED BY | DATE REVISED
JAMES M. HANNIGAN | JEREMIAH PEARCE
CALCULATED-DESIGNED BY | CHECKED BY
FUNCTIONAL SUPERVISOR
ROB STINGER

STATE OF CALIFORNIA - DEPARTMENT OF TRANSPORTATION
Caltrans ELECTRICAL DESIGN

P:\proj1\02\0c590_plans\pse\20c590ua029.dgn

LAST REVISION | DATE PLOTTED => 10-AUG-2010
07-09-10 | TIME PLOTTED => 13:53

Dist	COUNTY	ROUTE	POST MILES TOTAL PROJECT	SHEET No.	TOTAL SHEETS
02	Sha	5,44	R3.2/R18.6, L0.3/L1.8	56	120

REGISTERED ELECTRICAL ENGINEER 07-09-10

7-12-10
PLANS APPROVAL DATE

REGISTERED PROFESSIONAL ENGINEER J.M. HANNIGAN No. E13665 Exp. 6-30-11 ELECTRICAL STATE OF CALIFORNIA

THE STATE OF CALIFORNIA OR ITS OFFICERS OR AGENTS SHALL NOT BE RESPONSIBLE FOR THE ACCURACY OR COMPLETENESS OF ELECTRONIC COPIES OF THIS PLAN SHEET.

NOTES (THIS SHEET):

1. Exist SERVICE EQUIPMENT, SEE SHEET E-63.
2. Exist 3"C, 6#1 (nb cms), 2#8 (ems cab), REMOVE 2#8 (ems cab), ADD 3#6, 1#6G (SB CMS), ADD 2#8, 1#8G (SB CMS CAB).
3. Exist 1-1/2"C, 2#6 (ems cab), REMOVE 2#6 (ems cab), ADD 3#6, 1#6G (SB CMS), ADD 2#8, 1#8G (SB CMS CAB).
4. 2"C, 2 STATE-FURNISHED CABLES.
5. 2"C, 3#6, 1#6G.
6. MAINTAIN 4' HORIZONTAL CLEARANCE FROM OBSTRUCTIONS.
7. FOR ACCURATE RIGHT OF WAY AND ACCESS DATA, CONTACT RIGHT OF WAY ENGINEERING AT THE DISTRICT OFFICE.
8. EXISTING UTILITIES HAVE NOT BEEN POSITIVELY LOCATED.
9. 1½"C, FOHDPE, MT
   CB INTO EXISTING COMMUNICATIONS PULL BOX.

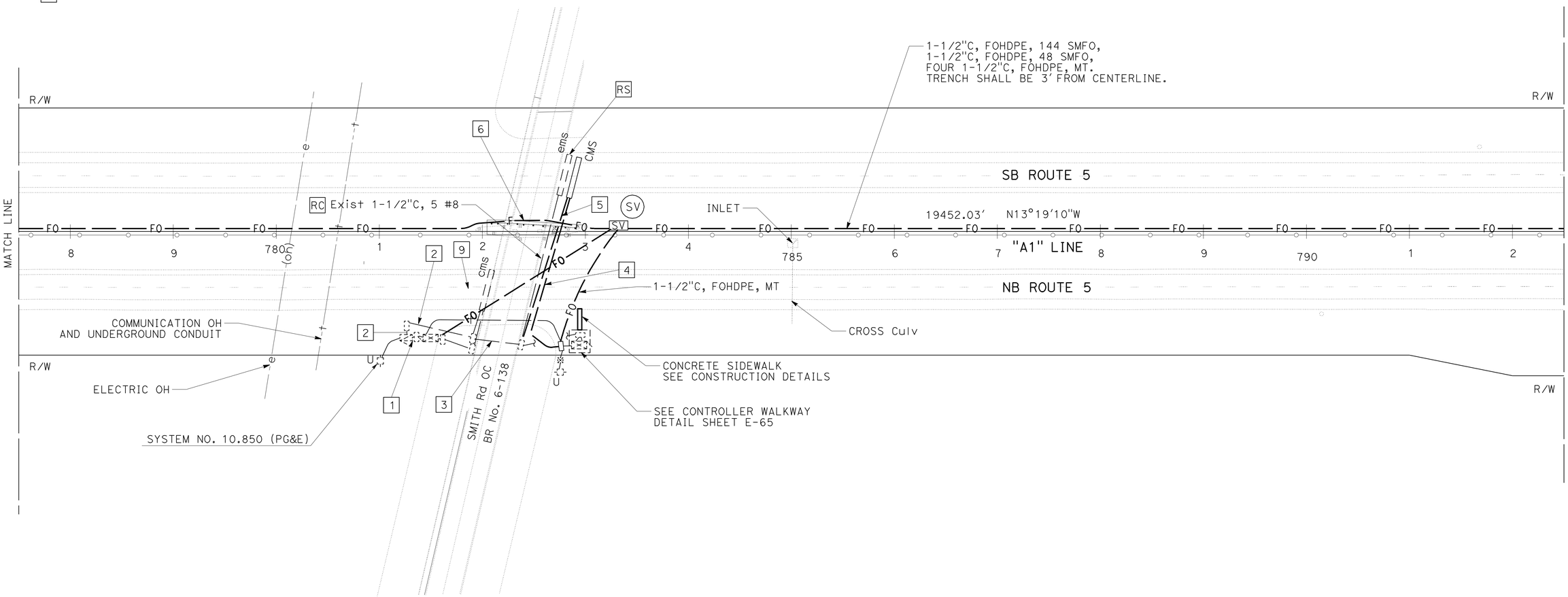

FIBER OPTIC SYSTEM

SCALE: 1" = 50'

E-30

THIS PLAN IS ACCURATE FOR ELECTRICAL WORK ONLY.

STATE OF CALIFORNIA - DEPARTMENT OF TRANSPORTATION
Caltrans ELECTRICAL DESIGN

FUNCTIONAL SUPERVISOR: ROB STINGER
CALCULATED-DESIGNED BY: JAMES M. HANNIGAN
CHECKED BY: JEREMIAH PEARCE
REVISED BY / DATE REVISED

P:\proj1\02\0c590_plans\pse\20c590ua030.dgn

LAST REVISION 07-09-10 | DATE PLOTTED => 10-AUG-2010 | TIME PLOTTED => 13:53

Dist	COUNTY	ROUTE	POST MILES TOTAL PROJECT	SHEET No.	TOTAL SHEETS
02	Sha	5,44	R3.2/R18.6, L0.3/L1.8	57	120

J. Hannigan 07-09-10
REGISTERED ELECTRICAL ENGINEER

7-12-10
PLANS APPROVAL DATE

REGISTERED PROFESSIONAL ENGINEER J.M. HANNIGAN No. E13665 Exp. 6-30-11 ELECTRICAL STATE OF CALIFORNIA

THE STATE OF CALIFORNIA OR ITS OFFICERS OR AGENTS SHALL NOT BE RESPONSIBLE FOR THE ACCURACY OR COMPLETENESS OF ELECTRONIC COPIES OF THIS PLAN SHEET.

NOTES (THIS SHEET):

1. MAINTAIN 4′ HORIZONTAL CLEARANCE FROM OBSTRUCTIONS.
2. FOR ACCURATE RIGHT OF WAY AND ACCESS DATA, CONTACT RIGHT OF WAY ENGINEERING AT THE DISTRICT OFFICE.
3. EXISTING UTILITIES HAVE NOT BEEN POSITIVELY LOCATED.

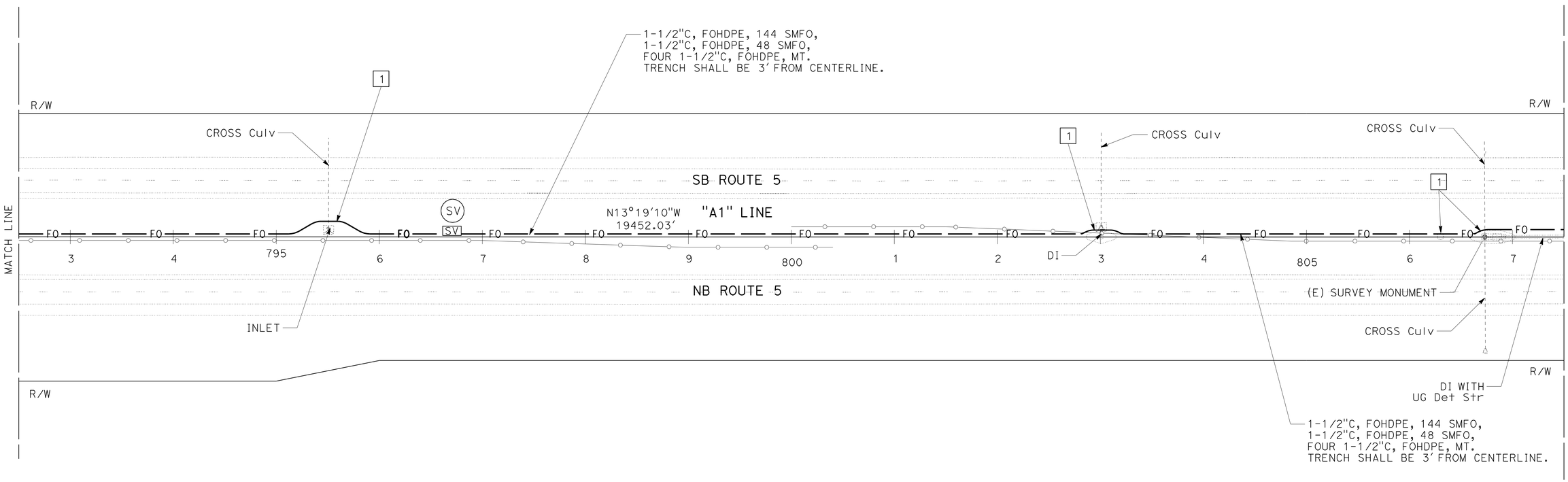

FIBER OPTIC SYSTEM

SCALE: 1" = 50′

E-31

THIS PLAN IS ACCURATE FOR ELECTRICAL WORK ONLY.

REVISED BY | DATE REVISED
JAMES M. HANNIGAN | JEREMIAH PEARCE
CALCULATED-DESIGNED BY | CHECKED BY
FUNCTIONAL SUPERVISOR
ROB STINGER

STATE OF CALIFORNIA - DEPARTMENT OF TRANSPORTATION
Caltrans ELECTRICAL DESIGN

P:\proj1\02\0c590_plans\pse\20c590ua031.dgn

LAST REVISION 07-09-10 | DATE PLOTTED => 10-AUG-2010 | TIME PLOTTED => 13:53

Dist	COUNTY	ROUTE	POST MILES TOTAL PROJECT	SHEET No.	TOTAL SHEETS
02	Sha	5,44	R3.2/R18.6, L0.3/L1.8	58	120

J. Hannigan 07-09-10
REGISTERED ELECTRICAL ENGINEER

7-12-10
PLANS APPROVAL DATE

REGISTERED PROFESSIONAL ENGINEER J.M. HANNIGAN No. E13665 Exp. 6-30-11 ELECTRICAL STATE OF CALIFORNIA

THE STATE OF CALIFORNIA OR ITS OFFICERS OR AGENTS SHALL NOT BE RESPONSIBLE FOR THE ACCURACY OR COMPLETENESS OF ELECTRONIC COPIES OF THIS PLAN SHEET.

NOTES (THIS SHEET):

1. MAINTAIN 4' HORIZONTAL CLEARANCE FROM OBSTRUCTIONS.
2. FOR ACCURATE RIGHT OF WAY AND ACCESS DATA, CONTACT RIGHT OF WAY ENGINEERING AT THE DISTRICT OFFICE.
3. EXISTING UTILITIES HAVE NOT BEEN POSITIVELY LOCATED.

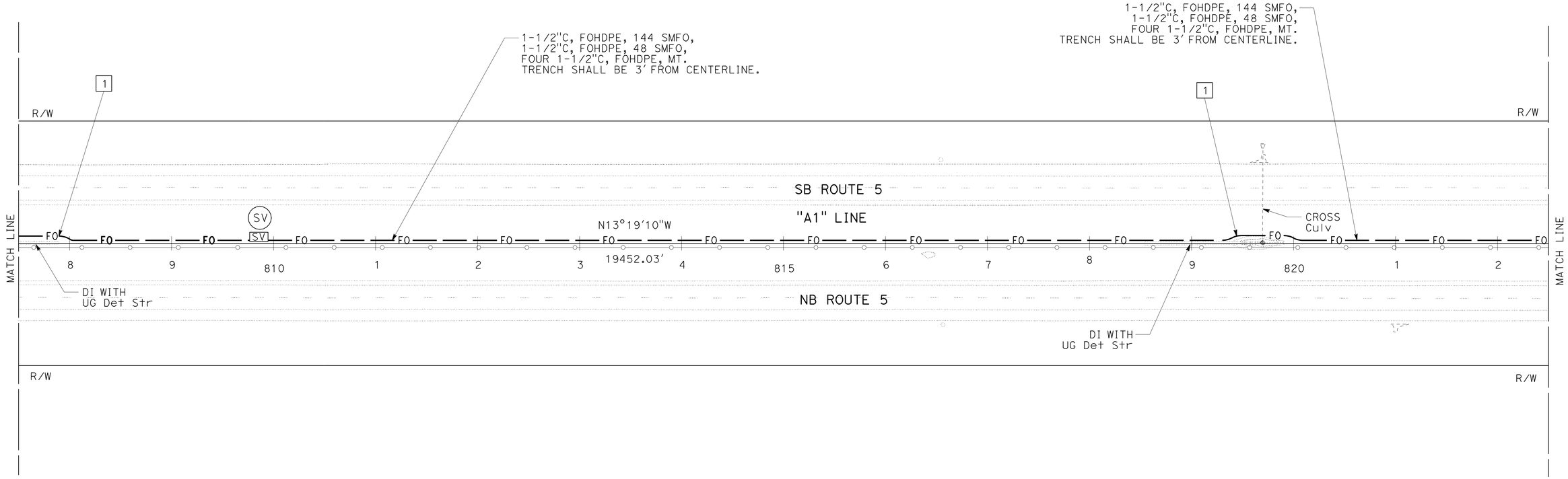

FIBER OPTIC SYSTEM

SCALE: 1" = 50'

E-32

THIS PLAN IS ACCURATE FOR ELECTRICAL WORK ONLY.

REVISED BY	DATE REVISED

JAMES M. HANNIGAN — JEREMIAH PEARCE — CALCULATED-DESIGNED BY — CHECKED BY

FUNCTIONAL SUPERVISOR: ROB STINGER

STATE OF CALIFORNIA - DEPARTMENT OF TRANSPORTATION
Caltrans ELECTRICAL DESIGN

P:\proj1\02\0c590_plans\pse\20c590ua032.dgn

LAST REVISION 07-09-10 | DATE PLOTTED => 10-AUG-2010 | TIME PLOTTED => 13:53

Dist	COUNTY	ROUTE	POST MILES TOTAL PROJECT	SHEET No.	TOTAL SHEETS
02	Sha	5,44	R3.2/R18.6, L0.3/L1.8	59	120

J. Hannigan 07-09-10
REGISTERED ELECTRICAL ENGINEER

7-12-10
PLANS APPROVAL DATE

REGISTERED PROFESSIONAL ENGINEER J.M. HANNIGAN No. E13665 Exp. 6-30-11 ELECTRICAL STATE OF CALIFORNIA

THE STATE OF CALIFORNIA OR ITS OFFICERS OR AGENTS SHALL NOT BE RESPONSIBLE FOR THE ACCURACY OR COMPLETENESS OF ELECTRONIC COPIES OF THIS PLAN SHEET.

NOTES (THIS SHEET):

1. MAINTAIN 4′ HORIZONTAL CLEARANCE FROM OBSTRUCTIONS.
2. FOR ACCURATE RIGHT OF WAY AND ACCESS DATA, CONTACT RIGHT OF WAY ENGINEERING AT THE DISTRICT OFFICE.
3. EXISTING UTILITIES HAVE NOT BEEN POSITIVELY LOCATED.

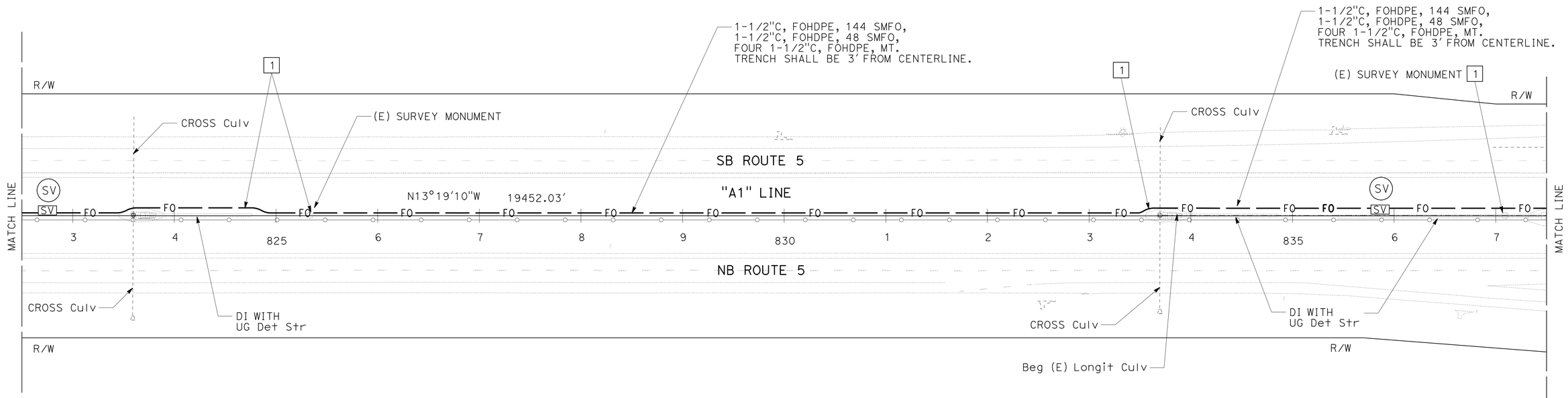

FIBER OPTIC SYSTEM

SCALE: 1" = 50′ **E-33**

THIS PLAN IS ACCURATE FOR ELECTRICAL WORK ONLY.

STATE OF CALIFORNIA - DEPARTMENT OF TRANSPORTATION
Caltrans ELECTRICAL DESIGN

FUNCTIONAL SUPERVISOR: ROB STINGER
CALCULATED-DESIGNED BY: JAMES M. HANNIGAN
CHECKED BY: JEREMIAH PEARCE
REVISED BY
DATE REVISED

P:\proj1\02\0c590_plans\pse\20c590ua033.dgn

LAST REVISION 07-09-10
DATE PLOTTED => 10-AUG-2010
TIME PLOTTED => 13:53

Dist	COUNTY	ROUTE	POST MILES TOTAL PROJECT	SHEET No.	TOTAL SHEETS
02	Sha	5,44	R3.2/R18.6, L0.3/L1.8	60	120

J. Hannigan 07-09-10
REGISTERED ELECTRICAL ENGINEER

7-12-10
PLANS APPROVAL DATE

REGISTERED PROFESSIONAL ENGINEER J.M. HANNIGAN No. E13665 Exp. 6-30-11 ELECTRICAL STATE OF CALIFORNIA

THE STATE OF CALIFORNIA OR ITS OFFICERS OR AGENTS SHALL NOT BE RESPONSIBLE FOR THE ACCURACY OR COMPLETENESS OF ELECTRONIC COPIES OF THIS PLAN SHEET.

NOTES (THIS SHEET):

1. MAINTAIN 4′ HORIZONTAL CLEARANCE FROM OBSTRUCTIONS.
2. FOR ACCURATE RIGHT OF WAY AND ACCESS DATA, CONTACT RIGHT OF WAY ENGINEERING AT THE DISTRICT OFFICE.
3. EXISTING UTILITIES HAVE NOT BEEN POSITIVELY LOCATED.
4. 1-1/2"C, FOHDPE, 144 SMFO, 1-1/2"C, FOHDPE, 48 SMFO, FOUR 1-1/2"C, FOHDPE, MT. TRENCH SHALL BE 3′ FROM CENTERLINE.

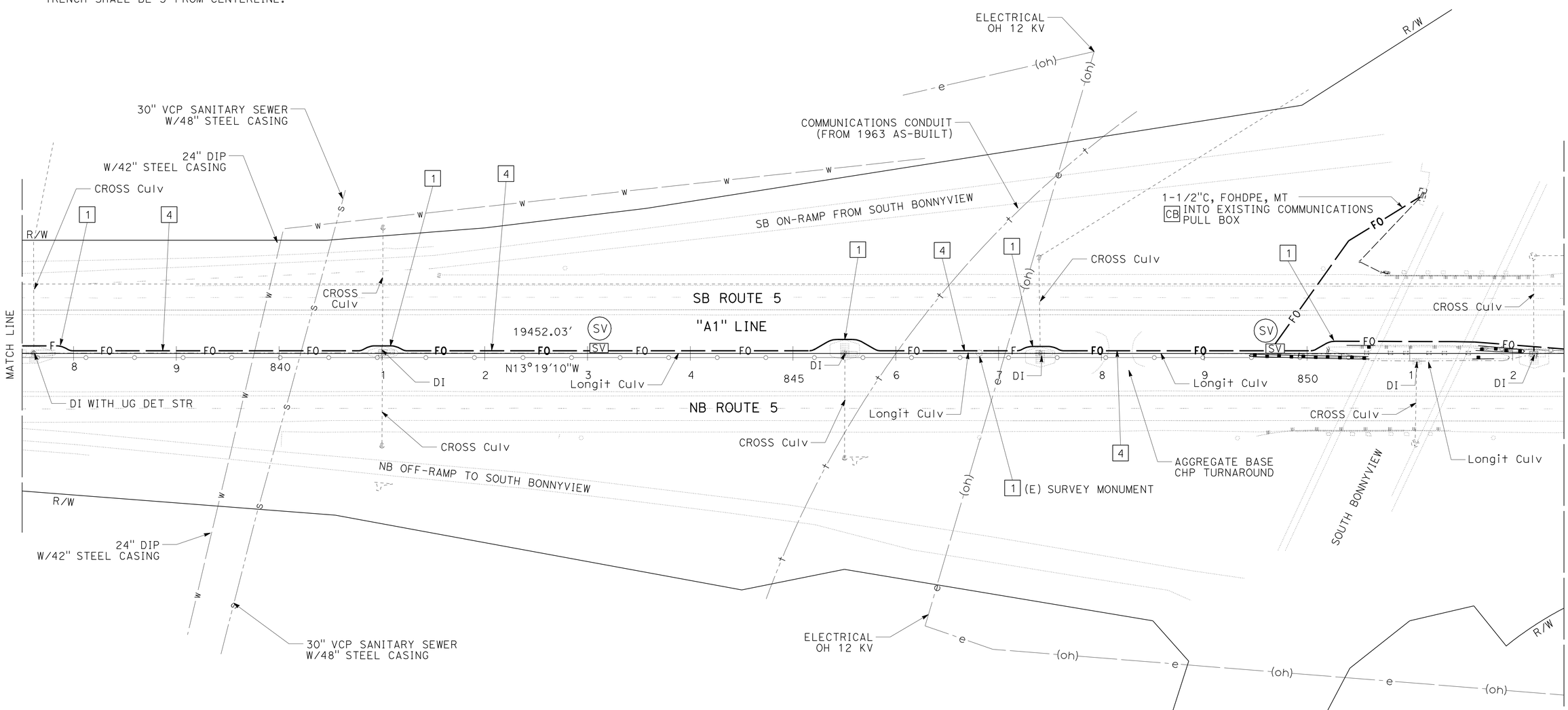

FIBER OPTIC SYSTEM

SCALE: 1" = 50′

E-34

THIS PLAN IS ACCURATE FOR ELECTRICAL WORK ONLY.

STATE OF CALIFORNIA - DEPARTMENT OF TRANSPORTATION
Caltrans ELECTRICAL DESIGN

FUNCTIONAL SUPERVISOR: ROB STINGER
CALCULATED-DESIGNED BY: JAMES M. HANNIGAN
CHECKED BY: JEREMIAH PEARCE
REVISED BY / DATE REVISED

P:\proj1\02\0c590_plans\pse\20c590ua034.dgn

LAST REVISION 07-09-10 | DATE PLOTTED => 10-AUG-2010 | TIME PLOTTED => 13:53

Dist	COUNTY	ROUTE	POST MILES TOTAL PROJECT	SHEET No.	TOTAL SHEETS
02	Sha	5,44	R3.2/R18.6, L0.3/L1.8	61	120

J. Hannigan 07-09-10
REGISTERED ELECTRICAL ENGINEER

7-12-10
PLANS APPROVAL DATE

REGISTERED PROFESSIONAL ENGINEER J.M. HANNIGAN No. E13665 Exp. 6-30-11 ELECTRICAL STATE OF CALIFORNIA

THE STATE OF CALIFORNIA OR ITS OFFICERS OR AGENTS SHALL NOT BE RESPONSIBLE FOR THE ACCURACY OR COMPLETENESS OF ELECTRONIC COPIES OF THIS PLAN SHEET.

NOTES (THIS SHEET):

1. MAINTAIN 4′ HORIZONTAL CLEARANCE FROM OBSTRUCTIONS.
2. FOR ACCURATE RIGHT OF WAY AND ACCESS DATA, CONTACT RIGHT OF WAY ENGINEERING AT THE DISTRICT OFFICE.
3. EXISTING UTILITIES HAVE NOT BEEN POSITIVELY LOCATED.
4. 1-1/2"C, FOHDPE, 144 SMFO, 1-1/2"C, FOHDPE, 48 SMFO, FOUR 1-1/2"C, FOHDPE, MT. TRENCH SHALL BE 3′ FROM CENTERLINE.
5. EXISTING IRRIGATION FACILITIES TO BE LOCATED PRIOR TO CONSTRUCTION ACTIVITIES.

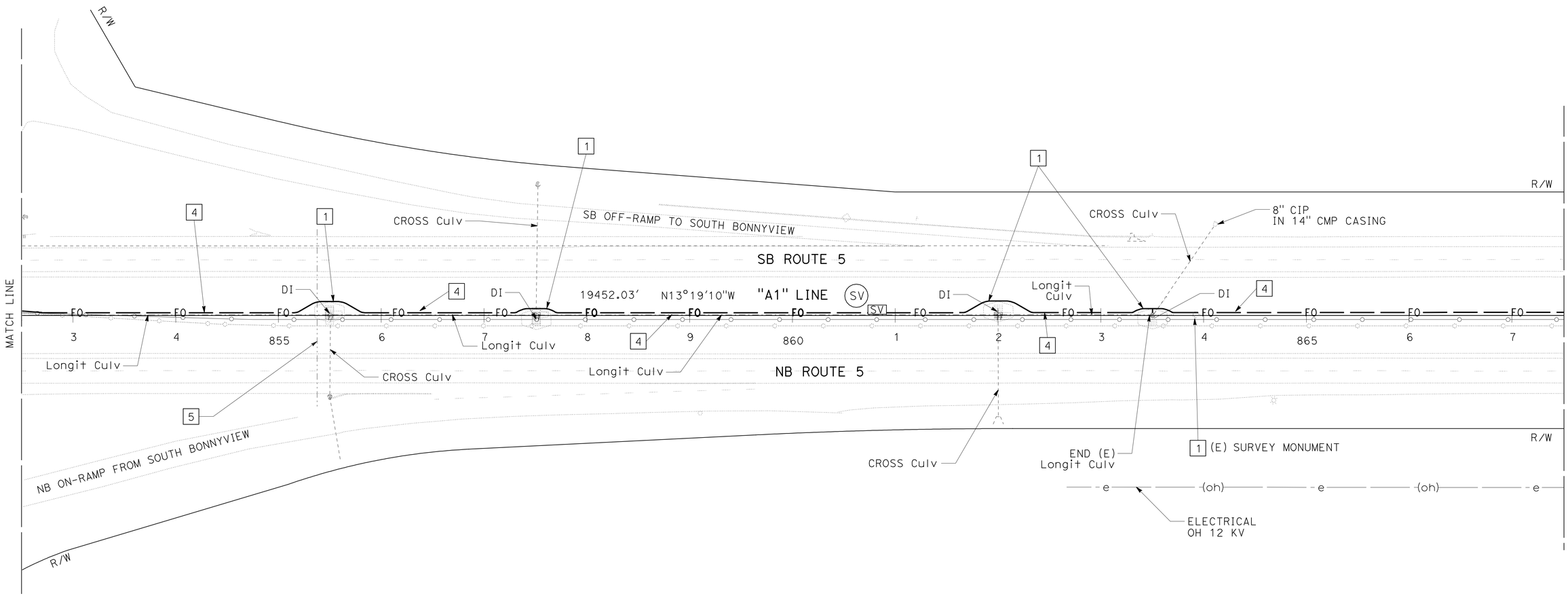

FIBER OPTIC SYSTEM

SCALE: 1" = 50′ **E-35**

THIS PLAN IS ACCURATE FOR ELECTRICAL WORK ONLY.

STATE OF CALIFORNIA - DEPARTMENT OF TRANSPORTATION
Caltrans ELECTRICAL DESIGN

FUNCTIONAL SUPERVISOR: ROB STINGER
CALCULATED-DESIGNED BY: JAMES M. HANNIGAN
CHECKED BY: JEREMIAH PEARCE
REVISED BY / DATE REVISED

P:\proj1\02\0c590_plans\pse\20c590ua035.dgn

LAST REVISION 07-09-10 | DATE PLOTTED => 10-AUG-2010 | TIME PLOTTED => 13:54

Dist	COUNTY	ROUTE	POST MILES TOTAL PROJECT	SHEET No.	TOTAL SHEETS
02	Sha	5,44	R3.2/R18.6, L0.3/L1.8	62	120

J. Hannigan 07-09-10
REGISTERED ELECTRICAL ENGINEER

7-12-10
PLANS APPROVAL DATE

REGISTERED PROFESSIONAL ENGINEER J.M. HANNIGAN No. E13665 Exp. 6-30-11 ELECTRICAL STATE OF CALIFORNIA

THE STATE OF CALIFORNIA OR ITS OFFICERS OR AGENTS SHALL NOT BE RESPONSIBLE FOR THE ACCURACY OR COMPLETENESS OF ELECTRONIC COPIES OF THIS PLAN SHEET.

NOTES (THIS SHEET):

1. MAINTAIN 4′ HORIZONTAL CLEARANCE FROM OBSTRUCTIONS.
2. FOR ACCURATE RIGHT OF WAY AND ACCESS DATA, CONTACT RIGHT OF WAY ENGINEERING AT THE DISTRICT OFFICE.
3. EXISTING UTILITIES HAVE NOT BEEN POSITIVELY LOCATED.

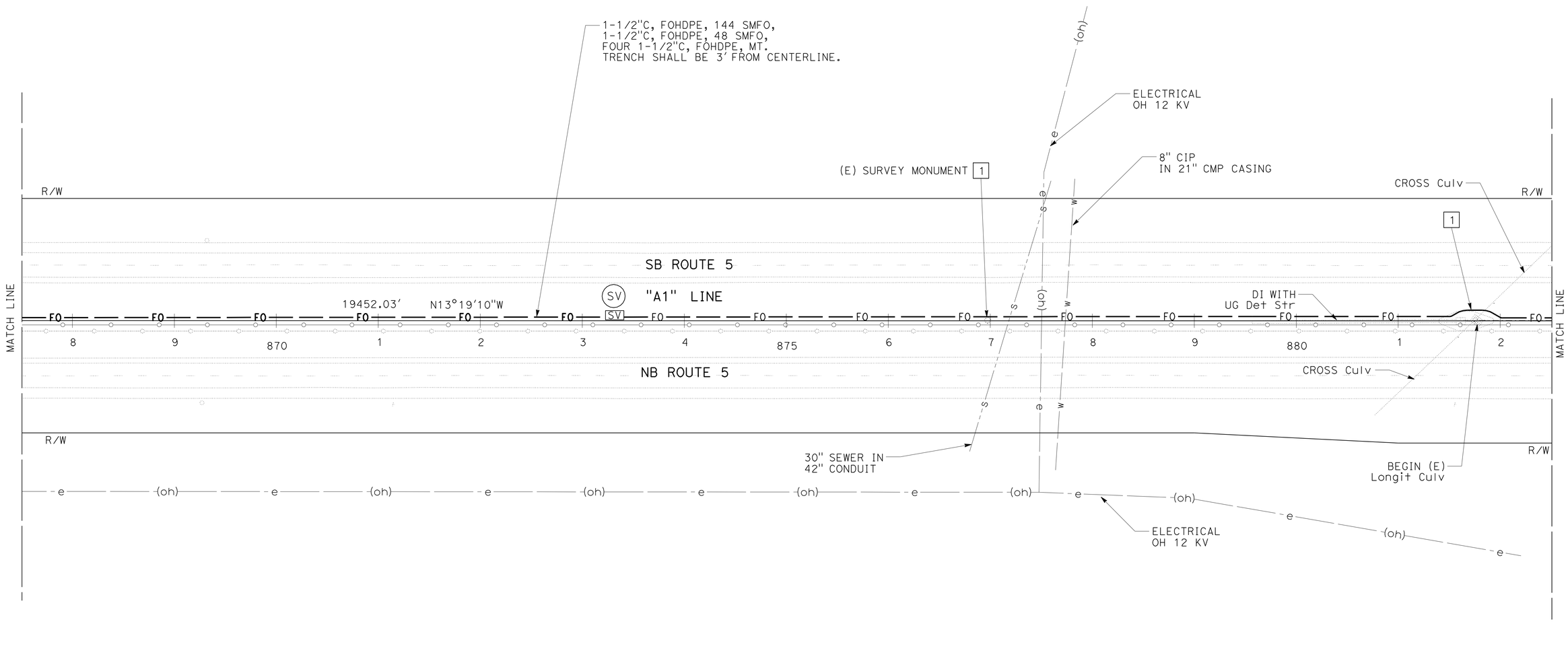

FIBER OPTIC SYSTEM

SCALE: 1" = 50′

E-36

THIS PLAN IS ACCURATE FOR ELECTRICAL WORK ONLY.

REVISED BY	DATE REVISED

CALCULATED-DESIGNED BY: JAMES M. HANNIGAN
CHECKED BY: JEREMIAH PEARCE
FUNCTIONAL SUPERVISOR: ROB STINGER

STATE OF CALIFORNIA - DEPARTMENT OF TRANSPORTATION
Caltrans ELECTRICAL DESIGN

P:\proj1\02\0c590_plans\pse\20c590ua036.dgn

LAST REVISION 07-09-10
DATE PLOTTED => 10-AUG-2010
TIME PLOTTED => 13:54

Dist	COUNTY	ROUTE	POST MILES TOTAL PROJECT	SHEET No.	TOTAL SHEETS
02	Sha	5,44	R3.2/R18.6, L0.3/L1.8	63	120

REGISTERED ELECTRICAL ENGINEER 07-09-10

7-12-10
PLANS APPROVAL DATE

REGISTERED PROFESSIONAL ENGINEER J.M. HANNIGAN No. E13665 Exp. 6-30-11 ELECTRICAL STATE OF CALIFORNIA

THE STATE OF CALIFORNIA OR ITS OFFICERS OR AGENTS SHALL NOT BE RESPONSIBLE FOR THE ACCURACY OR COMPLETENESS OF ELECTRONIC COPIES OF THIS PLAN SHEET.

NOTES (THIS SHEET):

1. MAINTAIN 4′ HORIZONTAL CLEARANCE FROM OBSTRUCTIONS.
2. FOR ACCURATE RIGHT OF WAY AND ACCESS DATA, CONTACT RIGHT OF WAY ENGINEERING AT THE DISTRICT OFFICE.
3. EXISTING UTILITIES HAVE NOT BEEN POSITIVELY LOCATED.
4. 1-1/2"C, FOHDPE, 144 SMFO, 1-1/2"C, FOHDPE, 48 SMFO, FOUR 1-1/2"C, FOHDPE, MT. TRENCH SHALL BE 3′ FROM CENTERLINE.
5. EXISTING IRRIGATION FACILITIES TO BE LOCATED PRIOR TO CONSTRUCTION ACTIVITES.

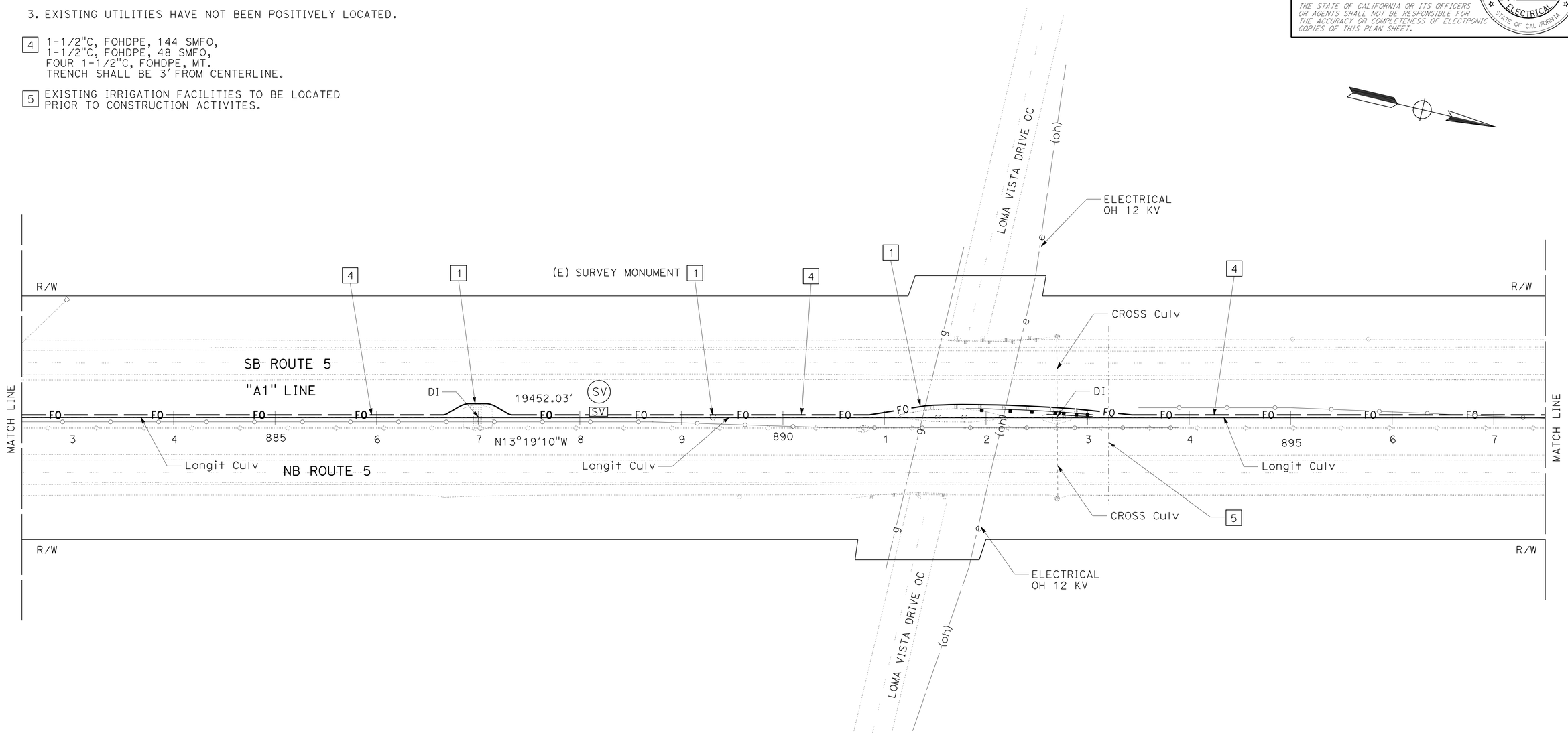

FIBER OPTIC SYSTEM

SCALE: 1" = 50′ **E-37**

THIS PLAN IS ACCURATE FOR ELECTRICAL WORK ONLY.

STATE OF CALIFORNIA - DEPARTMENT OF TRANSPORTATION
Caltrans ELECTRICAL DESIGN

FUNCTIONAL SUPERVISOR: ROB STINGER
CALCULATED-DESIGNED BY: JAMES M. HANNIGAN
CHECKED BY: JEREMIAH PEARCE
REVISED BY / DATE REVISED

P:\proj1\02\0c590_plans\pse\20c590ua037.dgn

LAST REVISION 07-09-10 | DATE PLOTTED => 10-AUG-2010 | TIME PLOTTED => 13:54

Dist	COUNTY	ROUTE	POST MILES TOTAL PROJECT	SHEET No.	TOTAL SHEETS
02	Sha	5,44	R3.2/R18.6, L0.3/L1.8	64	120

J. Hannigan 07-09-10
REGISTERED ELECTRICAL ENGINEER

7-12-10
PLANS APPROVAL DATE

REGISTERED PROFESSIONAL ENGINEER J.M. HANNIGAN No. E13665 Exp. 6-30-11 ELECTRICAL STATE OF CALIFORNIA

THE STATE OF CALIFORNIA OR ITS OFFICERS OR AGENTS SHALL NOT BE RESPONSIBLE FOR THE ACCURACY OR COMPLETENESS OF ELECTRONIC COPIES OF THIS PLAN SHEET.

NOTES (THIS SHEET):

1. MAINTAIN 4′ HORIZONTAL CLEARANCE FROM OBSTRUCTIONS.
2. FOR ACCURATE RIGHT OF WAY AND ACCESS DATA, CONTACT RIGHT OF WAY ENGINEERING AT THE DISTRICT OFFICE.
3. EXISTING UTILITIES HAVE NOT BEEN POSITIVELY LOCATED.

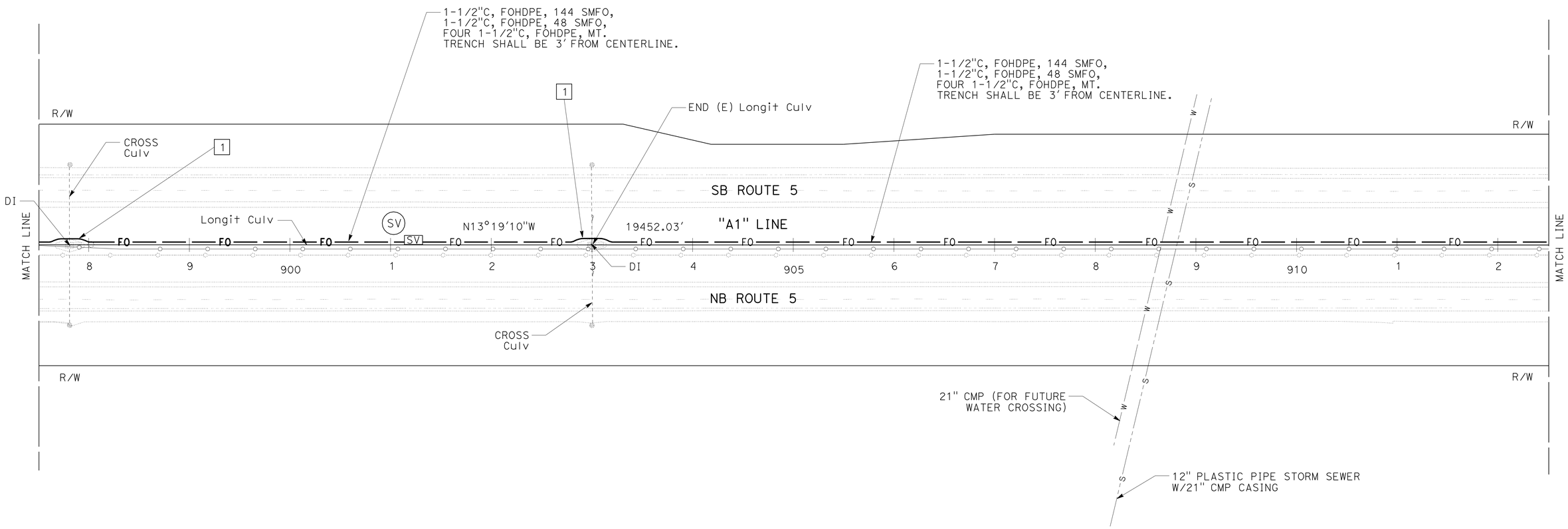

FIBER OPTIC SYSTEM

SCALE: 1" = 50′

E-38

THIS PLAN IS ACCURATE FOR ELECTRICAL WORK ONLY.

REVISED BY | DATE REVISED
JAMES M. HANNIGAN | JEREMIAH PEARCE
CALCULATED-DESIGNED BY | CHECKED BY
FUNCTIONAL SUPERVISOR
ROB STINGER

STATE OF CALIFORNIA - DEPARTMENT OF TRANSPORTATION
Caltrans ELECTRICAL DESIGN

P:\proj1\02\0c590_plans\pse\20c590ua038.dgn

LAST REVISION | DATE PLOTTED => 10-AUG-2010
07-09-10 | TIME PLOTTED => 13:54

Dist	COUNTY	ROUTE	POST MILES TOTAL PROJECT	SHEET No.	TOTAL SHEETS
02	Sha	5,44	R3.2/R18.6, L0.3/L1.8	65	120

J. Hannigan 07-09-10
REGISTERED ELECTRICAL ENGINEER

7-12-10
PLANS APPROVAL DATE

REGISTERED PROFESSIONAL ENGINEER J.M. HANNIGAN No. E13665 Exp. 6-30-11 ELECTRICAL STATE OF CALIFORNIA

THE STATE OF CALIFORNIA OR ITS OFFICERS OR AGENTS SHALL NOT BE RESPONSIBLE FOR THE ACCURACY OR COMPLETENESS OF ELECTRONIC COPIES OF THIS PLAN SHEET.

NOTES (THIS SHEET):

1. MAINTAIN 4′ HORIZONTAL CLEARANCE FROM OBSTRUCTIONS.
2. FOR ACCURATE RIGHT OF WAY AND ACCESS DATA, CONTACT RIGHT OF WAY ENGINEERING AT THE DISTRICT OFFICE.
3. EXISTING UTILITIES HAVE NOT BEEN POSITIVELY LOCATED.

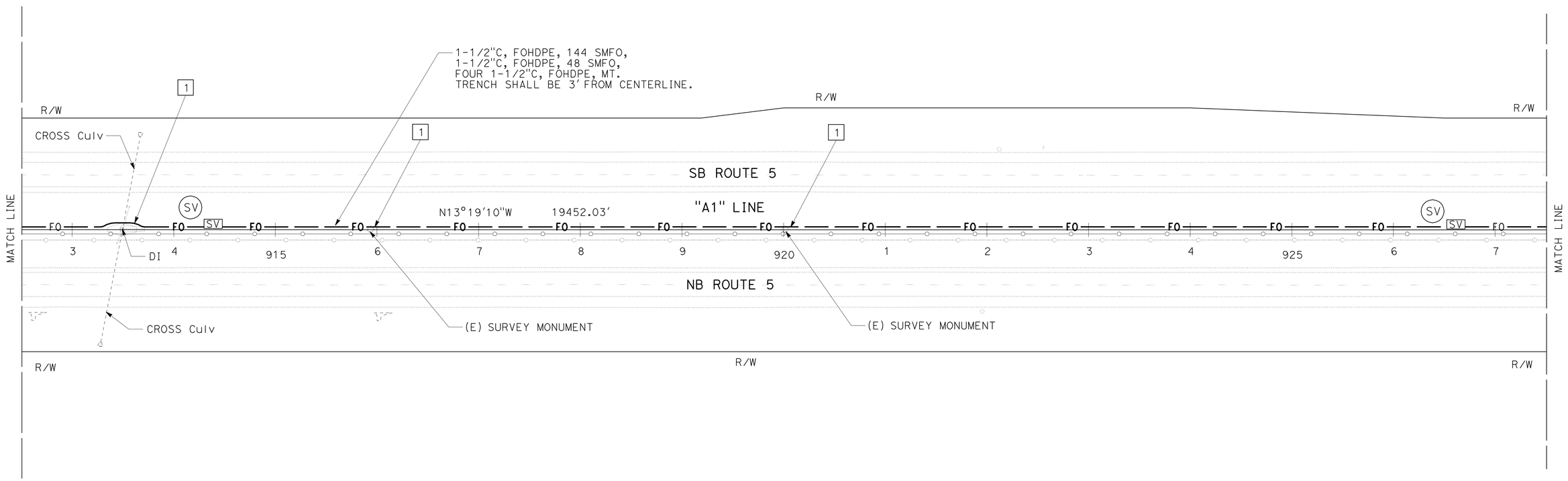

FIBER OPTIC SYSTEM

SCALE: 1" = 50′

E-39

THIS PLAN IS ACCURATE FOR ELECTRICAL WORK ONLY.

STATE OF CALIFORNIA - DEPARTMENT OF TRANSPORTATION
Caltrans ELECTRICAL DESIGN

FUNCTIONAL SUPERVISOR: ROB STINGER
CALCULATED-DESIGNED BY: JAMES M. HANNIGAN
CHECKED BY: JEREMIAH PEARCE
REVISED BY / DATE REVISED

P:\proj1\02\0c590_plans\pse\20c590ua039.dgn

LAST REVISION DATE PLOTTED => 15-JUL-2010
07-09-10 TIME PLOTTED => 16:06

Dist	COUNTY	ROUTE	POST MILES TOTAL PROJECT	SHEET No.	TOTAL SHEETS
02	Sha	5,44	R3.2/R18.6, L0.3/L1.8	66	120

J. Hannigan 07-09-10
REGISTERED ELECTRICAL ENGINEER

7-12-10
PLANS APPROVAL DATE

REGISTERED PROFESSIONAL ENGINEER J.M. HANNIGAN No. E13665 Exp. 6-30-11 ELECTRICAL STATE OF CALIFORNIA

THE STATE OF CALIFORNIA OR ITS OFFICERS OR AGENTS SHALL NOT BE RESPONSIBLE FOR THE ACCURACY OR COMPLETENESS OF ELECTRONIC COPIES OF THIS PLAN SHEET.

NOTES (THIS SHEET):

1. MAINTAIN 4′ HORIZONTAL CLEARANCE FROM OBSTRUCTIONS.
2. FOR ACCURATE RIGHT OF WAY AND ACCESS DATA, CONTACT RIGHT OF WAY ENGINEERING AT THE DISTRICT OFFICE.
3. EXISTING UTILITIES HAVE NOT BEEN POSITIVELY LOCATED.
4. 1-1/2"C, FOHDPE, 144 SMFO, 1-1/2"C, FOHDPE, 48 SMFO, FOUR 1-1/2"C, FOHDPE, MT. TRENCH SHALL BE 3′ FROM CENTERLINE.

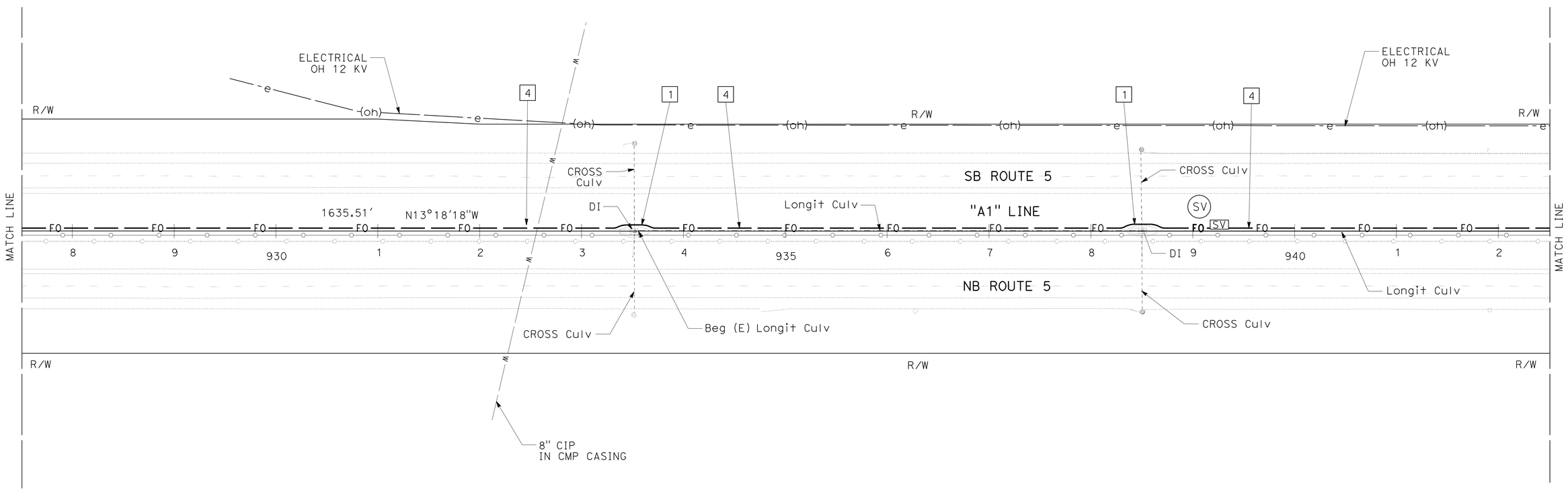

FIBER OPTIC SYSTEM

SCALE: 1" = 50′

E-40

THIS PLAN IS ACCURATE FOR ELECTRICAL WORK ONLY.

REVISED BY	DATE REVISED

CALCULATED-DESIGNED BY: JAMES M. HANNIGAN
CHECKED BY: JEREMIAH PEARCE
FUNCTIONAL SUPERVISOR: ROB STINGER

STATE OF CALIFORNIA - DEPARTMENT OF TRANSPORTATION
Caltrans ELECTRICAL DESIGN

P:\proj1\02\0c590_plans\pse\20c590ua040.dgn

LAST REVISION 07-09-10 | DATE PLOTTED => 15-JUL-2010 | TIME PLOTTED => 16:06

Dist	COUNTY	ROUTE	POST MILES TOTAL PROJECT	SHEET No.	TOTAL SHEETS
02	Sha	5,44	R3.2/R18.6, L0.3/L1.8	67	120

J. Hannigan 07-09-10
REGISTERED ELECTRICAL ENGINEER

7-12-10
PLANS APPROVAL DATE

REGISTERED PROFESSIONAL ENGINEER J.M. HANNIGAN No. E13665 Exp. 6-30-11 ELECTRICAL STATE OF CALIFORNIA

THE STATE OF CALIFORNIA OR ITS OFFICERS OR AGENTS SHALL NOT BE RESPONSIBLE FOR THE ACCURACY OR COMPLETENESS OF ELECTRONIC COPIES OF THIS PLAN SHEET.

NOTES (THIS SHEET):

1. MAINTENANCE VEHICLE PULLOUT (SEE CONSTRUCTION DETAILS).
2. CCTV-45, SEE DETAIL SHEET SES-1
3. 1½"C, FOHDPE, MT.
4. 2"C, 3#4, 1#4G
5. 2"C, 1 TC
6. MAINTAIN 4′ HORIZONTAL CLEARANCE FROM OBSTRUCTIONS
7. FOR ACCURATE RIGHT OF WAY AND ACCESS DATA, CONTACT RIGHT OF WAY ENGINEERING AT THE DISTRICT OFFICE.
8. EXISTING UTILITIES HAVE NOT BEEN POSITIVELY LOCATED.
9. EXISTING IRRIGATION FACILITIES TO BE LOCATED PRIOR TO CONSTRUCTION ACTIVITIES.

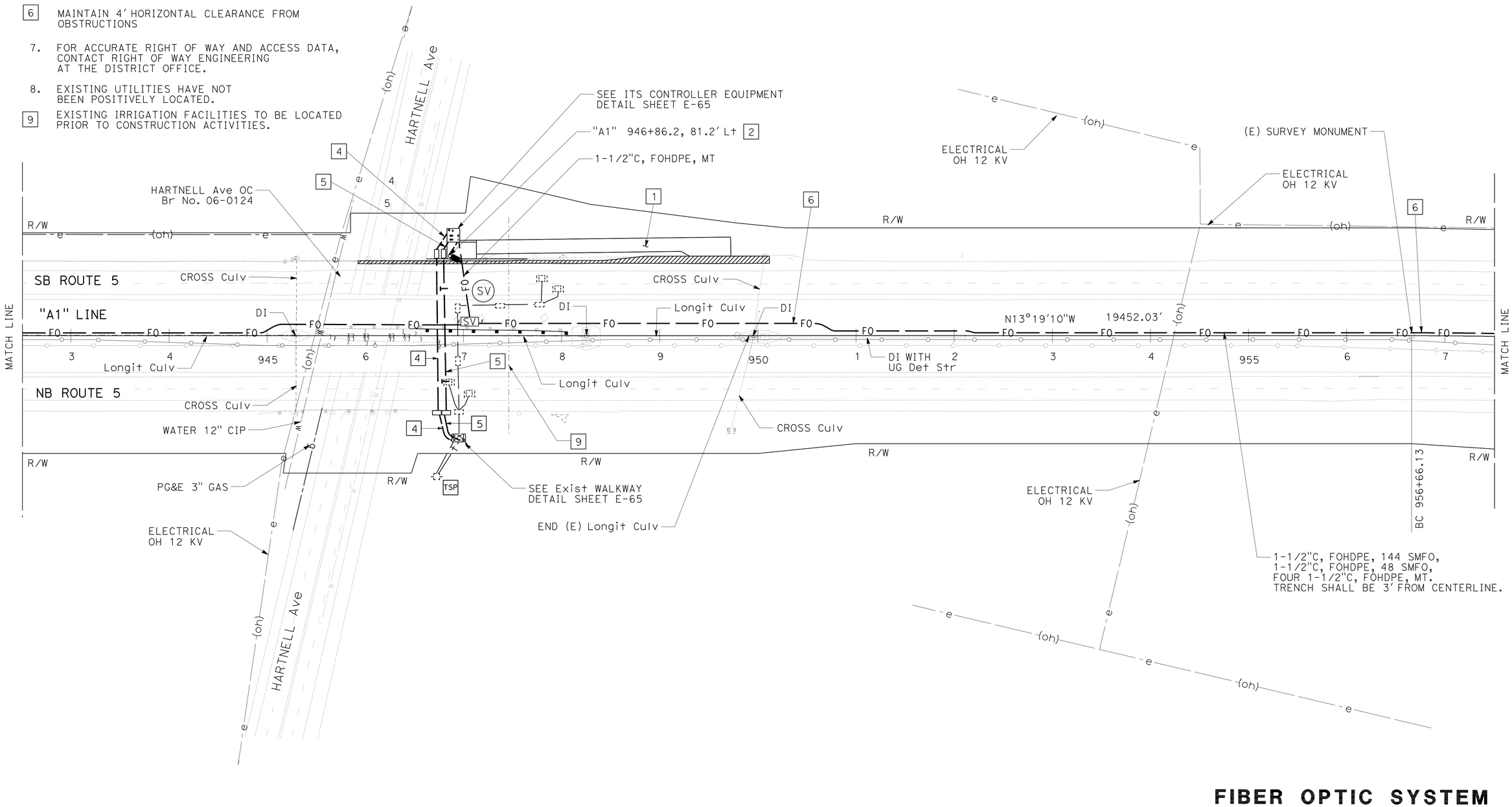

FIBER OPTIC SYSTEM

SCALE: 1" = 50′ **E-41**

THIS PLAN IS ACCURATE FOR ELECTRICAL WORK ONLY.

REVISED BY	DATE REVISED

CALCULATED-DESIGNED BY: JAMES M. HANNIGAN
CHECKED BY: JEREMIAH PEARCE
FUNCTIONAL SUPERVISOR: ROB STINGER

STATE OF CALIFORNIA - DEPARTMENT OF TRANSPORTATION
Caltrans ELECTRICAL DESIGN

P:\proj1\02\0c590_plans\pse\20c590ua041.dgn

LAST REVISION DATE PLOTTED => 15-JUL-2010
07-09-10 TIME PLOTTED => 16:06

Dist	COUNTY	ROUTE	POST MILES TOTAL PROJECT	SHEET No.	TOTAL SHEETS
02	Sha	5,44	R3.2/R18.6, L0.3/L1.8	68	120

J. Hannigan 07-09-10
REGISTERED ELECTRICAL ENGINEER

7-12-10
PLANS APPROVAL DATE

REGISTERED PROFESSIONAL ENGINEER J.M. HANNIGAN No. E13665 Exp. 6-30-11 ELECTRICAL STATE OF CALIFORNIA

THE STATE OF CALIFORNIA OR ITS OFFICERS OR AGENTS SHALL NOT BE RESPONSIBLE FOR THE ACCURACY OR COMPLETENESS OF ELECTRONIC COPIES OF THIS PLAN SHEET.

NOTES (THIS SHEET):

1. MAINTAIN 4′ HORIZONTAL CLEARANCE FROM OBSTRUCTIONS.
2. FOR ACCURATE RIGHT OF WAY AND ACCESS DATA, CONTACT RIGHT OF WAY ENGINEERING AT THE DISTRICT OFFICE.
3. EXISTING UTILITIES HAVE NOT BEEN POSITIVELY LOCATED.
4. 1-1/2"C, FOHDPE, 144 SMFO, 1-1/2"C, FOHDPE, 48 SMFO, FOUR 1-1/2"C, FOHDPE, MT. TRENCH SHALL BE 3′ FROM CENTERLINE.
5. EXISTING IRRIGATION FACILITIES TO BE LOCATED PRIOR TO CONSTRUCTION ACTIVITIES.

CURVE DATA

No.	R	Δ	T	L
6	5000′	13°19′10"	583.80′	1162.34′

FIBER OPTIC SYSTEM

SCALE: 1" = 50′

E-42

THIS PLAN IS ACCURATE FOR ELECTRICAL WORK ONLY.

REVISED BY	DATE REVISED

CALCULATED-DESIGNED BY: JAMES M. HANNIGAN
CHECKED BY: JEREMIAH PEARCE
FUNCTIONAL SUPERVISOR: ROB STINGER

STATE OF CALIFORNIA - DEPARTMENT OF TRANSPORTATION
Caltrans ELECTRICAL DESIGN

P:\proj1\02\0c590_plans\pse\20c590ua042.dgn

LAST REVISION DATE PLOTTED => 15-JUL-2010
07-09-10 TIME PLOTTED => 16:06

Dist	COUNTY	ROUTE	POST MILES TOTAL PROJECT	SHEET No.	TOTAL SHEETS
02	Sha	5,44	R3.2/R18.6, L0.3/L1.8	69	120

J. Hannigan 07-09-10
REGISTERED ELECTRICAL ENGINEER

7-12-10
PLANS APPROVAL DATE

REGISTERED PROFESSIONAL ENGINEER J.M. HANNIGAN No. E13665 Exp. 6-30-11 ELECTRICAL STATE OF CALIFORNIA

THE STATE OF CALIFORNIA OR ITS OFFICERS OR AGENTS SHALL NOT BE RESPONSIBLE FOR THE ACCURACY OR COMPLETENESS OF ELECTRONIC COPIES OF THIS PLAN SHEET.

NOTES (THIS SHEET):

1. MAINTAIN 4′ HORIZONTAL CLEARANCE FROM OBSTRUCTIONS.
2. FOR ACCURATE RIGHT OF WAY AND ACCESS DATA, CONTACT RIGHT OF WAY ENGINEERING AT THE DISTRICT OFFICE.
3. EXISTING UTILITIES HAVE NOT BEEN POSITIVELY LOCATED.
4. EXISTING IRRIGATION FACILITIES TO BE LOCATED PRIOR TO CONSTRUCTION ACTIVITIES.

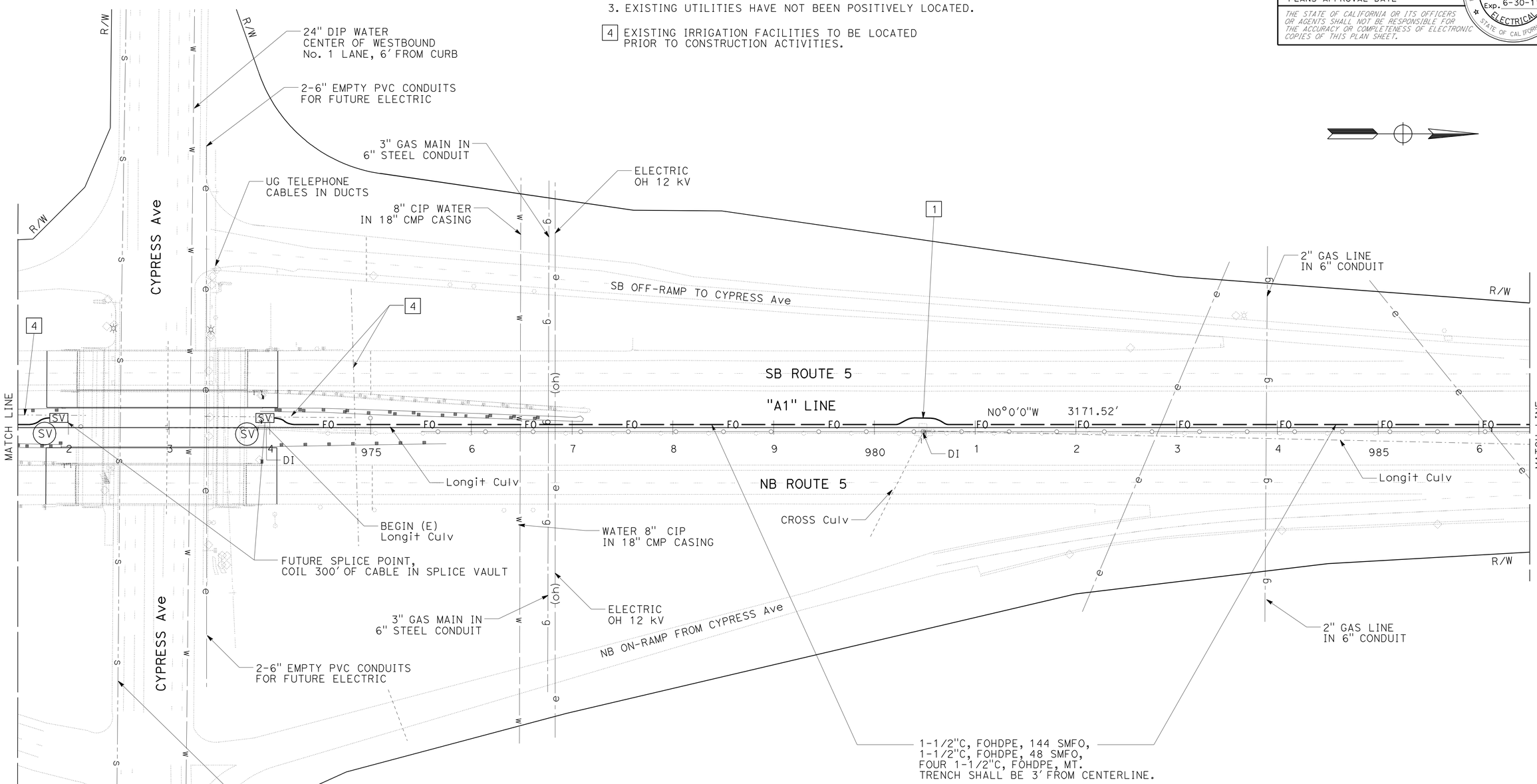

FIBER OPTIC SYSTEM

SCALE: 1" = 50′

E-43

THIS PLAN IS ACCURATE FOR ELECTRICAL WORK ONLY.

CALCULATED-DESIGNED BY	JAMES M. HANNIGAN	REVISED BY	
CHECKED BY	JEREMIAH PEARCE	DATE REVISED	
FUNCTIONAL SUPERVISOR	ROB STINGER		

STATE OF CALIFORNIA - DEPARTMENT OF TRANSPORTATION
Caltrans ELECTRICAL DESIGN

P:\proj1\02\0c590_plans\pse\20c590ua043.dgn

LAST REVISION 07-09-10 | DATE PLOTTED => 15-JUL-2010 TIME PLOTTED => 16:07

Dist	COUNTY	ROUTE	POST MILES TOTAL PROJECT	SHEET No.	TOTAL SHEETS
02	Sha	5,44	R3.2/R18.6, L0.3/L1.8	70	120

J. Hannigan 07-09-10
REGISTERED ELECTRICAL ENGINEER

7-12-10
PLANS APPROVAL DATE

REGISTERED PROFESSIONAL ENGINEER J.M. HANNIGAN No. E13665 Exp. 6-30-11 ELECTRICAL STATE OF CALIFORNIA

THE STATE OF CALIFORNIA OR ITS OFFICERS OR AGENTS SHALL NOT BE RESPONSIBLE FOR THE ACCURACY OR COMPLETENESS OF ELECTRONIC COPIES OF THIS PLAN SHEET.

NOTES (THIS SHEET):

1. MAINTAIN 4′ HORIZONTAL CLEARANCE FROM OBSTRUCTIONS.
2. FOR ACCURATE RIGHT OF WAY AND ACCESS DATA, CONTACT RIGHT OF WAY ENGINEERING AT THE DISTRICT OFFICE.
3. EXISTING UTILITIES HAVE NOT BEEN POSITIVELY LOCATED.
4. EXISTING IRRIGATION FACILITIES TO BE LOCATED PRIOR TO CONSTRUCTION ACTIVITIES.

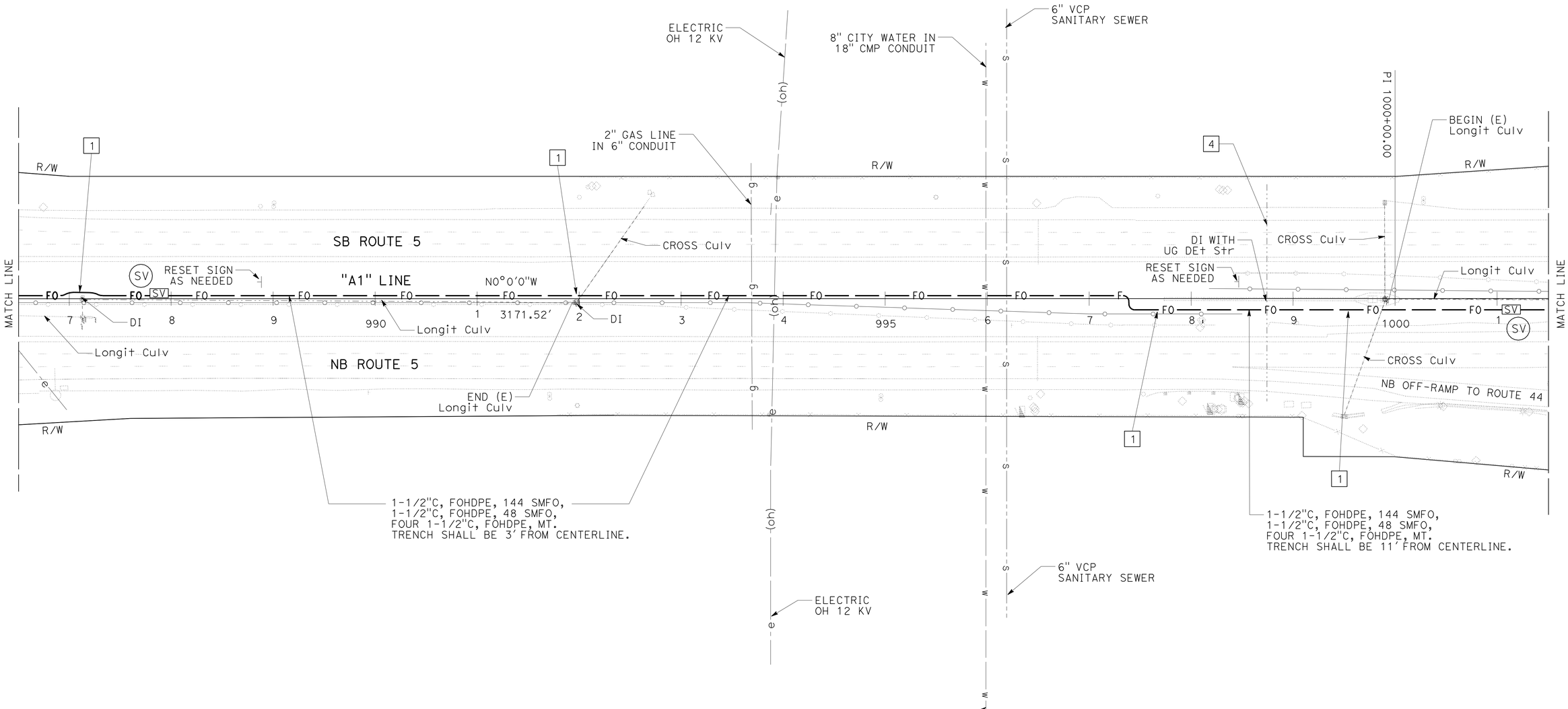

FIBER OPTIC SYSTEM

SCALE: 1" = 50′

E-44

THIS PLAN IS ACCURATE FOR ELECTRICAL WORK ONLY.

REVISED BY	DATE REVISED

CALCULATED-DESIGNED BY: JAMES M. HANNIGAN
CHECKED BY: JEREMIAH PEARCE
FUNCTIONAL SUPERVISOR: ROB STINGER

STATE OF CALIFORNIA - DEPARTMENT OF TRANSPORTATION
Caltrans ELECTRICAL DESIGN

P:\proj1\02\0c590_plans\pse\20c590ua044.dgn

LAST REVISION | DATE PLOTTED => 15-JUL-2010 | TIME PLOTTED => 16:07
07-09-10

Dist	COUNTY	ROUTE	POST MILES TOTAL PROJECT	SHEET No.	TOTAL SHEETS
02	Sha	5,44	R3.2/R18.6, L0.3/L1.8	71	120

J. Hannigan 07-09-10
REGISTERED ELECTRICAL ENGINEER

7-12-10
PLANS APPROVAL DATE

REGISTERED PROFESSIONAL ENGINEER J.M. HANNIGAN No. E13665 Exp. 6-30-11 ELECTRICAL STATE OF CALIFORNIA

THE STATE OF CALIFORNIA OR ITS OFFICERS OR AGENTS SHALL NOT BE RESPONSIBLE FOR THE ACCURACY OR COMPLETENESS OF ELECTRONIC COPIES OF THIS PLAN SHEET.

NOTES (THIS SHEET):

1. MAINTAIN 4' HORIZONTAL CLEARANCE FROM OBSTRUCTIONS.
2. FOR ACCURATE RIGHT OF WAY AND ACCESS DATA, CONTACT RIGHT OF WAY ENGINEERING AT THE DISTRICT OFFICE.
3. EXISTING UTILITIES HAVE NOT BEEN POSITIVELY LOCATED.
4. 1-1/2"C, FOHDPE, 144 SMFO, 1-1/2"C, FOHDPE, 48 SMFO, FOUR 1-1/2"C, FOHDPE, MT. TRENCH SHALL BE 11' FROM CENTERLINE.

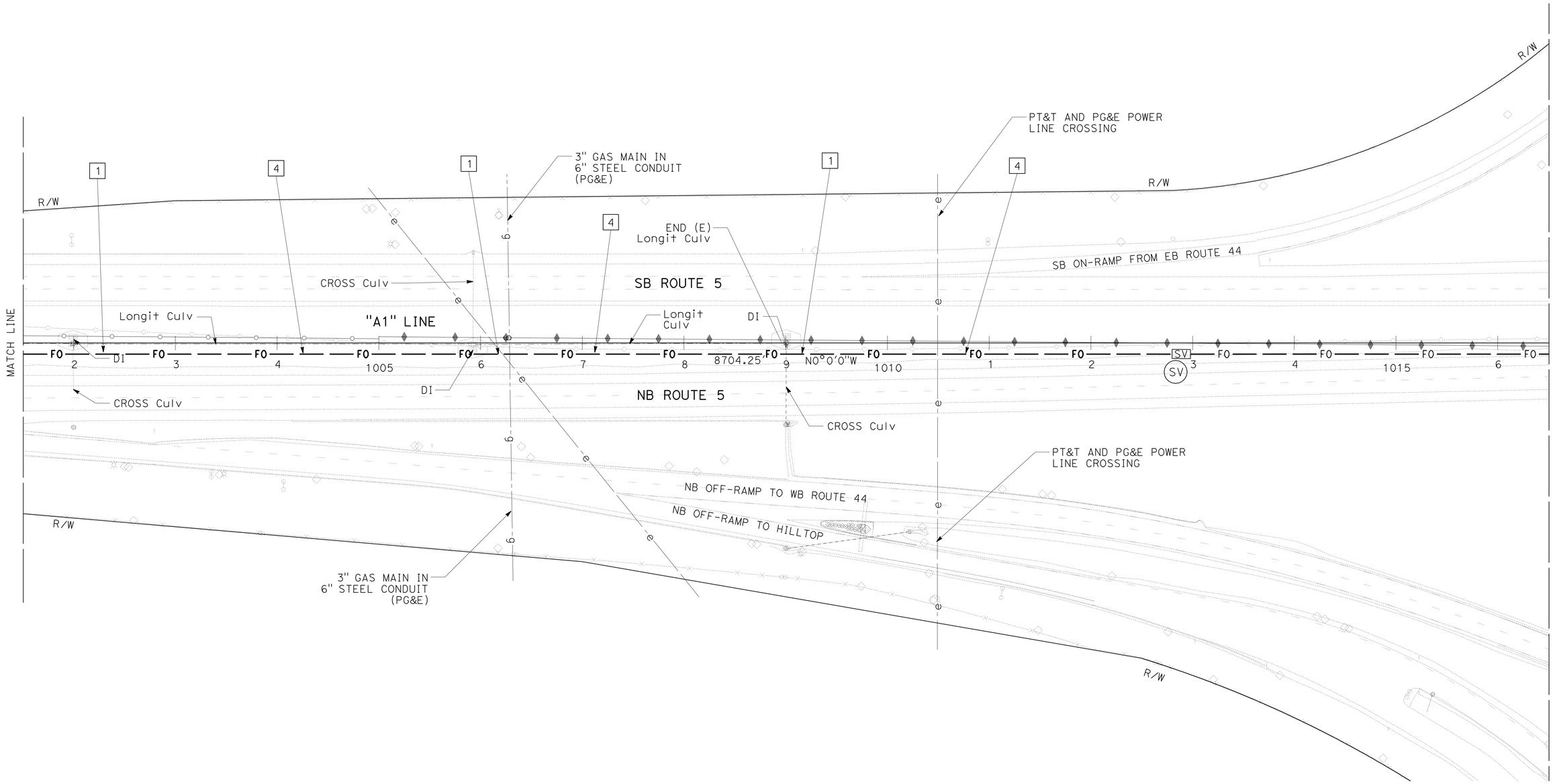

FIBER OPTIC SYSTEM

SCALE: 1" = 50'

E-45

THIS PLAN IS ACCURATE FOR ELECTRICAL WORK ONLY.

REVISED BY	DATE REVISED
JAMES M. HANNIGAN	JEREMIAH PEARCE
CALCULATED-DESIGNED BY	CHECKED BY
FUNCTIONAL SUPERVISOR	ROB STINGER

STATE OF CALIFORNIA - DEPARTMENT OF TRANSPORTATION
Caltrans ELECTRICAL DESIGN

P:\proj1\02\0c590_plans\pse\20c590ua045.dgn

LAST REVISION DATE PLOTTED => 15-JUL-2010
07-09-10 TIME PLOTTED => 16:07

Dist	COUNTY	ROUTE	POST MILES TOTAL PROJECT	SHEET No.	TOTAL SHEETS
02	Sha	5,44	R3.2/R18.6, L0.3/L1.8	72	120

J. Hannigan 07-09-10
REGISTERED ELECTRICAL ENGINEER

7-12-10
PLANS APPROVAL DATE

REGISTERED PROFESSIONAL ENGINEER J.M. HANNIGAN No. E13665 Exp. 6-30-11 ELECTRICAL STATE OF CALIFORNIA

THE STATE OF CALIFORNIA OR ITS OFFICERS OR AGENTS SHALL NOT BE RESPONSIBLE FOR THE ACCURACY OR COMPLETENESS OF ELECTRONIC COPIES OF THIS PLAN SHEET.

NOTES (THIS SHEET):

1. EXISTING IRRIGATION FACILITIES TO BE LOCATED PRIOR TO CONSTRUCTION ACTIVITIES.
2. FOR ACCURATE RIGHT OF WAY AND ACCESS DATA, CONTACT RIGHT OF WAY ENGINEERING AT THE DISTRICT OFFICE.
3. EXISTING UTILITIES HAVE NOT BEEN POSITIVELY LOCATED.

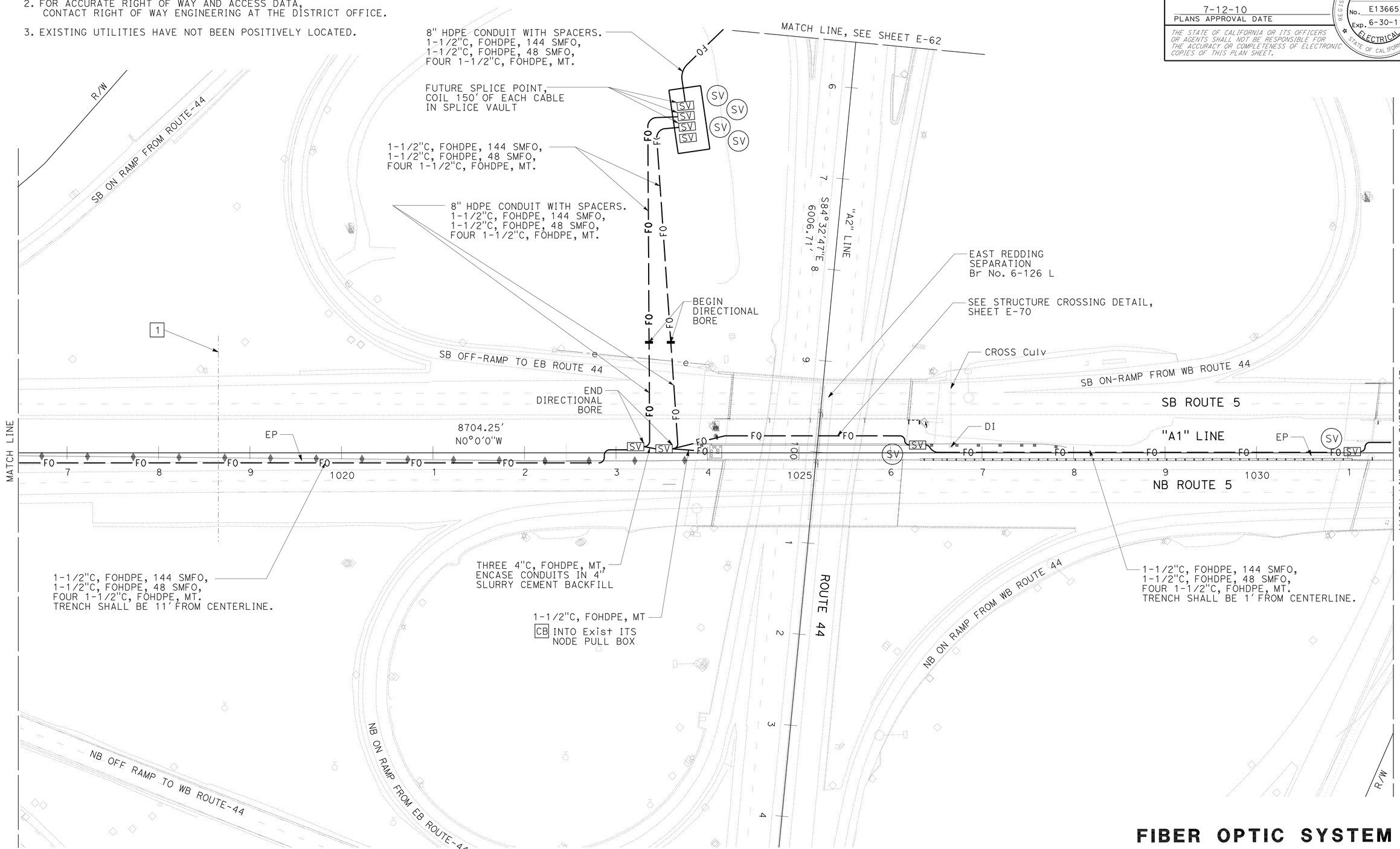

FIBER OPTIC SYSTEM

SCALE: 1" = 50'

E-46

THIS PLAN IS ACCURATE FOR ELECTRICAL WORK ONLY.

REVISED BY	JAMES M. HANNIGAN
DATE REVISED	JEREMIAH PEARCE
CALCULATED-DESIGNED BY	
CHECKED BY	
FUNCTIONAL SUPERVISOR	ROB STINGER

STATE OF CALIFORNIA - DEPARTMENT OF TRANSPORTATION
Caltrans **ELECTRICAL DESIGN**

P:\proj1\02\0c590_plans\pse\20c590ua046.dgn

LAST REVISION 07-09-10 | DATE PLOTTED => 15-JUL-2010 | TIME PLOTTED => 16:07

Dist	COUNTY	ROUTE	POST MILES TOTAL PROJECT	SHEET No.	TOTAL SHEETS
02	Sha	5,44	R3.2/R18.6, L0.3/L1.8	73	120

J. Hannigan 07-09-10
REGISTERED ELECTRICAL ENGINEER

7-12-10
PLANS APPROVAL DATE

REGISTERED PROFESSIONAL ENGINEER J.M. HANNIGAN No. E13665 Exp. 6-30-11 ELECTRICAL STATE OF CALIFORNIA

THE STATE OF CALIFORNIA OR ITS OFFICERS OR AGENTS SHALL NOT BE RESPONSIBLE FOR THE ACCURACY OR COMPLETENESS OF ELECTRONIC COPIES OF THIS PLAN SHEET.

NOTES (THIS SHEET):

1. MAINTAIN 4′ HORIZONTAL CLEARANCE FROM OBSTRUCTIONS.
2. FOR ACCURATE RIGHT OF WAY AND ACCESS DATA, CONTACT RIGHT OF WAY ENGINEERING AT THE DISTRICT OFFICE.
3. EXISTING UTILITIES HAVE NOT BEEN POSITIVELY LOCATED.
4. EXISTING IRRIGATION FACILITIES TO BE LOCATED PRIOR TO CONSTRUCTION ACTIVITIES.

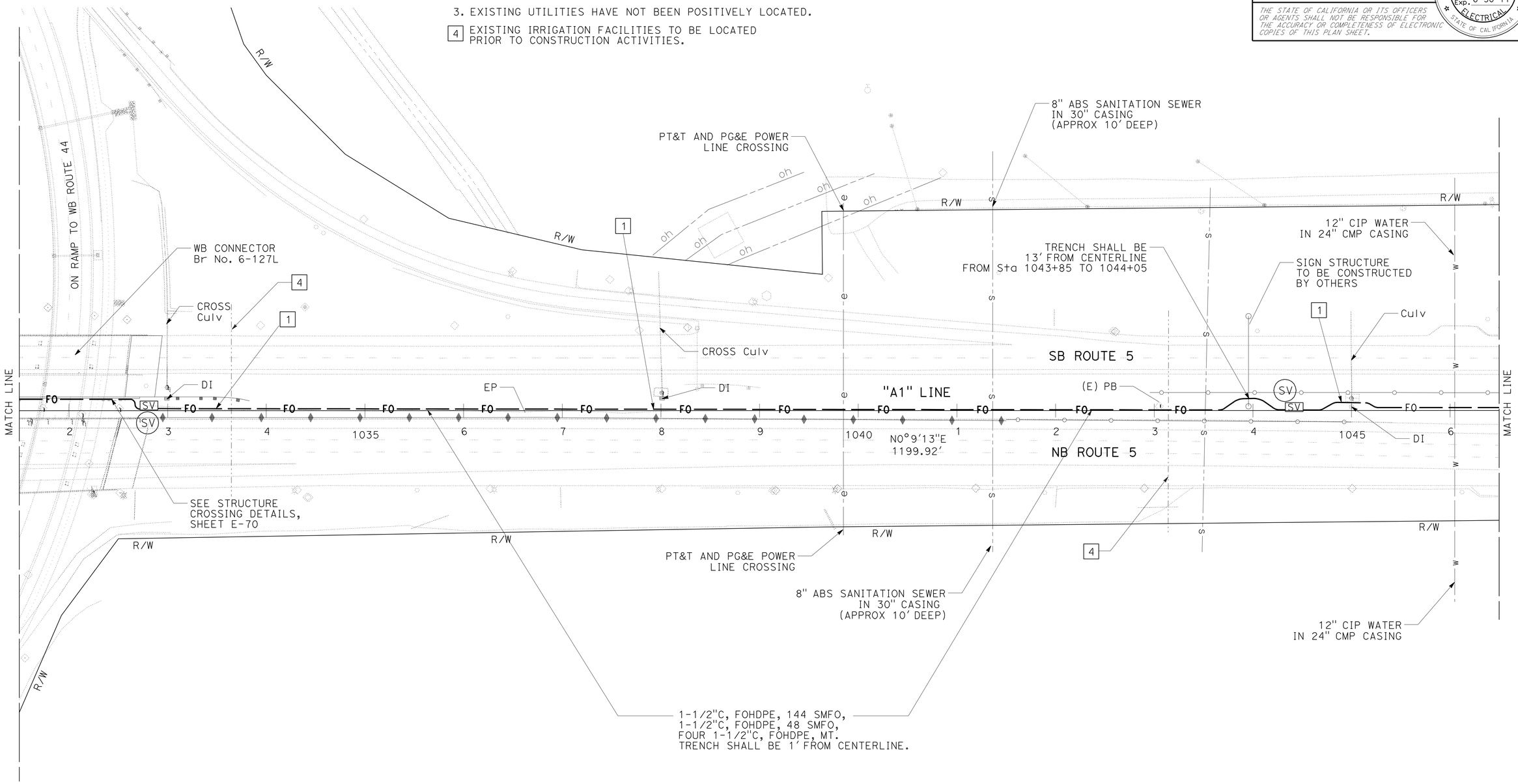

FIBER OPTIC SYSTEM

SCALE: 1" = 50′

E-47

THIS PLAN IS ACCURATE FOR ELECTRICAL WORK ONLY.

REVISED BY	DATE REVISED

CALCULATED-DESIGNED BY: JAMES M. HANNIGAN
CHECKED BY: JEREMIAH PEARCE
FUNCTIONAL SUPERVISOR: ROB STINGER

STATE OF CALIFORNIA - DEPARTMENT OF TRANSPORTATION
Caltrans ELECTRICAL DESIGN

P:\proj1\02\0c590_plans\pse\20c590ua047.dgn

LAST REVISION 07-09-10 | DATE PLOTTED => 15-JUL-2010 | TIME PLOTTED => 16:07

Dist	COUNTY	ROUTE	POST MILES TOTAL PROJECT	SHEET No.	TOTAL SHEETS
02	Sha	5,44	R3.2/R18.6, L0.3/L1.8	74	120

J. Hannigan 07-09-10
REGISTERED ELECTRICAL ENGINEER

7-12-10
PLANS APPROVAL DATE

REGISTERED PROFESSIONAL ENGINEER J.M. HANNIGAN No. E13665 Exp. 6-30-11 ELECTRICAL STATE OF CALIFORNIA

THE STATE OF CALIFORNIA OR ITS OFFICERS OR AGENTS SHALL NOT BE RESPONSIBLE FOR THE ACCURACY OR COMPLETENESS OF ELECTRONIC COPIES OF THIS PLAN SHEET.

NOTES (THIS SHEET):

1. MAINTAIN 4′ HORIZONTAL CLEARANCE FROM OBSTRUCTIONS.
2. FOR ACCURATE RIGHT OF WAY AND ACCESS DATA, CONTACT RIGHT OF WAY ENGINEERING AT THE DISTRICT OFFICE.
3. EXISTING UTILITIES HAVE NOT BEEN POSITIVELY LOCATED.

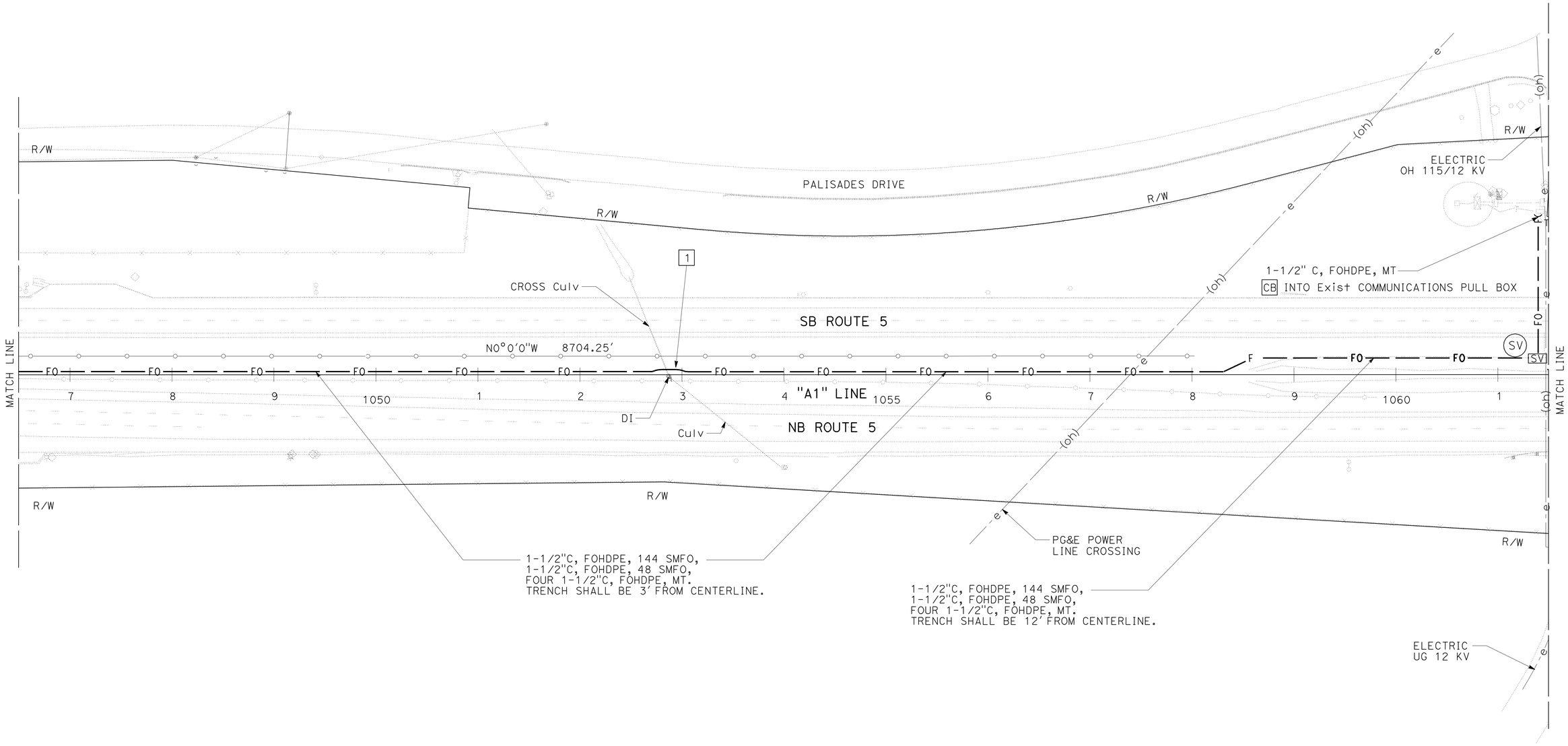

FIBER OPTIC SYSTEM

SCALE: 1" = 50′

E-48

THIS PLAN IS ACCURATE FOR ELECTRICAL WORK ONLY.

REVISED BY | DATE REVISED
JAMES M. HANNIGAN | JEREMIAH PEARCE
CALCULATED-DESIGNED BY | CHECKED BY
FUNCTIONAL SUPERVISOR: ROB STINGER

STATE OF CALIFORNIA - DEPARTMENT OF TRANSPORTATION
Caltrans **ELECTRICAL DESIGN**

P:\proj1\02\0c590_plans\pse\20c590ua048.dgn

LAST REVISION 07-09-10 | DATE PLOTTED => 16-JUL-2010 | TIME PLOTTED => 13:35

Dist	COUNTY	ROUTE	POST MILES TOTAL PROJECT	SHEET No.	TOTAL SHEETS
02	Sha	5,44	R3.2/R18.6, L0.3/L1.8	75	120

J. Hannigan 07-09-10
REGISTERED ELECTRICAL ENGINEER

7-12-10
PLANS APPROVAL DATE

REGISTERED PROFESSIONAL ENGINEER J.M. HANNIGAN No. E13665 Exp. 6-30-11 ELECTRICAL STATE OF CALIFORNIA

THE STATE OF CALIFORNIA OR ITS OFFICERS OR AGENTS SHALL NOT BE RESPONSIBLE FOR THE ACCURACY OR COMPLETENESS OF ELECTRONIC COPIES OF THIS PLAN SHEET.

NOTES:

1. FOR ACCURATE RIGHT OF WAY AND ACCESS DATA, CONTACT RIGHT OF WAY ENGINEERING AT THE DISTRICT OFFICE.
2. EXISTING UTILITIES HAVE NOT BEEN POSITIVELY LOCATED,

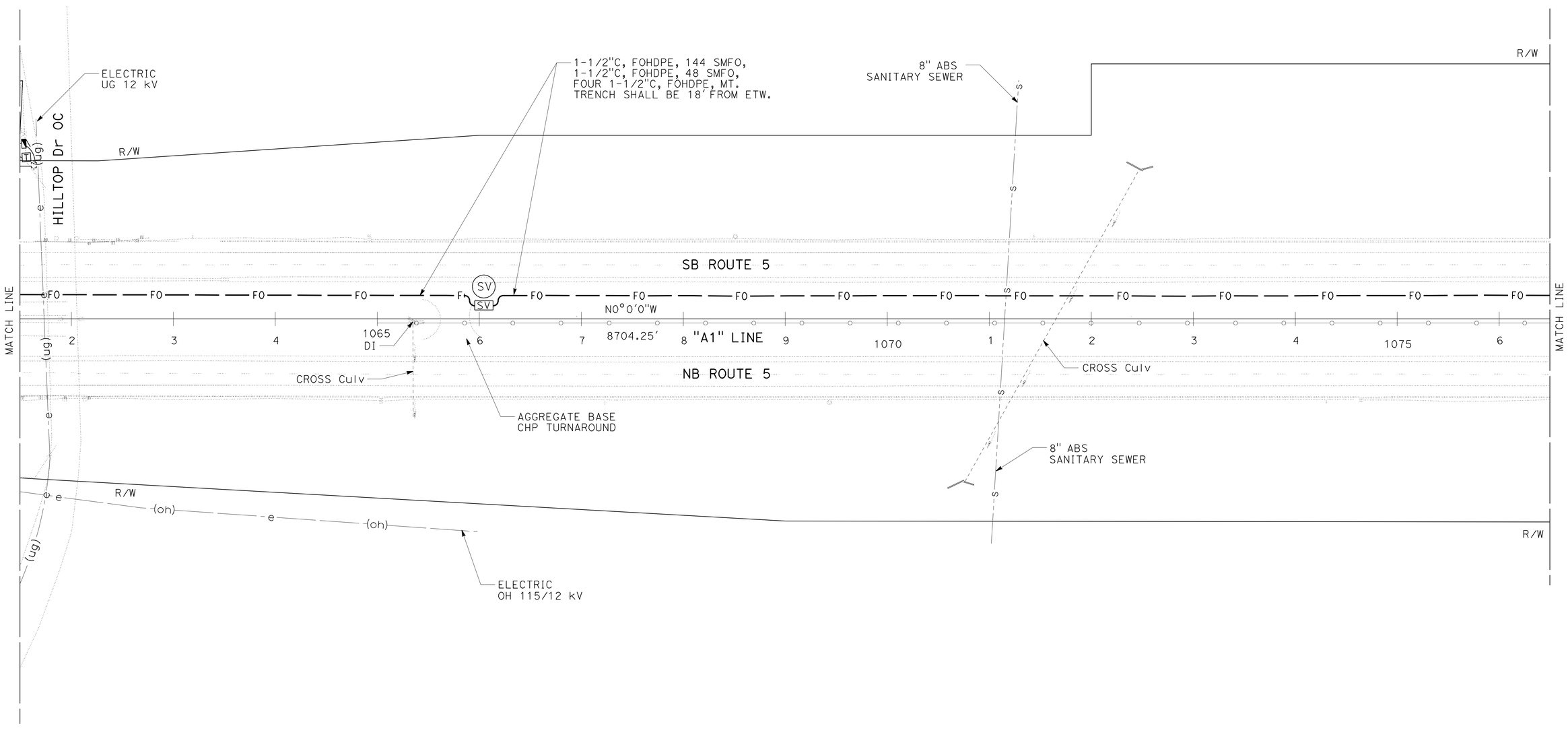

THIS PLAN IS ACCURATE FOR ELECTRICAL WORK ONLY.

FIBER OPTIC SYSTEM

SCALE: 1" = 50'

E-49

REVISED BY | DATE REVISED
JAMES M. HANNIGAN | JEREMIAH PEARCE
CALCULATED-DESIGNED BY | CHECKED BY
FUNCTIONAL SUPERVISOR
ROB STINGER

STATE OF CALIFORNIA - DEPARTMENT OF TRANSPORTATION
Caltrans ELECTRICAL DESIGN

P:\proj1\02\0c590_plans\pse\20c590ua049.dgn

LAST REVISION | DATE PLOTTED => 15-JUL-2010
07-09-10 | TIME PLOTTED => 16:07

BORDER LAST REVISED 7/2/2010 | USERNAME => trlim | DGN FILE => 20c590ua049.dgn | RELATIVE BORDER SCALE IS IN INCHES 0 1 2 3 | UNIT 0319 | PROJECT NUMBER & PHASE 02000200001

Dist	COUNTY	ROUTE	POST MILES TOTAL PROJECT	SHEET No.	TOTAL SHEETS
02	Sha	5,44	R3.2/R18.6, L0.3/L1.8	76	120

J. Hannigan 07-09-10
REGISTERED ELECTRICAL ENGINEER

7-12-10
PLANS APPROVAL DATE

REGISTERED PROFESSIONAL ENGINEER J.M. HANNIGAN No. E13665 Exp. 6-30-11 ELECTRICAL STATE OF CALIFORNIA

THE STATE OF CALIFORNIA OR ITS OFFICERS OR AGENTS SHALL NOT BE RESPONSIBLE FOR THE ACCURACY OR COMPLETENESS OF ELECTRONIC COPIES OF THIS PLAN SHEET.

NOTES (THIS SHEET):

1. FOR ACCURATE RIGHT OF WAY AND ACCESS DATA, CONTACT RIGHT OF WAY ENGINEERING AT THE DISTRICT OFFICE.
2. EXISTING UTILITIES HAVE NOT BEEN POSITIVELY LOCATED.

CURVE DATA

No. ⑧	R	Δ	T	L
7	5000′	13°14′30″	580.36′	1155.55′

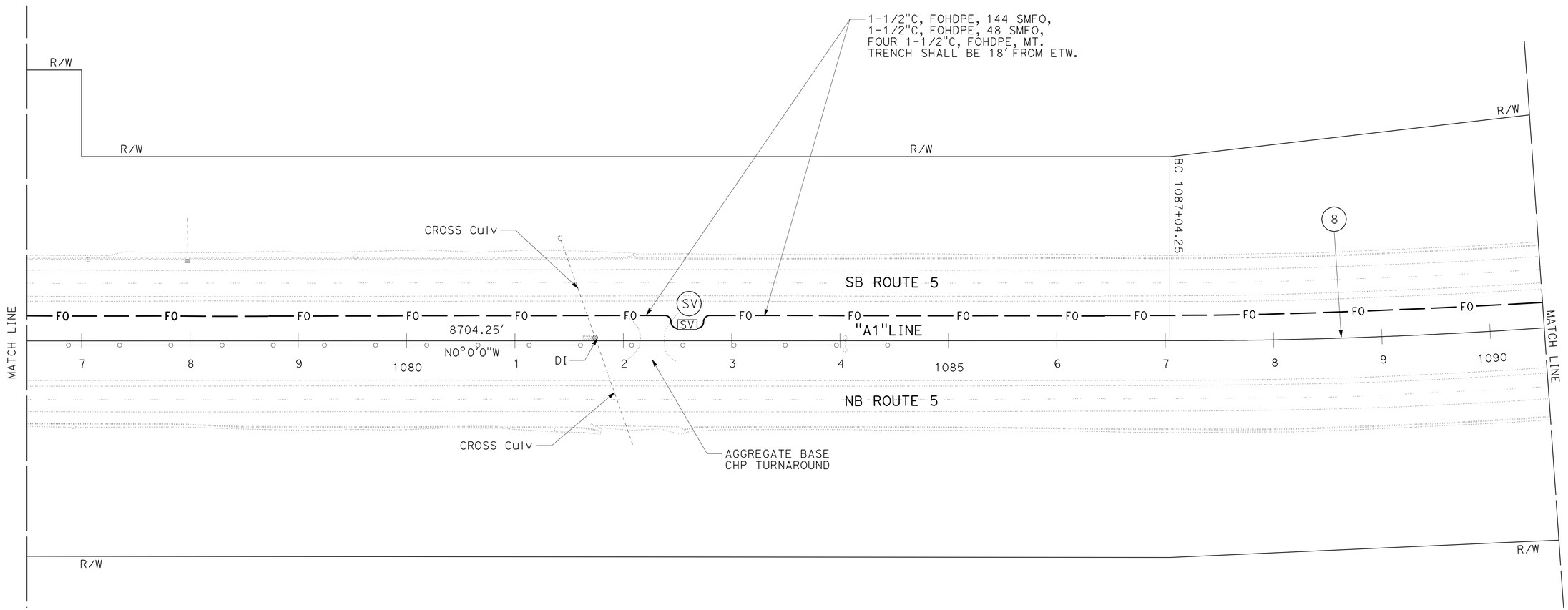

FIBER OPTIC SYSTEM

SCALE: 1" = 50′

E-50

THIS PLAN IS ACCURATE FOR ELECTRICAL WORK ONLY.

REVISED BY	DATE REVISED

CALCULATED-DESIGNED BY	CHECKED BY
JAMES M. HANNIGAN	JEREMIAH PEARCE

FUNCTIONAL SUPERVISOR: ROB STINGER

STATE OF CALIFORNIA - DEPARTMENT OF TRANSPORTATION
Caltrans ELECTRICAL DESIGN

P:\proj1\02\0c590_plans\pse\20c590ua050.dgn

LAST REVISION 07-09-10 | DATE PLOTTED => 15-JUL-2010 | TIME PLOTTED => 16:07

Dist	COUNTY	ROUTE	POST MILES TOTAL PROJECT	SHEET No.	TOTAL SHEETS
02	Sha	5,44	R3.2/R18.6, L0.3/L1.8	77	120

J. Hannigan 07-09-10
REGISTERED ELECTRICAL ENGINEER

7-12-10
PLANS APPROVAL DATE

REGISTERED PROFESSIONAL ENGINEER J.M. HANNIGAN No. E13665 Exp. 6-30-11 ELECTRICAL STATE OF CALIFORNIA

THE STATE OF CALIFORNIA OR ITS OFFICERS OR AGENTS SHALL NOT BE RESPONSIBLE FOR THE ACCURACY OR COMPLETENESS OF ELECTRONIC COPIES OF THIS PLAN SHEET.

NOTES (THIS SHEET):

1. FOR ACCURATE RIGHT OF WAY AND ACCESS DATA, CONTACT RIGHT OF WAY ENGINEERING AT THE DISTRICT OFFICE.
2. EXISTING UTILITIES HAVE NOT BEEN POSITIVELY LOCATED.

CURVE DATA

No. (#)	R	Δ	T	L
8	5000′	13°14′30″	580.36′	1155.55′

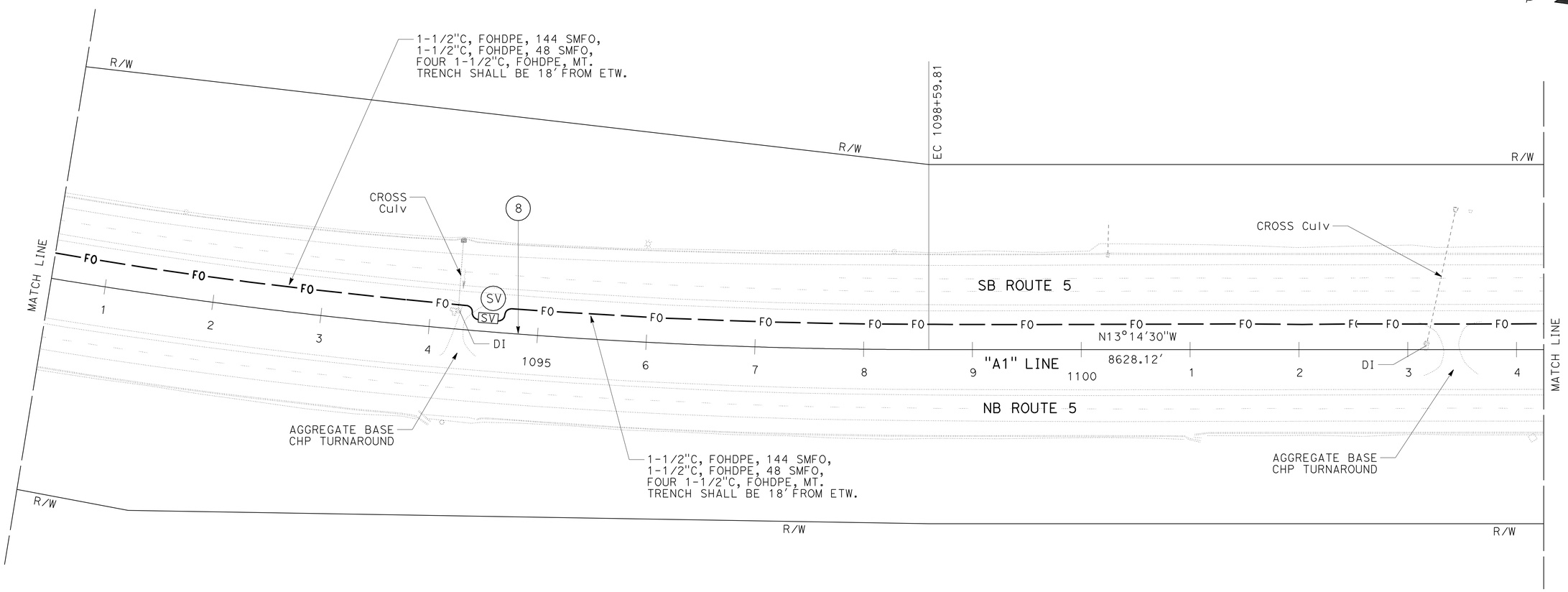

FIBER OPTIC SYSTEM

SCALE: 1" = 50′

E-51

THIS PLAN IS ACCURATE FOR ELECTRICAL WORK ONLY.

REVISED BY | DATE REVISED
JAMES M. HANNIGAN | JEREMIAH PEARCE
CALCULATED-DESIGNED BY | CHECKED BY
FUNCTIONAL SUPERVISOR: ROB STINGER

STATE OF CALIFORNIA - DEPARTMENT OF TRANSPORTATION
Caltrans ELECTRICAL DESIGN

P:\proj\02\0c590_plans\pse\20c590ua051.dgn

LAST REVISION 07-09-10 | DATE PLOTTED => 15-JUL-2010 | TIME PLOTTED => 16:07

BORDER LAST REVISED 7/2/2010 | USERNAME => trlim | DGN FILE => 20c590ua051.dgn | RELATIVE BORDER SCALE IS IN INCHES 0 1 2 3 | UNIT 0319 | PROJECT NUMBER & PHASE 02000200001

Dist	COUNTY	ROUTE	POST MILES TOTAL PROJECT	SHEET No.	TOTAL SHEETS
02	Sha	5,44	R3.2/R18.6, L0.3/L1.8	78	120

J. Hannigan 07-09-10
REGISTERED ELECTRICAL ENGINEER

7-12-10
PLANS APPROVAL DATE

REGISTERED PROFESSIONAL ENGINEER J.M. HANNIGAN No. E13665 Exp. 6-30-11 ELECTRICAL STATE OF CALIFORNIA

THE STATE OF CALIFORNIA OR ITS OFFICERS OR AGENTS SHALL NOT BE RESPONSIBLE FOR THE ACCURACY OR COMPLETENESS OF ELECTRONIC COPIES OF THIS PLAN SHEET.

NOTES (THIS SHEET):

1. FOR ACCURATE RIGHT OF WAY AND ACCESS DATA, CONTACT RIGHT OF WAY ENGINEERING AT THE DISTRICT OFFICE.
2. EXISTING UTILITIES HAVE NOT BEEN POSITIVELY LOCATED.

3 EXISTING IRRIGATION FACILITIES TO BE LOCATED PRIOR TO CONSTRUCTION ACTIVITIES.

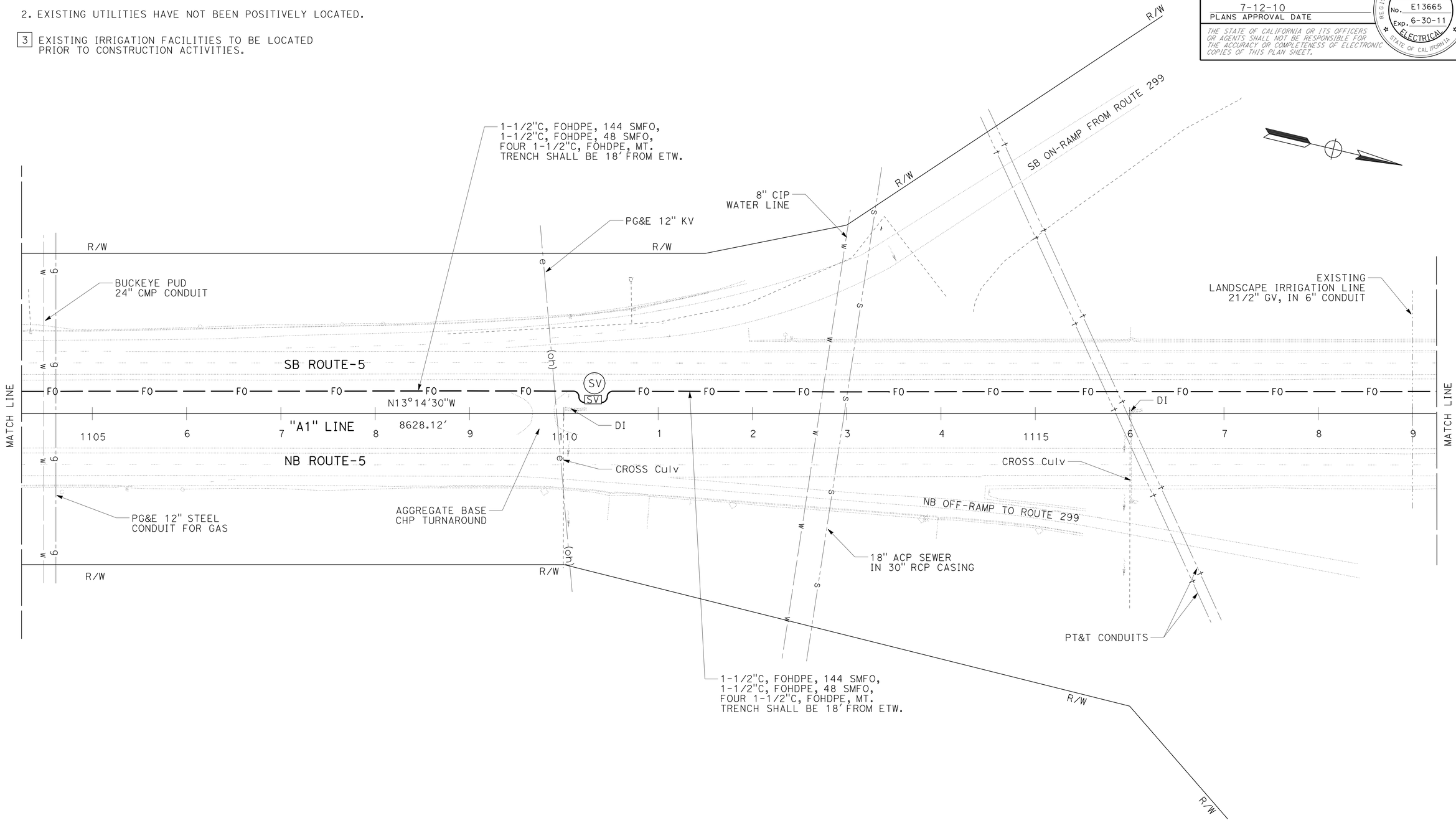

FIBER OPTIC SYSTEM

SCALE: 1" = 50' **E-52**

THIS PLAN IS ACCURATE FOR ELECTRICAL WORK ONLY.

REVISED BY	DATE REVISED
JAMES M. HANNIGAN	JEREMIAH PEARCE
CALCULATED-DESIGNED BY	CHECKED BY
FUNCTIONAL SUPERVISOR	ROB STINGER

STATE OF CALIFORNIA - DEPARTMENT OF TRANSPORTATION
Caltrans ELECTRICAL DESIGN

P:\proj1\02\0c590_plans\pse\20c590ua052.dgn

LAST REVISION 07-09-10 | DATE PLOTTED => 15-JUL-2010 TIME PLOTTED => 16:07

Dist	COUNTY	ROUTE	POST MILES TOTAL PROJECT	SHEET No.	TOTAL SHEETS
02	Sha	5,44	R3.2/R18.6, L0.3/L1.8	79	120

J. Hannigan 07-09-10
REGISTERED ELECTRICAL ENGINEER

7-12-10
PLANS APPROVAL DATE

REGISTERED PROFESSIONAL ENGINEER J.M. HANNIGAN No. E13665 Exp. 6-30-11 ELECTRICAL STATE OF CALIFORNIA

THE STATE OF CALIFORNIA OR ITS OFFICERS OR AGENTS SHALL NOT BE RESPONSIBLE FOR THE ACCURACY OR COMPLETENESS OF ELECTRONIC COPIES OF THIS PLAN SHEET.

NOTES (THIS SHEET):

1. MAINTENANCE VEHICLE PULLOUT (SEE CONSTRUCTION DETAILS).
2. CCTV-45, SEE DETAIL SHEET SES-1.
3. 1½"C, FOHDPE, MT.
4. 2"C, 3#2, 1#2G
5. 2"C, TC
6. FOR ACCURATE RIGHT OF WAY AND ACCESS DATA, CONTACT RIGHT OF WAY ENGINEERING AT THE DISTRICT OFFICE.
7. EXISTING UTILITIES HAVE NOT BEEN POSITIVELY LOCATED.

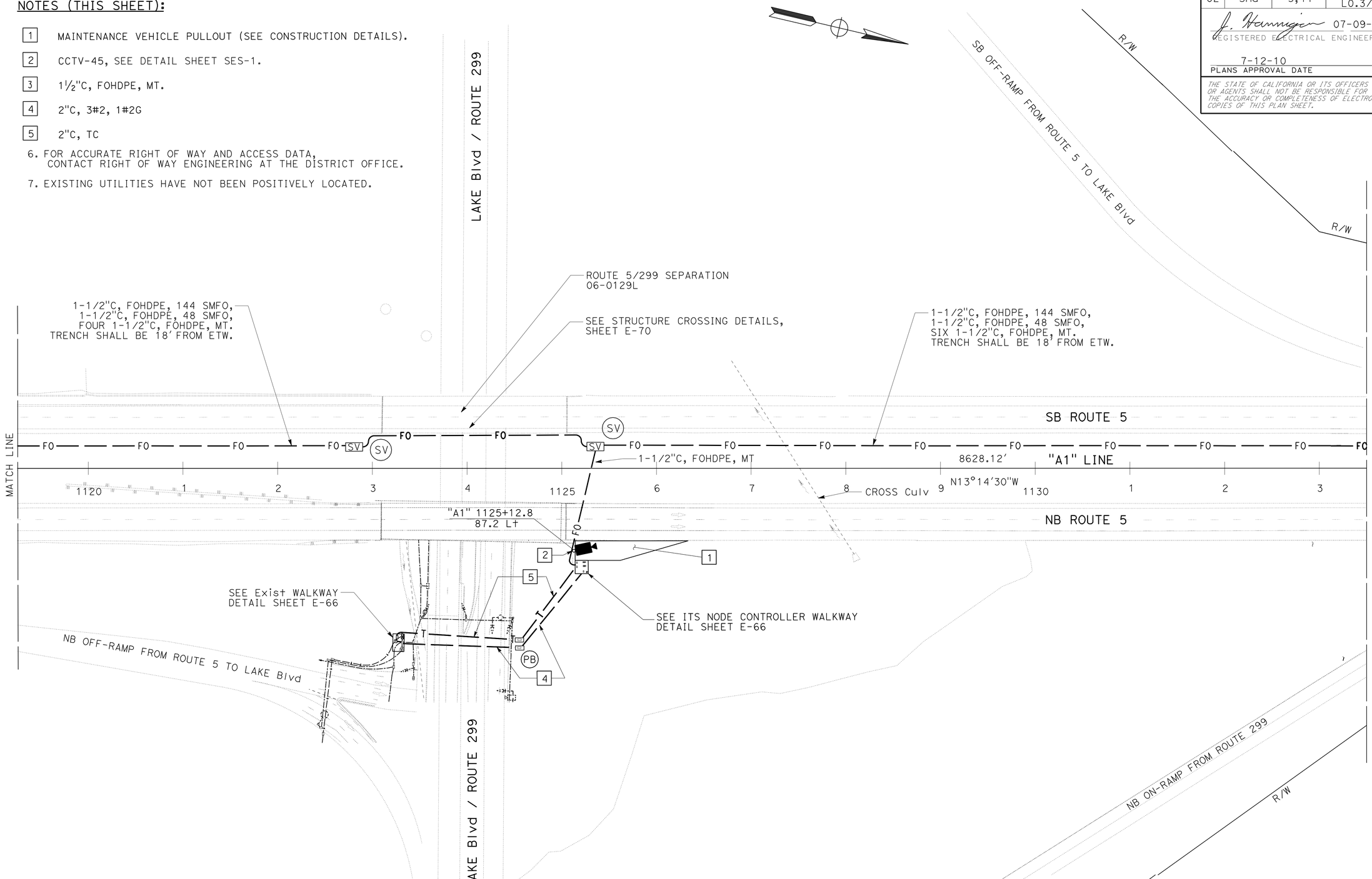

FIBER OPTIC SYSTEM

SCALE: 1" = 50'

E-53

THIS PLAN IS ACCURATE FOR ELECTRICAL WORK ONLY.

REVISED BY	DATE REVISED
JAMES M. HANNIGAN	
JEREMIAH PEARCE	
CALCULATED-DESIGNED BY	CHECKED BY
FUNCTIONAL SUPERVISOR	
ROB STINGER	

STATE OF CALIFORNIA - DEPARTMENT OF TRANSPORTATION
Caltrans ELECTRICAL DESIGN

P:\proj1\02\0c590_plans\pse\20c590ua053.dgn

LAST REVISION 07-09-10 | DATE PLOTTED => 15-JUL-2010 | TIME PLOTTED => 16:07

Dist	COUNTY	ROUTE	POST MILES TOTAL PROJECT	SHEET No.	TOTAL SHEETS
02	Sha	5,44	R3.2/R18.6, L0.3/L1.8	80	120

J. Hannigan 07-09-10
REGISTERED ELECTRICAL ENGINEER

7-12-10
PLANS APPROVAL DATE

REGISTERED PROFESSIONAL ENGINEER J.M. HANNIGAN No. E13665 Exp. 6-30-11 ELECTRICAL STATE OF CALIFORNIA

THE STATE OF CALIFORNIA OR ITS OFFICERS OR AGENTS SHALL NOT BE RESPONSIBLE FOR THE ACCURACY OR COMPLETENESS OF ELECTRONIC COPIES OF THIS PLAN SHEET.

NOTES (THIS SHEET):

1. FOR ACCURATE RIGHT OF WAY AND ACCESS DATA, CONTACT RIGHT OF WAY ENGINEERING AT THE DISTRICT OFFICE.
2. EXISTING UTILITIES HAVE NOT BEEN POSITIVELY LOCATED.

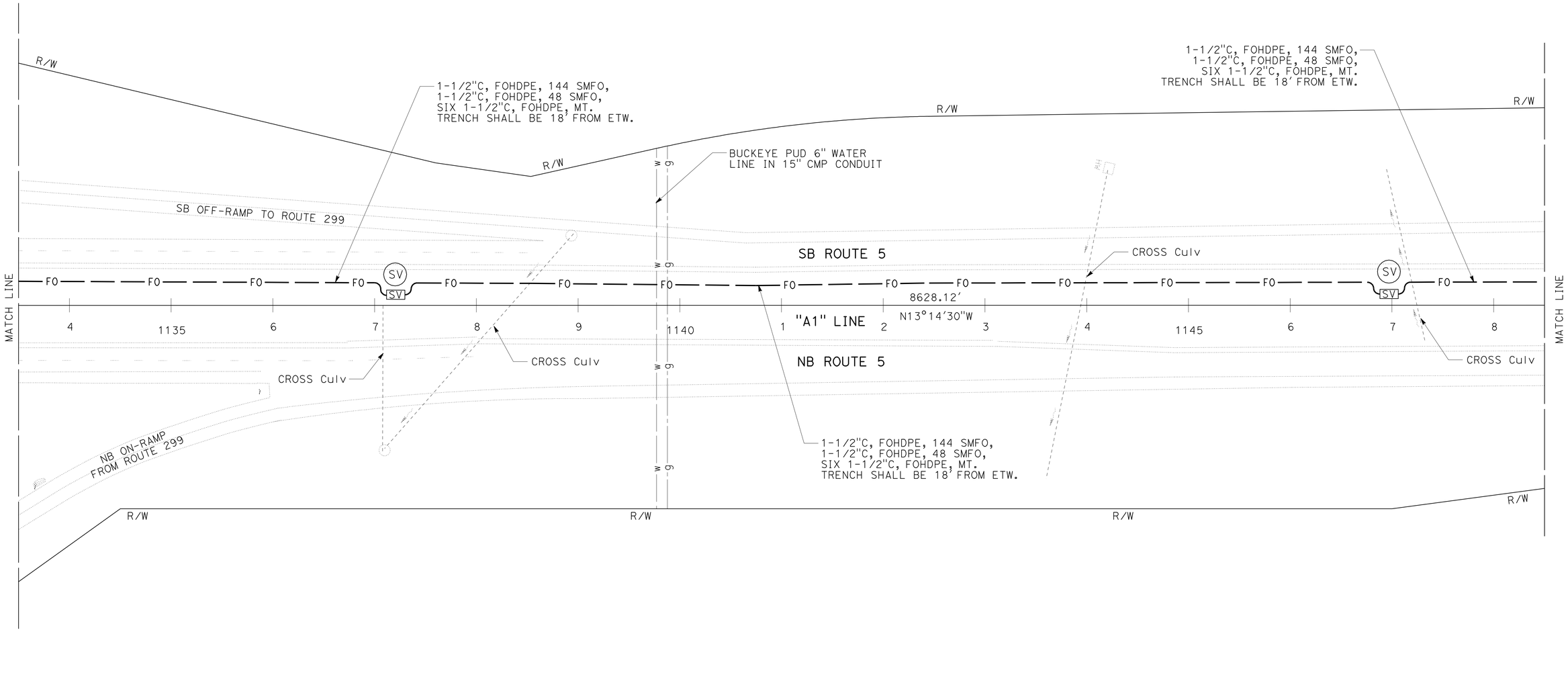

FIBER OPTIC SYSTEM

SCALE: 1" = 50'

E-54

THIS PLAN IS ACCURATE FOR ELECTRICAL WORK ONLY.

REVISED BY | DATE REVISED
JAMES M. HANNIGAN | JEREMIAH PEARCE
CALCULATED-DESIGNED BY | CHECKED BY
FUNCTIONAL SUPERVISOR
ROB STINGER

STATE OF CALIFORNIA - DEPARTMENT OF TRANSPORTATION
Caltrans ELECTRICAL DESIGN

P:\proj1\02\0c590_plans\pse\20c590ua054.dgn

LAST REVISION 07-09-10 | DATE PLOTTED => 15-JUL-2010 TIME PLOTTED => 16:07

BORDER LAST REVISED 7/2/2010 | USERNAME => trlim DGN FILE => 20c590ua054.dgn | RELATIVE BORDER SCALE IS IN INCHES 0 1 2 3 | UNIT 0319 | PROJECT NUMBER & PHASE 02000200001

Dist	COUNTY	ROUTE	POST MILES TOTAL PROJECT	SHEET No.	TOTAL SHEETS
02	Sha	5,44	R3.2/R18.6, L0.3/L1.8	81	120

J. Hannigan 07-09-10
REGISTERED ELECTRICAL ENGINEER

7-12-10
PLANS APPROVAL DATE

REGISTERED PROFESSIONAL ENGINEER J.M. HANNIGAN No. E13665 Exp. 6-30-11 ELECTRICAL STATE OF CALIFORNIA

THE STATE OF CALIFORNIA OR ITS OFFICERS OR AGENTS SHALL NOT BE RESPONSIBLE FOR THE ACCURACY OR COMPLETENESS OF ELECTRONIC COPIES OF THIS PLAN SHEET.

NOTES (THIS SHEET):

1. FOR ACCURATE RIGHT OF WAY AND ACCESS DATA, CONTACT RIGHT OF WAY ENGINEERING AT THE DISTRICT OFFICE.
2. EXISTING UTILITIES HAVE NOT BEEN POSITIVELY LOCATED.

[3] EXISTING IRRIGATION FACILITIES TO BE LOCATED PRIOR TO CONSTRUCTION ACTIVITIES.

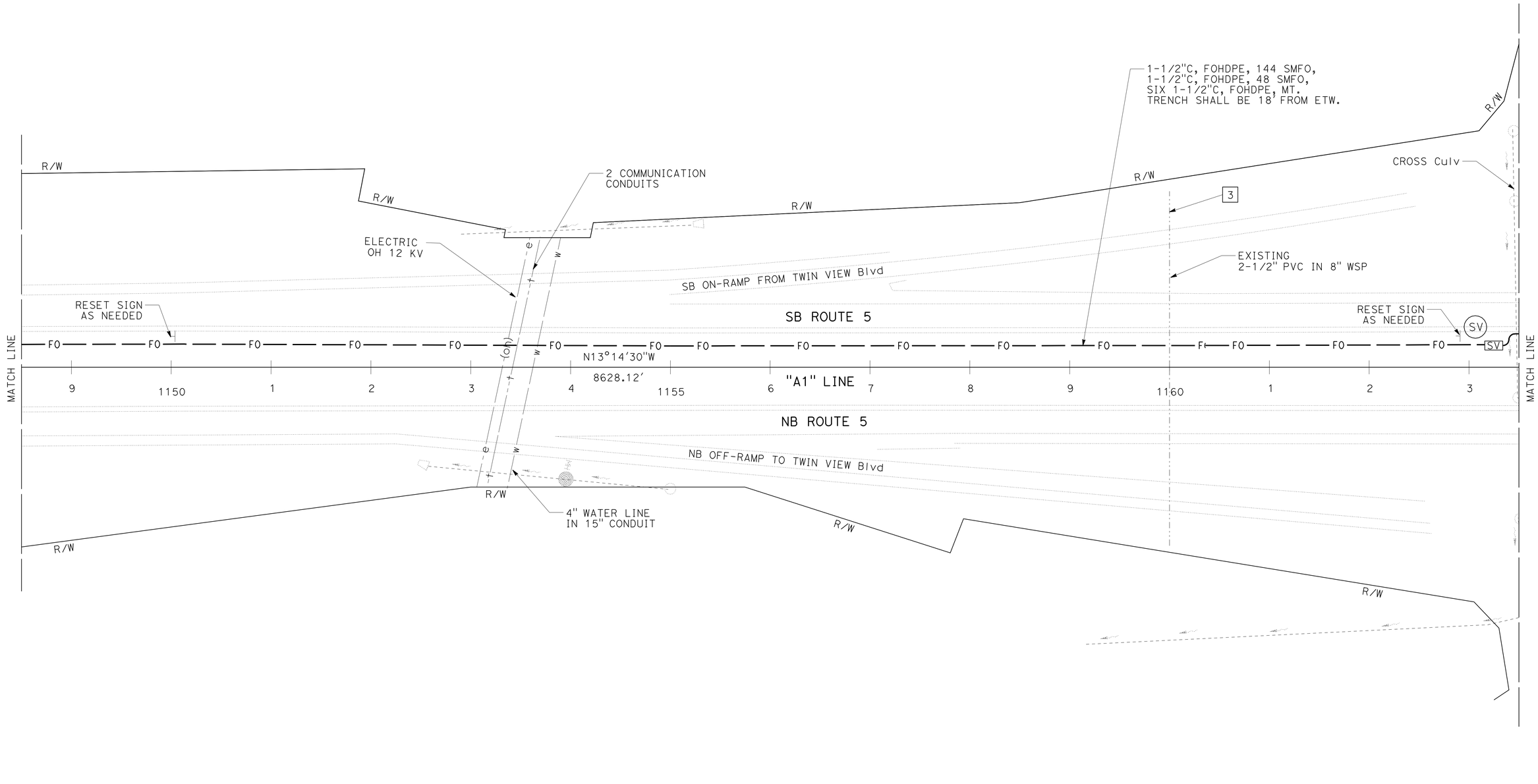

FIBER OPTIC SYSTEM

SCALE: 1" = 50'

E-55

THIS PLAN IS ACCURATE FOR ELECTRICAL WORK ONLY.

REVISED BY	DATE REVISED
JAMES M. HANNIGAN	JEREMIAH PEARCE
CALCULATED-DESIGNED BY	CHECKED BY
FUNCTIONAL SUPERVISOR	ROB STINGER

STATE OF CALIFORNIA - DEPARTMENT OF TRANSPORTATION
Caltrans ELECTRICAL DESIGN

P:\proj1\02\0c590_plans\pse\20c590ua055.dgn

LAST REVISION 07-09-10 | DATE PLOTTED => 15-JUL-2010 | TIME PLOTTED => 16:08

Dist	COUNTY	ROUTE	POST MILES TOTAL PROJECT	SHEET No.	TOTAL SHEETS
02	Sha	5,44	R3.2/R18.6, L0.3/L1.8	82	120

J. Hannigan 07-09-10
REGISTERED ELECTRICAL ENGINEER

7-12-10
PLANS APPROVAL DATE

REGISTERED PROFESSIONAL ENGINEER J.M. HANNIGAN No. E13665 Exp. 6-30-11 ELECTRICAL STATE OF CALIFORNIA

THE STATE OF CALIFORNIA OR ITS OFFICERS OR AGENTS SHALL NOT BE RESPONSIBLE FOR THE ACCURACY OR COMPLETENESS OF ELECTRONIC COPIES OF THIS PLAN SHEET.

NOTES (THIS SHEET):

1. FOR ACCURATE RIGHT OF WAY AND ACCESS DATA, CONTACT RIGHT OF WAY ENGINEERING AT THE DISTRICT OFFICE.
2. EXISTING UTILITIES HAVE NOT BEEN POSITIVELY LOCATED.

[3] EXISTING IRRIGATION FACILITIES TO BE LOCATED PRIOR TO CONSTRUCTION ACTIVITIES.

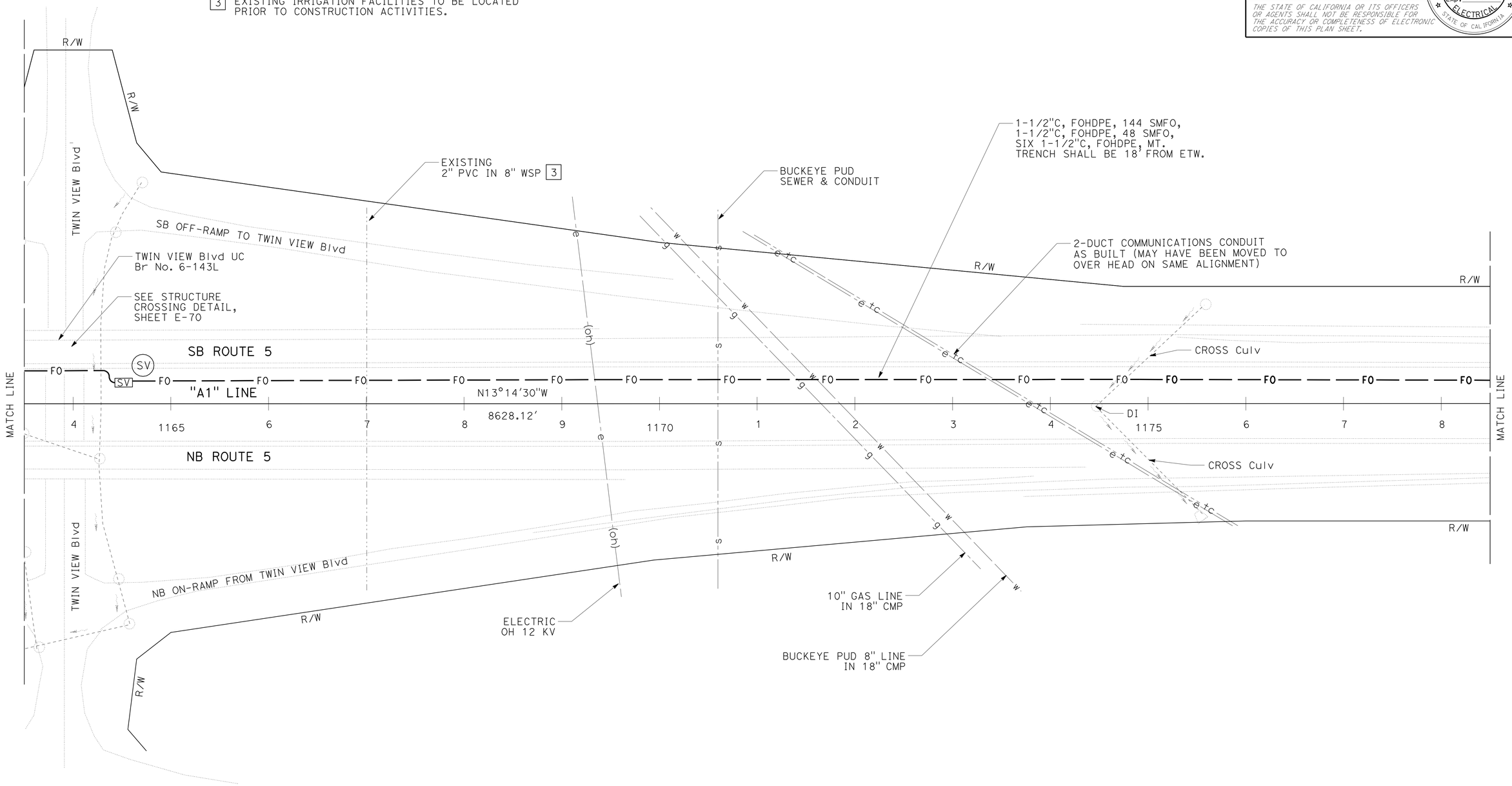

FIBER OPTIC SYSTEM

SCALE: 1" = 50'

E-56

THIS PLAN IS ACCURATE FOR ELECTRICAL WORK ONLY.

STATE OF CALIFORNIA - DEPARTMENT OF TRANSPORTATION
Caltrans ELECTRICAL DESIGN

FUNCTIONAL SUPERVISOR: ROB STINGER
CALCULATED-DESIGNED BY: JAMES M. HANNIGAN
CHECKED BY: JEREMIAH PEARCE
REVISED BY / DATE REVISED

P:\proj1\02\0c590_plans\pse\20c590ua056.dgn

LAST REVISION 07-09-10 | DATE PLOTTED => 15-JUL-2010 | TIME PLOTTED => 16:08

BORDER LAST REVISED 7/2/2010 | USERNAME => trlim | DGN FILE => 20c590ua056.dgn | RELATIVE BORDER SCALE IS IN INCHES 0 1 2 3 | UNIT 0319 | PROJECT NUMBER & PHASE 02000200001

Dist	COUNTY	ROUTE	POST MILES TOTAL PROJECT	SHEET No.	TOTAL SHEETS
02	Sha	5,44	R3.2/R18.6, L0.3/L1.8	83	120

J. Hannigan 07-09-10
REGISTERED ELECTRICAL ENGINEER

7-12-10
PLANS APPROVAL DATE

REGISTERED PROFESSIONAL ENGINEER J.M. HANNIGAN No. E13665 Exp. 6-30-11 ELECTRICAL STATE OF CALIFORNIA

THE STATE OF CALIFORNIA OR ITS OFFICERS OR AGENTS SHALL NOT BE RESPONSIBLE FOR THE ACCURACY OR COMPLETENESS OF ELECTRONIC COPIES OF THIS PLAN SHEET.

NOTES (THIS SHEET):

1. FOR ACCURATE RIGHT OF WAY AND ACCESS DATA, CONTACT RIGHT OF WAY ENGINEERING AT THE DISTRICT OFFICE.
2. EXISTING UTILITIES HAVE NOT BEEN POSITIVELY LOCATED.
3. ALL RADII ALONG "HUB2" ALIGNMENT ARE 20′.

[4] MAINTAIN 4′ HORIZONTAL CLEARANCE FROM OBSTRUCTIONS.

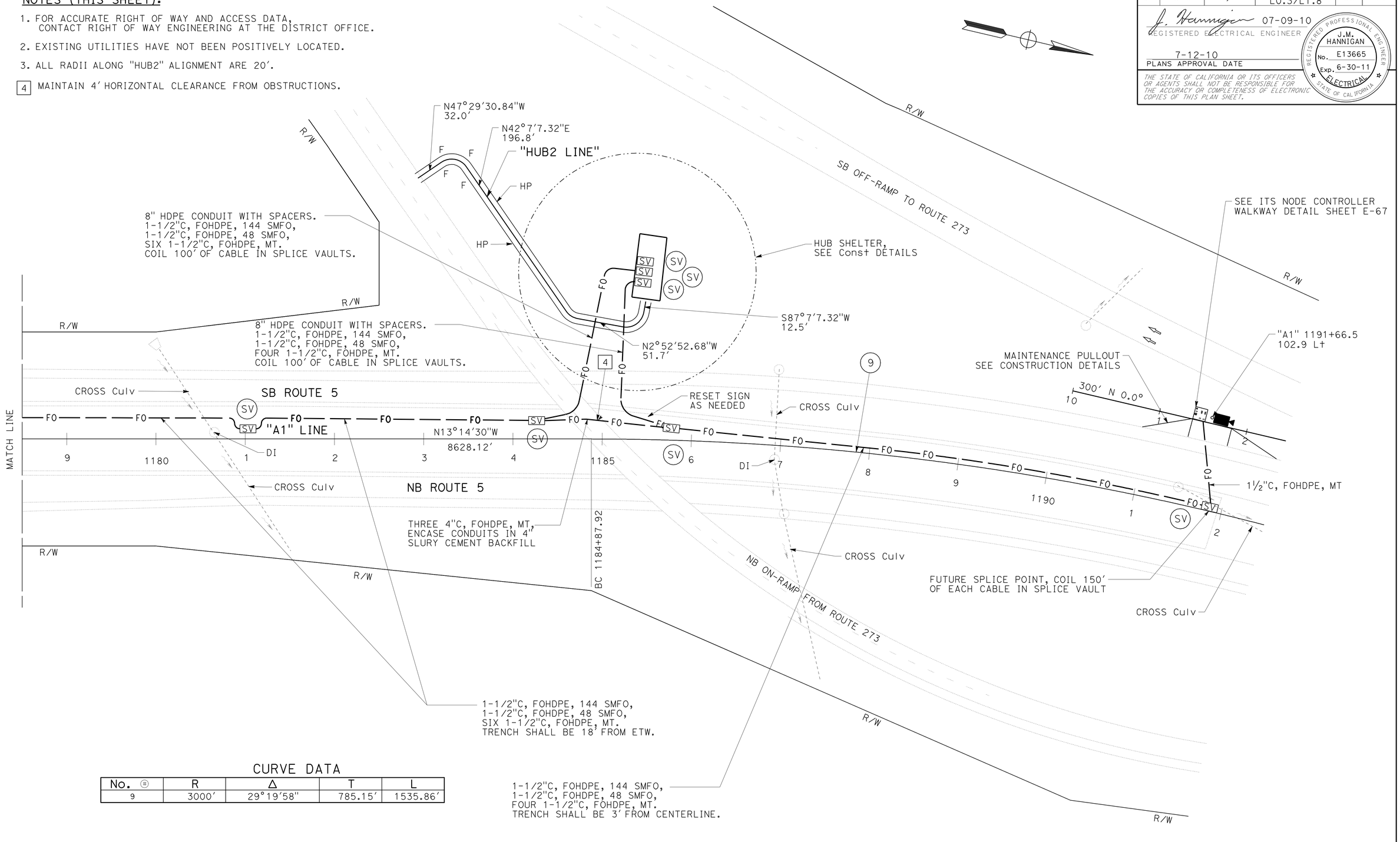

CURVE DATA

No. ⊕	R	Δ	T	L
9	3000′	29°19′58"	785.15′	1535.86′

THIS PLAN IS ACCURATE FOR ELECTRICAL WORK ONLY.

FIBER OPTIC SYSTEM

SCALE: 1" = 50′ **E-57**

REVISED BY	DATE REVISED

CALCULATED-DESIGNED BY	CHECKED BY
JAMES M. HANNIGAN	JEREMIAH PEARCE

FUNCTIONAL SUPERVISOR: ROB STINGER

STATE OF CALIFORNIA - DEPARTMENT OF TRANSPORTATION
Caltrans ELECTRICAL DESIGN

P:\proj1\02\0c590_plans\pse\20c590ua057.dgn

LAST REVISION 07-09-10 | DATE PLOTTED => 16-JUL-2010 | TIME PLOTTED => 13:36

Dist	COUNTY	ROUTE	POST MILES TOTAL PROJECT	SHEET No.	TOTAL SHEETS
02	Sha	5,44	R3.2/R18.6, L0.3/L1.8	84	120

J. Hannigan 07-09-10
REGISTERED ELECTRICAL ENGINEER

7-12-10
PLANS APPROVAL DATE

REGISTERED PROFESSIONAL ENGINEER J.M. HANNIGAN No. E13665 Exp. 6-30-11 ELECTRICAL STATE OF CALIFORNIA

THE STATE OF CALIFORNIA OR ITS OFFICERS OR AGENTS SHALL NOT BE RESPONSIBLE FOR THE ACCURACY OR COMPLETENESS OF ELECTRONIC COPIES OF THIS PLAN SHEET.

NOTES (THIS SHEET):

1. FOR ACCURATE RIGHT OF WAY AND ACCESS DATA, CONTACT RIGHT OF WAY ENGINEERING AT THE DISTRICT OFFICE.
2. EXISTING UTILITIES HAVE NOT BEEN POSITIVELY LOCATED.

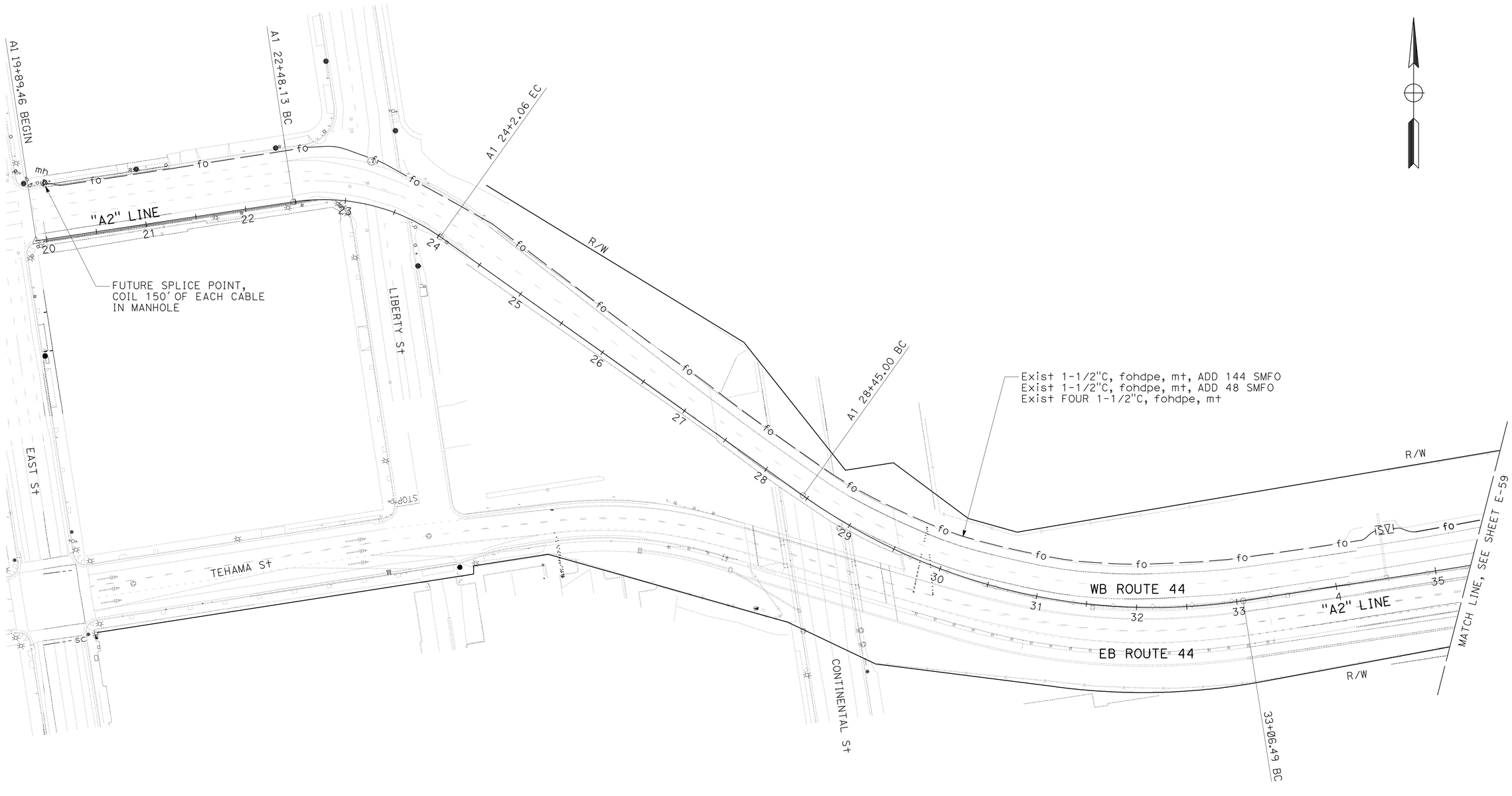

FIBER OPTIC SYSTEM

SCALE: 1" = 50'

E-58

THIS PLAN IS ACCURATE FOR ELECTRICAL WORK ONLY.

REVISED BY	DATE REVISED

CALCULATED-DESIGNED BY	JAMES M. HANNIGAN
CHECKED BY	JEREMIAH PEARCE
FUNCTIONAL SUPERVISOR	ROB STINGER

STATE OF CALIFORNIA - DEPARTMENT OF TRANSPORTATION
Caltrans **ELECTRICAL DESIGN**

P:\proj1\02\0c590_plans\pse\RESUBMIT\20c590ua058.dgn

LAST REVISION 07-09-10 | DATE PLOTTED => 15-JUL-2010 | TIME PLOTTED => 16:08

Dist	COUNTY	ROUTE	POST MILES TOTAL PROJECT	SHEET No.	TOTAL SHEETS
02	Sha	5,44	R3.2/R18.6, L0.3/L1.8	85	120

J. Hannigan 07-09-10
REGISTERED ELECTRICAL ENGINEER

7-12-10
PLANS APPROVAL DATE

REGISTERED PROFESSIONAL ENGINEER J.M. HANNIGAN No. E13665 Exp. 6-30-11 ELECTRICAL STATE OF CALIFORNIA

THE STATE OF CALIFORNIA OR ITS OFFICERS OR AGENTS SHALL NOT BE RESPONSIBLE FOR THE ACCURACY OR COMPLETENESS OF ELECTRONIC COPIES OF THIS PLAN SHEET.

NOTES (THIS SHEET):

1. FOR ACCURATE RIGHT OF WAY AND ACCESS DATA, CONTACT RIGHT OF WAY ENGINEERING AT THE DISTRICT OFFICE.
2. EXISTING UTILITIES HAVE NOT BEEN POSITIVELY LOCATED.

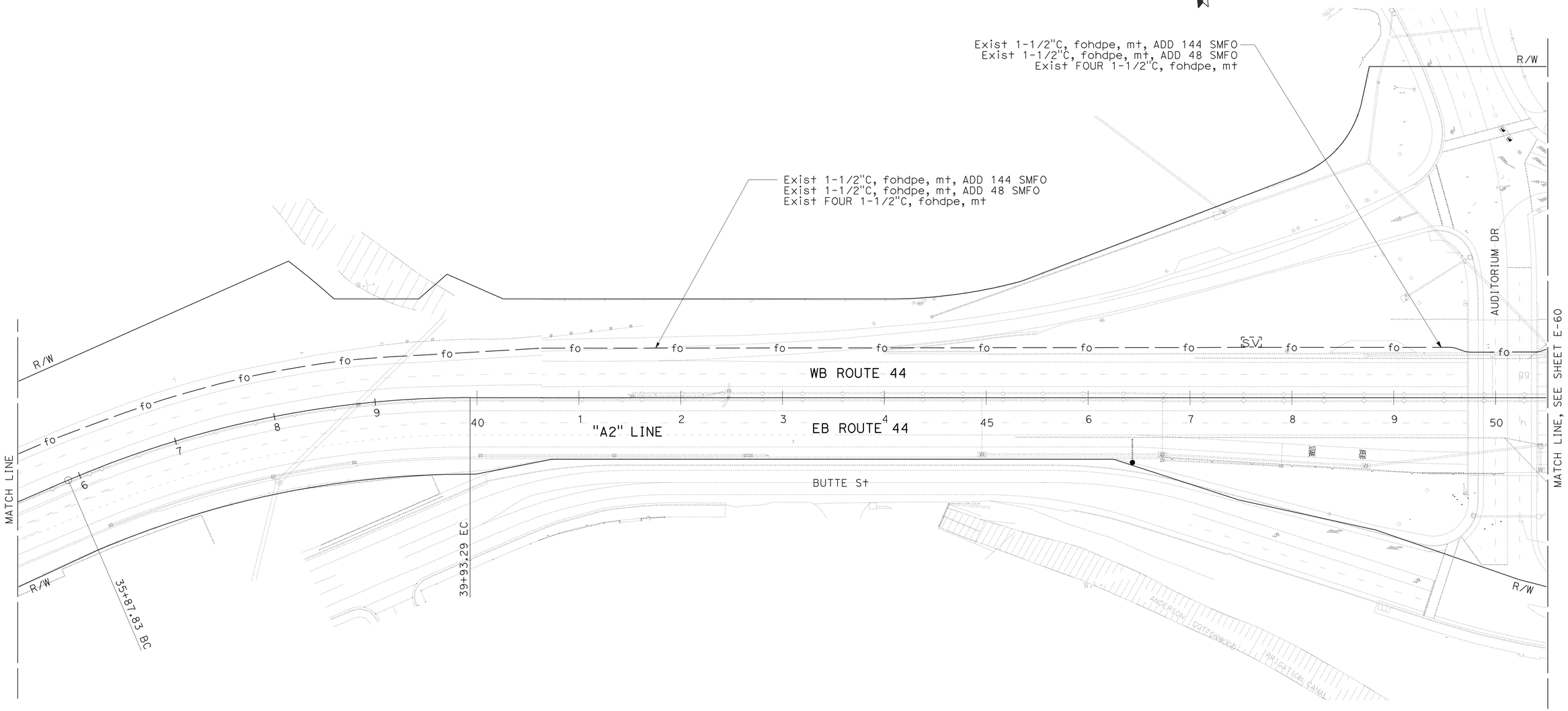

FIBER OPTIC SYSTEM

SCALE: 1" = 50'

E-59

THIS PLAN IS ACCURATE FOR ELECTRICAL WORK ONLY.

REVISED BY	JAMES M. HANNIGAN
DATE REVISED	
CALCULATED-DESIGNED BY	JEREMIAH PEARCE
CHECKED BY	
FUNCTIONAL SUPERVISOR	ROB STINGER

STATE OF CALIFORNIA - DEPARTMENT OF TRANSPORTATION
Caltrans ELECTRICAL DESIGN

P:\proj1\02\0c590_plans\pse\20c590ua059.dgn

LAST REVISION 07-09-10 | DATE PLOTTED => 15-JUL-2010 | TIME PLOTTED => 15:26

Dist	COUNTY	ROUTE	POST MILES TOTAL PROJECT	SHEET No.	TOTAL SHEETS
02	Sha	5,44	R3.2/R18.6, L0.3/L1.8	86	120

REGISTERED ELECTRICAL ENGINEER 07-09-10

PLANS APPROVAL DATE 7-12-10

REGISTERED PROFESSIONAL ENGINEER J.M. HANNIGAN No. E13665 Exp. 6-30-11 ELECTRICAL STATE OF CALIFORNIA

THE STATE OF CALIFORNIA OR ITS OFFICERS OR AGENTS SHALL NOT BE RESPONSIBLE FOR THE ACCURACY OR COMPLETENESS OF ELECTRONIC COPIES OF THIS PLAN SHEET.

NOTES (THIS SHEET):

1. FOR ACCURATE RIGHT OF WAY AND ACCESS DATA, CONTACT RIGHT OF WAY ENGINEERING AT THE DISTRICT OFFICE.
2. EXISTING UTILITIES HAVE NOT BEEN POSITIVELY LOCATED.

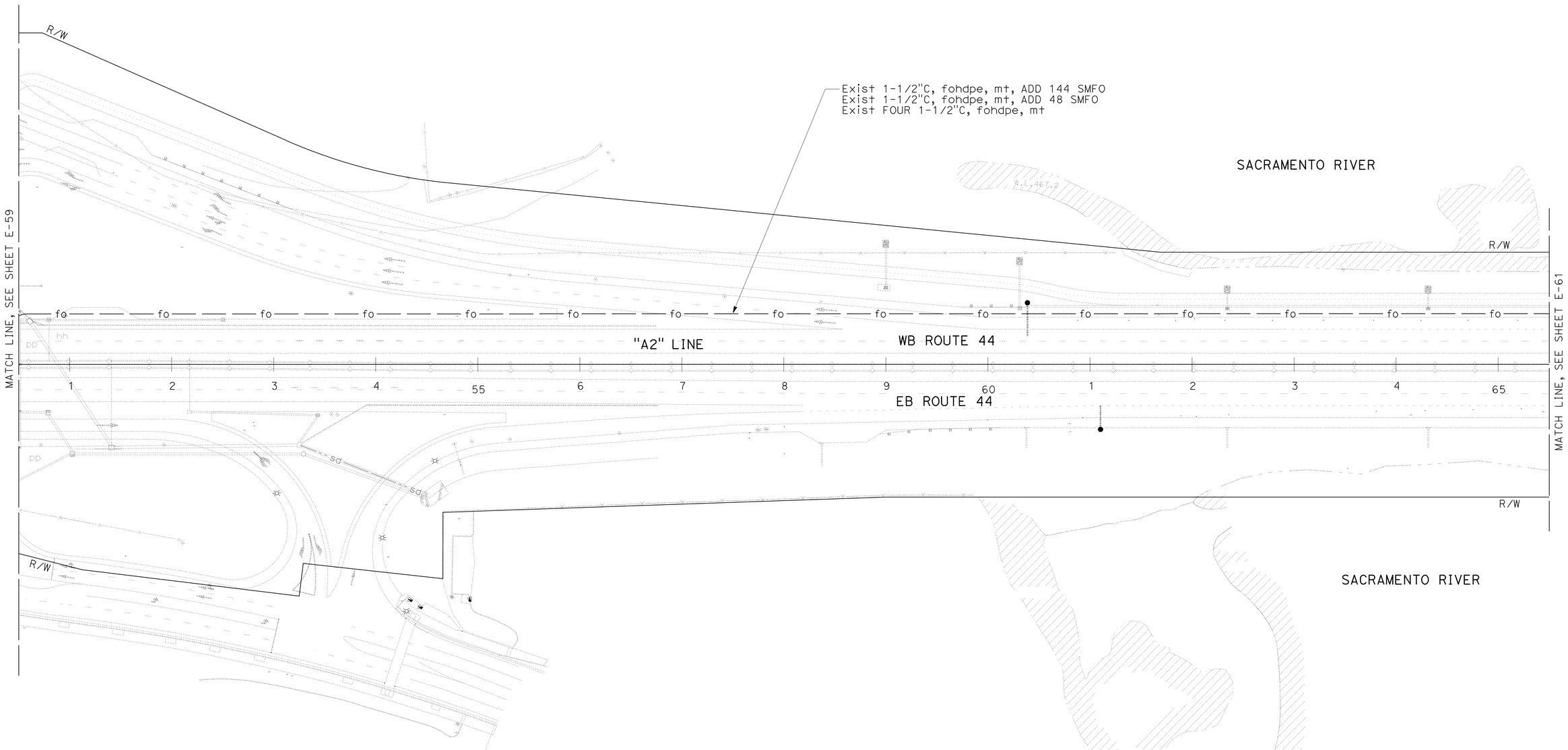

FIBER OPTIC SYSTEM

SCALE: 1" = 50'

E-60

THIS PLAN IS ACCURATE FOR ELECTRICAL WORK ONLY.

STATE OF CALIFORNIA - DEPARTMENT OF TRANSPORTATION

Caltrans ELECTRICAL DESIGN

FUNCTIONAL SUPERVISOR: ROB STINGER

CALCULATED-DESIGNED BY: JAMES M. HANNIGAN

CHECKED BY: JEREMIAH PEARCE

REVISED BY

DATE REVISED

P:\proj1\02\0c590_plans\pse\20c590ua060.dgn

LAST REVISION DATE PLOTTED => 15-JUL-2010 TIME PLOTTED => 15:26 07-09-10

BORDER LAST REVISED 7/2/2010

USERNAME => trstrk
DGN FILE => 20c590ua060.dgn

RELATIVE BORDER SCALE IS IN INCHES 0 1 2 3

UNIT 0319

PROJECT NUMBER & PHASE 02000200001

Dist	COUNTY	ROUTE	POST MILES TOTAL PROJECT	SHEET No.	TOTAL SHEETS
02	Sha	5,44	R3.2/R18.6, L0.3/L1.8	87	120

J. Hannigan 07-09-10
REGISTERED ELECTRICAL ENGINEER

7-12-10
PLANS APPROVAL DATE

REGISTERED PROFESSIONAL ENGINEER J.M. HANNIGAN No. E13665 Exp. 6-30-11 ELECTRICAL STATE OF CALIFORNIA

THE STATE OF CALIFORNIA OR ITS OFFICERS OR AGENTS SHALL NOT BE RESPONSIBLE FOR THE ACCURACY OR COMPLETENESS OF ELECTRONIC COPIES OF THIS PLAN SHEET.

NOTES (THIS SHEET):

1. FOR ACCURATE RIGHT OF WAY AND ACCESS DATA, CONTACT RIGHT OF WAY ENGINEERING AT THE DISTRICT OFFICE.
2. EXISTING UTILITIES HAVE NOT BEEN POSITIVELY LOCATED.

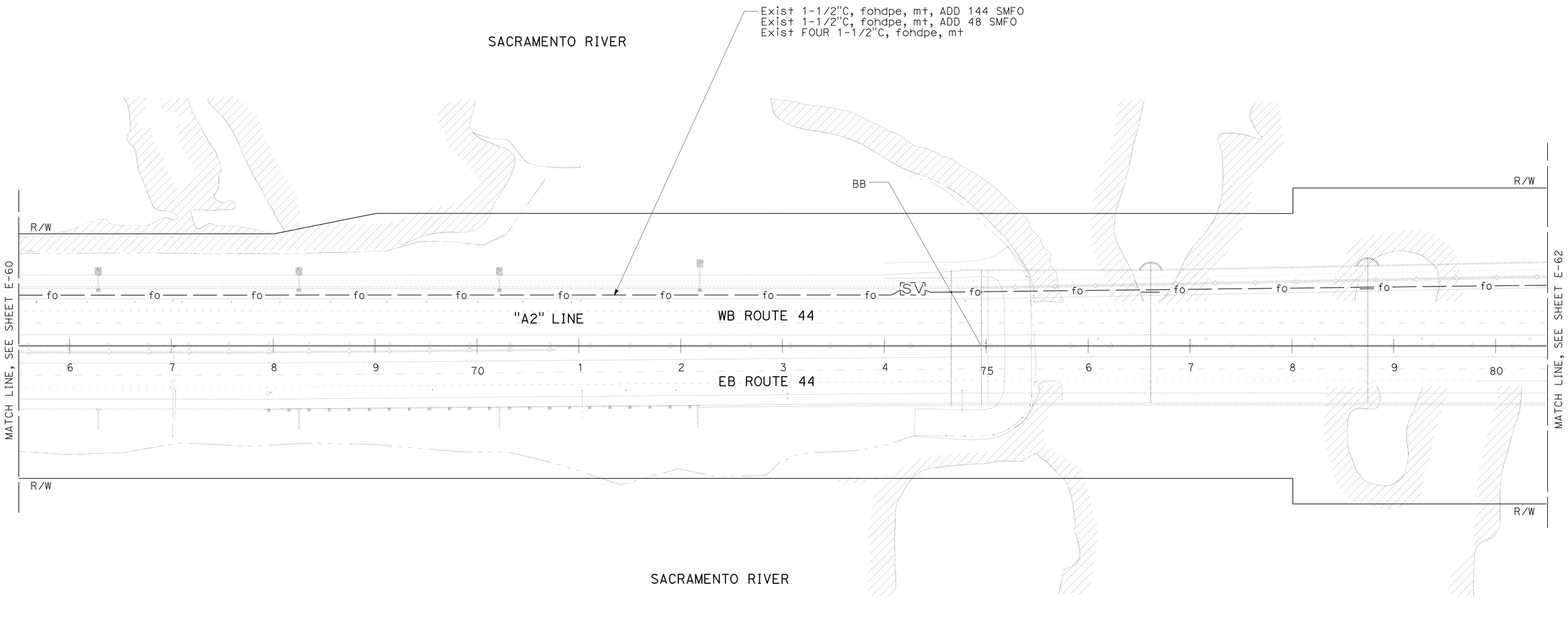

FIBER OPTIC SYSTEM

SCALE: 1" = 50'

E-61

THIS PLAN IS ACCURATE FOR ELECTRICAL WORK ONLY.

JAMES M. HANNIGAN — REVISED BY
JEREMIAH PEARCE — DATE REVISED
CALCULATED-DESIGNED BY
CHECKED BY
FUNCTIONAL SUPERVISOR
ROB STINGER

STATE OF CALIFORNIA - DEPARTMENT OF TRANSPORTATION
Caltrans ELECTRICAL DESIGN

P:\proj1\02\0c590_plans\pse\20c590ua061.dgn

LAST REVISION 07-09-10 | DATE PLOTTED => 16-JUL-2010 | TIME PLOTTED => 13:36

BORDER LAST REVISED 7/2/2010 | USERNAME => trmikesl | DGN FILE => 20c590ua061.dgn | RELATIVE BORDER SCALE IS IN INCHES 0 1 2 3 | UNIT 0319 | PROJECT NUMBER & PHASE 02000200001

Dist	COUNTY	ROUTE	POST MILES TOTAL PROJECT	SHEET No.	TOTAL SHEETS
02	Sha	5,44	R3.2/R18.6, L0.3/L1.8	88	120

J. Hannigan 07-09-10
REGISTERED ELECTRICAL ENGINEER

7-12-10
PLANS APPROVAL DATE

REGISTERED PROFESSIONAL ENGINEER J.M. HANNIGAN No. E13665 Exp. 6-30-11 ELECTRICAL STATE OF CALIFORNIA

THE STATE OF CALIFORNIA OR ITS OFFICERS OR AGENTS SHALL NOT BE RESPONSIBLE FOR THE ACCURACY OR COMPLETENESS OF ELECTRONIC COPIES OF THIS PLAN SHEET.

NOTES (THIS SHEET):

1. FOR ACCURATE RIGHT OF WAY AND ACCESS DATA, CONTACT RIGHT OF WAY ENGINEERING AT THE DISTRICT OFFICE.
2. EXISTING UTILITIES HAVE NOT BEEN POSITIVELY LOCATED.

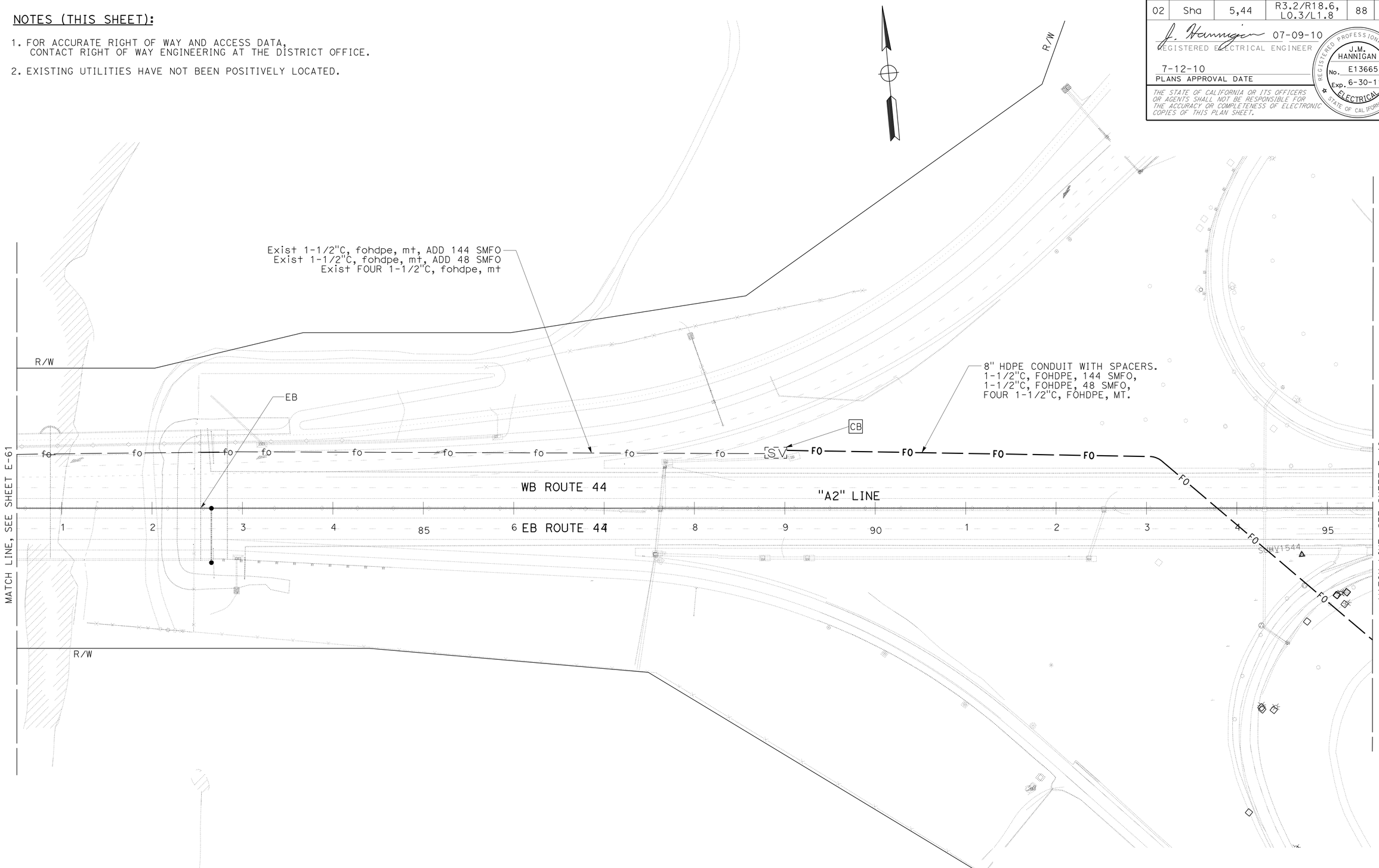

FIBER OPTIC SYSTEM

SCALE: 1" = 50'

E-62

THIS PLAN IS ACCURATE FOR ELECTRICAL WORK ONLY.

REVISED BY	DATE REVISED

CALCULATED-DESIGNED BY: JAMES M. HANNIGAN
CHECKED BY: JEREMIAH PEARCE
FUNCTIONAL SUPERVISOR: ROB STINGER

STATE OF CALIFORNIA - DEPARTMENT OF TRANSPORTATION
Caltrans ELECTRICAL DESIGN

P:\proj\02\0c590_plans\pse\20c590ua062.dgn

LAST REVISION 07-09-10 | DATE PLOTTED => 16-JUL-2010 | TIME PLOTTED => 13:36

BORDER LAST REVISED 7/2/2010 | USERNAME => trmikesl | DGN FILE => 20c590ua062.dgn | RELATIVE BORDER SCALE IS IN INCHES 0 1 2 3 | UNIT 0319 | PROJECT NUMBER & PHASE 02000200001

Dist	COUNTY	ROUTE	POST MILES TOTAL PROJECT	SHEET No.	TOTAL SHEETS
02	Sha	5,44	R3.2/R18.6, L0.3/L1.8	89	120

J. Hannigan 07-09-10
REGISTERED ELECTRICAL ENGINEER

7-12-10
PLANS APPROVAL DATE

REGISTERED PROFESSIONAL ENGINEER J.M. HANNIGAN No. E13665 Exp. 6-30-11 ELECTRICAL STATE OF CALIFORNIA

THE STATE OF CALIFORNIA OR ITS OFFICERS OR AGENTS SHALL NOT BE RESPONSIBLE FOR THE ACCURACY OR COMPLETENESS OF ELECTRONIC COPIES OF THIS PLAN SHEET.

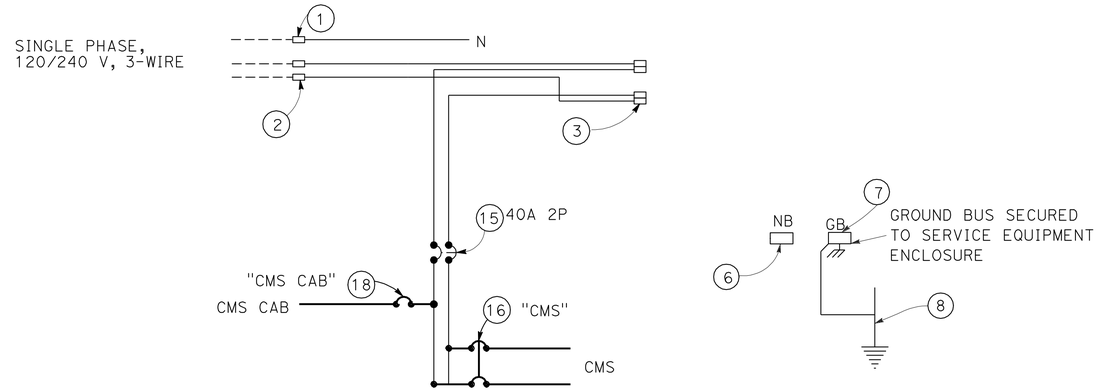

SERVICE EQUIPMENT WIRING DIAGRAM (LOCATION RIVERSIDE AVE OC) SUBPANEL

SEE Std PLAN RSP ES-2D FOR DETAILS NOT SHOWN

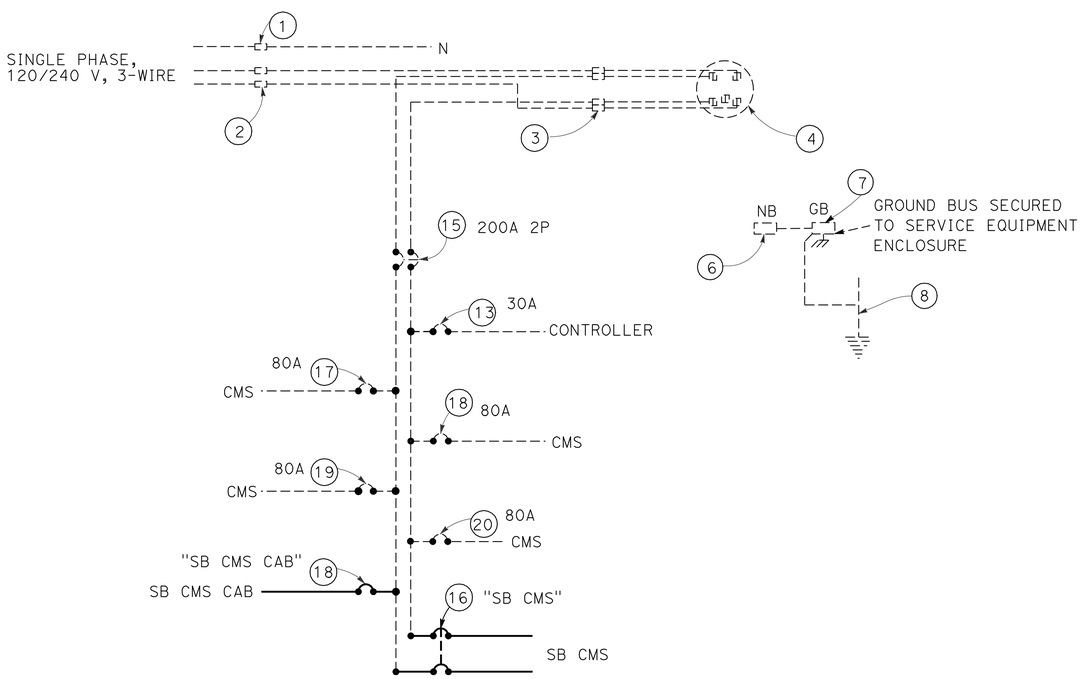

SERVICE EQUIPMENT WIRING DIAGRAM (LOCATION SMITH RD OC) Exist SERVICE ENCLOSURE

SEE Std PLAN ES-2D FOR DETAILS NOT SHOWN

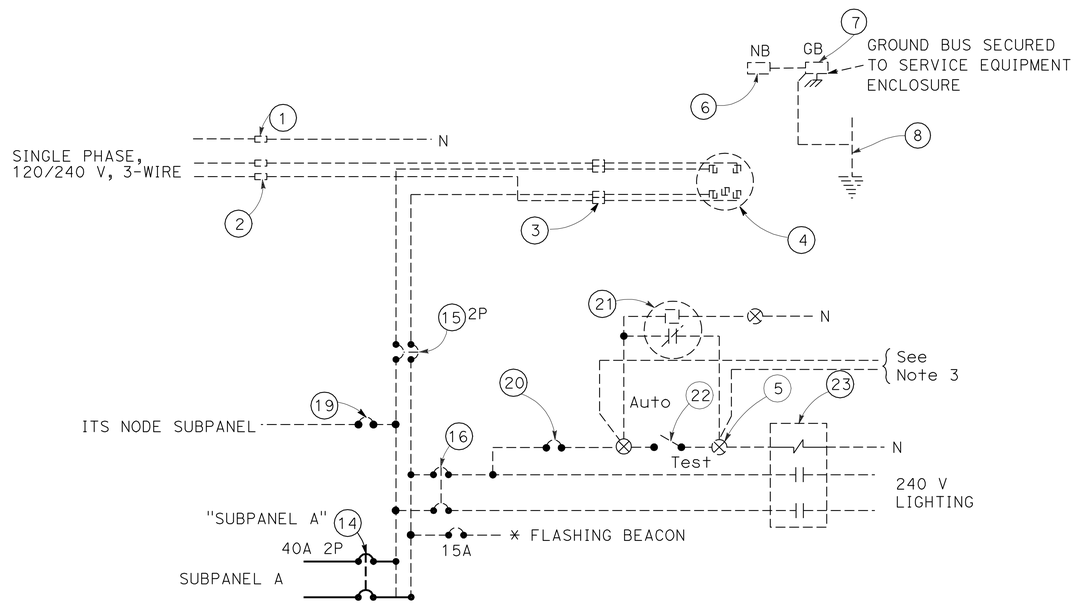

* REPLACE "FLASHING BEACON" NAMEPLATE WITH NAMEPLATE INSCRIBED "SPARE"

SERVICE EQUIPMENT WIRING DIAGRAM (LOCATION RIVERSIDE AVE OC) Exist SERVICE ENCLOSURE

SEE Std PLAN ES-2D FOR DETAILS NOT SHOWN

WIRING DIAGRAMS

NO SCALE

E-63

THIS PLAN IS ACCURATE FOR ELECTRICAL WORK ONLY.

STATE OF CALIFORNIA - DEPARTMENT OF TRANSPORTATION
Caltrans ELECTRICAL DESIGN

FUNCTIONAL SUPERVISOR: ROB STINGER
CALCULATED-DESIGNED BY: JAMES M. HANNIGAN
CHECKED BY: JEREMIAH PEARCE
REVISED BY / DATE REVISED

P:\proj1\02\0c590_plans\pse\20c590ua063.dgn

LAST REVISION 07-09-10 | DATE PLOTTED => 15-JUL-2010 | TIME PLOTTED => 15:26

BORDER LAST REVISED 7/2/2010 | USERNAME => trstrk | DGN FILE => 20c590ua063.dgn | RELATIVE BORDER SCALE IS IN INCHES 0 1 2 3 | UNIT 0319 | PROJECT NUMBER & PHASE 02000200001

Dist	COUNTY	ROUTE	POST MILES TOTAL PROJECT	SHEET No.	TOTAL SHEETS
02	Sha	5,44	R3.2/R18.6, L0.3/L1.8	90	120

J. Hannigan 07-09-10
REGISTERED ELECTRICAL ENGINEER

7-12-10
PLANS APPROVAL DATE

REGISTERED PROFESSIONAL ENGINEER J.M. HANNIGAN No. E13665 Exp. 6-30-11 ELECTRICAL STATE OF CALIFORNIA

THE STATE OF CALIFORNIA OR ITS OFFICERS OR AGENTS SHALL NOT BE RESPONSIBLE FOR THE ACCURACY OR COMPLETENESS OF ELECTRONIC COPIES OF THIS PLAN SHEET.

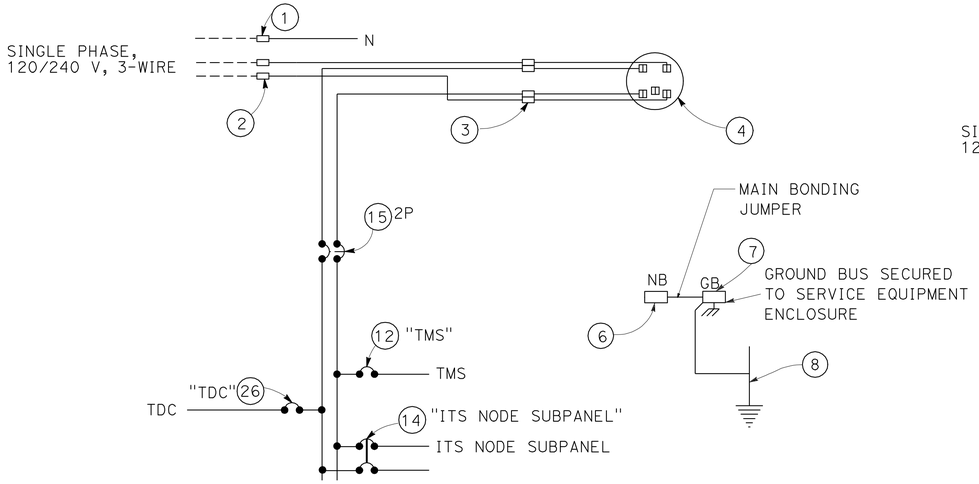

SERVICE EQUIPMENT WIRING DIAGRAM
(LOCATION HARTNELL)
SERVICE ENCLOSURE
SEE Std PLAN RSP ES-2D FOR DETAILS NOT SHOWN

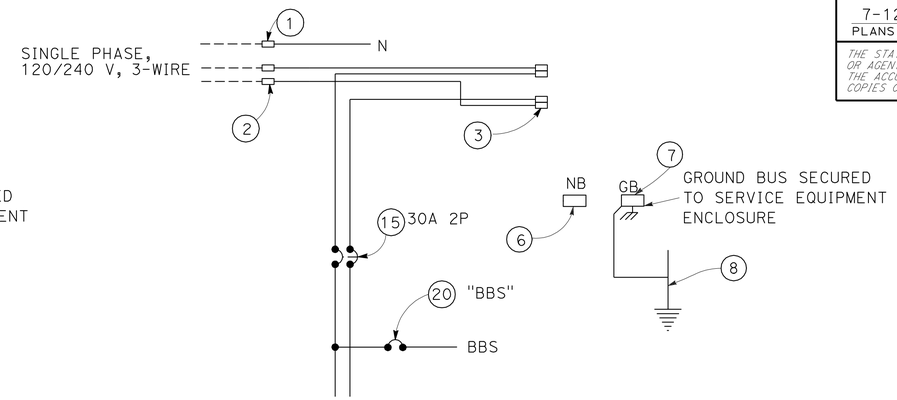

SERVICE EQUIPMENT WIRING DIAGRAM
(LOCATION HARTNELL)
ITS NODE SUBPANEL
SEE Std PLAN RSP ES-2D FOR DETAILS NOT SHOWN

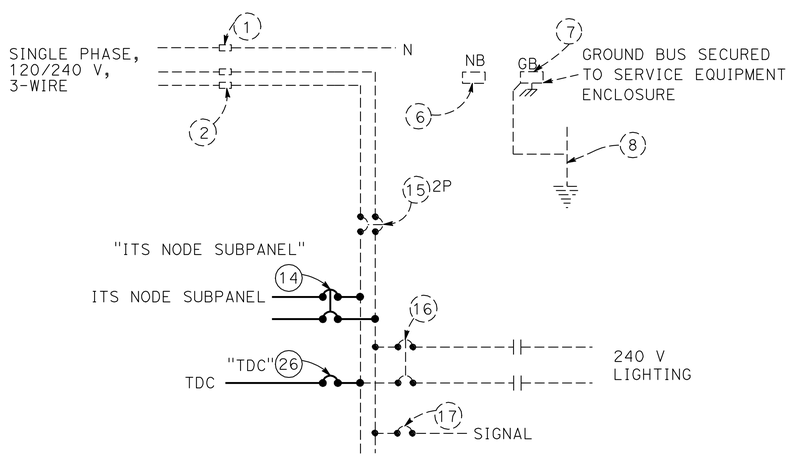

SERVICE EQUIPMENT WIRING DIAGRAM
(LOCATION I5-SR299)
Exist SUBPANEL
SEE Std PLAN ES-2D FOR DETAILS NOT SHOWN

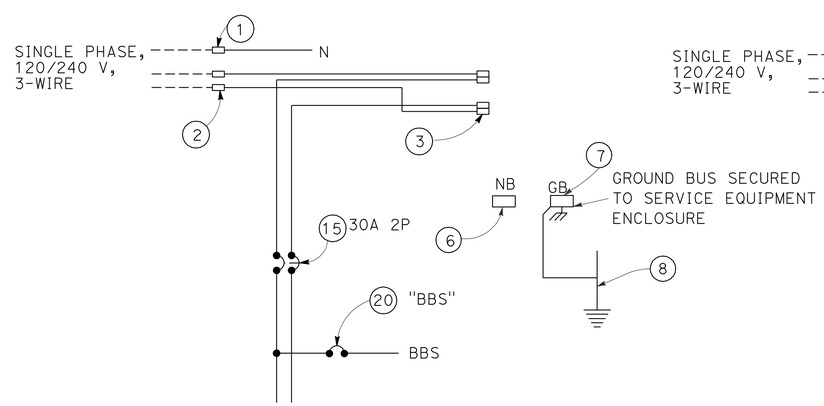

SERVICE EQUIPMENT WIRING DIAGRAM
(LOCATION I5-SR299)
ITS NODE SUBPANEL
SEE Std PLAN RSP ES-2D FOR DETAILS NOT SHOWN

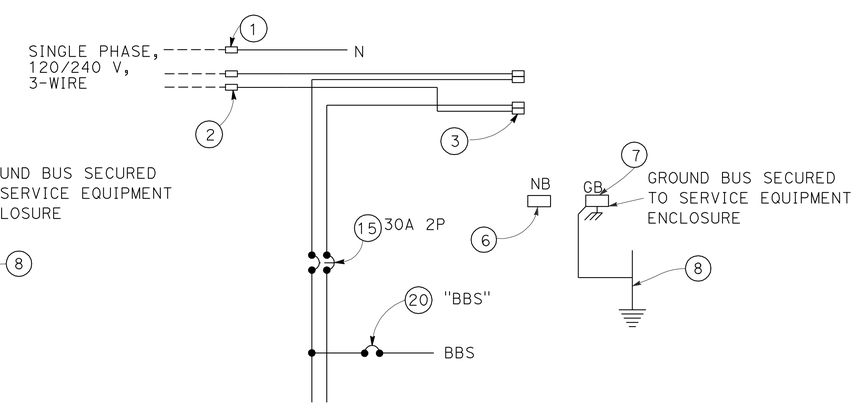

SERVICE EQUIPMENT WIRING DIAGRAM
(LOCATION I5-SR273)
ITS NODE SUBPANEL
SEE Std PLAN RSP ES-2D FOR DETAILS NOT SHOWN

WIRING DIAGRAM
NO SCALE

E-64

THIS PLAN IS ACCURATE FOR ELECTRICAL WORK ONLY.

REVISED BY	DATE REVISED
JAMES M. HANNIGAN	JEREMIAH PEARCE
CALCULATED-DESIGNED BY	CHECKED BY
FUNCTIONAL SUPERVISOR	ROB STINGER

STATE OF CALIFORNIA - DEPARTMENT OF TRANSPORTATION
Caltrans ELECTRICAL DESIGN

P:\proj1\02\0c590_plans\pse\20c590ua064.dgn

LAST REVISION 07-09-10 | DATE PLOTTED => 15-JUL-2010 TIME PLOTTED => 15:27

Dist	COUNTY	ROUTE	POST MILES TOTAL PROJECT	SHEET No.	TOTAL SHEETS
02	Sha	5,44	R3.2/R18.6, L0.3/L1.8	91	120

REGISTERED ELECTRICAL ENGINEER 07-09-10

7-12-10
PLANS APPROVAL DATE

REGISTERED PROFESSIONAL ENGINEER J.M. HANNIGAN No. E13665 Exp. 6-30-11 ELECTRICAL STATE OF CALIFORNIA

THE STATE OF CALIFORNIA OR ITS OFFICERS OR AGENTS SHALL NOT BE RESPONSIBLE FOR THE ACCURACY OR COMPLETENESS OF ELECTRONIC COPIES OF THIS PLAN SHEET.

NOTES (THIS SHEET):

1. 2"C, 3#4, 1#4G
   2"C, 2#8 (BBS).
2. ITS NODE SUBPANEL, TYPE III-AF SERVICE EQUIPMENT ENCLOSURE WITHOUT METERING SECTION. SEE WIRING DIAGRAM ON SHEET E-64 AND PROVIDE ITEMS SHOWN.
3. 2"C, 2#8, 1#8G (BBS).
4. 3"C, 2#8, 1#8G, (BBS), 4#12, 1#12G (SEE ITS NODE INSULATION COLOR CODE THIS SHEET).
5. 3"C, 4#12, 1#12G (SEE ITS NODE INSULATION COLOR CODE THIS SHEET).
6. 4"C, 1 TC, STATE FURNISHED CCTV CABLE, MT.
7. 3"C, STATE FURNISHED CCTV CABLE.
8. INSTALL STATE-FURNISHED ITS NODE EQUIPMENT CABINET.
9. INSTALL STATE-FURNISHED BBS CABINET.
10. COIL CABLES WITH 6' OF SLACK IN BOTTOM OF CABINET.
11. THIS NOTE NOT USED.
12. CCTV-45, SEE DETAIL SHEET SES-1.
13. 1½"C, FOHDPE, MT.
14. REMOVE Exist CONTROLLER WALKWAY. BUILD NEW WALKWAY AROUND EXISTING FOUNDATIONS AND PULL BOXES. FOR PLACEMENT AND DIMENSIONS, SEE CONSTRUCTION DETAILS.
15. INSTALL TYP B TDC.
16. Exist 1½"C, 3#4, 1#4G, ADD 3#4 (ITS SUBPANEL), 2#12 (TDC)
17. 2"C, 2#12, 1#12G
18. 2"C, 3 TC
19. INSTALL TYPE III-AF SERVICE EQUIPMENT ENCLOSURE. SEE WIRING DIAGRAM ON SHEET E-64 AND PROVIDE ITEMS SHOWN.
20. 2"C, 2 STATE-FURNISHED CABLES.
21. Exist 2"C, 2 tc, ADD 2 STATE-FURNISHED CABLES.
22. Exist 2"C, 2#6, 5#8. REMOVE 2#6 (ems cab), REMOVE 5#8 (ems). ADD 2#8G 1#8G (CMS CAB).
23. TWO Exist 3"C, 2#6 (ems cab), 5#8 (ems). REMOVE 2#6 (ems), 5#8 (ems), ADD 2#8, 1#8G (CMS CAB).
24. REMOVE AND SALVAGE Exist ems cab (TYPE 334). REUSE FOUNDATION AND INSTALL STATE-FURNISHED CMS CABINET.
25. RC EXISTING PULL BOX AND REPLACE WITH ITS NODE PULL BOX.

ITS NODE INSULATION COLOR CODE

CIRCUIT	CONDUCTOR	INSULATION
BETWEEN BBS Cab AND ITS NODE Cab	UNGROUNDED UTILITY POWER	BLACK
	GROUNDED UTILITY POWER	WHITE
	UNGROUNDED BBS POWER	BLUE
	GROUNDED BBS POWER	WHITE

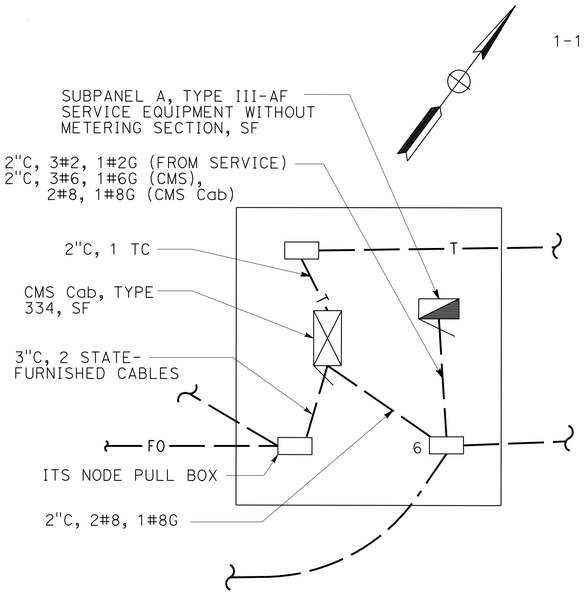

CONTROLLER WALKWAY (RIVERSIDE AVE OC)

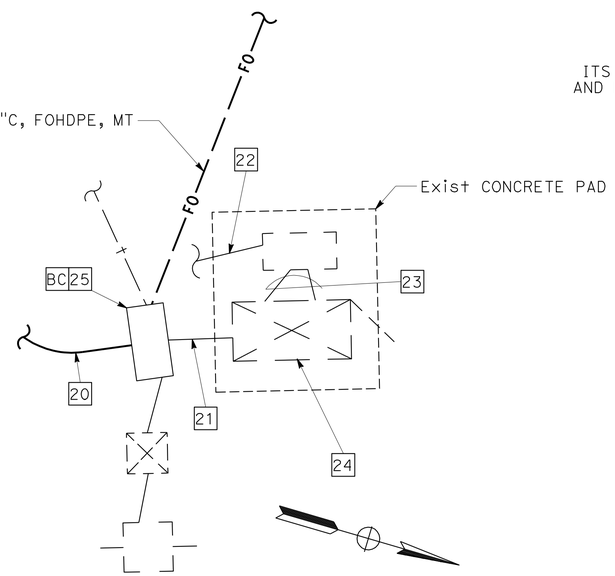

CONTROLLER WALKWAY (SMITH ROAD OC)

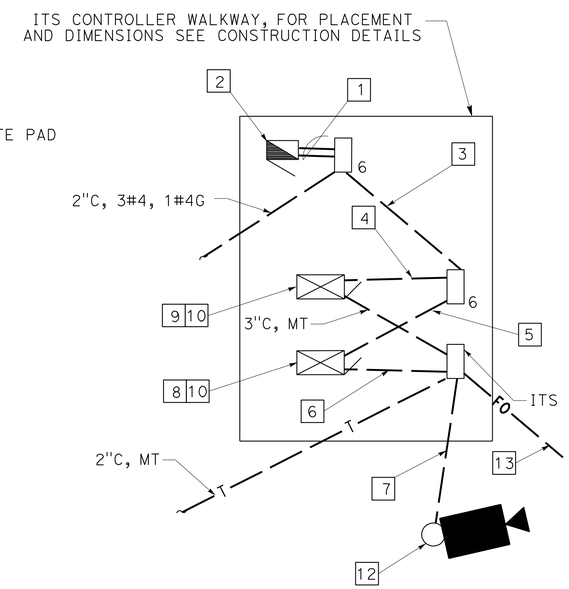

ITS NODE CONTROLLER EQUIPMENT DETAIL (HARTNELL AVE OC)

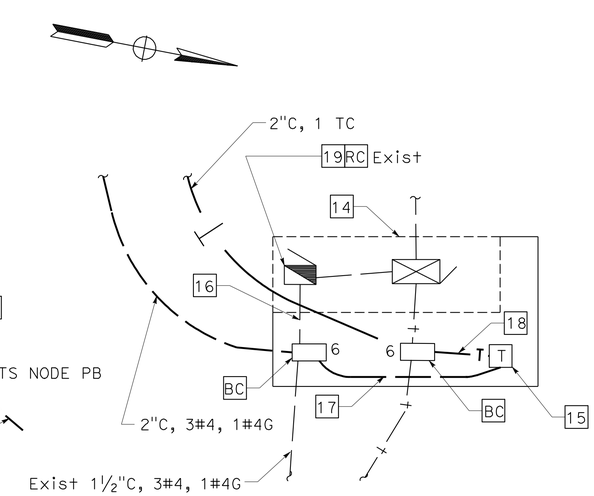

Exist WALKWAY DETAIL (HARTNELL AVE OC)

DETAILS
NO SCALE

E-65

THIS PLAN IS ACCURATE FOR ELECTRICAL WORK ONLY.

STATE OF CALIFORNIA - DEPARTMENT OF TRANSPORTATION
Caltrans ELECTRICAL DESIGN
FUNCTIONAL SUPERVISOR: ROB STINGER
CALCULATED-DESIGNED BY: JAMES M. HANNIGAN
CHECKED BY: JEREMIAH PEARCE
REVISED BY / DATE REVISED

P:\proj1\02\0c590_plans\pse\20c590ua065.dgn

LAST REVISION 07-09-10 | DATE PLOTTED => 15-JUL-2010 | TIME PLOTTED => 15:27

BORDER LAST REVISED 7/2/2010 | USERNAME => trstrk | DGN FILE => 20c590ua065.dgn | RELATIVE BORDER SCALE IS IN INCHES 0 1 2 3 | UNIT 0319 | PROJECT NUMBER & PHASE 02000200001

Dist	COUNTY	ROUTE	POST MILES TOTAL PROJECT	SHEET No.	TOTAL SHEETS
02	Sha	5,44	R3.2/R18.6, L0.3/L1.8	92	120

J. Hannigan 07-09-10
REGISTERED ELECTRICAL ENGINEER

7-12-10
PLANS APPROVAL DATE

REGISTERED PROFESSIONAL ENGINEER J.M. HANNIGAN No. E13665 Exp. 6-30-11 ELECTRICAL STATE OF CALIFORNIA

THE STATE OF CALIFORNIA OR ITS OFFICERS OR AGENTS SHALL NOT BE RESPONSIBLE FOR THE ACCURACY OR COMPLETENESS OF ELECTRONIC COPIES OF THIS PLAN SHEET.

NOTES (THIS SHEET):

1. 2"C, 3#2, 1#2G, 2#8, 1#8G, 2"C, 2#8, 1#8G.
2. ITS NODE SUBPANEL, TYPE III-AF SERVICE EQUIPMENT ENCLOSURE WITHOUT METERING SECTION. SEE WIRING DIAGRAM ON SHEET E-64 AND PROVIDE ITEMS SHOWN.
3. 2"C, 2#8, 1#8G (BBS).
4. 3"C, 2#8, 1#8G, (BBS), 4#12, 1#12G (SEE ITS NODE INSULATION COLOR CODE, SHEET E-65).
5. 3"C, 4#12, 1#12G (SEE ITS NODE INSULATION COLOR CODE, SHEET E-65).
6. 4"C, 1 TC, STATE FURNISHED CCTV CABLE.
7. 3"C, STATE FURNISHED CCTV CABLE.
8. INSTALL STATE-FURNISHED ITS NODE EQUIPMENT CABINET.
9. INSTALL STATE-FURNISHED BBS CABINET.
10. COIL CABLES WITH 6' OF SLACK IN BOTTOM OF CABINET.
11. MAINTENANCE VEHICLE PULLOUT (SEE CONSTRUCTION DETAILS).
12. CCTV-45, SEE DETAIL SHEET SES-1.
13. 1½"C, FOHDPE, MT.
14. 2"C, 2 TC.
15. Exist 2"C, 2#8, 2#1/0, ADD 3#2, 1#2G, 2#12, 1#12G.
16. PULL CABLES BACK TO AVOID SPLICING. INTERCEPT Exist CONDUIT AND BRING UP INTO NEW TYPE B TDC.
17. INSTALL CIRCUIT BREAKERS IN Exist SUBPANEL ENCLOSURE. LABEL ITS NODE SUBPANEL AND TEL DEMARC. SEE WIRING DIAGRAM SHEET E-64.
18. Exist 2"C, REMOVE Exist TC, ADD TC

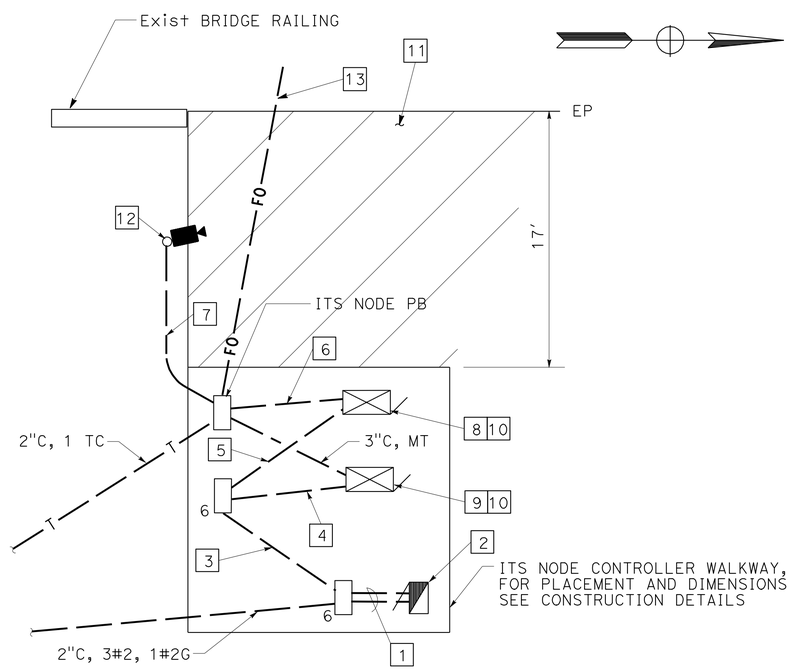

ITS NODE CONTROLLER WALKWAY DETAIL

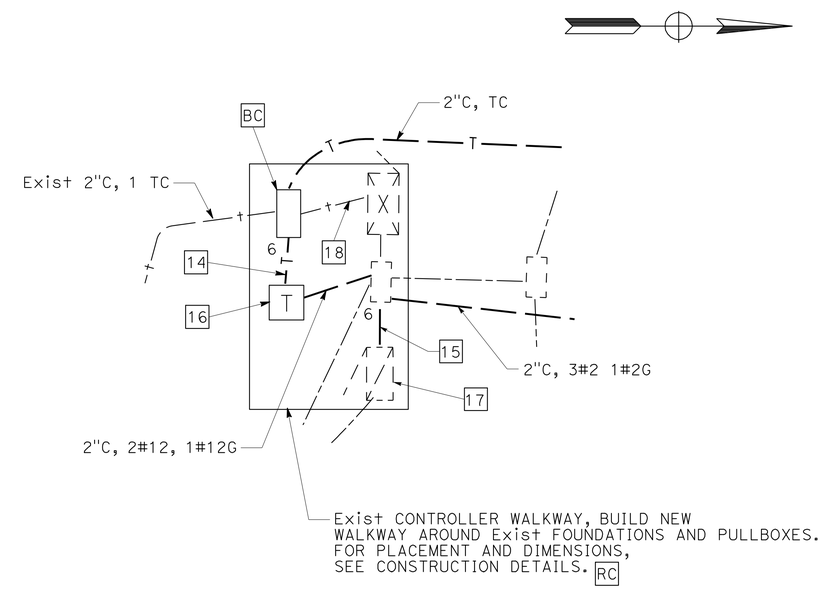

DETAIL A

CLOSED CIRCUIT TELEVISION (LOCATION 5/299 SEPARATION)

NO SCALE

E-66

THIS PLAN IS ACCURATE FOR ELECTRICAL WORK ONLY.

STATE OF CALIFORNIA - DEPARTMENT OF TRANSPORTATION
Caltrans ELECTRICAL DESIGN
FUNCTIONAL SUPERVISOR: ROB STINGER
CALCULATED-DESIGNED BY: JAMES M. HANNIGAN
CHECKED BY: JEREMIAH PEARCE
REVISED BY / DATE REVISED

P:\proj1\02\0c590_plans\pse\20c590ua066.dgn

LAST REVISION 07-09-10 | DATE PLOTTED => 15-JUL-2010 | TIME PLOTTED => 15:27

Dist	COUNTY	ROUTE	POST MILES TOTAL PROJECT	SHEET No.	TOTAL SHEETS
02	Sha	5,44	R3.2/R18.6, L0.3/L1.8	93	120

J. Hannigan 07-09-10
REGISTERED ELECTRICAL ENGINEER

7-12-10
PLANS APPROVAL DATE

REGISTERED PROFESSIONAL ENGINEER J.M. HANNIGAN No. E13665 Exp. 6-30-11 ELECTRICAL STATE OF CALIFORNIA

THE STATE OF CALIFORNIA OR ITS OFFICERS OR AGENTS SHALL NOT BE RESPONSIBLE FOR THE ACCURACY OR COMPLETENESS OF ELECTRONIC COPIES OF THIS PLAN SHEET.

NOTES (THIS SHEET):

1. 2"C, 3#6, 1#6G.
   2"C, 2#8, 1#8G (BBS).
2. ITS NODE SUBPANEL, TYPE III-AF SERVICE EQUIPMENT ENCLOSURE WITHOUT METERING SECTION.
   SEE WIRING DIAGRAM ON SHEET E-64 AND PROVIDE ITEMS SHOWN.
3. 2"C, 2#8, 1#8G (BBS).
4. 3"C, 2#8, 1#8G, (BBS), 4#12, 1#12G
   (SEE ITS NODE INSULATION COLOR CODE, SHEET E-65).
5. 3"C, 4#12, 1#12G
   (SEE ITS NODE INSULATION COLOR CODE, SHEET E-65).
6. 4"C, 1 TC, STATE FURNISHED CCTV CABLE.
7. 3"C, STATE FURNISHED CCTV CABLE.
8. INSTALL STATE-FURNISHED ITS NODE EQUIPMENT CABINET.
9. INSTALL STATE-FURNISHED BBS CABINET.
10. COIL CABLES WITH 6′ OF SLACK IN BOTTOM OF CABINET.
11. 2-3"C, MT STUB-OUT 2′ PAST SLAB.
12. THIS NOTE NOT USED.
13. 1½"C, FOHDPE, MT.
14. 2"C, TC.

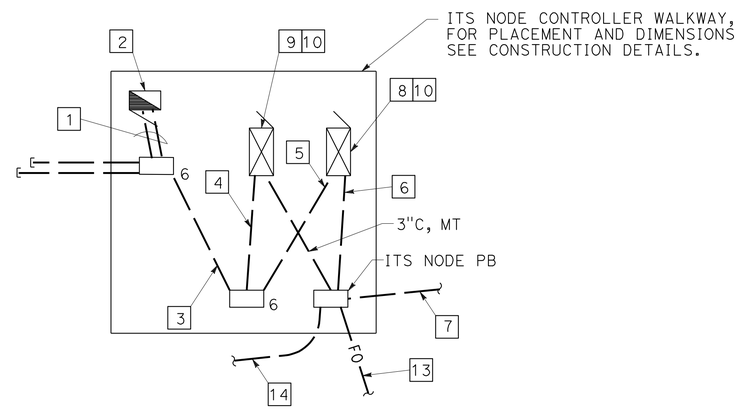

ITS NODE CONTROLLER WALKWAY DETAIL

CLOSED CIRCUIT TELEVISION (LOCATION 5/273 SEPARATION)

NO SCALE

E-67

THIS PLAN IS ACCURATE FOR ELECTRICAL WORK ONLY.

JAMES M. HANNIGAN — JEREMIAH PEARCE — ROB STINGER

STATE OF CALIFORNIA - DEPARTMENT OF TRANSPORTATION — Caltrans — ELECTRICAL DESIGN

P:\proj1\02\0c590_plans\pse\20c590ua067.dgn

Dist	COUNTY	ROUTE	POST MILES TOTAL PROJECT	SHEET No.	TOTAL SHEETS
02	Sha	5,44	R3.2/R18.6, L0.3/L1.8	94	120

J. Hannigan 07-09-10
REGISTERED ELECTRICAL ENGINEER

7-12-10
PLANS APPROVAL DATE

REGISTERED PROFESSIONAL ENGINEER J.M. HANNIGAN No. E13665 Exp. 6-30-11 ELECTRICAL STATE OF CALIFORNIA

THE STATE OF CALIFORNIA OR ITS OFFICERS OR AGENTS SHALL NOT BE RESPONSIBLE FOR THE ACCURACY OR COMPLETENESS OF ELECTRONIC COPIES OF THIS PLAN SHEET.

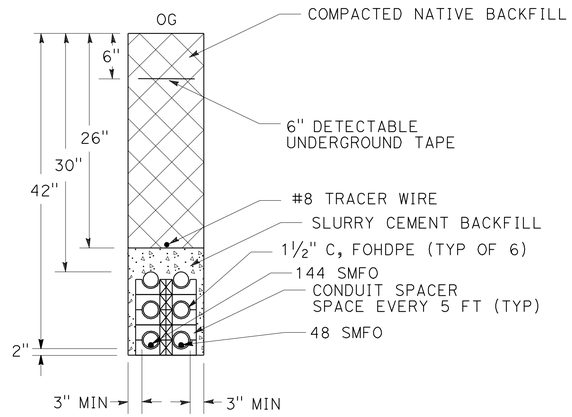

SIX 1-1/2"C, FOHDPE TRENCH DETAIL

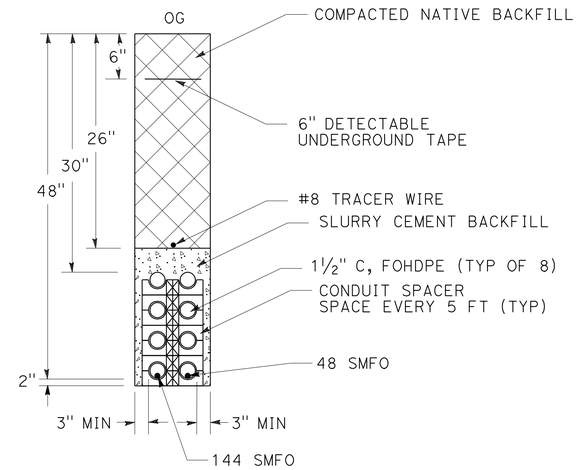

EIGHT 1-1/2"C, FOHDPE TRENCH DETAIL

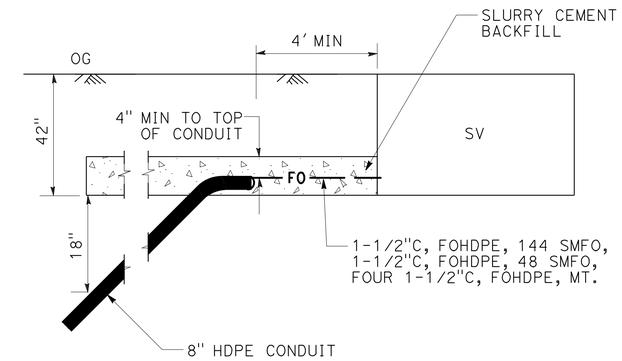

8" HDPE CONDUIT DIRECTIONAL BORING DETAIL

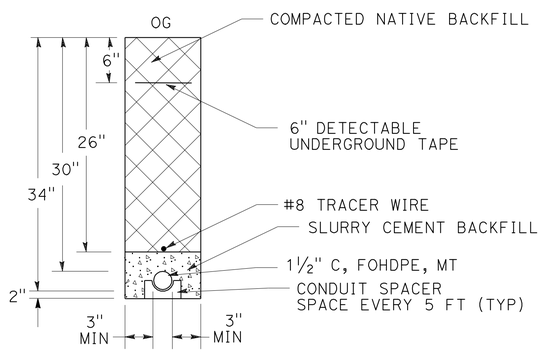

ONE 1-1/2"C, FOHDPE TRENCH DETAIL

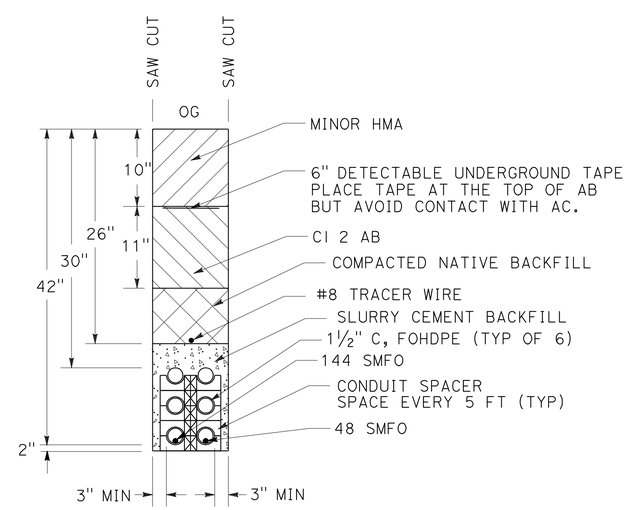

SIX 1-1/2"C, FOHDPE TRENCH DETAIL (IN PAVED SECTION)

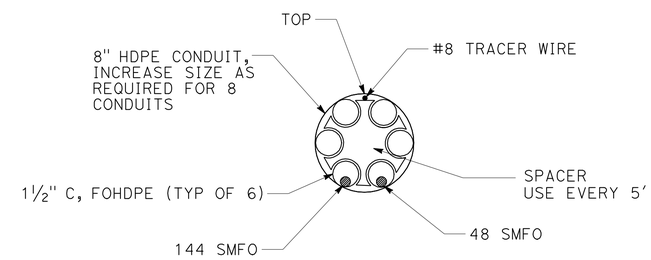

8" HDPE CONDUIT DIRECTIONAL BORING DETAIL

THIS PLAN IS ACCURATE FOR ELECTRICAL WORK ONLY.

FIBER OPTIC DETAILS

NO SCALE

E-68

REVISED BY	DATE REVISED
JAMES M. HANNIGAN	JEREMIAH PEARCE

CALCULATED-DESIGNED BY	CHECKED BY

FUNCTIONAL SUPERVISOR: ROB STINGER

STATE OF CALIFORNIA - DEPARTMENT OF TRANSPORTATION
Caltrans ELECTRICAL DESIGN

P:\proj1\02\0c590_plans\pse\20c590ua068.dgn

LAST REVISION 07-09-10 | DATE PLOTTED => 15-JUL-2010 | TIME PLOTTED => 15:39

Dist	COUNTY	ROUTE	POST MILES TOTAL PROJECT	SHEET No.	TOTAL SHEETS
02	Sha	5,44	R3.2/R18.6, L0.3/L1.8	95	120

REGISTERED ELECTRICAL ENGINEER 07-09-10

PLANS APPROVAL DATE 7-12-10

REGISTERED PROFESSIONAL ENGINEER J.M. HANNIGAN No. E13665 Exp. 6-30-11 ELECTRICAL STATE OF CALIFORNIA

THE STATE OF CALIFORNIA OR ITS OFFICERS OR AGENTS SHALL NOT BE RESPONSIBLE FOR THE ACCURACY OR COMPLETENESS OF ELECTRONIC COPIES OF THIS PLAN SHEET.

NOTES (THIS SHEET):

1. SIX 1-1/2"C, MT, FOHDPE, SEE TRENCH DETAIL SHEET E-68.
2. SIX 1-1/2"C, MT, FOHDPE, SEE TRENCH DETAIL OBSTRUCTION CROSSING THIS SHEET
3. WHEN WITHIN 15' HORIZONTALLY OF OBSTRUCTION, USE TRENCH DETAIL (THIS SHEET).

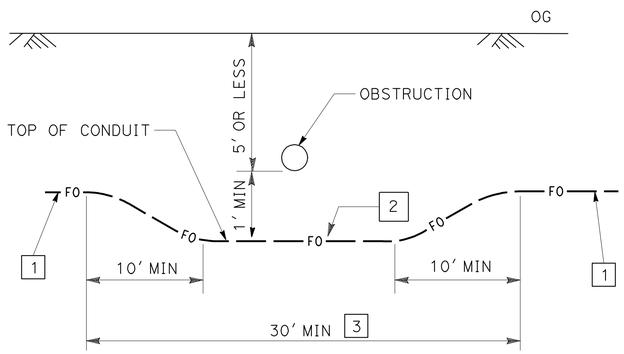

PROFILE
SHALLOW OBSTRUCTION

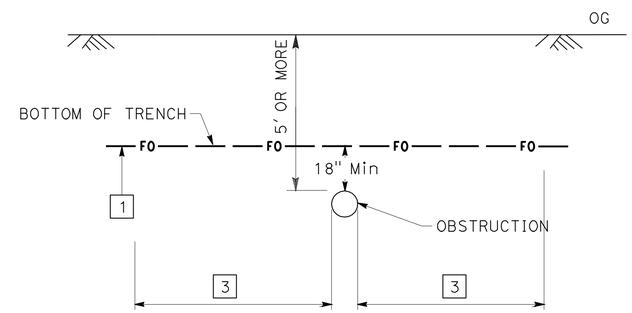

PROFILE
DEEP OBSTRUCTION

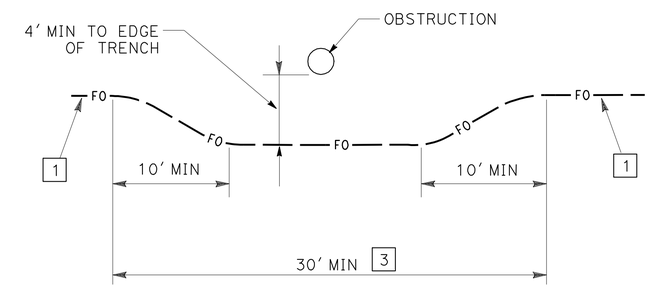

PLAN
SURFACE OBSTRUCTION

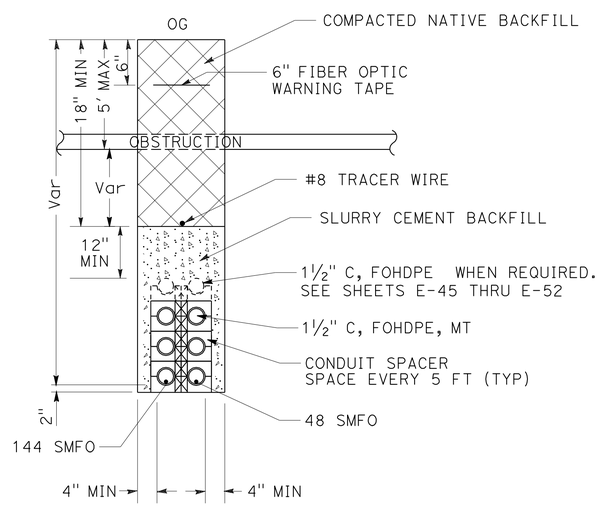

1-1/2"C FOHDPE
TRENCH DETAIL
SHALLOW OBSTRUCTION CROSSING

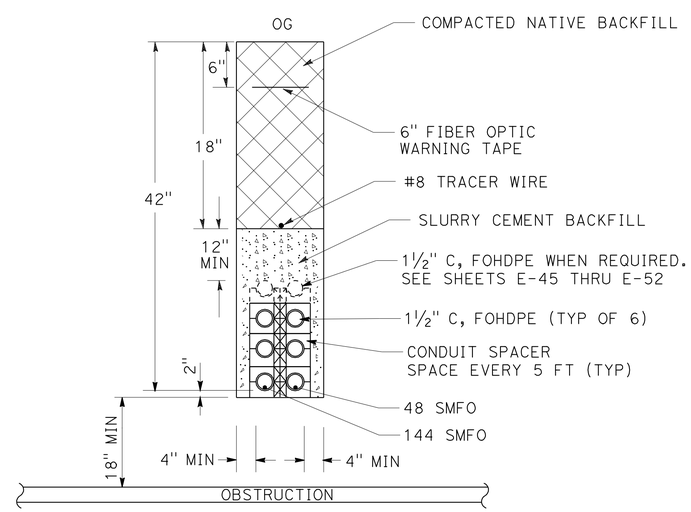

1-1/2"C FOHDPE
TRENCH DETAIL
DEEP OBSTRUCTION CROSSING

OBSTRUCTION DETAILS

NO SCALE

E-69

THIS PLAN IS ACCURATE FOR ELECTRICAL WORK ONLY.

REVISED BY	DATE REVISED
JAMES M. HANNIGAN	JEREMIAH PEARCE
CALCULATED-DESIGNED BY	CHECKED BY
FUNCTIONAL SUPERVISOR	ROB STINGER

STATE OF CALIFORNIA - DEPARTMENT OF TRANSPORTATION
Caltrans **ELECTRICAL DESIGN**

P:\proj1\02\0c590_plans\pse\20c590ua069.dgn

LAST REVISION 07-09-10 | DATE PLOTTED => 15-JUL-2010 | TIME PLOTTED => 15:40

Dist	COUNTY	ROUTE	POST MILES TOTAL PROJECT	SHEET No.	TOTAL SHEETS
02	Sha	5,44	R3.2/R18.6, L0.3/L1.8	96	120

REGISTERED ELECTRICAL ENGINEER 07-09-10

7-12-10
PLANS APPROVAL DATE

REGISTERED PROFESSIONAL ENGINEER J.M. HANNIGAN No. E13665 Exp. 6-30-11 ELECTRICAL STATE OF CALIFORNIA

THE STATE OF CALIFORNIA OR ITS OFFICERS OR AGENTS SHALL NOT BE RESPONSIBLE FOR THE ACCURACY OR COMPLETENESS OF ELECTRONIC COPIES OF THIS PLAN SHEET.

NOTES (THIS SHEET):

1. CONTRACTOR SHALL VERIFY CONTROLLING FIELD DIMENSIONS BEFORE ORDERING, FABRICATING, AND INSTALLING ANY MATERIALS
2. EXPANSION JOINTS SHALL BE USED AT EACH END OF THE BRIDGE FOR FIBERGLASS CONDUIT

[3] 8" FIBERGLASS ROUTE SIX 1-1/2" FOHDPE CONDUITS AND SEAL WITH END CAP, SEE DETAIL C

[4] 1-1/2"C, FOHDPE

[5] 1-1/2"C, FOHDPE, 144 SMFO,
1-1/2"C, FOHDPE, 48 SMFO,
FOUR 1-1/2"C, FOHDPE, MT.
SEE TRENCH DETAIL SHEET E-68.

[6] INCREASE SIZE AS REQUIRED FOR 8 CONDUITS.

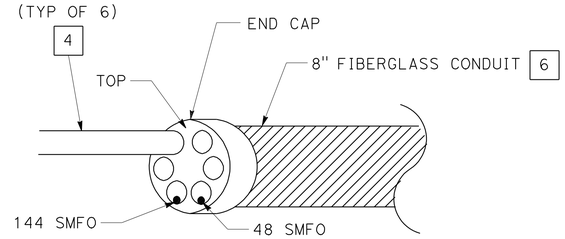

DETAIL C

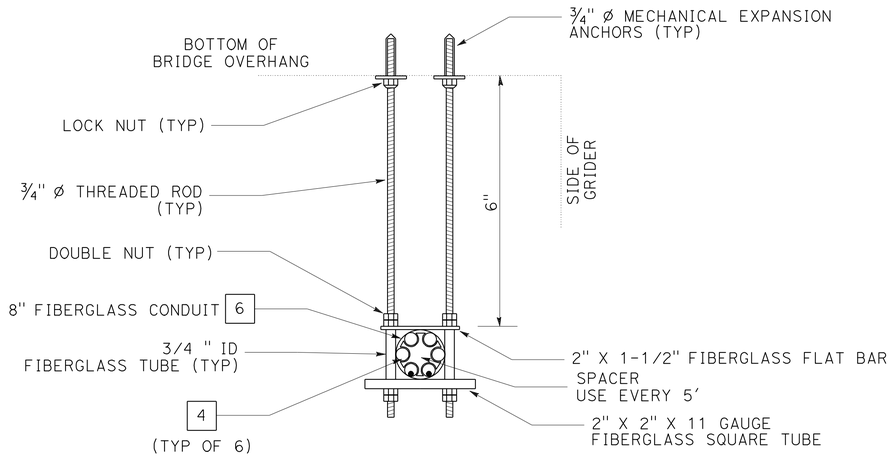

DETAIL A
CONDUIT SUPPORT HANGER DETAIL

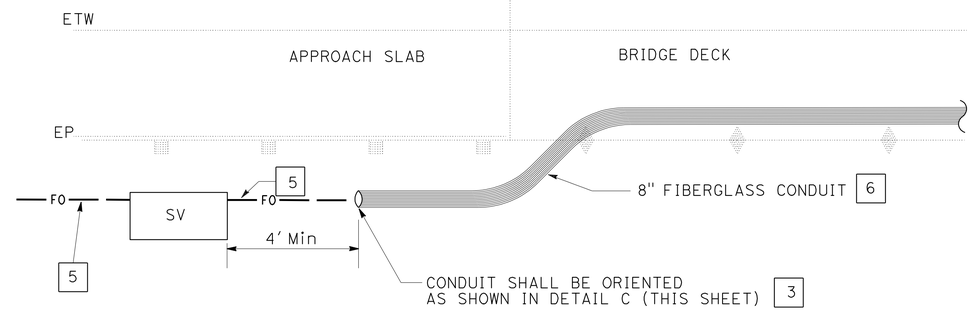

PLAN
BRIDGE CROSSING

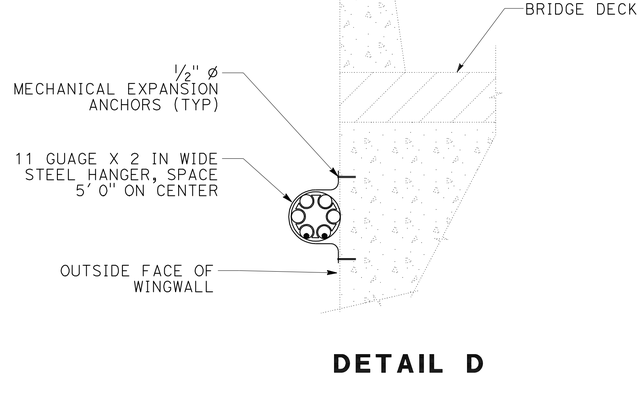

DETAIL D

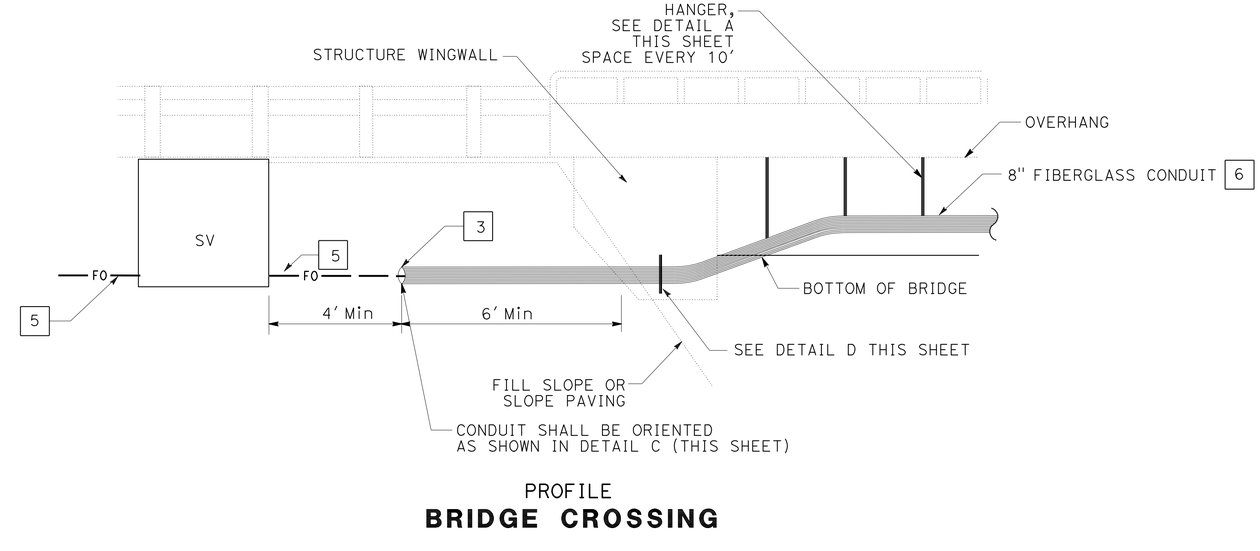

PROFILE
BRIDGE CROSSING

STRUCTURE CROSSING DETAILS
NO SCALE
E-70

THIS PLAN IS ACCURATE FOR ELECTRICAL WORK ONLY.

REVISED BY	DATE REVISED

JAMES M. HANNIGAN — JEREMIAH PEARCE
CALCULATED-DESIGNED BY — CHECKED BY
FUNCTIONAL SUPERVISOR: ROB STINGER

STATE OF CALIFORNIA - DEPARTMENT OF TRANSPORTATION
Caltrans ELECTRICAL DESIGN

P:\proj\02\0c590_plans\pse\20c590ua070.dgn

LAST REVISION 07-09-10 | DATE PLOTTED => 15-JUL-2010 | TIME PLOTTED => 15:40

Dist	COUNTY	ROUTE	POST MILES TOTAL PROJECT	SHEET No.	TOTAL SHEETS
02	Sha	5,44	R3.2/R18.6, L0.3/L1.8	97	120

J. Hannigan 07-09-10
REGISTERED ELECTRICAL ENGINEER

7-12-10
PLANS APPROVAL DATE

REGISTERED PROFESSIONAL ENGINEER J.M. HANNIGAN No. E13665 Exp. 6-30-11 ELECTRICAL STATE OF CALIFORNIA

THE STATE OF CALIFORNIA OR ITS OFFICERS OR AGENTS SHALL NOT BE RESPONSIBLE FOR THE ACCURACY OR COMPLETENESS OF ELECTRONIC COPIES OF THIS PLAN SHEET.

NOTES (THIS SHEET):

1. 1-1/2"C, FOHDPE
2. 1-1/2"C, FOHDPE, 144 SMFO, 1-1/2"C, FOHDPE, 48 SMFO, FOUR 1-1/2"C, FOHDPE, MT.
3. HANG 8" FIBERGLASS CONDUIT FROM BOTTOM OF BRIDGE DECK. ROUTE THROUGH Exist UTILITY OPENING IN BENT CAP. SEE HANGER DETAIL SHEET E-X.

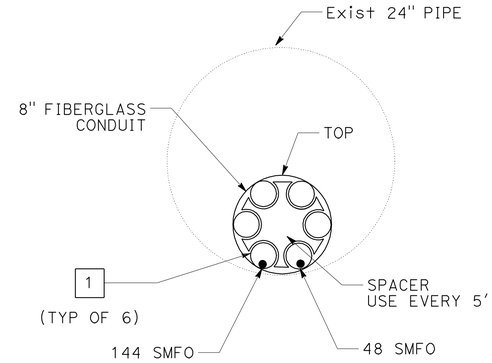

SECTION A-A

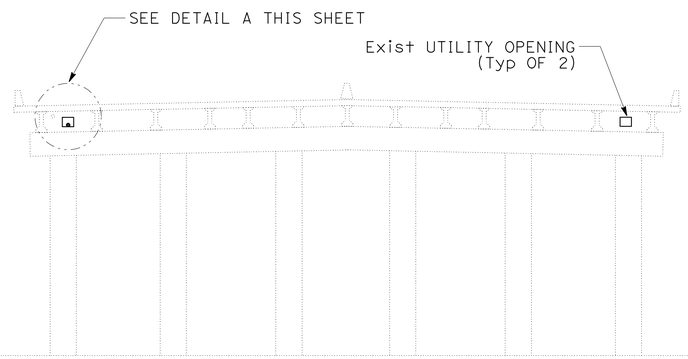

SACRAMENTO RIVER BRIDGE TYPICAL SECTION

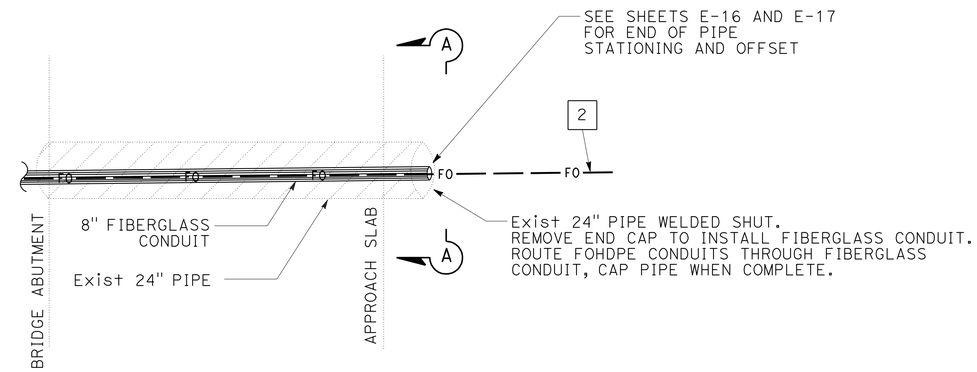

PLAN

BRIDGE ENTRANCE DETAIL UTILITY PIPE

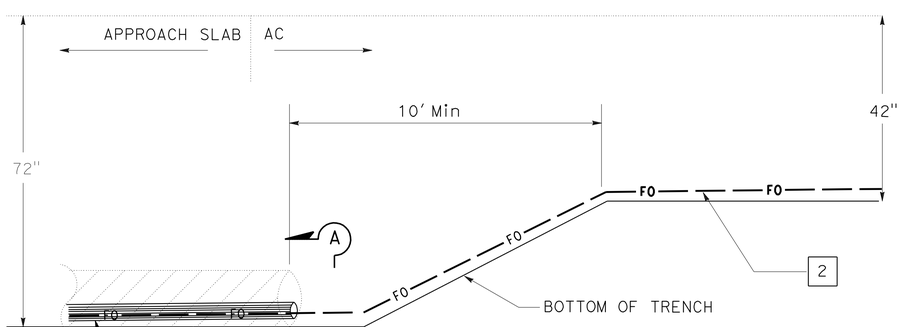

PROFILE

BRIDGE ENTRANCE DETAIL UTILITY PIPE

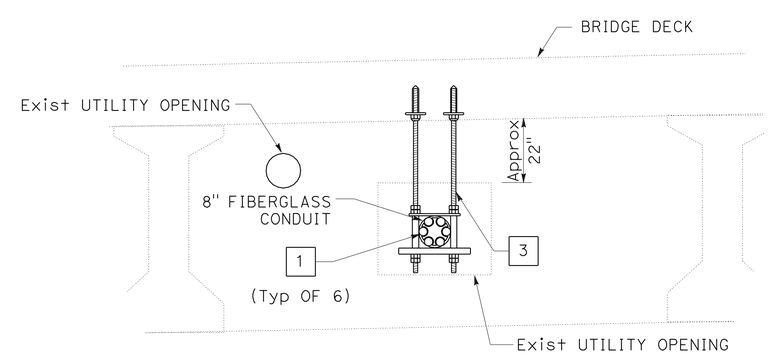

DETAIL A

SACRAMENTO RIVER BRIDGE DETAILS BRIDGE ID 6-128L

NO SCALE

E-71

THIS PLAN IS ACCURATE FOR ELECTRICAL WORK ONLY.

REVISED BY	DATE REVISED

CALCULATED-DESIGNED BY: JAMES M. HANNIGAN
CHECKED BY: JEREMIAH PEARCE
FUNCTIONAL SUPERVISOR: ROB STINGER

STATE OF CALIFORNIA - DEPARTMENT OF TRANSPORTATION
Caltrans ELECTRICAL DESIGN

P:\proj1\02\0c590_plans\pse\20c590ua071.dgn

LAST REVISION 07-09-10 | DATE PLOTTED => 15-JUL-2010 | TIME PLOTTED => 18:12

Dist	COUNTY	ROUTE	POST MILES TOTAL PROJECT	SHEET No.	TOTAL SHEETS
02	Sha	5,44	R3.2/R18.6, L0.3/L1.8	98	120

J. Hannigan 07-09-10
REGISTERED ELECTRICAL ENGINEER

7-12-10
PLANS APPROVAL DATE

REGISTERED PROFESSIONAL ENGINEER J.M. HANNIGAN No. E13665 Exp. 6-30-11 ELECTRICAL STATE OF CALIFORNIA

THE STATE OF CALIFORNIA OR ITS OFFICERS OR AGENTS SHALL NOT BE RESPONSIBLE FOR THE ACCURACY OR COMPLETENESS OF ELECTRONIC COPIES OF THIS PLAN SHEET.

NOTES (THIS SHEET):

1. SPLICE VAULT TO BE PLACED ON A 12" BED OF ¾" CRUSHED DRAIN ROCK.

2 ¾" X 8' COPPER CLAD GROUND ROD EXTENDING 2.5" ABOVE BOTTOM OF INSIDE OF SPLICE VAULT. EXOTHERMICALLY WELD #8 TRACER WIRE TO GROUND ROD.

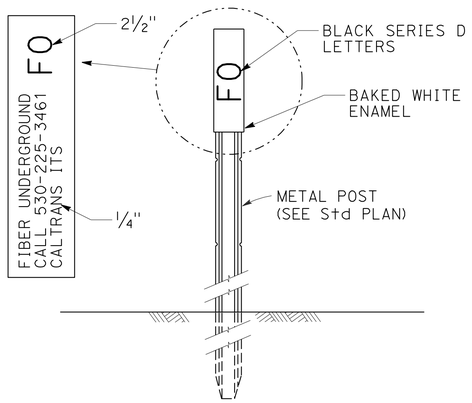

NOTE: MARKERS SHALL COMPLY WITH TYPE L-2 AS SHOWN ON THE STANDARD PLAN SHEETS A73A AND A73B EXCEPT NO REFLECTORIZATION WILL BE REQUIRED.

OBJECT MARKER (TYPE FO)

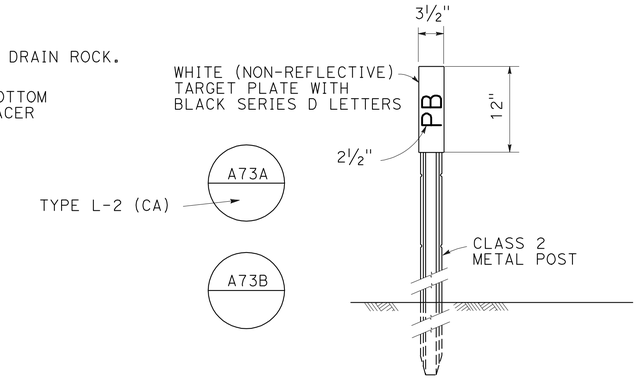

NOTE: MARKERS SHALL COMPLY WITH TYPE L-2 MODIFIED WITH A SNOW POLE BRACKET. PLACE MARKER 2" OUTSIDE PULL BOX PAVING ON SIDE AWAY FROM TRAFFIC. SEE PULL BOX PAVING DETAIL.

OBJECT MARKER (TYPE PB)

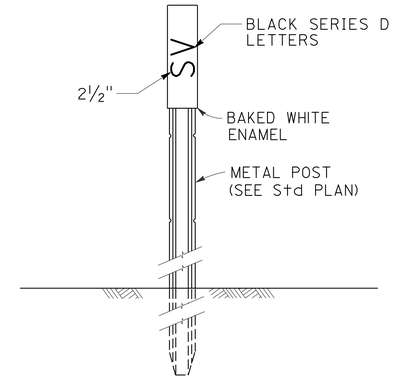

NOTE: MARKERS SHALL COMPLY WITH TYPE L-2 AS SHOWN ON THE STANDARD PLAN SHEETS A73A AND A73B EXCEPT NO REFLECTORIZATION WILL BE REQUIRED.

OBJECT MARKER (TYPE SV)

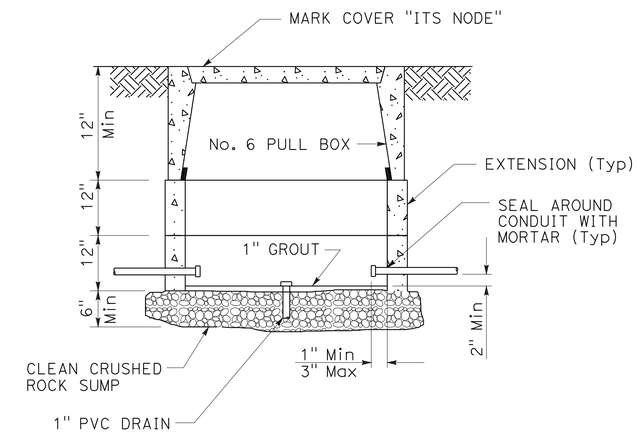

ITS NODE PULL BOX

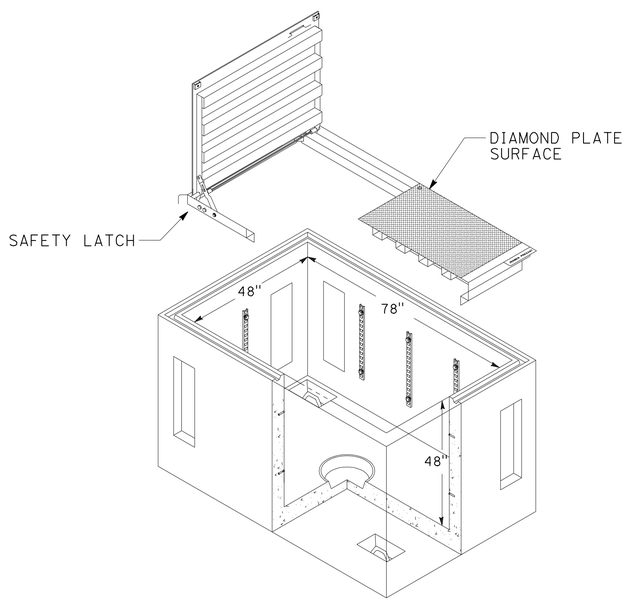

SPLICE VAULT

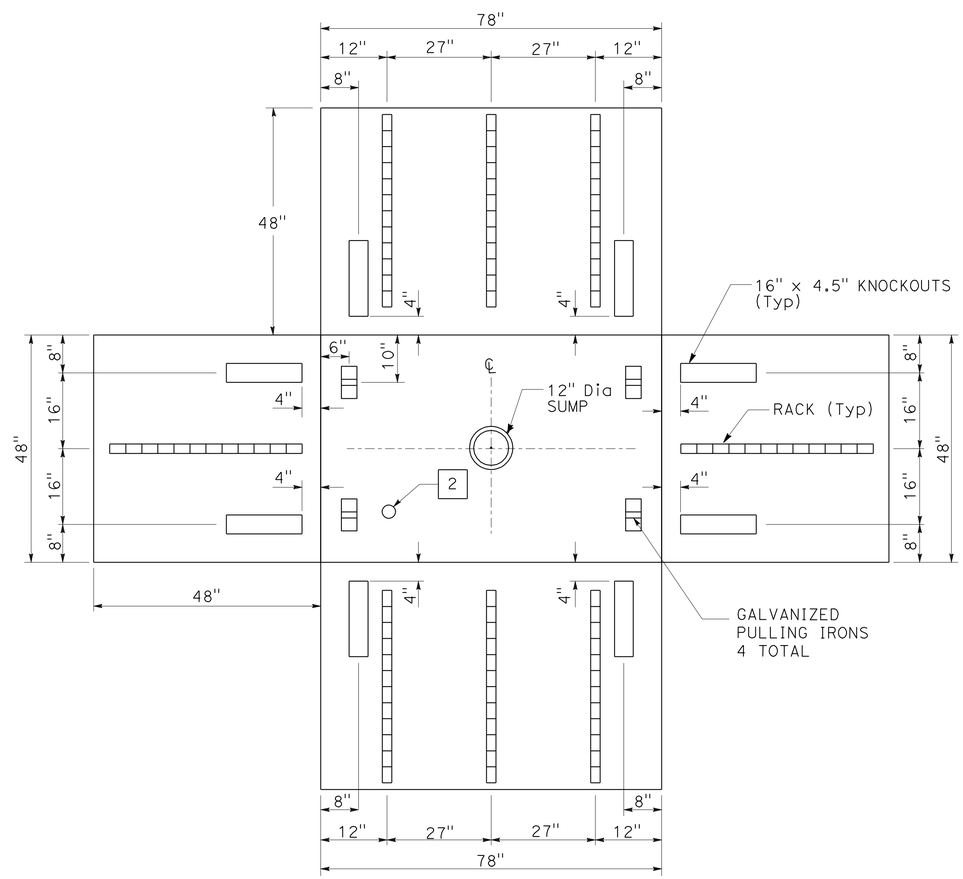

SPLICE VAULT

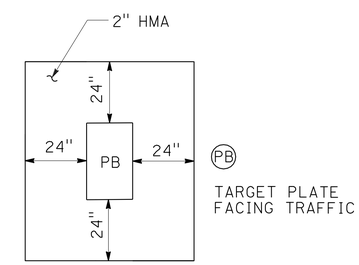

NOTE: APPLIES TO ALL INSTALLATIONS IN UNPAVED AREAS

PULL BOX PAVING

THIS PLAN IS ACCURATE FOR ELECTRICAL WORK ONLY.

FIBER OPTIC DETAILS

NO SCALE

E-72

STATE OF CALIFORNIA - DEPARTMENT OF TRANSPORTATION
Caltrans ELECTRICAL DESIGN

FUNCTIONAL SUPERVISOR: ROB STINGER
CALCULATED-DESIGNED BY: JAMES M. HANNIGAN
CHECKED BY: JEREMIAH PEARCE
REVISED BY / DATE REVISED

P:\proj1\02\0c590_plans\pse\20c590ua072.dgn

LAST REVISION DATE PLOTTED => 15-JUL-2010
07-09-10 TIME PLOTTED => 15:40

DIST	COUNTY	ROUTE	POST MILES TOTAL PROJECT	SHEET No	TOTAL SHEETS
02	Sha	5,44	R3.2/R18.6, L0.3/L1.8	99	120

REGISTERED CIVIL ENGINEER 7/8/10 DATE

7-12-10
PLANS APPROVAL DATE

REGISTERED PROFESSIONAL ENGINEER JEFF WOODY No. C41260 Exp. 3/31/11 CIVIL STATE OF CALIFORNIA

The State of California or its officers or agents shall not be responsible for the accuracy or completeness of electronic copies of this plan sheet.

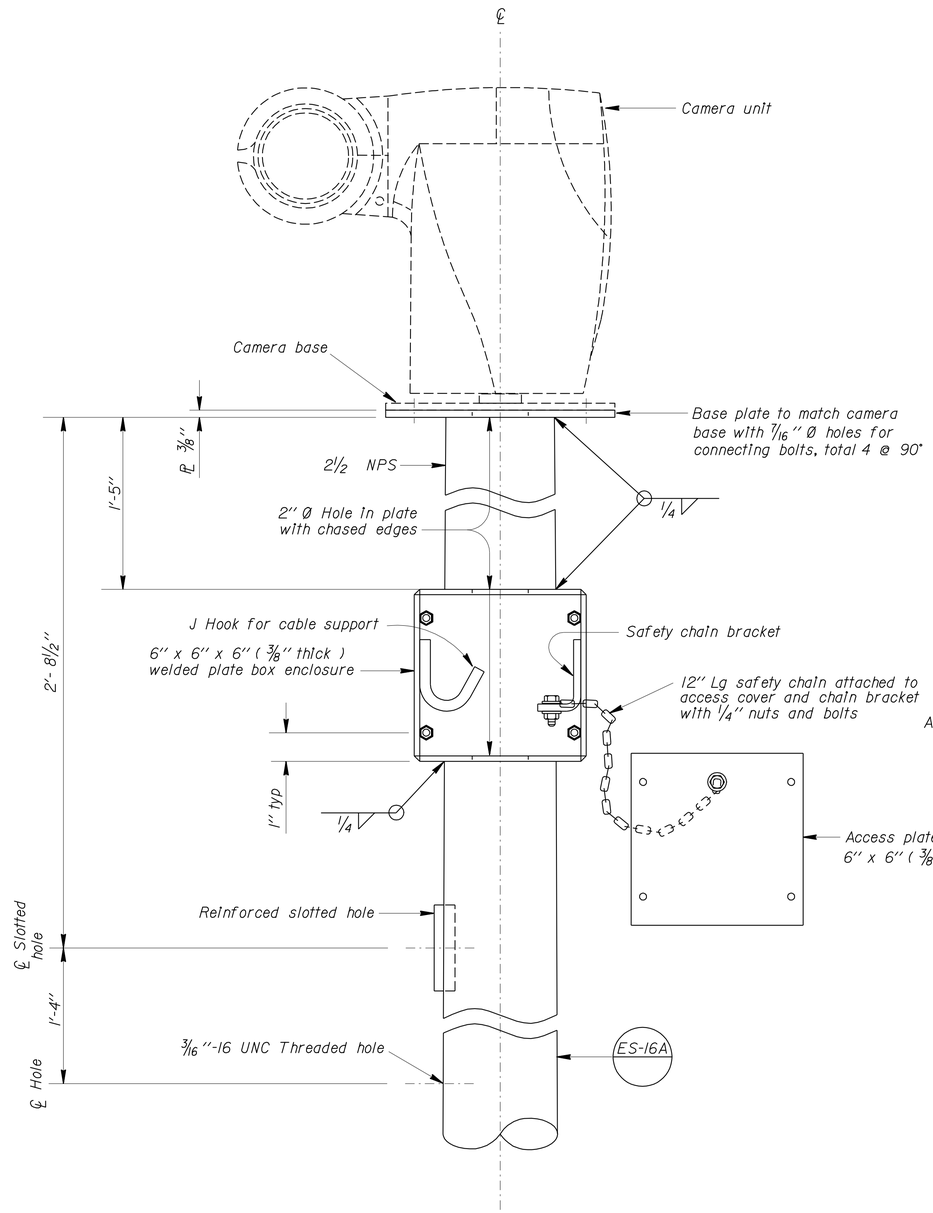

DETAIL A
CCTV POLE MOUNTING WITH ADAPTER

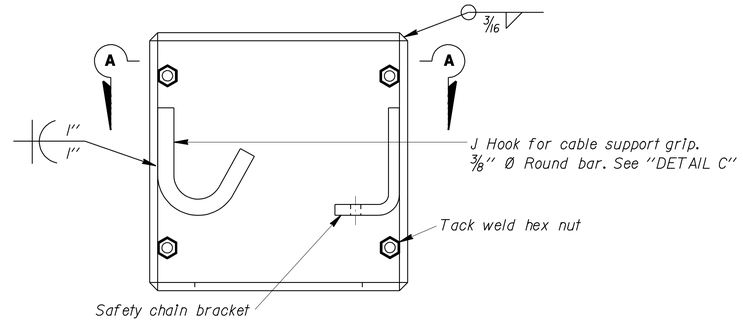

DETAIL B
BOX ENCLOSURE

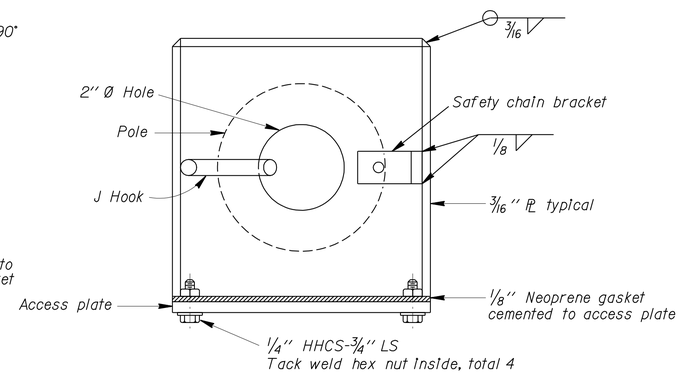

SECTION A-A

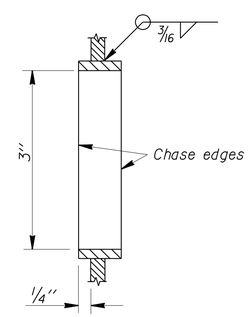

REINFORCED SLOTTED HOLE DETAIL

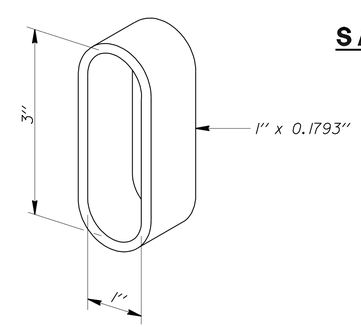

REINFORCING RING

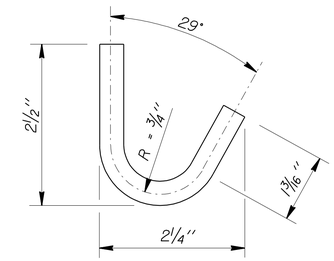

DETAIL C
J HOOK

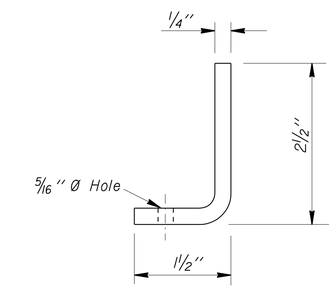

DETAIL D
SAFETY CHAIN BRACKET

NOTE:
THE CONTRACTOR SHALL VERIFY ALL CONTROLLING FIELD DIMENSIONS BEFORE ORDERING OR FABRICATING ANY MATERIAL.

STANDARD PLAN SHEET NO.
DETAIL NO.

NO SCALE

BRANCH CHIEF	DESIGN	BY JEFF WOODY	CHECKED	STATE OF CALIFORNIA DEPARTMENT OF TRANSPORTATION	DIVISION OF ENGINEERING SERVICES DESIGN AND TECHNICAL SERVICES SPECIAL DESIGNS BRANCH A	BRIDGE NO.	ELECTRICAL DETAILS	SES-1
	DETAILS	BY R. YEE	CHECKED JEFF WOODY			POST MILE	CAMERA MOUNTING DETAILS	
	QUANTITIES	BY	CHECKED					

(ENGLISH) SPECIAL DESIGNS BRANCH BORDER SHEET (REV. 7-1-09)

ORIGINAL SCALE IN INCHES FOR REDUCED PLANS 0 1 2 3

CU 02
EA 0C5901

DISREGARD PRINTS BEARING EARLIER REVISION DATES → 7/8/10

REVISION DATES | SHEET | OF

FILE => /2010sd/02-0C5901/ses1.dgn

USERNAME => trrichf DATE PLOTTED => 15-JUL-2010 TIME PLOTTED => 15:37

DIST	COUNTY	ROUTE	POST MILES TOTAL PROJECT	SHEET NO.	TOTAL SHEETS
02	Sha	5,44	R3.2/R18.6, L0.3/L1.8	100	120

Randell D. Hiatt
REGISTERED CIVIL ENGINEER

June 6, 2008
PLANS APPROVAL DATE

REGISTERED PROFESSIONAL ENGINEER
Randell D. Hiatt
No. C50200
Exp. 6-30-09
CIVIL
STATE OF CALIFORNIA

The State of California or its officers or agents shall not be responsible for the accuracy or completeness of electronic copies of this plan sheet.

To accompany plans dated 7-12-10

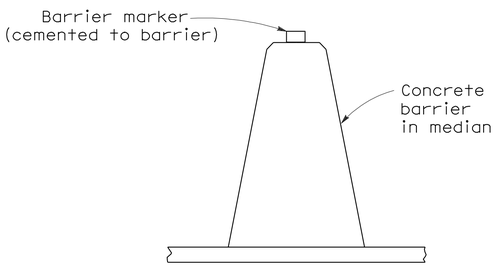

CONCRETE BARRIER TYPE 60 DELINEATION

See Notes 7 and 8

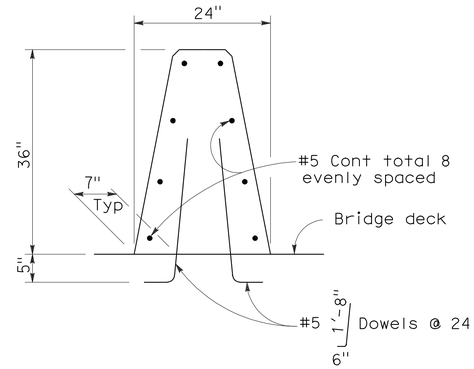

CONCRETE BARRIER TYPE 60A

Details similar to Type 60 except as noted.

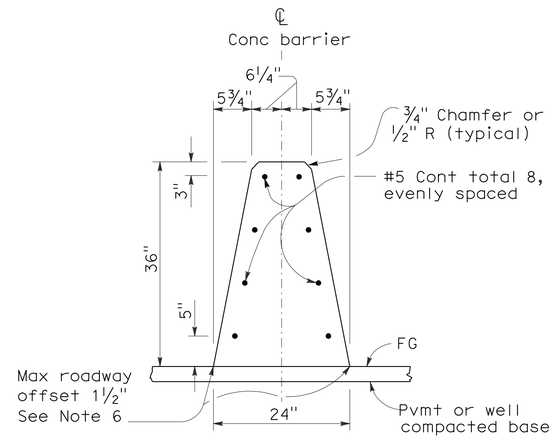

CONCRETE BARRIER TYPE 60

NOTES:

1. See Standard Plan A76B for details of Concrete Barrier Type 60 end anchors, connection to structures and transitions to Concrete Barrier Type 50 and Concrete Barrier Type 60S.
2. See Standard Plan A76C for Concrete Barrier Type 60 transitions at bridge column and sign pedestals.
3. Where glare screen is required on Concrete Barrier Type 60, use Concrete Barrier Type 60G.
4. Where the concrete barrier is added to the face of existing concrete structure, match existing weep holes.
5. Expansion joints in concrete barrier shall be located at all deck, pavement and principal wall joints. Expansion joint filler material shall be the same size as joint or ½" minimum.
6. Where roadway offset is greater than 1½", see Concrete Barrier Type 60C.
7. Barrier delineation to be used when required by the Special Provisions.
8. Spacing of barrier markers to match spacing of raised pavement markers on the adjacent median edgeline pavement delineation.
9. Reinforcing stirrup not required for roadway offsets less than 1'-0".
10. For roadway surfaces offset greater than 1½" to 3", no rebars required. For roadway surfaces offset greater than 3" to 8" use two #4 rebars at 3" above the lower roadway surface. For roadway surfaces offset greater than 8" to 12", use two #4 rebars at 3" above the lower roadway surface and two #4 rebars at 8" above the lower roadway surface. For roadway surfaces offset greater than 12" to 36", use two #4 rebars at 3" above the lower roadway surface and two #4 rebars at every 8" increment vertical spacing above the first two #4 rebars.

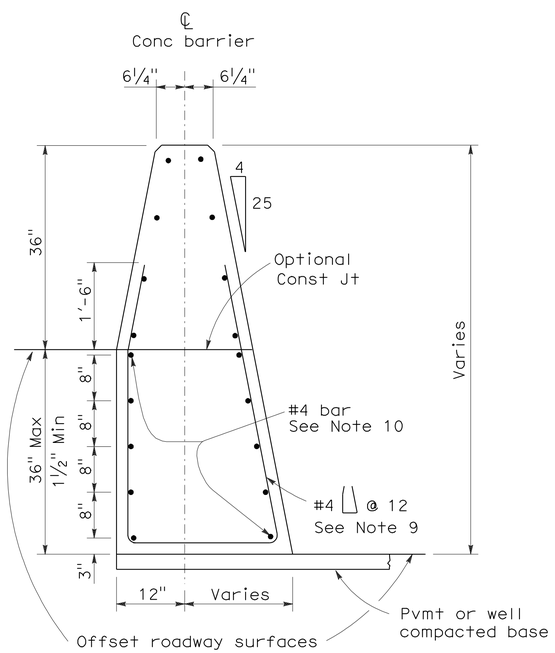

CONCRETE BARRIER TYPE 60C

Details similar to Type 60 except as noted.
Concrete barrier end anchor when necessary.
36" roadway surfaces offset shown.

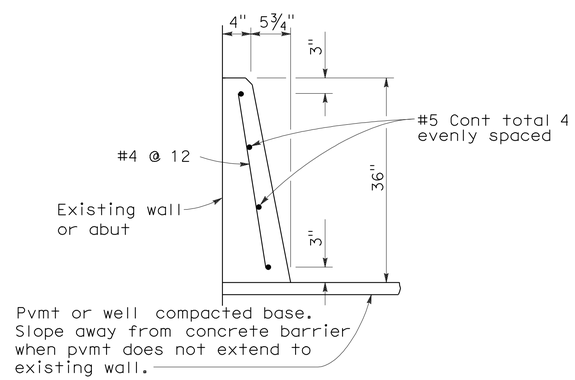

CONCRETE BARRIER TYPE 60D

STATE OF CALIFORNIA
DEPARTMENT OF TRANSPORTATION

CONCRETE BARRIER TYPE 60

NO SCALE

RSP A76A DATED JUNE 6, 2008 SUPERSEDES STANDARD PLAN A76A
DATED MAY 1, 2006 - PAGE 29 OF THE STANDARD PLANS BOOK DATED MAY 2006.

REVISED STANDARD PLAN RSP A76A

2006 REVISED STANDARD PLAN RSP A76A

DIST	COUNTY	ROUTE	POST MILES TOTAL PROJECT	SHEET NO.	TOTAL SHEETS
02	Sha	5,44	R3.2/R18.6, L0.3/L1.8	101	120

Randell D. Hiatt
REGISTERED CIVIL ENGINEER

June 6, 2008
PLANS APPROVAL DATE

REGISTERED PROFESSIONAL ENGINEER
Randell D. Hiatt
No. C50200
Exp. 6-30-09
CIVIL
STATE OF CALIFORNIA

The State of California or its officers or agents shall not be responsible for the accuracy or completeness of electronic copies of this plan sheet.

To accompany plans dated 7-12-10

NOTES:

1. When necessary to place dike in front of face of guard railing, only Type C dike may be used. For dike details, see Standard Plan A87B.
2. For standard railing post embedment, see Standard Plans A77C3.
3. Guard railing delineation to be used where shown on the Project Plans.
4. When dike or curb is placed under guard railing, the maximum height of the dike or curb shall be 4". Mountable dike should not be used. For dike and curb details, see Revised Standard Plans RSP A87A and Standard Plan A87B.
5. For details of typical distance between the face of rail and hinge point, see Standard Plan A77C3.

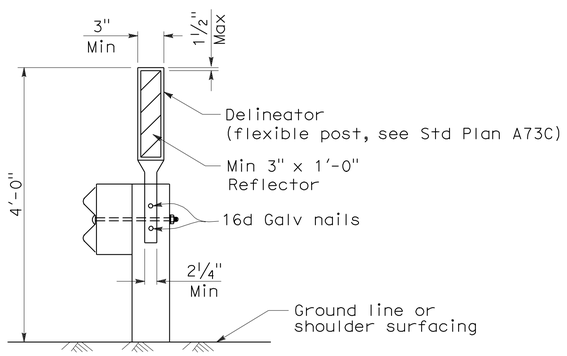

GUARD RAILING DELINEATION

See Note 3

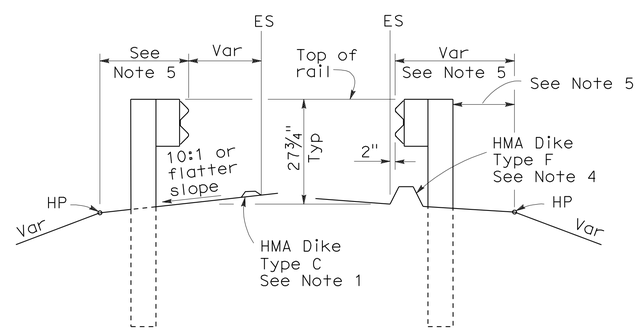

DIKE POSITIONING

See Note 1

STATE OF CALIFORNIA
DEPARTMENT OF TRANSPORTATION

METAL BEAM GUARD RAILING TYPICAL RAILING DELINEATION AND DIKE POSITIONING DETAILS

NO SCALE

RSP A77C4 DATED JUNE 6, 2008 SUPERSEDES STANDARD PLAN A77C4
DATED MAY 1, 2006 - PAGE 47 OF THE STANDARD PLANS BOOK DATED MAY 2006.

REVISED STANDARD PLAN RSP A77C4

2006 REVISED STANDARD PLAN RSP A77C4

12-10-07

DIST	COUNTY	ROUTE	POST MILES TOTAL PROJECT	SHEET NO.	TOTAL SHEETS
02	Sha	5,44	R3.2/R18.6, L0.3/L1.8	102	120

Randell D. Hiatt
REGISTERED CIVIL ENGINEER

June 6, 2008
PLANS APPROVAL DATE

REGISTERED PROFESSIONAL ENGINEER
Randell D. Hiatt
No. C50200
Exp. 6-30-09
CIVIL
STATE OF CALIFORNIA

The State of California or its officers or agents shall not be responsible for the accuracy or completeness of electronic copies of this plan sheet.

To accompany plans dated 7-12-10

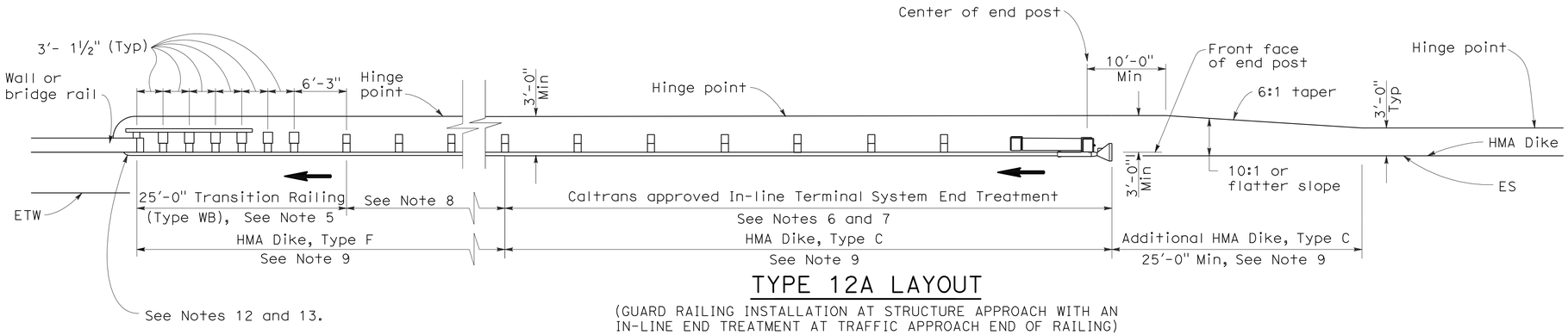

TYPE 12A LAYOUT

(GUARD RAILING INSTALLATION AT STRUCTURE APPROACH WITH AN IN-LINE END TREATMENT AT TRAFFIC APPROACH END OF RAILING)
See Notes 10

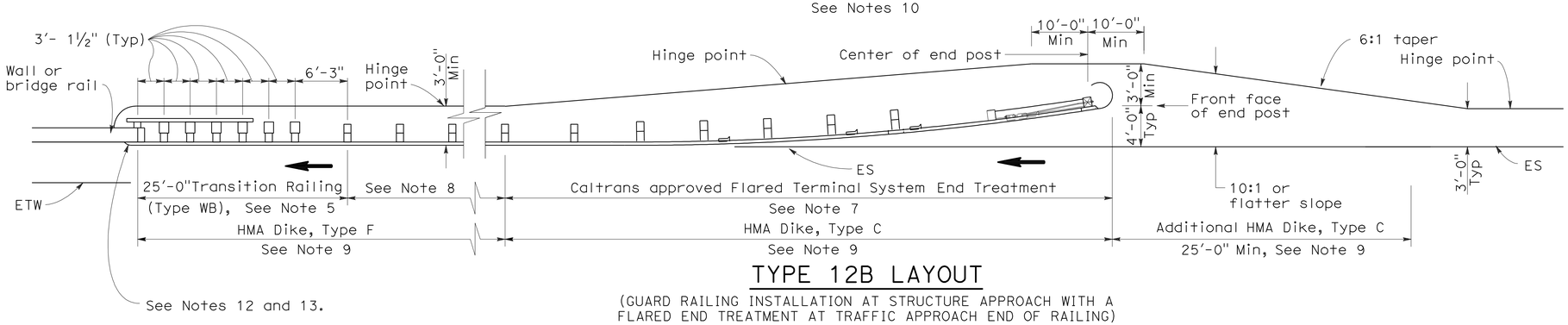

TYPE 12B LAYOUT

(GUARD RAILING INSTALLATION AT STRUCTURE APPROACH WITH A FLARED END TREATMENT AT TRAFFIC APPROACH END OF RAILING)
See Notes 10

NOTES:

1. Line post, blocks and hardware to be used are shown on Standard Plans A77A1, A77A2, A77B1, A77C1 and A77C2.
2. Guard rail post spacing to be 6'-3" center to center, except as otherwise noted.
3. Except as noted, line posts are 6" x 8" x 6'-0" wood with 6" x 8" x 1'-2" wood blocks. W6 x 9 steel posts, 6'-0" in length, with 6" x 8" x 1'-2" notched wood blocks or plastic blocks may be used for 6" x 8" x 6'-0" wood posts with 6" x 8" x 1'-2" wood blocks where applicable and when specified.
4. Direction of adjacent traffic indicated by ➡.
5. For Transition Railing (Type WB) details for Types 12A and 12B Layouts, see Standard Plan A77J4.
6. In-line Terminal System End Treatments are used where site conditions will not accommodate a flared end treatment.
7. The type of terminal system end treatment to be used will be shown on the Project Plans.
8. Dependent on site conditions (embankment height, side slopes, or other fixed objects), it may be advisable to construct additional guard railing (a length equal to multiples of 12'-6" with 6'-3" post spacing) between the transition railing and end treatment.
9. Where placement of dike is required with guard railing installations, see Revised Standard Plan RSP A77C4 for dike positioning details.
10. Type 12A or Type 12B Layouts are typically used:
    a. To the right of approaching traffic, at the end of a structure, on two-lane conventional highway where the roadbed width across the structure is less than 40 feet.
    b. To the left of approaching traffic, at the end of a structure, on two-lane conventional highway where the roadbed width across the structure is less than 40 feet.
    c. To the right of approaching traffic at the end of each structure on multilane freeways or expressways with separate adjacent or parallel bridges.
    d. To the right of approaching traffic at the end of the structure on multilane freeways or expressways with decked median on the bridge.
11. See Revised Standard Plan RSP A77F3 for typical layout used left of approaching traffic at the ends of each structure on multilane freeways or expressways with separate adjacent or parallel bridges.
12. For additional details of typical connections to bridge rail, see Connection Detail AA on Revised Standard Plans RSP A77J1 and RSP A77J2 and Connection Detail FF on Standard Plans A77K1 and A77K2.
13. For additional details of a typical connection to walls or abutments, see Standard Plan A77J3.

STATE OF CALIFORNIA
DEPARTMENT OF TRANSPORTATION

METAL BEAM GUARD RAILING TYPICAL LAYOUTS FOR STRUCTURE APPROACH

NO SCALE

RSP A77F1 DATED JUNE 6, 2008 SUPERSEDES STANDARD PLAN A77F1
DATED MAY 1, 2006 - PAGE 54 OF THE STANDARD PLANS BOOK DATED MAY 2006.

REVISED STANDARD PLAN RSP A77F1

2006 REVISED STANDARD PLAN RSP A77F1

12-10-07

DIST	COUNTY	ROUTE	POST MILES TOTAL PROJECT	SHEET NO.	TOTAL SHEETS
02	Sha	5,44	R3.2/R18.6, L0.3/L1.8	103	120

Randell D. Hiatt
REGISTERED CIVIL ENGINEER

June 6, 2008
PLANS APPROVAL DATE

REGISTERED PROFESSIONAL ENGINEER
Randell D. Hiatt
No. C50200
Exp. 6-30-09
CIVIL
STATE OF CALIFORNIA

The State of California or its officers or agents shall not be responsible for the accuracy or completeness of electronic copies of this plan sheet.

To accompany plans dated 7-12-10

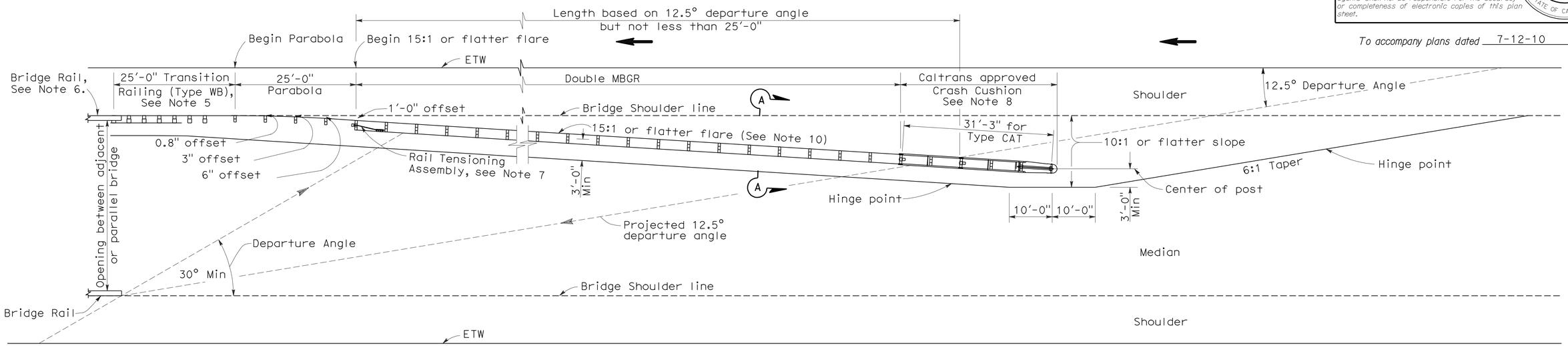

TYPE 12E LAYOUT

See Note 10

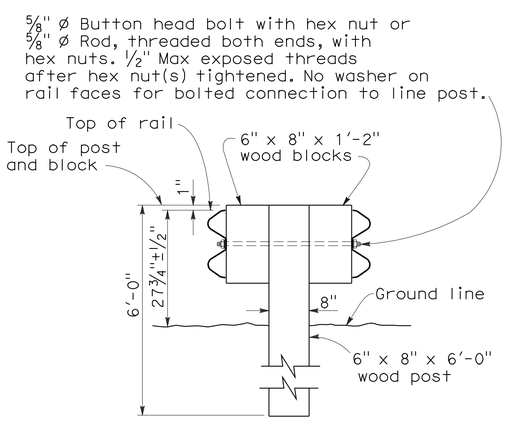

SECTION A-A

TYPICAL DOUBLE METAL BEAM GUARD RAILING

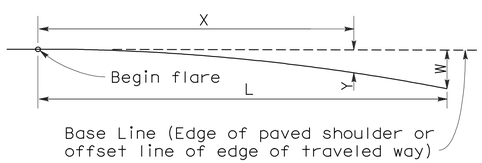

$$Y = \frac{WX^2}{L^2}$$

Y = Offset from base line
W = Maximum offset
X = Distance along base line
L = Length of flare

PARABOLIC FLARE OFFSETS

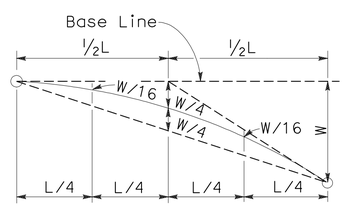

TYPICAL PARABOLIC LAYOUT

NOTES:

1. Line post, blocks and hardware to be used are shown on Standard Plans A77A1, A77A2, A77B1, A77C1 and A77C2.
2. Guard railing post spacing to be 6'-3" center to center, except as otherwise noted.
3. Except as noted, line posts are 6" x 8" x 6'-0" wood with 6" x 8" x 1'-2" wood blocks. W6 x 9 steel posts, 6'-0" in length, with 6" x 8" x 1'-2" notched wood blocks or notched recycled plastic blocks may be used for 6" x 8" x 6'-0" wood line posts with 6" x 8" x 1'-2" wood blocks where applicable and when specified.
4. Direction of adjacent traffic indicated by ⟶.
5. For Transition Railing (Type WB) details, see Standard Plan A77J4.
6. For additional details of a typical connection to bridge rail, see Connection Detail AA on Revised Standard Plan RSP A77J1.
7. For Rail Tensioning Assembly details, see Standard Plan A77H2.
8. The type of Crash Cushion to be used will be shown on the Project Plans.
9. Type 12E Layout is typically used left of approaching traffic at the end of each structure on multilane freeways or expressways where a median type barrier is not constructed between separated roadbeds.
10. The 15:1 or flatter flare is measured off of the edge of traveled way.

STATE OF CALIFORNIA
DEPARTMENT OF TRANSPORTATION

METAL BEAM GUARD RAILING TYPICAL LAYOUTS FOR STRUCTURE APPROACH

NO SCALE

RSP A77F3 DATED JUNE 6, 2008 SUPERSEDES STANDARD PLAN A77F3
DATED MAY 1, 2006 - PAGE 56 OF THE STANDARD PLANS BOOK DATED MAY 2006.

REVISED STANDARD PLAN RSP A77F3

2006 REVISED STANDARD PLAN RSP A77F3

12-10-07

DIST	COUNTY	ROUTE	POST MILES TOTAL PROJECT	SHEET NO.	TOTAL SHEETS
02	Sha	5,44	R3.2/R18.6, L0.3/L1.8	104	120

Randell D. Hiatt
REGISTERED CIVIL ENGINEER

June 5, 2009
PLANS APPROVAL DATE

REGISTERED PROFESSIONAL ENGINEER
Randell D. Hiatt
No. C50200
Exp. 6-30-09
CIVIL
STATE OF CALIFORNIA

The State of California or its officers or agents shall not be responsible for the accuracy or completeness of electronic copies of this plan sheet.

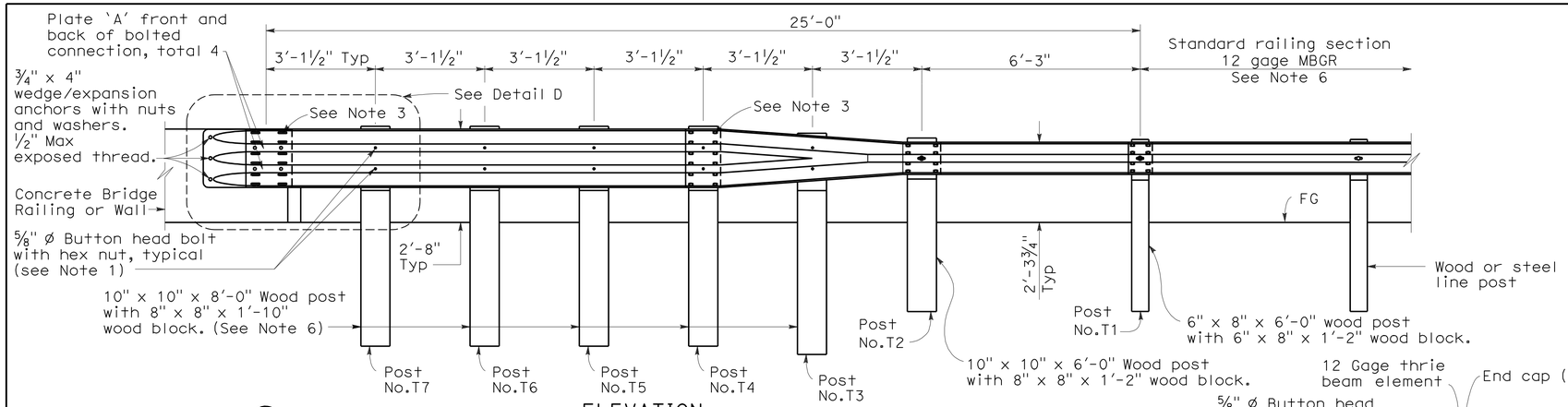

ELEVATION

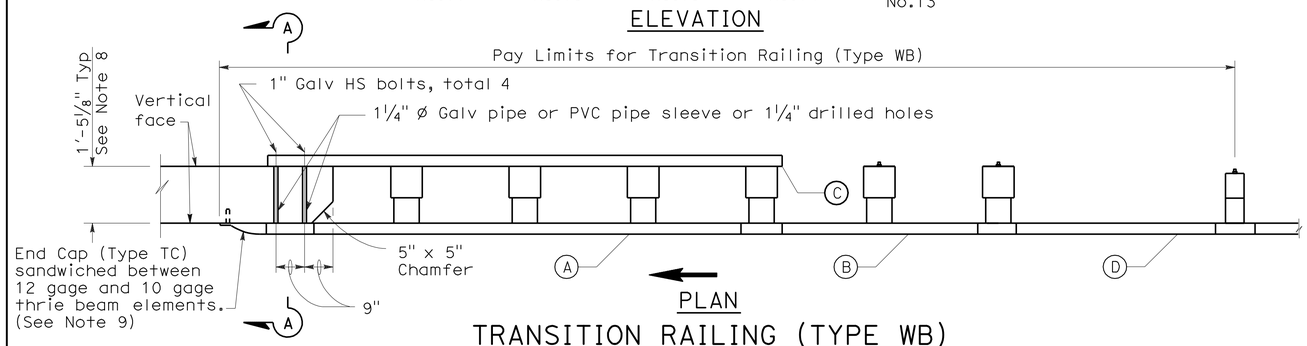

PLAN

TRANSITION RAILING (TYPE WB)

(No Blockout Attachment)

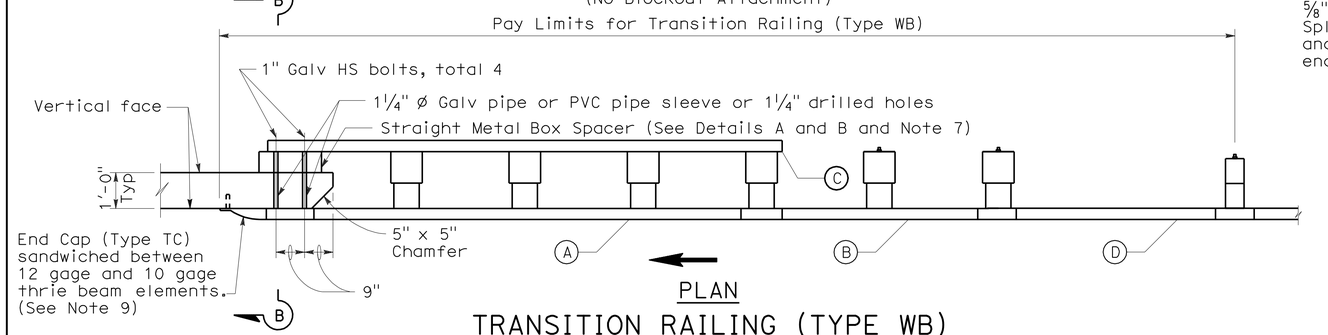

PLAN

TRANSITION RAILING (TYPE WB)

(Blockout Attachment)

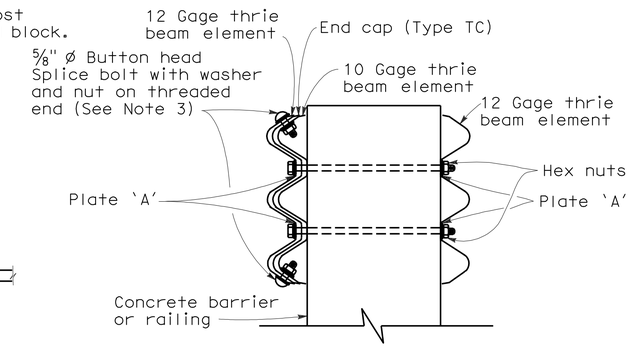

SECTION A-A

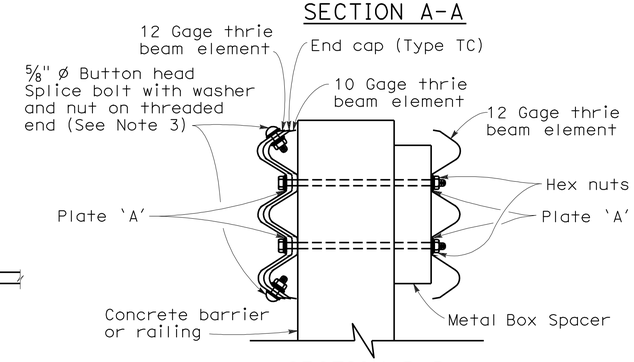

SECTION B-B

LEGEND

(A) Nested thrie beam elements (one 12 gage element nested over one 10 gage element).

(B) One 10 gage "W" beam to thrie beam element.

(C) One 12 gage thrie beam element.

(D) One 10 gage "W" beam rail element (7'-3½" length)

10 gage = 0.135" thick

12 gage = 0.108" thick

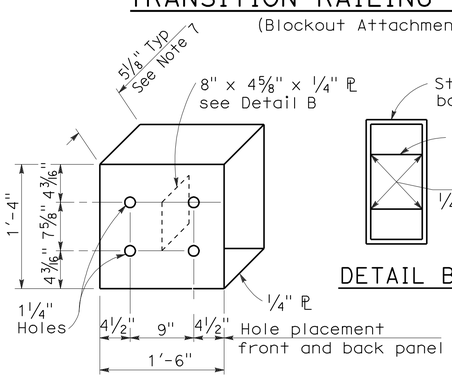

DETAIL A

STRAIGHT METAL BOX SPACER

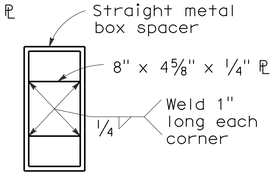

DETAIL B

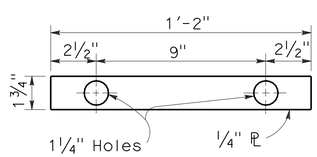

DETAIL C

PLATE 'A'

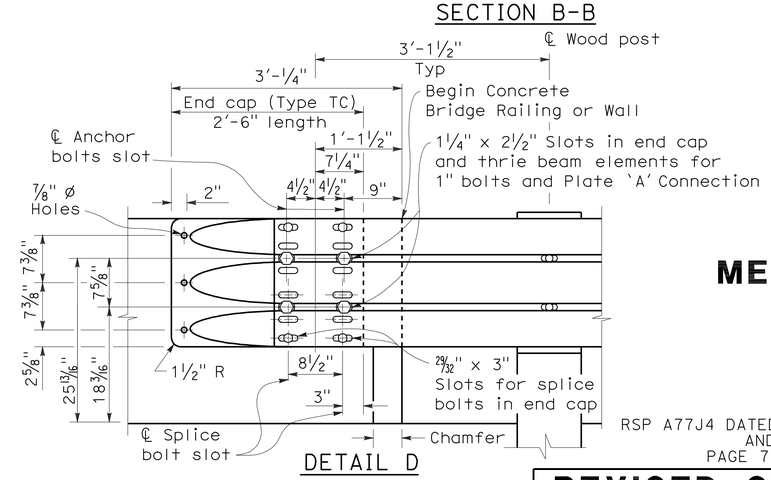

DETAIL D

NOTES:

To accompany plans dated 7-12-10

1. Use 5/8 " ø Button head bolts and hex nuts for connections to posts. No washer on rail face for bolted connections to post.
2. The nested rail elements, end cap, and 'W' beam to thrie beam element may be spliced together prior to bolting the elements to the wood post and concrete barrier or railing.
3. Exterior splice bolt holes for rail element splices at Post No.T4 and the connection to the concrete barrier or railing shall be the standard 29/32 " x 1 1/8 " slot size. Interior splice bolt holes at these locations may be increased up to 1 1/4 " ø. Only the top 2 and the bottom 2 splice bolts with washers and nuts are required for rail splices at Post No.T4 and the connection to the concrete barrier or railing.
4. Direction of adjacent traffic indicated by →.
5. The top elevation of Post Nos.T2 through T7 shall not project more than 1" above the top elevation of the rail element.
6. Typically, the railing connected to Transition Railing (Type WB) will be either standard railing section of metal beam guard railing or an approved Caltrans end treatment attached to Post No.T1.
7. The depth of the metal box spacer varies from the 5 1/8 " to 1 1/2 " and is dependent on the width of the concrete railing or wall. The combined dimension for the depth of the metal box spacer plus the width of railing or wall is typically 17 1/8 ". Where the space between the backside of the concrete railing or wall and the rear thrie beam element is less than 1 1/2 ", metal plates similar to Plate 'A' are to be used as spacers.
8. Where the width of the concrete railing or wall is greater than 17 1/8 ", wood blocks are to be used to fill the space created between the backside of Posts No.4 through No.7 and the rear thrie beam element. These wood blocks shall be 8" in width and 1'-2" in length. The dimension between the front thrie beam element and the rear thrie beam element is to match the width of the concrete railing or wall.
9. End cap may be installed over 12 gage and 10 gage thrie beam elements where transition railing is installed on the departure end of bridge railing.

STATE OF CALIFORNIA
DEPARTMENT OF TRANSPORTATION

METAL BEAM GUARD RAILING TRANSITION RAILING (TYPE WB)

NO SCALE

RSP A77J4 DATED JUNE 5, 2009 SUPERSEDES RSP A77J4 DATED JUNE 6, 2008 AND STANDARD PLAN A77J4 DATED MAY 1, 2006 - PAGE 75 OF THE STANDARD PLANS BOOK DATED MAY 2006.

REVISED STANDARD PLAN RSP A77J4

2006 REVISED STANDARD PLAN RSP A77J4

5-14-09

DIST	COUNTY	ROUTE	POST MILES TOTAL PROJECT	SHEET NO.	TOTAL SHEETS
02	Sha	5,44	R3.2/R18.6, L0.3/L1.8	105	120

LICENSED LANDSCAPE ARCHITECT

June 5, 2009
PLANS APPROVAL DATE

The State of California or its officers or agents shall not be responsible for the accuracy or completeness of electronic copies of this plan sheet.

Gregory A. Balzer 2516 — 10 January 2-28-11 Renewal Date 5-14-09 Date — LICENSED LANDSCAPE ARCHITECT — STATE OF CALIFORNIA

To accompany plans dated 7-12-10

EXISTING	PROPOSED	ITEM DESCRIPTION
		WATER METER (WM)
		BACKFLOW PREVENTER ASSEMBLY (BPA)
		BACKFLOW PREVENTER ASSEMBLY IN ENCLOSURE (BPAE)
		BACKFLOW PREVENTER ENCLOSURE (BPE)
		BOOSTER PUMP (BP)
		TRUCK LOADING STANDPIPE (TLS)
FS	FS	FLOW SENSOR (FS)
X	X	MASTER IRRIGATION CONTROLLER (MIC)
		AUXILIARY IRRIGATION CONTROLLER (AIC)
		IRRIGATION CONTROLLER (IC)/ IRRIGATION CONTROLLER (IC) (BATTERY) IRRIGATION CONTROLLER (IC) (SOLAR)
		IRRIGATION CONTROLLER(S) IN CONTROLLER ENCLOSURE CABINET (ICC)
		CONTROL AND NEUTRAL CONDUCTORS (CNC)
SCC	SCC	SPRINKLER CONTROL CONDUIT (SCC)
		IRRIGATION CROSSOVER
		EXTEND IRRIGATION CROSSOVER
		IRRIGATION SLEEVE
dip	DIP	DUCTILE IRON PIPE (SUPPLY LINE) (MAIN) (DIP)
		GALVANIZED STEEL PIPE (SUPPLY LINE) (MAIN) (GSP)
		GALVANIZED STEEL PIPE (SUPPLY LINE) (LATERAL) (GSP)
		PLASTIC PIPE (PR 200) (SUPPLY LINE) (MAIN)
		PLASTIC PIPE (PR 200) (SUPPLY LINE) (LATERAL)
		PLASTIC PIPE (IRRIGATION LINE)
		REMOTE CONTROL VALVE (RCV) REMOTE CONTROL VALVE (MASTER) (RCVM) REMOTE CONTROL VALVE (MASTER) W/FLOW METER (RCVMF)
		MANUAL CONTROL VALVE (MCV)
		VALVE ASSEMBLY UNIT (VAU)
		WYE STRAINER (WS)
		FILTER ASSEMBLY UNIT (FAU)
		GATE VALVE (GV)
		BALL VALVE (BV)

EXISTING	PROPOSED	ITEM DESCRIPTION
		QUICK COUPLING VALVE (QCV)
		CAM COUPLER ASSEMBLY (CCA)
		PRESSURE REDUCING VALVE (PRV)
		PRESSURE RELIEF VALVE (PRLV)
		FLOW CONTROL VALVE (FCV)
		COMBINATION AIR RELEASE VALVE (CARV)
		CHECK VALVE (CV)
		FLUSH VALVE (FV)
		NOZZLE LINE W/TURNING UNION
		IRRIGATION SYSTEM
		IRRIGATION SYSTEM TO BE REMOVED
		CHAIN LINK GATE
		QUICK COUPLING VALVE W/SPRINKLER PROTECTOR
3	3	SPRINKLER W/SPRINKLER PROTECTOR
	C	CONNECT TO EXISTING SYSTEM
		CAP
		CAP EXISTING

VALVE CODE

RCV SIZE
IRRIGATION CONTROLLER
CONTROLLER STATION
VALVE IN PARALLEL (IF APPLICABLE)
GPM
QUANTITY OF SPRINKLERS (WHEN SHOWN)

* 2½"-A-2b-40 -60

MCV SIZE
VALVE NUMBER
GPM
QUANTITY OF TYPE SPRINKLERS (WHEN SHOWN)

* 2"-3-30 -50

* VALVE CODES FOR EXISTING VALVES ARE SHOWN IN A DASHED ENCLOSURE.

STATE OF CALIFORNIA
DEPARTMENT OF TRANSPORTATION

PLANTING AND IRRIGATION SYMBOLS

NO SCALE

RSP H2 DATED JUNE 5, 2009 SUPERSEDES RSP H2 DATED MARCH 7, 2008 AND STANDARD PLAN H2 DATED MAY 1, 2006 - PAGE 202 OF THE STANDARD PLANS BOOK DATED MAY 2006.

REVISED STANDARD PLAN RSP H2

2006 REVISED STANDARD PLAN RSP H2

DIST	COUNTY	ROUTE	POST MILES TOTAL PROJECT	SHEET NO.	TOTAL SHEETS
02	Sha	5,44	R3.2/R18.6, L0.3/L1.8	106	120

Randell D. Hiatt
REGISTERED CIVIL ENGINEER

June 6, 2008
PLANS APPROVAL DATE

REGISTERED PROFESSIONAL ENGINEER
Randell D. Hiatt
No. C50200
Exp. 6-30-09
CIVIL
STATE OF CALIFORNIA

The State of California or its officers or agents shall not be responsible for the accuracy or completeness of electronic copies of this plan sheet.

To accompany plans dated 7-12-10

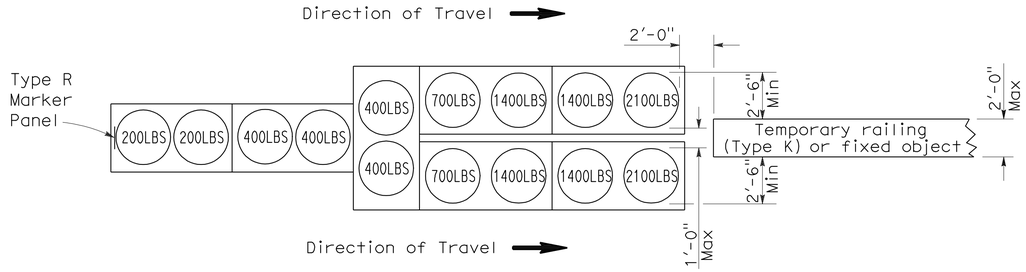

ARRAY 'TU14'

Approach speed 45 mph or more

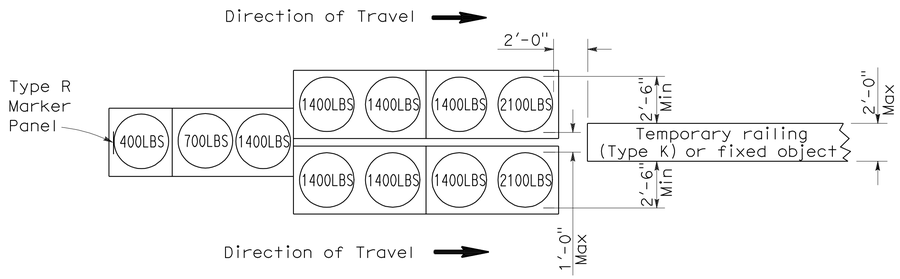

ARRAY 'TU11'

Approach speed less than 45 mph

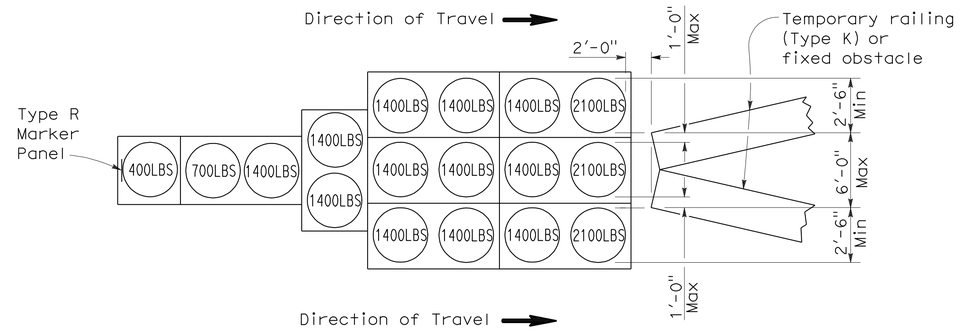

ARRAY 'TU17'

Approach speed less than 45 mph

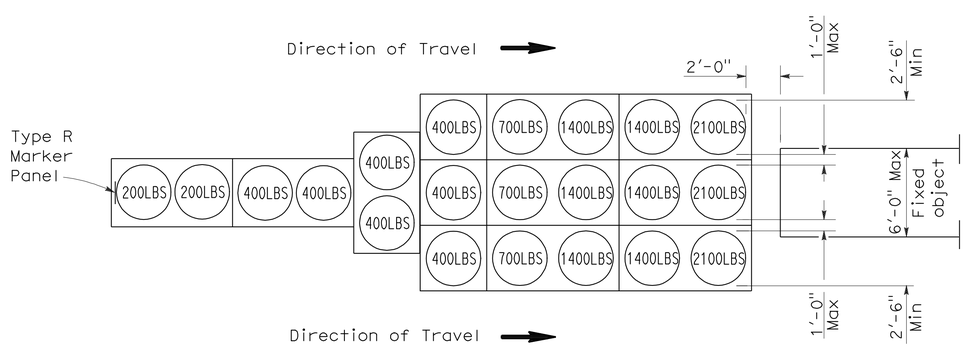

ARRAY 'TU21'

Approach speed 45 mph or more

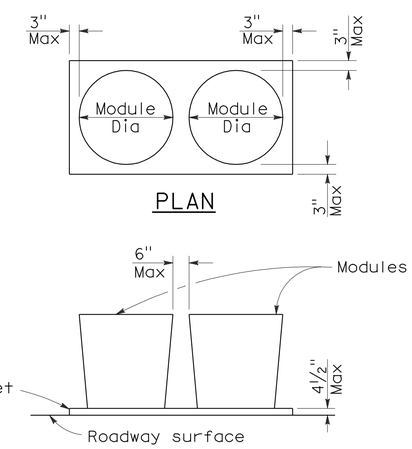

PLAN

ELEVATION

CRASH CUSHION PALLET DETAIL

See Note 7

NOTES:

1. (XXX) Indicates sand filled module location and weight of sand in pounds for each module. Module spacing is based on the greater diameter of the module.
2. All sand weights are nominal.
3. Temporary crash cushion arrays shall not encroach on the traveled way.
4. Place the top of Type R marker panel 1" below the module lid.
5. Refer to Standard Plan A73B for marker details.
6. Approach speeds indicated conform to NCHRP 350 Report criteria.
7. Use of pallets is optional.

STATE OF CALIFORNIA
DEPARTMENT OF TRANSPORTATION

TEMPORARY CRASH CUSHION, SAND FILLED (UNIDIRECTIONAL)

NO SCALE

RSP T1A DATED JUNE 6, 2008 SUPERSEDES STANDARD PLAN T1A
DATED MAY 1, 2006 - PAGE 211 OF THE STANDARD PLANS BOOK DATED MAY 2006.

REVISED STANDARD PLAN RSP T1A

2006 REVISED STANDARD PLAN RSP T1A

DIST	COUNTY	ROUTE	POST MILES TOTAL PROJECT	SHEET NO.	TOTAL SHEETS
02	Sha	5,44	R3.2/R18.6, L0.3/L1.8	107	120

Randell D. Hiatt
REGISTERED CIVIL ENGINEER

June 6, 2008
PLANS APPROVAL DATE

REGISTERED PROFESSIONAL ENGINEER
Randell D. Hiatt
No. C50200
Exp. 6-30-09
CIVIL
STATE OF CALIFORNIA

The State of California or its officers or agents shall not be responsible for the accuracy or completeness of electronic copies of this plan sheet.

To accompany plans dated 7-12-10

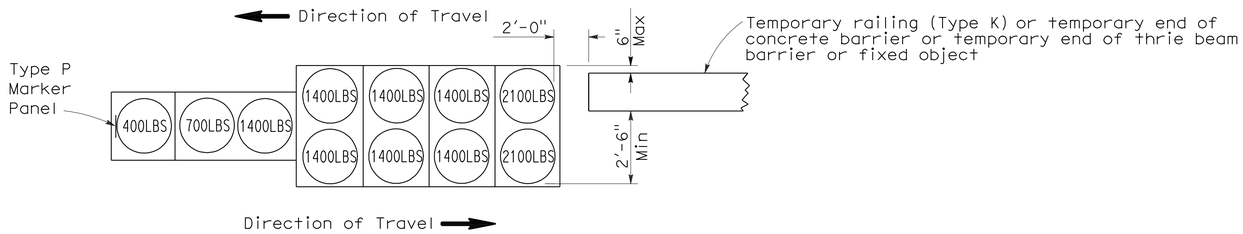

ARRAY 'TB11'

Approach speed less than 45 mph

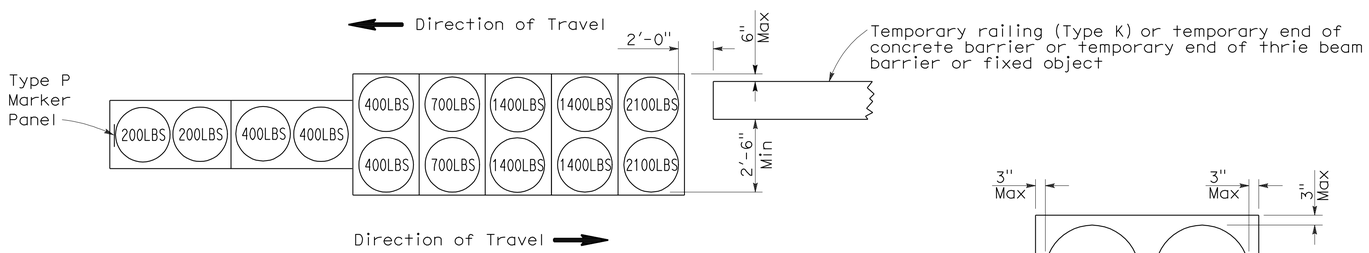

ARRAY 'TB14'

Approach speed 45 mph or more

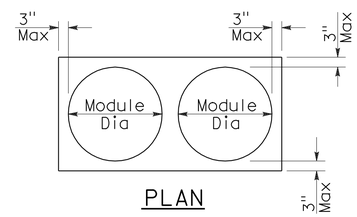

PLAN

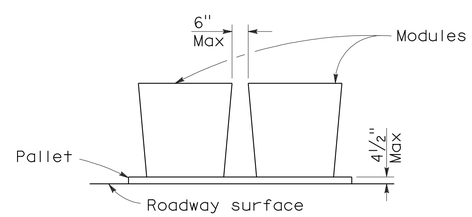

ELEVATION

CRASH CUSHION PALLET DETAIL

See Note 7

NOTES:

1. (XXX) Indicates sand filled module location and weight of sand in pounds for each module. Module spacing is based on the greater diameter of the module.
2. All sand weights are nominal.
3. Temporary crash cushion arrays shall not encroach on the traveled way.
4. Place the Type P marker panel so that the bottom of the panel rests upon the pallet.
5. Refer to Standard Plan A73B for marker details.
6. Approach speeds indicated conform to NCHRP 350 Report criteria.
7. Use of pallets is optional.

STATE OF CALIFORNIA
DEPARTMENT OF TRANSPORTATION

TEMPORARY CRASH CUSHION, SAND FILLED (BIDIRECTIONAL)

NO SCALE

RSP T1B DATED JUNE 6, 2008 SUPERSEDES STANDARD PLAN T1B
DATED MAY 1, 2006 - PAGE 212 OF THE STANDARD PLANS BOOK DATED MAY 2006.

REVISED STANDARD PLAN RSP T1B

2006 REVISED STANDARD PLAN RSP T1B

5-15-08

DIST	COUNTY	ROUTE	POST MILES TOTAL PROJECT	SHEET NO.	TOTAL SHEETS
02	Sha	5,44	R3.2/R18.6, L0.3/L1.8	108	120

Randell D. Hiatt
REGISTERED CIVIL ENGINEER

June 6, 2008
PLANS APPROVAL DATE

REGISTERED PROFESSIONAL ENGINEER
Randell D. Hiatt
No. C50200
Exp. 6-30-09
CIVIL
STATE OF CALIFORNIA

The State of California or its officers or agents shall not be responsible for the accuracy or completeness of electronic copies of this plan sheet.

To accompany plans dated 7-12-10

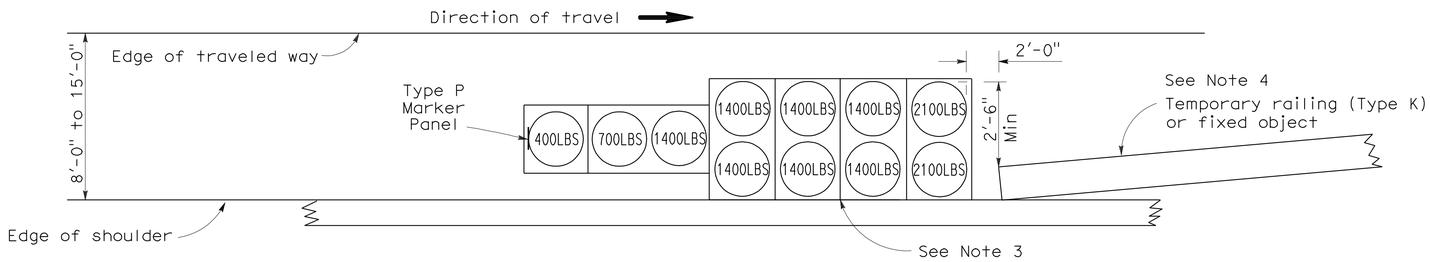

ARRAY 'TS11'

Approach speed less than 45 mph
See Note 9

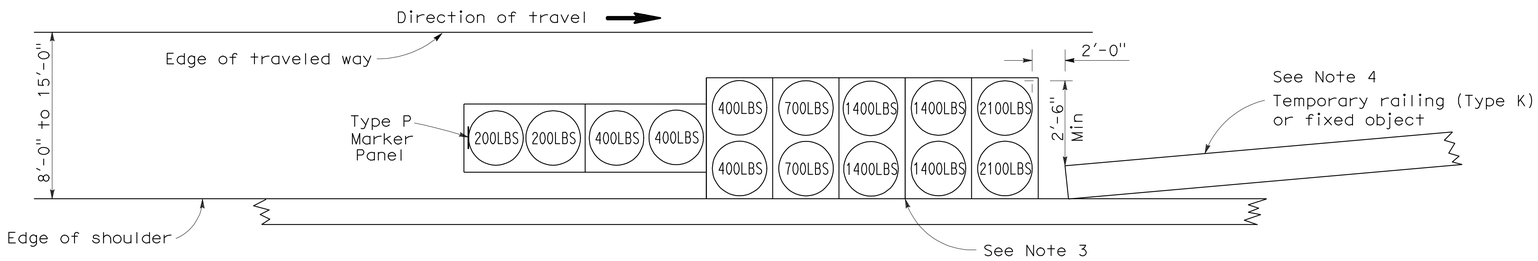

ARRAY 'TS14'

Approach speed 45 mph or more
See Note 9

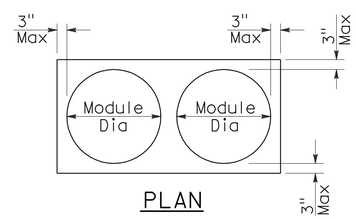

PLAN

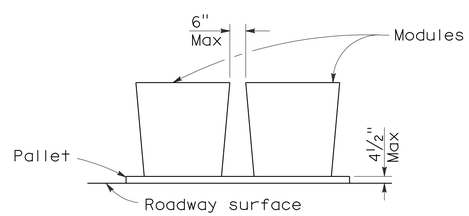

ELEVATION

CRASH CUSHION PALLET DETAIL

See Note 11

NOTES:

1. (XXX) Indicates sand filled module location and weight of sand in pounds for each module. Module spacing is based on the greater diameter of the module.
2. All sand weights are nominal.
3. The temporary crash cushion arrays shown on this plan shall be used only in locations where there will be traffic on one side of the temporary crash cushion array.
4. If the fixed object or approach end of the temporary railing is less than 15'-0" from the edge of traveled way, a temporary crash cushion is required in a construction or work zone.
5. Temporary crash cushion arrays shall not encroach on the traveled way.
6. Arrays for median shoulders shall conform to details shown on this plan for outside shoulders.
7. Place the Type P marker panel so that the bottom of the panel rests upon the pallet and faces traffic.
8. Refer to Standard Plan A73B for marker details.
9. For shoulder widths less than 8'-0", appropriate approved crash cushion protection, other than sand filled modules, shall be provided at fixed objects and at approach ends of temporary railing. The specific type of crash cushion shall be as shown on the project plans or as specified in the Special Provisions, or if not shown on the project plans or specified in the Special Provisions, shall be as approved by the Engineer.
10. Approach speeds indicated conform to NCHRP 350 Report criteria.
11. Use of pallets is optional.

STATE OF CALIFORNIA
DEPARTMENT OF TRANSPORTATION

TEMPORARY CRASH CUSHION, SAND FILLED (SHOULDER INSTALLATIONS)

NO SCALE

RSP T2 DATED JUNE 6, 2008 SUPERSEDES STANDARD PLAN T2
DATED MAY 1, 2006 - PAGE 213 OF THE STANDARD PLANS BOOK DATED MAY 2006.

REVISED STANDARD PLAN RSP T2

2006 REVISED STANDARD PLAN RSP T2

5-15-08

DIST	COUNTY	ROUTE	POST MILES TOTAL PROJECT	SHEET NO.	TOTAL SHEETS
02	Sha	5,44	R3.2/R18.6, L0.3/L1.8	109	120

Greg W. Edwards
REGISTERED CIVIL ENGINEER

November 17, 2006
PLANS APPROVAL DATE

REGISTERED PROFESSIONAL ENGINEER
Greg W. Edwards
No. C36386
Exp. 6-30-08
CIVIL
STATE OF CALIFORNIA

The State of California or its officers or agents shall not be responsible for the accuracy or completeness of electronic copies of this plan sheet.

To accompany plans dated 7-12-10

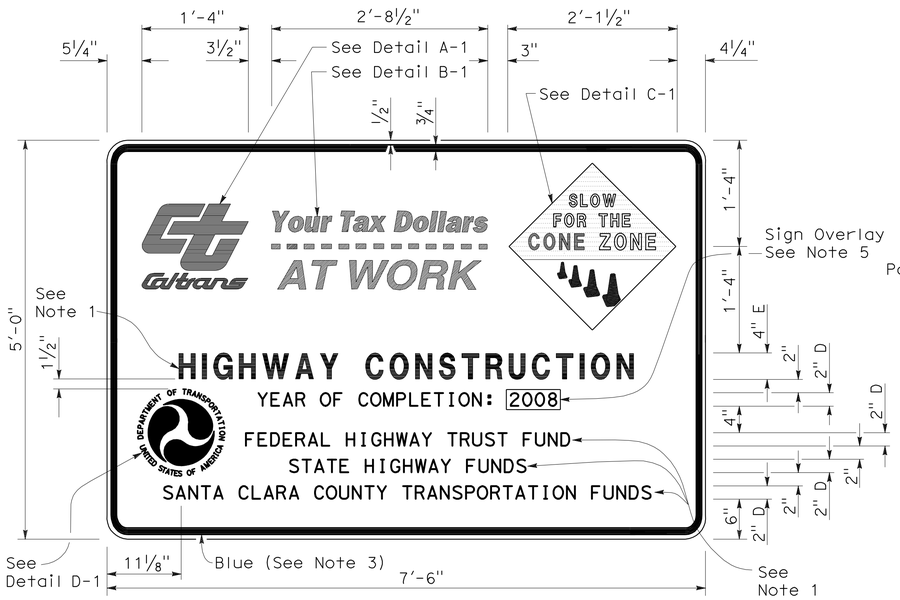

TYPE 1

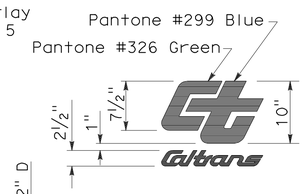

DETAIL A-1

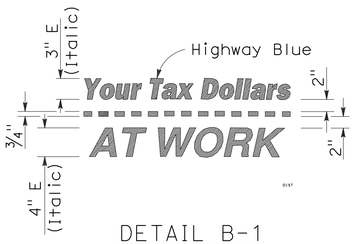

DETAIL B-1
(See Note 3)

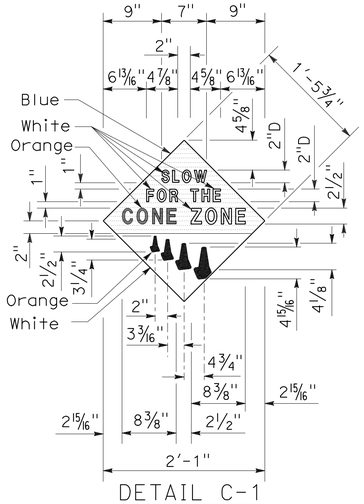

DETAIL C-1
(See Note 4)

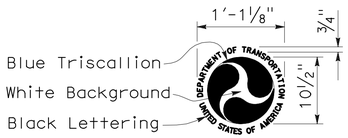

DETAIL D-1
(See Note 6)

NOTES:

1. The sign messages shown for type of project and fund types are examples only. See the Special Provisions for the applicable type of project and fund type messages to be used.
2. Except as otherwise shown, the legend of sign shall be black on a white background (non-reflective).
3. The border of the signs and details "B-1" and "B-2" shall be blue (non-reflective).
4. The diamond in details "C-1" and "C-2" shall be blue for the background of message, " SLOW FOR THE CONE ZONE", and white background for the orange cones. The color and type of font for the "SLOW FOR THE CONE ZONE" message shall be: "SLOW" white D; "FOR THE" white D; "CONE" orange Arial font; "ZONE" white Arial font.
5. Year of completion of project construction shown on the overlay is an example only. See the Special Provisions.
6. Use when the Project involves Federal Highway Trust Fund.

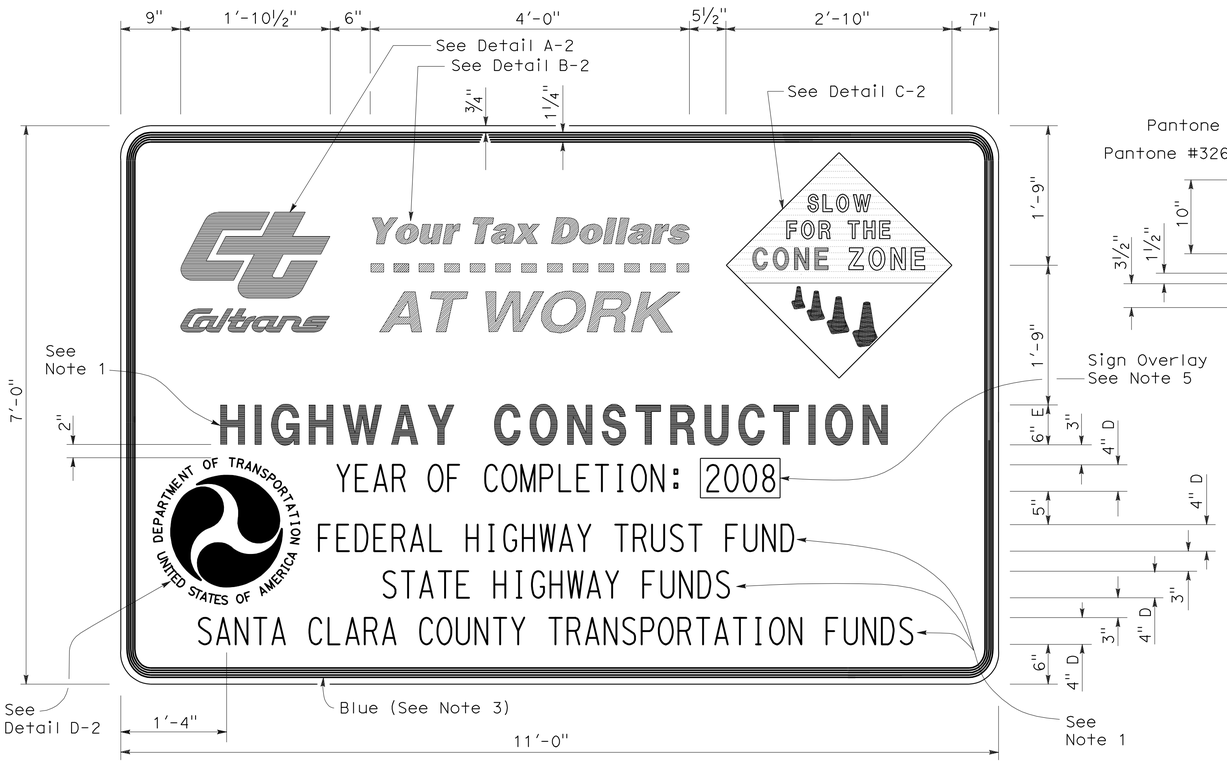

TYPE 2

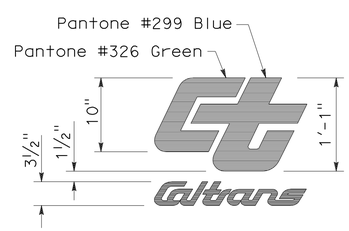

DETAIL A-2

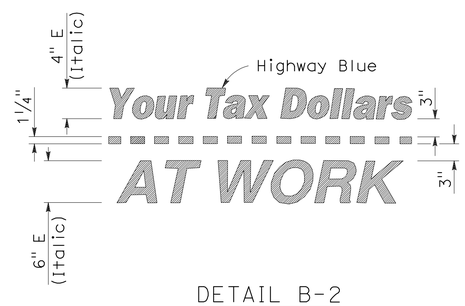

DETAIL B-2
(See Note 3)

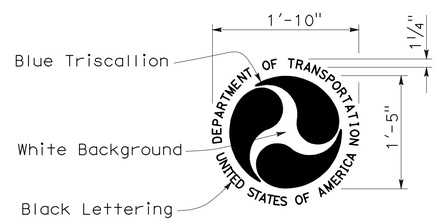

DETAIL D-2
(See Note 6)

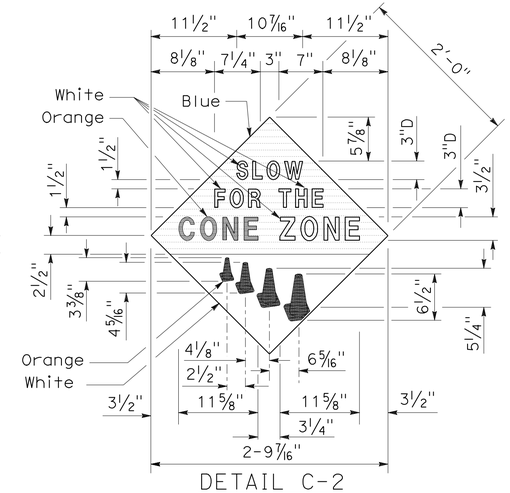

DETAIL C-2
(See Note 4)

STATE OF CALIFORNIA
DEPARTMENT OF TRANSPORTATION

CONSTRUCTION PROJECT FUNDING IDENTIFICATION SIGNS

NO SCALE

RSP T7 DATED NOVEMBER 17, 2006 SUPERSEDES STANDARD PLAN T7
DATED MAY 1, 2006 - PAGE 217 OF THE STANDARD PLANS BOOK DATED MAY 2006.

REVISED STANDARD PLAN RSP T7

2006 REVISED STANDARD PLAN RSP T7

9-7-06

DIST	COUNTY	ROUTE	POST MILES TOTAL PROJECT	SHEET NO.	TOTAL SHEETS
02	Sha	5,44	R3.2/R18.6, L0.3/L1.8	110	120

LICENSED LANDSCAPE ARCHITECT

April 3, 2009
PLANS APPROVAL DATE

The State of California or its officers or agents shall not be responsible for the accuracy or completeness of electronic copies of this plan sheet.

LICENSED LANDSCAPE ARCHITECT — Robert B. Schott — Signature — 11-30-10 Renewal Date — 2-25-09 Date — STATE OF CALIFORNIA

To accompany plans dated 7-12-10

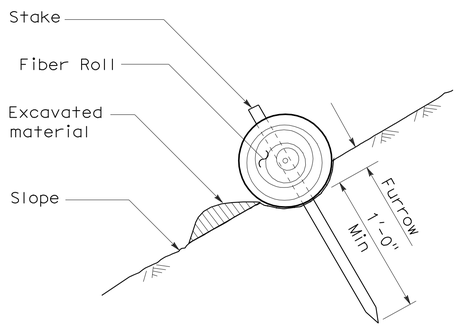

SECTION

TEMPORARY FIBER ROLL (TYPE 1)

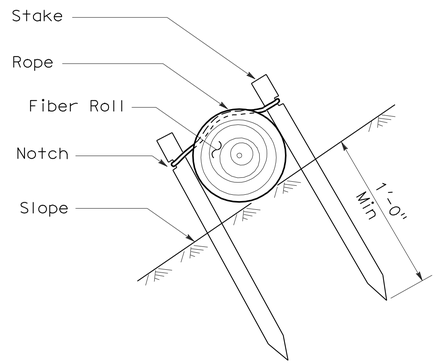

SECTION

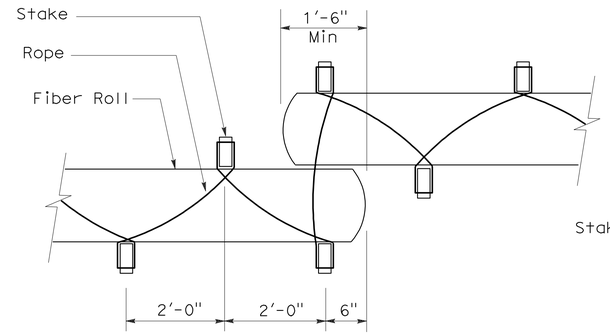

PLAN

TEMPORARY FIBER ROLL (TYPE 2)

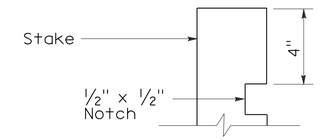

ELEVATION

STAKE NOTCH DETAIL

NOTES:

1. Temporary fiber roll spacing varies depending upon slope inclination.
2. Installations shown in the perspectives are for slope inclination of 10:1 and steeper.

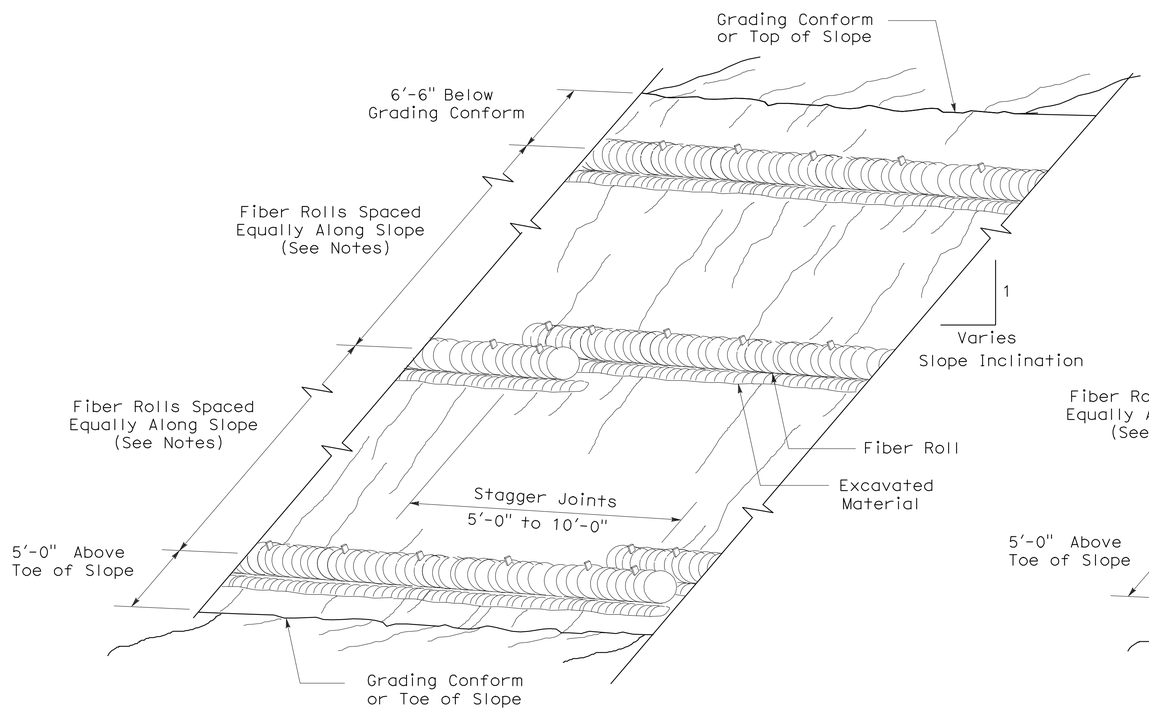

PERSPECTIVE

TEMPORARY FIBER ROLL (TYPE 1)

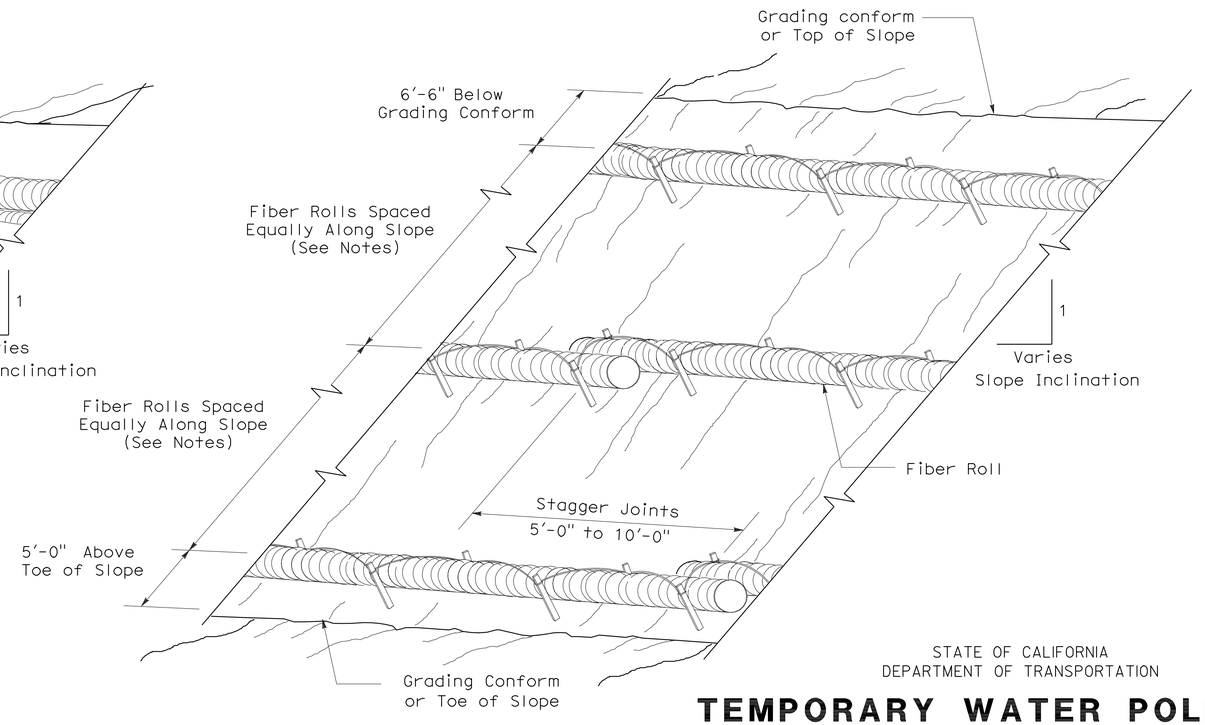

PERSPECTIVE

TEMPORARY FIBER ROLL (TYPE 2)

STATE OF CALIFORNIA
DEPARTMENT OF TRANSPORTATION

TEMPORARY WATER POLLUTION CONTROL DETAILS (TEMPORARY FIBER ROLL)

NO SCALE

RSP T56 DATED APRIL 3, 2009 SUPERSEDES STANDARD PLAN T56
DATED MAY 1, 2006 - PAGE 232 OF THE STANDARD PLANS BOOK DATED MAY 2006.

REVISED STANDARD PLAN RSP T56

2006 REVISED STANDARD PLAN RSP T56

2-23-09

DIST	COUNTY	ROUTE	POST MILES TOTAL PROJECT	SHEET NO.	TOTAL SHEETS
02	Sha	5,44	R3.2/R18.6, L0.3/L1.8	111	120

LICENSED LANDSCAPE ARCHITECT

August 15, 2008
PLANS Approval DATE

LICENSED LANDSCAPE ARCHITECT
Robert B. Schott 3895
Signature
11-04-08
Renewal Date
08-11-08
Date
STATE OF CALIFORNIA

The State of California or its officers or agents shall not be responsible for the accuracy or completeness of electronic copies of this plan sheet.

To accompany plans dated 7-12-10

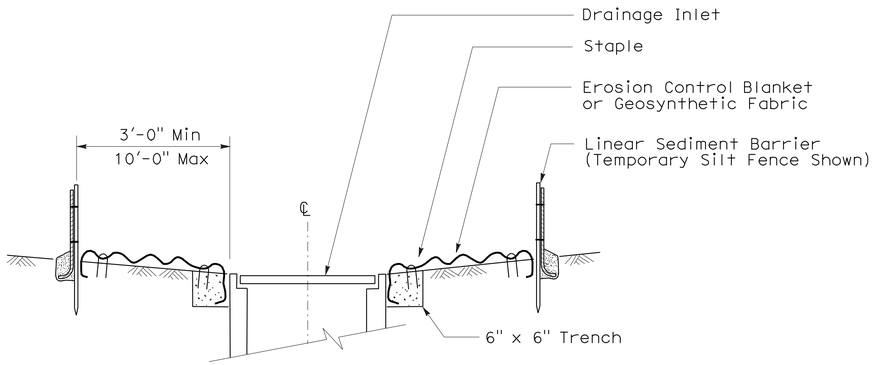

SECTION A-A

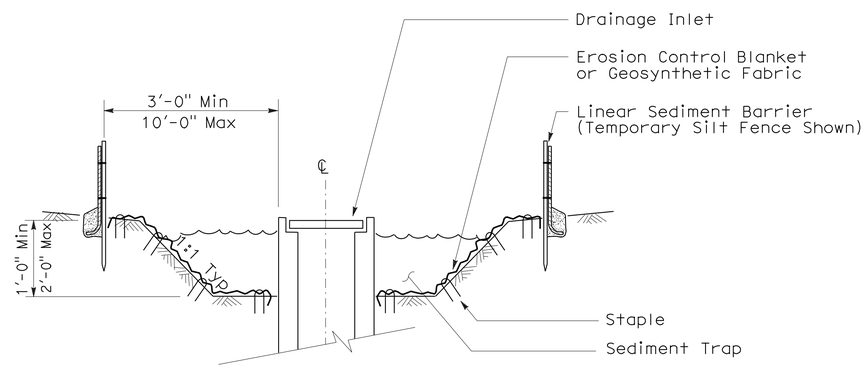

SECTION B-B

NOTES:

1. See Standard Plan T51 for Temporary Silt Fence.
2. Dimensions may vary to fit field conditions.

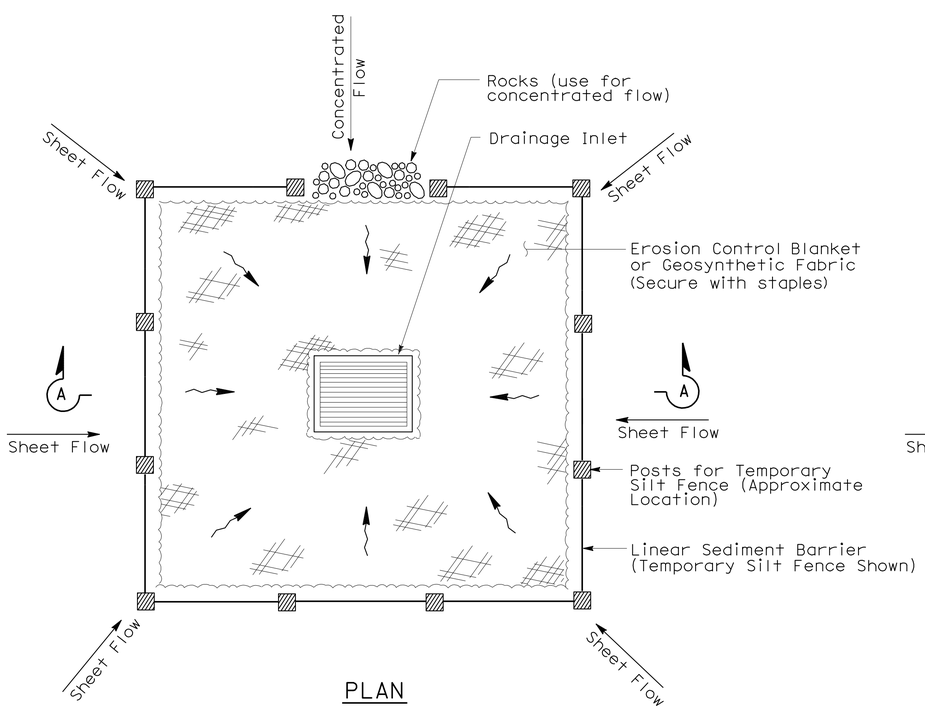

PLAN

TEMPORARY DRAINAGE INLET PROTECTION (TYPE 1)

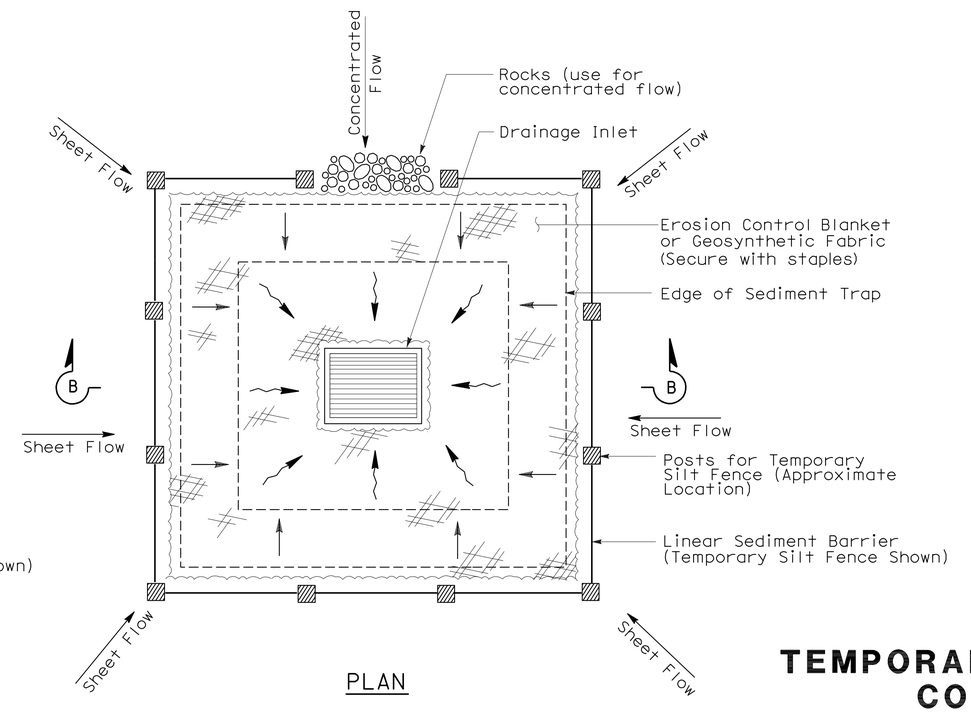

PLAN

TEMPORARY DRAINAGE INLET PROTECTION (TYPE 2) (EXCAVATED SEDIMENT TRAP)

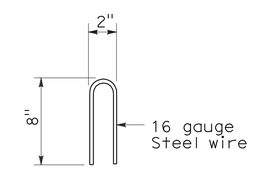

STAPLE DETAIL

STATE OF CALIFORNIA
DEPARTMENT OF TRANSPORTATION

TEMPORARY WATER POLLUTION CONTROL DETAILS (TEMPORARY DRAINAGE INLET PROTECTION)

NO SCALE

NSP T61 DATED AUGUST 15, 2008 SUPPLEMENTS THE STANDARD PLANS BOOK DATED MAY 2006.

NEW STANDARD PLAN NSP T61

2006 NEW STANDARD PLAN NSP T61

7-11-08

DIST	COUNTY	ROUTE	POST MILES TOTAL PROJECT	SHEET NO.	TOTAL SHEETS
02	Sha	5,44	R3.2/R18.6, L0.3/L1.8	112	120

LICENSED LANDSCAPE ARCHITECT

August 15, 2008
PLANS APPROVAL DATE

LICENSED LANDSCAPE ARCHITECT — Robert B. Schott — Signature — 11-04-08 Renewal Date — 08-11-08 Date — STATE OF CALIFORNIA

The State of California or its officers or agents shall not be responsible for the accuracy or completeness of electronic copies of this plan sheet.

To accompany plans dated 7-12-10

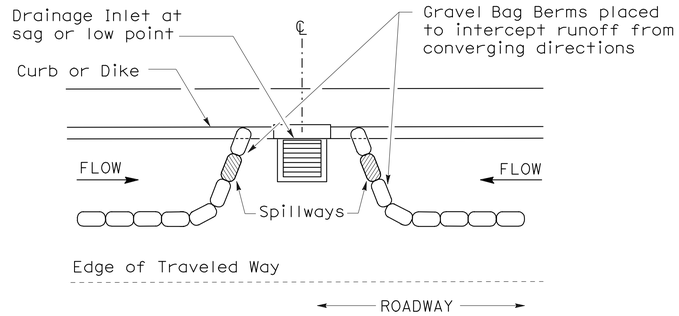

PLAN

CONFIGURATION FOR SAG POINT INLET (GRAVEL BAG BERM)

GRAVEL BAG BERM (TYPE 3A) SPACING TABLE

SLOPE OF ROADWAY (PERCENT)	1 to 3.9	4 to 5.9	6 to 7.9	8 to 10	10+
INTERVAL BETWEEN BERM	100′	75′	50′	25′	12′

For slope of less than 1%, install barriers only if erosion/sediment is prevalent

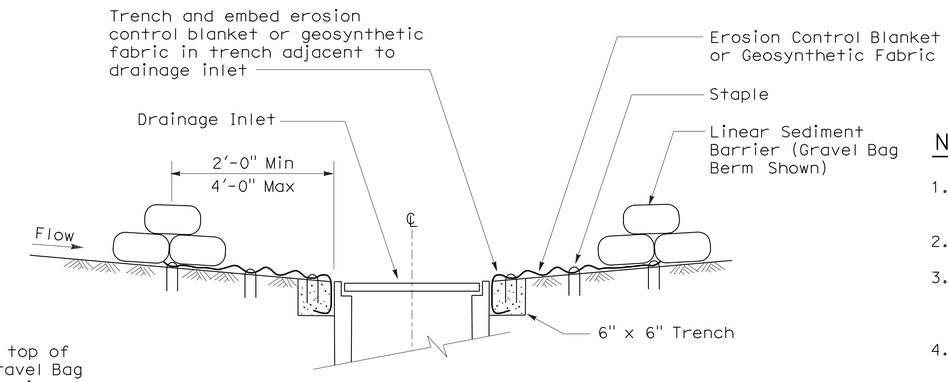

SECTION A-A

NOTES:

1. Place safety cones adjacent to drainage inlet protection.
2. Dimensions may vary to fit field conditions.
3. Install a minimum of 3 gravel bag berms upstream of each drainage inlet to be protected.
4. Position erosion control blanket or geosynthetic fabric at edge of concrete apron and secure in trench.
5. Erosion control blanket or geosynthetic fabric is not required if the area adjacent to the drainage inlet is vegetated or paved.

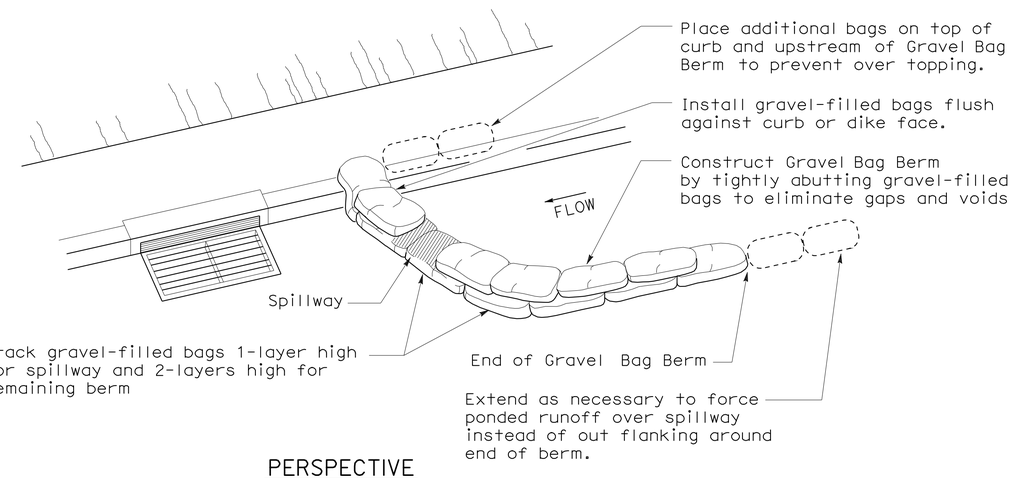

PERSPECTIVE

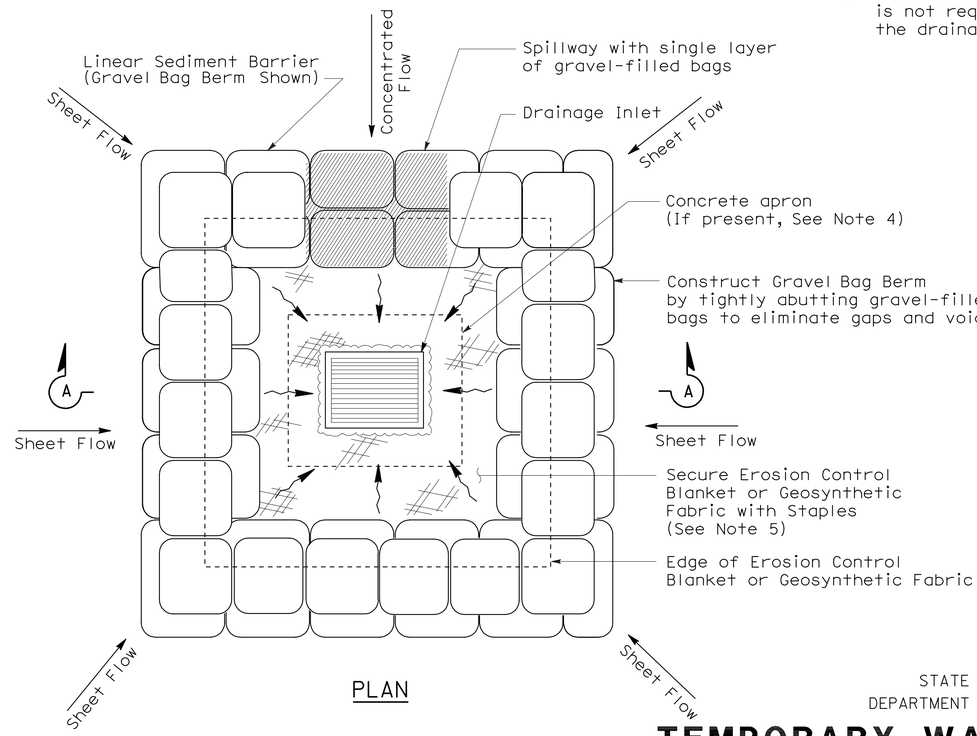

PLAN

TEMPORARY DRAINAGE INLET PROTECTION (TYPE 3B)

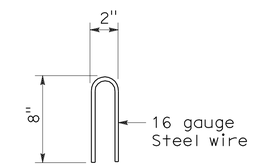

STAPLE DETAIL

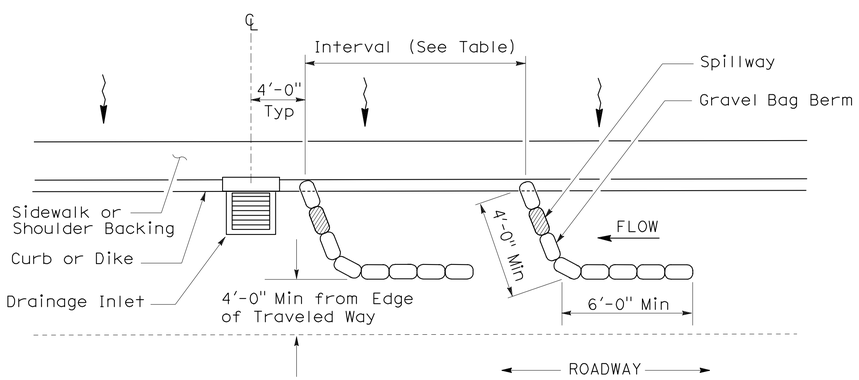

PLAN

TEMPORARY DRAINAGE INLET PROTECTION (TYPE 3A) (GRAVEL BAG BERM)

STATE OF CALIFORNIA
DEPARTMENT OF TRANSPORTATION

TEMPORARY WATER POLLUTION CONTROL DETAILS (TEMPORARY DRAINAGE INLET PROTECTION)

NO SCALE

NSP T62 DATED AUGUST 15, 2008 SUPPLEMENTS THE STANDARD PLANS BOOK DATED MAY 2006.

NEW STANDARD PLAN NSP T62

2006 NEW STANDARD PLAN NSP T62

7-11-08

DIST	COUNTY	ROUTE	POST MILES TOTAL PROJECT	SHEET NO.	TOTAL SHEETS
02	Sha	5,44	R3.2/R18.6, L0.3/L1.8	113	120

LICENSED LANDSCAPE ARCHITECT

August 15, 2008
PLANS APPROVAL DATE

The State of California or its officers or agents shall not be responsible for the accuracy or completeness of electronic copies of this plan sheet.

LICENSED LANDSCAPE ARCHITECT — Robert B. Schott — Signature — 11-04-08 Renewal Date — 08-11-08 Date — STATE OF CALIFORNIA

To accompany plans dated 7-12-10

FLEXIBLE SEDIMENT BARRIER SPACING TABLE

SLOPE OF ROADWAY (PERCENT)	0 to 0.9	1 to 1.9	2 to 2.9	3 to 4	5+
INTERVAL BETWEEN BARRIERS	50′	35′	30′	25′	20′
ANGLE FROM FACE OF CURB	70°	70°	70°	45°	45°
SUGGESTED BARRIER LENGTH	6′	6′	6′	6′	6′

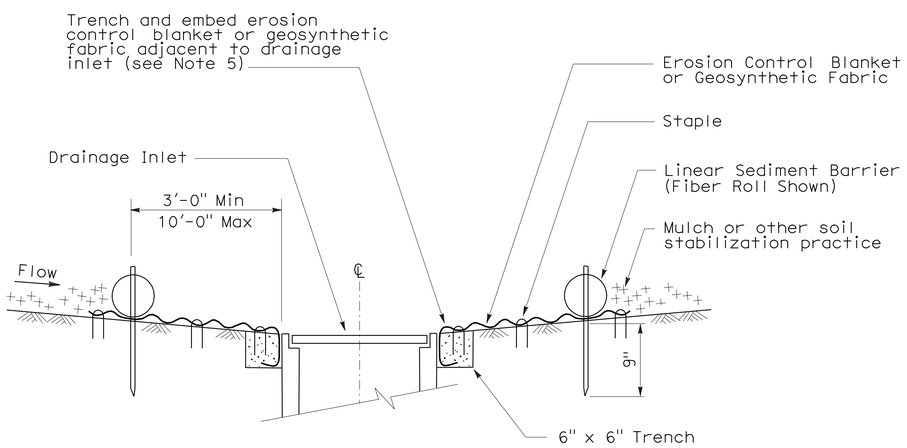

SECTION A-A

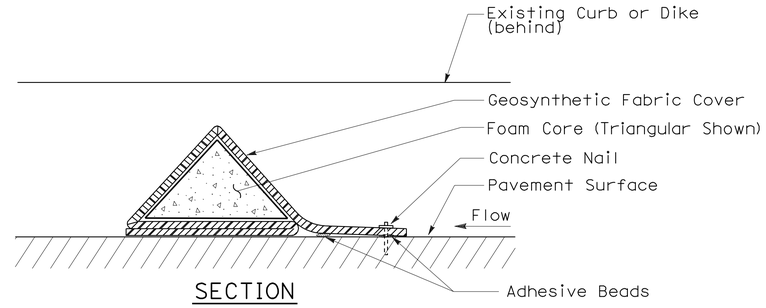

SECTION

FLEXIBLE SEDIMENT BARRIER DETAIL (FOAM BARRIER SHOWN)

NOTES:

1. See Standard Plan T51 for Temporary Silt Fence.
2. Dimensions may vary to fit field conditions.
3. Install a minimum of 3 flexible sediment barriers upstream of each drainage inlet to be protected.
4. Position erosion control blanket or geosynthetic fabric at edge of concrete apron and secure in trench.
5. Erosion control blanket or geosynthetic fabric is not required if the area adjacent to the drainage inlet is vegetated.

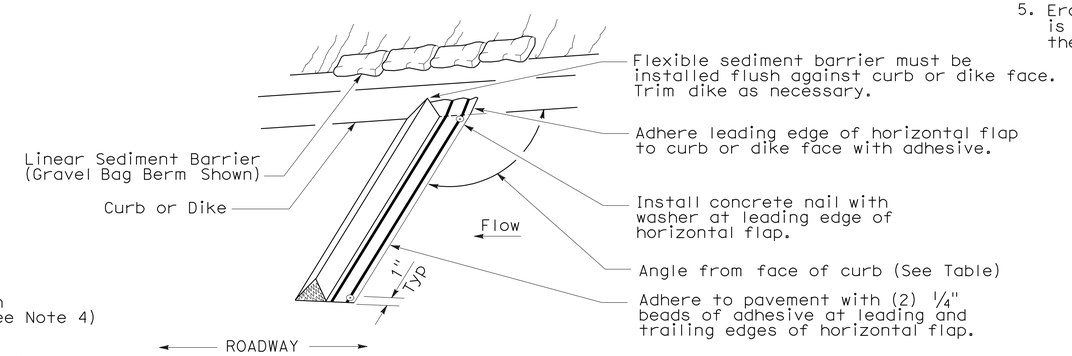

PERSPECTIVE

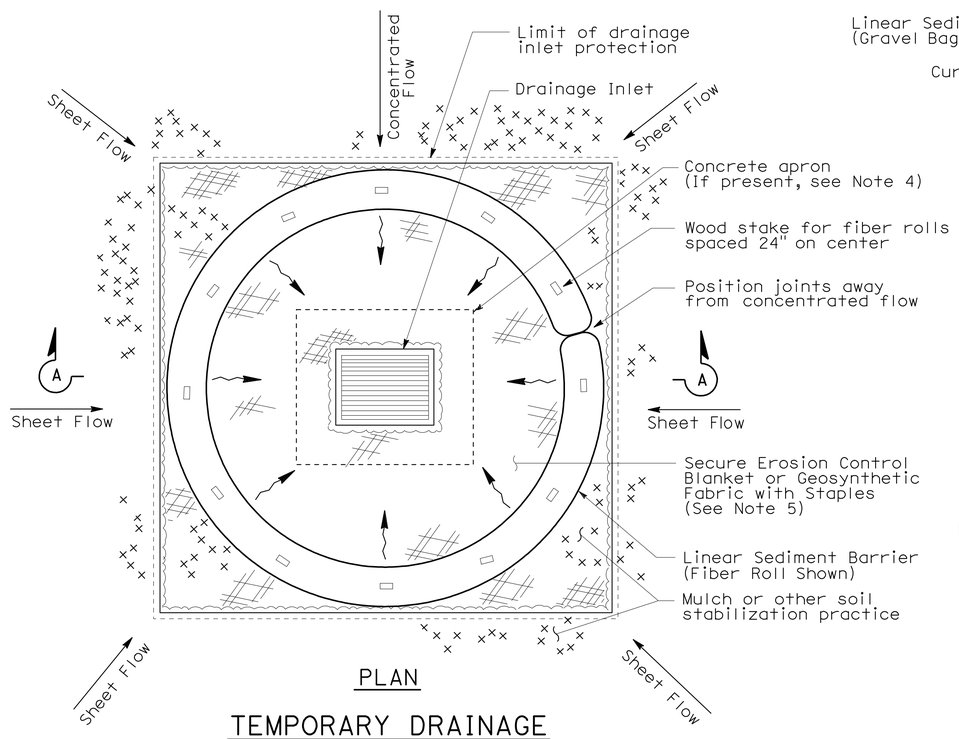

PLAN

TEMPORARY DRAINAGE INLET PROTECTION (TYPE 4A)

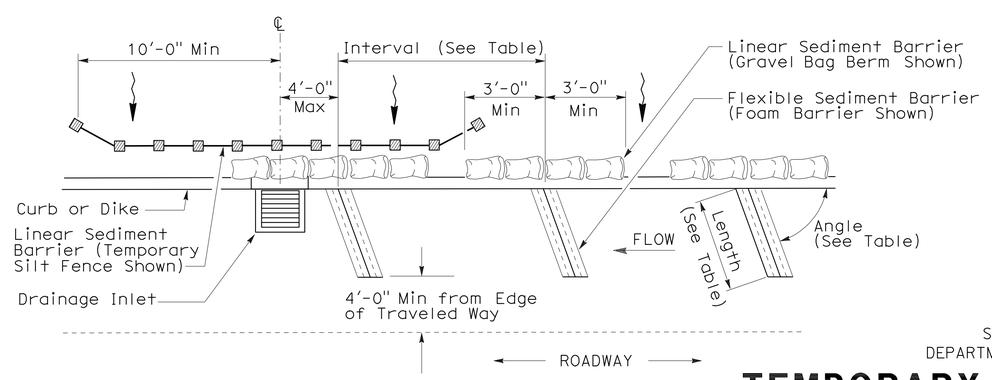

PLAN

TEMPORARY DRAINAGE INLET PROTECTION (TYPE 4B) FLEXIBLE SEDIMENT BARRIER

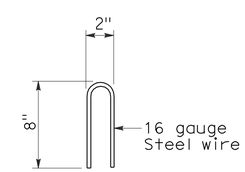

STAPLE DETAIL

STATE OF CALIFORNIA
DEPARTMENT OF TRANSPORTATION

TEMPORARY WATER POLLUTION CONTROL DETAILS (TEMPORARY DRAINAGE INLET PROTECTION)

NO SCALE

NSP T63 DATED AUGUST 15, 2008 SUPPLEMENTS THE STANDARD PLANS BOOK DATED MAY 2006.

NEW STANDARD PLAN NSP T63

2006 NEW STANDARD PLAN NSP T63

DIST	COUNTY	ROUTE	POST MILES TOTAL PROJECT	SHEET NO.	TOTAL SHEETS
02	Sha	5,44	R3.2/R18.6, L0.3/L1.8	114	120

LICENSED LANDSCAPE ARCHITECT

August 15, 2008
PLANS APPROVAL DATE

LICENSED LANDSCAPE ARCHITECT
Robert B. Schott 3625
Signature
11-04-08
Renewal Date
08-11-08
Date
STATE OF CALIFORNIA

The State of California or its officers or agents shall not be responsible for the accuracy or completeness of electronic copies of this plan sheet.

To accompany plans dated 7-12-10

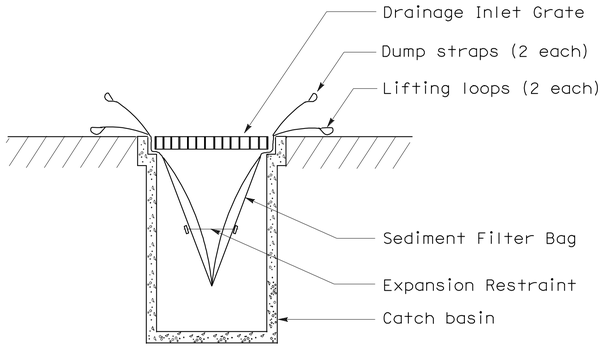

SECTION B-B

SEDIMENT FILTER BAG DETAIL

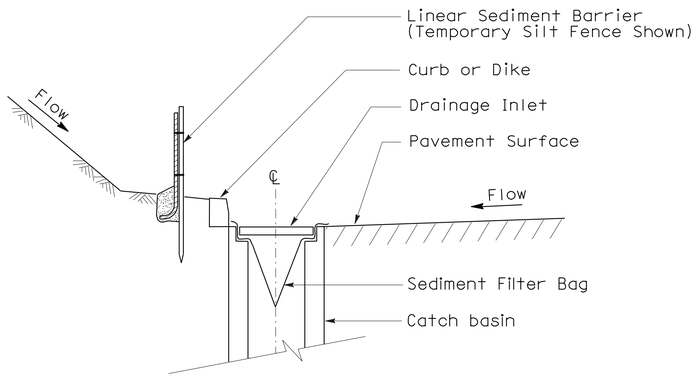

SECTION A-A

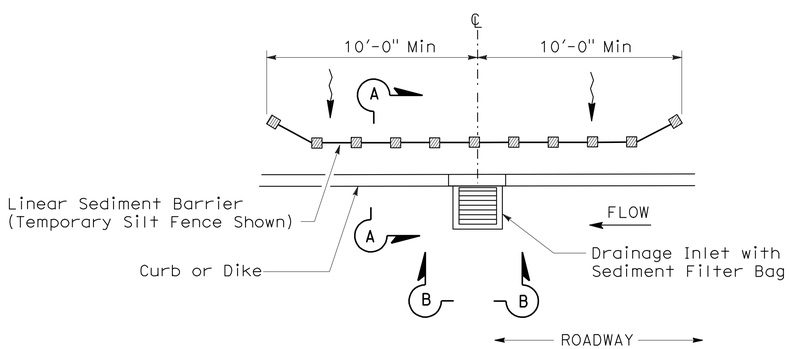

PLAN

TEMPORARY DRAINAGE INLET PROTECTION (TYPE 5) (SEDIMENT FILTER BAG)

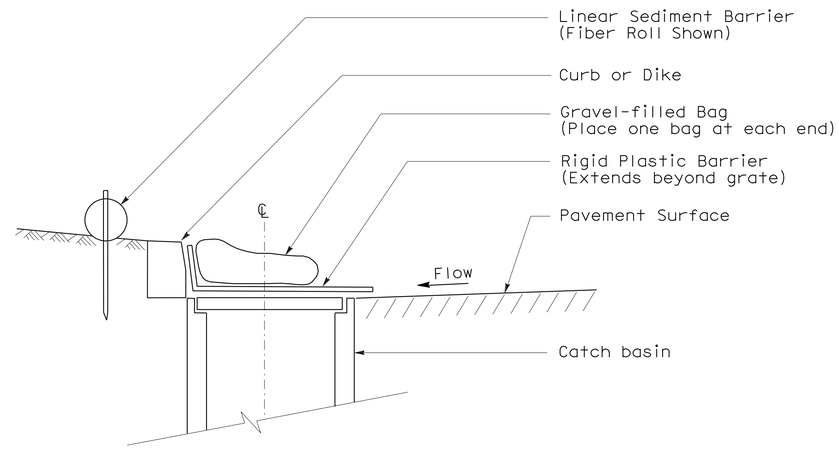

SECTION

TEMPORARY DRAINAGE INLET PROTECTION (TYPE 6A) (CATCH BASIN WITH GRATE)

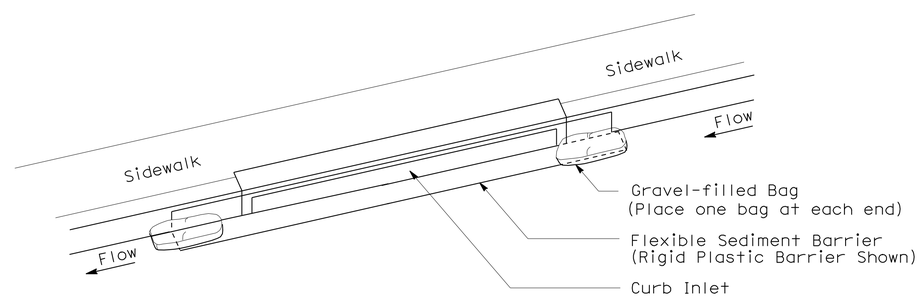

PERSPECTIVE

TEMPORARY DRAINAGE INLET PROTECTION (TYPE 6B) (CURB INLET WITHOUT GRATE)

NOTES:

1. See Standard Plan T51 for Temporary Silt Fence.
2. Dimensions may vary to fit field conditions.

STATE OF CALIFORNIA
DEPARTMENT OF TRANSPORTATION

TEMPORARY WATER POLLUTION CONTROL DETAILS (TEMPORARY DRAINAGE INLET PROTECTION)

NO SCALE

NSP T64 DATED AUGUST 15, 2008 SUPPLEMENTS THE STANDARD PLANS BOOK DATED MAY 2006.

NEW STANDARD PLAN NSP T64

2006 NEW STANDARD PLAN NSP T64

7-11-08

DIST	COUNTY	ROUTE	POST MILES TOTAL PROJECT	SHEET NO.	TOTAL SHEETS
02	Sha	5,44	R3.2/R18.6, L0.3/L1.8	115	120

REGISTERED ELECTRICAL ENGINEER

October 5, 2007
PLANS APPROVAL DATE

REGISTERED PROFESSIONAL ENGINEER Jeffery G. McRae No. E14512 Exp. 6-30-08 ELECTRICAL STATE OF CALIFORNIA

The State of California or its officers or agents shall not be responsible for the accuracy or completeness of electronic copies of this plan sheet.

To accompany plans dated 7-12-10

ELECTROLIERS

STANDARD TYPES
15, 15D
15 STRUCTURE
21, 21D STRUCTURE
30
31
32
35
36-20A

High mast light pole

Double Arm lighting standard

Existing electrolier

Electrolier foundation (Future installation)

NOTES:

1. Luminaires shall be 310 W HPS when installed on Type 21, 21D, 30, 31, 32, 35 and 36-20A Standards, unless otherwise specified. Luminaires shall be 200 W HPS when installed on other type standards or poles, unless otherwise specified.
2. Luminaires shall be the cutoff type, ANSI Type Ⅲ medium cutoff lighting distribution, unless otherwise specified.
3. Variations noted adjacent to symbol on project plans.

Electrolier (see project notes or project plans)

Luminaire on wood pole

STANDARD NOTES:

- AB — Abandon. If applied to conduit, remove conductors.
- BC — Install pull box in existing conduit run.
- BP — Pedestrian barricade, type as indicated on plan.
- CB — Install conduit into existing pull box.
- CC — Connect new and existing conduit. Remove existing conductors and install conductors as indicated.
- CF — Conduit to remain for future use. Remove conductors. Install pull wire or rope.
- DH — Detector handhole.
- FA — Foundation to be abandoned.
- IS — Install sign on signal mast arm.
- NS — No slip base on standard.
- PEC — Photoelectric control.
- PEU — Photoelectric unit.
- RC — Equipment or material to be removed and become the property of the Contractor.
- RE — Remove electrolier, fuses and ballast. Tape ends of conductors.
- RL — Relocate equipment.
- RR — Remove and reuse equipment.
- RS — Remove and salvage equipment.
- SC — Splice new to existing conductors.
- SD — Service disconnect.
- SF — Standard to remain for future use. Remove luminaire, pole conductors, fuses and ballast.
- TSP — Telephone service point.

ABBREVIATIONS AND EQUIPMENT DESIGNATIONS

PROPOSED	EXISTING	
BBS	bbs	Battery backup system
BC	bc	Bolt circle
C	C	Conduit
CCTV	cctv	Closed circuit television
CKT	ckt	Circuit
CMS	cms	Changeable message sign
DLC	dlc	Loop detector lead-in cable
EMS	ems	Extinguishable message sign
EVC	evc	Emergency vehicle cable
EVD	evd	Emergency vehicle detector
FB	fb	Flashing beacon
FBCA	fbca	Flashing beacon control assembly
FBS	fbs	Flashing beacon with slip base
FO	fo	Fiber optic
G	G	Ground (Equipment Grounding Conductor)
GFCI	GFCI	Ground fault circuit interrupt
HAR	har	Highway advisory radio
HEX	hex	Hexagonal
HPS	hps	High pressure sodium
IISNS	iisns	Internally illuminated street name sign
ISL	isl	Induction sign lighting
LED	led	Light emitting diode
LMA	lma	Luminaire mast arm
LPS	lps	Low pressure sodium
LTG	ltg	Lighting
LUM	lum	Luminaire
MAT	mat	Mast arm mounting vehicle signal faces, top attachment
MAS	mas	Mast arm mounting vehicle signal faces, side attachment
MAS-4A	mas-4A	Mast arm mounting vehicle signal faces, side attachment - 4 signal section
MAS-4B	mas-4B	
MAS-4C	mas-4C	
MAS-5A	mas-5A	Mast arm mounting vehicle signal faces, side attachment - 5 signal section
MAS-5B	mas-5B	
MC	mc	Mercury contactor
M/M	m/m	Multiple to multiple transformer
MT	mt	Conduit with pull wire or rope only
MTG	mtg	Mounting
	mv	Mercury vapor lighting fixture
N	N	Neutral (Grounded Conductor)
NC	NC	Normally closed
NO	NO	Normally open
PB	pb	Pull box
PEC	pec	Photoelectric control (Type Ⅰ, Ⅱ, Ⅲ, Ⅳ or Ⅴ as shown)
PED	ped	Pedestrian
PEU	peu	Photoelectric unit
PPB	ppb	Pedestrian push button
RL		Relocated equipment
RM	rm	Ramp metering
SB	sb	Slip base
SIC	sic	Signal interconnect cable
SIG	sig	Signal
SMA	sma	Signal mast arm
SNS	sns	Street name sign
SP	sp	Service point
TDC	tdc	Telephone demarcation cabinet
TMS	tms	Traffic monitoring station
TOS	tos	Traffic Operations System
VEH	veh	Vehicle
XFMR	xfmr	Transformer
COMM	comm	Communication
RWIS	rwis	Roadway weather information system

SOFFIT AND WALL MOUNTED LUMINAIRES

Pendant, 70 W HPS unless otherwise specified.

Flush, 70 W HPS unless otherwise specified.

Wall surface, 70 W HPS unless otherwise specified.

Existing soffit or wall luminaire to remain unmodified.

Existing soffit or wall luminaire to be modified as specified.

NOTE:

Arrow indicates "street side" of luminaire.

STATE OF CALIFORNIA
DEPARTMENT OF TRANSPORTATION

ELECTRICAL SYSTEMS (SYMBOLS AND ABBREVIATIONS)

NO SCALE

RSP ES-1A DATED OCTOBER 5, 2007 SUPERSEDES STANDARD PLAN ES-1A DATED MAY 1, 2006 - PAGE 400 OF THE STANDARD PLANS BOOK DATED MAY 2006.

REVISED STANDARD PLAN RSP ES-1A

2006 REVISED STANDARD PLAN RSP ES-1A

DIST	COUNTY	ROUTE	POST MILES TOTAL PROJECT	SHEET NO.	TOTAL SHEETS
02	Sha	5,44	R3.2/R18.6, L0.3/L1.8	116	120

REGISTERED ELECTRICAL ENGINEER

October 5, 2007
PLANS APPROVAL DATE

REGISTERED PROFESSIONAL ENGINEER Jeffery G. McRae No. E14512 Exp. 6-30-08 ELECTRICAL STATE OF CALIFORNIA

The State of California or its officers or agents shall not be responsible for the accuracy or completeness of electronic copies of this plan sheet.

To accompany plans dated 7-12-10

CONDUIT

PROPOSED	EXISTING	
		Lighting Conduit, unless otherwise indicated or noted
		Traffic signal conduit
C	c	Communication conduit
T	t	Telephone conduit
F	f	Fire alarm conduit
FO	fo	Fiber optic conduit
		Conduit termination (RSP ES-9A C)
R	r	Conduit riser in/on structure or service pole

SERVICE EQUIPMENT

PROPOSED	EXISTING	
OH	oh	Overhead lines
U	U	Wood pole "U" indicates utility owned
		Pole guy with anchor
		Utility transformer - ground mounted
III		Service equipment enclosure type
		Service equipment enclosure door indicates front of enclosure
T	t	Telephone demarcation cabinet

POLE-MOUNTED SERVICE DESIGNATION

Type of installation

TYPE H SERVICE - 28'-10" ← Pole height above grade

ILLUMINATED OVERHEAD SIGN

PROPOSED	EXISTING	
		Overhead sign - Single post
		Overhead sign - Two post
		Overhead sign - Mounted on structure
		Overhead sign with electrolier

SIGNAL EQUIPMENT

PROPOSED	EXISTING	
		Pedestrian signal face
		Pedestrian push button post
		Pedestrian barricade
		Vehicle signal face (with backplate, 3-Section: red, yellow and green)
		Vehicle signal face with angle visors
PV	PV	Modifications of basic symbols: "L" indicates all non-arrow sections louvered "LG" indicates louvered green section only "PV" indicates 12" programmed visibility sections "8" indicates all 8" sections (only when specified)
		Type 15TS and Vehicle signal face
		Vehicle signal face with red, yellow and green left arrow sections
		Vehicle signal face with red and yellow sections and up green arrow
		Vehicle signal face (5 Section) with red, yellow and green sections and yellow and green right arrows
		Type 1 Standard and attached vehicle signal faces
		Standard with signal mast arm only and attached vehicle signal faces and internally illuminated street name sign
		Type 33 Standard, Left-turn vehicle signal face and sign
		Standard with luminaire and signal mast arms and attached vehicle signal faces
		Cantilever flashing beacon Type 9 Frame, with a sign unless otherwise specified or indicated
		Type 15-FBS Standard with two vehicle signal face sections with lens, backplate and visor with a sign
R	Y	Flashing beacon. One vehicle signal face section with lens, backplate and visor. "R" indicates red indication, "Y" indicates yellow indication
		Controller assembly. Door indicates front of cabinet

SIGNAL EQUIPMENT Cont

PROPOSED	EXISTING	
		Guard post
		Type 1 Standard with "Meter On" sign
		Emergency Vehicle detector

NOTES:

1. All signal sections shall be 12" unless shown otherwise.
2. Signal heads shall be provided with backplates unless shown otherwise.
3. Signal indication shall be LED.

STATE OF CALIFORNIA
DEPARTMENT OF TRANSPORTATION

ELECTRICAL SYSTEMS (SYMBOLS AND ABBREVIATIONS)

NO SCALE

RSP ES-1B DATED OCTOBER 5, 2007 SUPERCEDES STANDARD PLAN ES-1B DATED MAY 1, 2006 - PAGE 401 OF THE STANDARD PLANS BOOK DATED MAY 2006.

REVISED STANDARD PLAN RSP ES-1B

2006 REVISED STANDARD PLAN RSP ES-1B

7-10-07

DIST	COUNTY	ROUTE	POST MILES TOTAL PROJECT	SHEET NO.	TOTAL SHEETS
02	Sha	5,44	R3.2/R18.6, L0.3/L1.8	117	120

REGISTERED ELECTRICAL ENGINEER

October 5, 2007
PLANS APPROVAL DATE

REGISTERED PROFESSIONAL ENGINEER Jeffery G. McRae No. E14512 Exp. 6-30-08 ELECTRICAL STATE OF CALIFORNIA

The State of California or its officers or agents shall not be responsible for the accuracy or completeness of electronic copies of this plan sheet.

To accompany plans dated 7-12-10

EQUIPMENT IDENTIFICATION

ILLUMINATED SIGN IDENTIFICATION NUMBER:

Sign No. 12345

10 ISL SCI 1.0

- Sign number - Place on post or structure
- Transformer rating (kVA)
- Lighting control type
- Number and type of fixtures

Do NOT place on standard or structure

ELECTROLIER OR EQUIPMENT IDENTIFICATION NUMBER:

12345 - 15'-0"

- Mast arm length, if shown. Do not place on standard or structure.
- Equipment number - Place on standard or structure. Existing equipment numbers are shown in parenthesis

CONDUIT AND CONDUCTOR IDENTIFICATION:

1½"C, 2#10, 15#14, 2 DLC

- Number and size of conductors and cables
- Size of conduit in inches

Ø1, Ø2, Ø2P, etc.	Traffic phase identification for signal faces, detectors and phase diagrams
1 2 3	Project note numbers
A B C	Equipment description, installation or item numbers
1 2 3	Conduit run numbers

SIGNAL AND LIGHTING STANDARD (TYPICAL DESIGNATION):

19A - 3 - 100

- Wind velocity = 100 mph
- Case 3 arm loading
- Standard type
- Standard Plan sheet number
- Detail number or letter

MISCELLANEOUS EQUIPMENT

PROPOSED	EXISTING	
CMS	cms	Changeable message sign
		Closed circuit television camera
		Highway advisory radio pole and antenna
EMS	ems	Extinguishable message sign
M V	m v	Detection device M = Microwave sensor V = Video image sensor

WIRING DIAGRAM LEGEND

P	Pole
CB	Circuit breaker
A	Ampere
V	Volt
M	Metered
UM	Unmetered
NB	Neutral bus
GB	Ground bus
G	Equipment grounding conductor
N	Grounded conductor (Neutral)

- External conductor
- Conductor or bus
- Tie point
- Contactor coil
- Contactor, Contact NO
- Terminal blocks
- Contactor, Contact NC
- Enclosure bond
- Grounding electrode
- Circuit breaker
- Receptacle

PULL BOXES

PROPOSED EXISTING

Pull box-No. 5 unless otherwise indicated or noted.

3 9A(21)

Pull box-Additional designations or descriptions

3	= No. 3½ pull box
5	= No. 5 pull box
6	= No. 6 pull box
7	= No. 7 (Ceiling pull box)
8	= No. 8 (Pendant soffit pull box)
9	= No. 9 pull box
9A	= No. 9A pull box

(C) = Communications pull box
(E) = Pull box with extension
(S) = Sprinkler control pull box
(21) = Anchor bolts and conduit for future installation of Type 21 Standard
(T) = Traffic pull box

VEHICLE DETECTORS

5 J 9 U

- U = Upper
- L = Lower
- Slot number in input file
- Input file (I or J)
- Phase

PROPOSED EXISTING

	Type A detector loop. Outline of sawcut shown.
	Type B detector loop. Outline of sawcut shown.
	Type C detector loop. Outline of sawcut shown.
	Type D detector loop. Outline of sawcut shown.
	Type E detector loop. Outline of sawcut shown.
	Type Q detector loop. Outline of sawcut shown.
	Magnetic detector
DH dh	Detector handhole
	Microwave or video detection zone

STATE OF CALIFORNIA
DEPARTMENT OF TRANSPORTATION

ELECTRICAL SYSTEMS (SYMBOLS AND ABBREVIATIONS)

NO SCALE

RSP ES-1C DATED OCTOBER 5, 2007 SUPERCEDES STANDARD PLAN ES-1C DATED MAY 1, 2006 - PAGE 402 OF THE STANDARD PLANS BOOK DATED MAY 2006.

REVISED STANDARD PLAN RSP ES-1C

2006 REVISED STANDARD PLAN RSP ES-1C

DIST	COUNTY	ROUTE	POST MILES TOTAL PROJECT	SHEET NO.	TOTAL SHEETS
02	Sha	5,44	R3.2/R18.6, L0.3/L1.8	118	120

Jeffery G. McRae
REGISTERED ELECTRICAL ENGINEER

October 5, 2007
PLANS APPROVAL DATE

REGISTERED PROFESSIONAL ENGINEER
Jeffery G. McRae
No. E14512
Exp. 6-30-08
ELECTRICAL
STATE OF CALIFORNIA

The State of California or its officers or agents shall not be responsible for the accuracy or completeness of electronic copies of this plan sheet.

To accompany plans dated 7-12-10

2006 REVISED STANDARD PLAN RSP ES-2C

NOTES-TYPE III SERVICE EQUIPMENT ENCLOSURES:

1. Service equipment enclosure and metering equipment shall meet the requirements of the service utility. The meter area shall have a sealable, lockable, weathertight cover that can be removed without the use of tools.

2. Service equipment enclosures shall be factory wired and conform to NEMA standards.

3. Dimensions of service equipment enclosures shall meet the requirements of the service utility.

4. The dead front panels on Type III service equipment enclosures shall have a continuous stainless steel or aluminum piano hinge. The panel in front of the breakers shall be secured with a latch or captive screws. No live parts shall be mounted on the dead front panel.

5. The exterior door shall have provisions for padlocking. The padlock hole shall be a minimum diameter of 7/16".

6. Enclosures housing transformers of more than one kVA shall have effective screened ventilation louver of not less than 50 square inches. Screen shall be stainless steel No. 304, with a No. 10 size mesh. Framed screen shall be secured with at least four bolts.

7. Fasteners on the exterior of the enclosure shall be vandal-resistant and shall not be removable from the exterior. Exterior screws, nuts, bolts and washers shall be stainless steel.

8. Landing lugs for incoming service conductors shall be compatible with either copper or aluminum conductors sized to suit the conductors shown on the plan. Landing lugs shall be copper or tin-plated aluminum. Neutral bus shall be rated for 125 A and be suitable for copper or aluminum conductors unless otherwise specified. The terminal shall include but not be limited to:

   a) Incoming terminals (landing lugs)
   b) Neutral lugs
   c) Solid neutral terminal strip

9. At least 6 standard single pole circuit breaker spaces, 3/4" nominal, shall be provided for branch circuits. Circuit breaker interiors shall be copper. Interiors of enclosure shall accept plug-in or cable-in/cable-out circuit breakers.

10. Control wiring shall be 600 V, 14 stranded machine tool wire. Where subject to flexing, 19 strand wire shall be used.

11. Main bus shall be rated for 125 A and shall be tin-plated copper.

12. A plastic laminated wiring diagram shall be provided with brass mounting eyelets and attached to the inside of the enclosure and the wiring diagram shall be affixed to the interior with a UL or ETL approved method.

13. An engraved phenolic nameplate on the dead front panel indicating the function of each circuit or device shall be installed with stainless steel rivets or stainless steel screws:

    a) Adjacent to the breaker or device with character size a minimum of 1/8".

    b) At the top of the exterior door panel indicating State system number, voltage level and number of phases with character size a minimum of 3/16".

14. The plan shows the approximate location of devices within the enclosure. Components may be rearranged, however, the "working" clearances within the service equipment enclosure shall be maintained.

15. In unpaved areas a raised portland cement concrete pad 2'-0" x 4" x width of foundation shall be constructed in front of new service equipment enclosure installation. Pad shall be set to elevation of foundation.

16. Foundation shall extend 2" minimum beyond edge of service equipment enclosure.

17. Internal bus, where shown, is typical only. Alternative design of proposed service equipment enclosure shall be submitted to the Engineer for approval.

18. Plug-in circuit breakers may be mounted in the vertical or horizontal position. Cable-in/cable-out circuit breakers shall be mounted in the vertical position.

19. Type III-AF and Type III-BF service equipment enclosures shall have the meter viewing windows located on the front side of the service equipment enclosures.

20. Type III-AR and Type III-BR service equipment enclosures shall be similarly constructed as Type III-AF and Type III-BF respectively, except the meter viewing windows shall be located on the back side of the service equipment enclosures.

21. Minimum clearance shall be required for front and back of service equipment enclosure per National Electrical Code, Article 110.26, "Spaces About Electric Equipment (600 Volts, Nominal, or Less)."

STATE OF CALIFORNIA
DEPARTMENT OF TRANSPORTATION

ELECTRICAL SYSTEMS (SERVICE EQUIPMENT NOTES TYPE III SERIES)

NO SCALE

RSP ES-2C DATED OCTOBER 5, 2007 SUPERCEDES STANDARD PLAN ES-2C
DATED MAY 1, 2006 - PAGE 405 OF THE STANDARD PLANS BOOK DATED MAY 2006.

REVISED STANDARD PLAN RSP ES-2C

DIST	COUNTY	ROUTE	POST MILES TOTAL PROJECT	SHEET NO.	TOTAL SHEETS
02	Sha	5,44	R3.2/R18.6, L0.3/L1.8	119	120

REGISTERED ELECTRICAL ENGINEER

October 5, 2007
PLANS APPROVAL DATE

REGISTERED PROFESSIONAL ENGINEER Jeffery G. McRae No. E14512 Exp. 6-30-08 ELECTRICAL STATE OF CALIFORNIA

The State of California or its officers or agents shall not be responsible for the accuracy or completeness of electronic copies of this plan sheet.

To accompany plans dated 7-12-10

2006 REVISED STANDARD PLAN RSP ES-2D

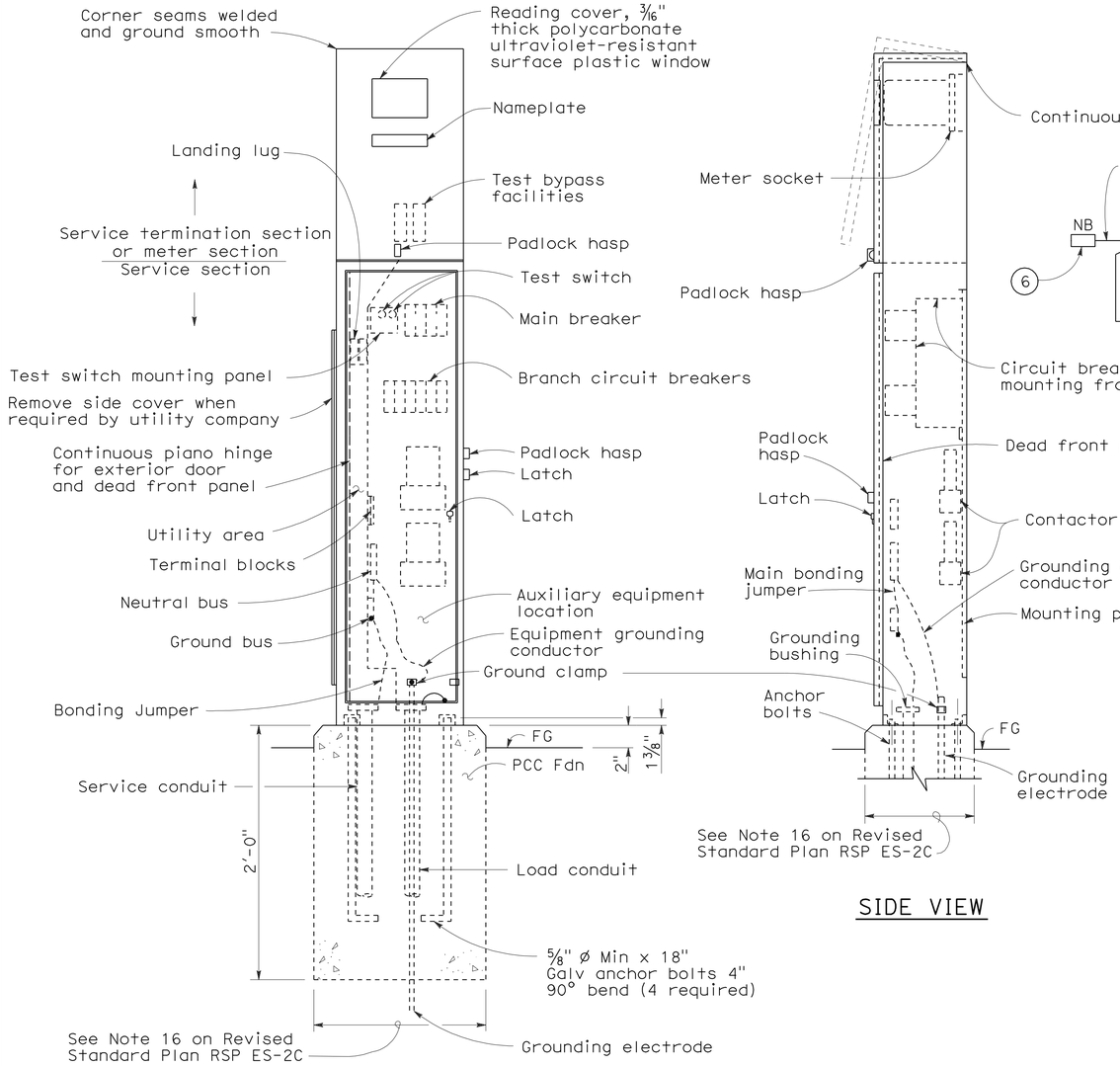

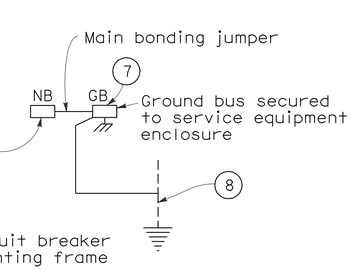

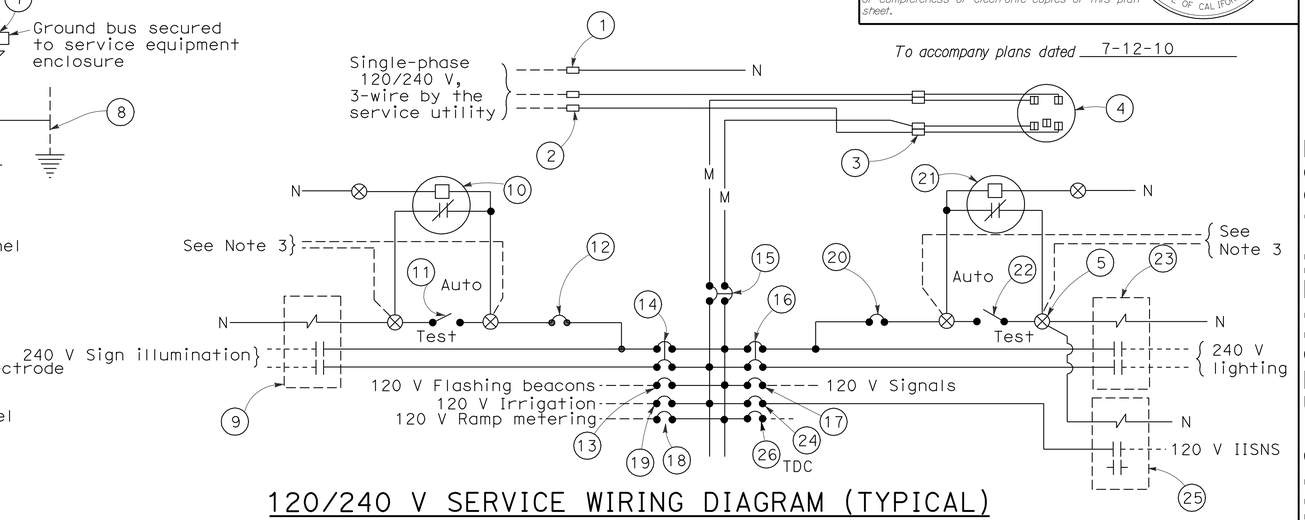

120/240 V SERVICE WIRING DIAGRAM (TYPICAL)

TYPE III-A SERVICE (120/240 V) EQUIPMENT LEGEND					
ITEM No.	COMPONENT	NAME PLATE DESCRIPTION	ITEM No.	COMPONENT	NAME PLATE DESCRIPTION
1	Neutral lug		14	30 A, 240 V, 2P, CB	Sign Illumination
2	Landing lug (Note 6)		15	100 A, 240 V, 2P, CB	Main Breaker
3	Test bypass facility		16	30 A, 240 V, 2P, CB	Lighting
4	Meter socket and support		17	50 A, 120 V, 1P, CB	Signals
5	Terminal blocks		18	30 A, 120 V, 1P, CB	Ramp Metering
6	Neutral bus		19	20 A, 120 V, 1P, CB	Irrigation
7	Ground bus		20	15 A, 120 V, 1P, CB	Lighting Control
8	Grounding electrode		21	Photoelectric unit (Note 7)	
9	30 A, 2PNO Contactor	Sign Illumination	22	15 A, 1P, Test switch	Lighting Test Switch
10	Photoelectric unit (Note 7)		23	60 A, 2PNO Contactor	Lighting
11	15 A, 1P, Test switch	Sign Illumination Test Switch	24	15 A, 120 V, 1P, CB	IISNS
12	15 A, 120 V, 1P, CB	Sign Illumination Control	25	30 A, 2PNO Contactor	IISNS
13	15 A, 120 V, 1P, CB	Flashing Beacon	26	20 A, 120 V, 1P, CB	Telephone Demarcation Cabinet

TYPE III-AF SERVICE EQUIPMENT ENCLOSURE (TYPICAL)

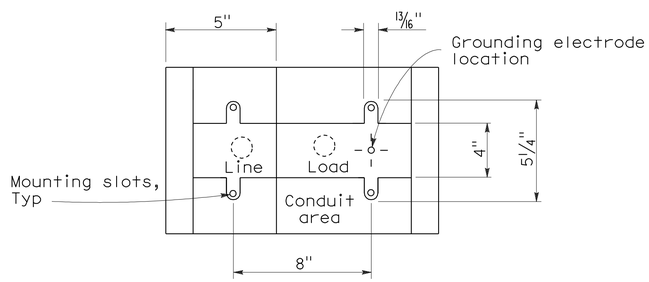

BASE FOR TYPE III-A SERVICE EQUIPMENT ENCLOSURE

NOTES: (FOR SERVICE EQUIPMENT ENCLOSURE)

1. Voltage ratings of service equipment shall conform to the service voltages indicated on the plans.
2. Unless otherwise indicated on the plans, service equipment items shall be provided for each service equipment enclosure as shown.
3. Connect to remote test switch mounted on lighting standards, sign post or structure when required.
4. Items No. 1 and 6 shall be isolated from the service equipment enclosure.
5. Meter sockets shall be 5 clip type.
6. The landing lug shall be suitable for multiple conductors.
7. Type V photoelectric control shall be used unless otherwise indicated on the plans.

STATE OF CALIFORNIA
DEPARTMENT OF TRANSPORTATION

ELECTRICAL SYSTEMS (SERVICE EQUIPMENT AND TYPICAL WIRING DIAGRAM, TYPE III-A SERIES)

NO SCALE

RSP ES-2D DATED OCTOBER 5, 2007 SUPERCEDES STANDARD PLAN ES-2D DATED MAY 1, 2006 - PAGE 406 OF THE STANDARD PLANS BOOK DATED MAY 2006.

REVISED STANDARD PLAN RSP ES-2D

DIST	COUNTY	ROUTE	POST MILES TOTAL PROJECT	SHEET NO.	TOTAL SHEETS
02	Sha	5,44	R3.2/R18.6, L0.3/L1.8	120	120

REGISTERED ELECTRICAL ENGINEER

October 5, 2007
PLANS APPROVAL DATE

REGISTERED PROFESSIONAL ENGINEER
Jeffery G. McRae
No. E14512
Exp. 6-30-08
ELECTRICAL
STATE OF CALIFORNIA

The State of California or its officers or agents shall not be responsible for the accuracy or completeness of electronic copies of this plan sheet.

To accompany plans dated 7-12-10

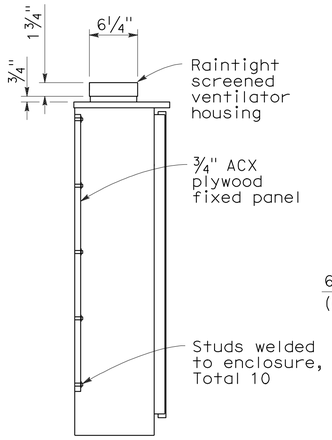

SECTION A-A

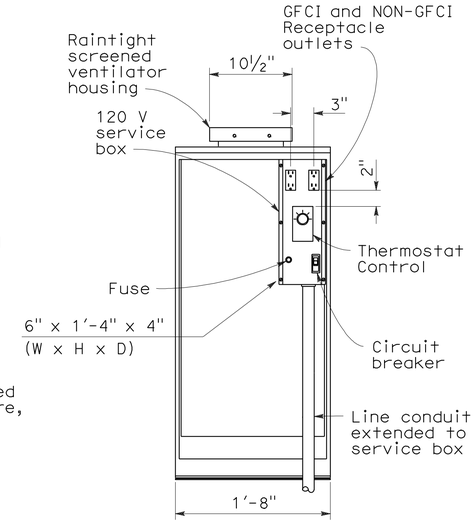

FRONT VIEW

(Exterior door removed for clarity)

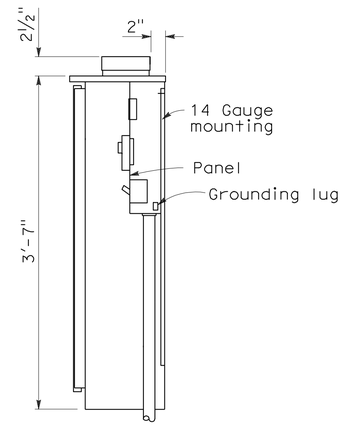

SECTION B-B

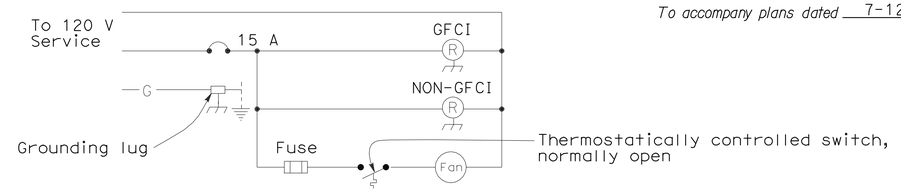

WIRING DIAGRAM

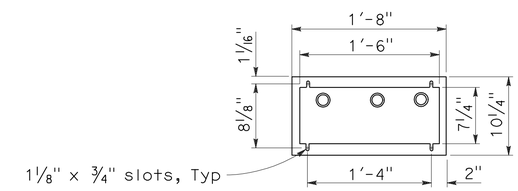

BASE PLAN

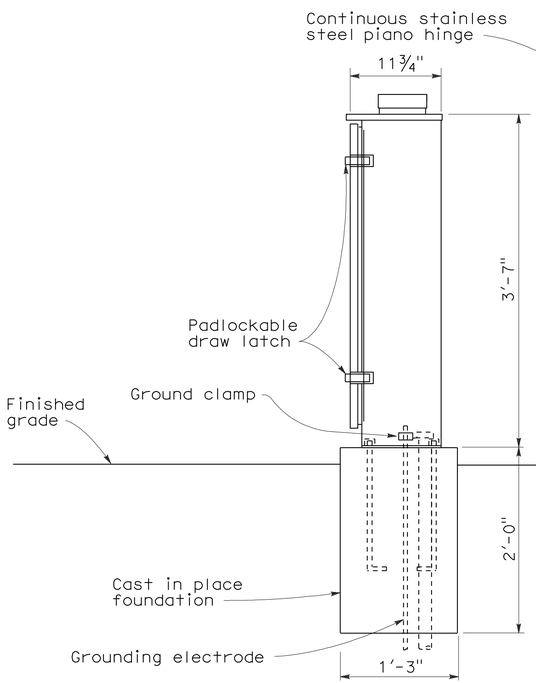

SIDE VIEW

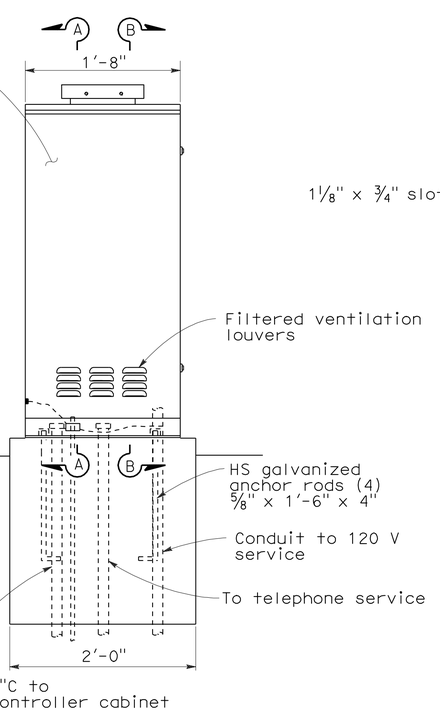

FRONT VIEW

NOTES:

1. Telephone demarcation cabinet shall be furnished with a mounting panel, outlets, circuit breaker and deadfront plates in place. Dimensions are nominal.
2. An approved mastic or caulking compound shall be placed on the foundation prior to placing the cabinet to seal openings between the bottom of the cabinet and the foundation.
3. In unpaved areas, a raised PCC pad shall be placed in front of the telephone demarcation cabinet. Pad shall be 2'-0" x 1'-10" x 4" thick, with 2" above the finished grade.
4. All conduits shall be bonded to the enclosure.
5. Telephone demarcation cabinet:
   a) Material shall be anodized aluminum (⅛" thick).
   b) Fabrication shall conform to the requirements of the Standard Specifications.
   c) The exterior door shall be side hung and secured with a padlockable draw latch, the padlock hole shall be a minimum diameter of 7/16" to receive a padlock.
   d) Ventilation louvers shall be located on the door.
   e) Fan shall be mounted in a ventilator housing.
   f) Fan shall be thermostatically controlled and adjustable to turn on between 80°F and 130°F.
   g) Fan circuit shall be fused at 175 percent of the fan motor capacity.
   h) Fan capacity shall be at least 25 cubic feet per minute.
   i) Fasten fixed mounting panels with nuts, lock and flat washers to 3/16" Ø x 1" studs welded to enclosure.

STATE OF CALIFORNIA
DEPARTMENT OF TRANSPORTATION

ELECTRICAL SYSTEMS (TELEPHONE DEMARCATION CABINET, TYPE B)

NO SCALE

RSP ES-3E DATED OCTOBER 5, 2007 SUPERCEDES STANDARD PLAN ES-3E DATED MAY 1, 2006 - PAGE 414 OF THE STANDARD PLANS BOOK DATED MAY 2006.

REVISED STANDARD PLAN RSP ES-3E

2006 REVISED STANDARD PLAN RSP ES-3E

8-17-07