Dist	COUNTY	ROUTE	POST MILES TOTAL PROJECT	SHEET No.	TOTAL SHEETS
01	Lak	29,53	20.1/20.4, 0.0/2.9	1	55

STP-X033(077)E

STATE OF CALIFORNIA
DEPARTMENT OF TRANSPORTATION

PROJECT PLANS FOR CONSTRUCTION ON
STATE HIGHWAY
IN LAKE COUNTY
ON ROUTE 29
FROM 0.2 MILE SOUTH OF ROUTE 53 TO 0.1 MILE NORTH OF ROUTE 53 ON ROUTE 53 FROM ROUTE 29 TO 0.1 MILE SOUTH OF 40TH AVENUE

TO BE SUPPLEMENTED BY STANDARD PLANS DATED MAY 2006

INDEX OF PLANS

SHEET No.	DESCRIPTION
1	TITLE AND LOCATION MAP
2-4	TYPICAL CROSS SECTIONS
5-12	CONSTRUCTION DETAILS
13	CONSTRUCTION AREA SIGN
14	TRAFFIC HANDLING DETAILS
15-19	PAVEMENT DELINEATION PLANS, DETAILS AND QUANTITIES
20-24	SUMMARY OF QUANTITIES
25-27	ELECTRICAL PLANS
28-55	REVISED AND NEW STANDARD PLANS

THE STANDARD PLANS LIST APPLICABLE TO THIS CONTRACT IS INCLUDED IN THE NOTICE TO BIDDERS AND SPECIAL PROVISIONS BOOK.

LOCATION MAP

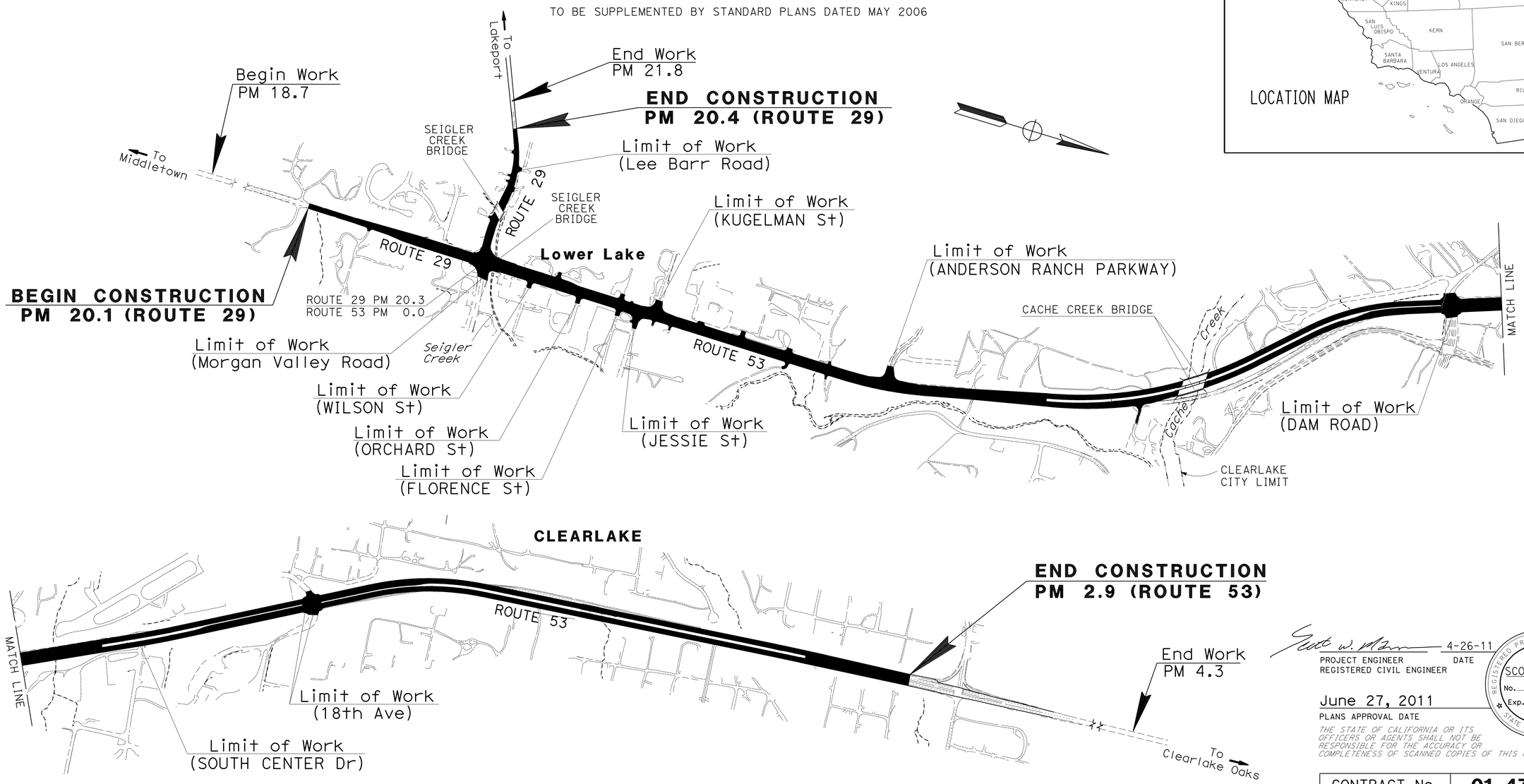

PROJECT MANAGER: MIKE YANCHEFF

DESIGN ENGINEER: SCOTT W. MANN

4-26-11
PROJECT ENGINEER REGISTERED CIVIL ENGINEER — DATE

June 27, 2011
PLANS APPROVAL DATE

REGISTERED PROFESSIONAL ENGINEER — SCOTT MANN No. 72005 Exp. 6-30-12 CIVIL — STATE OF CALIFORNIA

THE STATE OF CALIFORNIA OR ITS OFFICERS OR AGENTS SHALL NOT BE RESPONSIBLE FOR THE ACCURACY OR COMPLETENESS OF SCANNED COPIES OF THIS PLAN SHEET.

THE CONTRACTOR SHALL POSSESS THE CLASS (OR CLASSES) OF LICENSE AS SPECIFIED IN THE "NOTICE TO BIDDERS."

NO SCALE

CONTRACT No.	01-479204
PROJECT ID	0100020269

LAST REVISION 07-06-11 — DATE PLOTTED => 22-JUL-2011 — TIME PLOTTED => 10:55

Dist	COUNTY	ROUTE	POST MILES TOTAL PROJECT	SHEET No.	TOTAL SHEETS
01	Lak	29,53	20.1/20.4, 0.0/2.9	2	55

REGISTERED CIVIL ENGINEER 4-26-11 DATE

6-27-11
PLANS APPROVAL DATE

REGISTERED PROFESSIONAL ENGINEER SCOTT MANN No. 72005 Exp. 6-30-12 CIVIL STATE OF CALIFORNIA

THE STATE OF CALIFORNIA OR ITS OFFICERS OR AGENTS SHALL NOT BE RESPONSIBLE FOR THE ACCURACY OR COMPLETENESS OF SCANNED COPIES OF THIS PLAN SHEET.

NOTES:

1. DIMENSIONS OF THE STRUCTURAL SECTIONS ARE SUBJECT TO TOLERANCES SPECIFIED IN THE STANDARD SPECIFICATIONS.
2. FOR ACCURATE RIGHT OF WAY DATA, CONTACT RIGHT OF WAY ENGINEERING AT THE DISTRICT OFFICE.
3. SUPERELEVATION AS SHOWN OR AS DIRECTED BY THE ENGINEER.
4. EXISTING UTILITY FACILITIES HAVE NOT BEEN PLOTTED ON THESE PLANS.
5. FOR HMA DIKE TO BE REMOVED AND TYPE OF HMA DIKE TO BE PLACED, SEE SUMMARY OF QUANTITIES FOR LOCATIONS.
6. COLD PLANE Exist AC PRIOR TO PLACING RHMA-G SEE "SUMMARY OF QUANTITIES" FOR LIMITS.
7. EXACT LOCATION OF PLACEMENT OF GEOSYNTHETIC PAVEMENT INTERLAYER TO BE PLACED AS SHOWN OR AS DIRECTED BY THE ENGINEER.

LEGEND:

SR SUPERELEVATION RATE
RHMA-G RUBBERIZED HOT MIX ASPHALT (GAP GRADED)
GPI GEOSYNTHETIC PAVEMENT INTERLAYER

DESIGN DESIGNATION

ROUTE AND PM	LAK-29-20.1/20.8	LAK-53-0.0/3.1
2010	13,000	2,080
2030	22,500	2,850
D	60	60
T	4	4

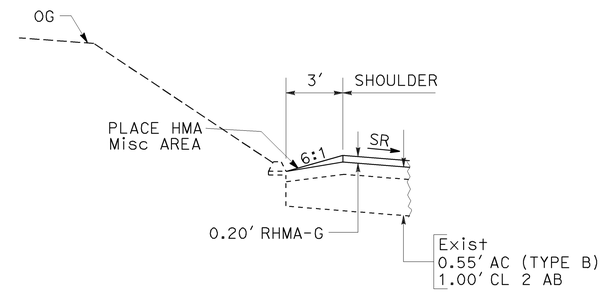

ROUTE 53
HIGH SIDE SUPER DITCH
PM 1.13 TO 1.20 NB-Rt
PM 2.12 TO 2.24 SB-Rt

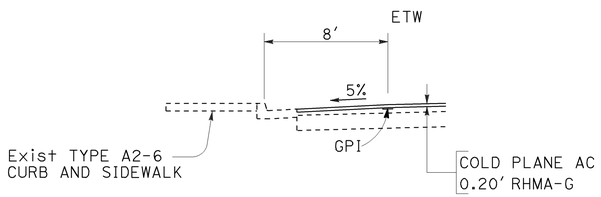

ROUTE 53
PM 0.04 TO 0.11

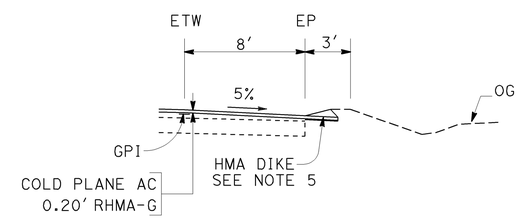

ROUTE 53
PM 0.03 TO 0.12

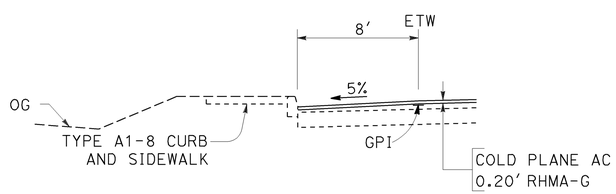

ROUTE 53
PM 0.03 TO 0.04

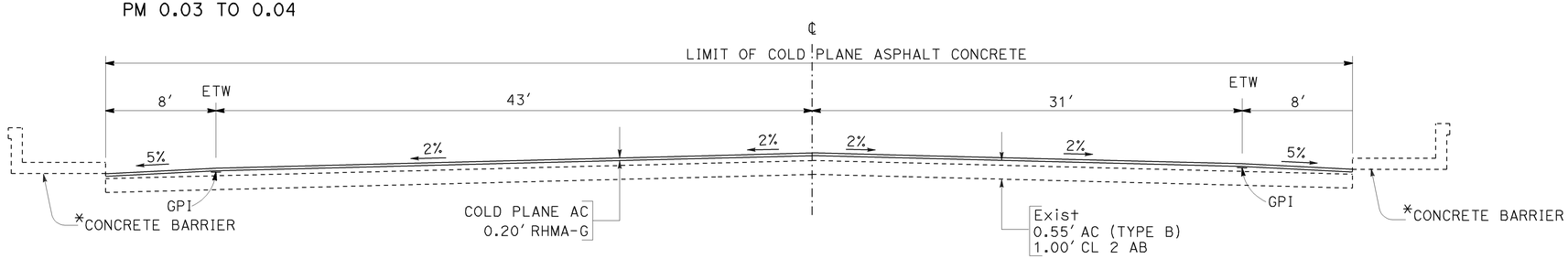

ROUTE 53
PM 0.00 TO 0.12
*CONCRETE BARRIER FROM PM 0.01 TO 0.03

TYPICAL CROSS SECTIONS

NO SCALE

X-1

STATE OF CALIFORNIA - DEPARTMENT OF TRANSPORTATION
NORTH REGION
DIVISION OF ENGINEERING
Caltrans

FUNCTIONAL SUPERVISOR: SCOTT MANN
CALCULATED-DESIGNED BY: PATRICK KYO
CHECKED BY: CHRISTOPHER BRADANICK
REVISED BY
DATE REVISED

LAST REVISION 00-00-00
DATE PLOTTED => 22-JUL-2011
TIME PLOTTED => 10:15

Dist	COUNTY	ROUTE	POST MILES TOTAL PROJECT	SHEET No.	TOTAL SHEETS
01	Lak	29,53	20.1/20.4, 0.0/2.9	3	55

REGISTERED CIVIL ENGINEER 4-26-11 DATE

6-27-11
PLANS APPROVAL DATE

REGISTERED PROFESSIONAL ENGINEER SCOTT MANN No. 72005 Exp. 6-30-12 CIVIL STATE OF CALIFORNIA

THE STATE OF CALIFORNIA OR ITS OFFICERS OR AGENTS SHALL NOT BE RESPONSIBLE FOR THE ACCURACY OR COMPLETENESS OF SCANNED COPIES OF THIS PLAN SHEET.

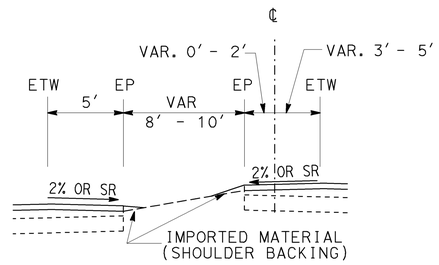

PM 1.34 TO 1.45
PM 1.82 TO 1.96

ROUTE 53

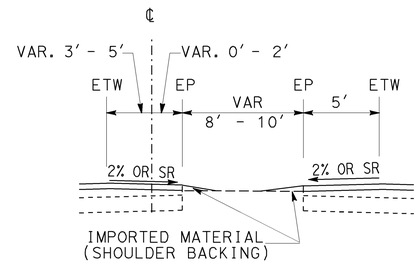

PM 1.99 TO 2.13

ROUTE 53

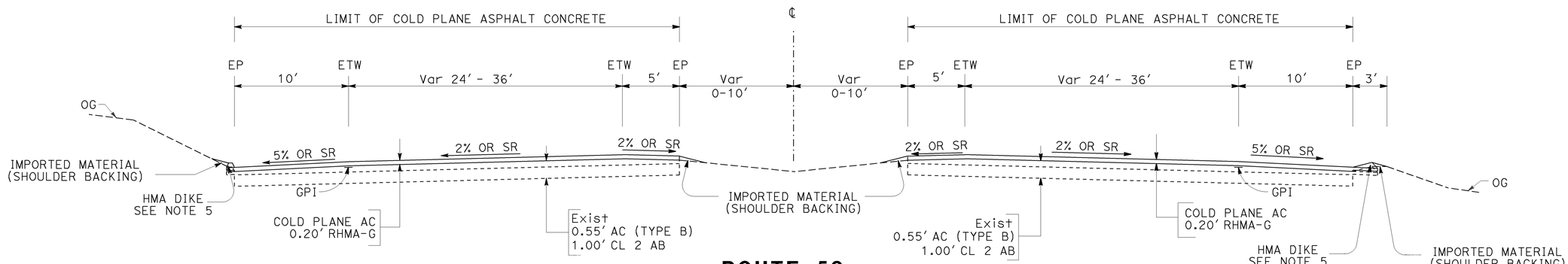

ROUTE 53

PM 0.85 TO 1.45
PM 1.66 TO 1.96
PM 1.99 TO 2.71

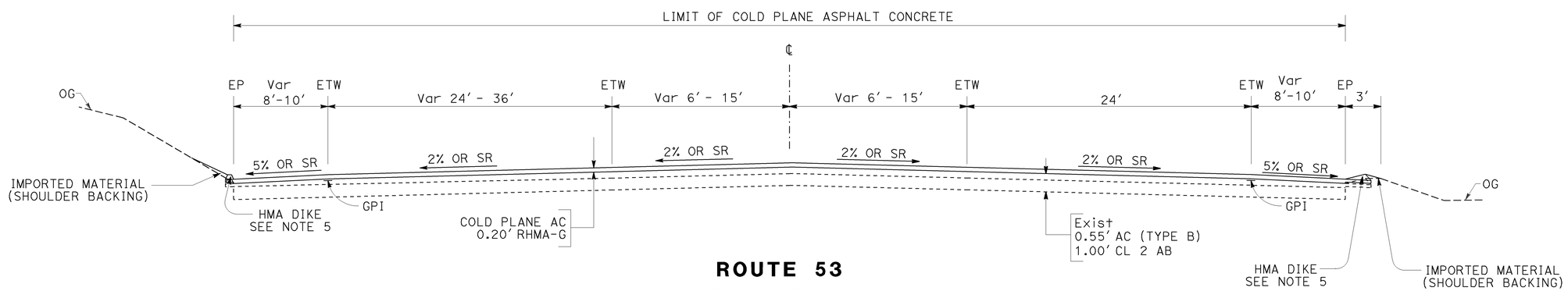

ROUTE 53

PM 0.12 TO 0.85
PM 1.45 TO 1.66
PM 1.96 TO 1.99
PM 2.71 TO 2.90

TYPICAL CROSS SECTIONS

NO SCALE

X-2

STATE OF CALIFORNIA - DEPARTMENT OF TRANSPORTATION
Caltrans
NORTH REGION
DIVISION OF ENGINEERING

FUNCTIONAL SUPERVISOR: SCOTT MANN
CALCULATED-DESIGNED BY: PATRICK KYO
CHECKED BY: CHRISTOPHER BRADANICK
REVISED BY
DATE REVISED

LAST REVISION 00-00-00
DATE PLOTTED => 22-JUL-2011
TIME PLOTTED => 10:15

Dist	COUNTY	ROUTE	POST MILES TOTAL PROJECT	SHEET No.	TOTAL SHEETS
01	Lak	29,53	20.1/20.4, 0.0/2.9	4	55

REGISTERED CIVIL ENGINEER 4-26-11 DATE

6-27-11
PLANS APPROVAL DATE

REGISTERED PROFESSIONAL ENGINEER
SCOTT MANN
No. 72005
Exp. 6-30-12
CIVIL
STATE OF CALIFORNIA

THE STATE OF CALIFORNIA OR ITS OFFICERS OR AGENTS SHALL NOT BE RESPONSIBLE FOR THE ACCURACY OR COMPLETENESS OF SCANNED COPIES OF THIS PLAN SHEET.

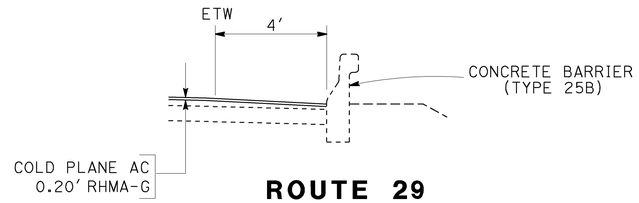

ROUTE 29
PM 20.33 TO 20.35

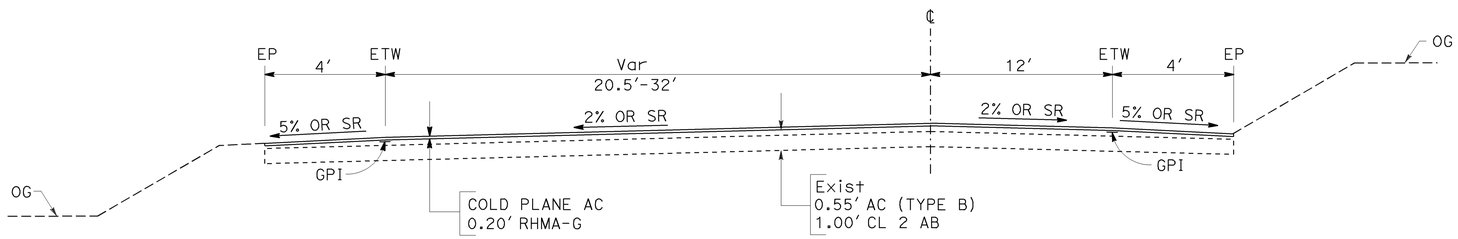

ROUTE 29
PM 20.30 TO 20.40

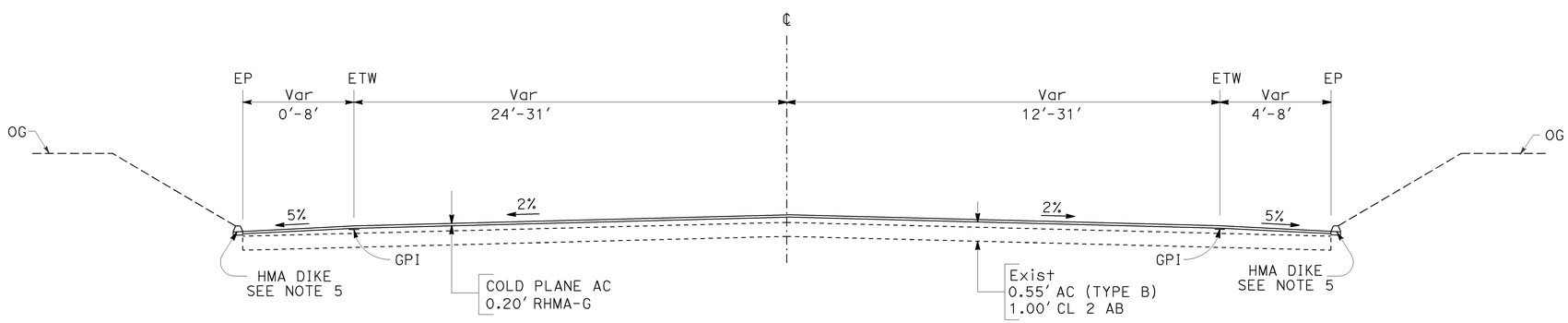

ROUTE 29
PM 20.10 TO 20.3

TYPICAL CROSS SECTIONS
NO SCALE

X-3

STATE OF CALIFORNIA - DEPARTMENT OF TRANSPORTATION
NORTH REGION
DIVISION OF ENGINEERING
Caltrans

FUNCTIONAL SUPERVISOR: SCOTT MANN
CALCULATED-DESIGNED BY: LUZ VILLANUEVA
CHECKED BY: CHRISTOPHER BRADANICK
REVISED BY
DATE REVISED

LAST REVISION 00-00-00
DATE PLOTTED => 22-JUL-2011
TIME PLOTTED => 10:15

Dist	COUNTY	ROUTE	POST MILES TOTAL PROJECT	SHEET No.	TOTAL SHEETS
01	Lak	29,53	20.1/20.4, 0.0/2.9	5	55

REGISTERED CIVIL ENGINEER 4-26-11 DATE

6-27-11
PLANS APPROVAL DATE

REGISTERED PROFESSIONAL ENGINEER SCOTT MANN No. 72005 Exp. 6-30-12 CIVIL STATE OF CALIFORNIA

THE STATE OF CALIFORNIA OR ITS OFFICERS OR AGENTS SHALL NOT BE RESPONSIBLE FOR THE ACCURACY OR COMPLETENESS OF SCANNED COPIES OF THIS PLAN SHEET.

NOTES:

1. RUMBLE STRIP, AS SHOWN ON THIS PLAN SHALL NOT BE CONSTRUCTED ON BRIDGE DECKS, BRIDGE APPROACH SLABS, RAMPS, PUBLIC AND PRIVATE ROAD APPROACHES AND MINOR DRIVEWAYS.
2. CENTER MEDIAN/INSIDE SHOULDER AREAS SHALL BE 5/8" DEPTH.
3. FOR 'GROUND-IN RUMBLE STRIP' APPLICATIONS NOT SHOWN SEE STANDARD PLANS 2006

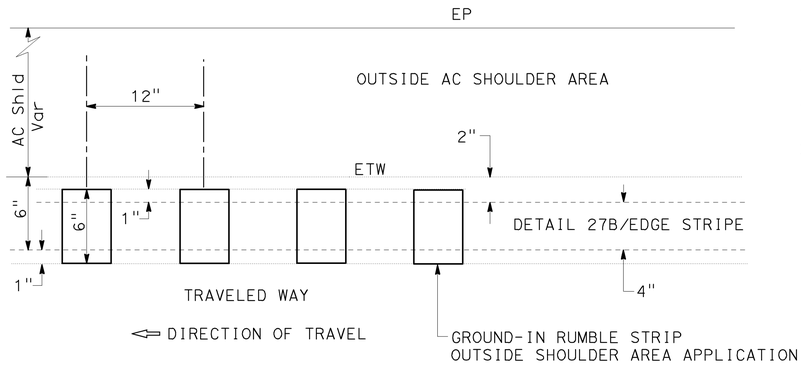

PLAN

GROUND-IN RUMBLE STRIP/OUTSIDE SHOULDER AREA

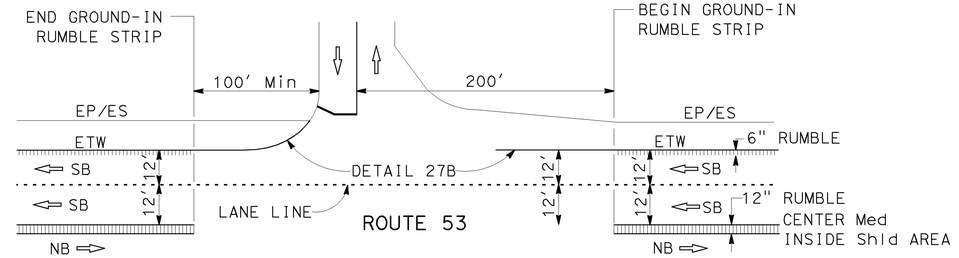

TYPICAL

CENTER Med/INSIDE & OUTSIDE Shld AREAS AND AT GRADE INTERSECTION

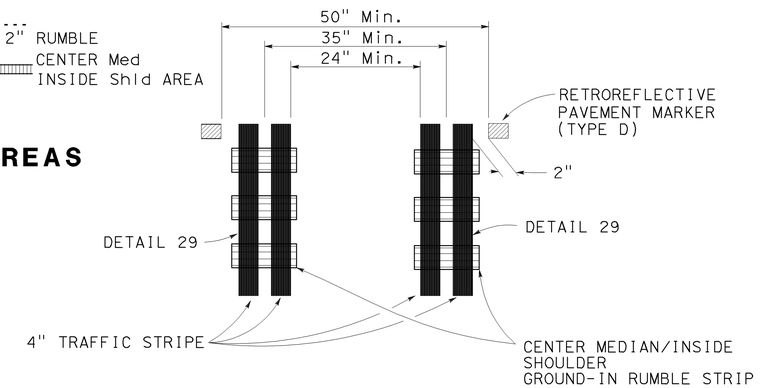

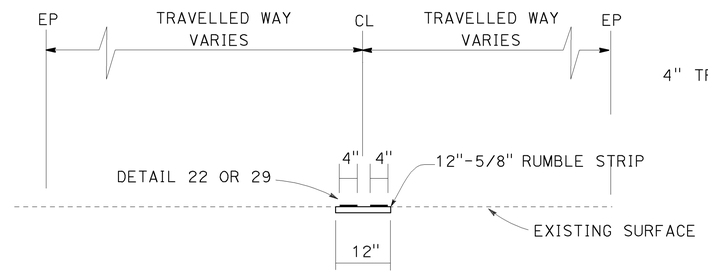

SECTION A-A

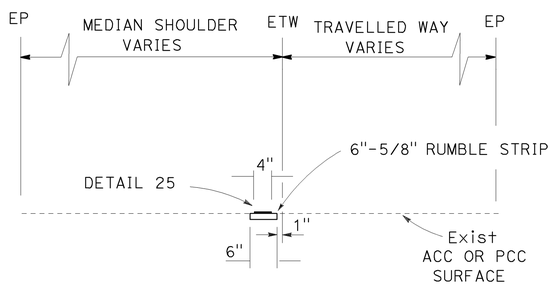

SECTION B-B

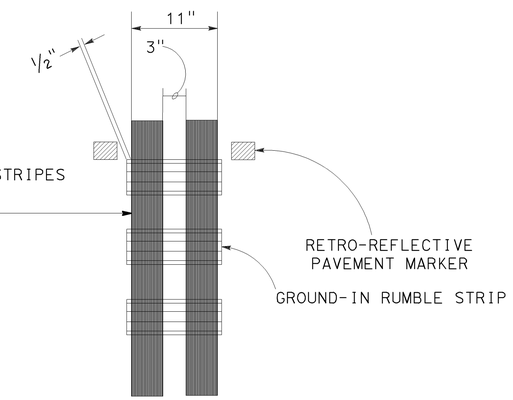

PLAN

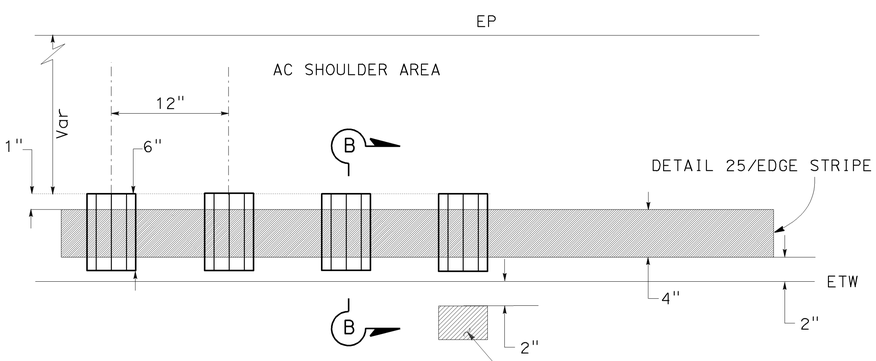

PLAN

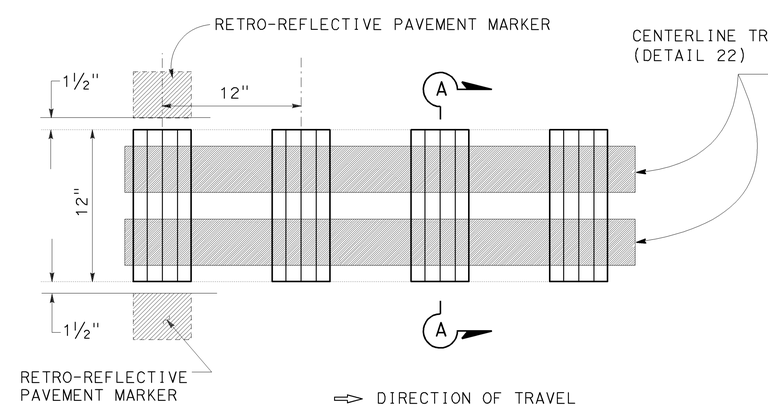

PLAN

CENTER MEDIAN/INSIDE SHOULDER AREA GROUND-IN RUMBLE STRIP

MODIFIED GROUND-IN RUMBLE STRIP/INSIDE SHOULDER AREA

ELEVATION

GROUND-IN RUMBLE STRIP TYPICALS

CONSTRUCTION DETAILS

NO SCALE

C-1

STATE OF CALIFORNIA - DEPARTMENT OF TRANSPORTATION
NORTH REGION
DIVISION OF ENGINEERING
Caltrans

FUNCTIONAL SUPERVISOR: SCOTT MANN
CALCULATED-DESIGNED BY: CHRISTOPHER BRADANICK
CHECKED BY: LUZ VILLANUEVA
REVISED BY
DATE REVISED

LAST REVISION 00-00-00
DATE PLOTTED => 22-JUL-2011
TIME PLOTTED => 10:15

Dist	COUNTY	ROUTE	POST MILES TOTAL PROJECT	SHEET No.	TOTAL SHEETS
01	Lak	29,53	20.1/20.4, 0.0/2.9	6	55

REGISTERED CIVIL ENGINEER 4-26-11 DATE

6-27-11
PLANS APPROVAL DATE

REGISTERED PROFESSIONAL ENGINEER SCOTT MANN No. 72005 Exp. 6-30-12 CIVIL STATE OF CALIFORNIA

THE STATE OF CALIFORNIA OR ITS OFFICERS OR AGENTS SHALL NOT BE RESPONSIBLE FOR THE ACCURACY OR COMPLETENESS OF SCANNED COPIES OF THIS PLAN SHEET.

LEGEND:

⇨ DIRECTION OF TRAVEL

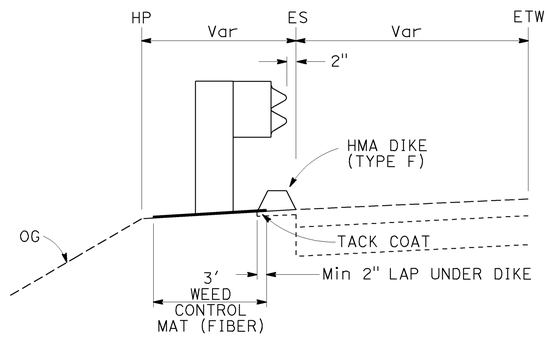

WEED CONTROL MAT (FIBER) WITH NEW HMA DIKE (TYPE F)

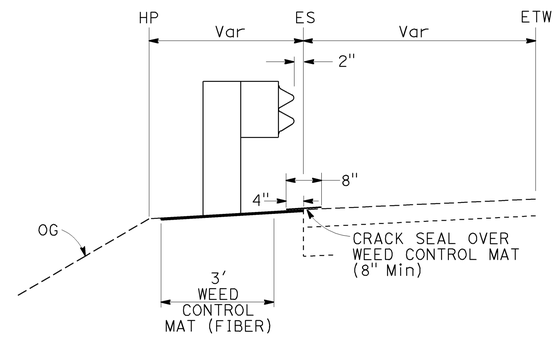

WEED CONTROL MAT (FIBER) WITHOUT HMA DIKE

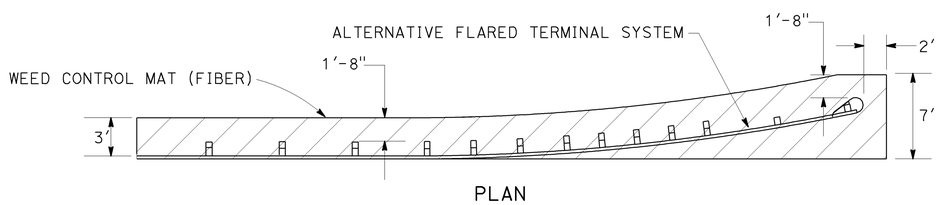

WEED CONTROL MAT (FIBER) UNDER ALTERNATIVE FLARED TERMINAL SYSTEM

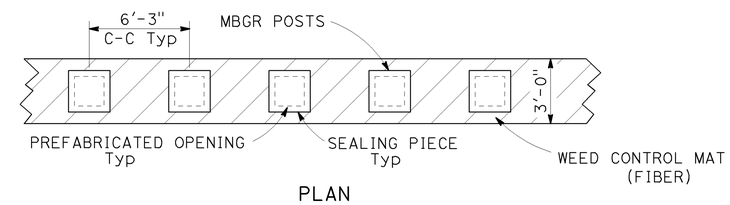

POST SPACING & OTHER DIMENSIONS TO BE VERIFIED IN THE FIELD BY THE CONTRACTOR.

WEED CONTROL MAT (FIBER) UNDER MBGR

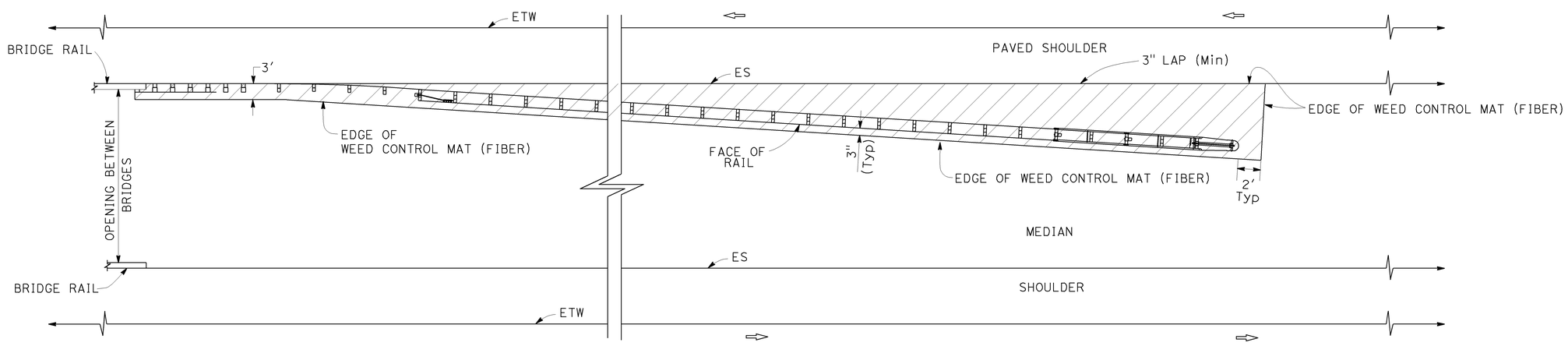

WEED CONTROL MAT (FIBER) UNDER MBGR LAYOUT 12E

CONSTRUCTION DETAILS
NO SCALE

C-2

STATE OF CALIFORNIA - DEPARTMENT OF TRANSPORTATION
NORTH REGION DIVISION OF ENGINEERING
Caltrans

FUNCTIONAL SUPERVISOR: SCOTT MANN
CALCULATED-DESIGNED BY: PATRICK KYO
CHECKED BY: CHRISTOPHER BRADANICK
REVISED BY
DATE REVISED

LAST REVISION 00-00-00
DATE PLOTTED => 22-JUL-2011
TIME PLOTTED => 10:15

Dist	COUNTY	ROUTE	POST MILES TOTAL PROJECT	SHEET No.	TOTAL SHEETS
01	Lak	29,53	20.1/20.4, 0.0/2.9	7	55

REGISTERED CIVIL ENGINEER 4-26-11 DATE

6-27-11
PLANS APPROVAL DATE

REGISTERED PROFESSIONAL ENGINEER
SCOTT MANN
No. 72005
Exp. 6-30-12
CIVIL
STATE OF CALIFORNIA

THE STATE OF CALIFORNIA OR ITS OFFICERS OR AGENTS SHALL NOT BE RESPONSIBLE FOR THE ACCURACY OR COMPLETENESS OF SCANNED COPIES OF THIS PLAN SHEET.

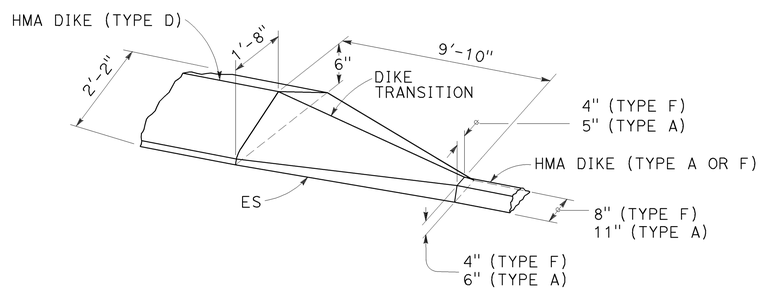

HMA DIKE (TYPE D) TO HMA DIKE (TYPE A, OR F)

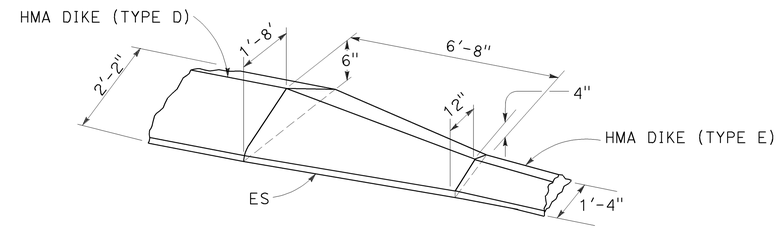

HMA DIKE (TYPE D) TO HMA DIKE (TYPE E)

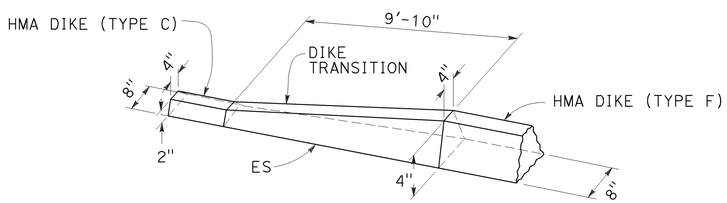

HMA DIKE (TYPE C) TO HMA DIKE (TYPE F)

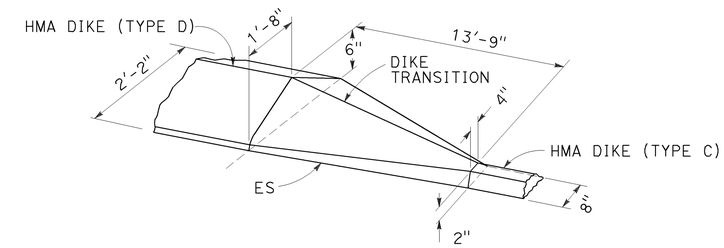

HMA DIKE (TYPE D) TO HMA DIKE (TYPE C)

HMA DIKE TRANSITIONS

CONSTRUCTION DETAILS

NO SCALE

C-3

STATE OF CALIFORNIA - DEPARTMENT OF TRANSPORTATION
NORTH REGION
DIVISION OF ENGINEERING

FUNCTIONAL SUPERVISOR: SCOTT MANN
CALCULATED-DESIGNED BY: LUZ VILLANUEVA
CHECKED BY: CHRISTOPHER BRADANICK
REVISED BY
DATE REVISED

LAST REVISION 00-00-00
DATE PLOTTED => 22-JUL-2011
TIME PLOTTED => 10:15

Dist	COUNTY	ROUTE	POST MILES TOTAL PROJECT	SHEET No.	TOTAL SHEETS
01	Lak	29,53	20.1/20.4, 0.0/2.9	8	55

REGISTERED CIVIL ENGINEER 4-26-11 DATE

6-27-11
PLANS APPROVAL DATE

REGISTERED PROFESSIONAL ENGINEER SCOTT MANN No. 72005 Exp. 6-30-12 CIVIL STATE OF CALIFORNIA

THE STATE OF CALIFORNIA OR ITS OFFICERS OR AGENTS SHALL NOT BE RESPONSIBLE FOR THE ACCURACY OR COMPLETENESS OF SCANNED COPIES OF THIS PLAN SHEET.

NOTE:

1. FOR LIMITS OF EXCAVATION AND BACKFILL SEE ROADWAY PLANS AND STANDARD PLANS MAY 2006 A62C, SECTION E-E.
2. MINIMUM 1" COVER, (TYPICAL).
3. SEE INDEX SHEET AND SITE PLAN SHEET FOR GP TYPE.
4. TAPER THE TOP OF THE END OF THE CONCRETE TRANSITION RAILING AT 4:1 TO MATCH THE TOP ELEVATION OF THE TRANSITION RAILING (TYPE WB).
5. PATCH EXISTING BOLT HOLES WITH CEMENT MORTAR.
6. ALL PLATES AND BOLTS ARE GALVANIZED.

LEGEND:

INDICATES EXISTING STRUCTURE

INDICATES NEW CONSTRUCTION

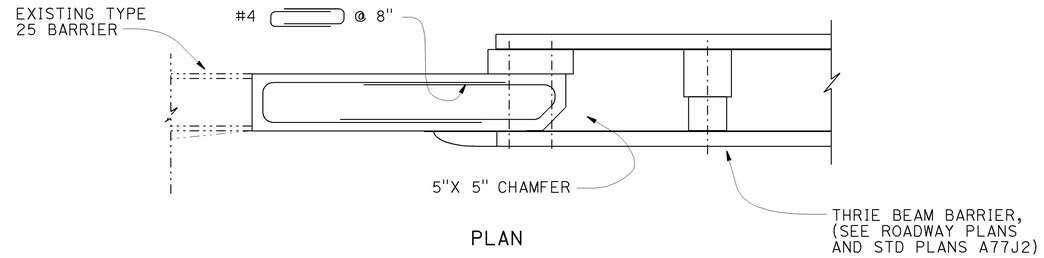

PLAN

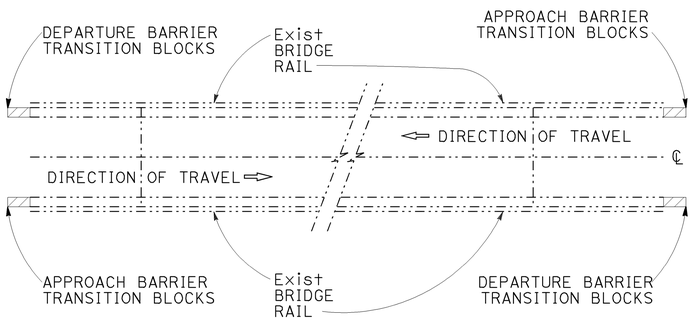

(PLAN B)

NO SCALE

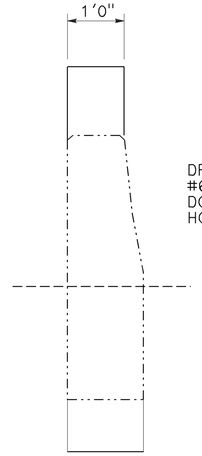

SECTION A-A

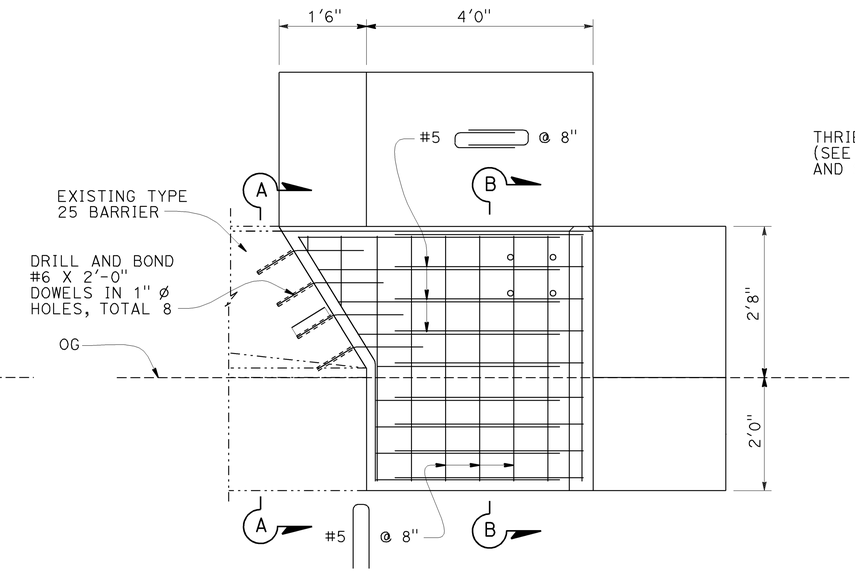

ELEVATION

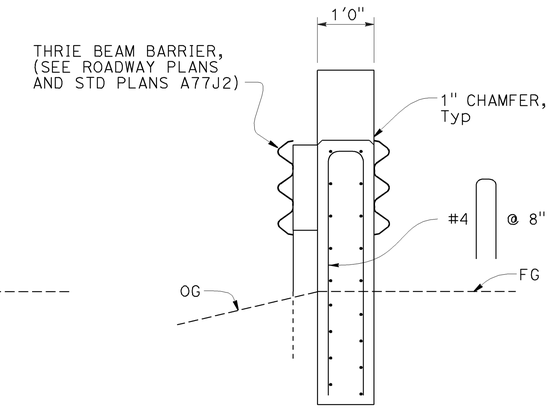

SECTION B-B

TWO WAY BRIDGES

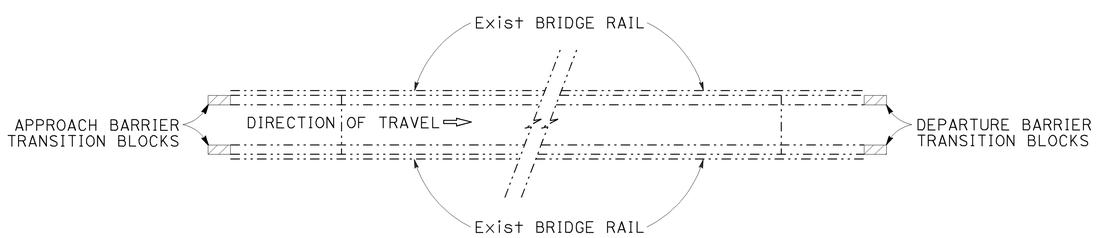

(PLAN A)

NO SCALE

ONE WAY BRIDGES

LOCATION TABLE OF TYPE 25 BARRIER TRANSITION BLOCK (TYPE WB) APPLICATION

BRIDGE No.	BRIDGE NAME	ROUTE	POST MILE	DIRECTION	No. of WB CONNECTIONS @		GP TYPE	CONCRETE BARRIER (TRANSITION BLOCK) (LF)
					APPROACH END	DEPARTURE END		
14-0078L	CACHE CREEK BRIDGE	53	1.10	SB	2		A	11
14-0078R	CACHE CREEK BRIDGE	53	1.00	NB	2		A	11
14-0058	SEIGLER CREEK BRIDGE	29	20.37	NB		1	B	5.5
14-0058	SEIGLER CREEK BRIDGE	29	20.37	SB	1		B	5.5

CONSTRUCTION DETAILS

NO SCALE

C-4

STATE OF CALIFORNIA - DEPARTMENT OF TRANSPORTATION
NORTH REGION DIVISION OF ENGINEERING
Caltrans

FUNCTIONAL SUPERVISOR: SCOTT MANN
CALCULATED-DESIGNED BY: LUZ VILLANUEVA
CHECKED BY: CHRISTOPHER BRADANICK
REVISED BY
DATE REVISED

LAST REVISION 00-00-00
DATE PLOTTED => 22-JUL-2011
TIME PLOTTED => 10:15

Dist	COUNTY	ROUTE	POST MILES TOTAL PROJECT	SHEET No.	TOTAL SHEETS
01	Lak	29,53	20.1/20.4, 0.0/2.9	9	55

REGISTERED CIVIL ENGINEER 4-26-11 DATE

6-27-11
PLANS APPROVAL DATE

REGISTERED PROFESSIONAL ENGINEER SCOTT MANN No. 72005 Exp. 6-30-12 CIVIL STATE OF CALIFORNIA

THE STATE OF CALIFORNIA OR ITS OFFICERS OR AGENTS SHALL NOT BE RESPONSIBLE FOR THE ACCURACY OR COMPLETENESS OF SCANNED COPIES OF THIS PLAN SHEET.

NOTES:

1. SUPERELEVATION AS SHOWN OR DIRECTED BY THE ENGINEER.
2. EXISTING UTILITY FACILITIES HAVE NOT BEEN PLOTTED ON THESE PLANS.

LEGEND:

COLD PLANE AC PAVEMENT

0.20' RHMA-G

PAVING CONFORM

LOCATION	Y (LF)
BEGIN & END CONSTRUCTION	100
BEGIN & END BRIDGE DECK	100
PUBLIC Rd/LOCAL Rd	40
PRIVATE Rd/DRIVEWAY	4

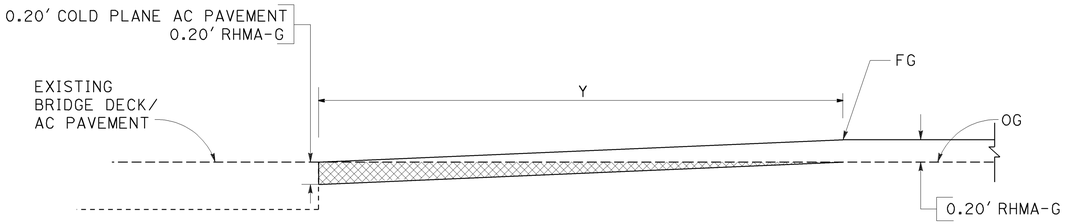

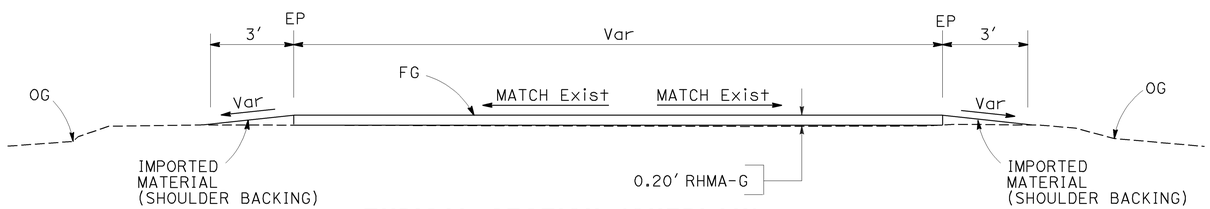

TYPICAL SECTION (OVERLAY)
PUBLIC, PRIVATE & LOCAL Rd

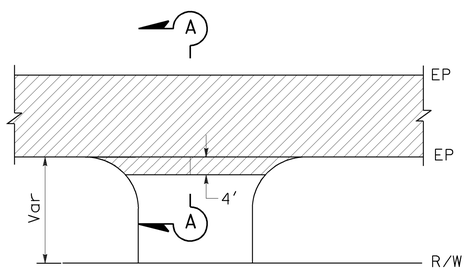

PRIVATE ROAD/DRIVEWAY
PAVING CONFORM

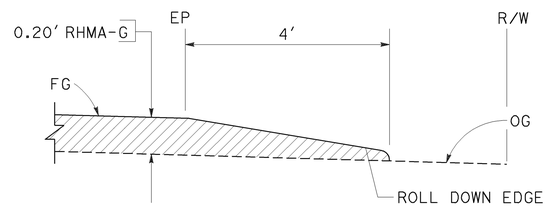

SECTION A-A

LAKE 29/53

LOCATION	DIRECTION	PM	X(LF)
Hwy 29 Dwy	NB	20.15	20
Hwy 53 MORGAN VALLEY Rd	NB	0.00	100
Hwy 53 Dwy COMMERCIAL	NB	0.03	20
Hwy 53 Dwy COMMERCIAL	NB	0.05	20
Hwy 53 WILSON STREET	NB	0.09	40
Hwy 53 Dwy COMMERCIAL	NB	0.12	20
Hwy 53 ORCHARD STREET	NB	0.15	20
Hwy 53 FLORENCE STREET	NB	0.2	40
Hwy 53 JESSIE STREET	NB	0.24	40
Hwy 53 Dwy - PRIVATE	NB	0.3	20
Hwy 53 Dwy - PRIVATE	NB	0.46	20
Hwy 53 Dwy - PRIVATE	NB	0.52	20
Hwy 53 Dwy - PRIVATE	NB	0.55	20
Hwy 53 Dwy - PRIVATE	NB	0.97	20
Hwy 53 DAM Rd	NB	1.47	80
Hwy 53 18th Ave	NB	2.00	40
Hwy 53 18th Ave	SB	2.00	40
Hwy 53 OLD STATE Hwy	SB	1.49	80
Hwy 53 ANDERSON RANCH PARKWAY	SB	0.65	40
Hwy 53 Dwy - PRIVATE	SB	0.55	20
Hwy 53 Dwy COMMERCIAL	SB	0.49	20
Hwy 53 Dwy COMMERCIAL	SB	0.42	20
Hwy 53 Dwy COMMERCIAL	SB	0.36	20
Hwy 53 KUGELMAN STREET	SB	0.29	40
Hwy 53 Dwy COMMERCIAL	SB	0.25	20
Hwy 53 Dwy COMMERCIAL	SB	0.23	20
Hwy 53 Dwy COMMERCIAL	SB	0.14	20
Hwy 29 Dwy	WB	20.43	15
Hwy 29 LEELAND Rd	WB	20.46	40
Hwy 29 Dwy - PRIVATE	WB	20.63	20
Hwy 29 Dwy - PRIVATE	EB	20.65	20
Hwy 29 BELL PARK Ave	EB	20.57	20
Hwy 29 Dwy - PRIVATE	EB	20.48	20
Hwy 29 Dwy - PRIVATE	EB	20.45	20
Hwy 29 Dwy - PRIVATE	EB	20.44	20
Hwy 29 Dwy - PRIVATE	EB	20.37	20
Hwy 29 Dwy COMMERCIAL	EB	20.35	20
Hwy 29 Dwy COMMERCIAL	EB	20.34	20
Hwy 29 Dwy COMMERCIAL	EB	20.33	20
Hwy 29 Dwy COMMERCIAL	EB	20.26	20

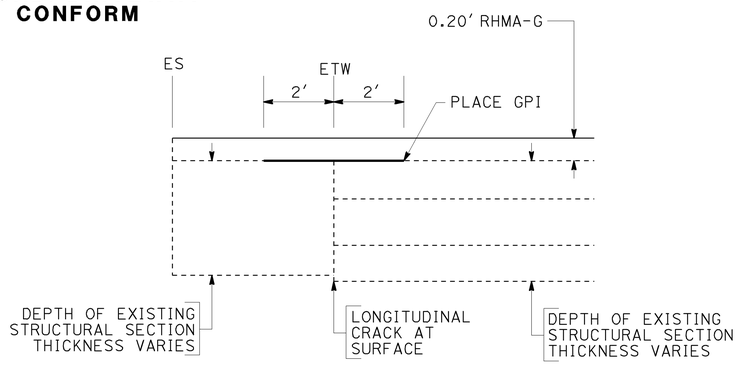

STRUCTURAL SECTION AND GEOSYNTHETIC INTERLAYER
(GPI DETAIL)

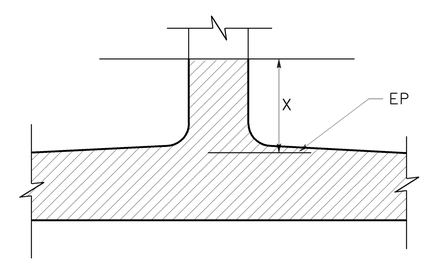

PUBLIC ROAD/LOCAL ROAD CONNECTION

CONSTRUCTION DETAILS

NO SCALE

C-5

STATE OF CALIFORNIA - DEPARTMENT OF TRANSPORTATION
NORTH REGION
DIVISION OF ENGINEERING

FUNCTIONAL SUPERVISOR: SCOTT MANN
CALCULATED-DESIGNED BY: LUZ VILLANUEVA
CHECKED BY: CHRISTOPHER BRADANICK
REVISED BY / DATE REVISED

LAST REVISION 00-00-00 | DATE PLOTTED => 22-JUL-2011 | TIME PLOTTED => 10:15

Dist	COUNTY	ROUTE	POST MILES TOTAL PROJECT	SHEET No.	TOTAL SHEETS
01	Lak	29,53	20.1/20.4, 0.0/2.9	10	55

REGISTERED CIVIL ENGINEER 4-26-11 DATE

6-27-11
PLANS APPROVAL DATE

REGISTERED PROFESSIONAL ENGINEER
SCOTT MANN
No. 72005
Exp. 6-30-12
CIVIL
STATE OF CALIFORNIA

THE STATE OF CALIFORNIA OR ITS OFFICERS OR AGENTS SHALL NOT BE RESPONSIBLE FOR THE ACCURACY OR COMPLETENESS OF SCANNED COPIES OF THIS PLAN SHEET.

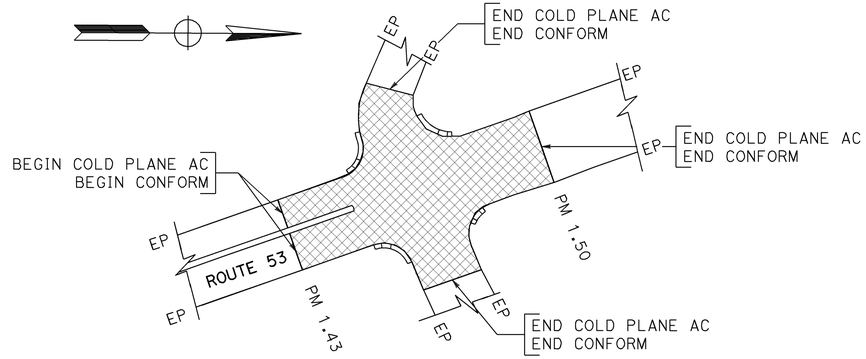

ROUTE 53/DAM Rd

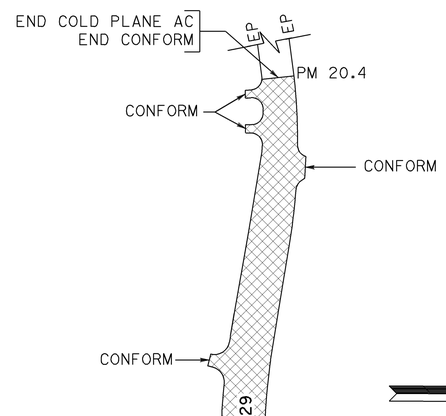

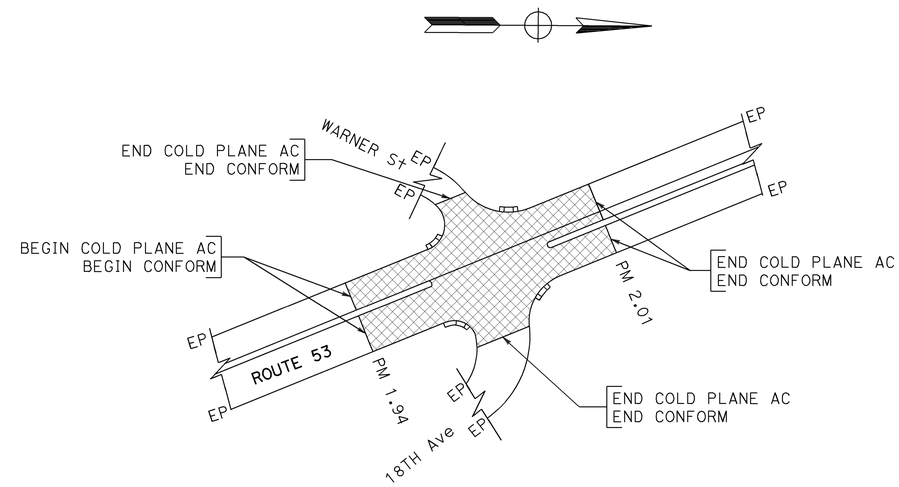

ROUTE 53/18TH Ave

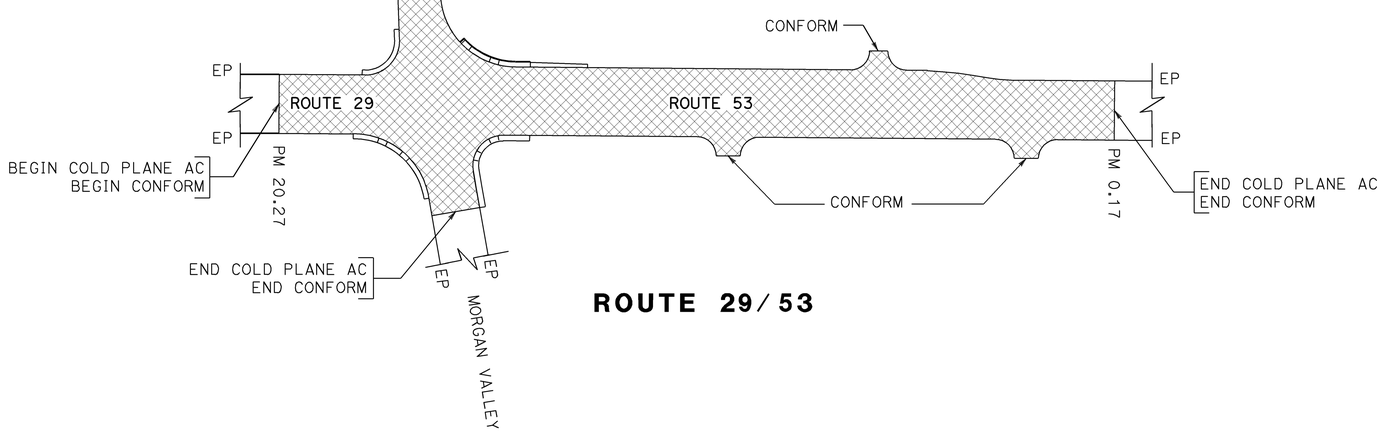

ROUTE 29/53

CONSTRUCTION DETAILS

NO SCALE

C-6

STATE OF CALIFORNIA - DEPARTMENT OF TRANSPORTATION
NORTH REGION
DIVISION OF ENGINEERING

FUNCTIONAL SUPERVISOR: SCOTT MANN
CALCULATED-DESIGNED BY: CHRISTOPHER BRADANICK
CHECKED BY: LUZ VILLANUEVA
REVISED BY
DATE REVISED

LAST REVISION 00-00-00
DATE PLOTTED => 22-JUL-2011
TIME PLOTTED => 10:15

Dist	COUNTY	ROUTE	POST MILES TOTAL PROJECT	SHEET No.	TOTAL SHEETS
01	Lak	29,53	20.1/20.4, 0.0/2.9	11	55

REGISTERED CIVIL ENGINEER 4-26-11 DATE

6-27-11
PLANS APPROVAL DATE

REGISTERED PROFESSIONAL ENGINEER SCOTT MANN No. 72005 Exp. 6-30-12 CIVIL STATE OF CALIFORNIA

THE STATE OF CALIFORNIA OR ITS OFFICERS OR AGENTS SHALL NOT BE RESPONSIBLE FOR THE ACCURACY OR COMPLETENESS OF SCANNED COPIES OF THIS PLAN SHEET.

LEGEND:

IMPORTED MATERIAL (SHOULDER BACKING)

DIRECTION OF FLOW

W= WIDTH OF ROUTING = WIDTH OF CRACK + 1/4" Min

D= DEPTH OF ROUTING = W + 1/4" Min

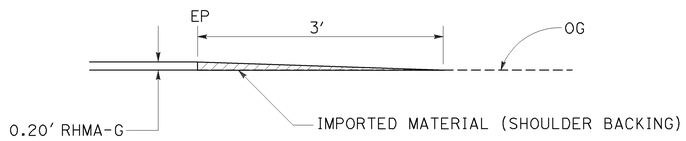

SHOULDER BACKING CONSTRUCTION

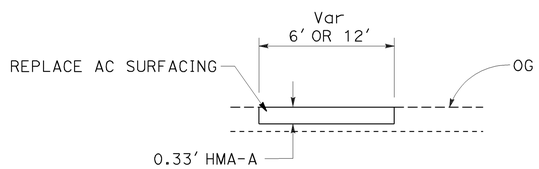

REPLACE ASPHALT CONCRETE SURFACING

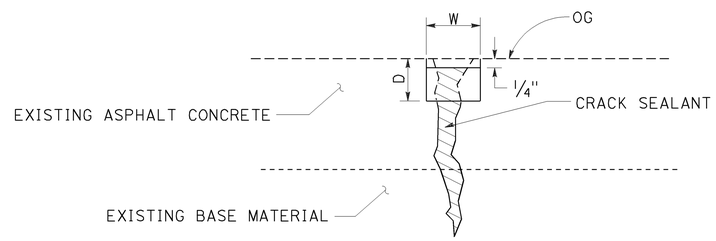

CRACK TREATMENT

TYPICAL CROSS SECTION

NOTES:

1. ALL CRACKS 1/4" WIDE OR GREATER ARE TO BE ROUTED AND SEALED.
2. IF ANY PART OF CRACKS IS 1/4" OR WIDER, THEN THE ENTIRE CRACK WILL BE ROUTED AND SEALED.
3. NO SEALANT MATERIAL WILL BE ALLOWED ON AC PAVEMENT SURFACE.

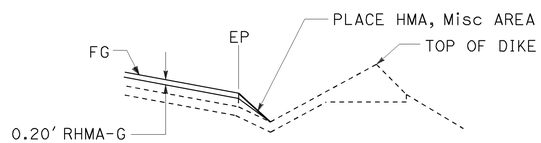

SECTION A-A

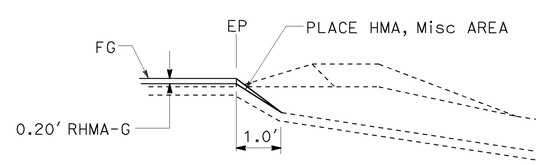

SECTION B-B

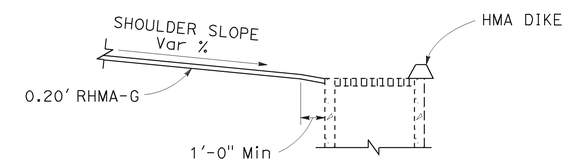

SECTION C-C

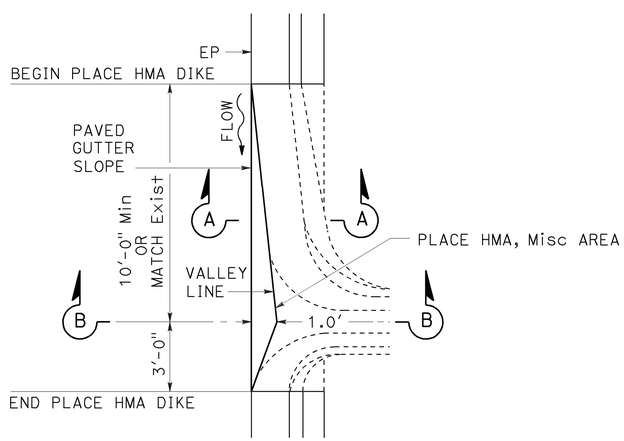

PLAN

OVERSIDE DRAIN

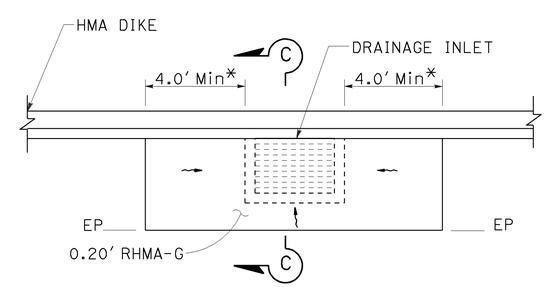

PLAN

INLET DEPRESSION

* EXACT OFFSET TO BE DETERMINED BY THE ENGINEER

CONSTRUCTION DETAILS

NO SCALE

C-7

STATE OF CALIFORNIA - DEPARTMENT OF TRANSPORTATION
NORTH REGION
DIVISION OF ENGINEERING

FUNCTIONAL SUPERVISOR: SCOTT MANN

CALCULATED-DESIGNED BY: CHRISTOPHER BRADANICK

CHECKED BY: LUZ VILLANUEVA

REVISED BY / DATE REVISED

LAST REVISION 00-00-00 | DATE PLOTTED => 22-JUL-2011 | TIME PLOTTED => 10:15

Dist	COUNTY	ROUTE	POST MILES TOTAL PROJECT	SHEET No.	TOTAL SHEETS
01	Lak	29,53	20.1/20.4, 0.0/2.9	12	55

REGISTERED CIVIL ENGINEER 4-26-11 DATE

6-27-11
PLANS APPROVAL DATE

REGISTERED PROFESSIONAL ENGINEER SCOTT MANN No. 72005 Exp. 6-30-12 CIVIL STATE OF CALIFORNIA

THE STATE OF CALIFORNIA OR ITS OFFICERS OR AGENTS SHALL NOT BE RESPONSIBLE FOR THE ACCURACY OR COMPLETENESS OF SCANNED COPIES OF THIS PLAN SHEET.

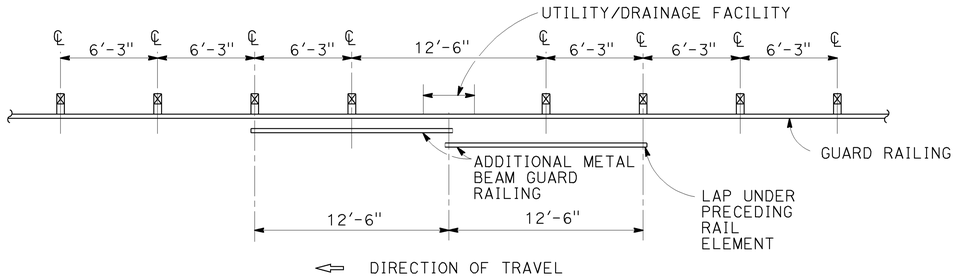

CASE 1
ONE POST OMITTED (SPLICE IN CENTER)

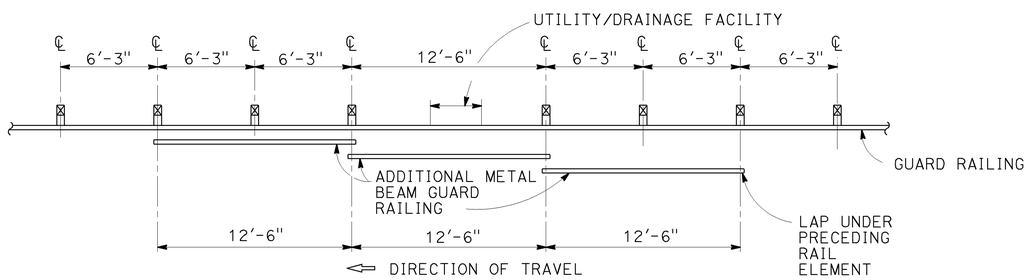

CASE 2
ONE POST OMITTED (SPLICE AT POSTS)

NESTED RAIL ELEMENTS

FOR DETAILS NOT SHOWN SEE STANDARD PLAN A77A1.

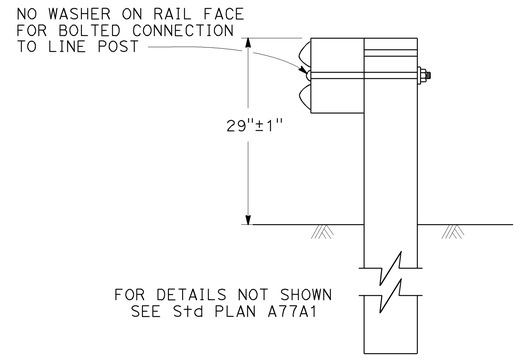

NEW POST INSTALLATION
RECONSTRUCT MBGR

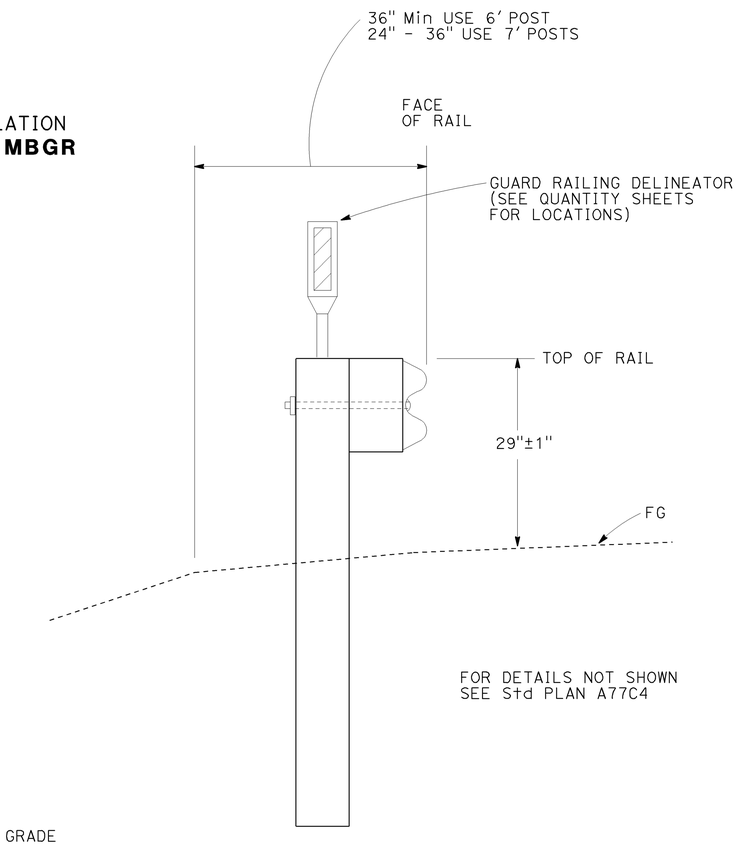

MBGR EMBANKMENT AND HINGE POINT

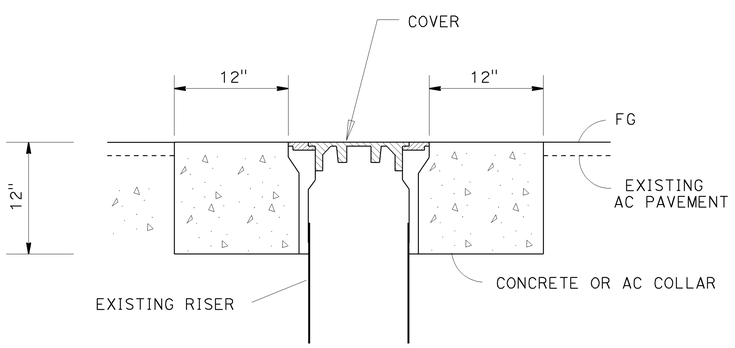

ADJUST FRAME AND COVER TO GRADE

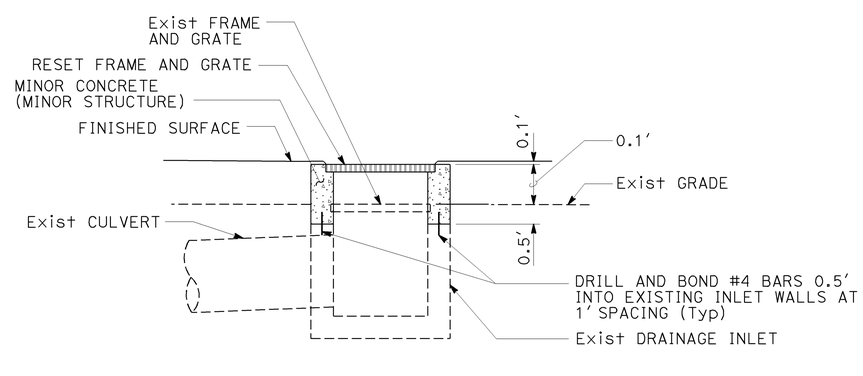

ADJUST INLET

CONSTRUCTION DETAILS

NO SCALE

C-8

STATE OF CALIFORNIA - DEPARTMENT OF TRANSPORTATION
NORTH REGION
DIVISION OF ENGINEERING

FUNCTIONAL SUPERVISOR: SCOTT MANN
CALCULATED-DESIGNED BY: CHRISTOPHER BRADANICK
CHECKED BY: LUZ VILLANUEVA
REVISED BY
DATE REVISED

LAST REVISION 00-00-00 | DATE PLOTTED => 22-JUL-2011 | TIME PLOTTED => 10:15

Dist	COUNTY	ROUTE	POST MILES TOTAL PROJECT	SHEET No.	TOTAL SHEETS
01	Lak	29,53	20.1/20.4, 0.0/2.9	13	55

REGISTERED CIVIL ENGINEER 4-26-11 DATE

6-27-11
PLANS APPROVAL DATE

REGISTERED PROFESSIONAL ENGINEER SCOTT MANN No. 72005 Exp. 6-30-12 CIVIL STATE OF CALIFORNIA

THE STATE OF CALIFORNIA OR ITS OFFICERS OR AGENTS SHALL NOT BE RESPONSIBLE FOR THE ACCURACY OR COMPLETENESS OF SCANNED COPIES OF THIS PLAN SHEET.

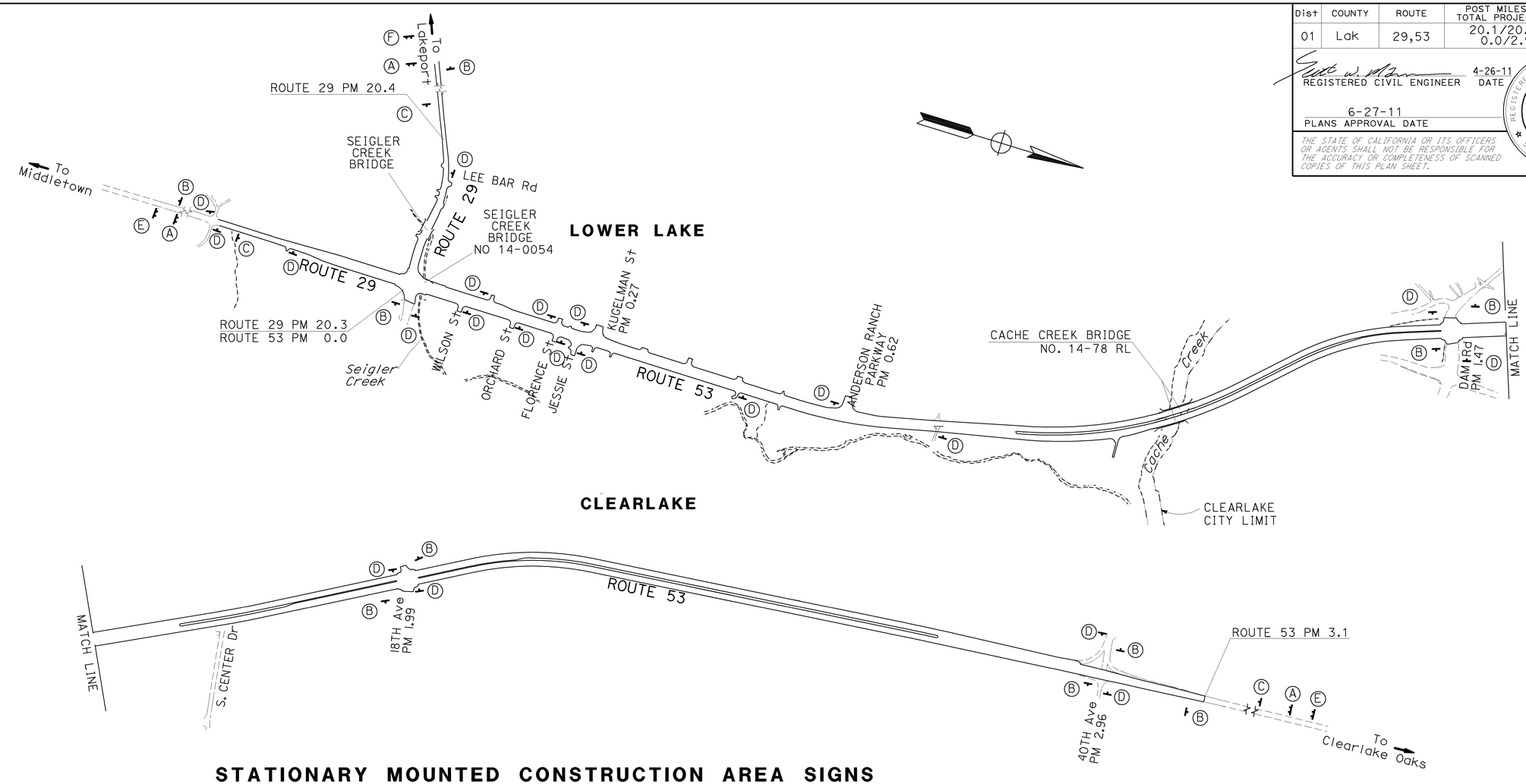

STATIONARY MOUNTED CONSTRUCTION AREA SIGNS

SIGN No.	SIGN CODE FEDERAL	SIGN CODE CALIFORNIA	SIGN MESSAGE	PANEL SIZE (INCHES)	No. OF POSTS AND SIZE (INCHES)	No. OF SIGNS
A	W20-1	C23	ROAD WORK AHEAD	60X36	2 - 6x6	3
B	G20-2	C14	END ROAD WORK	48X24	1 - 4x6	10
C	W11-1		(BICYCLE SYMBOL)	36x36	1 - 4x6	3
	W16-1		SHARE THE ROAD	24x30		
D	W20-1	C23	ROAD WORK AHEAD	30x30	1 - 4x4	21
E		C40(CA)	TRAFFIC FINES DOUBLED IN CONSTRUCTION ZONE	144X60	2 - 6x8	2
F		C40(CA)	TRAFFIC FINES DOUBLED IN CONSTRUCTION ZONE	108X42	2 - 6x6	1

NOTE: EXACT SIGN LOCATION TO BE DETERMINED BY THE ENGINEER.

CONSTRUCTION AREA SIGNS

NO SCALE

CS-1

STATE OF CALIFORNIA - DEPARTMENT OF TRANSPORTATION
NORTH REGION
DIVISION OF ENGINEERING

FUNCTIONAL SUPERVISOR: SCOTT MANN
CALCULATED-DESIGNED BY: LUZ VILLANUEVA
CHECKED BY: CHRISTOPHER BRADANICK
REVISED BY
DATE REVISED

LAST REVISION 00-00-00 | DATE PLOTTED => 22-JUL-2011 | TIME PLOTTED => 10:15

Dist	COUNTY	ROUTE	POST MILES TOTAL PROJECT	SHEET No.	TOTAL SHEETS
01	Lak	29,53	20.1/20.4, 0.0/2.9	14	55

REGISTERED CIVIL ENGINEER 4-26-11 DATE

6-27-11
PLANS APPROVAL DATE

REGISTERED PROFESSIONAL ENGINEER SCOTT MANN No. 72005 Exp. 6-30-12 CIVIL STATE OF CALIFORNIA

THE STATE OF CALIFORNIA OR ITS OFFICERS OR AGENTS SHALL NOT BE RESPONSIBLE FOR THE ACCURACY OR COMPLETENESS OF SCANNED COPIES OF THIS PLAN SHEET.

NOTES:

1. TO PROTECT NEW ANCHOR BLOCK DURING CURE TIME, RE-HANG EXISTING RAIL ELEMENT IN EXISTING BOLT HOLES.
2. USE FOR TRANSITION ANCHOR BLOCKS LESS THAN 10'.
3. HOLES DRILLED IN THE EXISTING CONCRETE BARRIER RAIL TO TEMPORARILY MOUNT THE EXISTING MBGR SHALL BE REPAIRED (HARD PACKED WITH MORTAR) WHEN THE HOLES ARE NO LONGER NEEDED.

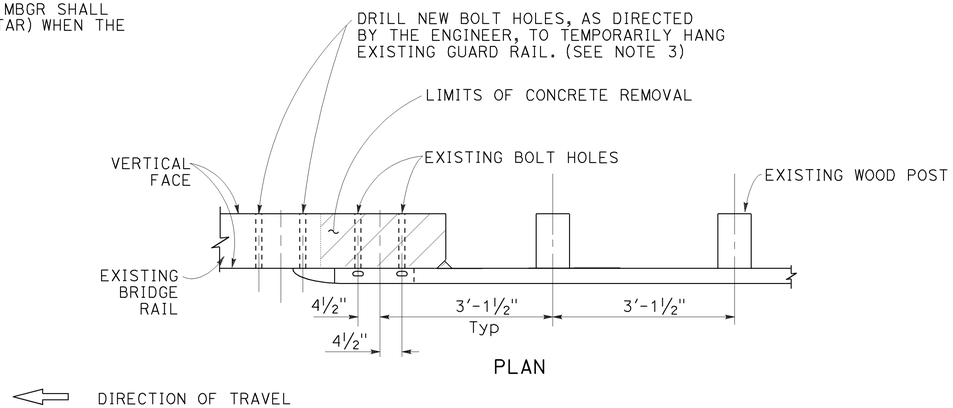

PLAN

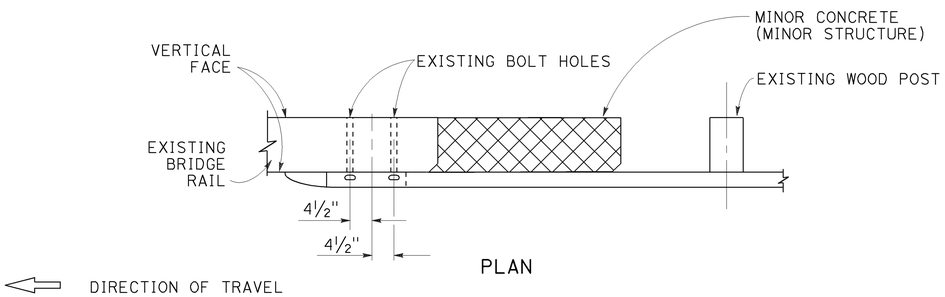

PLAN

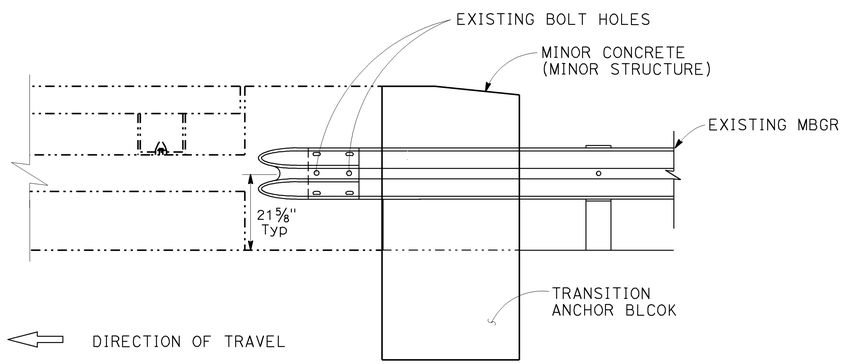

ELEVATION

TEMPORARY TRAFFIC PROTECTION DETAILS

LOCATION TABLE OF TYPE 25 BARRIER TRANSITION BLOCK (TYPE WB) APPLICATIONS

BRIDGE No.	BRIDGE NAME	ROUTE	POST MILE	DIRECTION
14-0078L	CACHE CREEK BRIDGE	53	1.10	SB
14-0078R	CACHE CREEK BRIDGE	53	1.00	NB
14-0058	SEIGLER CREEK BRIDGE	29	20.37	NB/SB

TRAFFIC HANDLING DETAILS

NO SCALE

THD-1

STATE OF CALIFORNIA - DEPARTMENT OF TRANSPORTATION
NORTH REGION
DIVISION OF ENGINEERING

FUNCTIONAL SUPERVISOR: SCOTT MANN
CALCULATED-DESIGNED BY: LUZ VILLANUEVA
CHECKED BY: CHRISTOPHER BRADANICK
REVISED BY / DATE REVISED

LAST REVISION 00-00-00
DATE PLOTTED => 22-JUL-2011
TIME PLOTTED => 10:15

Dist	COUNTY	ROUTE	POST MILES TOTAL PROJECT	SHEET No.	TOTAL SHEETS
01	Lak	29,53	20.1/20.4, 0.0/2.9	15	55

REGISTERED CIVIL ENGINEER 4-26-11 DATE

6-27-11
PLANS APPROVAL DATE

REGISTERED PROFESSIONAL ENGINEER SCOTT MANN No. 72005 Exp. 6-30-12 CIVIL STATE OF CALIFORNIA

THE STATE OF CALIFORNIA OR ITS OFFICERS OR AGENTS SHALL NOT BE RESPONSIBLE FOR THE ACCURACY OR COMPLETENESS OF SCANNED COPIES OF THIS PLAN SHEET.

THERMOPLASTIC PAVEMENT MARKING

LOCATION/POST MILE	ROUTE 29/53	DIRECTION EB/WB NB/SB	ARROWS TYPE II (R)	TYPE II (L)	TYPE III (L)	TYPE III (R)	TYPE V	TYPE VI	WORDS STOP	LIMIT LINE	CROSS WALK
			SQFT						SQFT	SQFT	SQFT
20.11	29	SB						42			
20.14	29	SB						42			
20.25	29	NB			42		66				
20.28	29	NB			42		66				
INTERSECTION 29/53, SOUTH	29	NB									180
INTERSECTION 29/53, EAST	53/MORGAN VALLEY Rd	WB									184
INTERSECTION 29/53, WEST	29	EB	45		84						176
INTERSECTION 29/53, NORTH	53	SB									198
20.38*	29	NB/SB	45		84						
20.43*	29	NB/SB			84						
MORGAN VALLEY ROAD	-	WB			84	42	33				
0.01	53	SB			42	42	66				
0.06*	53	SB			84	42	66				
WILSON STREET	53	WB							22	25	
0.10*	53	NB/SB			84						
0.14*	53	NB/SB			84						
ORCHARD AVENUE	53	WB							22	25	
0.17*	53	NB/SB			84						
FLORENCE STREET	53	WB							22	20	
0.21*	53	NB/SB			84						
JESSIE STREET	53	WB							22	30	
0.25*	53	NB/SB			84						
KUGELMAN STREET	53	EB							44	45	
0.29*	53	NB/SB			84						
0.33*	53	NB/SB			84						
0.36*	53	NB/SB			84						
0.40*	53	NB/SB			84						
0.44*	53	NB/SB			84						
0.48*	53	NB/SB			84						
0.52*	53	NB/SB			84						
SUBTOTAL			90	0	1554	126	297	84	132	145	738
TOTAL			3166								

NOTE: *ONE TYPE III (L) FACING IN EACH DIRECTION IN TURNING LANE

PAVEMENT DELINEATION QUANTITIES

PDQ-1

STATE OF CALIFORNIA - DEPARTMENT OF TRANSPORTATION
Caltrans
NORTH REGION
DIVISION OF ENGINEERING

FUNCTIONAL SUPERVISOR: SCOTT MANN
CALCULATED-DESIGNED BY: LUZ VILLANUEVA
CHECKED BY: CHRISTOPHER BRADANICK
REVISED BY
DATE REVISED

LAST REVISION 00-00-00
DATE PLOTTED => 22-JUL-2011
TIME PLOTTED => 10:15

Dist	COUNTY	ROUTE	POST MILES TOTAL PROJECT	SHEET No.	TOTAL SHEETS
01	Lak	29,53	20.1/20.4, 0.0/2.9	16	55

REGISTERED CIVIL ENGINEER 4-26-11 DATE

6-27-11
PLANS APPROVAL DATE

REGISTERED PROFESSIONAL ENGINEER SCOTT MANN No. 72005 Exp. 6-30-12 CIVIL STATE OF CALIFORNIA

THE STATE OF CALIFORNIA OR ITS OFFICERS OR AGENTS SHALL NOT BE RESPONSIBLE FOR THE ACCURACY OR COMPLETENESS OF SCANNED COPIES OF THIS PLAN SHEET.

THERMOPLASTIC PAVEMENT MARKING

LOCATION/POST MILE	ROUTE	DIRECTION	ARROWS						WORDS	LIMIT	CROSS
	29/53	EB/WB NB/SB	TYPE II (R)	TYPE II (L)	TYPE III (L)	TYPE III (R)	TYPE V	TYPE VI	STOP	LINE	WALK
			SQFT						SQFT	SQFT	SQFT
0.56*	53	NB/SB			84						
0.60*	53	NB/SB			84						
ANDERSON RANCH PARKWAY	53	EB							44	45	
0.72	53	NB						42			
0.76	53	NB						42			
MEDLEY MOBILE HOME PARK	53	EB							22	30	
1.37	53	NB	45		42		33				
INTERSECTION 53/OLD STATE, SOUTH	53	NB	45		42		33				210
INTERSECTION 53/OLD STATE, EAST	53	WB			84	42	33				220
INTERSECTION 53/OLD STATE, WEST	53	EB			42	42	33				206
INTERSECTION 53/OLD STATE, NORTH	53	SB			84	42	33				250
1.54	53	SB			84						
1.61	53	SB			84		66				
1.8	53	NB			42		66				
1.9	53	NB			42						
INTERSECTION 53/18th St., SOUTH	53	NB			42		66				202
INTERSECTION 53/18th St., EAST	53	WB		45		42					208
INTERSECTION 53/18th St., WEST	53	EB	45								198
INTERSECTION 53/18th St., NORTH	53	SB	45		42		33				224
2.12	53	SB			42		66				
2.83	53	NB			42		66				
SUBTOTAL			180	45	882	168	528	84	66	75	1718
SUBTOTAL FROM PDQ-1			90	0	1554	126	297	84	132	145	738
TOTAL			6912								

NOTE: *ONE TYPE III (L) FACING IN EACH DIRECTION IN TURNING LANE

REMOVE THERMOPLASTIC PAVEMENT MARKING

LOCATION/POST MILE	ROUTE	DIRECTION	ARROWS				WORDS	LIMIT
	29/53	EB/WB NB/SB	TYPE II (R)	TYPE III (L)	TYPE V	TYPE VI	STOP	LINE
			SQFT				SQFT	SQFT
20.11	29	SB				42		
20.14	29	SB				42		
20.25	29	NB		42	66			
20.43*	29	NB/SB		84				
FLORENCE STREET	53	WB					22	20
0.21*	53	NB/SB		84				
JESSIE STREET	53	WB					22	30
0.25*	53	NB/SB		84				
KUGELMAN STREET	53	EB					44	45
0.29*	53	NB/SB		84				
0.33*	53	NB/SB		84				
0.36*	53	NB/SB		84				
0.40*	53	NB/SB		84				
0.44*	53	NB/SB		84				
0.48*	53	NB/SB		84				
0.52*	53	NB/SB		84				
0.56*	53	NB/SB		84				
0.60*	53	NB/SB		84				
ANDERSON RANCH PARKWAY	53	EB					44	45
0.72	53	NB				42		
0.76	53	NB				42		
MEDLEY MOBILE HOME PARK	53	EB					22	30
1.37	53	NB	45	42	33			
1.54	53	SB		84				
1.61	53	SB		84	66			
1.8	53	NB		42	66			
1.9	53	NB		42				
2.12	53	SB		42	66			
2.83	53	NB		42	66			
SUBTOTAL			45	1428	363	168	154	170
TOTAL			2328					

NOTE: *ONE TYPE III (L) FACING IN EACH DIRECTION IN TURNING LANE

PAVEMENT DELINEATION QUANTITIES
PDQ-2

STATE OF CALIFORNIA - DEPARTMENT OF TRANSPORTATION
Caltrans
NORTH REGION
DIVISION OF ENGINEERING

FUNCTIONAL SUPERVISOR: SCOTT MANN

CALCULATED-DESIGNED BY: LUZ VILLANUEVA
CHECKED BY: CHRISTOPHER BRADANICK

REVISED BY / DATE REVISED

LAST REVISION 00-00-00
DATE PLOTTED => 22-JUL-2011
TIME PLOTTED => 10:15

Dist	COUNTY	ROUTE	POST MILES TOTAL PROJECT	SHEET No.	TOTAL SHEETS
01	Lak	29,53	20.1/20.4, 0.0/2.9	17	55

REGISTERED CIVIL ENGINEER 4-26-11 DATE

6-27-11
PLANS APPROVAL DATE

REGISTERED PROFESSIONAL ENGINEER SCOTT MANN No. 72005 Exp. 6-30-12 CIVIL STATE OF CALIFORNIA

THE STATE OF CALIFORNIA OR ITS OFFICERS OR AGENTS SHALL NOT BE RESPONSIBLE FOR THE ACCURACY OR COMPLETENESS OF SCANNED COPIES OF THIS PLAN SHEET.

TRAFFIC STRIPE AND PAVEMENT MARKER

LOCATION	ROUTE	DIRECTION	4" THERMO TRAFFIC STRIPE				4" THERMO TRAFFIC STRIPE						8" THERMO TRAFFIC STRIPE	8" THERMO TRAFFIC STRIPE				RETROREFLECTIVE MARKERS		
			BROKEN 6-1 DETAIL	BROKEN 12-3 DETAIL	BROKEN 36-12 DETAIL No.		DETAIL No.						BROKEN 12-3 DETAIL	DETAIL No.				TWO-WAY YELLOW	ONE-WAY CLEAR	ONE-WAY YELLOW
	29/53	NB/SB	40	27c	12	32	21	22	25	27b	29	32	37B	36	36A	38	38B	D	G	H
			LF	LF	LF	LF	LF	LF	LF	LF	LF	LF	LF	LF	LF	LF	LF	EA	EA	EA
20.03 TO 20.11	29	MEDIAN						845										72		
20.03 TO 20.29	29	NB								1373										
20.11 TO 20.23	29	MEDIAN									2534							213		
20.18 TO 20.29	29	NB			581														13	
20.23 TO 20.29	29	MEDIAN						634										55		
20.24 TO 20.29	29	NB														264				
20.32 TO 20.44	29	NB								634										
20.44 TO 20.48	29	MEDIAN									845							72		
20.32 TO 20.5	29	SB								950										
20.32 TO 20.33	29	NB/SB						106								50	50	11		
20.32 TO 20.4	29	SB											422						30	
20.33 TO 20.44	29	NB/SB				1162						2323						245		
MORGAN VALLEY ROAD	-	EB								305										
MORGAN VALLEY ROAD	-	WB						305		305						220		27		
0.02 TO 1.45	53	NB	130		7550														158	
0.02 TO 0.07	53	NB								264										
WILSON STREET	-	WB		75			100													
0.08 TO 0.14	53	NB								317										
ORCHARD STREET	-	WB		80			100													
0.16 TO 0.2	53	NB								211										
FLORENCE STREET	-	WB		75			76													
JESSIE STREET	-	WB		125			182													
0.25 TO 1.45	53	NB								6336										
0.85 TO 1.45	53	NB							3168											67
1.35 TO 1.45	53	NB														528				
DAM ROAD	53	NB	110		2534														54	
1.48 TO 1.96	53	NB																		
1.48 TO 1.66	53	NB									3802							319		
1.66 TO 1.96	53	NB							1584											34
1.82 TO 1.96	53	NB														739				
18th AVENUE	53	NB						120		120						60		12		
1.99 TO 2.71	53	NB							3802											80
1.99 TO 2.93	53	NB			4963					4963									104	
2.89 TO 2.93	53	NB														211				
SUBTOTALS			240	355	15,628	1162	458	2010	8554	15,778	7181	2323	422			2072	50	1026	359	181
TOTAL NB			240	355	16,790		36,304						422	2122				1566		

PAVEMENT DELINEATION QUANTITIES

PDQ-3

STATE OF CALIFORNIA - DEPARTMENT OF TRANSPORTATION
NORTH REGION
DIVISION OF ENGINEERING

FUNCTIONAL SUPERVISOR: SCOTT MANN
CALCULATED-DESIGNED BY: PATRICK KYO
CHECKED BY: LUZ VILLANUEVA
REVISED BY / DATE REVISED

LAST REVISION 00-00-00 | DATE PLOTTED => 22-JUL-2011 | TIME PLOTTED => 10:15

Dist	COUNTY	ROUTE	POST MILES TOTAL PROJECT	SHEET No.	TOTAL SHEETS
01	Lak	29,53	20.1/20.4, 0.0/2.9	18	55

REGISTERED CIVIL ENGINEER 4-26-11 DATE

6-27-11
PLANS APPROVAL DATE

REGISTERED PROFESSIONAL ENGINEER SCOTT MANN No. 72005 Exp. 6-30-12 CIVIL STATE OF CALIFORNIA

THE STATE OF CALIFORNIA OR ITS OFFICERS OR AGENTS SHALL NOT BE RESPONSIBLE FOR THE ACCURACY OR COMPLETENESS OF SCANNED COPIES OF THIS PLAN SHEET.

TRAFFIC STRIPE AND PAVEMENT MARKER

LOCATION	ROUTE	DIRECTION	4" THERMO TRAFFIC STRIPE				4" THERMO TRAFFIC STRIPE						8" THERMO TRAFFIC STRIPE	8" THERMO TRAFFIC STRIPE				RETROREFLECTIVE MARKERS		
			BROKEN 6-1 DETAIL	BROKEN 12-3 DETAIL	BROKEN 36-12 DETAIL No.		DETAIL No.						BROKEN 12-3 DETAIL	DETAIL No.				TWO-WAY YELLOW	ONE-WAY CLEAR	ONE-WAY YELLOW
	29/53	NB/SB	40	27c	12	32	21	22	25	27b	29	32	37B	36	36A	38	38B	D	G	H
			LF	LF	LF	LF	LF	LF	LF	LF	LF	LF	LF	LF	LF	LF	LF	EA	EA	EA
20.03 TO 20.29	29	SB			1,373					1,373									30	
20.32 TO 20.40	29	SB								422										
0.02 TO 0.04	53	SB									422					106		37		
0.02 TO 0.05	53	SB						317										28		
0.02 TO 0.12	53	SB														528				
0.02 TO 0.26	53	SB								1,267									158	
0.02 TO 1.45	53	SB			7,550															
0.05 TO 0.54	53	SB				5,175						5,174						542		
KUGELMAN STREET	53	SB		295			160													
0.28 TO 0.61	53	SB								1,742										
ANDERSON RANCH PARKWAY	53	SB		365			180													
0.54 TO 0.6	53	SB						634										55		
0.56 TO 0.8	53	SB														1,267				
0.63 TO 0.74	53	SB						1,162										99		
0.66 TO 1.45	53	SB								4,171										
0.74 TO 0.85	53	SB									2,323							196		
0.85 TO 1.45	53	SB							3,168											67
OLD STATE HIGHWAY	53	SB						100		200						200		10		
DAM ROAD	53	SB	110		80			160		160						240		15	3	
1.48 TO 1.64	53	SB														1,690				
1.48 TO 1.96	53	SB			2,534					2,534									54	
1.66 TO 1.96	53	SB							1,584											34
18th AVENUE	53	SB					120			120										
1.99 TO 2.13	53	SB														739				
1.99 TO 2.71	53	SB							3,802											80
1.99 TO 2.93	53	SB			4,963					4,963									104	
2.71 TO 2.88	53	SB									3,590							301		
2.88 TO 2.93	53	SB						528										46		
2.89 TO 2.90	53	SB													75				4	
SUBTOTALS			110	660	16,500	5175	460	2901	8554	16,952	6335	5174	0	0	75	4770	0	1329	353	181
TOTAL SB			110	660	21,675		40,376						0	4845				1863		
TOTAL NB			240	355	16,790		36,304						422	2122				1566		
TOTAL			350	1,015	38,465		76,680						422	6967				3429		

PAVEMENT DELINEATION QUANTITIES

PDQ-4

STATE OF CALIFORNIA - DEPARTMENT OF TRANSPORTATION
NORTH REGION
DIVISION OF ENGINEERING
Caltrans

FUNCTIONAL SUPERVISOR: SCOTT MANN
CALCULATED-DESIGNED BY: PATRICK KYO
CHECKED BY: LUZ VILLANUEVA
REVISED BY
DATE REVISED

LAST REVISION 00-00-00
DATE PLOTTED => 22-JUL-2011
TIME PLOTTED => 10:15

Dist	COUNTY	ROUTE	POST MILES TOTAL PROJECT	SHEET No.	TOTAL SHEETS
01	Lak	29,53	20.1/20.4, 0.0/2.9	19	55

REGISTERED CIVIL ENGINEER 4-26-11 DATE

6-27-11
PLANS APPROVAL DATE

REGISTERED PROFESSIONAL ENGINEER
SCOTT MANN
No. 72005
Exp. 6-30-12
CIVIL
STATE OF CALIFORNIA

THE STATE OF CALIFORNIA OR ITS OFFICERS OR AGENTS SHALL NOT BE RESPONSIBLE FOR THE ACCURACY OR COMPLETENESS OF SCANNED COPIES OF THIS PLAN SHEET.

DELINEATORS AND CHANNELIZERS

ROUTE	PM	DELINEATOR CLASS 1			CHANNELIZER (SURFACE MOUNTED)	DESCRIPTION
		TYPE E	TYPE F	TYPE G	EA	
29	20.1 TO 20.4	2	10			
53	0.0 TO 1.04		16	7		
53	1.43 TO 1.46				9	AT DAM ROAD INTERSECTION, NB ON R+ SHOULDER
53	1.04 TO 2.0		20	14		
53	2.0 TO 2.9		10	10		
SUBTOTAL		2	56	31	9	
TOTAL		89			9	

PAVEMENT DELINEATION QUANTITIES

PDQ-5

STATE OF CALIFORNIA - DEPARTMENT OF TRANSPORTATION
Caltrans
NORTH REGION
DIVISION OF ENGINEERING

FUNCTIONAL SUPERVISOR: SCOTT MANN

CALCULATED-DESIGNED BY: PATRICK KYO
CHECKED BY: LUZ VILLANUEVA

REVISED BY
DATE REVISED

LAST REVISION 00-00-00
DATE PLOTTED => 22-JUL-2011
TIME PLOTTED => 10:15

Dist	COUNTY	ROUTE	POST MILES TOTAL PROJECT	SHEET No.	TOTAL SHEETS
01	Lak	29,53	20.1/20.4, 0.0/2.9	20	55

REGISTERED CIVIL ENGINEER 4-26-11 DATE

6-27-11
PLANS APPROVAL DATE

REGISTERED PROFESSIONAL ENGINEER SCOTT MANN No. 72005 Exp. 6-30-12 CIVIL STATE OF CALIFORNIA

THE STATE OF CALIFORNIA OR ITS OFFICERS OR AGENTS SHALL NOT BE RESPONSIBLE FOR THE ACCURACY OR COMPLETENESS OF SCANNED COPIES OF THIS PLAN SHEET.

MBGR QUANTITIES

LOCATION	ROUTE	POSTMILE	DIRECTION-SIDE	REMOVE MBGR	REMOVE CRASH CUSHION (SAND FILLED)	RECONSTRUCT MBGR	METAL BEAM GUARD RAILING (WOOD POST)	DOUBLE METAL BEAM GUARD RAILING (WOOD POST)	TRANSITION RAILING (TYPE WB)	MINOR CONCRETE MINOR STRUCTURE	END CAP (TYPE TC)	ALTERNATIVE FLARED TERMINAL SYSTEM	TERMINAL ANCHOR ASSEMBLY (TYPE SFT)	GUARD RAILING DELINEATOR (TYPE F)	ALTERNATIVE CRASH CUSHION	TERMINAL SYSTEM (TYPE CAT) BACKUP	WEED CONTROL MAT (FIBER)
				LF	EA	LF	LF	LF	EA	CY	EA	EA	EA	EA	EA	EA	SQYD
1	29	20.38	WB-R†	63					1	1	1	1					19
2	29	20.39	EB-R†	63					1	1	1	1					19
3	53	0.52	NB-R†	89		51						1	1	4			27
4	53	0.53	SB-R†	77		39						1	1	3			23
5	53	0.65	NB-R†	188		150						1	1	6			60
6	53	0.91	NB-R†	350		312						1		10			114
7	53	1.00	NB-R†	238		209			1	1	1			7			78
8	53	1.03	MEDIAN	152	1		25	25	1	1	1			4	1	1	73
9	53	1.09	MEDIAN	126	1		25	25	1	1	1			4	1	1	73
10	53	1.10	SB-R†	237		170			1	1	1	1		7			75
11	53	1.25	SB-R†	838		800						1	1	22			277
			TOTAL	2421	2	1731	50	50	6	6	6	8	4	67	2	2	838

RELOCATE ROADSIDE SIGN

ROUTE	PM	DIRECTION	RELOCATE ROADSIDE SIGN - 2 POST	RELOCATE ROADSIDE SIGN - 1 POST
			EA	EA
29	20.4	WB - R†	1	
29	20.4	EB - R†		1
53	0.9	NB - R†		1
53	1.0	NB - R†		2
TOTAL			1	4

ADJUST FRAME AND COVER TO GRADE

ROUTE	POSTMILE	DIRECTION	LOCATION	ADJUST FRAME AND COVER TO GRADE
				EA
53	0.15	NB	R†	3
53	0.21	NB	R†	3
53	0.24	NB	R†	3
53	0.26	SB	R†	3
53	0.65	NB	R†	1
53	0.68	NB	R†	1
TOTAL				14

INLET DEPRESSION

ROUTE	POSTMILE	DIRECTION-SIDE	(N) INLET DEPRESSSION
			EA
29	20.20	NB-R†	1
29	20.24	NB-R†	1
53	0.17	SB-R†	1
53	0.23	SB-R†	1
53	0.23	NB-R†	1
53	1.31	NB-R†	1
53	1.38	NB-R†	1
53	2.04	NB-R†	1
53	2.09	NB-R†	1
53	2.14	NB-R†	1
53	2.20	NB-R†	1
53	2.23	NB-R†	1
53	2.26	NB-R†	1
53	2.96	NB-R†	1
TOTAL			14

(N) NON-PAY ITEM

ADJUST INLET

ROUTE	POSTMILE	DIRECTION-SIDE	TYPE G1 DRAIN INLET	TYPE GO DRAIN INLET	TYPE GMP DRAIN INLET	TYPE ODI DRAIN INLET	TYPE 36" CSP DRAIN INLET
			EA	EA	EA	EA	EA
29	20.20	SB-R†					1
29	20.26	SB-R†					1
29	20.34	EB-R†		1			
53	1.38	MEDIAN	1				
53	2.04	MEDIAN	1				
53	2.07	MEDIAN			1		
53	2.83	NB-R†				1	
SUBTOTAL			2	1	1	1	2
TOTAL			7				

ESA FENCING

ROUTE	POSTMILE	DESCRIPTION	TEMPORARY FENCE (TYPE ESA)
			LF
29	20.38	INSTALL FENCING AROUND ELDERBERRY SHRUB, 20 FT FROM DRIPLINE	160
		TOTAL	160

SUMMARY OF QUANTITIES

Q-1

STATE OF CALIFORNIA - DEPARTMENT OF TRANSPORTATION
NORTH REGION
DIVISION OF ENGINEERING

FUNCTIONAL SUPERVISOR: SCOTT MANN
CALCULATED-DESIGNED BY: CHRISTOPHER BRADANICK
CHECKED BY: LUZ VILLANUEVA
REVISED BY
DATE REVISED

LAST REVISION 00-00-00 | DATE PLOTTED => 22-JUL-2011 | TIME PLOTTED => 10:15

Dist	COUNTY	ROUTE	POST MILES TOTAL PROJECT	SHEET No.	TOTAL SHEETS
01	Lak	29,53	20.1/20.4, 0.0/2.9	21	55

REGISTERED CIVIL ENGINEER 4-26-11 DATE

6-27-11
PLANS APPROVAL DATE

REGISTERED PROFESSIONAL ENGINEER SCOTT MANN No. 72005 Exp. 6-30-12 CIVIL STATE OF CALIFORNIA

THE STATE OF CALIFORNIA OR ITS OFFICERS OR AGENTS SHALL NOT BE RESPONSIBLE FOR THE ACCURACY OR COMPLETENESS OF SCANNED COPIES OF THIS PLAN SHEET.

HMA DIKE

ROUTE	POST MILE	DIRECTION SIDE	PLACE HMA DIKE (TYPE A)	PLACE HMA DIKE (TYPE C)	PLACE HMA DIKE (TYPE D)	PLACE HMA DIKE (TYPE E)	PLACE HMA DIKE (TYPE F)	REMOVE AC DIKE	HOT MIX ASPHALT -TYPE A
			LF	LF	LF	LF	LF	LF	TON
53	0.02 TO 0.03	NB/Rt	43					43	1.2
53	0.04 TO 0.05	NB/Rt	37					37	1.0
53	0.08 TO 0.10	NB/Rt	93					93	2.5
53	0.11 TO 0.20	SB/Rt	472					472	12.9
53	0.16 TO 0.23	NB/Rt	391					391	10.7
53	0.21 TO 0.22	SB/Rt	48					48	1.3
53	0.25 TO 0.26	NB/Rt			36			36	2.1
53	0.27 TO 0.29	NB/Rt			110			110	6.5
53	0.29 TO 0.30	NB/Rt			26			26	1.5
53	0.31 TO 0.46	NB/Rt			818			818	48.5
53	0.34 TO 0.39	SB/Rt			272			272	16.1
53	0.4 TO 0.46	SB/Rt			305			305	18.1
53	0.47 TO 0.51	SB/Rt			204			204	12.1
53	0.47 TO 0.50	NB/Rt			136			136	8.1
53	0.50 TO 0.51	NB/Rt		56				56	0.4
53	0.51 TO 0.52	SB/Rt					61	61	0.8
53	0.51 TO 0.52	NB/Rt					56	56	0.7
53	0.52 TO 0.53	SB/Rt		15				15	0.1
53	0.52 TO 0.52	NB/Rt	22					22	0.6
53	0.53 TO 0.59	SB/Rt			316			316	18.7
53	0.63 TO 1.05	SB/Rt			2189			2189	129.9
53	0.70 TO 0.84	NB/Rt			757			757	44.9
53	1.10 TO 1.14	SB/Rt					242	242	3.2
53	1.14 TO 1.16	SB/Rt		62				62	0.5
53	1.16 TO 1.20	SB/Rt			245			245	14.5
53	1.13 TO 1.25	NB/Rt	640					640	17.5
53	1.25 TO 1.27	NB/Rt			153			153	9.1
53	1.27 TO 1.46	NB/Rt	964					964	26.4
53	1.34 TO 1.44	MEDIAN	549					549	15.0
53	1.41 TO 1.45	SB/Rt	251					251	6.9
53	1.49 TO 1.52	NB/Rt	172					172	4.7
53	1.52 TO 1.70	NB/Rt			951			951	56.4
53	1.78 TO 1.87	SB/Rt			487			487	28.9
53	1.84 TO 1.96	NB/Rt	646					646	17.7
53	1.87 TO 1.96	SB/Rt	543					543	14.8
53	2.00 TO 2.04	SB/Rt			227			227	13.5
53	2.00 TO 2.30	NB/Rt	1624					1624	44.4
53	2.13 TO 2.31	SB/Rt	951					951	26.0
53	2.30 TO 2.69	NB/Rt			2026			2026	120.2
53	2.31 TO 2.70	SB/Rt			2038			2038	120.9
53	2.69 TO 2.81	NB/Rt	626					626	17.1
53	2.70 TO 2.76	SB/Rt	298					298	8.1
53	2.76 TO 2.90	SB/Rt			616			616	36.5
53	2.81 TO 2.87	NB/Rt			344			344	20.4
53	2.87 TO 2.92	NB/Rt				244		244	6.4
29	20.10 TO 20.18	SB/Rt	424					244	11.6
29	20.15 TO 20.27	NB/Rt	617					617	16.9
29	20.18 TO 20.22	SB/Rt			206			206	12.2
29	20.22 TO 20.26	SB/Rt	195					195	5.3
29	20.27 TO 20.28	NB/Rt			85			85	5.0
		SUBTOTAL	9606	113	12,547	244	359	22,889	1019.3
	SUBTOTAL FROM OVERSIDE DRAIN								50.9
		TOTAL	9606	113	12,547	244	359	22,889	1070.2

*FOR TOTAL SEE ROADWAY QUANTITIES TABLE

Temp DRAINAGE INLET PROTECTION

ROUTE	POST MILE	LOCATION	DI TYPE	DRAINAGE INLET PROTECTION
				EA
53	1.10	MEDIAN	G1	1

CURB RAMP DETECTABLE WARNING SURFACE

ROUTE	LOCATION	SIDE	LENGTH TOTAL	WIDTH	CURB RAMP DETECTABLE WARNING SURFACE
			FT	FT	SQYD
53/29	Hwy 29 AND 53 INTERSECTION				
		SOUTHEAST CORNER	10	3	3.33
		SOUTHWEST CORNER	12	3	4.00
		NORTHEAST CORNER	5	3	1.67
		NORTHWEST CORNER	13	3	4.33
53	Hwy 53 AND DAM ROAD/OLD STATE Hwy INTERSECTION				
		SOUTHEAST CORNER	5	3	1.67
		SOUTHWEST CORNER	5	3	1.67
		NORTHEAST CORNER	4	3	1.33
		NORTHWEST CORNER	4	3	1.33
53	Hwy 53 AND 18th STREET CORNER				
		SOUTHEAST CORNER	5	3	1.33
		SOUTHWEST CORNER	5	3	1.67
		NORTHEAST CORNER	4	3	1.33
		NORTHWEST CORNER	4	3	1.67
		TOTAL	76	36	25.33

SUMMARY OF QUANTITIES

Q-2

STATE OF CALIFORNIA - DEPARTMENT OF TRANSPORTATION
NORTH REGION
DIVISION OF ENGINEERING
Caltrans

FUNCTIONAL SUPERVISOR: SCOTT MANN
CALCULATED-DESIGNED BY: CHRISTOPHER BRADANICK
CHECKED BY: LUZ VILLANUEVA
REVISED BY
DATE REVISED

LAST REVISION 00-00-00
DATE PLOTTED => 22-JUL-2011
TIME PLOTTED => 10:15

Dist	COUNTY	ROUTE	POST MILES TOTAL PROJECT	SHEET No.	TOTAL SHEETS
01	Lak	29,53	20.1/20.4, 0.0/2.9	22	55

REGISTERED CIVIL ENGINEER 4-26-11 DATE

6-27-11
PLANS APPROVAL DATE

REGISTERED PROFESSIONAL ENGINEER SCOTT MANN No. 72005 Exp. 6-30-12 CIVIL STATE OF CALIFORNIA

THE STATE OF CALIFORNIA OR ITS OFFICERS OR AGENTS SHALL NOT BE RESPONSIBLE FOR THE ACCURACY OR COMPLETENESS OF SCANNED COPIES OF THIS PLAN SHEET.

ROADWAY ITEMS

ROUTE	LOCATION	DIRECTION SIDE	COLD PLANE (0.2' MAXIMUM)	RHMA-G	TACK COAT TON
			SQYD	TON	TON
29	BEGINNING OF PROJECT, BEGIN 100' TRANSITION, Rte 29 PM 20.1		474.9	64.1	0.24
29	ROUTE 29, PM 20.12 TO PM 20.26			783.9	2.97
29/53	AT Hwy 29/53/MORGAN VALLEY ROAD INTERSECTION, Rte 53 PM 0.0		16,354.4	2207.8	8.35
53	PRIVATE DRIVEWAY, PM 0.21	SB-Rt		13.6	0.05
53	FLORENCE STREET & JESSIE STREET, PM 0.21-PM 0.26	NB-Rt	585.5	79.0	0.30
53	PRIVATE DRIVEWAY, PM 0.23	SB-Rt		3.5	0.01
53	KUGELMAN STREET, PM 0.26	SB-Rt	394.2	53.2	0.20
53	PRIVATE DRIVEWAY, PM 0.26	NB-Rt		5.8	0.02
53	PRIVATE DRIVEWAY, PM 0.29	NB-Rt		6.3	0.02
53	PRIVATE DRIVEWAY, PM 0.33	SB-Rt		17.1	0.06
53	PRIVATE DRIVEWAY, PM 0.39	SB-Rt		15.9	0.06
53	PRIVATE DRIVEWAY, PM 0.47	SB-Rt		18.9	0.07
53	PRIVATE DRIVEWAY, PM 0.47	NB-Rt		8.6	0.03
53	PRIVATE DRIVEWAY, PM 0.53	NB-Rt		7.3	0.03
53	PRIVATE DRIVEWAY, PM 0.53	SB-Rt		6.7	0.03
53	ANDERSON RANCH PARKWAY, PM 0.62	SB-Rt	561.7	75.8	0.29
53	PRIVATE DRIVEWAY, (MOBILE HOME ENTRANCE) PM 1.0	NB-Rt		26.5	0.10
53	PM 0.17 TO PM 1.02			5472.1	20.70
53	CACHE CREEK BRIDGE APPROACH, PM 1.02		905.9	122.3	0.46
53	CACHE CREEK BRIDGE APPROACH, PM 1.10		867.5	117.1	0.44
53	PM 1.12 TO PM 1.43			2016.8	7.63
53	AT OLD STATE HIGHWAY/DAM ROAD INTERSECTION, PM 1.47		5391.8	727.9	2.75
53	PM 1.50 TO PM 1.94			3083.2	11.66
53	AT 18th AVENUE INTERSECTION, PM 1.97		4444.1	599.9	2.27
53	PM 2.01 TO PM 2.85			5534.9	20.94
53	END OF PROJECT, END 100' TRANSITION, PM 2.9		990.3	133.7	0.51
	TOTAL		30,970.3	21,202.2	80.19

RUMBLE STRIP

ROUTE	POST MILE	LENGTH	SHOULDER RUMBLE STRIP (HMA, GROUND-IN INDENTATIONS)	CENTERLINE RUMBLE STRIP (HMA, GROUND-IN INDENTATIONS)
		FT	STA	STA
53	0.28 TO 1.05	4066	78	17
53	1.09 TO 1.99	4752	124	45
53	2.0 TO 2.9	4752	152	35
TOTAL			354	97

SUMMARY OF QUANTITIES
Q-3

STATE OF CALIFORNIA - DEPARTMENT OF TRANSPORTATION
Caltrans
NORTH REGION
DIVISION OF ENGINEERING

FUNCTIONAL SUPERVISOR: SCOTT MANN
CALCULATED-DESIGNED BY: CHRISTOPHER BRADANICK
CHECKED BY: LUZ VILLANUEVA
REVISED BY
DATE REVISED

LAST REVISION 00-00-00
DATE PLOTTED => 22-JUL-2011
TIME PLOTTED => 10:15

Dist	COUNTY	ROUTE	POST MILES TOTAL PROJECT	SHEET No.	TOTAL SHEETS
01	Lak	29,53	20.1/20.4, 0.0/2.9	23	55

REGISTERED CIVIL ENGINEER 4-26-11 DATE

6-27-11
PLANS APPROVAL DATE

REGISTERED PROFESSIONAL ENGINEER SCOTT MANN No. 72005 Exp. 6-30-12 CIVIL STATE OF CALIFORNIA

THE STATE OF CALIFORNIA OR ITS OFFICERS OR AGENTS SHALL NOT BE RESPONSIBLE FOR THE ACCURACY OR COMPLETENESS OF SCANNED COPIES OF THIS PLAN SHEET.

CRACK TREATMENT AND GEOSYNTHETIC PAVEMENT INTERLAYER

LOCATION/DESCRIPTION	DIRECTION	CRACK TREATMENT	GEOSYNTHETIC PAVEMENT INTERLAYER
		LNMI	SQYD
ROUTE 29, PM 20.1 TO 20.4	NB	0.63	
ROUTE 29, PM 20.1 TO 20.4	SB	0.63	
ROUTE 53, PM 0.0 TO 2.9	NB	6.37	6806
ROUTE 53, PM 0.0 TO 2.9	SB	6.37	6806
TOTAL		14	13,612

NOTE: GEOSYNTHETIC PAVEMENT INTERLAYER IS NOT TO BE PLACED IN COLD PLANE AREAS.

REPLACE AC SURFACING

ROUTE	DIRECTION	PM	LENGTH	WIDTH	DEPTH	LANE #	VOLUME
	NB/SB	Beg	LF	LF	LF	#	CY
29	29	20.03	34	12	0.33	1	5.0
29	SB	20.03	13	12	0.33	2	1.9
29	SB	20.05	66	12	0.33	1	9.7
29	SB	20.05	399	12	0.33	2	58.5
29	SB	20.10	400	12	0.33	2	58.7
29	NB	20.20	25	12	0.33	1	3.7
29	NB	20.21	120	12	0.33	2	17.6
29	NB	20.13	9	12	0.33	1	1.3
29	NB	20.06	177	12	0.33	1	26.0
53	SB	0.02	290	12	0.33	2	42.5
53	SB	0.02	240	12	0.33	3	35.2
53	SB	0.12	1070	12	0.33	1	156.9
53	SB	0.12	967	12	0.33	2	141.8
53	SB	0.33	265	12	0.33	1	38.9
53	SB	0.33	265	12	0.33	2	38.9
53	SB	0.36	448	12	0.33	2	65.7
53	SB	0.46	288	12	0.33	2	42.2
53	SB	0.52	158	12	0.33	2	23.2
53	SB	0.56	2320	12	0.33	2	340.3
53	SB	1.04	98	12	0.33	2	14.4
53	SB	1.10	278	12	0.33	2	40.8
53	SB	1.15	220	12	0.33	2	32.3
53	SB	1.20	155	12	0.33	2	22.7
53	SB	1.41	200	12	0.33	2	29.3
53	SB	1.45	570	12	0.33	1	83.6
53	SB	1.45	570	12	0.33	2	83.6
53	SB	1.65	15	12	0.33	1	2.2
53	SB	1.73	20	12	0.33	2	2.9
53	SB	1.94	50	12	0.33	2	7.3
53	SB	1.97	70	12	0.33	2	10.3
53	SB	2.02	25	12	0.33	2	3.7
53	SB	2.06	57	12	0.33	2	8.4
53	SB	2.11	10	12	0.33	2	1.5
53	SB	2.15	27	12	0.33	1	4.0
SUBTOTAL 1							1455.0

REPLACE AC SURFACING

ROUTE	DIRECTION	PM	LENGTH	WIDTH	DEPTH	LANE #	VOLUME
	NB/SB	Beg	LF	LF	LF	#	CY
53	SB	2.31	143	12	0.33	2	21.0
53	SB	2.34	64	12	0.33	1	9.4
53	SB	2.36	12	12	0.33	2	1.8
53	SB	2.38	20	12	0.33	2	2.9
53	SB	2.40	89	12	0.33	1	13.1
53	SB	2.43	52	12	0.33	1	7.6
53	SB	2.46	260	12	0.33	2	38.1
53	SB	2.52	75	12	0.33	2	11.0
53	SB	2.58	90	12	0.33	2	13.2
53	SB	2.61	30	12	0.33	2	4.4
53	SB	2.64	21	12	0.33	2	3.1
53	SB	2.64	11	12	0.33	2	1.6
53	SB	2.67	408	12	0.33	2	59.8
53	NB	2.76	12	12	0.33	2	1.8
53	NB	2.72	90	12	0.33	2	13.2
53	NB	2.73	60	12	0.33	2	8.8
53	NB	2.63	335	12	0.33	2	49.1
53	NB	2.56	198	12	0.33	2	29.0
53	NB	2.53	50	12	0.33	2	7.3
53	NB	2.43	337	12	0.33	2	49.4
53	NB	2.41	24	12	0.33	2	3.5
53	NB	2.39	25	12	0.33	2	3.7
53	NB	2.34	163	12	0.33	2	23.9
53	NB	2.29	186	12	0.33	2	27.3
53	NB	2.14	25	12	0.33	2	3.7
53	NB	2.05	20	12	0.33	2	2.9
53	NB	1.95	165	12	0.33	2	24.2
53	NB	1.94	75	12	0.33	2	11.0
53	NB	1.88	40	12	0.33	2	5.9
53	NB	1.86	25	12	0.33	2	3.7
53	NB	1.85	48	12	0.33	2	7.0
53	NB	1.84	33	12	0.33	2	4.8
53	NB	1.81	24	12	0.33	2	3.5
53	NB	1.57	50	12	0.33	2	7.3
53	NB	1.40	339	12	0.33	1	49.7
53	NB	1.40	448	12	0.33	2.00	65.7
53	NB	1.34	35	12	0.33	2	5.1
53	NB	1.27	282	12	0.33	2	41.4
53	NB	1.21	222	12	0.33	2	32.6
53	NB	1.15	68	12	0.33	2	10.0
53	NB	1.10	222	12	0.33	2	32.6
53	NB	1.04	10	12	0.33	1	1.5
53	NB	1.04	30	12	0.33	2	4.4
53	NB	0.96	330	12	0.33	1	48.4
53	NB	0.96	124	12	0.33	2	18.2
53	NB	0.92	95	12	0.33	2	13.9
53	NB	0.88	149	12	0.33	1	21.9
53	NB	0.87	60	12	0.33	2	8.8
53	NB	0.68	960	12	0.33	2	140.8
53	NB	0.64	92	12	0.33	2	13.5
53	NB	0.63	30	12	0.33	2	4.4
53	NB	0.58	92	12	0.33	2	13.5
53	NB	0.50	312	12	0.33	2	45.8
53	NB	0.45	24	12	0.33	1	3.5
53	NB	0.02	2089	12	0.33	2	306.4
SUBTOTAL							1360.1
SUBTOTAL 1							1455.0
TOTAL							2815.1

SUMMARY OF QUANTITIES
Q-4

STATE OF CALIFORNIA - DEPARTMENT OF TRANSPORTATION
NORTH REGION
DIVISION OF ENGINEERING
Caltrans

FUNCTIONAL SUPERVISOR: SCOTT MANN
CALCULATED-DESIGNED BY: CHRISTOPHER BRADANICK
CHECKED BY: LUZ VILLANUEVA
REVISED BY
DATE REVISED

LAST REVISION 00-00-00 | DATE PLOTTED => 22-JUL-2011 | TIME PLOTTED => 10:15

Dist	COUNTY	ROUTE	POST MILES TOTAL PROJECT	SHEET No.	TOTAL SHEETS
01	Lak	29,53	20.1/20.4, 0.0/2.9	24	55

REGISTERED CIVIL ENGINEER 4-26-11 DATE

6-27-11
PLANS APPROVAL DATE

REGISTERED PROFESSIONAL ENGINEER
SCOTT MANN
No. 72005
Exp. 6-30-12
CIVIL
STATE OF CALIFORNIA

THE STATE OF CALIFORNIA OR ITS OFFICERS OR AGENTS SHALL NOT BE RESPONSIBLE FOR THE ACCURACY OR COMPLETENESS OF SCANNED COPIES OF THIS PLAN SHEET.

OVERSIDE DRAIN ENTRANCE TAPER AND HMA DITCH

ROUTE	POST MILE	SIDE	PLACE HMA (Misc. AREA)	HOT MIX ASPHALT (TYPE A)
			SQYD	TON
53	0.46	R†	0.7	0.07
53	0.46	L†	0.7	0.07
53	0.52	R†	0.7	0.07
53	0.52	L†	0.7	0.07
53	0.60	L†	0.7	0.07
53	0.70	L†	0.7	0.07
53	0.73	L†	0.7	0.07
53	0.77	L†	0.7	0.07
53	0.83	R†	0.7	0.07
53	0.90	L†	0.7	0.07
53	1.10	L†	0.7	0.07
53	1.60	R†	0.7	0.07
53	1.68	R†	0.7	0.07
53	1.78	L†	0.7	0.07
53	1.90	L†	0.7	0.07
53	2.00	L†	0.7	0.07
53	2.30	R†	0.7	0.07
53	2.44	R†	0.7	0.07
53	2.47	L†	0.7	0.07
53	2.52	R†	0.7	0.07
53	2.69	R†	0.7	0.07
53	2.72	L†	0.7	0.07
53	2.78	L†	0.7	0.07
53	2.83	R†	0.7	0.07
53	2.87	L†	0.7	0.07
53	2.88	R†	0.7	0.07
53	2.90	L†	0.7	0.07
53	2.92	R†	0.7	0.07
53	3.03	R†	0.7	0.07
53	3.06	L†	0.7	0.07
53	3.08	R†	0.7	0.07
53	3.08	L†	0.7	0.07
53*	1.13 TO 1.20	NB/R†	9.0	18.23
53*	2.12 TO 2.24	SB/R†	15.0	30.38
SUBTOTAL			46.4	50.85
TOTAL			46.4	**

* FROM HIGH SIDE SUPER DITCH.
** FOR TOTAL, SEE HMA DIKE TABLE ON Q-2

SHOULDER BACKING

ROUTE	POST MILE	IMPORTED MATERIAL (SHOULDER BACKING)
		TON
29	20.1 TO 20.4	99.8
53	0.25 TO 0.83	193.0
53	0.83 TO 1.04	139.8
53	1.09 TO 1.46	246.2
53	1.49 TO 1.66	56.6
53	1.66 TO 1.97	206.2
53	1.99 TO 2.71	479.0
53	2.71 TO 2.9	63.2
TOTAL		1483.8

ADDITIONAL TEMPORARY CONSTRUCTION BMP'S

ITEM	UNIT	QUANTITY
TEMPORARY FIBER ROLL (6")	LF	2300
TEMPORARY SILT FENCE	LF	2300

SUMMARY OF QUANTITIES

Q-5

STATE OF CALIFORNIA - DEPARTMENT OF TRANSPORTATION
Caltrans
NORTH REGION
DIVISION OF ENGINEERING

FUNCTIONAL SUPERVISOR: SCOTT MANN
CALCULATED-DESIGNED BY: CHRISTOPHER BRADANICK
CHECKED BY: LUZ VILLANUEVA
REVISED BY
DATE REVISED

LAST REVISION 00-00-00
DATE PLOTTED => 22-JUL-2011
TIME PLOTTED => 10:15

Dist	COUNTY	ROUTE	POST MILES TOTAL PROJECT	SHEET No.	TOTAL SHEETS
01	Lak	29,53	20.1/20.4, 0.0/2.9	25	55

Brian T. Finck 5/10/11
REGISTERED ELECT ENGINEER DATE

6-27-11
PLANS APPROVAL DATE

REGISTERED PROFESSIONAL ENGINEER BRIAN T. FINCK No. 17756 Exp. 6-30-12 ELECT STATE OF CALIFORNIA

THE STATE OF CALIFORNIA OR ITS OFFICERS OR AGENTS SHALL NOT BE RESPONSIBLE FOR THE ACCURACY OR COMPLETENESS OF SCANNED COPIES OF THIS PLAN SHEET.

NOTES:
1. FOR COMPLETE RIGHT OF WAY DATA, SEE RIGHT OF WAY RECORD MAPS AT THE DISTRICT OFFICE.
2. EXISTING UTILITY FACILITIES HAVE NOT BEEN PLOTTED ON THESE PLANS.

ELECTRICAL NOTES:
1. DETECTOR HANDHOLES SHALL BE PLACED ON LANE LINES AS SHOWN.
2. LOOPS SHALL BE PLACED PRIOR TO PLACING FINAL LIFT OF HOT MIX ASPHALT.
3. RC EXISTING HANDHOLES AND ALL EXISTING LOOPS AFFECTED BY CONSTRUCTION.

LEGEND:
TYPE D LOOP (LOCATED AT CROSSWALK)

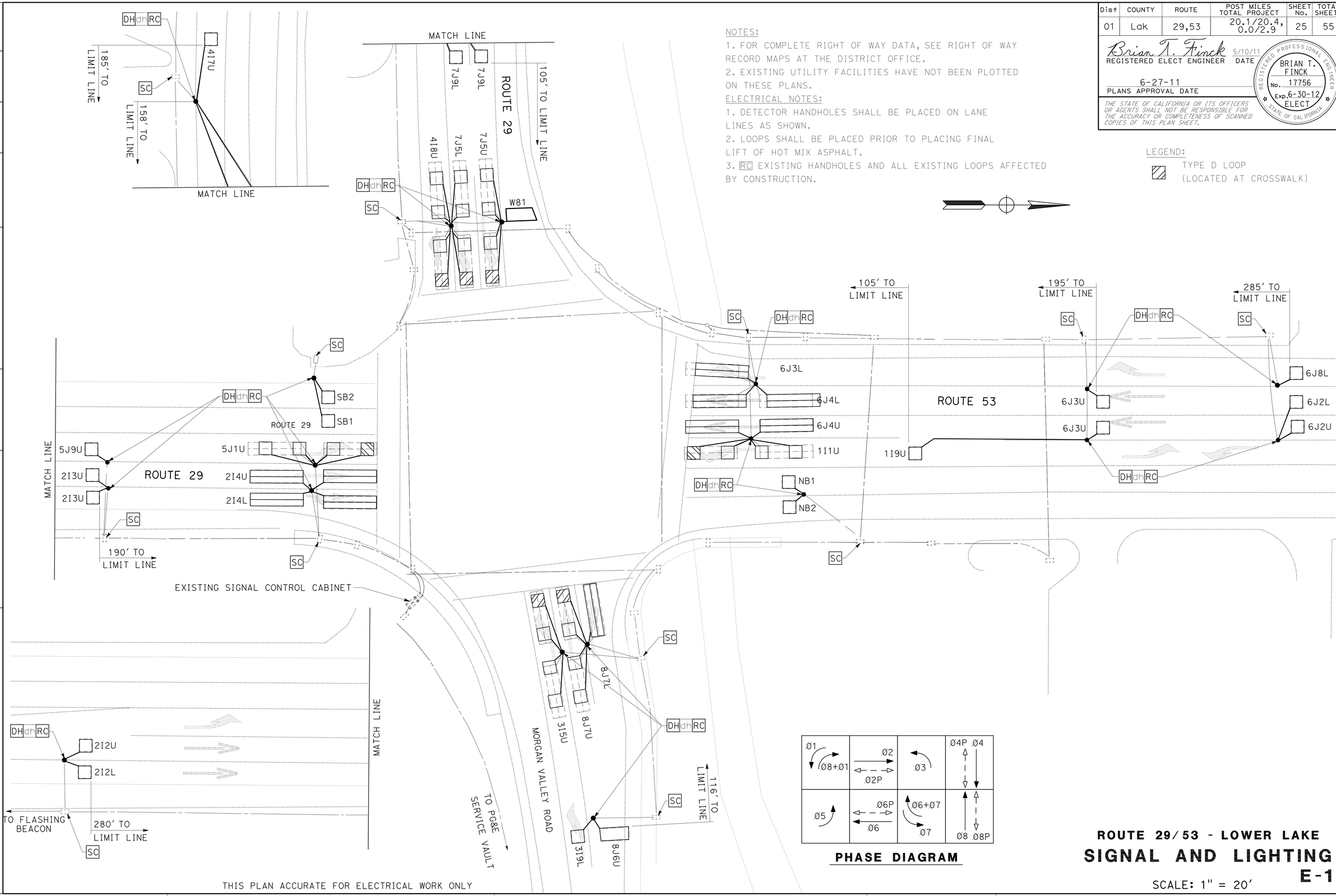

PHASE DIAGRAM

THIS PLAN ACCURATE FOR ELECTRICAL WORK ONLY

ROUTE 29/53 - LOWER LAKE

SIGNAL AND LIGHTING

SCALE: 1" = 20'

E-1

REVISED BY	DATE REVISED

CALCULATED-DESIGNED BY	CHECKED BY
SEAN LARSON	BRIAN FINCK

FUNCTIONAL SUPERVISOR: TROY ARSENEAU

STATE OF CALIFORNIA - DEPARTMENT OF TRANSPORTATION
Caltrans TRAFFIC ELECTRICAL

LAST REVISION 00-00-00 | DATE PLOTTED => 22-JUL-2011 | TIME PLOTTED => 10:55

Dist	COUNTY	ROUTE	POST MILES TOTAL PROJECT	SHEET No.	TOTAL SHEETS
01	Lak	29,53	20.1/20.4, 0.0/2.9	26	55

Brian T. Finck 5/10/11
REGISTERED ELECT ENGINEER DATE

6-27-11
PLANS APPROVAL DATE

REGISTERED PROFESSIONAL ENGINEER BRIAN T. FINCK No. 17756 Exp. 6-30-12 ELECT STATE OF CALIFORNIA

THE STATE OF CALIFORNIA OR ITS OFFICERS OR AGENTS SHALL NOT BE RESPONSIBLE FOR THE ACCURACY OR COMPLETENESS OF SCANNED COPIES OF THIS PLAN SHEET.

NOTES:
1. FOR COMPLETE RIGHT OF WAY DATA, SEE RIGHT OF WAY RECORD MAPS AT THE DISTRICT OFFICE.
2. EXISTING UTILITY FACILITIES HAVE NOT BEEN PLOTTED ON THESE PLANS.

ELECTRICAL NOTES:
1. DETECTOR HANDHOLES SHALL BE PLACED ON LANE LINES AS SHOWN.
2. LOOPS SHALL BE PLACED PRIOR TO PLACING FINAL LIFT OF HOT MIX ASPHALT.
3. RC EXISTING HANDHOLES AND ALL EXISTING LOOPS AFFECTED BY CONSTRUCTION.

LEGEND:
TYPE D LOOP (LOCATED AT CROSSWALK)

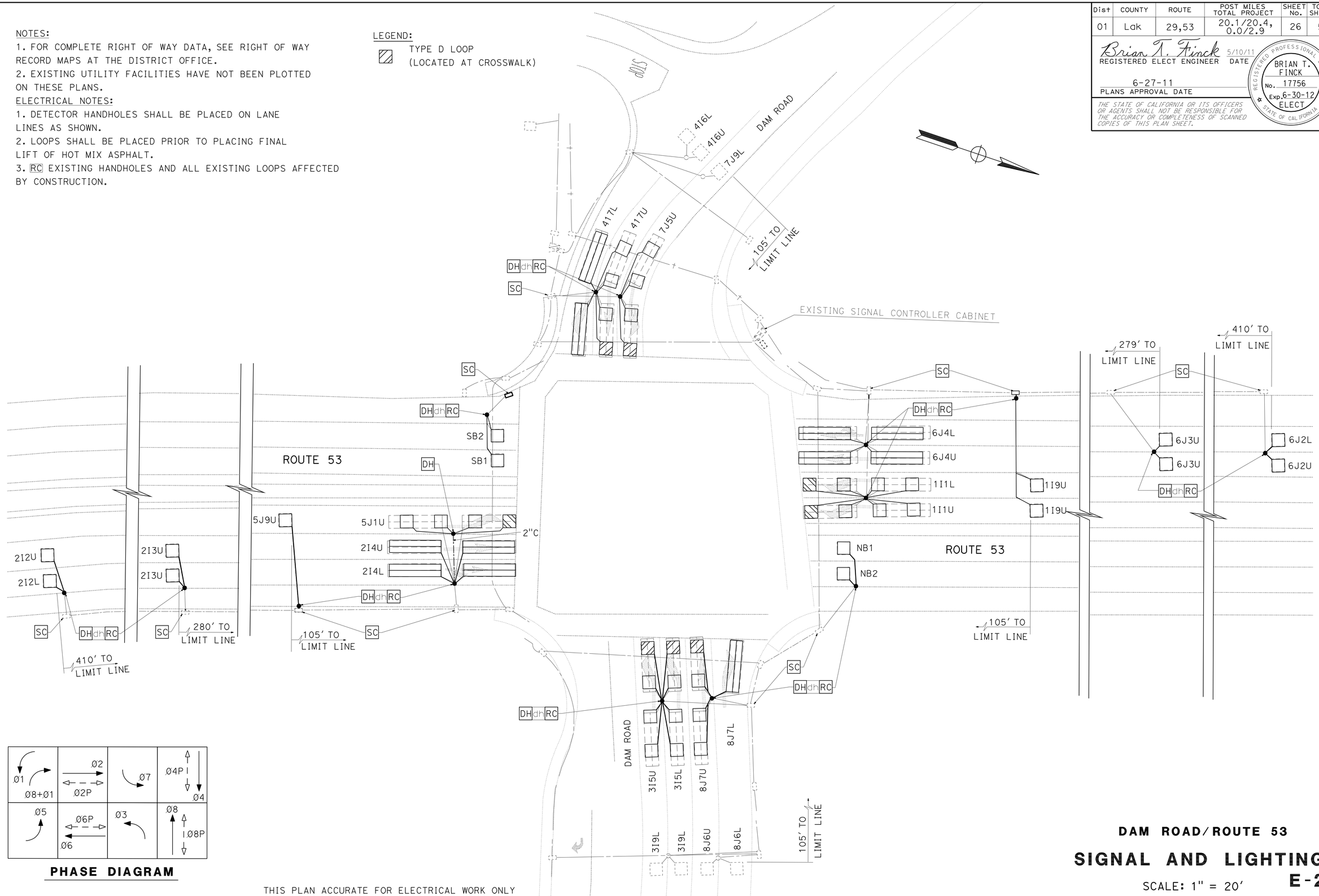

PHASE DIAGRAM

THIS PLAN ACCURATE FOR ELECTRICAL WORK ONLY

DAM ROAD/ROUTE 53

SIGNAL AND LIGHTING

SCALE: 1" = 20'

E-2

STATE OF CALIFORNIA - DEPARTMENT OF TRANSPORTATION
Caltrans® **TRAFFIC ELECTRICAL**

FUNCTIONAL SUPERVISOR: TROY ARSENEAU
CALCULATED-DESIGNED BY: SEAN LARSON
CHECKED BY: BRIAN FINCK
REVISED BY / DATE REVISED

LAST REVISION 00-00-00
DATE PLOTTED => 22-JUL-2011
TIME PLOTTED => 10:55

Dist	COUNTY	ROUTE	POST MILES TOTAL PROJECT	SHEET No.	TOTAL SHEETS
01	Lak	29,53	20.1/20.4, 0.0/2.9	27	55

Brian T. Finck 5/10/11
REGISTERED ELECT ENGINEER DATE

6-27-11
PLANS APPROVAL DATE

REGISTERED PROFESSIONAL ENGINEER BRIAN T. FINCK No. 17756 Exp. 6-30-12 ELECT STATE OF CALIFORNIA

THE STATE OF CALIFORNIA OR ITS OFFICERS OR AGENTS SHALL NOT BE RESPONSIBLE FOR THE ACCURACY OR COMPLETENESS OF SCANNED COPIES OF THIS PLAN SHEET.

NOTES:
1. FOR COMPLETE RIGHT OF WAY DATA, SEE RIGHT OF WAY RECORD MAPS AT THE DISTRICT OFFICE.
2. EXISTING UTILITY FACILITIES HAVE NOT BEEN PLOTTED ON THESE PLANS.

ELECTRICAL NOTES:
1. DETECTOR HANDHOLES SHALL BE PLACED ON LANE LINES AS SHOWN.
2. LOOPS SHALL BE PLACED PRIOR TO PLACING FINAL LIFT OF HOT MIX ASPHALT.
3. RC EXISTING HANDHOLES AND ALL EXISTING LOOPS AFFECTED BY CONSTRUCTION.

LEGEND:
TYPE D LOOP (LOCATED AT CROSSWALK)

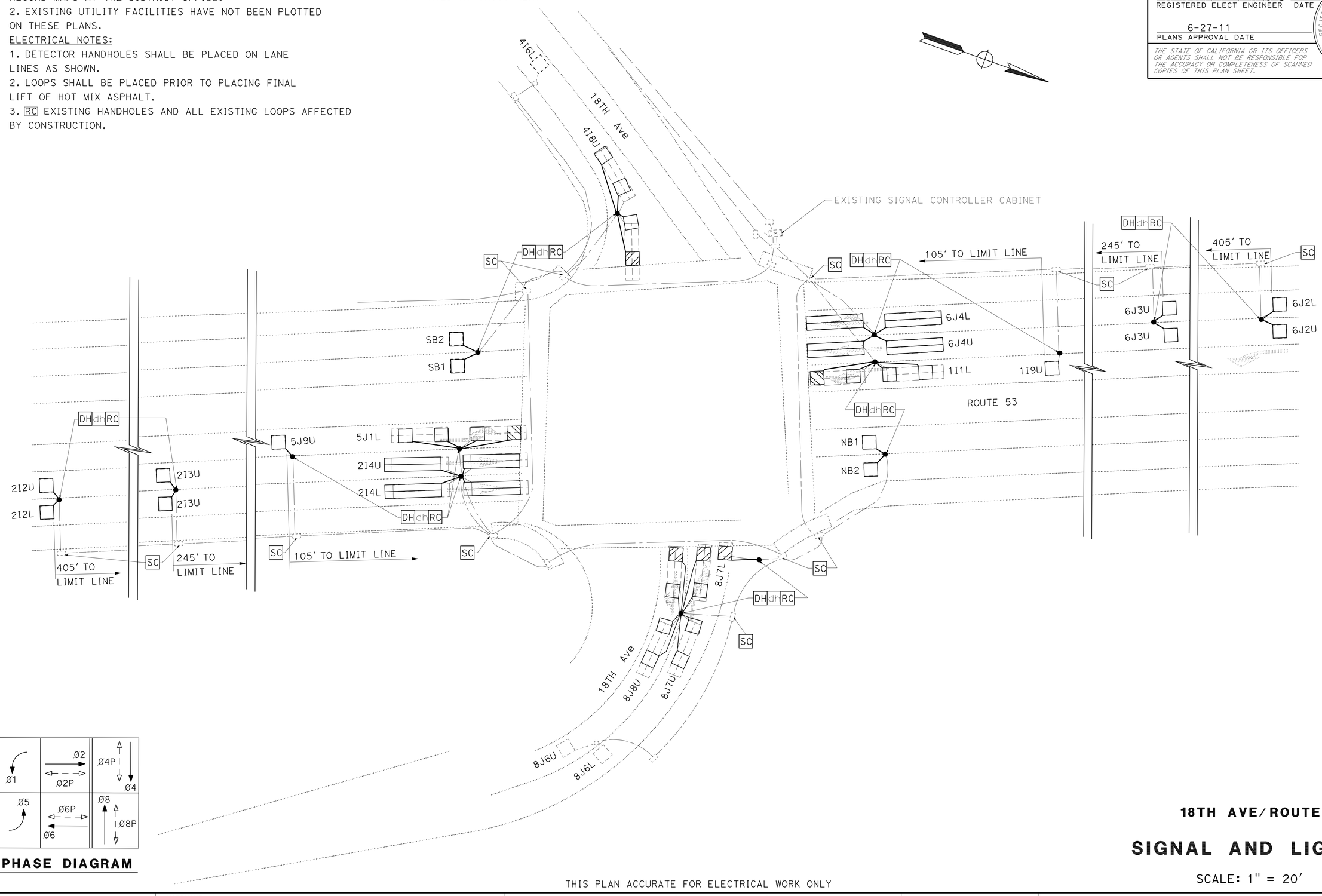

PHASE DIAGRAM

THIS PLAN ACCURATE FOR ELECTRICAL WORK ONLY

18TH AVE/ROUTE 53

SIGNAL AND LIGHTING

SCALE: 1" = 20'

E-3

STATE OF CALIFORNIA - DEPARTMENT OF TRANSPORTATION
Caltrans® **TRAFFIC ELECTRICAL**

FUNCTIONAL SUPERVISOR: TROY ARSENEAU
CALCULATED-DESIGNED BY: SEAN LARSON
CHECKED BY: BRIAN FINCK
REVISED BY
DATE REVISED

LAST REVISION 00-00-00
DATE PLOTTED => 22-JUL-2011
TIME PLOTTED => 10:55

Dist	COUNTY	ROUTE	POST MILES TOTAL PROJECT	SHEET No.	TOTAL SHEETS
01	Lak	29,53	20.1/20.4 0.0/2.9	28	55

Randell D. Hiatt
REGISTERED CIVIL ENGINEER

May 20, 2011
PLANS APPROVAL DATE

REGISTERED PROFESSIONAL ENGINEER
Randell D. Hiatt
No. C50200
Exp. 6-30-11
CIVIL
STATE OF CALIFORNIA

The State of California or its officers or agents shall not be responsible for the accuracy or completeness of electronic copies of this plan sheet.

To accompany plans dated 6-27-11

NOTES:

1. When necessary to place dike in front of face of guard railing, only Type C dike may be used. For dike details, see Standard Plan A87B.
2. For standard railing post embedment, see Standard Plans A77C3.
3. Guard railing delineation to be used where shown on the Project Plans.
4. When dike or curb is placed under guard railing, the maximum height of the dike or curb shall be 4". Mountable dike should not be used. For dike and curb details, see Standard Plans A87A and A87B.
5. For details of typical distance between the face of rail and hinge point, see Standard Plan A77C3.
6. For steel line posts, use 1/4 - 20 self-tapping screws in 0.22" diameter holes or 1/4" bolts in 9/32" diameter holes.

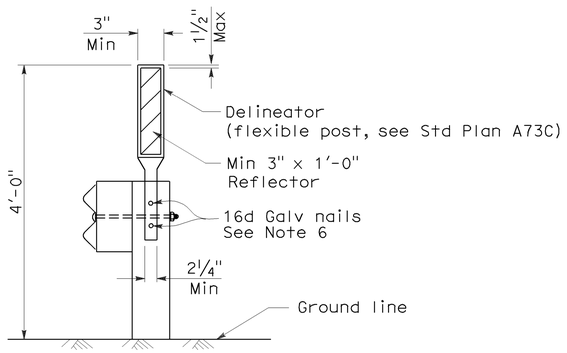

GUARD RAILING DELINEATION

See Note 3

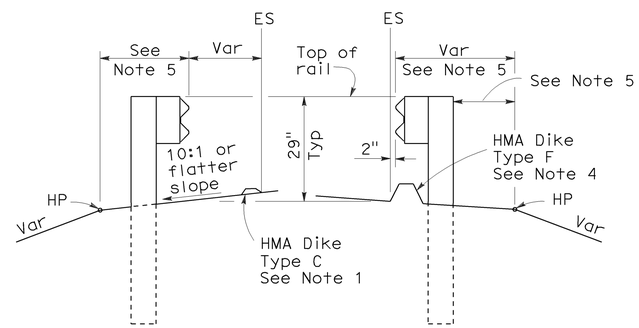

DIKE POSITIONING

See Note 1

STATE OF CALIFORNIA
DEPARTMENT OF TRANSPORTATION

METAL BEAM GUARD RAILING TYPICAL RAILING DELINEATION AND DIKE POSITIONING DETAILS

NO SCALE

RSP A77C4 DATED MAY 20, 2011 SUPERSEDES RSP A77C4 DATED JUNE 6, 2008 AND STANDARD PLAN A77C4 DATED MAY 1, 2006 - PAGE 47 OF THE STANDARD PLANS BOOK DATED MAY 2006.

REVISED STANDARD PLAN RSP A77C4

2006 REVISED STANDARD PLAN RSP A77C4

3-10-11

DIST	COUNTY	ROUTE	POST MILES TOTAL PROJECT	SHEET NO.	TOTAL SHEETS
01	Lak	29,53	20.1/20.4 0.0/2.9	29	55

Randell D. Hiatt
REGISTERED CIVIL ENGINEER

October 20, 2006
PLANS APPROVAL DATE

REGISTERED PROFESSIONAL ENGINEER
Randell D. Hiatt
No. C50200
Exp. 6-30-07
CIVIL
STATE OF CALIFORNIA

The State of California or its officers or agents shall not be responsible for the accuracy or completeness of electronic copies of this plan sheet.

To accompany plans dated 6-27-11

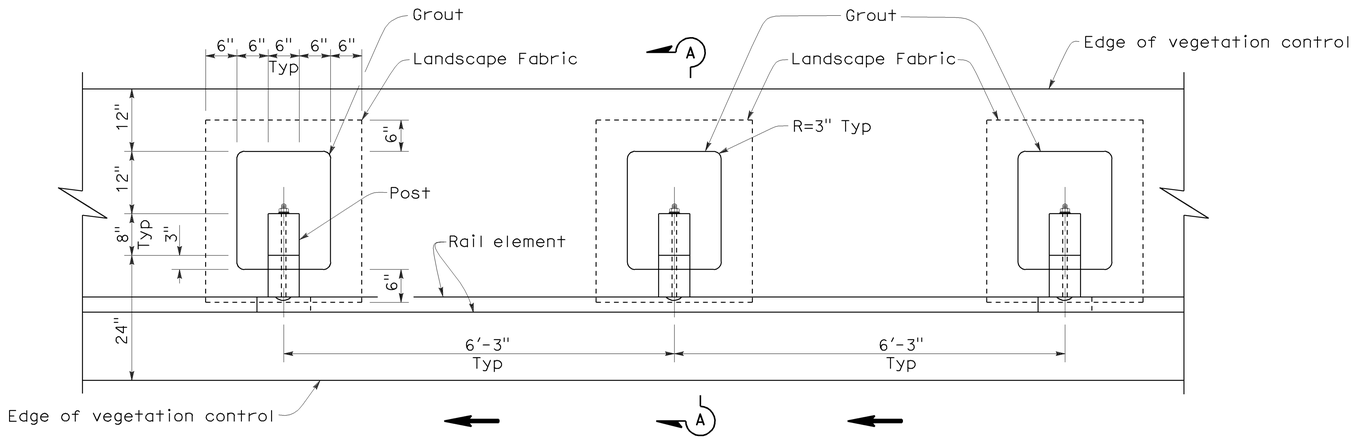

PLAN

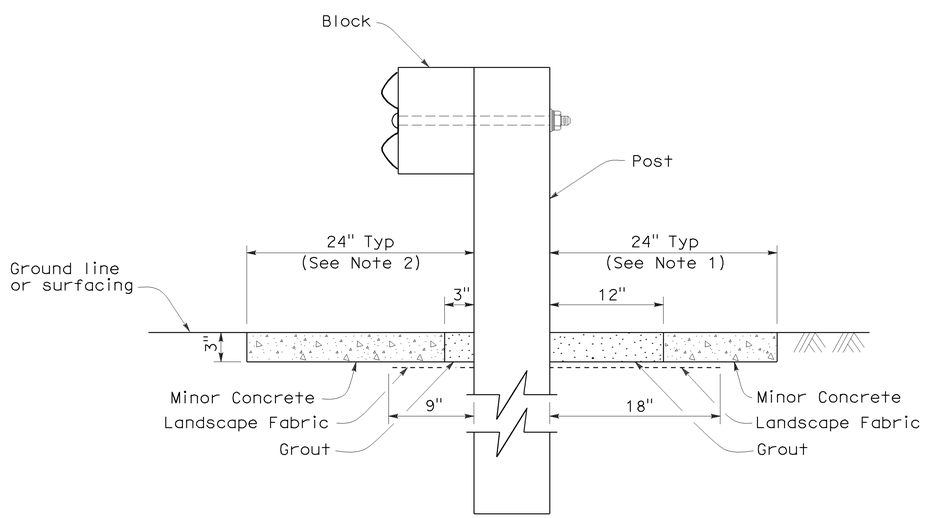

SECTION A-A

NOTES:

1. Where the distance between back of post and hinge point is less than 24", vegetation control to be constructed flush with the back edge of the post.
2. Where dike is constructed under railing, construct vegetation control to back edge of dike. Where paved shoulder is constructed within 24" in front of the post, construct vegetation control to the edge of paved shoulder.
3. Direction of adjacent traffic indicated by ← .

STATE OF CALIFORNIA
DEPARTMENT OF TRANSPORTATION

METAL BEAM GUARD RAILING TYPICAL VEGETATION CONTROL STANDARD RAILING SECTION

NO SCALE

NSP A77C5 DATED OCTOBER 20, 2006 SUPPLEMENTS THE STANDARD PLANS BOOK DATED MAY 2006.

NEW STANDARD PLAN NSP A77C5

2006 NEW STANDARD PLAN NSP A77C5

7-17-06

DIST	COUNTY	ROUTE	POST MILES TOTAL PROJECT	SHEET NO.	TOTAL SHEETS
01	Lak	29,53	20.1/20.4 0.0/2.9	30	55

Randell D. Hiatt
REGISTERED CIVIL ENGINEER

October 20, 2006
PLANS APPROVAL DATE

REGISTERED PROFESSIONAL ENGINEER
Randell D. Hiatt
No. C50200
Exp. 6-30-07
CIVIL
STATE OF CALIFORNIA

The State of California or its officers or agents shall not be responsible for the accuracy or completeness of electronic copies of this plan sheet.

To accompany plans dated 6-27-11

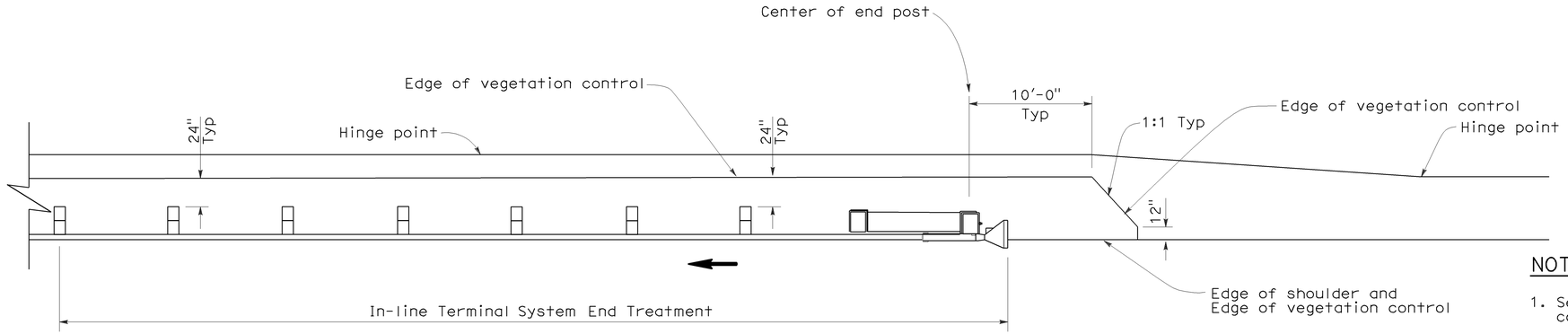

PLAN

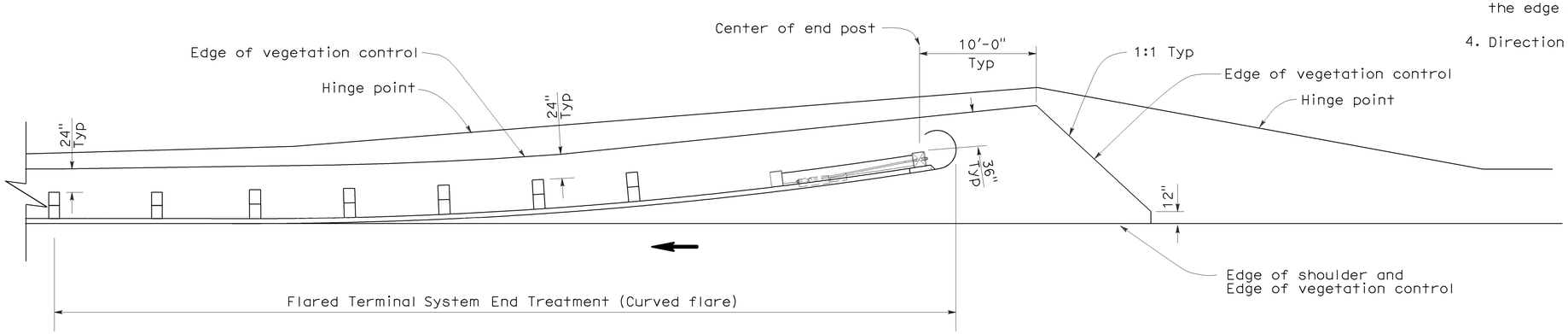

PLAN

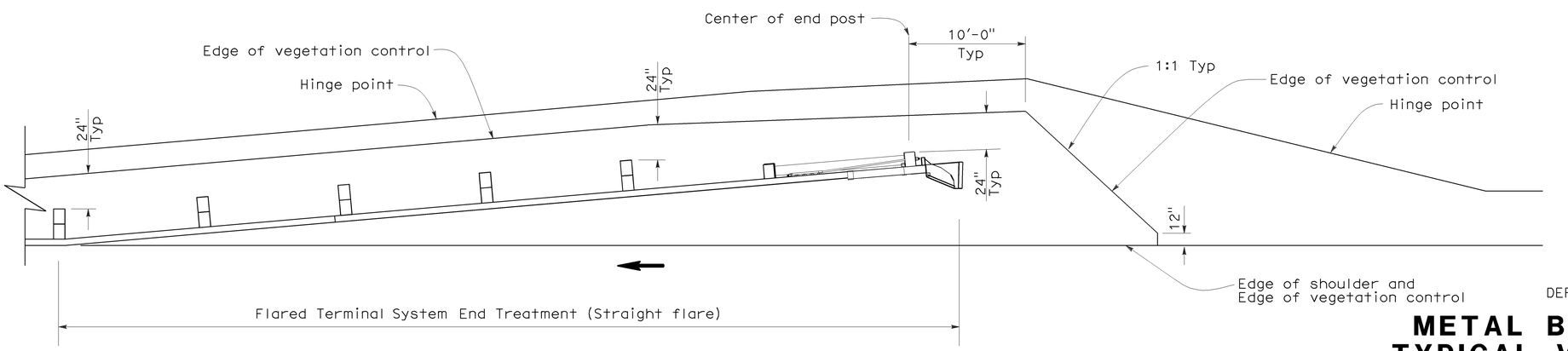

PLAN

NOTES:

1. See New Standard Plan NSP A77C5 for additional vegetation control details.
2. Where the distance between back of post and hinge point is less than 24", vegetation control to be constructed flush with the back edge of the post.
3. Where dike is constructed under railing, construct vegetation control to back edge of dike. Where paved shoulder is constructed within 24" in front of the post, construct vegetation control to the edge of paved shoulder.
4. Direction of adjacent traffic indicated by ←.

STATE OF CALIFORNIA
DEPARTMENT OF TRANSPORTATION

METAL BEAM GUARD RAILING TYPICAL VEGETATION CONTROL FOR TERMINAL SYSTEM END TREATMENTS

NO SCALE

NSP A77C6 DATED OCTOBER 20, 2006 SUPPLEMENTS THE STANDARD PLANS BOOK DATED MAY 2006.

NEW STANDARD PLAN NSP A77C6

2006 NEW STANDARD PLAN NSP A77C6

7-17-06

DIST	COUNTY	ROUTE	POST MILES TOTAL PROJECT	SHEET NO.	TOTAL SHEETS
01	Lak	29,53	20.1/20.4 0.0/2.9	31	55

Randell D. Hiatt
REGISTERED CIVIL ENGINEER

October 20, 2006
PLANS APPROVAL DATE

REGISTERED PROFESSIONAL ENGINEER
Randell D. Hiatt
No. C50200
Exp. 6-30-07
CIVIL
STATE OF CALIFORNIA

The State of California or its officers or agents shall not be responsible for the accuracy or completeness of electronic copies of this plan sheet.

To accompany plans dated 6-27-11

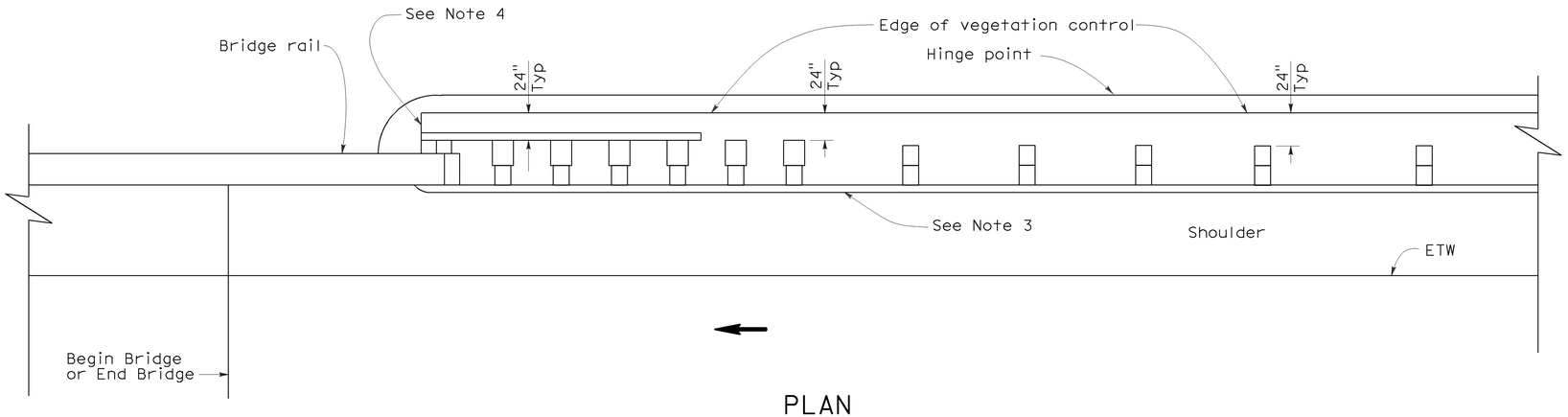

PLAN

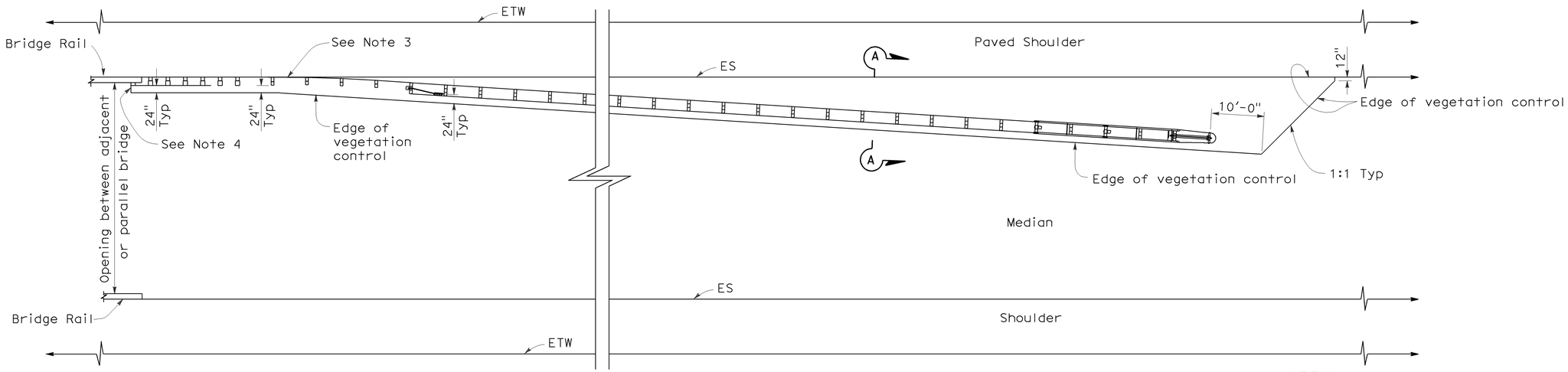

PLAN

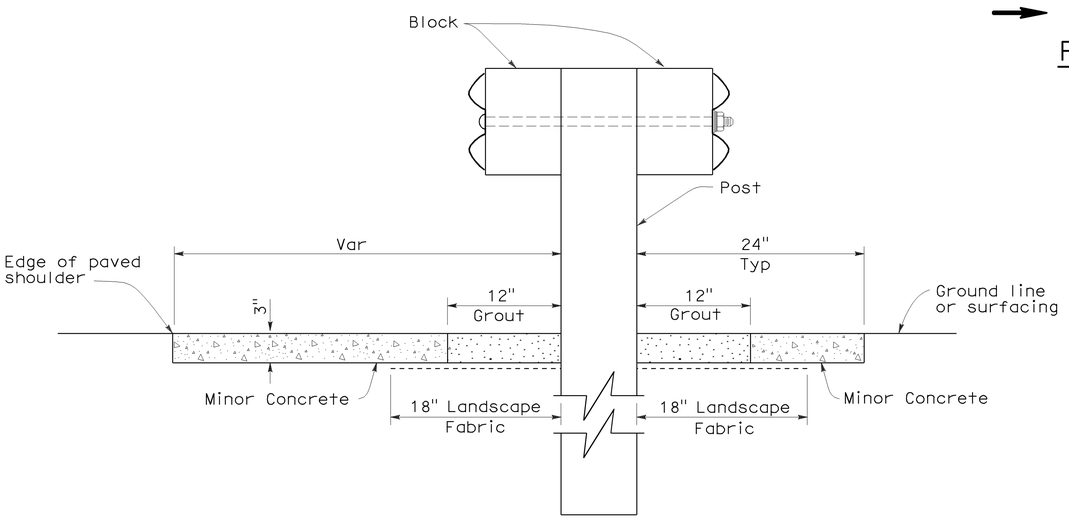

SECTION A-A

NOTES:

1. See New Standard Plan NSP A77C5 for additional vegetation control details.
2. Where the distance between back of post and hinge point is less than 24", vegetation control to be constructed flush with the back edge of the post.
3. Where dike is constructed under railing, construct vegetation control to back edge of dike. Where paved shoulder is constructed within 24" in front of the post, construct vegetation control to the edge of paved shoulder.
4. End vegetation control at end of backside rail element.
5. Direction of adjacent traffic indicated by ←.

STATE OF CALIFORNIA
DEPARTMENT OF TRANSPORTATION

METAL BEAM GUARD RAILING TYPICAL VEGETATION CONTROL AT STRUCTURE APPROACH AND DEPARTURE

NO SCALE

NSP A77C7 DATED OCTOBER 20, 2006 SUPPLEMENTS THE STANDARD PLANS BOOK DATED MAY 2006.

NEW STANDARD PLAN NSP A77C7

2006 NEW STANDARD PLAN NSP A77C7

7-17-06

DIST	COUNTY	ROUTE	POST MILES TOTAL PROJECT	SHEET NO.	TOTAL SHEETS
01	Lak	29,53	20.1/20.4 0.0/2.9	32	55

Randell D. Hiatt
REGISTERED CIVIL ENGINEER

October 20, 2006
PLANS APPROVAL DATE

REGISTERED PROFESSIONAL ENGINEER
Randell D. Hiatt
No. C50200
Exp. 6-30-07
CIVIL
STATE OF CALIFORNIA

The State of California or its officers or agents shall not be responsible for the accuracy or completeness of electronic copies of this plan sheet.

To accompany plans dated 6-27-11

NOTES:

1. See New Standard Plan NSP A77C5 for additional vegetation control details.
2. Where the distance between back of post and hinge point is less than 24", vegetation control to be constructed flush with the back edge of the post.
3. Where dike is constructed under railing, construct vegetation control to back edge of dike. Where paved shoulder is constructed within 24" in front of the post, construct vegetation control to the edge of paved shoulder.
4. Direction of adjacent traffic indicated by ←.

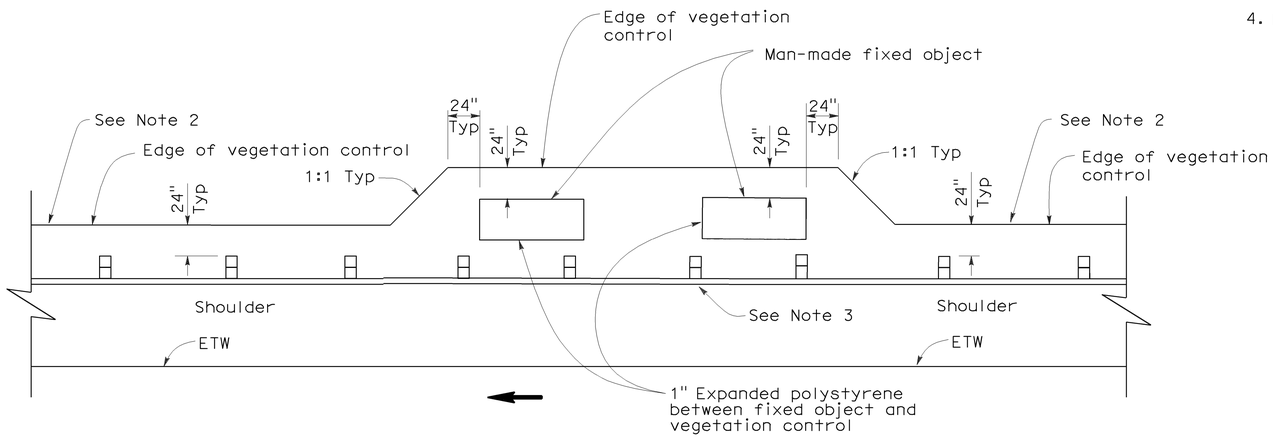

PLAN

FIXED OBJECT(S) ON SHOULDER

STATE OF CALIFORNIA
DEPARTMENT OF TRANSPORTATION

METAL BEAM GUARD RAILING TYPICAL VEGETATION CONTROL AT FIXED OBJECT

NO SCALE

NSP A77C8 DATED OCTOBER 20, 2006 SUPPLEMENTS THE STANDARD PLANS BOOK DATED MAY 2006.

NEW STANDARD PLAN NSP A77C8

2006 NEW STANDARD PLAN NSP A77C8

7-17-06

DIST	COUNTY	ROUTE	POST MILES TOTAL PROJECT	SHEET NO.	TOTAL SHEETS
01	Lak	29,53	20.1/20.4 0.0/2.9	33	55

Randell D. Hiatt
REGISTERED CIVIL ENGINEER

October 20, 2006
PLANS APPROVAL DATE

REGISTERED PROFESSIONAL ENGINEER
Randell D. Hiatt
No. C50200
Exp. 6-30-07
CIVIL
STATE OF CALIFORNIA

The State of California or its officers or agents shall not be responsible for the accuracy or completeness of electronic copies of this plan sheet.

To accompany plans dated 6-27-11

NOTES:

1. See New Standard Plan NSP A77C5 for additional vegetation control details.
2. Where dike is constructed under railing, construct vegetation control to back edge of dike. Where paved shoulder is constructed within 24" in front of the post, construct vegetation control to the edge of paved shoulder.
3. Direction of adjacent traffic indicated by ← .

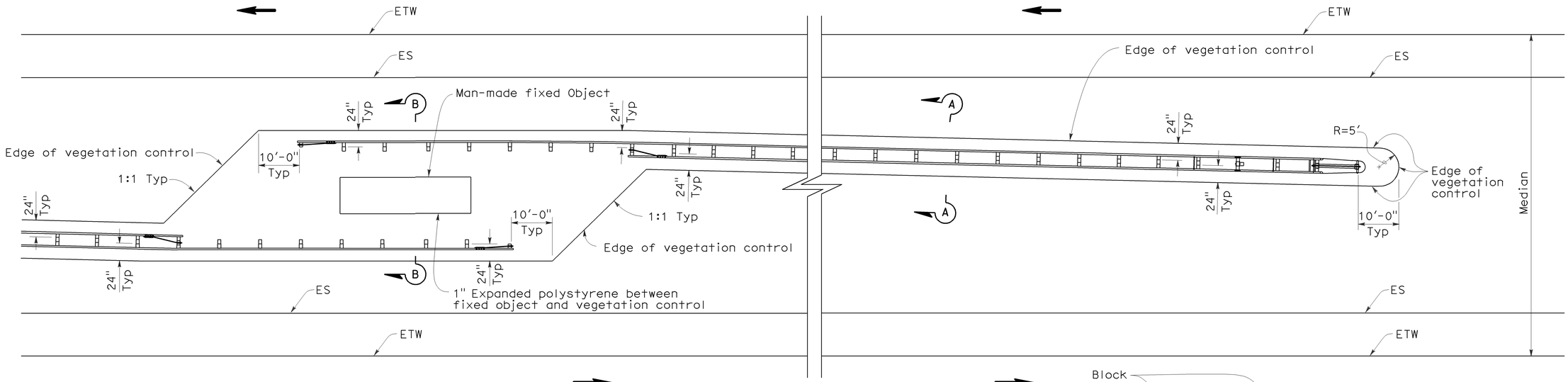

PLAN

FIXED OBJECT(S) IN MEDIAN

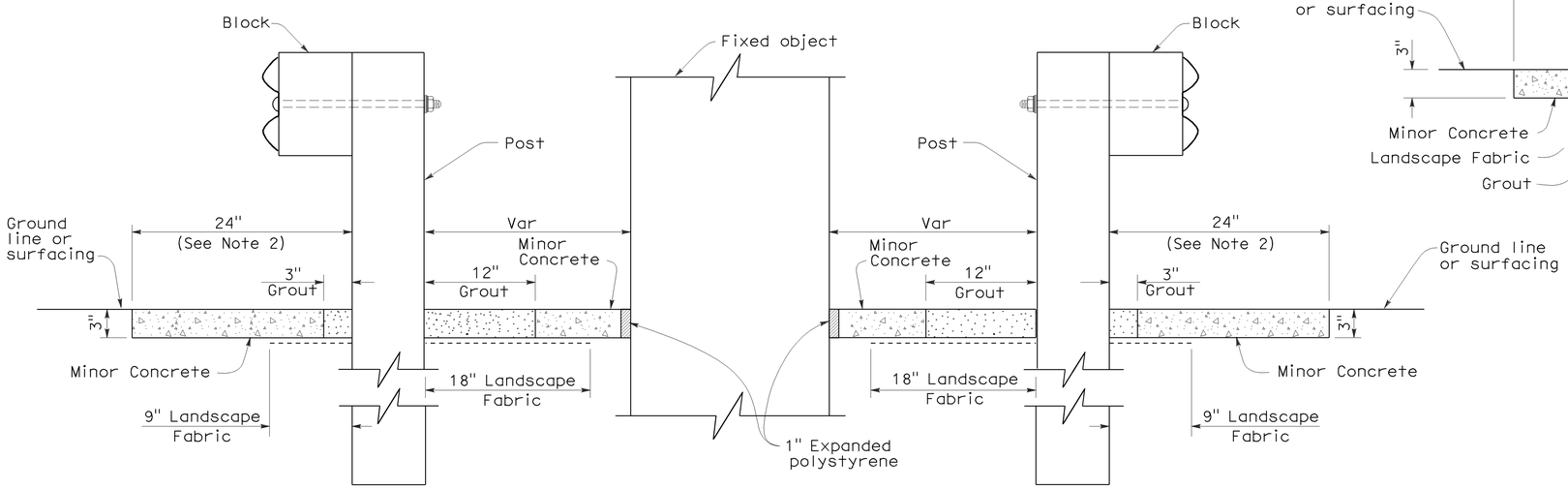

SECTION B-B

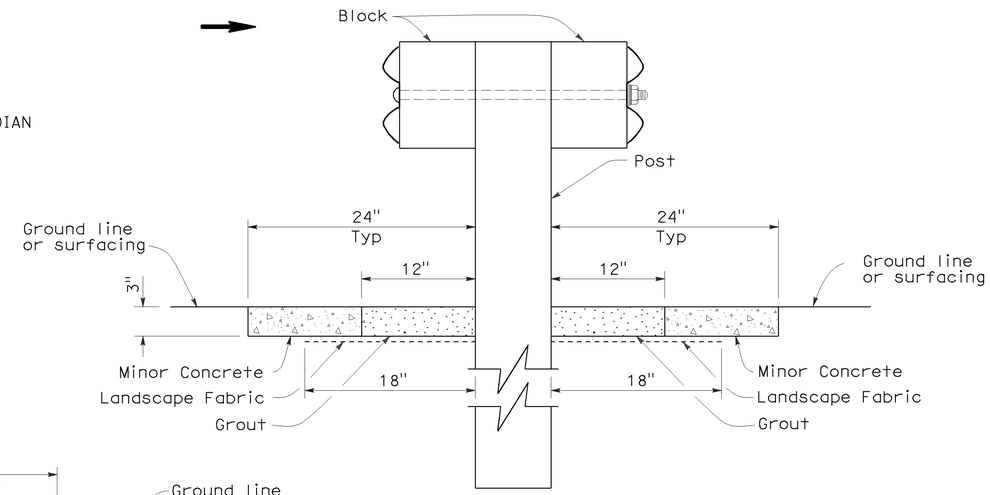

SECTION A-A

STATE OF CALIFORNIA
DEPARTMENT OF TRANSPORTATION

METAL BEAM GUARD RAILING TYPICAL VEGETATION CONTROL AT FIXED OBJECT

NO SCALE

NSP A77C9 DATED OCTOBER 20, 2006 SUPPLEMENTS THE STANDARD PLANS BOOK DATED MAY 2006.

NEW STANDARD PLAN NSP A77C9

2006 NEW STANDARD PLAN NSP A77C9

7-17-06

DIST	COUNTY	ROUTE	POST MILES TOTAL PROJECT	SHEET NO.	TOTAL SHEETS
01	Lak	29,53	20.1/20.4 0.0/2.9	34	55

Randell D. Hiatt
REGISTERED CIVIL ENGINEER

October 20, 2006
PLANS APPROVAL DATE

REGISTERED PROFESSIONAL ENGINEER
Randell D. Hiatt
No. C50200
Exp. 6-30-07
CIVIL
STATE OF CALIFORNIA

The State of California or its officers or agents shall not be responsible for the accuracy or completeness of electronic copies of this plan sheet.

To accompany plans dated 6-27-11

NOTES:

1. See New Standard Plan NSP A77C5 for additional vegetation control details.
2. Where dike is constructed under railing, construct vegetation control to back edge of dike. Where paved shoulder is constructed within 24" in front of the post, construct vegetation control to the edge of paved shoulder.
3. Direction of adjacent traffic indicated by ←.

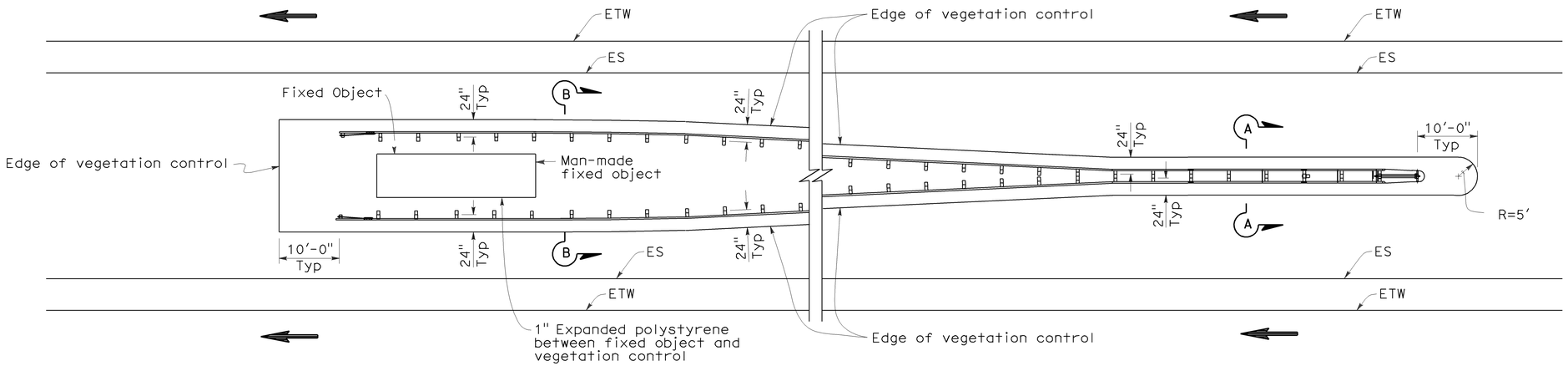

PLAN

FIXED OBJECT(S) BETWEEN SEPARATE ROADBEDS
(ONE-WAY TRAFFIC)

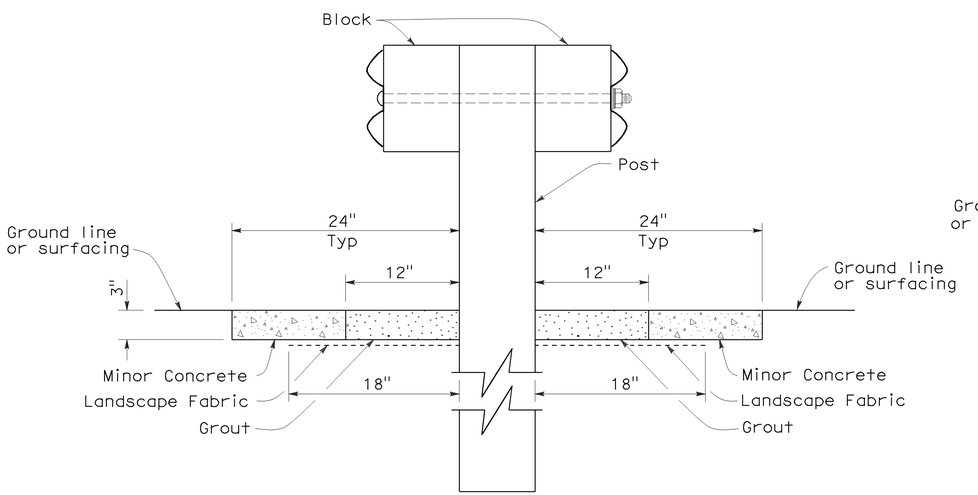

SECTION A-A

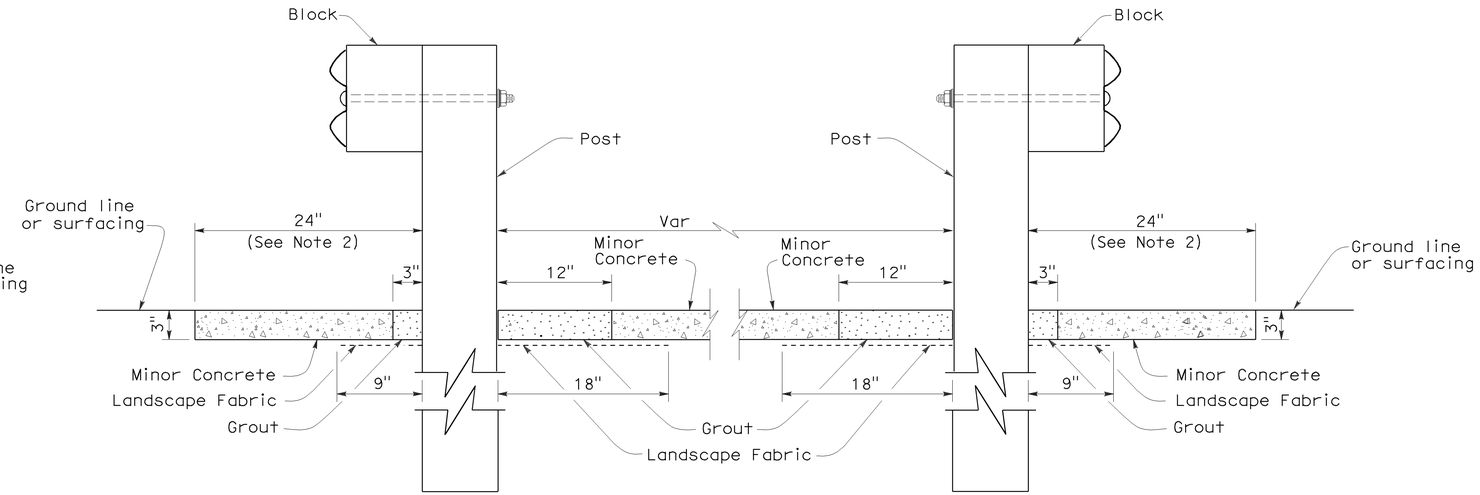

SECTION B-B

STATE OF CALIFORNIA
DEPARTMENT OF TRANSPORTATION

METAL BEAM GUARD RAILING TYPICAL VEGETATION CONTROL AT FIXED OBJECT

NO SCALE

NSP A77C10 DATED OCTOBER 20, 2006 SUPPLEMENTS THE STANDARD PLANS BOOK DATED MAY 2006.

NEW STANDARD PLAN NSP A77C10

2006 NEW STANDARD PLAN NSP A77C10

7-17-06

DIST	COUNTY	ROUTE	POST MILES TOTAL PROJECT	SHEET NO.	TOTAL SHEETS
01	Lak	29,53	20.1/20.4 0.0/2.9	35	55

Randell D. Hiatt
REGISTERED CIVIL ENGINEER

June 6, 2008
PLANS APPROVAL DATE

REGISTERED PROFESSIONAL ENGINEER
Randell D. Hiatt
No. C50200
Exp. 6-30-09
CIVIL
STATE OF CALIFORNIA

The State of California or its officers or agents shall not be responsible for the accuracy or completeness of electronic copies of this plan sheet.

To accompany plans dated 6-27-11

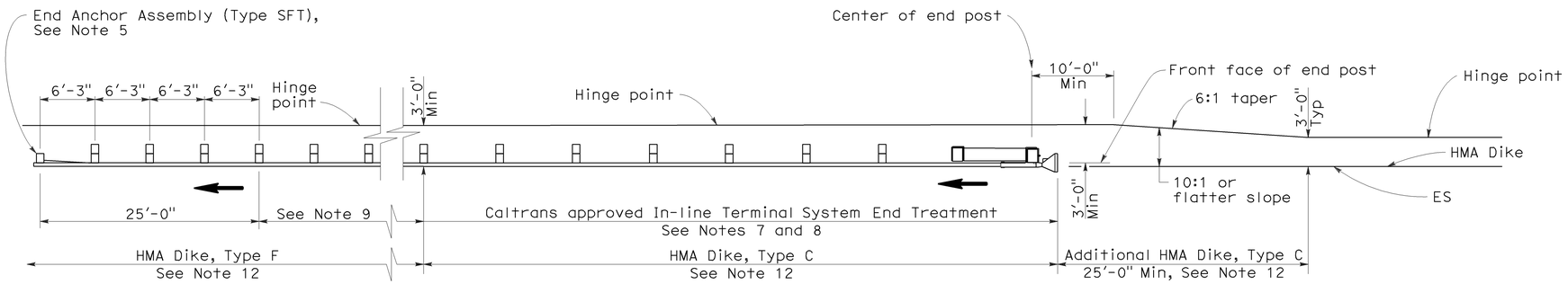

TYPE 11A LAYOUT

(EMBANKMENT GUARD INSTALLATION WITH IN-LINE END TREATMENT AT TRAFFIC APPROACH END OF RAILING)
See Note 6

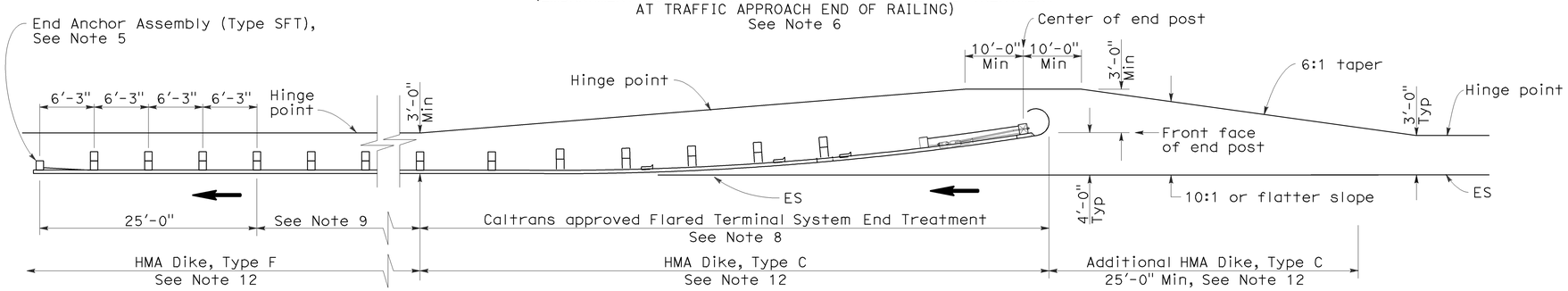

TYPE 11B LAYOUT

(EMBANKMENT GUARD RAILING INSTALLATION WITH FLARED END TREATMENT AT TRAFFIC APPROACH END OF RAILING)
See Note 6

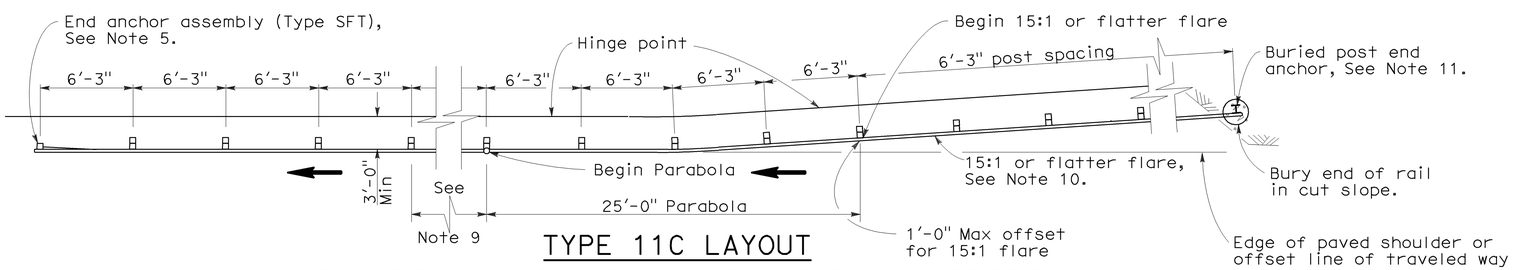

TYPE 11C LAYOUT

(EMBANKMENT GUARD RAILING INSTALLATION WITH BURIED END ANCHOR TREATMENT AT TRAFFIC APPROACH END OF RAILING)
See Notes 6 and 12

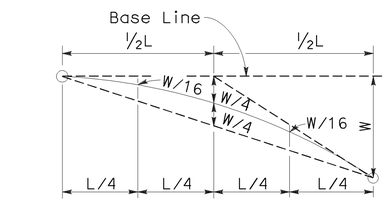

TYPICAL PARABOLIC LAYOUT

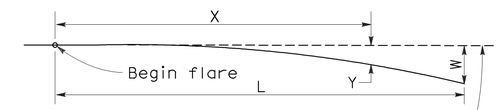

Base Line (Edge of paved shoulder or offset line of edge of traveled way)

$$Y = \frac{WX^2}{L^2}$$

Y = Offset from base line
W = Maximum offset
X = Distance along base line
L = Length of flare

PARABOLIC FLARE OFFSETS

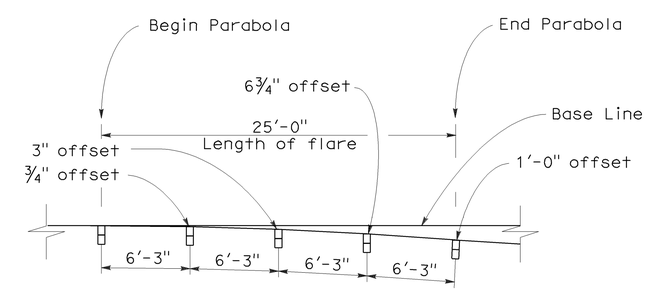

TYPICAL FLARE OFFSETS FOR 1 FOOT MAX END OFFSET

NOTES:

1. Line post, blocks and hardware to be used are shown on Standard Plans A77A1, A77A2, A77B1, A77C1, and A77C2.
2. Guard rail post spacing to be 6'-3" center to center, except as otherwise noted.
3. Except as noted, line posts are 6" x 8" x 6'-0" wood with 6" x 8" x 1'-2" wood blocks. W6 x 9 steel posts, 6'-0" in length, with 6" x 8" x 1'-2" notched wood blocks or recycled plastic blocks may be used for 6" x 8" x 6'-0" wood post with 6" x 8" x 1'-2" wood blocks where applicable and when specified.
4. Direction of adjacent traffic indicated by ➡.
5. For End Anchor Assembly (Type SFT) details, see Standard Plan A77H1.
6. Layout Types 11A, 11B or 11C are typically used where guard railing is recommended to shield embankment slopes and a crashworthy end treatment is required for only one direction of traffic.
7. In-line Terminal System End Treatments are used where site conditions will not accommodate a flared end treatment.
8. The type of terminal system end treatment to be used will be shown on the Project Plans.
9. Dependent on site conditions (embankment height and side slope), construction of additional guard railing (length equal to multiples of 12'-6" with 6'-3" post spacing) may be advisable.
10. The 15:1 or flatter flare used with buried end anchors is based on the edge of the paved shoulder or offset line of edge of the traveled way. The length of guard railing within the 15:1 or flatter flare is based on site conditions and should be a length equal to multiples of 12'-6".
11. For details of the buried post end anchor used with Type 11C Layout, see Standard Plan A77I2.
12. Where placement of dike is required with guard railing installations, see Revised Standard Plan RSP A77C4 for dike positioning details.

STATE OF CALIFORNIA
DEPARTMENT OF TRANSPORTATION

METAL BEAM GUARD RAILING TYPICAL LAYOUTS FOR EMBANKMENTS

NO SCALE

RSP A77E1 DATED JUNE 6, 2008 SUPERSEDES STANDARD PLAN A77E1 DATED MAY 1, 2006 - PAGE 48 OF THE STANDARD PLANS BOOK DATED MAY 2006.

REVISED STANDARD PLAN RSP A77E1

2006 REVISED STANDARD PLAN RSP A77E1

12-10-07

DIST	COUNTY	ROUTE	POST MILES TOTAL PROJECT	SHEET NO.	TOTAL SHEETS
01	Lak	29,53	20.1/20.4 0.0/2.9	36	55

Randell D. Hiatt
REGISTERED CIVIL ENGINEER

June 6, 2008
PLANS APPROVAL DATE

REGISTERED PROFESSIONAL ENGINEER
Randell D. Hiatt
No. C50200
Exp. 6-30-09
CIVIL
STATE OF CALIFORNIA

The State of California or its officers or agents shall not be responsible for the accuracy or completeness of electronic copies of this plan sheet.

To accompany plans dated 6-27-11

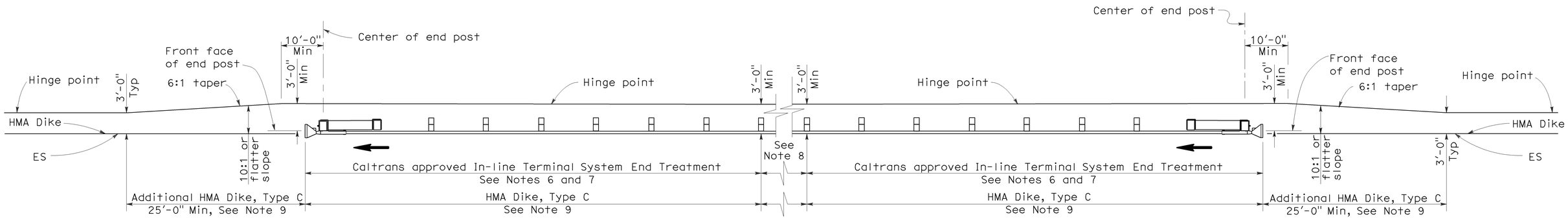

TYPE 11D LAYOUT

(EMBANKMENT GUARD RAILING INSTALLATION WITH IN-LINE END TREATMENT AT EACH END OF RAILING)
See Note 5

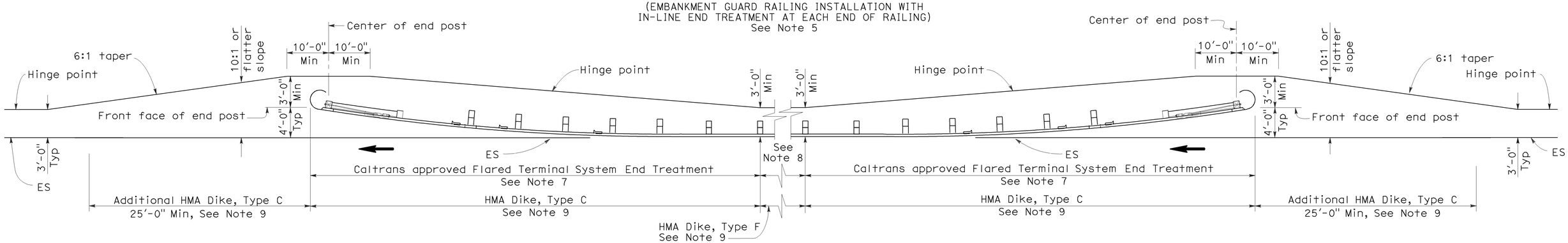

TYPE 11E LAYOUT

(EMBANKMENT GUARD RAILING INSTALLATION WITH FLARED END TREATMENT AT EACH END OF RAILING)
See Note 5

NOTES:

1. Line post, blocks and hardware to be used are shown on Standard Plans A77A1, A77A2, A77B1, A77C1 and A77C2.
2. Guard rail post spacing to be 6'-3" center to center, except as otherwise noted.
3. Except as noted, line posts are 6" x 8" x 6'-0" wood with 6" x 8" x 1'-2" wood blocks. W6 x 9 steel posts, 6'-0" in length, with 6" x 8" x 1'-2" notched wood blocks or plastic blocks may be used for 6" x 8" x 6'-0" wood post with 6" x 8" x 1'-2" wood blocks where applicable and when specified.
4. Direction of adjacent traffic indicated by ⟶.
5. Layout Types 11D through 11L, shown on the A77E Series of Revised Standard Plans, are typically used where guard railing is recommended to shield embankment slopes and a crashworthy end treatment is required for both directions of traffic.
6. In-line Terminal System End Treatments are used where site conditions will not accommodate a flared end treatment.
7. The type of terminal system end treatment to be used will be shown on the Project Plans.
8. Dependent on site conditions (embankment height and side slope), construction of additional guard railing (length equal to multiples of 12'-6" with 6'-3" post spacing) may be advisable.
9. Where placement of dike is required with guard railing installations, see Revised Standard Plan RSP A77C4 for dike positioning details.

STATE OF CALIFORNIA
DEPARTMENT OF TRANSPORTATION

METAL BEAM GUARD RAILING TYPICAL LAYOUTS FOR EMBANKMENTS

NO SCALE

RSP A77E2 DATED JUNE 6, 2008 SUPERSEDES STANDARD PLAN A77E2
DATED MAY 1, 2006 - PAGE 49 OF THE STANDARD PLANS BOOK DATED MAY 2006.

REVISED STANDARD PLAN RSP A77E2

2006 REVISED STANDARD PLAN RSP A77E2

12-10-07

DIST	COUNTY	ROUTE	POST MILES TOTAL PROJECT	SHEET NO.	TOTAL SHEETS
01	Lak	29,53	20.1/20.4 0.0/2.9	37	55

Randell D. Hiatt
REGISTERED CIVIL ENGINEER

June 6, 2008
PLANS APPROVAL DATE

REGISTERED PROFESSIONAL ENGINEER
Randell D. Hiatt
No. C50200
Exp. 6-30-09
CIVIL
STATE OF CALIFORNIA

The State of California or its officers or agents shall not be responsible for the accuracy or completeness of electronic copies of this plan sheet.

To accompany plans dated 6-27-11

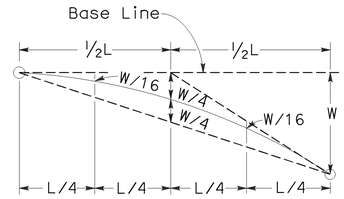

TYPICAL PARABOLIC LAYOUT

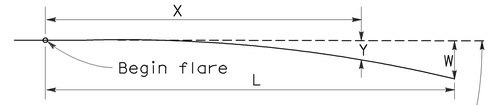

Base Line (Edge of paved shoulder or offset line of edge of traveled way)

$$Y = \frac{WX^2}{L^2}$$

Y = Offset from base line
W = Maximum offset
X = Distance along base line
L = Length of flare

PARABOLIC FLARE OFFSETS

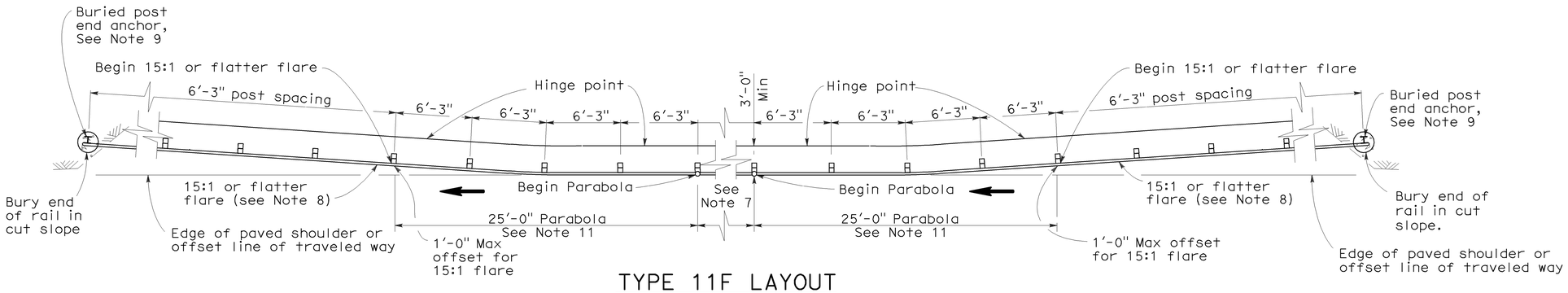

TYPE 11F LAYOUT

(EMBANKMENT GUARD RAILING INSTALLATION WITH A BURIED END ANCHOR TREATMENT AT EACH END OF RAILING)
See Notes 5 and 10

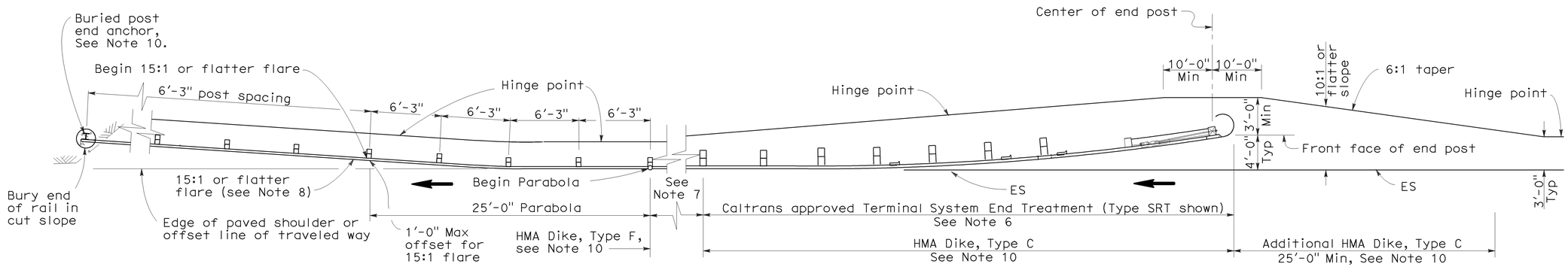

TYPE 11G LAYOUT

(EMBANKMENT GUARD RAILING INSTALLATION WITH FLARED END TREATMENT AND A BURIED END ANCHOR TREATMENT AT THE ENDS OF RAILING)
See Notes 5 and 10

NOTES:

1. Line post, blocks and hardware to be used are shown on Standard Plans A77A1, A77A2, A77B1, A77C1 and A77C2.
2. Guard rail post spacing to be 6'-3" center to center, except as otherwise noted.
3. Except as noted, line posts are 6" x 8" x 6'-0" wood with 6" x 8" x 1'-2" wood blocks. W6 x 9 steel posts, 6'-0" in length, with 6" x 8" x 1'-2" notched wood blocks or plastic blocks may be used for 6" x 8" x 6'-0" wood post with 6" x 8" x 1'-2" wood blocks where applicable and when specified.
4. Direction of adjacent traffic indicated by ⟶.
5. Layout Types 11D through 11L, shown on the A77E Series of Revised Standard Plans, are typically used where guard railing is recommended to shield embankment slopes and a crashworthy end treatment is required for both directions of traffic.
6. The type of terminal system end treatment to be used will be shown on the Project Plans.
7. Dependent on site conditions (embankment height and side slope), construction of additional guard railing (length equal to multiples of 12'-6" with 6'-3" post spacing) may be advisable.
8. The 15:1 or flatter flare used with buried end anchors is based on the edge of the paved shoulder or offset line of edge of the traveled way. The length of guard railing within the 15:1 or flatter flare is based on site conditions and should be a length equal to multiples of 12'-6".
9. For details of the buried post end anchor used with Type 11F and 11G Layouts, see Standard Plan A77I2.
10. Where placement of dike is required with guard railing installations, see Revised Standard Plan RSP A77C4 for dike positioning details.
11. For typical flare offsets for 25'-0" length parabola with maximum offset of 1'-0", see Revised Standard Plan RSP A77E1.

STATE OF CALIFORNIA
DEPARTMENT OF TRANSPORTATION

METAL BEAM GUARD RAILING TYPICAL LAYOUTS FOR EMBANKMENTS

NO SCALE

RSP A77E3 DATED JUNE 6, 2008 SUPERSEDES STANDARD PLAN A77E3 DATED MAY 1, 2006 - PAGE 50 OF THE STANDARD PLANS BOOK DATED MAY 2006.

REVISED STANDARD PLAN RSP A77E3

2006 REVISED STANDARD PLAN RSP A77E3

12-10-07

DIST	COUNTY	ROUTE	POST MILES TOTAL PROJECT	SHEET NO.	TOTAL SHEETS
01	Lak	29,53	20.1/20.4 0.0/2.9	38	55

Randell D. Hiatt
REGISTERED CIVIL ENGINEER

June 6, 2008
PLANS APPROVAL DATE

REGISTERED PROFESSIONAL ENGINEER
Randell D. Hiatt
No. C50200
Exp. 6-30-09
CIVIL
STATE OF CALIFORNIA

The State of California or its officers or agents shall not be responsible for the accuracy or completeness of electronic copies of this plan sheet.

To accompany plans dated 6-27-11

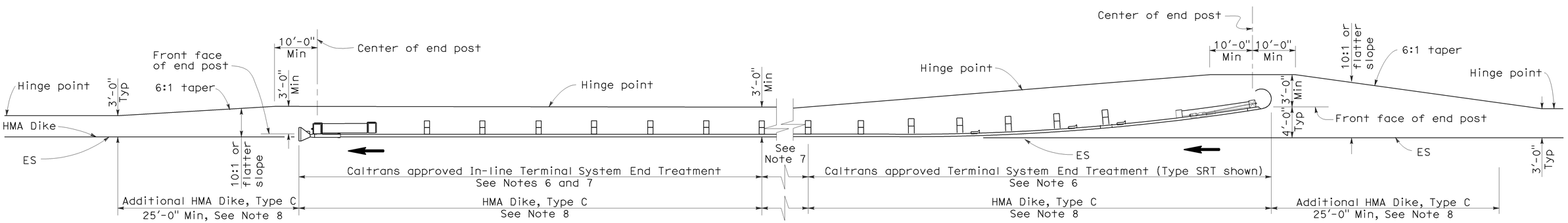

TYPE 11H LAYOUT

(EMBANKMENT GUARD RAILING INSTALLATION WITH FLARED END TREATMENT
AND AN IN-LINE TREATMENT AT THE ENDS OF RAILING)
See Notes 5 and 8

NOTES:

1. Line post, blocks and hardware to be used are shown on Standard Plans A77A1, A77A2, A77B1, A77C1 and A77C2.
2. Guard rail post spacing to be 6'-3" center to center, except as otherwise noted.
3. Except as noted, line posts are 6" x 8" x 6'-0" wood with 6" x 8" x 1'-2" wood blocks. W6 x 9 steel posts, 6'-0" in length, with 6" x 8" x 1'-2" notched wood blocks or plastic blocks may be used for 6" x 8" x 6'-0" wood post with 6" x 8" x 1'-2" wood blocks where applicable and when specified.
4. Direction of adjacent traffic indicated by ⟶.
5. Layout Types 11D through 11L, shown on the A77E Series of Revised Standard Plans, are typically used where guard railing is recommended to shield embankment slopes and a crashworthy end treatment is required for both directions of traffic.
6. The type of terminal system end treatment to be used will be shown on the Project Plans.
7. Dependent on site conditions (embankment height and side slope), construction of additional guard railing (length equal to multiples of 12'-6" with 6'-3" post spacing) may be advisable.
8. Where placement of dike is required with guard railing installations, see Revised Standard Plan RSP A77C4 for dike positioning details.

STATE OF CALIFORNIA
DEPARTMENT OF TRANSPORTATION

METAL BEAM GUARD RAILING TYPICAL LAYOUTS FOR EMBANKMENTS

NO SCALE

RSP A77E4 DATED JUNE 6, 2008 SUPERSEDES STANDARD PLAN A77E4
DATED MAY 1, 2006 - PAGE 51 OF THE STANDARD PLANS BOOK DATED MAY 2006.

REVISED STANDARD PLAN RSP A77E4

2006 REVISED STANDARD PLAN RSP A77E4

12-10-07

DIST	COUNTY	ROUTE	POST MILES TOTAL PROJECT	SHEET NO.	TOTAL SHEETS
01	Lak	29,53	20.1/20.4 0.0/2.9	39	55

Randell D. Hiatt
REGISTERED CIVIL ENGINEER

June 6, 2008
PLANS APPROVAL DATE

REGISTERED PROFESSIONAL ENGINEER
Randell D. Hiatt
No. C50200
Exp. 6-30-09
CIVIL
STATE OF CALIFORNIA

The State of California or its officers or agents shall not be responsible for the accuracy or completeness of electronic copies of this plan sheet.

To accompany plans dated 6-27-11

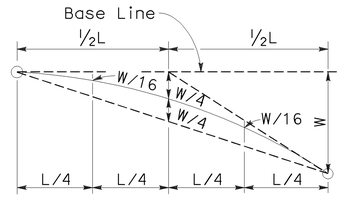

TYPICAL PARABOLIC LAYOUT

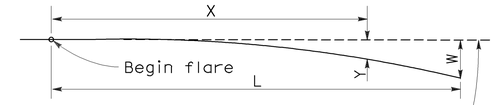

Base Line (Edge of paved shoulder or offset line of edge of traveled way)

$$Y = \frac{WX^2}{L^2}$$

Y = Offset from base line
W = Maximum offset
X = Distance along base line
L = Length of flare

PARABOLIC FLARE OFFSETS

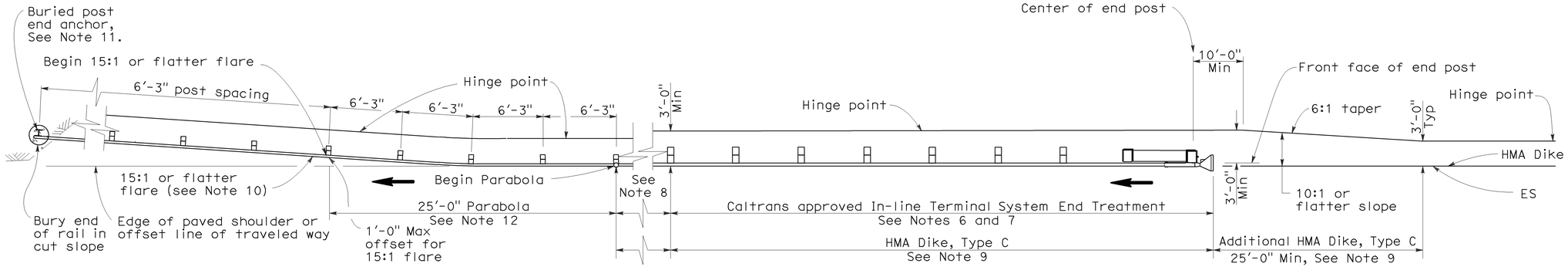

TYPE 11I LAYOUT

(EMBANKMENT GUARD RAILING INSTALLATION WITH IN-LINE END TREATMENT AND A BURIED END ANCHOR TREATMENT AT THE ENDS OF RAILING)
See Note 5

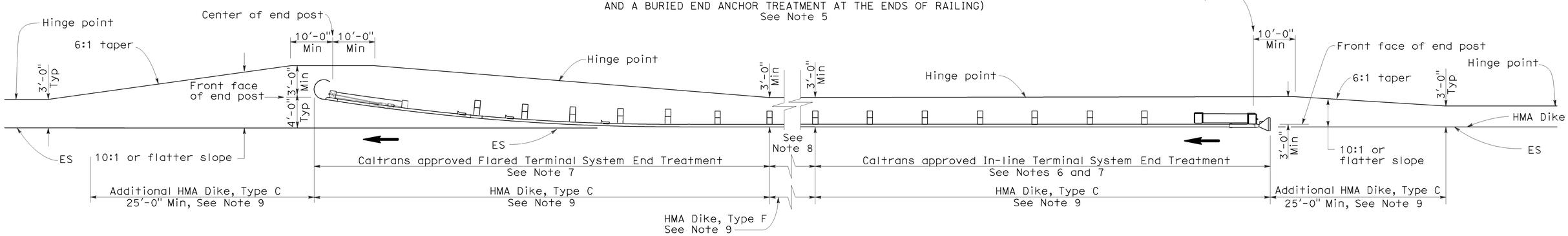

TYPE 11J LAYOUT

(EMBANKMENT GUARD RAILING INSTALLATION WITH IN-LINE END TREATMENT AND FLARED END TREATMENT AT THE ENDS OF RAILING)
See Note 5

NOTES:

1. Line post, blocks and hardware to be used are shown on Standard Plans A77A1, A77A2, A77B1, A77C1 and A77C2.
2. Guard rail post spacing to be 6'-3" center to center, except as otherwise noted.
3. Except as noted, line posts are 6" x 8" x 6'-0" wood with 6" x 8" x 1'-2" wood blocks. W6 x 9 steel posts, 6'-0" in length, with 6" x 8" x 1'-2" notched wood blocks or plastic blocks may be used for 6" x 8" x 6'-0" wood post with 6" x 8" x 1'-2" wood blocks where applicable and when specified.
4. Direction of adjacent traffic indicated by ⟶.
5. Layout Types 11D through 11L, shown on the A77E Series of Revised Standard Plans, are typically used where guard railing is recommended to shield embamkment slopes and a crashworthy end treatment is required for both directions of traffic.
6. In-line Terminal System End Treatments are used where site conditions will not accommodate a flared end treatment.
7. The type of terminal system end treatment to be used will be shown on the Project Plans.
8. Dependent on site conditions (embankment height and side slope), construction of additional guard railing (length equal to multiples of 12'-6" with 6'-3" post spacing) may be advisable.
9. Where placement of dike is required with guard railing installations, see Revised Standard Plan RSP A77C4 for dike positioning details.
10. The 15:1 or flatter flare used with buried end anchors is based on the edge of the paved shoulder or offset line of edge of the traveled way. The length of guard railing within the 15:1 or flatter flare is based on site conditions and should be a length equal to multiples of 12'-6".
11. For details of the buried post end anchor used with Type 11I Layout, see Standard Plan A77I2.
12. For typical flare offsets for 25'-0" length parabola with maximum offset of 1'-0", see Revised Standard Plan RSP A77E1.

STATE OF CALIFORNIA
DEPARTMENT OF TRANSPORTATION

METAL BEAM GUARD RAILING TYPICAL LAYOUTS FOR EMBANKMENTS

NO SCALE

RSP A77E5 DATED JUNE 6, 2008 SUPERSEDES STANDARD PLAN A77E5 DATED MAY 1, 2006 - PAGE 52 OF THE STANDARD PLANS BOOK DATED MAY 2006.

REVISED STANDARD PLAN RSP A77E5

2006 REVISED STANDARD PLAN RSP A77E5

12-10-07

DIST	COUNTY	ROUTE	POST MILES TOTAL PROJECT	SHEET NO.	TOTAL SHEETS
01	Lak	29,53	20.1/20.4 0.0/2.9	40	55

Randell D. Hiatt
REGISTERED CIVIL ENGINEER

June 6, 2008
PLANS APPROVAL DATE

REGISTERED PROFESSIONAL ENGINEER
Randell D. Hiatt
No. C50200
Exp. 6-30-09
CIVIL
STATE OF CALIFORNIA

The State of California or its officers or agents shall not be responsible for the accuracy or completeness of electronic copies of this plan sheet.

To accompany plans dated 6-27-11

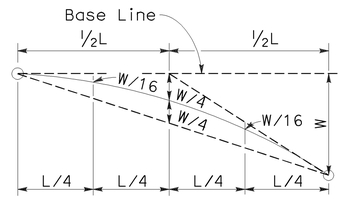

TYPICAL PARABOLIC LAYOUT

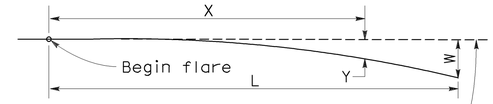

Base Line (Edge of paved shoulder or offset line of edge of traveled way)

$$Y = \frac{WX^2}{L^2}$$

Y = Offset from base line
W = Maximum offset
X = Distance along base line
L = Length of flare

PARABOLIC FLARE OFFSETS

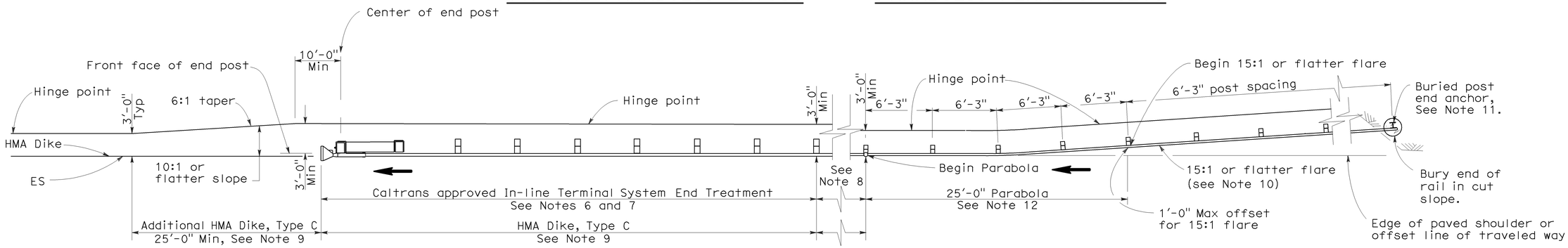

TYPE 11K LAYOUT

(EMBANKMENT GUARD RAILING INSTALLATION WITH A BURIED END ANCHOR TREATMENT AND AN IN-LINE END TREATMENT AT THE ENDS OF RAILING)
See Note 5

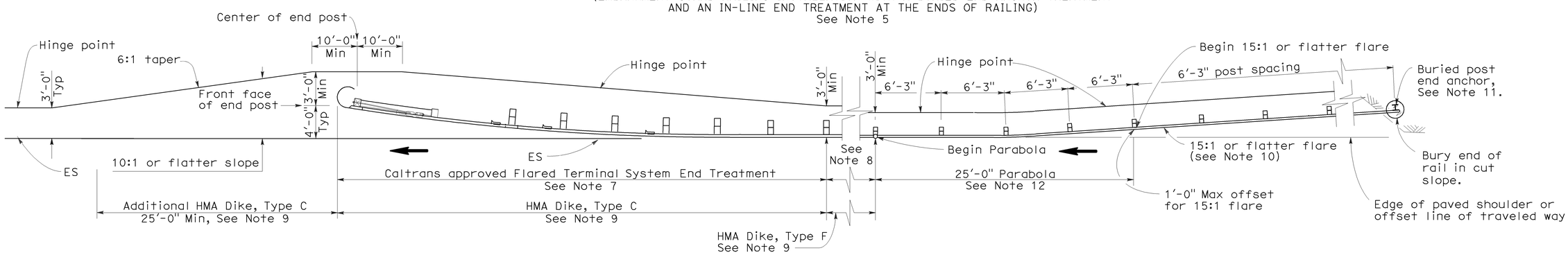

TYPE 11L LAYOUT

(EMBANKMENT GUARD RAILING INSTALLATION WITH A BURIED END ANCHOR TREATMENT AND A FLARED END TREATMENT AT THE ENDS OF RAILING)
See Note 5

NOTES:

1. Line post, blocks and hardware to be used are shown on Standard Plans A77A1, A77A2, A77B1, A77C1 and A77C2.
2. Guard rail post spacing to be 6'-3" center to center, except as otherwise noted.
3. Except as noted, line posts are 6" x 8" x 6'-0" wood with 6" x 8" x 1'-2" wood blocks. W6 x 9 steel posts, 6'-0" in length, with 6" x 8" x 1'-2" notched wood blocks or plastic blocks may be used for 6" x 8" x 6'-0" wood post with 6" x 8" x 1'-2" wood blocks where applicable and when specified.
4. Direction of adjacent traffic indicated by ⟶.
5. Layout Types 11D through 11L, shown on the A77E Series of Revised Standard Plans, are typically used where guard railing is recommended to shield embamkment slopes and a crashworthy end treatment is required for both directions of traffic.
6. In-line Terminal System End Treatments are used where site conditions will not accommodate a flared end treatment.
7. The type of terminal system end treatment to be used will be shown on the Project Plans.
8. Dependent on site conditions (embankment height and side slope), construction of additional guard railing (length equal to multiples of 12'-6" with 6'-3" post spacing) may be advisable.
9. Where placement of dike is required with guard railing installations, see Revised Standard Plan RSP A77C4 for dike positioning details.
10. The 15:1 or flatter flare used with buried end anchors is based on the edge of the paved shoulder or offset line of edge of the traveled way. The length of guard railing within the 15:1 or flatter flare is based on site conditions and should be a length equal to multiples of 12'-6".
11. For details of the buried post end anchor used with Type 11K and 11L Layouts, see Standard Plan A77I2.
12. For typical flare offsets for 25'-0" length parabola with maximum offset of 1'-0", see Revised Standard Plan RSP A77E1.

STATE OF CALIFORNIA
DEPARTMENT OF TRANSPORTATION

METAL BEAM GUARD RAILING TYPICAL LAYOUTS FOR EMBANKMENTS

NO SCALE

RSP A77E6 DATED JUNE 6, 2008 SUPERSEDES STANDARD PLAN A77E6
DATED MAY 1, 2006 - PAGE 53 OF THE STANDARD PLANS BOOK DATED MAY 2006.

REVISED STANDARD PLAN RSP A77E6

2006 REVISED STANDARD PLAN RSP A77E6

12-10-07

DIST	COUNTY	ROUTE	POST MILES TOTAL PROJECT	SHEET NO.	TOTAL SHEETS
01	Lak	29,53	20.1/20.4 0.0/2.9	41	55

Randell D. Hiatt
REGISTERED CIVIL ENGINEER

June 6, 2008
PLANS APPROVAL DATE

REGISTERED PROFESSIONAL ENGINEER
Randell D. Hiatt
No. C50200
Exp. 6-30-09
CIVIL
STATE OF CALIFORNIA

The State of California or its officers or agents shall not be responsible for the accuracy or completeness of electronic copies of this plan sheet.

To accompany plans dated 6-27-11

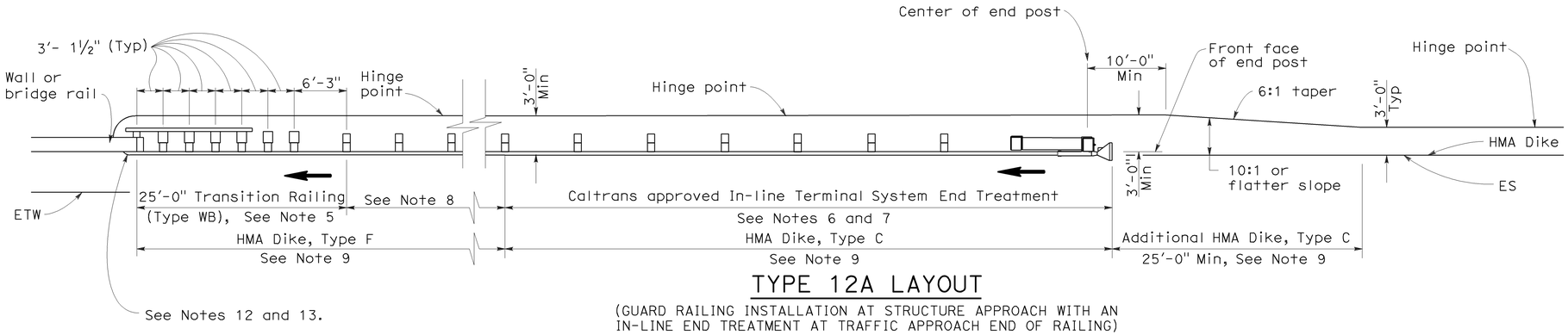

TYPE 12A LAYOUT

(GUARD RAILING INSTALLATION AT STRUCTURE APPROACH WITH AN IN-LINE END TREATMENT AT TRAFFIC APPROACH END OF RAILING)
See Notes 10

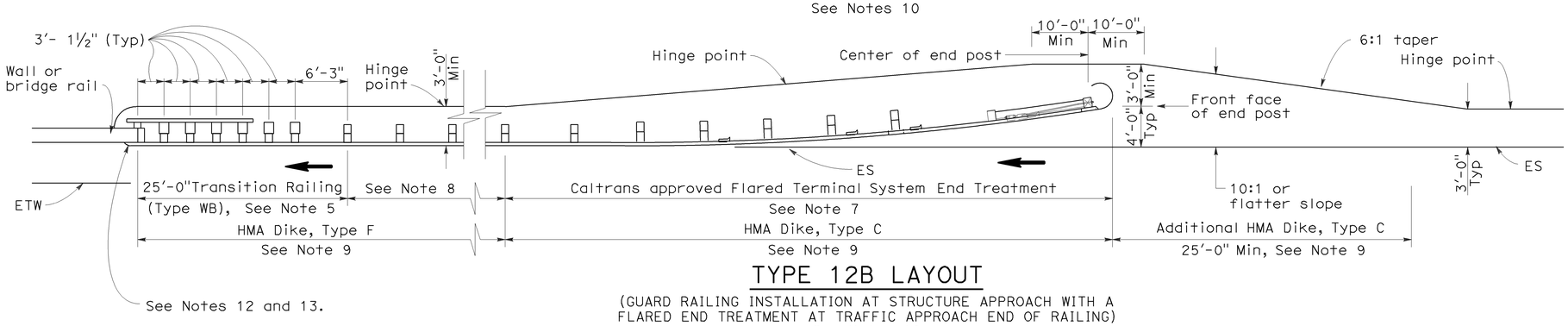

TYPE 12B LAYOUT

(GUARD RAILING INSTALLATION AT STRUCTURE APPROACH WITH A FLARED END TREATMENT AT TRAFFIC APPROACH END OF RAILING)
See Notes 10

NOTES:

1. Line post, blocks and hardware to be used are shown on Standard Plans A77A1, A77A2, A77B1, A77C1 and A77C2.
2. Guard rail post spacing to be 6'-3" center to center, except as otherwise noted.
3. Except as noted, line posts are 6" x 8" x 6'-0" wood with 6" x 8" x 1'-2" wood blocks. W6 x 9 steel posts, 6'-0" in length, with 6" x 8" x 1'-2" notched wood blocks or plastic blocks may be used for 6" x 8" x 6'-0" wood posts with 6" x 8" x 1'-2" wood blocks where applicable and when specified.
4. Direction of adjacent traffic indicated by ➡.
5. For Transition Railing (Type WB) details for Types 12A and 12B Layouts, see Standard Plan A77J4.
6. In-line Terminal System End Treatments are used where site conditions will not accommodate a flared end treatment.
7. The type of terminal system end treatment to be used will be shown on the Project Plans.
8. Dependent on site conditions (embankment height, side slopes, or other fixed objects), it may be advisable to construct additional guard railing (a length equal to multiples of 12'-6" with 6'-3" post spacing) between the transition railing and end treatment.
9. Where placement of dike is required with guard railing installations, see Revised Standard Plan RSP A77C4 for dike positioning details.
10. Type 12A or Type 12B Layouts are typically used:
    a. To the right of approaching traffic, at the end of a structure, on two-lane conventional highway where the roadbed width across the structure is less than 40 feet.
    b. To the left of approaching traffic, at the end of a structure, on two-lane conventional highway where the roadbed width across the structure is less than 40 feet.
    c. To the right of approaching traffic at the end of each structure on multilane freeways or expressways with separate adjacent or parallel bridges.
    d. To the right of approaching traffic at the end of the structure on multilane freeways or expressways with decked median on the bridge.
11. See Revised Standard Plan RSP A77F3 for typical layout used left of approaching traffic at the ends of each structure on multilane freeways or expressways with separate adjacent or parallel bridges.
12. For additional details of typical connections to bridge rail, see Connection Detail AA on Revised Standard Plans RSP A77J1 and RSP A77J2 and Connection Detail FF on Standard Plans A77K1 and A77K2.
13. For additional details of a typical connection to walls or abutments, see Standard Plan A77J3.

STATE OF CALIFORNIA
DEPARTMENT OF TRANSPORTATION

METAL BEAM GUARD RAILING TYPICAL LAYOUTS FOR STRUCTURE APPROACH

NO SCALE

RSP A77F1 DATED JUNE 6, 2008 SUPERSEDES STANDARD PLAN A77F1
DATED MAY 1, 2006 - PAGE 54 OF THE STANDARD PLANS BOOK DATED MAY 2006.

REVISED STANDARD PLAN RSP A77F1

2006 REVISED STANDARD PLAN RSP A77F1

12-10-07

Dist	COUNTY	ROUTE	POST MILES TOTAL PROJECT	SHEET No.	TOTAL SHEETS
01	Lak	29,53	20.1/20.4 0.0/2.9	42	55

Randell D. Hiatt
REGISTERED CIVIL ENGINEER

May 20, 2011
PLANS APPROVAL DATE

REGISTERED PROFESSIONAL ENGINEER
Randell D. Hiatt
No. C50200
Exp. 6-30-11
CIVIL
STATE OF CALIFORNIA

The State of California or its officers or agents shall not be responsible for the accuracy or completeness of electronic copies of this plan sheet.

To accompany plans dated 6-27-11

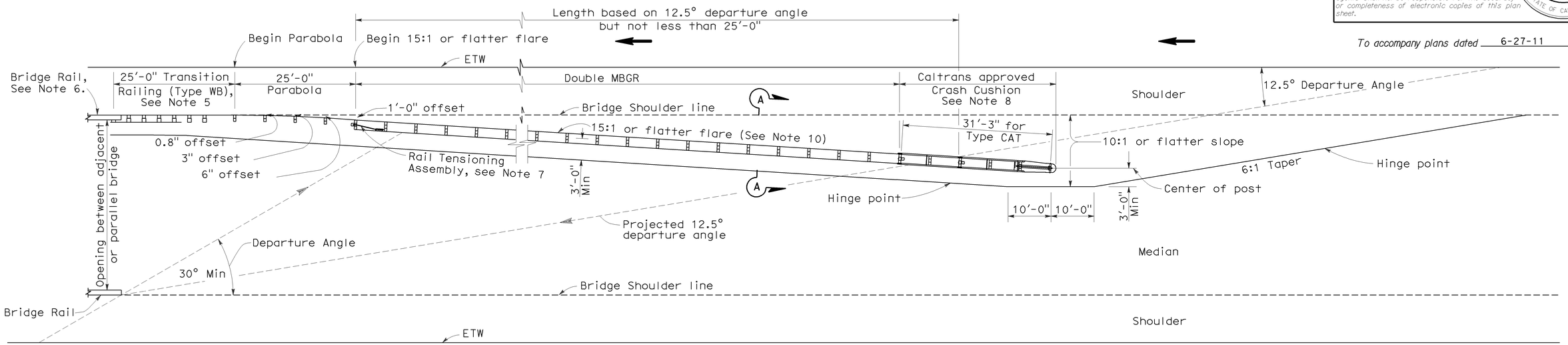

TYPE 12E LAYOUT

See Note 10

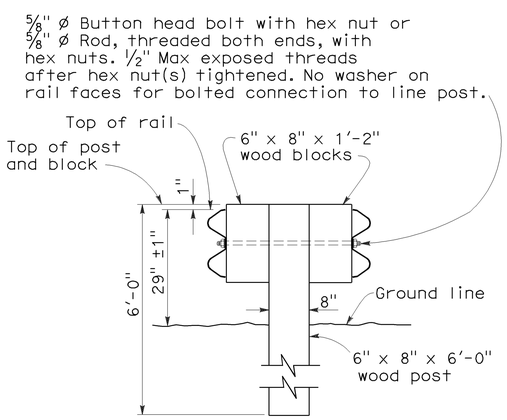

SECTION A-A

TYPICAL DOUBLE METAL BEAM GUARD RAILING

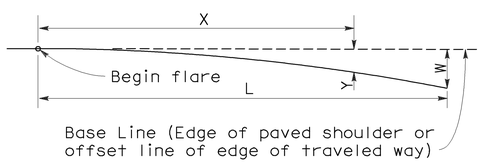

$$Y = \frac{WX^2}{L^2}$$

Y = Offset from base line
W = Maximum offset
X = Distance along base line
L = Length of flare

PARABOLIC FLARE OFFSETS

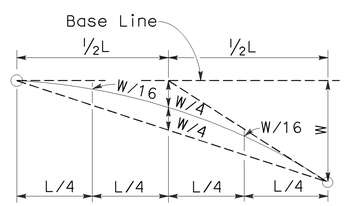

TYPICAL PARABOLIC LAYOUT

NOTES:

1. Line post, blocks and hardware to be used are shown on Standard Plans A77A1, A77A2, A77B1, A77C1 and A77C2.
2. Guard railing post spacing to be 6'-3" center to center, except as otherwise noted.
3. Except as noted, line posts are 6" x 8" x 6'-0" wood with 6" x 8" x 1'-2" wood blocks. W6 x 9 steel posts, 6'-0" in length, with 6" x 8" x 1'-2" notched wood blocks or notched recycled plastic blocks may be used for 6" x 8" x 6'-0" wood line posts with 6" x 8" x 1'-2" wood blocks where applicable and when specified.
4. Direction of adjacent traffic indicated by ⟶.
5. For Transition Railing (Type WB) details, see Standard Plan A77J4.
6. For additional details of a typical connection to bridge rail, see Connection Detail AA on Revised Standard Plan RSP A77J1.
7. For Rail Tensioning Assembly details, see Standard Plan A77H2.
8. The type of Crash Cushion to be used will be shown on the Project Plans.
9. Type 12E Layout is typically used left of approaching traffic at the end of each structure on multilane freeways or expressways where a median type barrier is not constructed between separated roadbeds.
10. The 15:1 or flatter flare is measured off of the edge of traveled way.

STATE OF CALIFORNIA
DEPARTMENT OF TRANSPORTATION

METAL BEAM GUARD RAILING TYPICAL LAYOUTS FOR STRUCTURE APPROACH

NO SCALE

RSP A77F3 DATED MAY 20, 2011 SUPERSEDES RSP A77F3 DATED JUNE 6, 2008 AND STANDARD PLAN A77F3 DATED MAY 1, 2006 - PAGE 56 OF THE STANDARD PLANS BOOK DATED MAY 2006.

REVISED STANDARD PLAN RSP A77F3

2006 REVISED STANDARD PLAN RSP A77F3

3-10-11

DIST	COUNTY	ROUTE	POST MILES TOTAL PROJECT	SHEET NO.	TOTAL SHEETS
01	Lak	29,53	20.1/20.4 0.0/2.9	43	55

Randell D. Hiatt
REGISTERED CIVIL ENGINEER

June 6, 2008
PLANS APPROVAL DATE

REGISTERED PROFESSIONAL ENGINEER
Randell D. Hiatt
No. C50200
Exp. 6-30-09
CIVIL
STATE OF CALIFORNIA

The State of California or its officers or agents shall not be responsible for the accuracy or completeness of electronic copies of this plan sheet.

To accompany plans dated 6-27-11

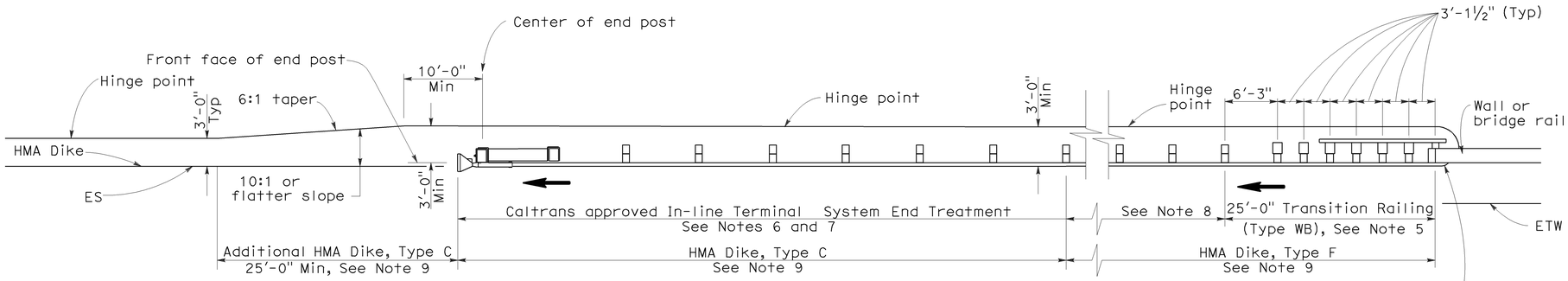

TYPE 12AA LAYOUT

(GUARD RAILING INSTALLATION AT STRUCTURE DEPARTURE WITH AN IN-LINE END TREATMENT AT TRAILING END OF RAILING)
See Notes 9 and 10

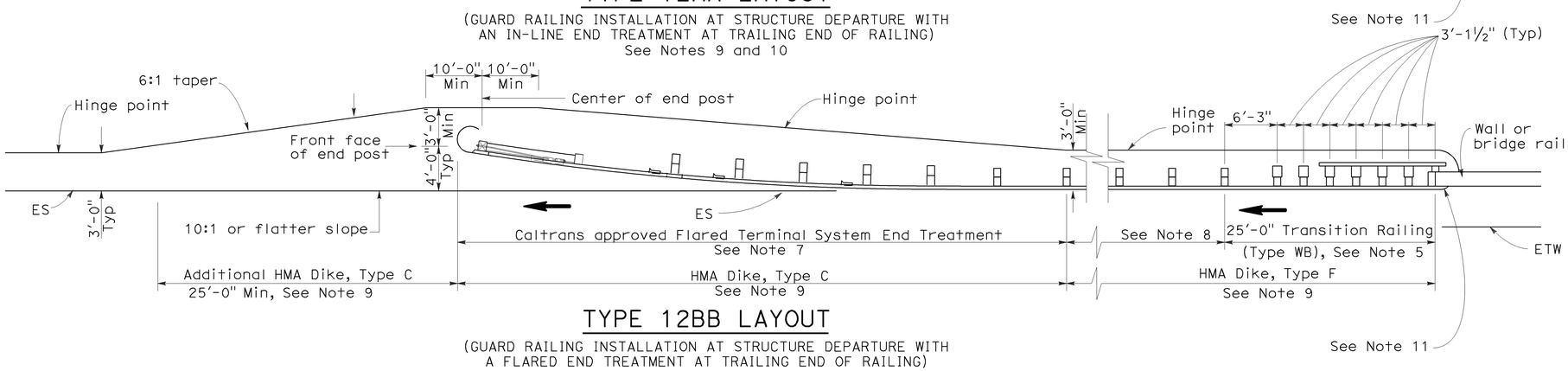

TYPE 12BB LAYOUT

(GUARD RAILING INSTALLATION AT STRUCTURE DEPARTURE WITH A FLARED END TREATMENT AT TRAILING END OF RAILING)
See Notes 9 and 10

NOTES:

1. Line post, blocks and hardware to be used are shown on Standard Plans A77A1, A77A2, A77B1, A77C1 and A77C2.
2. Guard rail post spacing to be 6'-3" center to center, except as otherwise noted.
3. Except as noted, line posts are 6" x 8" x 6'-0" wood with 6" x 8" x 1'-2" wood blocks. W6 x 9 steel posts, 6'-0" in length, with 6" x 8" x 1-2" notched wood blocks or notched recycled plastic blocks may be used for 6" x 8" x 6'-0" wood posts with 6" x 8" x 1'-2" wood blocks where applicable and when specified.
4. Direction of adjacent traffic indicated by ⟶.
5. For Transition Railing (Type WB) details for Types 12AA and 12BB Layouts, see Standard Plan A77J4.
6. In-line Terminal System Treatments are used where site conditions will not accommodate a flared end treatment.
7. The type of terminal system to be used will be shown on the Project Plans.
8. Dependent on site conditions (embankment height, side slopes, other fixed objects), it may be advisable to construct additional guard railing (a length equal to multiples of 12'-6" with 6'-3" post spacing) between the transition railing and end treatments.
9. Where placement of dike is required with guard railing installations, see Revised Standard Plan RSP A77C4 for dike positioning details.
10. Type 12AA or Type 12BB Layouts are typically used to the right of traffic departing a structure on two-way conventional highways where the roadbed width across the structure is less than 40 feet.
11. For additional details of typical connections to bridge rail, see Connection Detail CC on Revised Standard Plan RSP A77J2 and Connection Detail HH on Standard Plans A77k2.

STATE OF CALIFORNIA
DEPARTMENT OF TRANSPORTATION

METAL BEAM GUARD RAILING TYPICAL LAYOUTS FOR STRUCTURE DEPARTURE

NO SCALE

RSP A77F4 DATED JUNE 6, 2008 SUPERSEDES STANDARD PLAN A77F4
DATED MAY 1, 2006 - PAGE 57 OF THE STANDARD PLANS BOOK DATED MAY 2006.

REVISED STANDARD PLAN RSP A77F4

2006 REVISED STANDARD PLAN RSP A77F4

12-10-07

DIST	COUNTY	ROUTE	POST MILES TOTAL PROJECT	SHEET NO.	TOTAL SHEETS
01	Lak	29,53	20.1/20.4 0.0/2.9	44	55

Randell D. Hiatt
REGISTERED CIVIL ENGINEER

June 6, 2008
PLANS APPROVAL DATE

REGISTERED PROFESSIONAL ENGINEER
Randell D. Hiatt
No. C50200
Exp. 6-30-09
CIVIL
STATE OF CALIFORNIA

The State of California or its officers or agents shall not be responsible for the accuracy or completeness of electronic copies of this plan sheet.

To accompany plans dated 6-27-11

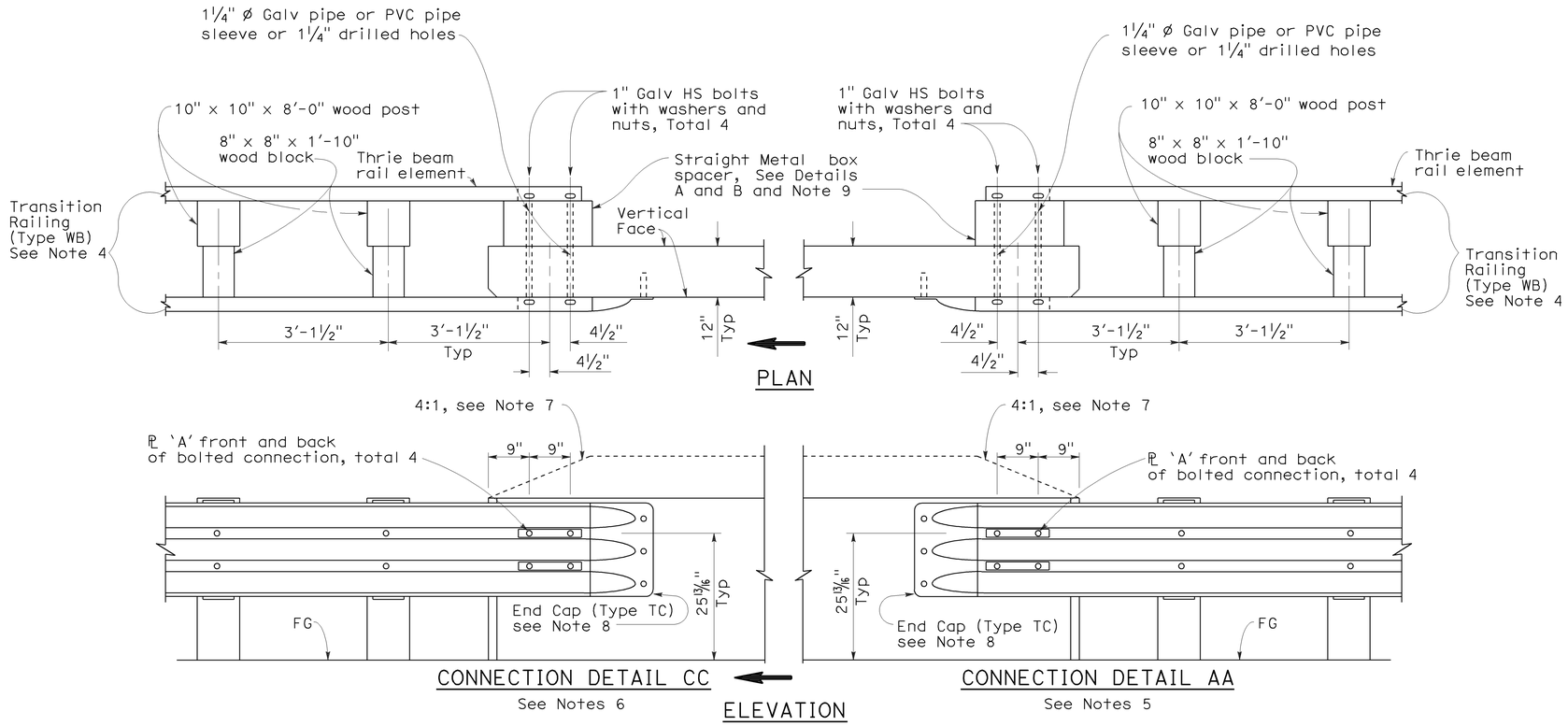

GUARD RAILING CONNECTION TO BRIDGE RAILING WITHOUT SIDEWALK

NOTES:

1. See Revised Standard Plan RSP A77J1 for additional connection details to bridges without sidewalks.
2. Additional details of posts, blocks and hardware are shown on Standard Plan A77B1, A77C1 and A77C2.
3. Direction of adjacent traffic indicated by ⟹.
4. For additional details of Transition Railing (Type WB), see Standard Plan A77J4. Transition Railing (Type WB) transitions the 12 gage w-beam standard railing section of guard railing to a heavier gage nested thrie beam railing section which is connected to the concrete bridge railing.
5. For typical use of Connection Detail AA, see Layout Types 12A and 12B on Revised Standard Plan RSP A77F1, Layout Types 12C and 12D on Standard Plan A77F2, and Layout Type 12E on Revised Standard Plan RSP A77F3.
6. For typical use of Connection Detail CC, see Layout Types 12AA and 12BB on Standard Plan A77F4 and Layout Type 12CC on Standard Plan A77F5.
7. Where the height of the bridge railing exceeds the height of the thrie beam railing by more than 1" at Connection Detail AA and connection Detail CC, taper the top of the end of the bridge railing at 4:1 to match the top elevation of the thrie beam railing.
8. For details of End Cap (Type TC), see Standard Plans A77J4.
9. See Standard Plans A77J4 for additional details regarding depth dimension for straight metal box spacer.

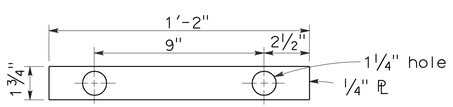

PLATE 'A'

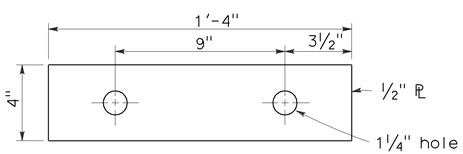

PLATE 'B'
(For backside of connection BB)

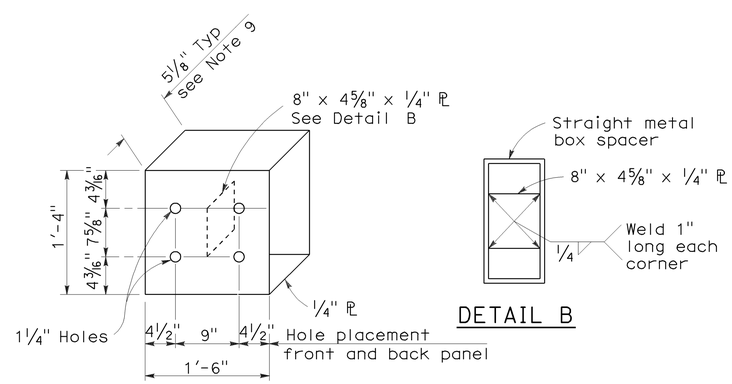

DETAIL A

DETAIL B

STRAIGHT METAL BOX SPACER

STATE OF CALIFORNIA
DEPARTMENT OF TRANSPORTATION

METAL BEAM GUARD RAILING CONNECTIONS TO BRIDGE RAILINGS WITHOUT SIDEWALKS DETAILS No.2

NO SCALE

RSP A77J2 DATED JUNE 6, 2008 SUPERSEDES STANDARD PLAN A77J2 DATED MAY 1, 2006 - PAGE 73 OF THE STANDARD PLANS BOOK DATED MAY 2006.

REVISED STANDARD PLAN RSP A77J2

2006 REVISED STANDARD PLAN RSP A77J2

12-10-07

Dist	COUNTY	ROUTE	POST MILES TOTAL PROJECT	SHEET No.	TOTAL SHEETS
01	Lak	29,53	20.1/20.4 0.0/2.9	45	55

Randell D. Hiatt
REGISTERED CIVIL ENGINEER

May 20, 2011
PLANS APPROVAL DATE

REGISTERED PROFESSIONAL ENGINEER
Randell D. Hiatt
No. C50200
Exp. 6-30-11
CIVIL
STATE OF CALIFORNIA

To accompany plans dated 6-27-11

The State of California or its officers or agents shall not be responsible for the accuracy or completeness of electronic copies of this plan sheet.

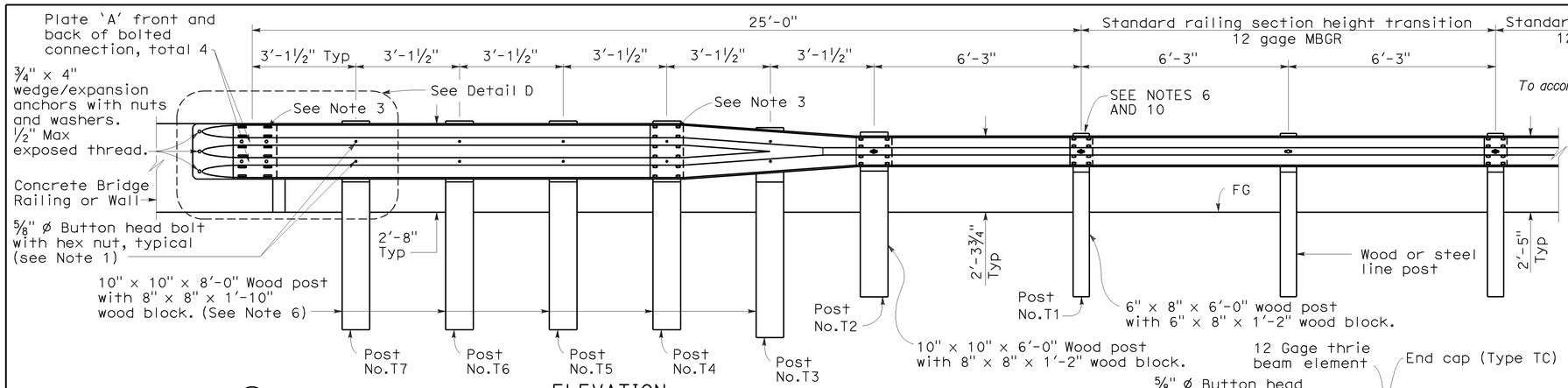

ELEVATION

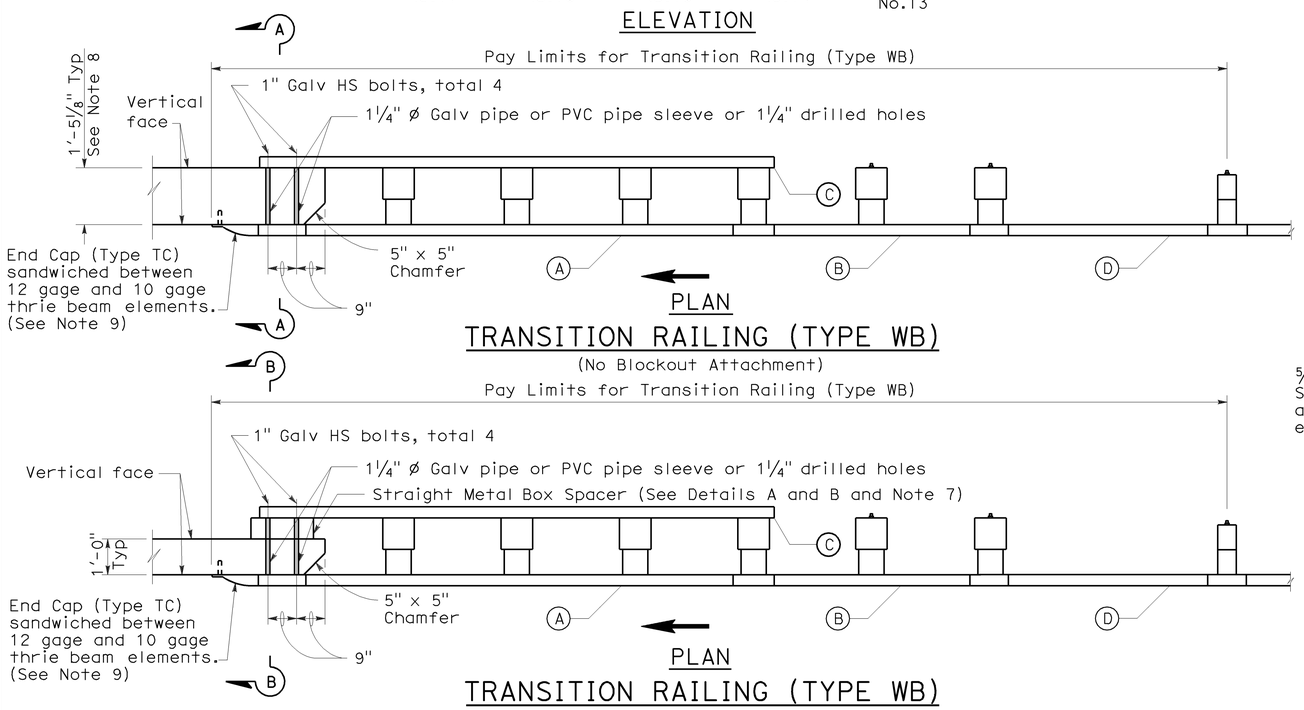

PLAN

TRANSITION RAILING (TYPE WB)

(No Blockout Attachment)

PLAN

TRANSITION RAILING (TYPE WB)

(Blockout Attachment)

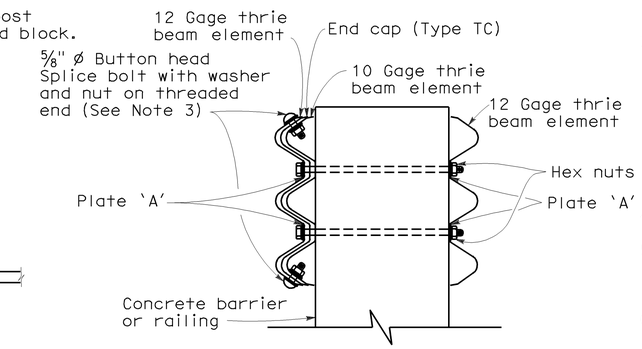

SECTION A-A

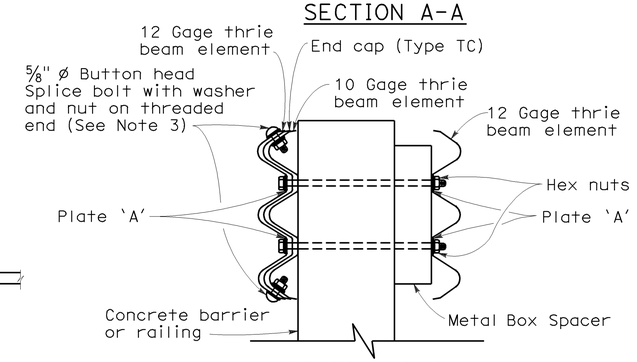

SECTION B-B

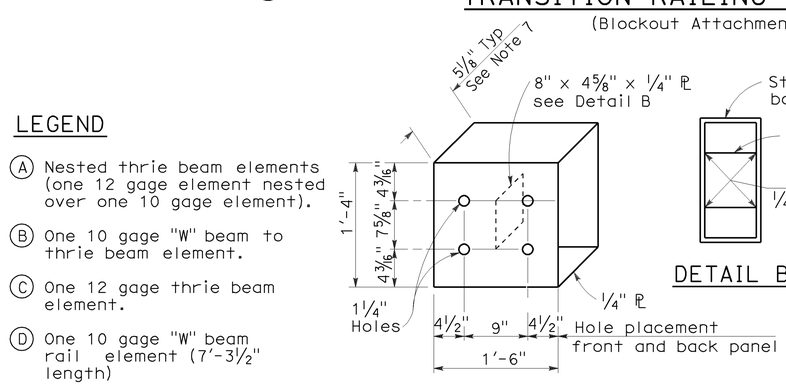

DETAIL A

STRAIGHT METAL BOX SPACER

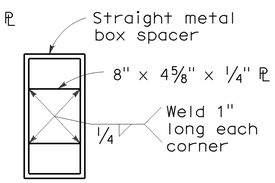

DETAIL B

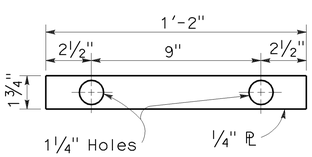

DETAIL C

PLATE 'A'

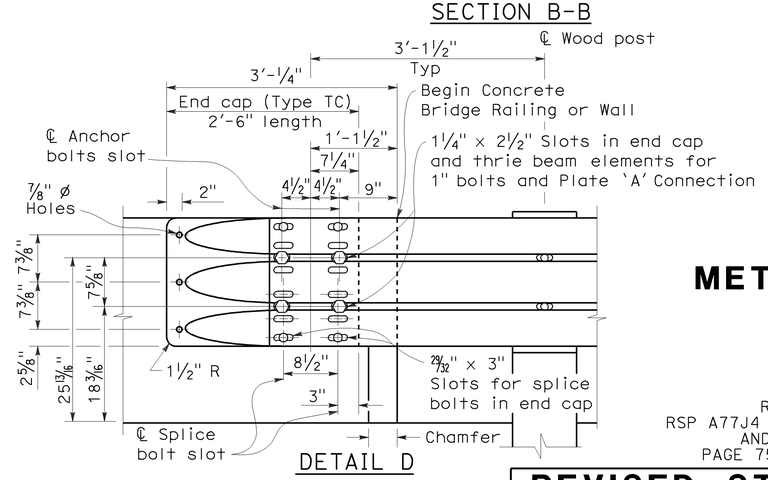

DETAIL D

LEGEND

(A) Nested thrie beam elements (one 12 gage element nested over one 10 gage element).

(B) One 10 gage "W" beam to thrie beam element.

(C) One 12 gage thrie beam element.

(D) One 10 gage "W" beam rail element (7'-3½" length)

10 gage = 0.135" thick

12 gage = 0.108" thick

NOTES:

1. Use ⅝" ø Button head bolts and hex nuts for connections to posts. No washer on rail face for bolted connections to post.
2. The nested rail elements, end cap, and 'W' beam to thrie beam element may be spliced together prior to bolting the elements to the wood post and concrete barrier or railing.
3. Exterior splice bolt holes for rail element splices at Post No. T4 and the connection to the concrete barrier or railing shall be the standard 29⁄32" x 1⅛" slot size. Interior splice bolt holes at these locations may be increased up to 1¼" ø. Only the top 2 and the bottom 2 splice bolts with washers and nuts are required for rail splices at Post No. T4 and the connection to the concrete barrier or railing.
4. Direction of adjacent traffic indicated by ➡.
5. The top elevation of Posts No. T2 through No. T7 shall not project more than 1" above the top elevation of the rail element.
6. Typically, the railing connected to Transition Railing (Type WB) will be either standard railing section of metal beam guard railing with height transition ratio of 120:1 or an approved Caltrans end treatment attached to Post No. T1.
7. The depth of the metal box spacer varies from the 5⅛" to 1½" and is dependent on the width of the concrete railing or wall. The combined dimension for the depth of the metal box spacer plus the width of railing or wall is typically 17⅛". Where the space between the backside of the concrete railing or wall and the rear thrie beam element is less than 1½", metal plates similar to Plate 'A' are to be used as spacers.
8. Where the width of the concrete railing or wall is greater than 17⅛", wood blocks are to be used to fill the space created between the backside of Posts No. T4 through No. T7 and the rear thrie beam element. These wood blocks shall be 8" in width and 1'-2" in length. The dimension between the front thrie beam element and the rear thrie beam element is to match the width of the concrete railing or wall.
9. End cap may be installed over 12 gage and 10 gage thrie beam elements where transition railing is installed on the departure end of bridge railing.
10. Conform standard railing section height to 2'-3¾" at Post No. T1 using height transition ratio of 120:1.

STATE OF CALIFORNIA
DEPARTMENT OF TRANSPORTATION

METAL BEAM GUARD RAILING TRANSITION RAILING (TYPE WB)

NO SCALE

RSP A77J4 DATED MAY 20, 2011 SUPERSEDES
RSP A77J4 DATED JUNE 5, 2009, RSP A77J4 DATED JUNE 6, 2008
AND STANDARD PLAN A77J4 DATED MAY 1, 2006 -
PAGE 75 OF THE STANDARD PLANS BOOK DATED MAY 2006.

REVISED STANDARD PLAN RSP A77J4

2006 REVISED STANDARD PLAN RSP A77J4

5-14-09

DIST	COUNTY	ROUTE	POST MILES TOTAL PROJECT	SHEET NO.	TOTAL SHEETS
01	Lak	29,53	20.1/20.4 0.0/2.9	46	55

REGISTERED CIVIL ENGINEER

September 1, 2006
PLANS APPROVAL DATE

Hector David Cordova
No. C41957
Exp. 3-31-08
CIVIL
STATE OF CALIFORNIA
REGISTERED PROFESSIONAL ENGINEER

The State of California or its officers or agents shall not be responsible for the accuracy or completeness of electronic copies of this plan sheet.

To accompany plans dated 6-27-11

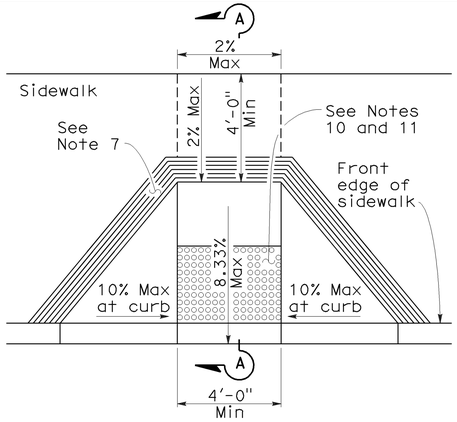

CASE A

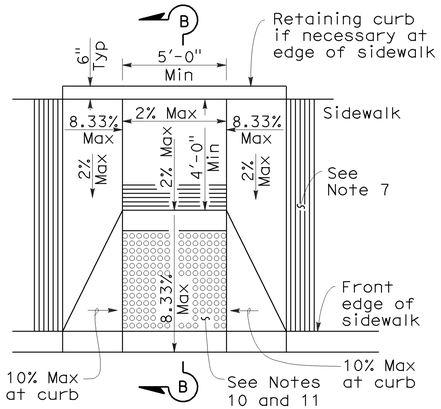

CASE B

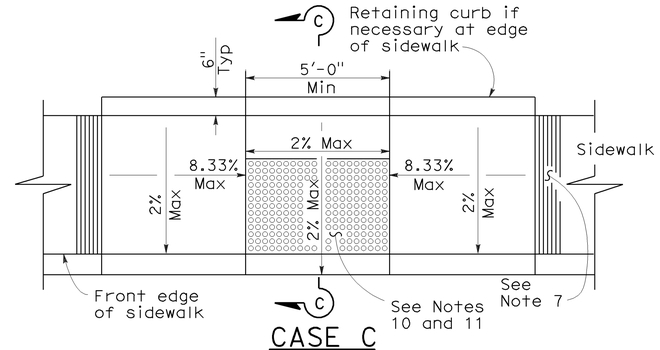

CASE C

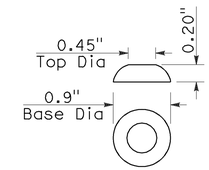

RAISED TRUNCATED DOME

CASE D

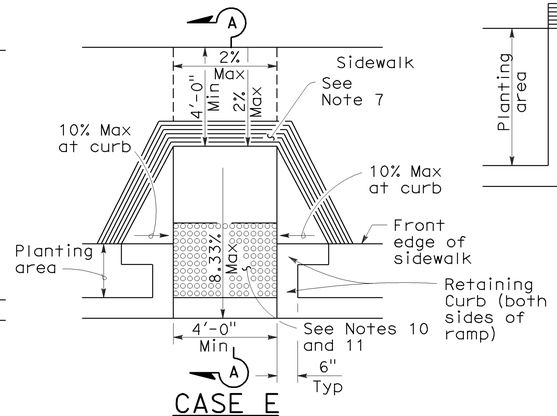

CASE E

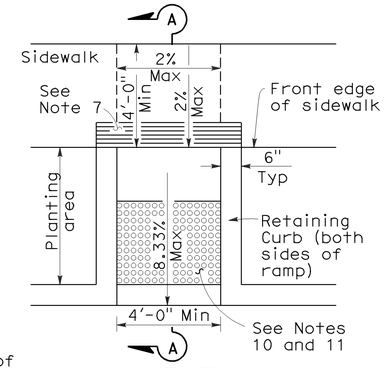

CASE F

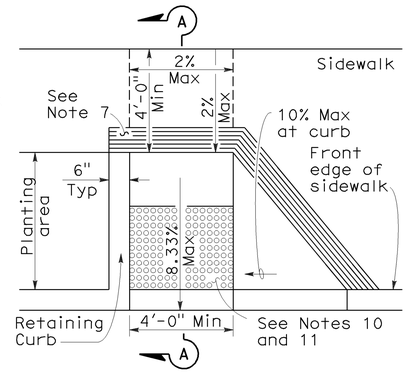

CASE G

See Note 4

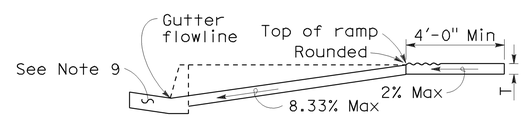

SECTION A-A

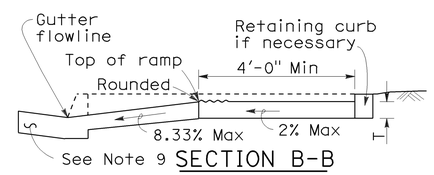

SECTION B-B

Depress entire sidewalk as required

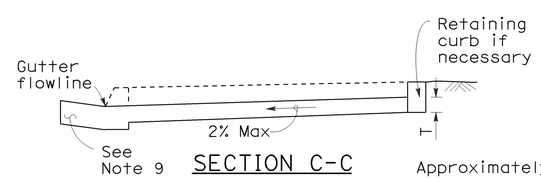

SECTION C-C

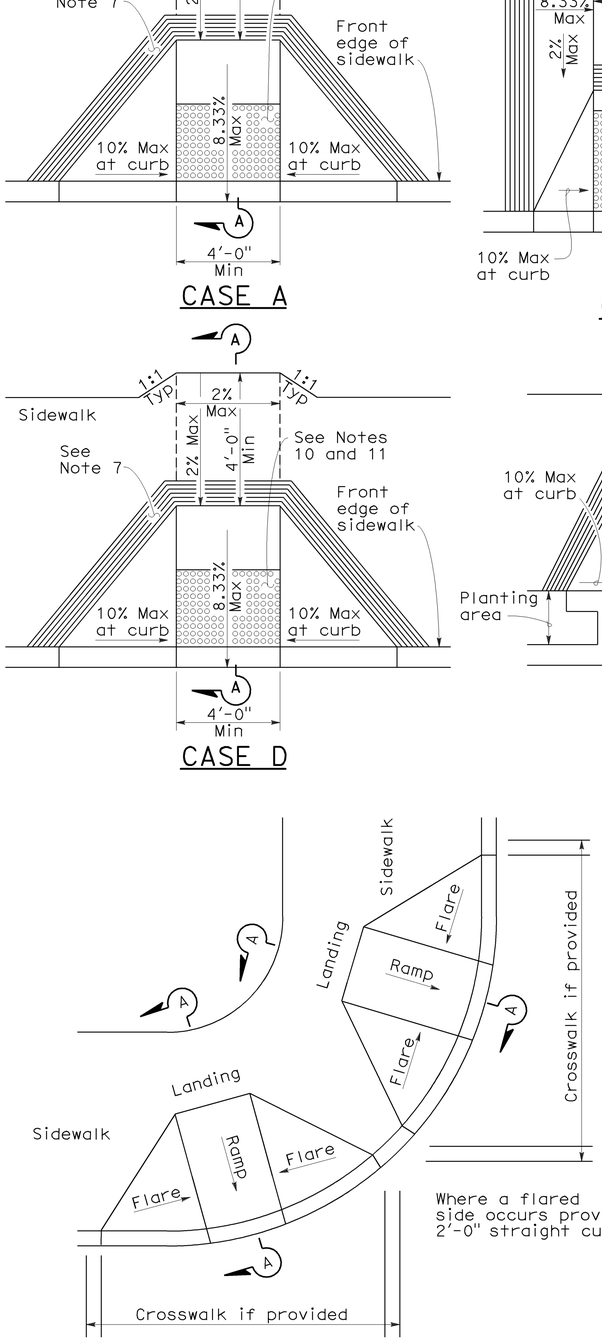

DETAIL A

TYPICAL TWO-RAMP CORNER INSTALLATION

See Note 1

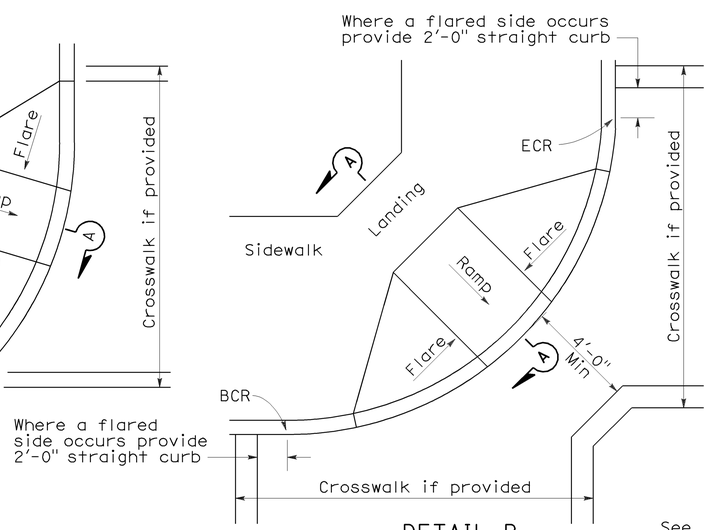

DETAIL B

TYPICAL ONE-RAMP CORNER INSTALLATION

See Notes 1 and 3

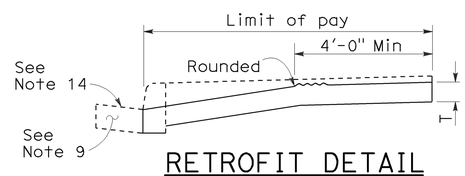

RETROFIT DETAIL

Existing curb and sidewalk

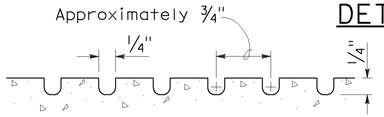

GROOVING DETAIL

NOTES:

1. As site conditions dictate, Case A through Case G curb ramps may be used for corner installations similar to those shown in Detail A and Detail B. The case of curb ramps used in Detail A do not have to be the same. Case A through Case G curb ramps also may be used at mid block locations, as site conditions dictate.
2. If distance from curb to back of sidewalk is too short to accommodate ramp and 4'-0" platform (landing) as shown in Case A, the sidewalk may be depressed longitudinally as in Case B, or C or may be widened as in Case D.
3. When ramp is located in center of curb return, crosswalk configuration must be similar to that shown for Detail B.
4. As site conditions dictate, the retaining curb side and the flared side of the Case G ramp shall be constructed in reversed position.
5. If located on a curve, the sides of the ramp need not be parallel, but the minimum width of the ramp shall be 4'-0".
6. Side slope of ramp flares vary uniformly from a maximum of 10% at curb to conform with longitudinal sidewalk slope adjacent to top of the ramp, except in Case C and Case F.
7. The curb ramp shall be outlined, as shown, with a 1'-0" wide border with 1/4" grooves approximately 3/4" on center. See grooving detail.
8. Transitions from ramps and landing to walks, gutters or streets shall be flush and free of abrupt changes.
9. Maximum slopes of adjoining gutters, the road surface immediately adjacent to the curb ramp or accessible route shall not exceed 5 percent within 4'-0" of the top and bottom of the curb ramp.
10. Curb ramps shall have a detectable warning surface that extends the full width and 3'-0" depth of the ramp. Detectable Warning Surfaces shall conform to the details on this plan and the requirements in the Special Provisions.
11. The edge of the detectable warning surface nearest the street shall be between 6" and 8" from the gutter flowline.
12. Sidewalk and ramp thickness, "T", shall be 3½" minimum.
13. Utility pull boxes, manholes, vaults and all other utility facilities within the boundaries of the curb ramp will be relocated or adjusted to grade by the owner prior to, or in conjunction with, curb ramp construction.
14. For retrofit conditions, removal and replacement of curb apron will be at the Contractor's option, unless otherwise shown on project plans.

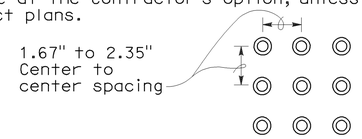

RAISED TRUNCATED DOME PATTERN (IN-LINE)

DETECTABLE WARNING SURFACE

See Note 10

STATE OF CALIFORNIA
DEPARTMENT OF TRANSPORTATION

CURB RAMP DETAILS

NO SCALE

RSP A88A DATED SEPTEMBER 1, 2006 SUPERSEDES STANDARD PLAN A88A DATED MAY 1, 2006 - PAGE 115 OF THE STANDARD PLANS BOOK DATED MAY 2006.

REVISED STANDARD PLAN RSP A88A

2006 REVISED STANDARD PLAN RSP A88A

8-3-06

DIST	COUNTY	ROUTE	POST MILES TOTAL PROJECT	SHEET NO.	TOTAL SHEETS
01	Lak	29,53	20.1/20.4 0.0/2.9	47	55

Randell D. Hiatt
REGISTERED CIVIL ENGINEER

June 6, 2008
PLANS APPROVAL DATE

REGISTERED PROFESSIONAL ENGINEER
Randell D. Hiatt
No. C50200
Exp. 6-30-09
CIVIL
STATE OF CALIFORNIA

The State of California or its officers or agents shall not be responsible for the accuracy or completeness of electronic copies of this plan sheet.

To accompany plans dated 6-27-11

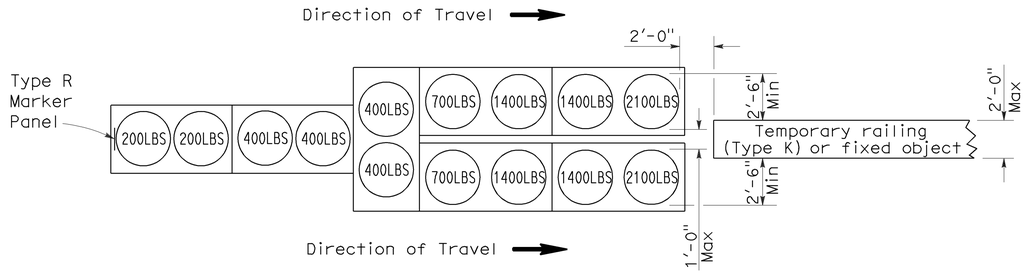

ARRAY 'TU14'

Approach speed 45 mph or more

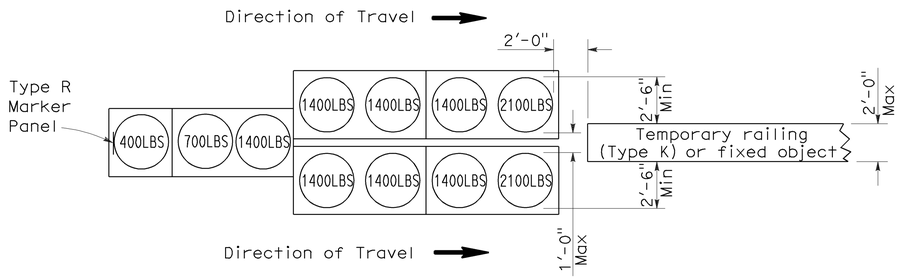

ARRAY 'TU11'

Approach speed less than 45 mph

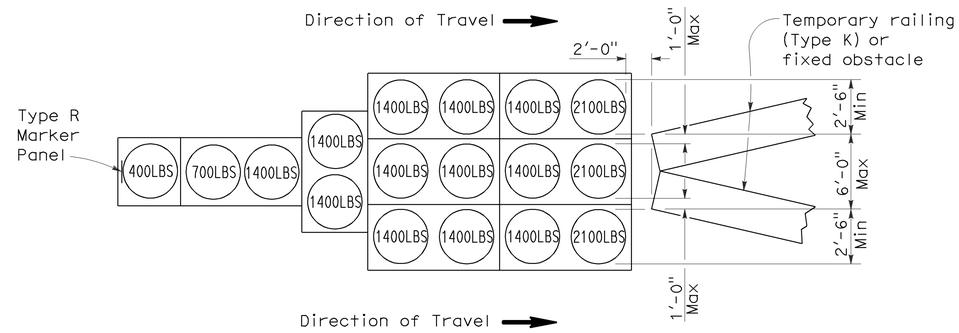

ARRAY 'TU17'

Approach speed less than 45 mph

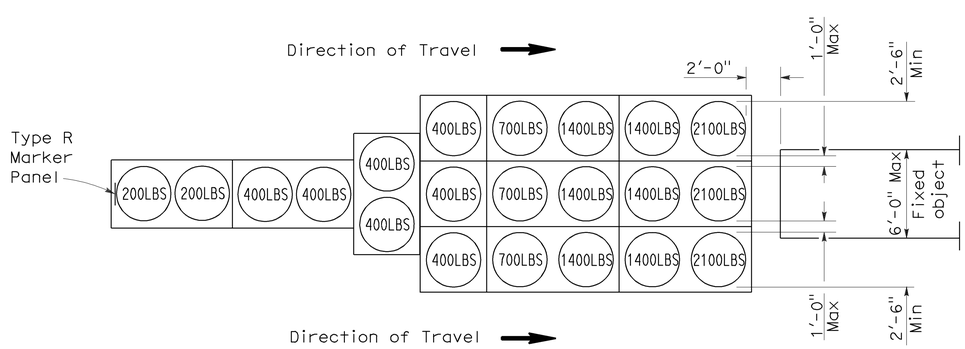

ARRAY 'TU21'

Approach speed 45 mph or more

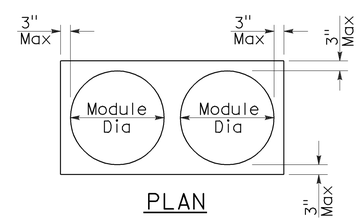

PLAN

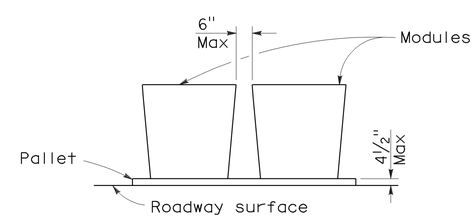

ELEVATION

CRASH CUSHION PALLET DETAIL

See Note 7

NOTES:

1. (XXX) Indicates sand filled module location and weight of sand in pounds for each module. Module spacing is based on the greater diameter of the module.
2. All sand weights are nominal.
3. Temporary crash cushion arrays shall not encroach on the traveled way.
4. Place the top of Type R marker panel 1" below the module lid.
5. Refer to Standard Plan A73B for marker details.
6. Approach speeds indicated conform to NCHRP 350 Report criteria.
7. Use of pallets is optional.

STATE OF CALIFORNIA
DEPARTMENT OF TRANSPORTATION

TEMPORARY CRASH CUSHION, SAND FILLED (UNIDIRECTIONAL)

NO SCALE

RSP T1A DATED JUNE 6, 2008 SUPERSEDES STANDARD PLAN T1A
DATED MAY 1, 2006 - PAGE 211 OF THE STANDARD PLANS BOOK DATED MAY 2006.

REVISED STANDARD PLAN RSP T1A

2006 REVISED STANDARD PLAN RSP T1A

DIST	COUNTY	ROUTE	POST MILES TOTAL PROJECT	SHEET NO.	TOTAL SHEETS
01	Lak	29,53	20.1/20.4 0.0/2.9	48	55

Randell D. Hiatt
REGISTERED CIVIL ENGINEER

June 6, 2008
PLANS APPROVAL DATE

REGISTERED PROFESSIONAL ENGINEER
Randell D. Hiatt
No. C50200
Exp. 6-30-09
CIVIL
STATE OF CALIFORNIA

The State of California or its officers or agents shall not be responsible for the accuracy or completeness of electronic copies of this plan sheet.

To accompany plans dated 6-27-11

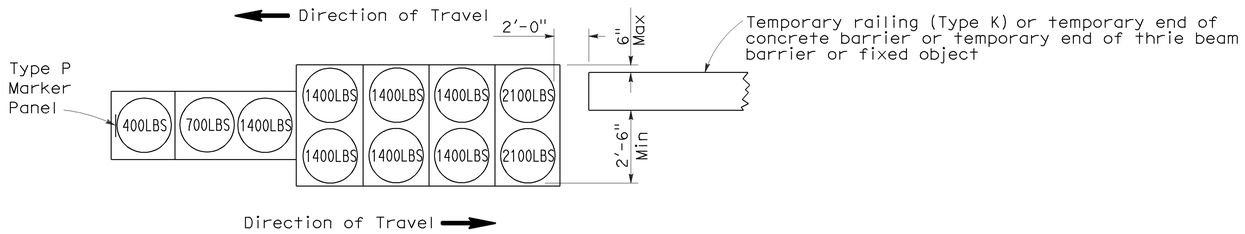

ARRAY 'TB11'

Approach speed less than 45 mph

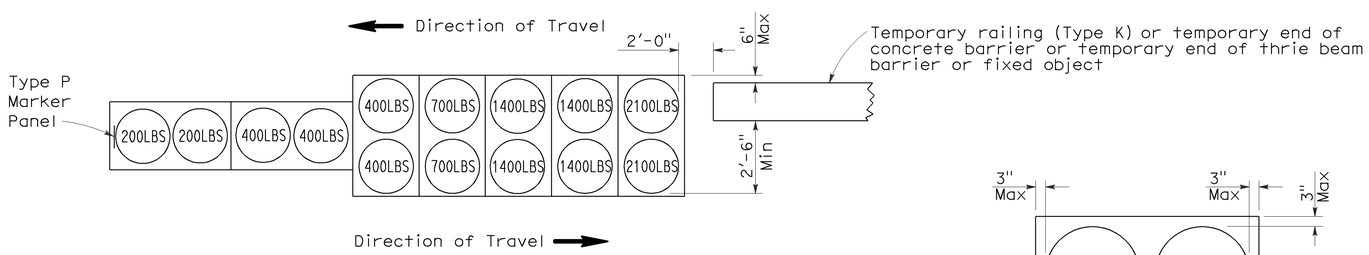

ARRAY 'TB14'

Approach speed 45 mph or more

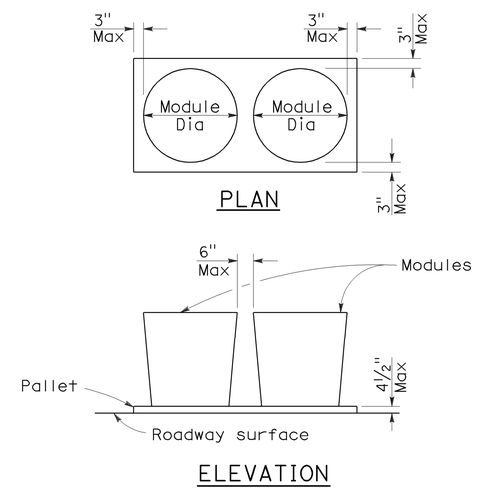

CRASH CUSHION PALLET DETAIL

See Note 7

NOTES:

1. (XXX) Indicates sand filled module location and weight of sand in pounds for each module. Module spacing is based on the greater diameter of the module.
2. All sand weights are nominal.
3. Temporary crash cushion arrays shall not encroach on the traveled way.
4. Place the Type P marker panel so that the bottom of the panel rests upon the pallet.
5. Refer to Standard Plan A73B for marker details.
6. Approach speeds indicated conform to NCHRP 350 Report criteria.
7. Use of pallets is optional.

STATE OF CALIFORNIA
DEPARTMENT OF TRANSPORTATION

TEMPORARY CRASH CUSHION, SAND FILLED (BIDIRECTIONAL)

NO SCALE

RSP T1B DATED JUNE 6, 2008 SUPERSEDES STANDARD PLAN T1B
DATED MAY 1, 2006 - PAGE 212 OF THE STANDARD PLANS BOOK DATED MAY 2006.

REVISED STANDARD PLAN RSP T1B

2006 REVISED STANDARD PLAN RSP T1B

5-15-08

DIST	COUNTY	ROUTE	POST MILES TOTAL PROJECT	SHEET NO.	TOTAL SHEETS
01	Lak	29,53	20.1/20.4 0.0/2.9	49	55

Randell D. Hiatt
REGISTERED CIVIL ENGINEER

June 6, 2008
PLANS APPROVAL DATE

REGISTERED PROFESSIONAL ENGINEER
Randell D. Hiatt
No. C50200
Exp. 6-30-09
CIVIL
STATE OF CALIFORNIA

The State of California or its officers or agents shall not be responsible for the accuracy or completeness of electronic copies of this plan sheet.

To accompany plans dated 6-27-11

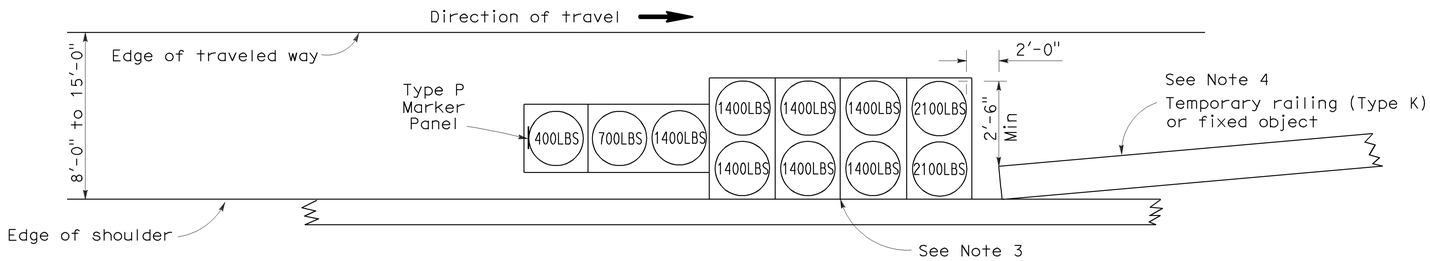

ARRAY 'TS11'

Approach speed less than 45 mph
See Note 9

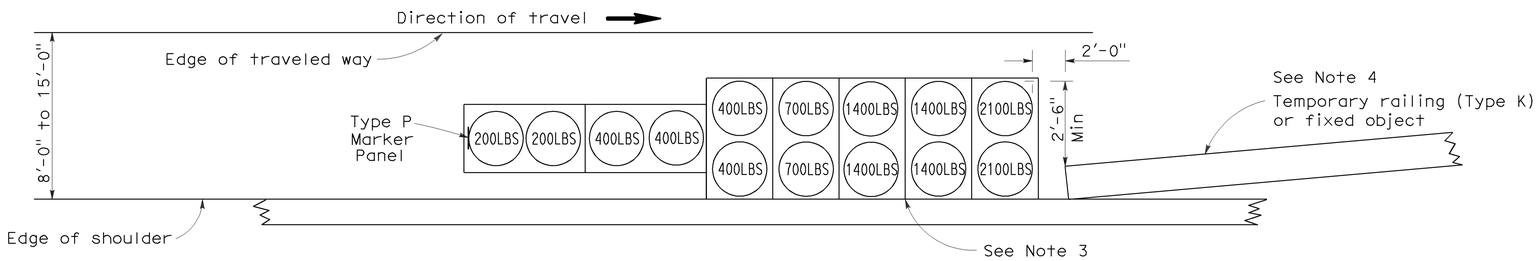

ARRAY 'TS14'

Approach speed 45 mph or more
See Note 9

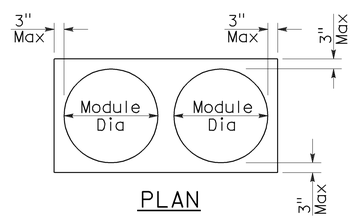

PLAN

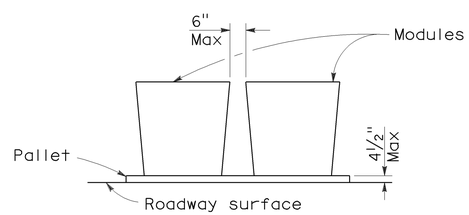

ELEVATION

CRASH CUSHION PALLET DETAIL

See Note 11

NOTES:

1. (XXX) Indicates sand filled module location and weight of sand in pounds for each module. Module spacing is based on the greater diameter of the module.
2. All sand weights are nominal.
3. The temporary crash cushion arrays shown on this plan shall be used only in locations where there will be traffic on one side of the temporary crash cushion array.
4. If the fixed object or approach end of the temporary railing is less than 15'-0" from the edge of traveled way, a temporary crash cushion is required in a construction or work zone.
5. Temporary crash cushion arrays shall not encroach on the traveled way.
6. Arrays for median shoulders shall conform to details shown on this plan for outside shoulders.
7. Place the Type P marker panel so that the bottom of the panel rests upon the pallet and faces traffic.
8. Refer to Standard Plan A73B for marker details.
9. For shoulder widths less than 8'-0", appropriate approved crash cushion protection, other than sand filled modules, shall be provided at fixed objects and at approach ends of temporary railing. The specific type of crash cushion shall be as shown on the project plans or as specified in the Special Provisions, or if not shown on the project plans or specified in the Special Provisions, shall be as approved by the Engineer.
10. Approach speeds indicated conform to NCHRP 350 Report criteria.
11. Use of pallets is optional.

STATE OF CALIFORNIA
DEPARTMENT OF TRANSPORTATION

TEMPORARY CRASH CUSHION, SAND FILLED (SHOULDER INSTALLATIONS)

NO SCALE

RSP T2 DATED JUNE 6, 2008 SUPERSEDES STANDARD PLAN T2
DATED MAY 1, 2006 - PAGE 213 OF THE STANDARD PLANS BOOK DATED MAY 2006.

REVISED STANDARD PLAN RSP T2

2006 REVISED STANDARD PLAN RSP T2

5-15-08

DIST	COUNTY	ROUTE	POST MILES TOTAL PROJECT	SHEET NO.	TOTAL SHEETS
01	Lak	29,53	20.1/20.4 0.0/2.9	50	55

Greg W. Edwards
REGISTERED CIVIL ENGINEER

November 17, 2006
PLANS APPROVAL DATE

REGISTERED PROFESSIONAL ENGINEER
Greg W. Edwards
No. C36386
Exp. 6-30-08
CIVIL
STATE OF CALIFORNIA

The State of California or its officers or agents shall not be responsible for the accuracy or completeness of electronic copies of this plan sheet.

To accompany plans dated 6-27-11

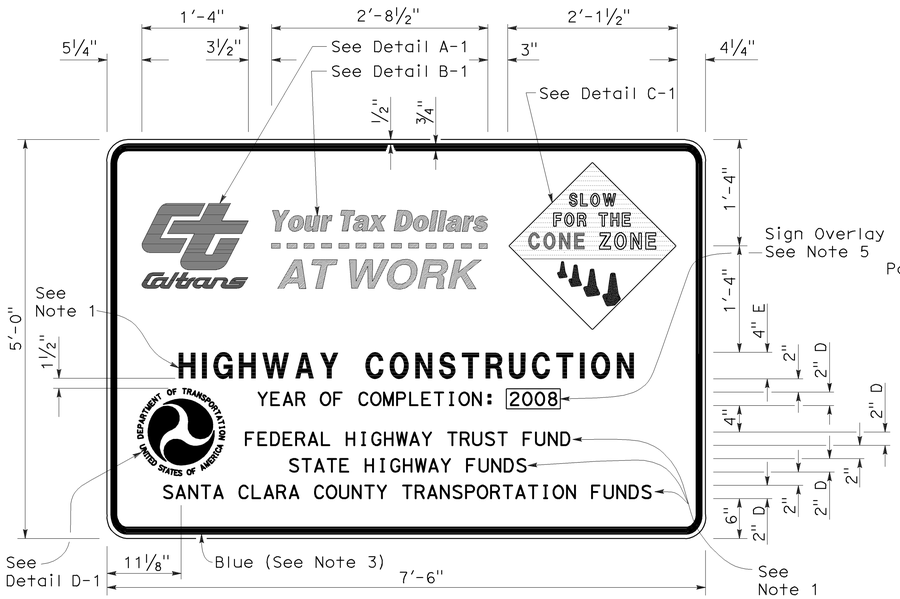

TYPE 1

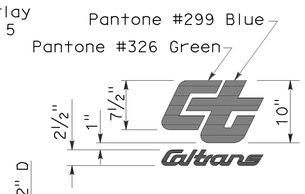

DETAIL A-1

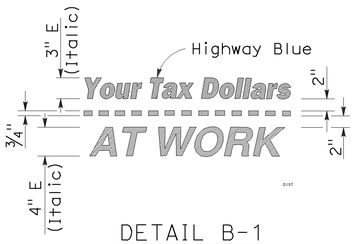

DETAIL B-1
(See Note 3)

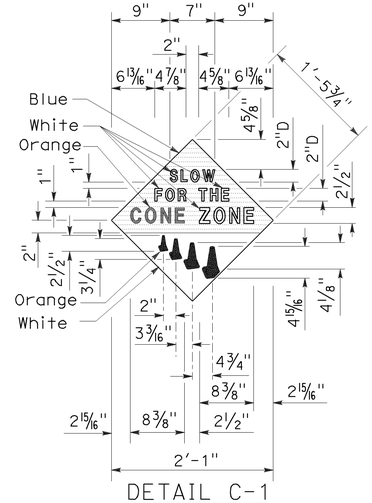

DETAIL C-1
(See Note 4)

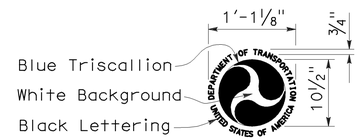

DETAIL D-1
(See Note 6)

NOTES:

1. The sign messages shown for type of project and fund types are examples only. See the Special Provisions for the applicable type of project and fund type messages to be used.
2. Except as otherwise shown, the legend of sign shall be black on a white background (non-reflective).
3. The border of the signs and details "B-1" and "B-2" shall be blue (non-reflective).
4. The diamond in details "C-1" and "C-2" shall be blue for the background of message, " SLOW FOR THE CONE ZONE", and white background for the orange cones. The color and type of font for the "SLOW FOR THE CONE ZONE" message shall be: "SLOW" white D; "FOR THE" white D; "CONE" orange Arial font; "ZONE" white Arial font.
5. Year of completion of project construction shown on the overlay is an example only. See the Special Provisions.
6. Use when the Project involves Federal Highway Trust Fund.

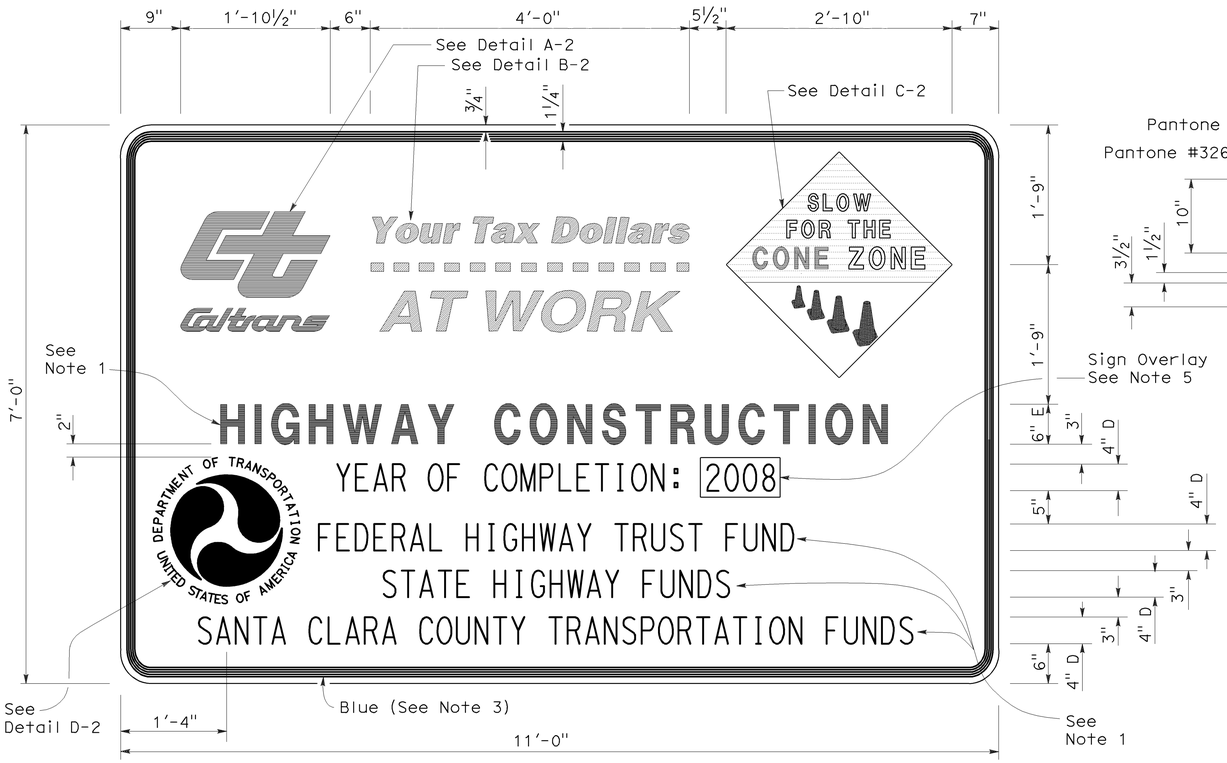

TYPE 2

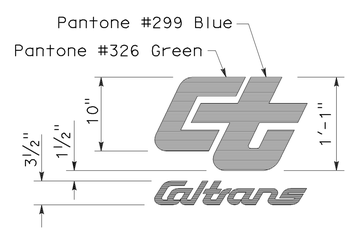

DETAIL A-2

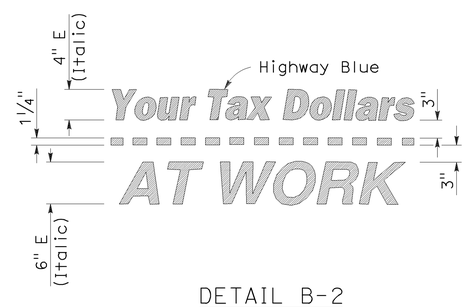

DETAIL B-2
(See Note 3)

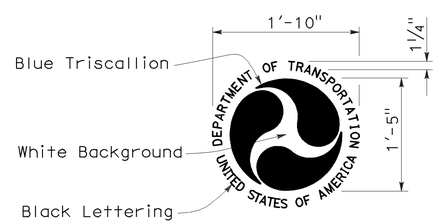

DETAIL D-2
(See Note 6)

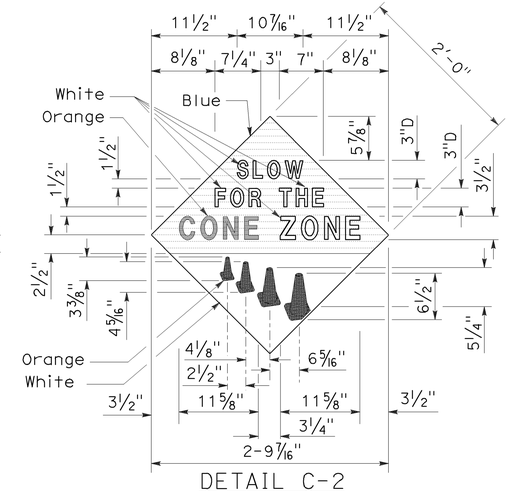

DETAIL C-2
(See Note 4)

STATE OF CALIFORNIA
DEPARTMENT OF TRANSPORTATION

CONSTRUCTION PROJECT FUNDING IDENTIFICATION SIGNS

NO SCALE

RSP T7 DATED NOVEMBER 17, 2006 SUPERSEDES STANDARD PLAN T7
DATED MAY 1, 2006 - PAGE 217 OF THE STANDARD PLANS BOOK DATED MAY 2006.

REVISED STANDARD PLAN RSP T7

2006 REVISED STANDARD PLAN RSP T7

9-7-06

DIST	COUNTY	ROUTE	POST MILES TOTAL PROJECT	SHEET NO.	TOTAL SHEETS
01	Lak	29,53	20.1/20.4 0.0/2.9	51	55

LICENSED LANDSCAPE ARCHITECT

April 3, 2009
PLANS APPROVAL DATE

LICENSED LANDSCAPE ARCHITECT
Robert B. Schott 3635
11-30-10
Renewal Date
2-25-09
Date
STATE OF CALIFORNIA

The State of California or its officers or agents shall not be responsible for the accuracy or completeness of electronic copies of this plan sheet.

To accompany plans dated 6-27-11

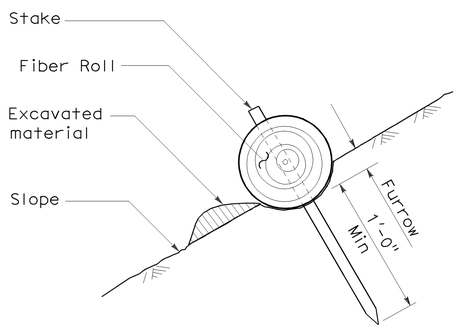

SECTION

TEMPORARY FIBER ROLL (TYPE 1)

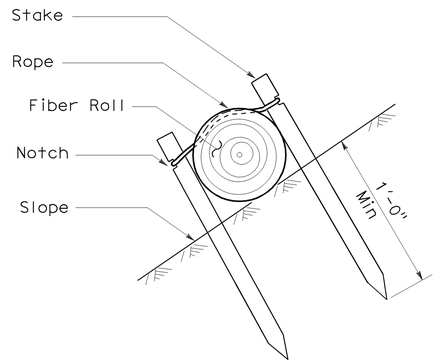

SECTION

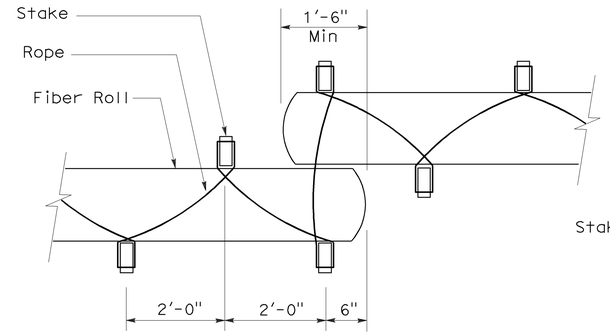

PLAN

TEMPORARY FIBER ROLL (TYPE 2)

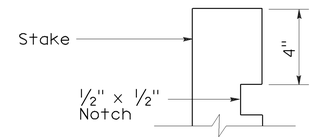

ELEVATION

STAKE NOTCH DETAIL

NOTES:

1. Temporary fiber roll spacing varies depending upon slope inclination.
2. Installations shown in the perspectives are for slope inclination of 10:1 and steeper.

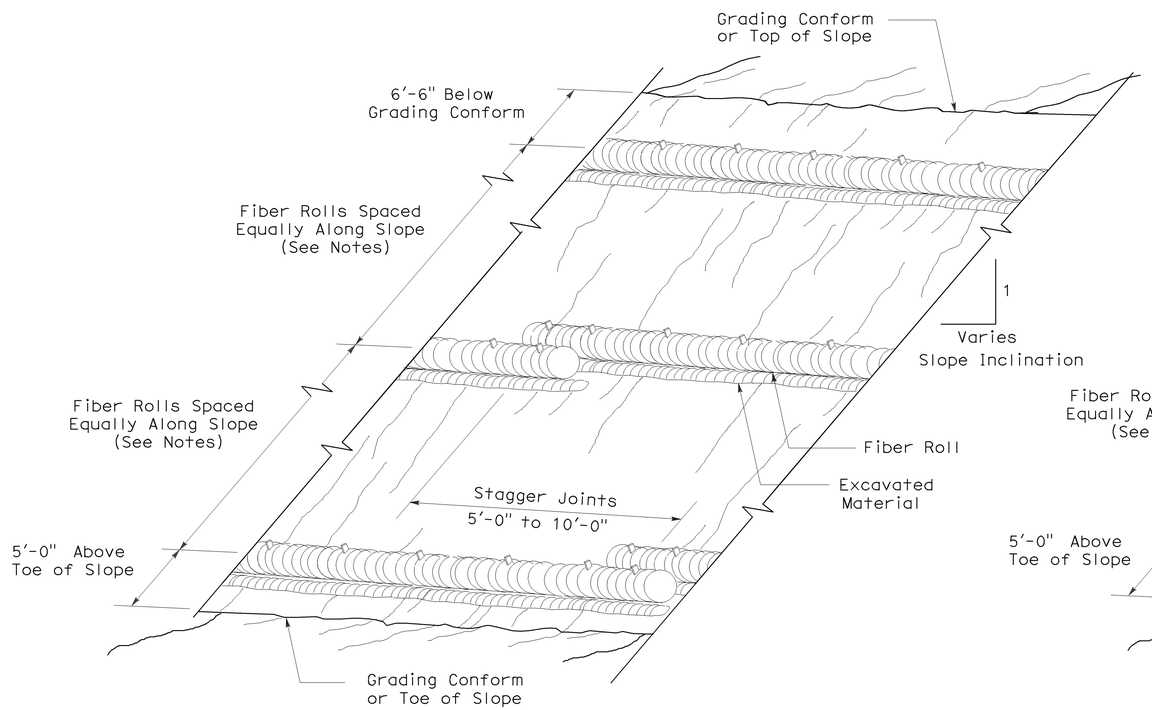

PERSPECTIVE

TEMPORARY FIBER ROLL (TYPE 1)

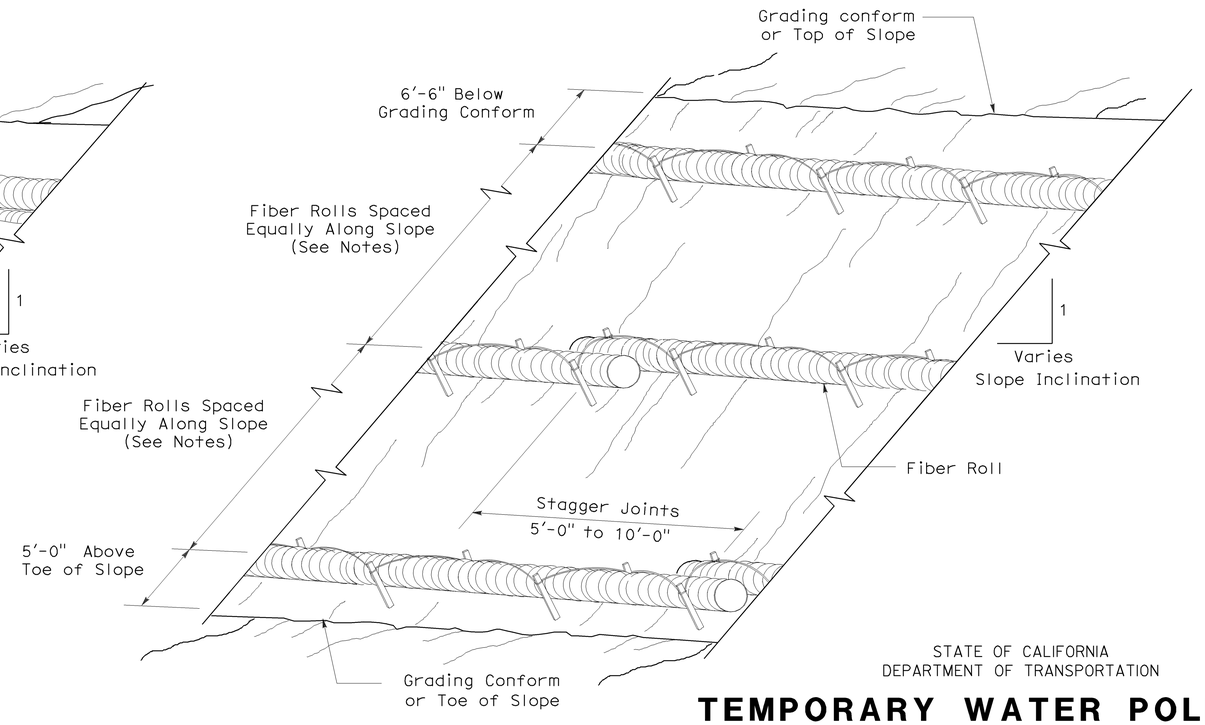

PERSPECTIVE

TEMPORARY FIBER ROLL (TYPE 2)

STATE OF CALIFORNIA
DEPARTMENT OF TRANSPORTATION

TEMPORARY WATER POLLUTION CONTROL DETAILS (TEMPORARY FIBER ROLL)

NO SCALE

RSP T56 DATED APRIL 3, 2009 SUPERSEDES STANDARD PLAN T56
DATED MAY 1, 2006 - PAGE 232 OF THE STANDARD PLANS BOOK DATED MAY 2006.

REVISED STANDARD PLAN RSP T56

2006 REVISED STANDARD PLAN RSP T56

2-23-09

DIST	COUNTY	ROUTE	POST MILES TOTAL PROJECT	SHEET NO.	TOTAL SHEETS
01	Lak	29,53	20.1/20.4 0.0/2.9	52	55

LICENSED LANDSCAPE ARCHITECT

August 15, 2008
PLANS APPROVAL DATE

LICENSED LANDSCAPE ARCHITECT Robert B. Schott 3635 Signature 11-04-08 Renewal Date 08-11-08 Date STATE OF CALIFORNIA

The State of California or its officers or agents shall not be responsible for the accuracy or completeness of electronic copies of this plan sheet.

To accompany plans dated 6-27-11

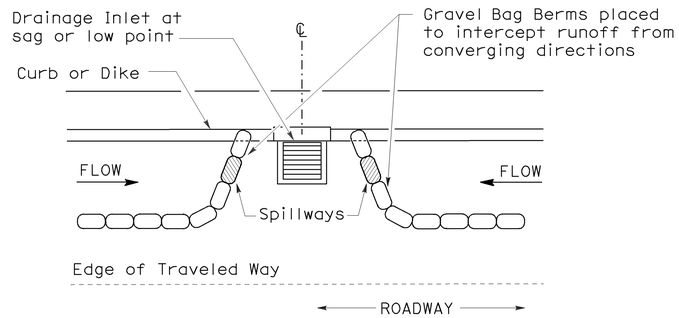

PLAN

CONFIGURATION FOR SAG POINT INLET (GRAVEL BAG BERM)

GRAVEL BAG BERM (TYPE 3A) SPACING TABLE

SLOPE OF ROADWAY (PERCENT)	1 to 3.9	4 to 5.9	6 to 7.9	8 to 10	10+
INTERVAL BETWEEN BERM	100′	75′	50′	25′	12′

For slope of less than 1%, install barriers only if erosion/sediment is prevalent

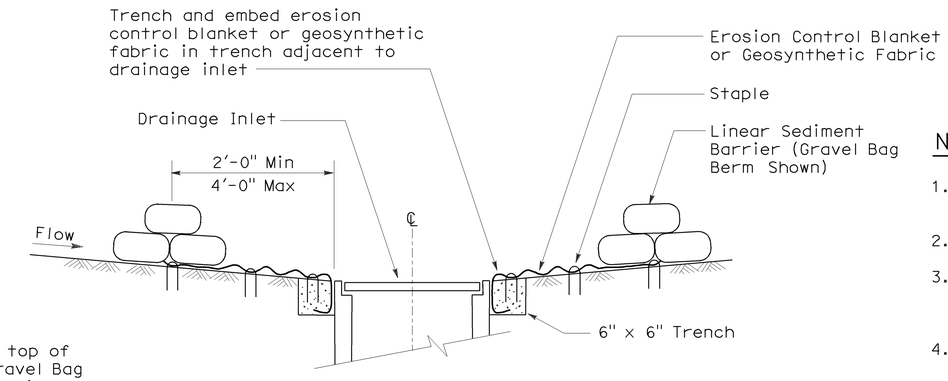

SECTION A-A

NOTES:

1. Place safety cones adjacent to drainage inlet protection.
2. Dimensions may vary to fit field conditions.
3. Install a minimum of 3 gravel bag berms upstream of each drainage inlet to be protected.
4. Position erosion control blanket or geosynthetic fabric at edge of concrete apron and secure in trench.
5. Erosion control blanket or geosynthetic fabric is not required if the area adjacent to the drainage inlet is vegetated or paved.

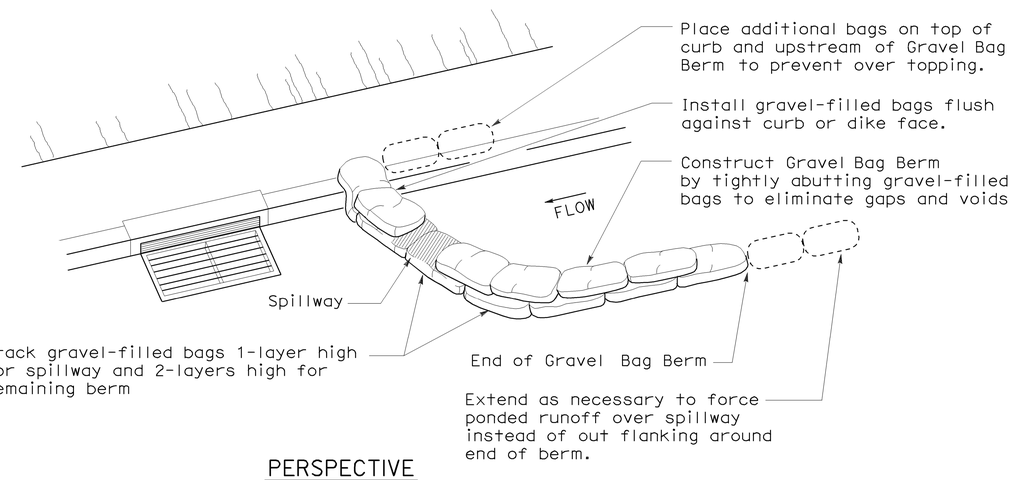

PERSPECTIVE

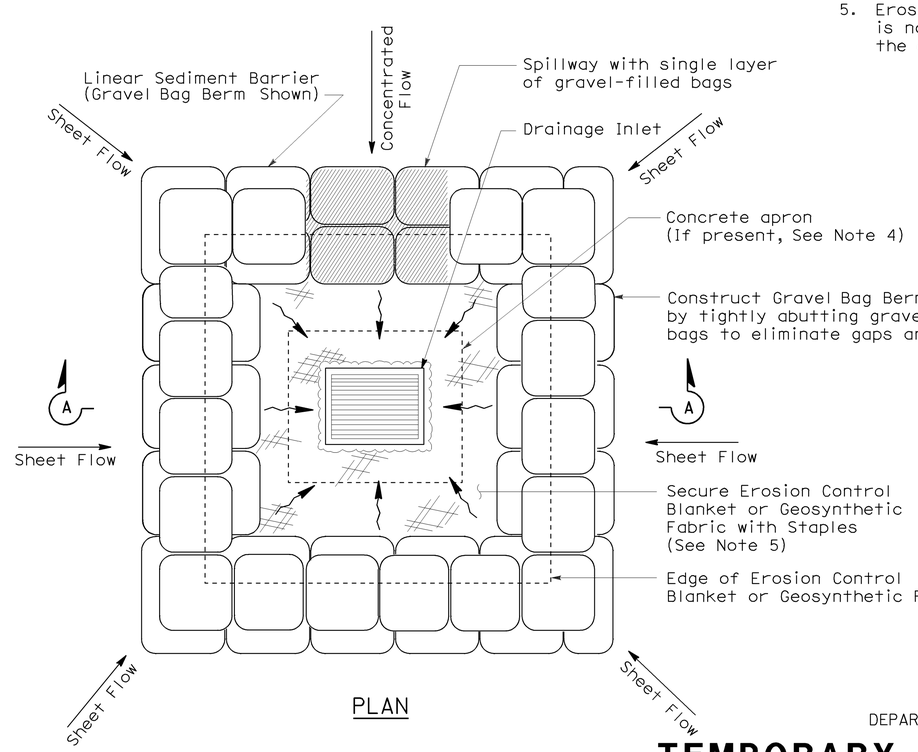

PLAN

TEMPORARY DRAINAGE INLET PROTECTION (TYPE 3B)

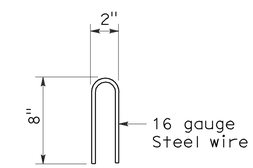

STAPLE DETAIL

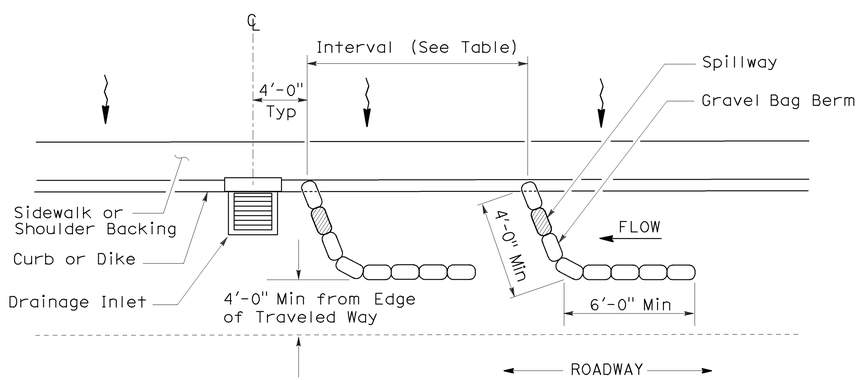

PLAN

TEMPORARY DRAINAGE INLET PROTECTION (TYPE 3A) (GRAVEL BAG BERM)

STATE OF CALIFORNIA
DEPARTMENT OF TRANSPORTATION

TEMPORARY WATER POLLUTION CONTROL DETAILS (TEMPORARY DRAINAGE INLET PROTECTION)

NO SCALE

NSP T62 DATED AUGUST 15, 2008 SUPPLEMENTS THE STANDARD PLANS BOOK DATED MAY 2006.

NEW STANDARD PLAN NSP T62

2006 NEW STANDARD PLAN NSP T62

7-11-08

DIST	COUNTY	ROUTE	POST MILES TOTAL PROJECT	SHEET NO.	TOTAL SHEETS
01	Lak	29,53	20.1/20.4 0.0/2.9	53	55

Robert B. Schott
LICENSED LANDSCAPE ARCHITECT

August 15, 2008
PLANS APPROVAL DATE

LICENSED LANDSCAPE ARCHITECT
Robert B. Schott 3635
Robert B. Schott
Signature
11-04-08
Renewal Date
08-11-08
Date
STATE OF CALIFORNIA

The State of California or its officers or agents shall not be responsible for the accuracy or completeness of electronic copies of this plan sheet.

To accompany plans dated 6-27-11

FLEXIBLE SEDIMENT BARRIER SPACING TABLE

SLOPE OF ROADWAY (PERCENT)	0 to 0.9	1 to 1.9	2 to 2.9	3 to 4	5+
INTERVAL BETWEEN BARRIERS	50′	35′	30′	25′	20′
ANGLE FROM FACE OF CURB	70°	70°	70°	45°	45°
SUGGESTED BARRIER LENGTH	6′	6′	6′	6′	6′

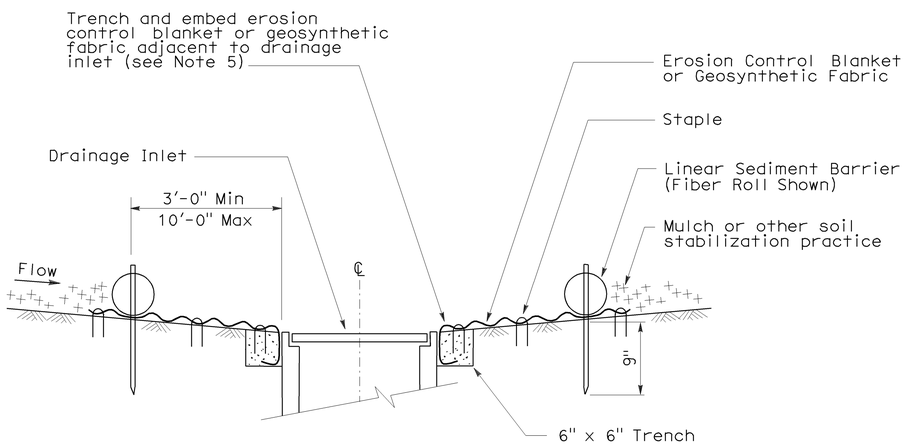

SECTION A-A

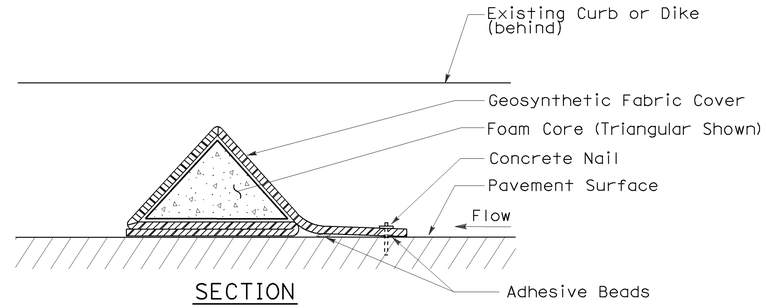

SECTION

FLEXIBLE SEDIMENT BARRIER DETAIL (FOAM BARRIER SHOWN)

NOTES:

1. See Standard Plan T51 for Temporary Silt Fence.
2. Dimensions may vary to fit field conditions.
3. Install a minimum of 3 flexible sediment barriers upstream of each drainage inlet to be protected.
4. Position erosion control blanket or geosynthetic fabric at edge of concrete apron and secure in trench.
5. Erosion control blanket or geosynthetic fabric is not required if the area adjacent to the drainage inlet is vegetated.

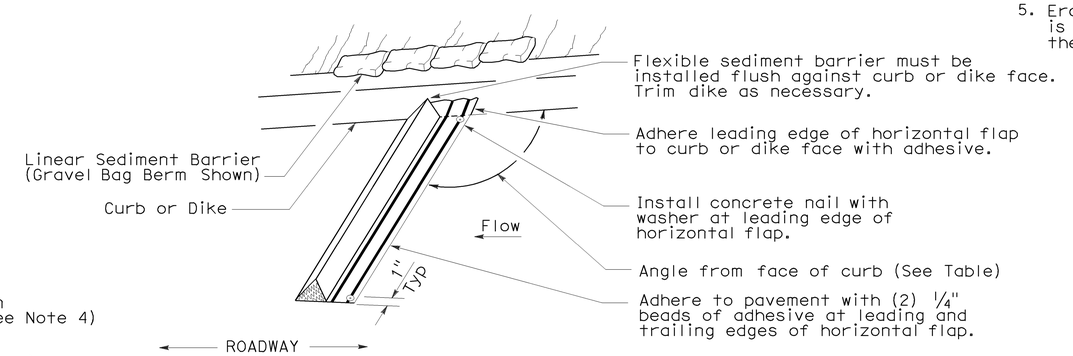

PERSPECTIVE

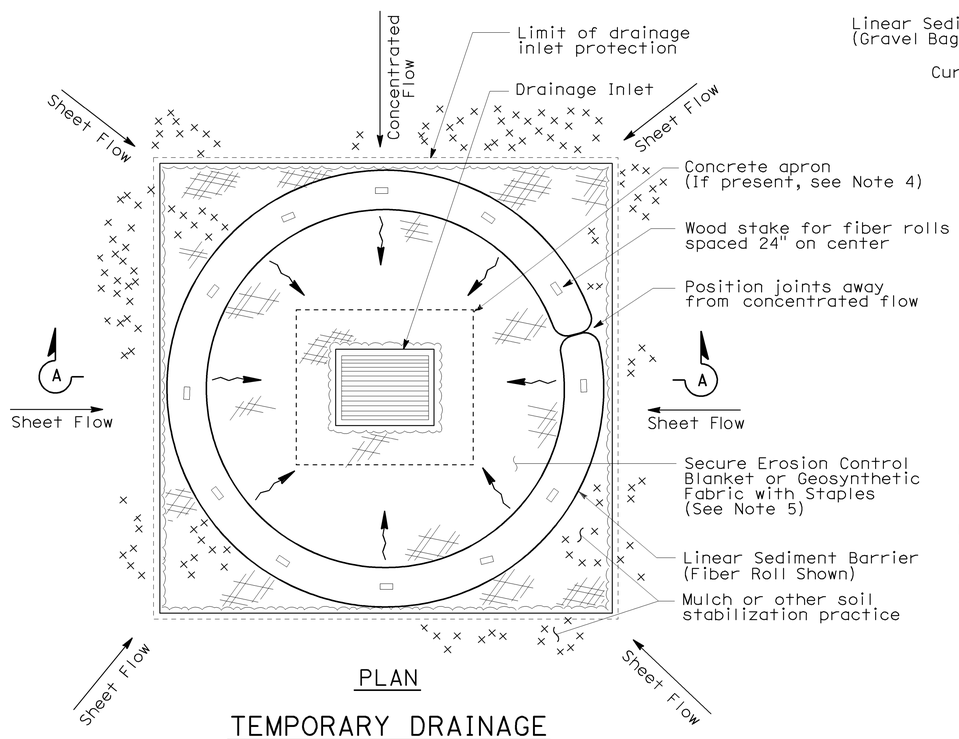

PLAN

TEMPORARY DRAINAGE INLET PROTECTION (TYPE 4A)

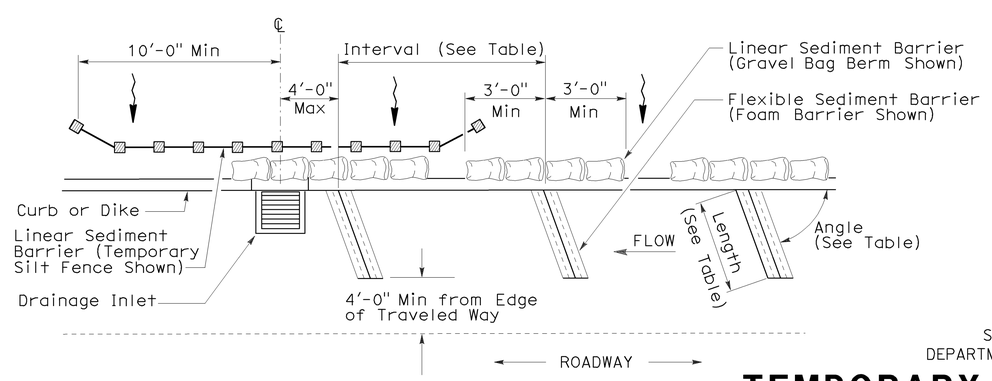

PLAN

TEMPORARY DRAINAGE INLET PROTECTION (TYPE 4B) FLEXIBLE SEDIMENT BARRIER

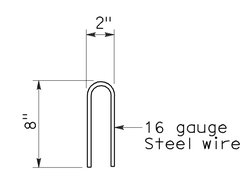

STAPLE DETAIL

STATE OF CALIFORNIA
DEPARTMENT OF TRANSPORTATION

TEMPORARY WATER POLLUTION CONTROL DETAILS (TEMPORARY DRAINAGE INLET PROTECTION)

NO SCALE

NSP T63 DATED AUGUST 15, 2008 SUPPLEMENTS THE STANDARD PLANS BOOK DATED MAY 2006.

NEW STANDARD PLAN NSP T63

2006 NEW STANDARD PLAN NSP T63

7-11-08

DIST	COUNTY	ROUTE	POST MILES TOTAL PROJECT	SHEET NO.	TOTAL SHEETS
01	Lak	29,53	20.1/20.4 0.0/2.9	54	55

LICENSED LANDSCAPE ARCHITECT

August 15, 2008
PLANS APPROVAL DATE

LICENSED LANDSCAPE ARCHITECT
Robert B. Schott 3635
Signature
11-04-08
Renewal Date
08-11-08
Date
STATE OF CALIFORNIA

The State of California or its officers or agents shall not be responsible for the accuracy or completeness of electronic copies of this plan sheet.

To accompany plans dated 6-27-11

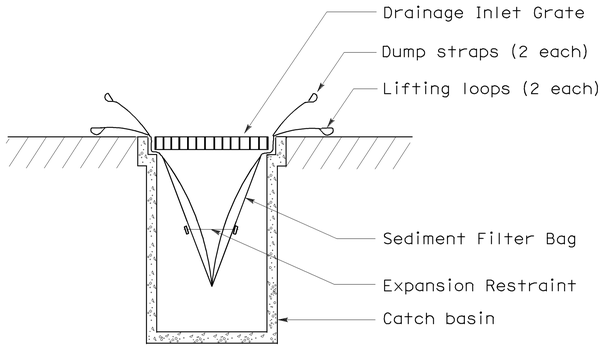

SECTION B-B

SEDIMENT FILTER BAG DETAIL

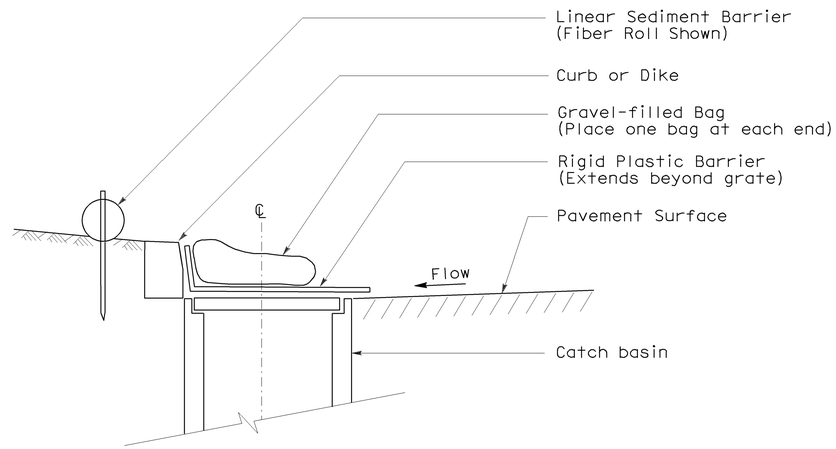

SECTION

TEMPORARY DRAINAGE INLET PROTECTION (TYPE 6A) (CATCH BASIN WITH GRATE)

NOTES:

1. See Standard Plan T51 for Temporary Silt Fence.
2. Dimensions may vary to fit field conditions.

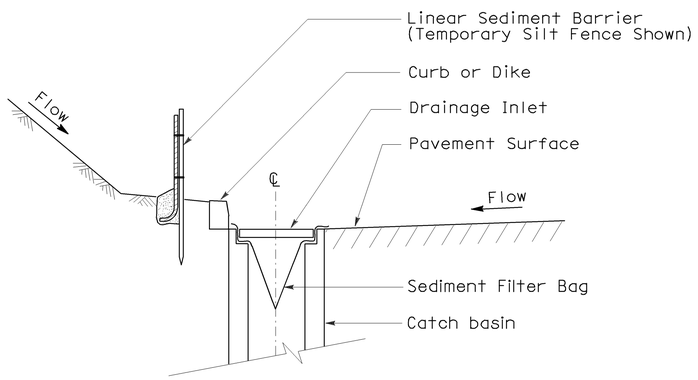

SECTION A-A

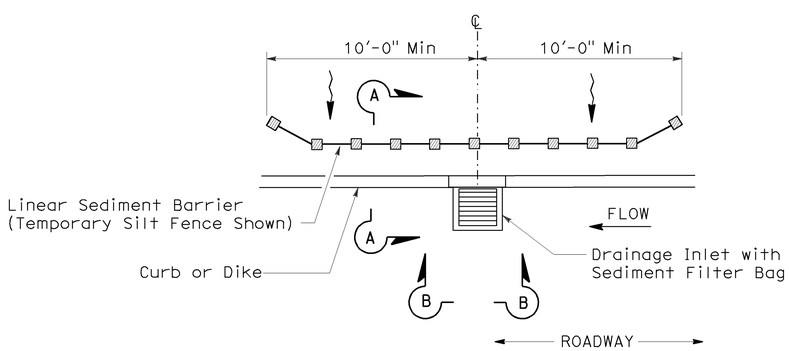

PLAN

TEMPORARY DRAINAGE INLET PROTECTION (TYPE 5) (SEDIMENT FILTER BAG)

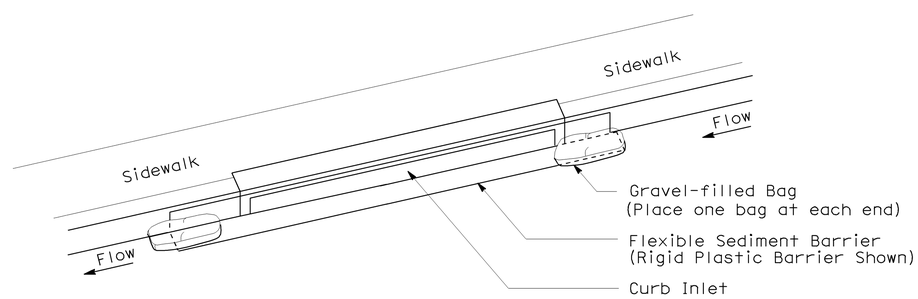

PERSPECTIVE

TEMPORARY DRAINAGE INLET PROTECTION (TYPE 6B) (CURB INLET WITHOUT GRATE)

STATE OF CALIFORNIA
DEPARTMENT OF TRANSPORTATION

TEMPORARY WATER POLLUTION CONTROL DETAILS (TEMPORARY DRAINAGE INLET PROTECTION)

NO SCALE

NSP T64 DATED AUGUST 15, 2008 SUPPLEMENTS
THE STANDARD PLANS BOOK DATED MAY 2006.

NEW STANDARD PLAN NSP T64

2006 NEW STANDARD PLAN NSP T64

7-11-08

DIST	COUNTY	ROUTE	POST MILES TOTAL PROJECT	SHEET NO.	TOTAL SHEETS
01	Lak	29,53	20.1/20.4 0.0/2.9	55	55

Robert B. Schott
LICENSED LANDSCAPE ARCHITECT

April 3, 2009
PLANS APPROVAL DATE

LICENSED LANDSCAPE ARCHITECT
Robert B. Schott 3625
Signature
11-30-10
Renewal Date
2-25-09
Date
STATE OF CALIFORNIA

The State of California or its officers or agents shall not be responsible for the accuracy or completeness of electronic copies of this plan sheet.

To accompany plans dated 6-27-11

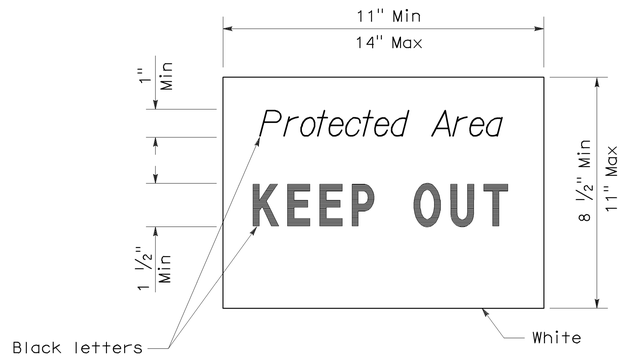

SIGN DETAIL

NOTE:

1. Temporary silt fence and temporary straw bale barrier shown for reference purposes only.

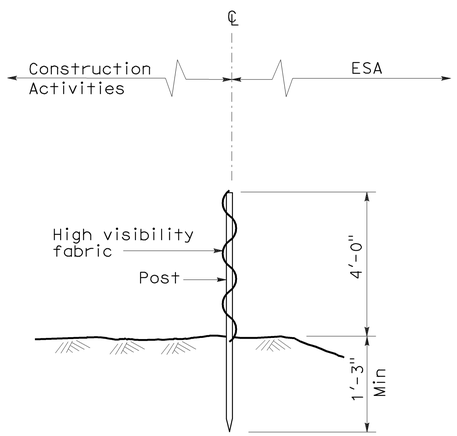

SECTION
TEMPORARY FENCE (TYPE ESA)

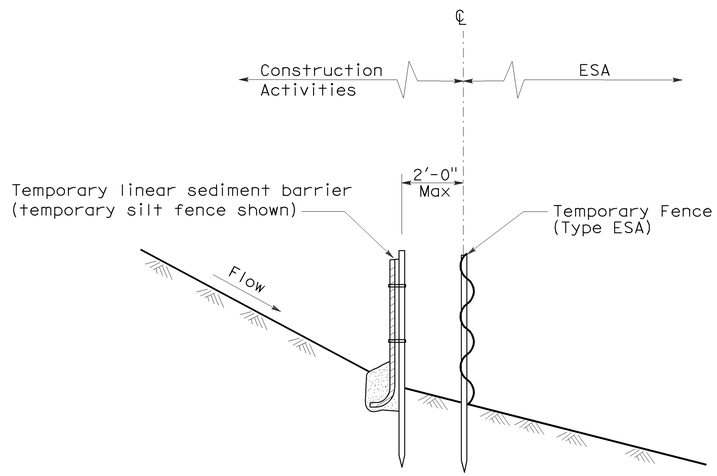

SECTION
PLACEMENT DETAIL
FOR TEMPORARY LINEAR SEDIMENT BARRIER
USED WITH TEMPORARY
FENCE (TYPE ESA)
(See Note 1)

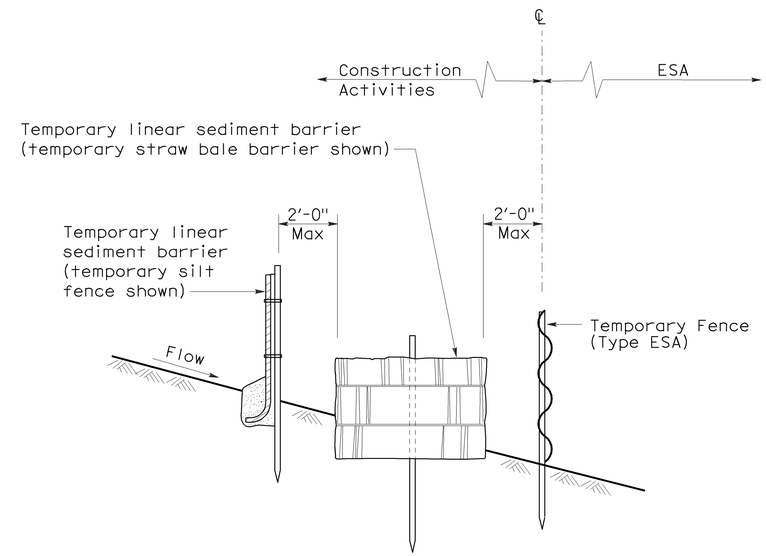

SECTION
PLACEMENT DETAIL
FOR TEMPORARY SILT FENCE
AND TEMPORARY STRAW BALE BARRIER
USED WITH TEMPORARY FENCE (TYPE ESA)
(See Note 1)

STATE OF CALIFORNIA
DEPARTMENT OF TRANSPORTATION

TEMPORARY WATER POLLUTION CONTROL DETAILS [TEMPORARY FENCE (TYPE ESA)]

NO SCALE

NSP T65 DATED APRIL 3, 2009 SUPPLEMENTS
THE STANDARD PLANS BOOK DATED MAY 2006.

NEW STANDARD PLAN NSP T65

2006 NEW STANDARD PLAN NSP T65