Dist	COUNTY	ROUTE	POST MILES TOTAL PROJECT	SHEET No.	TOTAL SHEETS
01	Hum	169	Var	1	29

ACSTP-43K9(004)E

STATE OF CALIFORNIA

DEPARTMENT OF TRANSPORTATION

PROJECT PLANS FOR CONSTRUCTION ON

STATE HIGHWAY

IN HUMBOLDT COUNTY AT VARIOUS LOCATIONS FROM 1.9 MILES WEST OF CAPPELL CREEK BRIDGE TO 0.9 MILE WEST OF ROUTE 96

TO BE SUPPLEMENTED BY STANDARD PLANS DATED MAY 2006

INDEX OF PLANS

SHEET No.	DESCRIPTION
1	TITLE AND LOCATION MAP
2-4	TYPICAL CROSS SECTIONS
5-10	LAYOUTS
11-12	CONSTRUCTION DETAILS
13-14	DRAINAGE PROFILES
15	DRAINAGE DETAILS
16	DRAINAGE QUANTITIES
17	CONSTRUCTION AREA SIGNS
18-19	SUMMARY OF QUANTITIES
20-29	REVISED STANDARD PLANS

THE STANDARD PLANS LIST APPLICABLE TO THIS CONTRACT IS INCLUDED IN THE NOTICE TO BIDDERS AND SPECIAL PROVISIONS BOOK.

LOCATION MAP

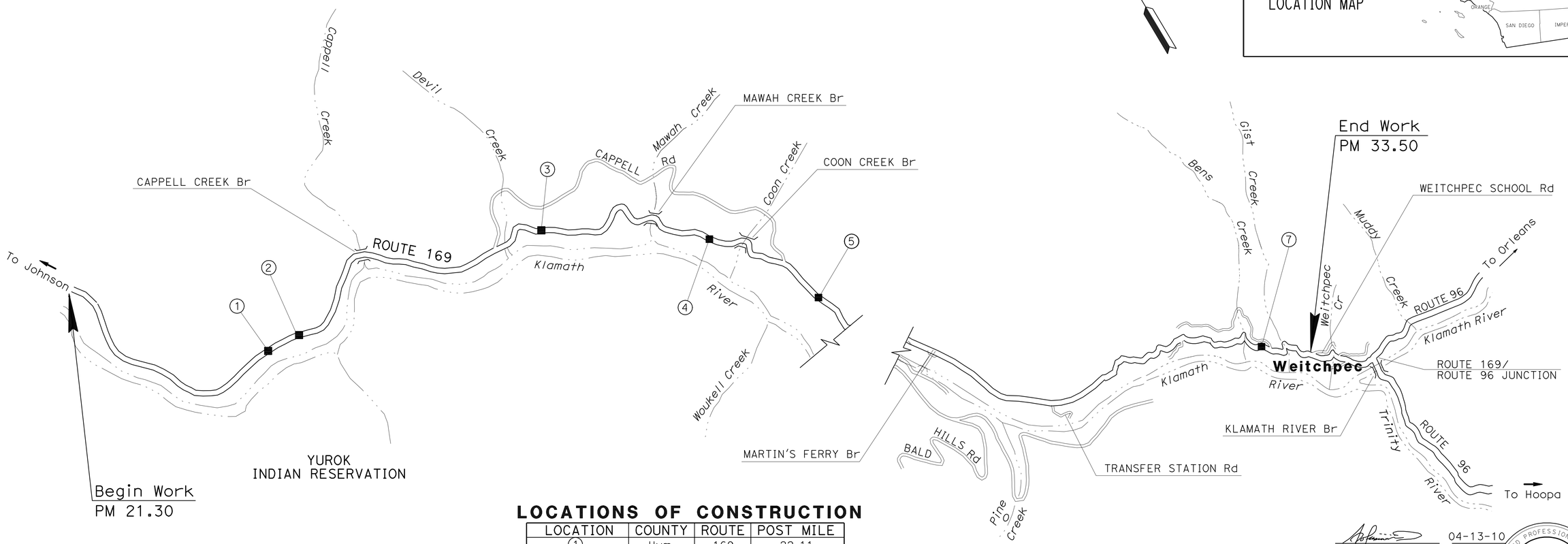

LOCATIONS OF CONSTRUCTION

LOCATION	COUNTY	ROUTE	POST MILE
1	Hum	169	22.11
2	Hum	169	22.21
3	Hum	169	23.93
4	Hum	169	25.49
5	Hum	169	26.31
6	Hum	169	32.88

THE CONTRACTOR SHALL POSSESS THE CLASS (OR CLASSES) OF LICENSE AS SPECIFIED IN THE "NOTICE TO BIDDERS."

NO SCALE

PROJECT MANAGER: FRANK DEMLING

DESIGN ENGINEER: ROB BURNETT

P:\proj2\01\47850_plans\pse\147850ab001.dgn

04-13-10

PROJECT ENGINEER REGISTERED CIVIL ENGINEER — DATE

April 13, 2010

PLANS APPROVAL DATE

REGISTERED PROFESSIONAL ENGINEER — APOLINARIO W. VIVIT — No. C66046 — Exp. 6-30-12 — CIVIL — STATE OF CALIFORNIA

THE STATE OF CALIFORNIA OR ITS OFFICERS OR AGENTS SHALL NOT BE RESPONSIBLE FOR THE ACCURACY OR COMPLETENESS OF SCANNED COPIES OF THIS PLAN SHEET.

CONTRACT No.	01-478504
PROJECT ID	0100000365

LAST REVISION 07-30-10 | DATE PLOTTED => 12-AUG-2010 | TIME PLOTTED => 11:37

Dist	COUNTY	ROUTE	POST MILES TOTAL PROJECT	SHEET No.	TOTAL SHEETS
01	Hum	169	Var	2	29

REGISTERED CIVIL ENGINEER DATE 04-13-10

PLANS APPROVAL DATE 04-13-10

REGISTERED PROFESSIONAL ENGINEER APOLINARIO W. VIVIT No. C66046 Exp. 6-30-12 CIVIL STATE OF CALIFORNIA

THE STATE OF CALIFORNIA OR ITS OFFICERS OR AGENTS SHALL NOT BE RESPONSIBLE FOR THE ACCURACY OR COMPLETENESS OF ELECTRONIC COPIES OF THIS PLAN SHEET.

NOTES:

1. DIMENSIONS OF THE PAVEMENT STRUCTURES (STRUCTURAL SECTIONS) ARE SUBJECT TO TOLERANCES SPECIFIED IN THE STANDARD SPECIFICATIONS.
2. SUPERELEVATIONS AS SHOWN OR AS DIRECTED BY THE ENGINEER.

ABBREVIATIONS

TL TRIM LINE

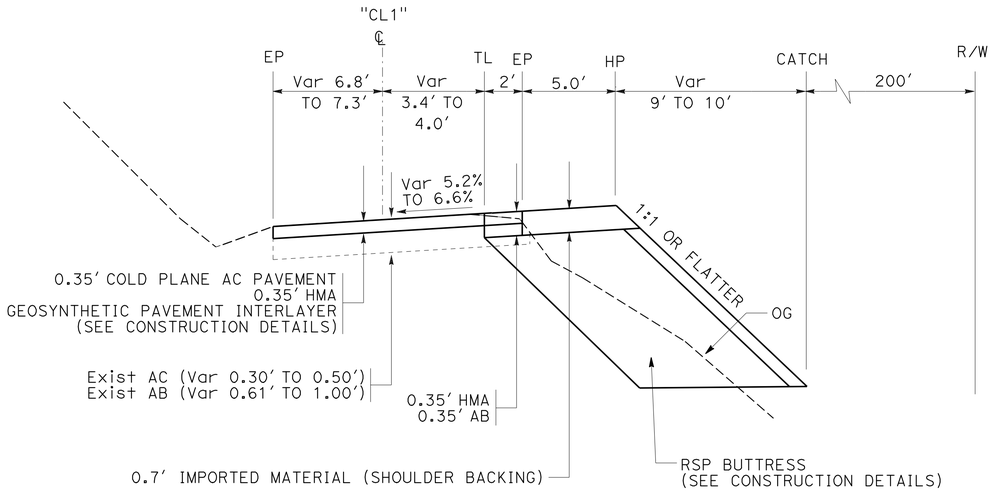

LOCATION 1

"CL1" 8+87.15 TO 9+30

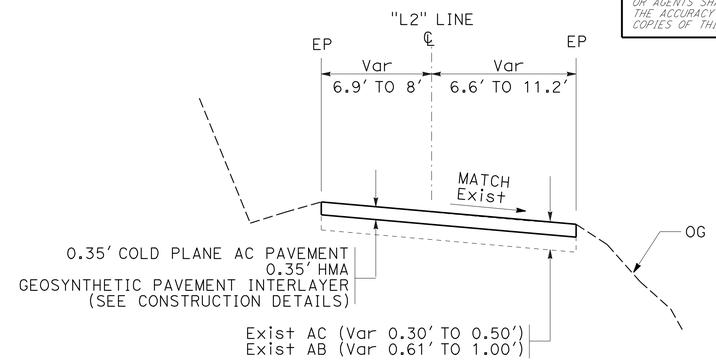

LOCATION 2

"L2" 5+00 TO 6+60

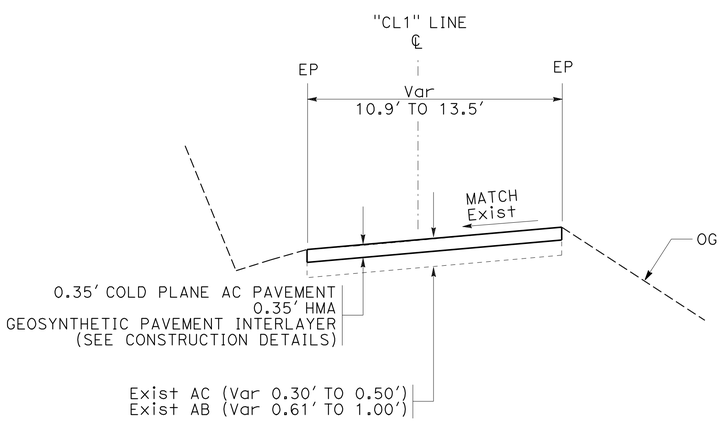

LOCATION 1

"CL1" 7+08 TO 7+40
"CL1" 7+75 TO 8+87.15
"CL1"9+30 TO 9+50

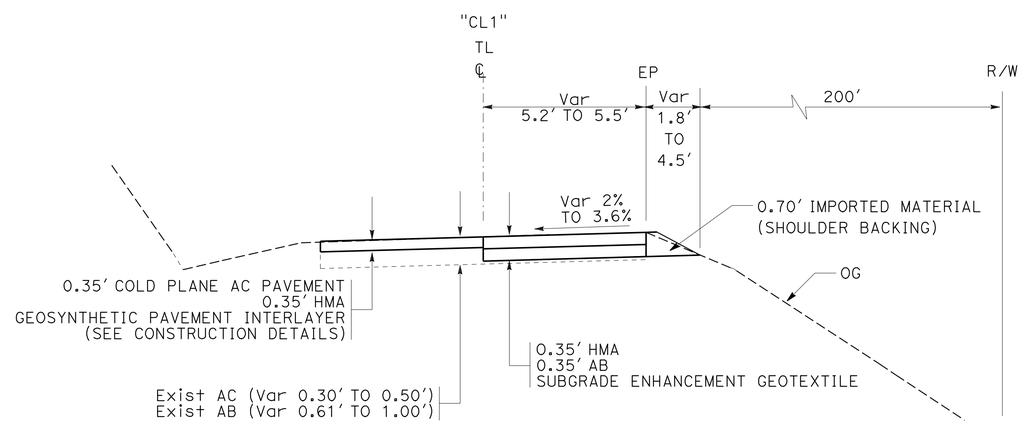

LOCATION 1

"CL1" 7+40 TO 7+75

TYPICAL CROSS SECTIONS

NO SCALE

X-1

REVISED BY | DATE REVISED

ROD ESTES | APOLINARIO VIVIT

CALCULATED-DESIGNED BY | CHECKED BY

FUNCTIONAL SUPERVISOR: ROB BURNETT

STATE OF CALIFORNIA - DEPARTMENT OF TRANSPORTATION

Caltrans **DESIGN**

P:\proj2\01\47850_plans\pse\147850ca001.dgn

LAST REVISION 03-08-10 | DATE PLOTTED => 12-AUG-2010 | TIME PLOTTED => 11:38

Dist	COUNTY	ROUTE	POST MILES TOTAL PROJECT	SHEET No.	TOTAL SHEETS
01	Hum	169	Var	3	29

REGISTERED CIVIL ENGINEER DATE 04-13-10

PLANS APPROVAL DATE 04-13-10

REGISTERED PROFESSIONAL ENGINEER APOLINARIO W. VIVIT No. C66046 Exp. 6-30-12 CIVIL STATE OF CALIFORNIA

THE STATE OF CALIFORNIA OR ITS OFFICERS OR AGENTS SHALL NOT BE RESPONSIBLE FOR THE ACCURACY OR COMPLETENESS OF ELECTRONIC COPIES OF THIS PLAN SHEET.

KEY NOTES

1 0.7′ IMPORTED MATERIAL (SHOULDER BACKING)

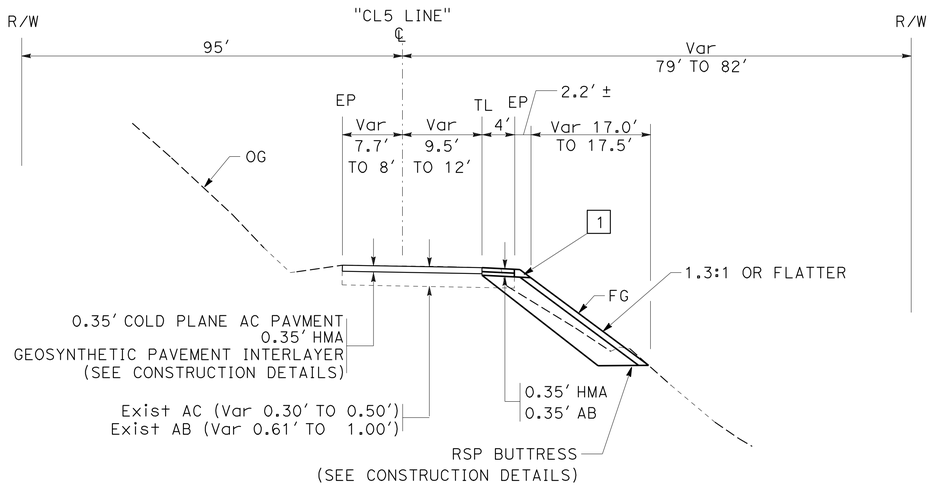

LOCATION 4

"CL5" 4+25.09 TO 4+50

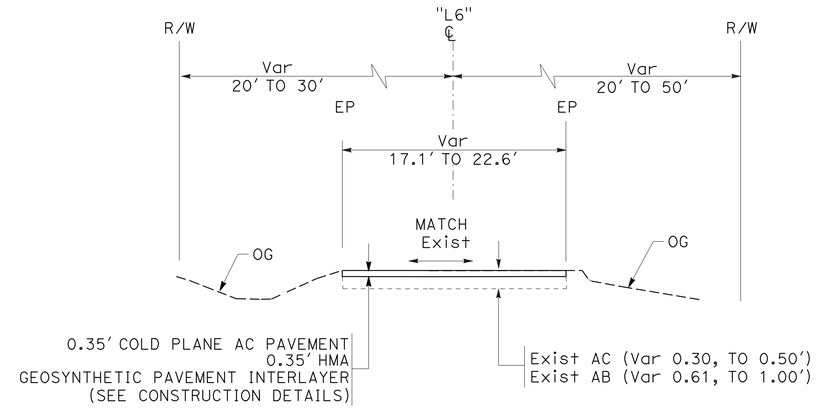

LOCATION 5

"L6" 3+50 TO 4+06.20
"L6" 4+80 TO 5+50

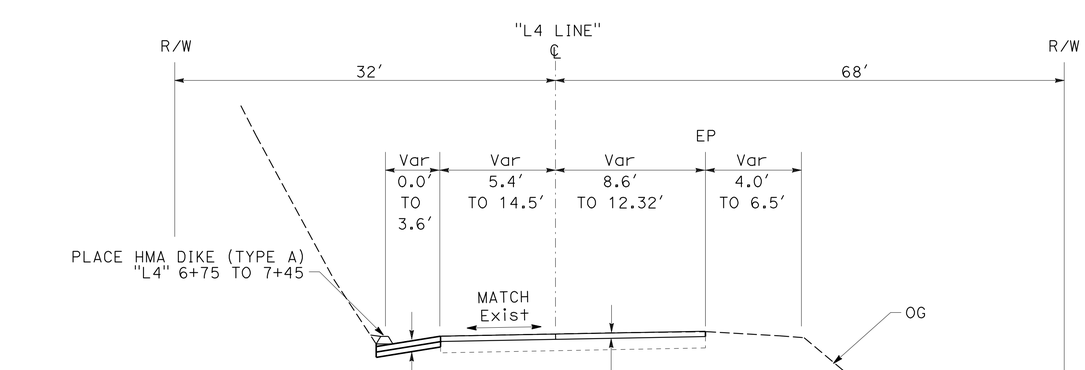

LOCATION 3

"L4" 6+50 TO 8+28.58

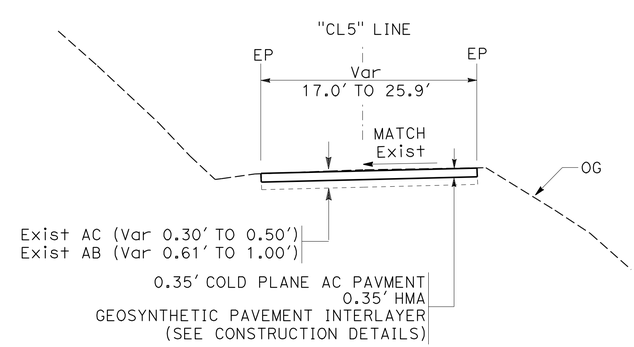

LOCATION 4

"CL5" 3+65.67 TO 4+25.09
"CL5" 4+50 TO 5+29.09

TYPICAL CROSS SECTIONS

NO SCALE

X-2

REVISED BY | DATE REVISED

ROD ESTES | APOLINARIO VIVIT

CALCULATED-DESIGNED BY | CHECKED BY

FUNCTIONAL SUPERVISOR: ROB BURNETT

STATE OF CALIFORNIA - DEPARTMENT OF TRANSPORTATION

Caltrans DESIGN

P:\proj2\01\478501_plans\pse\147850ca002.dgn

LAST REVISION | DATE PLOTTED => 12-AUG-2010 | TIME PLOTTED => 11:38 | 03-08-10

Dist	COUNTY	ROUTE	POST MILES TOTAL PROJECT	SHEET No.	TOTAL SHEETS
01	Hum	169	Var	4	29

REGISTERED CIVIL ENGINEER DATE 04-13-10

PLANS APPROVAL DATE 04-13-10

REGISTERED PROFESSIONAL ENGINEER APOLINARIO W. VIVIT No. C66046 Exp. 6-30-12 CIVIL STATE OF CALIFORNIA

THE STATE OF CALIFORNIA OR ITS OFFICERS OR AGENTS SHALL NOT BE RESPONSIBLE FOR THE ACCURACY OR COMPLETENESS OF ELECTRONIC COPIES OF THIS PLAN SHEET.

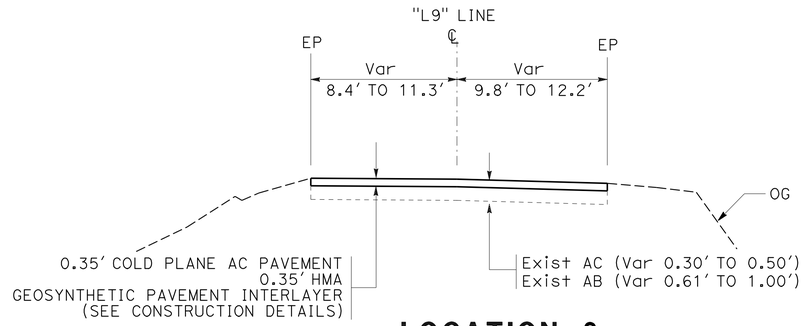

LOCATION 6

"L9" Sta 3+50 TO 4+50

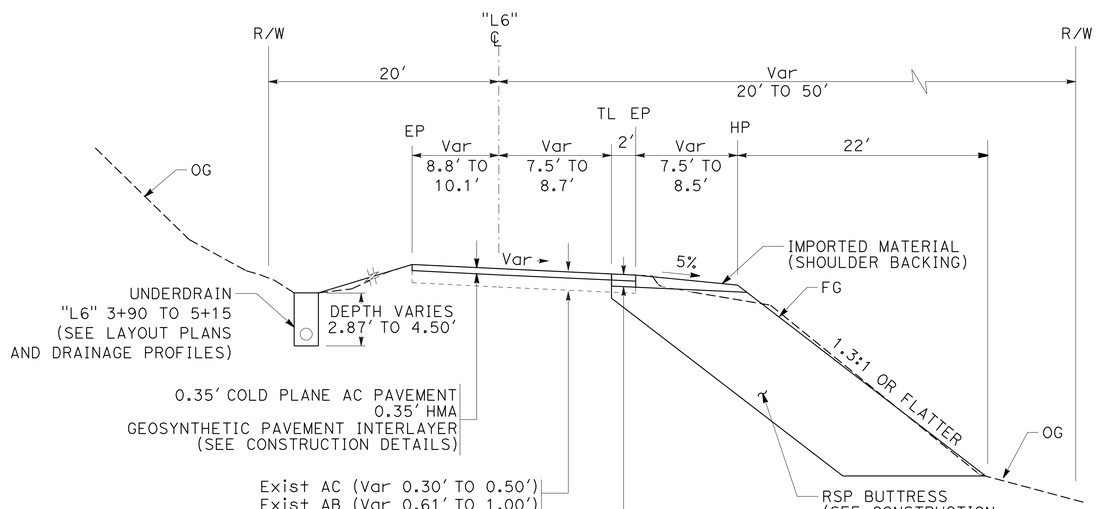

LOCATION 5

"L6" 4+06.20 TO 4+80

TYPICAL CROSS SECTIONS

NO SCALE

X-3

REVISED BY | DATE REVISED

ROD ESTES | APOLINARIO VIVIT

CALCULATED-DESIGNED BY | CHECKED BY

FUNCTIONAL SUPERVISOR: ROB BURNETT

STATE OF CALIFORNIA - DEPARTMENT OF TRANSPORTATION

Caltrans **DESIGN**

P:\proj2\01\47850_plans\pse\147850ca003.dgn

LAST REVISION | DATE PLOTTED => 12-AUG-2010 | TIME PLOTTED => 11:38 | 03-08-10

Dist	COUNTY	ROUTE	POST MILES TOTAL PROJECT	SHEET No.	TOTAL SHEETS
01	Hum	169	Var	5	29

04-13-10
REGISTERED CIVIL ENGINEER DATE

04-13-10
PLANS APPROVAL DATE

REGISTERED PROFESSIONAL ENGINEER
APOLINARIO W. VIVIT
No. C66046
Exp. 6-30-12
CIVIL
STATE OF CALIFORNIA

THE STATE OF CALIFORNIA OR ITS OFFICERS OR AGENTS SHALL NOT BE RESPONSIBLE FOR THE ACCURACY OR COMPLETENESS OF ELECTRONIC COPIES OF THIS PLAN SHEET.

NOTE:

1. FOR COMPLETE RIGHT OF WAY DATA, SEE RIGHT OF WAY RECORD MAPS AT DISTRICT OFFICE.

LEGEND

- COLD PLANE AC
- DELINEATOR (TYPE E)
- MARKER (CULVERT)
- 6" ALTERNATIVE PIPE
- TEMPORARY FENCE (TYPE ESA)
- DRAINAGE SYSTEM No.
- DRAINAGE UNIT
- FLOW DIRECTION

ABBREVIATIONS

AL	ALUMINUM
FD	FOUND
RED	ROCK ENERGY DISSIPATOR
CHDPE	CORRUGATED HIGH DENSITY POLYETHYLENE

CURVE DATA

No.	R	Δ	T	L
1	300.00′	12°4′16"	31.72′	63.20′
2	300.00′	24°25′33"	64.93′	127.89′
3	299.99′	13°51′37"	36.46′	72.57′
4	300.00′	24°59′05"	66.47′	130.82′

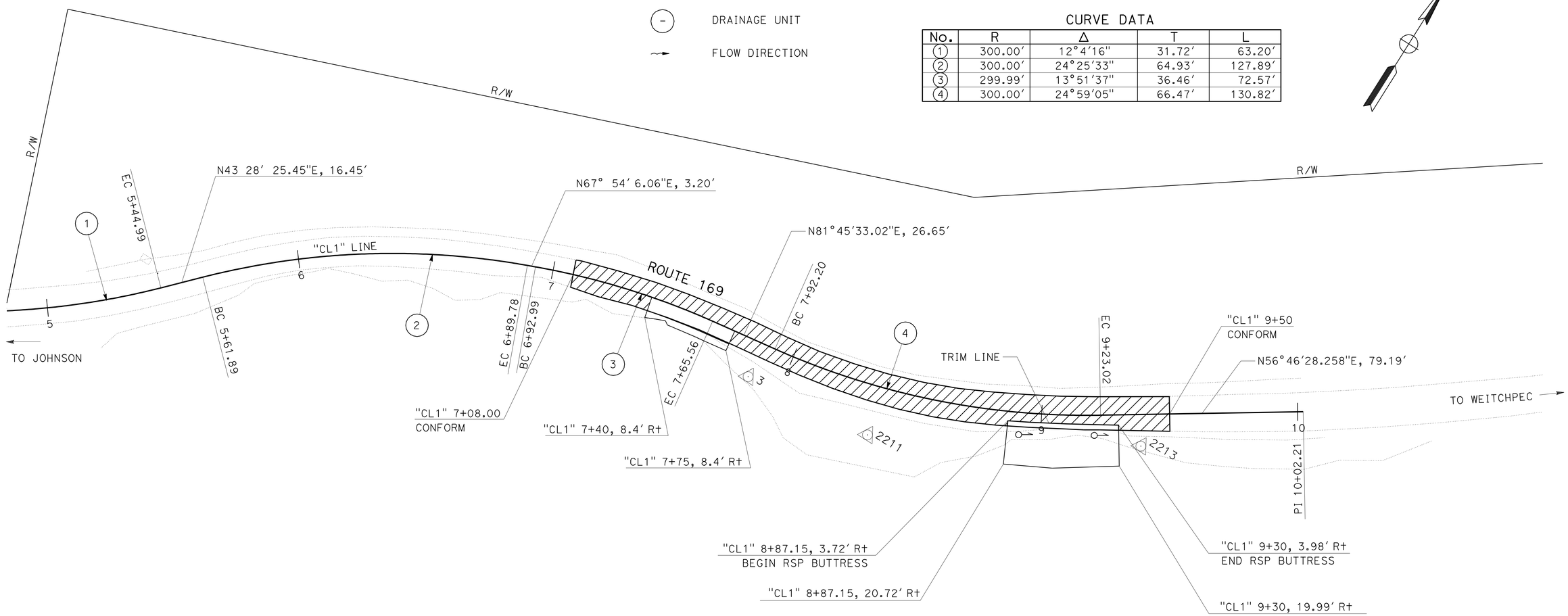

BENCHMARKS

No.	STATION	OFFSET	ELEVATION	DESCRIPTION
3	"CL1" 7+87.03	14.146′ Rt	299.733′	SET HUB AND TACK
2211	"CL1" 8+36.19	19.398′ Rt	297.893′	PM 22.11 ALCAP
2213	"CL1" 9+38.58	12.370′ Rt	295.082′	SET SPIKE PM 22.13

LOCATION 1
PM 22.1

LAYOUT
SCALE: 1" = 20′

L-1

REVISED BY | DATE REVISED
ROD ESTES | APOLINARIO VIVIT
CALCULATED-DESIGNED BY | CHECKED BY
FUNCTIONAL SUPERVISOR
ROB BURNETT

STATE OF CALIFORNIA - DEPARTMENT OF TRANSPORTATION
Caltrans
DESIGN

P:\proj2\01\47850_plans\pse\147850ea001.dgn

LAST REVISION 03-08-10 | DATE PLOTTED => 12-AUG-2010 | TIME PLOTTED => 11:38

Dist	COUNTY	ROUTE	POST MILES TOTAL PROJECT	SHEET No.	TOTAL SHEETS
01	Hum	169	Var	6	29

REGISTERED CIVIL ENGINEER DATE 04-13-10

PLANS APPROVAL DATE 04-13-10

REGISTERED PROFESSIONAL ENGINEER APOLINARIO W. VIVIT No. C66046 Exp. 6-30-12 CIVIL STATE OF CALIFORNIA

THE STATE OF CALIFORNIA OR ITS OFFICERS OR AGENTS SHALL NOT BE RESPONSIBLE FOR THE ACCURACY OR COMPLETENESS OF ELECTRONIC COPIES OF THIS PLAN SHEET.

NOTE:

1. FOR COMPLETE RIGHT OF WAY DATA, SEE RIGHT OF WAY RECORD MAPS AT DISTRICT OFFICE.

CURVE DATA

No.	R	Δ	T	L
5	300.00′	28°20′20"	75.74′	148.38′
6	240.00′	49°38′41"	111.01′	207.95′

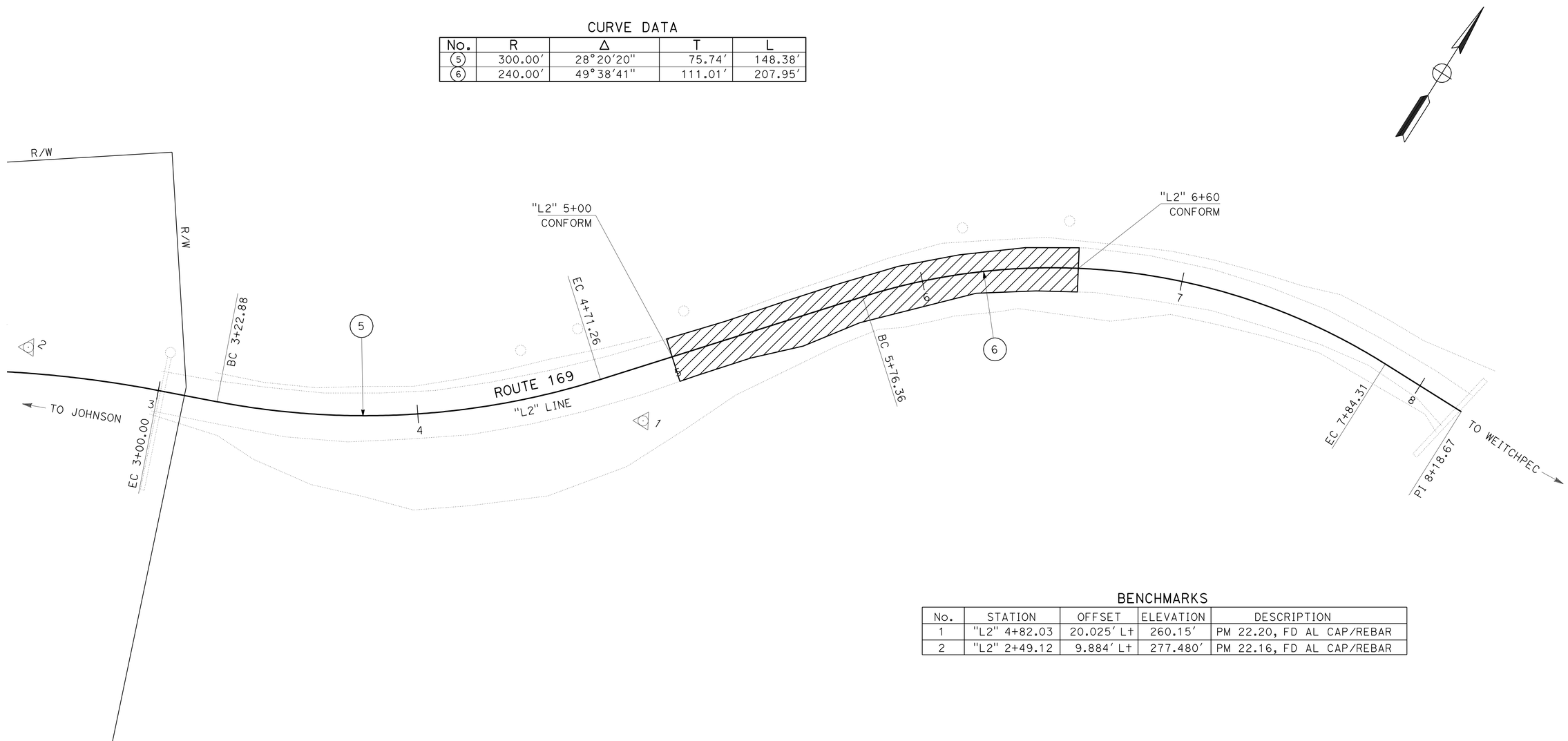

BENCHMARKS

No.	STATION	OFFSET	ELEVATION	DESCRIPTION
1	"L2" 4+82.03	20.025′ Lt	260.15′	PM 22.20, FD AL CAP/REBAR
2	"L2" 2+49.12	9.884′ Lt	277.480′	PM 22.16, FD AL CAP/REBAR

LOCATION 2
PM 22.21

LAYOUT
SCALE: 1" = 20′

L-2

REVISED BY | DATE REVISED
ROD ESTES | APOLINARIO VIVIT
CALCULATED-DESIGNED BY | CHECKED BY
FUNCTIONAL SUPERVISOR
ROB BURNETT

STATE OF CALIFORNIA - DEPARTMENT OF TRANSPORTATION
Caltrans **DESIGN**

P:\proj2\01\478501\plans\pse\147850ea002.dgn

LAST REVISION | DATE PLOTTED => 12-AUG-2010 | TIME PLOTTED => 11:38
03-08-10

BORDER LAST REVISED 3/1/2007 | RELATIVE BORDER SCALE IS IN INCHES 0 1 2 3 | USERNAME => s115152 | DGN FILE => 147850ea002.dgn | CU 03 243 | EA 478501

Dist	COUNTY	ROUTE	POST MILES TOTAL PROJECT	SHEET No.	TOTAL SHEETS
01	Hum	169	Var	7	29

REGISTERED CIVIL ENGINEER DATE 04-13-10

PLANS APPROVAL DATE 04-13-10

REGISTERED PROFESSIONAL ENGINEER APOLINARIO W. VIVIT No. C66046 Exp. 6-30-12 CIVIL STATE OF CALIFORNIA

THE STATE OF CALIFORNIA OR ITS OFFICERS OR AGENTS SHALL NOT BE RESPONSIBLE FOR THE ACCURACY OR COMPLETENESS OF ELECTRONIC COPIES OF THIS PLAN SHEET.

NOTE:

1. FOR COMPLETE RIGHT OF WAY DATA, SEE RIGHT OF WAY RECORD MAPS AT DISTRICT OFFICE.

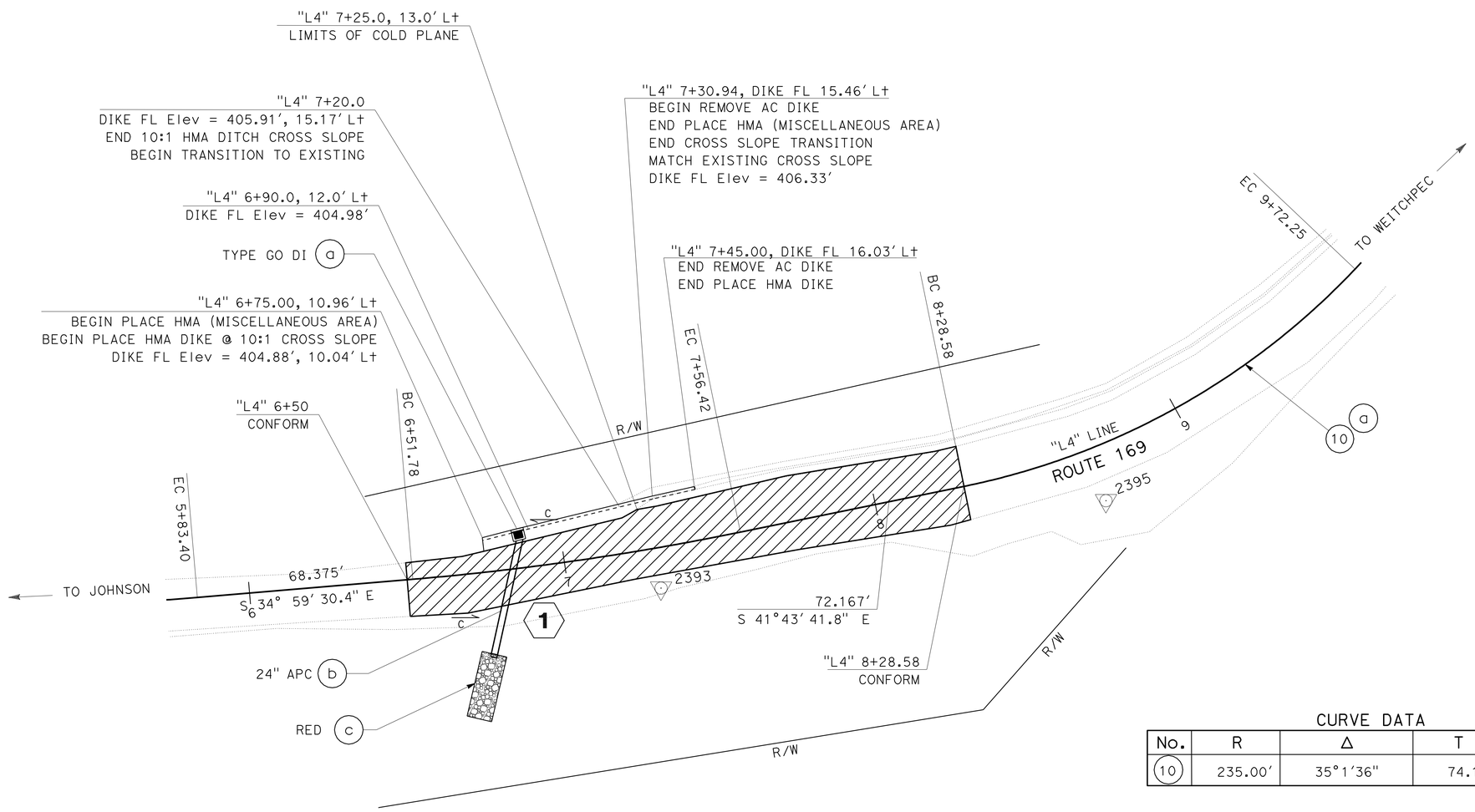

CURVE DATA

No.	R	Δ	T	L
10	235.00'	35°1'36"	74.16'	143.66'

BENCHMARKS

No.	STATION	OFFSET	ELEVATION	DESCRIPTION
2392	"L4" 7+00.42	103.676' Rt	349.096'	PM 23.92 X 100' Rt
2393	"L4" 7+28.71	12.764' Rt	405.900'	
2395	"L4" 8+68.91	17.131' Rt	409.934'	ALCAP H-169-23.95 2004

LOCATION 3
PM 23.93

LAYOUT
SCALE: 1" = 20'

L-3

REVISED BY | DATE REVISED
APOLINARIO VIVIT
CALCULATED-ROD ESTES
DESIGNED BY
CHECKED BY
FUNCTIONAL SUPERVISOR
ROB BURNETT
STATE OF CALIFORNIA - DEPARTMENT OF TRANSPORTATION
Caltrans
DESIGN

P:\proj2\01\478501_plans\pse\147850ea003.dgn

LAST REVISION | DATE PLOTTED => 12-AUG-2010 | TIME PLOTTED => 11:38
03-08-10

Dist	COUNTY	ROUTE	POST MILES TOTAL PROJECT	SHEET No.	TOTAL SHEETS
01	Hum	169	Var	8	29

REGISTERED CIVIL ENGINEER DATE 04-13-10

PLANS APPROVAL DATE 04-13-10

REGISTERED PROFESSIONAL ENGINEER APOLINARIO W. VIVIT No. C66046 Exp. 6-30-12 CIVIL STATE OF CALIFORNIA

THE STATE OF CALIFORNIA OR ITS OFFICERS OR AGENTS SHALL NOT BE RESPONSIBLE FOR THE ACCURACY OR COMPLETENESS OF ELECTRONIC COPIES OF THIS PLAN SHEET.

NOTE:

1. FOR COMPLETE RIGHT OF WAY DATA, SEE RIGHT OF WAY RECORD MAPS AT DISTRICT OFFICE.

CURVE DATA

No.	R	Δ	T	L
11	160.42′	46°14′18″	68.49′	129.46′
12	126.61′	40°50′07″	47.13′	90.23′
13	227.90′	17°10′09″	34.40′	68.29′

BENCHMARKS

No.	STATION	OFFSET	ELEVATION	DESCRIPTION
2548	"CL5" 2+28.100	16.473′ R+	530.691′	PM 25.48, FD AL CAP/REBAR
2554	"CL5" 5+77.940	9.313′ L+	540.011′	PM 25.54, FD AL CAP/REBAR
10	"CL5" 5+14.230	17.471′ R+	537.471′	SET HUB AND TACK

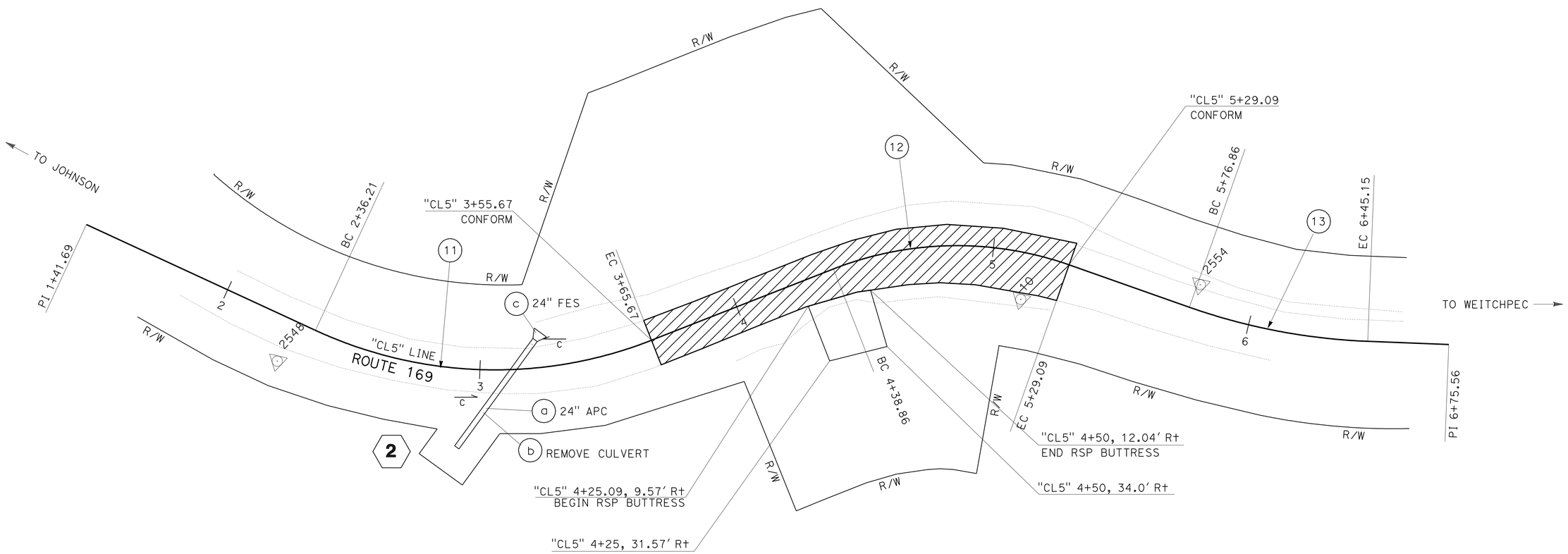

LOCATION 4
PM 25.49

LAYOUT
SCALE: 1" = 20′

L-4

STATE OF CALIFORNIA - DEPARTMENT OF TRANSPORTATION
Caltrans **DESIGN**

FUNCTIONAL SUPERVISOR: ROB BURNETT
CALCULATED-DESIGNED BY: ROD ESTES
CHECKED BY: APOLINARIO VIVIT
REVISED BY / DATE REVISED

P:\proj2\01\47850_plans\pse\147850ea004.dgn

LAST REVISION 03-08-10 | DATE PLOTTED => 12-AUG-2010 | TIME PLOTTED => 11:38

BORDER LAST REVISED 3/1/2007 | RELATIVE BORDER SCALE IS IN INCHES 0 1 2 3 | USERNAME => s115152 | DGN FILE => 147850ea004.dgn | CU 03 243 | EA 478501

Dist	COUNTY	ROUTE	POST MILES TOTAL PROJECT	SHEET No.	TOTAL SHEETS
01	Hum	169	Var	9	29

04-13-10
REGISTERED CIVIL ENGINEER DATE

04-13-10
PLANS APPROVAL DATE

REGISTERED PROFESSIONAL ENGINEER
APOLINARIO W. VIVIT
No. C66046
Exp. 6-30-12
CIVIL
STATE OF CALIFORNIA

THE STATE OF CALIFORNIA OR ITS OFFICERS OR AGENTS SHALL NOT BE RESPONSIBLE FOR THE ACCURACY OR COMPLETENESS OF ELECTRONIC COPIES OF THIS PLAN SHEET.

NOTE:

1. FOR COMPLETE RIGHT OF WAY DATA, SEE RIGHT OF WAY RECORD MAPS AT DISTRICT OFFICE.
2. CONTACT PROPERTY OWNER PRIOR TO CAPING WATERLINE.
3. WATERLINE TO BE INSTALLED BY OWNER.

CURVE DATA

No.	R	Δ	T	L
14	131.23	15°16′50.59"	17.60	35.00
15	222.66	29°42′7.45"	59.04	115.43

BENCHMARKS

No.	STATION	OFFSET	ELEVATION	DESCRIPTION
14	"L6" 4+78.30	14.717 R+	496.65′	SET REBAR
2631	"L6" 5+28.340	13.248 L+	495.750′	H169-26.31 AL CAP/REBAR

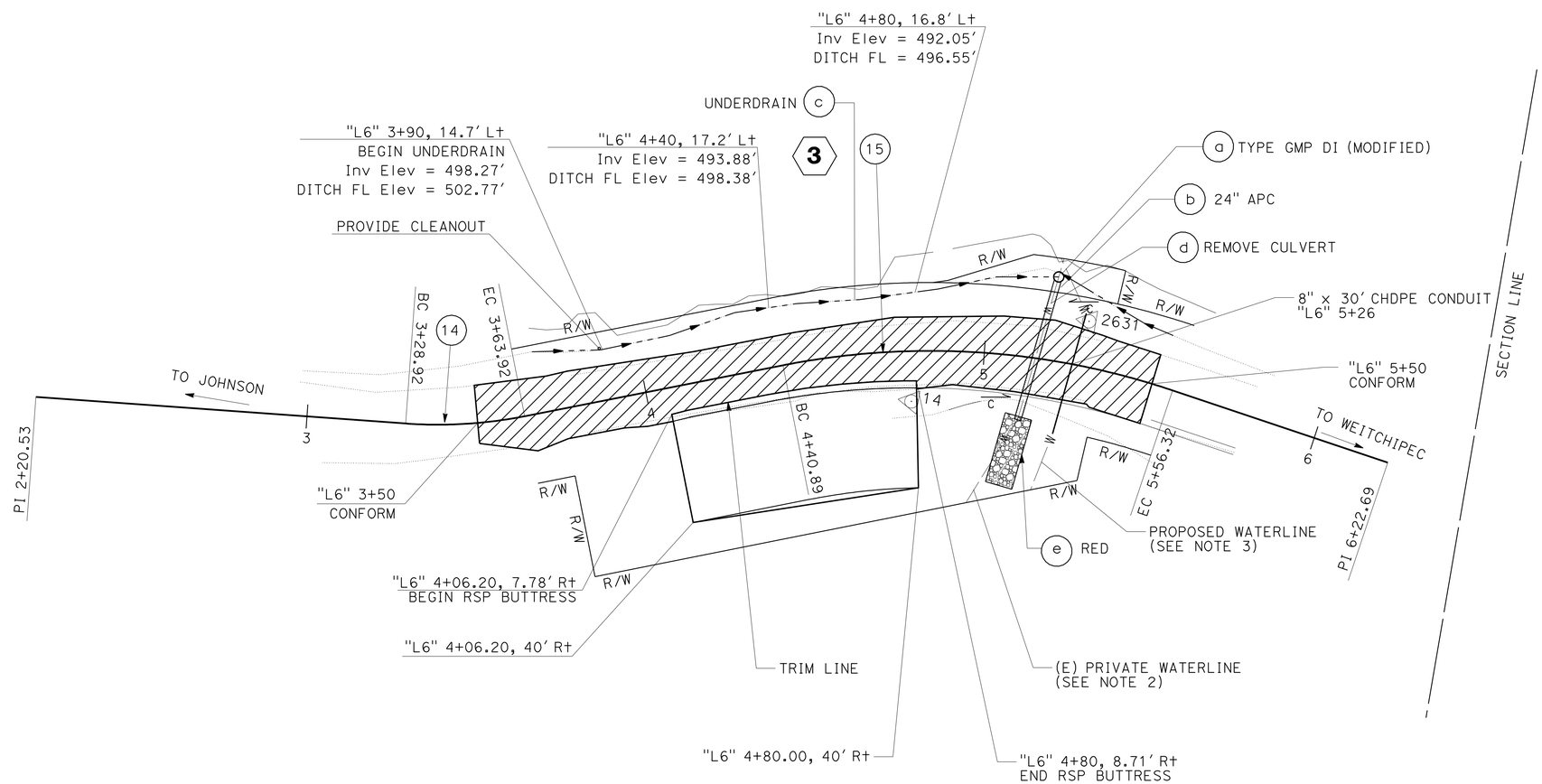

LOCATION 5

PM 26.31

LAYOUT

SCALE: 1" = 20′

L-5

REVISED BY	DATE REVISED

CALCULATED-DESIGNED BY: ROD ESTES
CHECKED BY: APOLINARIO VIVIT
FUNCTIONAL SUPERVISOR: ROB BURNETT

STATE OF CALIFORNIA - DEPARTMENT OF TRANSPORTATION
Caltrans
DESIGN

P:\proj2\01\47850_plans\pse\147850ea005.dgn

LAST REVISION 03-08-10
DATE PLOTTED => 12-AUG-2010
TIME PLOTTED => 11:38

Dist	COUNTY	ROUTE	POST MILES TOTAL PROJECT	SHEET No.	TOTAL SHEETS
01	Hum	169	Var	10	29

REGISTERED CIVIL ENGINEER 04-13-10 DATE

04-13-10
PLANS APPROVAL DATE

REGISTERED PROFESSIONAL ENGINEER
APOLINARIO W. VIVIT
No. C66046
Exp. 6-30-12
CIVIL
STATE OF CALIFORNIA

THE STATE OF CALIFORNIA OR ITS OFFICERS OR AGENTS SHALL NOT BE RESPONSIBLE FOR THE ACCURACY OR COMPLETENESS OF ELECTRONIC COPIES OF THIS PLAN SHEET.

NOTE:

1. FOR COMPLETE RIGHT OF WAY DATA, SEE RIGHT OF WAY RECORD MAPS AT DISTRICT OFFICE.

CURVE DATA

No.	R	Δ	T	L
17	149.98′	30°42′28″	41.18′	80.38′
18	150.02′	31°54′00″	42.88′	83.52′

BENCHMARKS

No.	STATION	OFFSET	ELEVATION	DESCRIPTION
3287	"L9" 3+51.820	20.387′ R+	397.930′	PRHV17 169 PM 32.87
3288	"L9" 3+94.420	15.698′ R+	397.007′	100D SPIKE PM 32.88
3291	"L9" 5+42.020	19.439′ R+	397.319′	100D SPIKE PM 32.91
3292	"L9" 5+75.100	16.125′ L+	397.929′	PRHV18 169 PM 32.92

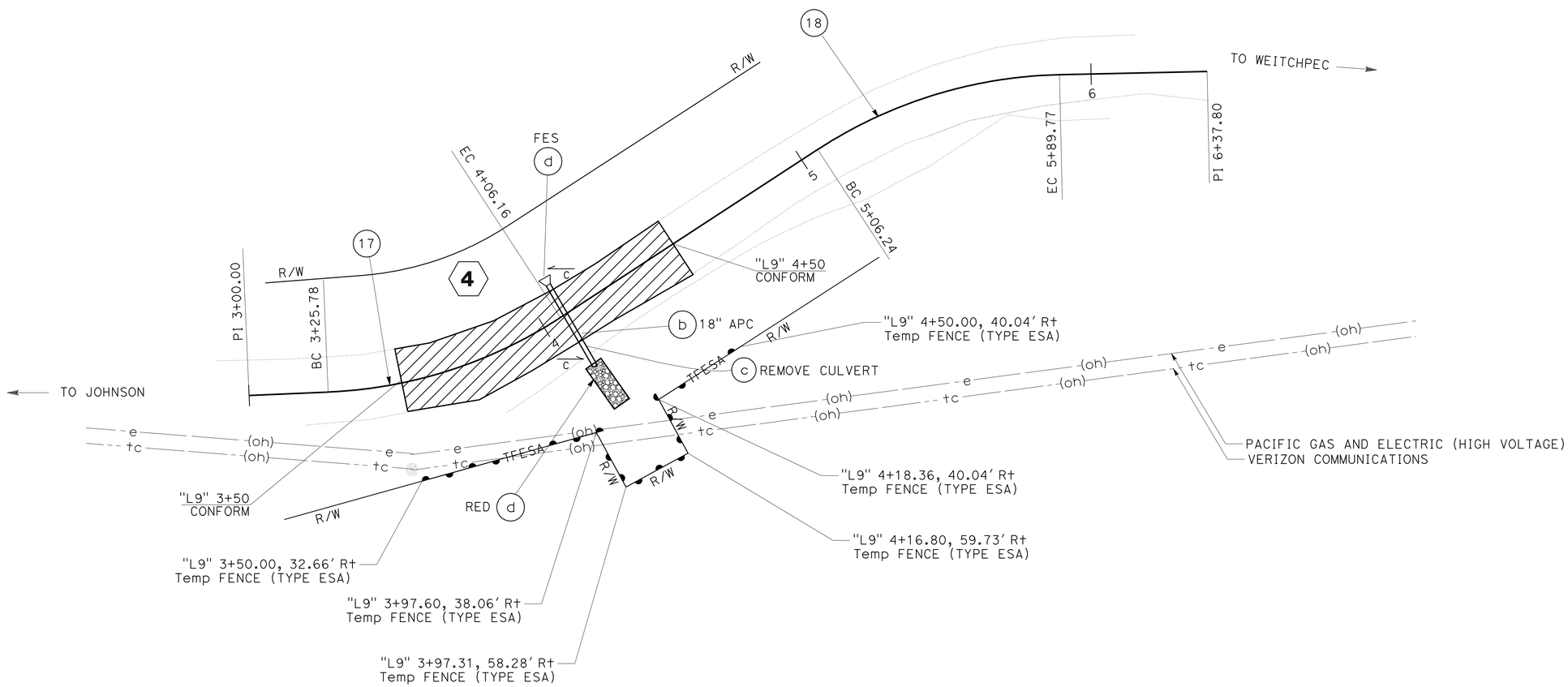

LOCATION 6
PM 32.88

LAYOUT
SCALE: 1" = 20′

L-6

REVISED BY | DATE REVISED
ROD ESTES | APOLINARIO VIVIT
CALCULATED-DESIGNED BY | CHECKED BY
FUNCTIONAL SUPERVISOR | ROB BURNETT
STATE OF CALIFORNIA - DEPARTMENT OF TRANSPORTATION
Caltrans **DESIGN**
P:\proj2\01\47850_plans\pse\147850ea006.dgn

LAST REVISION 03-08-10 | DATE PLOTTED => 12-AUG-2010 | TIME PLOTTED => 11:39

Dist	COUNTY	ROUTE	POST MILES TOTAL PROJECT	SHEET No.	TOTAL SHEETS
01	Hum	169	Var	11	29

04-13-10
REGISTERED CIVIL ENGINEER DATE

04-13-10
PLANS APPROVAL DATE

REGISTERED PROFESSIONAL ENGINEER
APOLINARIO W. VIVIT
No. C66046
Exp. 6-30-12
CIVIL
STATE OF CALIFORNIA

THE STATE OF CALIFORNIA OR ITS OFFICERS OR AGENTS SHALL NOT BE RESPONSIBLE FOR THE ACCURACY OR COMPLETENESS OF ELECTRONIC COPIES OF THIS PLAN SHEET.

LEGEND

- NATIVE SOIL
- RSP (1/4 TON, METHOD B)
- RSP FABRIC

ABBREVIATIONS

TL	TRIM LINE
GPI	GEOSYNTHETIC PAVEMENT INTERLAYER

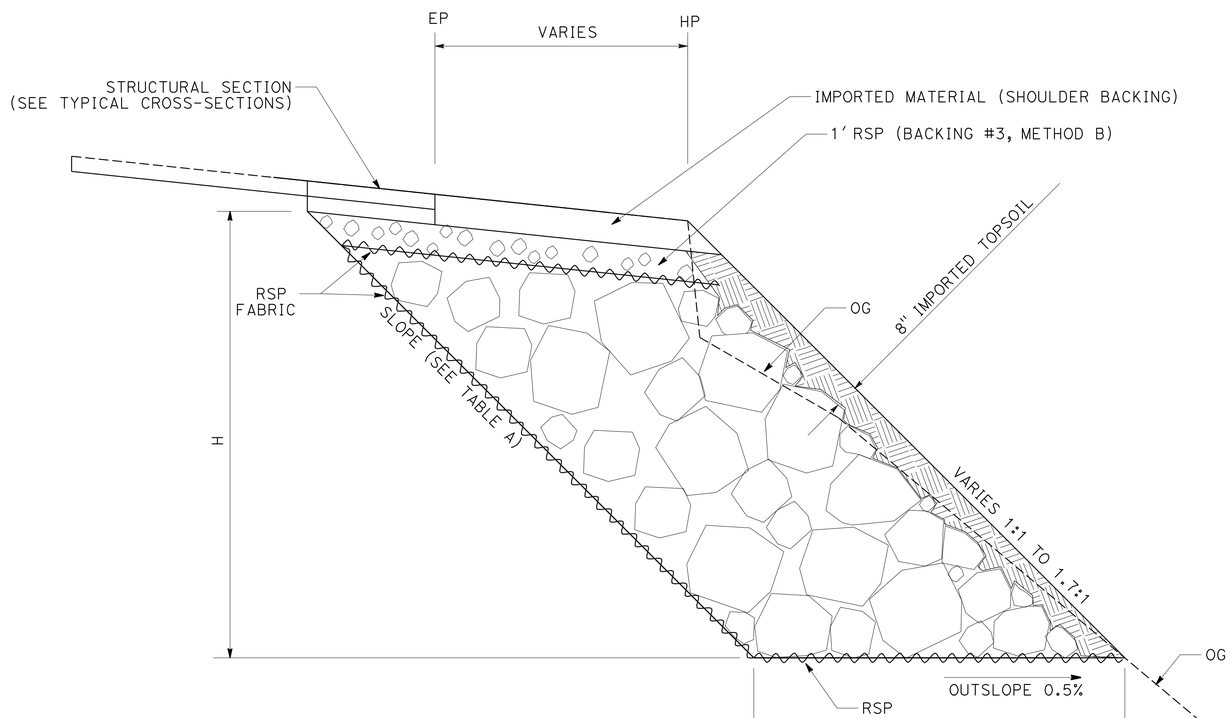

RSP BUTTRESS

"CL1" 8+87.15 TO 9+30
"CL5" 4+25.09 TO 4+50
"L6" 4+06.20 TO 4+80

TABLE A

LOCATION	ALIGNMENT & STATION	D	H	SLOPE
Loc 1	"CL1" 8+87.15 TO 9+30	Var 5.1 Ft TO 5.9 Ft	Var 4.1 Ft TO 4.8 Ft	Var 1:1 TO 1.3:1
Loc 4	"CL5" 4+25.09 TO 4+50	Var 5.7 Ft TO 6.4 Ft	Var 10.5 Ft TO 11.0 Ft	1.4:1
Loc 5	"L6" 4+06.20 TO 4+80	Var 11.7 Ft TO 15.3 Ft	Var 11.6 Ft TO 15.2 Ft	1.3:1

CONSTRUCTION DETAILS

NO SCALE

C-1

REVISED BY | DATE REVISED
ROD ESTES | APOLINARIO VIVIT
CALCULATED-DESIGNED BY | CHECKED BY
FUNCTIONAL SUPERVISOR
ROB BURNETT

STATE OF CALIFORNIA - DEPARTMENT OF TRANSPORTATION
Caltrans DESIGN

P:\proj2\01\47850_plans\pse\147850ga001.dgn

LAST REVISION 03-08-10 | DATE PLOTTED => 12-AUG-2010 | TIME PLOTTED => 11:39

Dist	COUNTY	ROUTE	POST MILES TOTAL PROJECT	SHEET No.	TOTAL SHEETS
01	Hum	169	Var	12	29

04-13-10
REGISTERED CIVIL ENGINEER DATE

04-13-10
PLANS APPROVAL DATE

REGISTERED PROFESSIONAL ENGINEER
APOLINARIO W. VIVIT
No. C66046
Exp. 6-30-12
CIVIL
STATE OF CALIFORNIA

THE STATE OF CALIFORNIA OR ITS OFFICERS OR AGENTS SHALL NOT BE RESPONSIBLE FOR THE ACCURACY OR COMPLETENESS OF ELECTRONIC COPIES OF THIS PLAN SHEET.

NOTE:

1. 24" OVERLAP AT SHORT SIDE.
2. USE TRIMLINE PLACEMENT FOR TRIMLINES AT BUTTRESS LOCATIONS. PLACE BEFORE FINAL LIFT.
3. USE FRACTURE PLACMENT FOR LARGE STRUCTURAL SECTION FRACTURES.

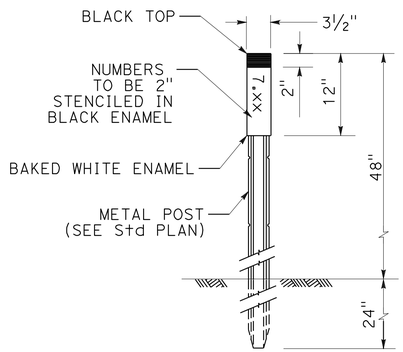

MARKER (CULVERT) DETAIL

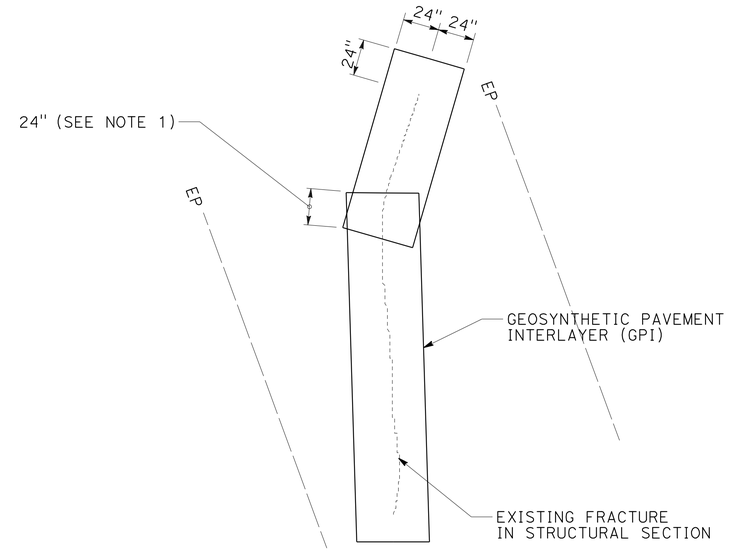

PLAN

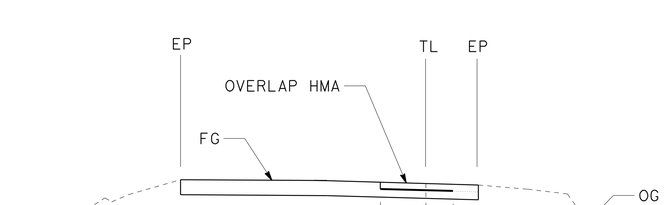

LOCATIONS 1, 4, 5

GEOSYNTHETIC PAVEMENT INTERLAYER DETAIL (FABRIC APPLIED TO TRIM LINE)

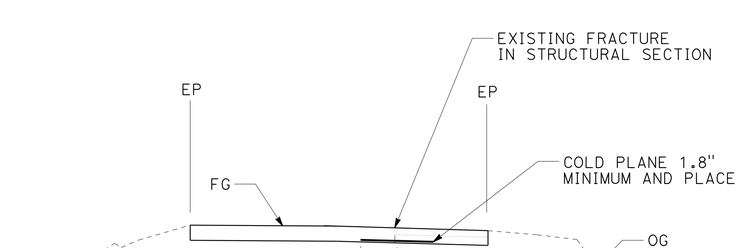

ALL LOCATIONS

GEOSYNTHETIC PAVEMENT INTERLAYER DETAIL (APPLIED TO Exist FRACTURE IN AC)

CONSTRUCTION DETAILS

NO SCALE

C-2

REVISED BY | DATE REVISED
ROD ESTES | APOLINARIO VIVIT
CALCULATED-DESIGNED BY | CHECKED BY
FUNCTIONAL SUPERVISOR | ROB BURNETT
STATE OF CALIFORNIA - DEPARTMENT OF TRANSPORTATION
Caltrans DESIGN
P:\proj2\01\47850_plans\pse\147850ga002.dgn

LAST REVISION | DATE PLOTTED => 12-AUG-2010 | 03-08-10 | TIME PLOTTED => 11:39

Dist	COUNTY	ROUTE	POST MILES TOTAL PROJECT	SHEET No.	TOTAL SHEETS
01	Hum	169	Var	13	29

REGISTERED CIVIL ENGINEER DATE 04-13-10

PLANS APPROVAL DATE 04-13-10

REGISTERED PROFESSIONAL ENGINEER APOLINARIO W. VIVIT No. C66046 Exp. 6-30-12 CIVIL STATE OF CALIFORNIA

THE STATE OF CALIFORNIA OR ITS OFFICERS OR AGENTS SHALL NOT BE RESPONSIBLE FOR THE ACCURACY OR COMPLETENESS OF ELECTRONIC COPIES OF THIS PLAN SHEET.

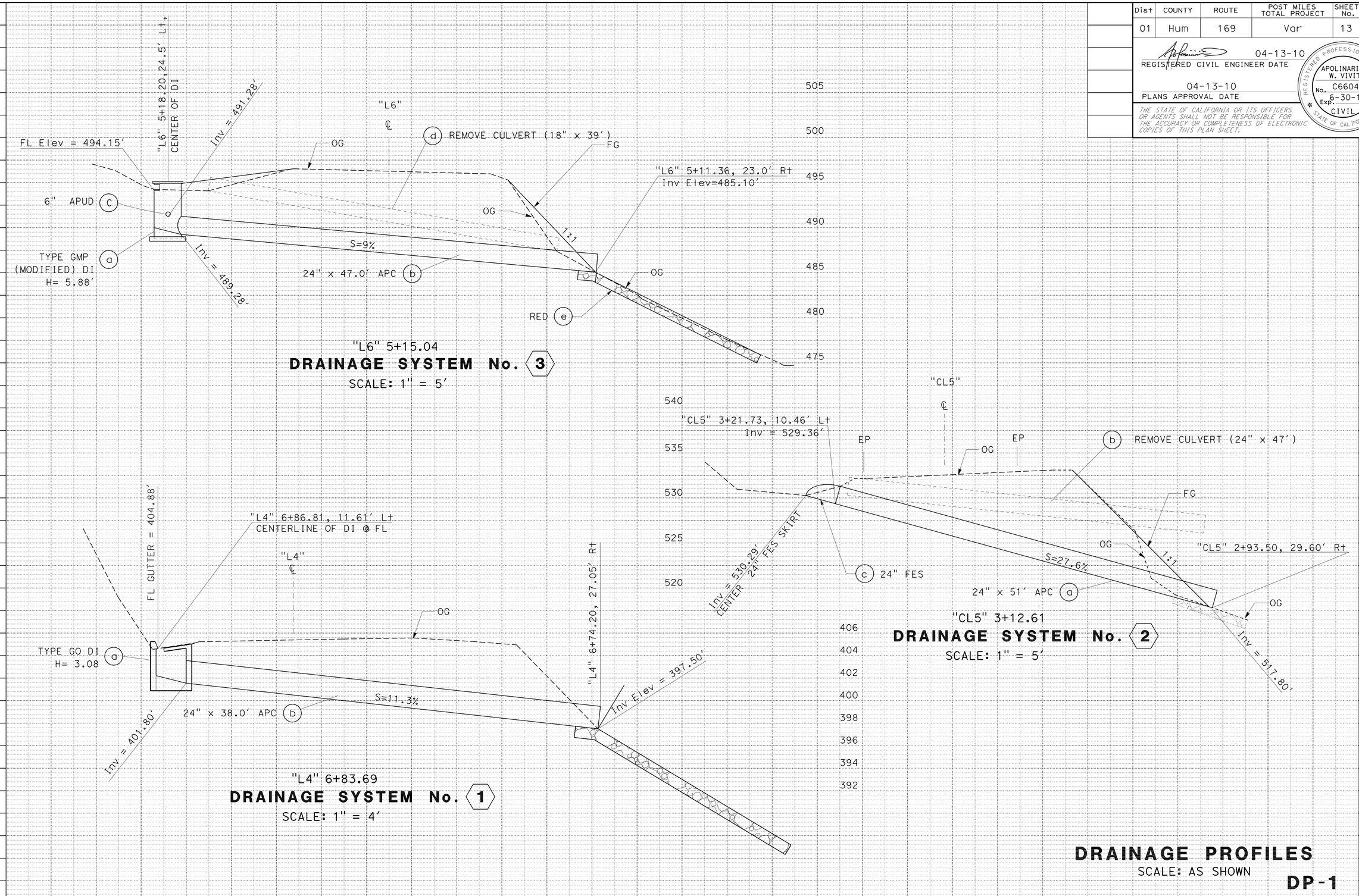

DRAINAGE PROFILES

SCALE: AS SHOWN

DP-1

STATION		TOTAL
CY	Exc	
	Emb	

REVISED BY | DATE REVISED

ROD ESTES | APOLINARIO VIVIT

CALCULATED-DESIGNED BY | CHECKED BY

FUNCTIONAL SUPERVISOR: ROB BURNETT

STATE OF CALIFORNIA - DEPARTMENT OF TRANSPORTATION

Caltrans **DESIGN**

P:\proj2\01\47850\plans\pse\147850ib001.dgn

LAST REVISION 03-08-10 | DATE PLOTTED => 12-AUG-2010 TIME PLOTTED => 11:39

Dist	COUNTY	ROUTE	POST MILES TOTAL PROJECT	SHEET No.	TOTAL SHEETS
01	Hum	169	Var	14	29

REGISTERED CIVIL ENGINEER DATE 04-13-10

PLANS APPROVAL DATE 04-13-10

REGISTERED PROFESSIONAL ENGINEER APOLINARIO W. VIVIT No. C66046 Exp. 6-30-12 CIVIL STATE OF CALIFORNIA

THE STATE OF CALIFORNIA OR ITS OFFICERS OR AGENTS SHALL NOT BE RESPONSIBLE FOR THE ACCURACY OR COMPLETENESS OF ELECTRONIC COPIES OF THIS PLAN SHEET.

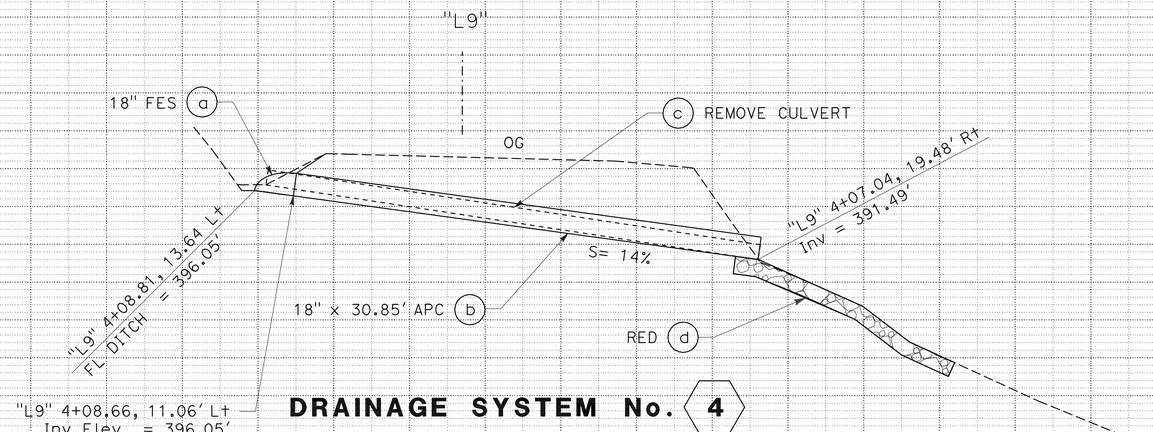

DRAINAGE SYSTEM No. 4

"L9" 4+08.10

DRAINAGE PROFILES

SCALE: 1" = 5' Horiz
1" = 5' Vert

DP-2

REVISED BY | DATE REVISED

ROD ESTES | APOLINARIO VIVIT

CALCULATED-DESIGNED BY | CHECKED BY

FUNCTIONAL SUPERVISOR: ROB BURNETT

STATE OF CALIFORNIA - DEPARTMENT OF TRANSPORTATION

Caltrans **DESIGN**

P:\proj2\01\478501_plans\pse\147850ib002.dgn

LAST REVISION DATE PLOTTED => 12-AUG-2010 TIME PLOTTED => 11:39

03-08-10

Dist	COUNTY	ROUTE	POST MILES TOTAL PROJECT	SHEET No.	TOTAL SHEETS
01	Hum	169	Var	15	29

REGISTERED CIVIL ENGINEER DATE 04-13-10

PLANS APPROVAL DATE 04-13-10

REGISTERED PROFESSIONAL ENGINEER APOLINARIO W. VIVIT No. C66046 Exp. 6-30-12 CIVIL STATE OF CALIFORNIA

THE STATE OF CALIFORNIA OR ITS OFFICERS OR AGENTS SHALL NOT BE RESPONSIBLE FOR THE ACCURACY OR COMPLETENESS OF ELECTRONIC COPIES OF THIS PLAN SHEET.

LEGEND

ROCK SLOPE PROTECTION

RSP FABRIC

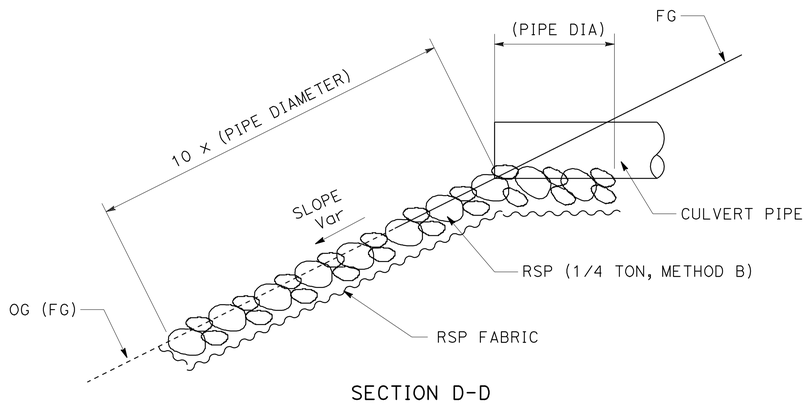

SECTION D-D

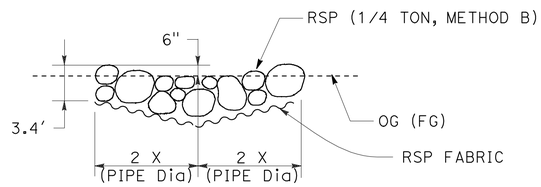

SECTION C-C

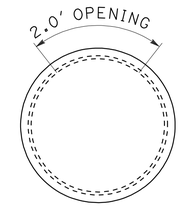

PLAN

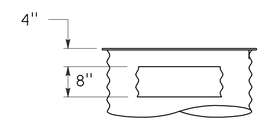

SECTION B-B

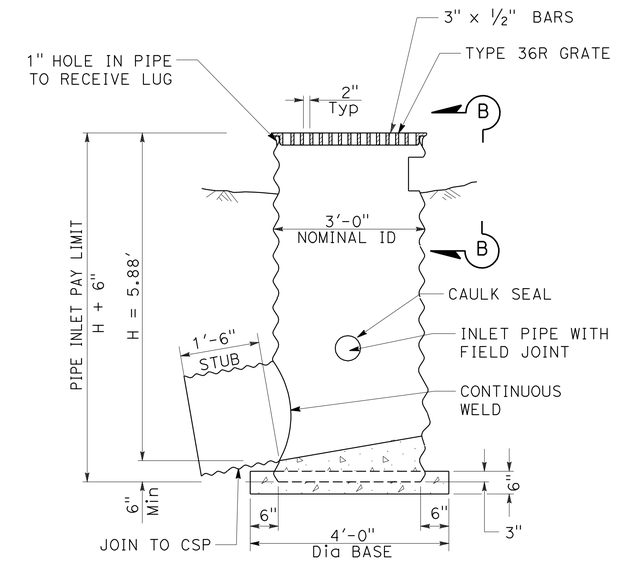

SECTION A-A

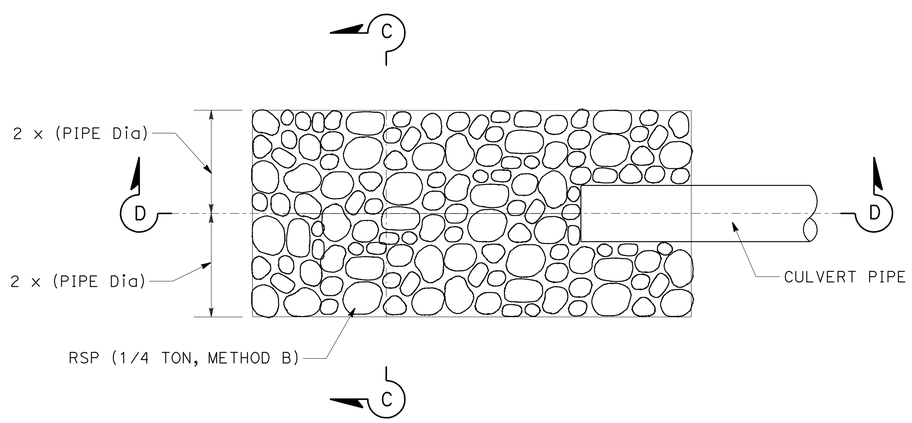

PLAN

ROCK ENERGY DISSIPATOR

1 c 3 e 4 d

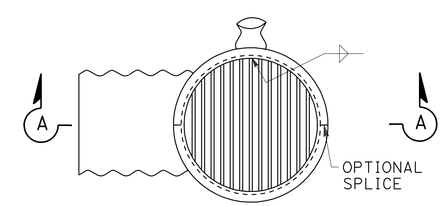

TYPE GMP (MODIFIED)

FOR DETAILS AND NOTES NOT SHOWN SEE STANDARD PLAN D75A

DRAINAGE SYSTEM No. 3 a

DRAINAGE DETAILS

NO SCALE **DD-1**

REVISED BY	DATE REVISED
ROD ESTES	APOLINARIO VIVIT

CALCULATED-DESIGNED BY / CHECKED BY

FUNCTIONAL SUPERVISOR: ROB BURNETT

STATE OF CALIFORNIA - DEPARTMENT OF TRANSPORTATION

Caltrans **DESIGN**

P:\proj2\01\47850_plans\pse\147850ic001.dgn

LAST REVISION 03-08-10 | DATE PLOTTED => 12-AUG-2010 | TIME PLOTTED => 11:39

Dist	COUNTY	ROUTE	POST MILES TOTAL PROJECT	SHEET No.	TOTAL SHEETS
01	Hum	169	Var	16	29

REGISTERED CIVIL ENGINEER DATE 04-13-10

PLANS APPROVAL DATE 04-13-10

REGISTERED PROFESSIONAL ENGINEER APOLINARIO W. VIVIT No. C66046 Exp. 6-30-12 CIVIL STATE OF CALIFORNIA

THE STATE OF CALIFORNIA OR ITS OFFICERS OR AGENTS SHALL NOT BE RESPONSIBLE FOR THE ACCURACY OR COMPLETENESS OF ELECTRONIC COPIES OF THIS PLAN SHEET.

ABBREVIATIONS

D DOWNDRAIN JOINT
P POSITIVE JOINT
S STANDARD JOINT
(N) NOT A SEPARATE PAY ITEM, FOR INFORMATION ONLY

DRAINAGE QUANTITIES

SHEET No.	DRAINAGE SYSTEM No. ⬡	DRAINAGE UNIT No. ◯	LOCATION No.	REMOVE CULVERT EA	MINOR CONCRETE (MINOR STUCTURE) CY	18" ALTERNATIVE PIPE CULVERT LF	24" ALTERNATIVE PIPE CULVERT LF	6" ALTERNATIVE PIPE UNDERDRAIN LF	36" CSP INLET (.138" THICK, Mod) LF	18" STEEL FES EA	24" STEEL FES EA	RSP (1/4 TON, METHOD B) CY	RSP FABRIC SQYD	Misc IRON AND STEEL LB	(N) INLET GRATE TYPE 24-12X EA	(N) INLET GRATE TYPE 36R EA	(N) HEIGHT OF INLET FT	(N) JOINT CLASSIFICATION	DESCRIPTION	STATION	DRAINAGE PLAN SHEET No.	DRAINAGE SYSTEM No. ⬡	DRAINAGE UNIT No. ◯	LOCATION No.
L-3	1	a	3		1.50									239	1		3.08		TYPE GO DRAINAGE INLET	"L4" 6+86.4, 10.9′ Lt	L-3	1	a	3
		b					38											S	ALTERNATIVE PIPE CULVERT	"L4" 6+86.6, 8.8′ Lt TO 6+74.2, 27.1′ Rt			b	
		c										18.0	18						ROCK ENERGY DISSIPATOR	"L4" 6+74.2, 27.1′ Rt			c	
L-4	2	a	4				51											P	ALTERNATIVE PIPE CULVERT	"CL5" 3+21.7, 10.5′ Lt TO 2+93.5, 29.6′ Rt	L-4	2	a	4
		b		1															REMOVE CULVERT (L = 47.0′)	"CL5" 3+20.3, 9.0′ Lt TO 2+94.0, 28.7′ Rt			b	
		c									1								STEEL FLARED END SECTION	"CL5" 3+24.21, 12.98′ Lt			c	
L-5	3	a	5		0.38				6.37					236		1	5.87		TYPE GMP (MODIFIED) "H" DESIGN = 5.87′	"L6" 5+18.2, 24.5′ Lt	L-5	3	a	5
		b					47											P	ALTERNATIVE PIPE CULVERT	"L6" 5+18.0, 23.0′ Lt TO 5+11.4, 23.0′ Rt			b	
		c						140										S	6" PPP UNDERDRAIN	"L6" 3+90.0, 14.7′ Lt TO 5+16.3, 24.5′ Rt			c	
		d		1															REMOVE CULVERT (L = 39′)	"L6" 5+17.8, 19.7′ Lt TO 5+12.3, 18.6′ Rt			d	
		e										18.0	18						ROCK ENERGY DISSIPATOR	"L6" 5+11.4, 23.0′ Rt			e	
L-6	4	a	6							1								S	STEEL FLARED END SECTION	"L9" 4+08.8, 13.6′ Lt	L-6	4	a	6
		b				30.9													ALTERNATIVE PIPE CULVERT	"L9" 4+08.8, 11.1′ Lt TO 4+07.0, 19.5′ Rt			b	
		c		1															REMOVE CULVERT (L = 33′)	"L9" 4+08.8, 11.1′ Lt TO 4+07.0, 19.5′ Rt			c	
		d										13.5	10						ROCK ENERGY DISSIPATOR	"L9" 4+07.0, 19.5′ Rt			d	
			TOTAL	3	1.88	30.9	136	140	6.37	1	1	49.5*	46*	475	1	1	8.95							

* ADDITIONAL QUANTITIES SHOWN ELSEWHERE, SEE SHEET Q-1

DRAINAGE QUANTITIES
DQ-1

REVISED BY | DATE REVISED
CALCULATED-DESIGNED BY ROD ESTES | CHECKED BY APOLINARIO VIVIT
FUNCTIONAL SUPERVISOR ROB BURNETT

STATE OF CALIFORNIA - DEPARTMENT OF TRANSPORTATION
Caltrans DESIGN

P:\proj2\01\47850_plans\pse\147850id001.dgn

LAST REVISION 03-08-10 | DATE PLOTTED => 12-AUG-2010 | TIME PLOTTED => 11:39

Dist	COUNTY	ROUTE	POST MILES TOTAL PROJECT	SHEET No.	TOTAL SHEETS
01	Hum	169	Var	17	29

REGISTERED CIVIL ENGINEER DATE 04-13-10

PLANS APPROVAL DATE 04-13-10

REGISTERED PROFESSIONAL ENGINEER APOLINARIO W. VIVIT No. C66046 Exp. 6-30-12 CIVIL STATE OF CALIFORNIA

THE STATE OF CALIFORNIA OR ITS OFFICERS OR AGENTS SHALL NOT BE RESPONSIBLE FOR THE ACCURACY OR COMPLETENESS OF ELECTRONIC COPIES OF THIS PLAN SHEET.

NOTES:

1. EXACT SIGN LOCATION TO BE DETERMINED BY THE ENGINEER.
2. THE MESSAGE ON THE PCMS TO BE DETERMINED BY THE ENGINEER.
3. SIGNS SHOWN WITH (CA) INDICATE CALIFORNIA MUTCD SIGN CODE, OTHERWISE FEDERAL SIGN CODES ARE SHOWN.

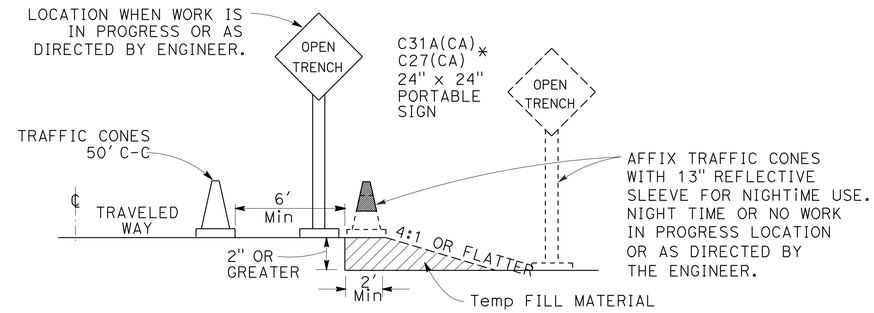

OPEN TRENCH SIGNING AND MARKING

*PLACE AT 250' INTERVALS THROUGH THE OPEN TRENCH AREA ALTERNATE C27(CA) (OPEN TRENCH) AND C31A(CA) (NO SHOULDER) SIGNS

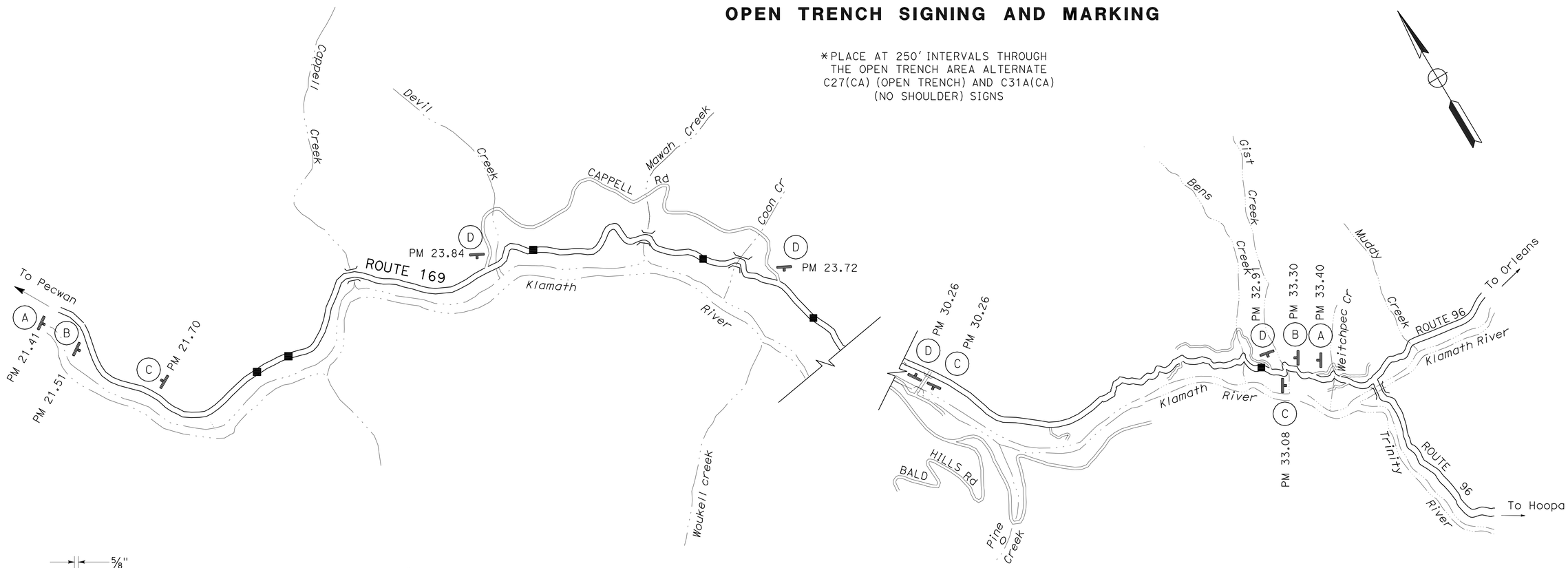

C23B(CA) SIGN PANEL DETAIL

CONSTRUCTION AREA SIGNS (STATIONARY MOUNTED)

TYPE	CODE	PANEL SIZE	SIGN MESSAGE	NUMBER AND SIZE OF POST	No. OF SIGNS
A	G20-1 C23B(CA)	48" x 48" 36" x 24"	ROAD WORK NEXT 11 MILES HIGHWAY REPAIR	1 - 6" x 6"	2
B	W11-1 W16-1	24" x 24" 18" x 24"	(PICTURE OF BICYCLE) SHARE THE ROAD	1 - 4" x 6"	2
C	G20-2	36" x 18"	END ROAD WORK	1 - 4" x 4"	3
D	C23(CA)	30" x 30"	ROAD WORK AHEAD	1 - 4" x 4"	4

CONSTRUCTION AREA SIGNS

NO SCALE

CS-1

REVISED BY | DATE REVISED

CALCULATED-DESIGNED BY: ROD ESTES | CHECKED BY: APOLINARIO VIVIT

FUNCTIONAL SUPERVISOR: ROB BURNETT

STATE OF CALIFORNIA - DEPARTMENT OF TRANSPORTATION

Caltrans DESIGN

P:\proj2\01\47850_plans\pse\1478501a001.dgn

LAST REVISION 03-08-10 | DATE PLOTTED => 12-AUG-2010 | TIME PLOTTED => 11:39

Dist	COUNTY	ROUTE	POST MILES TOTAL PROJECT	SHEET No.	TOTAL SHEETS
01	Hum	169	Var	18	29

REGISTERED CIVIL ENGINEER DATE 04-13-10

PLANS APPROVAL DATE 04-13-10

REGISTERED PROFESSIONAL ENGINEER APOLINARIO W. VIVIT No. C66046 Exp. 6-30-12 CIVIL STATE OF CALIFORNIA

THE STATE OF CALIFORNIA OR ITS OFFICERS OR AGENTS SHALL NOT BE RESPONSIBLE FOR THE ACCURACY OR COMPLETENESS OF ELECTRONIC COPIES OF THIS PLAN SHEET.

NOTE:

1. (N) - NOT A SEPARATE PAY ITEM, FOR INFORMATION ONLY.

ABBREVIATION;

CHDPE CORRUGATED HIGH DENSITY POLYETHYLENE

MARKERS AND DELINEATORS

SHEET No.	DELINEATOR (CLASS 1)	STATION
	TYPE E	
	EA	
L-1	2	"L1" 9+10, R+
TOTAL	2	

PAVEMENT DELINEATION QUANTITIES

STATION	THERMOPLASTIC TRAFFIC STRIPE (SPRAYABLE)
	DETAIL 27B
	LF
"CL1" 7+08 TO 9+50 L+ & R+	492
"L2" 5+00 TO 6+60 L+ & R+	328
"L4" 6+50 TO 8+29 L+ & R+	363
"CL5" 3+55 TO 5+30 L+ & R+	355
"L6" 3+50 TO 5+50 L+ & R+	405
"L9" 3+50 TO 4+50 L+ & R+	205
TOTAL	2148

MARKER (CULVERT)

SHEET No.	DRAINAGE SYSTEM	STATION	MARKER (CULVERT)	POSTMILES
L-3	1	"L4" 6+86.87	2	23.93
L-4	2	"CL5" 3+12.61	2	25.49
L-5	3	"L6" 5+15.04	2	26.31
L-6	4	"L9" 4+08.10	2	32.88
TOTAL			8	

ROADWAY QUANTITIES

STATION	POST MILE	LOCATION	Temp FENCE (TYPE ESA)	REMOVE AC DIKE	COLD PLANE ASPHALT CONCRETE PAVEMENT	ROADWAY EXCAVATION	(N) EMBANKMENT (ROCK BUTTRESS EXCAVATION)	(N) EMBANKMENT	IMPORTED MATERIAL (SHOULDER BACKING)	SUBGRADE ENHANCEMENT GEOTEXTILE	IMPORTED TOPSOIL	8" CHDPE	CLASS 2 AGGREGATE BASE	HOT MIX ASPHALT (TYPE A)	GEOSYNTHETIC PAVEMENT INTERLAYER	PLACE HMA DIKE (TYPE A)	PLACE HMA (MISC AREA)	TACK COAT	RSP (1/4 TON, METHOD B)	RSP (BACKING #3, METHOD B)	RSP FABRIC	CAP PIPE	REMARKS
			LF	LF	SQYD	CY	CY	CY	TON	SQYD	CY	LF	CY	TON	SQYD	LF	SQYD	TON	CY	CY	SQYD	EA	
"CL1" 7+08.0 TO "CL1" 9+50.0	22.1	1			318	5	85		13	22	20		4	69	22			0.20	58	15	90		"CL1" 7+40 TO 7+75
"L2" 5+00.0 TO "L2" 6+60.0	22.21	2			298									65	23			0.19					
"L4" 6+50.0 TO "L4" 8+28.58	23.93	3		14	471				13				3.5	109.4	23	69	24	0.30					TYPE A DIKE (1.0 CY OF HMA)
"CL5" 2+93.5 TO "CL5" 5+29.09	25.49	4			348		61	20	4		30		4	76	12			0.22	71	8	100		
"L6" 3+50.0 TO "L6" 5+50.0	26.31	5			426				53		110	30	2	93	35			0.27	500	45	415	1	
"L9" 3+50.0 TO "L9" 4+50.0	32.88	6	153.60		225	10							10	49	14			0.14					
TOTAL			153.60	14	2086	15	576	40	83	22	160	30	23.5	461.4	129	69	24	1.32	629*	68	605*	1	

* ADDITIONAL QUANTITIES SHOWN ELSEWHERE, SEE SHEET DQ-1

SUMMARY OF QUANTITIES
Q-1

REVISED BY | DATE REVISED

ROD ESTES | APOLINARIO VIVIT

CALCULATED-DESIGNED BY | CHECKED BY

FUNCTIONAL SUPERVISOR: ROB BURNETT

STATE OF CALIFORNIA - DEPARTMENT OF TRANSPORTATION

Caltrans DESIGN

P:\proj2\01\47850_plans\pse\147850pa001.dgn

LAST REVISION 03-08-10 | DATE PLOTTED => 12-AUG-2010 | TIME PLOTTED => 11:40

Dist	COUNTY	ROUTE	POST MILES TOTAL PROJECT	SHEET No.	TOTAL SHEETS
01	Hum	169	Var	19	29

REGISTERED CIVIL ENGINEER DATE 04-13-10

PLANS APPROVAL DATE 04-13-10

REGISTERED PROFESSIONAL ENGINEER APOLINARIO W. VIVIT No. C66046 Exp. 6-30-12 CIVIL STATE OF CALIFORNIA

THE STATE OF CALIFORNIA OR ITS OFFICERS OR AGENTS SHALL NOT BE RESPONSIBLE FOR THE ACCURACY OR COMPLETENESS OF ELECTRONIC COPIES OF THIS PLAN SHEET.

NOTE:

1. (N) - NOT A SEPARATE PAY ITEM, FOR INFORMATION ONLY

TEMPORARY WATER POLLUTION CONTROL

TEMPORARY FIBER ROLL	TEMPORARY DRAINAGE INLET PROTECTION	TEMPORARY SILT FENCE	TEMPORARY CHECK DAM
LF	EA	LF	LF
81	1	87	145

PORTABLE CHANGEABLE MESSAGE SIGN

EA	2

6" ALTERNATIVE PIPE UNDERDRAIN

STATION	ALTERNATIVE PIPE UNDERDRAIN	(N) PERMEABLE MATERIAL (CLASS 1)	(N) FILTER FABRIC	REMARKS
"L6" 3+70.0 TO 5+16.7	LF	CY	SQYD	PLACE TEMPORARY CHECK DAMS AFTER CONSTRUCTING APUD
TOTAL	140	30	175	

NOTE:ALLOWABLE TYPES OF APU WILL BE 6" PLASTIC AND 6" STEEL.
MINIMUM WALL THICKNESS OF STEEL PERFORATED PIPE TO BE 0.079 INCHES.
(SEE STANDARD SPECIFICATIONS)

EROSION CONTROL

STATION/ LOCATION	EROSION CONTROL (HYDROSEED)	(N) PURE LIVE SEED (EROSION CONTROL)	(N) FIBER (EROSION CONTROL)	(N) STABILIZING EMULSION (EROSION CONTROL)
	SQFT	LB	LB	LB
"CL1" 8+82 TO 9+35 Rt	1179	3.79	59.52	4.06
"CL5" 2+90 TO 4+60 RT	963	3.09	48.62	3.31
"L6" 3+65 TO 5+25 Lt/Rt	3816	12.26	192.65	13.14
TOTAL	5958	19.14	300.79	20.51

ALLOWABLE TYPES OF APC (18" AND 24")

LOCATION	PM	APC RECOMMENDED FOR 50 YEAR SERVICE LIFE			
		Galv CSP	Galv POLYMERIC SHEET COATED CORRUGATED STEEL PIPE	RCP NOTES	HDPE OPTION
3	23.93	0.138" (10 GAGE)	0.079" (14 GAGE)	*	YES
4	25.49	0.109" (12 GAGE)	0.079" (14 GAGE)	*	YES
5	26.31	0.138" (10 GAGE)	0.079" (14 GAGE)	*	YES
6	32.88	0.138" (10 GAGE)	0.079" (14 GAGE)	*	YES

* MAXIMUM WATER TO CEMENT RATIO BY WEIGHT OF 0.45

SUMMARY OF QUANTITIES
Q-2

REVISED BY | DATE REVISED

ROD ESTES | APOLINARIO VIVIT

CALCULATED-DESIGNED BY | CHECKED BY

FUNCTIONAL SUPERVISOR | ROB BURNETT

STATE OF CALIFORNIA - DEPARTMENT OF TRANSPORTATION

Caltrans DESIGN

P:\proj2\01\47850_plans\pse\147850pa002.dgn

LAST REVISION 03-08-10 | DATE PLOTTED => 12-AUG-2010 | TIME PLOTTED => 11:40

DIST	COUNTY	ROUTE	POST MILES TOTAL PROJECT	SHEET NO.	TOTAL SHEETS
01	Hum	169	Var	20	29

REGISTERED CIVIL ENGINEER

November 17, 2006
PLANS APPROVAL DATE

REGISTERED PROFESSIONAL ENGINEER Dallas Forester No. C37765 Exp. 12-31-06 CIVIL STATE OF CALIFORNIA

The State of California or its officers or agents shall not be responsible for the accuracy or completeness of electronic copies of this plan sheet.

To accompany plans dated 04-13-10

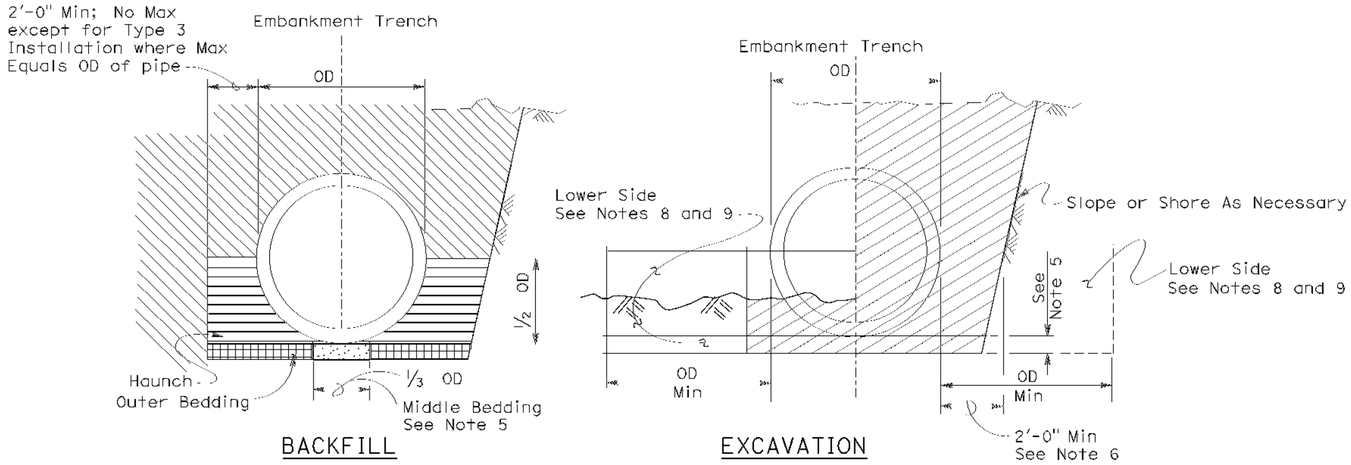

Roadway Embankment

Structure Backfill (Culvert) See Note 6

Structure Backfill (Culvert) See Note 6

Loose Backfill

Excavation Structure (Culvert)

TYPE 1 INSTALLATION:

The haunch and outer bedding shall be compacted to a minimum 90 percent relative compaction. In addition, the minimum sand equivalent in these areas shall be 30 and the maximum percentage passing the 75 μm sieve size shall be 12.

TYPE 2 INSTALLATION:

The haunch and outer bedding shall be compacted to a minimum 90 percent relative compaction. In addition, the minimum sand equivalent in these areas shall be 25.

TYPE 3 INSTALLATION:

The haunch and outer bedding shall be compacted to a minimum 85 percent relative compaction. 90 percent relative compaction will be required where the fill over the pipe is less than 4'-0" or 1/2 OD.

INSTALLATION TYPE 1

MINIMUM CLASS AND D-LOAD	COVER	
	108" Dia AND SMALLER	OVER 108" Dia
Class II 1000D	14.9'	12.9'
Class III 1350D	15.0' - 20.9'	13.0' - 18.9'
Class III Special 1700D	21.0' - 26.9'	19.0' - 24.9'
Class IV 2000D	27.0' - 31.9'	25.0' - 29.9'
Class IV Special 2500D	32.0' - 40.9'	30.0' - 38.9'
Class V 3000D	41.0' - 49.9'	39.0' - 46.9'
Class V Special 3600D	50.0' - 59.0'	47.0' - 58.0'

INSTALLATION TYPE 2

MINIMUM CLASS AND D-LOAD	COVER
Class II 1000D	9.9'
Class III 1350D	10.0'- 14.9'
Class III Special 1700D	15.0' - 19.9'
Class IV 2000D	20.0' - 24.9'
Class IV Special 2500D	25.0' - 31.9'
Class V 3000D	32.0' - 38.9'
Class V Special 3600D	39.0' - 47.0'

INSTALLATION TYPE 3

MINIMUM CLASS AND D-LOAD	COVER	
	48" Dia AND SMALLER	OVER 48" Dia
Class II 1000D	7.9'	5.9'
Class III 1350D	8.0' - 10.9'	6.0' - 8.9'
Class III Special 1700D	11.0' - 14.9'	9.0' - 12.9'
Class IV 2000D	15.0' - 17.9'	13.0' - 15.9'
Class IV Special 2500D	18.0' - 21.9'	16.0' - 19.9'
Class V 3000D	22.0' - 26.9'	20.0' - 24.9'
Class V Special 3600D	30.0' - 33.0'	25.0' - 31.0'

NOTES:

1. Unless otherwise shown on the plans or specified in the special provision, the Contractor shall have the option of selecting the class of RCP and the type of installation to be used, provided the height of cover does not exceed the value shown for the RCP selected.
   Example: 24" RCP culvert with maximum cover of 19'-0" the options are:
   a) Class III or stronger with Installation Type 1.
   b) Class III Special or stronger with Installation Type 2.
   c) Class IV Special or stronger with Installation Type 3.
   Cover is defined as the maximum vertical distance from top of the pipe to finished grade within the length of any given culvert.
2. The class of RCP and Installation Type selected shall be the same throughout the length of any given culvert.
3. The "length of any culvert" is defined as the culvert between:
   a) Successive drainage structure (inlets, junction boxes, headwalls, etc.).
   b) A drainage structure and the inlet or outlet end of the culvert.
   c) The inlet and outlet end of the culvert when there are no intervening drainage structures.
4. Oval and arch shaped RCP shall not be used.
5. 1/25 OD Min, not less than 3".
6. Slurry cement backfill may be substituted for backfill in the outer bedding and haunch areas. If slurry is used the outer and middle beddings shall be omitted. Prior to installation the soil under the middle 1/3 of the outside diameter of the pipe shall be softened by scarifying or other means to a minimum depth of 1/25 OD, but not less than 3". Where slurry cement backfill is used clear distance to trench wall may be reduced as set forth in Section 19-3.062 of the Standard Specifications.
7. Backfill shall be placed full width of excavation except where dimensions are shown for backfill width or thickness. Dimensions shown are minimums.
8. Lower side shall be suitable material as determined by the Engineer. Otherwise it shall be considered unsuitable as set forth in Section 19-2.02 of the Standard Specifications. See Note 9.
9. Where the pipe is placed in a trench, if the trench walls are sloped at 5 vertical to 1 horizontal or steeper for at least 90 percent of the trench height or up to not less than 12" from the grading plane, the firmness of the soil in the lower side need not be considered.
10. Non-reinforced precast concrete pipe sizes 3'-0" or smaller may be placed under installation Types 1, 2 or 3.

STATE OF CALIFORNIA
DEPARTMENT OF TRANSPORTATION

EXCAVATION AND BACKFILL CONCRETE PIPE CULVERTS

NO SCALE

RSP A62DA DATED NOVEMBER 17, 2006 SUPERSEDES STANDARD PLAN A62DA DATED MAY 1, 2006 - PAGE 20 OF THE STANDARD PLANS BOOK DATED MAY 2006.

REVISED STANDARD PLAN RSP A62DA

2006 REVISED STANDARD PLAN RSP A62DA

10 26 06

DIST	COUNTY	ROUTE	POST MILES TOTAL PROJECT	SHEET NO.	TOTAL SHEETS
01	Hum	169	Var	21	29

REGISTERED CIVIL ENGINEER

June 15, 2007
PLANS APPROVAL DATE

REGISTERED PROFESSIONAL ENGINEER Glenn DeCou No. C34547 Exp. 9-30-07 CIVIL STATE OF CALIFORNIA

The State of California or its officers or agents shall not be responsible for the accuracy or completeness of electronic copies of this plan sheet.

To accompany plans dated 04-13-10

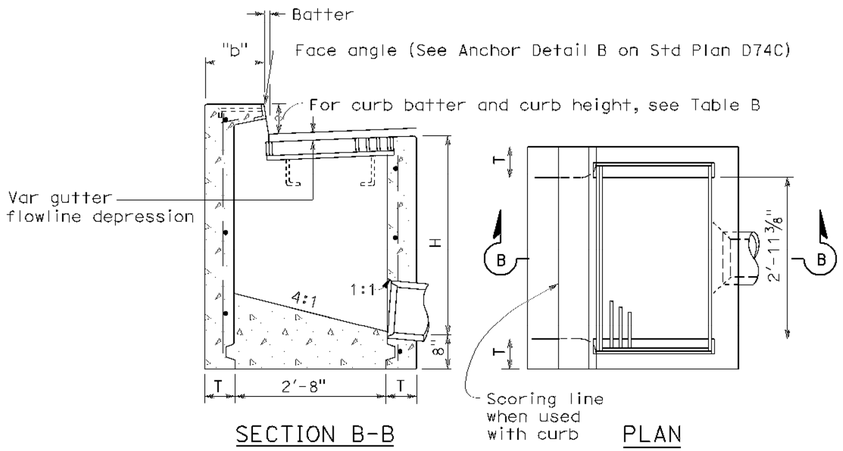

SECTION B-B PLAN

TYPE GO

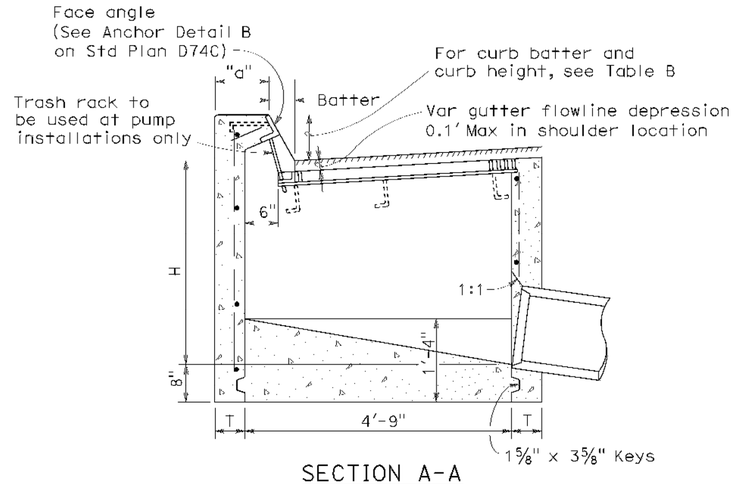

SECTION A-A

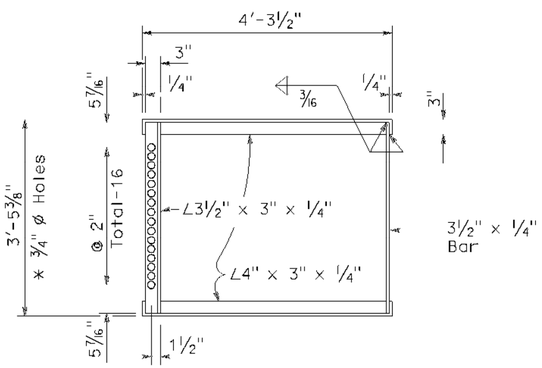

* 3/4" ø Holes required only with trash rack

GRATE FRAME FOR TYPE GDO INLET

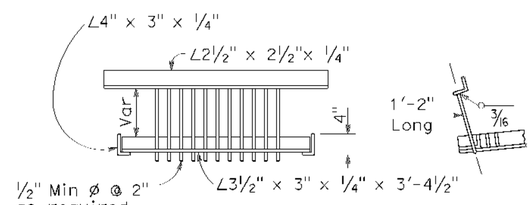

TRASH RACK

(For use with pump installation)

TABLE A

CONCRETE QUANTITIES				
	H=3'-0" TO 8'-0" (T=6")		H=8'-1" TO 20'-0" (T=8")	
TYPE	H=3'-0" (CY)	ADDITIONAL PCC PER FOOT (CY)	H=8'-1" (CY)	ADDITIONAL PCC PER FOOT (CY)
GO	1.24	0.245	3.39	0.346
GDO	1.62	0.322	4.36	0.446

Table based on 8" floor slab, no deduction for pipe openings, and curb type giving highest quantity of concrete. No deductions or adjustments are to be made to these quantities because of pipe openings, different floor alternatives or different curb type.

TABLE B

CURB TYPE	NORMAL CURB HEIGHT	CURB BATTER	"a" DIMENSION	"b" DIMENSION
A1-6	6"	1 1/2"	T+7 1/2"	T+6 1/2"
A1-8	8"	2"	T+7"	T+6"
B1-6	6"	4"	T+5"	T+4"
Type A Dike	6"	3"	T+6"	T+5"

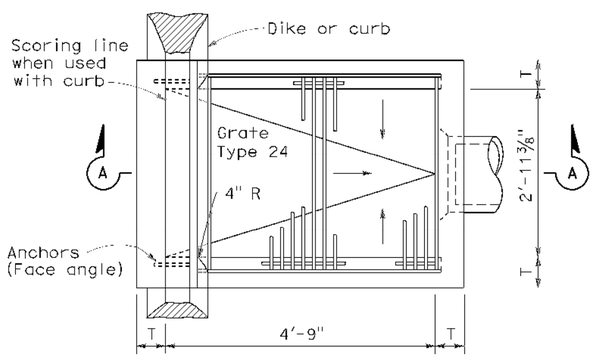

PLAN

TYPE GDO

NOTES:

1. "H" is the difference in elevation between the outlet pipe flow line and the normal gutter grade line undepressed.
2. For "T" wall thickness, see Table A below.
3. Wall reinforcing not required when "H" is 8'-0" or less and the unsupported width or length is 7'-0" or less. Walls exceeding these limits shall be reinforced with #4 @ 18"± centers placed 1 1/2" clear to inside of box unless otherwise shown.
4. Inlet bottom reinforcing not required. See Standard Plan D74C for alternative reinforced bottom.
5. Steps - None required where "H" is less than 2'-6" Where "H" is 2'-6" or more, install steps with lowest rung 1'-0" above the floor and highest rung not more than 6" below top of inlet. The distance between steps shall not exceed 1'-0" and shall be uniform throughout the length of the wall. Place steps in the wall without an opening. Step inserts may be substituted for the bar steps. Step Inserts shall comply with State Industrial Safety requirements. See Standard Plan D74C for step details.
6. When shown on the project plans, place a 3/4" plain round protection bar horizontally across the length of the opening and bend back 4" into the inlet wall on each side.
7. Pipe(s) can be placed in any wall.
8. Curb section shall match adjacent curb.
9. Basin floors shall have wood trowel finish and shall slope toward the outlet pipe as shown.
10. Galvanizing - See Standard Specifications or Special Provisions.
11. See Standard Plan D77A and D77B for grate and frame details and weights of miscellaneous iron and Steel.
12. See Standard Plan D78A for gutter depression details.
13. Full penetration butt welds may be substituted for the fillet welds on all anchors.
14. Standard square, hexagon, round or equivalent headed anchors may be substituted for the right angle hooks on the anchors shown on this plan.
15. Cast-in-place or precast alternative is optional with contractor. See Standard Specifications.
16. Cast-in-place inlets to be formed around all pipes/stubs intersecing the inlet and concrete poured in one continuous operation. Precast inlets shall have mortared pipe connections conforming to details for Type GCP inlets on Standard Plan D75B. See Standard Specifications for mortar composition.

STATE OF CALIFORNIA
DEPARTMENT OF TRANSPORTATION

DRAINAGE INLETS

NO SCALE

RSP D74B DATED JUNE 15, 2007 SUPERSEDES STANDARD PLAN D74B DATED MAY 1, 2006 - PAGE 150 OF THE STANDARD PLANS BOOK DATED MAY 2006.

REVISED STANDARD PLAN RSP D74B

2006 REVISED STANDARD PLAN RSP D74B

4 16 07

DIST	COUNTY	ROUTE	POST MILES TOTAL PROJECT	SHEET NO.	TOTAL SHEETS
01	Hum	169	Var	22	29

Randell D. Hiatt
REGISTERED CIVIL ENGINEER

June 6, 2008
PLANS APPROVAL DATE

REGISTERED PROFESSIONAL ENGINEER
Randell D. Hiatt
No. C50200
Exp. 6-30-09
CIVIL
STATE OF CALIFORNIA

The State of California or its officers or agents shall not be responsible for the accuracy or completeness of electronic copies of this plan sheet.

To accompany plans dated 04-13-10

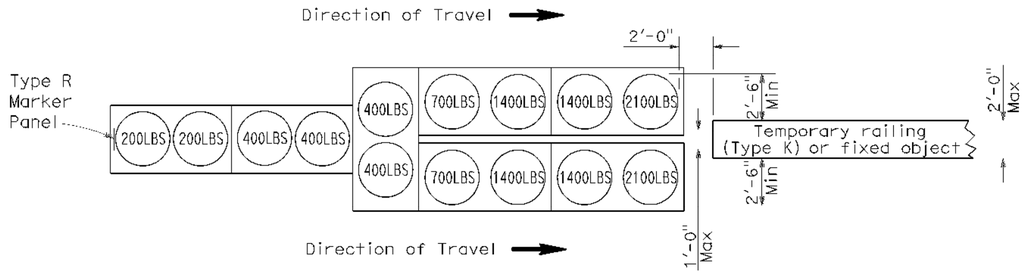

ARRAY 'TU14'

Approach speed 45 mph or more

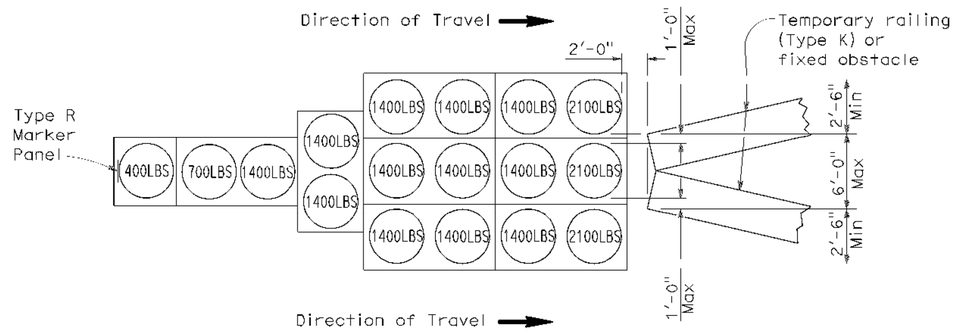

ARRAY 'TU17'

Approach speed less than 45 mph

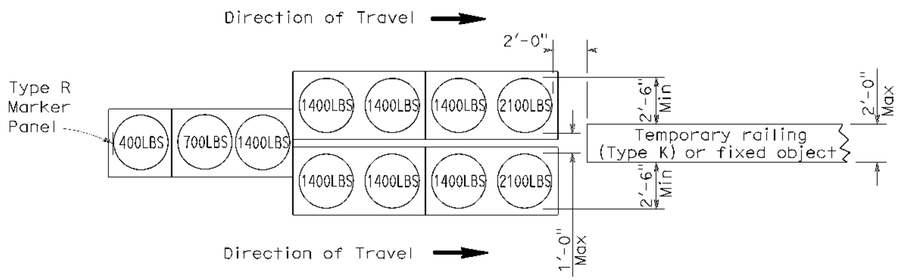

ARRAY 'TU11'

Approach speed less than 45 mph

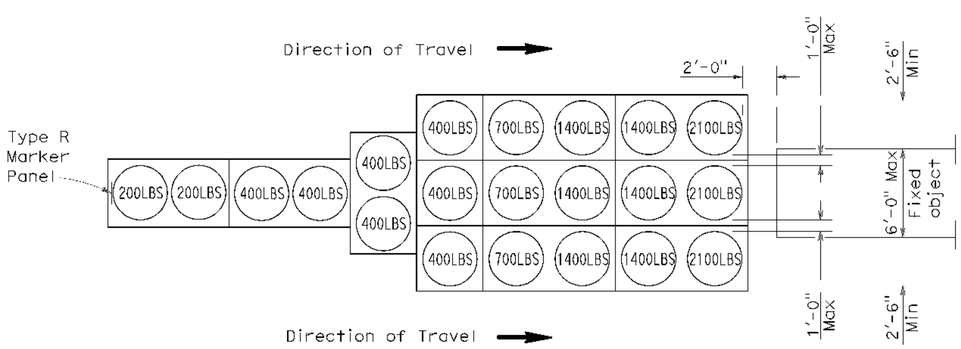

ARRAY 'TU21'

Approach speed 45 mph or more

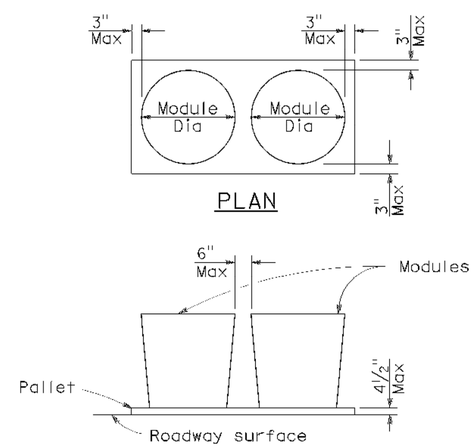

ELEVATION

CRASH CUSHION PALLET DETAIL

See Note 7

NOTES:

1. (XXX) Indicates sand filled module location and weight of sand in pounds for each module. Module spacing is based on the greater diameter of the module.
2. All sand weights are nominal.
3. Temporary crash cushion arrays shall not encroach on the traveled way.
4. Place the top of Type R marker panel 1" below the module lid.
5. Refer to Standard Plan A73B for marker details.
6. Approach speeds indicated conform to NCHRP 350 Report criteria.
7. Use of pallets is optional.

STATE OF CALIFORNIA
DEPARTMENT OF TRANSPORTATION

TEMPORARY CRASH CUSHION, SAND FILLED (UNIDIRECTIONAL)

NO SCALE

RSP T1A DATED JUNE 6, 2008 SUPERSEDES STANDARD PLAN T1A
DATED MAY 1, 2006 - PAGE 211 OF THE STANDARD PLANS BOOK DATED MAY 2006.

REVISED STANDARD PLAN RSP T1A

2006 REVISED STANDARD PLAN RSP T1A

5 15 08

DIST	COUNTY	ROUTE	POST MILES TOTAL PROJECT	SHEET NO.	TOTAL SHEETS
01	Hum	169	Var	23	29

Randell D. Hiatt
REGISTERED CIVIL ENGINEER

June 6, 2008
PLANS APPROVAL DATE

REGISTERED PROFESSIONAL ENGINEER
Randell D. Hiatt
No. C50200
Exp. 6-30-09
CIVIL
STATE OF CALIFORNIA

The State of California or its officers or agents shall not be responsible for the accuracy or completeness of electronic copies of this plan sheet.

To accompany plans dated 04-13-10

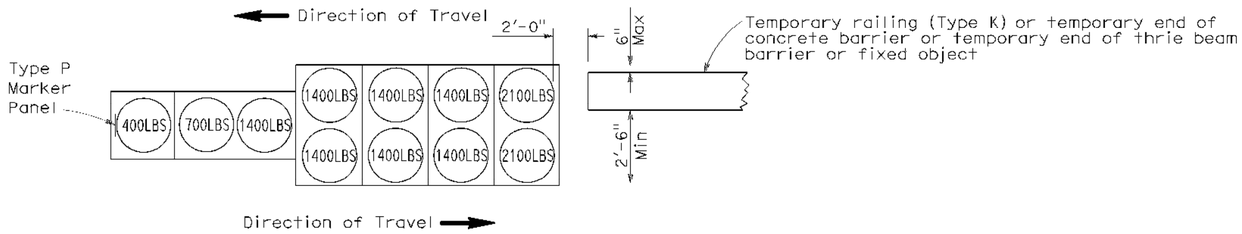

ARRAY 'TB11'

Approach speed less than 45 mph

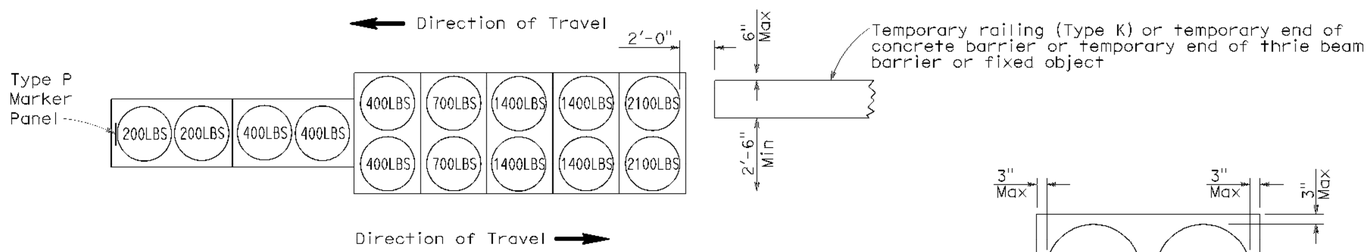

ARRAY 'TB14'

Approach speed 45 mph or more

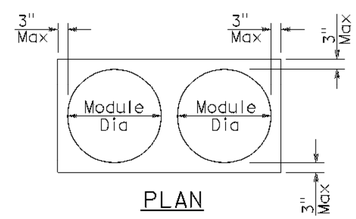

PLAN

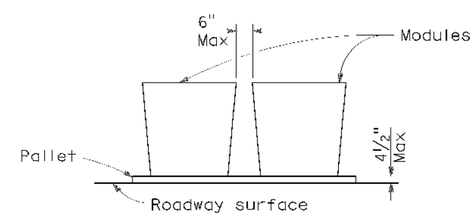

ELEVATION

CRASH CUSHION PALLET DETAIL

See Note 7

NOTES:

1. (XXX) Indicates sand filled module location and weight of sand in pounds for each module. Module spacing is based on the greater diameter of the module.
2. All sand weights are nominal.
3. Temporary crash cushion arrays shall not encroach on the traveled way.
4. Place the Type P marker panel so that the bottom of the panel rests upon the pallet.
5. Refer to Standard Plan A73B for marker details.
6. Approach speeds indicated conform to NCHRP 350 Report criteria.
7. Use of pallets is optional.

STATE OF CALIFORNIA
DEPARTMENT OF TRANSPORTATION

TEMPORARY CRASH CUSHION, SAND FILLED (BIDIRECTIONAL)

NO SCALE

RSP T1B DATED JUNE 6, 2008 SUPERSEDES STANDARD PLAN T1B
DATED MAY 1, 2006 - PAGE 212 OF THE STANDARD PLANS BOOK DATED MAY 2006.

REVISED STANDARD PLAN RSP T1B

2006 REVISED STANDARD PLAN RSP T1B

5 15 08

DIST	COUNTY	ROUTE	POST MILES TOTAL PROJECT	SHEET NO.	TOTAL SHEETS
01	Hum	169	Var	24	29

Randell D. Hiatt
REGISTERED CIVIL ENGINEER

June 6, 2008
PLANS APPROVAL DATE

REGISTERED PROFESSIONAL ENGINEER
Randell D. Hiatt
No. C50200
Exp. 6-30-09
CIVIL
STATE OF CALIFORNIA

The State of California or its officers or agents shall not be responsible for the accuracy or completeness of electronic copies of this plan sheet.

To accompany plans dated 04-13-10

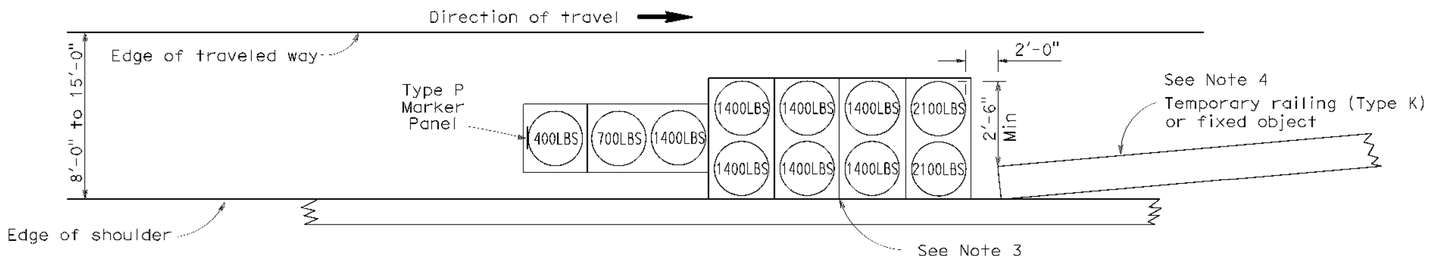

ARRAY 'TS11'

Approach speed less than 45 mph
See Note 9

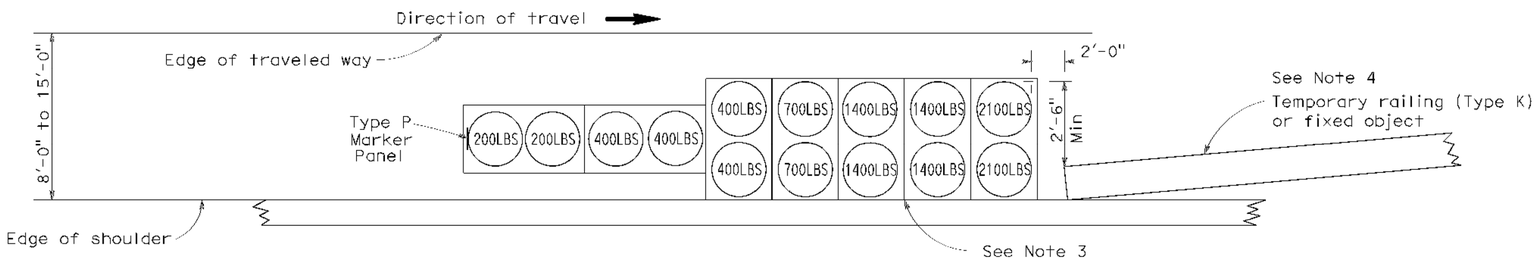

ARRAY 'TS14'

Approach speed 45 mph or more
See Note 9

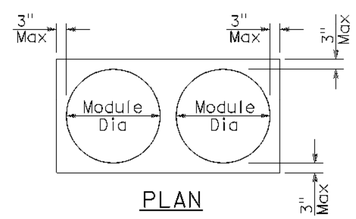

PLAN

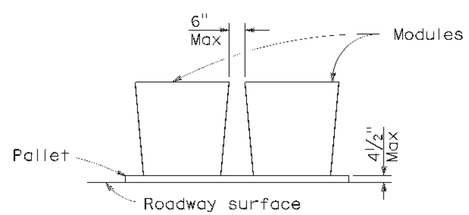

ELEVATION

CRASH CUSHION PALLET DETAIL

See Note 11

NOTES:

1. (XXX) Indicates sand filled module location and weight of sand in pounds for each module. Module spacing is based on the greater diameter of the module.
2. All sand weights are nominal.
3. The temporary crash cushion arrays shown on this plan shall be used only in locations where there will be traffic on one side of the temporary crash cushion array.
4. If the fixed object or approach end of the temporary railing is less than 15'-0" from the edge of traveled way, a temporary crash cushion is required in a construction or work zone.
5. Temporary crash cushion arrays shall not encroach on the traveled way.
6. Arrays for median shoulders shall conform to details shown on this plan for outside shoulders.
7. Place the Type P marker panel so that the bottom of the panel rests upon the pallet and faces traffic.
8. Refer to Standard Plan A73B for marker details.
9. For shoulder widths less than 8'-0", appropriate approved crash cushion protection, other than sand filled modules, shall be provided at fixed objects and at approach ends of temporary railing. The specific type of crash cushion shall be as shown on the project plans or as specified in the Special Provisions, or if not shown on the project plans or specified in the Special Provisions, shall be as approved by the Engineer.
10. Approach speeds indicated conform to NCHRP 350 Report criteria.
11. Use of pallets is optional.

STATE OF CALIFORNIA
DEPARTMENT OF TRANSPORTATION

TEMPORARY CRASH CUSHION, SAND FILLED (SHOULDER INSTALLATIONS)

NO SCALE

RSP T2 DATED JUNE 6, 2008 SUPERSEDES STANDARD PLAN T2
DATED MAY 1, 2006 - PAGE 213 OF THE STANDARD PLANS BOOK DATED MAY 2006.

REVISED STANDARD PLAN RSP T2

2006 REVISED STANDARD PLAN RSP T2

5-15-08

DIST	COUNTY	ROUTE	POST MILES TOTAL PROJECT	SHEET NO.	TOTAL SHEETS
01	Hum	169	Var	25	29

Robert B Schott
LICENSED LANDSCAPE ARCHITECT

April 3, 2009
PLANS APPROVAL DATE

LICENSED LANDSCAPE ARCHITECT
Robert B. Schott 3685
Signature
11-30-10
Renewal Date
2-25-09
Date
STATE OF CALIFORNIA

The State of California or its officers or agents shall not be responsible for the accuracy or completeness of electronic copies of this plan sheet.

To accompany plans dated 04-13-10

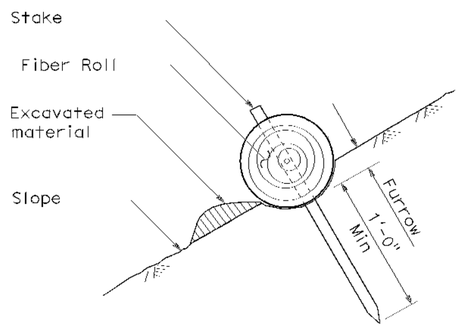

SECTION

TEMPORARY FIBER ROLL (TYPE 1)

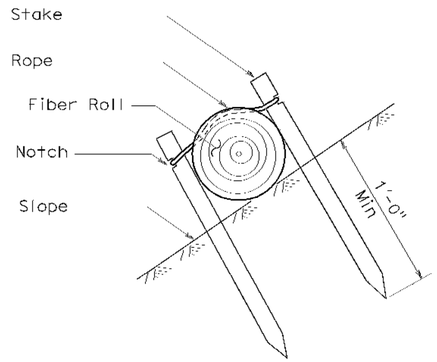

SECTION

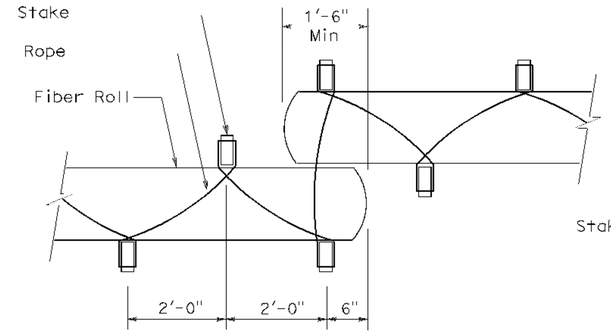

PLAN

TEMPORARY FIBER ROLL (TYPE 2)

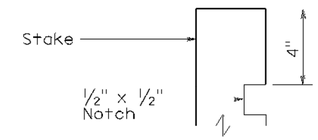

ELEVATION

STAKE NOTCH DETAIL

NOTES:

1. Temporary fiber roll spacing varies depending upon slope inclination.
2. Installations shown in the perspectives are for slope inclination of 10:1 and steeper.

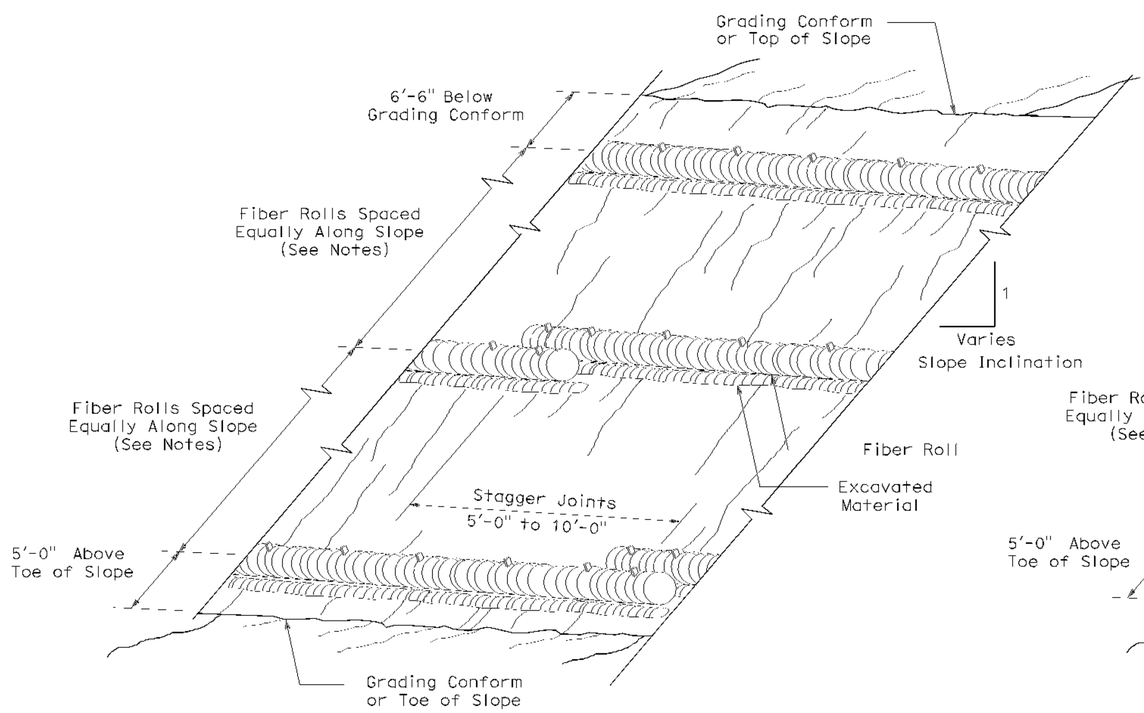

PERSPECTIVE

TEMPORARY FIBER ROLL (TYPE 1)

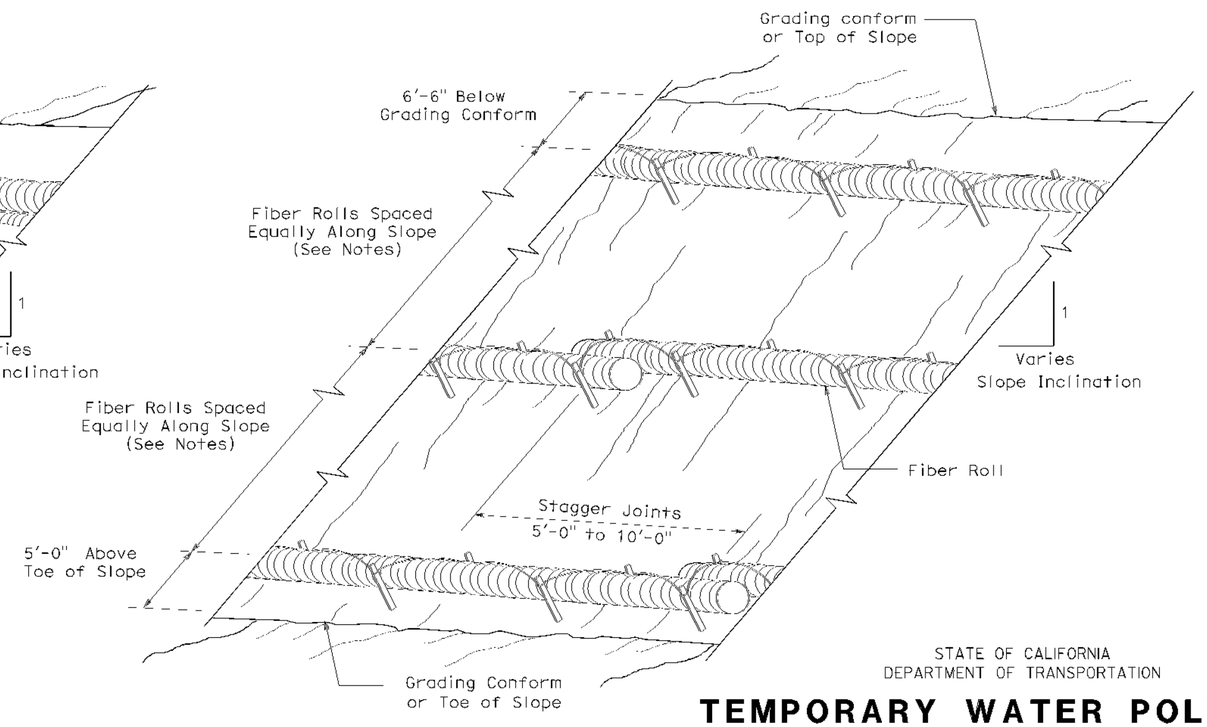

PERSPECTIVE

TEMPORARY FIBER ROLL (TYPE 2)

STATE OF CALIFORNIA
DEPARTMENT OF TRANSPORTATION

TEMPORARY WATER POLLUTION CONTROL DETAILS (TEMPORARY FIBER ROLL)

NO SCALE

RSP T56 DATED APRIL 3, 2009 SUPERSEDES STANDARD PLAN T56 DATED MAY 1, 2006 - PAGE 232 OF THE STANDARD PLANS BOOK DATED MAY 2006.

REVISED STANDARD PLAN RSP T56

2006 REVISED STANDARD PLAN RSP T56

DIST	COUNTY	ROUTE	POST MILES TOTAL PROJECT	SHEET NO.	TOTAL SHEETS
01	Hum	169	Var	26	29

Robert B Schott
LICENSED LANDSCAPE ARCHITECT

August 15, 2008
PLANS Approval DATE

LICENSED LANDSCAPE ARCHITECT
Robert B. Schott 3685
Signature
11-04-08
Renewal Date
08-11-08
Date
STATE OF CALIFORNIA

The State of California or its officers or agents shall not be responsible for the accuracy or completeness of electronic copies of this plan sheet.

To accompany plans dated 04-13-10

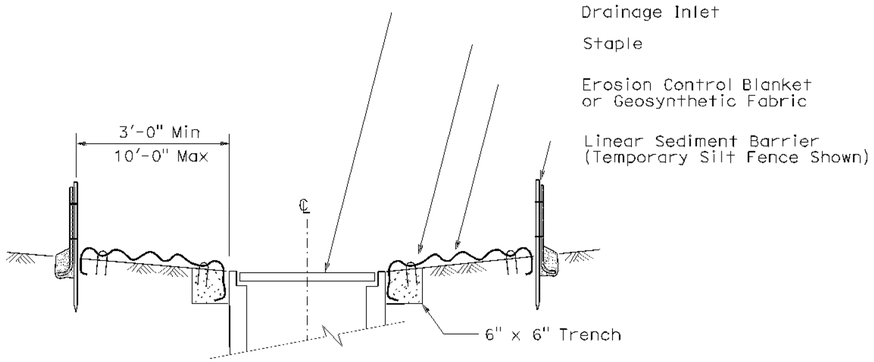

SECTION A-A

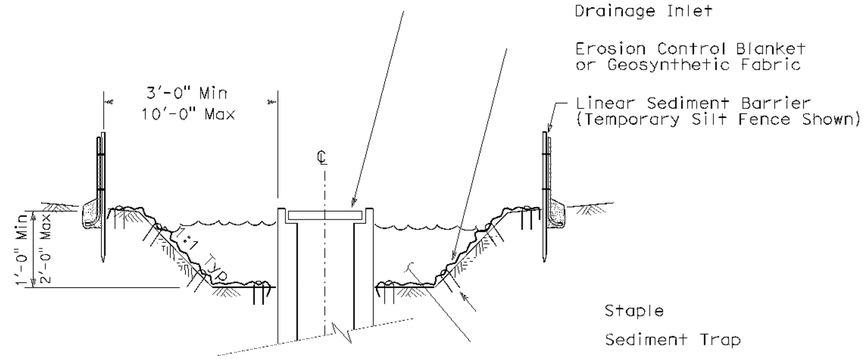

SECTION B-B

NOTES:

1. See Standard Plan T51 for Temporary Silt Fence.
2. Dimensions may vary to fit field conditions.

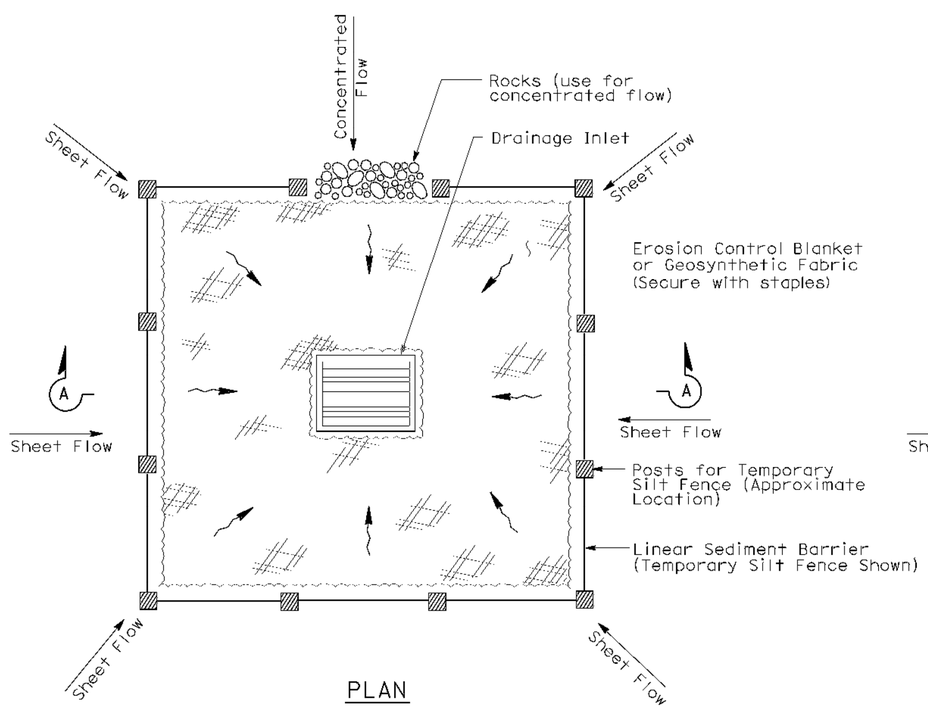

PLAN

TEMPORARY DRAINAGE INLET PROTECTION (TYPE 1)

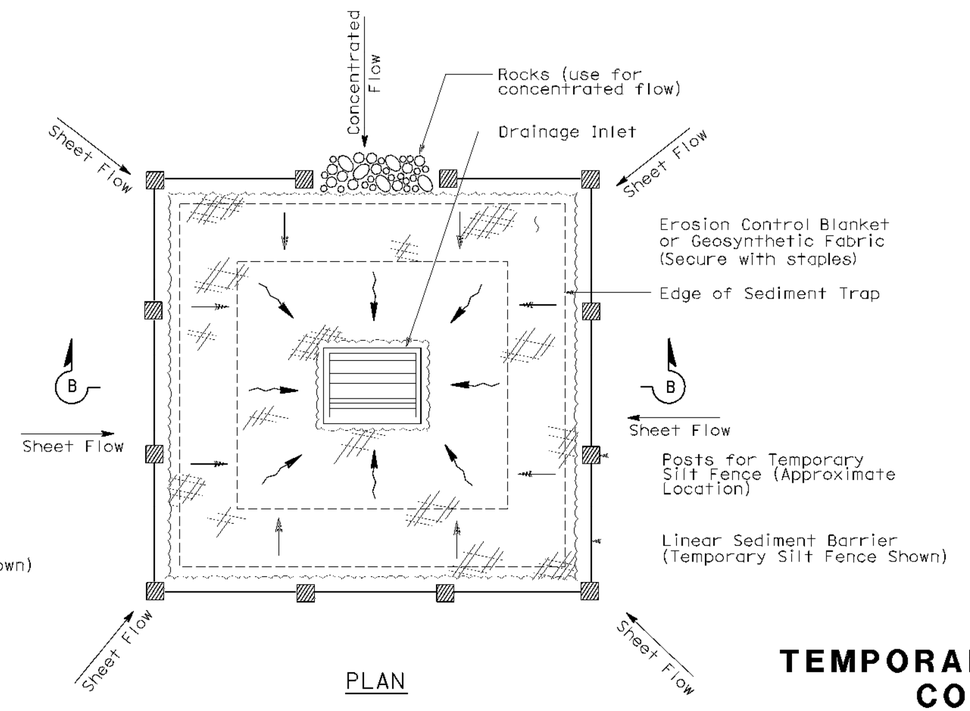

PLAN

TEMPORARY DRAINAGE INLET PROTECTION (TYPE 2) (EXCAVATED SEDIMENT TRAP)

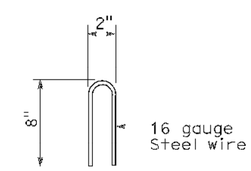

STAPLE DETAIL

STATE OF CALIFORNIA
DEPARTMENT OF TRANSPORTATION

TEMPORARY WATER POLLUTION CONTROL DETAILS (TEMPORARY DRAINAGE INLET PROTECTION)

NO SCALE

Nsp t61 dated august 15, 2008 supplements the standard plans book dated may 2006.

NEW STANDARD PLAN NSP T61

2006 NEW STANDARD PLAN NSP T61

DIST	COUNTY	ROUTE	POST MILES TOTAL PROJECT	SHEET NO.	TOTAL SHEETS
01	Hum	169	Var	27	29

Robert B Schott
LICENSED LANDSCAPE ARCHITECT

August 15, 2008
PLANS APPROVAL DATE

LICENSED LANDSCAPE ARCHITECT Robert B. Schott 3685 Signature 11-04-08 Renewal Date 08-11-08 Date STATE OF CALIFORNIA

The State of California or its officers or agents shall not be responsible for the accuracy or completeness of electronic copies of this plan sheet.

To accompany plans dated 04-13-10

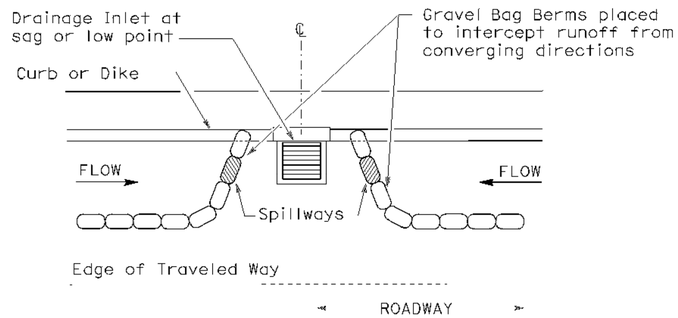

PLAN

CONFIGURATION FOR SAG POINT INLET (GRAVEL BAG BERM)

GRAVEL BAG BERM (TYPE 3A) SPACING TABLE

SLOPE OF ROADWAY (PERCENT)	1 to 3.9	4 to 5.9	6 to 7.9	8 to 10	10+
INTERVAL BETWEEN BERM	100'	75'	50'	25'	12'

For slope of less than 1%, install barriers only if erosion/sediment is prevalent

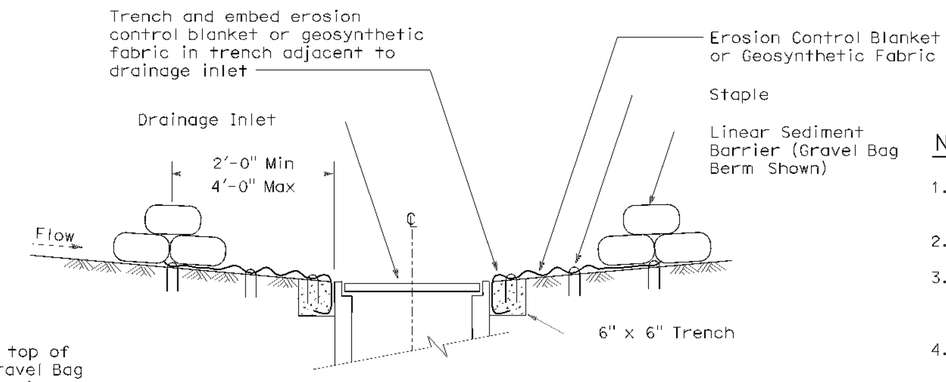

SECTION A-A

NOTES:

1. Place safety cones adjacent to drainage inlet protection.
2. Dimensions may vary to fit field conditions.
3. Install a minimum of 3 gravel bag berms upstream of each drainage inlet to be protected.
4. Position erosion control blanket or geosynthetic fabric at edge of concrete apron and secure in trench.
5. Erosion control blanket or geosynthetic fabric is not required if the area adjacent to the drainage inlet is vegetated or paved.

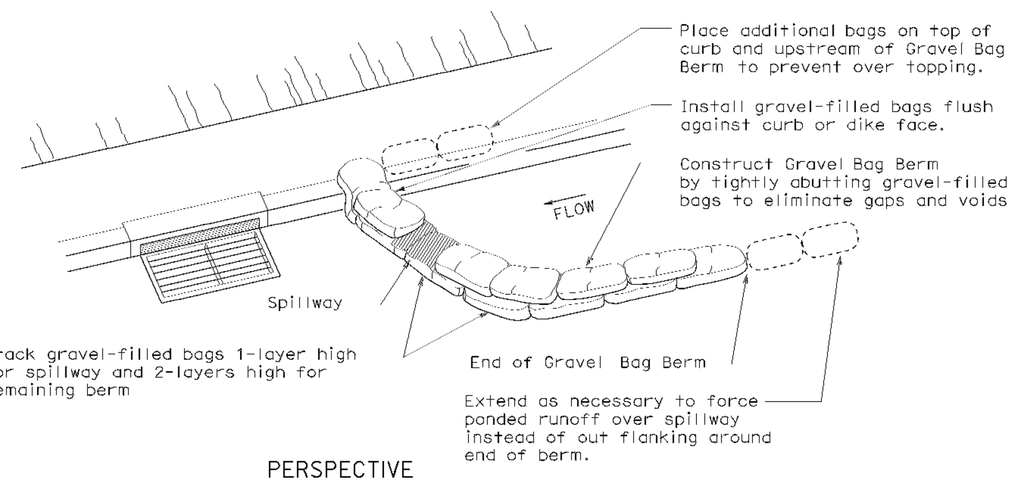

PERSPECTIVE

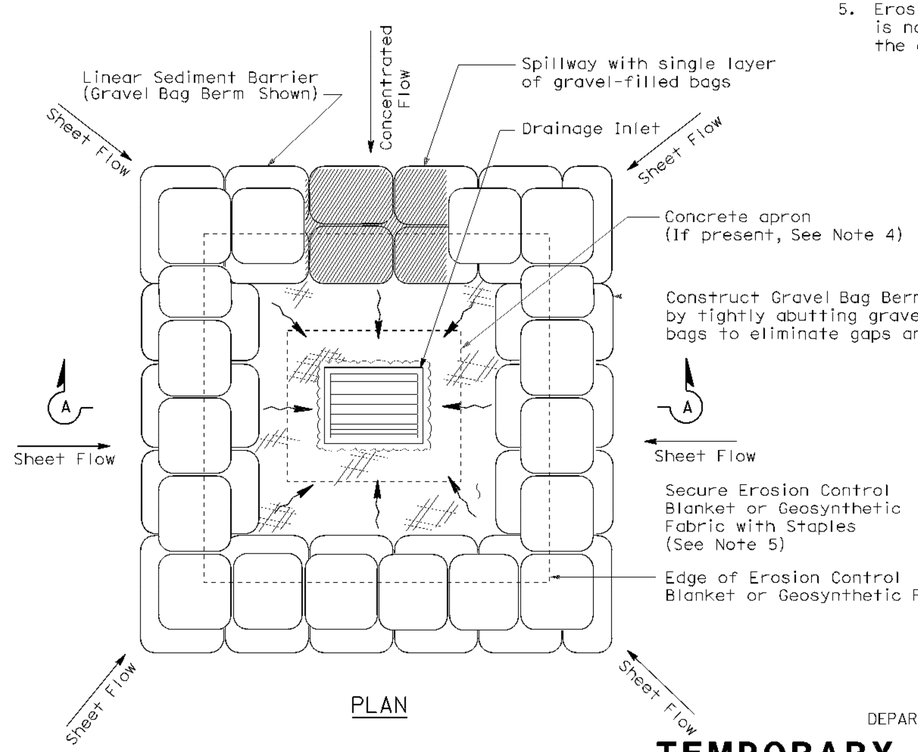

PLAN

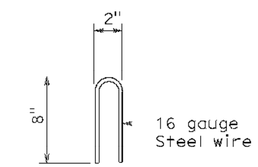

STAPLE DETAIL

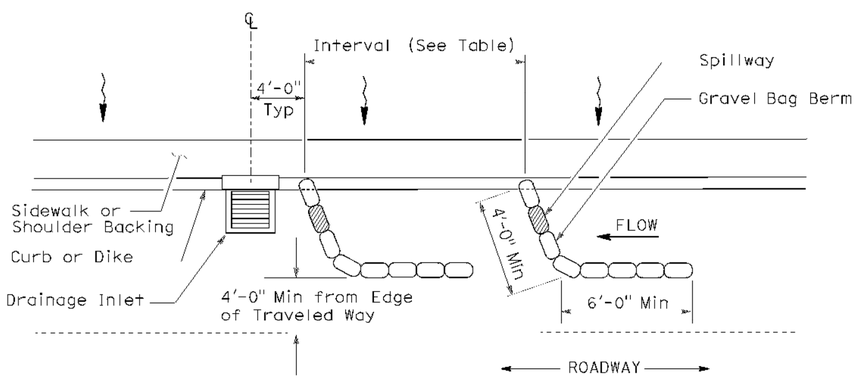

PLAN

TEMPORARY DRAINAGE INLET PROTECTION (TYPE 3A) (GRAVEL BAG BERM)

TEMPORARY DRAINAGE INLET PROTECTION (TYPE 3B)

STATE OF CALIFORNIA
DEPARTMENT OF TRANSPORTATION

TEMPORARY WATER POLLUTION CONTROL DETAILS (TEMPORARY DRAINAGE INLET PROTECTION)

NO SCALE

NSP T62 DATED AUGUST 15, 2008 SUPPLEMENTS
THE STANDARD PLANS BOOK DATED MAY 2006.

NEW STANDARD PLAN NSP T62

2006 NEW STANDARD PLAN NSP T62

DIST	COUNTY	ROUTE	POST MILES TOTAL PROJECT	SHEET NO.	TOTAL SHEETS
01	Hum	169	Var	28	29

LICENSED LANDSCAPE ARCHITECT

August 15, 2008
PLANS APPROVAL DATE

The State of California or its officers or agents shall not be responsible for the accuracy or completeness of electronic copies of this plan sheet.

LICENSED LANDSCAPE ARCHITECT — Robert B. Schott — Signature — 11-04-08 Renewal Date — 08-11-08 Date — STATE OF CALIFORNIA

To accompany plans dated 04-13-10

FLEXIBLE SEDIMENT BARRIER SPACING TABLE

SLOPE OF ROADWAY (PERCENT)	0 to 0.9	1 to 1.9	2 to 2.9	3 to 4	5+
INTERVAL BETWEEN BARRIERS	50′	35′	30′	25′	20′
ANGLE FROM FACE OF CURB	70°	70°	70°	45°	45°
SUGGESTED BARRIER LENGTH	6′	6′	6′	6′	6′

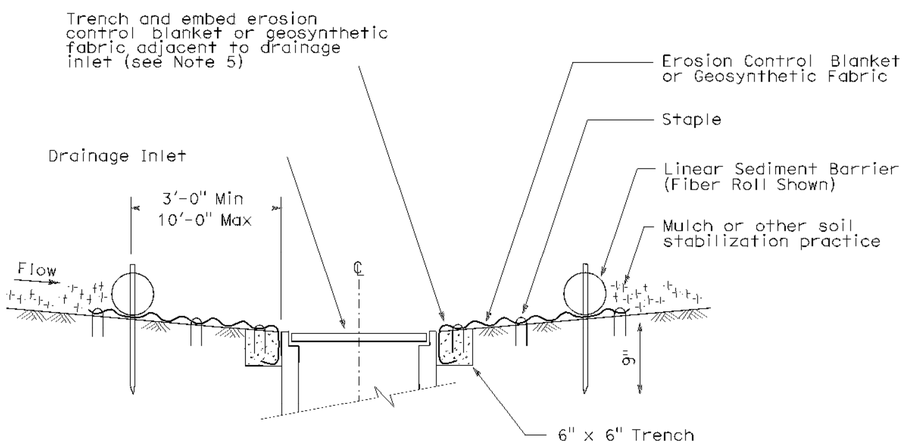

SECTION A-A

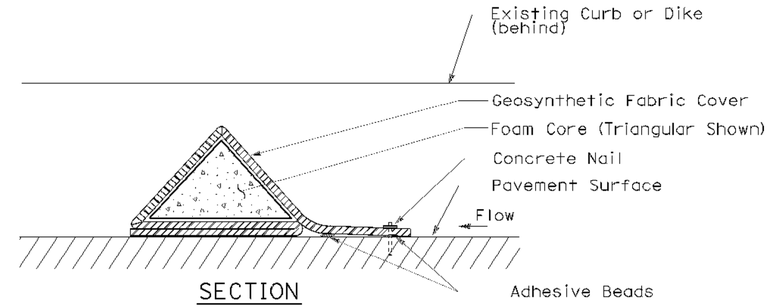

SECTION

FLEXIBLE SEDIMENT BARRIER DETAIL (FOAM BARRIER SHOWN)

NOTES:

1. See Standard Plan T51 for Temporary Silt Fence.
2. Dimensions may vary to fit field conditions.
3. Install a minimum of 3 flexible sediment barriers upstream of each drainage inlet to be protected.
4. Position erosion control blanket or geosynthetic fabric at edge of concrete apron and secure in trench.
5. Erosion control blanket or geosynthetic fabric is not required if the area adjacent to the drainage inlet is vegetated.

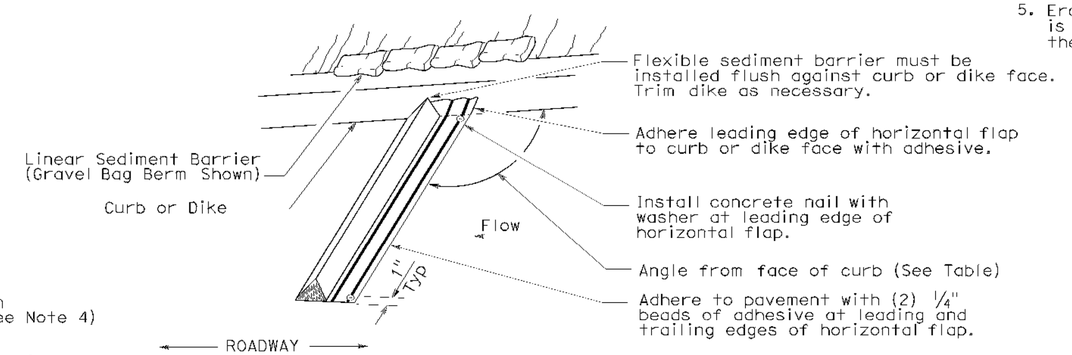

PERSPECTIVE

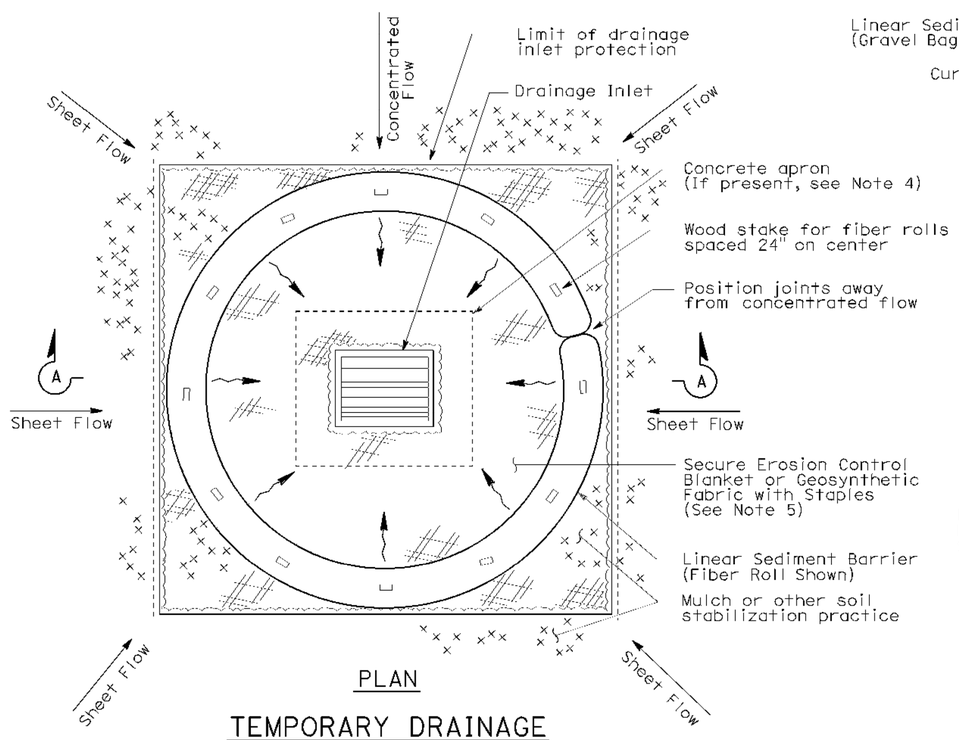

PLAN

TEMPORARY DRAINAGE INLET PROTECTION (TYPE 4A)

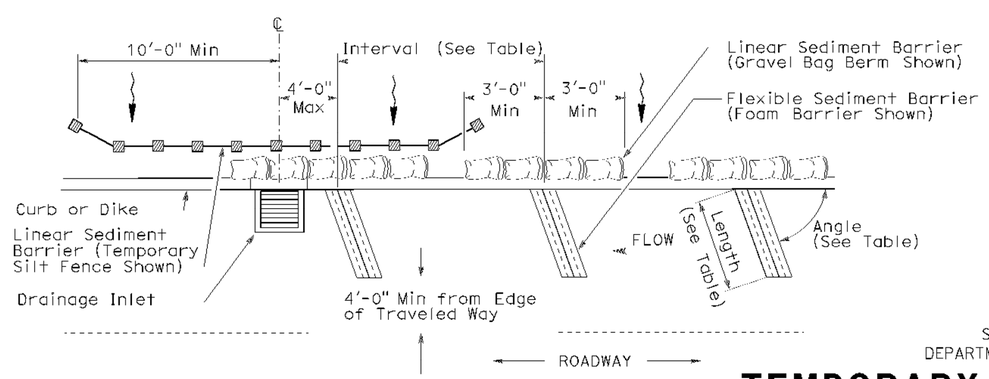

PLAN

TEMPORARY DRAINAGE INLET PROTECTION (TYPE 4B) FLEXIBLE SEDIMENT BARRIER

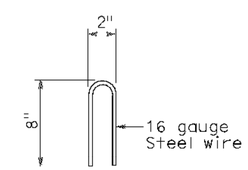

STAPLE DETAIL

STATE OF CALIFORNIA
DEPARTMENT OF TRANSPORTATION

TEMPORARY WATER POLLUTION CONTROL DETAILS (TEMPORARY DRAINAGE INLET PROTECTION)

NO SCALE

NSP T63 DATED AUGUST 15, 2008 SUPPLEMENTS THE STANDARD PLANS BOOK DATED MAY 2006.

NEW STANDARD PLAN NSP T63

2006 NEW STANDARD PLAN NSP T63

DIST	COUNTY	ROUTE	POST MILES TOTAL PROJECT	SHEET NO.	TOTAL SHEETS
01	Hum	169	Var	29	29

LICENSED LANDSCAPE ARCHITECT

August 15, 2008
PLANS APPROVAL DATE

The State of California or its officers or agents shall not be responsible for the accuracy or completeness of electronic copies of this plan sheet.

LICENSED LANDSCAPE ARCHITECT — Robert B. Schott — Signature — 11-04-08 Renewal Date — 08-11-08 Date — STATE OF CALIFORNIA

To accompany plans dated 04-13-10

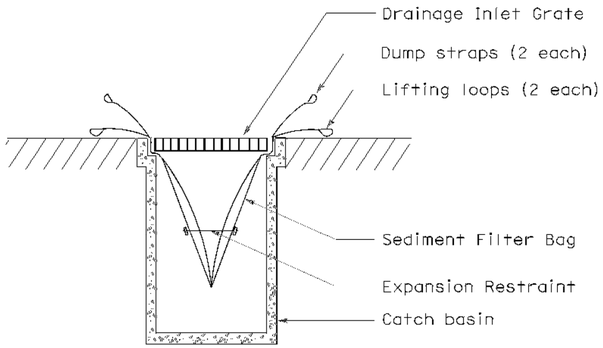

SECTION B-B

SEDIMENT FILTER BAG DETAIL

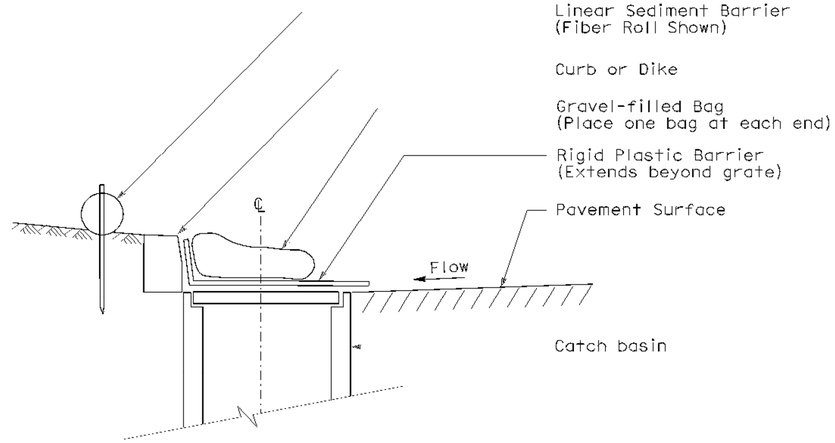

SECTION

TEMPORARY DRAINAGE INLET PROTECTION (TYPE 6A) (CATCH BASIN WITH GRATE)

NOTES:

1. See Standard Plan T51 for Temporary Silt Fence.
2. Dimensions may vary to fit field conditions.

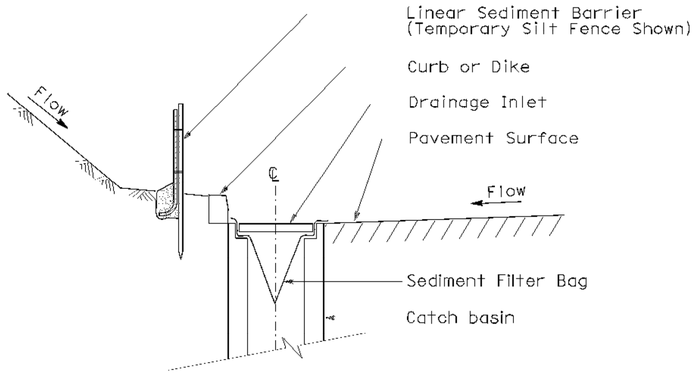

SECTION A-A

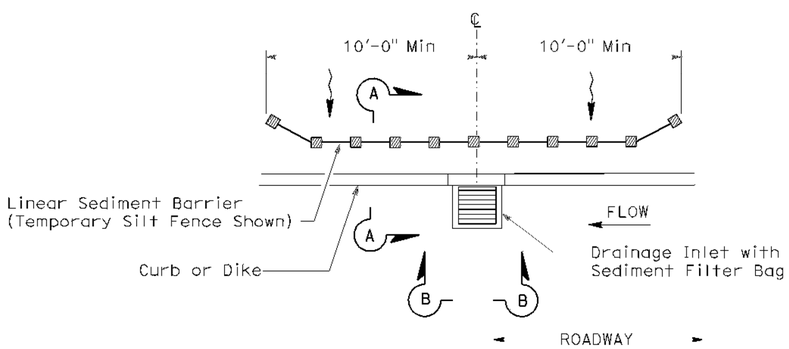

PLAN

TEMPORARY DRAINAGE INLET PROTECTION (TYPE 5) (SEDIMENT FILTER BAG)

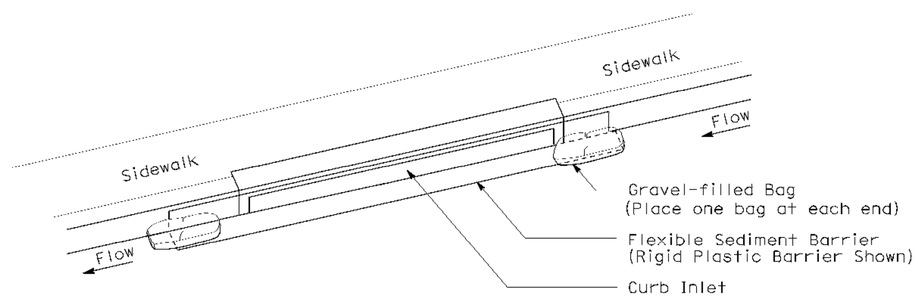

PERSPECTIVE

TEMPORARY DRAINAGE INLET PROTECTION (TYPE 6B) (CURB INLET WITHOUT GRATE)

STATE OF CALIFORNIA
DEPARTMENT OF TRANSPORTATION

TEMPORARY WATER POLLUTION CONTROL DETAILS (TEMPORARY DRAINAGE INLET PROTECTION)

NO SCALE

NSP T64 DATED AUGUST 15, 2008 SUPPLEMENTS
THE STANDARD PLANS BOOK DATED MAY 2006.

NEW STANDARD PLAN NSP T64

2006 NEW STANDARD PLAN NSP T64