ER-43H5(004)E

Dist	COUNTY	ROUTE	POST MILES TOTAL PROJECT	SHEET No.	TOTAL SHEETS
01	Men	101	34.9/35.0, 43.7/43.9	1	36

STATE OF CALIFORNIA

DEPARTMENT OF TRANSPORTATION

PROJECT PLANS FOR CONSTRUCTION ON

STATE HIGHWAY

IN MENDOCINO COUNTY NEAR CALPELLA AT 1.9 MILES NORTH OF WEST ROAD OVERCROSSING AND NEAR WILLITS AT 0.2 MILE SOUTH OF HAEHL OVERCROSSING

TO BE SUPPLEMENTED BY STANDARD PLANS DATED MAY 2006

INDEX OF PLANS

SHEET No.	DESCRIPTION
1	TITLE AND LOCATION MAP
2	TYPICAL CROSS SECTIONS
3-4	LAYOUTS
5	SUPERELEVATION DIAGRAMS
6-8	CONSTRUCTION DETAILS
9-16	DRAINAGE PLANS, PROFILES, DETAILS AND QUANTITIES
17	CONSTRUCTION AREA SIGNS
18-21	STAGE CONSTRUCTION PLANS AND TRAFFIC HANDLING PLANS AND QUANTITIES
22-25	PAVEMENT DELINEATION PLANS AND QUANTITIES
26	SIGN PLAN AND QUANTITIES
27	SUMMARY OF QUANTITIES
28-36	REVISED STANDARD PLANS

THE STANDARD PLANS LIST APPLICABLE TO THIS CONTRACT IS INCLUDED IN THE NOTICE TO BIDDERS AND SPECIAL PROVISIONS BOOK.

LOCATION MAP

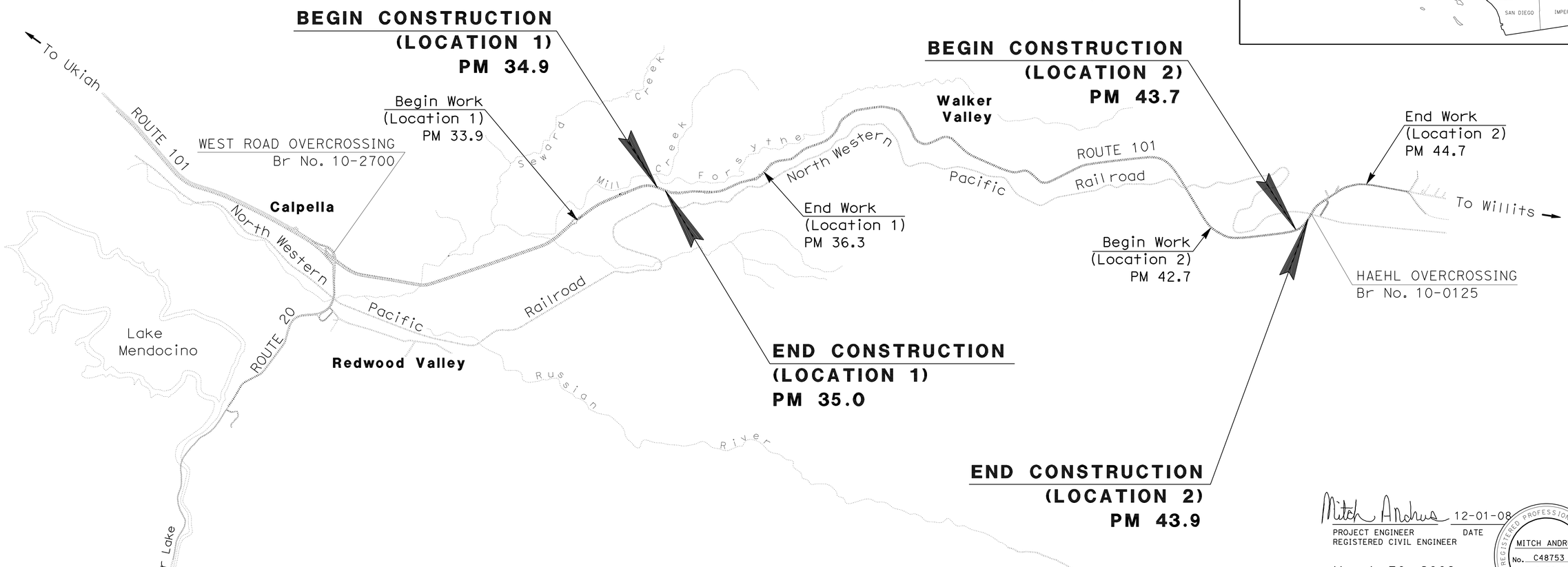

NO SCALE

THE CONTRACTOR SHALL POSSESS THE CLASS (OR CLASSES) OF LICENSE AS SPECIFIED IN THE "NOTICE TO BIDDERS."

Mitch Andrus 12-01-08
PROJECT ENGINEER DATE
REGISTERED CIVIL ENGINEER

REGISTERED PROFESSIONAL ENGINEER
MITCH ANDRUS
No. C48753
Exp. 9-30-10
CIVIL
STATE OF CALIFORNIA

March 30, 2009
PLANS APPROVAL DATE

THE STATE OF CALIFORNIA OR ITS OFFICERS OR AGENTS SHALL NOT BE RESPONSIBLE FOR THE ACCURACY OR COMPLETENESS OF ELECTRONIC COPIES OF THIS PLAN SHEET.

PROJECT MANAGER FRANK DEMLING

DESIGN ENGINEER DOUG JONES

LAST REVISION 11-28-08 DATE PLOTTED => 04-AUG-2009 TIME PLOTTED => 09:34

CONTRACT No. 01-477804

NOTES:

1. DIMENSIONS OF STRUCTURAL SECTIONS ARE SUBJECT TO TOLERANCES SPECIFIED IN THE STANDARD SPECIFICATIONS.
2. SUPERELEVATIONS AS SHOWN OR AS DIRECTED BY THE ENGINEER.
3. SEE LAYOUT PLANS FOR PLACE HMA DIKE AND MBGR LOCATIONS.
4. FILL MATERIAL TO BE RODDED INTO VOIDS WITH 0.5′ TO REMAIN ON SURFACE. 0.25′ COMPOST TO BE PLACED OVER FILL MATERIAL. ALSO TO BE PLACED AT FILL VOID DETAIL LOCATIONS.

STRUCTURAL SECTIONS

1	0.10′ OGFC 0.20′ HMA (TYPE A)	2	0.10′ OGFC 0.45′ HMA (TYPE A) 0.25′ ATPB 0.15′ HMA (TYPE A) 1.20′ CI 2 AB	4	0.08′ OGFC	5	EXISTING 0.08′ OGAC 0.45′ AC (TYPE B) 0.25′ ATPB 0.70′ CI 2 AB 1.30′ CI 2 AS

Dist	COUNTY	LOCATION CODE	POST MILES TOTAL PROJECT	SHEET No.	TOTAL SHEETS
01	Men	101	34.9/35.0, 43.7/43.9	2	36

Mitch Andrus 3-27-09
REGISTERED CIVIL ENGINEER DATE

3-30-09
PLANS APPROVAL DATE

REGISTERED PROFESSIONAL ENGINEER MITCH ANDRUS No. C48753 Exp. 9-30-10 CIVIL STATE OF CALIFORNIA

THE STATE OF CALIFORNIA OR ITS OFFICERS OR AGENTS SHALL NOT BE RESPONSIBLE FOR THE ACCURACY OR COMPLETENESS OF ELECTRONIC COPIES OF THIS PLAN SHEET.

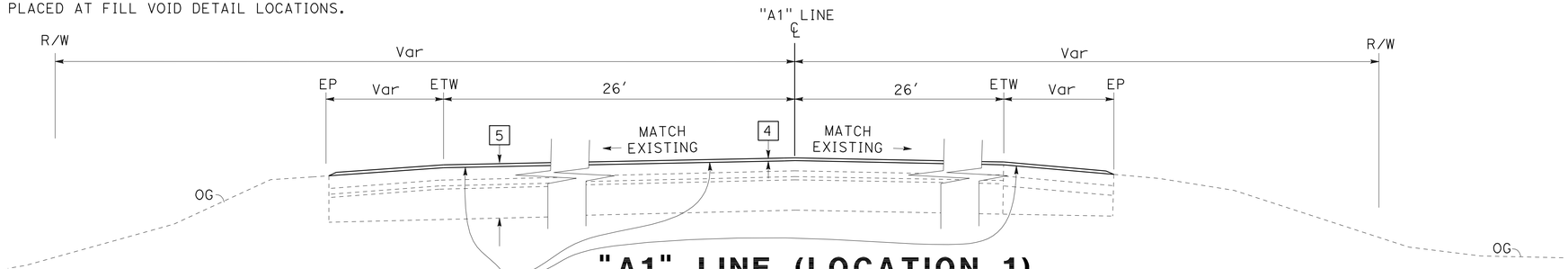

"A1" LINE (LOCATION 1)

STA "A1"93+20.00 TO STA "A1"111+20.00
STA "A1"115+10.00 TO STA "A1"137+70.00

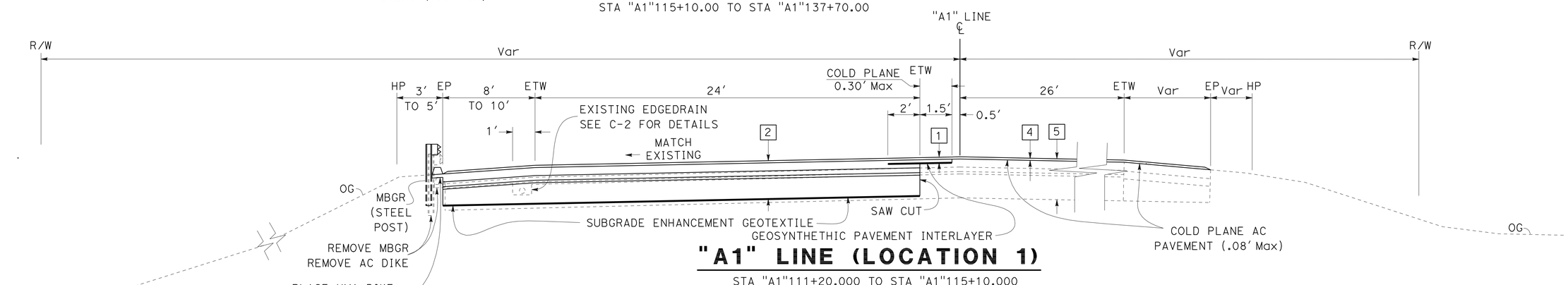

"A1" LINE (LOCATION 1)

STA "A1"111+20.000 TO STA "A1"115+10.000

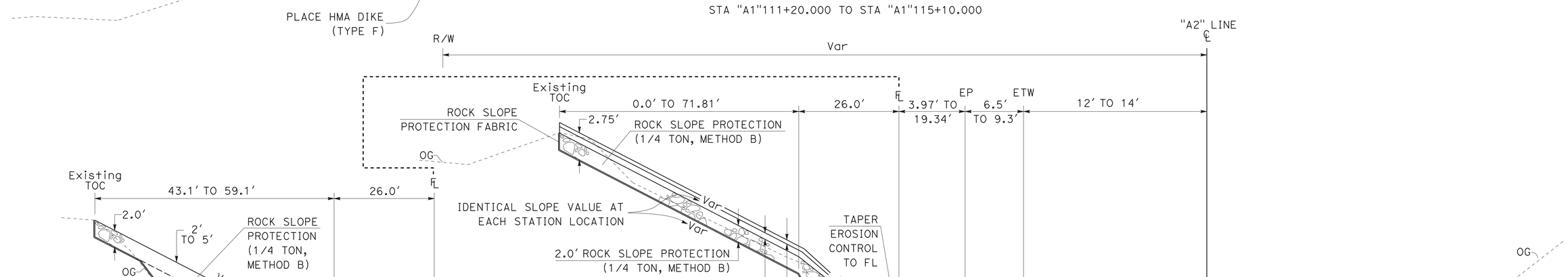

FILL VOID DETAIL

STA "A2"13+20.00 TO STA "A2"13+60.00
STA "A2"16+20.00 TO STA "A2"17+00.00

"A2" LINE (LOCATION 2)

STA "A2"12+58.00 TO STA "A2"22+50.00

TYPICAL CROSS SECTIONS

NO SCALE

X-1

STATE OF CALIFORNIA - DEPARTMENT OF TRANSPORTATION
NORTH REGION - DIVISION OF DESIGN & ENGINEERING SERVICES
Caltrans

FUNCTIONAL SUPERVISOR: DOUGLAS S. JONES
CALCULATED-DESIGNED BY: MELISSA L. HAURY
CHECKED BY: MITCH ANDRUS
REVISED BY / DATE REVISED

LAST REVISION 03-24-09 | DATE PLOTTED => 04-AUG-2009 | TIME PLOTTED => 09:34

Dist	COUNTY	LOCATION CODE	POST MILES TOTAL PROJECT	SHEET No.	TOTAL SHEETS
01	Men	101	34.9/35.0, 43.7/43.9	3	36

Mitch Andrus 3-27-09
REGISTERED CIVIL ENGINEER DATE

3-30-09
PLANS APPROVAL DATE

REGISTERED PROFESSIONAL ENGINEER
MITCH ANDRUS
No. C48753
Exp. 9-30-10
CIVIL
STATE OF CALIFORNIA

THE STATE OF CALIFORNIA OR ITS OFFICERS OR AGENTS SHALL NOT BE RESPONSIBLE FOR THE ACCURACY OR COMPLETENESS OF ELECTRONIC COPIES OF THIS PLAN SHEET.

NOTES:

1. FOR COMPLETE R/W AND ACCURATE ACCESS DATA, SEE R/W RECORD MAPS AT DISTRICT OFFICE.
2. COORDINATE VALUES SHOWN ARE CCS83 ZONE 2. MULTIPLY BY 0.99995 TO OBTAIN GROUND DISTANCES.
3. SEE DRAINAGE SHEETS FOR ACCURATE DRAINAGE INFORMATION.
4. SEE X-1 FOR COLD PLANE LIMITS, OGFC LIMITS, MEDIAN WIDTH AND SHOULDER WIDTHS. SEE CONSTRUCTION DETAIL SHEET C-1 FOR PAVING DETAIL.
5. SEE DRAINAGE SHEETS FOR TEMPORARY FENCE (TYPE ESA)
6. LOCATION TO BE DETERMINED BY ENGINEER.
7. SEE PAVEMENT DELINEATION SHEETS FOR CENTERLINE RUMBLE STRIP LIMITS.

LAUGHLIN RANGE
T17N R13W MDB&M
SEC 36

CURVE DATA				
No.	R	Δ	T	L
1	1500.00′	24°49′22″	330.11′	649.86′
2	1500.00′	22°50′45″	303.08′	598.11′

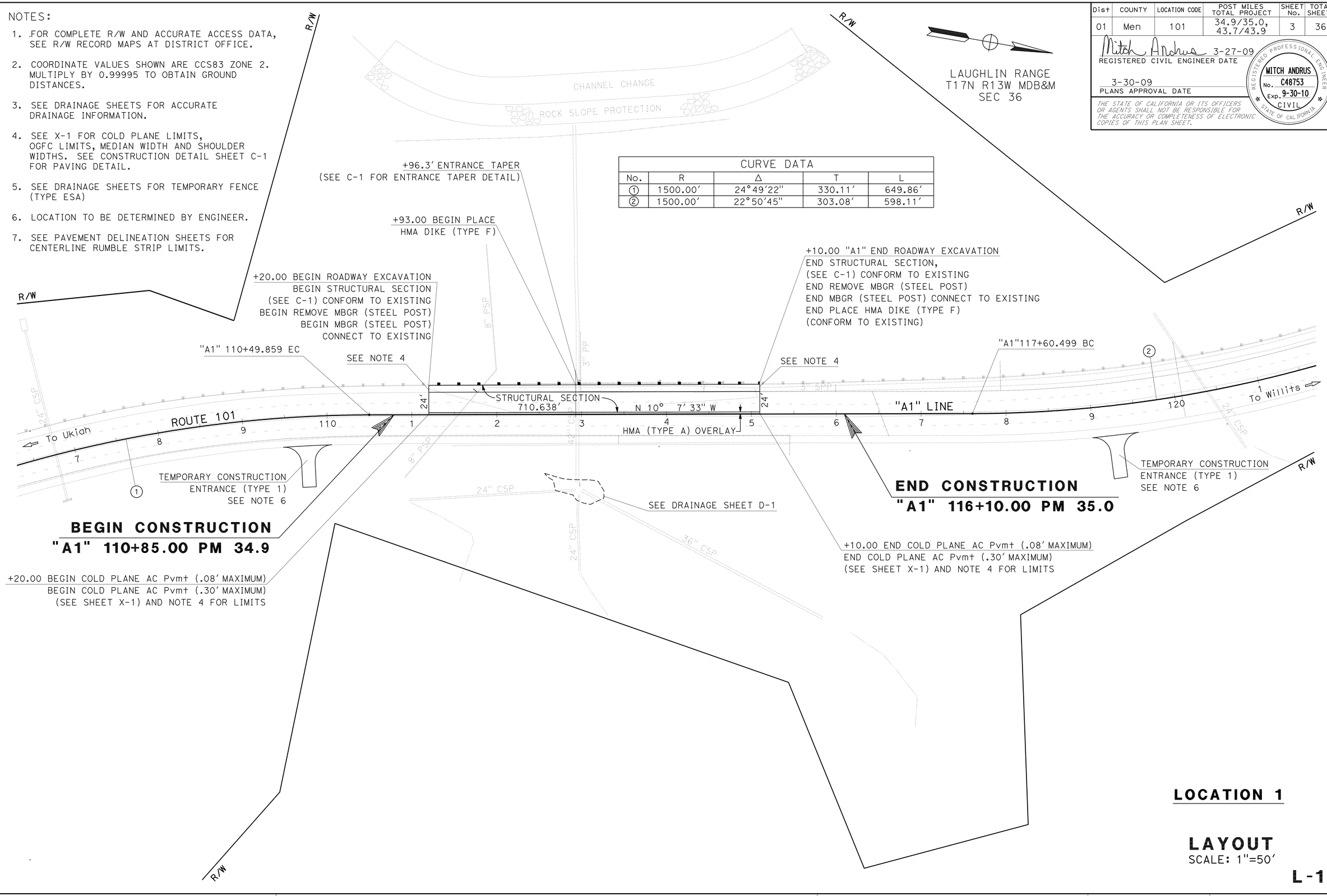

LOCATION 1

LAYOUT
SCALE: 1"=50′

L-1

STATE OF CALIFORNIA - DEPARTMENT OF TRANSPORTATION
NORTH REGION - DIVISION OF DESIGN & ENGINEERING SERVICES
Caltrans

FUNCTIONAL SUPERVISOR: DOUGLAS S. JONES
CALCULATED-DESIGNED BY: MELISSA L. HAURY
CHECKED BY: MITCH ANDRUS
REVISED BY
DATE REVISED

LAST REVISION 03-24-09
DATE PLOTTED => 04-AUG-2009
TIME PLOTTED => 09:34

Dist	COUNTY	LOCATION CODE	POST MILES TOTAL PROJECT	SHEET No.	TOTAL SHEETS
01	Men	101	34.9/35.0, 43.7/43.9	4	36

Mitch Andrus 3-27-09
REGISTERED CIVIL ENGINEER DATE

3-30-09
PLANS APPROVAL DATE

REGISTERED PROFESSIONAL ENGINEER
MITCH ANDRUS
No. C48753
Exp. 9-30-10
CIVIL
STATE OF CALIFORNIA

THE STATE OF CALIFORNIA OR ITS OFFICERS OR AGENTS SHALL NOT BE RESPONSIBLE FOR THE ACCURACY OR COMPLETENESS OF ELECTRONIC COPIES OF THIS PLAN SHEET.

NOTES:

1. FOR COMPLETE R/W AND ACCURATE ACCESS DATA, SEE R/W RECORD MAPS AT DISTRICT OFFICE.
2. COORDINATE VALUES SHOWN ARE CCS83 ZONE 2. MULTIPLY BY 0.99995 TO OBTAIN GROUND DISTANCES.
3. SEE DRAINAGE SHEETS FOR ACCURATE DRAINAGE INFORMATION.
4. SEE DRAINAGE SHEETS FOR TEMPORARY FENCE (TYPE ESA).

LAUGHLIN RANGE & WILLITS
T17N R13W MDB&M
SEC 32

CURVE DATA				
No.	R	Δ	T	L
3	1700.00′	39°36′41″	612.23	1175.29′

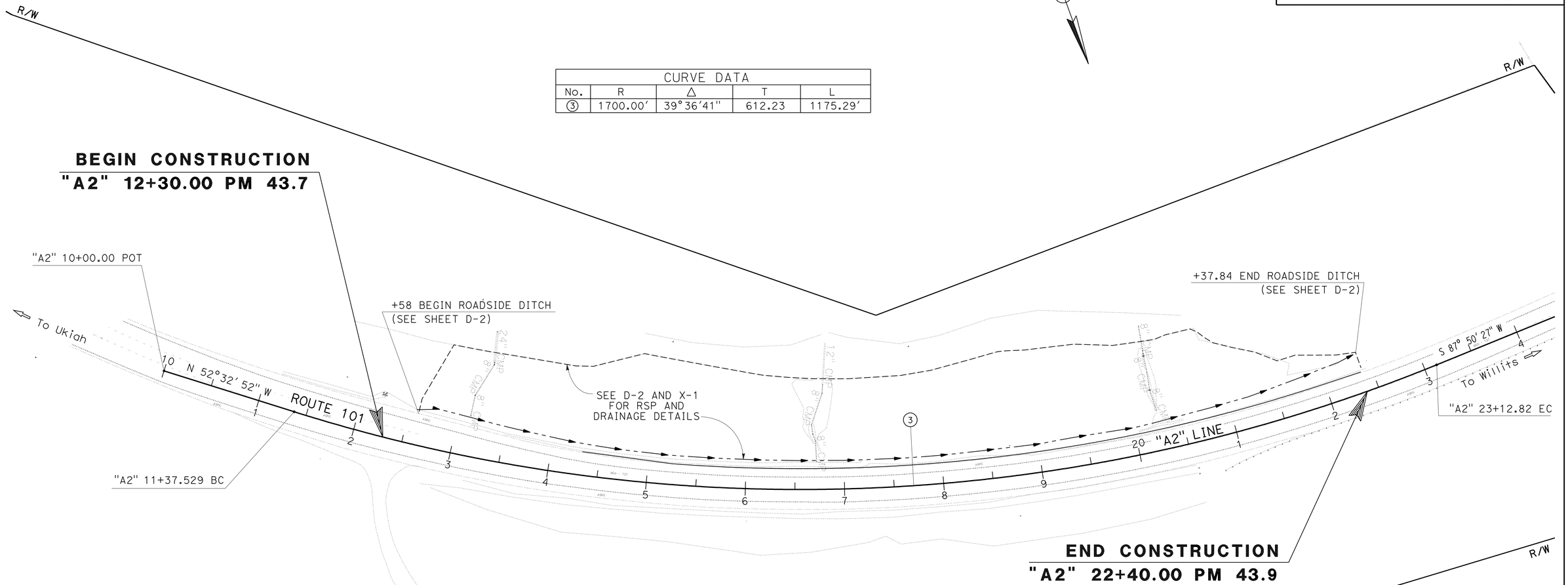

LOCATION 2

LAYOUT
SCALE: 1"=50′

L-2

STATE OF CALIFORNIA - DEPARTMENT OF TRANSPORTATION
NORTH REGION - DIVISION OF DESIGN & ENGINEERING SERVICES

FUNCTIONAL SUPERVISOR: DOUGLAS S. JONES
CALCULATED-DESIGNED BY: MELISSA L. HAURY
CHECKED BY: MITCH ANDRUS
REVISED BY
DATE REVISED

LAST REVISION 03-24-09
DATE PLOTTED => 04-AUG-2009
TIME PLOTTED => 09:35

Dist	COUNTY	ROUTE	POST MILES TOTAL PROJECT	SHEET No.	TOTAL SHEETS
01	Men	101	34.9/35.0, 43.7/43.9	5	36

Mitch Andrus 12-01-08
REGISTERED CIVIL ENGINEER DATE

3-30-09
PLANS APPROVAL DATE

REGISTERED PROFESSIONAL ENGINEER
MITCH ANDRUS
No. C48753
Exp. 9-30-10
CIVIL
STATE OF CALIFORNIA

THE STATE OF CALIFORNIA OR ITS OFFICERS OR AGENTS SHALL NOT BE RESPONSIBLE FOR THE ACCURACY OR COMPLETENESS OF ELECTRONIC COPIES OF THIS PLAN SHEET.

NOTES:

1. SUPERELEVATION AS SHOWN OR AS DIRECTED BY THE ENGINEER.
2. ALL SUPERELEVATION VERTICAL CURVES ARE 100' UNLESS OTHERWISE DENOTED.

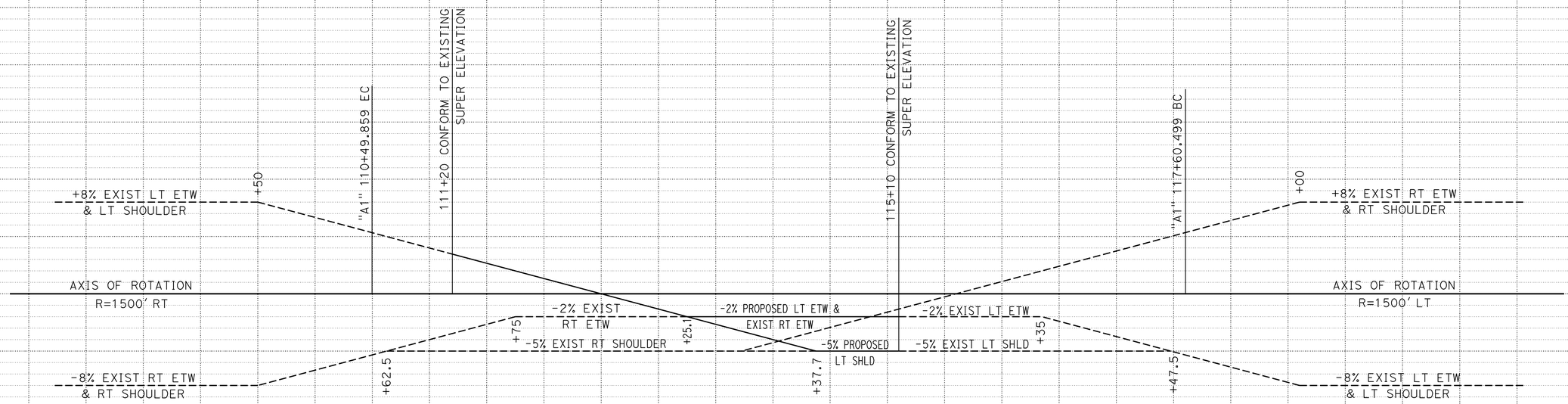

SUPERELEVATION DIAGRAM
"A1" LINE - ROUTE 101
HORIZONTAL 1"= 50'

STATION	8	9	110	1	2	3	4	5	6	7	8	9	120	1	TOTAL
CY Exc															
CY Emb															

LOCATION 1

SUPERELEVATION DIAGRAM
SCALE AS SHOWN

SE-1

MELISSA L. HAURY — CALCULATED-DESIGNED BY
MITCH ANDRUS — CHECKED BY
DOUGLAS S. JONES — FUNCTIONAL SUPERVISOR
REVISED BY — DATE REVISED

STATE OF CALIFORNIA - DEPARTMENT OF TRANSPORTATION
NORTH REGION - DIVISION OF DESIGN & ENGINEERING SERVICES
Caltrans

FILE PATH => \\Sv03s01\cadd\proj3\01\47780_plans\pse\147780fc001.dgn

LAST REVISION 07-15-08 | DATE PLOTTED => 04-AUG-2009 | TIME PLOTTED => 09:35

Dist	COUNTY	LOCATION CODE	POST MILES TOTAL PROJECT	SHEET No.	TOTAL SHEETS
01	Men	101	34.9/35.0, 43.7/43.9	6	36

Mitch Andrus 3-27-09
REGISTERED CIVIL ENGINEER DATE

3-30-09
PLANS APPROVAL DATE

REGISTERED PROFESSIONAL ENGINEER
MITCH ANDRUS
No. C48753
Exp. 9-30-10
CIVIL
STATE OF CALIFORNIA

THE STATE OF CALIFORNIA OR ITS OFFICERS OR AGENTS SHALL NOT BE RESPONSIBLE FOR THE ACCURACY OR COMPLETENESS OF ELECTRONIC COPIES OF THIS PLAN SHEET.

NOTES:
1. ELEVATIONS ARE BASED ON 1929 (ASSUMED) NATIONAL GEODETIC VERTICAL DATUM.
2. SEE X-1 FOR COLD PLANE AND OPEN GRADED LIMITS.

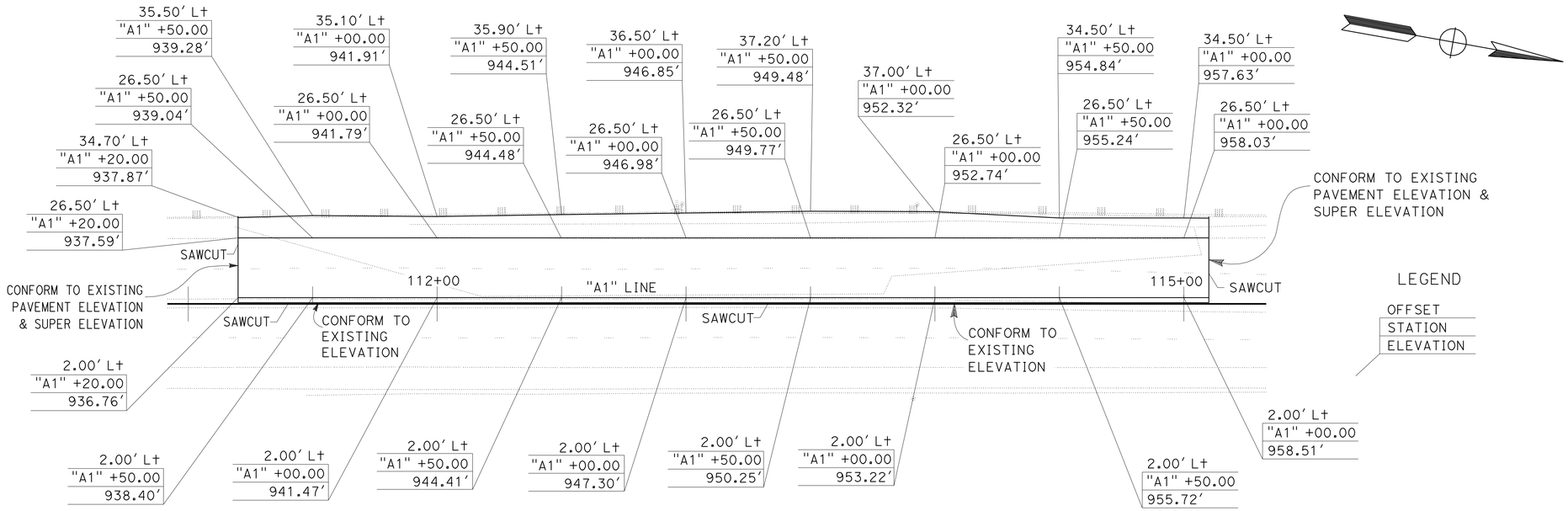

LEGEND
OFFSET
STATION
ELEVATION

PAVING DETAIL
PAVEMENT ELEVATIONS

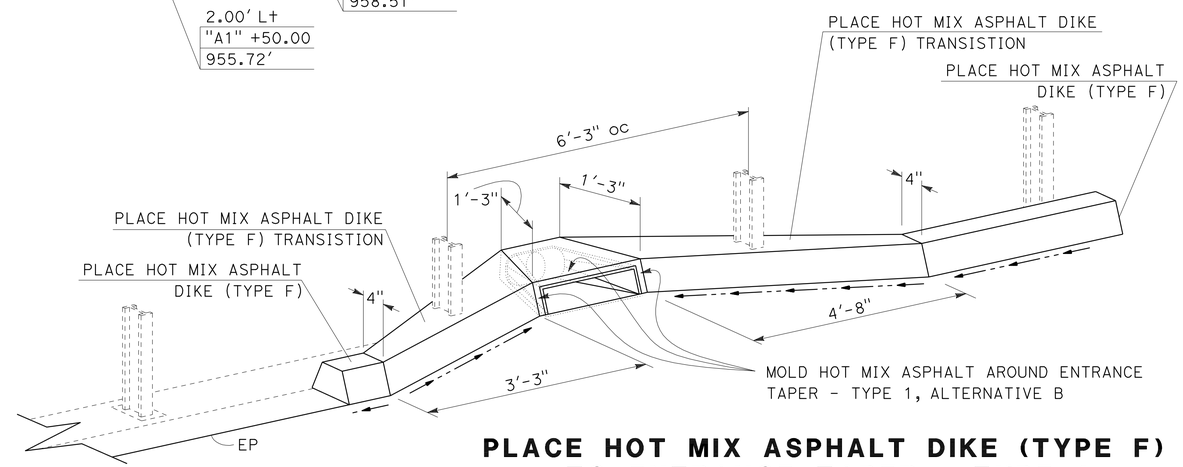

PLACE HOT MIX ASPHALT DIKE (TYPE F) TO ENTRANCE TAPER - TYPE 1 ALTERNATIVE B TRANSISTION
WITH ENTRANCE TAPER - TYPE 1
ALTERNATIVE B
SEE Std PLAN D87A

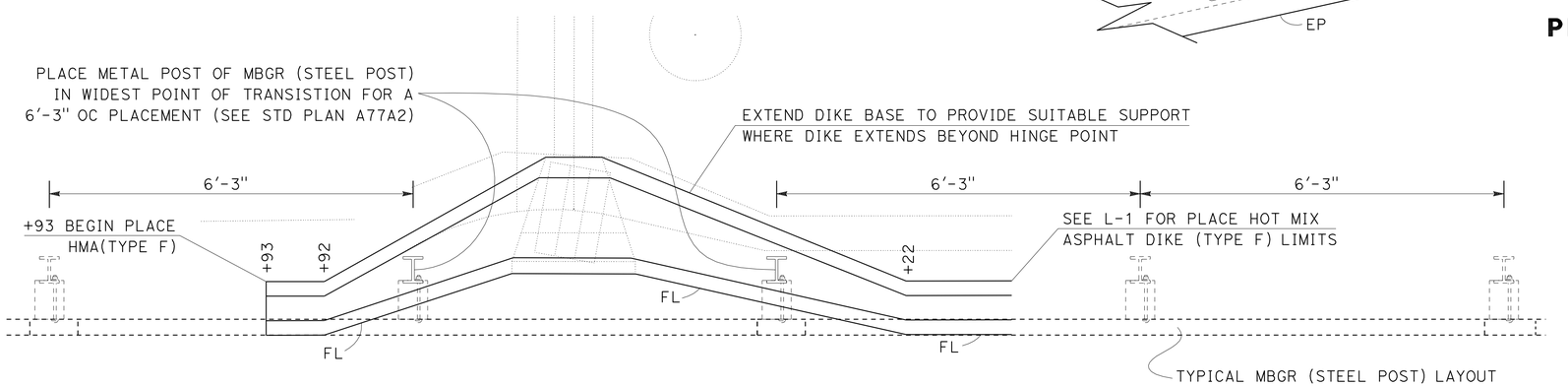

ENTRANCE TAPER DETAIL
"A1" 112+96.30'
*SEE PLACE HOT MIX ASPHALT DIKE (TYPE F) TO ENTRANCE TAPER - TYPE 1, ALTERNATIVE B TRANSITION THIS SHEET

LOCATION 1

CONSTRUCTION DETAILS
NO SCALE

C-1

STATE OF CALIFORNIA - DEPARTMENT OF TRANSPORTATION
NORTH REGION - DIVISION OF DESIGN & ENGINEERING SERVICES
Caltrans

FUNCTIONAL SUPERVISOR: DOUGLAS S. JONES
CALCULATED-DESIGNED BY: MELISSA L. HAURY
CHECKED BY: MITCH ANDRUS
REVISED BY
DATE REVISED

LAST REVISION 03-24-09
DATE PLOTTED => 04-AUG-2009
TIME PLOTTED => 09:35

Dist	COUNTY	LOCATION CODE	POST MILES TOTAL PROJECT	SHEET No.	TOTAL SHEETS
01	Men	101	34.9/35.0, 43.7/43.9	7	36

Mitch Andrus 3-27-09
REGISTERED CIVIL ENGINEER DATE

3-30-09
PLANS APPROVAL DATE

REGISTERED PROFESSIONAL ENGINEER
MITCH ANDRUS
No. C48753
Exp. 9-30-10
CIVIL
STATE OF CALIFORNIA

THE STATE OF CALIFORNIA OR ITS OFFICERS OR AGENTS SHALL NOT BE RESPONSIBLE FOR THE ACCURACY OR COMPLETENESS OF ELECTRONIC COPIES OF THIS PLAN SHEET.

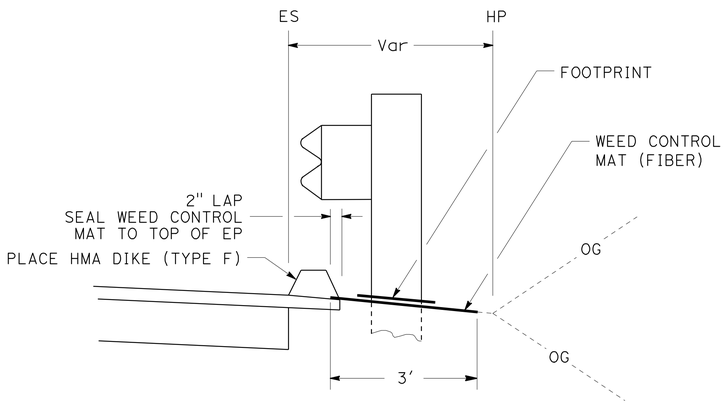

GUARD RAILING WEED CONTROL MAT (FIBER)

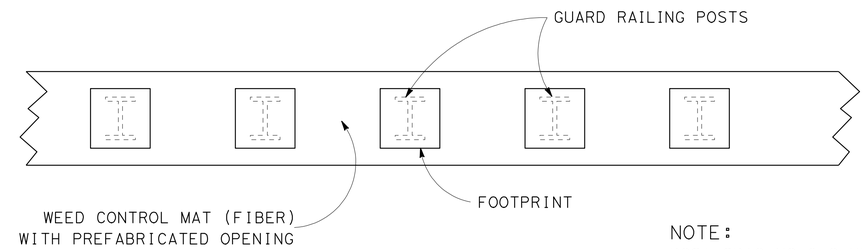

PLAN

NOTE:
POST SPACING & OTHER DIMENSIONS TO BE VERIFIED IN THE FIELD BY THE CONTRACTOR

GUARD RAILING WEED CONTROL MAT (FIBER)

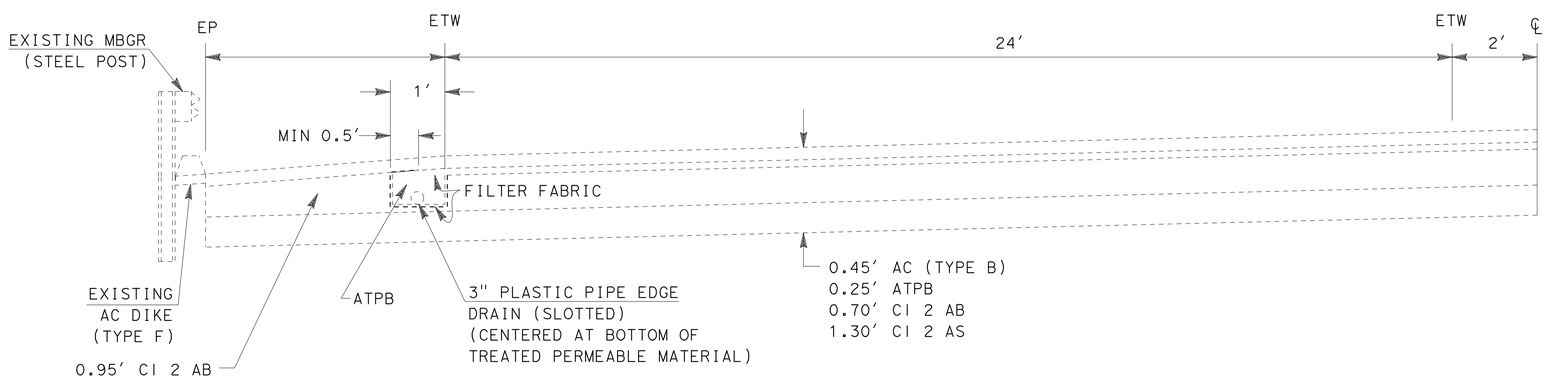

EXISTING EDGE DRAIN AS-BUILTS*

SYSTEM 4 — b

*CONTRACT PLAN No. 01-155904 1991
STANDARD PLANS - JANUARY, 1988

LOCATION 1

CONSTRUCTION DETAILS

NO SCALE

C-2

STATE OF CALIFORNIA - DEPARTMENT OF TRANSPORTATION
NORTH REGION - DIVISION OF DESIGN & ENGINEERING SERVICES
Caltrans

FUNCTIONAL SUPERVISOR: DOUGLAS S. JONES
CALCULATED-DESIGNED BY: MELISSA L. HAURY
CHECKED BY: MITCH ANDRUS
REVISED BY
DATE REVISED

LAST REVISION 03-25-09
DATE PLOTTED => 04-AUG-2009
TIME PLOTTED => 09:35

Dist	COUNTY	LOCATION CODE	POST MILES TOTAL PROJECT	SHEET No.	TOTAL SHEETS
01	Men	101	34.9/35.0, 43.7/43.9	8	36

Mitch Andrus 12-01-08
REGISTERED CIVIL ENGINEER DATE

3-30-09
PLANS APPROVAL DATE

REGISTERED PROFESSIONAL ENGINEER
MITCH ANDRUS
No. C48753
Exp. 9-30-10
CIVIL
STATE OF CALIFORNIA

THE STATE OF CALIFORNIA OR ITS OFFICERS OR AGENTS SHALL NOT BE RESPONSIBLE FOR THE ACCURACY OR COMPLETENESS OF ELECTRONIC COPIES OF THIS PLAN SHEET.

NOTES:

1. CENTERLINE RUMBLE STRIP (GROUND-IN INDENTATIONS) PLACED FROM STA "A2" 93+30 TO "A2" 137+70 WILL CONTINUE THROUGH LOCATIONS WITH PRIVATE DRIVEWAY UNLESS OTHERWISE NOTED ON THE PLANS.
2. CENTERLINE RUMBLE STRIP (GROUND-IN INDENTATIONS) MUST BE CONSTRUCTED PRIOR TO INSTALLING FINAL TRAFFIC STRIPES.

LEGEND

⇨ DIRECTION OF TRAVEL

▮ TYPE D TWO-WAY YELLOW RETROREFLECTIVE, PAVEMENT MARKER

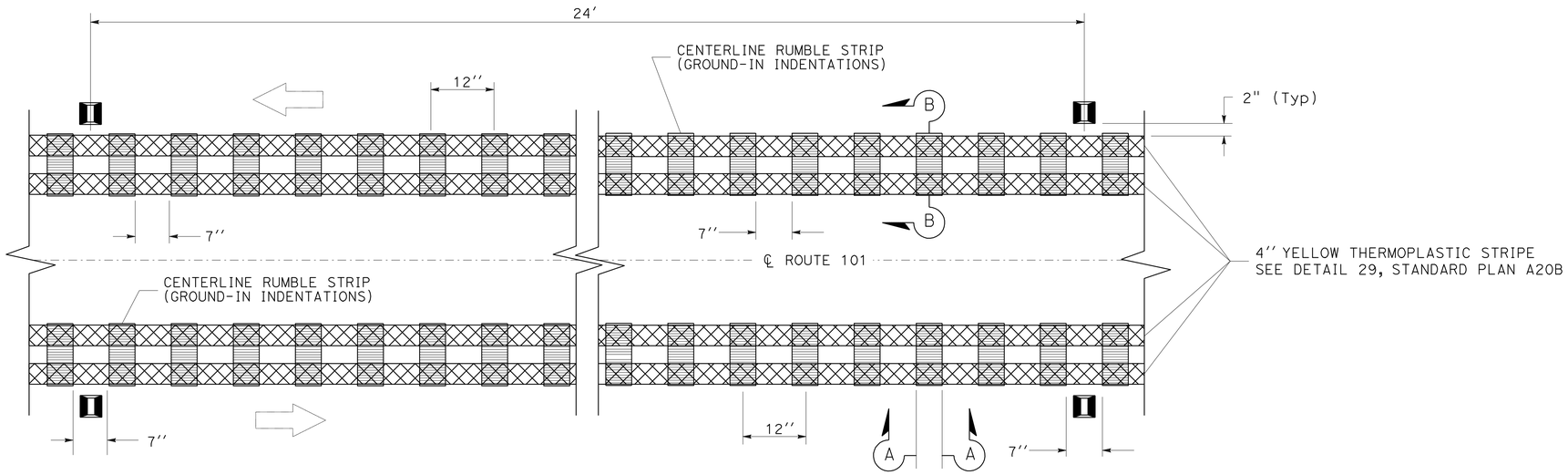

PLAN

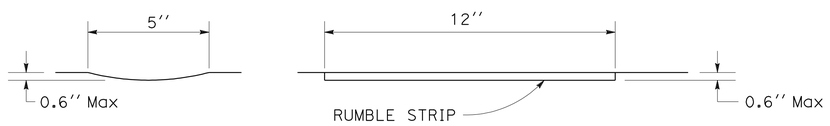

SECTION A-A SECTION B-B

ELEVATION

CENTERLINE RUMBLE STRIP (GROUND-IN INDENTATIONS)

LOCATION 1

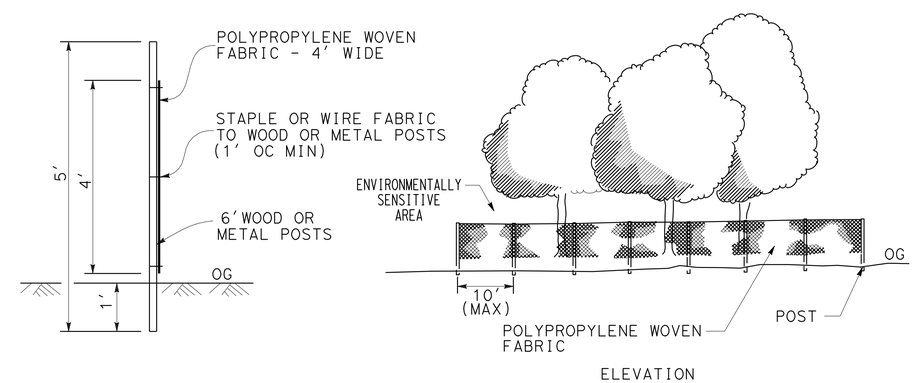

TEMPORARY FENCE (TYPE ESA)

NO SCALE
FOR ENVIRONMENTALLY SENSITIVE AREAS

CONSTRUCTION DETAILS

NO SCALE

C-3

STATE OF CALIFORNIA - DEPARTMENT OF TRANSPORTATION
Caltrans
NORTH REGION - DIVISION OF DESIGN & ENGINEERING SERVICES

FUNCTIONAL SUPERVISOR: DOUGLAS S. JONES
CALCULATED-DESIGNED BY: MELISSA L. HAURY
CHECKED BY: MITCH ANDRUS
REVISED BY
DATE REVISED

LAST REVISION 11-13-08
DATE PLOTTED => 04-AUG-2009
TIME PLOTTED => 09:35

Dist	COUNTY	LOCATION CODE	POST MILES TOTAL PROJECT	SHEET No.	TOTAL SHEETS
01	Men	101	34.9/35.0, 43.7/43.9	9	36

Mitch Andrus 12-01-08
REGISTERED CIVIL ENGINEER DATE

3-30-09
PLANS APPROVAL DATE

REGISTERED PROFESSIONAL ENGINEER
MITCH ANDRUS
No. C48753
Exp. 9-30-10
CIVIL
STATE OF CALIFORNIA

THE STATE OF CALIFORNIA OR ITS OFFICERS OR AGENTS SHALL NOT BE RESPONSIBLE FOR THE ACCURACY OR COMPLETENESS OF ELECTRONIC COPIES OF THIS PLAN SHEET.

NOTES:

1. THIS PLAN ACCURATE FOR DRAINAGE WORK ONLY.
2. CONTOURS SHOWN ARE ORIGINAL GROUND.
3. SEE SHEET DP-1 FOR DRAINAGE PROFILES OF SYSTEMS 1 & 2.
4. SEE SHEET DP-2 FOR DRAINAGE PROFILES OF SYSTEM 3.
5. SEE SHEET DP-3 FOR DRAINAGE PROFILES OF SYSTEM 4.
6. FOR PLACEMENT OF RSP, FOLLOW EXISTING 930' CONTOUR
7. FOR COMPLETE R/W AND ACCURATE ACCESS DATA, SEE R/W RECORD MAPS AT DISTRICT OFFICE.

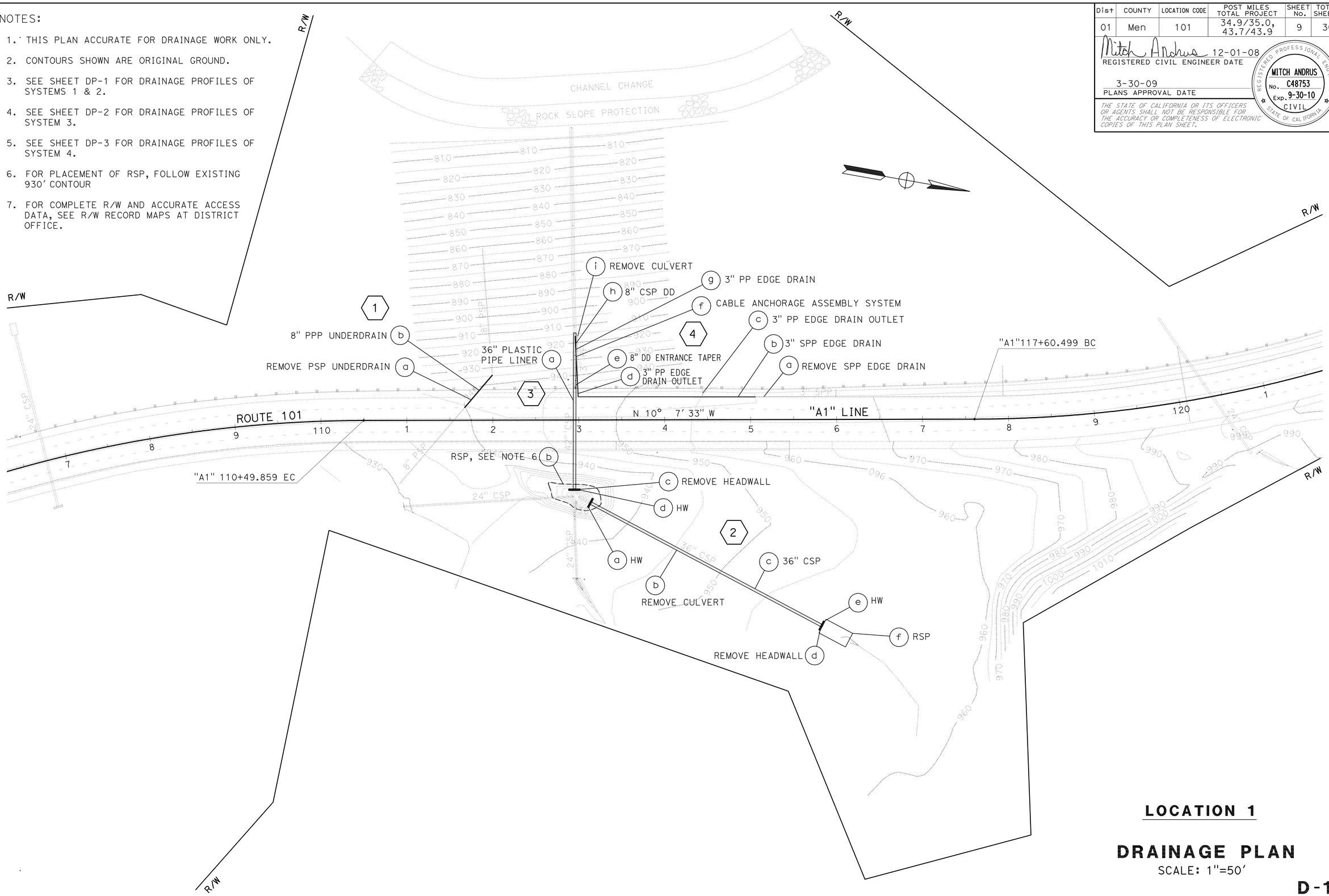

LOCATION 1

DRAINAGE PLAN

SCALE: 1"=50'

D-1

STATE OF CALIFORNIA - DEPARTMENT OF TRANSPORTATION
Caltrans NORTH REGION - DIVISION OF DESIGN & ENGINEERING SERVICES

FUNCTIONAL SUPERVISOR: DOUGLAS S. JONES
CALCULATED-DESIGNED BY: MELISSA L. HAURY
CHECKED BY: MITCH ANDRUS
REVISED BY / DATE REVISED

LAST REVISION 11-13-08 | DATE PLOTTED => 04-AUG-2009 | TIME PLOTTED => 09:35

Dist	COUNTY	LOCATION CODE	POST MILES TOTAL PROJECT	SHEET No.	TOTAL SHEETS
01	Men	101	34.9/35.0, 43.7/43.9	10	36

Mitch Andrus 4-27-09
REGISTERED CIVIL ENGINEER DATE

3-30-09
PLANS APPROVAL DATE

REGISTERED PROFESSIONAL ENGINEER
MITCH ANDRUS
No. C48753
Exp. 9-30-10
CIVIL
STATE OF CALIFORNIA

THE STATE OF CALIFORNIA OR ITS OFFICERS OR AGENTS SHALL NOT BE RESPONSIBLE FOR THE ACCURACY OR COMPLETENESS OF ELECTRONIC COPIES OF THIS PLAN SHEET.

NOTES:

1. THIS PLAN ACCURATE FOR DRAINAGE ONLY.
2. CONTOURS SHOWN ARE ORIGINAL GROUND.
3. SEE SHEET DP-4 FOR DRAINAGE PROFILES OF SYSTEM 5.
4. SEE SHEET DP-4 FOR DRAINAGE PROFILES OF SYSTEM 6.
5. SEE SHEET DP-5 FOR DRAINAGE PROFILES OF SYSTEM 7.
6. ALL CABLE ANCHORAGE SYSTEMS (STD PLAN D87C) CONNECT TO CORRUGATED METAL PIPE DOWNDRAIN ANCHOR ASSEMBLIES. (SEE STD PLANS D87A)
7. FOR COMPLETE R/W AND ACCURATE ACCESS DATA, SEE R/W RECORD MAPS AT DISTRICT OFFICE.

LEGEND

TEMPORARY FENCE (TYPE ESA) — TFESA

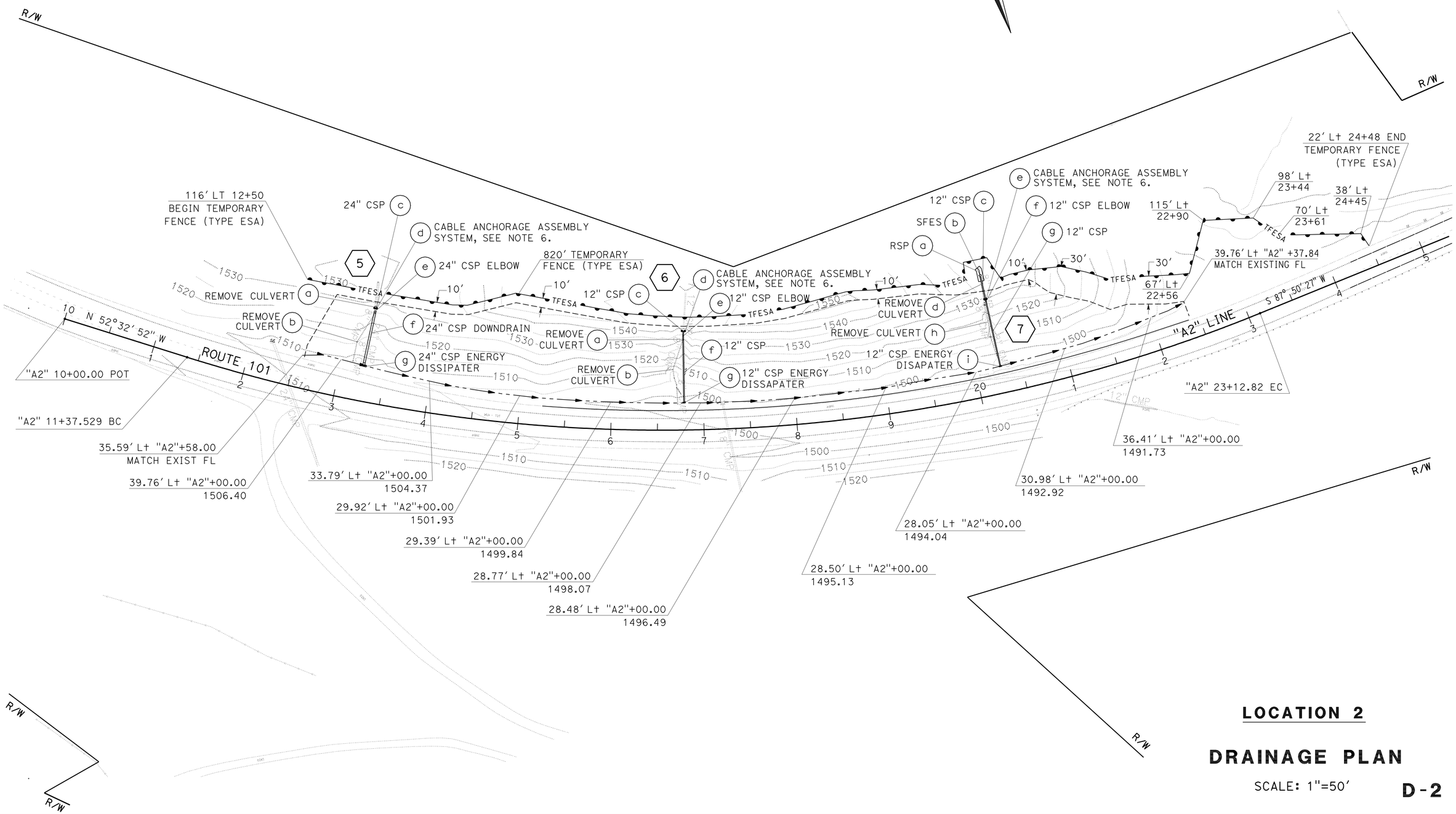

LOCATION 2

DRAINAGE PLAN

SCALE: 1"=50'

D-2

STATE OF CALIFORNIA - DEPARTMENT OF TRANSPORTATION
NORTH REGION - DIVISION OF DESIGN & ENGINEERING SERVICES
Caltrans

FUNCTIONAL SUPERVISOR: DOUGLAS S. JONES
CALCULATED-DESIGNED BY: MELISSA L. HAURY
CHECKED BY: MITCH ANDRUS
REVISED BY
DATE REVISED

LAST REVISION 04-21-09
DATE PLOTTED => 04-AUG-2009
TIME PLOTTED => 09:36

Dist	COUNTY	ROUTE	POST MILES TOTAL PROJECT	SHEET No.	TOTAL SHEETS
01	Men	101	34.9/35.0, 43.7/43.9	11	36

Mitch Andrus 3-27-09
REGISTERED CIVIL ENGINEER DATE

3-30-09
PLANS APPROVAL DATE

REGISTERED PROFESSIONAL ENGINEER MITCH ANDRUS No. C48753 Exp. 09-30-10 CIVIL STATE OF CALIFORNIA

THE STATE OF CALIFORNIA OR ITS OFFICERS OR AGENTS SHALL NOT BE RESPONSIBLE FOR THE ACCURACY OR COMPLETENESS OF ELECTRONIC COPIES OF THIS PLAN SHEET.

NOTE:
1. SEE SHEET D-1 FOR PLAN VIEW OF DRAINAGE SYSTEMS 1 AND 2.

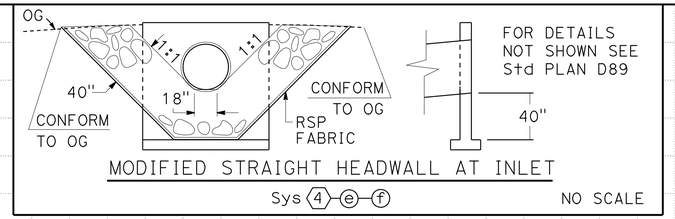

MODIFIED STRAIGHT HEADWALL AT INLET
Sys 4 e f NO SCALE

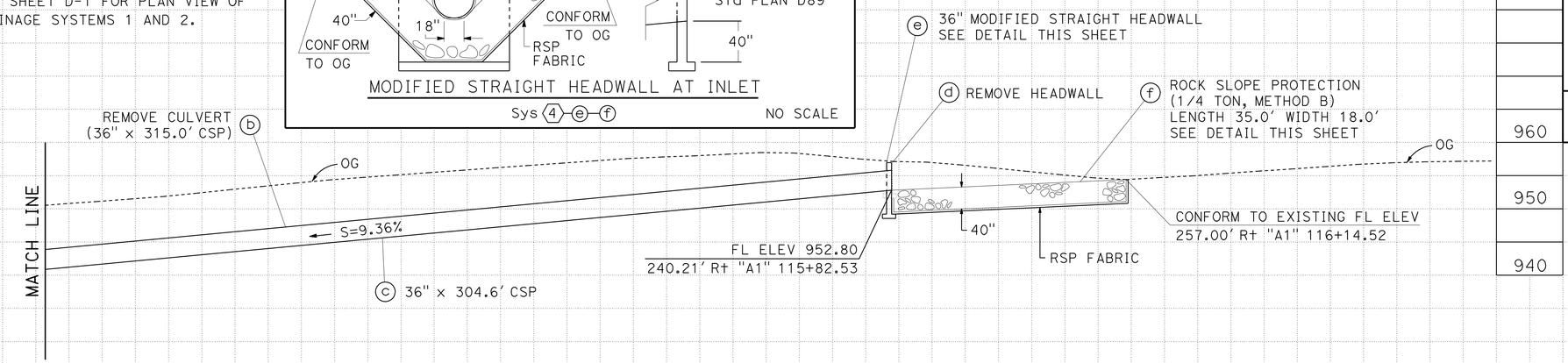

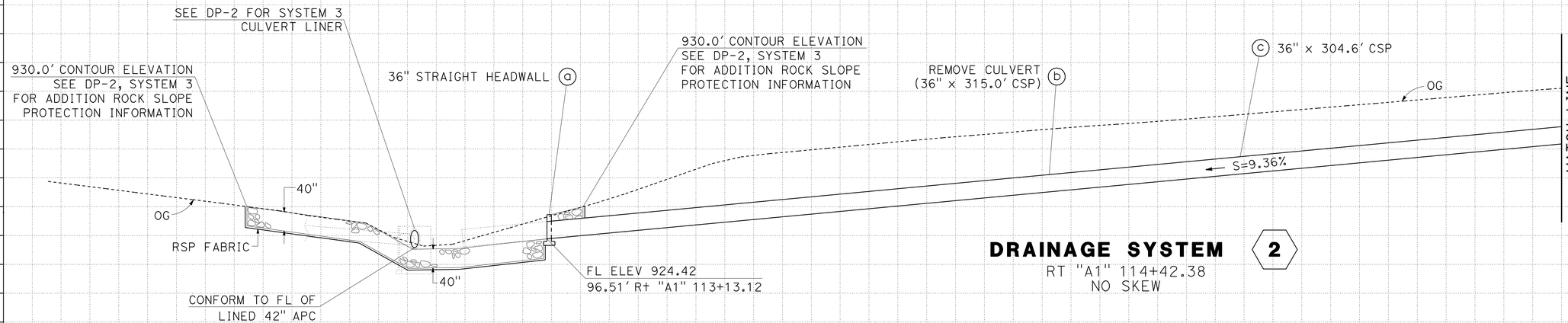

DRAINAGE SYSTEM 2
RT "A1" 114+42.38
NO SKEW

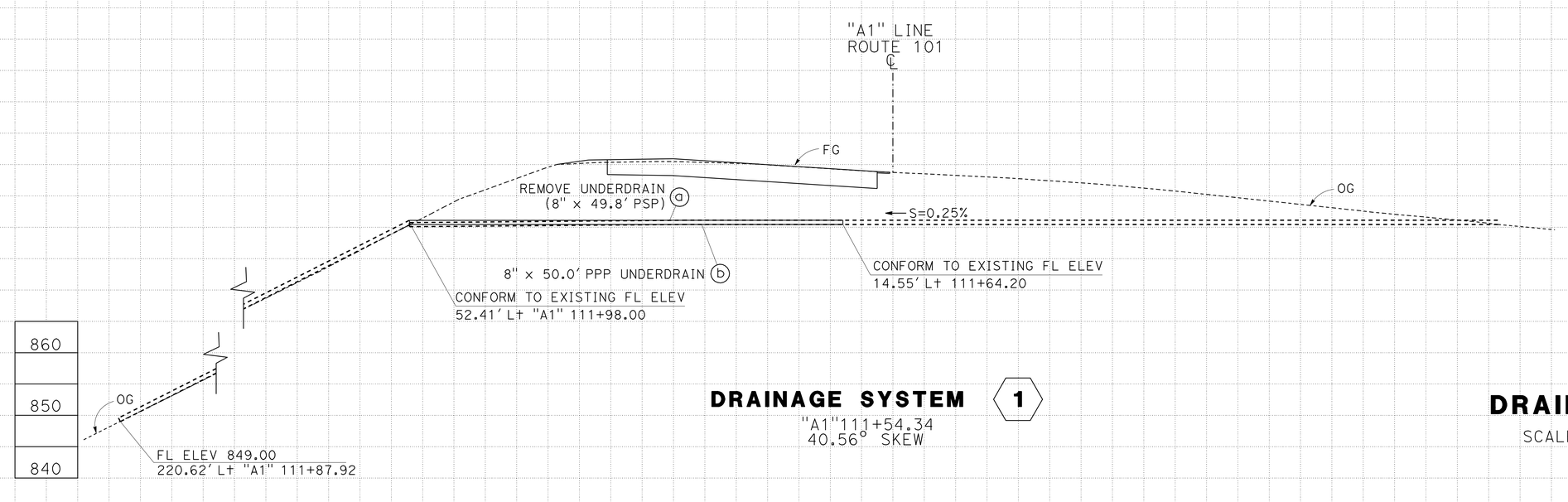

DRAINAGE SYSTEM 1
"A1"111+54.34
40.56° SKEW

LOCATION 1

DRAINAGE PROFILES
SCALE: HORIZONAL 1"=10'
VERTICAL 1"=10'

DP-1

STATE OF CALIFORNIA - DEPARTMENT OF TRANSPORTATION
NORTH REGION - DIVISION OF DESIGN & ENGINEERING SERVICES
Caltrans

FUNCTIONAL SUPERVISOR: DOUGLAS S. JONES
CALCULATED-DESIGNED BY: MELISSA L. HAURY
CHECKED BY: MITCH ANDRUS
REVISED BY
DATE REVISED

LAST REVISION 03-26-09
DATE PLOTTED => 04-AUG-2009
TIME PLOTTED => 09:36

NOTE:

1. SEE SHEET D-1 FOR PLAN VIEW OF DRAINAGE SYSTEM 3.

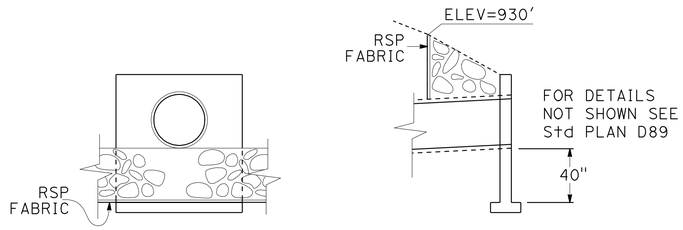

MODIFIED STRAIGHT HEADWALL AT INLET

Sys 3-b-d

NO SCALE

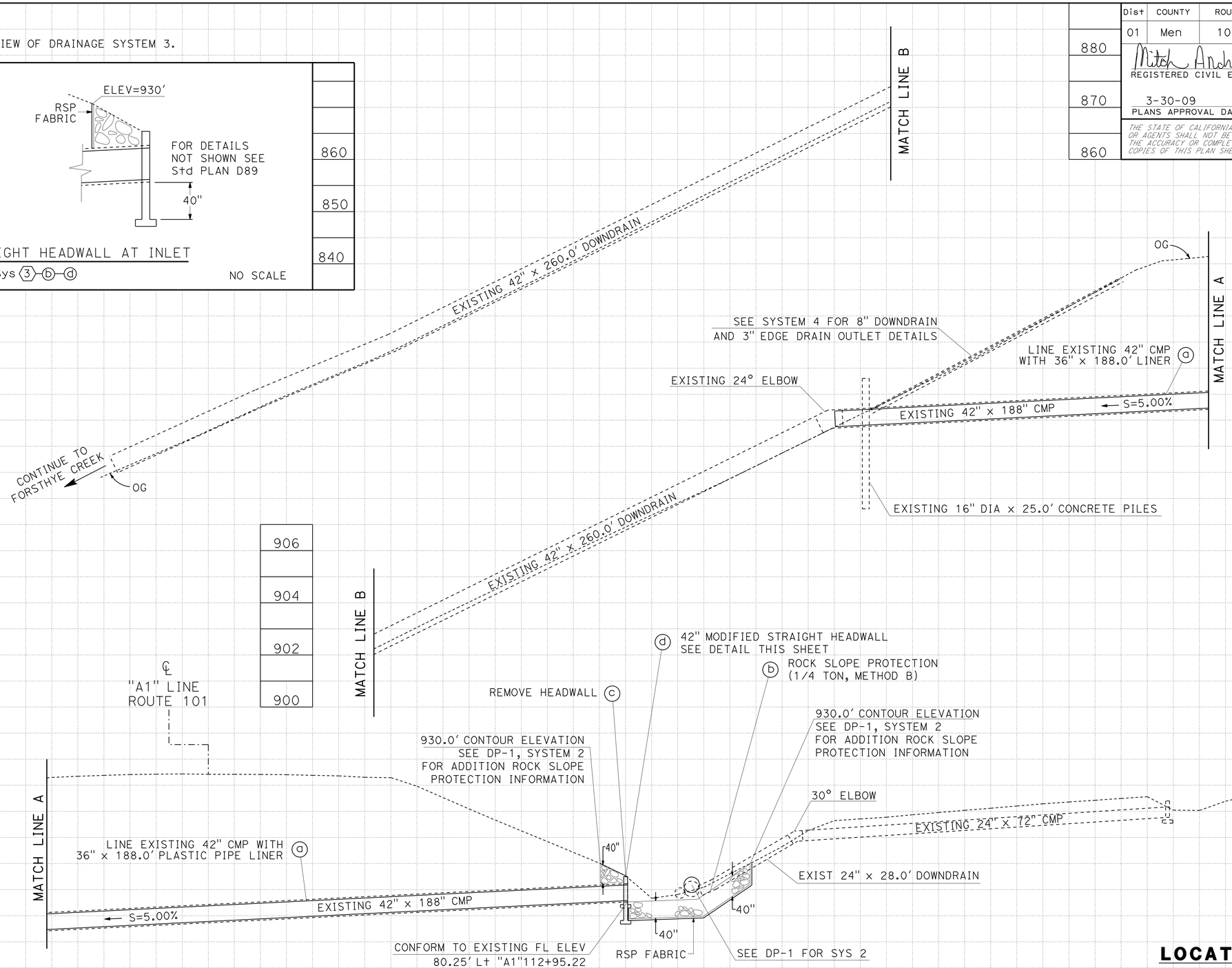

DRAINAGE SYSTEM 3

"A1" 112+95.22

NO SKEW

LOCATION 1

DRAINAGE PROFILES

SCALE: HORIZONAL 1"=10'

VERTICAL 1"=10'

DP-2

Dist	COUNTY	ROUTE	POST MILES TOTAL PROJECT	SHEET No.	TOTAL SHEETS
01	Men	101	34.9/35.0, 43.7/43.9	12	36

Mitch Andrus 3-27-09
REGISTERED CIVIL ENGINEER DATE

3-30-09
PLANS APPROVAL DATE

REGISTERED PROFESSIONAL ENGINEER MITCH ANDRUS No. C48753 Exp. 09-30-10 CIVIL STATE OF CALIFORNIA

THE STATE OF CALIFORNIA OR ITS OFFICERS OR AGENTS SHALL NOT BE RESPONSIBLE FOR THE ACCURACY OR COMPLETENESS OF ELECTRONIC COPIES OF THIS PLAN SHEET.

REVISED BY | DATE REVISED

MELISSA L. HAURY | MITCH ANDRUS

CALCULATED-DESIGNED BY | CHECKED BY

FUNCTIONAL SUPERVISOR: DOUGLAS S. JONES

STATE OF CALIFORNIA - DEPARTMENT OF TRANSPORTATION

NORTH REGION - DIVISION OF DESIGN & ENGINEERING SERVICES

Caltrans

LAST REVISION | DATE PLOTTED => 04-AUG-2009 | TIME PLOTTED => 09:36

03-26-09

Dist	COUNTY	ROUTE	POST MILES TOTAL PROJECT	SHEET No.	TOTAL SHEETS
01	Men	101	34.9/35.0, 43.7/43.9	13	36

Mitch Andrus 12-01-08
REGISTERED CIVIL ENGINEER DATE

3-30-09
PLANS APPROVAL DATE

REGISTERED PROFESSIONAL ENGINEER
MITCH ANDRUS
No. C48753
Exp. 09-30-10
CIVIL
STATE OF CALIFORNIA

THE STATE OF CALIFORNIA OR ITS OFFICERS OR AGENTS SHALL NOT BE RESPONSIBLE FOR THE ACCURACY OR COMPLETENESS OF ELECTRONIC COPIES OF THIS PLAN SHEET.

NOTES:

1. SEE SHEET D-1 FOR PLAN VIEW OF DRAINAGE SYSTEM 4.
2. FOR ADDITIONAL INFORMATION FOR (e) AND (h) DOWNDRAIN CONNECTION, SEE C-1 ENTRANCE TAPER DETAILS.
3. SEE C-2 FOR EXISTING EDGE DRAIN AS-BUILTS.

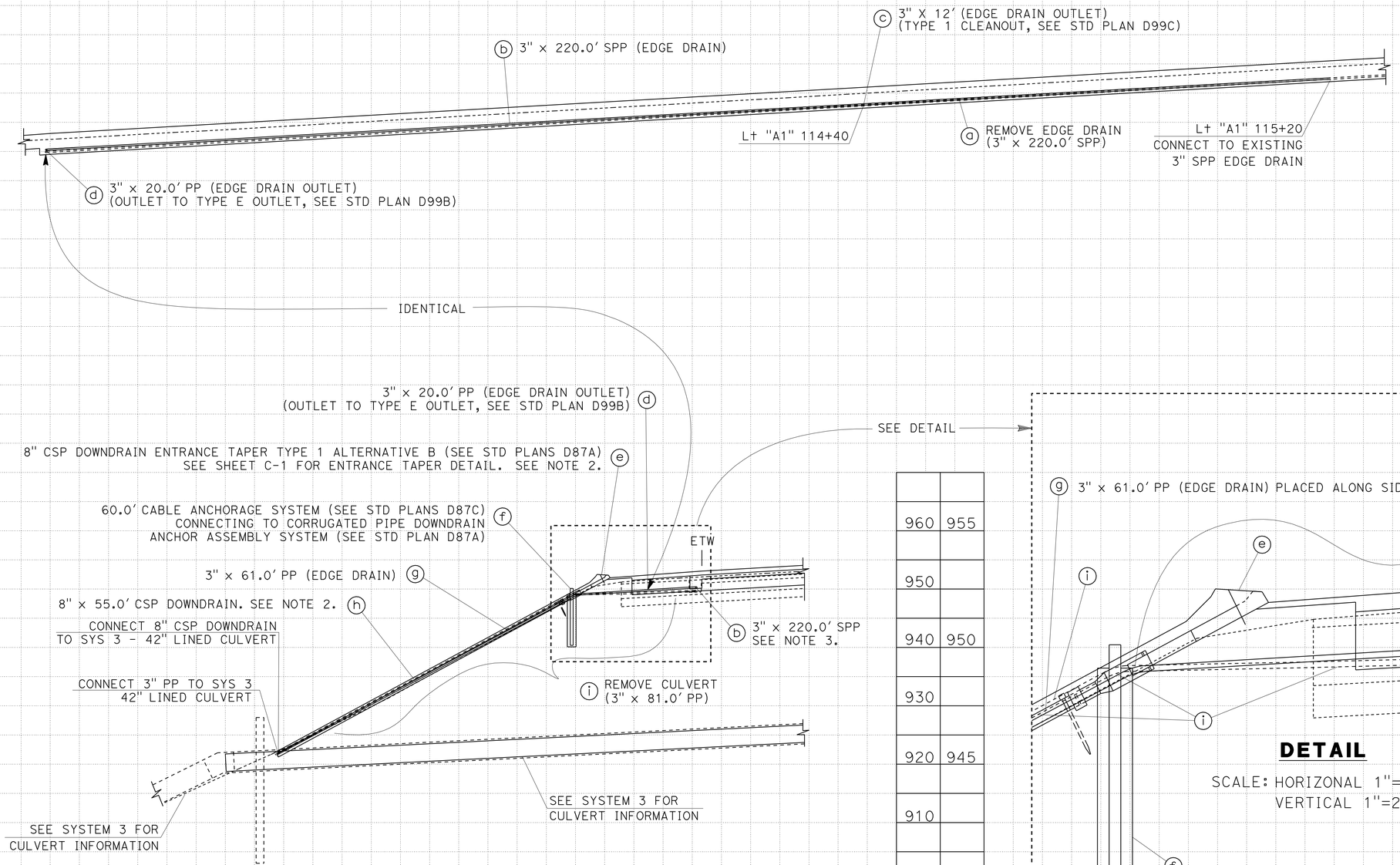

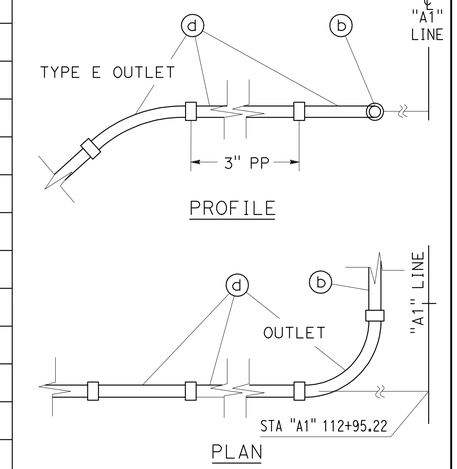

DRAINAGE SYSTEM (4)

STA "A1" 112+95.22

SCALE: HORIZONAL 1"=10'
VERTICAL 1"=10'

LOCATION 1

DRAINAGE PROFILES

SCALE AS SHOWN

DP-3

STATE OF CALIFORNIA - DEPARTMENT OF TRANSPORTATION
NORTH REGION - DIVISION OF DESIGN & ENGINEERING SERVICES
Caltrans

FUNCTIONAL SUPERVISOR: DOUGLAS S. JONES
CALCULATED-DESIGNED BY: MELISSA L. HAURY
CHECKED BY: MITCH ANDRUS
REVISED BY
DATE REVISED

LAST REVISION | DATE PLOTTED => 04-AUG-2009
07-15-08 | TIME PLOTTED => 09:36

Dist	COUNTY	ROUTE	POST MILES TOTAL PROJECT	SHEET No.	TOTAL SHEETS
01	Men	101	34.9/35.0, 43.7/43.9	14	36

Mitch Andrus 3-27-09
REGISTERED CIVIL ENGINEER DATE

3-30-09
PLANS APPROVAL DATE

REGISTERED PROFESSIONAL ENGINEER
MITCH ANDRUS
No. C48753
Exp. 09-30-10
CIVIL
STATE OF CALIFORNIA

THE STATE OF CALIFORNIA OR ITS OFFICERS OR AGENTS SHALL NOT BE RESPONSIBLE FOR THE ACCURACY OR COMPLETENESS OF ELECTRONIC COPIES OF THIS PLAN SHEET.

NOTES:

1. SEE SHEET D-2 FOR PLAN VIEW OF DRAINAGE SYSTEMS 5 AND 6.

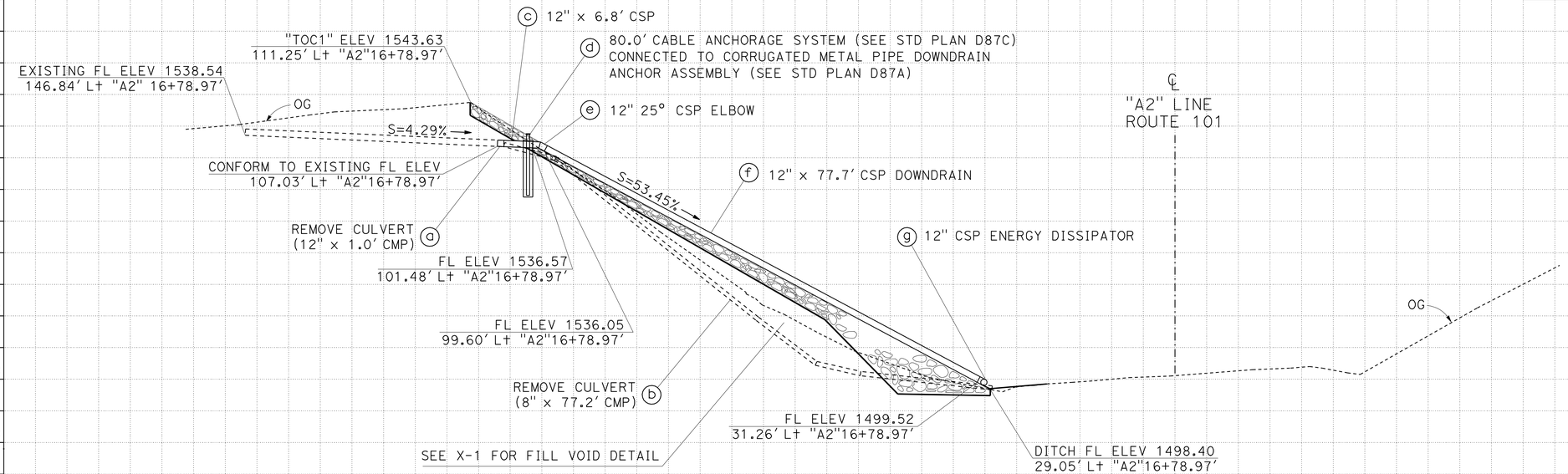

DRAINAGE SYSTEM 6

STA "A2" 16+78.97
NO SKEW

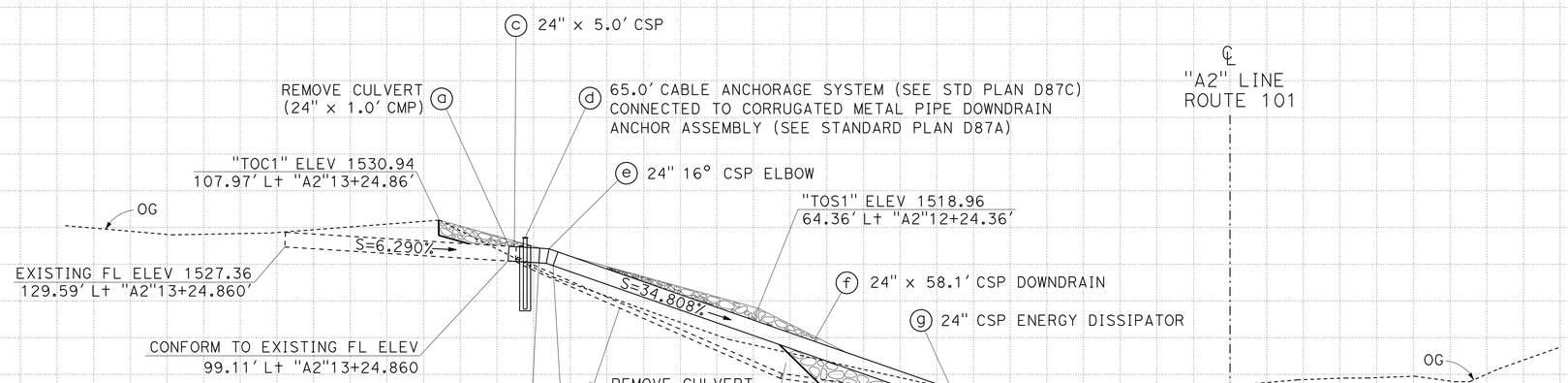

DRAINAGE SYSTEM 5

STA "A2" 13+24.86
NO SKEW

LOCATION 2

DRAINAGE PROFILES

SCALE: HORIZONAL 1"=10'
VERTICAL 1"=10'

DP-4

STATE OF CALIFORNIA - DEPARTMENT OF TRANSPORTATION
NORTH REGION - DIVISION OF DESIGN & ENGINEERING SERVICES
Caltrans

FUNCTIONAL SUPERVISOR: DOUGLAS S. JONES
CALCULATED-DESIGNED BY: MELISSA L. HAURY
CHECKED BY: MITCH ANDRUS
REVISED BY / DATE REVISED

LAST REVISION | DATE PLOTTED => 04-AUG-2009
03-26-09 | TIME PLOTTED => 09:36

Dist	COUNTY	ROUTE	POST MILES TOTAL PROJECT	SHEET No.	TOTAL SHEETS
01	Men	101	34.9/35.0, 43.7/43.9	15	36

Mitch Andrus 3-27-09
REGISTERED CIVIL ENGINEER DATE

3-30-09
PLANS APPROVAL DATE

REGISTERED PROFESSIONAL ENGINEER
MITCH ANDRUS
No. C48753
Exp. 09-30-10
CIVIL
STATE OF CALIFORNIA

THE STATE OF CALIFORNIA OR ITS OFFICERS OR AGENTS SHALL NOT BE RESPONSIBLE FOR THE ACCURACY OR COMPLETENESS OF ELECTRONIC COPIES OF THIS PLAN SHEET.

NOTES:

1. SEE SHEET D-2 FOR PLAN VIEW OF DRAINAGE SYSTEM 7.

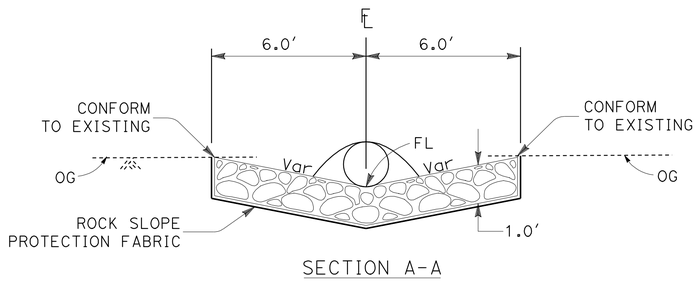

SECTION A-A

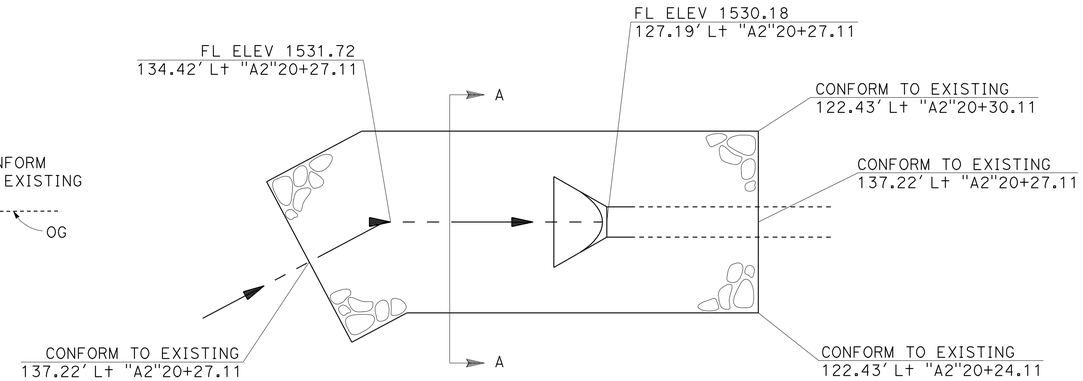

7 — a

ROCK SLOPE PROTECTION "V" DITCH FOR FLOW INTO STEEL FES

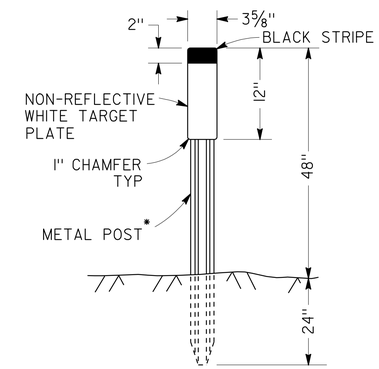

* SEE STANDARD PLAN A73B FOR METAL POST DETAILS

MARKER (CULVERT)

SEE SHEET Q-1 FOR CULVERT MARKER LOCATIONS

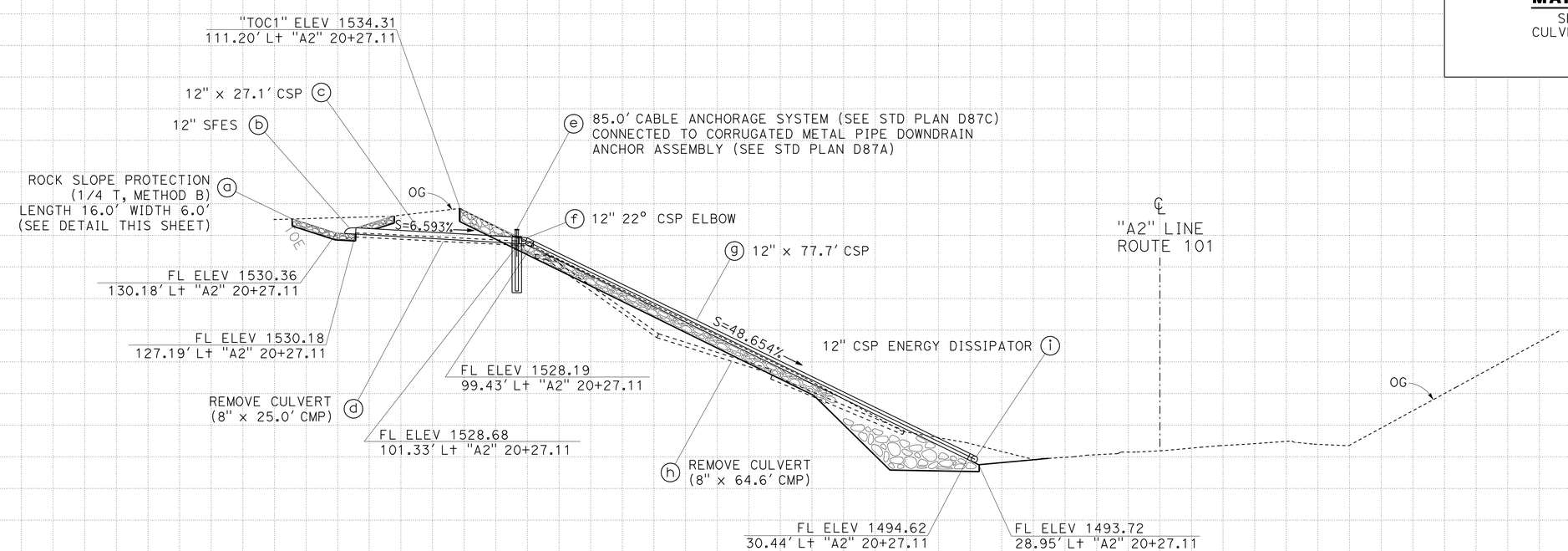

LOCATION 2

DRAINAGE SYSTEM 7

STA "A2" 20+27.11

DRAINAGE PROFILES

SCALE: HORIZONAL 1"=10′
VERTICAL 1"=10′

DP-5

STATE OF CALIFORNIA - DEPARTMENT OF TRANSPORTATION
NORTH REGION - DIVISION OF DESIGN & ENGINEERING SERVICES
Caltrans

FUNCTIONAL SUPERVISOR: DOUGLAS S. JONES
CALCULATED-DESIGNED BY: MELISSA L. HAURY
CHECKED BY: MITCH ANDRUS
REVISED BY / DATE REVISED

LAST REVISION 03-26-09 | DATE PLOTTED => 04-AUG-2009 | TIME PLOTTED => 09:36

Dist	COUNTY	ROUTE	POST MILES TOTAL PROJECT	SHEET No.	TOTAL SHEETS
01	Men	101	34.9/35.0, 43.7/43.9	16	36

Mitch Andrus 3-27-09
REGISTERED CIVIL ENGINEER DATE

3-30-09
PLANS APPROVAL DATE

REGISTERED PROFESSIONAL ENGINEER
MITCH ANDRUS
No. C48753
Exp. 9-30-10
CIVIL
STATE OF CALIFORNIA

THE STATE OF CALIFORNIA OR ITS OFFICERS OR AGENTS SHALL NOT BE RESPONSIBLE FOR THE ACCURACY OR COMPLETENESS OF ELECTRONIC COPIES OF THIS PLAN SHEET.

	DRAINAGE PLAN SHEET NO.	DRAINAGE PROFILE SHEET NO.	DRAINAGE SYSTEM NO.	DRAINAGE UNIT	REMOVE ITEMS (N) REMOVE UNDERDRAIN	REMOVE CULVERT	(N) REMOVE EDGE DRAIN	REMOVE HEADWALL	MISC ITEMS 8" PERFORATED PLASTIC PIPE UNDERDRAIN	3" SLOTTED PLASTIC PIPE (EDGE DRAIN)	3" PLASTIC PIPE (EDGE DRAIN)	3" PLASTIC PIPE (EDGE DRAIN OUTLET)	8" DOWNDRAIN ENTRANCE TAPER	CABLE ANCHORAGE ASSEMBLY SYSTEM	PLASTIC PIPELINER (36" I.D.) **	MINOR CONCRETE MINOR CONCRETE (MINOR STRUCTURE)	(N*) CLASS 4 CONCRETE	CSP 8" CORRUGATED STEEL PIPE DOWNDRAIN (.079" THICK)	12" CORRUGATED STEEL PIPE DOWNDRAIN (.079" THICK)	24" CORRUGATED STEEL PIPE DOWNDRAIN (.079" THICK)	12" CORRUGATED STEEL PIPE (.079" THICK)	24" CORRUGATED STEEL PIPE (.109" THICK)	36" CORRUGATED STEEL PIPE (.079" THICK)	12" CORRUGATED STEEL PIPE ENERGY DISSIPATOR (.064" THICK)	24" CORRUGATED STEEL PIPE ENERGY DISSIPATOR (.064" THICK)	RSP (N**) RSP (1/4 T, METHOD B)	RSP FABRIC	SFES 12" STEEL FES	JOINT CLASSIFICATION (N)	DRAINAGE PLAN SHEET NO.	DRAINAGE PROFILE SHEET NO.	DRAINAGE SYSTEM NO.	DRAINAGE UNIT	STATION	DESCRIPTION	
					EA	LF	EA	EA	LF	LF	LF	LF	EA	LF	LF	CY	CY	LF	LF	LF	LF	LF	LF	EA	EA	CY	SQYD	EA	TYPE						
LOCATION 1	1	1	1	a	1																									1	1	1	a	"A1" 111+54.34	REMOVE 8" x 49.8' PSP UNDERDRAIN
				b					50.0																								b		8" x 50.0' PPP UNDERDRAIN
	1	1	2	a												1.95														1	1	2	a	"A1" 114+42.38	36" STRAIGHT HEADWALL
				b		315.0																											d		REMOVE 36" x 315.0' CSP
				c																			304.6										c		36" x 304.6' CSP
				d				1																									d		REMOVE HEADWALL
				e												3.02																	e		36" MODIFIED STRAIGHT HEADWALL
				f																						77.0	102.0						f		RSP (1/4 T, METHOD B)
	1	2	3	a											188.0															1	2	3	a	"A1" 112+95.22	36" x 188.0' PLASTIC PIPE LINER (LINE EXIST 42" CMP)
				b																						174.0	215.0						b		RSP (1/4 T, METHOD B)
				c				1																									c		REMOVE HEADWALL
				d												3.19																	d		42" MODIFIED STRAIGHT HEADWALL
	1	3	4	a			1																							1	3	4	a	"A1" 112+95.22	REMOVE 3" x 220.0' SPP EDGE DRAIN
				b						220.0																							b		3" x 220.0' SPP (EDGE DRAIN)
				c								12.0																					c		3" x 12' PP (EDGE DRAIN OUTLET)
				d								20.0																					d		3" x 20.0' PP (EDGE DRAIN OUTLET)
				e									1																				e		8" CSP DOWNDRAIN ENTRANCE TAPER
				f										60.0																			f		60.0' CABLE ANCHORAGE ASSEMBLY SYSTEM
				g							61.0						5.3																g		3" x 61.0' PP (EDGE DRAIN)
				h														55.0															h		8" x 55.0' CSP DOWNDRAIN
				i		81.0																											i		REMOVE 3" x 81.0' PP
LOCATION 2	2	4	5	a		1.0																								2	4	5	a	"A2" 13+24.86	REMOVE 24" x 1.0' CMP
				b		61.0																											b		REMOVE 8" x 61.0' CMP
				c																	5.0												c		24" x 5.0' CSP
				d										65.0			5.3																d		CABLE ANCHORAGE ASSEMBLY SYSTEM
				e																	5.0												e		24" 16° CSP ELBOW
				f																58.1													f		24" x 58.1 CSP DOWNDRAIN
				g																					1								g		24" CSP ENERGY DISSIPATOR
	2	4	6	a		1.0																								2	4	6	a	"A2" 16+78.97	REMOVE 12" x 1.0' CMP
				b		77.2																											b		REMOVE 8" x 77.2' CMP
				c																	6.8												c		12" x 6.8' CSP
				d										80.0			5.3																d		CABLE ANCHORAGE ASSEMBLY SYSTEM
				e																	5.0												e		12" 25° CSP ELBOW
				f															77.7														f		12" x 77.7" CSP DOWNDRAIN
				g																					1								g		12" CSP ENERGY DISSIPATOR
	2	5	7	a																						3.4	17.0			2	5	7	a	"A2" 20+27.11	RSP (1/4 T, METHOD B)
				b																								1					b		12" SFES
				c																	27.1												c		12" x 27.1' CSP
				d		25.0																											d		REMOVE 8" x 25.0' CMP
				e										85.0			5.3																e		CABLE ANCHORAGE ASSEMBLY SYSTEM
				f																	5.0												f		12" 22° CSP ELBOW
				g															77.7														g		12' x 77.7' CSP
				h		64.6																											h		REMOVE 8" x 64.6' CMP
				i																					1								i		12" CSP ENERGY DISSIPATOR
	SHEET TOTAL				1	625.8	1	2	50	220.0	61.0	32.0	1	290.0	188.0	8.2	21.2	55.0	155.4	58.1	43.9	10.0	304.6	2	1	254.4	334.0	1							

* SEE Q-1 FOR ROCK SLOPE PROTECTION (1/4 T, METHOD B) PROJECT QUANTITY TOTAL. SEE Q-1 FOR ROCK SLOPE PROTECTION FABRIC PROJECT QUANTITY TOTAL.

** TO LINE EXISTING 42" CMP

(N) NOT A SEPARATE PAY ITEM, FOR INFORMATIONAL PURPOSES ONLY. INCLUDED IN ROADWAY EXCAVATION.

(N*) NOT A SEPARATE PAY ITEM, FOR INFORMATIONAL PURPOSES ONLY. INCLUDED IN CABLE ANCHORAGE SYSTEM.

(N**) QUANTITY INCLUDED IN SUMMARY OF QUANTITIES, SEE Q-1.

DRAINAGE QUANTITIES

DQ-1

REVISED BY | DATE REVISED

MELISSA L. HAURY | MITCH ANDRUS

CALCULATED-DESIGNED BY | CHECKED BY

FUNCTIONAL SUPERVISOR: DOUGLAS S. JONES

STATE OF CALIFORNIA - DEPARTMENT OF TRANSPORTATION
NORTH REGION - DIVISION OF DESIGN & ENGINEERING SERVICES
Caltrans

LAST REVISION 03-26-09 | DATE PLOTTED => 04-AUG-2009 | TIME PLOTTED => 09:37

Dist	COUNTY	LOCATION CODE	POST MILES TOTAL PROJECT	SHEET No.	TOTAL SHEETS
01	Men	101	34.9/35.0, 43.7/43.9	17	36

Mitch Andrus 3-27-09
REGISTERED CIVIL ENGINEER DATE

3-30-09
PLANS APPROVAL DATE

REGISTERED PROFESSIONAL ENGINEER
MITCH ANDRUS
No. C48753
Exp. 9-30-10
CIVIL
STATE OF CALIFORNIA

THE STATE OF CALIFORNIA OR ITS OFFICERS OR AGENTS SHALL NOT BE RESPONSIBLE FOR THE ACCURACY OR COMPLETENESS OF ELECTRONIC COPIES OF THIS PLAN SHEET.

LEGEND

- SIGN - SINGLE POST
- SIGN - TWO POST
- <CA> CALIFORNIA SIGN CODE

STATIONARY MOUNTED CONSTRUCTION AREA SIGNS

SIGN LETTER	SIGN CODE FEDERAL	SIGN CODE CALIFORNIA	PANEL SIZE	SIGN MESSAGE	NUMBER OF POSTS AND SIZE	NUMBER OF SIGNS	HIGHWAY POST LOCATION
A	W20-1	C23	48" x 48"	ROAD WORK AHEAD	1 - 6" x 6"	3	33.90 (FNBT) LOCAL ROAD 36.25 (FSBT)
B	G20-2	C14	48" x 24"	END ROAD WORK	1 - 4" x 4"	2	34.43 (FSBT) 35.59 (FNBT)
C		C40(Mod)<CA>	96" x 60"	TRAFFIC FINES DOUBLED IN WORK ZONES	2 - 6" x 6"	2	34.00 (FNBT) 36.16 (FSBT)
D		CSP-1	36" x 24"	WATCH FOR BICYCLES	1 - 4" x 4"	2	34.09 (FNBT) 36.07 (FSBT)

NOTES:

1. FOR ADDITIONAL CONSTRUCTION AREA SIGNS, SEE STAGE CONSTRUCTION SHEET SC-1 THRU SC-3.
2. HIGHWAY POST VALUES GIVEN ARE APPROXIMATE. EXACT SIGN LOCATIONS TO BE DETERMINED BY THE ENGINEER.
3. ALL SIGN CODES SHOWN ARE FEDERAL SIGN CODES UNLESS OTHERWISE DESIGNATED AS CALIFORNIA SIGN CODES.
4. THIS PLAN ACCURATE FOR CONSTRUCTION AREA SIGN WORK ONLY.

Sign Details

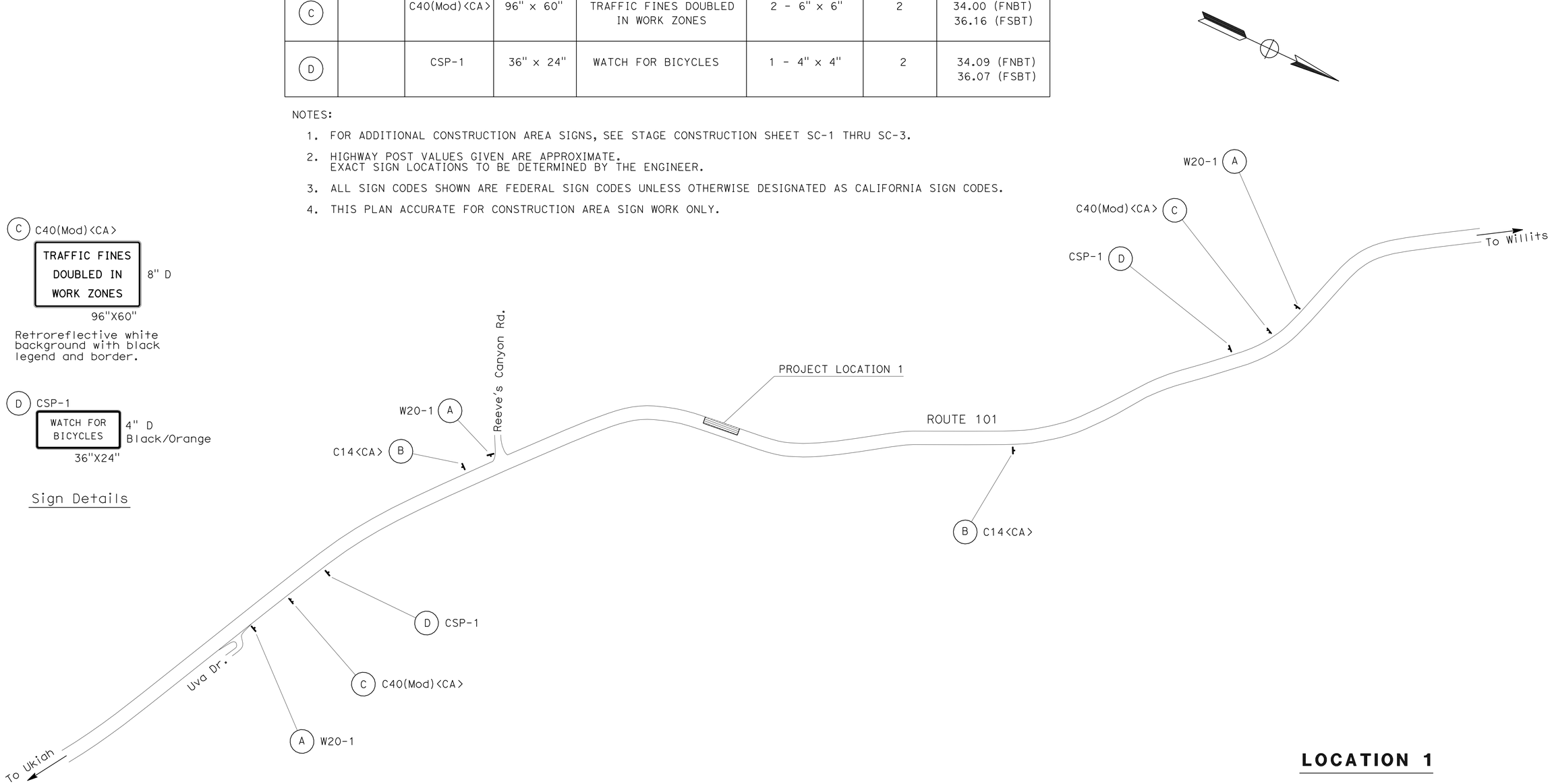

LOCATION 1

CONSTRUCTION AREA SIGNS
NO SCALE

CS-1

STATE OF CALIFORNIA - DEPARTMENT OF TRANSPORTATION
NORTH REGION - DIVISION OF DESIGN & ENGINEERING SERVICES
Caltrans

FUNCTIONAL SUPERVISOR: DOUGLAS S. JONES
CALCULATED-DESIGNED BY: MELISSA L. HAURY
CHECKED BY: MITCH ANDRUS
REVISED BY
DATE REVISED

LAST REVISION 03-26-09
DATE PLOTTED => 04-AUG-2009
TIME PLOTTED => 09:37

Dist	COUNTY	LOCATION CODE	POST MILES TOTAL PROJECT	SHEET No.	TOTAL SHEETS
01	Men	101	34.9/35.0, 43.7/43.9	18	36

Mitch Andrus 12-01-08
REGISTERED CIVIL ENGINEER DATE

3-30-09
PLANS APPROVAL DATE

REGISTERED PROFESSIONAL ENGINEER
MITCH ANDRUS
No. C48753
Exp. 9-30-10
CIVIL
STATE OF CALIFORNIA

THE STATE OF CALIFORNIA OR ITS OFFICERS OR AGENTS SHALL NOT BE RESPONSIBLE FOR THE ACCURACY OR COMPLETENESS OF ELECTRONIC COPIES OF THIS PLAN SHEET.

LEGEND

- Direction of Travel
- Channelizer (Surface Mounted) See Note 2.
- (X) Construction Area Sign Letter See Note 3.
- (No. / P) Pavement Delineation Detail Number P=Paint
- Type VI Arrow
- TPMP Temporary Pavement Marking (Paint)

NOTES:

1. THIS PLAN ACCURATE FOR STAGE CONSTRUCTION AND TEMPORARY TRAFFIC CONTROL WORK ONLY.
2. ALL CHANNELIZERS (SURFACE MOUNTED) SHALL BE INSTALLED ON 50′ CENTERS.
3. SEE CS-1 FOR ADDITIONAL STATIONARY MOUNTED CONSTRUCTION AREA SIGNS.
4. REMOVE ONLY THE EXISTING DOUBLE YELLOW STRIPE WHICH IS ADJACENT TO NORTHBOUND ROUTE 101 TRAFFIC.

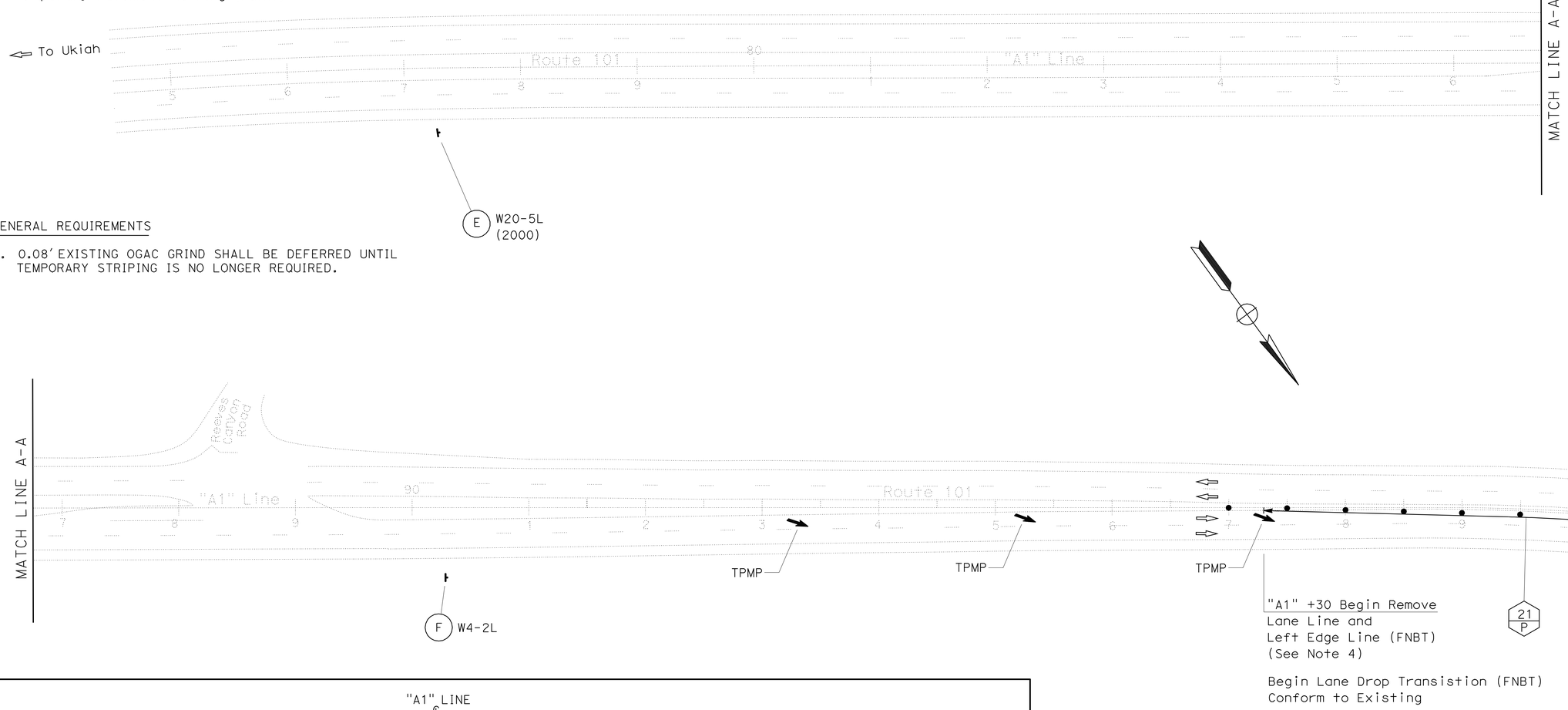

GENERAL REQUIREMENTS

1. 0.08′ EXISTING OGAC GRIND SHALL BE DEFERRED UNTIL TEMPORARY STRIPING IS NO LONGER REQUIRED.

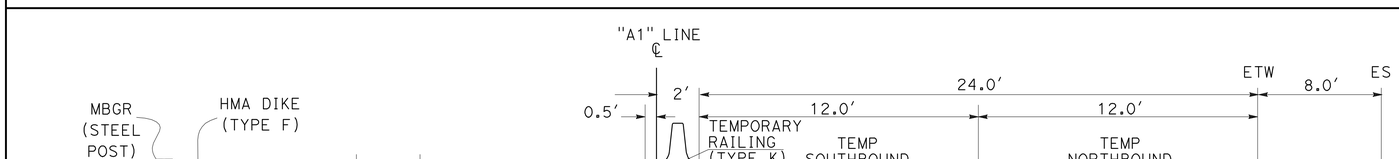

TEMPORARY RAILING (TYPE K) PLACEMENT
STA "A1" 110+00 TO "A1" 115+67
NOT TO SCALE

LOCATION 1

STAGE CONSTRUCTION
TRAFFIC HANDLING

SCALE: 1"=50′

SC-1

STATE OF CALIFORNIA - DEPARTMENT OF TRANSPORTATION
Caltrans
NORTH REGION - DIVISION OF DESIGN & ENGINEERING SERVICES

FUNCTIONAL SUPERVISOR: DOUGLAS S. JONES
CALCULATED-DESIGNED BY: MELISSA L. HAURY
CHECKED BY: MITCH ANDRUS
REVISED BY
DATE REVISED

LAST REVISION 07-11-08
DATE PLOTTED => 04-AUG-2009
TIME PLOTTED => 09:37

Dist	COUNTY	LOCATION CODE	POST MILES TOTAL PROJECT	SHEET No.	TOTAL SHEETS
01	Men	101	34.9/35.0, 43.7/43.9	19	36

Mitch Andrus 12-01-08
REGISTERED CIVIL ENGINEER DATE

3-30-09
PLANS APPROVAL DATE

REGISTERED PROFESSIONAL ENGINEER
MITCH ANDRUS
No. C48753
Exp. 9-30-10
CIVIL
STATE OF CALIFORNIA

THE STATE OF CALIFORNIA OR ITS OFFICERS OR AGENTS SHALL NOT BE RESPONSIBLE FOR THE ACCURACY OR COMPLETENESS OF ELECTRONIC COPIES OF THIS PLAN SHEET.

NOTES:

1. THIS PLAN ACCURATE FOR STAGE CONSTRUCTION AND TEMPORARY TRAFFIC CONTROL WORK ONLY.
2. REMOVE ONLY THE EXISTING DOUBLE YELLOW STRIPE WHICH IS ADJACENT TO SOUTHBOUND ROUTE 101 TRAFFIC.

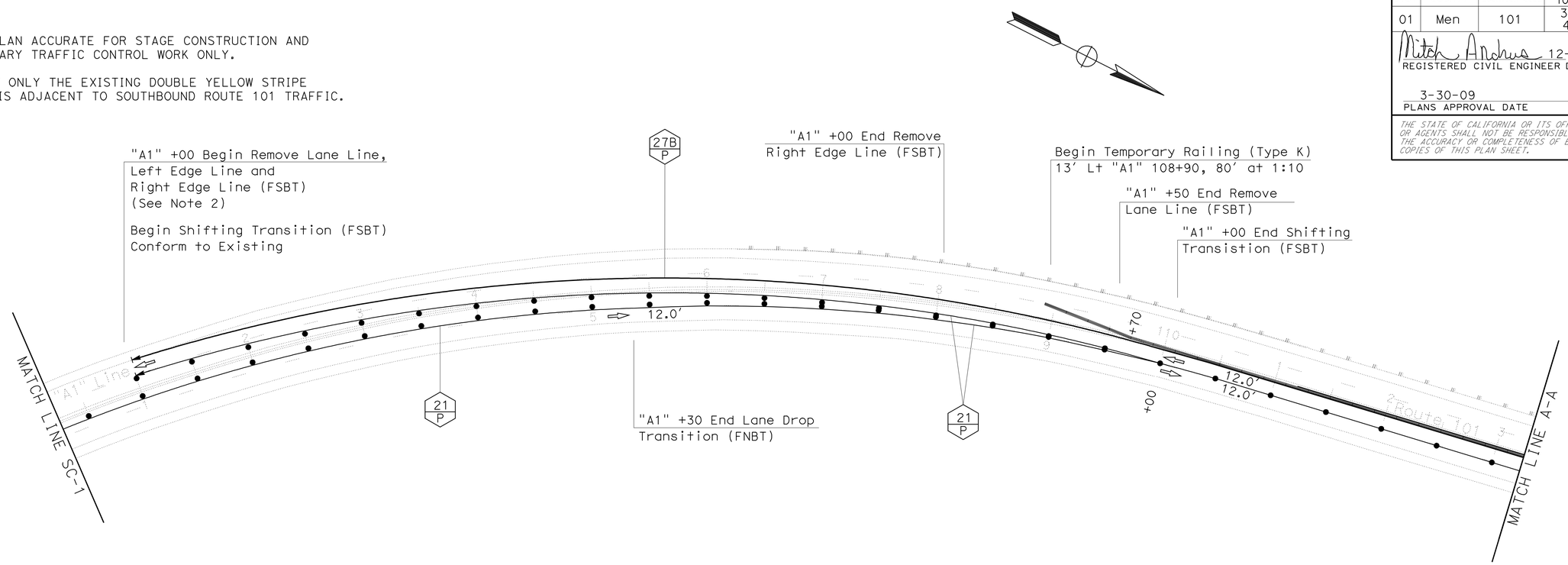

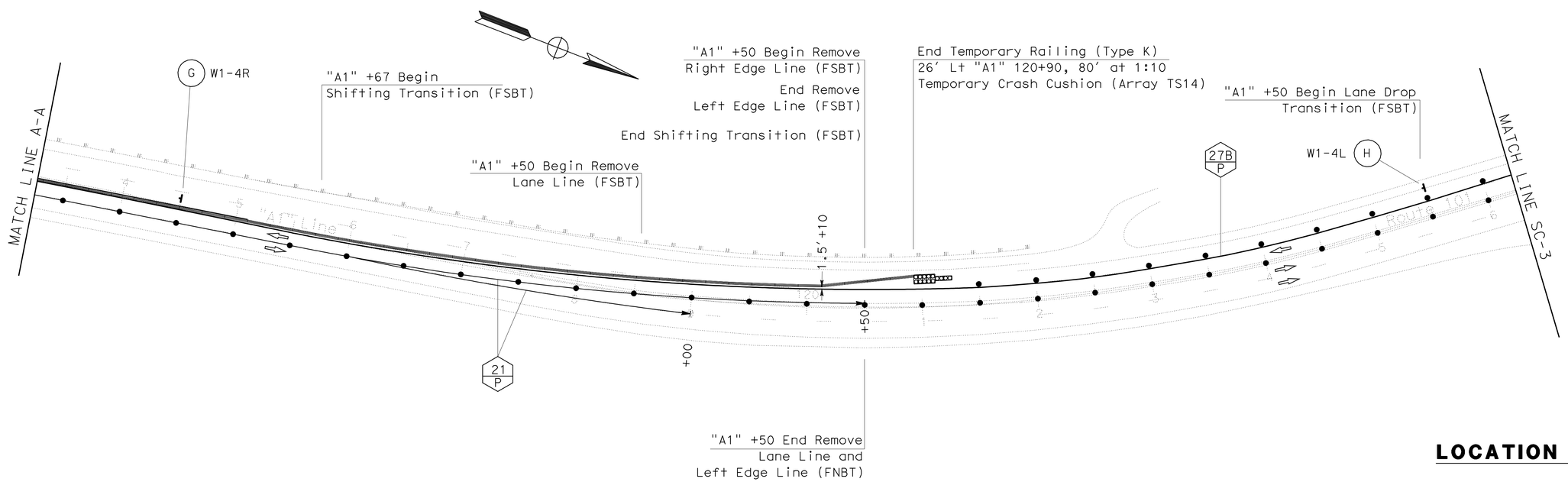

LOCATION 1

STAGE CONSTRUCTION
TRAFFIC HANDLING

SCALE: 1"=50'

SC-2

STATE OF CALIFORNIA - DEPARTMENT OF TRANSPORTATION
Caltrans
NORTH REGION - DIVISION OF DESIGN & ENGINEERING SERVICES

FUNCTIONAL SUPERVISOR: DOUGLAS S. JONES
CALCULATED-DESIGNED BY: MELISSA L. HAURY
CHECKED BY: MITCH ANDRUS
REVISED BY
DATE REVISED

LAST REVISION 07-10-08
DATE PLOTTED => 04-AUG-2009
TIME PLOTTED => 09:37

Dist	COUNTY	LOCATION CODE	POST MILES TOTAL PROJECT	SHEET No.	TOTAL SHEETS
01	Men	101	34.9/35.0, 43.7/43.9	20	36

Mitch Andrus 12-01-08
REGISTERED CIVIL ENGINEER DATE

3-30-09
PLANS APPROVAL DATE

REGISTERED PROFESSIONAL ENGINEER
MITCH ANDRUS
No. C48753
Exp. 9-30-10
CIVIL
STATE OF CALIFORNIA

THE STATE OF CALIFORNIA OR ITS OFFICERS OR AGENTS SHALL NOT BE RESPONSIBLE FOR THE ACCURACY OR COMPLETENESS OF ELECTRONIC COPIES OF THIS PLAN SHEET.

NOTES:

1. THIS PLAN ACCURATE FOR STAGE CONSTRUCTION AND TEMPORARY TRAFFIC CONTROL WORK ONLY.

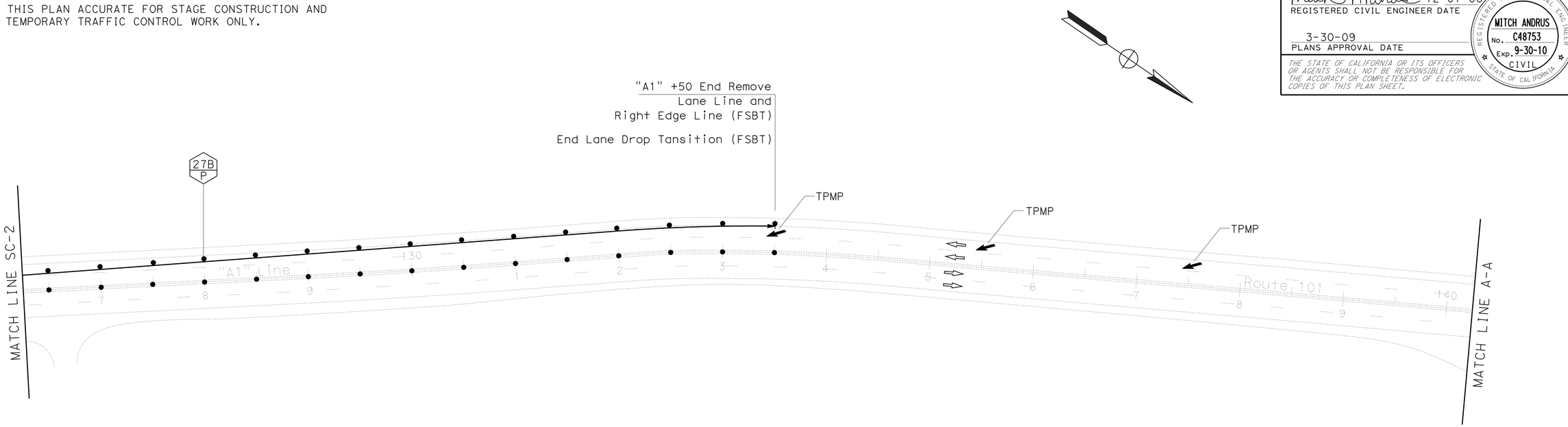

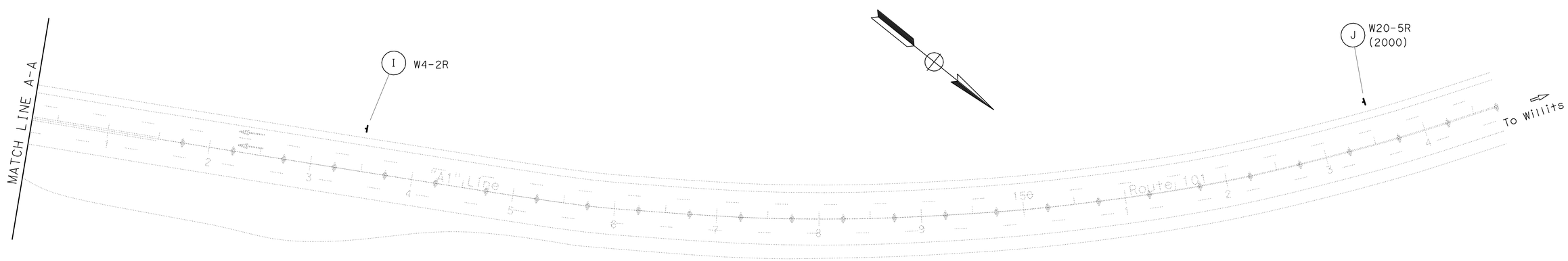

LOCATION 1

STAGE CONSTRUCTION
TRAFFIC HANDLING

SCALE: 1"=50'

SC-3

STATE OF CALIFORNIA - DEPARTMENT OF TRANSPORTATION
Caltrans
NORTH REGION - DIVISION OF DESIGN & ENGINEERING SERVICES

FUNCTIONAL SUPERVISOR: DOUGLAS S. JONES

CALCULATED-DESIGNED BY: MELISSA L. HAURY
CHECKED BY: MITCH ANDRUS

REVISED BY
DATE REVISED

LAST REVISION 07-10-08
DATE PLOTTED => 04-AUG-2009
TIME PLOTTED => 09:37

Dist	COUNTY	LOCATION CODE	POST MILES TOTAL PROJECT	SHEET No.	TOTAL SHEETS
01	Men	101	34.9/35.0, 43.7/43.9	21	36

Mitch Andrus 12-01-08
REGISTERED CIVIL ENGINEER DATE

3-30-09
PLANS APPROVAL DATE

REGISTERED PROFESSIONAL ENGINEER
MITCH ANDRUS
No. C48753
Exp. 9-30-10
CIVIL
STATE OF CALIFORNIA

THE STATE OF CALIFORNIA OR ITS OFFICERS OR AGENTS SHALL NOT BE RESPONSIBLE FOR THE ACCURACY OR COMPLETENESS OF ELECTRONIC COPIES OF THIS PLAN SHEET.

ADDITIONAL STATIONARY MOUNTED CONSTRUCTION AREA SIGNS

Type	Panel Size	Sign Message	Number of Post and Size	Number or Signs
(E) W20-5L (2000)	48"x48"	LEFT LANE CLOSED AHEAD 2000 FT	1-6"X6"	1
(F) W4-2L	48"x48"	LANE TRANSITION SYMBOL SIGN	1-6"X6"	1
(G) W1-4R	48"x48"	REVERSE CURVE SYMBOL SIGN	1-6"X6"	1
(H) W1-4L	48"x48"	REVERSE CURVE SYMBOL SIGN	1-6"X6"	1
(I) W4-2R	48"x48"	LANE TRANSITION SYMBOL SIGN	1-6"X6"	1
(J) W20-5R (2000)	48"x48"	RIGHT LANE CLOSED GRAPHIC	1-6"X6"	1

NOTES:
1. EXACT SIGN LOCATION TO BE DETERMINED BY THE ENGINEER.
2. FOR ADDITIONAL CONSTRUCTION AREA SIGNS SEE CS-1.
3. ALL W SERIES SIGN PANELS SHALL BE BLACK ON ORANGE.

CHANNELIZER

	CHANNELIZER (SURFACE MOUNTED) (EA)
LOCATION 1	117
Total	117

REMOVE YELLOW THERMOPLASTIC TRAFFIC STRIPE

Description	LOCATION 1 (LF)
Left Edge Line	8540
Total	8540

TEMPORARY TRAFFIC STRIPE (PAINT)

Detail Number	LOCATION 1 (LF)
21	6940
27B	3250
Total	10190

REMOVE WHITE THERMOPLASTIC TRAFFIC STRIPE

Description	LOCATION 1 (LF)
Lane Line	4670
Right Edge Line	2000
Total	6670

TEMPORARY PAVEMENT MARKING (PAINT)

DESCRIPTION	LOCATION 1 (SQFT)	
Type VI Arrow	6 @ 42	252
	Total	252

TRAFFIC HANDLING QUANTITIES

THQ-1

REVISED BY | DATE REVISED
MELISSA L. HAURY | MITCH ANDRUS
CALCULATED-DESIGNED BY | CHECKED BY
FUNCTIONAL SUPERVISOR
DOUGLAS S. JONES

STATE OF CALIFORNIA - DEPARTMENT OF TRANSPORTATION
Caltrans NORTH REGION - DIVISION OF DESIGN & ENGINEERING SERVICES

LAST REVISION 12-10-08 | DATE PLOTTED => 04-AUG-2009 | TIME PLOTTED => 09:38

Dist	COUNTY	LOCATION CODE	POST MILES TOTAL PROJECT	SHEET No.	TOTAL SHEETS
01	Men	101	34.9/35.0, 43.7/43.9	22	36

Mitch Andrus 12-01-08
REGISTERED CIVIL ENGINEER DATE

3-30-09
PLANS APPROVAL DATE

REGISTERED PROFESSIONAL ENGINEER
MITCH ANDRUS
No. C48753
Exp. 9-30-10
CIVIL
STATE OF CALIFORNIA

THE STATE OF CALIFORNIA OR ITS OFFICERS OR AGENTS SHALL NOT BE RESPONSIBLE FOR THE ACCURACY OR COMPLETENESS OF ELECTRONIC COPIES OF THIS PLAN SHEET.

LEGEND

Limit of Striping Pattern

No Pavement Delineation Detail Number

NOTES:

1. THIS PLAN ACCURATE FOR PAVEMENT DELINEATION WORK ONLY.
2. THE DOUBLE/DOUBLE YELLOW CENTERLINE SHALL BE PLACED SYMETRICALLY ALONG THE "A1" ALIGNMENT.
3. THE DETAIL 13 SHALL BE PLACED ON THE DETAIL 11.

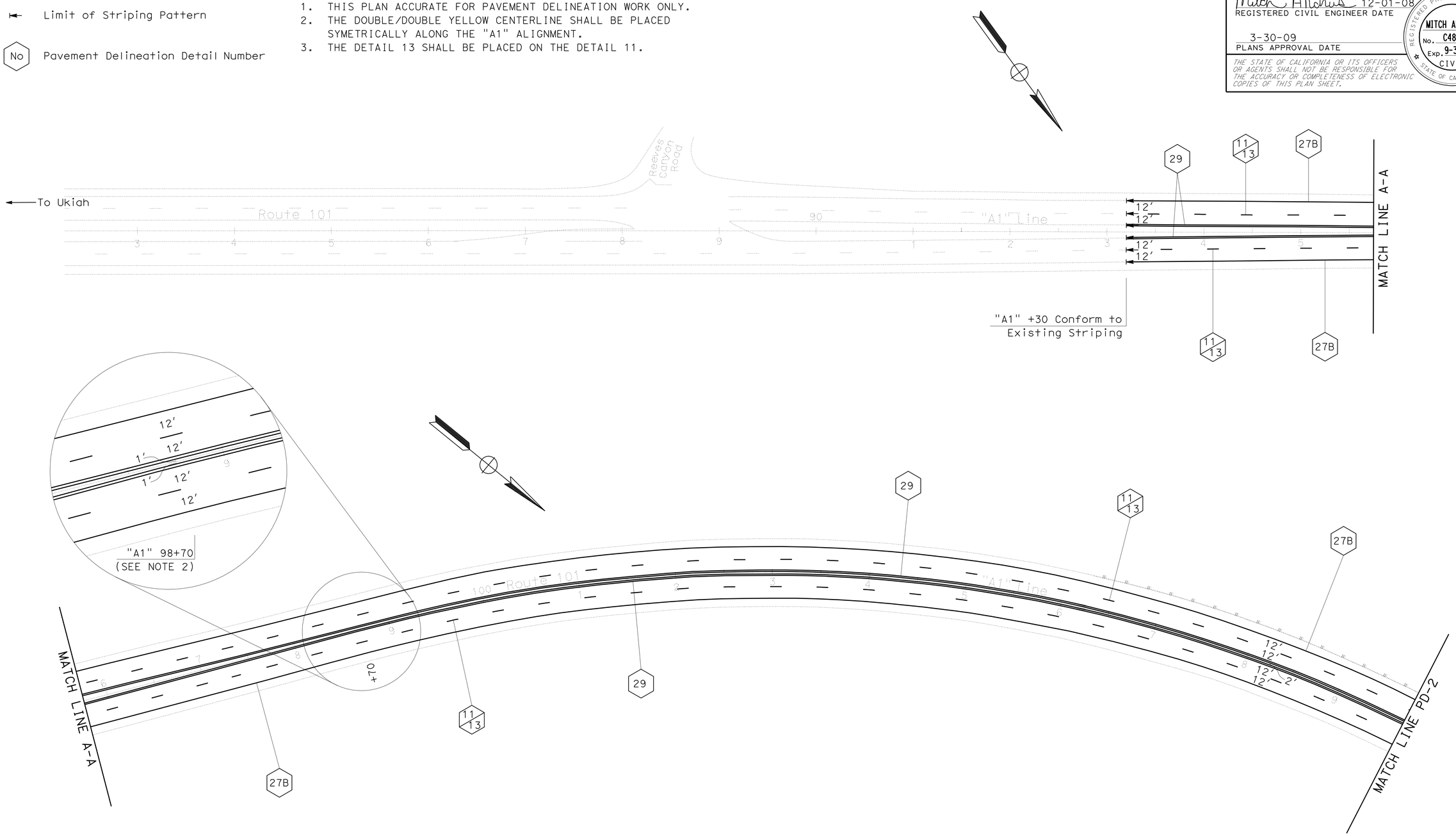

LOCATION 1

PAVEMENT DELINEATION

SCALE: 1"=50'

PD-1

REVISED BY	DATE REVISED
MELISSA L. HAURY	MITCH ANDRUS

CALCULATED-DESIGNED BY
CHECKED BY

FUNCTIONAL SUPERVISOR
DOUGLAS S. JONES

STATE OF CALIFORNIA - DEPARTMENT OF TRANSPORTATION
Caltrans
NORTH REGION - DIVISION OF DESIGN & ENGINEERING SERVICES

LAST REVISION 01-13-09
DATE PLOTTED => 04-AUG-2009
TIME PLOTTED => 09:38

Dist	COUNTY	LOCATION CODE	POST MILES TOTAL PROJECT	SHEET No.	TOTAL SHEETS
01	Men	101	34.9/35.0, 43.7/43.9	23	36

Mitch Andrus 12-01-08
REGISTERED CIVIL ENGINEER DATE

3-30-09
PLANS APPROVAL DATE

REGISTERED PROFESSIONAL ENGINEER
MITCH ANDRUS
No. C48753
Exp. 9-30-10
CIVIL
STATE OF CALIFORNIA

THE STATE OF CALIFORNIA OR ITS OFFICERS OR AGENTS SHALL NOT BE RESPONSIBLE FOR THE ACCURACY OR COMPLETENESS OF ELECTRONIC COPIES OF THIS PLAN SHEET.

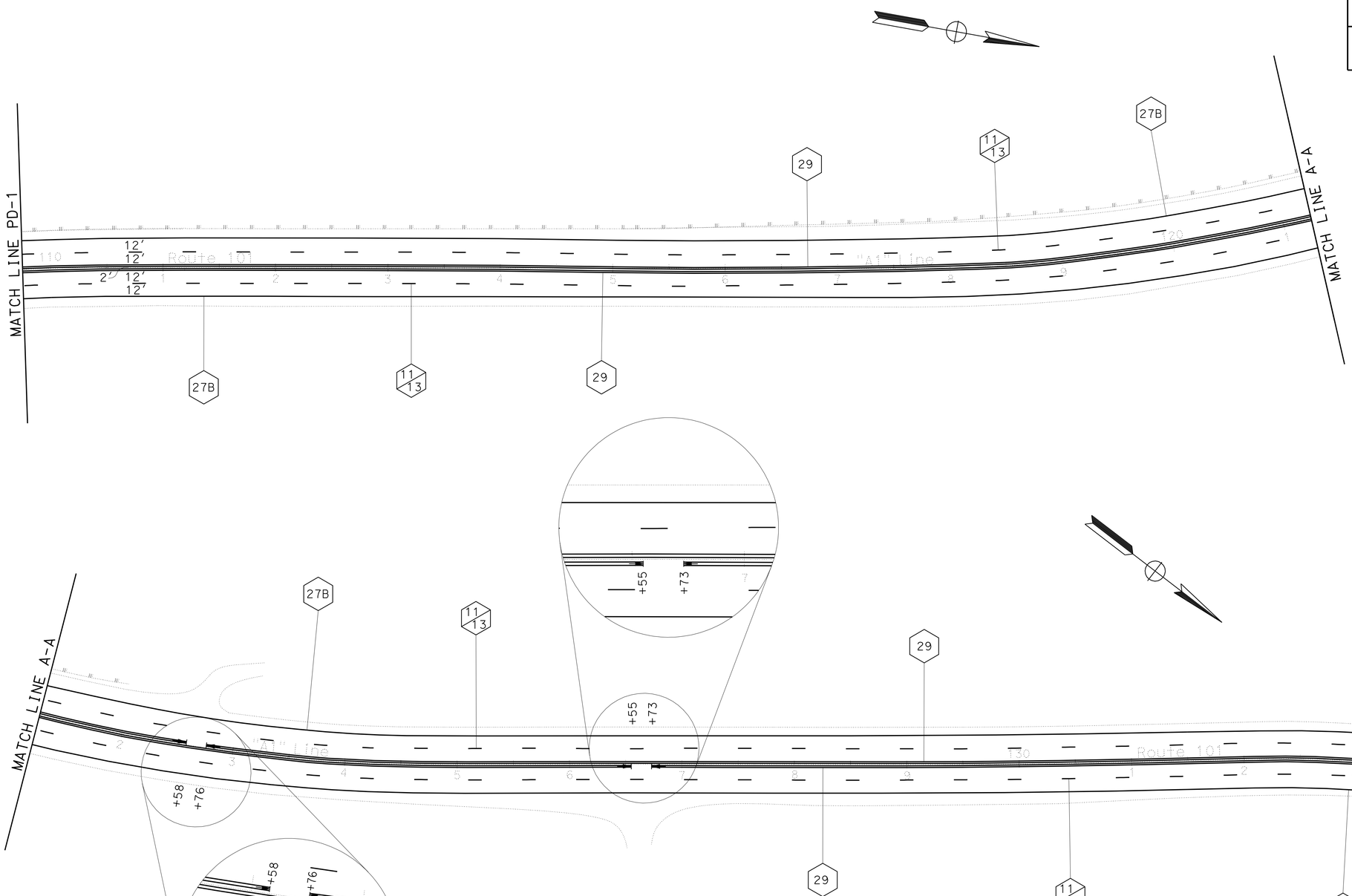

LOCATION 1

PAVEMENT DELINEATION

SCALE: 1"=50'

THIS PLAN ACCURATE FOR PAVEMENT DELINEATION WORK ONLY.

PD-2

REVISED BY	DATE REVISED

CALCULATED-DESIGNED BY: MELISSA L. HAURY
CHECKED BY: MITCH ANDRUS
FUNCTIONAL SUPERVISOR: DOUGLAS S. JONES

STATE OF CALIFORNIA - DEPARTMENT OF TRANSPORTATION
Caltrans NORTH REGION - DIVISION OF DESIGN & ENGINEERING SERVICES

LAST REVISION 01-13-09
DATE PLOTTED => 04-AUG-2009
TIME PLOTTED => 09:38

Dist	COUNTY	LOCATION CODE	POST MILES TOTAL PROJECT	SHEET No.	TOTAL SHEETS
01	Men	101	34.9/35.0, 43.7/43.9	24	36

Mitch Andrus 12-01-08
REGISTERED CIVIL ENGINEER DATE

3-30-09
PLANS APPROVAL DATE

REGISTERED PROFESSIONAL ENGINEER
MITCH ANDRUS
No. C48753
Exp. 9-30-10
CIVIL
STATE OF CALIFORNIA

THE STATE OF CALIFORNIA OR ITS OFFICERS OR AGENTS SHALL NOT BE RESPONSIBLE FOR THE ACCURACY OR COMPLETENESS OF ELECTRONIC COPIES OF THIS PLAN SHEET.

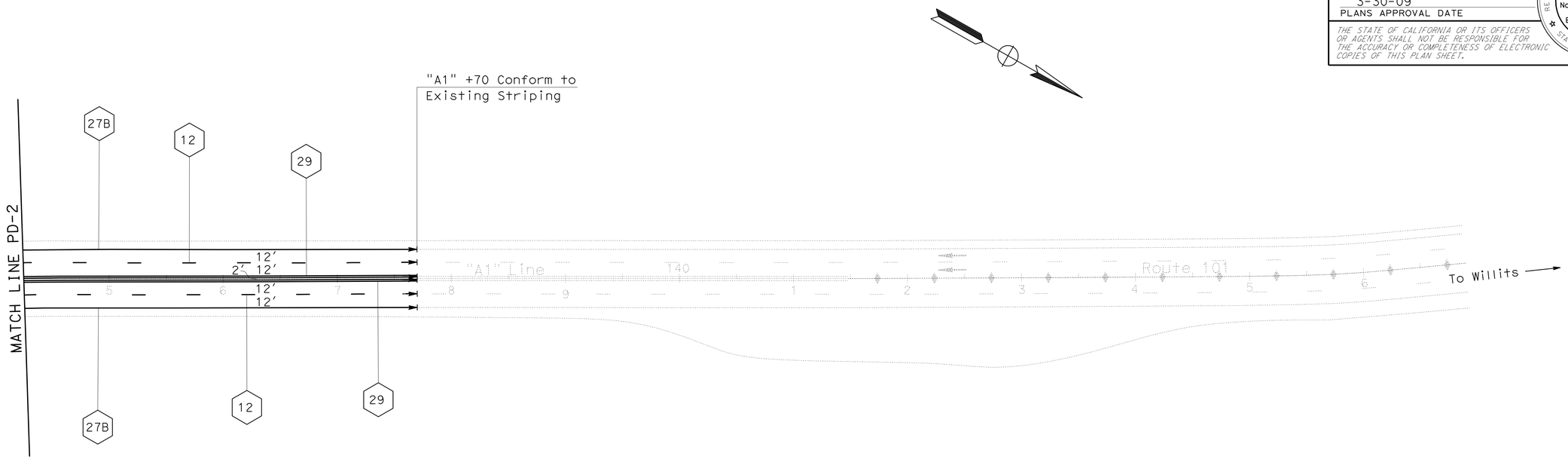

THIS PLAN ACCURATE FOR PAVEMENT DELINEATION WORK ONLY.

LOCATION 1

PAVEMENT DELINEATION

SCALE: 1"=50'

PD-3

STATE OF CALIFORNIA - DEPARTMENT OF TRANSPORTATION
Caltrans
NORTH REGION - DIVISION OF DESIGN & ENGINEERING SERVICES

FUNCTIONAL SUPERVISOR: DOUGLAS S. JONES

CALCULATED-DESIGNED BY: MELISSA L. HAURY
CHECKED BY: MITCH ANDRUS

REVISED BY
DATE REVISED

LAST REVISION 01-12-09
DATE PLOTTED => 04-AUG-2009
TIME PLOTTED => 09:38

Dist	COUNTY	LOCATION CODE	POST MILES TOTAL PROJECT	SHEET No.	TOTAL SHEETS
01	Men	101	34.9/35.0, 43.7/43.9	25	36

Mitch Andrus 3-27-09
REGISTERED CIVIL ENGINEER DATE

3-30-09
PLANS APPROVAL DATE

REGISTERED PROFESSIONAL ENGINEER
MITCH ANDRUS
No. C48753
Exp. 9-30-10
CIVIL
STATE OF CALIFORNIA

THE STATE OF CALIFORNIA OR ITS OFFICERS OR AGENTS SHALL NOT BE RESPONSIBLE FOR THE ACCURACY OR COMPLETENESS OF ELECTRONIC COPIES OF THIS PLAN SHEET.

THERMOPLASTIC TRAFFIC STRIPE (SPRAYABLE)

Detail Number	LOCATION 1 (LF)
27B	8880
Total	8880

4" THERMOPLASTIC TRAFFIC STRIPE (BROKEN 36-12)

Detail Number	LOCATION 1 (LF)
11	8880
Total	8880

4" THERMOPLASTIC TRAFFIC STRIPE

Detail Number	LOCATION 1 (LF)
29	17 760
Total	17 760

PAVEMENT MARKER (RETROREFLECTIVE)

Detail Number	LOCATION 1	
	Type D (EA)	Type G (EA)
13		186
29	372	
Sub Total	372	186
Total	558	

PAVEMENT MARKER (NON-REFLECTIVE)

Detail Number	LOCATION 1
	Type A (EA)
13	740
Total	740

PAVEMENT DELINEATION QUANTITIES

PDQ-1

STATE OF CALIFORNIA - DEPARTMENT OF TRANSPORTATION
Caltrans
NORTH REGION - DIVISION OF DESIGN & ENGINEERING SERVICES

FUNCTIONAL SUPERVISOR: DOUGLAS S. JONES
CALCULATED-DESIGNED BY: MELISSA L. HAURY
CHECKED BY: MITCH ANDRUS
REVISED BY
DATE REVISED

LAST REVISION 03-26-09
DATE PLOTTED => 04-AUG-2009
TIME PLOTTED => 09:38

Dist	COUNTY	LOCATION CODE	POST MILES TOTAL PROJECT	SHEET No.	TOTAL SHEETS
01	Men	101	34.9/35.0, 43.7/43.9	26	36

Mitch Andrus 12-01-08
REGISTERED CIVIL ENGINEER DATE

3-30-09
PLANS APPROVAL DATE

REGISTERED PROFESSIONAL ENGINEER
MITCH ANDRUS
No. C48753
Exp. 9-30-10
CIVIL
STATE OF CALIFORNIA

THE STATE OF CALIFORNIA OR ITS OFFICERS OR AGENTS SHALL NOT BE RESPONSIBLE FOR THE ACCURACY OR COMPLETENESS OF ELECTRONIC COPIES OF THIS PLAN SHEET.

LEGEND

(Sht-No.)	Roadside Sign Number
<CA>	California Sign Code
↓	Sign - Single Post
▲	Reset Roadside Sign

Notes:

1. ALL EXISTING SIGNS NOT SHOWN FOR RESETTING SHALL REMAIN IN PLACE.
2. ALL SIGN CODES SHOWN ARE FEDERAL SIGN CODES UNLESS OTHERWISE DESIGNATED AS CALIFORNIA SIGN CODES.
3. THIS PLAN ACCURATE FOR SIGN WORK ONLY.

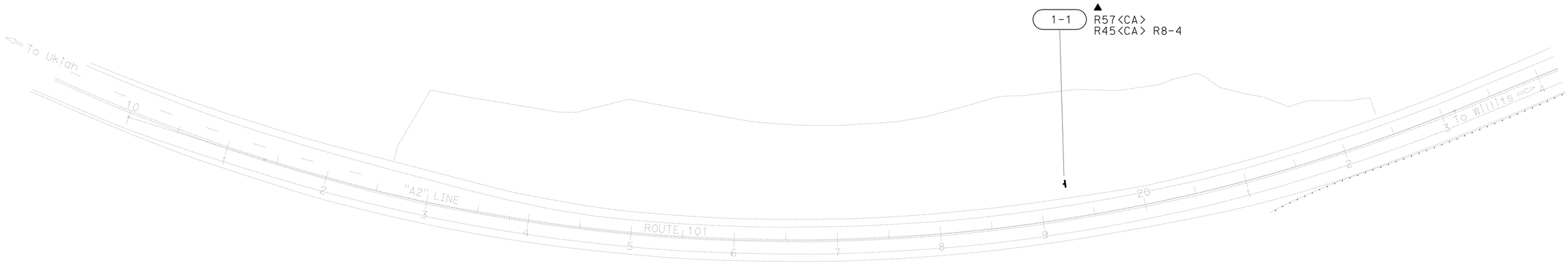

ROADSIDE SIGN QUANTITY

Sign Number (Sht-No.)	Sign Code		Reset Roadside Sign (Each)
	Federal	California	
1-1	R8-4	R57 R45	1
		Total	1

LOCATION 2

SIGN PLAN AND QUANTITY

SCALE: 1"=50'

S-1

STATE OF CALIFORNIA - DEPARTMENT OF TRANSPORTATION
NORTH REGION - DIVISION OF DESIGN & ENGINEERING SERVICES
Caltrans

FUNCTIONAL SUPERVISOR: DOUGLAS S. JONES
CALCULATED-DESIGNED BY: MELISSA L. HAURY
CHECKED BY: MITCH ANDRUS
REVISED BY
DATE REVISED

LAST REVISION 08-20-08
DATE PLOTTED => 04-AUG-2009
TIME PLOTTED => 09:38

Dist	COUNTY	LOCATION CODE	POST MILES TOTAL PROJECT	SHEET No.	TOTAL SHEETS
01	Men	101	34.9/35.0, 43.7/43.9	27	36

Mitch Andrus 4-27-09
REGISTERED CIVIL ENGINEER DATE

3-30-09
PLANS APPROVAL DATE

REGISTERED PROFESSIONAL ENGINEER
MITCH ANDRUS
No. C48753
Exp. 9-30-10
CIVIL
STATE OF CALIFORNIA

THE STATE OF CALIFORNIA OR ITS OFFICERS OR AGENTS SHALL NOT BE RESPONSIBLE FOR THE ACCURACY OR COMPLETENESS OF ELECTRONIC COPIES OF THIS PLAN SHEET.

ROADWAY QUANTITIES SUMMARY

STATION TO STATION	CLASS 2 AGGREGATE BASE (CY)	HOT MIX ASPHALT (TYPE A) (TON)	HOT MIX ASPHALT (OPEN GRADED) (TON)	ASPHALT TREATED PERMEABLE BASE (CY)	GEOSYNTHETIC PAVEMENT INTERLAYER (SQYD)	PAVING ASPHALT (BINDER, GPI) (TON)	SUBGRADE ENHANCEMENT GEOTEXTILE (SQYD)	TACK COAT (TON)
"A1" 93+30.00 "A1" 111+20.00	0	0	670	0	0	0	0	0
"A1" 111+20.00 "A1" 115+10.00	590	612	182	121	174	0.2	1474	1.4
"A1" 115+10.00 "A1" 137+70.00	0	0	846	0	0	0	0	0
SUBTOTAL	590	612	1699	121	174	0.2	1474	1.4
* HMA DIKE (TYPE F)	0	3	0	0	0	0	0	0
TOTAL	590	615	1699	121	174	0.2	1474	1.4

* SEE PLACE HOT MIX ASPHALT DIKE (TYPE A) QUANTITY, THIS SHEET

EARTHWORK SUMMARY

LOCATION	ROADWAY EXCAVATION QTY (CY)	ROADWAY EMBANKMENT (N) QTY (CY)	IMPORTED BORROW QTY (CY)
"A1" LINE	1012	44	
"A2" LINE	8756	0	
TOTAL	9768	44	0

(N) NOT A SEPARATE PAY ITEM, FOR INFORMATION ONLY.

PLACE HOT MIX ASPHALT DIKE (TYPE F)

STATION TO STATION	QUANTITY (LF)	QUANTITY (TON)
L+ "A1" 112+93.000 L+ "A1" 115+10.000	217	3
TOTAL:	217	3*

* QUANTITY IS INCLUDED IN THE ROADWAY QUANTITIES SUMMARY TABLE ABOVE.

ROCK SLOPE PROTECTION (1/4 TON, METHOD B)

DESCRIPTION	QUANTITY (CY)
*DRAINAGE SYSTEMS 2, 3, & 7	255
LOCATION 2 - SLOPE STABLIZATION	8304
TOTAL:	8558

SEE DRAINAGE QUANTITIES DQ-1.

ROCK SLOPE PROTECTION FABRIC

DESCRIPTION	QUANTITY (SQYD)
*DRAINAGE SYSTEMS 2, 3, & 7	334
LOCATION 2 - SLOPE STABLIZATION	9764
TOTAL:	10098

SEE DRAINAGE QUANTITIES DQ-1.

REMOVE METAL BEAM GUARD RAILING

STATION TO STATION	QTY (LF)
L+ "A1" 111+20.000 L+ "A1" 115+10.000	390
TOTAL:	390

METAL BEAM GUARD RAILING (STEEL POST)

STATION TO STATION	QTY (LF)
L+ "A1" 111+20.000 L+ "A1" 115+10.000	390
TOTAL:	390

WEED CONTROL MAT (FIBER)

STATION TO STATION	QTY (SQYD)
L+ "A1" 111+20.000 L+ "A1" 115+10.000	130
TOTAL:	130

COLD PLANE ASPHALT CONCRETE PAVEMENT

(.08' MAXIMUM)

STATION TO STATION			QTY (SQYD)
NB & SB	"A1" 93+30.00	"A1" 111+20.00	3580
NB	"A1" 111+20.00	"A1" 115+10.00	398
NB & SB	"A1" 115+10.00	"A1" 137+70.00	4520
		SUB TOTAL (.8'):	8498

(.3' MAXIMUM)

STATION TO STATION			QTY (SQYD)
SB	"A1" 111+20.00	"A1" 115+10.00	29
		SUB TOTAL (.3')	29
		SUB TOTAL (.8')	8498
		TOTAL:	8527

CENTERLINE RUMBLE STRIP (GROUND-IN INDENTATIONS)

STATION TO STATION	LF	* QTY (LF)
"A1" 93+30.00 "A1" 137+70.000	4440	8880
TOTAL:		8880

* LENGTH x 2. DETAIL 29 WITH RUMBLE STRIPS.

MARKER (CULVERT)

DRAINAGE SYSTEM	STATION		QTY (EA)
1	L+	"A1" 111+98.00	1
3	L+/R+	"A1" 112+95.22	2
5	L+	"A2" 13+24.86	1
6	L+	"A2" 16+78.97	1
7	L+	"A2" 20+27.11	1
		TOTAL:	6

EROSION CONTROL (COMPOST BLANKET)

STATION TO STATION	QTY (CY)
L+ "A2" 12+58.000 L+ "A2" 22+00.000	740
TOTAL:	740

TEMPORARY CRASH CUSHION MODULE

LOCATION	STATION	ARRAY	TEMPORARY CRASH CUSHION MODULES
1	L+ "A1" 108+90.00	TS14	14
		TOTAL:	14

TEMPORARY RAILING (TYPE K)

STATION TO STATION	QTY (LF)
L+ "A1" 108+90.00 L+ "A1" 120+90.00	1200
TOTAL:	1200

TEMPORARY CONSTRUCTION ENTRANCE

2 EA

TEMPORARY FIBER ROLL (TYPE 1)

1200 LF

TEMPORARY GRAVEL BAG BERM

180 LF

TEMPORARY STRAW BALE BARRIER

76 LF

TEMPORARY FENCE (TYPE ESA)

SHEET LOCATION	QTY (LF)
D-1	40
D-2	1242
TOTAL:	1282

EROSION CONTROL (TYPE D)

STATION TO STATION	QTY (SQYD)	STRAW (N) (TON)	FIBER (N) (LBS)	COMPOST (N) (CY)	PURE LIVE SEED (N) (LBS)	STABILIZING EMULSION (N) (LBS)
L+ "A2" 12+58.000 L+ "A2" 22+00.000	8860	7.32	4026	7.32	238	238
TOTAL:	8860	7.32	4026	7.32	238	238

(N) NOT A SEPARATE PAY ITEM, FOR INFORMATIONAL PURPOSES ONLY.

SUMMARY OF QUANTITIES

Q-1

REVISED BY | DATE REVISED
MELISSA L. HAURY | MITCH ANDRUS
CALCULATED-DESIGNED BY | CHECKED BY
FUNCTIONAL SUPERVISOR
DOUGLAS S. JONES

STATE OF CALIFORNIA - DEPARTMENT OF TRANSPORTATION
Caltrans
NORTH REGION - DIVISION OF DESIGN & ENGINEERING SERVICES

LAST REVISION 04-21-09 | DATE PLOTTED => 04-AUG-2009 | TIME PLOTTED => 09:38

DIST	COUNTY	ROUTE	POST MILES TOTAL PROJECT	SHEET NO.	TOTAL SHEETS
01	Men	101	34.9/35.0, 43.7/43.9	28	36

REGISTERED CIVIL ENGINEER

November 17, 2006
PLANS APPROVAL DATE

REGISTERED PROFESSIONAL ENGINEER Dallas Forester No. C37765 Exp. 12-31-06 CIVIL STATE OF CALIFORNIA

The State of California or its officers or agents shall not be responsible for the accuracy or completeness of electronic copies of this plan sheet.

To accompany plans dated 3-30-09

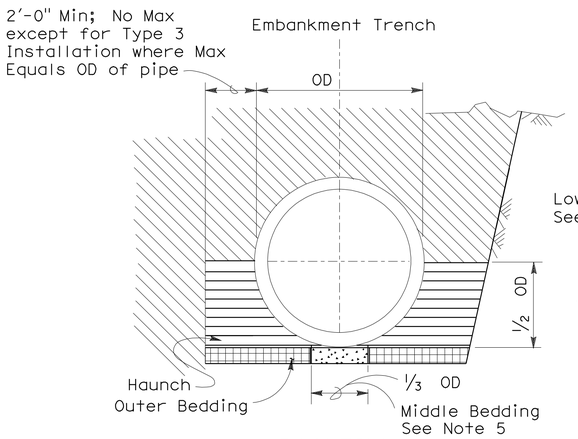

BACKFILL

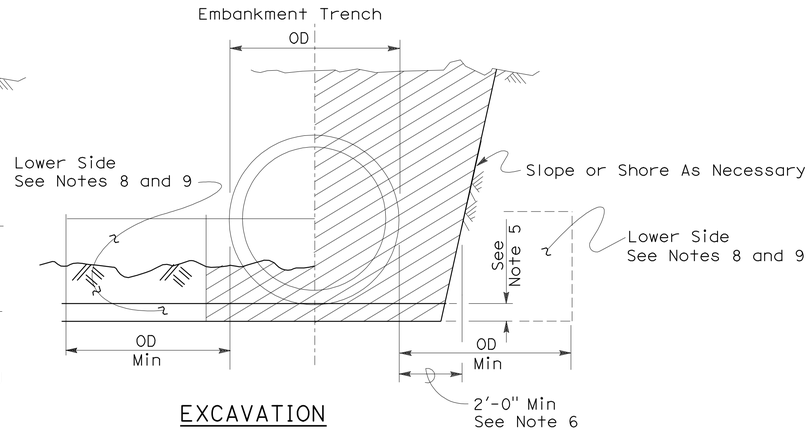

EXCAVATION

Roadway Embankment

Structure Backfill (Culvert) See Note 6

Structure Backfill (Culvert) See Note 6

Loose Backfill

Excavation Structure (Culvert)

TYPE 1 INSTALLATION:

The haunch and outer bedding shall be compacted to a minimum 90 percent relative compaction. In addition, the minimum sand equivalent in these areas shall be 30 and the maximum percentage passing the 75 μm sieve size shall be 12.

TYPE 2 INSTALLATION:

The haunch and outer bedding shall be compacted to a minimum 90 percent relative compaction. In addition, the minimum sand equivalent in these areas shall be 25.

TYPE 3 INSTALLATION:

The haunch and outer bedding shall be compacted to a minimum 85 percent relative compaction. 90 percent relative compaction will be required where the fill over the pipe is less than 4'-0" or 1/2 OD.

NOTES:

1. Unless otherwise shown on the plans or specified in the special provision, the Contractor shall have the option of selecting the class of RCP and the type of installation to be used, provided the height of cover does not exceed the value shown for the RCP selected.
   Example: 24" RCP culvert with maximum cover of 19'-0" the options are:
   a) Class III or stronger with Installation Type 1.
   b) Class III Special or stronger with Installation Type 2.
   c) Class IV Special or stronger with Installation Type 3.
   Cover is defined as the maximum vertical distance from top of the pipe to finished grade within the length of any given culvert.
2. The class of RCP and Installation Type selected shall be the same throughout the length of any given culvert.
3. The "length of any culvert" is defined as the culvert between:
   a) Successive drainage structure (inlets, junction boxes, headwalls, etc.).
   b) A drainage structure and the inlet or outlet end of the culvert.
   c) The inlet and outlet end of the culvert when there are no intervening drainage structures.
4. Oval and arch shaped RCP shall not be used.
5. 1/25 OD Min, not less than 3".
6. Slurry cement backfill may be substituted for backfill in the outer bedding and haunch areas. If slurry is used the outer and middle beddings shall be omitted. Prior to installation the soil under the middle 1/3 of the outside diameter of the pipe shall be softened by scarifying or other means to a minimum depth of 1/25 OD, but not less than 3". Where slurry cement backfill is used clear distance to trench wall may be reduced as set forth in Section 19-3.062 of the Standard Specifications.
7. Backfill shall be placed full width of excavation except where dimensions are shown for backfill width or thickness. Dimensions shown are minimums.
8. Lower side shall be suitable material as determined by the Engineer. Otherwise it shall be considered unsuitable as set forth in Section 19-2.02 of the Standard Specifications. See Note 9.
9. Where the pipe is placed in a trench, if the trench walls are sloped at 5 vertical to 1 horizontal or steeper for at least 90 percent of the trench height or up to not less than 12" from the grading plane, the firmness of the soil in the lower side need not be considered.
10. Non-reinforced precast concrete pipe sizes 3'-0" or smaller may be placed under installation Types 1, 2 or 3.

INSTALLATION TYPE 1

MINIMUM CLASS AND D-LOAD	COVER	
	108" Dia AND SMALLER	OVER 108" Dia
Class II 1000D	14.9'	12.9'
Class III 1350D	15.0' - 20.9'	13.0' - 18.9'
Class III Special 1700D	21.0' - 26.9'	19.0' - 24.9'
Class IV 2000D	27.0' - 31.9'	25.0' - 29.9'
Class IV Special 2500D	32.0' - 40.9'	30.0' - 38.9'
Class V 3000D	41.0' - 49.9'	39.0' - 46.9'
Class V Special 3600D	50.0' - 59.0'	47.0' - 58.0'

INSTALLATION TYPE 2

MINIMUM CLASS AND D-LOAD	COVER
Class II 1000D	9.9'
Class III 1350D	10.0'- 14.9'
Class III Special 1700D	15.0' - 19.9'
Class IV 2000D	20.0' - 24.9'
Class IV Special 2500D	25.0' - 31.9'
Class V 3000D	32.0' - 38.9'
Class V Special 3600D	39.0' - 47.0'

INSTALLATION TYPE 3

MINIMUM CLASS AND D-LOAD	COVER	
	48" Dia AND SMALLER	OVER 48" Dia
Class II 1000D	7.9'	5.9'
Class III 1350D	8.0' - 10.9'	6.0' - 8.9'
Class III Special 1700D	11.0' - 14.9'	9.0' - 12.9'
Class IV 2000D	15.0' - 17.9'	13.0' - 15.9'
Class IV Special 2500D	18.0' - 21.9'	16.0' - 19.9'
Class V 3000D	22.0' - 26.9'	20.0' - 24.9'
Class V Special 3600D	30.0' - 33.0'	25.0' - 31.0'

STATE OF CALIFORNIA
DEPARTMENT OF TRANSPORTATION

EXCAVATION AND BACKFILL CONCRETE PIPE CULVERTS

NO SCALE

RSP A62DA DATED NOVEMBER 17, 2006 SUPERSEDES STANDARD PLAN A62DA DATED MAY 1, 2006 - PAGE 20 OF THE STANDARD PLANS BOOK DATED MAY 2006.

REVISED STANDARD PLAN RSP A62DA

2006 REVISED STANDARD PLAN RSP A62DA

10-26-06

DIST	COUNTY	ROUTE	POST MILES TOTAL PROJECT	SHEET NO.	TOTAL SHEETS
01	Men	101	34.9/35.0, 43.7/43.9	29	36

Randell D. Hiatt
REGISTERED CIVIL ENGINEER

June 6, 2008
PLANS APPROVAL DATE

REGISTERED PROFESSIONAL ENGINEER
Randell D. Hiatt
No. C50200
Exp. 6-30-09
CIVIL
STATE OF CALIFORNIA

The State of California or its officers or agents shall not be responsible for the accuracy or completeness of electronic copies of this plan sheet.

To accompany plans dated 3-30-09

NOTES:

1. When necessary to place dike in front of face of guard railing, only Type C dike may be used. For dike details, see Standard Plan A87B.
2. For standard railing post embedment, see Standard Plans A77C3.
3. Guard railing delineation to be used where shown on the Project Plans.
4. When dike or curb is placed under guard railing, the maximum height of the dike or curb shall be 4". Mountable dike should not be used. For dike and curb details, see Revised Standard Plans RSP A87A and Standard Plan A87B.
5. For details of typical distance between the face of rail and hinge point, see Standard Plan A77C3.

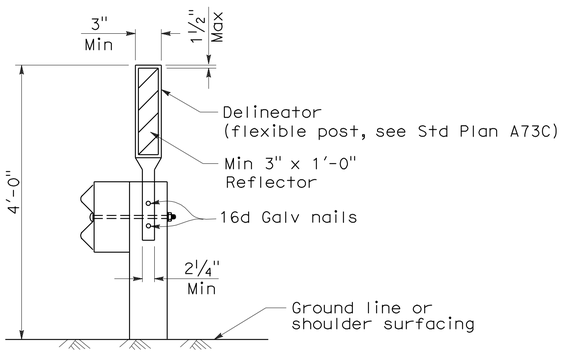

GUARD RAILING DELINEATION

See Note 3

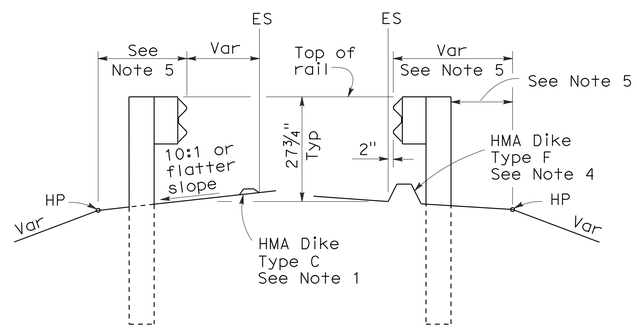

DIKE POSITIONING

See Note 1

STATE OF CALIFORNIA
DEPARTMENT OF TRANSPORTATION

METAL BEAM GUARD RAILING TYPICAL RAILING DELINEATION AND DIKE POSITIONING DETAILS

NO SCALE

RSP A77C4 DATED JUNE 6, 2008 SUPERSEDES STANDARD PLAN A77C4
DATED MAY 1, 2006 - PAGE 47 OF THE STANDARD PLANS BOOK DATED MAY 2006.

REVISED STANDARD PLAN RSP A77C4

2006 REVISED STANDARD PLAN RSP A77C4

12-10-07

DIST	COUNTY	ROUTE	POST MILES TOTAL PROJECT	SHEET NO.	TOTAL SHEETS
01	Men	101	34.9/35.0, 43.7/43.9	30	36

Raymond Don Tsztoo
REGISTERED CIVIL ENGINEER

June 6, 2008
PLANS APPROVAL DATE

REGISTERED PROFESSIONAL ENGINEER
Raymond Don Tsztoo
No. C37332
Exp. 6-30-08
CIVIL
STATE OF CALIFORNIA

The State of California or its officers or agents shall not be responsible for the accuracy or completeness of electronic copies of this plan sheet.

To accompany plans dated 3-30-09

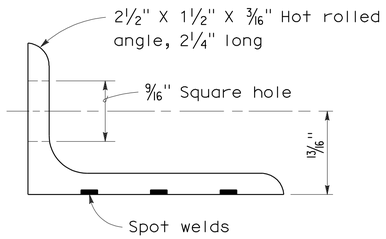

ANGLE

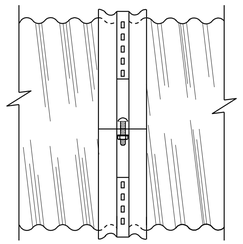

SIDE VIEW
ANGLE

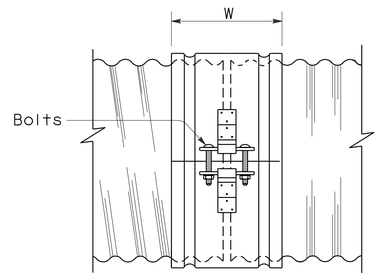

SIDE VIEW
SINGLE BAR AND STRAP

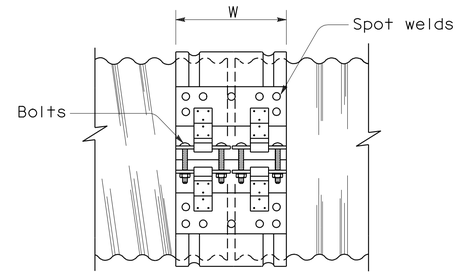

SIDE VIEW
DOUBLE BAR AND STRAP

NOTES:

1. All ferrous metal coupling band connection hardware shall be galvanized or electroplated in accordance with the Standard Specifications.
2. Dimensions and thicknesses shown are minimum.
3. Spot welds shall develop minimum required strength of strap.
4. Fillet welds of equivalent strength may be substituted for spot welds or rivets.
5. Dimension depends upon whether end condition is lips up or lips down.

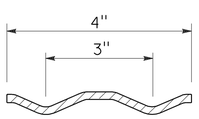

SECTION

H-4 HUGGER BAND

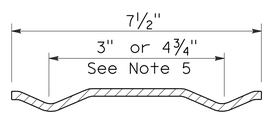

SECTION

H-7 HUGGER BAND

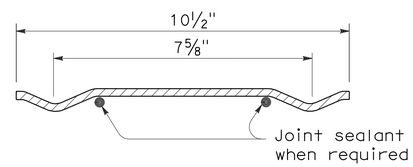

SECTION

H-10 HUGGER BAND

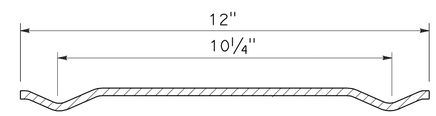

SECTION

H-12 HUGGER BAND

HUGGER COUPLING BANDS

STATE OF CALIFORNIA
DEPARTMENT OF TRANSPORTATION

CORRUGATED METAL PIPE COUPLING DETAILS No. 4 HUGGER COUPLING BANDS

NO SCALE

RSP D97D DATED JUNE 6, 2008 SUPERSEDES STANDARD PLAN D97D
DATED MAY 1, 2006 - PAGE 186 OF THE STANDARD PLANS BOOK DATED MAY 2006.

REVISED STANDARD PLAN RSP D97D

2006 REVISED STANDARD PLAN RSP D97D

3-24-08

DIST	COUNTY	ROUTE	POST MILES TOTAL PROJECT	SHEET NO.	TOTAL SHEETS
01	Men	101	34.9/35.0, 43.7/43.9	31	36

Raymond Don Tsztoo
REGISTERED CIVIL ENGINEER

June 6, 2008
PLANS APPROVAL DATE

REGISTERED PROFESSIONAL ENGINEER Raymond Don Tsztoo No. C37332 Exp. 6-30-08 CIVIL STATE OF CALIFORNIA

The State of California or its officers or agents shall not be responsible for the accuracy or completeness of electronic copies of this plan sheet.

ANNULAR AND HELICAL PROFILE

COUPLING TYPE	PIPE CORRUGATION	PIPE SIZE	W OR A	PIPE WALL THICKNESS CSP	PIPE WALL THICKNESS CAP	BAND THICKNESS CSP	BAND THICKNESS CAP	BAR AND STRAP (CSP ONLY) STRAP THICKNESS	BOLTS Dia	BAR Dia	BAR YIELD STRENGTH	ANGLE DIMENSIONS CSP	ANGLE DIMENSIONS CAP	BOLTS (No.- Dia) CSP	BOLTS (No.- Dia) CAP	RIVETS ANGLE TO BAND CSP	RIVETS ANGLE TO BAND CAP	SPOT WELDS ANGLE TO BAND CSP
TWO PIECE INTEGRAL FLANGE	1½′ × ¼"	6"-10"	7"	0.052"-0.079"	0.048"-0.060"	0.052"	0.060"							2-⅜"	2-⅜"			
		12"-18"	7"	0.052"-0.079"		0.064"								2-½"				
	2⅔" × ½"	12"-24"	7"	0.052"-0.079"	0.060"-0.105"	0.064"	0.060"							2-½"	2-½"			
UNIVERSAL	2⅔" × ½"	THROUGH 36"	12"	0.052"-0.138"	0.060"-0.135"	0.052"	0.060"					2" × 2" × 3/16"	2" × 2" × 3/16"	3-½"	3-½"	3-⅜"	3-⅜"	3-½"
		42"-60"	12"	0.052"-0.168"	0.075"-0.164"	0.052"	0.060"					2" × 2" × 3/16"	2" × 2" × 3/16"	3-½"	3-½"	3-⅜"	3-⅜"	5-½"
		THROUGH 72"	12"	0.052"-0.168"	0.164"	0.052"	0.105"	0.079"	½"	⅞"	32 ksi	2" × 2" × 3/16"	2" × 2" × 3/16"	3-½"	3-½"	3-⅜"	3-⅜"	5-½"
		78"-84"	16¼"	0.168"		0.079"		DOUBLE 0.079"	½"	⅞"	32 ksi							
ANNULAR	2⅔" × ½"	THROUGH 36"	7"	0.064"-0.138"	0.060"-0.135"	0.052"	0.060"	0.079"	½"	⅞"	32 ksi	2" × 2" × 3/16"	2" × 2" × 3/16"	2-½"	2-½"	3-⅜"	3-⅜"	3-½"
		42"-72"	12"	0.064"-0.168"	0.075"-0.164"	0.052"	0.105"	0.079"	½"	⅞"	32 ksi	2" × 2" × 3/16"	2" × 2" × 3/16"	3-½"	3-½"	3-⅜"	3-⅜"	5-½"
		78"-84"	12"	0.168"		0.079"		0.109"	½"	⅞"	45 ksi	2" × 2" × 3/16"		3-½"		3-⅜"		5-½"
	3" × 1"	48"-90"	14"	0.064"-0.109"		0.052"		0.079"	½"	⅞"	32 ksi	2" × 2" × 3/16"		3-½"		3-⅜"		5-½"
		96"-120"	14"	0.079"-0.109"		0.052"		0.109"	½"	⅞"	45 ksi	2" × 2" × 3/16"		3-½"		4-⅜"		
		42"-108"	14"		0.060"-0.135"		0.060"						2" × 2" × 3/16"		3-½"		3-⅜"	
HELICAL	2⅔" × ½"	THROUGH 36"	12"	0.052"-0.138"	0.060"-0.135"	0.052"	0.060"	0.079"	½"	⅞"	32 ksi	2" × 2" × 3/16"	2" × 2" × 3/16"	3-½"	3-½"	3-⅜"	3-⅜"	3-½"
		42"-72"	12"	0.052"-0.168"	0.075"-0.164"	0.052"	0.060"	0.079"	½"	⅞"	32 ksi	2" × 2" × 3/16"	2" × 2" × 3/16"	3-½"	3-½"	3-⅜"	3-⅜"	5-½"
		78"-84"	12"	0.168"		0.079"		0.109"	½"	⅞"	45 ksi	2" × 2" × 3/16"		3-½"		3-⅜"		5-½"
	3" × 1"	48"-90"	14"	0.064"-0.109"		0.052"		0.079"	½"	⅞"	32 ksi	2" × 2" × 3/16"		3-½"		3-⅜"		5-½"
		96"-120"	14"	0.079"-0.109"		0.052"		0.109"	½"	⅞"	45 ksi	2" × 2" × 3/16"		3-½"		4-⅜"		
		42"-108"	14"		0.060"-0.135"		0.060"						2" × 2" × 3/16"		3-½"		3-⅜"	
HUGGER	2⅔" × ½" REROLLED END	12"-54"	4"	0.052"-0.109"		0.052"						2½" × 1½" × 3/16"	2½" × 1½" × 3/16"	1-½"				3-½"
		60"-66"	4"	0.109"		0.064"						2½" × 1½" × 3/16"	2½" × 1½" × 3/16"	1-½"				3-½"
		36"-48"	4"	0.138"		0.064"						2½" × 1½" × 3/16"	2½" × 1½" × 3/16"	1-½"				3-½"
		THROUGH 72"	10½"	0.052"-0.168"		0.052"		0.079"	½"	⅞"	32 ksi							
		78"-84"	10½"	0.168"		0.079"		0.109"	½"	⅞"	45 ksi							
	3" × 1" REROLLED END	48"-90"	10½"	0.064"-0.109"		0.052"		0.079"	½"	⅞"	32 ksi							
		96"-120"	10½"	0.079"-0.109"		0.052"		0.109"	½"	⅞"	45 ksi							
	5" × 1" REROLLED END	48"-66"	7½"	0.064"-0.109"		0.064"		0.079"	½"	⅞"	32 ksi	2½" × 1½" × 3/16"	2½" × 1½" × 3/16"	1-½"				3-½"
		72"-90"	7½"	0.064"-0.079"		0.064"		0.079"	½"	⅞"	32 ksi	2½" × 1½" × 3/16"	2½" × 1½" × 3/16"	1-½"				3-½"
		48"-90"	7½"	0.064"-0.138"		0.064"		0.079"	½"	⅞"	32 ksi							
		48"-120"	12" SEE	0.064"-0.109"		0.064"		0.079"	½"	⅞"	32 ksi							
		48"-84"	12" NOTE	0.138"		0.064"		0.079"	½"	⅞"	32 ksi							
		90"-120"	12" 11	0.138"		0.064"		DOUBLE 0.079"	½"	⅞"	32 ksi							

SPIRAL RIB PROFILE

COUPLING TYPE	PIPE CORRUGATION	PIPE SIZE	W	PIPE WALL THICKNESS SSRP	PIPE WALL THICKNESS ASRP	BAND THICKNESS SSRP	BAND THICKNESS ASRP	BAR AND STRAP (SSRP ONLY) STRAP THICKNESS	BOLTS Dia	BAR Dia	BAR YIELD STRENGTH	ANGLE DIMENSIONS SSRP	ANGLE DIMENSIONS ASRP	BOLTS (No.- Dia) SSRP	BOLTS (No.- Dia) ASRP	RIVETS ANGLE TO BAND SSRP	RIVETS ANGLE TO BAND ASRP	SPOT WELDS ANGLE TO BAND SSRP
ANNULAR	2⅔" × ½" * REROLLED END	24"-36"	12"	0.064"-0.109"	0.060"-0.105"	0.052"	0.060"	0.079"	½"	⅞"	32 ksi	2" × 2" × 3/16"	2" × 2" × 3/16"	3-½"	3-½"	3-⅜"	3-⅜"	5-½"
		42"-60"	12"	0.064"-0.109"	0.075"-0.105"	0.052"	0.105"	0.079"	½"	⅞"	32 ksi	2" × 2" × 3/16"	2" × 2" × 3/16"	3-½"	3-½"	3-⅜"	3-⅜"	5-½"
		66"-72"	12"	0.064"-0.109"		0.052"		0.079"	½"	⅞"	32 ksi	2" × 2" × 3/16"	2" × 2" × 3/16"	3-½"	3-½"	3-⅜"	3-⅜"	5-½"
		78"-114"	12"	0.079"-0.109"		0.079"		0.109"	½"	⅞"	45 ksi	2" × 2" × 3/16"	2" × 2" × 3/16"	3-½"	3-½"	3-⅜"	3-⅜"	5-½"
HUGGER	2⅔" × ½" * REROLLED END	24"-72"	10½"	0.064"-0.109"		0.052"		0.079"	½"	⅞"	32 ksi							
		78"-84"	10½"	0.109"		0.079"		0.109"	½"	⅞"	45 ksi							

* See Note 14.

14. All profiles of Spiral Rib Pipe (¾" × ¾" ribs at 7½" pitch and ¾" × 1" ribs at 11½" pitch in both steel and aluminum and ¾" × 1" ribs at 8½" pitch in steel only) shall be manufactured with rerolled ends. Corrugation profile of the rerolled ends shall be 2⅔" × ½" annual corrugations with a minimum of two full corrugations at each end.

NOTES:

To accompany plans dated 3-30-09

1. All ferrous metal coupling band connection hardware shall be galvanized or electro-plated in accordance with the Standard Specifications.
2. For helically corrugated coupling bands, the connection angles may be oriented parallel to the pipe axis, provided connecting holes are slotted lengthwise sufficiently to allow adjustment for the helix angle.
3. Tension strap may be connected to band with either spot welds or fillet welds that develop minimum required strength of strap.
4. Use 1¼" gage line dimension on attached angle leg for rivets and spot welds.
5. Band thickness shall not be less than:
   a. 3 standard thicknesses lighter than the thickness of the pipe for Corrugated Steel Pipe.
   b. 2 standard thicknesses lighter than the thickness of the pipe and in no case lighter than 0.060" for Corrugated Aluminum Pipe.
6. Dimensions, thicknesses and strengths shown are minimum.
7. For pipe arches use same width band as for round pipe of equal periphery.
8. Fillet welds of equivalent strenght may be substituted for spot welds or rivets.
9. Spot welds shall develop minimum required strength of strap.
10. Pipe with rerolled ends having at least two 2⅔" × ½" annular corrugations at each end with or without an upturned flange may be connected with any of the annular coupling bands shown for pipe of the same diameter and wall thickness and having 2⅔" × ½" corrugations.
11. In the case of H-12 huggerbands, two piece bands are required for diameters through 96" and three piece bands are required for diameters 102" through 120".
12. Two piece bands are required for pipes greater than 42" diameter.
13. The 2¼" × 2" × 0.109" thick galvanized die-formed angle connector may be used in lieu of the 2" × 2" × 3/16" angle connector for standard joints only on pipes through 72" diameter.

STATE OF CALIFORNIA
DEPARTMENT OF TRANSPORTATION

CORRUGATED METAL PIPE COUPLING DETAILS No. 5 STANDARD JOINT

NO SCALE

RSP D97E DATED JUNE 6, 2008 SUPERSEDES STANDARD PLAN D97E
DATED MAY 1, 2006 - PAGE 187 OF THE STANDARD PLANS BOOK DATED MAY 2006.

REVISED STANDARD PLAN RSP D97E

2006 REVISED STANDARD PLAN RSP D97E

4-2-08

DIST	COUNTY	ROUTE	POST MILES TOTAL PROJECT	SHEET NO.	TOTAL SHEETS
01	Men	101	34.9/35.0, 43.7/43.9	32	36

Raymond Don Tsztoo
REGISTERED CIVIL ENGINEER

June 6, 2008
PLANS APPROVAL DATE

REGISTERED PROFESSIONAL ENGINEER Raymond Don Tsztoo No. C37332 Exp. 6-30-08 CIVIL STATE OF CALIFORNIA

The State of California or its officers or agents shall not be responsible for the accuracy or completeness of electronic copies of this plan sheet.

To accompany plans dated 3-30-09

ANNULAR AND HELICAL PROFILE

COUPLING TYPE	PIPE CORRUGATION	PIPE SIZE	W OR A	PIPE WALL THICKNESS CSP	PIPE WALL THICKNESS CAP	BAND THICKNESS CSP	BAND THICKNESS CAP	BAR AND STRAP (CSP ONLY) STRAP THICKNESS	BOLTS Dia	BAR Dia	BAR YIELD STRENGTH	ANGLE DIMENSIONS CSP	ANGLE DIMENSIONS CAP	BOLTS (No. - Dia) CSP	BOLTS (No. - Dia) CAP	RIVETS ANGLE TO BAND CSP	RIVETS ANGLE TO BAND CAP	SPOT WELDS ANGLE TO BAND CSP
TWO PIECE INTEGRAL FLANGE	1½" × ¼"	6"-10"	7"	0.064"-0.079"	0.060"	0.064"	0.060"							2-⅜"	2-⅜"			
	2⅔" × ½"	12"-24"	12"		0.060"-0.105"		0.060"								3-½"			
UNIVERSAL	2⅔" × ½"	THROUGH 36"	12"	0.064"-0.138"	0.060"-0.135"	0.064"	0.060"	0.079"	½"	⅞"	32 ksi	2" × 2" × 3/16"	2" × 2" × 3/16"	3-½"	3-½"	3-⅜"	3-⅜"	5-½"
		42"-60"	16¼"	0.064"-0.168"	0.060"-0.164"	0.064"	0.060"	DOUBLE 0.079"	½"	⅞"	32 ksi	2" × 2" × ¼"	2" × 2" × ¼"	4-½"	4-½"	5-⅜"	5-⅜"	
ANNULAR	2⅔" × ½"	THROUGH 36"	12"	0.064"-0.138"	0.060"-0.135"	0.064"	0.060"					2" × 2" × 3/16"	2" × 2" × 3/16"	3-½"	3-½"	3-⅜"	3-⅜"	5-½"
		42"-60"	12"	0.064"-0.079"		0.064"						2" × 2" × 3/16"		3-½"		3-⅜"		5-½"
		42"-60"	12"	0.109"-0.168"	0.135"-0.164"	0.064"	0.075"					2" × 2" × ¼"	2" × 2" × ¼"	3-½"	3-½"	5-⅜"	5-⅜"	
		66"-72"	24"		0.164"		0.105"						2" × 2" × ¼"		5-½"		5-½"	
		66"-84"	24"	0.109"-0.168"		0.064"						2" × 2" × ¼"		5-½"		7-⅜"		
		42"-54"	12"		0.060"-0.105"		0.060"						2" × 2" × 3/16"		3-½"		3-⅜"	
	3" × 1"	48"-60"	14"	0.064"-0.079"		0.064"						2" × 2" × 3/16"		3-½"		3-⅜"		5-½"
		48"-60"	14"	0.109"		0.064"						2" × 2" × 3/16"		3-½"		5-⅜"		
		66"-120"	25"	0.064"-0.109"		0.064"						2" × 2" × 3/16"		5-½"		9-⅜"		
		42"-60"	14"		0.060"-0.105"		0.060"						2" × 2" × 3/16"		3-½"		5-⅜"	
		42"-60"	14"		0.135"		0.075"						2" × 2" × ¼"		3-½"		5-⅜"	
		66"-96"	25"		0.060"-0.135"		0.060"						2" × 2" × ¼"		5-½"		7-⅜"	
		96"-108"	25"		0.135"		0.075"						2" × 2" × ¼"		5-½"		7-⅜"	
HELICAL	2⅔" × ½"	THROUGH 36"	12"	0.064"-0.138"	0.060"-0.135"	0.064"	0.060"					2" × 2" × 3/16"	2" × 2" × 3/16"	3-½"	3-½"	3-⅜"	3-⅜"	5-½"
		42"-54"	12"		0.060"-0.105"		0.060"						2" × 2" × 3/16"		3-½"		3-⅜"	
		42"-60"	12"	0.064"-0.079"		0.064"						2" × 2" × 3/16"		3-½"		3-⅜"		5-½"
		42"-60"	12"	0.109"-0.168"	0.135"-0.164"	0.064"	0.075"					2" × 2" × ¼"	2" × 2" × ¼"	3-½"	3-½"	5-⅜"	5-⅜"	
		66'-84"	24"	0.109"-0.168"		0.064"						2" × 2" × ¼"		5-½"		7-⅜"		
		66"-72"	24"		0.164"		0.105"						2" × 2" × ¼"		5-½"		5-⅜"	
	3" × 1"	48"-60"	14"	0.064"-0.079"		0.064"						2" × 2" × 3/16"		3-½"		3-⅜"		5-½"
		48"-60"	14"	0.109"		0.064"						2" × 2" × 3/16"		3-½"		5-⅜"		
		66"-120"	25"	0.064"-0.109"		0.064"						2" × 2" × 3/16"		5-½"		9-⅜"		
		42"-60"	14"		0.060"-0.105"		0.060"						2" × 2" × 3/16"		3-½"		5-⅜"	
		42"-60"	14"		0.135"		0.075"						2" × 2" × ¼"		3-½"		5-⅜"	
		66"-96"	25"		0.060"-0.135"		0.060"						2" × 2" × ¼"		5-½"		7-⅜"	
		96"-108"	25"		0.135"		0.075"						2" × 2" × ¼"		5-½"		7-⅜"	
HUGGER	2⅔" × ½" REROLLED END	THROUGH 48"	10½"	0.109"		0.064"		0.079"	½"	⅞"	32 ksi							
		54"- 66"	10½"	0.109"		0.064"		DOUBLE 0.079"	½"	⅞"	32 ksi							
		THROUGH 54"	10½"	0.064"-0.079"		0.064"		0.079"	½"	⅞"	32 ksi							
		THROUGH 60"	10½"	0.138"		0.079"		DOUBLE 0.079"	½"	⅞"	32 ksi							
		66"-72"	10½"	0.138"		0.109"		DOUBLE 0.079"	½"	⅞"	32 ksi							
		THROUGH 72"	10½"	0.168"		0.109"		DOUBLE 0.109"	½"	⅞"	45 ksi							
	3" × 1" REROLLED END	48"-84"	10½"	0.109"		0.079"		DOUBLE 0.079"	½"	⅞"	32 ksi							
		48"-90"	10½"	0.064"-0.079"		0.064"		DOUBLE 0.079"	½"	⅞"	32 ksi							
		96"-102"	10½"	0.079"		0.079"		DOUBLE 0.079"	½"	⅞"	32 ksi							
		90"-120"	10½"	0.109"		0.109"		DOUBLE 0.109"	½"	⅞"	45 ksi							

SPIRAL RIB PROFILE

COUPLING TYPE	PIPE CORRUGATION	PIPE SIZE	W	PIPE WALL THICKNESS SSRP	PIPE WALL THICKNESS ASRP	BAND THICKNESS SSRP	BAND THICKNESS ASRP	BAR AND STRAP (SSRP ONLY) STRAP THICKNESS	BOLTS Dia	BAR Dia	BAR YIELD STRENGTH	ANGLE DIMENSIONS SSRP	ANGLE DIMENSIONS ASRP	BOLTS (No.- Dia) SSRP	BOLTS (No.- Dia) ASRP	RIVETS ANGLE TO BAND SSRP	RIVETS ANGLE TO BAND ASRP	SPOT WELDS ANGLE TO BAND SSRP
ANNULAR	2⅔" × ½" * REROLLED END	24"-36"	12"	0.064"-0.109"	0.060"-0.105"	0.064"	0.060"	0.079"	½"	⅞"	32 ksi	2" × 2" × 3/16"	2" × 2" × 3/16"	3-½"	3-½"	3-⅜"	3-⅜"	5-½"
		42"-60"	12"	0.064"-0.079"	0.075"-0.105"	0.064"	0.075"	0.079"	½"	⅞"	32 ksi	2" × 2" × 3/16"	2" × 2" × 3/16"	3-½"	3-½"	3-⅜"	3-⅜"	5-½"
		42"-60"	12"	0.109"		0.064"		0.079"	½"	⅞"	32 ksi	2" × 2" × ¼"		3-½"		5-⅜"		
		66"-84"	24"	0.109"		0.064"		0.079"	½"	⅞"	32 ksi	2" × 2" × ¼"		5-½"		7-⅜"		
HUGGER	2⅔" × ½" * REROLLED END	24"-54"	10½"	0.064"-0.079"		0.064"		0.079"	½"	⅞"	32 ksi							
		24"-48"	10½"	0.109"		0.064"		0.079"	½"	⅞"	32 ksi							
		54"-66"	10½"	0.109"		0.064"		Double 0.079"	½"	⅞"	32 ksi							

* See Note 13.

NOTES:

1. All ferrous metal coupling band connection hardware shall be galvanized or electroplated in accordance with the Standard Specifications.
2. For helically corrugated coupling bands, the connection angles may be oriented parallel to the pipe axis, provided connecting holes are slotted lengthwise sufficiently to allow adjustment for the helix angle.
3. Tension strap may be connected to band with either spot welds or fillet welds that develop minimum required strength of strap.
4. Use 1¼" gage line dimension on attached angle leg for rivets and spot welds.
5. Band thickness shall not be less than:
   a. 3 standard thicknesses lighter than the thickness of the pipe for Corrugated Steel Pipe.
   b. 2 standard thicknesses lighter than the thickness of the pipe and in no case lighter than 0.060" for Corrugated Aluminum Pipe.
6. Dimensions, thicknesses and strengths shown are minimum.
7. For pipe arches use same width band as for round pipe of equal periphery.
8. Fillet welds of equivalent strength may be substituted for spot welds or rivets.
9. Spot welds shall develop minimum required strength of strap.
10. Pipe with rerolled ends having at least two 2⅔" × ½" annular corrugations at each end with or without an upturned flange may be connected with any of the annular coupling bands shown for pipe of the same diameter and wall thickness and having 2⅔" × ½" corrugations.
11. In the case of H-12 huggerbands, two piece bands are required for diameters through 96" and three piece bands are required for diameters 102" through 120".
12. Two piece bands are required for pipes greater than 42" diameter.
13. All profiles of Spiral Rib Pipe (¾" × ¾" ribs at 7½" pitch and ¾" × 1" ribs at 11½" pitch in both steel and aluminum and ¾" × 1" ribs at 8½" pitch in steel only) shall be manufactured with rerolled ends. Corrugation profile of the rerolled ends shall be 2⅔" × ½" annual corrugations with a minimum of two full corrugations at each end.

STATE OF CALIFORNIA
DEPARTMENT OF TRANSPORTATION

CORRUGATED METAL PIPE COUPLING DETAILS No. 6 POSITIVE JOINT

NO SCALE

RSP D97F DATED JUNE 6, 2008 SUPERSEDES STANDARD PLAN D97F
DATED MAY 1, 2006 - PAGE 188 OF THE STANDARD PLANS BOOK DATED MAY 2006.

REVISED STANDARD PLAN RSP D97F

2006 REVISED STANDARD PLAN RSP D97F

4-2-08

DIST	COUNTY	ROUTE	POST MILES TOTAL PROJECT	SHEET NO.	TOTAL SHEETS
01	Men	101	34.9/35.0, 43.7/43.9	33	36

Raymond Don Tsztoo
REGISTERED CIVIL ENGINEER

June 6, 2008
PLANS APPROVAL DATE

REGISTERED PROFESSIONAL ENGINEER
Raymond Don Tsztoo
No. C37332
Exp. 6-30-08
CIVIL
STATE OF CALIFORNIA

The State of California or its officers or agents shall not be responsible for the accuracy or completeness of electronic copies of this plan sheet.

To accompany plans dated 3-30-09

ANNULAR AND HELICAL PROFILE

COUPLING TYPE	PIPE CORRUGATION	PIPE SIZE	W OR A	PIPE WALL THICKNESS		BAND THICKNESS		BAR AND STRAP (CSP ONLY)			ANGLE						
											DIMENSIONS		BOLTS (No.- Dia)		RIVETS ANGLE TO BAND		SPOT WELDS ANGLE TO BAND
				CSP	CAP	CSP	CAP	STRAP THICKNESS	BOLTS Dia	BAR Dia	CSP	CAP	CSP	CAP	CSP	CAP	CSP
TWO PIECE INTEGRAL FLANGE	1½′ × ¼"	6"	7"	0.064"-0.168"		0.052"							3-⅜"				
	1½′ × ¼"	8"-10"	7"	0.064"-0.168"	0.060"-0.164"	0.064"	0.060"						3-⅜"	3-⅜"			
ANNULAR	2⅔" × ½"	THROUGH 24"	12"	0.064"-0.168"	0.060"-0.164"	0.064"	0.060"				2" × 2" × 3/16"	2" × 2" × 3/16"	3-½"	3-½"	3-⅜"	3-⅜"	3-½"
HUGGER	2⅔" × ½" REROLLED END	THROUGH 24"	10½"	0.064"-0.168"		0.064"		0.079"	½"	⅞"							

SPIRAL RIB PROFILE

COUPLING TYPE	PIPE CORRUGATION	PIPE SIZE	W	PIPE WALL THICKNESS		BAND THICKNESS		BAR AND STRAP (SSRP ONLY)			ANGLE						
											DIMENSIONS		BOLTS (No.- Dia)		RIVETS ANGLE TO BAND		SPOT WELDS ANGLE TO BAND
				SSRP	ASRP	SSRP	ASRP	STRAP THICKNESS	BOLTS Dia	BAR Dia	SSRP	ASRP	SSRP	ASRP	SSRP	ASRP	SSRP
ANNULAR	2⅔" × ½" * REROLLED END	24"	12"	0.064"-0.168"	0.060"-0.164"	0.064"	0.060"				2" × 2" × 3/16"	2" × 2" × 3/16"	3-½"	3-½"	3-⅜"	3-⅜"	3-½"
HUGGER	2⅔" × ½" * REROLLED END	24"	10½"	0.064"-0.168"		0.064"		0.079"	½"	⅞"							

* See Note 12.

NOTES:

1. All ferrous metal coupling band connection hardware shall be galvanized or electro-plated in accordance with the Standard Specifications.
2. For helically corrugated coupling bands, the connection angles may be oriented parallel to the pipe axis, provided connecting holes are slotted lengthwise sufficiently to allow adjustment for the helix angle.
3. Tension strap may be connected to band with either spot welds or fillet welds that develop minimum required strength of strap.
4. Use 1¼" gage line dimension on attached angle leg for rivets and spot welds.
5. Band thickness shall not be less than:
   a. 3 standard thicknesses lighter than the thickness of the pipe for Corrugated Steel Pipe.
   b. 2 standard thicknesses lighter than the thickness of the pipe and in no case lighter than 0.060" for Corrugated Aluminum Pipe.
6. Dimensions, thicknesses and strengths shown are minimum.
7. For pipe arches use same width band as for round pipe of equal periphery.
8. Fillet welds of equivalent strenght may be substituted for spot welds or rivets.
9. Spot welds shall develop minimum required strength of strap.
10. Pipe with rerolled ends having at least two 2⅔" × ½" annular corrugations at each end with or without an upturned flange may be connected with any of the annular coupling bands shown for pipe of the same diameter and wall thickness and having 2⅔" × ½" corrugations.
11. For downdrain applications, two piece integral flange couplers shall have factory applied sleeve type rubber gaskets with a minimum length of 7" measured along the length of the pipe.
12. All profiles of Spiral Rib Pipe (¾" × ¾" ribs at 7½" pitch and ¾" × 1" ribs at 11½" pitch in both steel and aluminum and ¾" × 1" ribs at 8½" pitch in steel only) shall be manufactured with rerolled ends. Corrugation profile of the rerolled ends shall be 2⅔" × ½" annual corrugations with a minimum of two full corrugations at each end.

STATE OF CALIFORNIA
DEPARTMENT OF TRANSPORTATION

CORRUGATED METAL PIPE COUPLING DETAILS No. 7 DOWNDRAIN

NO SCALE

RSP D97G DATED JUNE 6, 2008 SUPERSEDES STANDARD PLAN D97G
DATED MAY 1, 2006 - PAGE 189 OF THE STANDARD PLANS BOOK DATED MAY 2006.

REVISED STANDARD PLAN RSP D97G

2006 REVISED STANDARD PLAN RSP D97G

4-4-08

DIST	COUNTY	ROUTE	POST MILES TOTAL PROJECT	SHEET NO.	TOTAL SHEETS
01	Men	101	34.9/35.0, 43.7/43.9	34	36

Randell D. Hiatt
REGISTERED CIVIL ENGINEER

June 6, 2008
PLANS APPROVAL DATE

REGISTERED PROFESSIONAL ENGINEER
Randell D. Hiatt
No. C50200
Exp. 6-30-09
CIVIL
STATE OF CALIFORNIA

The State of California or its officers or agents shall not be responsible for the accuracy or completeness of electronic copies of this plan sheet.

To accompany plans dated 3-30-09

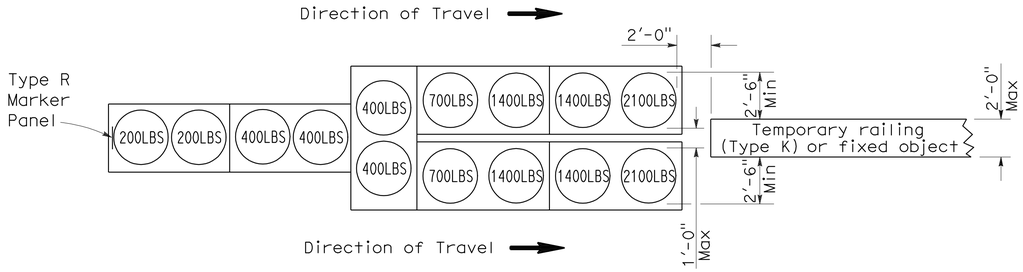

ARRAY 'TU14'

Approach speed 45 mph or more

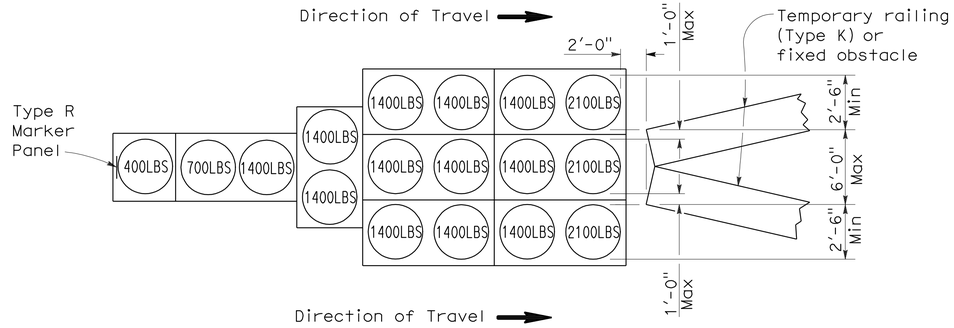

ARRAY 'TU17'

Approach speed less than 45 mph

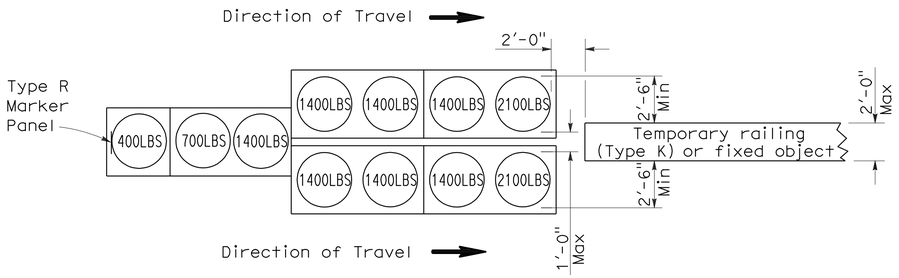

ARRAY 'TU11'

Approach speed less than 45 mph

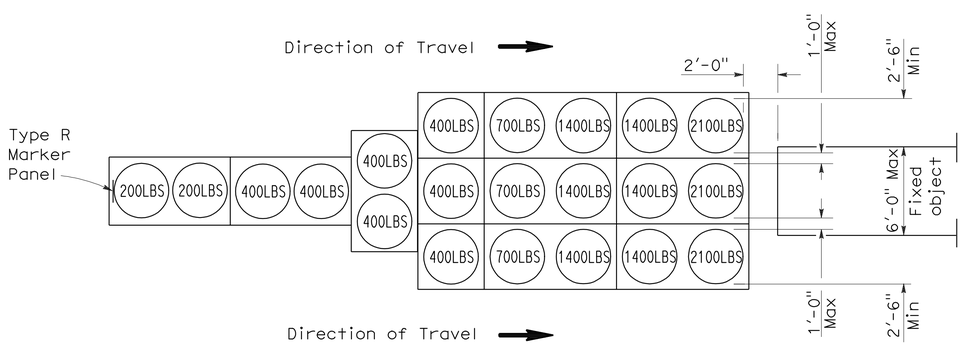

ARRAY 'TU21'

Approach speed 45 mph or more

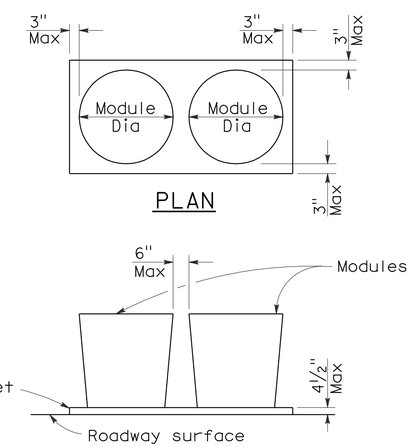

ELEVATION

CRASH CUSHION PALLET DETAIL

See Note 7

NOTES:

1. (XXX) Indicates sand filled module location and weight of sand in pounds for each module. Module spacing is based on the greater diameter of the module.
2. All sand weights are nominal.
3. Temporary crash cushion arrays shall not encroach on the traveled way.
4. Place the top of Type R marker panel 1" below the module lid.
5. Refer to Standard Plan A73B for marker details.
6. Approach speeds indicated conform to NCHRP 350 Report criteria.
7. Use of pallets is optional.

STATE OF CALIFORNIA
DEPARTMENT OF TRANSPORTATION

TEMPORARY CRASH CUSHION, SAND FILLED (UNIDIRECTIONAL)

NO SCALE

RSP T1A DATED JUNE 6, 2008 SUPERSEDES STANDARD PLAN T1A
DATED MAY 1, 2006 - PAGE 211 OF THE STANDARD PLANS BOOK DATED MAY 2006.

REVISED STANDARD PLAN RSP T1A

2006 REVISED STANDARD PLAN RSP T1A

5-15-08

DIST	COUNTY	ROUTE	POST MILES TOTAL PROJECT	SHEET NO.	TOTAL SHEETS
01	Men	101	34.9/35.0, 43.7/43.9	35	36

Randell D. Hiatt
REGISTERED CIVIL ENGINEER

June 6, 2008
PLANS APPROVAL DATE

REGISTERED PROFESSIONAL ENGINEER
Randell D. Hiatt
No. C50200
Exp. 6-30-09
CIVIL
STATE OF CALIFORNIA

The State of California or its officers or agents shall not be responsible for the accuracy or completeness of electronic copies of this plan sheet.

To accompany plans dated 3-30-09

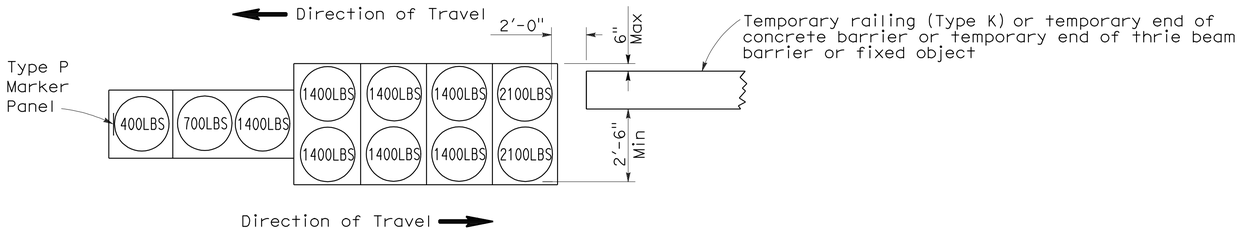

ARRAY 'TB11'

Approach speed less than 45 mph

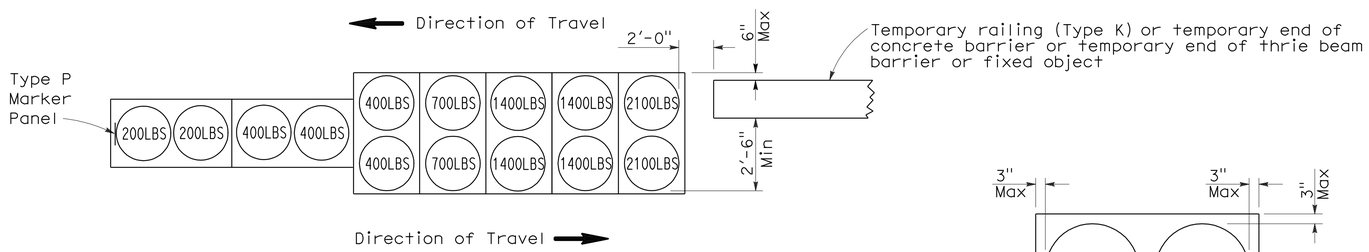

ARRAY 'TB14'

Approach speed 45 mph or more

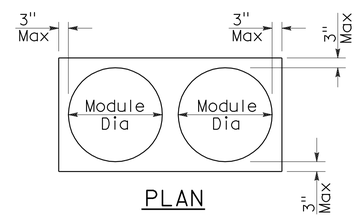

PLAN

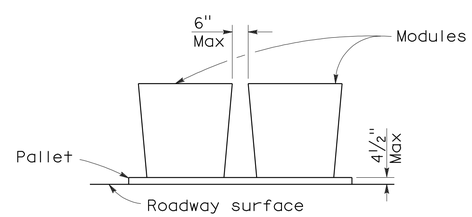

ELEVATION

CRASH CUSHION PALLET DETAIL

See Note 7

NOTES:

1. (XXX) Indicates sand filled module location and weight of sand in pounds for each module. Module spacing is based on the greater diameter of the module.
2. All sand weights are nominal.
3. Temporary crash cushion arrays shall not encroach on the traveled way.
4. Place the Type P marker panel so that the bottom of the panel rests upon the pallet.
5. Refer to Standard Plan A73B for marker details.
6. Approach speeds indicated conform to NCHRP 350 Report criteria.
7. Use of pallets is optional.

STATE OF CALIFORNIA
DEPARTMENT OF TRANSPORTATION

TEMPORARY CRASH CUSHION, SAND FILLED (BIDIRECTIONAL)

NO SCALE

RSP T1B DATED JUNE 6, 2008 SUPERSEDES STANDARD PLAN T1B
DATED MAY 1, 2006 - PAGE 212 OF THE STANDARD PLANS BOOK DATED MAY 2006.

REVISED STANDARD PLAN RSP T1B

2006 REVISED STANDARD PLAN RSP T1B

5-15-08

DIST	COUNTY	ROUTE	POST MILES TOTAL PROJECT	SHEET NO.	TOTAL SHEETS
01	Men	101	34.9/35.0, 43.7/43.9	36	36

Randell D. Hiatt
REGISTERED CIVIL ENGINEER

June 6, 2008
PLANS APPROVAL DATE

REGISTERED PROFESSIONAL ENGINEER
Randell D. Hiatt
No. C50200
Exp. 6-30-09
CIVIL
STATE OF CALIFORNIA

The State of California or its officers or agents shall not be responsible for the accuracy or completeness of electronic copies of this plan sheet.

To accompany plans dated 3-30-09

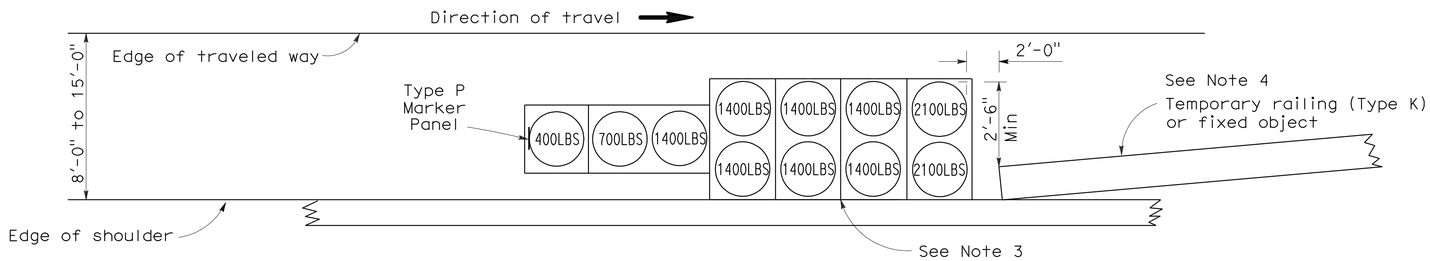

ARRAY 'TS11'

Approach speed less than 45 mph
See Note 9

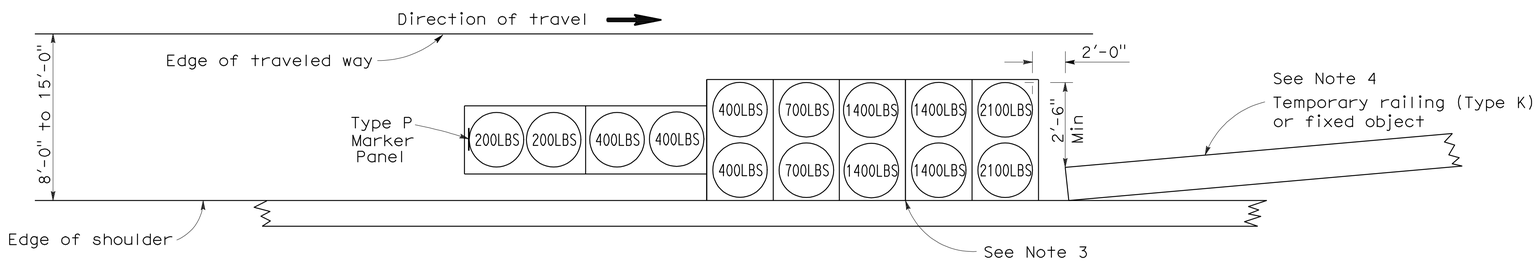

ARRAY 'TS14'

Approach speed 45 mph or more
See Note 9

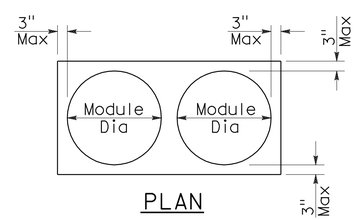

PLAN

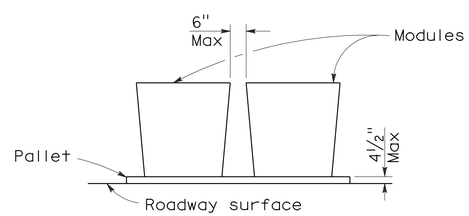

ELEVATION

CRASH CUSHION PALLET DETAIL

See Note 11

NOTES:

1. (XXX) Indicates sand filled module location and weight of sand in pounds for each module. Module spacing is based on the greater diameter of the module.
2. All sand weights are nominal.
3. The temporary crash cushion arrays shown on this plan shall be used only in locations where there will be traffic on one side of the temporary crash cushion array.
4. If the fixed object or approach end of the temporary railing is less than 15'-0" from the edge of traveled way, a temporary crash cushion is required in a construction or work zone.
5. Temporary crash cushion arrays shall not encroach on the traveled way.
6. Arrays for median shoulders shall conform to details shown on this plan for outside shoulders.
7. Place the Type P marker panel so that the bottom of the panel rests upon the pallet and faces traffic.
8. Refer to Standard Plan A73B for marker details.
9. For shoulder widths less than 8'-0", appropriate approved crash cushion protection, other than sand filled modules, shall be provided at fixed objects and at approach ends of temporary railing. The specific type of crash cushion shall be as shown on the project plans or as specified in the Special Provisions, or if not shown on the project plans or specified in the Special Provisions, shall be as approved by the Engineer.
10. Approach speeds indicated conform to NCHRP 350 Report criteria.
11. Use of pallets is optional.

STATE OF CALIFORNIA
DEPARTMENT OF TRANSPORTATION

TEMPORARY CRASH CUSHION, SAND FILLED (SHOULDER INSTALLATIONS)

NO SCALE

RSP T2 DATED JUNE 6, 2008 SUPERSEDES STANDARD PLAN T2
DATED MAY 1, 2006 - PAGE 213 OF THE STANDARD PLANS BOOK DATED MAY 2006.

REVISED STANDARD PLAN RSP T2

2006 REVISED STANDARD PLAN RSP T2

5-15-08