ACSTP-43L8(004)E

Dist	COUNTY	ROUTE	POST MILES TOTAL PROJECT	SHEET No.	TOTAL SHEETS
01	Hum	254	22.3,40.1	1	26

STATE OF CALIFORNIA
DEPARTMENT OF TRANSPORTATION

PROJECT PLANS FOR CONSTRUCTION ON
STATE HIGHWAY

IN HUMBOLDT COUNTY NEAR REDCREST AT 1.7 MILES NORTH OF SOUTH FORK EEL RIVER BRIDGE NUMBER 04-0010 AND AT 2.9 MILES SOUTH OF BEAR CREEK BRIDGE NUMBER 04-0012

TO BE SUPPLEMENTED BY STANDARD PLANS DATED MAY 2006

INDEX OF PLANS

SHEET No.	DESCRIPTION
1	TITLE AND LOCATION MAP
2	TYPICAL CROSS SECTIONS
3-4	LAYOUTS
5	PROFILES AND SUPERELEVATION
6	CONSTRUCTION DETAILS
7-12	DRAINAGE PLANS, PROFILES, DETAILS AND QUANTITIES
13	CONSTRUCTION AREA SIGNS
14-15	TRAFFIC HANDLING PLANS
16	SUMMARY OF QUANTITIES
17-26	REVISED AND NEW STANDARD PLANS

THE STANDARD PLANS LIST APPLICABLE TO THIS CONTRACT IS INCLUDED IN THE NOTICE TO BIDDERS AND SPECIAL PROVISIONS BOOK.

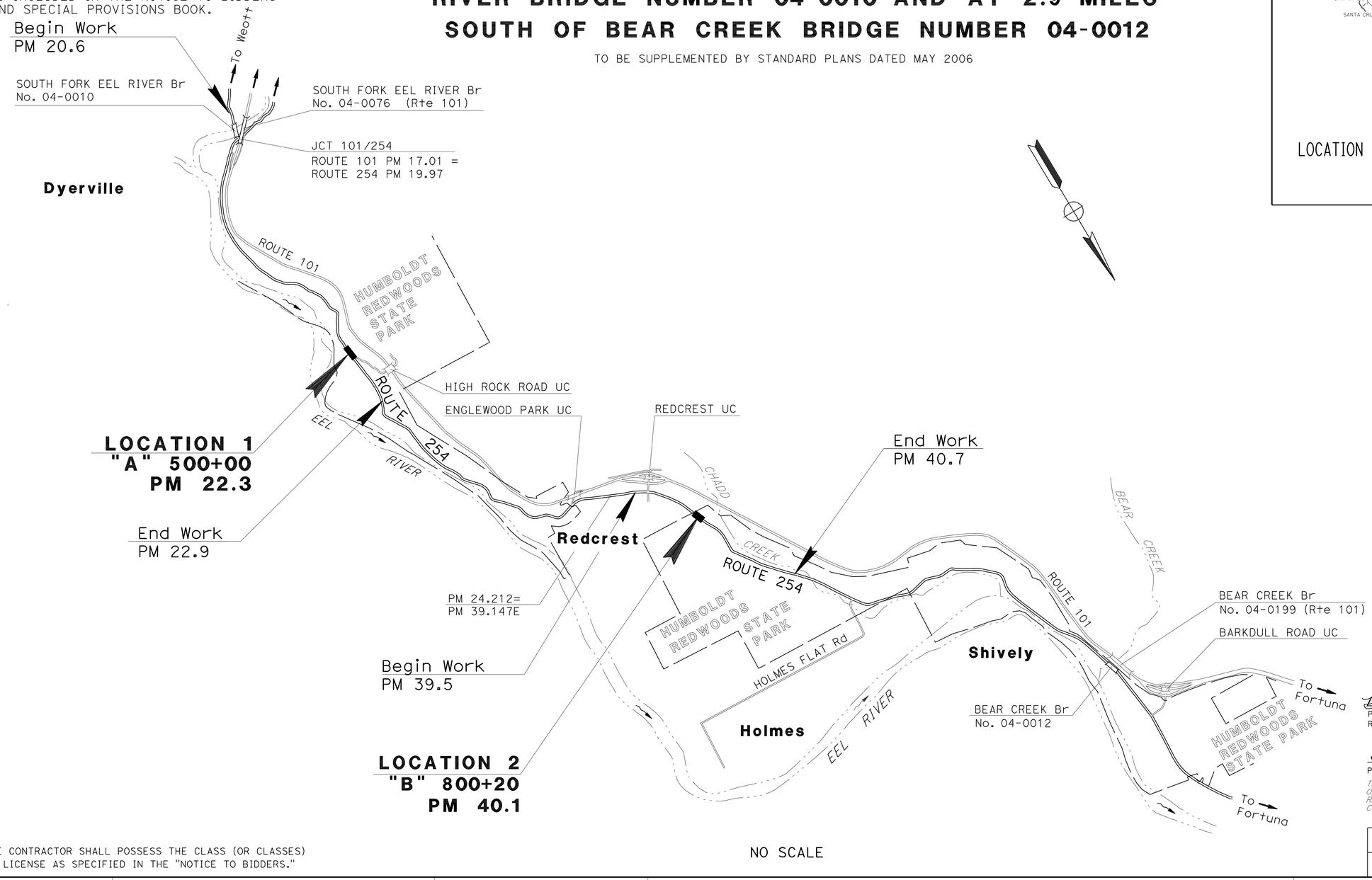

LOCATION MAP

NO SCALE

THE CONTRACTOR SHALL POSSESS THE CLASS (OR CLASSES) OF LICENSE AS SPECIFIED IN THE "NOTICE TO BIDDERS."

10-12-10
PROJECT ENGINEER DATE
REGISTERED CIVIL ENGINEER

June 13, 2011
PLANS APPROVAL DATE

REGISTERED PROFESSIONAL ENGINEER
BRENDA HARWELL
No. 64471
Exp. 6/30/11
CIVIL
STATE OF CALIFORNIA

THE STATE OF CALIFORNIA OR ITS OFFICERS OR AGENTS SHALL NOT BE RESPONSIBLE FOR THE ACCURACY OR COMPLETENESS OF SCANNED COPIES OF THIS PLAN SHEET.

CONTRACT No.	01-475204
PROJECT ID	0100000336

PROJECT MANAGER F. DEMLING
DESIGN ENGINEER L.R. ASHLEY

LAST REVISION 00-00-00
DATE PLOTTED => 03-AUG-2011
TIME PLOTTED => 06:25

NOTES:

1. DIMENSIONS OF THE PAVEMENT STRUCTURES (STRUCTURAL SECTIONS) ARE SUBJECT TO TOLERANCES SPECIFIED IN THE STANDARD SPECIFICATIONS.
2. SUPERELEVATIONS AS SHOWN OR AS DIRECTED BY THE ENGINEER.

DESIGN DESIGNATION (ROUTE 254)

		PM 22.3	PM 40.1
2008 ADT	=	550	300
2028 ADT	=	620	330
DHV	=	170	90

D = 60%
T = 4%
V = 55 MPH
TI_{20} = 6.5 (PM 22.27)
TI_{20} = 6.0 (PM 40.06)

Dist	COUNTY	ROUTE	POST MILES TOTAL PROJECT	SHEET No.	TOTAL SHEETS
01	Hum	254	22.3,40.1	2	26

REGISTERED CIVIL ENGINEER 10-12-10 DATE

6-13-11
PLANS APPROVAL DATE

REGISTERED PROFESSIONAL ENGINEER BRENDA HARWELL No. 64471 Exp. 6/30/11 CIVIL STATE OF CALIFORNIA

THE STATE OF CALIFORNIA OR ITS OFFICERS OR AGENTS SHALL NOT BE RESPONSIBLE FOR THE ACCURACY OR COMPLETENESS OF SCANNED COPIES OF THIS PLAN SHEET.

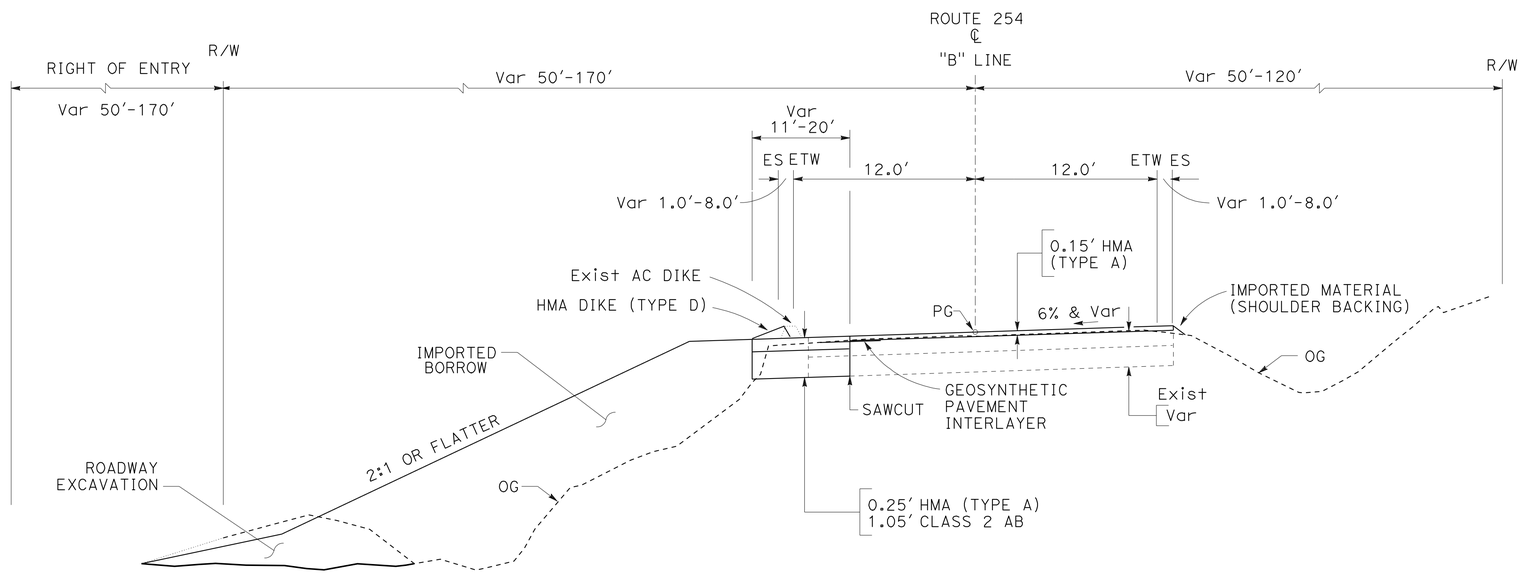

"B" 800+20 TO "B" 806+20
LOCATION 2 - PM 40.1

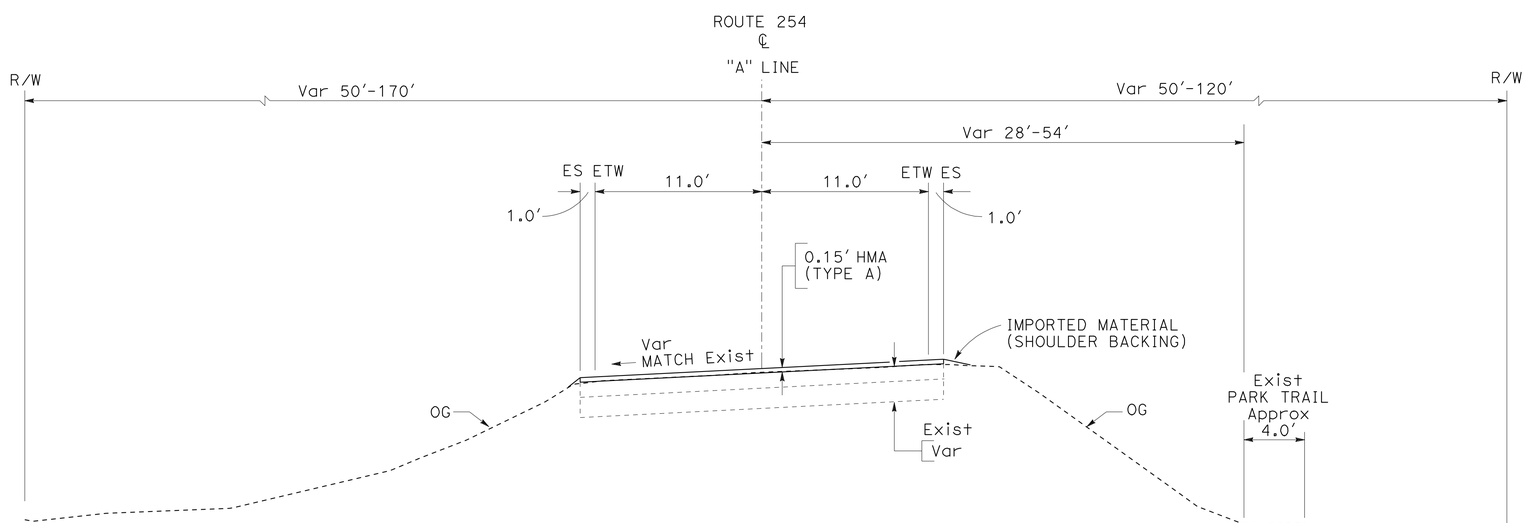

"A" 500+00 TO "A" 505+50
LOCATION 1 - PM 22.3

ROUTE 254

TYPICAL CROSS SECTIONS

NO SCALE

X-1

STATE OF CALIFORNIA - DEPARTMENT OF TRANSPORTATION
Caltrans
DESIGN
FUNCTIONAL SUPERVISOR: L.R. ASHLEY
CALCULATED-DESIGNED BY / CHECKED BY
B.C.HARWELL / TOM CARY
REVISED BY / DATE REVISED

LAST REVISION 00-00-00 | DATE PLOTTED => 14-JUN-2011 | TIME PLOTTED => 13:57

Dist	COUNTY	ROUTE	POST MILES TOTAL PROJECT	SHEET No.	TOTAL SHEETS
01	Hum	254	22.3,40.1	3	26

REGISTERED CIVIL ENGINEER 10-12-10 DATE

6-13-11
PLANS APPROVAL DATE

REGISTERED PROFESSIONAL ENGINEER BRENDA HARWELL No. 64471 Exp. 6/30/11 CIVIL STATE OF CALIFORNIA

THE STATE OF CALIFORNIA OR ITS OFFICERS OR AGENTS SHALL NOT BE RESPONSIBLE FOR THE ACCURACY OR COMPLETENESS OF SCANNED COPIES OF THIS PLAN SHEET.

NOTES:

1. FOR COMPLETE RIGHT OF WAY DATA SEE RIGHT OF WAY RECORD MAPS AT DISTRICT OFFICE.
2. ELEVATION IS BASED ON NAVD88 DATUM. COORDINATE VALUES SHOWN ARE THE 1983 CALIFORNIA COORDINATE SYSTEM, ZONE 1.

LEGEND

- X — DRAINAGE SYSTEM No.
- X — DRAINAGE UNIT
- TCE — TEMPORARY CONSTRUCTION EASEMENT
- COLD PLANE AC PAVEMENT
- LINE STRIPING DETAIL

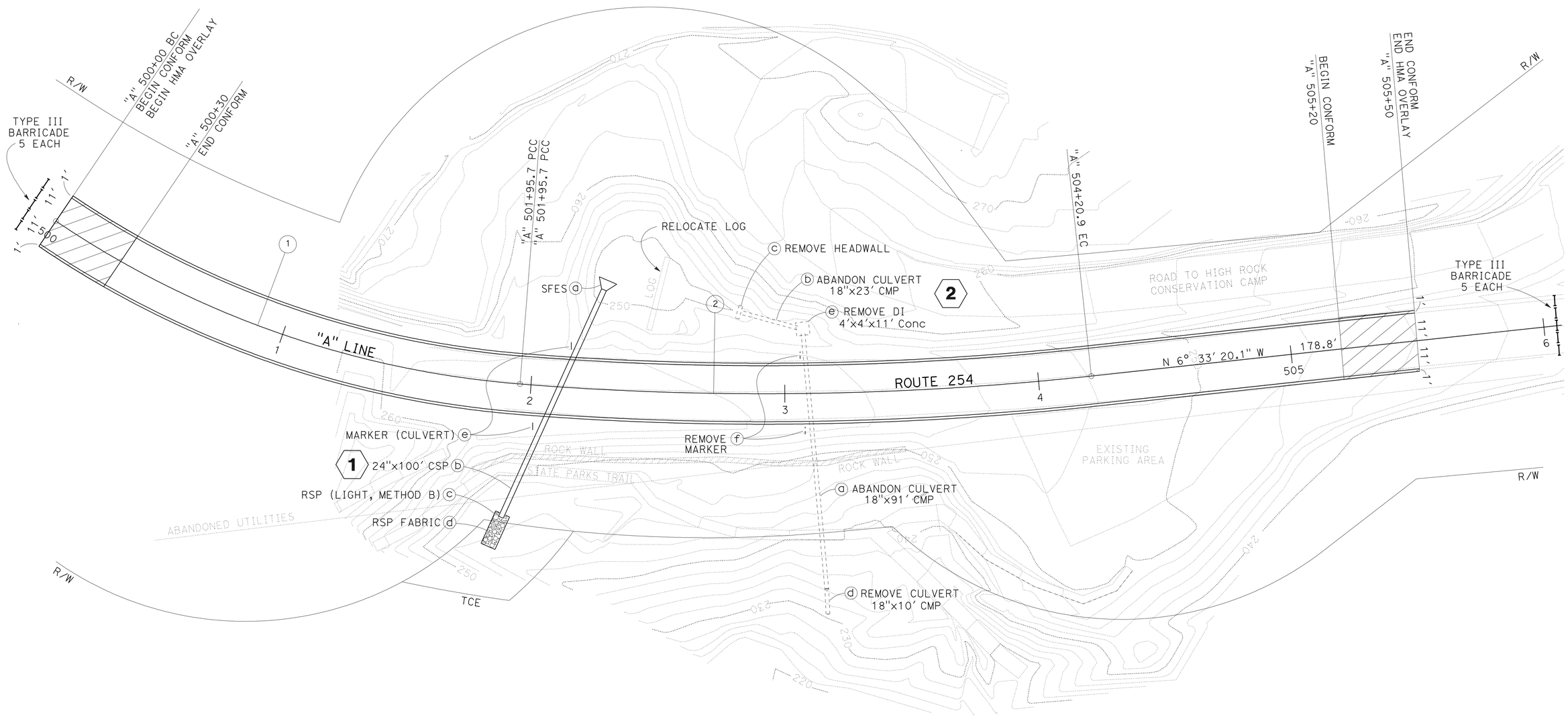

LOCATION 1

PM 22.3

No.	LINE	STATION	CURVE OR TANGENT DATA	COORDINATES NORTH	COORDINATES EAST
1	A	500+00 BEGIN/BC	R=380' Δ 29°30'07" T=100.05' L=195.66'	2,025,356.65	6,025,439.85
1 / 2	A	501+95.7 PCC	R=1200' Δ 10°45'12" T=112.94' L=225.22'	2,025,539.25	6,025,503.91
2	A	504+20.9 EC	N 6° 33'20.1" W 178.8'	2,025,764.11	6,025,500.79

SCALE 1"=20'

LAYOUT L-1

STATE OF CALIFORNIA - DEPARTMENT OF TRANSPORTATION
Caltrans
DESIGN

FUNCTIONAL SUPERVISOR: L.R. ASHLEY
CALCULATED-DESIGNED BY: B.C.HARWELL
CHECKED BY: TOM CARY
REVISED BY
DATE REVISED

LAST REVISION 00-00-00
DATE PLOTTED => 14-JUN-2011
TIME PLOTTED => 13:57

Dist	COUNTY	ROUTE	POST MILES TOTAL PROJECT	SHEET No.	TOTAL SHEETS
01	Hum	254	22.3,40.1	4	26

REGISTERED CIVIL ENGINEER 10-12-10 DATE

6-13-11
PLANS APPROVAL DATE

REGISTERED PROFESSIONAL ENGINEER BRENDA HARWELL No. 64471 Exp. 6/30/11 CIVIL STATE OF CALIFORNIA

THE STATE OF CALIFORNIA OR ITS OFFICERS OR AGENTS SHALL NOT BE RESPONSIBLE FOR THE ACCURACY OR COMPLETENESS OF SCANNED COPIES OF THIS PLAN SHEET.

NOTE:

FOR ACCURATE RIGHT OF WAY DATA, CONTACT RIGHT OF WAY ENGINEERING AT THE DISTRICT OFFICE.

No.	LINE	STATION	CURVE OR TANGENT DATA	COORDINATES NORTH	COORDINATES EAST
	B	799+23.9 BEGIN	N31°8′32″W 68.4′	2,035,931.73	6,018,451.84
3	B	800+20.6 BC	R=275′ Δ 24°54′42″ T=60.74′ L=119.57′	2,036,127.23	6,018,364.83
	B	801+40.2 EC	N5°46′38″W 68.4′	2,036,383.22	6,018,265.44
4	B	802+08.6 BC	R=300′ Δ 40°51′52″ T=111.76′ L=213.97′	2,036,195.30	6,018,357.95
	B	804+22.6 EC	N46°38′30″W 62.6′	2,036,383.22	6,018,265.44
5	B	804+85.2 BC	R=380′ Δ 20°15′23″ T=67.88′ L=134.35′	2,036,426.18	6,018,219.95
	B	807+29.2 EC		2,036,637.46	6,018,106.44

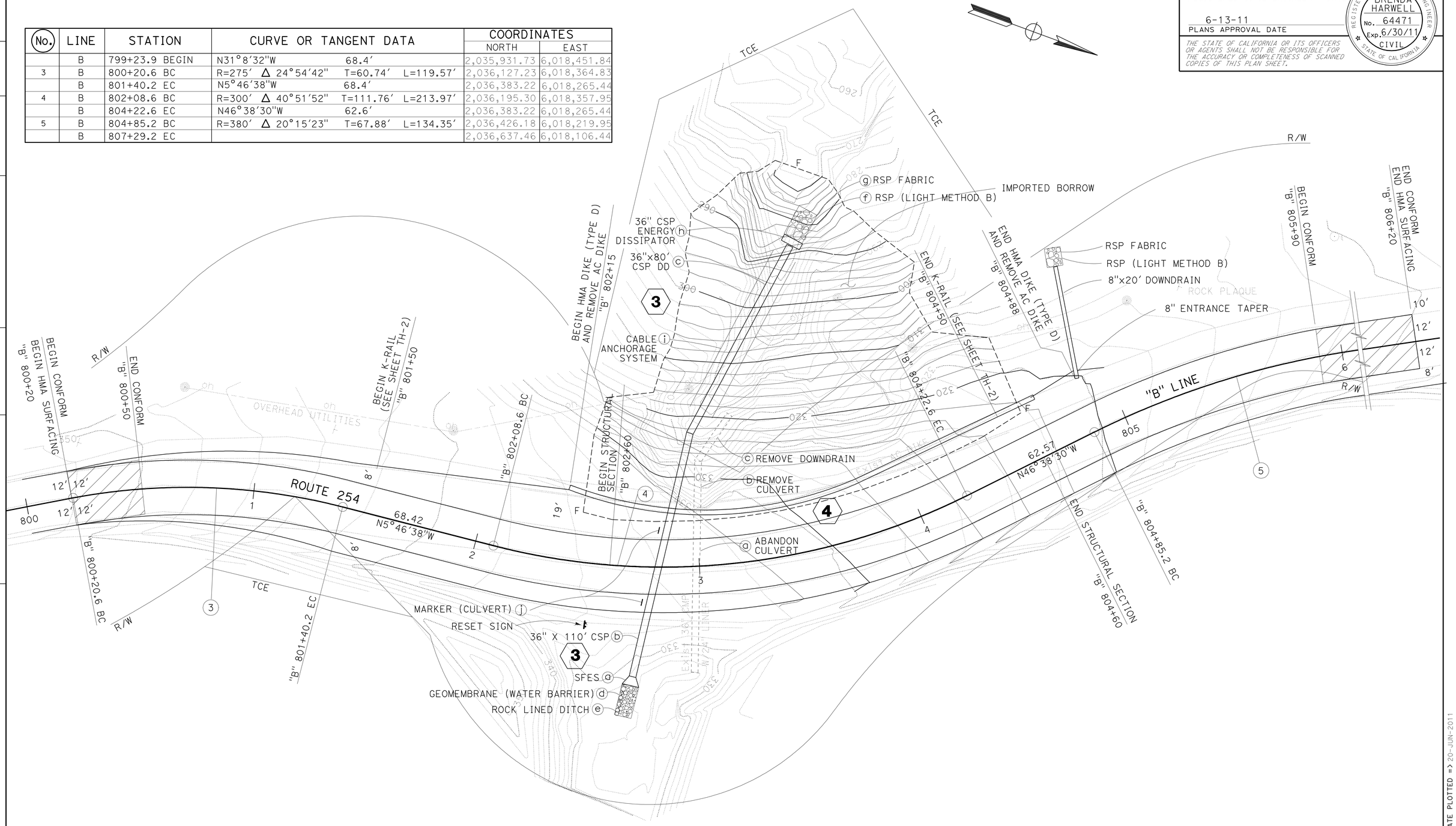

LOCATION 2

PM 40.2

SCALE: 1"=20′

LAYOUT L-2

STATE OF CALIFORNIA - DEPARTMENT OF TRANSPORTATION

Caltrans

DESIGN

FUNCTIONAL SUPERVISOR: L.R. ASHLEY

CALCULATED-DESIGNED BY: B.C.HARWELL

CHECKED BY: TOM CARY

REVISED BY

DATE REVISED

LAST REVISION 00-00-00

DATE PLOTTED => 20-JUN-2011

TIME PLOTTED => 08:33

BORDER LAST REVISED 7/2/2010

USERNAME => trmikesl

DGN FILE => 147520ea002.dgn

RELATIVE BORDER SCALE IS IN INCHES 0 1 2 3

UNIT 0313

PROJECT NUMBER & PHASE 01000003361

Dist	COUNTY	ROUTE	POST MILES TOTAL PROJECT	SHEET No.	TOTAL SHEETS
01	Hum	254	22.3, 40.1	5	26

REGISTERED CIVIL ENGINEER 10-12-10 DATE

6-13-11
PLANS APPROVAL DATE

REGISTERED PROFESSIONAL ENGINEER BRENDA HARWELL No. 64471 Exp. 6/30/11 CIVIL STATE OF CALIFORNIA

THE STATE OF CALIFORNIA OR ITS OFFICERS OR AGENTS SHALL NOT BE RESPONSIBLE FOR THE ACCURACY OR COMPLETENESS OF SCANNED COPIES OF THIS PLAN SHEET.

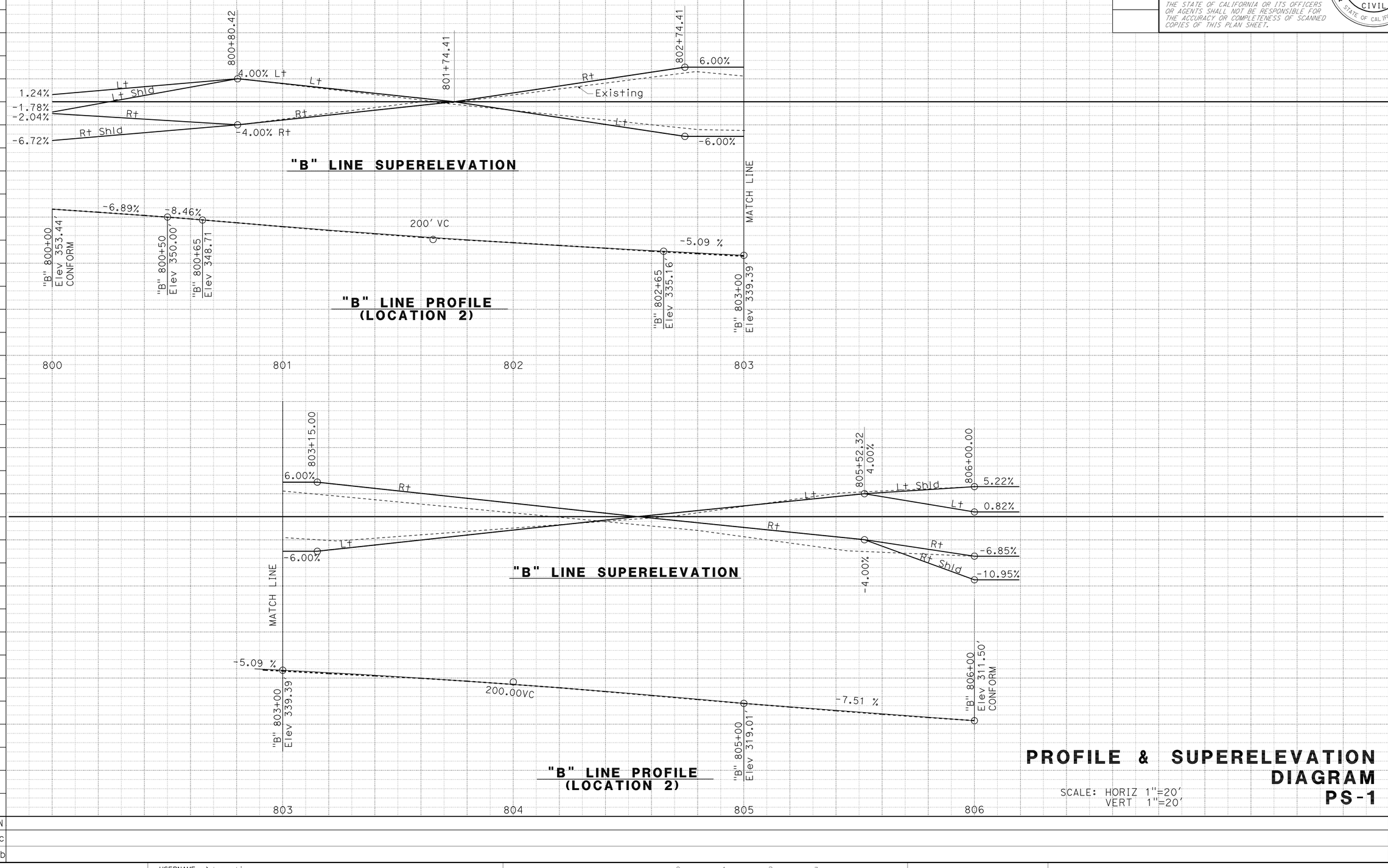

PROFILE & SUPERELEVATION DIAGRAM

SCALE: HORIZ 1"=20'
VERT 1"=20'

PS-1

STATION		TOTAL
CY	Exc	
	Emb	

STATE OF CALIFORNIA - DEPARTMENT OF TRANSPORTATION
Caltrans DESIGN

FUNCTIONAL SUPERVISOR: L.R. ASHLEY
CALCULATED-DESIGNED BY: B.C.HARWELL
CHECKED BY: TOM CARY
REVISED BY
DATE REVISED

LAST REVISION 00-00-00
DATE PLOTTED => 14-JUN-2011
TIME PLOTTED => 13:05

Dist	COUNTY	ROUTE	POST MILES TOTAL PROJECT	SHEET No.	TOTAL SHEETS
01	Hum	254	22.3, 40.1	6	26

REGISTERED CIVIL ENGINEER 10-12-10 DATE

6-13-11
PLANS APPROVAL DATE

REGISTERED PROFESSIONAL ENGINEER BRENDA HARWELL No. 64471 Exp. 6/30/11 CIVIL STATE OF CALIFORNIA

THE STATE OF CALIFORNIA OR ITS OFFICERS OR AGENTS SHALL NOT BE RESPONSIBLE FOR THE ACCURACY OR COMPLETENESS OF SCANNED COPIES OF THIS PLAN SHEET.

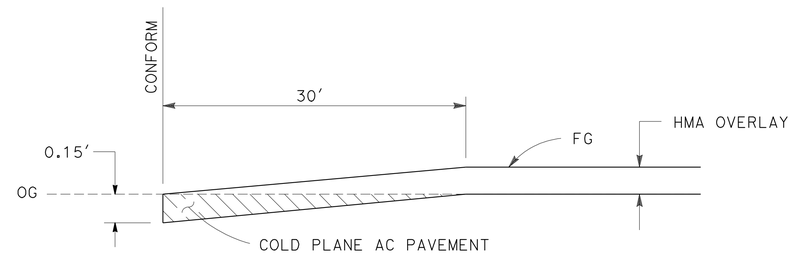

COLD PLANE AC PAVEMENT

NOTE: WIDTH VARIES FROM 24.0′ TO 40.0′

"A" 500+00 BEGIN CONFORM
"A" 505+50 END CONFORM
"B" 800+20 BEGIN CONFORM
"B" 806+20 END CONFORM

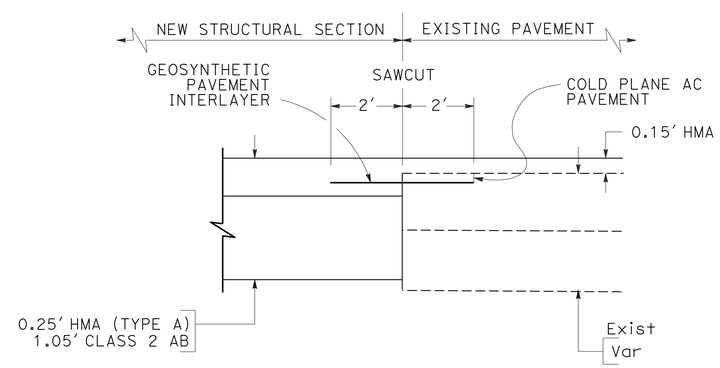

GEOSYNTHETIC PAVEMENT INTERLAYER

"B" 802+20 TO 802+60
"B" 804+20 TO 804+60

CONSTRUCTION DETAILS

NO SCALE

C-1

STATE OF CALIFORNIA - DEPARTMENT OF TRANSPORTATION
Caltrans®
DESIGN

FUNCTIONAL SUPERVISOR: L.R. ASHLEY
CALCULATED-DESIGNED BY: B.C.HARWELL
CHECKED BY: TOM CARY
REVISED BY
DATE REVISED

LAST REVISION 00-00-00
DATE PLOTTED => 14-JUN-2011
TIME PLOTTED => 13:05

Dist	COUNTY	ROUTE	POST MILES TOTAL PROJECT	SHEET No.	TOTAL SHEETS
01	Hum	254	22.3, 40.1	7	26

REGISTERED CIVIL ENGINEER 10-12-10 DATE

6-13-11
PLANS APPROVAL DATE

REGISTERED PROFESSIONAL ENGINEER BRENDA HARWELL No. 64471 Exp. 6/30/11 CIVIL STATE OF CALIFORNIA

THE STATE OF CALIFORNIA OR ITS OFFICERS OR AGENTS SHALL NOT BE RESPONSIBLE FOR THE ACCURACY OR COMPLETENESS OF SCANNED COPIES OF THIS PLAN SHEET.

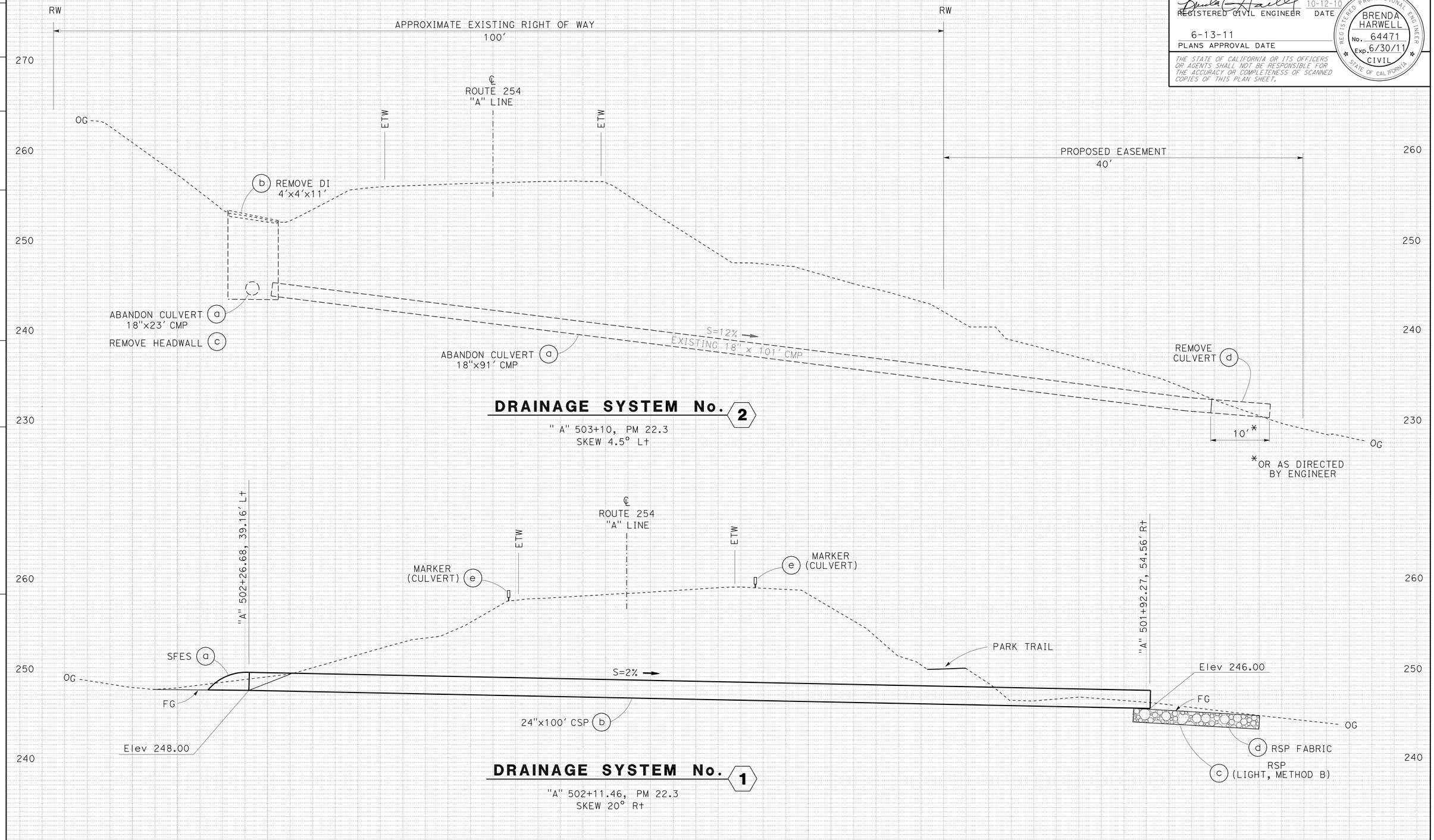

DRAINAGE PROFILE

SCALE: 1" = 5'

DP-1

STATE OF CALIFORNIA - DEPARTMENT OF TRANSPORTATION

DESIGN

Caltrans

FUNCTIONAL SUPERVISOR: L.R. ASHLEY

CALCULATED-DESIGNED BY: B.C.HARWELL

CHECKED BY: TOM CARY

REVISED BY

DATE REVISED

LAST REVISION 00-00-00

DATE PLOTTED => 14-JUN-2011
TIME PLOTTED => 13:05

Dist	COUNTY	ROUTE	POST MILES TOTAL PROJECT	SHEET No.	TOTAL SHEETS
01	Hum	254	22.3, 40.1	8	26

REGISTERED CIVIL ENGINEER 10-12-10 DATE

6-13-11
PLANS APPROVAL DATE

REGISTERED PROFESSIONAL ENGINEER BRENDA HARWELL No. 64471 Exp. 6/30/11 CIVIL STATE OF CALIFORNIA

THE STATE OF CALIFORNIA OR ITS OFFICERS OR AGENTS SHALL NOT BE RESPONSIBLE FOR THE ACCURACY OR COMPLETENESS OF SCANNED COPIES OF THIS PLAN SHEET.

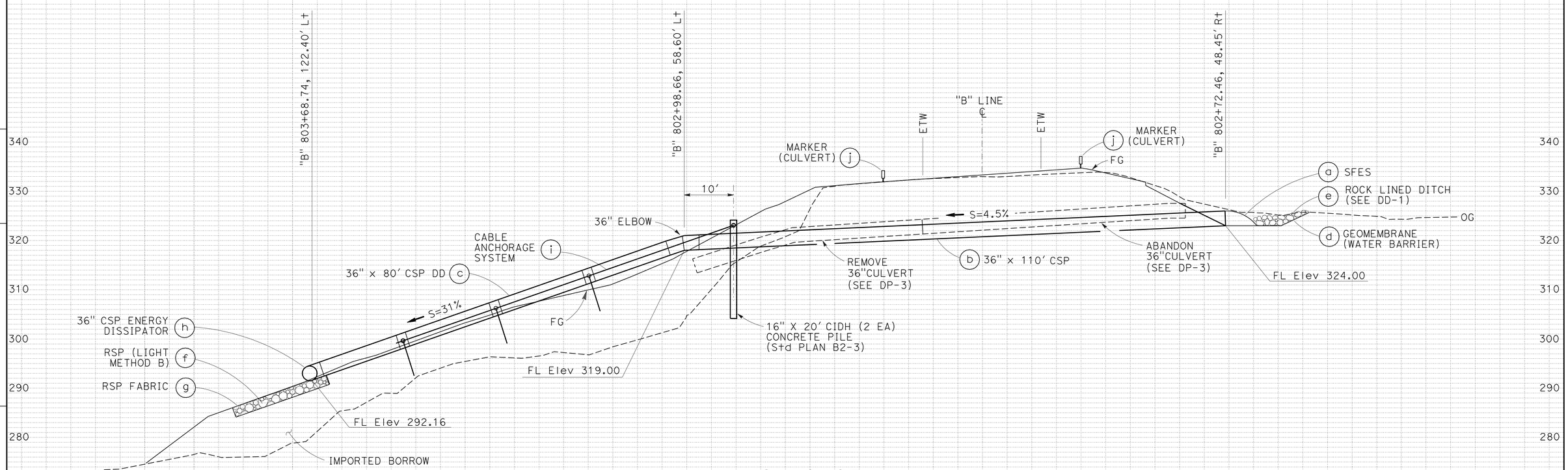

DRAINAGE SYSTEM No. 3

"B" 802+82, PM 40.1
SKEW 13° Rt

DRAINAGE PROFILE

SCALE: 1" = 10'

DP-2

STATE OF CALIFORNIA - DEPARTMENT OF TRANSPORTATION
Caltrans
DESIGN

FUNCTIONAL SUPERVISOR L.R. ASHLEY
CALCULATED-DESIGNED BY B.C.HARWELL
CHECKED BY TOM CARY
REVISED BY
DATE REVISED

LAST REVISION 00-00-00 DATE PLOTTED => 14-JUN-2011 TIME PLOTTED => 13:05

Dist	COUNTY	ROUTE	POST MILES TOTAL PROJECT	SHEET No.	TOTAL SHEETS
01	Hum	254	22.3, 40.1	9	26

REGISTERED CIVIL ENGINEER 10-12-10 DATE

6-13-11
PLANS APPROVAL DATE

REGISTERED PROFESSIONAL ENGINEER BRENDA HARWELL No. 64471 Exp. 6/30/11 CIVIL STATE OF CALIFORNIA

THE STATE OF CALIFORNIA OR ITS OFFICERS OR AGENTS SHALL NOT BE RESPONSIBLE FOR THE ACCURACY OR COMPLETENESS OF SCANNED COPIES OF THIS PLAN SHEET.

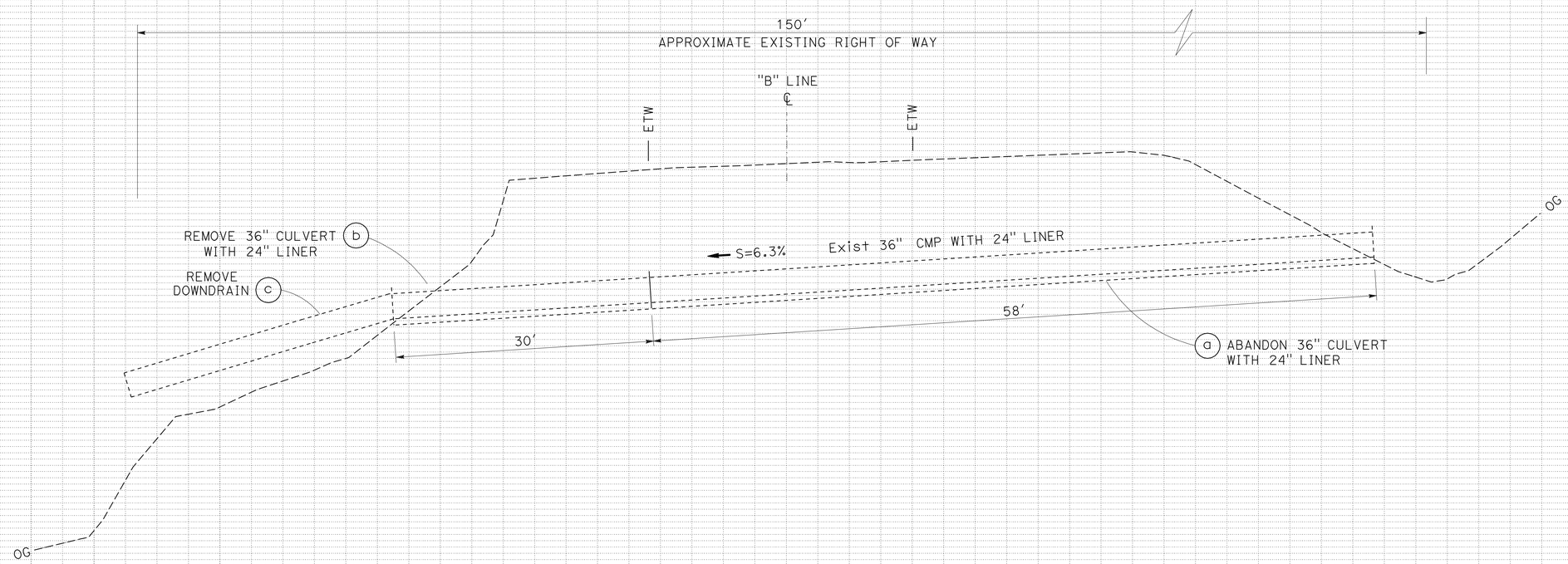

DRAINAGE SYSTEM No. 4

"B" 803+00
PM 40.1
SKEW 3.7° Rt

DRAINAGE PROFILE

SCALE: 1" = 5′

DP-3

STATE OF CALIFORNIA - DEPARTMENT OF TRANSPORTATION
Caltrans
DESIGN

FUNCTIONAL SUPERVISOR: L.R. ASHLEY
CALCULATED-DESIGNED BY: B.C.HARWELL
CHECKED BY: TOM CARY
REVISED BY
DATE REVISED

LAST REVISION 00-00-00
DATE PLOTTED => 14-JUN-2011
TIME PLOTTED => 13:05

Dist	COUNTY	ROUTE	POST MILES TOTAL PROJECT	SHEET No.	TOTAL SHEETS
01	Hum	254	22.3,40.1	10	26

REGISTERED CIVIL ENGINEER 10-12-10 DATE

6-13-11
PLANS APPROVAL DATE

REGISTERED PROFESSIONAL ENGINEER BRENDA HARWELL No. 64471 Exp. 6/30/11 CIVIL STATE OF CALIFORNIA

THE STATE OF CALIFORNIA OR ITS OFFICERS OR AGENTS SHALL NOT BE RESPONSIBLE FOR THE ACCURACY OR COMPLETENESS OF SCANNED COPIES OF THIS PLAN SHEET.

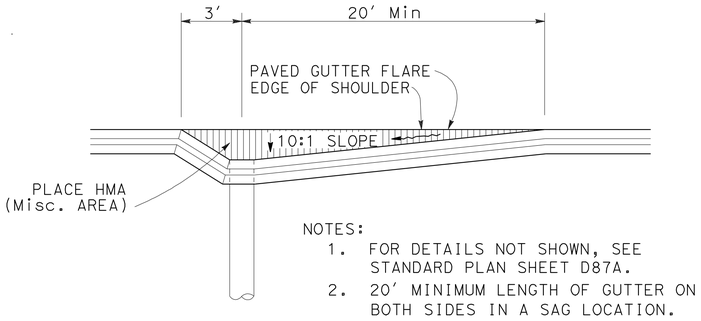

NOTES:
1. FOR DETAILS NOT SHOWN, SEE STANDARD PLAN SHEET D87A.
2. 20' MINIMUM LENGTH OF GUTTER ON BOTH SIDES IN A SAG LOCATION.

PLAN

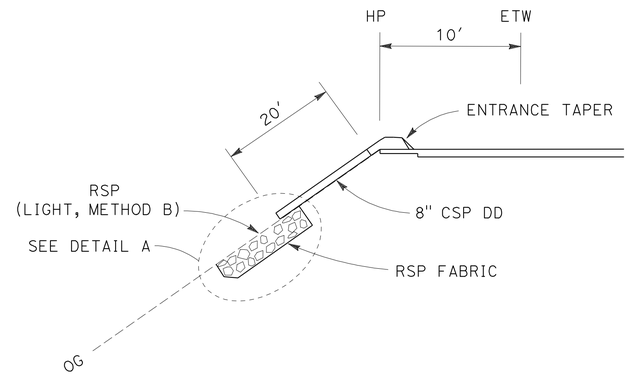

PROFILE

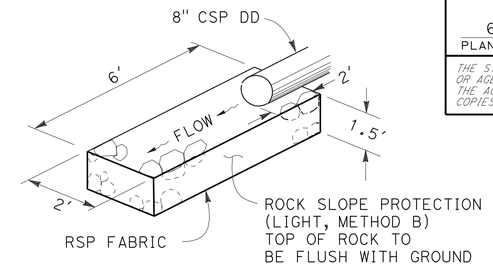

DETAIL A

TYPE 1 OVERSIDE DRAIN DETAIL

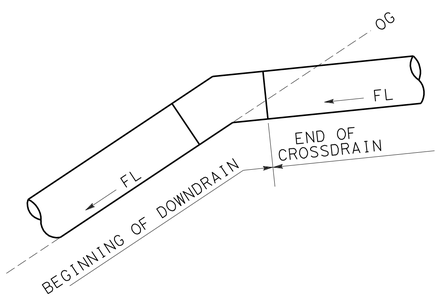

LIMITS OF MEASUREMENT FOR PAYMENT

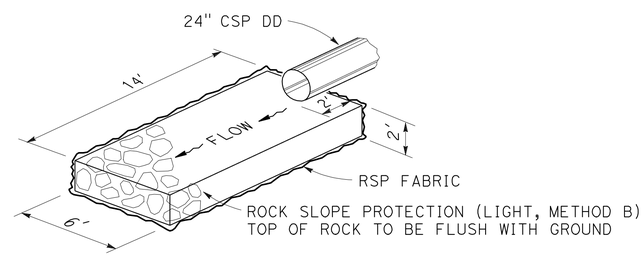

1 c

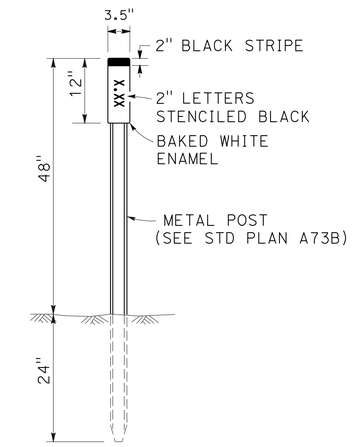

MARKER (CULVERT)

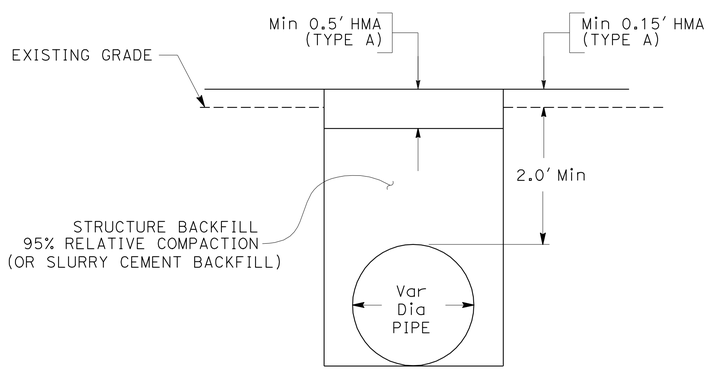

CULVERT EXCAVATION/BACKFILL

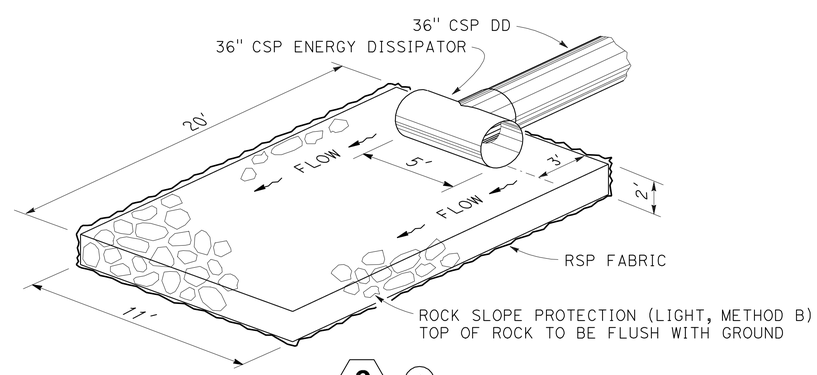

3 f

RSP (METHOD B) DETAIL

NOTE: DIMENSIONS AS SHOWN OR AS DIRECTED BY THE ENGINEER.

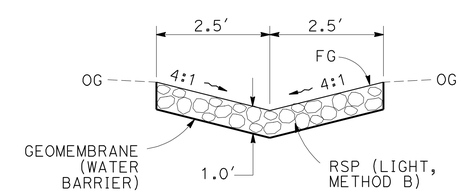

ROCK LINED DITCH

3 e

NO SCALE

DRAINAGE DETAILS
DD-1

STATE OF CALIFORNIA - DEPARTMENT OF TRANSPORTATION
Caltrans
DESIGN

FUNCTIONAL SUPERVISOR: L.R. ASHLEY
CALCULATED-DESIGNED BY: B.C.HARWELL
CHECKED BY: TOM CARY
REVISED BY
DATE REVISED

LAST REVISION 00-00-00
DATE PLOTTED => 14-JUN-2011
TIME PLOTTED => 12:54

Dist	COUNTY	ROUTE	POST MILES TOTAL PROJECT	SHEET No.	TOTAL SHEETS
01	Hum	254	22.3,40.1	11	26

REGISTERED CIVIL ENGINEER 10-12-10 DATE

6-13-11
PLANS APPROVAL DATE

REGISTERED PROFESSIONAL ENGINEER BRENDA HARWELL No. 64471 Exp. 6/30/11 CIVIL STATE OF CALIFORNIA

THE STATE OF CALIFORNIA OR ITS OFFICERS OR AGENTS SHALL NOT BE RESPONSIBLE FOR THE ACCURACY OR COMPLETENESS OF SCANNED COPIES OF THIS PLAN SHEET.

NOTE:
EACH SECTION OF DOWNDRAIN PIPE DOWNSTREAM OF ELBOW REQUIRES ONE ANCHOR COUPLING BAND IN ADDITION TO THE JOINT COUPLING BAND.

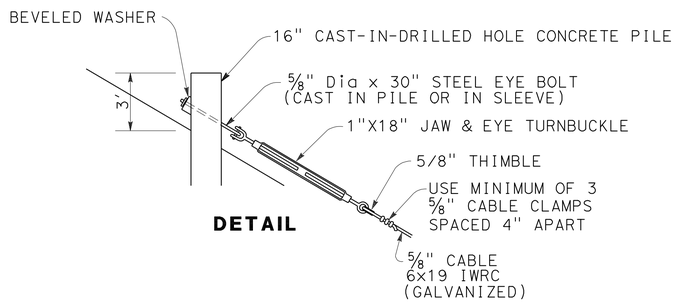

DETAIL

CABLE ANCHORAGE/CIDH PILE

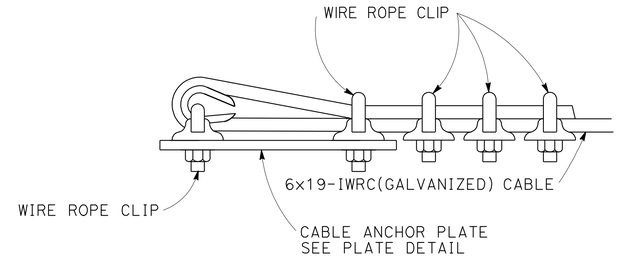

CABLE ANCHOR TERMINAL DETAIL

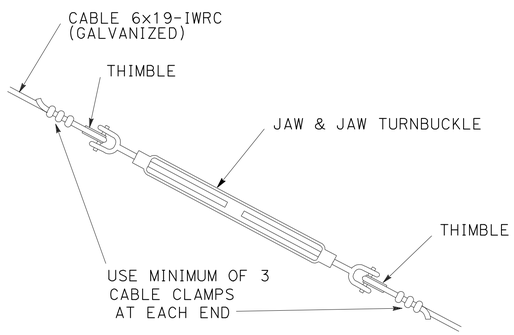

TURNBUCKLE DETAIL

CABLE CLAMP SPACING	4"
CABLE CLAMPS	3
TURNBUCKLES	7/8"x18"
CABLE SIZE (THIMBLE)	5/8"

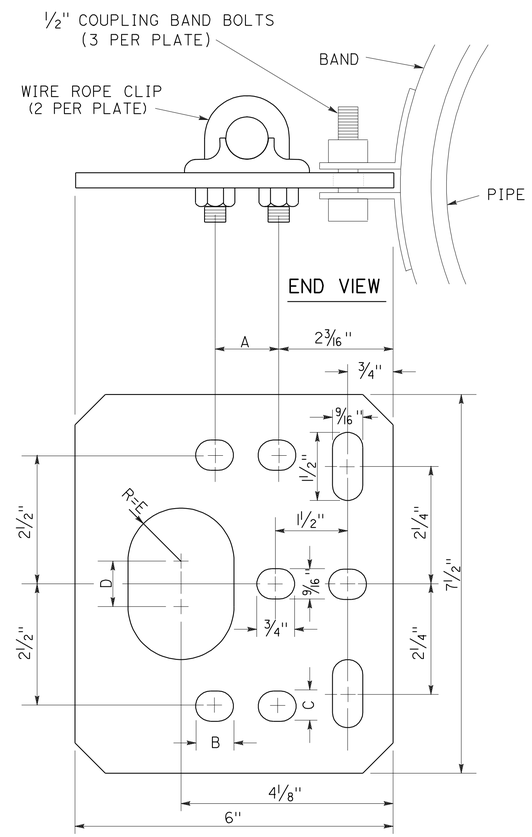

PLATE DETAIL

MATERIAL TO BE 1/4" STEEL PLATE, GALVANIZED AFTER FABRICATION

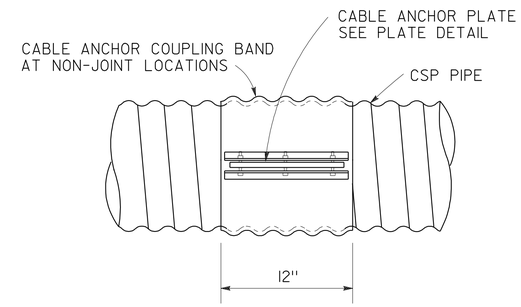

CABLE ANCHOR COUPLING BAND

CABLE SIZE	A	B	C	D	E
5/8"	1 1/4"	3/4"	9/16"	1"	1"
3/4"	1 1/2"	7/8"	11/16"	1"	1"
7/8"	1 3/4"	1"	13/16"	-	-
1"	2"	1"	13/16"	-	-

TABLE 1

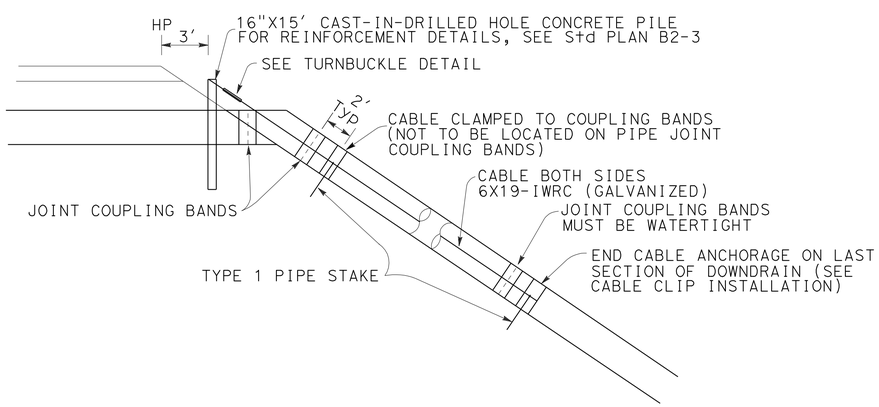

CABLE ANCHORAGE SYSTEM

DRAINAGE SYSTEM No. 3 (i)

LOCATION 2

NO SCALE

DRAINAGE DETAILS
DD-2

STATE OF CALIFORNIA - DEPARTMENT OF TRANSPORTATION
Caltrans® DESIGN
FUNCTIONAL SUPERVISOR L.R. ASHLEY
CALCULATED-DESIGNED BY B.C.HARWELL
CHECKED BY TOM CARY
REVISED BY
DATE REVISED

LAST REVISION 00-00-00
DATE PLOTTED => 14-JUN-2011
TIME PLOTTED => 12:54

Dist	COUNTY	ROUTE	POST MILES TOTAL PROJECT	SHEET No.	TOTAL SHEETS
01	Hum	254	22.3,40.1	12	26

REGISTERED CIVIL ENGINEER 10-12-10 DATE

6-13-11
PLANS APPROVAL DATE

REGISTERED PROFESSIONAL ENGINEER BRENDA HARWELL No. 64471 Exp. 6/30/11 CIVIL STATE OF CALIFORNIA

THE STATE OF CALIFORNIA OR ITS OFFICERS OR AGENTS SHALL NOT BE RESPONSIBLE FOR THE ACCURACY OR COMPLETENESS OF SCANNED COPIES OF THIS PLAN SHEET.

NOTES:

1. ALL CULVERT JOINTS SHALL BE POSITIVE.
2. THE JOINT CLASSIFICATIONS FOR DOWNDRAINS SHALL BE DOWNDRAINS.
3. LENGTHS OF PIPES, DOWNDRAINS AND ANGLES OF ELBOWS SHALL BE VERIFIED IN THE FIELD BY THE CONTRACTOR.

DRAINAGE QUANTITIES

LOCATION/STATION	DRAINAGE SYSTEM NUMBER	DRAINAGE UNIT	MARKER (CULVERT)	REMOVE MARKER	ABANDON CULVERT	REMOVE INLET	REMOVE HEADWALL	REMOVE CULVERT	24" SFES	36" SFES	SAND BACKFILL	24" CSP (.138" THICK)	36" CSP (.168" THICK)	36" CSP DOWNDRAIN (.109" THICK)	36" CSP ENERGY DISSIPATOR	(N) CABLE ANCHORAGE SYSTEM	REMOVE DOWNDRAIN	GEOMEMBRANE (WATER BARRIER)	RSP (LIGHT, METHOD B)	RSP FABRIC	OVERSIDE DRAIN 8" ENTRANCE TAPER	OVERSIDE DRAIN 8" ANCHOR ASSEMBLY	OVERSIDE DRAIN 8" CSP DOWNDRAIN	REMARKS
			EA					LF	EA	EA	CY	LF	LF	LF	EA	EA	EA	SQYD	CY	SQYD	EA		LF	
LOCATION 1 - "A" 502+11.46	1	a							1		6.5													
		b										100												
		c																	6.2					
		d																		8.9				
		e	2																					STENCIL "22.27"
LOCATION 1 - "A" 503+9.34	2	a		2	2						15.2													18" CMP (23' & 91' PORTIONS)
		b				1																		
		c					1																	
		d						10																18" CMP (10' PORTION)
LOCATION 2 - "B" 802+81.33	3	a								1														
		b											110											STENCIL "40.10"; 35° ELBOW
		c												80										
		d																3						
		e																	1.0					
		f																	16.3					
		g																		13.8				
		h													1									
		i														1								
		j	2																					
LOCATION 2 - "B" 802+98.67	4	a			1																			36" CMP with 24" LINER (58' PORTION)
		b						30																36" CMP with 24" LINER (30' PORTION)
		c		2													1							36"x25' CMP DD
LOCATION 2 - "B" STA 805+55																			1.5	1	1	1	20	SEE ROADWAY QUANTITIES FOR HMA (TYPE A) AND MISC AREA
		TOTAL	4	4	3	1	1	40	1	1	21.7	100	110	80	1	1	1	3	25	23.7	1	1	20	

(N) - NOT A SEPARATE PAY ITEM, FOR INFORMATION ONLY.

NO SCALE

DRAINAGE QUANTITIES
DQ-1

REVISED BY | DATE REVISED
B.C.HARWELL | TOM CARY
CALCULATED-DESIGNED BY | CHECKED BY
FUNCTIONAL SUPERVISOR | L.R. ASHLEY
STATE OF CALIFORNIA - DEPARTMENT OF TRANSPORTATION
Caltrans® DESIGN

LAST REVISION 00-00-00 | DATE PLOTTED => 14-JUN-2011 | TIME PLOTTED => 12:54

Dist	COUNTY	ROUTE	POST MILES TOTAL PROJECT	SHEET No.	TOTAL SHEETS
01	Hum	254	22.3,40.1	13	26

REGISTERED CIVIL ENGINEER 10-12-10 DATE

6-13-11
PLANS APPROVAL DATE

REGISTERED PROFESSIONAL ENGINEER BRENDA HARWELL No. 64471 Exp. 6/30/11 CIVIL STATE OF CALIFORNIA

THE STATE OF CALIFORNIA OR ITS OFFICERS OR AGENTS SHALL NOT BE RESPONSIBLE FOR THE ACCURACY OR COMPLETENESS OF SCANNED COPIES OF THIS PLAN SHEET.

36" X 18"
4" CAPS
BLACK/ORANGE

HIGHWAY REPAIR

C23B (CA)

STATIONARY MOUNTED CONSTRUCTION AREA SIGNS

SIGN ◯	SIGN CODE	SIGN MESSAGE	PANEL SIZE INCHES	NUMBER OF POSTS AND SIZE INCHES	NUMBER OF SIGNS EACH
A	W20-1	ROAD WORK AHEAD	48 X 48	1- 6 x 6	2
	C23B (CA)	HIGHWAY REPAIR	36 X 18		
B	G20-2	END ROAD WORK	48 X 24	1- 4 x 6	2
C	W11-1	BICYCLE SYMBOL	24 X 24	1- 4 x 6	2
	W16-1	SHARE THE ROAD	24 X 30		2

NOTE: EXACT SIGN LOCATION TO BE DETERMINED BY THE ENGINEER.

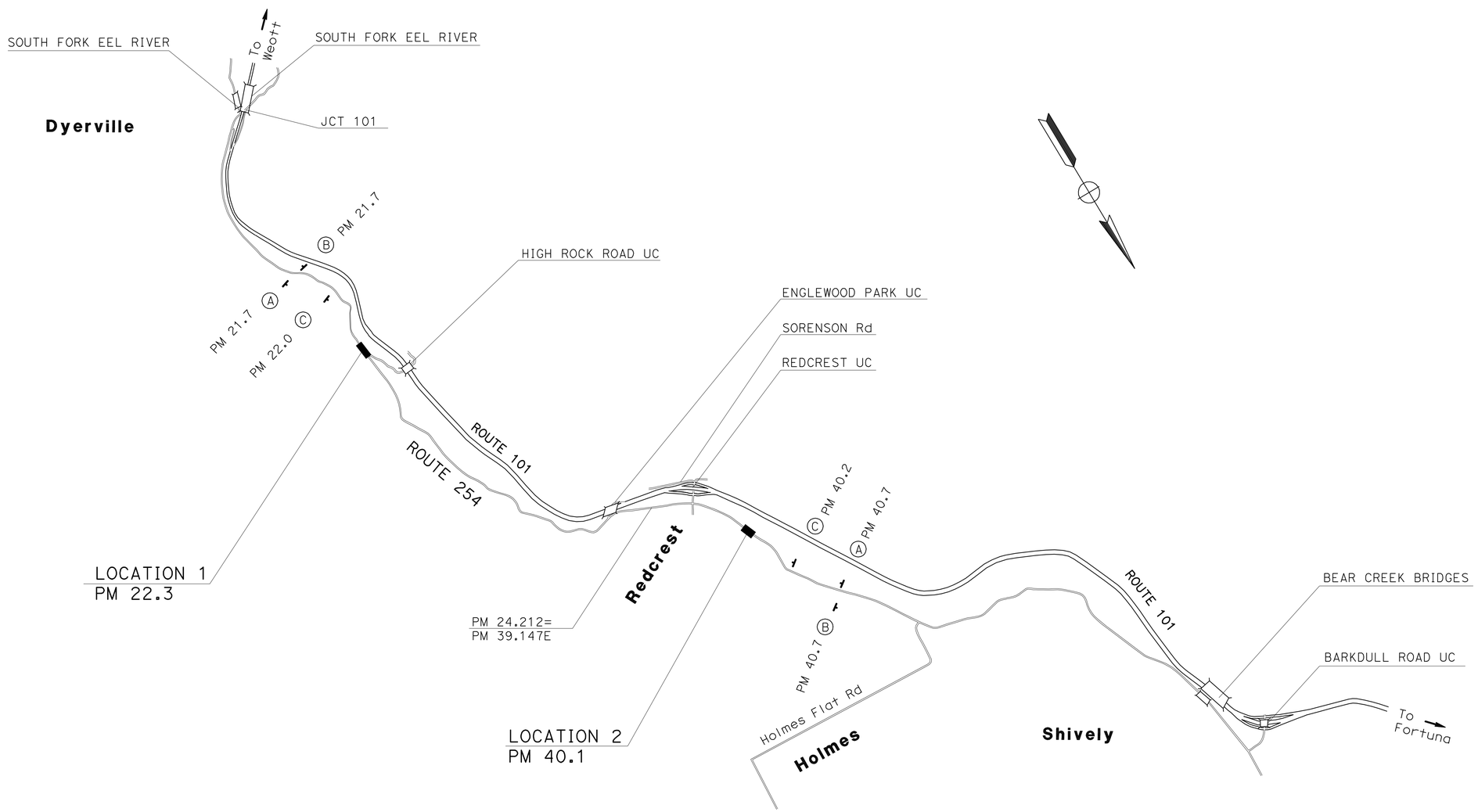

THIS PLAN ACCURATE FOR CONSTRUCTION AREA SIGN WORK ONLY.

CONSTRUCTION AREA SIGNS
CS-1

NO SCALE

STATE OF CALIFORNIA - DEPARTMENT OF TRANSPORTATION
Caltrans
DESIGN

FUNCTIONAL SUPERVISOR: L.R. ASHLEY
CALCULATED-DESIGNED BY: B.C.HARWELL
CHECKED BY: TOM CARY
REVISED BY
DATE REVISED

LAST REVISION 00-00-00
DATE PLOTTED => 14-JUN-2011
TIME PLOTTED => 13:20

Dist	COUNTY	ROUTE	POST MILES TOTAL PROJECT	SHEET No.	TOTAL SHEETS
01	Hum	254	22.3,40.1	14	26

REGISTERED CIVIL ENGINEER 10-12-10 DATE

6-13-11
PLANS APPROVAL DATE

REGISTERED PROFESSIONAL ENGINEER BRENDA HARWELL No. 64471 Exp. 6/30/11 CIVIL STATE OF CALIFORNIA

THE STATE OF CALIFORNIA OR ITS OFFICERS OR AGENTS SHALL NOT BE RESPONSIBLE FOR THE ACCURACY OR COMPLETENESS OF SCANNED COPIES OF THIS PLAN SHEET.

NOTES:

1. LOCATIONS OF CONSTRUCTION AREA SIGNS SHOWN ARE APPROXIMATE. EXACT LOCATIONS WILL BE DETERMINED BY THE ENGINEER.
2. SEE CONSTRUCTION AREA SIGNS FOR ADDITIONAL CONSTRUCTION AREA SIGNS.
3. DURING ROAD CLOSURE, PCMS MESSAGE SHOULD READ:

HWY 254 ROAD CLOSED 2 MILES AHEAD → DETOUR US 101

1ST FRAME 2ND FRAME

LEGEND

PORTABLE CHANGEABLE MESSAGE SIGN (PCMS)

SIGN

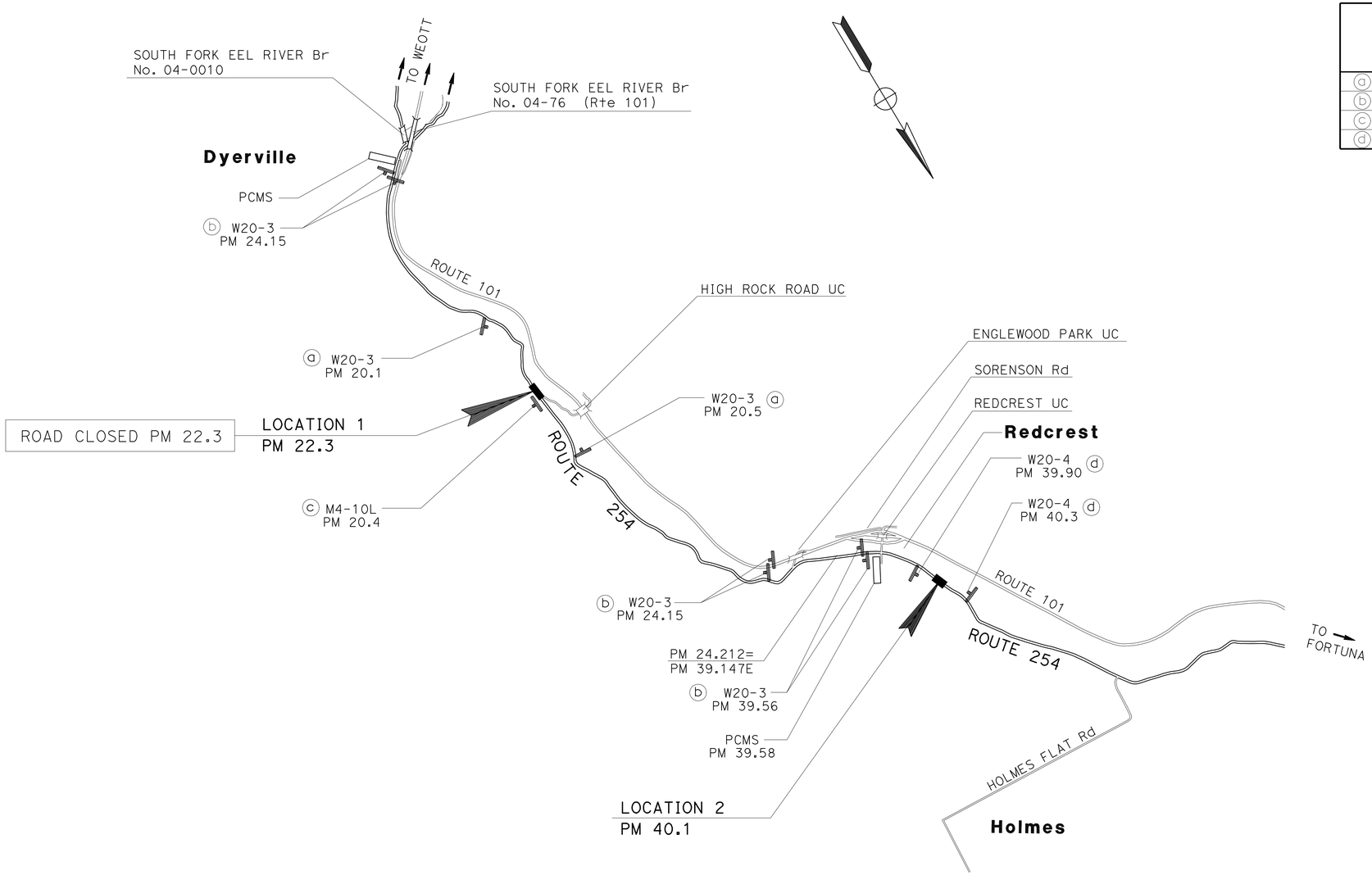

CONSTRUCTION AREA SIGNS

	SIGN CODE	SIGN MESSAGE	QUANTITY
ⓐ	W20-3	ROAD CLOSED 1000 FT	2
ⓑ	W20-3	ROAD CLOSED 2 MILES	6
ⓒ	M4-10L	DETOUR (LEFT ARROW)	1
ⓓ	W20-4	ONE LANE ROAD 1000 FT	2

THIS PLAN ACCURATE FOR TRAFFIC HANDLING PLAN ONLY.

NO SCALE

TRAFFIC HANDLING PLAN

TH-1

STATE OF CALIFORNIA - DEPARTMENT OF TRANSPORTATION
Caltrans DESIGN
FUNCTIONAL SUPERVISOR L.R. ASHLEY
CALCULATED-DESIGNED BY B.C.HARWELL
CHECKED BY TOM CARY
REVISED BY
DATE REVISED

LAST REVISION 00-00-00
DATE PLOTTED => 14-JUN-2011
TIME PLOTTED => 13:20

Dist	COUNTY	ROUTE	POST MILES TOTAL PROJECT	SHEET No.	TOTAL SHEETS
01	Hum	254	22.3,40.1	15	26

REGISTERED CIVIL ENGINEER 10-12-10 DATE

6-13-11
PLANS APPROVAL DATE

REGISTERED PROFESSIONAL ENGINEER BRENDA HARWELL No. 64471 Exp. 6/30/11 CIVIL STATE OF CALIFORNIA

THE STATE OF CALIFORNIA OR ITS OFFICERS OR AGENTS SHALL NOT BE RESPONSIBLE FOR THE ACCURACY OR COMPLETENESS OF SCANNED COPIES OF THIS PLAN SHEET.

NOTES:

1. LOCATION OF TEMPORARY K RAIL SHOWN IS APPROXIMATE. EXACT LOCATION WILL BE DETERMINED BY THE ENGINEER.

LEGEND

TEMPORARY RAILING (TYPE K)

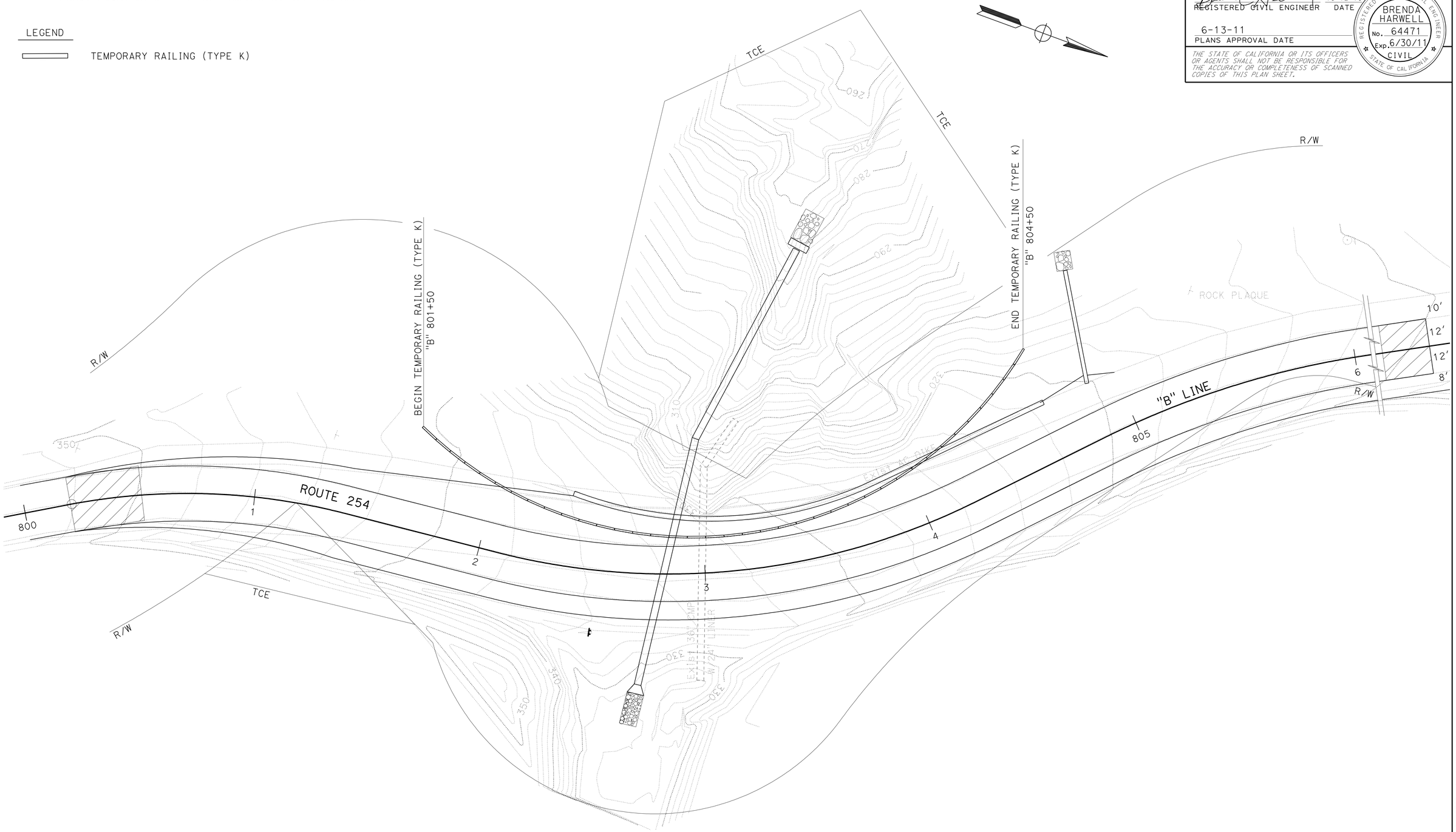

LOCATION 2

PM 40.2

THIS PLAN ACCURATE FOR TRAFFIC HANDLING ONLY.

TRAFFIC HANDLING PLAN

NO SCALE

TH-2

STATE OF CALIFORNIA - DEPARTMENT OF TRANSPORTATION

Caltrans® **DESIGN**

FUNCTIONAL SUPERVISOR: L.R. ASHLEY

CALCULATED-DESIGNED BY: B.C.HARWELL

CHECKED BY: TOM CARY

REVISED BY

DATE REVISED

LAST REVISION 00-00-00

DATE PLOTTED => 14-JUN-2011
TIME PLOTTED => 13:20

Dist	COUNTY	ROUTE	POST MILES TOTAL PROJECT	SHEET No.	TOTAL SHEETS
01	Hum	254	22.3,40.1	16	26

REGISTERED CIVIL ENGINEER 10-12-10 DATE

6-13-11
PLANS APPROVAL DATE

REGISTERED PROFESSIONAL ENGINEER BRENDA HARWELL No. 64471 Exp. 6/30/11 CIVIL STATE OF CALIFORNIA

THE STATE OF CALIFORNIA OR ITS OFFICERS OR AGENTS SHALL NOT BE RESPONSIBLE FOR THE ACCURACY OR COMPLETENESS OF SCANNED COPIES OF THIS PLAN SHEET.

ROADSIDE SIGNS

LOCATION		RESET ROADSIDE SIGN (2 POST)	SIGN MESSAGE	REMARKS
LOCATION No.	STATION	EA		
2	"B" 802+50	1	"C. WESLY"	STATE PARKS WOOD SIGN
	TOTAL	1		

TRAFFIC HANDLING

LOCATION		TEMPORARY RAILING (TYPE K)	TYPE III BARRICADE
LOCATION No.	STATION	LF	EA
1			10
2	"B" 801+50 TO 804+50	300	
	TOTAL	300	10

ROADWAY QUANTITIES

LOCATION/STATION	EARTHWORK SUMMARY		STRUCTURAL SECTION				IMPORTED MATERIAL (SHOULDER BACKING)	PLACE HMA DIKE (TYPE D)	REMOVE AC DIKE	PLACE HMA (Misc AREA)	COLD PLANE AC PAVEMENT	DELINEATOR (CLASS 1)	REMARKS
	ROADWAY EXCAVATION	IMPORTED BORROW	HMA (TYPE A)	CLASS 2 AB	GEOSYNTHETIC PAVEMENT INTERLAYER	PAVING ASPHALT (BINDER, GPI)							
	CY		TON		SQYD	TON	TON	LF	LF	SQYD		EA	
LOCATION 1 "A" 500+00 TO "A" 505+50			150				20						
"A" 500+00 TO "A" 500+30											80		CONFORM TO BEGIN HMA OVERLAY
"A" 505+20 TO "A" 505+50											80		CONFORM TO END HMA OVERLAY
LOCATION 2 "B" 800+20 TO "B" 806+20	230	4100	512	440	35	0.1	20					20	
"B" 800+20 TO "B" 800+50											107		CONFORM TO BEGIN HMA OVERLAY
"B" 800+20 TO "B" 806+20			16.2								133		CONFORM TO END HMA OVERLAY
"B" 802+15 TO "B" 804+88								273	223	3			
TOTAL	230	4100	680	440	35	0.1	40	273	223	3	400	20	

TEMPORARY EROSION CONTROL

LOCATION	Temp FIBER ROLL	Temp DRAINAGE INLET PROTECTION	Temp SILT FENCE
	LF	EA	LF
LOCATION 1	300	1	100
LOCATION 2	400	1	300
TOTAL	700	2	400

TRAFFIC STRIPE AND PAVEMENT MARKER QUANTITIES

LOCATION		DETAIL NUMBER	DETAIL LENGTH	THERMOPLASTIC TRAFFIC STRIPE 4" SOLID		PAVEMENT MARKER (RETROREFLECTIVE-RECESSED)
				WHITE	YELLOW	TYPE D YELLOW (TWO-WAY)
FROM	TO		LF			EA
"A" STA 500+00	"A" STA 505+50	27B	550	1100		
"A" STA 500+00	"A" STA 505+50	22	550		1100	48
"B" STA 800+20	"B" STA 806+20	27B	600	1200		
"B" STA 800+20	"B" STA 806+20	22	600		1200	52
			SUBTOTAL	2300	2300	100
			TOTAL	4600		100

PERMANENT EROSION CONTROL

STATION TO STATION		L†/R†	EROSION CONTROL (COMPOST BLANKET)	AREA	FIBER ROLL
			CY	ACRE	LF
FROM	TO				
"B" 802+20	"B" 805+90	L†	124	0.46	1300
"B" 802+30	"B" 803+20	R†	9	0.03	-
TOTAL			133	0.49	1300

SUMMARY OF QUANTIES
Q-1

STATE OF CALIFORNIA - DEPARTMENT OF TRANSPORTATION
Caltrans® DESIGN

FUNCTIONAL SUPERVISOR: L.R. ASHLEY
CALCULATED-DESIGNED BY: B.C.HARWELL
CHECKED BY: TOM CARY
REVISED BY / DATE REVISED

LAST REVISION 00-00-00
DATE PLOTTED => 20-JUN-2011
TIME PLOTTED => 08:33

DIST	COUNTY	ROUTE	POST MILES TOTAL PROJECT	SHEET NO.	TOTAL SHEETS
01	Hum	254	22.3,40.1	17	26

Raymond Don Tsztoo
REGISTERED CIVIL ENGINEER

June 6, 2008
PLANS APPROVAL DATE

REGISTERED PROFESSIONAL ENGINEER Raymond Don Tsztoo No. C37332 Exp. 6-30-08 CIVIL STATE OF CALIFORNIA

The State of California or its officers or agents shall not be responsible for the accuracy or completeness of electronic copies of this plan sheet.

To accompany plans dated 6-13-11

ANNULAR AND HELICAL PROFILE

COUPLING TYPE	PIPE CORRUGATION	PIPE SIZE	W OR A	PIPE WALL THICKNESS CSP	PIPE WALL THICKNESS CAP	BAND THICKNESS CSP	BAND THICKNESS CAP	BAR AND STRAP (CSP ONLY) STRAP THICKNESS	BOLTS Dia	BAR Dia	BAR YIELD STRENGTH	ANGLE DIMENSIONS CSP	ANGLE DIMENSIONS CAP	BOLTS (No. - Dia) CSP	BOLTS (No. - Dia) CAP	RIVETS ANGLE TO BAND CSP	RIVETS ANGLE TO BAND CAP	SPOT WELDS ANGLE TO BAND CSP
TWO PIECE INTEGRAL FLANGE	1½" × ¼"	6"-10"	7"	0.064"-0.079"	0.060"	0.064"	0.060"							2-⅜"	2-⅜"			
	2⅔" × ½"	12"-24"	12"		0.060"-0.105"		0.060"								3-½"			
UNIVERSAL	2⅔" × ½"	THROUGH 36"	12"	0.064"-0.138"	0.060"-0.135"	0.064"	0.060"	0.079"	½"	⅞"	32 ksi	2" × 2" × 3/16"	2" × 2" × 3/16"	3-½"	3-½"	3-⅜"	3-⅜"	5-½"
		42"-60"	16¼"	0.064"-0.168"	0.060"-0.164"	0.064"	0.060"	DOUBLE 0.079"	½"	⅞"	32 ksi	2" × 2" × ¼"	2" × 2" × ¼"	4-½"	4-½"	5-⅜"	5-⅜"	
ANNULAR	2⅔" × ½"	THROUGH 36"	12"	0.064"-0.138"	0.060"-0.135"	0.064"	0.060"					2" × 2" × 3/16"	2" × 2" × 3/16"	3-½"	3-½"	3-⅜"	3-⅜"	5-½"
		42"-60"	12"	0.064"-0.079"		0.064"						2" × 2" × 3/16"		3-½"		3-⅜"		5-½"
		42"-60"	12"	0.109"-0.168"	0.135"-0.164"	0.064"	0.075"					2" × 2" × ¼"	2" × 2" × ¼"	3-½"	3-½"	5-⅜"	5-⅜"	
		66"-72"	24"		0.164"		0.105"						2" × 2" × ¼"		5-½"		5-½"	
		66"-84"	24"	0.109"-0.168"		0.064"						2" × 2" × ¼"		5-½"		7-⅜"		
		42"-54"	12"		0.060"-0.105"		0.060"						2" × 2" × 3/16"		3-½"		3-⅜"	
	3" × 1"	48"-60"	14"	0.064"-0.079"		0.064"						2" × 2" × 3/16"		3-½"		3-⅜"		5-½"
		48"-60"	14"	0.109"		0.064"						2" × 2" × 3/16"		3-½"		5-⅜"		
		66"-120"	25"	0.064"-0.109"		0.064"						2" × 2" × 3/16"		5-½"		9-⅜"		
		42"-60"	14"		0.060"-0.105"		0.060"						2" × 2" × 3/16"		3-½"		5-⅜"	
		42"-60"	14"		0.135"		0.075"						2" × 2" × ¼"		3-½"		5-⅜"	
		66"-96"	25"		0.060"-0.135"		0.060"						2" × 2" × ¼"		5-½"		7-⅜"	
		96"-108"	25"		0.135"		0.075"						2" × 2" × ¼"		5-½"		7-⅜"	
HELICAL	2⅔" × ½"	THROUGH 36"	12"	0.064"-0.138"	0.060"-0.135"	0.064"	0.060"					2" × 2" × 3/16"	2" × 2" × 3/16"	3-½"	3-½"	3-⅜"	3-⅜"	5-½"
		42"-54"	12"		0.060"-0.105"		0.060"						2" × 2" × 3/16"		3-½"		3-⅜"	
		42"-60"	12"	0.064"-0.079"		0.064"						2" × 2" × 3/16"		3-½"		3-⅜"		5-½"
		42"-60"	12"	0.109"-0.168"	0.135"-0.164"	0.064"	0.075"					2" × 2" × ¼"	2" × 2" × ¼"	3-½"	3-½"	5-⅜"	5-⅜"	
		66'-84"	24"	0.109"-0.168"		0.064"						2" × 2" × ¼"		5-½"		7-⅜"		
		66"-72"	24"		0.164"		0.105"						2" × 2" × ¼"		5-½"		5-⅜"	
	3" × 1"	48"-60"	14"	0.064"-0.079"		0.064"						2" × 2" × 3/16"		3-½"		3-⅜"		5-½"
		48"-60"	14"	0.109"		0.064"						2" × 2" × 3/16"		3-½"		5-⅜"		
		66"-120"	25"	0.064"-0.109"		0.064"						2" × 2" × 3/16"		5-½"		9-⅜"		
		42"-60"	14"		0.060"-0.105"		0.060"						2" × 2" × 3/16"		3-½"		5-⅜"	
		42"-60"	14"		0.135"		0.075"						2" × 2" × ¼"		3-½"		5-⅜"	
		66"-96"	25"		0.060"-0.135"		0.060"						2" × 2" × ¼"		5-½"		7-⅜"	
		96"-108"	25"		0.135"		0.075"						2" × 2" × ¼"		5-½"		7-⅜"	
HUGGER	2⅔" × ½" REROLLED END	THROUGH 48"	10½"	0.109"		0.064"		0.079"	½"	⅞"	32 ksi							
		54"- 66"	10½"	0.109"		0.064"		DOUBLE 0.079"	½"	⅞"	32 ksi							
		THROUGH 54"	10½"	0.064"-0.079"		0.064"		0.079"	½"	⅞"	32 ksi							
		THROUGH 60"	10½"	0.138"		0.079"		DOUBLE 0.079"	½"	⅞"	32 ksi							
		66"-72"	10½"	0.138"		0.109"		DOUBLE 0.079"	½"	⅞"	32 ksi							
		THROUGH 72"	10½"	0.168"		0.109"		DOUBLE 0.109"	½"	⅞"	45 ksi							
	3" × 1" REROLLED END	48"-84"	10½"	0.109"		0.079"		DOUBLE 0.079"	½"	⅞"	32 ksi							
		48"-90"	10½"	0.064"-0.079"		0.064"		DOUBLE 0.079"	½"	⅞"	32 ksi							
		96"-102"	10½"	0.079"		0.079"		DOUBLE 0.079"	½"	⅞"	32 ksi							
		90"-120"	10½"	0.109"		0.109"		DOUBLE 0.109"	½"	⅞"	45 ksi							

SPIRAL RIB PROFILE

COUPLING TYPE	PIPE CORRUGATION	PIPE SIZE	W	PIPE WALL THICKNESS SSRP	PIPE WALL THICKNESS ASRP	BAND THICKNESS SSRP	BAND THICKNESS ASRP	BAR AND STRAP (SSRP ONLY) STRAP THICKNESS	BOLTS Dia	BAR Dia	BAR YIELD STRENGTH	ANGLE DIMENSIONS SSRP	ANGLE DIMENSIONS ASRP	BOLTS (No.- Dia) SSRP	BOLTS (No.- Dia) ASRP	RIVETS ANGLE TO BAND SSRP	RIVETS ANGLE TO BAND ASRP	SPOT WELDS ANGLE TO BAND SSRP
ANNULAR	2⅔" × ½" * REROLLED END	24"-36"	12"	0.064"-0.109"	0.060"-0.105"	0.064"	0.060"	0.079"	½"	⅞"	32 ksi	2" × 2" × 3/16"	2" × 2" × 3/16"	3-½"	3-½"	3-⅜"	3-⅜"	5-½"
		42"-60"	12"	0.064"-0.079"	0.075"-0.105"	0.064"	0.075"	0.079"	½"	⅞"	32 ksi	2" × 2" × 3/16"	2" × 2" × 3/16"	3-½"	3-½"	3-⅜"	3-⅜"	5-½"
		42"-60"	12"	0.109"		0.064"		0.079"	½"	⅞"	32 ksi	2" × 2" × ¼"		3-½"		5-⅜"		
		66"-84"	24"	0.109"		0.064"		0.079"	½"	⅞"	32 ksi	2" × 2" × ¼"		5-½"		7-⅜"		
HUGGER	2⅔" × ½" * REROLLED END	24"-54"	10½"	0.064"-0.079"		0.064"		0.079"	½"	⅞"	32 ksi							
		24"-48"	10½"	0.109"		0.064"		0.079"	½"	⅞"	32 ksi							
		54"-66"	10½"	0.109"		0.064"		Double 0.079"	½"	⅞"	32 ksi							

* See Note 13.

NOTES:

1. All ferrous metal coupling band connection hardware shall be galvanized or electroplated in accordance with the Standard Specifications.
2. For helically corrugated coupling bands, the connection angles may be oriented parallel to the pipe axis, provided connecting holes are slotted lengthwise sufficiently to allow adjustment for the helix angle.
3. Tension strap may be connected to band with either spot welds or fillet welds that develop minimum required strength of strap.
4. Use 1¼" gage line dimension on attached angle leg for rivets and spot welds.
5. Band thickness shall not be less than:
   a. 3 standard thicknesses lighter than the thickness of the pipe for Corrugated Steel Pipe.
   b. 2 standard thicknesses lighter than the thickness of the pipe and in no case lighter than 0.060" for Corrugated Aluminum Pipe.
6. Dimensions, thicknesses and strengths shown are minimum.
7. For pipe arches use same width band as for round pipe of equal periphery.
8. Fillet welds of equivalent strength may be substituted for spot welds or rivets.
9. Spot welds shall develop minimum required strength of strap.
10. Pipe with rerolled ends having at least two 2⅔" × ½" annular corrugations at each end with or without an upturned flange may be connected with any of the annular coupling bands shown for pipe of the same diameter and wall thickness and having 2⅔" × ½" corrugations.
11. In the case of H-12 huggerbands, two piece bands are required for diameters through 96" and three piece bands are required for diameters 102" through 120".
12. Two piece bands are required for pipes greater than 42" diameter.
13. All profiles of Spiral Rib Pipe (¾" × ¾" ribs at 7½" pitch and ¾" × 1" ribs at 11½" pitch in both steel and aluminum and ¾" × 1" ribs at 8½" pitch in steel only) shall be manufactured with rerolled ends. Corrugation profile of the rerolled ends shall be 2⅔" × ½" annual corrugations with a minimum of two full corrugations at each end.

STATE OF CALIFORNIA
DEPARTMENT OF TRANSPORTATION

CORRUGATED METAL PIPE COUPLING DETAILS No. 6 POSITIVE JOINT

NO SCALE

RSP D97F DATED JUNE 6, 2008 SUPERSEDES STANDARD PLAN D97F
DATED MAY 1, 2006 - PAGE 188 OF THE STANDARD PLANS BOOK DATED MAY 2006.

REVISED STANDARD PLAN RSP D97F

2006 REVISED STANDARD PLAN RSP D97F

4-2-08

DIST	COUNTY	ROUTE	POST MILES TOTAL PROJECT	SHEET NO.	TOTAL SHEETS
01	Hum	254	22.3,40.1	18	26

LICENSED LANDSCAPE ARCHITECT

April 3, 2009
PLANS APPROVAL DATE

The State of California or its officers or agents shall not be responsible for the accuracy or completeness of electronic copies of this plan sheet.

LICENSED LANDSCAPE ARCHITECT — Gregory A. Balzer — 02-28-11 Renewal Date — 03-04-09 Date — STATE OF CALIFORNIA

To accompany plans dated 6-13-11

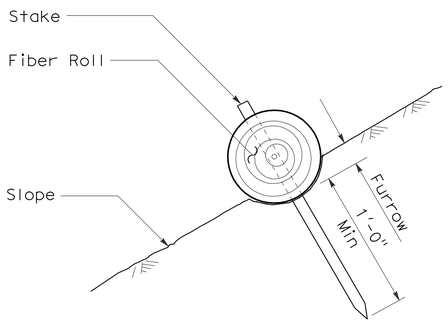

SECTION

FIBER ROLL (TYPE 1)

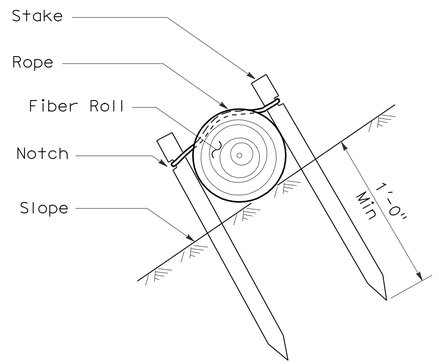

SECTION

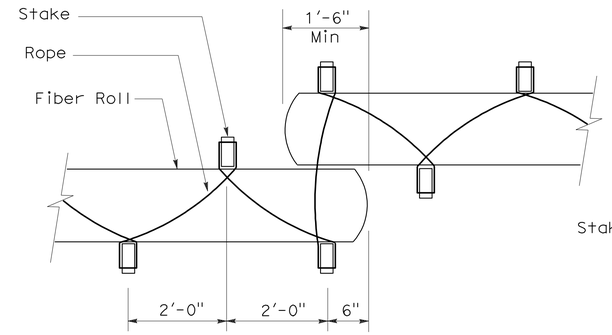

PLAN

FIBER ROLL (TYPE 2)

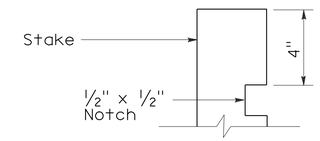

ELEVATION

STAKE NOTCH DETAIL

NOTES:

1. Fiber roll spacing varies depending upon slope inclination.
2. Installations shown in the perspectives are for slope inclination of 10:1 and steeper.

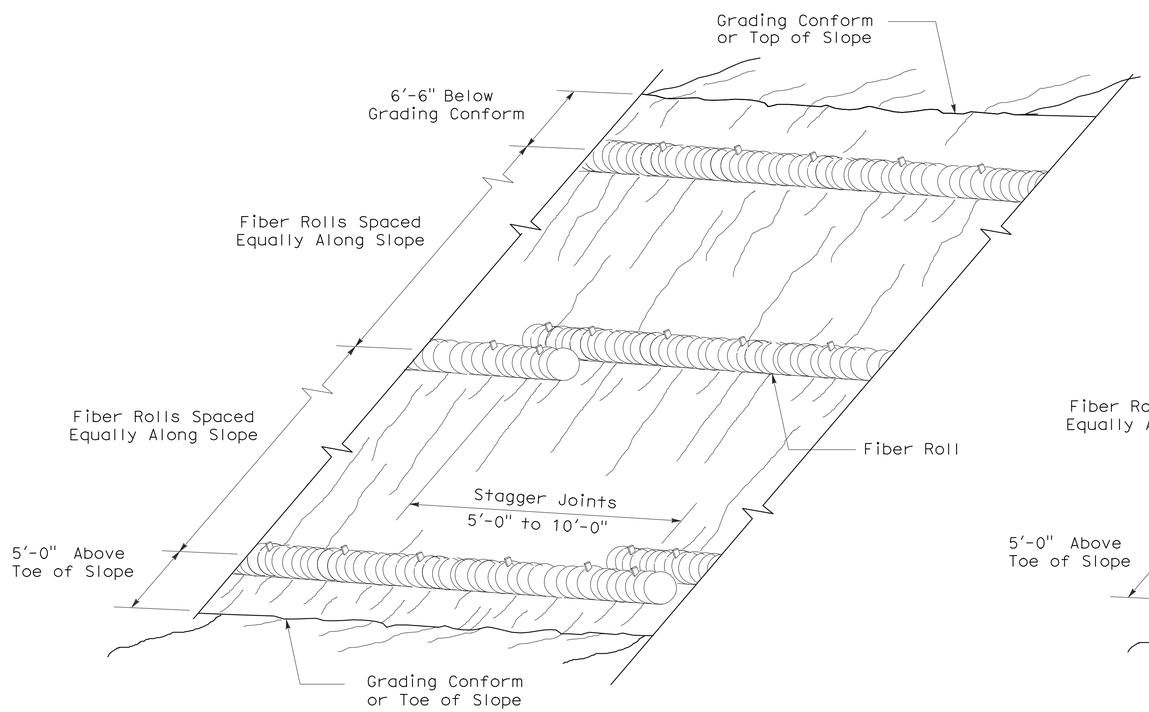

PERSPECTIVE

FIBER ROLL (TYPE 1)

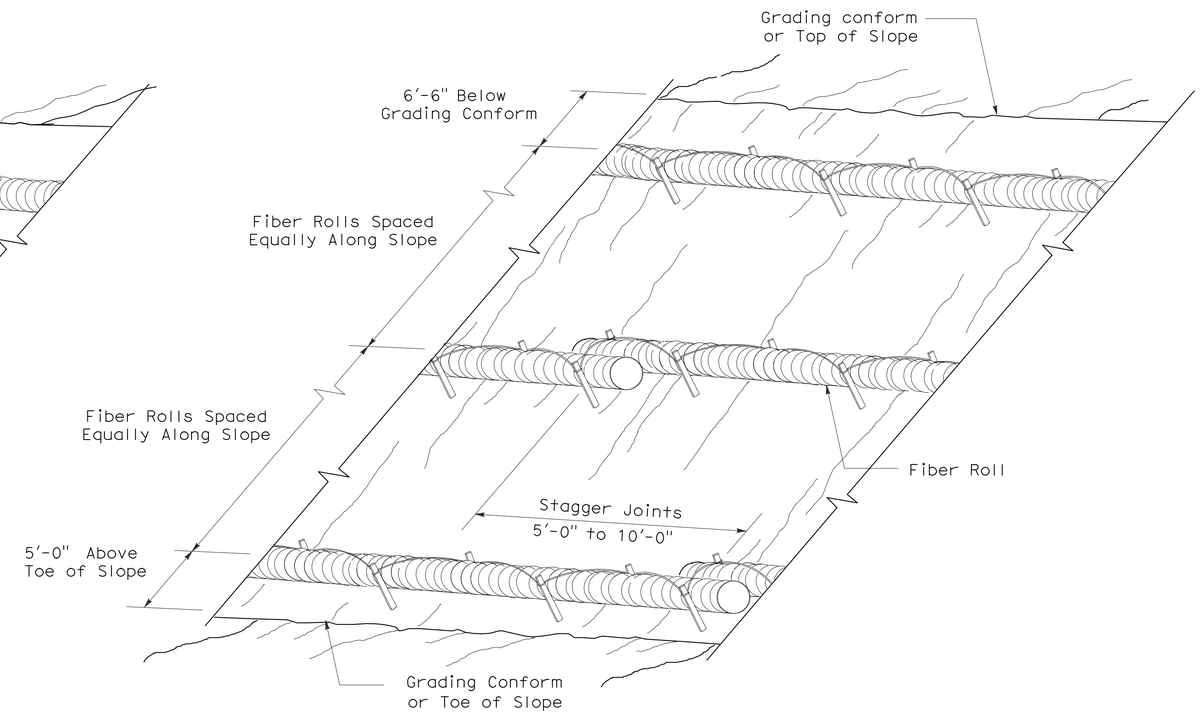

PERSPECTIVE

FIBER ROLL (TYPE 2)

STATE OF CALIFORNIA
DEPARTMENT OF TRANSPORTATION

EROSION CONTROL DETAILS (FIBER ROLL)

NO SCALE

RNSP H51 DATED APRIL 3, 2009 SUPERSEDES NSP H51 DATED DECEMBER 1, 2006 THAT SUPPLEMENTS THE STANDARD PLANS BOOK DATED MAY 2006.

REVISED NEW STANDARD PLAN RNSP H51

2006 REVISED NEW STANDARD PLAN RNSP H51

DIST	COUNTY	ROUTE	POST MILES TOTAL PROJECT	SHEET NO.	TOTAL SHEETS
01	Hum	254	22.3,40.1	19	26

Randell D. Hiatt
REGISTERED CIVIL ENGINEER

June 6, 2008
PLANS APPROVAL DATE

REGISTERED PROFESSIONAL ENGINEER
Randell D. Hiatt
No. C50200
Exp. 6-30-09
CIVIL
STATE OF CALIFORNIA

The State of California or its officers or agents shall not be responsible for the accuracy or completeness of electronic copies of this plan sheet.

To accompany plans dated 6-13-11

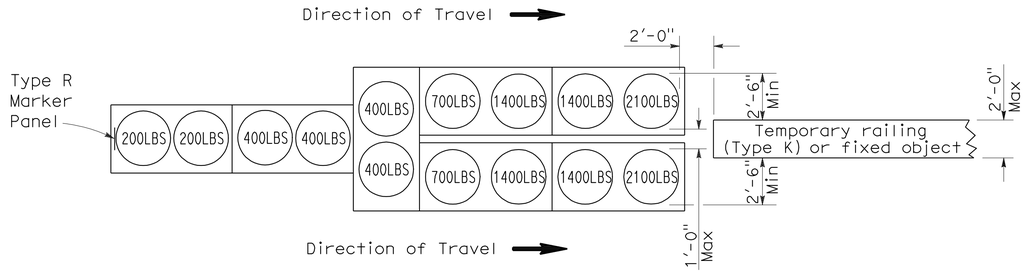

ARRAY 'TU14'

Approach speed 45 mph or more

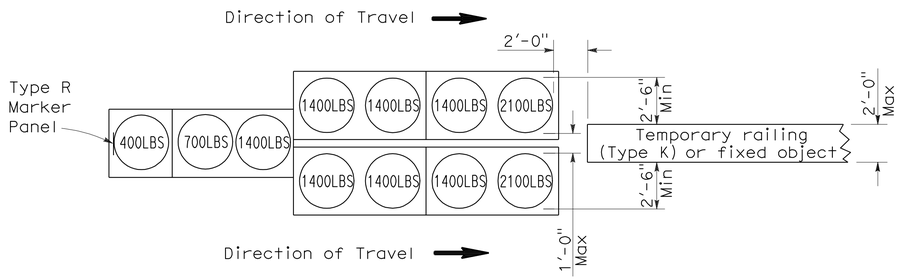

ARRAY 'TU11'

Approach speed less than 45 mph

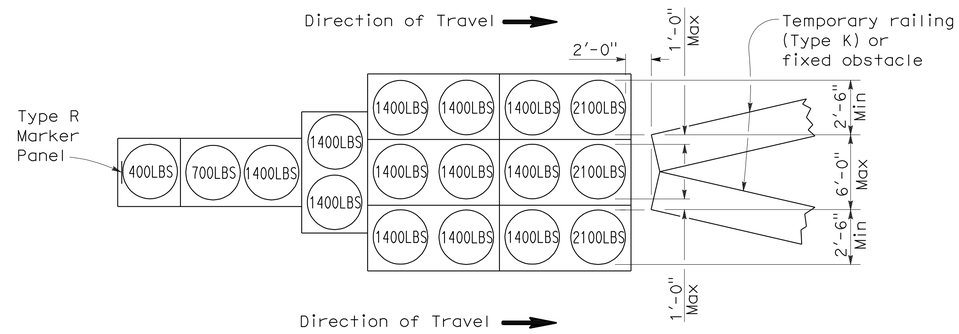

ARRAY 'TU17'

Approach speed less than 45 mph

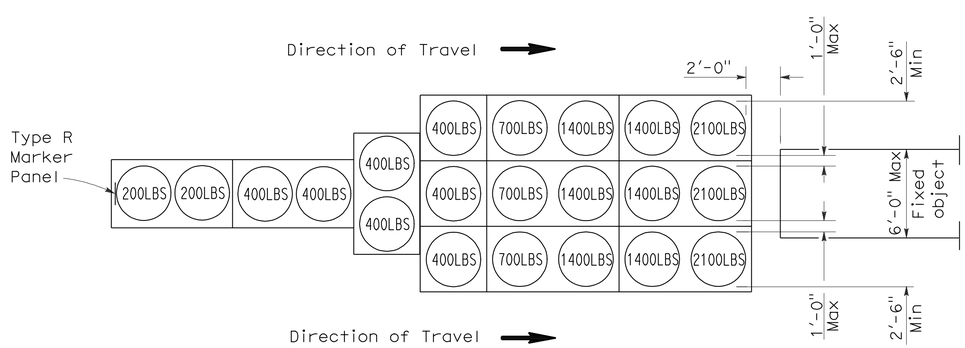

ARRAY 'TU21'

Approach speed 45 mph or more

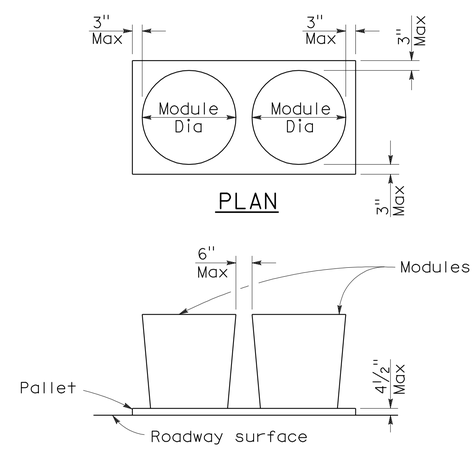

ELEVATION

CRASH CUSHION PALLET DETAIL

See Note 7

NOTES:

1. (XXX) Indicates sand filled module location and weight of sand in pounds for each module. Module spacing is based on the greater diameter of the module.
2. All sand weights are nominal.
3. Temporary crash cushion arrays shall not encroach on the traveled way.
4. Place the top of Type R marker panel 1" below the module lid.
5. Refer to Standard Plan A73B for marker details.
6. Approach speeds indicated conform to NCHRP 350 Report criteria.
7. Use of pallets is optional.

STATE OF CALIFORNIA
DEPARTMENT OF TRANSPORTATION

TEMPORARY CRASH CUSHION, SAND FILLED (UNIDIRECTIONAL)

NO SCALE

RSP T1A DATED JUNE 6, 2008 SUPERSEDES STANDARD PLAN T1A
DATED MAY 1, 2006 - PAGE 211 OF THE STANDARD PLANS BOOK DATED MAY 2006.

REVISED STANDARD PLAN RSP T1A

2006 REVISED STANDARD PLAN RSP T1A

5-15-08

DIST	COUNTY	ROUTE	POST MILES TOTAL PROJECT	SHEET NO.	TOTAL SHEETS
01	Hum	254	22.3,40.1	20	26

Randell D. Hiatt
REGISTERED CIVIL ENGINEER

June 6, 2008
PLANS APPROVAL DATE

REGISTERED PROFESSIONAL ENGINEER
Randell D. Hiatt
No. C50200
Exp. 6-30-09
CIVIL
STATE OF CALIFORNIA

The State of California or its officers or agents shall not be responsible for the accuracy or completeness of electronic copies of this plan sheet.

To accompany plans dated 6-13-11

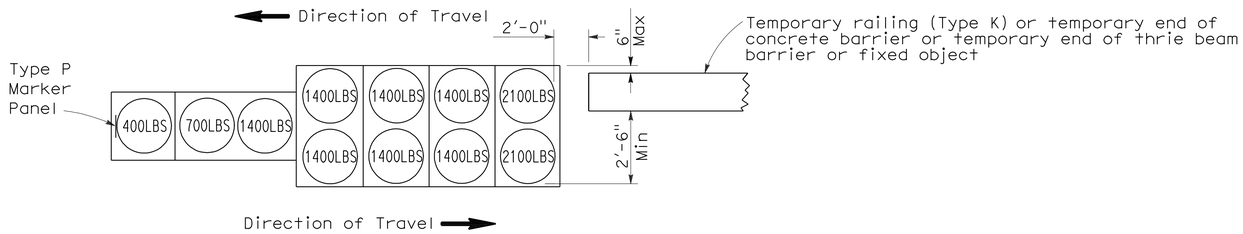

ARRAY 'TB11'

Approach speed less than 45 mph

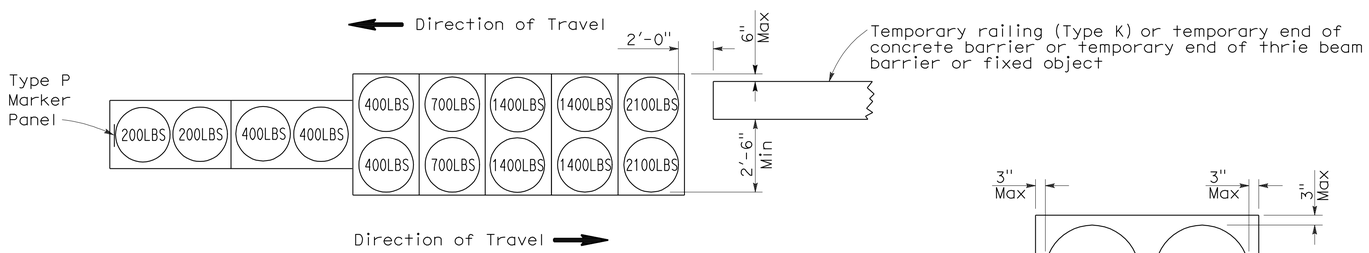

ARRAY 'TB14'

Approach speed 45 mph or more

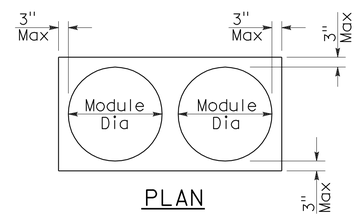

PLAN

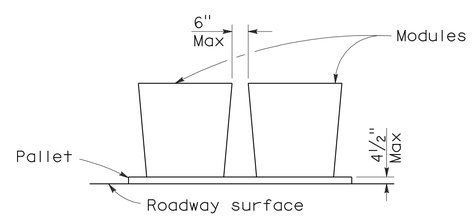

ELEVATION

CRASH CUSHION PALLET DETAIL

See Note 7

NOTES:

1. (XXX) Indicates sand filled module location and weight of sand in pounds for each module. Module spacing is based on the greater diameter of the module.
2. All sand weights are nominal.
3. Temporary crash cushion arrays shall not encroach on the traveled way.
4. Place the Type P marker panel so that the bottom of the panel rests upon the pallet.
5. Refer to Standard Plan A73B for marker details.
6. Approach speeds indicated conform to NCHRP 350 Report criteria.
7. Use of pallets is optional.

STATE OF CALIFORNIA
DEPARTMENT OF TRANSPORTATION

TEMPORARY CRASH CUSHION, SAND FILLED (BIDIRECTIONAL)

NO SCALE

RSP T1B DATED JUNE 6, 2008 SUPERSEDES STANDARD PLAN T1B
DATED MAY 1, 2006 - PAGE 212 OF THE STANDARD PLANS BOOK DATED MAY 2006.

REVISED STANDARD PLAN RSP T1B

2006 REVISED STANDARD PLAN RSP T1B

5-15-08

DIST	COUNTY	ROUTE	POST MILES TOTAL PROJECT	SHEET NO.	TOTAL SHEETS
01	Hum	254	22.3,40.1	21	26

Randell D. Hiatt
REGISTERED CIVIL ENGINEER

June 6, 2008
PLANS APPROVAL DATE

REGISTERED PROFESSIONAL ENGINEER
Randell D. Hiatt
No. C50200
Exp. 6-30-09
CIVIL
STATE OF CALIFORNIA

The State of California or its officers or agents shall not be responsible for the accuracy or completeness of electronic copies of this plan sheet.

To accompany plans dated 6-13-11

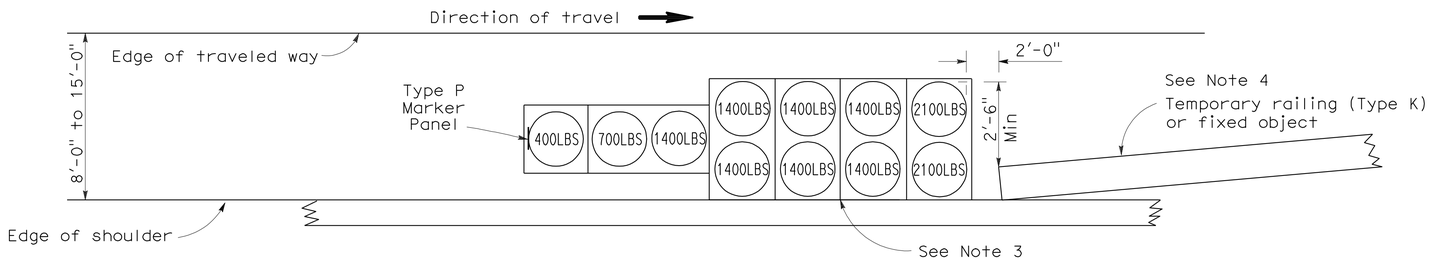

ARRAY 'TS11'

Approach speed less than 45 mph
See Note 9

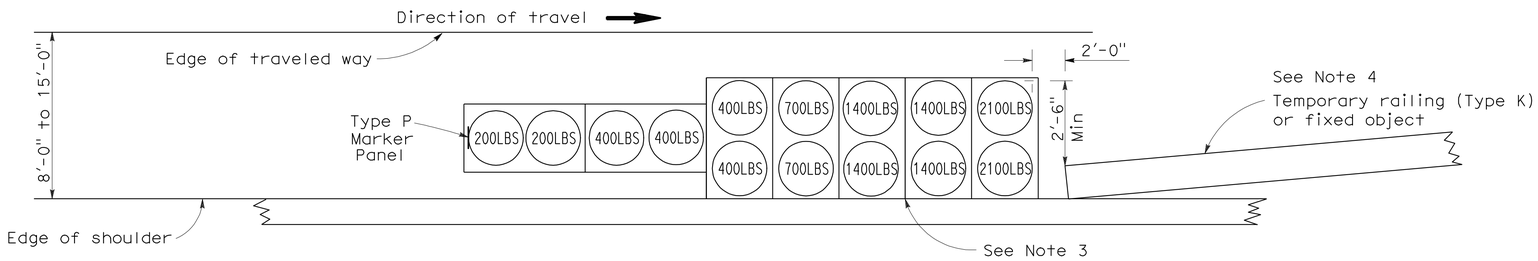

ARRAY 'TS14'

Approach speed 45 mph or more
See Note 9

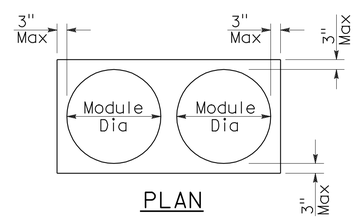

PLAN

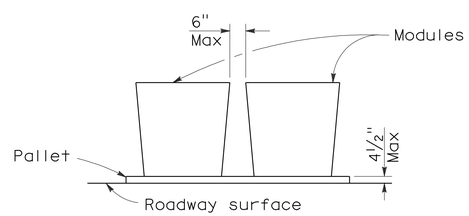

ELEVATION

CRASH CUSHION PALLET DETAIL

See Note 11

NOTES:

1. (XXX) Indicates sand filled module location and weight of sand in pounds for each module. Module spacing is based on the greater diameter of the module.
2. All sand weights are nominal.
3. The temporary crash cushion arrays shown on this plan shall be used only in locations where there will be traffic on one side of the temporary crash cushion array.
4. If the fixed object or approach end of the temporary railing is less than 15'-0" from the edge of traveled way, a temporary crash cushion is required in a construction or work zone.
5. Temporary crash cushion arrays shall not encroach on the traveled way.
6. Arrays for median shoulders shall conform to details shown on this plan for outside shoulders.
7. Place the Type P marker panel so that the bottom of the panel rests upon the pallet and faces traffic.
8. Refer to Standard Plan A73B for marker details.
9. For shoulder widths less than 8'-0", appropriate approved crash cushion protection, other than sand filled modules, shall be provided at fixed objects and at approach ends of temporary railing. The specific type of crash cushion shall be as shown on the project plans or as specified in the Special Provisions, or if not shown on the project plans or specified in the Special Provisions, shall be as approved by the Engineer.
10. Approach speeds indicated conform to NCHRP 350 Report criteria.
11. Use of pallets is optional.

STATE OF CALIFORNIA
DEPARTMENT OF TRANSPORTATION

TEMPORARY CRASH CUSHION, SAND FILLED (SHOULDER INSTALLATIONS)

NO SCALE

RSP T2 DATED JUNE 6, 2008 SUPERSEDES STANDARD PLAN T2
DATED MAY 1, 2006 - PAGE 213 OF THE STANDARD PLANS BOOK DATED MAY 2006.

REVISED STANDARD PLAN RSP T2

2006 REVISED STANDARD PLAN RSP T2

5-15-08

DIST	COUNTY	ROUTE	POST MILES TOTAL PROJECT	SHEET NO.	TOTAL SHEETS
01	Hum	254	22.3,40.1	22	26

Robert B Schott
LICENSED LANDSCAPE ARCHITECT

April 3, 2009
PLANS APPROVAL DATE

LICENSED LANDSCAPE ARCHITECT — Robert B. Schott — 3025 — Signature — 11-30-10 Renewal Date — 2-25-09 Date — STATE OF CALIFORNIA

The State of California or its officers or agents shall not be responsible for the accuracy or completeness of electronic copies of this plan sheet.

To accompany plans dated 6-13-11

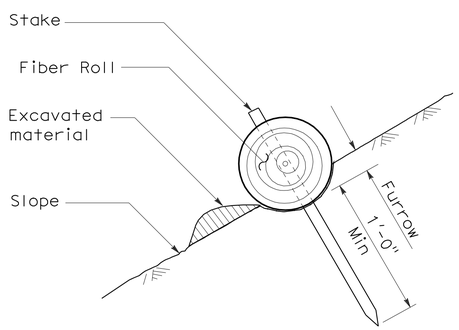

SECTION

TEMPORARY FIBER ROLL (TYPE 1)

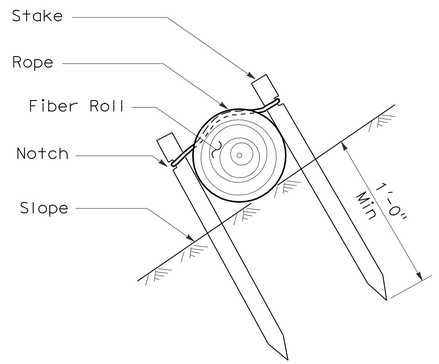

SECTION

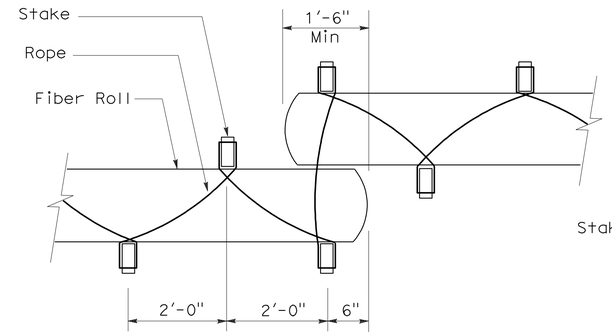

PLAN

TEMPORARY FIBER ROLL (TYPE 2)

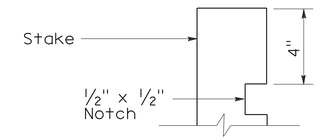

ELEVATION

STAKE NOTCH DETAIL

NOTES:

1. Temporary fiber roll spacing varies depending upon slope inclination.
2. Installations shown in the perspectives are for slope inclination of 10:1 and steeper.

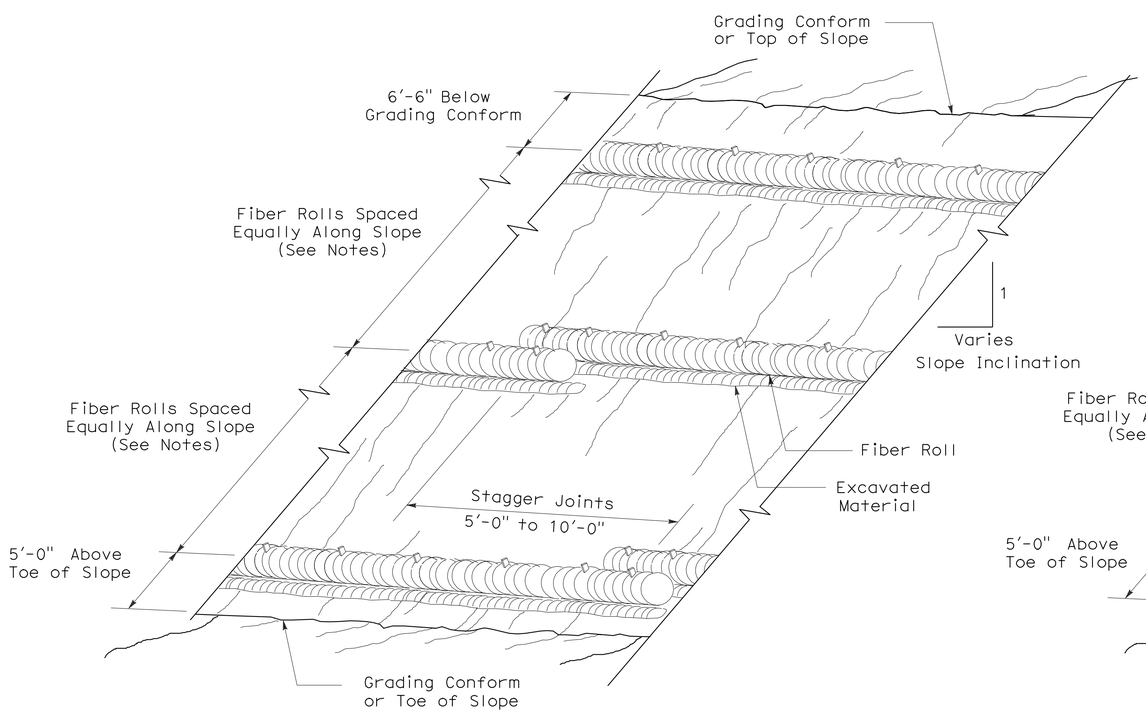

PERSPECTIVE

TEMPORARY FIBER ROLL (TYPE 1)

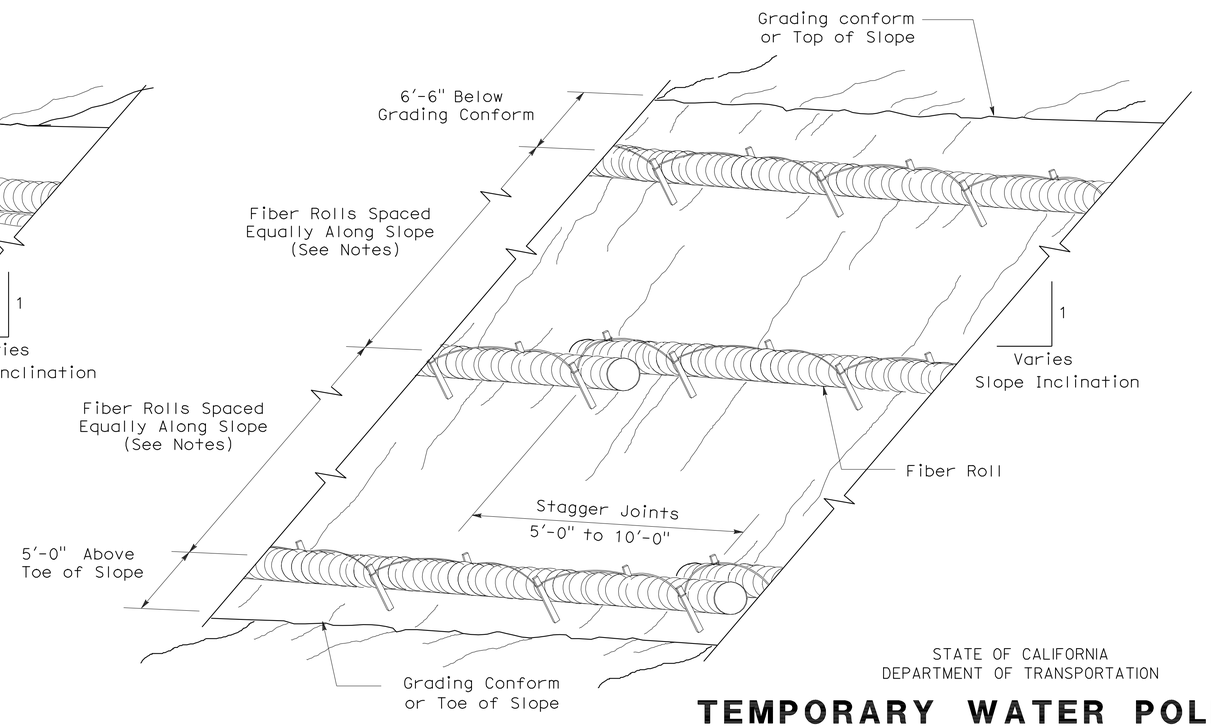

PERSPECTIVE

TEMPORARY FIBER ROLL (TYPE 2)

STATE OF CALIFORNIA
DEPARTMENT OF TRANSPORTATION

TEMPORARY WATER POLLUTION CONTROL DETAILS (TEMPORARY FIBER ROLL)

NO SCALE

RSP T56 DATED APRIL 3, 2009 SUPERSEDES STANDARD PLAN T56
DATED MAY 1, 2006 - PAGE 232 OF THE STANDARD PLANS BOOK DATED MAY 2006.

REVISED STANDARD PLAN RSP T56

2006 REVISED STANDARD PLAN RSP T56

2-23-09

DIST	COUNTY	ROUTE	POST MILES TOTAL PROJECT	SHEET NO.	TOTAL SHEETS
01	Hum	254	22.3,40.1	23	26

Robert B Schott
LICENSED LANDSCAPE ARCHITECT

August 15, 2008
PLANS Approval DATE

LICENSED LANDSCAPE ARCHITECT Robert B. Schott 3625 Signature 11-04-08 Renewal Date 08-11-08 Date STATE OF CALIFORNIA

The State of California or its officers or agents shall not be responsible for the accuracy or completeness of electronic copies of this plan sheet.

To accompany plans dated 6-13-11

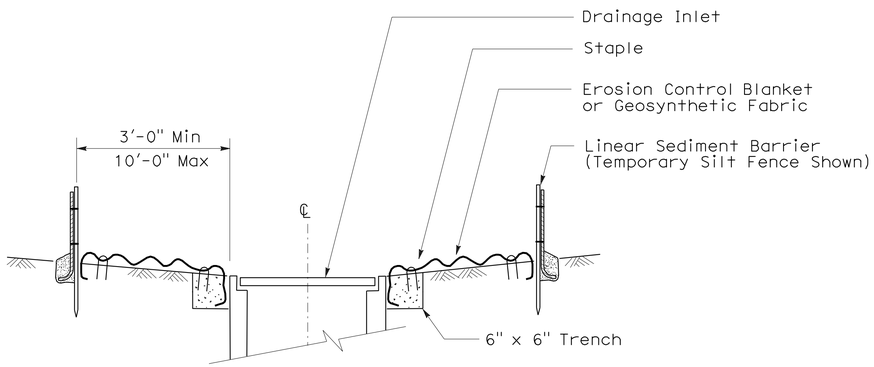

SECTION A-A

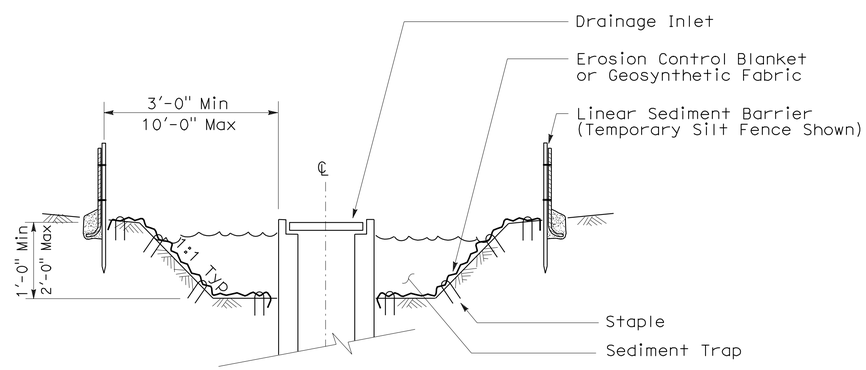

SECTION B-B

NOTES:

1. See Standard Plan T51 for Temporary Silt Fence.
2. Dimensions may vary to fit field conditions.

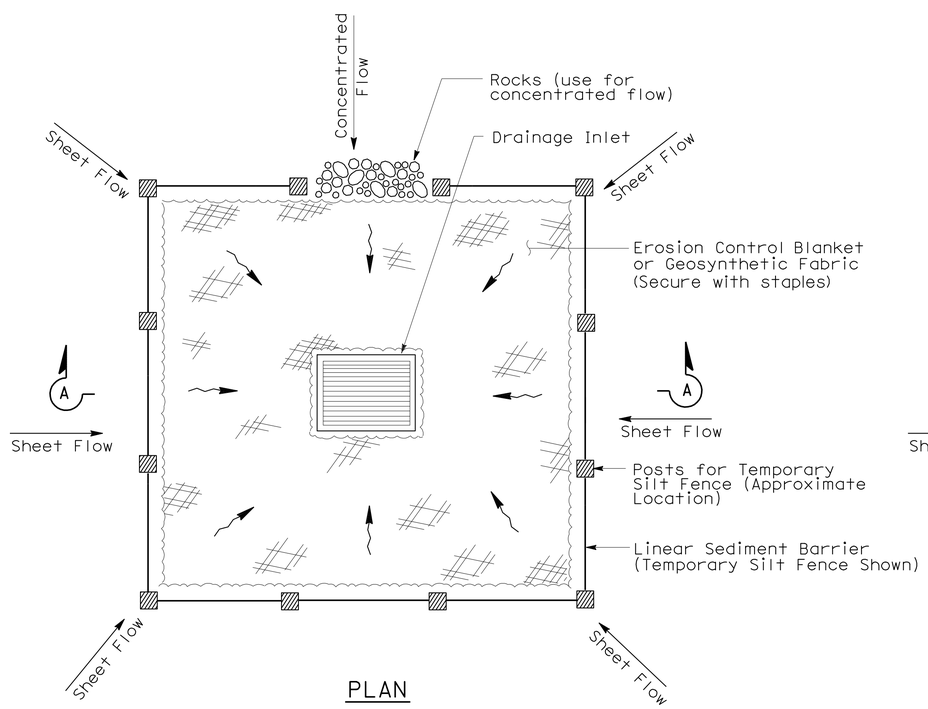

PLAN

TEMPORARY DRAINAGE INLET PROTECTION (TYPE 1)

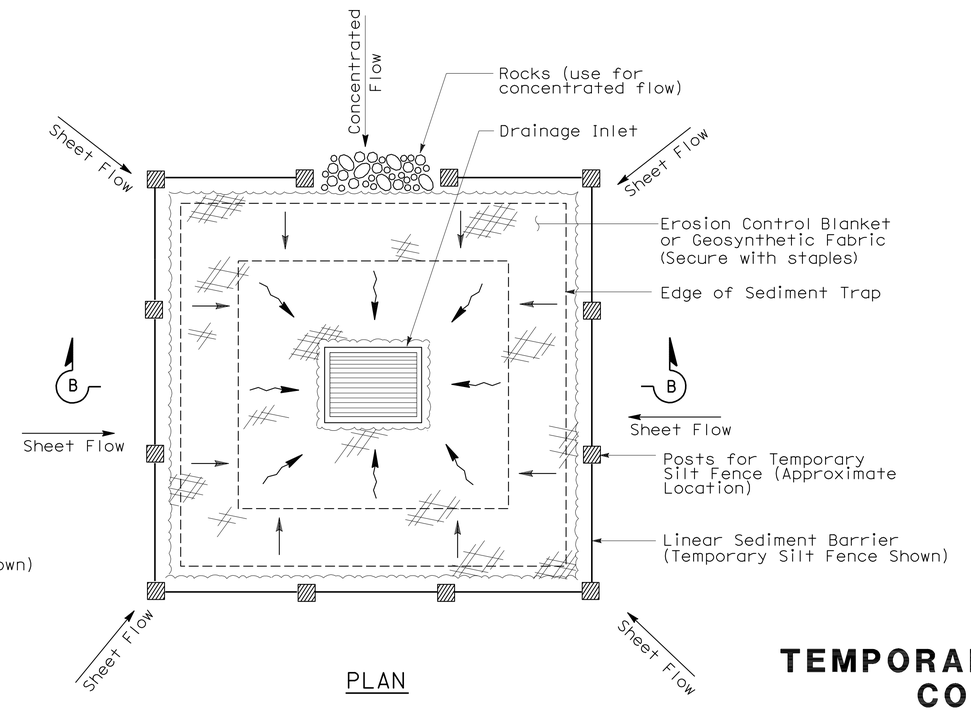

PLAN

TEMPORARY DRAINAGE INLET PROTECTION (TYPE 2) (EXCAVATED SEDIMENT TRAP)

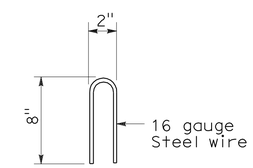

STAPLE DETAIL

STATE OF CALIFORNIA
DEPARTMENT OF TRANSPORTATION

TEMPORARY WATER POLLUTION CONTROL DETAILS (TEMPORARY DRAINAGE INLET PROTECTION)

NO SCALE

NSP T61 DATED AUGUST 15, 2008 SUPPLEMENTS THE STANDARD PLANS BOOK DATED MAY 2006.

NEW STANDARD PLAN NSP T61

2006 NEW STANDARD PLAN NSP T61

7-11-08

DIST	COUNTY	ROUTE	POST MILES TOTAL PROJECT	SHEET NO.	TOTAL SHEETS
01	Hum	254	22.3,40.1	24	26

LICENSED LANDSCAPE ARCHITECT

August 15, 2008
PLANS APPROVAL DATE

LICENSED LANDSCAPE ARCHITECT Robert B. Schott 3625 Signature 11-04-08 Renewal Date 08-11-08 Date STATE OF CALIFORNIA

The State of California or its officers or agents shall not be responsible for the accuracy or completeness of electronic copies of this plan sheet.

To accompany plans dated 6-13-11

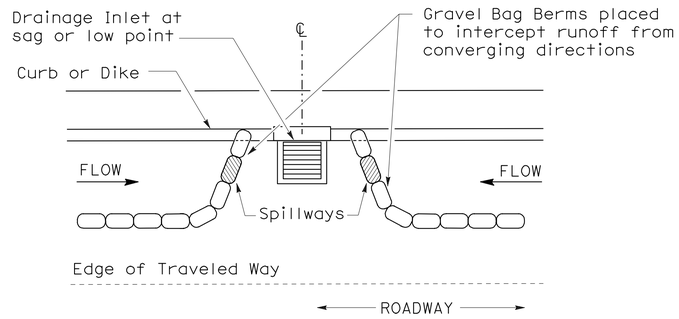

PLAN

CONFIGURATION FOR SAG POINT INLET (GRAVEL BAG BERM)

GRAVEL BAG BERM (TYPE 3A) SPACING TABLE

SLOPE OF ROADWAY (PERCENT)	1 to 3.9	4 to 5.9	6 to 7.9	8 to 10	10+
INTERVAL BETWEEN BERM	100′	75′	50′	25′	12′

For slope of less than 1%, install barriers only if erosion/sediment is prevalent

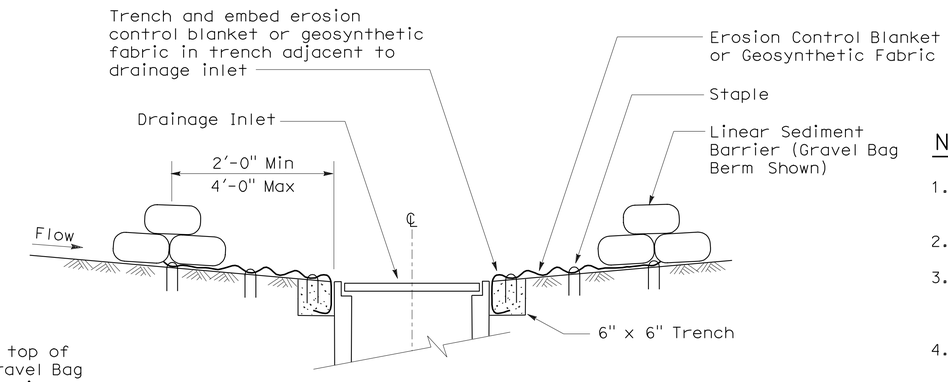

SECTION A-A

NOTES:

1. Place safety cones adjacent to drainage inlet protection.
2. Dimensions may vary to fit field conditions.
3. Install a minimum of 3 gravel bag berms upstream of each drainage inlet to be protected.
4. Position erosion control blanket or geosynthetic fabric at edge of concrete apron and secure in trench.
5. Erosion control blanket or geosynthetic fabric is not required if the area adjacent to the drainage inlet is vegetated or paved.

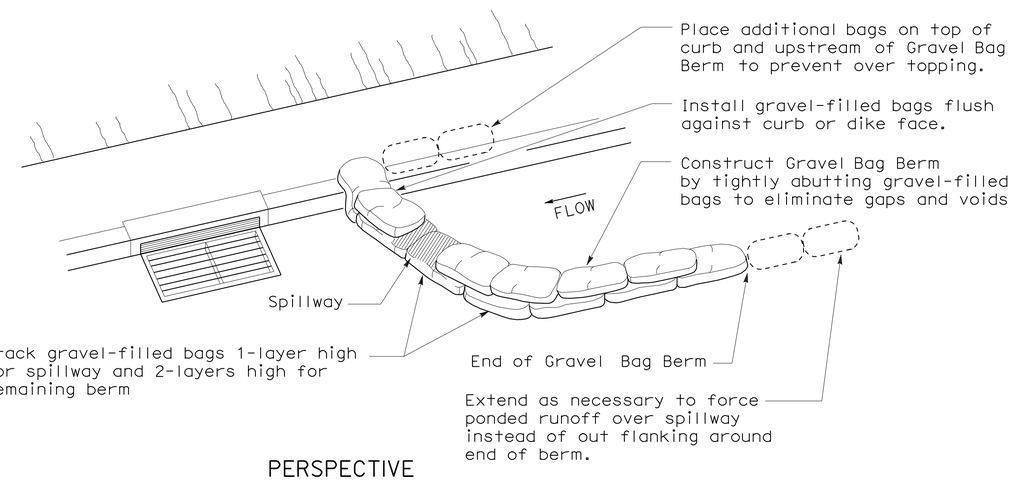

PERSPECTIVE

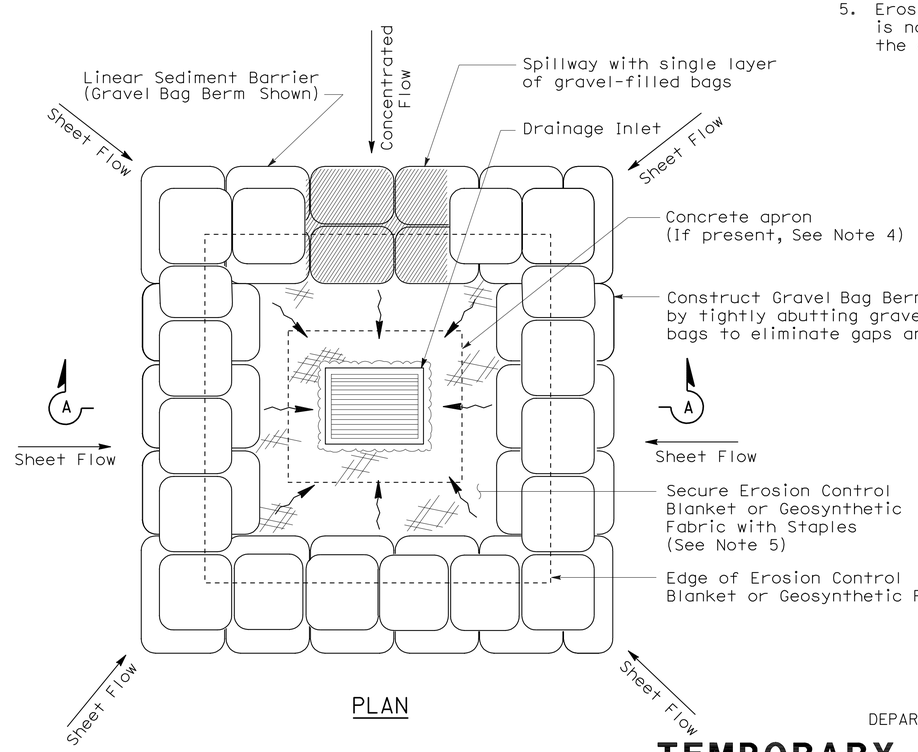

PLAN

TEMPORARY DRAINAGE INLET PROTECTION (TYPE 3B)

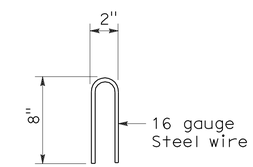

STAPLE DETAIL

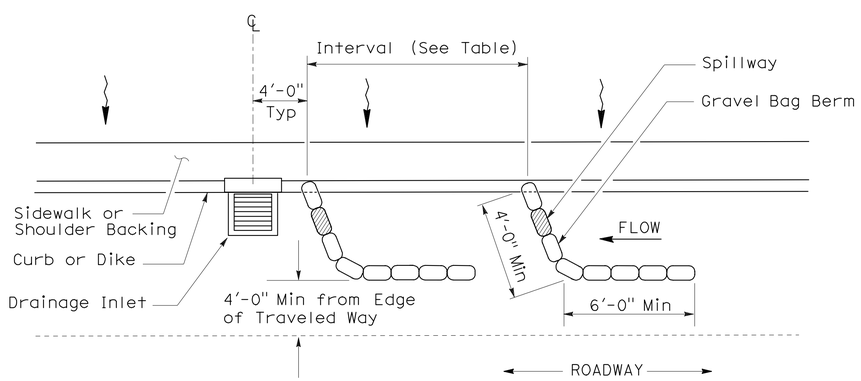

PLAN

TEMPORARY DRAINAGE INLET PROTECTION (TYPE 3A) (GRAVEL BAG BERM)

STATE OF CALIFORNIA
DEPARTMENT OF TRANSPORTATION

TEMPORARY WATER POLLUTION CONTROL DETAILS (TEMPORARY DRAINAGE INLET PROTECTION)

NO SCALE

NSP T62 DATED AUGUST 15, 2008 SUPPLEMENTS THE STANDARD PLANS BOOK DATED MAY 2006.

NEW STANDARD PLAN NSP T62

2006 NEW STANDARD PLAN NSP T62

7-11-08

DIST	COUNTY	ROUTE	POST MILES TOTAL PROJECT	SHEET NO.	TOTAL SHEETS
01	Hum	254	22.3,40.1	25	26

LICENSED LANDSCAPE ARCHITECT

August 15, 2008
PLANS APPROVAL DATE

The State of California or its officers or agents shall not be responsible for the accuracy or completeness of electronic copies of this plan sheet.

LICENSED LANDSCAPE ARCHITECT — Robert B. Schott — Signature — 11-04-08 Renewal Date — 08-11-08 Date — STATE OF CALIFORNIA

To accompany plans dated 6-13-11

FLEXIBLE SEDIMENT BARRIER SPACING TABLE

SLOPE OF ROADWAY (PERCENT)	0 to 0.9	1 to 1.9	2 to 2.9	3 to 4	5+
INTERVAL BETWEEN BARRIERS	50′	35′	30′	25′	20′
ANGLE FROM FACE OF CURB	70°	70°	70°	45°	45°
SUGGESTED BARRIER LENGTH	6′	6′	6′	6′	6′

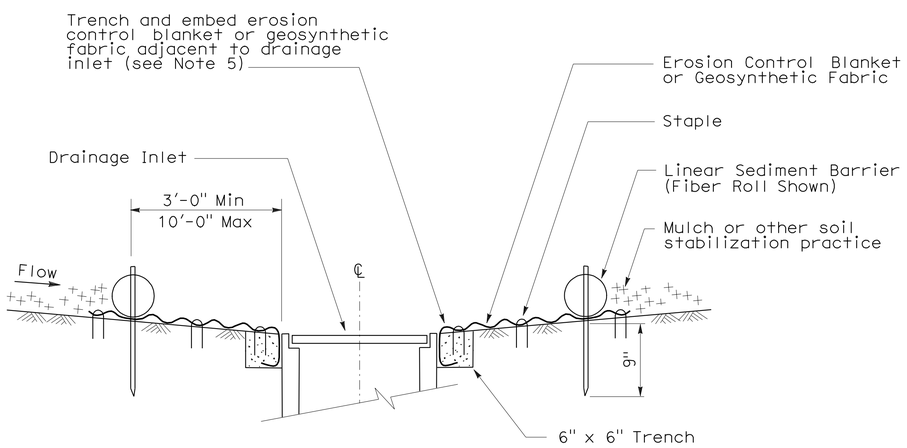

SECTION A-A

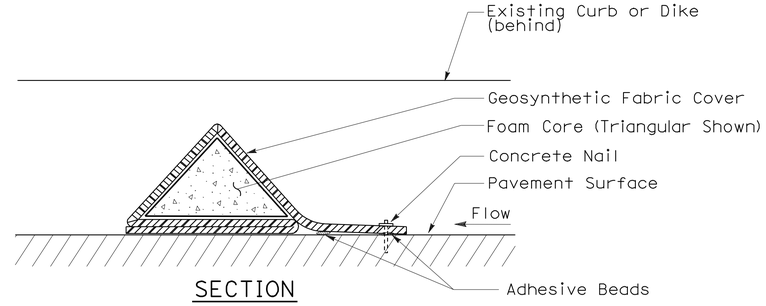

SECTION

FLEXIBLE SEDIMENT BARRIER DETAIL (FOAM BARRIER SHOWN)

NOTES:

1. See Standard Plan T51 for Temporary Silt Fence.
2. Dimensions may vary to fit field conditions.
3. Install a minimum of 3 flexible sediment barriers upstream of each drainage inlet to be protected.
4. Position erosion control blanket or geosynthetic fabric at edge of concrete apron and secure in trench.
5. Erosion control blanket or geosynthetic fabric is not required if the area adjacent to the drainage inlet is vegetated.

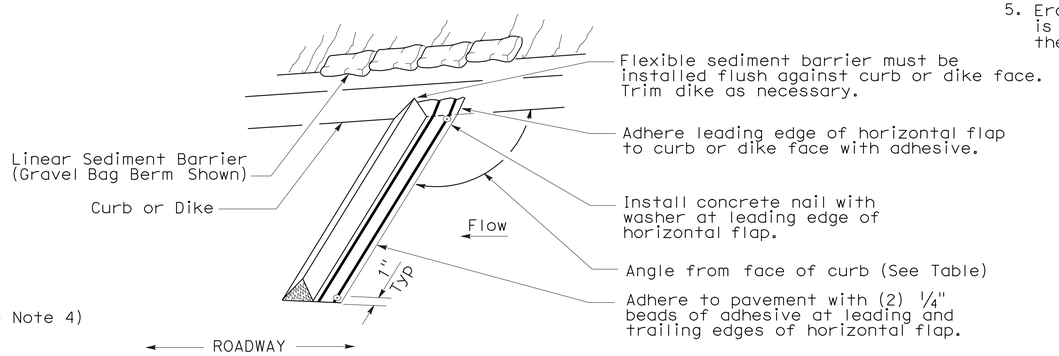

PERSPECTIVE

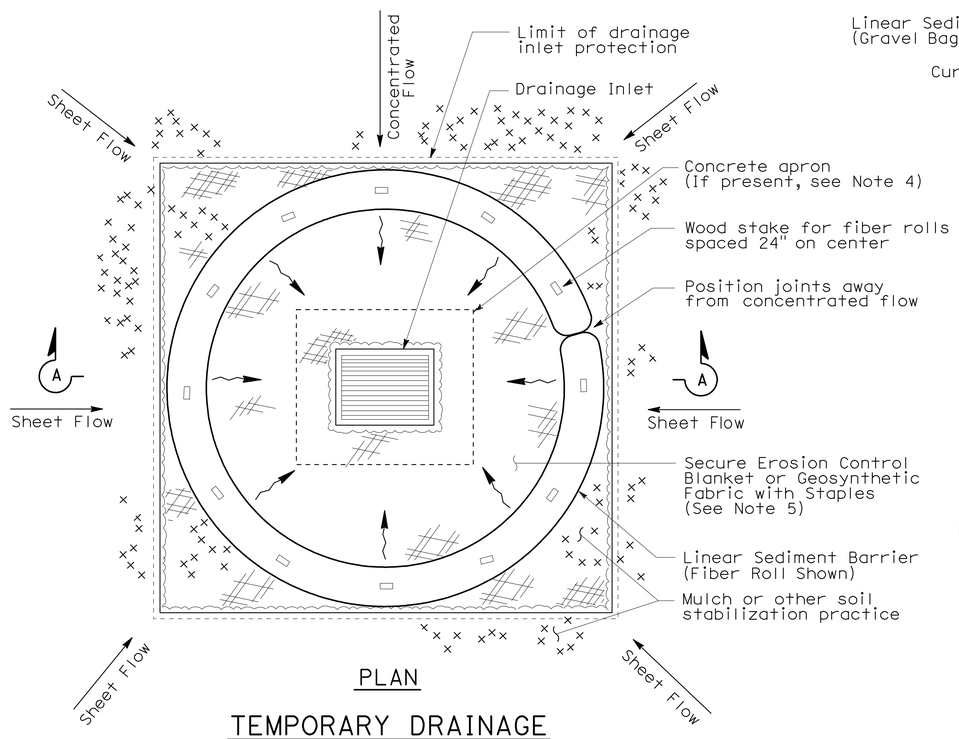

PLAN

TEMPORARY DRAINAGE INLET PROTECTION (TYPE 4A)

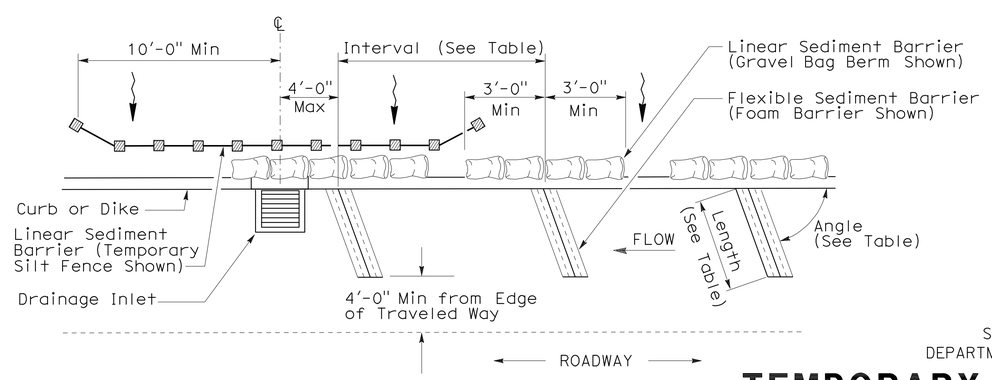

PLAN

TEMPORARY DRAINAGE INLET PROTECTION (TYPE 4B) FLEXIBLE SEDIMENT BARRIER

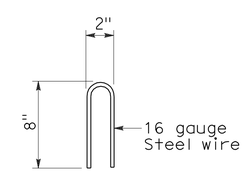

STAPLE DETAIL

STATE OF CALIFORNIA
DEPARTMENT OF TRANSPORTATION

TEMPORARY WATER POLLUTION CONTROL DETAILS (TEMPORARY DRAINAGE INLET PROTECTION)

NO SCALE

NSP T63 DATED AUGUST 15, 2008 SUPPLEMENTS THE STANDARD PLANS BOOK DATED MAY 2006.

NEW STANDARD PLAN NSP T63

2006 NEW STANDARD PLAN NSP T63

7-11-08

DIST	COUNTY	ROUTE	POST MILES TOTAL PROJECT	SHEET NO.	TOTAL SHEETS
01	Hum	254	22.3,40.1	26	26

LICENSED LANDSCAPE ARCHITECT

August 15, 2008
PLANS APPROVAL DATE

The State of California or its officers or agents shall not be responsible for the accuracy or completeness of electronic copies of this plan sheet.

LICENSED LANDSCAPE ARCHITECT — Robert B. Schott — Signature — 11-04-08 Renewal Date — 08-11-08 Date — STATE OF CALIFORNIA

To accompany plans dated 6-13-11

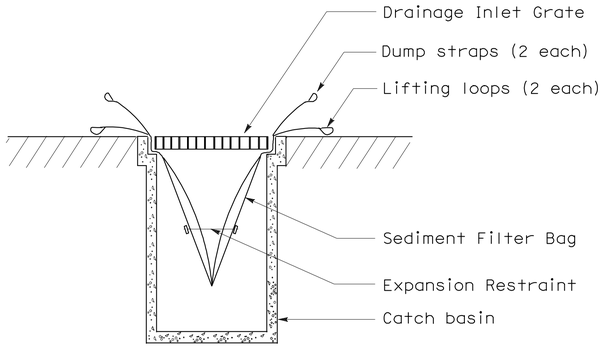

SECTION B-B

SEDIMENT FILTER BAG DETAIL

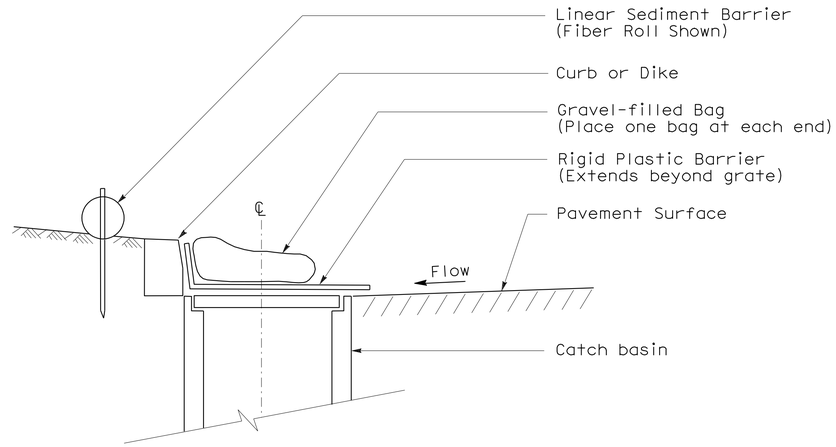

SECTION

TEMPORARY DRAINAGE INLET PROTECTION (TYPE 6A) (CATCH BASIN WITH GRATE)

NOTES:

1. See Standard Plan T51 for Temporary Silt Fence.
2. Dimensions may vary to fit field conditions.

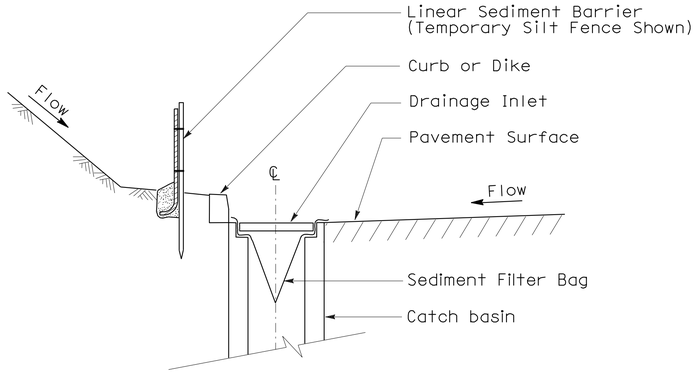

SECTION A-A

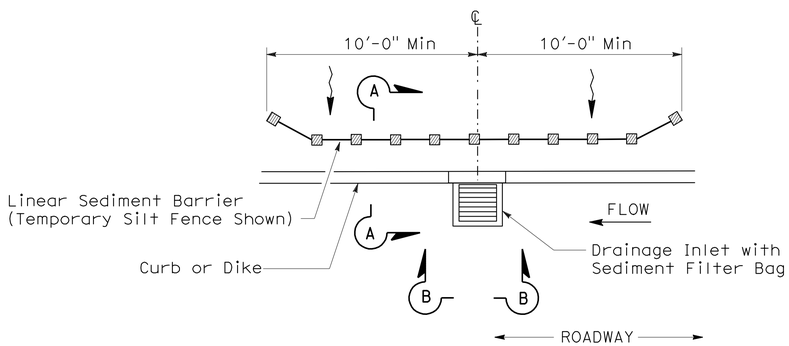

PLAN

TEMPORARY DRAINAGE INLET PROTECTION (TYPE 5) (SEDIMENT FILTER BAG)

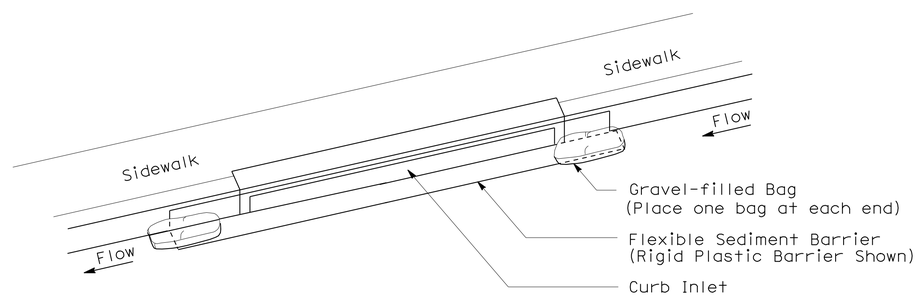

PERSPECTIVE

TEMPORARY DRAINAGE INLET PROTECTION (TYPE 6B) (CURB INLET WITHOUT GRATE)

STATE OF CALIFORNIA
DEPARTMENT OF TRANSPORTATION

TEMPORARY WATER POLLUTION CONTROL DETAILS (TEMPORARY DRAINAGE INLET PROTECTION)

NO SCALE

NSP T64 DATED AUGUST 15, 2008 SUPPLEMENTS
THE STANDARD PLANS BOOK DATED MAY 2006.

NEW STANDARD PLAN NSP T64

2006 NEW STANDARD PLAN NSP T64