Dist	COUNTY	ROUTE	POST MILES TOTAL PROJECT	SHEET No.	TOTAL SHEETS
01	Men	101	R0.1/R101.6	1	75

SARRA-Q101(169)E

STATE OF CALIFORNIA
DEPARTMENT OF TRANSPORTATION

PROJECT PLANS FOR CONSTRUCTION ON
STATE HIGHWAY

IN MENDOCINO COUNTY AT VARIOUS LOCATIONS FROM 0.3 MILE SOUTH OF RUSSIAN RIVER BRIDGE TO 0.5 MILE NORTH OF BEAR PEN UNDERCROSSING

TO BE SUPPLEMENTED BY STANDARD PLANS DATED MAY 2006

INDEX OF PLANS

SHEET No.	DESCRIPTION
1	TITLE AND LOCATION MAP
2-25	CONSTRUCTION DETAILS
26-27	STAGE CONSTRUCTION DETAILS
28-31	TRAFFIC HANDLING DETOUR PLANS
32-52	SUMMARY OF QUANTITIES
53-75	REVISED STANDARD PLANS

THE STANDARD PLANS LIST APPLICABLE TO THIS CONTRACT IS INCLUDED IN THE NOTICE TO BIDDERS AND SPECIAL PROVISIONS BOOK.

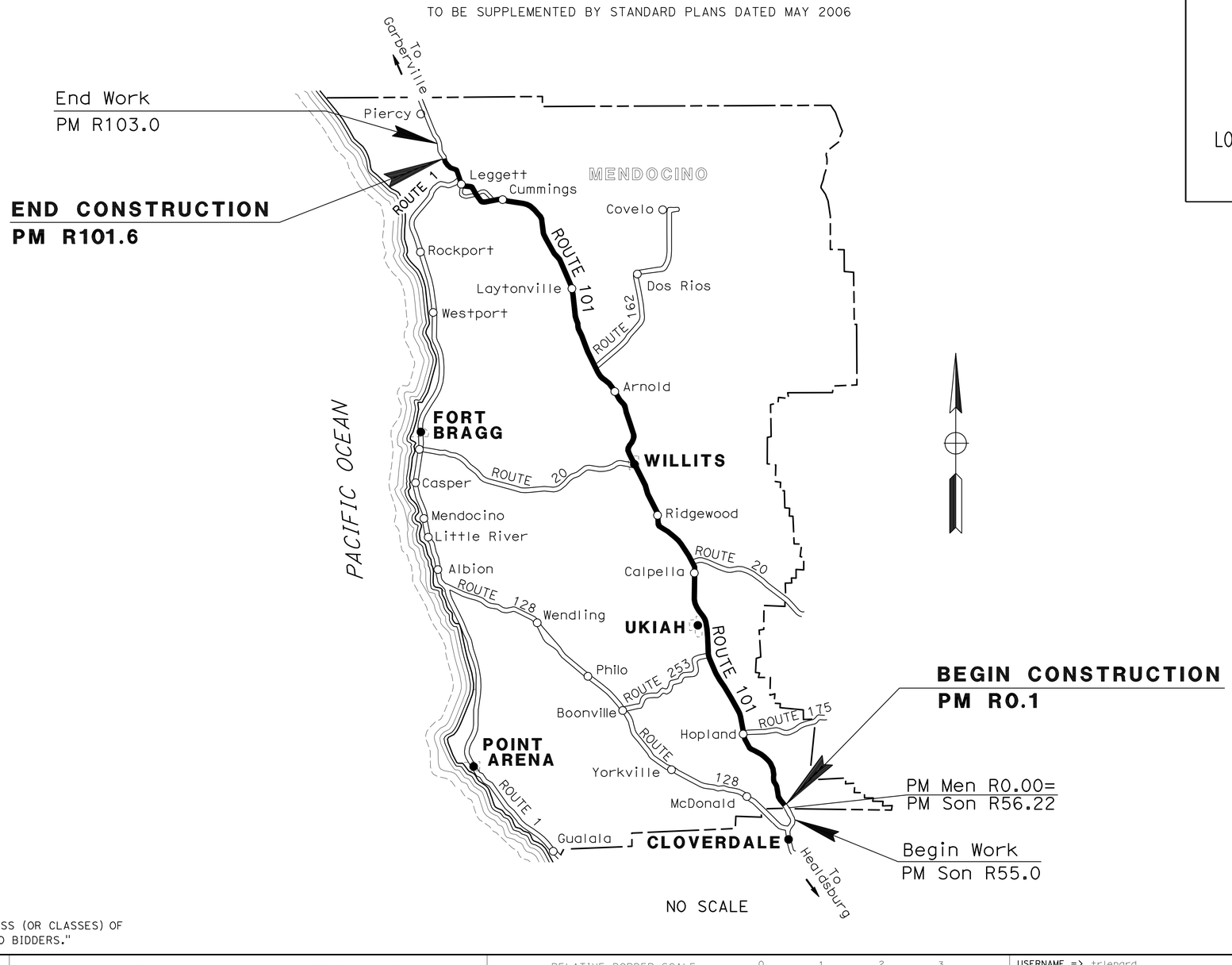

LOCATION MAP

PROJECT MANAGER: GRACE KIM TELL

DESIGN ENGINEER: TOM WOOD

THE CONTRACTOR SHALL POSSESS THE CLASS (OR CLASSES) OF LICENSE AS SPECIFIED IN THE "NOTICE TO BIDDERS."

Fernando Barriga B. 7-28-09
PROJECT ENGINEER DATE
REGISTERED CIVIL ENGINEER

REGISTERED PROFESSIONAL ENGINEER
F. Barriga
No. 47047
Exp. 12/31/09
CIVIL
STATE OF CALIFORNIA

September 28, 2009
PLANS APPROVAL DATE

THE STATE OF CALIFORNIA OR ITS OFFICERS OR AGENTS SHALL NOT BE RESPONSIBLE FOR THE ACCURACY OR COMPLETENESS OF SCANNED COPIES OF THIS PLAN SHEET.

CONTRACT No. **01-464304**

LAST REVISION 07-09-09
DATE PLOTTED => 23-FEB-2010
TIME PLOTTED => 11:13

Dist	COUNTY	ROUTE	POST MILES TOTAL PROJECT	SHEET No.	TOTAL SHEETS
01	Men	101	R0.1/R101.6	2	75

REGISTERED CIVIL ENGINEER DATE 7-28-09

9-28-09
PLANS APPROVAL DATE

REGISTERED PROFESSIONAL ENGINEER F. BARRIGA No. 47047 Exp. 12/31/09 CIVIL STATE OF CALIFORNIA

THE STATE OF CALIFORNIA OR ITS OFFICERS OR AGENTS SHALL NOT BE RESPONSIBLE FOR THE ACCURACY OR COMPLETENESS OF SCANNED COPIES OF THIS PLAN SHEET.

NOTES:

1. FOR DETAILS NOT SHOWN, SEE STANDARD PLANS RSP A77G2, RSP A77J4, AND A82A1.
2. SEE SHEET C-16 FOR TYPE 27 BARRIER CONNECTION DETAILS.
3. EXISTING UTILITY FACILITIES HAVE NOT BEEN POSITIVELY LOCATED.

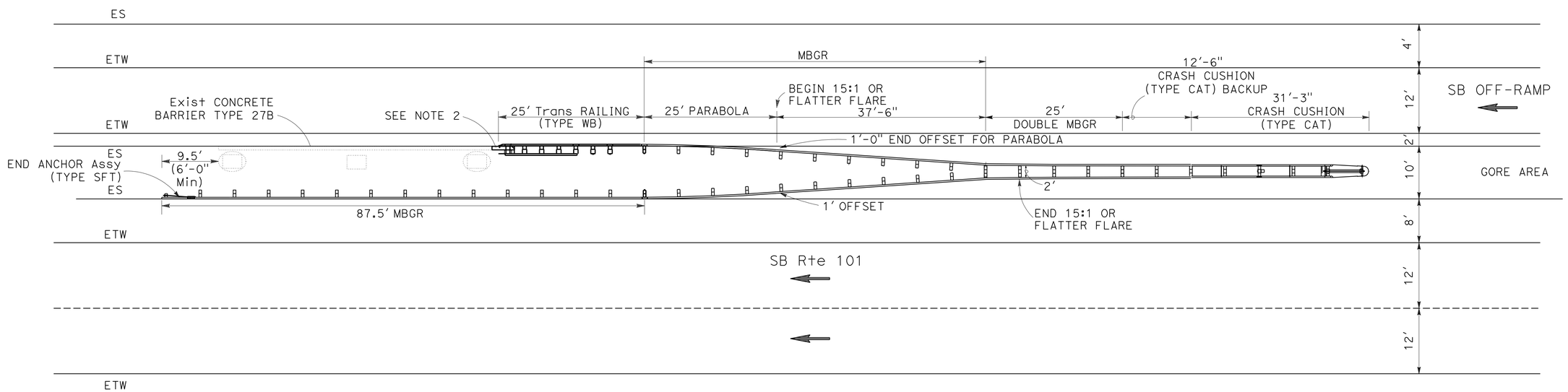

MBGR LAYOUT
BETWEEN SB MAINLINE AND SB OFF-RAMP

LOCATIONS 67 & 68
ROUTE 222/101 SEPARATION
TALMADGE OC
PM 23.44-23.46 SOUTHBOUND

CONSTRUCTION DETAILS

NO SCALE

C-1

STATE OF CALIFORNIA - DEPARTMENT OF TRANSPORTATION
Caltrans
03-DESIGN

FUNCTIONAL SUPERVISOR: THOMAS P. WOOD
CALCULATED-DESIGNED BY: S. WOODBECK
CHECKED BY: F. BARRIGA
REVISED BY
DATE REVISED

LAST REVISION 07-09-09
DATE PLOTTED => 30-SEP-2009
TIME PLOTTED => 15:10

Dist	COUNTY	ROUTE	POST MILES TOTAL PROJECT	SHEET No.	TOTAL SHEETS
01	Men	101	R0.1/R101.6	3	75

REGISTERED CIVIL ENGINEER 7-28-09 DATE

9-28-09
PLANS APPROVAL DATE

REGISTERED PROFESSIONAL ENGINEER F. BARRIGA No. 47047 Exp. 12/31/09 CIVIL STATE OF CALIFORNIA

THE STATE OF CALIFORNIA OR ITS OFFICERS OR AGENTS SHALL NOT BE RESPONSIBLE FOR THE ACCURACY OR COMPLETENESS OF SCANNED COPIES OF THIS PLAN SHEET.

NOTES:

1. FOR DETAILS NOT SHOWN, SEE STANDARD PLANS RSP A77F1, RSP A77J4, A77L1, AND A77L5. AT THIS LOCATION, THE FLEAT TERMINAL SYSTEM IS PREFERRED.
2. SEE SHEET C-9 FOR TYPE 1 BARRIER CONNECTION DETAILS.
3. EXISTING UTILITY FACILITIES HAVE NOT BEEN POSITIVELY LOCATED.

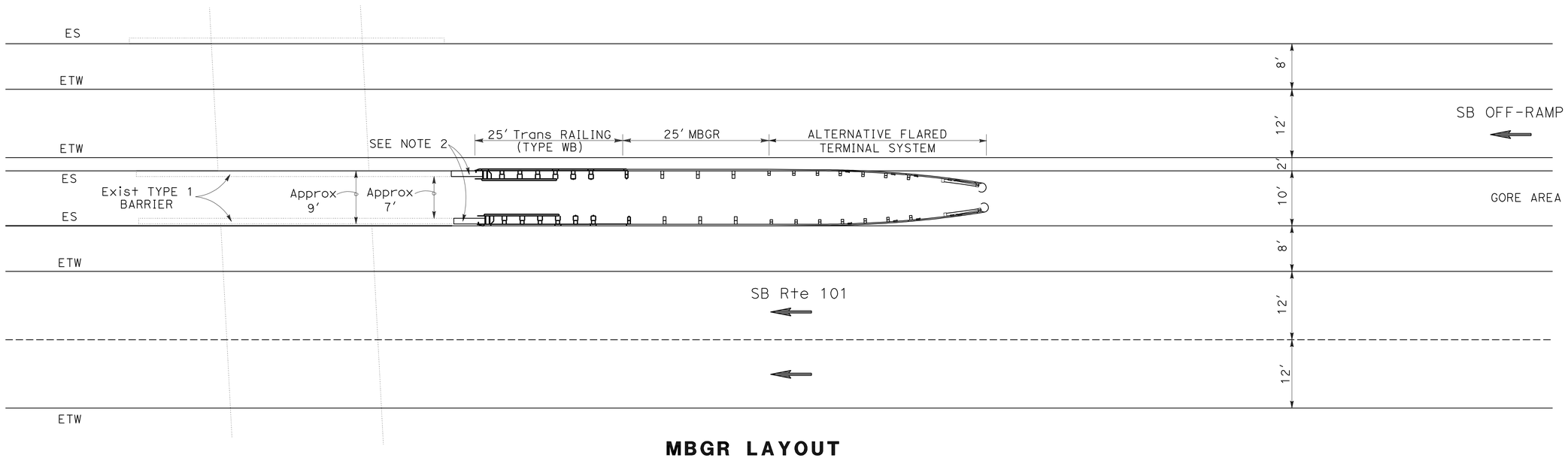

MBGR LAYOUT
BETWEEN SB MAINLINE AND SB OFF-RAMP

LOCATIONS 71 & 73
DOOLIN CR BRIDGE
PM R23.60 SOUTHBOUND

CONSTRUCTION DETAILS

NO SCALE

C-2

STATE OF CALIFORNIA - DEPARTMENT OF TRANSPORTATION
Caltrans
03-DESIGN

FUNCTIONAL SUPERVISOR: THOMAS P. WOOD
CALCULATED-DESIGNED BY: F. BARRIGA
CHECKED BY:
REVISED BY: S. WOODBECK
DATE REVISED:

LAST REVISION 07-09-09
DATE PLOTTED => 30-SEP-2009
TIME PLOTTED => 15:10

Dist	COUNTY	ROUTE	POST MILES TOTAL PROJECT	SHEET No.	TOTAL SHEETS
01	Men	101	R0.1/R101.6	4	75

REGISTERED CIVIL ENGINEER 7-28-09 DATE

9-28-09
PLANS APPROVAL DATE

REGISTERED PROFESSIONAL ENGINEER F. BARRIGA No. 47047 Exp. 12/31/09 CIVIL STATE OF CALIFORNIA

THE STATE OF CALIFORNIA OR ITS OFFICERS OR AGENTS SHALL NOT BE RESPONSIBLE FOR THE ACCURACY OR COMPLETENESS OF SCANNED COPIES OF THIS PLAN SHEET.

NOTES:

1. FOR DETAILS NOT SHOWN, SEE STANDARD PLANS RSP A77G1 AND A82A1.
2. SHIFT MBGR SOUTH AND/OR FLATTEN 15:1 FLARE AS NEEDED TO ALLOW DI AND CULVERT TO BE LOCATED BETWEEN POSTS.
3. EXISTING UTILITY FACILITIES HAVE NOT BEEN POSITIVELY LOCATED.

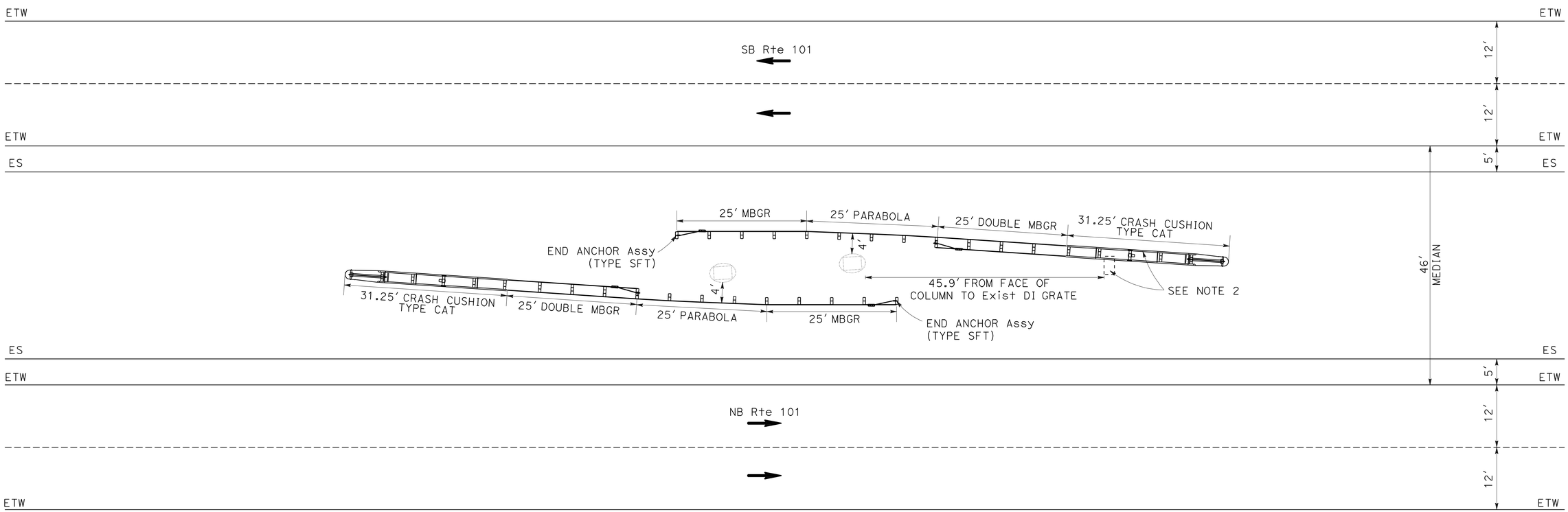

MBGR TYPE 14A LAYOUT AT OVERCROSSING COLUMNS IN MEDIAN

LOCATIONS 75 AND 77
GOBBI ST OVERCROSSING
PM R24.08 SOUTHBOUND

CONSTRUCTION DETAILS

NO SCALE

C-3

REVISED BY | DATE REVISED
S. WOODBECK | F. BARRIGA
CALCULATED-DESIGNED BY | CHECKED BY
FUNCTIONAL SUPERVISOR: THOMAS P. WOOD
STATE OF CALIFORNIA - DEPARTMENT OF TRANSPORTATION
Caltrans 03-DESIGN

LAST REVISION 07-09-09 | DATE PLOTTED => 30-SEP-2009 | TIME PLOTTED => 15:11

Dist	COUNTY	ROUTE	POST MILES TOTAL PROJECT	SHEET No.	TOTAL SHEETS
01	Men	101	R0.1/R101.6	5	75

REGISTERED CIVIL ENGINEER 7-28-09 DATE

9-28-09
PLANS APPROVAL DATE

REGISTERED PROFESSIONAL ENGINEER F. BARRIGA No. 47047 Exp. 12/31/09 CIVIL STATE OF CALIFORNIA

THE STATE OF CALIFORNIA OR ITS OFFICERS OR AGENTS SHALL NOT BE RESPONSIBLE FOR THE ACCURACY OR COMPLETENESS OF SCANNED COPIES OF THIS PLAN SHEET.

NOTES:

1. FOR DETAILS NOT SHOWN, SEE STANDARD PLANS RSP A77G1 AND A82A1.
2. EXISTING UTILITY FACILITES HAVE NOT BEEN POSITIVELY LOCATED.

LEGEND

(XX) MBGR LOCATION # FROM LIST OF PROPOSED WORK LOCATIONS (SEE SHEETS Q-1 THROUGH Q-20)

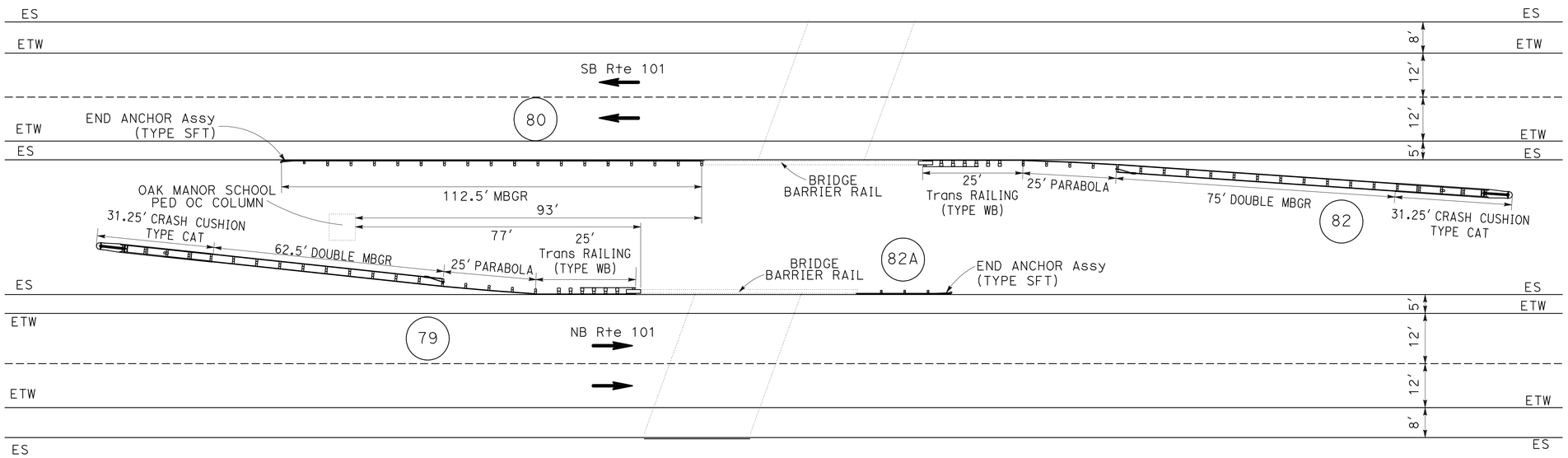

MBGR LAYOUT IN MEDIAN

LOCATIONS 79, 80, 82, 82A
OAK MANOR SCHOOL PEDESTRIAN OVERCROSSING
AND GIBSON CREEK BRIDGE
PM R24.29 - R24.34

CONSTRUCTION DETAILS

NO SCALE

C-4

STATE OF CALIFORNIA - DEPARTMENT OF TRANSPORTATION
Caltrans 03-DESIGN

FUNCTIONAL SUPERVISOR: THOMAS P. WOOD
CALCULATED-DESIGNED BY: S. WOODBECK
CHECKED BY: F. BARRIGA
REVISED BY
DATE REVISED

LAST REVISION 07-22-09
DATE PLOTTED => 30-SEP-2009
TIME PLOTTED => 15:11

Dist	COUNTY	ROUTE	POST MILES TOTAL PROJECT	SHEET No.	TOTAL SHEETS
01	Men	101	R0.1/R101.6	6	75

REGISTERED CIVIL ENGINEER 7-28-09 DATE

9-28-09
PLANS APPROVAL DATE

REGISTERED PROFESSIONAL ENGINEER F. BARRIGA No. 47047 Exp. 12/31/09 CIVIL STATE OF CALIFORNIA

THE STATE OF CALIFORNIA OR ITS OFFICERS OR AGENTS SHALL NOT BE RESPONSIBLE FOR THE ACCURACY OR COMPLETENESS OF SCANNED COPIES OF THIS PLAN SHEET.

NOTES:

1. FOR DETAILS NOT SHOWN, SEE STANDARD PLANS RSP A77G3 AND A77I2.
2. LAYOUT MBGR PRIOR TO DIGGING FOR POSTS TO ENSURE THE DI AND CULVERT FALL BETWEEN POSTS.
3. EXISTING UTILITY FACILITIES HAVE NOT BEEN POSITIVELY LOCATED.

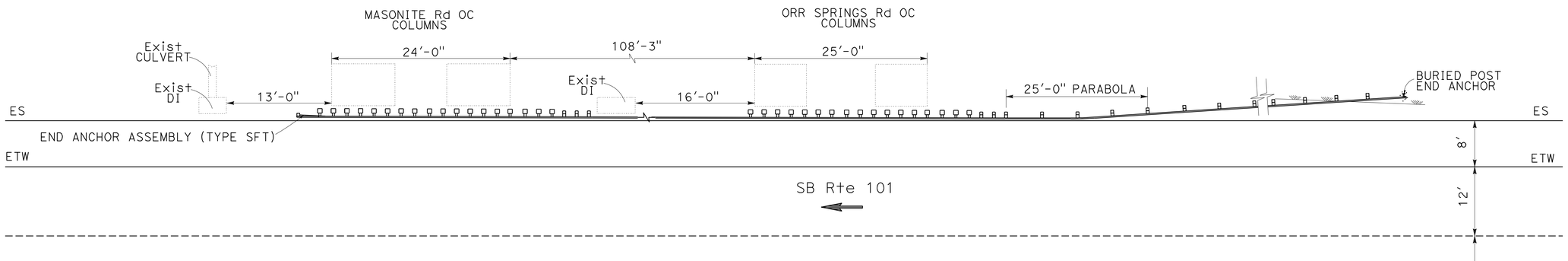

MBGR (TYPE 16C MODIFIED) LAYOUT AT OVERCROSSING COLUMNS ON RIGHT SHOULDER

LOCATION 103
ORR SPRINGS RD AND MASONITE RD OVERCROSSINGS
PM 26.35-26.37 SOUTHBOUND

CONSTRUCTION DETAILS

NO SCALE

C-5

STATE OF CALIFORNIA - DEPARTMENT OF TRANSPORTATION
Caltrans
03-DESIGN

FUNCTIONAL SUPERVISOR: THOMAS P. WOOD
CALCULATED-DESIGNED BY: S. WOODBECK
CHECKED BY: F. BARRIGA
REVISED BY
DATE REVISED

LAST REVISION 07-09-09
DATE PLOTTED => 22-OCT-2009
TIME PLOTTED => 08:34

Dist	COUNTY	ROUTE	POST MILES TOTAL PROJECT	SHEET No.	TOTAL SHEETS
01	Men	101	R0.1/R101.6	7	75

REGISTERED CIVIL ENGINEER 7-28-09 DATE

9-28-09
PLANS APPROVAL DATE

REGISTERED PROFESSIONAL ENGINEER F. BARRIGA No. 47047 Exp. 12/31/09 CIVIL STATE OF CALIFORNIA

THE STATE OF CALIFORNIA OR ITS OFFICERS OR AGENTS SHALL NOT BE RESPONSIBLE FOR THE ACCURACY OR COMPLETENESS OF SCANNED COPIES OF THIS PLAN SHEET.

NOTES:

1. FOR DETAILS NOT SHOWN, SEE STANDARD PLANS RSP A77G1 AND A82A1.
2. EXISTING UTILITY FACILITIES HAVE NOT BEEN POSITIVELY LOCATED.

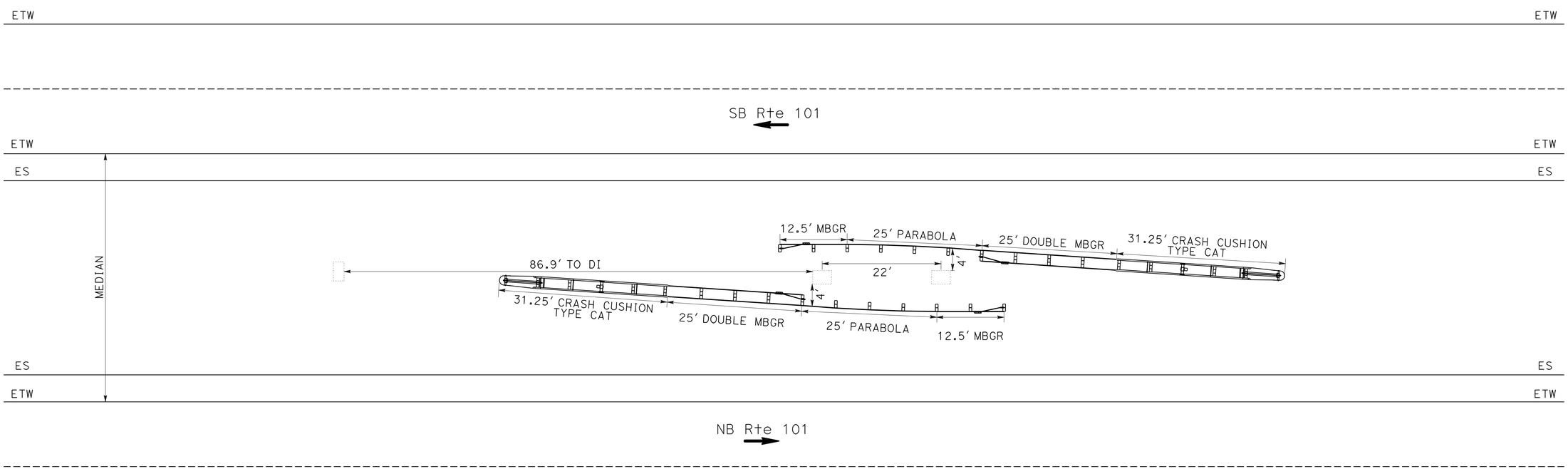

MBGR TYPE 14A LAYOUT AT OVERCROSSING COLUMNS IN MEDIAN

LOCATIONS 130 AND 131
CENTRAL AVE OVERCROSSING
PM 29.83-29.85

CONSTRUCTION DETAILS

NO SCALE

C-6

STATE OF CALIFORNIA - DEPARTMENT OF TRANSPORTATION
Caltrans
03-DESIGN

FUNCTIONAL SUPERVISOR: THOMAS P. WOOD
CALCULATED-DESIGNED BY: S. WOODBECK
CHECKED BY: F. BARRIGA
REVISED BY
DATE REVISED

LAST REVISION 07-09-09
DATE PLOTTED => 30-SEP-2009
TIME PLOTTED => 15:11

Dist	COUNTY	ROUTE	POST MILES TOTAL PROJECT	SHEET No.	TOTAL SHEETS
01	Men	101	R0.1/R101.6	8	75

REGISTERED CIVIL ENGINEER 7-28-09 DATE

9-28-09
PLANS APPROVAL DATE

REGISTERED PROFESSIONAL ENGINEER
F. BARRIGA
No. 47047
Exp. 12/31/09
CIVIL
STATE OF CALIFORNIA

THE STATE OF CALIFORNIA OR ITS OFFICERS OR AGENTS SHALL NOT BE RESPONSIBLE FOR THE ACCURACY OR COMPLETENESS OF SCANNED COPIES OF THIS PLAN SHEET.

NOTES:

1. FOR ADDITIONAL DETAILS, INCLUDING DOWLING AND REINFORCEMENT DETAILS, SEE SHEET C-9 FOR Exist TYPE 1 BARRIER RAILING.
2. EXTEND ANCHOR BLOCK APPROXIMATELY 4′ AT THE EXISTING TAPERED SLOPE.
3. EXISTING UTILITY FACILITIES HAVE NOT BEEN POSITIVELY LOCATED.

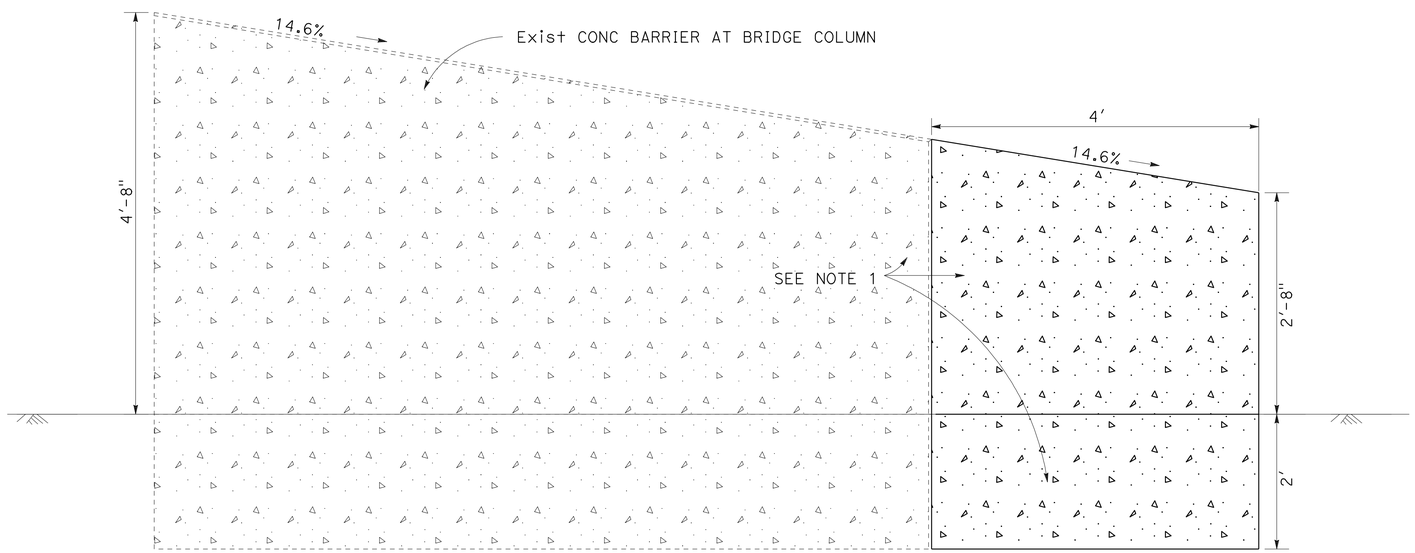

BARRIER CONNECTION

ELEVATION

LOCATION 132
PM 29.84 NORTHBOUND

LOCATION 133
PM 29.83 SOUTHBOUND

CONSTRUCTION DETAILS

NO SCALE

C-7

STATE OF CALIFORNIA - DEPARTMENT OF TRANSPORTATION
Caltrans
03-DESIGN

FUNCTIONAL SUPERVISOR: THOMAS P. WOOD
CALCULATED-DESIGNED BY: S. WOODBECK
CHECKED BY: F. BARRIGA
REVISED BY
DATE REVISED

LAST REVISION 07-09-09
DATE PLOTTED => 30-SEP-2009
TIME PLOTTED => 15:11

Dist	COUNTY	ROUTE	POST MILES TOTAL PROJECT	SHEET No.	TOTAL SHEETS
01	Men	101	R0.1/R101.6	9	75

REGISTERED CIVIL ENGINEER 7-28-09 DATE

9-28-09
PLANS APPROVAL DATE

REGISTERED PROFESSIONAL ENGINEER F. BARRIGA No. 47047 Exp. 12/31/09 CIVIL STATE OF CALIFORNIA

THE STATE OF CALIFORNIA OR ITS OFFICERS OR AGENTS SHALL NOT BE RESPONSIBLE FOR THE ACCURACY OR COMPLETENESS OF SCANNED COPIES OF THIS PLAN SHEET.

NOTES:

1. USE CASE 1 OR CASE 2 WHEN ONE POST IS OMITTED.
2. USE CASE 3 WHEN TWO POSTS ARE OMITTED.
3. FOR OTHER DETAILS, SEE STANDARD PLANS (MAY 2006).
4. NESTING OF MBGR IS NOT A SEPARATE PAY ITEM. IT IS FOR INFORMATION ONLY.
5. EXISTING UTILITY FACILITIES HAVE NOT BEEN POSITIVELY LOCATED.

LONG SPAN NESTED GUARDRAIL

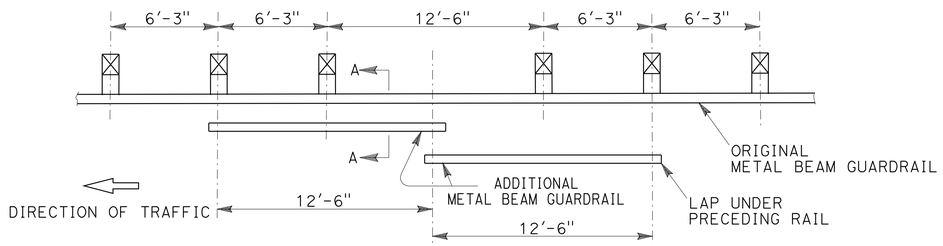

CASE 1

ONE POST OMITTED (SPLICE IN CENTER)

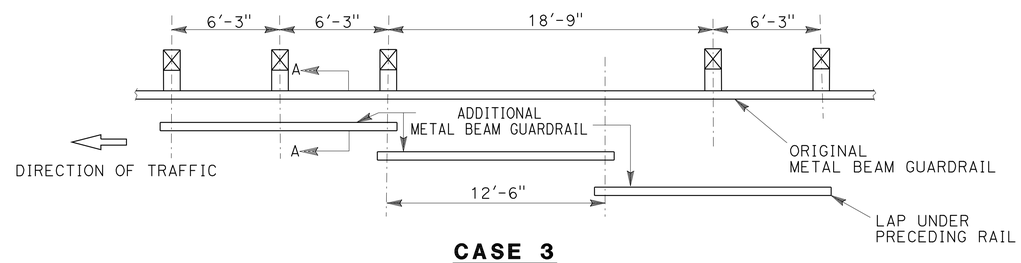

CASE 3

TWO POSTS OMITTED (LOC 247)

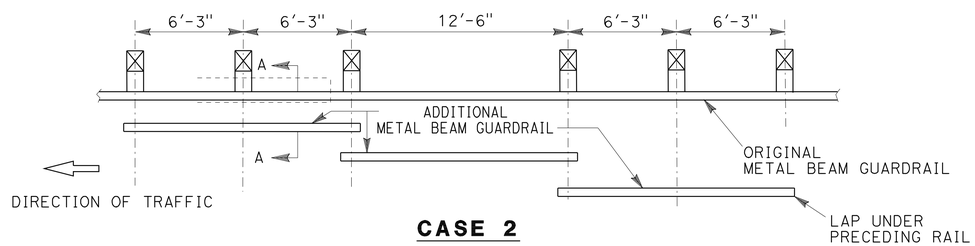

CASE 2

ONE POST OMITTED (SPLICE AT POSTS)

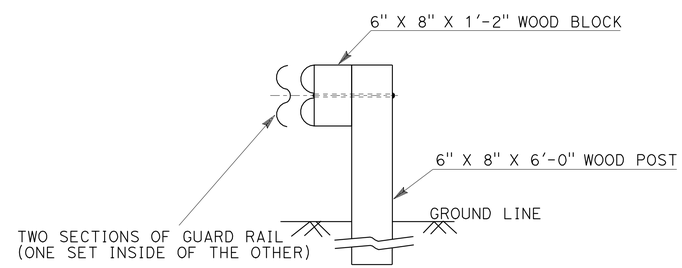

SECTION A-A

NESTED MBGR NEEDED FOR DRAINS/CULVERTS AT THE FOLLOWING LOCATIONS:

10-POSSIBLE - 2 OVERSIDE DRAINS
13-OVERSIDE DRAIN UNDER LEADER
14-OVERSIDE DRAIN AT LEADER
103-POSSIBLE-DI
172-DI
179-CULVERT
180-OVERSIDE DRAIN
188-OVERSIDE DRAIN AT 200' FROM SOUTH END. CUT OFF 1' FROM LAST MBGR SECTION.
234-POSSIBLE-CULVERT BEHIND MAY RUN UNDER.
235-OVERSIDE DRAIN
247-CULVERT
258-POSSIBLE-COULD ALSO REMOVE 12.5' FROM TRAILER END MBGR TO AVOID CULVERT IF NEEDED.
265-OS DRAIN @ 4' FROM STEEL POST-CAN BE MISSED IF NEW POSTS ARE PLACED AT SAME STATION LOCATION.
267-OS DRAIN EXISTS BETWEEN POSTS-CAN BE MISSED IF EXIST POSTHOLES ARE USED.
270-DI; OS DRAIN EXISTS BETWEEN POSTS-CAN BE MISSED IF EXIST POSTHOLES ARE USED.
284-OS DRAIN EXISTS BETWEEN POSTS-CAN BE MISSED IF EXIST POSTHOLES ARE USED.
302-POST OMITTED AT OS DRAIN-RECONSTRUCT AS EXISTS.
311-POSSIBLE FOR CULVERT
314-OS DRAIN EXISTS BETWEEN POSTS-CAN BE MISSED IF EXIST POSTHOLES ARE USED.

CONSTRUCTION DETAILS

NO SCALE

C-8

STATE OF CALIFORNIA - DEPARTMENT OF TRANSPORTATION
03-DESIGN
Caltrans®

FUNCTIONAL SUPERVISOR: THOMAS P. WOOD
CALCULATED-DESIGNED BY: S. WOODBECK
CHECKED BY: F. BARRIGA
REVISED BY
DATE REVISED

LAST REVISION 07-13-09
DATE PLOTTED => 30-SEP-2009
TIME PLOTTED => 15:12

Dist	COUNTY	ROUTE	POST MILES TOTAL PROJECT	SHEET No.	TOTAL SHEETS
01	Men	101	R0.1/R101.6	10	75

REGISTERED CIVIL ENGINEER DATE 7-28-09

9-28-09
PLANS APPROVAL DATE

REGISTERED PROFESSIONAL ENGINEER F. BARRIGA No. 47047 Exp. 12/31/09 CIVIL STATE OF CALIFORNIA

THE STATE OF CALIFORNIA OR ITS OFFICERS OR AGENTS SHALL NOT BE RESPONSIBLE FOR THE ACCURACY OR COMPLETENESS OF SCANNED COPIES OF THIS PLAN SHEET.

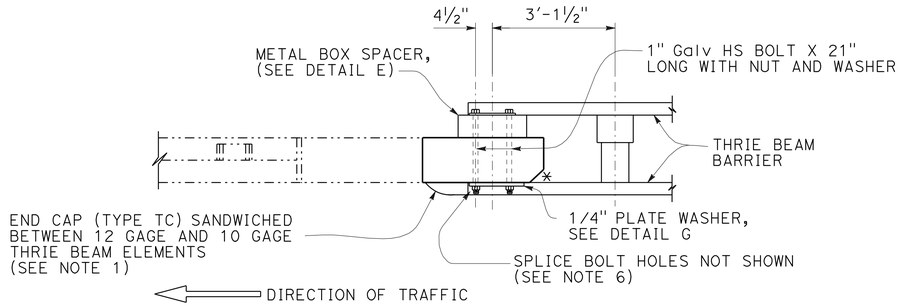

PLAN

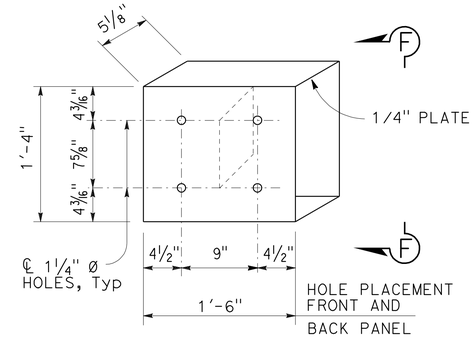

DETAIL E

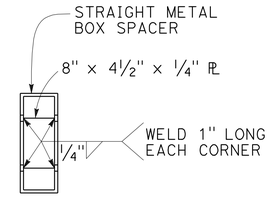

VIEW F-F

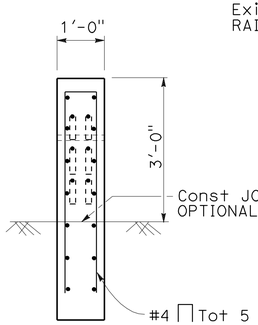

SECTION A-A

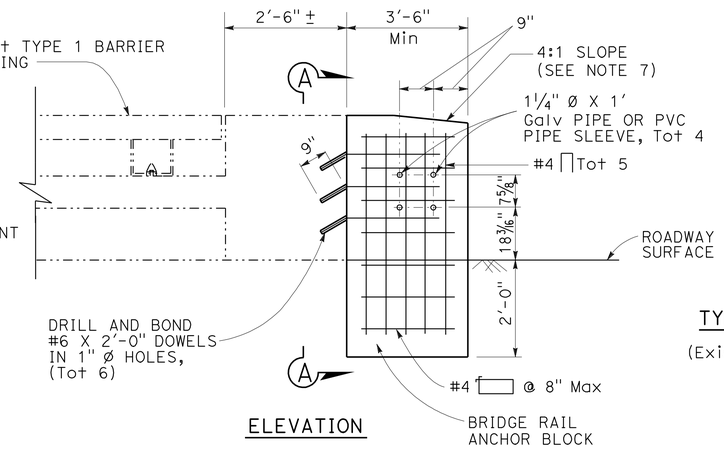

ELEVATION

TYPICAL SECTION

(Exist TYPE 1 BARRIER)

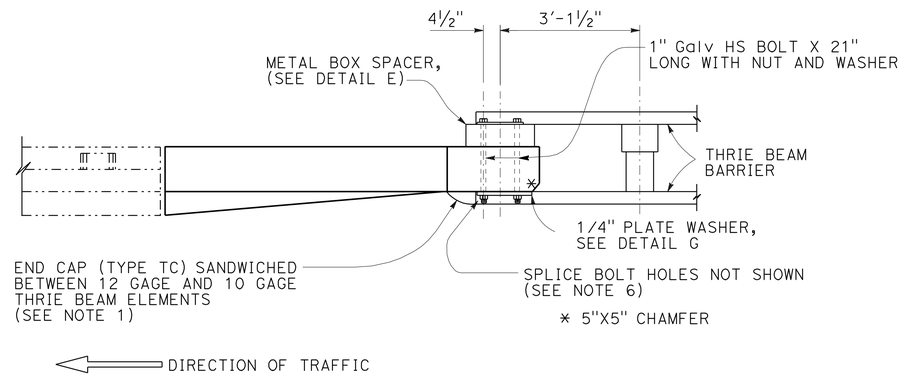

PLAN

ANCHOR BLOCK: MINOR CONCRETE (MINOR STRUCTURE)

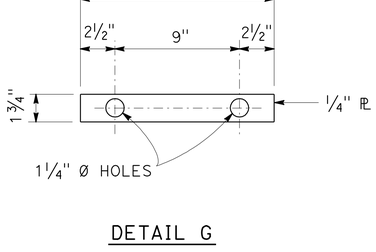

DETAIL G

NOTES:

1. FOR DETAILS NOT SHOWN, SEE STANDARD PLANS MAY 2006.
2. DEPENDENT DIMENSIONS WILL BE VERIFIED IN THE FIELD BEFORE FABRICATING ANY END CONNECTION TO CONFORM WITH EXISTING PAVED CONDITIONS.
3. WHEN END SECTION IS CALLED FOR, MODIFY TYPICAL TERMINAL SECTION TO FIT. SEE DETAIL E.
4. ALL PLATES AND BOLTS ARE GALVANIZED.
5. CUT AND REMOVE PORTION OF TYPE 1, 2 AND BAGR AS REQUIRED.
6. EXTERIOR SPLICE BOLT HOLES SHALL BE THE STANDARD 29/32" X 1 1/8" SLOT SIZE FOR RAIL SPLICES AT POST NO. T4 AND THE CONNECTION TO THE CONCRETE BARRIER OR RAILING. INTERIOR SPLICE BOLT HOLES MAY BE INCREASED UP TO 1 1/4" Ø. WASHERS SHALL BE USED WITH SPLICE BOLTS ON BACK SIDE OF RAIL ELEMENT AT POST NO. T4 AND CONNECTION TO THE CONCRETE BARRIER OR RAILING.
7. TAPER THE TOP OF THE END OF THE BRIDGE RAILING AT 4:1 TO MATCH THE TOP ELEVATION OF THE THRIE BEAM RAIL ELEMENT.
8. BRIDGE RAIL ANCHOR BLOCKS SHALL BE SHIELDED FROM TRAFFIC UNTIL FINAL MBGR CONNECTION OCCURS.

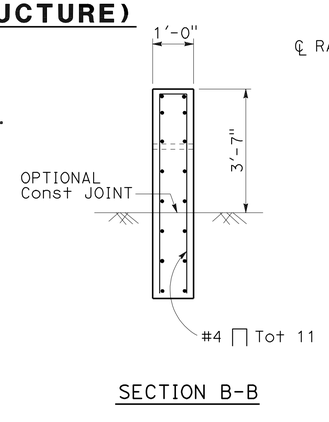

SECTION B-B

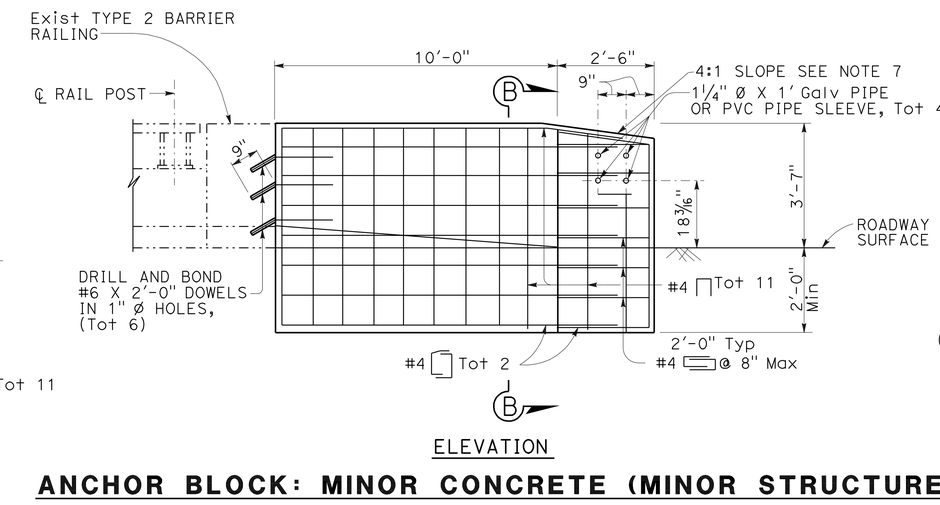

ELEVATION

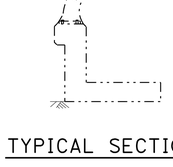

TYPICAL SECTION

(Exist TYPE 2 BARRIER)

ANCHOR BLOCK: MINOR CONCRETE (MINOR STRUCTURE)

END BLOCK: THRIE BEAM CONNECTION DETAILS FOR EXISTING BARRIER RAILING TYPE 1 AND TYPE 2

CONSTRUCTION DETAILS
THRIE BEAM CONNECTION DETAILS
BARRIER RAILING TYPES 1 & 2

NO SCALE

C-9

STATE OF CALIFORNIA - DEPARTMENT OF TRANSPORTATION
03-DESIGN
Caltrans
FUNCTIONAL SUPERVISOR THOMAS P. WOOD
CALCULATED-DESIGNED BY TILLAT SATTER
CHECKED BY F. BARRIGA
REVISED BY
DATE REVISED

LAST REVISION 07-13-09
DATE PLOTTED => 30-SEP-2009
TIME PLOTTED => 15:12

Dist	COUNTY	ROUTE	POST MILES TOTAL PROJECT	SHEET No.	TOTAL SHEETS
01	Men	101	R0.1/R101.6	11	75

REGISTERED CIVIL ENGINEER 7-28-09 DATE

9-28-09
PLANS APPROVAL DATE

REGISTERED PROFESSIONAL ENGINEER F. BARRIGA No. 47047 Exp. 12/31/09 CIVIL STATE OF CALIFORNIA

THE STATE OF CALIFORNIA OR ITS OFFICERS OR AGENTS SHALL NOT BE RESPONSIBLE FOR THE ACCURACY OR COMPLETENESS OF SCANNED COPIES OF THIS PLAN SHEET.

NOTES:

1. THE CONTRACTOR SHALL VERIFY ALL CONTROLLING FIELD DIMENSIONS BEFORE ORDERING OR FABRICATING ANY MATERIAL.
2. ALL PLATES AND BOLTS ARE GALVANIZED.
3. FOR DETAILS NOT SHOWN, SEE STANDARD PLANS, MAY 2006.

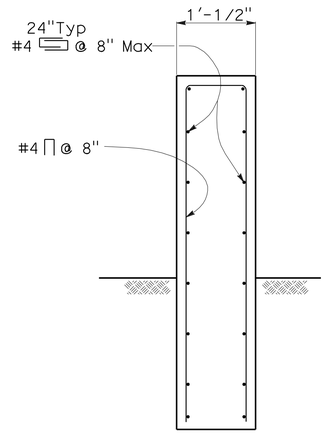

SECTION B-B

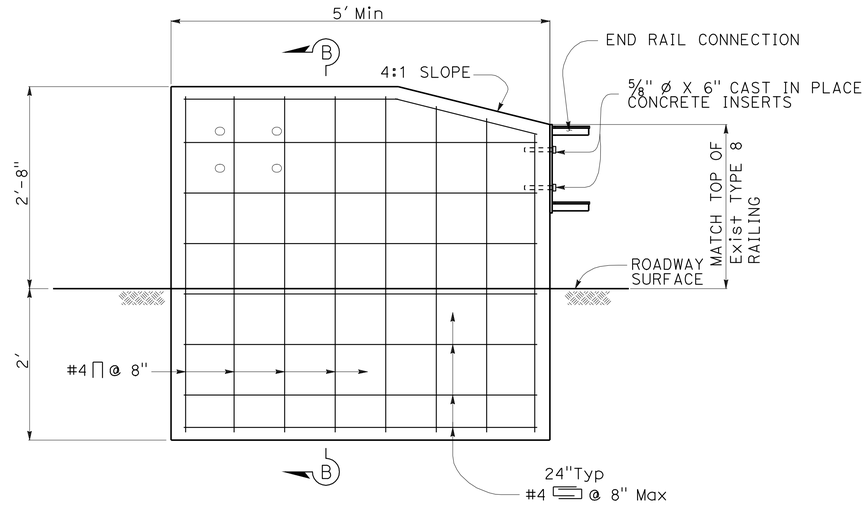

END BLOCK REINFORCEMENT

ELEVATION

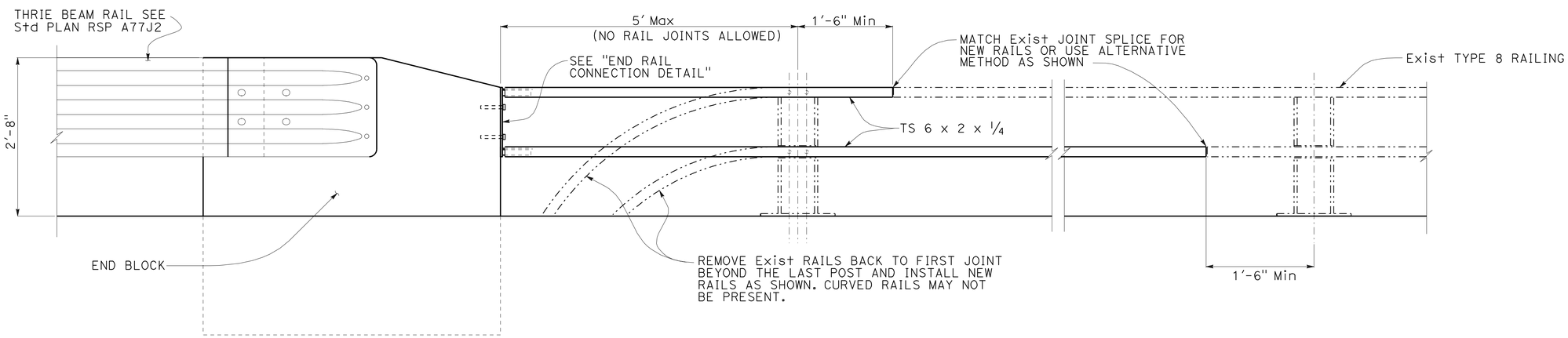

ELEVATION

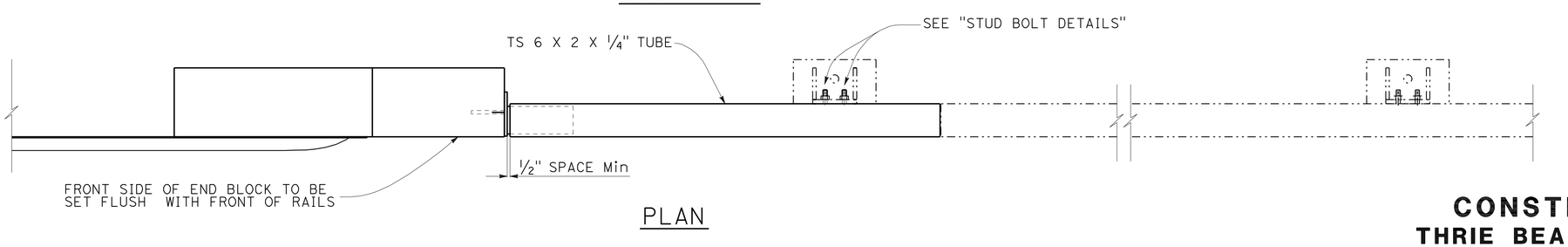

PLAN

CONSTRUCTION DETAILS
THRIE BEAM CONNECTION DETAILS
BARRIER RAILING TYPE 8

NO SCALE

C-10

REVISED BY | DATE REVISED
TILLAT SATTER | F. BARRIGA
CALCULATED-DESIGNED BY | CHECKED BY
FUNCTIONAL SUPERVISOR: THOMAS P. WOOD

STATE OF CALIFORNIA - DEPARTMENT OF TRANSPORTATION
Caltrans
03-DESIGN

LAST REVISION 07-13-09 | DATE PLOTTED => 30-SEP-2009 | TIME PLOTTED => 15:12

Dist	COUNTY	ROUTE	POST MILES TOTAL PROJECT	SHEET No.	TOTAL SHEETS
01	Men	101	R0.1/R101.6	12	75

Fermín Barriga B. 7-28-09
REGISTERED CIVIL ENGINEER DATE

9-28-09
PLANS APPROVAL DATE

REGISTERED PROFESSIONAL ENGINEER
F. BARRIGA
No. 47047
Exp. 12/31/09
CIVIL
STATE OF CALIFORNIA

THE STATE OF CALIFORNIA OR ITS OFFICERS OR AGENTS SHALL NOT BE RESPONSIBLE FOR THE ACCURACY OR COMPLETENESS OF SCANNED COPIES OF THIS PLAN SHEET.

NOTE:

1. THE CONTRACTOR SHALL VERIFY ALL CONTROLLING FIELD DIMENSIONS BEFORE ORDERING OR FABRICATING ANY MATERIAL.

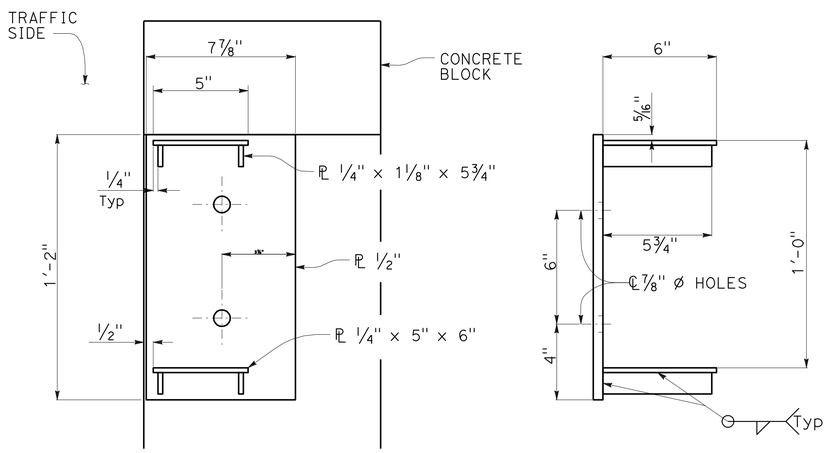

FRONT SIDE

END RAIL CONNECTION DETAILS

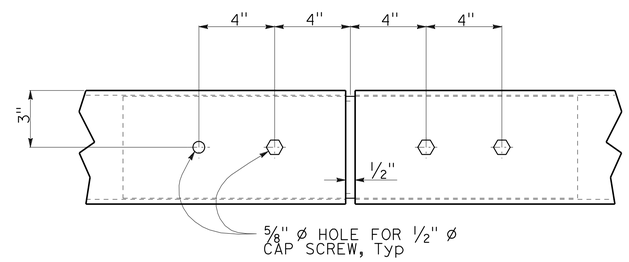

BOTTOM VIEW

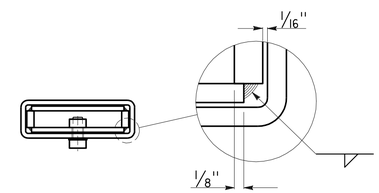

SECTION A-A

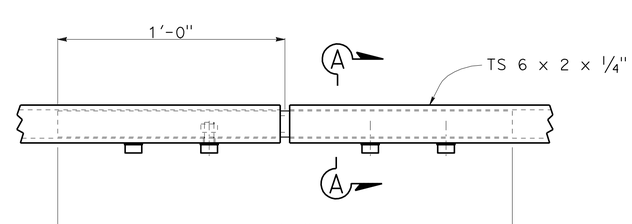

ELEVATION

RAIL SPLICE CONNECTION DETAILS

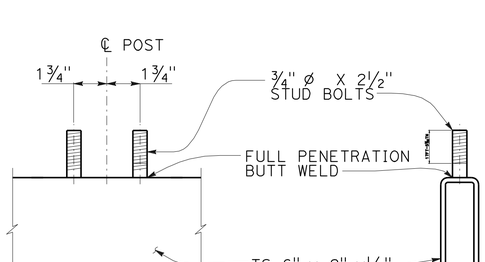

PLAN SECTION

STUD BOLT DETAILS

CONSTRUCTION DETAILS
THRIE BEAM CONNECTION DETAILS
BARRIER RAILING TYPE 8

NO SCALE

C-11

STATE OF CALIFORNIA - DEPARTMENT OF TRANSPORTATION
Caltrans®
03-DESIGN

FUNCTIONAL SUPERVISOR: THOMAS P. WOOD
CALCULATED-DESIGNED BY: F. BARRIGA
CHECKED BY: TILLAT SATTER
REVISED BY
DATE REVISED

LAST REVISION 07-13-09
DATE PLOTTED => 30-SEP-2009
TIME PLOTTED => 15:12

Dist	COUNTY	ROUTE	POST MILES TOTAL PROJECT	SHEET No.	TOTAL SHEETS
01	Men	101	R0.1/R101.6	13	75

REGISTERED CIVIL ENGINEER 7-28-09 DATE

9-28-09
PLANS APPROVAL DATE

REGISTERED PROFESSIONAL ENGINEER F. BARRIGA No. 47047 Exp. 12/31/09 CIVIL STATE OF CALIFORNIA

THE STATE OF CALIFORNIA OR ITS OFFICERS OR AGENTS SHALL NOT BE RESPONSIBLE FOR THE ACCURACY OR COMPLETENESS OF SCANNED COPIES OF THIS PLAN SHEET.

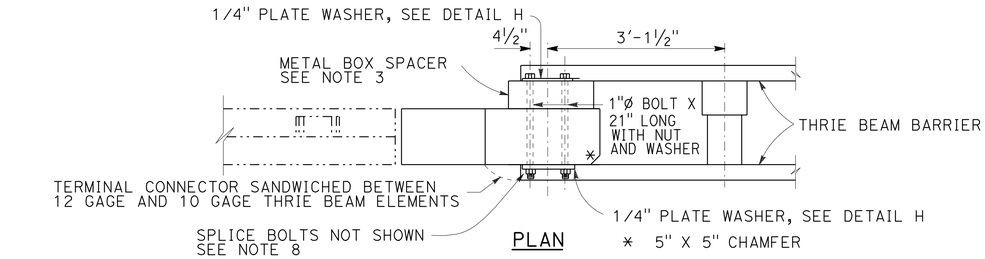

PLAN

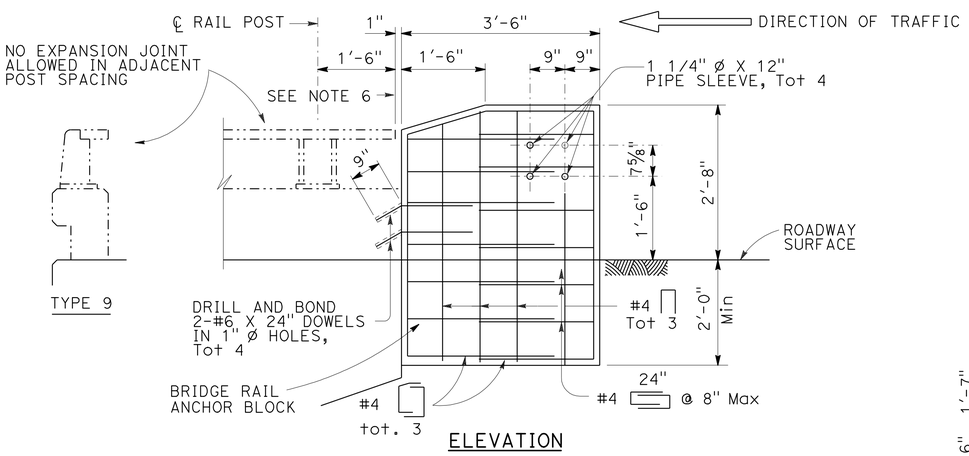

ELEVATION

EXISTING BARRIER RAILING TYPE 9 ALTERNATIVE 1

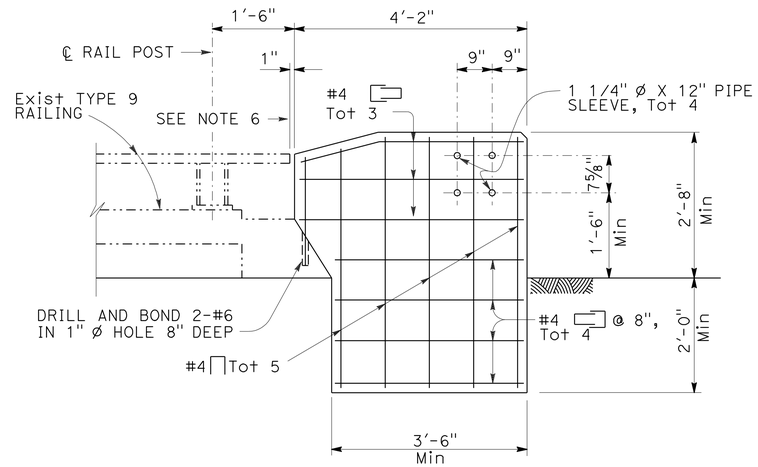

ELEVATION

EXISTING BARRIER RAILING TYPE 9 ALTERNATIVE 3

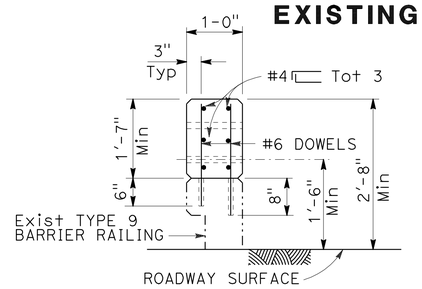

SECTION C-C

NOTES:

1. FOR DETAILS NOT SHOWN, SEE STANDARD PLANS.
2. DEPENDENT DIMENSIONS WILL BE VERIFIED IN THE FIELD BEFORE FABRICATING ANY END CONNECTION TO CONFORM WITH EXISTING PAVED CONDITIONS.
3. WHEN END SECTION IS CALLED FOR, MODIFY TYPICAL TERMINAL SECTION TO FIT. SEE DETAIL E SHEET C-13.
4. FOR THRIE BEAM CONNECTION, SEE STANDARD PLANS "THRIE BEAM BARRIER CONNECTIONS TO BRIDGE RAILING."
5. ALL PLATES AND BOLTS ARE GALVANIZED.
6. CUT AND REMOVE THAT PORTION OF TYPE 9, 9-11 AND BAGR AS REQUIRED.
7. IF RAIL IS NOT CONTINUOUS OVER 2 POSTS, USE SPLICE AT EXPANSION JOINT.
8. EXTERIOR SPLICE BOLT HOLES SHALL BE THE STANDARD 7/8" X 1 1/8" SLOT SIZE FOR RAIL SPLICES AT POST # T4 AND THE CONNECTION TO THE CONCRETE BARRIER OR RAILING. INTERIOR SPLICE BOLT HOLES MAY BE INCREASED UP TO 1 1/8" DIA. WASHERS SHALL BE USED WITH SPLICE BOLTS ON BACK SIDE OF RAIL ELEMENT AT POST # T4 AND CONNECTION TO THE CONCRETE BARRIER OR RAILING.
9. TAPER THE TOP OF THE END OF THE BRIDGE RAILING AT 4:1 TO MATCH THE TOP ELEVATION OF THE THRIE BEAM RAIL ELEMENT.
10. BRIDGE RAIL ANCHOR BLOCKS SHALL BE SHIELDED FROM TRAFFIC UNTIL FINAL MBGR CONNECTION OCCURS.

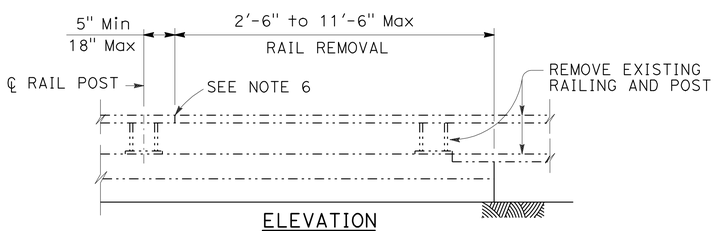

ELEVATION
RAIL REMOVAL

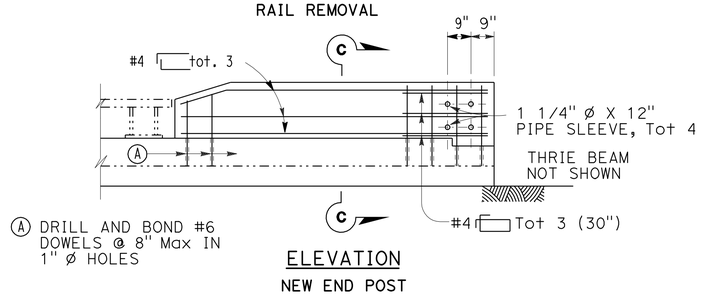

ELEVATION
NEW END POST

EXISTING BARRIER RAILING TYPE 9 ALTERNATIVE 2

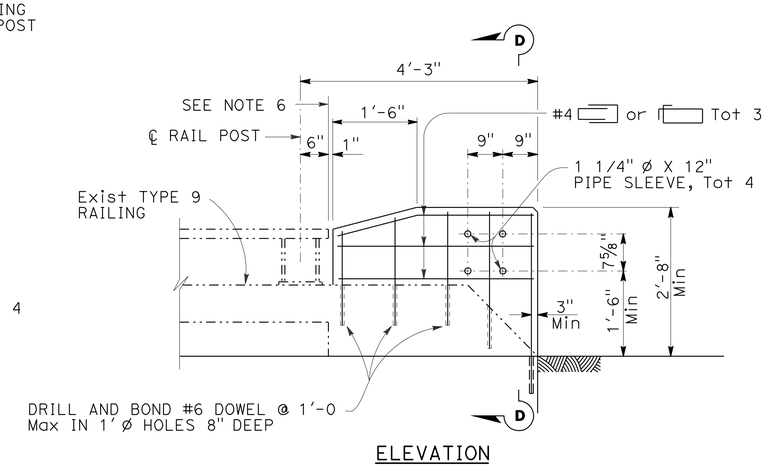

ELEVATION

EXISTING BARRIER RAILING TYPE 9 ALTERNATIVE 4

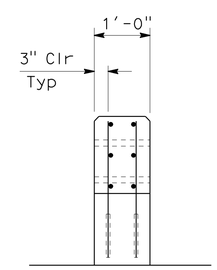

SECTION D-D

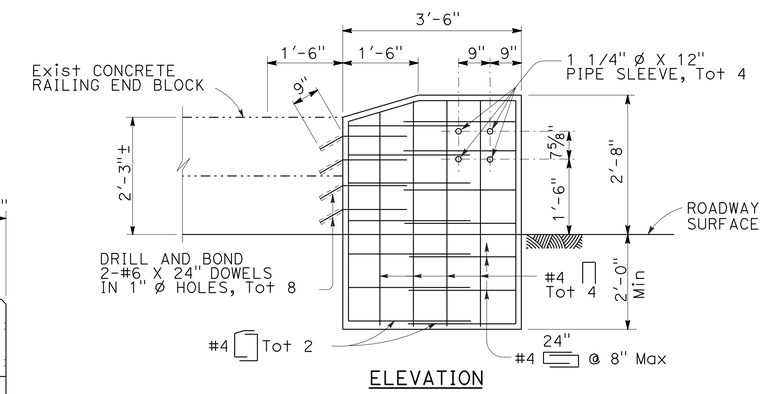

ELEVATION

EXISTING BARRIER RAILING TYPE 9 ALTERNATIVE 5

CONSTRUCTION DETAILS
THRIE BEAM CONNECTION DETAILS
BARRIER RAILING TYPE 9

NO SCALE

C-12

STATE OF CALIFORNIA - DEPARTMENT OF TRANSPORTATION
03-DESIGN
Caltrans
FUNCTIONAL SUPERVISOR THOMAS P. WOOD
CALCULATED-DESIGNED BY TILLAT SATTER
CHECKED BY F. BARRIGA
REVISED BY
DATE REVISED

LAST REVISION 07-13-09
DATE PLOTTED => 30-SEP-2009
TIME PLOTTED => 15:12

Dist	COUNTY	ROUTE	POST MILES TOTAL PROJECT	SHEET No.	TOTAL SHEETS
01	Men	101	R0.1/R101.6	14	75

REGISTERED CIVIL ENGINEER 7-28-09 DATE

9-28-09
PLANS APPROVAL DATE

REGISTERED PROFESSIONAL ENGINEER F. BARRIGA No. 47047 Exp. 12/31/09 CIVIL STATE OF CALIFORNIA

THE STATE OF CALIFORNIA OR ITS OFFICERS OR AGENTS SHALL NOT BE RESPONSIBLE FOR THE ACCURACY OR COMPLETENESS OF SCANNED COPIES OF THIS PLAN SHEET.

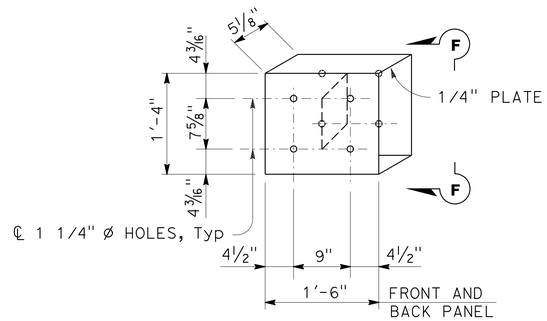

DETAIL E

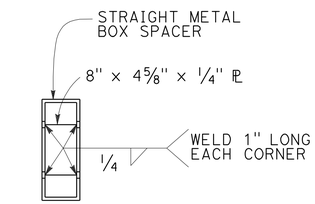

VIEW F-F

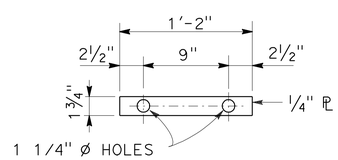

DETAIL H

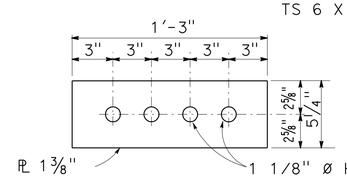

SPLICE PLATE

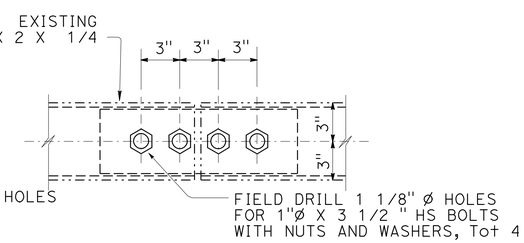

MODIFIED TUBE

RAIL SPLICE DETAIL

SEE NOTE 7-SHEET C-12

CONSTRUCTION DETAILS
THRIE BEAM CONNECTION DETAILS
BARRIER RAILING TYPE 9

NO SCALE

C-13

STATE OF CALIFORNIA - DEPARTMENT OF TRANSPORTATION
Caltrans
03-DESIGN

FUNCTIONAL SUPERVISOR: THOMAS P. WOOD
CALCULATED-DESIGNED BY: F. BARRIGA
CHECKED BY:
REVISED BY:
DATE REVISED:
TILLAT SATTER

LAST REVISION 07-13-09
DATE PLOTTED => 30-SEP-2009
TIME PLOTTED => 15:13

Dist	COUNTY	ROUTE	POST MILES TOTAL PROJECT	SHEET No.	TOTAL SHEETS
01	Men	101	R0.1/R101.6	15	75

REGISTERED CIVIL ENGINEER DATE 7-28-09

9-28-09
PLANS APPROVAL DATE

REGISTERED PROFESSIONAL ENGINEER F. BARRIGA No. 47047 Exp. 12/31/09 CIVIL STATE OF CALIFORNIA

THE STATE OF CALIFORNIA OR ITS OFFICERS OR AGENTS SHALL NOT BE RESPONSIBLE FOR THE ACCURACY OR COMPLETENESS OF SCANNED COPIES OF THIS PLAN SHEET.

NOTES:

1. FOR DETAILS NOT SHOWN, SEE STANDARD PLANS.
2. DEPENDENT DIMENSIONS WILL BE VERIFIED IN THE FIELD BEFORE FABRICATING ANY END CONNECTION TO CONFORM WITH EXISTING PAVED CONDITIONS.
3. ALL PLATES AND BOLTS ARE GALVANIZED.
4. BRIDGE RAIL ANCHOR BLOCKS SHALL BE SHIELDED FROM TRAFFIC UNTIL FINAL MBGR CONNECTION OCCURS.

LEGEND:

-·-·-·- EXISTING STRUCTURE

——— NEW CONSTRUCTION

STANDARD PLAN SHEET No.

DETAIL No.

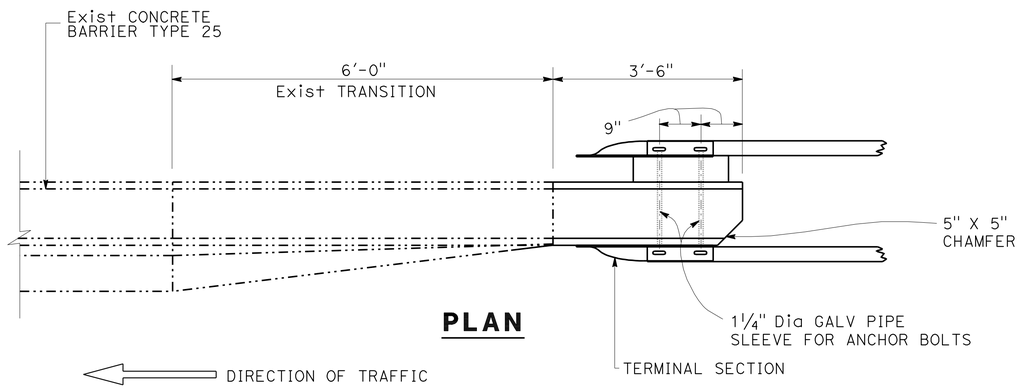

PLAN

RSP A78F1

RSP A78F2

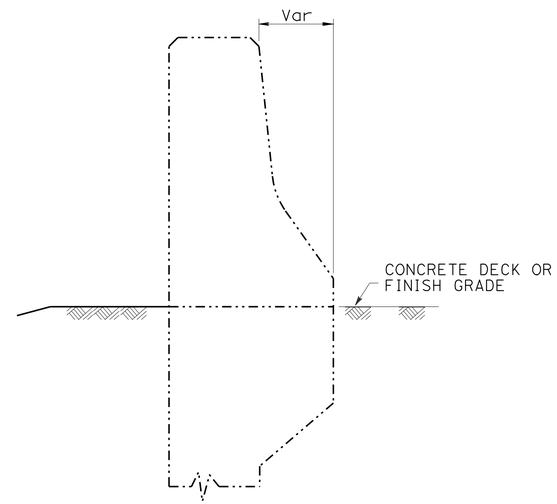

SECTION B-B

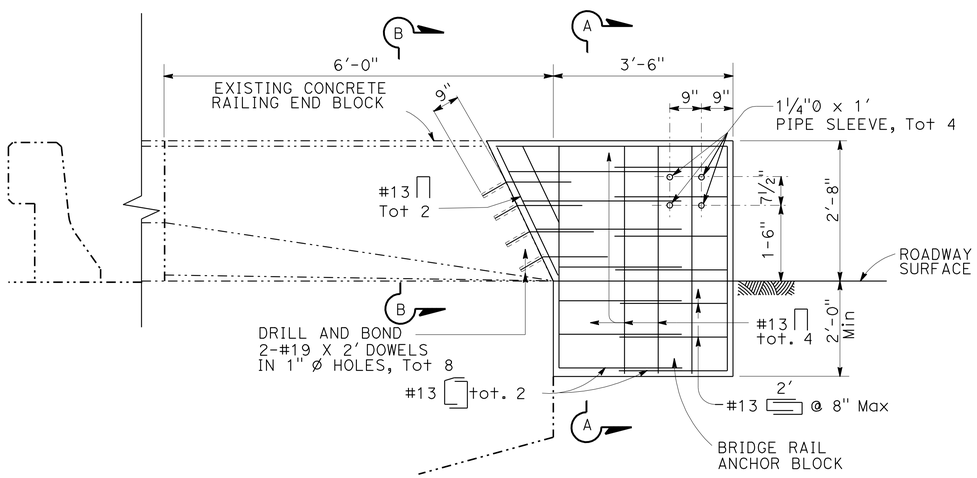

ELEVATION

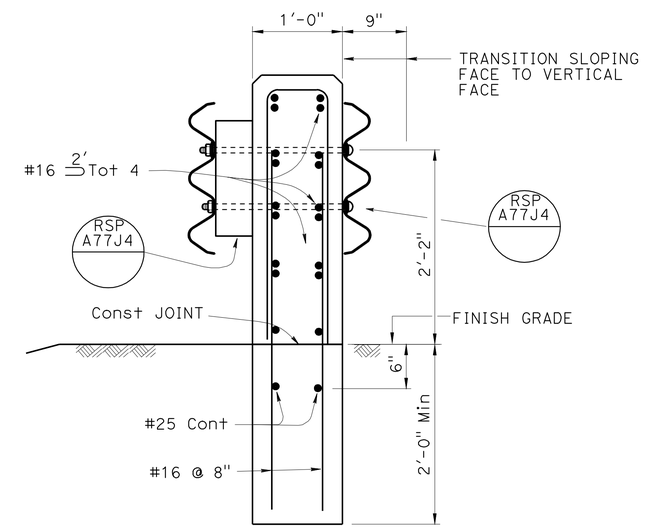

SECTION A-A

CONSTRUCTION DETAILS
THRIE BEAM CONNECTION DETAILS
BARRIER RAILING TYPE 25

NO SCALE

C-14

REVISED BY | DATE REVISED

TILLAT SATTER | F. BARRIGA

CALCULATED-DESIGNED BY | CHECKED BY

FUNCTIONAL SUPERVISOR: THOMAS P. WOOD

STATE OF CALIFORNIA - DEPARTMENT OF TRANSPORTATION

Caltrans®

03-DESIGN

LAST REVISION 07-13-09 | DATE PLOTTED => 30-SEP-2009 | TIME PLOTTED => 15:13

Dist	COUNTY	ROUTE	POST MILES TOTAL PROJECT	SHEET No.	TOTAL SHEETS
01	Men	101	R0.1/R101.6	16	75

REGISTERED CIVIL ENGINEER 7-28-09 DATE

9-28-09
PLANS APPROVAL DATE

REGISTERED PROFESSIONAL ENGINEER F. BARRIGA No. 47047 Exp. 12/31/09 CIVIL STATE OF CALIFORNIA

THE STATE OF CALIFORNIA OR ITS OFFICERS OR AGENTS SHALL NOT BE RESPONSIBLE FOR THE ACCURACY OR COMPLETENESS OF SCANNED COPIES OF THIS PLAN SHEET.

NOTES:

1. FOR DETAILS NOT SHOWN, SEE STANDARD PLAN A77K2.
2. DEPENDENT DIMENSIONS SHALL BE VERIFIED IN THE FIELD BEFORE FABRICATING ANY END CONNECTION TO CONFORM WITH EXISTING PAVED CONDITIONS.
3. WHEN END SECTION IS CALLED FOR, MODIFY TYPICAL STRAIGHT METAL BOX SPACER TO FIT. SEE DETAIL E.
4. ALL PLATES AND BOLTS ARE GALVANIZED.
5. CUT AND REMOVE PORTION OF TYPE 26 CONCRETE BARRIER AND BAGR AS DIRECTED BY THE ENGINEER.
6. EXTERIOR SPLICE BOLT HOLES SHALL BE THE STANDARD 29/32" X 1 1/8" SLOT SIZE FOR RAIL SPLICES AT POST NO. T4 AND THE CONNECTION TO THE CONCRETE BARRIER OR RAILING. INTERIOR SPLICE BOLT HOLES MAY BE INCREASED UP TO 1 1/4" O. WASHERS SHALL BE USED WITH SPLICE BOLTS ON BACK SIDE OF RAIL ELEMENT AT POST NO. T4 AND CONNECTION TO THE CONCRETE BARRIER OR RAILING.
7. TAPER THE TOP OF THE END ANCHOR BLOCK AT 4:1 TO MATCH THE TOP ELEVATION OF THE TRANSITION RAILING.
8. BRIDGE RAIL ANCHOR BLOCKS SHALL BE SHIELDED FROM TRAFFIC UNTIL FINAL MBGR CONNECTION OCCURS.

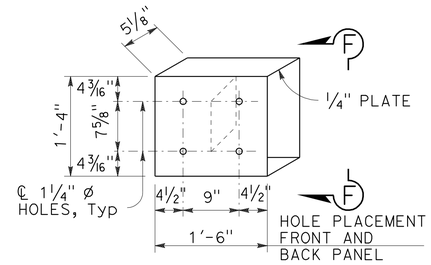

DETAIL E

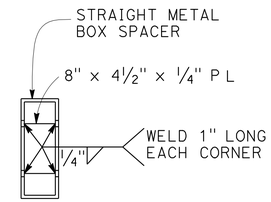

VIEW F-F

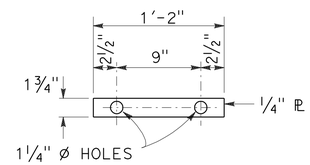

DETAIL G

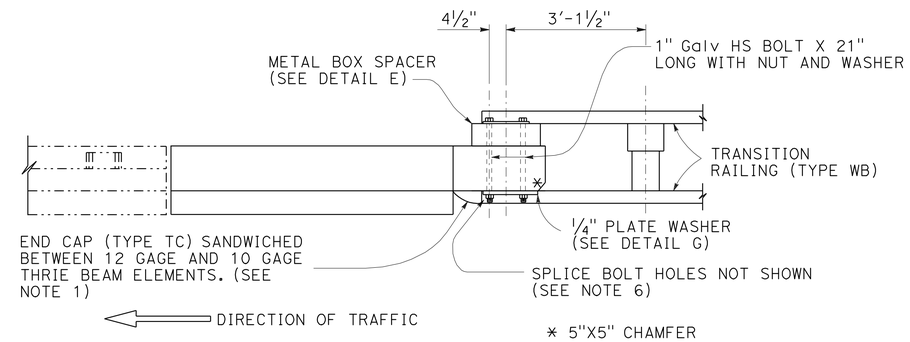

PLAN

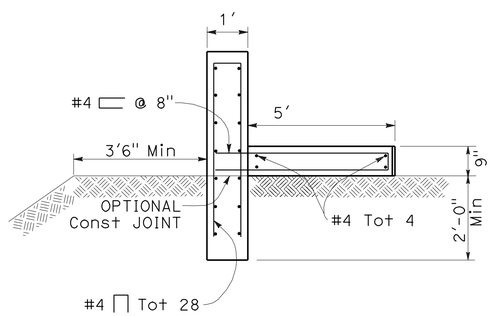

SECTION A-A

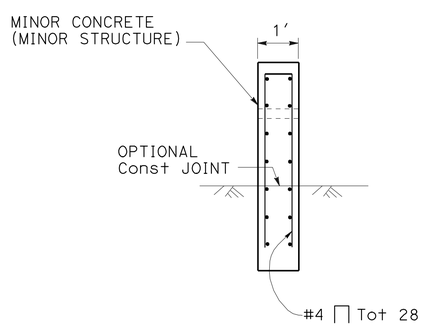

SECTION C-C

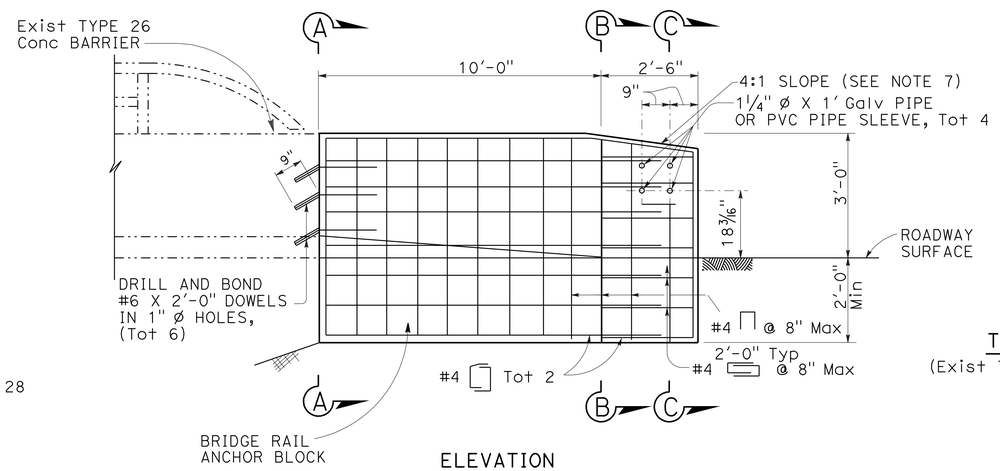

ELEVATION

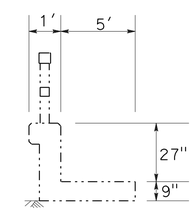

TYPICAL SECTION
(Exist TYPE 26 CONCRETE BARRIER)

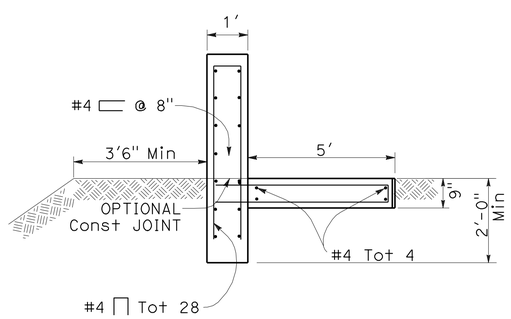

SECTION B-B

CONSTRUCTION DETAILS
THRIE BEAM CONNECTION DETAILS
BARRIER RAILING TYPE 26

NO SCALE

C-15

STATE OF CALIFORNIA - DEPARTMENT OF TRANSPORTATION
03-DESIGN
Caltrans
FUNCTIONAL SUPERVISOR THOMAS P. WOOD
CALCULATED-DESIGNED BY TILLAT SATTER
CHECKED BY F. BARRIGA
REVISED BY
DATE REVISED

LAST REVISION 07-13-09
DATE PLOTTED => 30-SEP-2009
TIME PLOTTED => 15:13

Dist	COUNTY	ROUTE	POST MILES TOTAL PROJECT	SHEET No.	TOTAL SHEETS
01	Men	101	R0.1/R101.6	17	75

REGISTERED CIVIL ENGINEER 7-28-09 DATE

9-28-09
PLANS APPROVAL DATE

REGISTERED PROFESSIONAL ENGINEER F. BARRIGA No. 47047 Exp. 12/31/09 CIVIL STATE OF CALIFORNIA

THE STATE OF CALIFORNIA OR ITS OFFICERS OR AGENTS SHALL NOT BE RESPONSIBLE FOR THE ACCURACY OR COMPLETENESS OF SCANNED COPIES OF THIS PLAN SHEET.

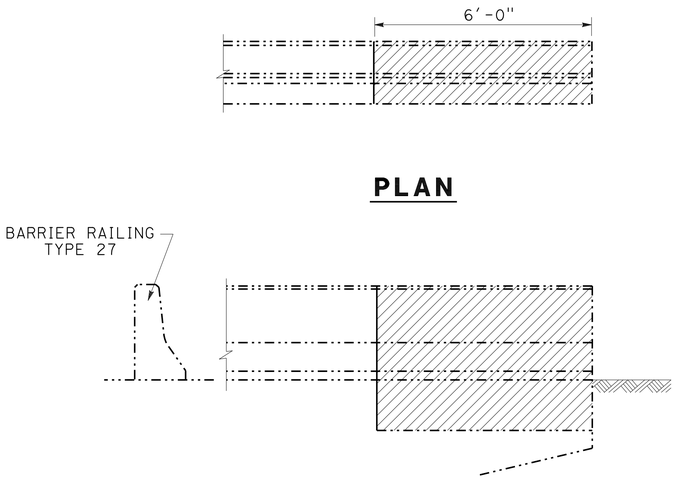

PLAN

ELEVATION

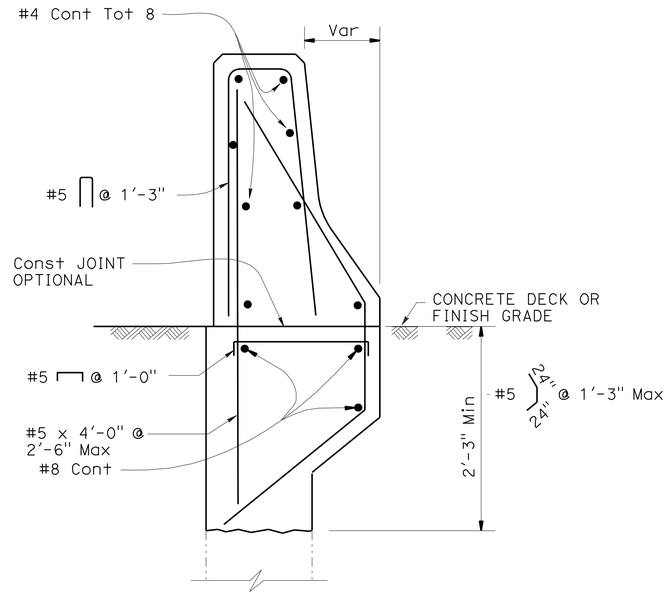

SECTION B-B

LEGEND:

- Exist STRUCTURE
- NEW CONSTRUCTION
- CONCRETE REMOVAL

NOTES:

1. FOR DETAILS NOT SHOWN, SEE STANDARD PLANS.
2. DEPENDENT DIMENSIONS WILL BE VERIFIED IN THE FIELD BEFORE FABRICATING ANY END CONNECTION TO CONFORM WITH EXISTING CONDITIONS.
3. FOR THRIE BEAM CONNECTION, SEE STANDARD PLANS "THRIE BEAM BARRIER CONNECTIONS TO BRIDGE RAILING."
4. ALL PLATES AND BOLTS ARE GALVANIZED.
5. BRIDGE RAIL ANCHOR BLOCKS SHALL BE SHIELDED FROM TRAFFIC UNTIL FINAL MBGR CONNECTION OCCURS.

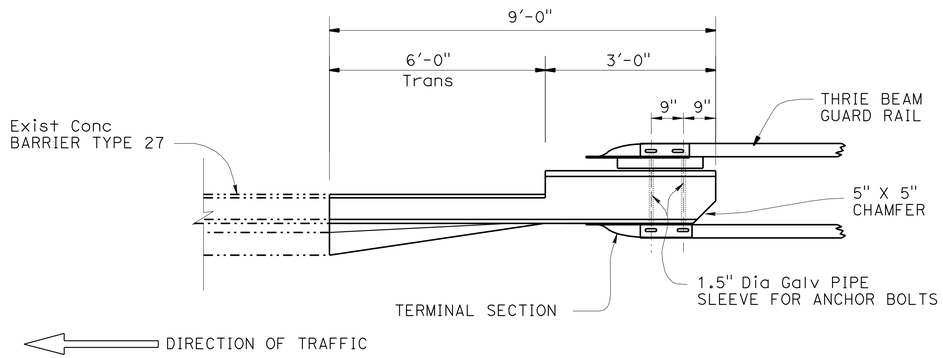

PLAN

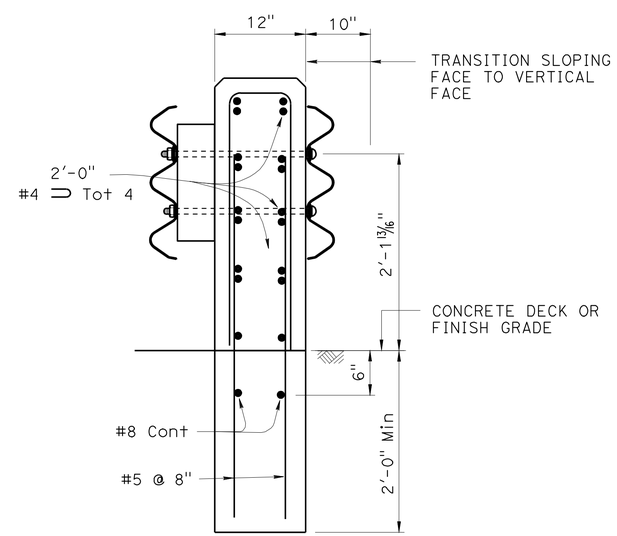

SECTION A-A

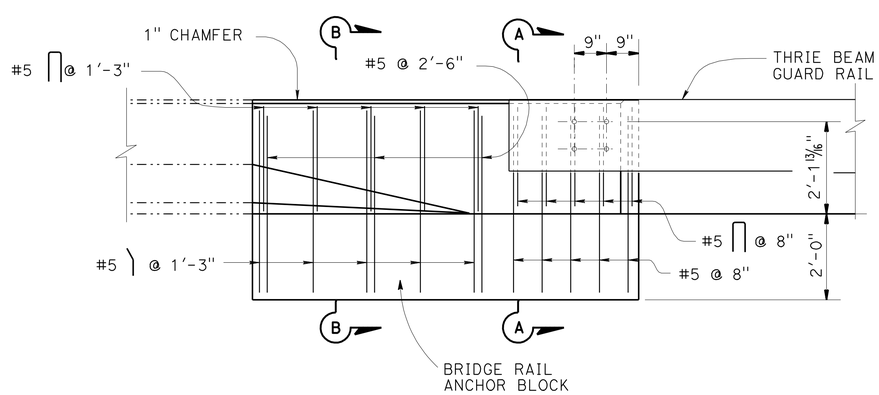

ELEVATION

CONSTRUCTION DETAILS
THRIE BEAM CONNECTION DETAILS
BARRIER RAILING TYPE 27

NO SCALE

C-16

STATE OF CALIFORNIA - DEPARTMENT OF TRANSPORTATION
Caltrans
03-DESIGN

FUNCTIONAL SUPERVISOR: THOMAS P. WOOD
CALCULATED-DESIGNED BY: TILLAT SATTER
CHECKED BY: F. BARRIGA
REVISED BY
DATE REVISED

LAST REVISION 07-13-09
DATE PLOTTED => 30-SEP-2009
TIME PLOTTED => 15:13

Dist	COUNTY	ROUTE	POST MILES TOTAL PROJECT	SHEET No.	TOTAL SHEETS
01	Men	101	R0.1/R101.6	18	75

REGISTERED CIVIL ENGINEER 7-28-09 DATE

9-28-09
PLANS APPROVAL DATE

REGISTERED PROFESSIONAL ENGINEER F. BARRIGA No. 47047 Exp. 12/31/09 CIVIL STATE OF CALIFORNIA

THE STATE OF CALIFORNIA OR ITS OFFICERS OR AGENTS SHALL NOT BE RESPONSIBLE FOR THE ACCURACY OR COMPLETENESS OF SCANNED COPIES OF THIS PLAN SHEET.

NOTES:

1. FOR LOCATIONS OF WEED CONTROL MAT SEE SUMMARY OF QUANTITIES SHEETS AND WEED CONTROL LAYOUT CONSTRUCTION DETAILS.
2. WHERE THE DISTANCE BETWEEN BACK OF POST AND HINGE POINT IS LESS THAN 24", VEGETATION CONTROL TO BE CONSTRUCTED TO HINGE POINT.
3. WHERE DIKE IS CONSTRUCTED UNDER RAILING, PLACE VEGETATION CONTROL TO BACK EDGE OF DIKE. WHERE PAVED SHOULDER IS CONSTRUCTED WITHIN 24" IN FRONT OF THE POST, PLACE VEGETATION CONTROL TO THE EDGE OF PAVED SHOULDER.
4. POST SPACING & OTHER DIMENSIONS TO BE VERIFIED IN THE FIELD BY THE CONTRACTOR.

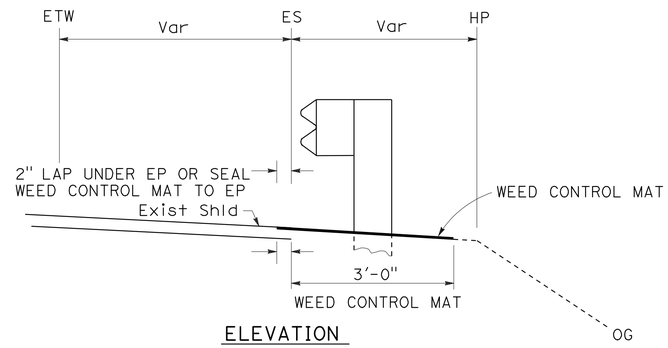

ELEVATION
(SEE NOTES 2 & 3)

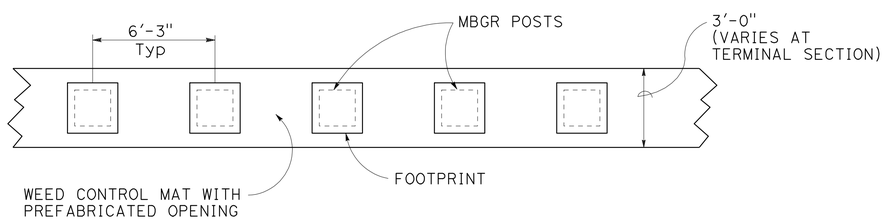

PLAN

GUARD RAILING WEED CONTROL MAT (FIBER)

AT WOOD POST

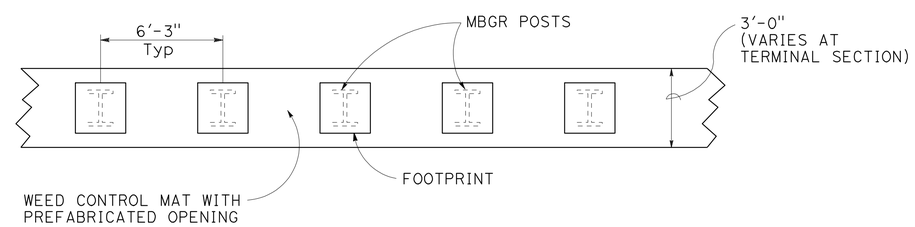

PLAN

GUARD RAILING WEED CONTROL MAT (FIBER)

AT STEEL POST

CONSTRUCTION DETAILS

NO SCALE

C-17

STATE OF CALIFORNIA - DEPARTMENT OF TRANSPORTATION
Caltrans
03-DESIGN

FUNCTIONAL SUPERVISOR: THOMAS P. WOOD
CALCULATED-DESIGNED BY: S. WOODBECK
CHECKED BY: F. BARRIGA
REVISED BY
DATE REVISED

LAST REVISION 07-13-09
DATE PLOTTED => 30-SEP-2009
TIME PLOTTED => 15:14

Dist	COUNTY	ROUTE	POST MILES TOTAL PROJECT	SHEET No.	TOTAL SHEETS
01	Men	101	R0.1/R101.6	19	75

REGISTERED CIVIL ENGINEER 7-28-09 DATE

9-28-09
PLANS APPROVAL DATE

REGISTERED PROFESSIONAL ENGINEER F. BARRIGA No. 47047 Exp. 12/31/09 CIVIL STATE OF CALIFORNIA

THE STATE OF CALIFORNIA OR ITS OFFICERS OR AGENTS SHALL NOT BE RESPONSIBLE FOR THE ACCURACY OR COMPLETENESS OF SCANNED COPIES OF THIS PLAN SHEET.

NOTES:

1. WHERE THE DISTANCE BETWEEN BACK OF POST AND HINGE POINT IS LESS THAN 24", VEGETATION CONTROL TO BE CONSTRUCTED TO HINGE PONT.
2. WHERE DIKE IS CONSTRUCTED UNDER RAILING, CONSTRUCT VEGETATION CONTROL TO BACK EDGE OF DIKE. WHERE PAVED SHOULDER IS CONSTRUCTED WITHIN 24" IN FRONT OF THE POST, CONSTRUCT VEGETATION CONTROL TO THE EDGE OF PAVED SHOULDER.
3. DIRECTION OF ADJACENT TRAFFIC INDICATED BY ← .

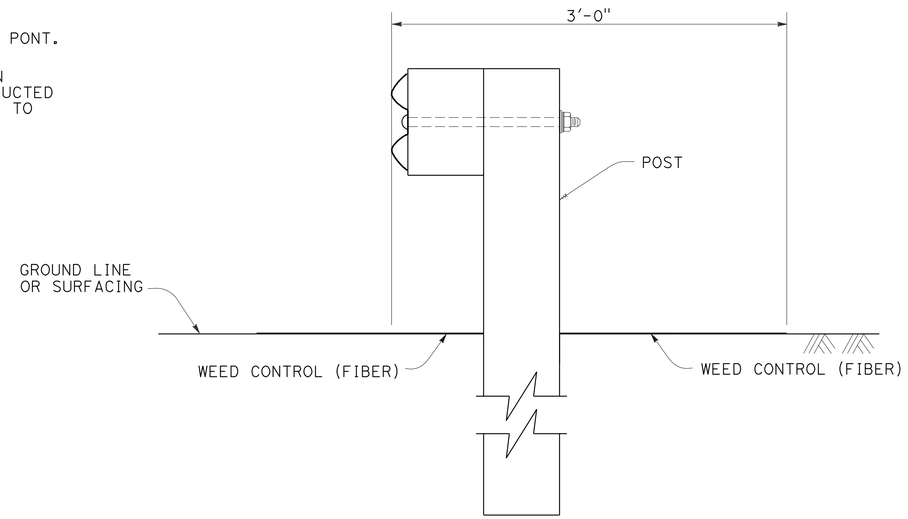

SECTION A-A

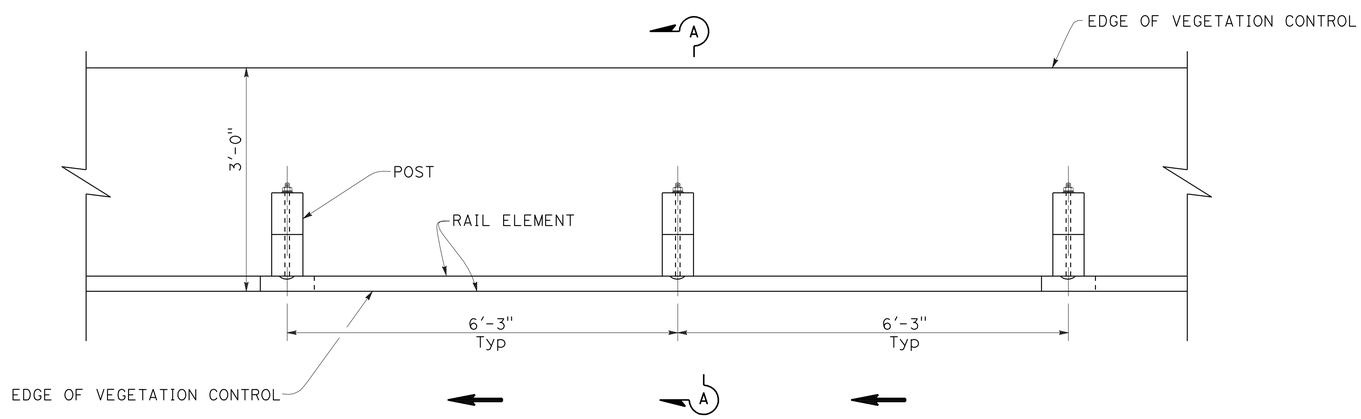

PLAN

METAL BEAM GUARD RAILING
TYPICAL VEGETATION CONTROL
STANDARD RAILING SECTION

CONSTRUCTION DETAILS
NO SCALE

C-18

REVISED BY | DATE REVISED
S. WOODBECK | F. BARRIGA
CALCULATED-DESIGNED BY | CHECKED BY
FUNCTIONAL SUPERVISOR
THOMAS P. WOOD

STATE OF CALIFORNIA - DEPARTMENT OF TRANSPORTATION
Caltrans
03-DESIGN

LAST REVISION 07-13-09 | DATE PLOTTED => 30-SEP-2009 TIME PLOTTED => 15:14

Dist	COUNTY	ROUTE	POST MILES TOTAL PROJECT	SHEET No.	TOTAL SHEETS
01	Men	101	R0.1/R101.6	20	75

REGISTERED CIVIL ENGINEER 7-28-09 DATE

9-28-09
PLANS APPROVAL DATE

REGISTERED PROFESSIONAL ENGINEER F. BARRIGA No. 47047 Exp. 12/31/09 CIVIL STATE OF CALIFORNIA

THE STATE OF CALIFORNIA OR ITS OFFICERS OR AGENTS SHALL NOT BE RESPONSIBLE FOR THE ACCURACY OR COMPLETENESS OF SCANNED COPIES OF THIS PLAN SHEET.

NOTES:

1. SEE SHEET C-17 FOR ADDITIONAL VEGETATION CONTROL DETAILS.
2. WHERE THE DISTANCE BETWEEN BACK OF POST AND HINGE POINT IS LESS THAN 24", VEGETATION CONTROL TO BE CONSTRUCTED TO HINGE POINT.
3. WHERE DIKE IS CONSTRUCTED UNDER RAILING, CONSTRUCT VEGETATION CONTROL TO BACK EDGE OF DIKE. WHERE PAVED SHOULDER IS CONSTRUCTED WITHIN 24" IN FRONT OF THE POST, CONSTRUCT VEGETATION CONTROL TO THE EDGE OF PAVED SHOULDER.
4. DIRECTION OF ADJACENT TRAFFIC INDICATED BY ←.

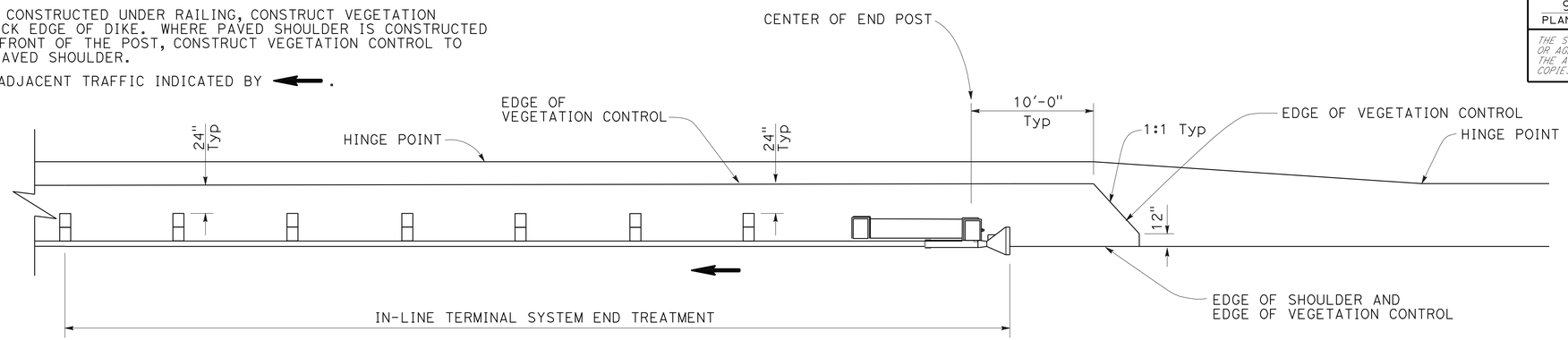

PLAN

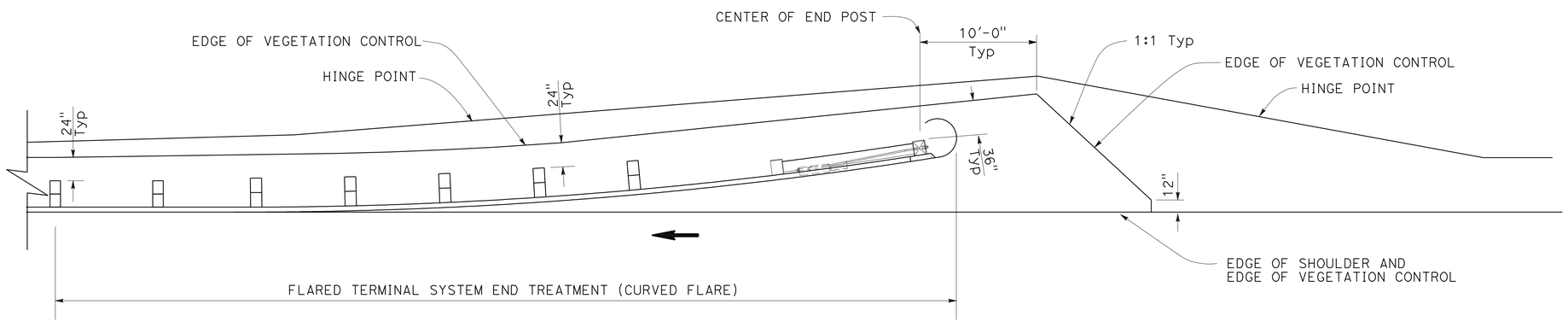

PLAN

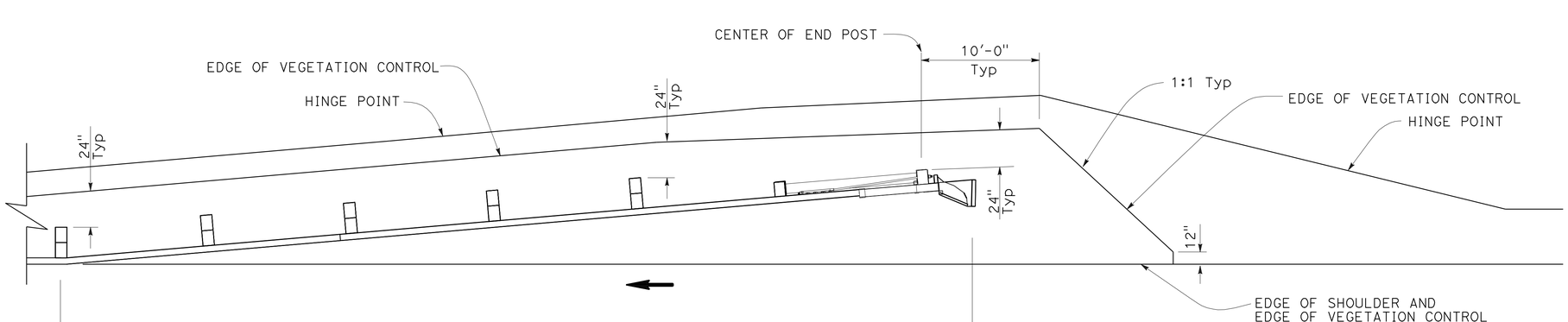

PLAN

METAL BEAM GUARD RAILING TYPICAL VEGETATION CONTROL FOR TERMINAL SYSTEM END TREATMENTS

CONSTRUCTION DETAILS

NO SCALE

C-19

STATE OF CALIFORNIA - DEPARTMENT OF TRANSPORTATION
03-DESIGN
Caltrans

FUNCTIONAL SUPERVISOR: THOMAS P. WOOD
CALCULATED-DESIGNED BY: S. WOODBECK
CHECKED BY: F. BARRIGA
REVISED BY
DATE REVISED

LAST REVISION 07-13-09
DATE PLOTTED => 30-SEP-2009
TIME PLOTTED => 15:14

Dist	COUNTY	ROUTE	POST MILES TOTAL PROJECT	SHEET No.	TOTAL SHEETS
01	Men	101	R0.1/R101.6	21	75

REGISTERED CIVIL ENGINEER 7-28-09 DATE

9-28-09
PLANS APPROVAL DATE

REGISTERED PROFESSIONAL ENGINEER F. BARRIGA No. 47047 Exp. 12/31/09 CIVIL STATE OF CALIFORNIA

THE STATE OF CALIFORNIA OR ITS OFFICERS OR AGENTS SHALL NOT BE RESPONSIBLE FOR THE ACCURACY OR COMPLETENESS OF SCANNED COPIES OF THIS PLAN SHEET.

NOTES:

1. SEE SHEET C-17 FOR ADDITIONAL VEGETATION CONTROL DETAILS.
2. WHERE THE DISTANCE BETWEEN BACK OF POST AND HINGE POINT IS LESS THAN 24", VEGETATION CONTROL TO BE CONSTRUCTED TO HINGE POINT.
3. WHERE DIKE IS CONSTRUCTED UNDER RAILING, CONSTRUCT VEGETATION CONTROL TO BACK EDGE OF DIKE. WHERE PAVED SHOULDER IS CONSTRUCTED WITHIN 24" IN FRONT OF THE POST, CONSTRUCT VEGETATION CONTROL TO THE EDGE OF PAVED SHOULDER.
4. END VEGETATION CONTROL AT END OF BACKSIDE RAIL ELEMENT.
5. DIRECTION OF ADJACENT TRAFFIC INDICATED BY ←.

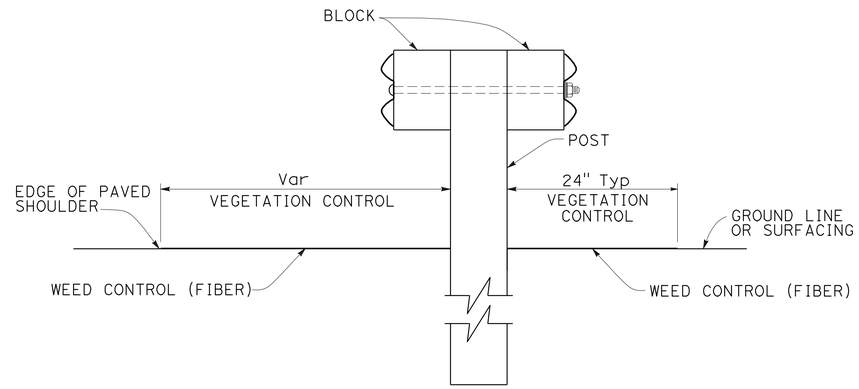

SECTION A-A

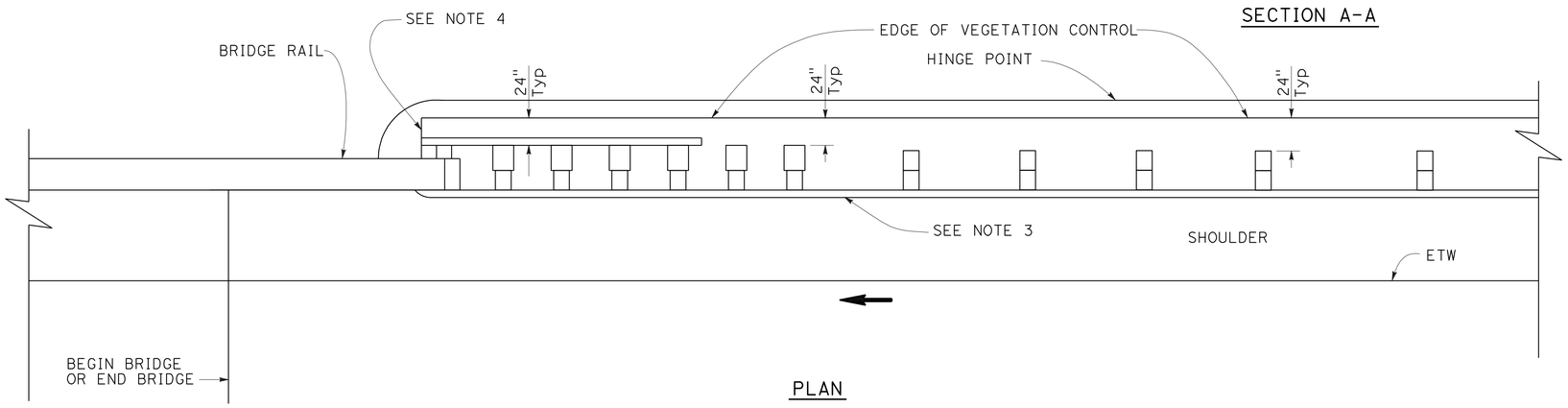

PLAN

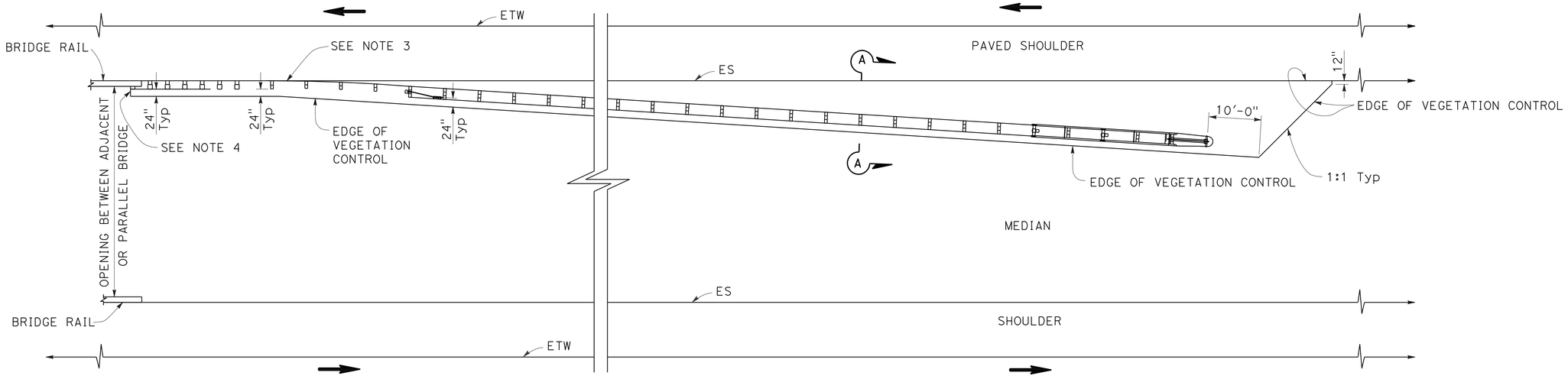

PLAN

METAL BEAM GUARD RAILING
TYPICAL VEGETATION CONTROL
AT STRUCTURE APPROACH AND DEPARTURE

CONSTRUCTION DETAILS

NO SCALE

C-20

REVISED BY	DATE REVISED
S. WOODBECK	F. BARRIGA
CALCULATED-DESIGNED BY	CHECKED BY
FUNCTIONAL SUPERVISOR	THOMAS P. WOOD

STATE OF CALIFORNIA - DEPARTMENT OF TRANSPORTATION
Caltrans
03-DESIGN

LAST REVISION 07-13-09
DATE PLOTTED => 30-SEP-2009
TIME PLOTTED => 15:14

Dist	COUNTY	ROUTE	POST MILES TOTAL PROJECT	SHEET No.	TOTAL SHEETS
01	Men	101	R0.1/R101.6	22	75

Fernando Barriga B. 7-28-09
REGISTERED CIVIL ENGINEER DATE

9-28-09
PLANS APPROVAL DATE

REGISTERED PROFESSIONAL ENGINEER
F. BARRIGA
No. 47047
Exp. 12/31/09
CIVIL
STATE OF CALIFORNIA

THE STATE OF CALIFORNIA OR ITS OFFICERS OR AGENTS SHALL NOT BE RESPONSIBLE FOR THE ACCURACY OR COMPLETENESS OF SCANNED COPIES OF THIS PLAN SHEET.

NOTES:

1. SEE SHEET C-17 FOR ADDITIONAL VEGETATION CONTROL DETAILS.
2. WHERE THE DISTANCE BETWEEN BACK OF POST AND HINGE POINT IS LESS THAN 24", VEGETATION CONTROL TO BE CONSTRUCTED TO HINGE POINT.
3. WHERE DIKE IS CONSTRUCTED UNDER RAILING, CONSTRUCT VEGETATION CONTROL TO BACK EDGE OF DIKE. WHERE PAVED SHOULDER IS CONSTRUCTED WITHIN 24" IN FRONT OF THE POST, CONSTRUCT VEGETATION CONTROL TO THE EDGE OF PAVED SHOULDER.
4. DIRECTION OF ADJACENT TRAFFIC INDICATED BY ←.

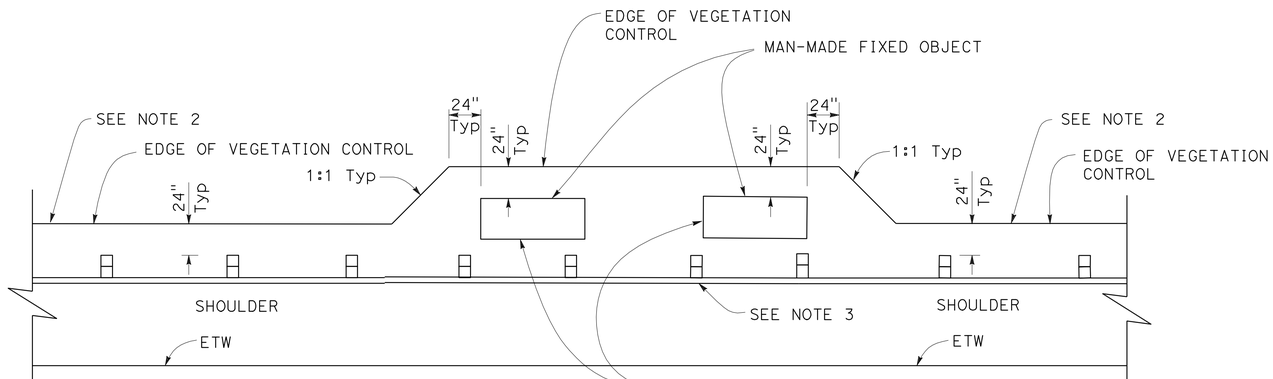

PLAN

METAL BEAM GUARD RAILING
TYPICAL VEGETATION CONTROL
AT FIXED OBJECT

CONSTRUCTION DETAILS

NO SCALE

C-21

STATE OF CALIFORNIA - DEPARTMENT OF TRANSPORTATION
Caltrans
03-DESIGN

FUNCTIONAL SUPERVISOR: THOMAS P. WOOD
CALCULATED-DESIGNED BY: S. WOODBECK
CHECKED BY: F. BARRIGA
REVISED BY
DATE REVISED

LAST REVISION 07-13-09
DATE PLOTTED => 30-SEP-2009
TIME PLOTTED => 15:14

Dist	COUNTY	ROUTE	POST MILES TOTAL PROJECT	SHEET No.	TOTAL SHEETS
01	Men	101	R0.1/R101.6	23	75

Fernando Barriga B. 7-28-09
REGISTERED CIVIL ENGINEER DATE

9-28-09
PLANS APPROVAL DATE

REGISTERED PROFESSIONAL ENGINEER
F. BARRIGA
No. 47047
Exp. 12/31/09
CIVIL
STATE OF CALIFORNIA

THE STATE OF CALIFORNIA OR ITS OFFICERS OR AGENTS SHALL NOT BE RESPONSIBLE FOR THE ACCURACY OR COMPLETENESS OF SCANNED COPIES OF THIS PLAN SHEET.

NOTES:

1. SEE SHEET C-17 FOR ADDITIONAL VEGETATION CONTROL DETAILS.
2. WHERE DIKE IS CONSTRUCTED UNDER RAILING, CONSTRUCT VEGETATION CONTROL TO BACK EDGE OF DIKE. WHERE PAVED SHOULDER IS CONSTRUCTED WITHIN 24" IN FRONT OF THE POST, CONSTRUCT VEGETATION CONTROL TO THE EDGE OF PAVED SHOULDER.
3. DIRECTION OF ADJACENT TRAFFIC INDICATED BY ← .

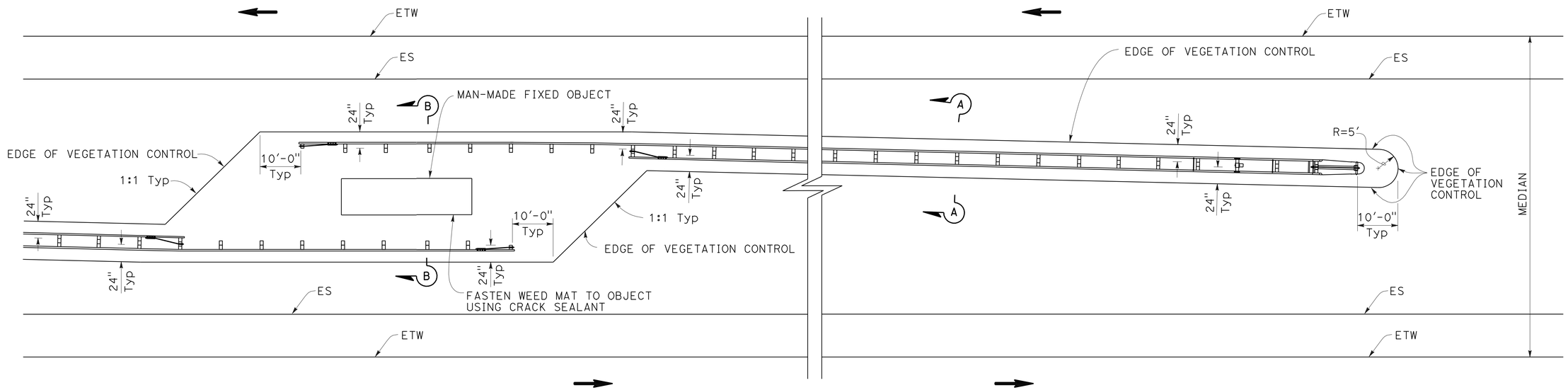

PLAN

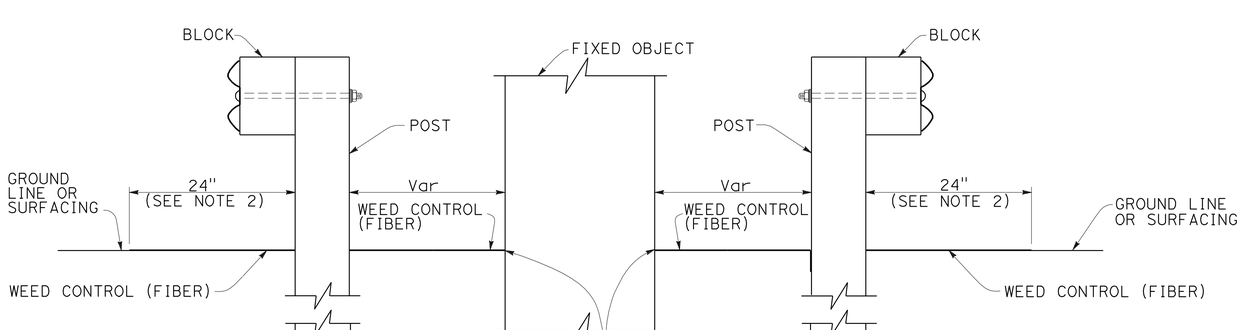

SECTION B-B

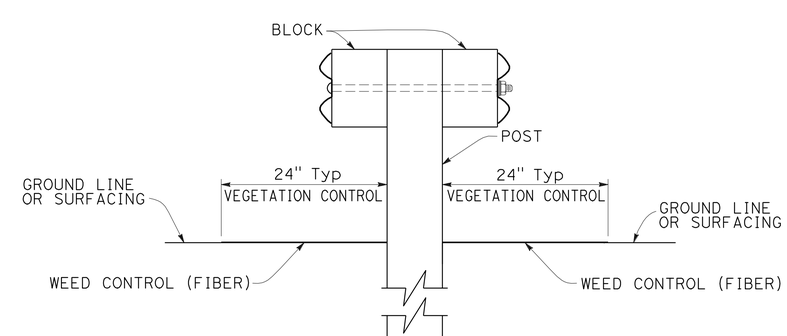

SECTION A-A

METAL BEAM GUARD RAILING TYPICAL VEGETATION CONTROL AT FIXED OBJECT

CONSTRUCTION DETAILS

NO SCALE

C-22

STATE OF CALIFORNIA - DEPARTMENT OF TRANSPORTATION
03-DESIGN
Caltrans
FUNCTIONAL SUPERVISOR: THOMAS P. WOOD
CALCULATED-DESIGNED BY: S. WOODBECK
CHECKED BY: F. BARRIGA
REVISED BY
DATE REVISED

LAST REVISION 07-13-09
DATE PLOTTED => 30-SEP-2009
TIME PLOTTED => 15:14

Dist	COUNTY	ROUTE	POST MILES TOTAL PROJECT	SHEET No.	TOTAL SHEETS
01	Men	101	R0.1/R101.6	24	75

REGISTERED CIVIL ENGINEER 7-28-09 DATE

9-28-09
PLANS APPROVAL DATE

REGISTERED PROFESSIONAL ENGINEER F. BARRIGA No. 47047 Exp. 12/31/09 CIVIL STATE OF CALIFORNIA

THE STATE OF CALIFORNIA OR ITS OFFICERS OR AGENTS SHALL NOT BE RESPONSIBLE FOR THE ACCURACY OR COMPLETENESS OF SCANNED COPIES OF THIS PLAN SHEET.

NOTES:

1. SEE C-17 FOR ADDITIONAL VEGETATION CONTROL DETAILS.
2. WHERE DIKE IS CONSTRUCTED UNDER RAILING, CONSTRUCT VEGETATION CONTROL TO BACK EDGE OF DIKE. WHERE PAVED SHOULDER IS CONSTRUCTED WITHIN 24" IN FRONT OF THE POST, CONSTRUCT VEGETATION CONTROL TO THE EDGE OF PAVED SHOULDER.
3. DIRECTION OF ADJACENT TRAFFIC INDICATED BY ←.

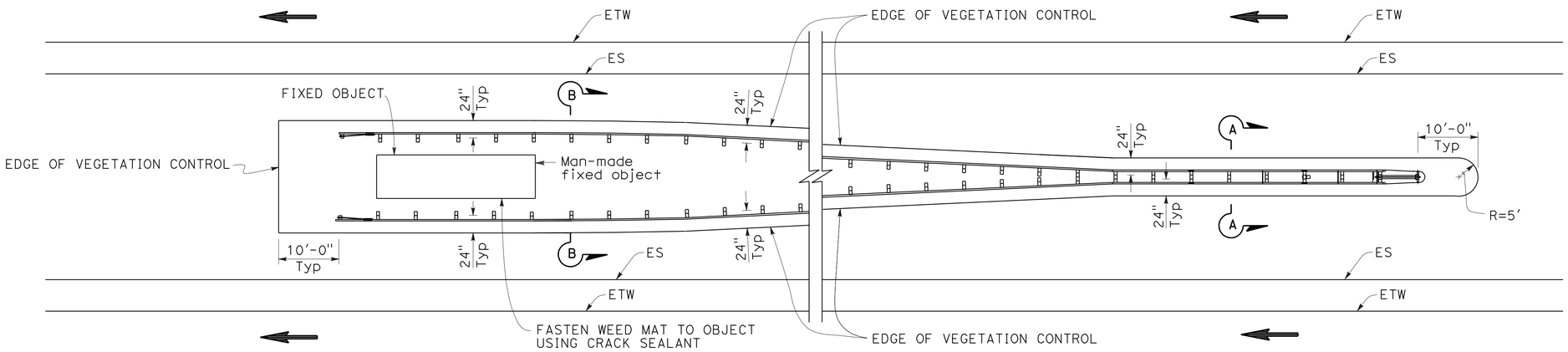

PLAN

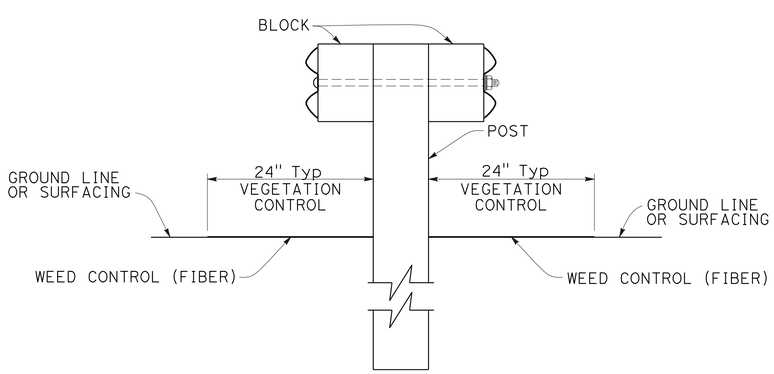

SECTION A-A

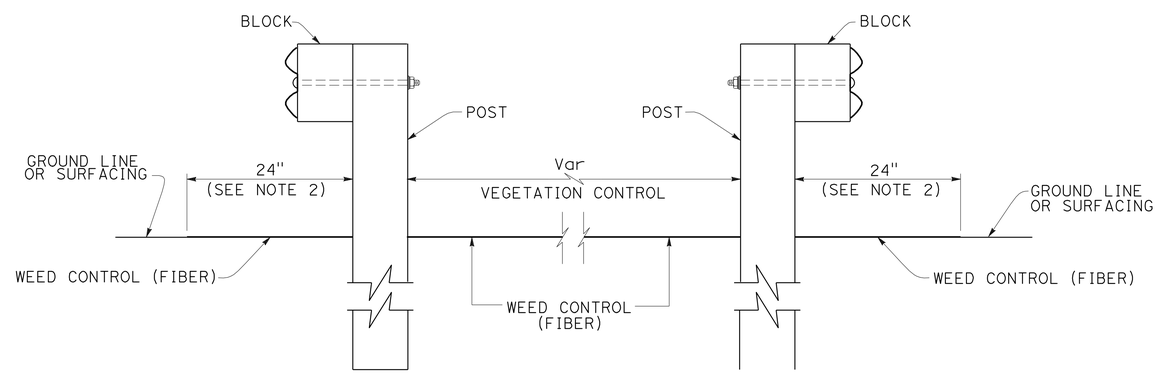

SECTION B-B

METAL BEAM GUARD RAILING TYPICAL VEGETATION CONTROL AT FIXED OBJECT BETWEEN SEPARATE ROADBEDS (ONE-WAY TRAFFIC)

CONSTRUCTION DETAILS

NO SCALE

C-23

STATE OF CALIFORNIA - DEPARTMENT OF TRANSPORTATION
03-DESIGN
FUNCTIONAL SUPERVISOR: THOMAS P. WOOD
CALCULATED-DESIGNED BY: S. WOODBECK
CHECKED BY: F. BARRIGA
REVISED BY
DATE REVISED

LAST REVISION 07-13-09
DATE PLOTTED => 30-SEP-2009
TIME PLOTTED => 15:15

Dist	COUNTY	ROUTE	POST MILES TOTAL PROJECT	SHEET No.	TOTAL SHEETS
01	Men	101	R0.1/R101.6	25	75

REGISTERED CIVIL ENGINEER 7-28-09 DATE

9-28-09
PLANS APPROVAL DATE

REGISTERED PROFESSIONAL ENGINEER F. BARRIGA No. 47047 Exp. 12/31/09 CIVIL STATE OF CALIFORNIA

THE STATE OF CALIFORNIA OR ITS OFFICERS OR AGENTS SHALL NOT BE RESPONSIBLE FOR THE ACCURACY OR COMPLETENESS OF SCANNED COPIES OF THIS PLAN SHEET.

NOTES:

1. PLACE DELINEATORS ON ALL GUARD RAIL INSTALLATIONS WITHIN 12 FEET OF THE ETW. THE SPACING ON TANGENT SECTIONS IS APPROXIMATELY 525 FEET. FOR SPACING ON CURVES, SEE TABLE ON THIS SHEET. SEE Q-SHEETS FOR Approx QUANTITY.
2. SEE Std PLAN A73C AND RSP A77C4 FOR ADDITIONAL PLACEMENT AND DELINEATOR/CHANNELIZER DETAILS.
3. CROSS SECTION OF PLACE HMA (Misc AREA) DITCH MAY BE SEMICIRCULAR, VEE, OR TRAPEZOIDAL WITH 3" Min THICKNESS OF HMA.

RELOCATE OVERSIDE DRAIN: PLACE HMA (Misc AREA)

LOCATION		HMA (Misc AREA)	
No.	PM	TON	SQYD
28	R9.6	0.4	2.7
99	R26.2	0.4	2.7
127	R28.6	0.4	2.7
147	R31.9	0.4	2.7
265	R84.7	0.4	2.7
	TOTAL	2.0	13.5

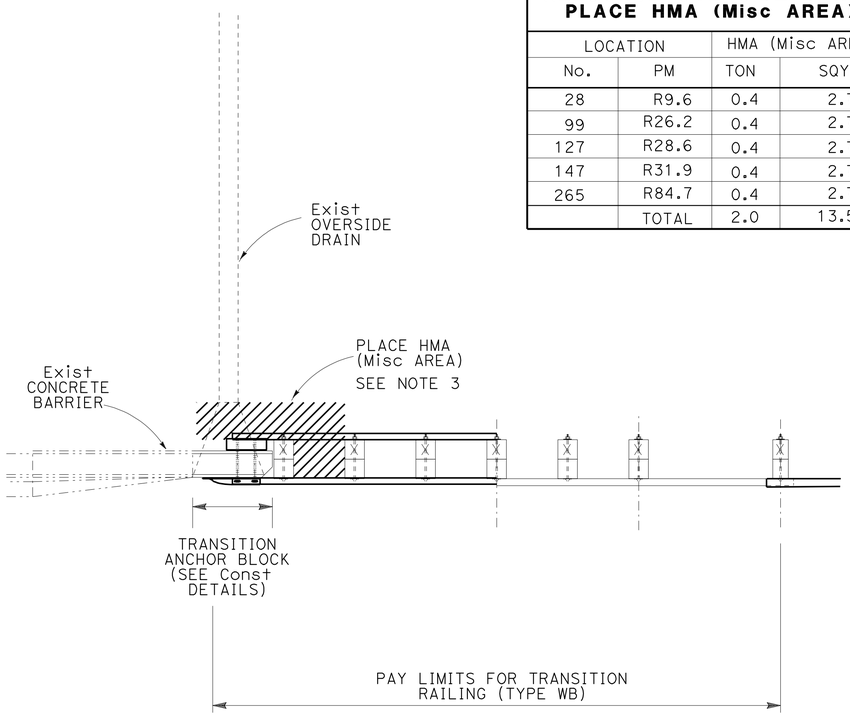

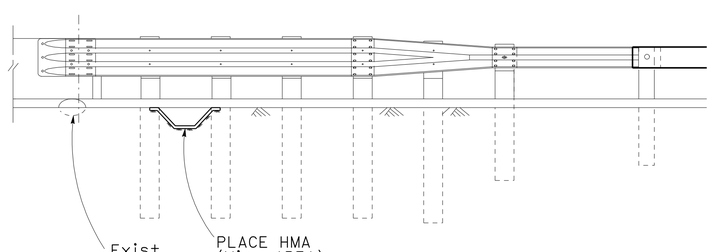

ELEVATION

RELOCATE OVERSIDE DRAIN

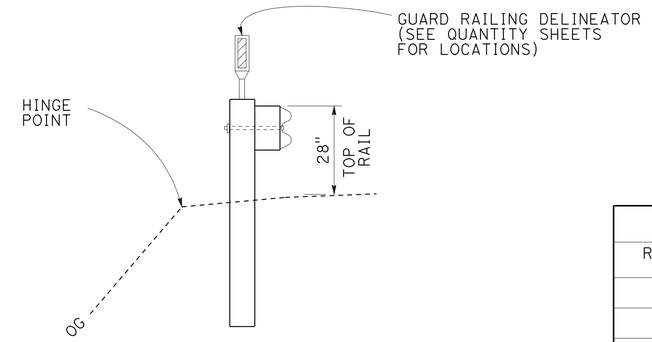

TYPICAL SECTION FROM FACE OF RAIL ELEMENT TO HINGE POINT

DELINEATOR SPACING TABLE

RADIUS OF CURVE (FEET)	APPROX SPACING (S) ON CURVE (FEET)
50	20
115	25
180	35
250	40
300	40
400	40
500	40
600	40
700	75
800	80
900	85
1,000 OR GREATER	90

NOTE:

1. INSTALL DELINEATORS PERPENDICULAR TO ONCOMING TRAFFIC.

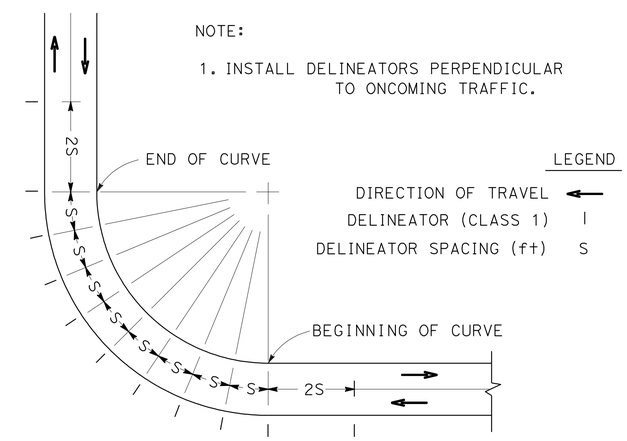

DELINEATOR SPACING ON CURVES

CONSTRUCTION DETAILS

NO SCALE **C-24**

STATE OF CALIFORNIA - DEPARTMENT OF TRANSPORTATION
Caltrans 03-DESIGN

FUNCTIONAL SUPERVISOR THOMAS P. WOOD
CALCULATED-DESIGNED BY S. WOODBECK
CHECKED BY F. BARRIGA
REVISED BY
DATE REVISED

LAST REVISION DATE PLOTTED => 30-SEP-2009 TIME PLOTTED => 15:15

Dist	COUNTY	ROUTE	POST MILES TOTAL PROJECT	SHEET No.	TOTAL SHEETS
01	Men	101	R0.1/R101.6	26	75

REGISTERED CIVIL ENGINEER 7-28-09 DATE

9-28-09
PLANS APPROVAL DATE

REGISTERED PROFESSIONAL ENGINEER F. BARRIGA No. 47047 Exp. 12/31/09 CIVIL STATE OF CALIFORNIA

THE STATE OF CALIFORNIA OR ITS OFFICERS OR AGENTS SHALL NOT BE RESPONSIBLE FOR THE ACCURACY OR COMPLETENESS OF SCANNED COPIES OF THIS PLAN SHEET.

NOTES:

1. BRIDGE ANCHOR BLOCKS SHALL BE SHIELDED FROM TRAFFIC UNTIL ANCHOR BLOCK CONCRETE CURES AND PERMANENT MBGR CONNECTION IS PLACED.
2. THIS SHIELD DETAIL IS A SUGGESTED DETAIL. THE WORK FOR THIS DETAIL OR AN ALTERNATE DETAIL THAT MAY BE APPROVED BY THE ENGINEER IS NOT A SEPARATE PAY ITEM.
3. FOR END ANCHOR BLOCK CONSTRUCTION DETAILS, SEE SHEETS C-7 THROUGH C-16.
4. REMOVE MBGR POST(S), EXCAVATE FOR ANCHOR BLOCK, FORM AND POUR ANCHOR BLOCK, AND PLACE NESTED RAIL, AS SHOWN BELOW, UNTIL BLOCK CONCRETE CURES.
5. EXISTING POST SPACING MAY BE 3′-1½″ OR EVEN VARIABLE DEPENDING ON FIELD CONDITIONS.
6. MBGR WORK IS TO BE DONE USING THE APPROPRIATE TRAFFIC CONTROL Std PLAN T10, T11, T13, AND T14. SEE SHEET SCD-2 FOR PAVEMENT DIMENSIONS.
7. CALIFORNIA SIGN C40A SHALL BE PLACED 500′ AHEAD OF THE W20-1 OR C19(CA) SIGNS AS SHOWN IN Std PLAN T10, T11, T13, AND T14. SIGN C40A SHALL BE CONSIDERED AS PART OF CONSTRUCTION AREA SIGNS (PORTABLE).

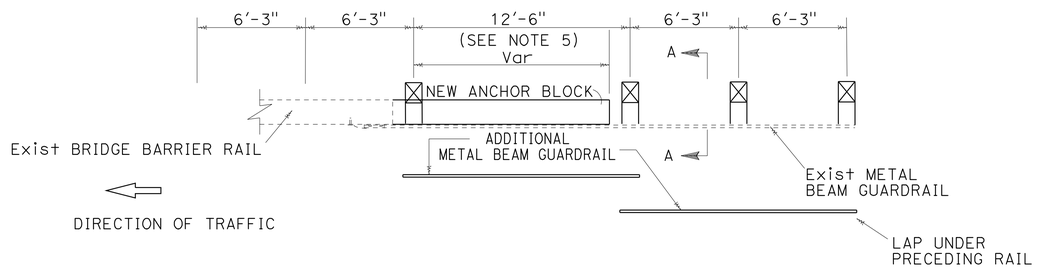

BRIDGE ANCHOR BLOCK SHIELD DETAIL

(SEE NOTE 2)

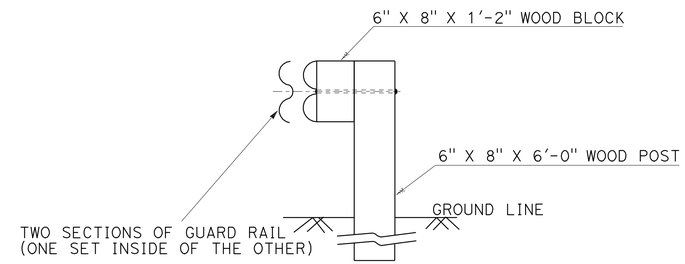

SECTION A-A

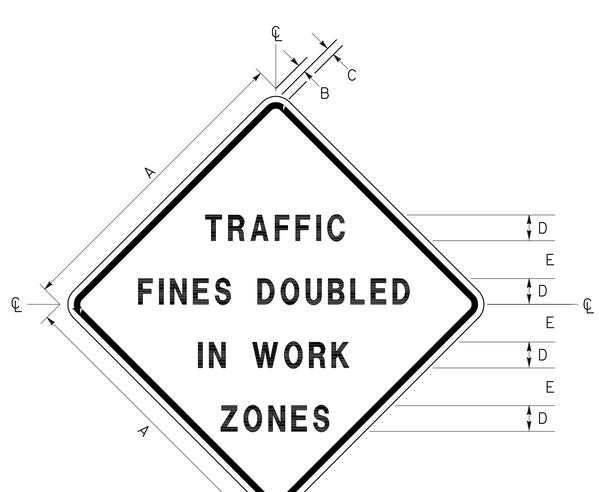

SIGN C40A(CA)

(SEE NOTE 5)

SIGN SIZES (INCHES)	DIMENSIONS (INCHES)					
	A	B	C	D	E	F
36 X 36	36	½	¾	4C	2-1/2	1-7/8
48 X 48	48	⅝	1	5C	3	2-5/8

STAGE CONSTRUCTION DETAILS

NO SCALE

SCD-1

STATE OF CALIFORNIA - DEPARTMENT OF TRANSPORTATION
Caltrans
03-DESIGN

FUNCTIONAL SUPERVISOR: THOMAS P. WOOD
CALCULATED-DESIGNED BY: S. WOODBECK
CHECKED BY: F. BARRIGA
REVISED BY
DATE REVISED

LAST REVISION 07-13-09 | DATE PLOTTED => 30-SEP-2009 | TIME PLOTTED => 15:15

Dist	COUNTY	ROUTE	POST MILES TOTAL PROJECT	SHEET No.	TOTAL SHEETS
01	Men	101	R0.1/R101.6	27	75

Fermin Barriga B. 7-28-09
REGISTERED CIVIL ENGINEER DATE

9-28-09
PLANS APPROVAL DATE

REGISTERED PROFESSIONAL ENGINEER
F. BARRIGA
No. 47047
Exp. 12/31/09
CIVIL
STATE OF CALIFORNIA

THE STATE OF CALIFORNIA OR ITS OFFICERS OR AGENTS SHALL NOT BE RESPONSIBLE FOR THE ACCURACY OR COMPLETENESS OF SCANNED COPIES OF THIS PLAN SHEET.

ROUTE 101 PAVEMENT WIDTHS

LEFT ROADBED (SOUTHBOUND DIRECTION)					RIGHT ROADBED (NORTHBOUND DIRECTION)				
BEGIN PM	END PM	OUTSIDE SHOULDER (FT)	TRAVELWAY WIDTH (FT)	INSIDE SHOULDER (FT)	BEGIN PM	END PM	OUTSIDE SHOULDER (FT)	TRAVELWAY WIDTH (FT)	INSIDE SHOULDER (FT)
R0.00	9.12	8	24	6	R0.00	8.62	8	24	6
9.17	11.78	4-8	12-13	0	8.63	9.00	8	12-23	6
11.79	13.37	4-8	12-18	0	9.01	11.78	4-12	12	0-12
13.38	14.02	2-8	24	0	12.00	13.33	4-8	12-18	0
13.99	14.70	8	12-18	0	13.38	13.44	2-4	24	0
14.84	15.60	2-8	24	0	14.03	14.67	8	12-18	0
15.53	17.42	8	12-18	0	14.69	15.41	0-2	24	0
17.58	R43.46	2-10	24	0-12	15.53	17.42	8	12-18	0
T43.50	45.27	8	12-13	0	17.58	R42.96	0-12	24	0-11
45.46	46.36	2-11	24	0	T43.50	45.27	4-8	12-13	0
46.45	51.46	4-10	12	0	45.46	46.24	11	24	0
46.45	51.46	4-10	12	0	46.25	50.73	2-10	12-13	0
51.56	51.90	4	24	0	50.78	51.79	4-8	24-36	0
52.01	55.03	4	12-19	0	51.90	55.03	4	12	0
55.18	64.71	4	24	0	55.18	64.71	4	24	0-2
64.73	71.00	4-10	11-12	0	64.73	71.91	0-8	12	0-4
71.09	72.80	4	24	0-2	72.00	72.80	4	24	0-2
72.90	74.85	4	12	0	72.90	74.81	4	12	0
75.12	75.26	4	24	0	74.86	75.23	3-4	24	0
75.73	76.08	4	12	0-12	75.28	76.47	0-4	12	0-12
77.40	78.09	0-7	24	0	76.50	77.65	4	24	0

LEFT ROADBED (SOUTHBOUND DIRECTION)					RIGHT ROADBED (NORTHBOUND DIRECTION)				
BEGIN PM	END PM	OUTSIDE SHOULDER (FT)	TRAVELWAY WIDTH (FT)	INSIDE SHOULDER (FT)	BEGIN PM	END PM	OUTSIDE SHOULDER (FT)	TRAVELWAY WIDTH (FT)	INSIDE SHOULDER (FT)
78.17	81.43	0-4	12-20	0	77.73	81.30	4-8	12	0
81.44	T91.08	2-14	24-36	0-2	81.44	R84.01	4-14	24	0-2
T91.25	93.96	0-8	11-16	0	R84.08	R85.16	2	36	0-2
94.07	94.53	4	24	0	R85.24	R89.68	4-8	24	0-2
94.56	100.10	0-10	10-21	0-2	R89.69	R90.39	4	36	0-2
100.28	R103.03	4	24	0-2	R90.87	100.10	0-8	10-16	0-2
					R90.46	R90.79	4-8	24	0-2
					100.14	R103.03	4	24	0-2

STAGE CONSTRUCTION DETAILS

SCD-2

STATE OF CALIFORNIA - DEPARTMENT OF TRANSPORTATION
Caltrans
03-DESIGN

FUNCTIONAL SUPERVISOR: THOMAS P. WOOD
CALCULATED-DESIGNED BY: S. WOODBECK
CHECKED BY: F. BARRIGA
REVISED BY
DATE REVISED

LAST REVISION 07-13-09
DATE PLOTTED => 30-SEP-2009
TIME PLOTTED => 15:15

Dist	COUNTY	ROUTE	POST MILES TOTAL PROJECT	SHEET No.	TOTAL SHEETS
01	Men	101	R0.1/R101.6	28	75

REGISTERED CIVIL ENGINEER 7-28-09 DATE

9-28-09
PLANS APPROVAL DATE

REGISTERED PROFESSIONAL ENGINEER F. BARRIGA No. 47047 Exp. 12/31/09 CIVIL STATE OF CALIFORNIA

THE STATE OF CALIFORNIA OR ITS OFFICERS OR AGENTS SHALL NOT BE RESPONSIBLE FOR THE ACCURACY OR COMPLETENESS OF SCANNED COPIES OF THIS PLAN SHEET.

NOTES:

1. PRE-NOTIFICATION PCMS: PLACE NEAR RAMP AND ACTIVATE APPROXIMATELY 12 HOURS PRIOR TO RAMP CLOSURE.

EXIT WILL BE CLOSED	TODAY (or TONIGHT) XX:XX PM-XX:XX AM
FRAME 1	FRAME 2

2. RAMP CLOSED PCMS: MOVE PRE-NOTIFICATION PCMS APPROXIMATELY 1000 FEET BEFORE RAMP AND ACTIVATE DURING RAMP CLOSURE.

EXIT XXX CLOSED	FOLLOW DETOUR
FRAME 1	FRAME 2

3. PLACE 7 DAYS PRIOR TO RAMP CLOSURE.
4. EXIT NUMBER SHOWN ON SIGN SHALL BE AS FOLLOWS:

EXIT NAME	EXIT NUMBER
HIGHWAY 253 WEST/BOONVILLE	546
HIGHWAY 222/TALMAGE	548A
HIGHWAY 271/DRIVE THRU TREE RD/SOUTH LEGGETT	614

LEGEND

PCMS - PORTABLE CHANGEABLE MESSAGE SIGN

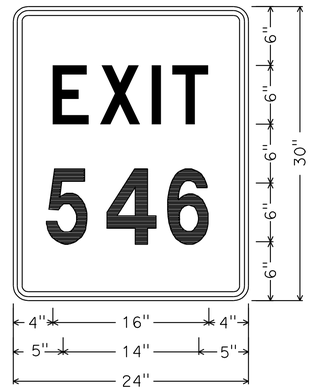

EXIT NUMBER SIGN (SP1) DETAIL

CONSTRUCTION AREA SIGNS (PORTABLE)

CODE	PANEL SIZE	SIGN MESSAGE
G28-2 (CA)	47" x 27"	ROUTE SHIELD (101)
M3-1	21" x 9"	DIRECTION (NORTH)
M3-3	21" x 9"	DIRECTION (SOUTH)
M4-8A	30" x 18"	END DETOUR
M4-10 (L+)	35" x 12"	DETOUR (L+ ARROW)
M4-10 (R+)	35" x 12"	DETOUR (R+ ARROW)
SC3 (CA)	35" x 12"	DETOUR WITH UP ARROW
SC6-4 (CA)	47" x 60"	RAMP CLOSED - DATE TIME
SP1	18" x 18"	EXIT NUMBER (SEE NOTE 4)
C40A(CA)	48" x 48"	SEE SHEET SCD-1

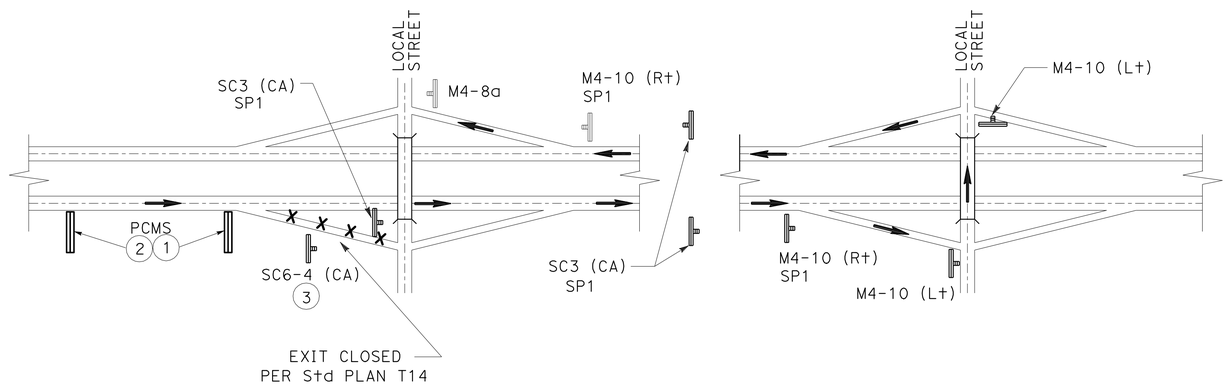

TYPICAL FREEWAY EXIT RAMP DETOUR SIGNING

DETOUR PLAN

NO SCALE

DE-1

STATE OF CALIFORNIA - DEPARTMENT OF TRANSPORTATION
Caltrans
03-DESIGN

FUNCTIONAL SUPERVISOR: THOMAS P. WOOD
CALCULATED-DESIGNED BY: S. WOODBECK
CHECKED BY: F. BARRIGA
REVISED BY
DATE REVISED

LAST REVISION 07-13-09
DATE PLOTTED => 30-SEP-2009
TIME PLOTTED => 15:15

Dist	COUNTY	ROUTE	POST MILES TOTAL PROJECT	SHEET No.	TOTAL SHEETS
01	Men	101	R0.1/R101.6	29	75

REGISTERED CIVIL ENGINEER DATE 7-28-09

9-28-09
PLANS APPROVAL DATE

REGISTERED PROFESSIONAL ENGINEER
F. BARRIGA
No. 47047
Exp. 12/31/09
CIVIL
STATE OF CALIFORNIA

THE STATE OF CALIFORNIA OR ITS OFFICERS OR AGENTS SHALL NOT BE RESPONSIBLE FOR THE ACCURACY OR COMPLETENESS OF SCANNED COPIES OF THIS PLAN SHEET.

NOTE:

1. FOR LABELS (1), (2), AND (3), SEE SHEET DE-1.

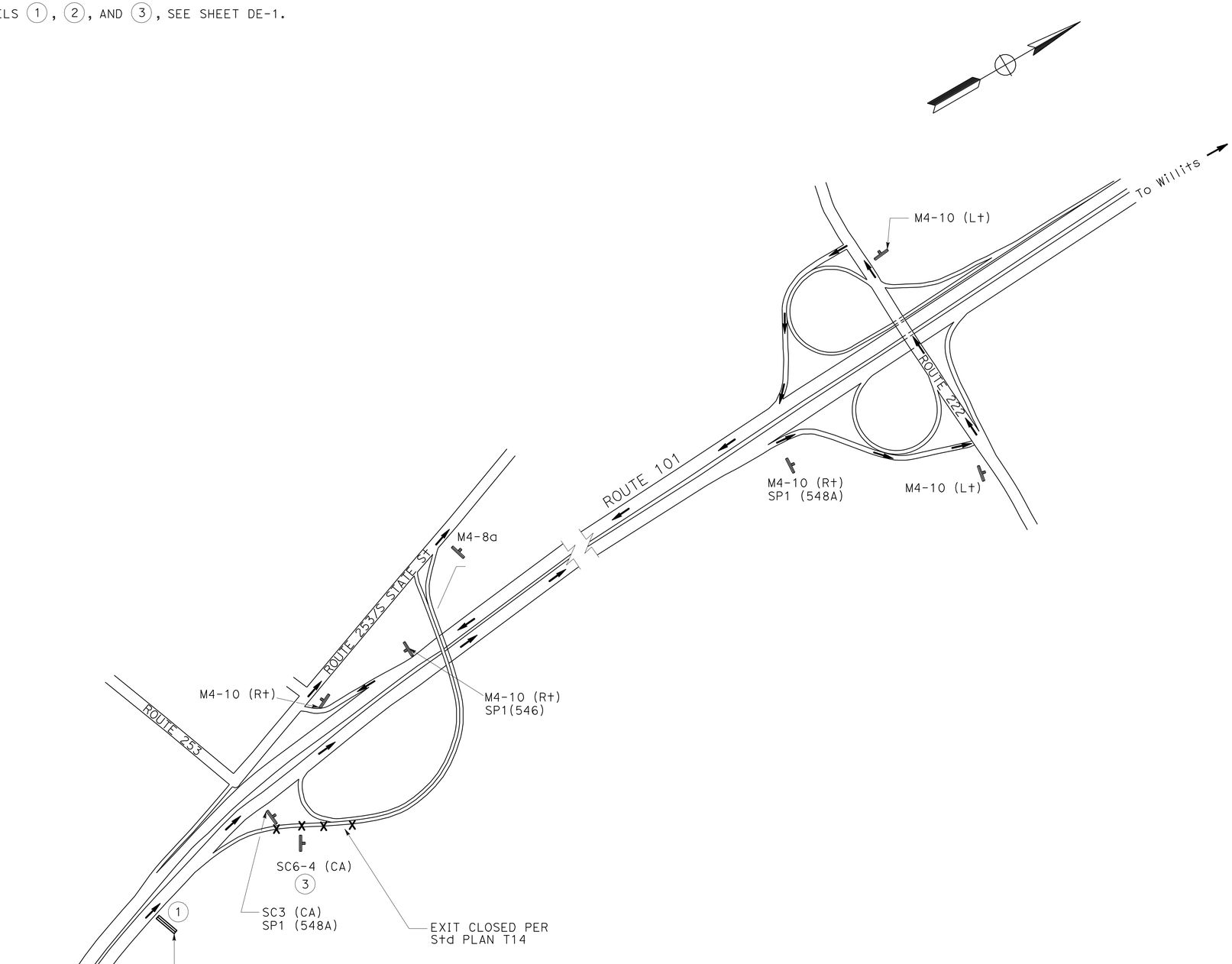

HIGHWAY 253 NORTHBOUND EXIT RAMP DETOUR

DETOUR PLAN

NO SCALE

DE-2

STATE OF CALIFORNIA - DEPARTMENT OF TRANSPORTATION
Caltrans
03-DESIGN

FUNCTIONAL SUPERVISOR: THOMAS P. WOOD
CALCULATED-DESIGNED BY: S. WOODBECK
CHECKED BY: F. BARRIGA
REVISED BY
DATE REVISED

LAST REVISION 07-13-09
DATE PLOTTED => 30-SEP-2009
TIME PLOTTED => 15:15

Dist	COUNTY	ROUTE	POST MILES TOTAL PROJECT	SHEET No.	TOTAL SHEETS
01	Men	101	R0.1/R101.6	30	75

REGISTERED CIVIL ENGINEER 7-28-09 DATE

9-28-09
PLANS APPROVAL DATE

REGISTERED PROFESSIONAL ENGINEER F. BARRIGA No. 47047 Exp. 12/31/09 CIVIL STATE OF CALIFORNIA

THE STATE OF CALIFORNIA OR ITS OFFICERS OR AGENTS SHALL NOT BE RESPONSIBLE FOR THE ACCURACY OR COMPLETENESS OF SCANNED COPIES OF THIS PLAN SHEET.

NOTE:

1. FOR LABELS (1), (2), AND (3), SEE SHEET DE-1.

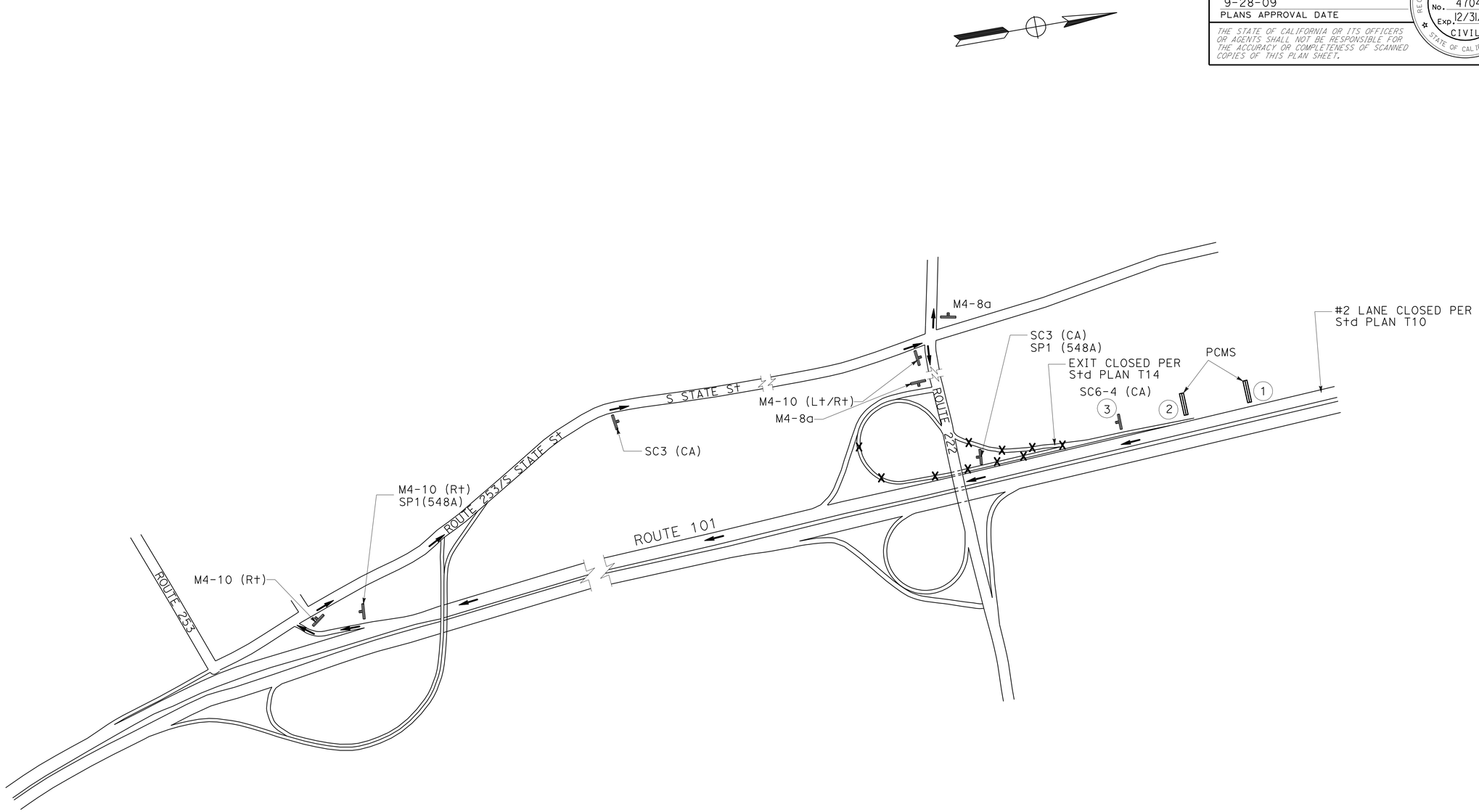

HIGHWAY 222 SOUTHBOUND EXIT RAMP DETOUR

DETOUR PLAN

NO SCALE

DE-3

STATE OF CALIFORNIA - DEPARTMENT OF TRANSPORTATION
Caltrans
03-DESIGN

FUNCTIONAL SUPERVISOR: THOMAS P. WOOD
CALCULATED-DESIGNED BY: S. WOODBECK
CHECKED BY: F. BARRIGA
REVISED BY
DATE REVISED

LAST REVISION 07-13-09
DATE PLOTTED => 30-SEP-2009
TIME PLOTTED => 15:16

BORDER LAST REVISED 4/11/2008
RELATIVE BORDER SCALE IS IN INCHES 0 1 2 3
USERNAME => trrichf
DGN FILE => 146430mg003.dgn
CU 03224
EA 464301

Dist	COUNTY	ROUTE	POST MILES TOTAL PROJECT	SHEET No.	TOTAL SHEETS
01	Men	101	R0.1/R101.6	31	75

REGISTERED CIVIL ENGINEER 7-28-09 DATE

9-28-09
PLANS APPROVAL DATE

REGISTERED PROFESSIONAL ENGINEER F. BARRIGA No. 47047 Exp. 12/31/09 CIVIL STATE OF CALIFORNIA

THE STATE OF CALIFORNIA OR ITS OFFICERS OR AGENTS SHALL NOT BE RESPONSIBLE FOR THE ACCURACY OR COMPLETENESS OF SCANNED COPIES OF THIS PLAN SHEET.

NOTE:

1. FOR LABELS (1), (2), AND (3), SEE SHEET DE-1.

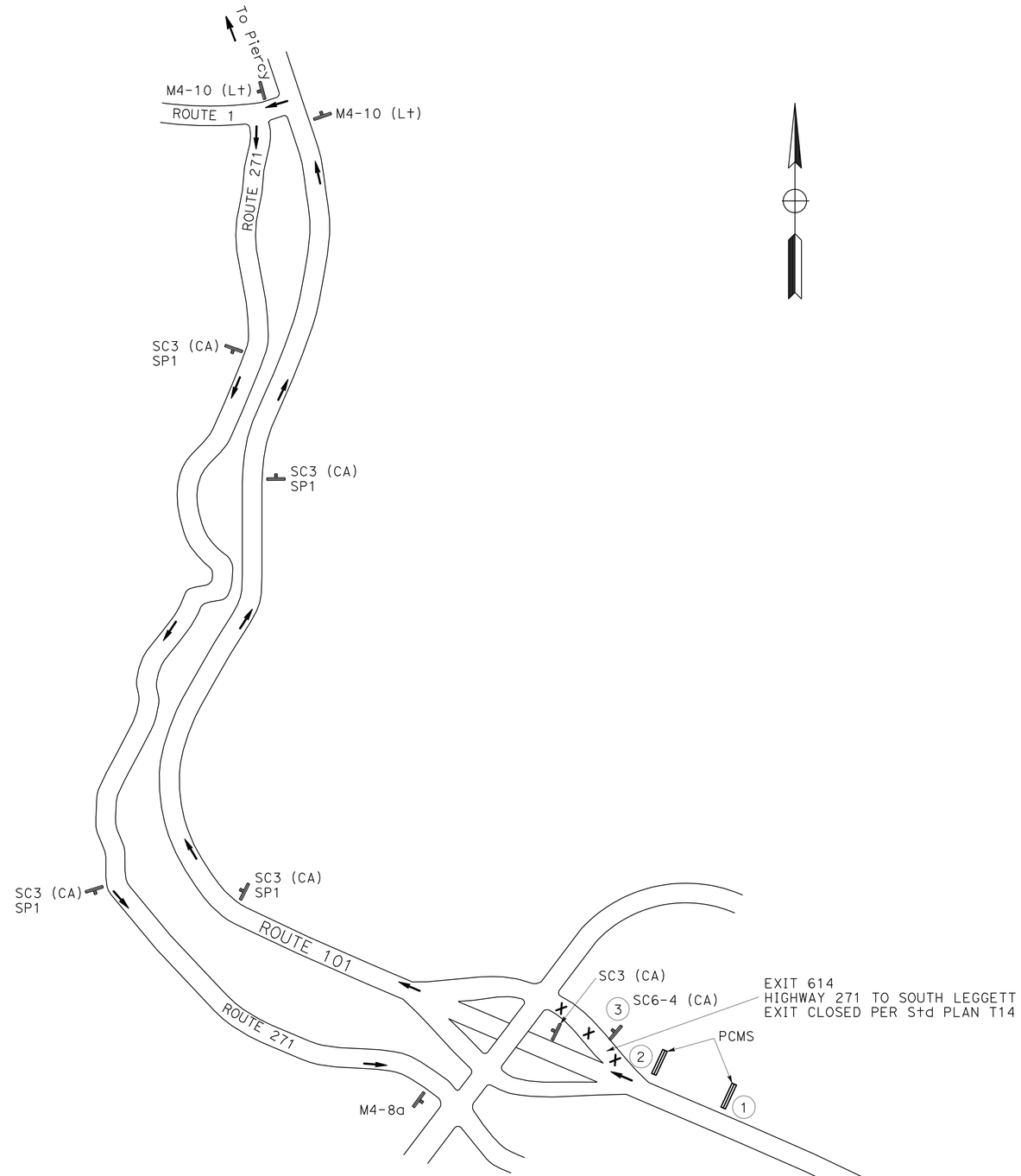

SOUTH LEGGETT NORTHBOUND EXIT RAMP DETOUR

DETOUR PLAN

NO SCALE

DE-4

STATE OF CALIFORNIA - DEPARTMENT OF TRANSPORTATION
Caltrans
03-DESIGN

FUNCTIONAL SUPERVISOR: THOMAS P. WOOD
CALCULATED-DESIGNED BY: S. WOODBECK
CHECKED BY: F. BARRIGA
REVISED BY
DATE REVISED

LAST REVISION 07-13-09
DATE PLOTTED => 30-SEP-2009
TIME PLOTTED => 15:16

Dist	COUNTY	ROUTE	POST MILES TOTAL PROJECT	SHEET No.	TOTAL SHEETS
01	Men	101	R0.1/R101.6	32	75

REGISTERED CIVIL ENGINEER 7-28-09 DATE

9-28-09
PLANS APPROVAL DATE

REGISTERED PROFESSIONAL ENGINEER F. BARRIGA No. 47047 Exp. 12/31/09 CIVIL STATE OF CALIFORNIA

THE STATE OF CALIFORNIA OR ITS OFFICERS OR AGENTS SHALL NOT BE RESPONSIBLE FOR THE ACCURACY OR COMPLETENESS OF SCANNED COPIES OF THIS PLAN SHEET.

NOTES:

1. EXISTING UTILITY FACILITIES HAVE NOT BEEN POSITIVELY LOCATED.
2. TWO POSTS HAVE BEEN CUT AND ANCHORED TO METAL SEATS WHICH ARE ANCHORED ON TOP OF STRUCTURE. AT THE OPTION OF THE CONTRACTOR, MBGR CAN BE RECONSTRUCTED IN THIS MANNER OR RECONSTRUCTED USING LONG SPAN NESTED GUARDRAIL CASE 3 (SEE SHEET C-8).

ALTERNATIVE TERMINAL SYSTEMS

FLARED TERMINAL SYSTEMS	IN-LINE TERMINAL SYSTEMS
TYPE SRT	TYPE ET
TYPE FLEAT	TYPE SKT

LOCATION #	Beg PM	END PM	DIRECTION	SHOULDER WIDTH (FT)	LENGTHS (LF)	RECONSTRUCT MBGR (LF)	RECONSTRUCT MBGR (7' POST) (LF)	SALVAGE MBGR (LF)	REMOVE MBGR (LF)	GUARD RAILING DELINEATOR (EA)	DOUBLE MBGR (WOOD POST) (LF)	MBGR (WOOD POST) (LF)	MBGR (7' WOOD POST) (LF)	MBGR (8' POST) (LF)	(N) SHOP BENT RAILS NEEDED (LF)	WEED CONTROL MAT (FIBER) (SQYD)	TRANSITION RAILING (TYPE WB) (EA)	EXISTING BRIDGE BARRIER RAIL TYPE	MINOR CONCRETE (MINOR STRUCTURE) (CUYD)	END CAP (TYPE A) (EA)	END CAP (N) (TYPE TC) (EA)	END ANCHOR ASSEMBLY (TYPE SFT) (EA)	ALTERNATIVE FLARED TERMINAL SYSTEM (EA)	ALTERNATIVE IN-LINE TERMINAL SYSTEM (EA)	(N) BURIED POST END ANCHOR (EA)	(N) RAIL TENSIONING ASSEMBLY (EA)	CRASH CUSHION (TYPE CAT) (EA)	CRASH CUSHION (TYPE CAT) BACKUP (EA)	REMOVE ASPHALT CONCRETE DIKE (LF)	REMOVE CONCRETE (CUYD)	OBJECT MARKER (TYPE L-1) (CA) (EA)	RESET ROADSIDE SIGN (ONE POST) (EA)	RESET ROADSIDE SIGN (METAL POST) (EA)	RESET ROADSIDE SIGN (TWO POST) (EA)	RESET MILEPOST MARKER (EA)	RESET MARKER (EA)	GUARD RAILING LAYOUT TYPE	COMMENTS
MENDOCINO COUNTY LINE PM R 0.10																																						
1	R0.14	R0.18	N	8	162.5	137.5			25	2							1	25	0.7		1										1						12C	MAY NEED TO EXTEND ANCHOR BLOCK BY 1' FOR MBGR POST TO AVOID UD.
2	R0.26	R0.28	N	8	125				125																				50									
3	R0.33	R0.35	N	8	75	50			25	2							1	25	0.7		1															1	12C	MAY NEED TO EXTEND ANCHOR BLOCK BY 1' FOR MBGR POST TO AVOID UD.
4	R0.36	R0.4	S	8	210	172.5			37.5	3		37.5				72.8						1			1											3	11C	
5	R0.47	R0.48	N	8	50	25			25	2						22.2	1	25	0.7		1				1									1		2	12C	Exist IRRIGATION LINE ON SURFACE NEARBY.
6	R0.61	R0.66	N	8	250	25			12.5	3		12.5								1		1										1					12DD	RECONSTRUCT 25' OF MBGR NEXT TO Br Conc RAILING.
7	R0.61	R0.68	S	8	510	450			62.5	6			62.5		62.5	216	1	25	0.7		1		1								1	2		1		3	12B	SHOP BEND RAILS TO MATCH Exist CONVEX RADII: 2=20'; 3=25'.
GEYSERS RD. PM R0.69																																						
8	R0.7	R0.83	S	8	800	400	325		75	5		37.5				285.3						1	1								1	4				2	11B	RECONSTRUCT TRAILER END USING Exist SHOP BENT RAILS.
9	1.42	1.45	S	8	162.5		87.5		75	2			37.5			75.2						1	1								1					1	11B	
10	1.8	1.86	S	8	250	175			75	3		37.5				102.3						1	1								1					1	11B	
END OF BRIDGE FOR COMMINSKY S.H. VIADUCT PM 2.54																																						
13	2.54	2.55	S	8	87.5	62.5			25	2						34.7	1	25	0.7		1				1							1				1	12C	
14	2.66	2.91	S	8	1300	1225			75	15		37.5				444.4						1		1								1	1				11A	
COMMINSKY STA RD-103 PM 3.06																																						
18	4.98	5.00	N	8	62.5				62.5	2						45.4	1	25	0.7		1		1								1	1					12B	
KOREAN WAR VET. MEMORIAL BRIDGE PM 4.95																																						
19	5.05	5.07	S	8	62.5				62.5	2							1	25	0.7		1		1								1	1					12B	
20	5.34	5.35	N	8	87.5	12.5			75	2		37.5				50.3						1	1								1					1	11B	SEE NOTE 2
SHEET TOTALS						2735	412.5	0	837.5	51	0	200	100	0	62.5	1348.6	7		4.9	1	7	7	7	1	3	0	0	0	50	0	7	12	1	2	0	15		

(N) - NOT A SEPARATE PAY ITEM, FOR INFORMATION ONLY.

SUMMARY OF QUANTITIES

Q-1

STATE OF CALIFORNIA - DEPARTMENT OF TRANSPORTATION
Caltrans 03-DESIGN

FUNCTIONAL SUPERVISOR: THOMAS P. WOOD
CALCULATED-DESIGNED BY: F. BARRIGA
CHECKED BY: S. WOODBECK
REVISED BY
DATE REVISED

LAST REVISION 07-20-09 DATE PLOTTED => 30-SEP-2009 TIME PLOTTED => 15:16

Dist	COUNTY	ROUTE	POST MILES TOTAL PROJECT	SHEET No.	TOTAL SHEETS
01	Men	101	R0.1/R101.6	33	75

REGISTERED CIVIL ENGINEER 7-28-09 DATE

9-28-09
PLANS APPROVAL DATE

REGISTERED PROFESSIONAL ENGINEER F. BARRIGA No. 47047 Exp. 12/31/09 CIVIL STATE OF CALIFORNIA

THE STATE OF CALIFORNIA OR ITS OFFICERS OR AGENTS SHALL NOT BE RESPONSIBLE FOR THE ACCURACY OR COMPLETENESS OF SCANNED COPIES OF THIS PLAN SHEET.

NOTES:

1. MAY NEED TO EXTEND ANCHOR BLOCK BY 1' FOR MBGR POST TO AVOID WEATHER STATION CABLES.
2. EXISTING UTILITY FACILITIES HAVE NOT BEEN POSITIVELY LOCATED.
3. USE Alt 2 CONNECTION DETAIL-(SEE SHEET C-2). RECONSTRUCT TERMINAL SYSTEM.

LOCATION #	Beg PM	END PM	DIRECTION	SHOULDER WIDTH (FT)	LENGTHS (LF)	RECONSTRUCT MBGR (LF)	RECONSTRUCT MBGR (7' POST) (LF)	SALVAGE MBGR (LF)	REMOVE MBGR (LF)	GUARD RAILING DELINEATOR (EA)	DOUBLE MBGR (WOOD POST) (LF)	MBGR (WOOD POST) (LF)	MBGR (7' WOOD POST) (LF)	MBGR (8' POST) (LF)	(N) SHOP BENT RAILS NEEDED	WEED CONTROL MAT (FIBER) (SQYD)	TRANSITION RAILING (TYPE WB) (EA)	EXISTING BRIDGE BARRIER RAIL TYPE	MINOR CONCRETE (MINOR STRUCTURE) (CUYD)	END CAP (TYPE A) (EA)	END CAP (N) (TYPE TC) (EA)	END ANCHOR ASSEMBLY (TYPE SFT) (EA)	ALTERNATIVE FLARED TERMINAL SYSTEM (EA)	ALTERNATIVE IN-LINE TERMINAL SYSTEM (EA)	(N) BURIED POST END ANCHOR (EA)	(N) RAIL TENSIONING ASSEMBLY (EA)	CRASH CUSHION (TYPE CAT) (EA)	CRASH CUSHION (TYPE CAT) BACKUP (EA)	REMOVE ASPHALT CONCRETE DIKE (LF)	REMOVE CONCRETE (CUYD)	OBJECT MARKER (TYPE L-1) (CA) (EA)	RESET ROADSIDE SIGN (ONE POST) (EA)	RESET ROADSIDE SIGN (METAL POST) (EA)	RESET ROADSIDE SIGN (TWO POST) (EA)	RESET MILEPOST MARKER (EA)	RESET MARKER (EA)	GUARD RAILING LAYOUT TYPE	COMMENTS
21	5.35	5.36	S	8	87.5	12.5			75	2		37.5				50.3						1	1								1					1	11B	
PIETA CR 10 83 PM 5.94																																						
EAST SIDE RD-RD 201 PM 9.17 (OLD RIVER ROAD)																																						
26	R9.51	R9.52	N	4	50				50	2						38.1	1	1	0.6		1		1						66		1	1			1		12A	
27	R9.51	R9.52	S	4	50				50	2						38.1	1	1	0.6		1		1								1						12AA	SEE NOTE 1
HOPLAND OH BR 10 81 PM R 9.53																																						
28	R9.58	R9.59	S	8	50				50	2						45.4	1	1	0.6		1		1								1		1				12B	RELOCATE OVERSIDE DRAIN TO END OF NEW ANCHOR BLOCK.
29	R9.59	9.61	N	8	50				50	2						45.4	1	1	0.6		1		1								1						12BB	
LA FRANCHI RD-RD 113 PM 9.87																																						
30	10.45	10.46	N	7	62.5				25	2							1	25			1														1		12B	REMOVE 25' AT Br CONNECTION.
ROSETTI CR 10 87 PM 10.46																																						
32	10.46	10.47	S	8	62.5				25	2							1	25			1														1		12B	REMOVE 25' AT Br CONNECTION.
JCT ST RTE 175 E PM 10.89																																						
PRIVATE RD PM 14.48																																						
34	14.61	14.62	N	8	50				50	2						45.4	1	9			1		1								1				1	1	12B	
CRAWFORD CR BR 10-168 PM 14.62																																						
36	15.93	15.94	N	8	75	50			25	2						62.1	1	9	0.5		1			1								1		1		12A	SEE NOTE 3
SHEET TOTALS:						62.5	0	0	400	18	0	37.5	0	0	0	324.8	8		2.9	0	8	1	6	1	0	0	0	0	66	0	6	2	1	0	5	2		

(N) - NOT A SEPARATE PAY ITEM, FOR INFORMATION ONLY.

SUMMARY OF QUANTITIES

Q-2

STATE OF CALIFORNIA - DEPARTMENT OF TRANSPORTATION
03-DESIGN
Caltrans

S. WOODBECK | F. BARRIGA | THOMAS P. WOOD | CALCULATED-DESIGNED BY | CHECKED BY | FUNCTIONAL SUPERVISOR | REVISED BY | DATE REVISED

LAST REVISION 07-20-09 | DATE PLOTTED => 30-SEP-2009 | TIME PLOTTED => 15:16

Dist	COUNTY	ROUTE	POST MILES TOTAL PROJECT	SHEET No.	TOTAL SHEETS
01	Men	101	R0.1/R101.6	34	75

REGISTERED CIVIL ENGINEER 7-28-09 DATE

9-28-09
PLANS APPROVAL DATE

REGISTERED PROFESSIONAL ENGINEER F. BARRIGA No. 47047 Exp. 12/31/09 CIVIL STATE OF CALIFORNIA

THE STATE OF CALIFORNIA OR ITS OFFICERS OR AGENTS SHALL NOT BE RESPONSIBLE FOR THE ACCURACY OR COMPLETENESS OF SCANNED COPIES OF THIS PLAN SHEET.

NOTE:

1. EXISTING UTILITY FACILITIES HAVE NOT BEEN POSITIVELY LOCATED.

LOCATION #	Beg PM	END PM	DIRECTION	SHOULDER WIDTH (FT)	LENGTHS (LF)	RECONSTRUCT MBGR (LF)	RECONSTRUCT MBGR (7' POST) (LF)	SALVAGE MBGR (LF)	REMOVE MBGR (LF)	GUARD RAILING DELINEATOR (EA)	DOUBLE MBGR (WOOD POST) (LF)	MBGR (WOOD POST) (LF)	MBGR (7' WOOD POST) (LF)	MBGR (8' POST) (LF)	(N) SHOP BENT RAILS NEEDED (LF)	WEED CONTROL MAT (FIBER) (SQYD)	TRANSITION RAILING (TYPE WB) (EA)	EXISTING BRIDGE BARRIER RAIL TYPE	MINOR CONCRETE (MINOR STRUCTURE) (CUYD)	END CAP (TYPE A) (EA)	END CAP (N) (TYPE TC) (EA)	END ANCHOR ASSEMBLY (TYPE SFT) (EA)	ALTERNATIVE FLARED TERMINAL SYSTEM (EA)	ALTERNATIVE IN-LINE TERMINAL SYSTEM (EA)	(N) BURIED POST END ANCHOR (EA)	(N) RAIL TENSIONING ASSEMBLY (EA)	CRASH CUSHION (TYPE CAT) (EA)	CRASH CUSHION (TYPE CAT) BACKUP (EA)	REMOVE ASPHALT CONCRETE DIKE (LF)	REMOVE CONCRETE (CUYD)	OBJECT MARKER (TYPE L-1) (CA) (EA)	RESET ROADSIDE SIGN (ONE POST) (EA)	RESET ROADSIDE SIGN (METAL POST) (EA)	RESET ROADSIDE SIGN (TWO POST) (EA)	RESET MILEPOST MARKER (EA)	RESET MARKER (EA)	GUARD RAILING LAYOUT TYPE	COMMENTS
MCNABB CR BR 10-04 PM 15.94																																					
37	15.95	15.96	S	8	62.5				62.5	2						45.4	1	9	0.5		1		1							1					12BB	USE A1+ 2 CONNECTION DETAIL-(SEE SHEET C-2).
38	15.95	15.96	N	8	62.5				62.5	2						45.4	1	9	0.5		1		1							1	1			1	12BB	USE A1+ 2 CONNECTION DETAIL-(SEE SHEET C-2).
39	15.95	15.96	S	8	75				25	2							1	9	0.5		1												1		12A	USE A1+ 2 CONNECTION DETAIL-(SEE SHEET C-2).
HENRY STA RD-RD 107 PM 16.49																																					
NELSON RD PM 17.237																																					
40	19.67	19.69	MED	5	112.5			37.5	75	3	25	62.5				256.4						1				1	1	1								14A	
41	19.67	19.69	MED	5	112.5			37.5	75	3	25	62.5				256.4						1				1	1	1								14A	
EL ROBLE OC 10-76 PM 19.68																																					
42	20.70	20.72	MED	5	112.5	37.5			75	3	25	37.5				256.4						1				1	1	1								14A	
43	20.70	20.72	MED	5	112.5	37.5			75	3	25	37.5				256.4						1				1	1	1								14A	
ROBINSON OC 10-86 PM 20.71																																					
44	20.89	20.91	MED	5	75	25			50	3	87.5					114.9	1	1	0.6		1					1	1	1								12E	
44A	20.90	20.91	S	2						2		25				10.4				1		1														12DD	
45	20.90	20.91	N	8	50			12.5	37.5	2						38.1	1	1	0.6		1			1							1			1		12A	
ROBINSON CR 10 5 PM 20.91																																					
48	R21.57	R21.59	N	8	812.5	275		25	37.5	2							1	1	0.6		1		1								1			1		12A	
49	R21.58	R21.59	N	8	62.5			25	37.5	2						45.4	1	1	0.6		1		1								1					12BB	
JCT 253/101 SEP 10-186 PM R21.59																																					
52	R21.58	R21.60	MED	5	125	50			75	2	25					256.4						1				1	1	1							1	14A	
SHEET TOTALS:						425	0	137.5	687.5	31	212.5	225	0	0	0	1581.6	7		3.9	1	7	6	4	1	0	6	6	6	0	0	4	2	0	0	3	2		

(N) - NOT A SEPARATE PAY ITEM, FOR INFORMATION ONLY.

SUMMARY OF QUANTITIES

Q-3

STATE OF CALIFORNIA - DEPARTMENT OF TRANSPORTATION
Caltrans 03-DESIGN

FUNCTIONAL SUPERVISOR: THOMAS P. WOOD
CALCULATED-DESIGNED BY: S. WOODBECK
CHECKED BY: F. BARRIGA
REVISED BY
DATE REVISED

LAST REVISION 07-21-09 DATE PLOTTED => 30-SEP-2009 TIME PLOTTED => 15:16

Dist	COUNTY	ROUTE	POST MILES TOTAL PROJECT	SHEET No.	TOTAL SHEETS
01	Men	101	R0.1/R101.6	35	75

REGISTERED CIVIL ENGINEER 7-28-09 DATE

9-28-09
PLANS APPROVAL DATE

REGISTERED PROFESSIONAL ENGINEER F. BARRIGA No. 47047 Exp. 12/31/09 CIVIL STATE OF CALIFORNIA

THE STATE OF CALIFORNIA OR ITS OFFICERS OR AGENTS SHALL NOT BE RESPONSIBLE FOR THE ACCURACY OR COMPLETENESS OF SCANNED COPIES OF THIS PLAN SHEET.

NOTES:

1. EXISTING UTILITY FACILITIES HAVE NOT BEEN POSITIVELY LOCATED.
2. RECONSTRUCT MBGR INCLUDES RECONSTRUCT CRASH CUSHION (TYPE CAT).

LOCATION #	Beg PM	END PM	DIRECTION	SHOULDER WIDTH	LENGTHS	RECONSTRUCT MBGR	RECONSTRUCT MBGR (7' POST)	SALVAGE MBGR	REMOVE MBGR	GUARD RAILING DELINEATOR	DOUBLE MBGR (WOOD POST)	MBGR (WOOD POST)	MBGR (7' WOOD POST)	MBGR (8' POST)	(N) SHOP BENT RAILS NEEDED	WEED CONTROL MAT (FIBER)	TRANSITION RAILING (TYPE WB)	EXISTING BRIDGE BARRIER RAIL TYPE	MINOR CONCRETE (MINOR STRUCTURE	END CAP (TYPE A)	END CAP (N) (TYPE TC)	END ANCHOR ASSEMBLY (TYPE SFT)	ALTERNATIVE FLARED TERMINAL SYSTEM	ALTERNATIVE IN-LINE TERMINAL SYSTEM	(N) BURIED POST END ANCHOR	(N) RAIL TENSIONING ASSEMBLY	CRASH CUSHION (TYPE CAT)	CRASH CUSHION (TYPE CAT) BACKUP	REMOVE ASPHALT CONCRETE DIKE	REMOVE CONCRETE	OBJECT MARKER (TYPE L-1) (CA)	RESET ROADSIDE SIGN (ONE POST)	RESET ROADSIDE SIGN (METAL POST)	RESET ROADSIDE SIGN (TWO POST)	RESET MILEPOST MARKER	RESET MARKER	GUARD RAILING LAYOUT TYPE	COMMENTS
				(FT)	(LF)	(LF)	(LF)	(LF)	(LF)	(LF)	(LF)	(LF)	(LF)	(LF)	(LF)	(SQYD)	(EA)		(CUYD)	(EA)	(EA)	(EA)	(EA)	(EA)	(EA)	(EA)	(EA)	(EA)	(LF)	(CUYD)	(EA)	(EA)	(EA)	(EA)	(EA)	(EA)		
53	R21.58	R21.60	N	8	62.5			25	37.5	2						38.1	1	1	0.6		1			1										1		12A	
54	R21.58	R21.6	MED	5	125			50	75		25	50				256.4						1				1	1	1							1	14A	
55	R21.59	R21.60	N	8	62.5			25	37.5	2						45.4	1	1	0.6		1		1								1					12BB	
56	R21.78	R21.80	MED	5	100	37.5		25	37.5	3	25					256.4						1				1	1	1								14A	
57	R21.78	R21.80	MED	5	100	50		25	25	3	25					256.4						1				1	1	1								14A	
TREATMENT PLT OC 10-185 PM R 21.80																																					
58	R22.03	R22.15	S	8	887.5	850			37.5	11		12.5				289.1				1		1														12DD	
59	R22.13	R22.15	N	8	50			12.5	37.5	2						38.1	1	1	0.6		1			1								1			1		12A	
60	R22.14	R22.15	MED	5	75	75				3	75					108.4	1	1	0.6		1															1	12E	SEE NOTE 2
SO UKIAH OH 10-187 PM R 22.16																																					
61	R22.22	R22.23	MED	5	75	25		37.5	37.5	3	62.5					101.9	1	1	0.6		1					1	1	1							1	12E	
62	R22.22	R22.23	S	8	62.5	50		12.5		2						28.5	1	1	0.6		1											1			1		12A	RECONSTRUCT TERMINAL SYSTEM
63	R22.31	R22.47	N	8	812.5	737.5			75	10		37.5				282.2						1	1								1					11B	
64	R23.43	R23.45	N	8	75	12.5		12.5	37.5	2						49.6	1	27	1.5		1		1							0.2	1			1		12B	SEE SHEET C-16
65	R23.43	R23.45	MED	5	137.5	62.5			75	3	37.5					262.9						1				1	1	1								14A	
66	R23.43	R23.45	MED	5	137.5	62.5			75	3	37.5					256.4						1				1	1	1								14A	
67	R23.44	R23.46	S	8	125	125				2		25				250.4						1								0.2					2	*15A	*MODIFIED-SEE SHEET C-1
68	R23.44	R23.46	S	8	62.5	62.5				2	25						1	27	1.5		1						1	1		0.2						*15A	*MODIFIED-SEE SHEET C-1
JCT 101/222 SEP 10-189 PM R 23.45																																					
69	R23.58	R23.59	MED	5	75	25		12.5	37.5		62.5					101.9	1	1	0.6		1					1	1	1							1	12E	
SHEET TOTALS:						2175	0	237.5	625	53	375	125	0	0	0	2622.1	9		7.2	1	9	8	3	2	0	7	8	8	0	0.6	3	2	0	0	4	6		

(N) - NOT A SEPARATE PAY ITEM, FOR INFORMATION ONLY.

SUMMARY OF QUANTITIES

Q-4

STATE OF CALIFORNIA - DEPARTMENT OF TRANSPORTATION
Caltrans 03-DESIGN

FUNCTIONAL SUPERVISOR: THOMAS P. WOOD
CALCULATED-DESIGNED BY: S. WOODBECK
CHECKED BY: F. BARRIGA
REVISED BY
DATE REVISED

LAST REVISION 07-21-09
DATE PLOTTED => 30-SEP-2009
TIME PLOTTED => 15:16

Dist	COUNTY	ROUTE	POST MILES TOTAL PROJECT	SHEET No.	TOTAL SHEETS
01	Men	101	R0.1/R101.6	36	75

REGISTERED CIVIL ENGINEER 7-28-09 DATE

9-28-09
PLANS APPROVAL DATE

REGISTERED PROFESSIONAL ENGINEER F. BARRIGA No. 47047 Exp. 12/31/09 CIVIL STATE OF CALIFORNIA

THE STATE OF CALIFORNIA OR ITS OFFICERS OR AGENTS SHALL NOT BE RESPONSIBLE FOR THE ACCURACY OR COMPLETENESS OF SCANNED COPIES OF THIS PLAN SHEET.

NOTE:

1. EXISTING UTILITY FACILITIES HAVE NOT BEEN POSITIVELY LOCATED.

LOCATION #	Beg PM	END PM	DIRECTION	SHOULDER WIDTH (FT)	LENGTHS (LF)	RECONSTRUCT MBGR (LF)	RECONSTRUCT MBGR (7' POST) (LF)	SALVAGE MBGR (LF)	REMOVE MBGR (LF)	GUARD RAILING DELINEATOR (EA)	DOUBLE MBGR (WOOD POST) (LF)	MBGR (WOOD POST) (LF)	MBGR (7' WOOD POST) (LF)	MBGR (8' POST) (LF)	(N) SHOP BENT RAILS NEEDED (LF)	WEED CONTROL MAT (FIBER) (SQYD)	TRANSITION RAILING (TYPE WB) (EA)	EXISTING BRIDGE BARRIER RAIL TYPE	MINOR CONCRETE (MINOR STRUCTURE) (CUYD)	END CAP (TYPE A) (EA)	END CAP (N) (TYPE TC) (EA)	END ANCHOR ASSEMBLY (TYPE SFT) (EA)	ALTERNATIVE FLARED TERMINAL SYSTEM (EA)	ALTERNATIVE IN-LINE TERMINAL SYSTEM (EA)	(N) BURIED POST END ANCHOR (EA)	(N) RAIL TENSIONING ASSEMBLY (EA)	CRASH CUSHION (TYPE CAT) (EA)	CRASH CUSHION (TYPE CAT) BACKUP (EA)	REMOVE ASPHALT CONCRETE DIKE (LF)	REMOVE CONCRETE (CUYD)	OBJECT MARKER (TYPE L-1) (CA) (EA)	RESET ROADSIDE SIGN (ONE POST) (EA)	RESET ROADSIDE SIGN (METAL POST) (EA)	RESET ROADSIDE SIGN (TWO POST) (EA)	RESET MILEPOST MARKER (EA)	RESET MARKER (EA)	GUARD RAILING LAYOUT TYPE	COMMENTS
70	R23.58	R23.59	N	9	75	50		25		2						32.6	1	1	0.6		1										1					12A	RECONSTRUCT TERMINAL SYSTEM
DOOLIN CR BR 10-190 PM R 23.59																																						
71	R23.60	R23.61	S	8	50	25			25	2						52.2	1	1	0.6		1		1							1					1	12B	SEE SHEET C-2
72	R23.60	R23.61	MED	5	75	25		12.5	37.5	3	75					111.6	1	1	0.6		1					1	1	1							1	12E	
73	R23.60	R23.61	S	8	50	25			25	2						52.2	1	1	0.6		1		1							1					2	12B	SEE SHEET C-2
AUSTIN CREEK BR 10-224 PM R 23.81																																						
75	R24.04	R24.06	MED	5	125	37.5		50	37.5	3	25	12.5				256.4						1				1	1	1							2	14A	SEE SHEET C-3 FOR LAYOUT
77	R24.06	R24.08	MED	5	125			87.5	37.5	3	25	50				256.4						1				1	1	1							2	14A	SEE SHEET C-3 FOR LAYOUT
GOBBI ST OC BR 10-191 PM R 24.06																																						
78	R24.29	R24.32	N	8	150	125		25		2						87	1	1	0.6		1														2	12B	RECONSTRUCT MBGR INCLUDES RECONSTRUCT TERMINAL SYSTEM
79	R24.29	R24.32	MED	5	125	25		62.5	37.5	3	62.5					75.8	1	1	0.6		1					1	1	1							2	12E	SEE SHEET C-4 FOR LAYOUT
OAK MANOR SCH POC 10-188 PM R 24.30																																						
80	R24.31	R24.32	MED	5	137.5	100			37.5	3		12.5				39.5				1		1														12DD	SEE SHEET C-4 FOR LAYOUT
81	R24.31	R24.33	S	8	137.5	137.5				2						47.8				1		1														12DD	
GIBSON CR BR 10-192 PM R 24.32																																						
82	R24.33	R24.35	MED	5	75	25		12.5	37.5	3	75					95.4	1	1	0.6		1					1	1	1							2	12E	
82A	R24.33	R24.34	MED	5						3		25				10.4						1															SEE SHEET C-4 FOR LAYOUT
83	R24.33	R24.35	S	8	62.5	37.5		25		2						60	1	1	0.6		1														2	12B	RECONSTRUCT TERMINAL SYSTEM
SHEET TOTALS:						612.5	0	300	275	33	262.5	100	0	0	0	1177.3	8		4.8	2	8	5	2	0	0	5	5	5	0	0	2	1	0	0	0	16		

(N) - NOT A SEPARATE PAY ITEM, FOR INFORMATION ONLY.

SUMMARY OF QUANTITIES

Q-5

STATE OF CALIFORNIA - DEPARTMENT OF TRANSPORTATION
03-DESIGN
Caltrans
S. WOODBECK
F. BARRIGA
THOMAS P. WOOD
FUNCTIONAL SUPERVISOR
CALCULATED-DESIGNED BY
CHECKED BY
REVISED BY
DATE REVISED

LAST REVISION 07-20-09
DATE PLOTTED => 01-OCT-2009
TIME PLOTTED => 14:36

Dist	COUNTY	ROUTE	POST MILES TOTAL PROJECT	SHEET No.	TOTAL SHEETS
01	Men	101	R0.1/R101.6	37	75

REGISTERED CIVIL ENGINEER 7-28-09 DATE

9-28-09
PLANS APPROVAL DATE

REGISTERED PROFESSIONAL ENGINEER F. BARRIGA No. 47047 Exp. 12/31/09 CIVIL STATE OF CALIFORNIA

THE STATE OF CALIFORNIA OR ITS OFFICERS OR AGENTS SHALL NOT BE RESPONSIBLE FOR THE ACCURACY OR COMPLETENESS OF SCANNED COPIES OF THIS PLAN SHEET.

NOTES:

1. REVERSE BRIDGE SIGN WITH BRIDGE SIGN AT LOCATION 91 WHEN RESETTING SIGN. RECONSTRUCT TERMINAL SYSTEM.
2. REVERSE BRIDGE SIGN WITH BRIDGE SIGN AT LOCATION 89 WHEN RESETTING SIGN. RECONSTRUCT TERMINAL SYSTEM.
3. EXISTING UTILITY FACILITIES HAVE NOT BEEN POSITIVELY LOCATED.

LOCATION #			DIRECTION	SHOULDER WIDTH	LENGTHS	RECONSTRUCT MBGR	RECONSTRUCT MBGR (7' POST)	SALVAGE MBGR	REMOVE MBGR	GUARD RAILING DELINEATOR	DOUBLE MBGR (WOOD POST)	MBGR (WOOD POST)	MBGR (7' WOOD POST)	MBGR (8' POST)	(N) SHOP BENT RAILS NEEDED	WEED CONTROL MAT (FIBER)	TRANSITION RAILING (TYPE WB)	EXISTING BRIDGE BARRIER RAIL TYPE	MINOR CONCRETE (MINOR STRUCTURE	END CAP (TYPE A)	END CAP (N) (TYPE TC)	END ANCHOR ASSEMBLY (TYPE SFT)	ALTERNATIVE FLARED TERMINAL SYSTEM	ALTERNATIVE IN-LINE TERMINAL SYSTEM	(N) BURIED POST END ANCHOR	(N) RAIL TENSIONING ASSEMBLY	CRASH CUSHION (TYPE CAT)	CRASH CUSHION (TYPE CAT) BACKUP	REMOVE ASPHALT CONCRETE DIKE	REMOVE CONCRETE	OBJECT MARKER (TYPE L-1) (CA)	RESET ROADSIDE SIGN (ONE POST)	RESET ROADSIDE SIGN (METAL POST)	RESET ROADSIDE SIGN (TWO POST)	RESET MILEPOST MARKER	RESET MARKER	GUARD RAILING LAYOUT TYPE	COMMENTS
	Beg PM	END PM		(FT)	(LF)	(LF)	(LF)	(LF)	(LF)	(EA)	(LF)	(LF)	(LF)	(LF)	(LF)	(SQYD)	(EA)		(CUYD)	(EA)	(EA)	(EA)	(EA)	(EA)		(EA)	(EA)	(EA)	(LF)	(CUYD)	(EA)	(EA)	(EA)	(EA)	(EA)			
84	R24.51	R24.52	N	8	62.5	37.5			28	2						45.4	1				1													1	1	12B	RECONSTRUCT TERMINAL SYSTEM
85	R24.52	R24.54	MED	5	112.5	50		37.5	37.5	3	25					256.4						1				1	1	1							1	14A	
E PERKINS ST OC 10-193 PM R 24.53																																						
86	R24.52	R24.54	MED	5	112.5	50		37.5	37.5	3	25					256.4						1				1	1	1							1	14A	
87	R24.54	R24.55	S	8	62.5	37.5		25		2							1				1													1	1	12B	
88	R24.99	R25.01	MED	5	75	25		12.5	37.5	3	75					108.4	1	1	0.6		1					1	1	1							2	12E	
89	R25.00	R25.01	N	9	62.5	37.5		25		2						57.9	1	1	0.6		1										1			1	1	12B	SEE NOTE 1
ORR CR BR 10-194 PM R 25.01																																						
90	R25.02	R25.04	MED	5	75	25		12.5	37.5	3	75					108.4	1	1	0.6		1					1	1	1							2	12E	
91	R25.02	R25.03	S	8	62.5	37.5		25		2						57.9	1	1	0.6		1										1				1	12B	SEE NOTE 2
92	R25.69	R25.72	MED	5	75	25		12.5	37.5	3	75					108.4	1	1	0.6		1					1	1	1							2	12E	
93	R25.71	R25.72	N	9	62.5	37.5		25		2						57.9	1	1	0.6		1													1	1	12B	RECONSTRUCT TERMINAL SYSTEM
PRESSWOOD OH BR 10-195 PM R 25.72																																						
94	R25.80	R25.81	S	8	62.5	25		37.5		2						53.8	1	1	0.6		1													1	1	12B	RECONSTRUCT TERMINAL SYSTEM
95	R25.80	R25.83	MED	5	75	25		50		3	62.5					101.9	1	1	0.6		1					1	1	1							2	12E	
96	R26.02	R26.03	NB OFF	<4	225	175				4												1														11A	TERMINAL SYSTEM DOES NOT NEED RECONSTRUCTION.
97	R26.13	R26.15	S	8	62.5	25			37.5	2						20.8				1		1														12DD	
98	R26.14	R26.16	MED	5	75	25			50	3	75					108.4	1	1	0.6		1					1	1	1							2	12E	
99	R26.15	R26.16	N	8	112.5	87.5		25		2						76.6	1	2	2.5		1														1	12B	RECONSTRUCT MBGR INCLUDES RECONSTRUCT TERMINAL SYSTEM
SHEET TOTALS:						725	0	325	303	41	412.5	0	0	0	0	1418.6	12		7.9	1	12	4	0	0	0	7	7	7	0	0	0	2	0	0	5	19		

(N) - NOT A SEPARATE PAY ITEM, FOR INFORMATION ONLY.

SUMMARY OF QUANTITIES

Q-6

STATE OF CALIFORNIA - DEPARTMENT OF TRANSPORTATION
03-DESIGN
Caltrans

FUNCTIONAL SUPERVISOR: THOMAS P. WOOD
CALCULATED-DESIGNED BY: S. WOODBECK
CHECKED BY: F. BARRIGA
REVISED BY
DATE REVISED

LAST REVISION 07-20-09
DATE PLOTTED => 30-SEP-2009
TIME PLOTTED => 15:17

Dist	COUNTY	ROUTE	POST MILES TOTAL PROJECT	SHEET No.	TOTAL SHEETS
01	Men	101	R0.1/R101.6	38	75

REGISTERED CIVIL ENGINEER 7-28-09 DATE

9-28-09
PLANS APPROVAL DATE

REGISTERED PROFESSIONAL ENGINEER F. BARRIGA No. 47047 Exp. 12/31/09 CIVIL STATE OF CALIFORNIA

THE STATE OF CALIFORNIA OR ITS OFFICERS OR AGENTS SHALL NOT BE RESPONSIBLE FOR THE ACCURACY OR COMPLETENESS OF SCANNED COPIES OF THIS PLAN SHEET.

NOTES:

1. Exist SPRINKLER LINE IS 1.5' BACK OF MBGR POSTS AND ATTACHED TO BRIDGE SIGN. PROTECT IN PLACE.
2. EXISTING UTILITY FACILITIES HAVE NOT BEEN POSITIVELY LOCATED.
3. RELOCATE OVERSIDE DRAIN TO END OF NEW ANCHOR BLOCK. RECONSTRUCT TERMINAL SYSTEM.

LOCATION #	Beg PM	END PM	DIRECTION	SHOULDER WIDTH (FT)	LENGTHS (LF)	RECONSTRUCT MBGR (LF)	RECONSTRUCT MBGR (7' POST) (LF)	SALVAGE MBGR (LF)	REMOVE MBGR (LF)	GUARD RAILING DELINEATOR (EA)	DOUBLE MBGR (WOOD POST) (LF)	MBGR (WOOD POST) (LF)	MBGR (7' WOOD POST) (LF)	MBGR (8' POST) (LF)	(N) SHOP BENT RAILS NEEDED (LF)	WEED CONTROL MAT (FIBER) (SQYD)	TRANSITION RAILING (TYPE WB) (EA)	EXISTING BRIDGE BARRIER RAIL TYPE	MINOR CONCRETE (MINOR STRUCTURE) (CUYD)	END CAP (TYPE A) (EA)	END CAP (N) (TYPE TC) (EA)	END ANCHOR ASSEMBLY (TYPE SFT) (EA)	ALTERNATIVE FLARED TERMINAL SYSTEM (EA)	ALTERNATIVE IN-LINE TERMINAL SYSTEM (EA)	(N) BURIED POST END ANCHOR (EA)	(N) RAIL TENSIONING ASSEMBLY (EA)	CRASH CUSHION (TYPE CAT) (EA)	CRASH CUSHION (TYPE CAT) BACKUP (EA)	REMOVE ASPHALT CONCRETE DIKE (LF)	REMOVE CONCRETE (CUYD)	OBJECT MARKER (TYPE L-1) (CA) (EA)	RESET ROADSIDE SIGN (ONE POST) (EA)	RESET ROADSIDE SIGN (METAL POST) (EA)	RESET ROADSIDE SIGN (TWO POST) (EA)	RESET MILEPOST MARKER (EA)	RESET MARKER (EA)	GUARD RAILING LAYOUT TYPE	COMMENTS
N STATE ST UC BR 10-196 PM R 26.16																																						
100	R26.21	R26.23	MED	5	75	25		12.5	37.5	3	62.5					101.9	1	1	0.6		1					1	1	1								2	12E	SEE NOTE 1
101	R26.21	R26.30	S	8	575	550		25		7						228.5	1	1	0.6		1											1			1	5	12B	RECONSTRUCT MBGR INCLUDES RECONSTRUCT TERMINAL SYSTEM
R 26.420 EQUATES TO 26.24 E																																						
102	R26.36	R26.40	MED	5	237.5	62.5		137.5	37.5	3	25					256.4						1				1	1	1								2	14A	
103	R26.35	R26.37	S	8	187.5	187.5				3		112.5				99.8						1													1	3	16C	NESTED BEAM DETAIL NEEDED: CASE 1 (SEE SHEET C-8)
104	R26.36	R26.40	MED	5	237.5	62.5		137.5	37.5	3	25					256.4						1				1	1	1								2	14A	
MASONITE RD OC 10 197 PM 26.37																																						
ORR SPRINGS RD OC 10 198 PM 26.39																																						
ACKERMAN CR 10 199 PM 26.66																																						
107	26.69	26.71	MED	5	75	25		12.5	37.5	3	75					108.4	1	1	0.6		1					1	1	1								2	12E	
107A	26.69	26.71	MED	5	0					3		25				10.4				1		1															12DD	
108	26.69	26.71	S	8	62.5	37.5		25		2						57.9	1	1	0.6		1											1			1		12B	SEE NOTE 3
109	26.99	27.01	N	8	75	50		25		2						54.8	1	1	0.6		1											1					12A	RECONSTRUCT TERMINAL SYSTEM
110	26.99	27.01	MED	5	75				75	3	62.5	25				101.9	1	1	0.6		1					1	1	1								2	12E	
HENSLEY CR UC 10 200 PM 27.00																																						
111	27.04	27.06	S	8	75	50		25		2						62.6	1	1	0.6		1											1			1	1	12B	RECONSTRUCT TERMINAL SYSTEM
112	27.04	27.06	MED	5	75	25		12.5	37.5	3	75					108.4	1	1	0.6		1					1	1	1							1	1	12E	
113	27.39	27.41	N	8	62.5	37.5			25	2						57.9	1	1	0.6		1											1			1	1	12B	RECONSTRUCT TERMINAL SYSTEM
114	27.39	27.41	MED	5	75	25			48	3	62.5					101.9	1	1	0.6		1					1	1	1								2	12E	
SHEET TOTALS:						1137.5	0	412.5	335.5	42	387.5	162.5	0	0	0	1607.2	10		6.0	1	10	4	0	0	0	7	7	7	0	0	0	5	0	0	6	23		

(N) - NOT A SEPARATE PAY ITEM, FOR INFORMATION ONLY.

SUMMARY OF QUANTITIES

Q-7

STATE OF CALIFORNIA - DEPARTMENT OF TRANSPORTATION
Caltrans 03-DESIGN

FUNCTIONAL SUPERVISOR: THOMAS P. WOOD
CALCULATED-DESIGNED BY: S. WOODBECK
CHECKED BY: F. BARRIGA
REVISED BY
DATE REVISED

LAST REVISION 07-21-09
DATE PLOTTED => 30-SEP-2009
TIME PLOTTED => 15:17

Dist	COUNTY	ROUTE	POST MILES TOTAL PROJECT	SHEET No.	TOTAL SHEETS
01	Men	101	R0.1/R101.6	39	75

REGISTERED CIVIL ENGINEER 7-28-09 DATE

9-28-09
PLANS APPROVAL DATE

REGISTERED PROFESSIONAL ENGINEER F. BARRIGA No. 47047 Exp. 12/31/09 CIVIL STATE OF CALIFORNIA

THE STATE OF CALIFORNIA OR ITS OFFICERS OR AGENTS SHALL NOT BE RESPONSIBLE FOR THE ACCURACY OR COMPLETENESS OF SCANNED COPIES OF THIS PLAN SHEET.

NOTES:

1. USING STANDARD PLAN A77J3, PLACE UNIFORM 5' HIGH BLOCK BETWEEN COLUMNS. USE STANDARD PLAN A77J3 TO APPROACH COLUMN.
2. EXISTING UTILITY FACILITIES HAVE NOT BEEN POSITIVELY LOCATED.
3. RELOCATE OVERSIDE DRAIN TO END OF NEW ANCHOR BLOCK. RECONSTRUCT TERMINAL SYSTEM.

LOCATION #	Beg PM	END PM	DIRECTION	SHOULDER WIDTH	LENGTHS	RECONSTRUCT MBGR	RECONSTRUCT MBGR (7' POST)	SALVAGE MBGR	REMOVE MBGR	GUARD RAILING DELINEATOR	DOUBLE MBGR (WOOD POST)	MBGR (WOOD POST)	MBGR (7' WOOD POST)	MBGR (8' POST)	(N) SHOP BENT RAILS NEEDED	WEED CONTROL MAT (FIBER)	TRANSITION RAILING (TYPE WB)	EXISTING BRIDGE BARRIER RAIL TYPE	MINOR CONCRETE (MINOR STRUCTURE	END CAP (TYPE A)	END CAP (N) (TYPE TC)	END ANCHOR ASSEMBLY (TYPE SFT)	ALTERNATIVE FLARED TERMINAL SYSTEM	ALTERNATIVE IN-LINE TERMINAL SYSTEM	(N) BURIED POST END ANCHOR	(N) RAIL TENSIONING ASSEMBLY	CRASH CUSHION (TYPE CAT)	CRASH CUSHION (TYPE CAT) BACKUP	REMOVE ASPHALT CONCRETE DIKE	REMOVE CONCRETE	OBJECT MARKER (TYPE L-1) (CA)	RESET ROADSIDE SIGN (ONE POST)	RESET ROADSIDE SIGN (METAL POST)	RESET ROADSIDE SIGN (TWO POST)	RESET MILEPOST MARKER	RESET MARKER	GUARD RAILING LAYOUT TYPE	COMMENTS
				(FT)	(LF)	(LF)	(LF)	(LF)	(LF)	(EA)	(LF)	(LF)	(LF)	(LF)	(LF)	(SQYD)	(EA)		(CUYD)	(EA)	(EA)	(EA)	(EA)	(EA)	(EA)	(EA)	(EA)	(EA)	(LF)	(CUYD)	(EA)	(EA)	(EA)	(EA)	(EA)	(EA)		
LAKE MEN. DR UC 10-201 PM 27.41																																						
115	27.43	27.45	MED	5	75	25		12.5	37.5	3	62.5					101.9	1	1	0.6		1					1	1	1							2	12E	
116	27.43	27.45	S	8	62.5	37.5			25	2						57.9	1	1	0.6		1										1			1	1	12B	RECONSTRUCT TERMINAL SYSTEM
117	27.91	27.92	N	8	75	75				2						25									1									1		16C	CONFORM TO Rev Std PLAN RSPA77C4-"DIKE POSITIONING."
118	27.91	27.93	MED	5	112.5	37.5			75	3	25					256.4						1				1	1	1							1	14A	
119	27.91	27.93	MED	5	112.5	37.5			75	3	25					256.4						1				1	1	1							1	14A	
120	27.91	27.93	S	8	100	50			50	2						30.5	1		6.5		1				1									1	2	12C	SEE NOTE 1
PARDUCCI RD OC 10 202 PM 27.92																																						
121	28.24	28.26	MED	5	75				75	3	75	25				108.4	1	1	0.6		1					1	1	1							2	12E	
122	28.25	28.27	N	8	62.5	37.5		25		2						57.9	1	1	0.6		1										1			1	1	12B	RECONSTRUCT TERMINAL SYSTEM
YORK CR 10 203 PM 28.26																																						
123	28.29	28.30	S	8	62.5	37.5		25		2						60.0	1	1	0.6		1										1			1	1	12B	RECONSTRUCT TERMINAL SYSTEM
124	28.29	28.31	MED	5	75				75	3	75	25				108.4	1	1	0.6		1					1	1	1							2	12E	Exist DD IN MEDIAN. PROTECT IN PLACE.
125	28.56	28.58	MED	5	75				75	3	75	25				108.4	1	1	0.6		1					1	1	1							2	12E	Exist DD IN MEDIAN. PROTECT IN PLACE.
126	28.57	28.58	N	8	62.5	37.5			25	2						57.9	1	1	0.6		1										1			1	1	12B	RECONSTRUCT TERMINAL SYSTEM
POMO UC 10 105 PM 28.58																																						
127	28.60	28.61	S	8	62.5	37.5		25		2						57.9	1	1	0.6		1										1			1	1	12B	SEE NOTE 3
128	28.60	28.62	MED	5	75				75	3	75	25				108.4	1	1	0.6		1					1	1	1							2	12E	
129	29.80	29.82	N	8	75				37.5	2		37.5				44.0							1								1				1	16B	
130	29.83	29.85	MED	5	87.5				87.5	3	25	37.5				256.4						1				1	1	1							1	14A	SEE SHEET C-6
SHEET TOTALS:						412.5	0	87.5	712.5	40	437.5	175	0	0	0	1695.8	11		12.5	0	11	3	1	0	2	8	8	8	0	0	1	5	0	0	7	21		

(N) - NOT A SEPARATE PAY ITEM, FOR INFORMATION ONLY.

SUMMARY OF QUANTITIES

Q-8

REVISED BY | DATE REVISED

S. WOODBECK | F. BARRIGA

CALCULATED-DESIGNED BY | CHECKED BY

FUNCTIONAL SUPERVISOR: THOMAS P. WOOD

STATE OF CALIFORNIA - DEPARTMENT OF TRANSPORTATION

Caltrans 03-DESIGN

LAST REVISION 07-21-09 | DATE PLOTTED => 30-SEP-2009 | TIME PLOTTED => 15:17

Dist	COUNTY	ROUTE	POST MILES TOTAL PROJECT	SHEET No.	TOTAL SHEETS
01	Men	101	R0.1/R101.6	40	75

REGISTERED CIVIL ENGINEER 7-28-09 DATE

9-28-09
PLANS APPROVAL DATE

REGISTERED PROFESSIONAL ENGINEER F. BARRIGA No. 47047 Exp. 12/31/09 CIVIL STATE OF CALIFORNIA

THE STATE OF CALIFORNIA OR ITS OFFICERS OR AGENTS SHALL NOT BE RESPONSIBLE FOR THE ACCURACY OR COMPLETENESS OF SCANNED COPIES OF THIS PLAN SHEET.

NOTES:

1. EXTEND Exist Conc BLOCK TO FINAL HEIGHT OF 2'-8" (SEE SHEET C-7). RECONSTRUCT TERMINAL SYSTEM.
2. EXISTING UTILITY FACILITIES HAVE NOT BEEN POSITIVELY LOCATED.

LOCATION #	Beg PM	END PM	DIRECTION	SHOULDER WIDTH	LENGTHS	RECONSTRUCT MBGR	RECONSTRUCT MBGR (7' POST)	SALVAGE MBGR	REMOVE MBGR	GUARD RAILING DELINEATOR	DOUBLE MBGR (WOOD POST)	MBGR (WOOD POST)	MBGR (7' WOOD POST)	MBGR (8' POST)	(N) SHOP BENT RAILS NEEDED	WEED CONTROL MAT (FIBER)	TRANSITION RAILING (TYPE WB)	EXISTING BRIDGE BARRIER RAIL TYPE	MINOR CONCRETE (MINOR STRUCTURE	END CAP (TYPE A)	END CAP (N) (TYPE TC)	END ANCHOR ASSEMBLY (TYPE SFT)	ALTERNATIVE FLARED TERMINAL SYSTEM	ALTERNATIVE IN-LINE TERMINAL SYSTEM	(N) BURIED POST END ANCHOR	(N) RAIL TENSIONING ASSEMBLY	CRASH CUSHION (TYPE CAT)	CRASH CUSHION (TYPE CAT) BACKUP	REMOVE ASPHALT CONCRETE DIKE	REMOVE CONCRETE	OBJECT MARKER (TYPE L-1) (CA)	RESET ROADSIDE SIGN (ONE POST)	RESET ROADSIDE SIGN (METAL POST)	RESET ROADSIDE SIGN (TWO POST)	RESET MILEPOST MARKER	RESET MARKER	GUARD RAILING LAYOUT TYPE	COMMENTS
				(FT)	(LF)	(LF)	(LF)	(LF)	(LF)	(EA)	(LF)	(LF)	(LF)	(LF)	(LF)	(SQYD)	(EA)		(CUYD)	(EA)	(EA)	(EA)	(EA)	(EA)	(EA)	(EA)	(EA)	(EA)	(LF)	(CUYD)	(EA)	(EA)	(EA)	(EA)	(EA)	(EA)		
131	29.83	29.85	MED	5	87.5				87.5	3	25	37.5				256.4						1				1	1	1								1	14A	SEE SHEET C-6
132	29.83	29.84	N	8	62.5	37.5		25		2						45.4	1		0.7		1														1	1	12B	SEE NOTE 1
133	29.83	29.84	S	8	75	50		25		2						38.1	1		0.7		1														1		12A	SEE NOTE 1
CENTRAL AVE OC 10 207 PM 29.84																																						
134	30.42	30.43	MED	5	75				75	3	50	25				95.4	1	1	0.6		1					1	1	1								2	12E	
135	30.42	30.43	N	8	62.5	37.5		25		2						57.9	1	1	0.6		1											1			1	1	12B	
MOORE AVE UC 10-204 PM 30.43																																						
136	30.44	30.45	S	8	100	75		25		2						63.1	1	2	2.5		1											1			1		12A	
137	30.44	30.46	MED	5	75				75	3	112.5	25				127.8	1	1	0.6		1					1	1	1								2	12E	
138	30.44	30.45	Co Rd	>4	62.5			62.5		2						76.3	2	27	1.5		2		2							0.2	2					1	12B	
139	30.45	30.46	Co Rd	>4	62.5			62.5		2						90.9	2	27	1.5		2		2							0.2	2					1	12B	
SB ON FR WB RTE 20 PM 30.52																																						
SB OFF TO EB RTE 20 PM 30.71																																						
141	30.80	30.82	MED	5	75	25		12.5	37.5	3	100					121.4	1	1	0.6		1					1	1	1								2	12E	
142	30.81	30.82	N	8	62.5	37.5			25	2						57.9	1	1	0.6		1														1	1	12B	
ST 101 20 SEP 10 205 PM 30.82																																						
143	30.85	30.86	S	8	62.5	37.5		25		2						57.9	1	1	0.6		1														1	2	12B	
144	30.85	30.87	MED	5	75				75	3	100	25				121.4	1	1	0.6		1					1	1	1								2	12E	
NB ON FR WB RTE 20 PM 30.99																																						
145	R31.53	R31.55	S	8	100	100				2						33.3									1												16C	CMS WIRING RUNNING NEAR BACK OF MBGR. PROTECT IN PLACE.
SHEET TOTALS:						400	0	262.5	375	33	387.5	112.5	0	0	0	1243.2	14		11.1	0	14	1	4	0	1	5	5	5	0	0.4	4	2	0	0	6	16		

(N) - NOT A SEPARATE PAY ITEM, FOR INFORMATION ONLY.

SUMMARY OF QUANTITIES

Q-9

STATE OF CALIFORNIA - DEPARTMENT OF TRANSPORTATION
Caltrans
03-DESIGN

FUNCTIONAL SUPERVISOR: THOMAS P. WOOD
CALCULATED-DESIGNED BY: S. WOODBECK
CHECKED BY: F. BARRIGA
REVISED BY
DATE REVISED

LAST REVISION 07-21-09
DATE PLOTTED => 30-SEP-2009
TIME PLOTTED => 15:17

Dist	COUNTY	ROUTE	POST MILES TOTAL PROJECT	SHEET No.	TOTAL SHEETS
01	Men	101	R0.1/R101.6	41	75

REGISTERED CIVIL ENGINEER 7-28-09 DATE

9-28-09
PLANS APPROVAL DATE

REGISTERED PROFESSIONAL ENGINEER F. BARRIGA No. 47047 Exp. 12/31/09 CIVIL STATE OF CALIFORNIA

THE STATE OF CALIFORNIA OR ITS OFFICERS OR AGENTS SHALL NOT BE RESPONSIBLE FOR THE ACCURACY OR COMPLETENESS OF SCANNED COPIES OF THIS PLAN SHEET.

NOTES:

1. EXISTING UTILITY FACILITIES HAVE NOT BEEN POSITIVELY LOCATED.
2. EXISTING TERMINAL SECTION DOES NOT NEED TO BE RECONSTRUCTED. THREE POLES ARE LESS THAN 4' FROM FACE OF MBGR AND WILL NEED STRENGTHENED RAILING SECTIONS. ALSO, PROTECT IN PLACE THE LIGHTING/ELECTRICAL WIRING THAT IS NEAR MBGR.
3. RECONSTRUCT FROM SOUTH END. BRING POSTS AND BLOCKS FLUSH WITH EACH OTHER.

LOCATION #	Beg PM	END PM	DIRECTION	SHOULDER WIDTH	LENGTHS	RECONSTRUCT MBGR	RECONSTRUCT MBGR (7' POST)	SALVAGE MBGR	REMOVE MBGR	GUARD RAILING DELINEATOR	DOUBLE MBGR (WOOD POST)	MBGR (WOOD POST)	MBGR (7' WOOD POST)	MBGR (8' POST)	(N) SHOP BENT RAILS NEEDED	WEED CONTROL MAT (FIBER)	TRANSITION RAILING (TYPE WB)	EXISTING BRIDGE BARRIER RAIL TYPE	MINOR CONCRETE (MINOR STRUCTURE	END CAP (TYPE A)	END CAP (N) (TYPE TC)	END ANCHOR ASSEMBLY (TYPE SFT)	ALTERNATIVE FLARED TERMINAL SYSTEM	ALTERNATIVE IN-LINE TERMINAL SYSTEM	(N) BURIED POST END ANCHOR	(N) RAIL TENSIONING ASSEMBLY	CRASH CUSHION (TYPE CAT)	CRASH CUSHION (TYPE CAT) BACKUP	REMOVE ASPHALT CONCRETE DIKE	REMOVE CONCRETE	OBJECT MARKER (TYPE L-1) (CA)	RESET ROADSIDE SIGN (ONE POST)	RESET ROADSIDE SIGN (METAL POST)	RESET ROADSIDE SIGN (TWO POST)	RESET MILEPOST MARKER	RESET MARKER	GUARD RAILING LAYOUT TYPE	COMMENTS
				(FT)	(LF)	(LF)	(LF)	(LF)	(LF)	(EA)	(LF)	(LF)	(LF)	(LF)	(LF)	(SQYD)	(EA)		(CUYD)	(EA)	(EA)	(EA)	(EA)	(EA)	(EA)	(EA)	(EA)	(EA)	(LF)	(CUYD)	(EA)	(EA)	(EA)	(EA)	(EA)	(EA)		
146	R31.87	R31.88	N	9	62.5			62.5		2						45.4	1	25	0.7		1		1								1	1					12B	
FORSYTH CR BR 10-269 PM R 31.88																																						
147	R31.92	R31.93	S	8	62.5	37.5		25		2						45.4	1	25	0.7		1											1			1	12A	RELOCATE OVERSIDE DRAIN TO FALL BETWEEN POSTS.
148	R32.62	R32.62	E	8	62.5			12.5	37.5	2						45.4	1		2.3		1		1								1					12B	LIGHTING WIRING NEAR MBGR. PROTECT IN PLACE.
149	R32.62	R32.62	E	8	62.5			12.5	37.5	2						45.4	1		2.3		1		1								1	1			2	12BB	LIGHTING WIRING NEAR MBGR. PROTECT IN PLACE.
WEST RD OC 10-270 PM R 32.63																																						
150	R32.63	R32.63	W	8	62.5			25	37.5	2						38.1	1	26	2.3		1			1								1					12A	LIGHTING WIRING NEAR MBGR. PROTECT IN PLACE.
151	R32.63	R32.63	W	8	62.5			25	37.5	2						45.4	1	26	2.3		1		1								1					12BB	
NB ON FR WEST RD PM R 32.81																																						
REEVES CANYON ROAD - LT PM R 34.52																																						
152	R34.52	R35.11	S	8	2450	2060				24						705.5									1												11G	SEE NOTE 3
154	35.63	35.64	N	8	62.5				62.5																													
155	36.73	36.80	S	8	337.5	337.5			37.5	5						145.9						1	1								1						11B	
156	37.21	37.36	S	4	662.5	612.5		12.5	37.5	2						237.5							1		1						1						11G	
RIDGWOOD RANCH RD PM 39.42																																						
157	40.88	40.90	N	4	100	62.5			37.5	2		37.5				64.8						1	1								1				1	16B	
BLACK BART DR PM 40.88																																						
158	41.13	41.22	S	4	425	425				6						162.6																				16B	SEE NOTE 2
SHEET TOTALS:						3535	0	175	325	51		37.5	0	0	0	1581.4	6		10.6	0	6	2	7	1	2	0	0	0	0	0	7	4	0	0	0	4		

(N) - NOT A SEPARATE PAY ITEM, FOR INFORMATION ONLY.

SUMMARY OF QUANTITIES

Q-10

STATE OF CALIFORNIA - DEPARTMENT OF TRANSPORTATION
Caltrans 03-DESIGN

S. WOODBECK | F. BARRIGA | THOMAS P. WOOD | CALCULATED-DESIGNED BY | CHECKED BY | FUNCTIONAL SUPERVISOR | REVISED BY | DATE REVISED

LAST REVISION 07-21-09 | DATE PLOTTED => 30-SEP-2009 | TIME PLOTTED => 15:17

Dist	COUNTY	ROUTE	POST MILES TOTAL PROJECT	SHEET No.	TOTAL SHEETS
01	Men	101	R0.1/R101.6	42	75

REGISTERED CIVIL ENGINEER 7-28-09 DATE

9-28-09
PLANS APPROVAL DATE

REGISTERED PROFESSIONAL ENGINEER F. BARRIGA No. 47047 Exp. 12/31/09 CIVIL STATE OF CALIFORNIA

THE STATE OF CALIFORNIA OR ITS OFFICERS OR AGENTS SHALL NOT BE RESPONSIBLE FOR THE ACCURACY OR COMPLETENESS OF SCANNED COPIES OF THIS PLAN SHEET.

NOTES:

1. EXISTING UTILITY FACILITIES HAVE NOT BEEN POSITIVELY LOCATED.
2. FACE OF MBGR TO BE 4' FROM POLE. NESTED BEAM DETAIL NEEDED: CASE 1 (SEE SHEET C-8).
3. EXTEND SOUTH END OF MBGR BY 75' AT 4' Min FROM SLOPE EDGE. CONSTRUCT FLARE FOLLOWING SLOPE EDGE LINE.

LOCATION #	Beg PM	END PM	DIRECTION	SHOULDER WIDTH (FT)	LENGTHS (LF)	RECONSTRUCT MBGR (LF)	RECONSTRUCT MBGR (7' POST) (LF)	SALVAGE MBGR (LF)	REMOVE MBGR (LF)	GUARD RAILING DELINEATOR (EA)	DOUBLE MBGR (WOOD POST) (LF)	MBGR (WOOD POST) (LF)	MBGR (7' WOOD POST) (LF)	MBGR (8' POST) (LF)	(N) SHOP BENT RAILS NEEDED (LF)	WEED CONTROL MAT (FIBER) (SQYD)	TRANSITION RAILING (TYPE WB) (EA)	EXISTING BRIDGE BARRIER RAIL TYPE	MINOR CONCRETE (MINOR STRUCTURE) (CUYD)	END CAP (TYPE A) (EA)	END CAP (N) (TYPE TC) (EA)	END ANCHOR ASSEMBLY (TYPE SFT) (EA)	ALTERNATIVE FLARED TERMINAL SYSTEM (EA)	ALTERNATIVE IN-LINE TERMINAL SYSTEM (EA)	(N) BURIED POST END ANCHOR (EA)	(N) RAIL TENSIONING ASSEMBLY (EA)	CRASH CUSHION (TYPE CAT) (EA)	CRASH CUSHION (TYPE CAT) BACKUP (EA)	REMOVE ASPHALT CONCRETE DIKE (LF)	REMOVE CONCRETE (CUYD)	OBJECT MARKER (TYPE L-1) (CA) (EA)	RESET ROADSIDE SIGN (ONE POST) (FT)	RESET ROADSIDE SIGN (METAL POST) (EA)	RESET ROADSIDE SIGN (TWO POST) (EA)	RESET MILEPOST MARKER (EA)	RESET MARKER (EA)	GUARD RAILING LAYOUT TYPE (EA)	COMMENTS
TRUCK SCALES - LT PM 41.17																																						
WATERPLANT/GRIDER RD PM 42.37																																						
164	R42.61	R42.98	N	4	887.5	837.5			50	11						278.7						1			1										3	11C	ELIMINATE NORTH 50' AND REPLACE WITH SFT.
165	R43.49	T43.61	N	8	650	575			75	8						256.5							2								2		1	1		11E	REMOVE EXISTING TERMINAL SECTIONS.
HAEHL OH BR 10-125 PM T 43																																						
T 44.216 EQUATES TO 44.131E																																						
JCT 20 W PM 46.36																																						
170	48.50	48.52	N	4	150	75				2						63.1																			1	16E	PLACE WEED CONTROL MAT WITHIN MBGR RECONSTRUCTION LIMITS.
ENT TO LITTLE LAKE PM 48.63																																						
171	48.97	48.99	N	4	75				75	2		37.5				50.3						1	1								1					16B	
GX-N WILLITS RR XING PM 49.01																																						
172	49.04	49.05	S	4	75				75	2		37.5				50.3						1	1								1					16B	SEE NOTE 2
ENTRANCE TO GEORGIA PACIFIC PM 49.68																																						
173	50.65	50.66	N	8	62.5				62.5	2						45.4	1	25	2.3		1		1								1					12B	
174	50.65	50.66	S	8	62.5				62.5	2		62.5				22.9				1		1														12DD	
OUTLET CREEK 10-16 PM 50.66																																						
175	50.73	50.79	N	4	250	187.5			62.5	3						107.8	1	25	2.3		1		1								1					12BB	
176	50.73	50.75	S	4	62.5			25	37.5	2						38.1	1	25	2.3		1			1								1				12A	
177	51.02	51.08	S	4	300	262.5			37.5	5		75				124.8						1			1											11F	SEE NOTE 3
178	51.16	51.21	N	4	250	212.5			37.5	4						114.7							1		1						1				2	11G	MAINTAIN ACCESS TO ROAD.
SHEET TOTALS:						2150	0	25	575	43	0	212.5	0	0	0	1152.6	3		6.9	1	3	5	7	1	3	0	0	0	0	0	7	1	0	1	1	6		

(N) - NOT A SEPARATE PAY ITEM, FOR INFORMATION ONLY.

SUMMARY OF QUANTITIES

Q-11

STATE OF CALIFORNIA - DEPARTMENT OF TRANSPORTATION
Caltrans
03-DESIGN

FUNCTIONAL SUPERVISOR: THOMAS P. WOOD
CALCULATED-DESIGNED BY: F. BARRIGA
CHECKED BY: S. WOODBECK
REVISED BY
DATE REVISED

LAST REVISION 07-21-09
DATE PLOTTED => 30-SEP-2009
TIME PLOTTED => 15:18

Dist	COUNTY	ROUTE	POST MILES TOTAL PROJECT	SHEET No.	TOTAL SHEETS
01	Men	101	R0.1/R101.6	43	75

REGISTERED CIVIL ENGINEER 7-28-09 DATE

9-28-09
PLANS APPROVAL DATE

REGISTERED PROFESSIONAL ENGINEER F. BARRIGA No. 47047 Exp. 12/31/09 CIVIL STATE OF CALIFORNIA

THE STATE OF CALIFORNIA OR ITS OFFICERS OR AGENTS SHALL NOT BE RESPONSIBLE FOR THE ACCURACY OR COMPLETENESS OF SCANNED COPIES OF THIS PLAN SHEET.

NOTES:

1. USE NESTED MBGR DETAIL AT CULVERT (PM 51.42): CASE 1 (SEE SHEET C-8).
2. REMOVE Exist SHOP BENT ELEMENTS AT NORTH END AND REPLACE THEM WITH 12.5′ STRAIGHT, FOLLOWED BY CONVEX SHOP BENT 12.5′ WITH RADIUS=10′, THEN FOLLOW WITH 12.5′ STRAIGHT.
3. MAINTAIN Exist POST SPACING BY COUNT STATION TO AVOID DAMAGING WIRING.
4. EXISTING UTILITY FACILITIES HAVE NOT BEEN POSITIVELY LOCATED.
5. REMOVE 37.5′MBGR FROM SOUTH END. PLACE 37.5′MBGR USING NESTED DETAIL: CASE 1 (SEE SHEET C-8). THEN PLACE AFTS.
6. REMOVE FIRST 25′MBGR FROM LEADER END; KEEP AND RECONSTRUCT THE NEXT 12.5′SHOP BENT RAIL; REMOVE THE NEXT 12.5′MBGR, AND REPLACE THE REMOVED MBGR WITH AFTS.

LOCATION #	Beg PM	END PM	DIRECTION	SHOULDER WIDTH	LENGTHS	RECONSTRUCT MBGR	RECONSTRUCT MBGR (7′POST)	SALVAGE MBGR	REMOVE MBGR	GUARD RAILING DELINEATOR	DOUBLE MBGR (WOOD POST)	MBGR (WOOD POST)	MBGR (7′WOOD POST)	MBGR (8′POST)	(N) SHOP BENT RAILS NEEDED	WEED CONTROL MAT (FIBER)	TRANSITION RAILING (TYPE WB)	EXISTING BRIDGE BARRIER RAIL TYPE	MINOR CONCRETE (MINOR STRUCTURE	END CAP (TYPE A)	END CAP (N) (TYPE TC)	END ANCHOR ASSEMBLY (TYPE SFT)	ALTERNATIVE FLARED TERMINAL SYSTEM	ALTERNATIVE IN-LINE TERMINAL SYSTEM	(N) BURIED POST END ANCHOR	(N) RAIL TENSIONING ASSEMBLY	CRASH CUSHION (TYPE CAT)	CRASH CUSHION (TYPE CAT) BACKUP	REMOVE ASPHALT CONCRETE DIKE	REMOVE CONCRETE	OBJECT MARKER (TYPE L-1) (CA)	RESET ROADSIDE SIGN (ONE POST)	RESET ROADSIDE SIGN (METAL POST)	RESET ROADSIDE SIGN (TWO POST)	RESET MILEPOST MARKER	RESET MARKER	GUARD RAILING LAYOUT TYPE	COMMENTS
				(FT)	(LF)	(LF)	(LF)	(LF)	(LF)	(EA)	(LF)	(LF)	(LF)	(LF)	(LF)	(SQYD)	(EA)		(CUYD)	(EA)	(EA)	(EA)	(EA)	(EA)	(EA)	(EA)	(EA)	(EA)	(LF)	(CUYD)	(EA)	(FT)	(EA)	(EA)	(EA)	(EA)		
179	51.40	51.51	S	4	575	437.5	100		37.5	8						212.5							1		1						1						11L	SEE NOTE 1
RYAN CR RD LT-310C PM 51.73																																						
180	51.94	52.10	S	4	862.5	825			37.5	11		37.5				308.2							1								1				1		11E	SEE NOTE 5
181	52.15	52.29	S	4	712.5	675			37.5	9						265.9							1								1	2					11J	
182	52.17	52.24	N	4	426.5	387.5			37.5	6		25			12.5	139.4						1														1	11C	SEE NOTE 2
RYAN CR RD LT-310C (NO) PM 52.49																																						
183	52.64	52.74	N	4	325	250			75	5						146.3							2								2					2	11E	EXTEND MBGR TRAILER END BY 25′.
ENT TO WITRA′S HIDDEN PM 53.76																																						
184	54.89	54.91	S	4	100	25			75	2		25				79.7							2								2					1	11E	EXTEND MBGR BY 25′ TO THE NORTH.
BIG TRAILS DR-310A PM 55.20																																						
185	55.26	55.38	S	4	725	650			75	9						271.1							2								2					1	11E	SEE NOTE 3
RD 310B SHIMMINS RIDGE PM 55.45																																						
186	55.73	55.79	N	4	300	75	187.5	37.5		5						123.1							1		1						1					1	11G	
187	55.87	55.93	N	4	325				325	5		300	25			108.2									2											1	11F	
188	56.52	56.59	S	4	400	325			75	6		162.5	150			236.4								1													11D	EXTEND MBGR TO CLOSE GAP.
189	56.65	56.81	S	4	862.5	275	450		75	11						265.5								1													11D	
190	56.95	57.24	N	4	1550	1512.5			37.5	19						539.1							1		1						1						11G	SEE NOTE 6
OLD HWY 101 PM 56.97																																						
192	57.66	57.67	S	0	62.5				62.5																												N/A	
SHEET TOTALS:						5437.5	737.5	37.5	950	96	0	550	175	0	12.5	2695.2	0		0	0	0	1	11	2	5	0	0	0	0	0	11	2	0	0	1	7		

(N) - NOT A SEPARATE PAY ITEM, FOR INFORMATION ONLY.

SUMMARY OF QUANTITIES

Q-12

STATE OF CALIFORNIA - DEPARTMENT OF TRANSPORTATION
Caltrans 03-DESIGN

FUNCTIONAL SUPERVISOR: THOMAS P. WOOD
CALCULATED-DESIGNED BY: S. WOODBECK
CHECKED BY: F. BARRIGA
REVISED BY
DATE REVISED

LAST REVISION 07-21-09 | DATE PLOTTED => 30-SEP-2009 | TIME PLOTTED => 15:18

Dist	COUNTY	ROUTE	POST MILES TOTAL PROJECT	SHEET No.	TOTAL SHEETS
01	Men	101	R0.1/R101.6	44	75

REGISTERED CIVIL ENGINEER 7-28-09 DATE

9-28-09
PLANS APPROVAL DATE

REGISTERED PROFESSIONAL ENGINEER F. BARRIGA No. 47047 Exp. 12/31/09 CIVIL STATE OF CALIFORNIA

THE STATE OF CALIFORNIA OR ITS OFFICERS OR AGENTS SHALL NOT BE RESPONSIBLE FOR THE ACCURACY OR COMPLETENESS OF SCANNED COPIES OF THIS PLAN SHEET.

NOTE:

1. EXISTING UTILITY FACILITIES HAVE NOT BEEN POSITIVELY LOCATED.

LOCATION #	Beg PM	END PM	DIRECTION	SHOULDER WIDTH	LENGTHS	RECONSTRUCT MBGR	RECONSTRUCT MBGR (7' POST)	SALVAGE MBGR	REMOVE MBGR	GUARD RAILING DELINEATOR	DOUBLE MBGR (WOOD POST)	MBGR (WOOD POST)	MBGR (7' WOOD POST)	MBGR (8' POST)	(N) SHOP BENT RAILS NEEDED	WEED CONTROL MAT (FIBER)	TRANSITION RAILING (TYPE WB)	EXISTING BRIDGE BARRIER RAIL TYPE	MINOR CONCRETE (MINOR STRUCTURE	END CAP (TYPE A)	END CAP (N) (TYPE TC)	END ANCHOR ASSEMBLY (TYPE SFT)	ALTERNATIVE FLARED TERMINAL SYSTEM	ALTERNATIVE IN-LINE TERMINAL SYSTEM	(N) BURIED POST END ANCHOR	(N) RAIL TENSIONING ASSEMBLY	CRASH CUSHION (TYPE CAT)	CRASH CUSHION (TYPE CAT) BACKUP	REMOVE ASPHALT CONCRETE DIKE	REMOVE CONCRETE	OBJECT MARKER (TYPE L-1) (CA)	RESET ROADSIDE SIGN (ONE POST)	RESET ROADSIDE SIGN (METAL POST)	RESET ROADSIDE SIGN (TWO POST)	RESET MILEPOST MARKER	RESET MARKER	GUARD RAILING LAYOUT TYPE	COMMENTS
				(FT)	(LF)	(LF)	(LF)	(LF)	(LF)	(EA)	(LF)	(LF)	(LF)	(LF)	(LF)	(SQYD)	(EA)		(CUYD)	(EA)	(EA)	(EA)	(EA)	(EA)	(EA)	(EA)	(EA)	(EA)	(LF)	(CUYD)	(EA)	(FT)	(EA)	(EA)	(EA)	(EA)		
UNDERPASS RD-RD 301D PM 57.66																																						
ARNOLD BR & OH - BR 10-179 PM 57.67																																						
193	57.78	57.79	S	0	62.5				62.5	2						38.1	1		1.5		1				1												12C	
194	57.78	57.79	N	4	62.5				62.5																												N/A	
195	58.02	58.08	N	4	325	325				5						108.2									2												11F	
196	58.13	58.18	N	4	250	212.5			37.5	4		37.5				85.3						1			1												11C	
197	58.78	58.99	N	4	900	825			75	11		37.5				326.9						1	1								1						11B	
MOSS COVE REST AREA PM 58.90																																						
JCT 162 E PM 59.307																																						
198	59.83	59.90	N	4	350	312.5			37.5	5						141.1	1	27	1.5		1		1							0.2	1					12B	
LONG VALLEY CR 10 180 PM 59.90																																						
199	59.90	59.91	S	4	62.5	62.5				2						20.8		27												0.2						*	* Exist LAYOUT
200	59.94	59.96	N	4	62.5	62.5				2						20.8																				*	* Exist LAYOUT
201	59.97	59.98	S	4	62.5			25	37.5	2						45.4	1	27	1.5		1		1							0.2	1					12B	
202	60.05	60.10	S	4	300				300	5		262.5				118.9						1	1								1				1	11B	
203	60.54	60.65	S	4	625	550			75	8		37.5				219.8						1		1										1	1	11A	
204	61.31	61.32	N	4	75	37.5			37.5	2		12.5				30.5	1	25R	0.7		1				1							2				12C	
205	61.31	61.32	S	4	50	50				2						16.6									1												MAINTAIN Exist LAYOUT
LONG VALLEY CR 10 97 PM 61.32																																						
206	61.36	61.52	N	4	882.5				882.5	11		882.5				297.4				1		1													2	12DD	
SHEET TOTALS:						2437.5	0	25	1607.5	61	0	1270	0	0	0	1469.9	4		5.2	1	4	5	4	1	6	0	0	0	0	0.6	4	2	0	0	1	4		

(N) - NOT A SEPARATE PAY ITEM, FOR INFORMATION ONLY.

SUMMARY OF QUANTITIES

Q-13

STATE OF CALIFORNIA - DEPARTMENT OF TRANSPORTATION
Caltrans® 03-DESIGN

FUNCTIONAL SUPERVISOR: THOMAS P. WOOD
CALCULATED-DESIGNED BY: S. WOODBECK
CHECKED BY: F. BARRIGA
REVISED BY
DATE REVISED

LAST REVISION 07-21-09
DATE PLOTTED => 30-SEP-2009
TIME PLOTTED => 15:18

Dist	COUNTY	ROUTE	POST MILES TOTAL PROJECT	SHEET No.	TOTAL SHEETS
01	Men	101	R0.1/R101.6	45	75

REGISTERED CIVIL ENGINEER 7-28-09 DATE

9-28-09
PLANS APPROVAL DATE

REGISTERED PROFESSIONAL ENGINEER F. BARRIGA No. 47047 Exp. 12/31/09 CIVIL STATE OF CALIFORNIA

THE STATE OF CALIFORNIA OR ITS OFFICERS OR AGENTS SHALL NOT BE RESPONSIBLE FOR THE ACCURACY OR COMPLETENESS OF SCANNED COPIES OF THIS PLAN SHEET.

NOTES:

1. MAINTAIN EXISTING LAYOUT AND SHOP-BENT MBGR RADII. 210′ OF NEW MBGR IS TO REMAIN. SOME POSTS ATTACHED TO SIDE OF STRUCTURE.
2. MAINTAIN EXISTING LAYOUT AND SHOP-BENT MBGR RADII. SOME POSTS ATTACHED TO SIDE OF STRUCTURE. MAINTAIN EXISTING POST LOCATIONS TO AVOID CULVERT.
3. EXISTING UTILITY FACILITIES HAVE NOT BEEN POSITIVELY LOCATED.
4. REMOVE 25′ FROM TRAILER END; RECONSTRUCT REMAINDER, MAINTAINING EXISTING LAYOUT; PLACE AFTS.

LOCATION #	Beg PM	END PM	DIRECTION	SHOULDER WIDTH	LENGTHS	RECONSTRUCT MBGR	RECONSTRUCT MBGR (7′ POST)	SALVAGE MBGR	REMOVE MBGR	GUARD RAILING DELINEATOR	DOUBLE MBGR (WOOD POST)	MBGR (WOOD POST)	MBGR (7′ WOOD POST)	MBGR (8′ POST)	(N) SHOP BENT RAILS NEEDED	WEED CONTROL MAT (FIBER)	TRANSITION RAILING (TYPE WB)	EXISTING BRIDGE BARRIER RAIL TYPE	MINOR CONCRETE (MINOR STRUCTURE	END CAP (TYPE A)	END CAP (N) (TYPE TC)	END ANCHOR ASSEMBLY (TYPE SFT)	ALTERNATIVE FLARED TERMINAL SYSTEM	ALTERNATIVE IN-LINE TERMINAL SYSTEM	(N) BURIED POST END ANCHOR	(N) RAIL TENSIONING ASSEMBLY	CRASH CUSHION (TYPE CAT)	CRASH CUSHION (TYPE CAT) BACKUP	REMOVE ASPHALT CONCRETE DIKE	REMOVE CONCRETE	OBJECT MARKER (TYPE L-1) (CA)	RESET ROADSIDE SIGN (ONE POST)	RESET ROADSIDE SIGN (METAL POST)	RESET ROADSIDE SIGN (TWO POST)	RESET MILEPOST MARKER	RESET MARKER	GUARD RAILING LAYOUT TYPE	COMMENTS
				(FT)	(LF)	(LF)	(LF)	(LF)	(LF)	(EA)	(LF)	(LF)	(LF)	(LF)	(LF)	(SQYD)	(EA)		(CUYD)	(EA)	(EA)	(EA)	(EA)	(EA)	(EA)	(EA)	(EA)	(EA)	(LF)	(CUYD)	(EA)	(FT)	(EA)	(EA)	(EA)	(EA)		
207	61.36	61.38	S	4	125	87.5			37.5	2						74.6	1	25R	0.7		1		1								1	1			1		12B	
208	61.81	61.82	E	<4	212.5	175			37.5	4					25	77.3	N/A						1								1				1		11A	Locs 208/209 COMBINED; SEE NOTE 1
IRVINE LODGE REST AREA PM 61.82																																						
210	61.83	61.83	W	<4	225	87.5	62.5		75	3					12.5	117.2	N/A						2								2					1	11B	Locs 210/211 COMBINED; SEE NOTE 2
212	62.48	62.57	N	4	475	350	50		75	7		37.5				177.1						1	1								1	1				2	11B	
SHERWOOD RD LT-RD 311 PM 62.52																																						
213	62.66	62.75	S	4	525	487.5			37.5	7		50				212.5							1		1						1					2	11G	EXTEND TRAILER END TO GAIN Std FLARE.
214	62.81	62.96	N	4	800	725			75	10		50				289.5						1	1								1					1	11B	
215	63.33	63.37	N	4	187.5	112.5			75	3		37.5				81.5						1	1								1					1	11B	
LONG VALLEY CR 10 98 PM 63.47																																						
220	63.58	63.67	S	4	462.5				462.5	6		462.5				187.5						1	1								1					2	11B	
221	64.21	64.36	S	4	875	850			25	11		50				299.5									2											3	11F	
222	64.52	64.61	S	4	462.5	425			37.5	6		50				158.1						1			1										1	1	11C	
OLD SHERWOOD RD-311A PM 64.68																																						
223	64.70	64.71	N	4	62.5			25	37.5	2						45.4	1	25R	0.7		1		1								1				1		12B	
224	64.70	64.71	S	4	62.5	37.5			25							46.0							1								1						*	*SEE NOTE 4
LONG VALLEY CR 10 99 PM 64.71																																						
225	64.73	64.74	N	8	62.5			25	37.5	2						45.4	1	25R	0.7		1		1								1	1					12BB	
226	64.73	64.74	S	8	62.5			25	37.5	2						45.4	1	25R	0.7		1		1								1	1			1		12B	
227	64.96	65.01	N	8	300				300	5		300				162.9							2								2				1	2	11A	
SHEET TOTALS:						3337.5	112.5	75	1375	70	0	1037.5	0	0	37.5	2020.0	4		2.8	0	4	5	15	0	4	0	0	0	0	0	15	4	0	0	6	15		

(N) - NOT A SEPARATE PAY ITEM, FOR INFORMATION ONLY.

SUMMARY OF QUANTITIES

Q-14

STATE OF CALIFORNIA - DEPARTMENT OF TRANSPORTATION
03-DESIGN
Caltrans

FUNCTIONAL SUPERVISOR: THOMAS P. WOOD
CALCULATED-DESIGNED BY: S. WOODBECK
CHECKED BY: F. BARRIGA
REVISED BY
DATE REVISED

LAST REVISION 07-21-09
DATE PLOTTED => 30-SEP-2009
TIME PLOTTED => 15:18

Dist	COUNTY	ROUTE	POST MILES TOTAL PROJECT	SHEET No.	TOTAL SHEETS
01	Men	101	R0.1/R101.6	46	75

REGISTERED CIVIL ENGINEER 7-28-09 DATE

9-28-09
PLANS APPROVAL DATE

REGISTERED PROFESSIONAL ENGINEER F. BARRIGA No. 47047 Exp. 12/31/09 CIVIL STATE OF CALIFORNIA

THE STATE OF CALIFORNIA OR ITS OFFICERS OR AGENTS SHALL NOT BE RESPONSIBLE FOR THE ACCURACY OR COMPLETENESS OF SCANNED COPIES OF THIS PLAN SHEET.

NOTES:

1. MAINTAIN Exist LAYOUT-SHOP BEND MBGR BY DRIVEWAY AT LEADERS, AS Exist LAYOUT.
2. EXISTING UTILITY FACILITIES HAVE NOT BEEN POSITIVELY LOCATED.
3. EXTEND NORTH 50' AT 4' Min FROM SLOPE EDGE. CONSTRUCT FLARE FOLLOWING SLOPE EDGE LINE. EXTEND TRAILER END 12.5' TO GAIN NECESSARY COVER FOR BURIED POST ANCHOR.

LOCATION #	Beg PM	END PM	DIRECTION	SHOULDER WIDTH	LENGTHS	RECONSTRUCT MBGR	RECONSTRUCT MBGR (7' POST)	SALVAGE MBGR	REMOVE MBGR	GUARD RAILING DELINEATOR	DOUBLE MBGR (WOOD POST)	MBGR (WOOD POST)	MBGR (7' WOOD POST)	MBGR (8' POST)	(N) SHOP BENT RAILS NEEDED	WEED CONTROL MAT (FIBER)	TRANSITION RAILING (TYPE WB)	EXISTING BRIDGE BARRIER RAIL TYPE	MINOR CONCRETE (MINOR STRUCTURE	END CAP (TYPE A)	END CAP (N) (TYPE TC)	END ANCHOR ASSEMBLY (TYPE SFT)	ALTERNATIVE FLARED TERMINAL SYSTEM	ALTERNATIVE IN-LINE TERMINAL SYSTEM	(N) BURIED POST END ANCHOR	(N) RAIL TENSIONING ASSEMBLY	CRASH CUSHION (TYPE CAT)	CRASH CUSHION (TYPE CAT) BACKUP	REMOVE ASPHALT CONCRETE DIKE	REMOVE CONCRETE	OBJECT MARKER (TYPE L-1) (CA)	RESET ROADSIDE SIGN (ONE POST)	RESET ROADSIDE SIGN (METAL POST)	RESET ROADSIDE SIGN (TWO POST)	RESET MILEPOST MARKER	RESET MARKER	GUARD RAILING LAYOUT TYPE	COMMENTS
				(FT)	(LF)	(LF)	(LF)	(LF)	(LF)	(EA)	(LF)	(LF)	(LF)	(LF)	(LF)	(SQYD)	(EA)		(CUYD)	(EA)	(EA)	(EA)	(EA)	(EA)	(EA)	(EA)	(EA)	(EA)	(LF)	(CUYD)	(EA)	(FT)	(EA)	(EA)	(EA)	(EA)		
228	65.16	65.28	N	8	637.5				637.5	8		637.5				214.2						1			1											2	11C	
65.857 EQUATES TO T 65.859E																																						
229	66.49	66.51	N	8	125	50			75	2		37.5				62.7						1	1								1			1	2	11B	
230	66.49	66.51	S	8	125	50			75	2		37.5				60.7						1	1								1			1	2	11B	
TEN MILE CR 10 24 PM 66.50																																						
R67.707 EQUATES TO 67.717E																																						
231	R67.33	R67.36	S	8	187.5	150			37.5	3		37.5			25	66.6						1															*	*SEE NOTE 1
232	R67.37	R67.44	S	8	387.5	350			37.5	5		37.5			25	131						1													2	*	*SEE NOTE 1
LAYTONVILLE PM 69.42																																						
BRANSCOM ROAD PM 69.49																																						
TEN MILE CREEK ROAD PM 70.62																																						
RD 307 PM 70.90																																						
233	71.20	71.27	N	4	325	287.5			37.5	5						139								1											2	11H	
234	71.75	71.91	N	4	825	762.5			62.5	10			62.5			276.6									2							1			1	11F	
235	71.80	71.91	S	4	612.5	575			37.5	8						222.9							1		1						1				2	11G	
236	73.07	73.14	S	4	400	237.5	125		37.5	6		25				160.5							1		1						1				2	11G	SEE NOTE 3
237	73.22	73.28	S	4	350	312.5			37.5	5						154.6							1								1				2	11E	
238	73.39	73.53	N	4	762.5	425	262.5		75	10						291.9							2								2			1	1	11E	MAINTAIN Exist MBGR OFFSET FROM ETW.
239	73.54	73.58	N	4	150	75			75	3		50				104.7							2								2					11E	
240	74.70	74.85	S	4	775	200	500		75	10		37.5				321.0							2								2	1			2	11E	
SHEET TOTALS:						3475	887.5	0	1300	77	0	900	62.5	0	50	2206.4	0	0	0	0	0	5	11	1	5	0	0	0	0	0	11	2	0	0	3	20		

(N) - NOT A SEPARATE PAY ITEM, FOR INFORMATION ONLY.

SUMMARY OF QUANTITIES

Q-15

STATE OF CALIFORNIA - DEPARTMENT OF TRANSPORTATION
Caltrans 03-DESIGN

FUNCTIONAL SUPERVISOR: THOMAS P. WOOD
CALCULATED-DESIGNED BY: S. WOODBECK
CHECKED BY: F. BARRIGA
REVISED BY / DATE REVISED

LAST REVISION 07-21-09 | DATE PLOTTED => 30-SEP-2009 | TIME PLOTTED => 15:18

Dist	COUNTY	ROUTE	POST MILES TOTAL PROJECT	SHEET No.	TOTAL SHEETS
01	Men	101	R0.1/R101.6	47	75

REGISTERED CIVIL ENGINEER DATE 7-28-09

9-28-09
PLANS APPROVAL DATE

REGISTERED PROFESSIONAL ENGINEER F. BARRIGA No. 47047 Exp. 12/31/09 CIVIL STATE OF CALIFORNIA

THE STATE OF CALIFORNIA OR ITS OFFICERS OR AGENTS SHALL NOT BE RESPONSIBLE FOR THE ACCURACY OR COMPLETENESS OF SCANNED COPIES OF THIS PLAN SHEET.

NOTES:

1. EXTEND DOWNSTREAM END OF MBGR BY 25' USING R=20' SHOP BENT MBGR THEN BY 12.5' STRAIGHT MBGR TO PLACE END ANCHOR ASSEMBLY.
2. EXISTING UTILITY FACILITIES HAVE NOT BEEN POSITIVELY LOCATED.
3. TREE BEHIND MBGR IS CURRENTLY ONLY 2.05' FROM FACE OF MBGR. REMOVE EXISTING LEADER; PLACE 25' MBGR; PLACE NEW AFTS.

LOCATION #	Beg PM	END PM	DIRECTION	SHOULDER WIDTH (FT)	LENGTHS (LF)	RECONSTRUCT MBGR (LF)	RECONSTRUCT MBGR (7' POST) (LF)	SALVAGE MBGR (LF)	REMOVE MBGR (LF)	GUARD RAILING DELINEATOR (EA)	DOUBLE MBGR (WOOD POST) (LF)	MBGR (WOOD POST) (LF)	MBGR (7' WOOD POST) (LF)	MBGR (8' POST) (LF)	(N) SHOP BENT RAILS NEEDED (LF)	WEED CONTROL MAT (FIBER) (SQYD)	TRANSITION RAILING (TYPE WB) (EA)	EXISTING BRIDGE BARRIER RAIL TYPE	MINOR CONCRETE (MINOR STRUCTURE) (CUYD)	END CAP (TYPE A) (EA)	END CAP (N) (TYPE TC) (EA)	END ANCHOR ASSEMBLY (TYPE SFT) (EA)	ALTERNATIVE FLARED TERMINAL SYSTEM (EA)	ALTERNATIVE IN-LINE TERMINAL SYSTEM (EA)	(N) BURIED POST END ANCHOR (EA)	(N) RAIL TENSIONING ASSEMBLY (EA)	CRASH CUSHION (TYPE CAT) (EA)	CRASH CUSHION (TYPE CAT) BACKUP (EA)	REMOVE ASPHALT CONCRETE DIKE (LF)	REMOVE CONCRETE (CUYD)	OBJECT MARKER (TYPE L-1) (CA) (EA)	RESET ROADSIDE SIGN (ONE POST) (FT)	RESET ROADSIDE SIGN (METAL POST) (EA)	RESET ROADSIDE SIGN (TWO POST) (EA)	RESET MILEPOST MARKER (EA)	RESET MARKER (EA)	GUARD RAILING LAYOUT TYPE	COMMENTS
241	75.07	75.15	S	4	337.5	300			37.5	5						131.4							1		1						1						11L	
242	75.82	75.93	S	4	575	537.5			37.5	8						210.4							1								1					3	11E	
243	76.26	76.33	S	4	275	175	25		75	4		62.5				110.6						1	1								1					1	11B	SEE NOTE 3
244	76.89	77.02	N	4	700	687.5			12.5	9		37.5				239.2									2										1	2	11F	REMOVE DAMAGED RAIL AT LEADER END.
245	77.86	78.06	S	0	1100	937.5	125		37.5	14		37.5				390.3						1													1	1	11A	
246	77.91	77.95	N	0	200	125			75	3		62.5		75	25	62.4						1			1											1	11C	SEE NOTE 1
247	78.23	78.40	N	8	262.5	112.5	75		75	3		37.5			25	101.2						1		1												4	11B	
SPYROCK RD-RD 323 PM 78.40																																						
248	78.93	79.07	S	4	650	575			75	9			37.5			256.5							2								2				1	1	11E	
249	79.22	79.24	N	8	112.5		37.5		75	2						77.6							2								2					1	11E	
250	80.22	80.32	S	4	575	450	87.5		37.5	8		112.5				232.2								1												1	11J	
251	80.33	80.38	S	4	250	187.5	62.5			3						83.2																				3	11D	
BELL SPRINGS & RD 324 PM 81.17																																						
RATTLESNAKE CR 10 27 PM 81.43																																						
254	82.13	82.18	N	4	287.5	212.5			75	4						128.6							1	1							1					1	11H	
255	82.38	82.45	S	4	350	275			75	5		37.5				137.6						1	1								1					2	11B	
EMPIRE CAMP REST AREA PM 82.50																																						
256	82.75	82.81	N	4	337.5	250	12.5		75	5		37.5				137.6						1	1								1					3	11B	
TAN OAK PARK PM 83.13																																						
257	83.18	83.24	S	4	325	250			75	5		37.5				127.2						1	1								1					2	11B	
SHEET TOTALS:						5075	425	0	837.5	87	0	462.5	37.5	75	50	2426.1	0		0	0	0	7	11	3	4	0	0	0	0	0	11	0	0	0	3	26		

(N) - NOT A SEPARATE PAY ITEM, FOR INFORMATION ONLY.

SUMMARY OF QUANTITIES

Q-16

STATE OF CALIFORNIA - DEPARTMENT OF TRANSPORTATION
Caltrans 03-DESIGN

FUNCTIONAL SUPERVISOR: THOMAS P. WOOD
CALCULATED-DESIGNED BY: S. WOODBECK
CHECKED BY: F. BARRIGA
REVISED BY
DATE REVISED

LAST REVISION 07-21-09
DATE PLOTTED => 30-SEP-2009
TIME PLOTTED => 15:18

Dist	COUNTY	ROUTE	POST MILES TOTAL PROJECT	SHEET No.	TOTAL SHEETS
01	Men	101	R0.1/R101.6	48	75

REGISTERED CIVIL ENGINEER 7-28-09 DATE

9-28-09
PLANS APPROVAL DATE

REGISTERED PROFESSIONAL ENGINEER F. BARRIGA No. 47047 Exp. 12/31/09 CIVIL STATE OF CALIFORNIA

THE STATE OF CALIFORNIA OR ITS OFFICERS OR AGENTS SHALL NOT BE RESPONSIBLE FOR THE ACCURACY OR COMPLETENESS OF SCANNED COPIES OF THIS PLAN SHEET.

NOTES:

1. EXISTING UTILITY FACILITIES HAVE NOT BEEN POSITIVELY LOCATED.
2. CULVERT DEPTH Approx 3.5'. COULD REMOVE 12.5' FROM TRAILER END TO AVOID IF NEEDED.
3. RECONSTRUCTION AND WEED CONTROL MAT PLACEMENT AT SOUTH END. NEW MBGR AT NORTH END.

LOCATION #	Beg PM	END PM	DIRECTION	SHOULDER WIDTH	LENGTHS	RECONSTRUCT MBGR	RECONSTRUCT MBGR (7' POST)	SALVAGE MBGR	REMOVE MBGR	GUARD RAILING DELINEATOR	DOUBLE MBGR (WOOD POST)	MBGR (WOOD POST)	MBGR (7' WOOD POST)	MBGR (8' POST)	(N) SHOP BENT RAILS NEEDED	WEED CONTROL MAT (FIBER)	TRANSITION RAILING (TYPE WB)	EXISTING BRIDGE BARRIER RAIL TYPE	MINOR CONCRETE (MINOR STRUCTURE	END CAP (TYPE A)	END CAP (N) (TYPE TC)	END ANCHOR ASSEMBLY (TYPE SFT)	ALTERNATIVE FLARED TERMINAL SYSTEM	ALTERNATIVE IN-LINE TERMINAL SYSTEM	(N) BURIED POST END ANCHOR	(N) RAIL TENSIONING ASSEMBLY	CRASH CUSHION (TYPE CAT)	CRASH CUSHION (TYPE CAT) BACKUP	REMOVE ASPHALT CONCRETE DIKE	REMOVE CONCRETE	OBJECT MARKER (TYPE L-1) (CA)	RESET ROADSIDE SIGN (ONE POST)	RESET ROADSIDE SIGN (METAL POST)	RESET ROADSIDE SIGN (TWO POST)	RESET MILEPOST MARKER	RESET MARKER	GUARD RAILING LAYOUT TYPE	COMMENTS
				(FT)	(LF)	(LF)	(LF)	(LF)	(LF)	(EA)	(LF)	(LF)	(LF)	(LF)	(LF)	(SQYD)	(EA)		(CUYD)	(EA)	(EA)	(EA)	(EA)	(EA)	(EA)	(EA)	(EA)	(EA)	(LF)	(CUYD)	(EA)	(EA)	(EA)	(EA)	(EA)	(EA)		
258	83.36	83.53	N	4	825	750			75	11		37.5				293.6						1	1								1				1	1	11B	SEE NOTE 2
259	83.63	83.70	N	4	487.5	412.5			75	7		37.5				181.3						1	1								1					2	11B	
260	R83.99	R84.16	S	4	850	775			75	11		37.5				304						1	1								1				1	3	11B	
RATTLESNAKE CR BR 10-29 PM R 83.99																																						
261	R84.22	R84.34	S	4	625	550			75	8		37.5				227.1						1	1								1	1	1			4	11B	
262	R84.4	R84.45	S	4	250	175			75	4		37.5				104.3						1	1								1					1	11B	
263	R84.6	R84.68	N	2	350	287.5			62.5	5						141.1	1	8	0.8		1		1								1	1				2	12B	
CUMMINGS RD UC 10-172 PM R 84.68																																						
CUMMINGS RD SEP 10-172 PM R 84.69																																						
264	R84.70	R84.76	N	2	337.5	337.5				5						114.4		8		1		1															12DD	
265	R84.70	R84.78	S	4	387.5	287.5			100	6						109.9	1	8	0.8		1		1								1	1				2	12B	RELOCATE OS DRAIN BETWEEN STEEL POST AND END BLOCK.
266	R85.01	R85.06	S	4	237.5	162.5			75	4		37.5				98.1						1	1								1	1				1	11B	
267	R85.10	R85.18	S	4	487.5	450			37.5	7		37.5				151.8						1			1							1				2	11C	
268	R85.13	R85.16	N	4	162.5	87.5			75	3		37.5				73.1						1	1								1	1				1	11B	
270	R85.55	R86.25	S	4	2562.5				50	30												1	1								1					5	11B	
271	R85.68	R85.87	N	4	975	200			75	12		37.5										1	1								1					2	11B	RECONSTRUCTION AND NEW MBGR TO OCCUR AT NORTH END.
HERMITAGE VISTA PT LT PM R 86.08																																						
272	R86.35	R86.42	N	4	362.5	187.5			37.5	5		37.5				83.5						1														2	11B	SEE NOTE 3
RT 101/271 SEP 10-145 PM R 87.67																																						
SHEET TOTALS:						4662.5	0	0	887.5	118	0	375	0	0	0	1882.2	2		1.6	1	2	12	11	0	1	0	0	0	0	0	11	6	1	0	2	28		

(N) - NOT A SEPARATE PAY ITEM, FOR INFORMATION ONLY.

SUMMARY OF QUANTITIES

Q-17

REVISED BY | DATE REVISED

S. WOODBECK | F. BARRIGA

CALCULATED-DESIGNED BY | CHECKED BY

FUNCTIONAL SUPERVISOR: THOMAS P. WOOD

STATE OF CALIFORNIA - DEPARTMENT OF TRANSPORTATION

03-DESIGN

Caltrans

LAST REVISION 07-21-09 | DATE PLOTTED => 30-SEP-2009 | TIME PLOTTED => 15:19

Dist	COUNTY	ROUTE	POST MILES TOTAL PROJECT	SHEET No.	TOTAL SHEETS
01	Men	101	R0.1/R101.6	49	75

REGISTERED CIVIL ENGINEER 7-28-09 DATE

9-28-09
PLANS APPROVAL DATE

REGISTERED PROFESSIONAL ENGINEER F. BARRIGA No. 47047 Exp. 12/31/09 CIVIL STATE OF CALIFORNIA

THE STATE OF CALIFORNIA OR ITS OFFICERS OR AGENTS SHALL NOT BE RESPONSIBLE FOR THE ACCURACY OR COMPLETENESS OF SCANNED COPIES OF THIS PLAN SHEET.

NOTES:

1. USE STANDARD PLAN A77J3 TO APPROACH COLUMN. PAINT "SCANDIA SEP. BR 10-135" ABOVE NEW BLOCK. PAINTING BRIDGE NAME AND NUMBER IS NOT A SEPARATE PAY ITEM. IT IS CONSIDERED TO BE INCLUDED AS PART OF MINOR CONCRETE (MINOR STRUCTURE).
2. EXISTING UTILITY FACILITIES HAVE NOT BEEN POSITIVELY LOCATED.

LOCATION #	Beg PM	END PM	DIRECTION	SHOULDER WIDTH	LENGTHS	RECONSTRUCT MBGR	RECONSTRUCT MBGR (7' POST)	SALVAGE MBGR	REMOVE MBGR	GUARD RAILING DELINEATOR	DOUBLE MBGR (WOOD POST)	MBGR (WOOD POST)	MBGR (7' WOOD POST)	MBGR (8' POST)	(N) SHOP BENT RAILS NEEDED	WEED CONTROL MAT (FIBER)	TRANSITION RAILING (TYPE WB)	EXISTING BRIDGE BARRIER RAIL TYPE	MINOR CONCRETE (MINOR STRUCTURE)	END CAP (TYPE A)	END CAP (TYPE TC)	END ANCHOR ASSEMBLY (TYPE SFT)	ALTERNATIVE FLARED TERMINAL SYSTEM	ALTERNATIVE IN-LINE TERMINAL SYSTEM	(N) BURIED POST END ANCHOR	(N) RAIL TENSIONING ASSEMBLY	CRASH CUSHION (TYPE CAT)	CRASH CUSHION (TYPE CAT) BACKUP	REMOVE ASPHALT CONCRETE DIKE	REMOVE CONCRETE	OBJECT MARKER (TYPE L-1) (CA)	RESET ROADSIDE SIGN (ONE POST)	RESET ROADSIDE SIGN (METAL POST)	RESET ROADSIDE SIGN (TWO POST)	RESET MILEPOST MARKER	RESET MARKER	GUARD RAILING LAYOUT TYPE	COMMENTS
				(FT)	(LF)	(LF)	(LF)	(LF)	(LF)	(EA)	(LF)	(LF)	(LF)	(LF)	(LF)	(SQYD)	(EA)	(EA)	(CUYD)	(EA)	(EA)	(EA)	(EA)	(EA)	(EA)	(EA)	(EA)	(EA)	(LF)	(CUYD)	(EA)	(EA)	(EA)	(EA)	(EA)	(EA)		
INMAN UC 10-254 PM R 88.02																																					
277	R88.21	R88.37	S	2	850	775				10						257.9									1											3	11F	RECONSTRUCT 775' STARTING FROM NORTH END.
278	R88.54	R88.80	N	4	912.5	887.5		25		11						340.8	1	9	0.6		1											2				2	12B	
279	R88.78	R88.80	S	2	50	12.5			37.5			37.5										1															12DD	REMOVE TERMINAL SYSTEM
MARION LN UC BR 10-228 PM R 88.80																																					
LITTLE DANN CR PM R 88.86																																					
280	R88.82	R88.83	S	2	75	50			25	2						49.6	1	9	0.6		1											1				1	12B	
281	R88.82	R88.88	N	4	350				62.5	5							1	9	0.6		1		1								1				1		
282	R88.95	R89.00	N	4	237.5	200			37.5	4		37.5				79						1													1	11B	
BIG DANN CREEK CULVERT PM R 88.97																																					
284	R89.17	R89.44	N	4	1500	1500				18						518.3															1			2		4	11G	
285	R89.17	R89.3	S	4	587.5	550			37.5	8		37.5				216.7						1									1				1	11B	
CEDAR CR CULV BR 10-226 PM R 89.24																																					
286	R89.54	R89.56	N	4	75	50		25		2						30.5	1		2.0		1				1												12C	SEE NOTE 1
SCANDIA SEP 10-135 PM R 89.57																																					
287	R89.57	R89.58	S	4	62.5	37.5		25		2						44.0	1		2.0		1				1												12C	SEE NOTE 1
288	R90.46	90.57	N	4	561	562.5				8						189.3									2											3	11F	
JCT RTE 1 PM T 91.25																																					
FRONTAGE RD-324B PM T 91.31																																					
T 91.355 EQUATES TO 92.452E																																					
SHEET TOTALS:						4625	0	75	200	70	0	112.5	0	0	0	1726.1	5		5.8	0	5	3	1	0	5	0	0	0	0	0	3	3	0	2	0	16		

(N) - NOT A SEPARATE PAY ITEM, FOR INFORMATION ONLY.

SUMMARY OF QUANTITIES

Q-18

STATE OF CALIFORNIA - DEPARTMENT OF TRANSPORTATION
03-DESIGN
Caltrans

FUNCTIONAL SUPERVISOR: THOMAS P. WOOD
CALCULATED-DESIGNED BY: S. WOODBECK
CHECKED BY: F. BARRIGA
REVISED BY
DATE REVISED

LAST REVISION 07-21-09
DATE PLOTTED => 30-SEP-2009
TIME PLOTTED => 15:19

Dist	COUNTY	ROUTE	POST MILES TOTAL PROJECT	SHEET No.	TOTAL SHEETS
01	Men	101	R0.1/R101.6	50	75

REGISTERED CIVIL ENGINEER 7-28-09 DATE

9-28-09
PLANS APPROVAL DATE

REGISTERED PROFESSIONAL ENGINEER F. BARRIGA No. 47047 Exp. 12/31/09 CIVIL STATE OF CALIFORNIA

THE STATE OF CALIFORNIA OR ITS OFFICERS OR AGENTS SHALL NOT BE RESPONSIBLE FOR THE ACCURACY OR COMPLETENESS OF SCANNED COPIES OF THIS PLAN SHEET.

NOTE:

1. EXISTING UTILITY FACILITIES HAVE NOT BEEN POSITIVELY LOCATED.

LOCATION #			DIRECTION	SHOULDER WIDTH	LENGTHS	RECONSTRUCT MBGR	RECONSTRUCT MBGR (7' POST)	SALVAGE MBGR	REMOVE MBGR	GUARD RAILING DELINEATOR	DOUBLE MBGR (WOOD POST)	MBGR (WOOD POST)	MBGR (7' WOOD POST)	MBGR (8' POST)	(N) SHOP BENT RAILS NEEDED	WEED CONTROL MAT (FIBER)	TRANSITION RAILING (TYPE WB)	EXISTING BRIDGE BARRIER RAIL TYPE	MINOR CONCRETE (MINOR STRUCTURE	END CAP (TYPE A)	END CAP (N) (TYPE TC)	END ANCHOR ASSEMBLY (TYPE SFT)	ALTERNATIVE FLARED TERMINAL SYSTEM	ALTERNATIVE IN-LINE TERMINAL SYSTEM	(N) BURIED POST END ANCHOR	(N) RAIL TENSIONING ASSEMBLY	CRASH CUSHION (TYPE CAT)	CRASH CUSHION (TYPE CAT) BACKUP	REMOVE ASPHALT CONCRETE DIKE	REMOVE CONCRETE	OBJECT MARKER (TYPE L-1) (CA)	RESET ROADSIDE SIGN (ONE POST)	RESET ROADSIDE SIGN (METAL POST)	RESET ROADSIDE SIGN (TWO POST)	RESET MILEPOST MARKER	RESET MARKER	GUARD RAILING LAYOUT TYPE	COMMENTS
	Beg PM	END PM		(FT)	(LF)	(LF)	(LF)	(LF)	(LF)	(EA)	(LF)	(LF)	(LF)	(LF)	(LF)	(SQYD)	(EA)		(CUYD)	(EA)	(EA)	(EA)	(EA)	(EA)	(EA)	(EA)	(EA)	(EA)	(LF)	(CUYD)	(EA)	(EA)	(EA)	(EA)	(EA)	(EA)		
JCT RTE 1 PM T 91.25																																					
FRONTAGE RD-324B PM T 91.31																																					
T 91.355 EQUATES TO 92.452E																																					
JITNEY GULCH BR 10-53 PM 93.01																																					
289	93.69	93.71	N	8	100	75		25		2						38.9	1	25	0.7		1				1											1	12C	
290	93.70	93.71	S	8	62.5	25				2								25		1																		RECONSTRUCT AT BRIDGE CONNECTION
ROCK CR 10 32 PM 93.71																																					
291	93.76	93.77	S	8	62.5	37.5			25	2						45.4	1	25	0.7		1											1				1	12B	
292	93.76	93.77	N	8	62.5	62.5				2						22.9		25		1		1															12DD	
ENT TO STANDISH HICKEY PM 93.90																																					
ENT TO BELL GLEN RESORT PM 94.64																																					
294	95.18	95.36	S	0-2	937.5	900			37.5	11						352.2							1							1					1	11E	USE CASE 3 DETAIL AT NONStd POSTS. SEE SHEET C-8.
295	96.48	96.49	N	8	62.5	25			37.5	2		12.5				26.4	1	25	0.7		1											1				2	12C	
296	96.48	96.49	S	8	62.5	62.5				2						22.9		25		1		1										1				2	12DD	
DORA CREEK BB 10-264 PM 96.49																																					
297	96.50	96.51	N	4	62.5	25			37.5	2		37.5				22.9						1													1		12DD	
298	96.50	96.51	S	4	62.5			25	37.5	2						45.4	1	25	0.7		1		1								1	1			1	1	12B	
299	97.42	97.47	S	4	275	250		25		4						121.3	1	25	0.7		1											1				1	12AA	
PRIVATE ROAD RT PM 97.45																																					
300	97.46	97.47	N	4	62.5	37.5		25		2						45.4	1	25	0.7		1											2			1	2	12B	
SHEET TOTALS:						1500	0	100	175	33	0	50	0	0	0	743.7	6		4.2	3	6	3	2	0	0	0	0	0	0	0	2	7	0	0	3	11		

(N) - NOT A SEPARATE PAY ITEM, FOR INFORMATION ONLY.

SUMMARY OF QUANTITIES

STATE OF CALIFORNIA - DEPARTMENT OF TRANSPORTATION
Caltrans 03-DESIGN

FUNCTIONAL SUPERVISOR: THOMAS P. WOOD
CALCULATED-DESIGNED BY: S. WOODBECK
CHECKED BY: F. BARRIGA
REVISED BY / DATE REVISED

LAST REVISION 07-21-09 | DATE PLOTTED => 30-SEP-2009 TIME PLOTTED => 15:19

Dist	COUNTY	ROUTE	POST MILES TOTAL PROJECT	SHEET No.	TOTAL SHEETS
01	Men	101	R0.1/R101.6	51	75

REGISTERED CIVIL ENGINEER 7-28-09 DATE

9-28-09
PLANS APPROVAL DATE

REGISTERED PROFESSIONAL ENGINEER F. BARRIGA No. 47047 Exp. 12/31/09 CIVIL STATE OF CALIFORNIA

THE STATE OF CALIFORNIA OR ITS OFFICERS OR AGENTS SHALL NOT BE RESPONSIBLE FOR THE ACCURACY OR COMPLETENESS OF SCANNED COPIES OF THIS PLAN SHEET.

NOTES:

1. EXISTING UTILITY FACILITIES HAVE NOT BEEN POSITIVELY LOCATED.
2. EXTEND MBGR BY 12.5′ AT SOUTH END TO PLACE AFTS. TREES CURRENTLY WITHIN 4′ BEHIND MBGR.

LOCATION #	BEGIN PM	END PM	DIRECTION	SHOULDER WIDTH (FT)	LENGTHS (LF)	RECONSTRUCT MBGR (LF)	RECONSTRUCT MBGR (7′ POST) (LF)	SALVAGE MBGR (LF)	REMOVE MBGR (LF)	GUARD RAILING DELINEATOR (EA)	DOUBLE MBGR (WOOD POST) (LF)	MBGR (WOOD POST) (LF)	MBGR (7′ WOOD POST) (LF)	MBGR (8′ POST) (LF)	(N) SHOP BENT RAILS NEEDED (LF)	WEED CONTROL MAT (FIBER) (SQYD)	TRANSITION RAILING (TYPE WB) (EA)	EXISTING BRIDGE BARRIER RAIL TYPE	MINOR CONCRETE (MINOR STRUCTURE) (CUYD)	END CAP (TYPE A) (EA)	END CAP (N) (TYPE TC) (EA)	END ANCHOR ASSEMBLY (TYPE SFT) (EA)	ALTERNATIVE FLARED TERMINAL SYSTEM (EA)	ALTERNATIVE IN-LINE TERMINAL SYSTEM (EA)	(N) BURIED POST END ANCHOR (EA)	(N) RAIL TENSIONING ASSEMBLY (EA)	CRASH CUSHION (TYPE CAT) (EA)	CRASH CUSHION (TYPE CAT) BACKUP (EA)	REMOVE ASPHALT CONCRETE DIKE (LF)	REMOVE CONCRETE (CUYD)	OBJECT MARKER (TYPE L-1) (CA) (EA)	RESET ROADSIDE SIGN (ONE POST) (EA)	RESET ROADSIDE SIGN (METAL POST) (EA)	RESET ROADSIDE SIGN (TWO POST) (EA)	RESET MILEPOST MARKER (EA)	RESET MARKER (EA)	GUARD RAILING LAYOUT TYPE	COMMENTS
BRIDGES CREEK BR 10-33 PM 97.47																																					
301	97.50	97.51	N	4	62.5	37.5		25		2					12.5	45.4	1	25	0.7		1															2	12BB	
302	97.50	97.52	S	4	137.5	112.5		25		2						61.0	1	25	0.7		1										1			1	1	12A	
PRIVATE ROAD RT PM 97.53																																					
M 97.933 EQUATES TO 98.253E																																					
304	99.10	99.18	S	4	450	375			75	6		12.5				190							2							2						11E	SEE NOTE 2
REDWOOD RIVER RETREAT-R PM 99.35																																					
100.319 EQUATES TO R 100.319E																																					
RED MTN CRK 10-35 PM R 100.46																																					
311	R100.63	R100.88	S	4	1275	1237.5			37.5	16						443.4							1		1					1			1		1	11G	
312	R100.98	R101.06	S	4	387.5	350			37.5	5		37.5				131.0		25		1		1												1	2	12DD	
313	R101.04	R101.06	N	4	137.5	112.5		25		2						51.3	1	25	0.7		1				1						1				1	12C	
BEAR PEN UC 10-251 PM R 101.06																																					
314	R101.08	R101.31	S	4	1350	1325		25		16						454.9	1	25	0.7		1				1						1				2	12C	NESTED MBGR DETAIL NEEDED FOR OVERSIDE DRAIN.
315	R101.08	R101.10	N	4	75				75																										1		
316	R101.48	R101.57	S	4	400	400				6		12.5				139.4									2									1		11F	NEED TO EXTEND NORTH END OF MBGR BY 12.5′ TO BURY END IN SLOPE.
JCT 271-REYNOLDS SEP 10-217 PM R 101.90																																					
S FK EEL RIVER BR 10-93 PM R 102.68																																					
S FORK EEL RIV 10-218 PM R 106.57																																					
MENDOCINO/HUMBOLDT COUNTY LINE PM T 106.80																																					
SHEET TOTALS:						3950	0	100	225	55	0	62.5	0	0	12.5	1516.4	4		2.8	1	4	1	3	0	5	0	0	0	0	0	3	3	0	1	3	10		

(N) - NOT A SEPARATE PAY ITEM, FOR INFORMATION ONLY.

SUMMARY OF QUANTITIES

Q-20

STATE OF CALIFORNIA - DEPARTMENT OF TRANSPORTATION
03-DESIGN
Caltrans

FUNCTIONAL SUPERVISOR: THOMAS P. WOOD
CALCULATED-DESIGNED BY: S. WOODBECK
CHECKED BY: F. BARRIGA
REVISED BY
DATE REVISED

LAST REVISION 07-21-09 | DATE PLOTTED => 30-SEP-2009 | TIME PLOTTED => 15:19

Dist	COUNTY	ROUTE	POST MILES TOTAL PROJECT	SHEET No.	TOTAL SHEETS
01	Men	101	R0.1/R101.6	52	75

Fernando Barriga B. 7-28-09
REGISTERED CIVIL ENGINEER DATE

9-28-09
PLANS APPROVAL DATE

REGISTERED PROFESSIONAL ENGINEER F. BARRIGA No. 47047 Exp. 12/31/09 CIVIL STATE OF CALIFORNIA

THE STATE OF CALIFORNIA OR ITS OFFICERS OR AGENTS SHALL NOT BE RESPONSIBLE FOR THE ACCURACY OR COMPLETENESS OF SCANNED COPIES OF THIS PLAN SHEET.

NOTE:

1. EXISTING UTILITY FACILITIES HAVE NOT BEEN POSITIVELY LOCATED.

	RECONSTRUCT MBGR	RECONSTRUCT MBGR (7' POST)	SALVAGE MBGR	REMOVE MBGR	GUARD RAILING DELINEATOR	DOUBLE MBGR (WOOD POST)	MBGR (WOOD POST)	MBGR (7' WOOD POST)	MBGR (8' POST)	(N) SHOP BENT RAILS NEEDED	WEED CONTROL MAT (FIBER)	TRANSITION RAILING (TYPE WB)	MINOR CONCRETE (MINOR STRUCTURE	END CAP (TYPE A)	END CAP (N) (TYPE TC)	END ANCHOR ASSEMBLY (TYPE SFT)	ALTERNATIVE FLARED TERMINAL SYSTEM	ALTERNATIVE IN-LINE TERMINAL SYSTEM	(N) BURIED POST END ANCHOR	(N) RAIL TENSIONING ASSEMBLY	CRASH CUSHION (TYPE CAT)	CRASH CUSHION (TYPE CAT) BACKUP	REMOVE ASPHALT CONCRETE DIKE	REMOVE CONCRETE	OBJECT MARKER (TYPE L-1) (CA)	RESET ROADSIDE SIGN (ONE POST)	RESET ROADSIDE SIGN (METAL POST)	RESET ROADSIDE SIGN (TWO POST)	RESET MILEPOST MARKER	RESET MARKER
	(LF)	(LF)	(LF)	(LF)	(EA)	(LF)	(LF)	(LF)	(LF)	(LF)	(SQYD)	(EA)	(CUYD)	(EA)	(EA)	(EA)	(EA)	(EA)	(EA)	(EA)	(EA)	(EA)	(LF)	(CUYD)	(EA)	(EA)	(EA)	(EA)	(EA)	(EA)
TOTALS FROM SHEET Q-1	2735	412.5	0	837.5	51	0	200	100	0	62.5	1348.6	7	4.9	1	7	7	7	1	3	0	0	0	50	0	7	12	1	2	0	15
TOTALS FROM SHEET Q-2	62.5	0	0	400	18	0	37.5	0	0	0	324.8	8	2.9	0	8	1	6	1	0	0	0	0	66	0	6	2	1	0	5	2
TOTALS FROM SHEET Q-3	425	0	137.5	687.5	31	212.5	225	0	0	0	1581.6	7	3.9	1	7	6	4	1	0	6	6	6	0	0	4	2	0	0	3	2
TOTALS FROM SHEET Q-4	2175	0	237.5	625	53	375	125	0	0	0	2622.1	9	7.2	1	9	8	3	2	0	7	8	8	0	0.6	3	2	0	0	4	6
TOTALS FROM SHEET Q-5	612.5	0	300	275	33	262.5	100	0	0	0	1177.3	8	4.8	2	8	5	2	0	0	5	5	5	0	0	2	1	0	0	0	16
TOTALS FROM SHEET Q-6	725	0	325	303	41	412.5	0	0	0	0	1418.6	12	7.9	1	12	4	0	0	0	7	7	7	0	0	0	2	0	0	5	19
TOTALS FROM SHEET Q-7	1137.5	0	412.5	335.5	42	387.5	162.5	0	0	0	1607.2	10	6.0	1	10	4	0	0	0	7	7	7	0	0	0	5	0	0	6	23
TOTALS FROM SHEET Q-8	412.5	0	87.5	712.5	40	437.5	175	0	0	0	1695.8	11	12.5	0	11	3	1	0	2	8	8	8	0	0	1	5	0	0	7	21
TOTALS FROM SHEET Q-9	400	0	262.5	375	33	387.5	112.5	0	0	0	1243.2	14	11.1	0	14	1	4	0	1	5	5	5	0	0.4	4	2	0	0	6	16
TOTALS FROM SHEET Q-10	3535	0	175	325	51	0	37.5	0	0	0	1581.4	6	10.6	0	6	2	7	1	2	0	0	0	0	0	7	4	0	0	0	4
TOTALS FROM SHEET Q-11	2150	0	25	575	43	0	212.5	0	0	0	1152.6	3	6.9	1	3	5	7	1	3	0	0	0	0	0	7	1	0	1	1	6
TOTALS FROM SHEET Q-12	5437.5	737.5	37.5	950	96	0	550	175	0	12.5	2695.2	0	0	0	0	1	11	2	5	0	0	0	0	0	11	2	0	0	1	7
TOTALS FROM SHEET Q-13	2437.5	0	25	1607.5	61	0	1270	0	0	0	1469.9	4	5.2	1	4	5	4	1	6	0	0	0	0	0.6	4	2	0	0	1	4
TOTALS FROM SHEET Q-14	3337.5	112.5	75	1375	70	0	1037.5	0	0	37.5	2020.0	4	2.8	0	4	5	15	0	4	0	0	0	0	0	15	4	0	0	6	15
TOTALS FROM SHEET Q-15	3475	887.5	0	1300	77	0	900	62.5	0	50	2206.4	0	0	0	0	5	11	1	5	0	0	0	0	0	11	2	0	0	3	20
TOTALS FROM SHEET Q-16	5075	425	0	837.5	87	0	462.5	37.5	75	50	2426.1	0	0	0	0	7	11	3	4	0	0	0	0	0	11	0	0	0	3	26
TOTALS FROM SHEET Q-17	4662.5	0	0	887.5	118	0	375	0	0	0	1882.2	2	1.6	1	2	12	11	0	1	0	0	0	0	0	11	6	1	0	2	28
TOTALS FROM SHEET Q-18	4625	0	75	200	70	0	112.5	0	0	0	1726.1	5	5.8	0	5	3	1	0	5	0	0	0	0	0	3	3	0	2	0	16
TOTALS FROM SHEET Q-19	1500	0	100	175	33	0	50	0	0	0	743.7	6	4.2	3	6	3	2	0	0	0	0	0	0	0	2	7	0	0	3	11
TOTALS FROM SHEET Q-20	3950	0	100	225	55	0	62.5	0	0	12.5	1516.4	4	2.8	1	4	1	3	0	5	0	0	0	0	0	3	3	0	1	3	10
ROADWAY QUANTITY TOTALS:	48870	2575	2375	13008.5	1103	2475	6207.5	375	75	225	32439.2	120	101.1	14	120	88	110	14	46	45	46	46	116	1.6	112	67	3	6	59	267

(N) - NOT A SEPARATE PAY ITEM, FOR INFORMATION ONLY.

LOCATION No.	LOCATION PM	PLACE HMA (MISC AREA)	PLACE HMA DIKE (TYPE C)	MINOR HMA
		SQYD	LF	TON
26	R9.5	0	66	0.5
28	R9.6	2.7		0.4
99	R26.2	2.7		0.4
127	R28.6	2.7		0.4
147	R31.9	2.7		0.4
265	R84.7	2.7		0.4
TOTAL		13.5	66	2.5

SUMMARY OF QUANTITIES

Q-21

STATE OF CALIFORNIA - DEPARTMENT OF TRANSPORTATION
03-DESIGN
Caltrans
FUNCTIONAL SUPERVISOR: THOMAS P. WOOD
CALCULATED-DESIGNED BY: S. WOODBECK
CHECKED BY: F. BARRIGA
REVISED BY
DATE REVISED

LAST REVISION 07-28-09
DATE PLOTTED => 01-OCT-2009
TIME PLOTTED => 14:19

DIST	COUNTY	ROUTE	POST MILES TOTAL PROJECT	SHEET NO.	TOTAL SHEETS
01	Men	101	R0.1/R101.6	53	75

Randell D. Hiatt
REGISTERED CIVIL ENGINEER

June 6, 2008
PLANS APPROVAL DATE

REGISTERED PROFESSIONAL ENGINEER
Randell D. Hiatt
No. C50200
Exp. 6-30-09
CIVIL
STATE OF CALIFORNIA

The State of California or its officers or agents shall not be responsible for the accuracy or completeness of electronic copies of this plan sheet.

To accompany plans dated 9-28-09

NOTES:

1. When necessary to place dike in front of face of guard railing, only Type C dike may be used. For dike details, see Standard Plan A87B.
2. For standard railing post embedment, see Standard Plans A77C3.
3. Guard railing delineation to be used where shown on the Project Plans.
4. When dike or curb is placed under guard railing, the maximum height of the dike or curb shall be 4". Mountable dike should not be used. For dike and curb details, see Revised Standard Plans RSP A87A and Standard Plan A87B.
5. For details of typical distance between the face of rail and hinge point, see Standard Plan A77C3.

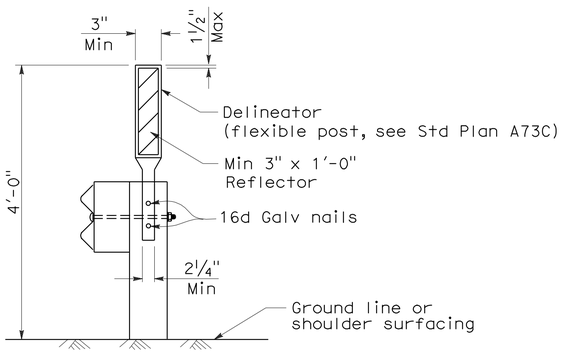

GUARD RAILING DELINEATION

See Note 3

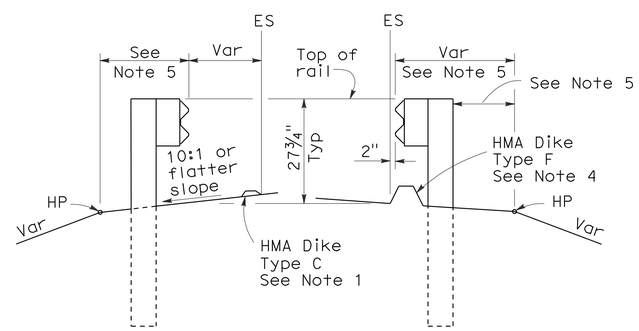

DIKE POSITIONING

See Note 1

STATE OF CALIFORNIA
DEPARTMENT OF TRANSPORTATION

METAL BEAM GUARD RAILING TYPICAL RAILING DELINEATION AND DIKE POSITIONING DETAILS

NO SCALE

RSP A77C4 DATED JUNE 6, 2008 SUPERSEDES STANDARD PLAN A77C4
DATED MAY 1, 2006 - PAGE 47 OF THE STANDARD PLANS BOOK DATED MAY 2006.

REVISED STANDARD PLAN RSP A77C4

2006 REVISED STANDARD PLAN RSP A77C4

12-10-07

DIST	COUNTY	ROUTE	POST MILES TOTAL PROJECT	SHEET NO.	TOTAL SHEETS
01	Men	101	R0.1/R101.6	54	75

Randell D. Hiatt
REGISTERED CIVIL ENGINEER

June 6, 2008
PLANS APPROVAL DATE

REGISTERED PROFESSIONAL ENGINEER Randell D. Hiatt No. C50200 Exp. 6-30-09 CIVIL STATE OF CALIFORNIA

The State of California or its officers or agents shall not be responsible for the accuracy or completeness of electronic copies of this plan sheet.

To accompany plans dated 9-28-09

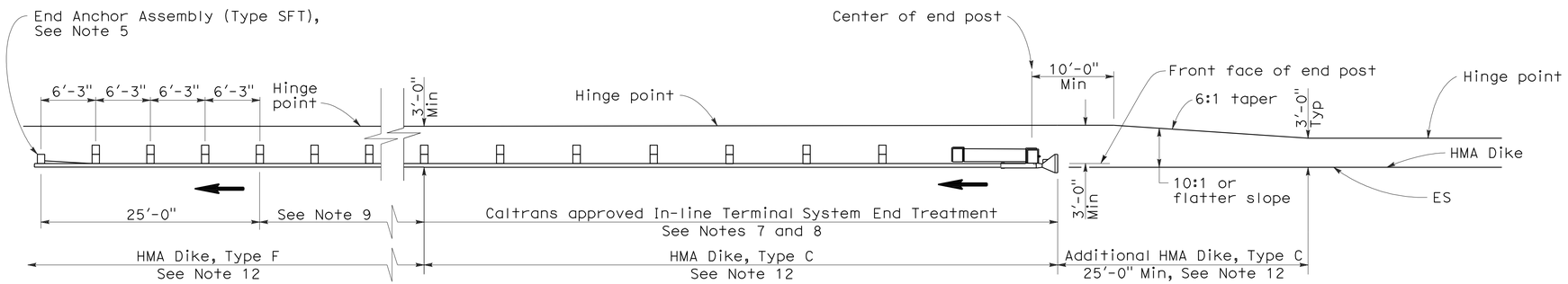

TYPE 11A LAYOUT

(EMBANKMENT GUARD INSTALLATION WITH IN-LINE END TREATMENT AT TRAFFIC APPROACH END OF RAILING)
See Note 6

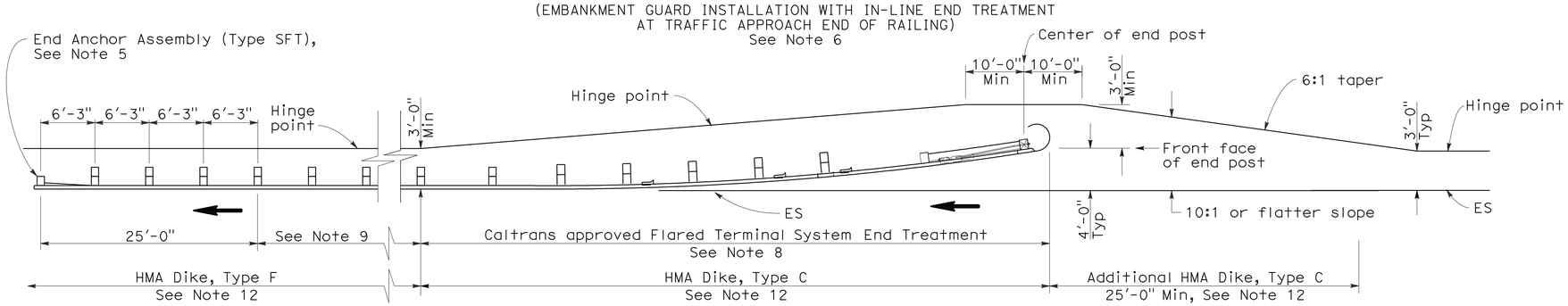

TYPE 11B LAYOUT

(EMBANKMENT GUARD RAILING INSTALLATION WITH FLARED END TREATMENT AT TRAFFIC APPROACH END OF RAILING)
See Note 6

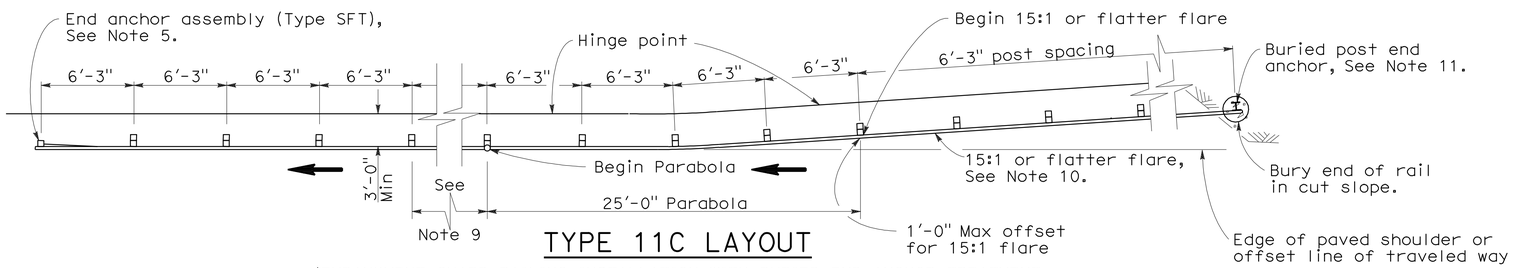

TYPE 11C LAYOUT

(EMBANKMENT GUARD RAILING INSTALLATION WITH BURIED END ANCHOR TREATMENT AT TRAFFIC APPROACH END OF RAILING)
See Notes 6 and 12

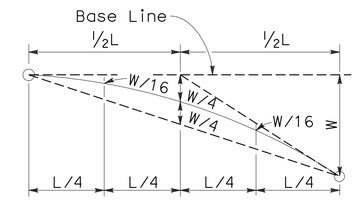

TYPICAL PARABOLIC LAYOUT

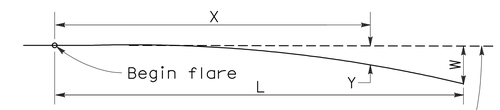

Base Line (Edge of paved shoulder or offset line of edge of traveled way)

$$Y = \frac{WX^2}{L^2}$$

Y = Offset from base line
W = Maximum offset
X = Distance along base line
L = Length of flare

PARABOLIC FLARE OFFSETS

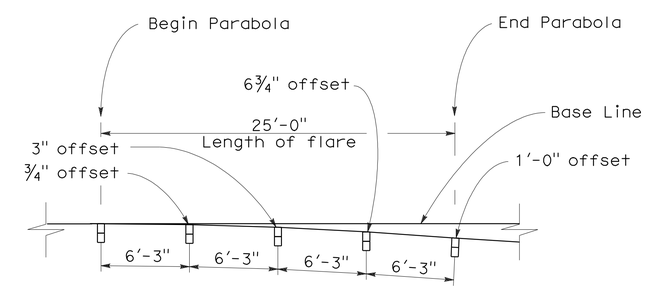

TYPICAL FLARE OFFSETS FOR 1 FOOT MAX END OFFSET

NOTES:

1. Line post, blocks and hardware to be used are shown on Standard Plans A77A1, A77A2, A77B1, A77C1, and A77C2.
2. Guard rail post spacing to be 6'-3" center to center, except as otherwise noted.
3. Except as noted, line posts are 6" x 8" x 6'-0" wood with 6" x 8" x 1'-2" wood blocks. W6 x 9 steel posts, 6'-0" in length, with 6" x 8" x 1'-2" notched wood blocks or recycled plastic blocks may be used for 6" x 8" x 6'-0" wood post with 6" x 8" x 1'-2" wood blocks where applicable and when specified.
4. Direction of adjacent traffic indicated by ⟶.
5. For End Anchor Assembly (Type SFT) details, see Standard Plan A77H1.
6. Layout Types 11A, 11B or 11C are typically used where guard railing is recommended to shield embankment slopes and a crashworthy end treatment is required for only one direction of traffic.
7. In-line Terminal System End Treatments are used where site conditions will not accommodate a flared end treatment.
8. The type of terminal system end treatment to be used will be shown on the Project Plans.
9. Dependent on site conditions (embankment height and side slope), construction of additional guard railing (length equal to multiples of 12'-6" with 6'-3" post spacing) may be advisable.
10. The 15:1 or flatter flare used with buried end anchors is based on the edge of the paved shoulder or offset line of edge of the traveled way. The length of guard railing within the 15:1 or flatter flare is based on site conditions and should be a length equal to multiples of 12'-6".
11. For details of the buried post end anchor used with Type 11C Layout, see Standard Plan A77I2.
12. Where placement of dike is required with guard railing installations, see Revised Standard Plan RSP A77C4 for dike positioning details.

STATE OF CALIFORNIA
DEPARTMENT OF TRANSPORTATION

METAL BEAM GUARD RAILING TYPICAL LAYOUTS FOR EMBANKMENTS

NO SCALE

RSP A77E1 DATED JUNE 6, 2008 SUPERSEDES STANDARD PLAN A77E1 DATED MAY 1, 2006 - PAGE 48 OF THE STANDARD PLANS BOOK DATED MAY 2006.

REVISED STANDARD PLAN RSP A77E1

2006 REVISED STANDARD PLAN RSP A77E1

12-10-07

DIST	COUNTY	ROUTE	POST MILES TOTAL PROJECT	SHEET NO.	TOTAL SHEETS
01	Men	101	R0.1/R101.6	55	75

Randell D. Hiatt
REGISTERED CIVIL ENGINEER

June 6, 2008
PLANS APPROVAL DATE

REGISTERED PROFESSIONAL ENGINEER
Randell D. Hiatt
No. C50200
Exp. 6-30-09
CIVIL
STATE OF CALIFORNIA

The State of California or its officers or agents shall not be responsible for the accuracy or completeness of electronic copies of this plan sheet.

To accompany plans dated 9-28-09

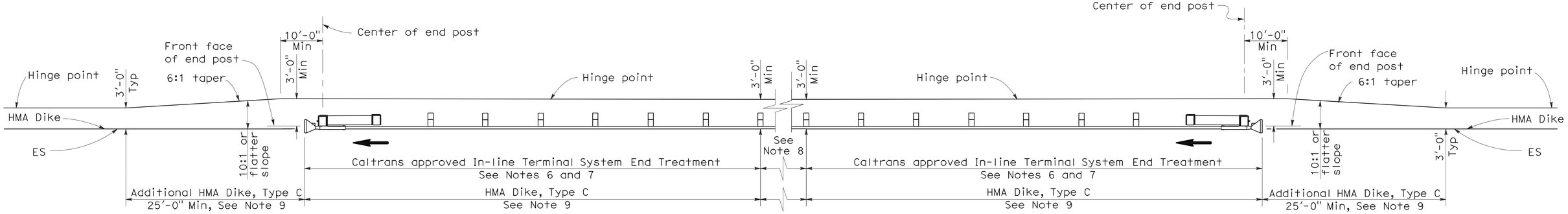

TYPE 11D LAYOUT

(EMBANKMENT GUARD RAILING INSTALLATION WITH IN-LINE END TREATMENT AT EACH END OF RAILING)
See Note 5

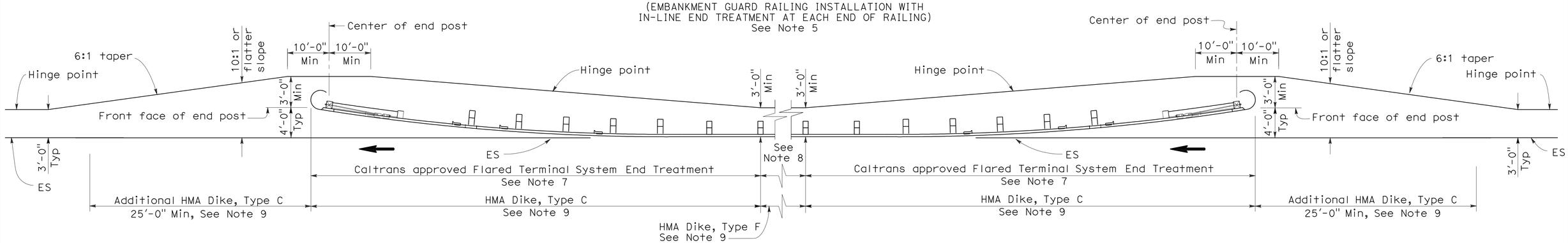

TYPE 11E LAYOUT

(EMBANKMENT GUARD RAILING INSTALLATION WITH FLARED END TREATMENT AT EACH END OF RAILING)
See Note 5

NOTES:

1. Line post, blocks and hardware to be used are shown on Standard Plans A77A1, A77A2, A77B1, A77C1 and A77C2.
2. Guard rail post spacing to be 6'-3" center to center, except as otherwise noted.
3. Except as noted, line posts are 6" x 8" x 6'-0" wood with 6" x 8" x 1'-2" wood blocks. W6 x 9 steel posts, 6'-0" in length, with 6" x 8" x 1'-2" notched wood blocks or plastic blocks may be used for 6" x 8" x 6'-0" wood post with 6" x 8" x 1'-2" wood blocks where applicable and when specified.
4. Direction of adjacent traffic indicated by ⟶.
5. Layout Types 11D through 11L, shown on the A77E Series of Revised Standard Plans, are typically used where guard railing is recommended to shield embankment slopes and a crashworthy end treatment is required for both directions of traffic.
6. In-line Terminal System End Treatments are used where site conditions will not accommodate a flared end treatment.
7. The type of terminal system end treatment to be used will be shown on the Project Plans.
8. Dependent on site conditions (embankment height and side slope), construction of additional guard railing (length equal to multiples of 12'-6" with 6'-3" post spacing) may be advisable.
9. Where placement of dike is required with guard railing installations, see Revised Standard Plan RSP A77C4 for dike positioning details.

STATE OF CALIFORNIA
DEPARTMENT OF TRANSPORTATION

METAL BEAM GUARD RAILING TYPICAL LAYOUTS FOR EMBANKMENTS

NO SCALE

RSP A77E2 DATED JUNE 6, 2008 SUPERSEDES STANDARD PLAN A77E2
DATED MAY 1, 2006 - PAGE 49 OF THE STANDARD PLANS BOOK DATED MAY 2006.

REVISED STANDARD PLAN RSP A77E2

2006 REVISED STANDARD PLAN RSP A77E2

12-10-07

DIST	COUNTY	ROUTE	POST MILES TOTAL PROJECT	SHEET NO.	TOTAL SHEETS
01	Men	101	R0.1/R101.6	56	75

Randell D. Hiatt
REGISTERED CIVIL ENGINEER

June 6, 2008
PLANS APPROVAL DATE

REGISTERED PROFESSIONAL ENGINEER
Randell D. Hiatt
No. C50200
Exp. 6-30-09
CIVIL
STATE OF CALIFORNIA

The State of California or its officers or agents shall not be responsible for the accuracy or completeness of electronic copies of this plan sheet.

To accompany plans dated 9-28-09

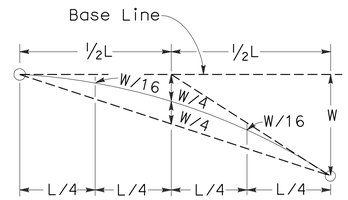

TYPICAL PARABOLIC LAYOUT

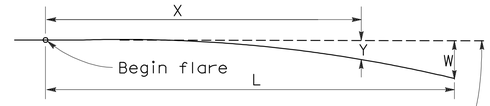

Base Line (Edge of paved shoulder or offset line of edge of traveled way)

$$Y = \frac{WX^2}{L^2}$$

Y = Offset from base line
W = Maximum offset
X = Distance along base line
L = Length of flare

PARABOLIC FLARE OFFSETS

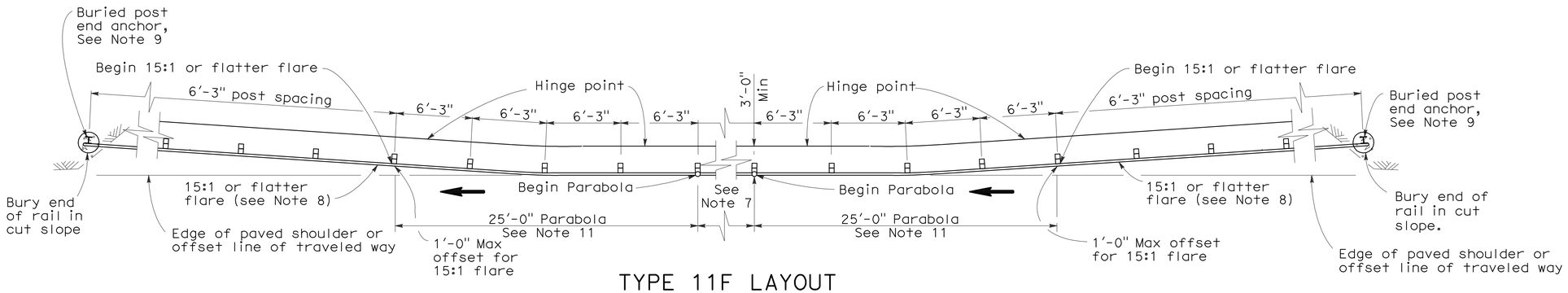

TYPE 11F LAYOUT

(EMBANKMENT GUARD RAILING INSTALLATION WITH A BURIED END ANCHOR TREATMENT AT EACH END OF RAILING)
See Notes 5 and 10

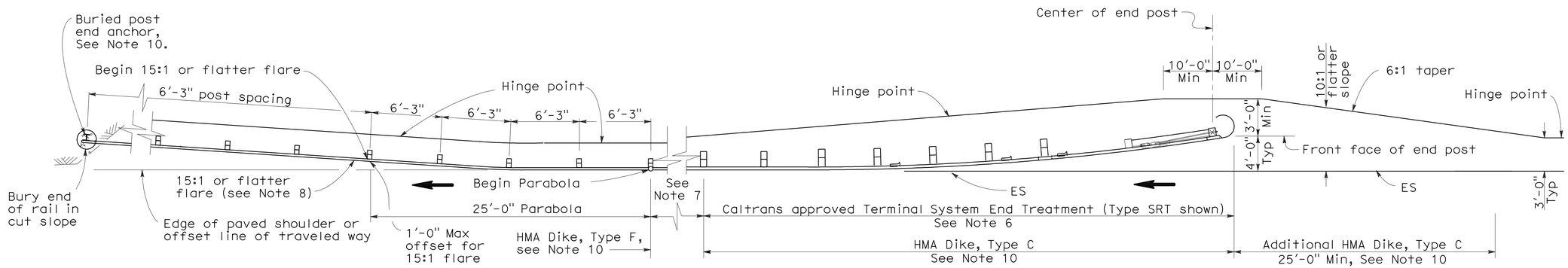

TYPE 11G LAYOUT

(EMBANKMENT GUARD RAILING INSTALLATION WITH FLARED END TREATMENT AND A BURIED END ANCHOR TREATMENT AT THE ENDS OF RAILING)
See Notes 5 and 10

NOTES:

1. Line post, blocks and hardware to be used are shown on Standard Plans A77A1, A77A2, A77B1, A77C1 and A77C2.
2. Guard rail post spacing to be 6'-3" center to center, except as otherwise noted.
3. Except as noted, line posts are 6" x 8" x 6'-0" wood with 6" x 8" x 1'-2" wood blocks. W6 x 9 steel posts, 6'-0" in length, with 6" x 8" x 1'-2" notched wood blocks or plastic blocks may be used for 6" x 8" x 6'-0" wood post with 6" x 8" x 1'-2" wood blocks where applicable and when specified.
4. Direction of adjacent traffic indicated by ⟶.
5. Layout Types 11D through 11L, shown on the A77E Series of Revised Standard Plans, are typically used where guard railing is recommended to shield embankment slopes and a crashworthy end treatment is required for both directions of traffic.
6. The type of terminal system end treatment to be used will be shown on the Project Plans.
7. Dependent on site conditions (embankment height and side slope), construction of additional guard railing (length equal to multiples of 12'-6" with 6'-3" post spacing) may be advisable.
8. The 15:1 or flatter flare used with buried end anchors is based on the edge of the paved shoulder or offset line of edge of the traveled way. The length of guard railing within the 15:1 or flatter flare is based on site conditions and should be a length equal to multiples of 12'-6".
9. For details of the buried post end anchor used with Type 11F and 11G Layouts, see Standard Plan A77I2.
10. Where placement of dike is required with guard railing installations, see Revised Standard Plan RSP A77C4 for dike positioning details.
11. For typical flare offsets for 25'-0" length parabola with maximum offset of 1'-0", see Revised Standard Plan RSP A77E1.

STATE OF CALIFORNIA
DEPARTMENT OF TRANSPORTATION

METAL BEAM GUARD RAILING TYPICAL LAYOUTS FOR EMBANKMENTS

NO SCALE

RSP A77E3 DATED JUNE 6, 2008 SUPERSEDES STANDARD PLAN A77E3 DATED MAY 1, 2006 - PAGE 50 OF THE STANDARD PLANS BOOK DATED MAY 2006.

REVISED STANDARD PLAN RSP A77E3

2006 REVISED STANDARD PLAN RSP A77E3

12-10-07

DIST	COUNTY	ROUTE	POST MILES TOTAL PROJECT	SHEET NO.	TOTAL SHEETS
01	Men	101	R0.1/R101.6	57	75

Randell D. Hiatt
REGISTERED CIVIL ENGINEER

June 6, 2008
PLANS APPROVAL DATE

REGISTERED PROFESSIONAL ENGINEER
Randell D. Hiatt
No. C50200
Exp. 6-30-09
CIVIL
STATE OF CALIFORNIA

The State of California or its officers or agents shall not be responsible for the accuracy or completeness of electronic copies of this plan sheet.

To accompany plans dated 9-28-09

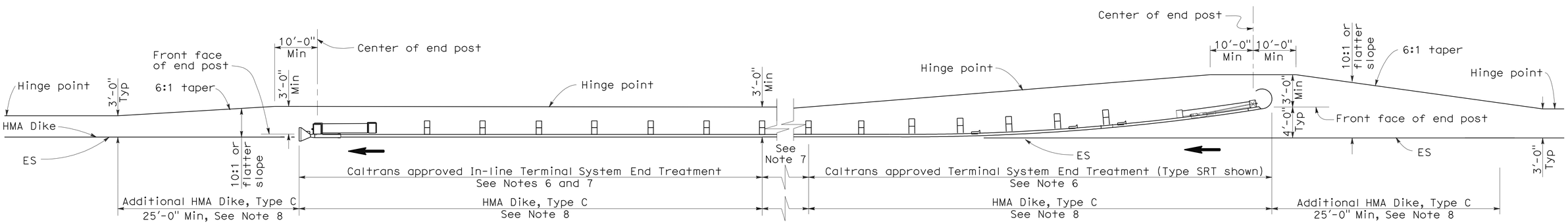

TYPE 11H LAYOUT

(EMBANKMENT GUARD RAILING INSTALLATION WITH FLARED END TREATMENT
AND AN IN-LINE TREATMENT AT THE ENDS OF RAILING)
See Notes 5 and 8

NOTES:

1. Line post, blocks and hardware to be used are shown on Standard Plans A77A1, A77A2, A77B1, A77C1 and A77C2.
2. Guard rail post spacing to be 6'-3" center to center, except as otherwise noted.
3. Except as noted, line posts are 6" x 8" x 6'-0" wood with 6" x 8" x 1'-2" wood blocks. W6 x 9 steel posts, 6'-0" in length, with 6" x 8" x 1'-2" notched wood blocks or plastic blocks may be used for 6" x 8" x 6'-0" wood post with 6" x 8" x 1'-2" wood blocks where applicable and when specified.
4. Direction of adjacent traffic indicated by ➡.
5. Layout Types 11D through 11L, shown on the A77E Series of Revised Standard Plans, are typically used where guard railing is recommended to shield embankment slopes and a crashworthy end treatment is required for both directions of traffic.
6. The type of terminal system end treatment to be used will be shown on the Project Plans.
7. Dependent on site conditions (embankment height and side slope), construction of additional guard railing (length equal to multiples of 12'-6" with 6'-3" post spacing) may be advisable.
8. Where placement of dike is required with guard railing installations, see Revised Standard Plan RSP A77C4 for dike positioning details.

STATE OF CALIFORNIA
DEPARTMENT OF TRANSPORTATION

METAL BEAM GUARD RAILING TYPICAL LAYOUTS FOR EMBANKMENTS

NO SCALE

RSP A77E4 DATED JUNE 6, 2008 SUPERSEDES STANDARD PLAN A77E4
DATED MAY 1, 2006 - PAGE 51 OF THE STANDARD PLANS BOOK DATED MAY 2006.

REVISED STANDARD PLAN RSP A77E4

2006 REVISED STANDARD PLAN RSP A77E4

DIST	COUNTY	ROUTE	POST MILES TOTAL PROJECT	SHEET NO.	TOTAL SHEETS
01	Men	101	R0.1/R101.6	58	75

Randell D. Hiatt
REGISTERED CIVIL ENGINEER

June 6, 2008
PLANS APPROVAL DATE

REGISTERED PROFESSIONAL ENGINEER
Randell D. Hiatt
No. C50200
Exp. 6-30-09
CIVIL
STATE OF CALIFORNIA

The State of California or its officers or agents shall not be responsible for the accuracy or completeness of electronic copies of this plan sheet.

To accompany plans dated 9-28-09

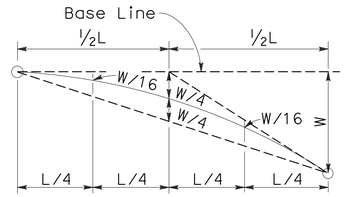

TYPICAL PARABOLIC LAYOUT

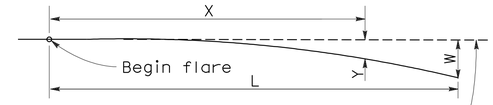

Base Line (Edge of paved shoulder or offset line of edge of traveled way)

$$Y = \frac{WX^2}{L^2}$$

Y = Offset from base line
W = Maximum offset
X = Distance along base line
L = Length of flare

PARABOLIC FLARE OFFSETS

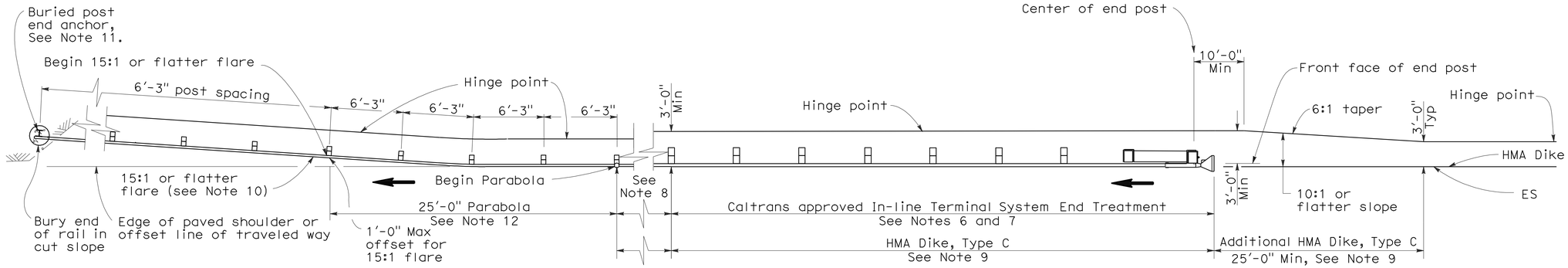

TYPE 11I LAYOUT

(EMBANKMENT GUARD RAILING INSTALLATION WITH IN-LINE END TREATMENT AND A BURIED END ANCHOR TREATMENT AT THE ENDS OF RAILING)
See Note 5

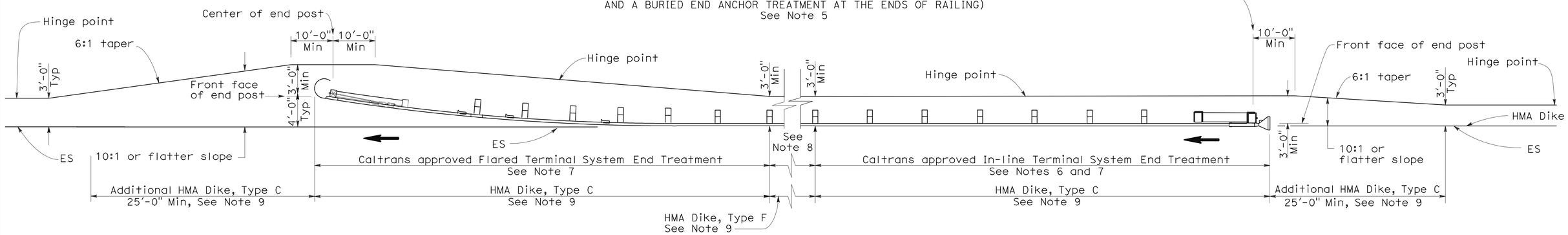

TYPE 11J LAYOUT

(EMBANKMENT GUARD RAILING INSTALLATION WITH IN-LINE END TREATMENT AND FLARED END TREATMENT AT THE ENDS OF RAILING)
See Note 5

NOTES:

1. Line post, blocks and hardware to be used are shown on Standard Plans A77A1, A77A2, A77B1, A77C1 and A77C2.
2. Guard rail post spacing to be 6'-3" center to center, except as otherwise noted.
3. Except as noted, line posts are 6" x 8" x 6'-0" wood with 6" x 8" x 1'-2" wood blocks. W6 x 9 steel posts, 6'-0" in length, with 6" x 8" x 1'-2" notched wood blocks or plastic blocks may be used for 6" x 8" x 6'-0" wood post with 6" x 8" x 1'-2" wood blocks where applicable and when specified.
4. Direction of adjacent traffic indicated by ⟶.
5. Layout Types 11D through 11L, shown on the A77E Series of Revised Standard Plans, are typically used where guard railing is recommended to shield embamkment slopes and a crashworthy end treatment is required for both directions of traffic.
6. In-line Terminal System End Treatments are used where site conditions will not accommodate a flared end treatment.
7. The type of terminal system end treatment to be used will be shown on the Project Plans.
8. Dependent on site conditions (embankment height and side slope), construction of additional guard railing (length equal to multiples of 12'-6" with 6'-3" post spacing) may be advisable.
9. Where placement of dike is required with guard railing installations, see Revised Standard Plan RSP A77C4 for dike positioning details.
10. The 15:1 or flatter flare used with buried end anchors is based on the edge of the paved shoulder or offset line of edge of the traveled way. The length of guard railing within the 15:1 or flatter flare is based on site conditions and should be a length equal to multiples of 12'-6".
11. For details of the buried post end anchor used with Type 11I Layout, see Standard Plan A77I2.
12. For typical flare offsets for 25'-0" length parabola with maximum offset of 1'-0", see Revised Standard Plan RSP A77E1.

STATE OF CALIFORNIA
DEPARTMENT OF TRANSPORTATION

METAL BEAM GUARD RAILING TYPICAL LAYOUTS FOR EMBANKMENTS

NO SCALE

RSP A77E5 DATED JUNE 6, 2008 SUPERSEDES STANDARD PLAN A77E5 DATED MAY 1, 2006 - PAGE 52 OF THE STANDARD PLANS BOOK DATED MAY 2006.

REVISED STANDARD PLAN RSP A77E5

2006 REVISED STANDARD PLAN RSP A77E5

12-10-07

DIST	COUNTY	ROUTE	POST MILES TOTAL PROJECT	SHEET NO.	TOTAL SHEETS
01	Men	101	R0.1/R101.6	59	75

Randell D. Hiatt
REGISTERED CIVIL ENGINEER

June 6, 2008
PLANS APPROVAL DATE

REGISTERED PROFESSIONAL ENGINEER
Randell D. Hiatt
No. C50200
Exp. 6-30-09
CIVIL
STATE OF CALIFORNIA

The State of California or its officers or agents shall not be responsible for the accuracy or completeness of electronic copies of this plan sheet.

To accompany plans dated 9-28-09

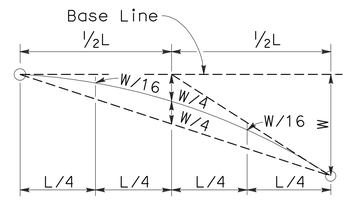

TYPICAL PARABOLIC LAYOUT

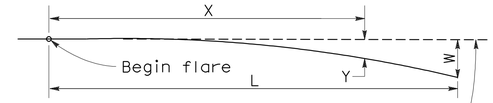

Base Line (Edge of paved shoulder or offset line of edge of traveled way)

$$Y = \frac{WX^2}{L^2}$$

Y = Offset from base line
W = Maximum offset
X = Distance along base line
L = Length of flare

PARABOLIC FLARE OFFSETS

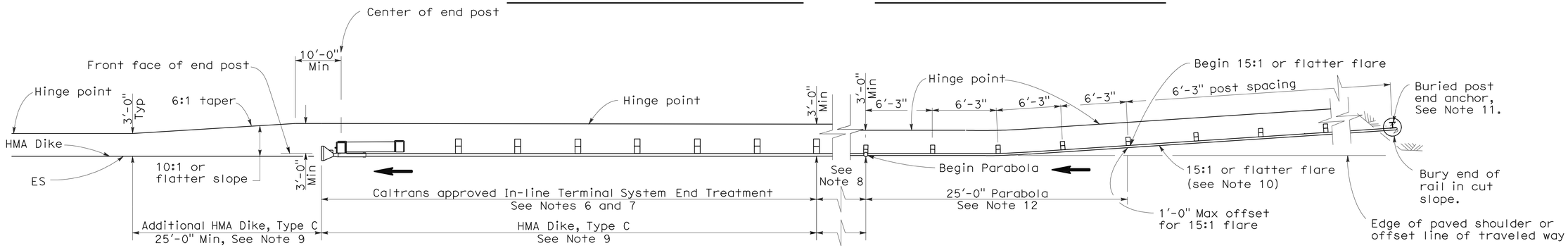

TYPE 11K LAYOUT

(EMBANKMENT GUARD RAILING INSTALLATION WITH A BURIED END ANCHOR TREATMENT AND AN IN-LINE END TREATMENT AT THE ENDS OF RAILING)
See Note 5

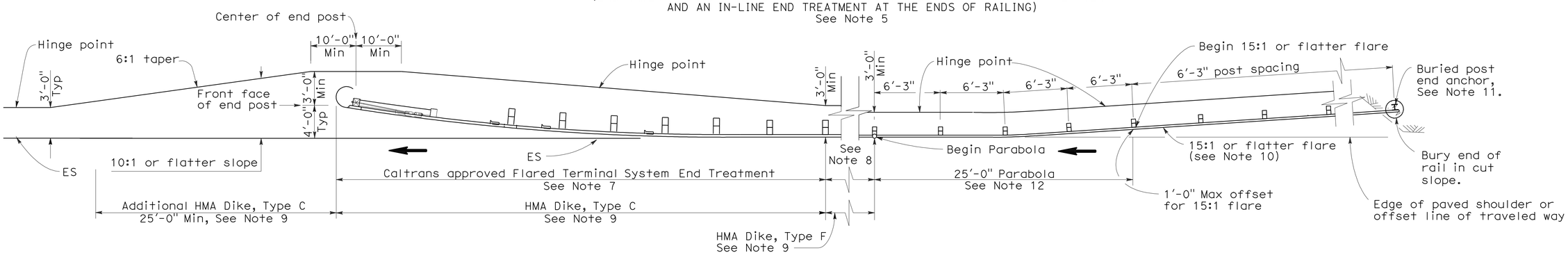

TYPE 11L LAYOUT

(EMBANKMENT GUARD RAILING INSTALLATION WITH A BURIED END ANCHOR TREATMENT AND A FLARED END TREATMENT AT THE ENDS OF RAILING)
See Note 5

NOTES:

1. Line post, blocks and hardware to be used are shown on Standard Plans A77A1, A77A2, A77B1, A77C1 and A77C2.
2. Guard rail post spacing to be 6'-3" center to center, except as otherwise noted.
3. Except as noted, line posts are 6" x 8" x 6'-0" wood with 6" x 8" x 1'-2" wood blocks. W6 x 9 steel posts, 6'-0" in length, with 6" x 8" x 1'-2" notched wood blocks or plastic blocks may be used for 6" x 8" x 6'-0" wood post with 6" x 8" x 1'-2" wood blocks where applicable and when specified.
4. Direction of adjacent traffic indicated by ⟶.
5. Layout Types 11D through 11L, shown on the A77E Series of Revised Standard Plans, are typically used where guard railing is recommended to shield embamkment slopes and a crashworthy end treatment is required for both directions of traffic.
6. In-line Terminal System End Treatments are used where site conditions will not accommodate a flared end treatment.
7. The type of terminal system end treatment to be used will be shown on the Project Plans.
8. Dependent on site conditions (embankment height and side slope), construction of additional guard railing (length equal to multiples of 12'-6" with 6'-3" post spacing) may be advisable.
9. Where placement of dike is required with guard railing installations, see Revised Standard Plan RSP A77C4 for dike positioning details.
10. The 15:1 or flatter flare used with buried end anchors is based on the edge of the paved shoulder or offset line of edge of the traveled way. The length of guard railing within the 15:1 or flatter flare is based on site conditions and should be a length equal to multiples of 12'-6".
11. For details of the buried post end anchor used with Type 11K and 11L Layouts, see Standard Plan A77I2.
12. For typical flare offsets for 25'-0" length parabola with maximum offset of 1'-0", see Revised Standard Plan RSP A77E1.

STATE OF CALIFORNIA
DEPARTMENT OF TRANSPORTATION

METAL BEAM GUARD RAILING TYPICAL LAYOUTS FOR EMBANKMENTS

NO SCALE

RSP A77E6 DATED JUNE 6, 2008 SUPERSEDES STANDARD PLAN A77E6
DATED MAY 1, 2006 - PAGE 53 OF THE STANDARD PLANS BOOK DATED MAY 2006.

REVISED STANDARD PLAN RSP A77E6

2006 REVISED STANDARD PLAN RSP A77E6

12-10-07

DIST	COUNTY	ROUTE	POST MILES TOTAL PROJECT	SHEET NO.	TOTAL SHEETS
01	Men	101	R0.1/R101.6	60	75

Randell D. Hiatt
REGISTERED CIVIL ENGINEER

June 6, 2008
PLANS APPROVAL DATE

REGISTERED PROFESSIONAL ENGINEER
Randell D. Hiatt
No. C50200
Exp. 6-30-09
CIVIL
STATE OF CALIFORNIA

The State of California or its officers or agents shall not be responsible for the accuracy or completeness of electronic copies of this plan sheet.

To accompany plans dated 9-28-09

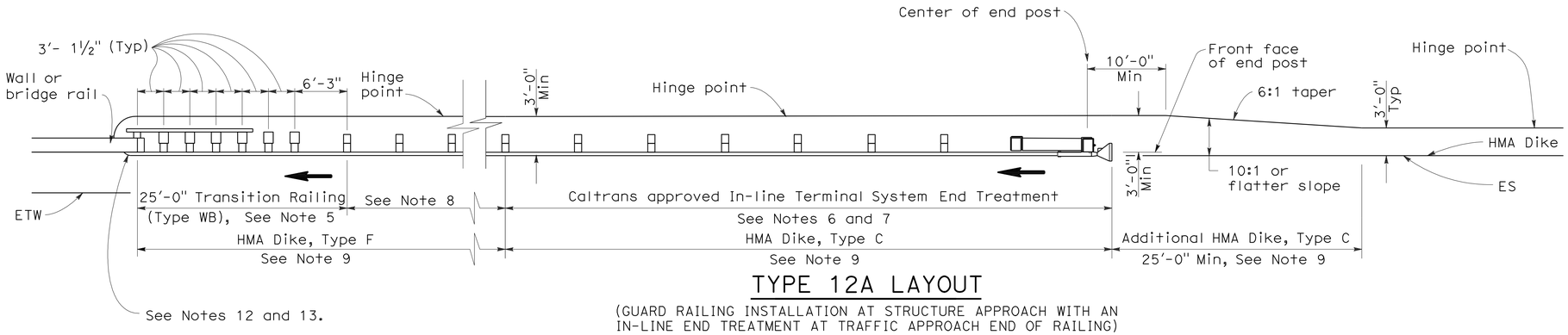

TYPE 12A LAYOUT

(GUARD RAILING INSTALLATION AT STRUCTURE APPROACH WITH AN IN-LINE END TREATMENT AT TRAFFIC APPROACH END OF RAILING)
See Notes 10

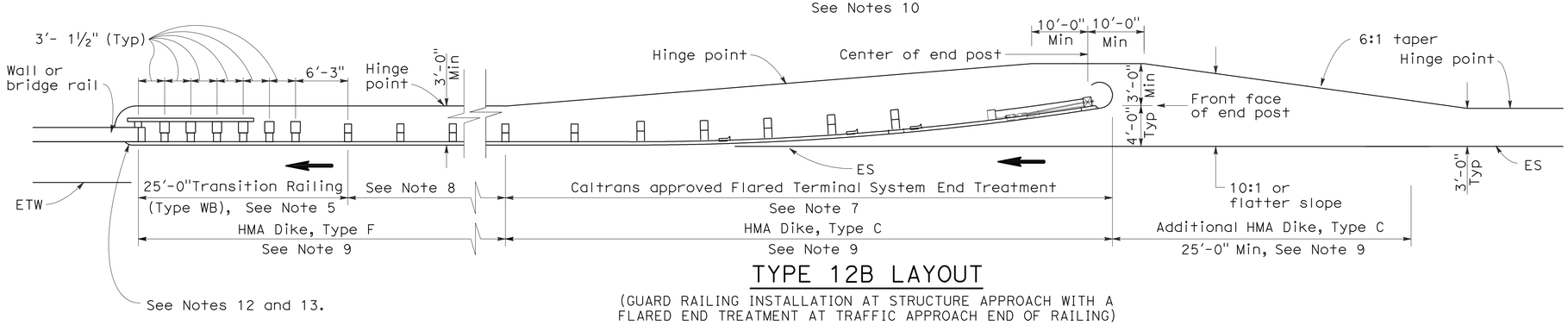

TYPE 12B LAYOUT

(GUARD RAILING INSTALLATION AT STRUCTURE APPROACH WITH A FLARED END TREATMENT AT TRAFFIC APPROACH END OF RAILING)
See Notes 10

NOTES:

1. Line post, blocks and hardware to be used are shown on Standard Plans A77A1, A77A2, A77B1, A77C1 and A77C2.
2. Guard rail post spacing to be 6'-3" center to center, except as otherwise noted.
3. Except as noted, line posts are 6" x 8" x 6'-0" wood with 6" x 8" x 1'-2" wood blocks. W6 x 9 steel posts, 6'-0" in length, with 6" x 8" x 1'-2" notched wood blocks or plastic blocks may be used for 6" x 8" x 6'-0" wood posts with 6" x 8" x 1'-2" wood blocks where applicable and when specified.
4. Direction of adjacent traffic indicated by ➡.
5. For Transition Railing (Type WB) details for Types 12A and 12B Layouts, see Standard Plan A77J4.
6. In-line Terminal System End Treatments are used where site conditions will not accommodate a flared end treatment.
7. The type of terminal system end treatment to be used will be shown on the Project Plans.
8. Dependent on site conditions (embankment height, side slopes, or other fixed objects), it may be advisable to construct additional guard railing (a length equal to multiples of 12'-6" with 6'-3" post spacing) between the transition railing and end treatment.
9. Where placement of dike is required with guard railing installations, see Revised Standard Plan RSP A77C4 for dike positioning details.
10. Type 12A or Type 12B Layouts are typically used:
    a. To the right of approaching traffic, at the end of a structure, on two-lane conventional highway where the roadbed width across the structure is less than 40 feet.
    b. To the left of approaching traffic, at the end of a structure, on two-lane conventional highway where the roadbed width across the structure is less than 40 feet.
    c. To the right of approaching traffic at the end of each structure on multilane freeways or expressways with separate adjacent or parallel bridges.
    d. To the right of approaching traffic at the end of the structure on multilane freeways or expressways with decked median on the bridge.
11. See Revised Standard Plan RSP A77F3 for typical layout used left of approaching traffic at the ends of each structure on multilane freeways or expressways with separate adjacent or parallel bridges.
12. For additional details of typical connections to bridge rail, see Connection Detail AA on Revised Standard Plans RSP A77J1 and RSP A77J2 and Connection Detail FF on Standard Plans A77K1 and A77K2.
13. For additional details of a typical connection to walls or abutments, see Standard Plan A77J3.

STATE OF CALIFORNIA
DEPARTMENT OF TRANSPORTATION

METAL BEAM GUARD RAILING TYPICAL LAYOUTS FOR STRUCTURE APPROACH

NO SCALE

RSP A77F1 DATED JUNE 6, 2008 SUPERSEDES STANDARD PLAN A77F1
DATED MAY 1, 2006 - PAGE 54 OF THE STANDARD PLANS BOOK DATED MAY 2006.

REVISED STANDARD PLAN RSP A77F1

2006 REVISED STANDARD PLAN RSP A77F1

DIST	COUNTY	ROUTE	POST MILES TOTAL PROJECT	SHEET NO.	TOTAL SHEETS
01	Men	101	R0.1/R101.6	61	75

Randell D. Hiatt
REGISTERED CIVIL ENGINEER

June 6, 2008
PLANS APPROVAL DATE

REGISTERED PROFESSIONAL ENGINEER
Randell D. Hiatt
No. C50200
Exp. 6-30-09
CIVIL
STATE OF CALIFORNIA

The State of California or its officers or agents shall not be responsible for the accuracy or completeness of electronic copies of this plan sheet.

To accompany plans dated 9-28-09

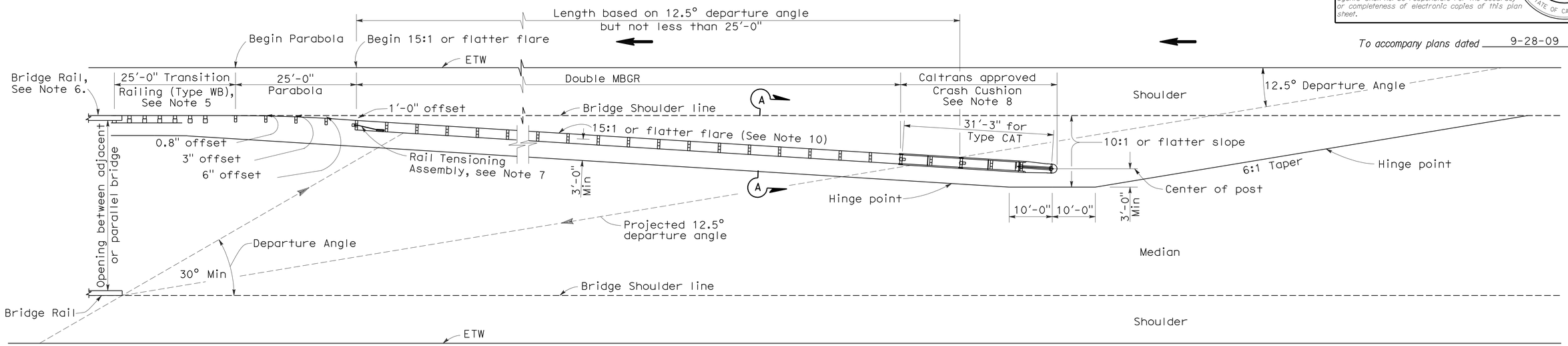

TYPE 12E LAYOUT

See Note 10

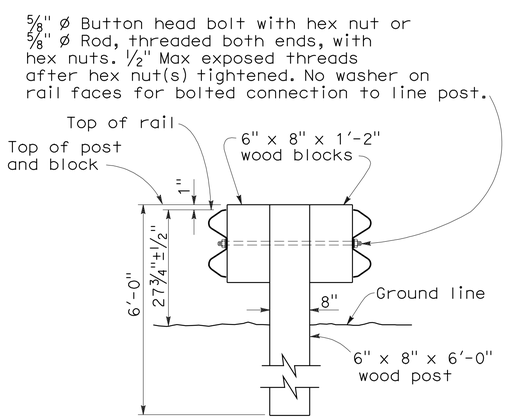

SECTION A-A

TYPICAL DOUBLE METAL BEAM GUARD RAILING

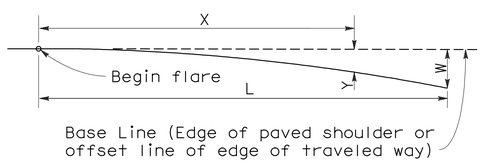

$$Y = \frac{WX^2}{L^2}$$

Y = Offset from base line
W = Maximum offset
X = Distance along base line
L = Length of flare

PARABOLIC FLARE OFFSETS

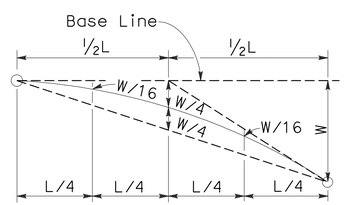

TYPICAL PARABOLIC LAYOUT

NOTES:

1. Line post, blocks and hardware to be used are shown on Standard Plans A77A1, A77A2, A77B1, A77C1 and A77C2.
2. Guard railing post spacing to be 6'-3" center to center, except as otherwise noted.
3. Except as noted, line posts are 6" x 8" x 6'-0" wood with 6" x 8" x 1'-2" wood blocks. W6 x 9 steel posts, 6'-0" in length, with 6" x 8" x 1'-2" notched wood blocks or notched recycled plastic blocks may be used for 6" x 8" x 6'-0" wood line posts with 6" x 8" x 1'-2" wood blocks where applicable and when specified.
4. Direction of adjacent traffic indicated by ⟶.
5. For Transition Railing (Type WB) details, see Standard Plan A77J4.
6. For additional details of a typical connection to bridge rail, see Connection Detail AA on Revised Standard Plan RSP A77J1.
7. For Rail Tensioning Assembly details, see Standard Plan A77H2.
8. The type of Crash Cushion to be used will be shown on the Project Plans.
9. Type 12E Layout is typically used left of approaching traffic at the end of each structure on multilane freeways or expressways where a median type barrier is not constructed between separated roadbeds.
10. The 15:1 or flatter flare is measured off of the edge of traveled way.

STATE OF CALIFORNIA
DEPARTMENT OF TRANSPORTATION

METAL BEAM GUARD RAILING TYPICAL LAYOUTS FOR STRUCTURE APPROACH

NO SCALE

RSP A77F3 DATED JUNE 6, 2008 SUPERSEDES STANDARD PLAN A77F3
DATED MAY 1, 2006 - PAGE 56 OF THE STANDARD PLANS BOOK DATED MAY 2006.

REVISED STANDARD PLAN RSP A77F3

2006 REVISED STANDARD PLAN RSP A77F3

12-10-07

DIST	COUNTY	ROUTE	POST MILES TOTAL PROJECT	SHEET NO.	TOTAL SHEETS
01	Men	101	R0.1/R101.6	62	75

Randell D. Hiatt
REGISTERED CIVIL ENGINEER

June 6, 2008
PLANS APPROVAL DATE

REGISTERED PROFESSIONAL ENGINEER
Randell D. Hiatt
No. C50200
Exp. 6-30-09
CIVIL
STATE OF CALIFORNIA

The State of California or its officers or agents shall not be responsible for the accuracy or completeness of electronic copies of this plan sheet.

To accompany plans dated 9-28-09

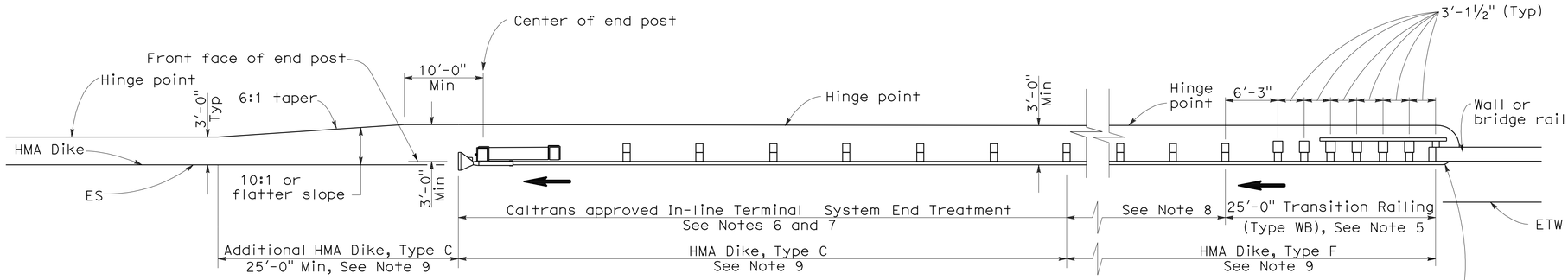

TYPE 12AA LAYOUT

(GUARD RAILING INSTALLATION AT STRUCTURE DEPARTURE WITH AN IN-LINE END TREATMENT AT TRAILING END OF RAILING)
See Notes 9 and 10

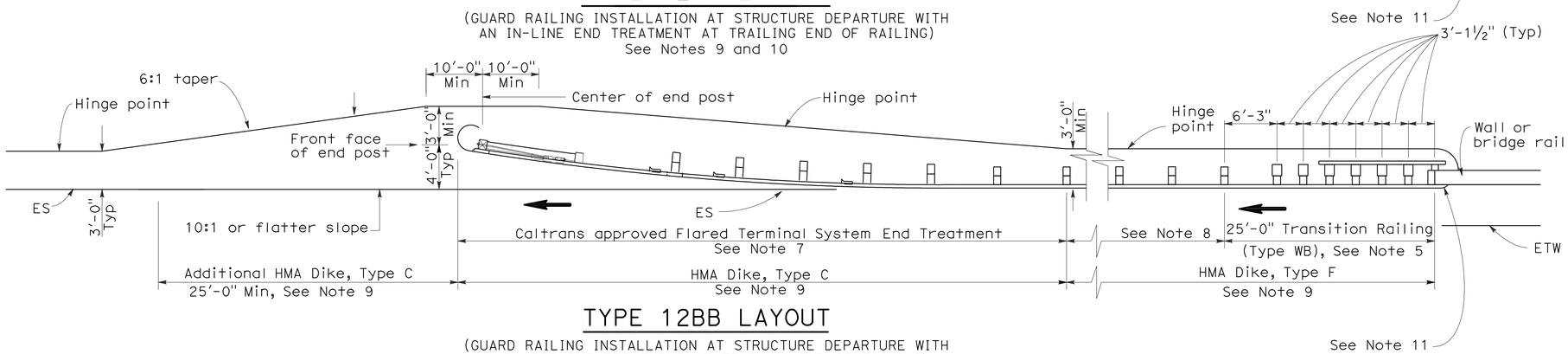

TYPE 12BB LAYOUT

(GUARD RAILING INSTALLATION AT STRUCTURE DEPARTURE WITH A FLARED END TREATMENT AT TRAILING END OF RAILING)
See Notes 9 and 10

NOTES:

1. Line post, blocks and hardware to be used are shown on Standard Plans A77A1, A77A2, A77B1, A77C1 and A77C2.
2. Guard rail post spacing to be 6'-3" center to center, except as otherwise noted.
3. Except as noted, line posts are 6" x 8" x 6'-0" wood with 6" x 8" x 1'-2" wood blocks. W6 x 9 steel posts, 6'-0" in length, with 6" x 8" x 1-2" notched wood blocks or notched recycled plastic blocks may be used for 6" x 8" x 6'-0" wood posts with 6" x 8" x 1'-2" wood blocks where applicable and when specified.
4. Direction of adjacent traffic indicated by ➡.
5. For Transition Railing (Type WB) details for Types 12AA and 12BB Layouts, see Standard Plan A77J4.
6. In-line Terminal System Treatments are used where site conditions will not accommodate a flared end treatment.
7. The type of terminal system to be used will be shown on the Project Plans.
8. Dependent on site conditions (embankment height, side slopes, other fixed objects), it may be advisable to construct additional guard railing (a length equal to multiples of 12'-6" with 6'-3" post spacing) between the transition railing and end treatments.
9. Where placement of dike is required with guard railing installations, see Revised Standard Plan RSP A77C4 for dike positioning details.
10. Type 12AA or Type 12BB Layouts are typically used to the right of traffic departing a structure on two-way conventional highways where the roadbed width across the structure is less than 40 feet.
11. For additional details of typical connections to bridge rail, see Connection Detail CC on Revised Standard Plan RSP A77J2 and Connection Detail HH on Standard Plans A77k2.

STATE OF CALIFORNIA
DEPARTMENT OF TRANSPORTATION

METAL BEAM GUARD RAILING TYPICAL LAYOUTS FOR STRUCTURE DEPARTURE

NO SCALE

RSP A77F4 DATED JUNE 6, 2008 SUPERSEDES STANDARD PLAN A77F4
DATED MAY 1, 2006 - PAGE 57 OF THE STANDARD PLANS BOOK DATED MAY 2006.

REVISED STANDARD PLAN RSP A77F4

2006 REVISED STANDARD PLAN RSP A77F4

12-10-07

DIST	COUNTY	ROUTE	POST MILES TOTAL PROJECT	SHEET NO.	TOTAL SHEETS
01	Men	101	R0.1/R101.6	63	75

Randell D. Hiatt
REGISTERED CIVIL ENGINEER

June 6, 2008
PLANS APPROVAL DATE

REGISTERED PROFESSIONAL ENGINEER Randell D. Hiatt No. C50200 Exp. 6-30-09 CIVIL STATE OF CALIFORNIA

The State of California or its officers or agents shall not be responsible for the accuracy or completeness of electronic copies of this plan sheet.

To accompany plans dated 9-28-09

NOTES:

1. Line post, blocks and hardware to be used are shown on Standard Plans A77A1, A77A2, A77B1, A77C1 and A77C2.
2. Guard railing post spacing to be 6′-3″ center to center, except as otherwise noted.
3. Except as noted, line posts are 6″ x 8″ x 6′-0″ wood with 6″ x 8″ x 1′-2″ wood blocks. W6 x 9 steel posts, 6′-0″ in length, with 6″ x 8″ x 1′-2″ notched wood blocks or notched recycled plastic blocks may be used for 6″ x 8″ x 6′-0″ wood line posts with 6″ x 8″ x 1′-2″ wood blocks where applicable and when specified.
4. A 4′-0″ minimum clearance is required between the face of the railing and the face of a fixed object located directly behind standard guard railing sections with post spacing of 6′-3″. Construct guard railing as shown in the detail "Strengthened Railing Sections for Fixed Objects" on this plan, where the clearance between the face of the railing and the face of a fixed object is less than 4′-0″, but not less than 2′-3″. Where the clearance is less than 2′-3″, a concrete wall or barrier should be constructed to shield the fixed object(s).
5. Direction of adjacent traffic indicated by ➡.
6. For End Anchor Assembly (Type SFT) details, see Standard Plan A77H1.
7. For details of Rail Tensioning Assembly, see Standard Plan A77H2.
8. The type of crash cushion to be used will be shown on the Project Plans.
9. Type 14A layout is typically used on multilane freeways or expressways to shield fixed objects where a median type barrier is not constructed between the separated roadbeds.
10. For typical flare offsets for 25′-0″ length parabola with maximum offset of 1′-0″, see Revised Standard Plan RSP A77E1.
11. The 15:1 or flatter flare is measured off of the edge of traveled way.
12. W6 x 15 steel post, 8′-0″ in length, with 8″ x 8″ x 1′-2″ notched wood block or notched recycled plastic block may be used in place of the 10″ x 10″ x 8′-0″ wood post with 8″ x 8″ x 1′-2″ wood block shown in the "Strengthened Railing Sections Detail".

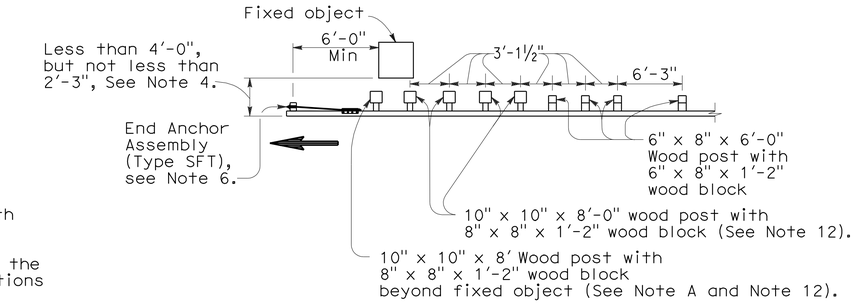

NOTE A: For a series of fixed objects (bridge columns, overhead sign supports, etc.) additional 10″ x 10″ x 8′-0″ wood post with 8″ x 8″ x 1′-2″ wood blocks at 3′-1½″ center to center spacing are to be used between fixed objects.

STRENGTHENED RAILING SECTIONS FOR FIXED OBJECT

Use strengthened railing sections with Type 14A layout where minimum clearance between the face of the guard railing and fixed object(s) is less than 4′-0″, but not less than 2′-3″, See Note 4.

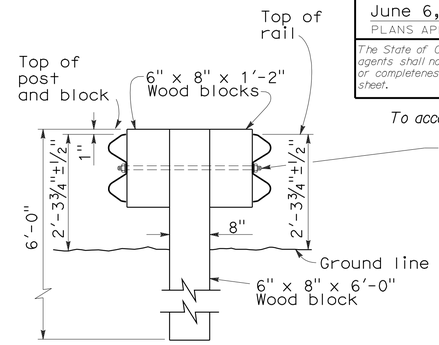

SECTION A-A
TYPICAL DOUBLE METAL BEAM GUARD RAILING

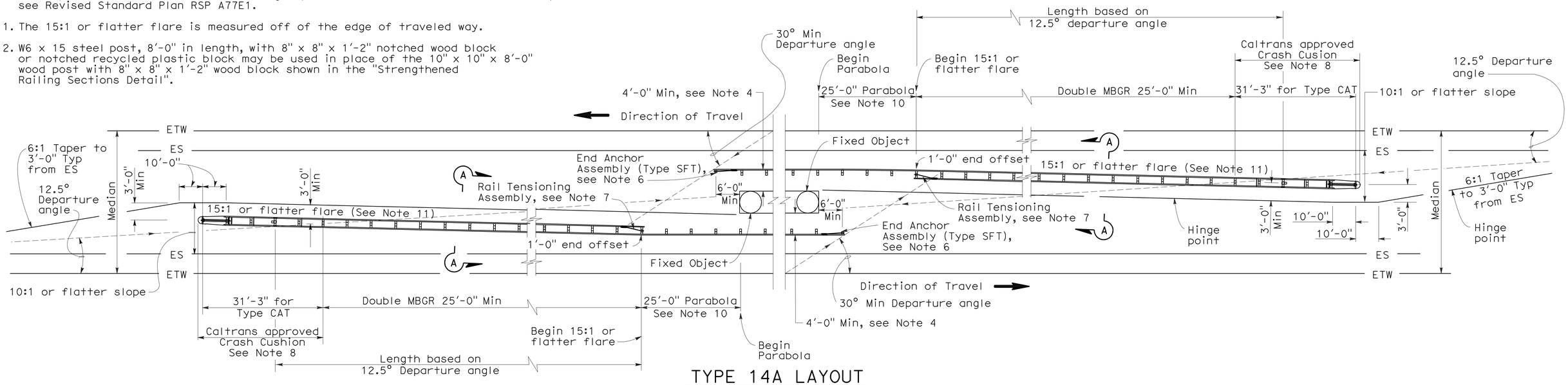

TYPE 14A LAYOUT

See Note 9

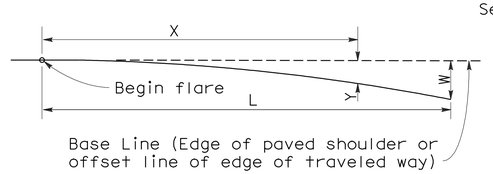

Base Line (Edge of paved shoulder or offset line of edge of traveled way)

$$Y = \frac{WX^2}{L^2}$$

Y = Offset from base line
W = Maximum offset
X = Distance along base line
L = Length of flare

PARABOLIC FLARE OFFSETS

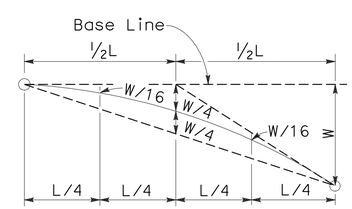

TYPICAL PARABOLIC LAYOUT

STATE OF CALIFORNIA
DEPARTMENT OF TRANSPORTATION

METAL BEAM GUARD RAILING TYPICAL LAYOUTS FOR FIXED OBJECTS BETWEEN SEPARATE ROADBEDS (TWO-WAY TRAFFIC)

NO SCALE

RSP A77G1 DATED JUNE 6, 2008 SUPERSEDES STANDARD PLAN A77G1 DATED MAY 1, 2006 - PAGE 59 OF THE STANDARD PLANS BOOK DATED MAY 2006.

REVISED STANDARD PLAN RSP A77G1

2006 REVISED STANDARD PLAN RSP A77G1

12-10-07

DIST	COUNTY	ROUTE	POST MILES TOTAL PROJECT	SHEET NO.	TOTAL SHEETS
01	Men	101	R0.1/R101.6	64	75

Randell D. Hiatt
REGISTERED CIVIL ENGINEER

June 6, 2008
PLANS APPROVAL DATE

REGISTERED PROFESSIONAL ENGINEER
Randell D. Hiatt
No. C50200
Exp. 6-30-09
CIVIL
STATE OF CALIFORNIA

The State of California or its officers or agents shall not be responsible for the accuracy or completeness of electronic copies of this plan sheet.

To accompany plans dated 9-28-09

NOTES:

1. Line post, blocks and hardware to be used are shown on Standard Plans A77A1, A77A2, A77B1, A77C1 and A77C2.
2. Guard railing post spacing to be 6′-3″ center to center, except as otherwise noted.
3. Except as noted, line posts are 6″ x 8″ x 6′-0″ wood with 6″ x 8″ x 1′-2″ wood blocks. W6 x 9 steel posts, 6′-0″ in length, with 6″ x 8″ x 1′-2″ notched wood blocks or notched recycled plastic blocks may be used for 6″ x 8″ x 6′-0″ wood line posts with 6″ x 8″ x 1′-2″ wood blocks where applicable and when specified.
4. A 4′-0″ minimum clearance is required between the face of the railing and the face of a fixed object located directly behind standard guard railing section with post spacing of 6′-3″. Construct guard railing as shown in the detail "Strengthened Railing Sections for Fixed Objects" on this plan, where the clearance between the face of the railing and the face of a fixed object is less than 4′-0″, but not less than 2′-3″. Where the clearance is less than 2′-3″, a concrete wall or barrier should be constructed to shield the fixed object(s).
5. Direction of adjacent traffic indicated by ➡.
6. For End Anchor Assembly (Type SFT) details, see Standard Plan A77H1.
7. Type of crash cushion to be used will be shown on the Project Plans.
8. Type 15A layout is typically used on multilane freeways or expressways to shield fixed objects in the area between separated one-way roadbeds.
9. For typical flare offsets for 25′-0″ length parabola with maximum offset of 1′-0″, see Revised Standard Plan RSP A77E1.
10. The 15:1 or flatter flare is measured off of the edge of the traveled way.
11. W6 x 15 steel post, 8′-0″ in length, with 8″ x 8″ x 1′-2″ notched wood block or notched recycled plastic blocks may be used in place of the 10″ x 10″ x 8′-0″ wood post with 8″ x 8″ x 1′-2″ wood block shown in the "Strengthened Railing Sections Detail".

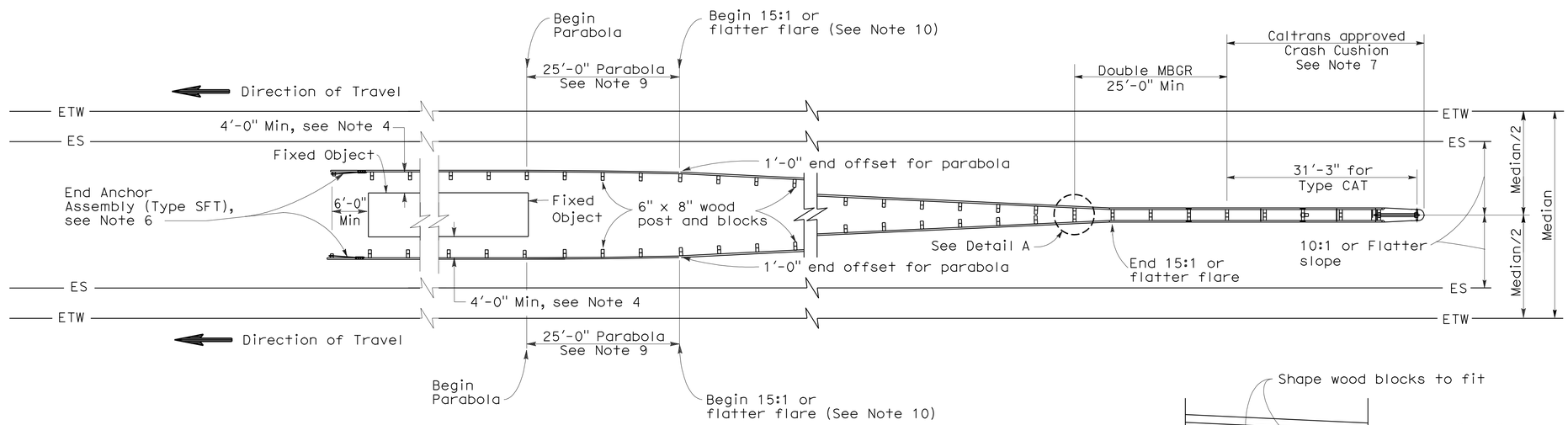

TYPE 15A LAYOUT

See Note 9

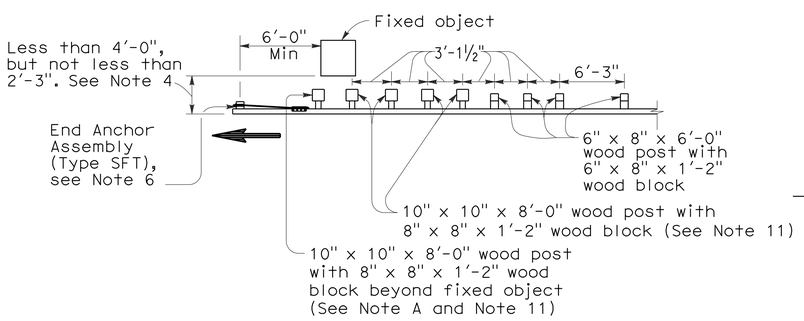

NOTE A: For a series of fixed objects (bridge columns, overhead sign supports, etc.) additional 10″ x 10″ x 8′-0″ wood post with 8″ x 8″ x 1′-2″ wood blocks at 3′-1½″ center to center spacing are to be used between fixed objects.

STRENGTHENED RAILING SECTIONS FOR FIXED OBJECT

Use strengthened railing sections with Type 15A layout where minimum clearance between the face of the guard railing and the fixed object(s) is less than 4′-0″, but not less than 2′-3″. See Note 4.

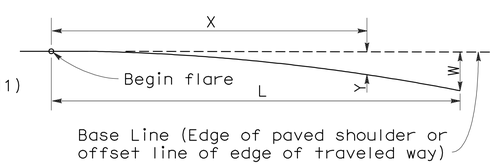

$$Y = \frac{WX^2}{L^2}$$

Y = Offset from base line
W = Maximum offset
X = Distance along base line
L = Length of flare

PARABOLIC FLARE OFFSETS

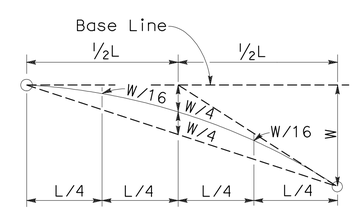

TYPICAL PARABOLIC LAYOUT

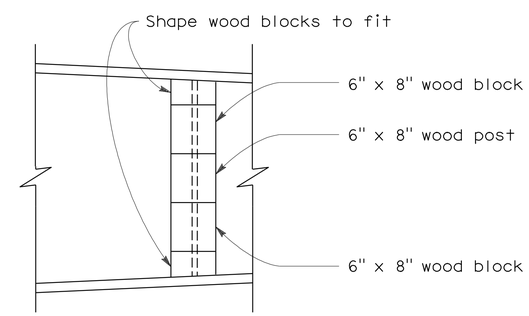

DETAIL A

STATE OF CALIFORNIA
DEPARTMENT OF TRANSPORTATION

METAL BEAM GUARD RAILING TYPICAL LAYOUTS FOR FIXED OBJECTS BETWEEN SEPARATE ROADBEDS (ONE-WAY TRAFFIC)

NO SCALE

RSP A77G2 DATED JUNE 6, 2008 SUPERSEDES STANDARD PLAN A77G2
DATED MAY 1, 2006 - PAGE 60 OF THE STANDARD PLANS BOOK DATED MAY 2006.

REVISED STANDARD PLAN RSP A77G2

2006 REVISED STANDARD PLAN RSP A77G2

12-10-07

DIST	COUNTY	ROUTE	POST MILES TOTAL PROJECT	SHEET NO.	TOTAL SHEETS
01	Men	101	R0.1/R101.6	65	75

Randell D. Hiatt
REGISTERED CIVIL ENGINEER

June 6, 2008
PLANS APPROVAL DATE

REGISTERED PROFESSIONAL ENGINEER
Randell D. Hiatt
No. C50200
Exp. 6-30-09
CIVIL
STATE OF CALIFORNIA

The State of California or its officers or agents shall not be responsible for the accuracy or completeness of electronic copies of this plan sheet.

To accompany plans dated 9-28-09

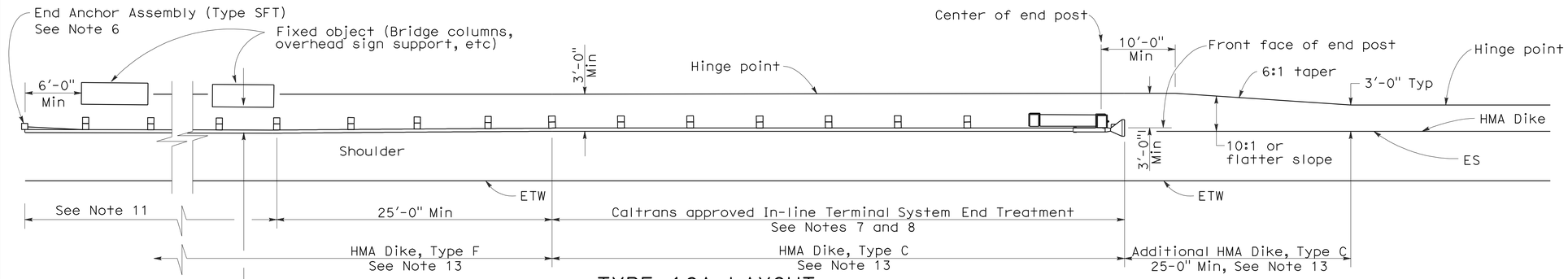

TYPE 16A LAYOUT

(GUARD RAILING INSTALLATION AT ROADSIDE FIXED OBJECT OR OBJECTS WITH AN IN-LINE END TREATMENT AT TRAFFIC APPROACH END OF RAILING)
See Notes 12 and 13

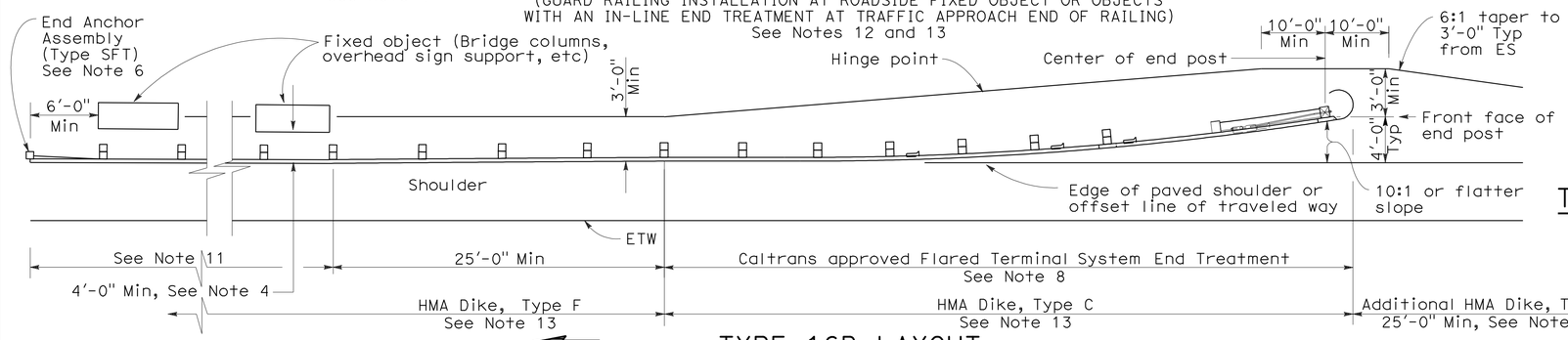

TYPE 16B LAYOUT

(GUARD RAILING INSTALLATION AT ROADSIDE FIXED OBJECT OR OBJECTS WITH A FLARED END TREATMENT AT TRAFFIC APPROACH END OF RAILING)
See Notes 12 and 13

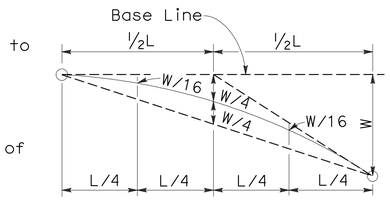

TYPICAL PARABOLIC LAYOUT

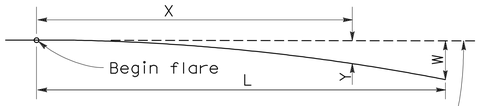

Base Line (Edge of paved shoulder or offset line of edge of traveled way)

$$Y = \frac{WX^2}{L^2}$$

Y = Offset from base line
W = Maximum offset
X = Distance along base line
L = Length of flare

PARABOLIC FLARE OFFSETS

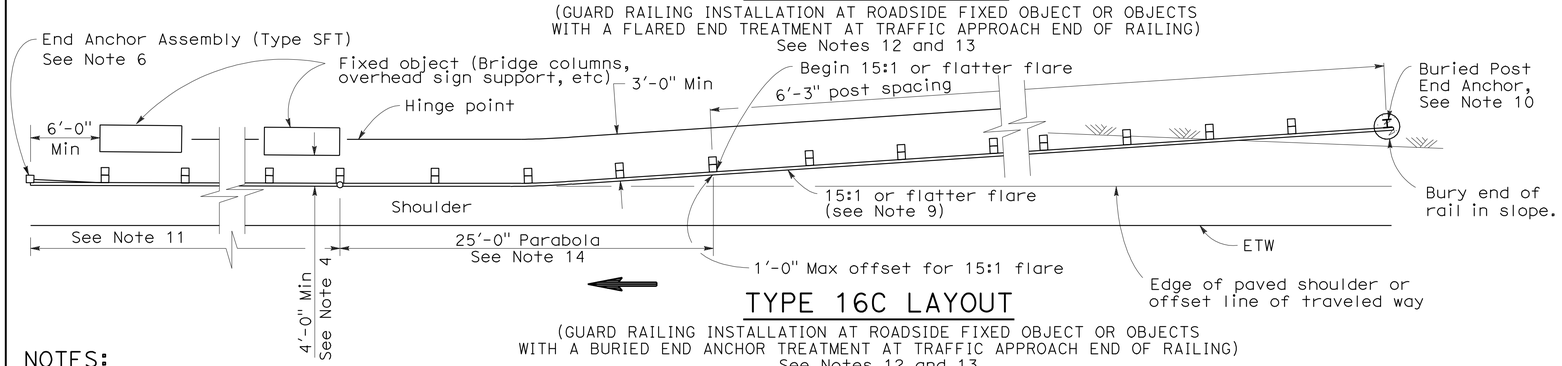

TYPE 16C LAYOUT

(GUARD RAILING INSTALLATION AT ROADSIDE FIXED OBJECT OR OBJECTS WITH A BURIED END ANCHOR TREATMENT AT TRAFFIC APPROACH END OF RAILING)
See Notes 12 and 13

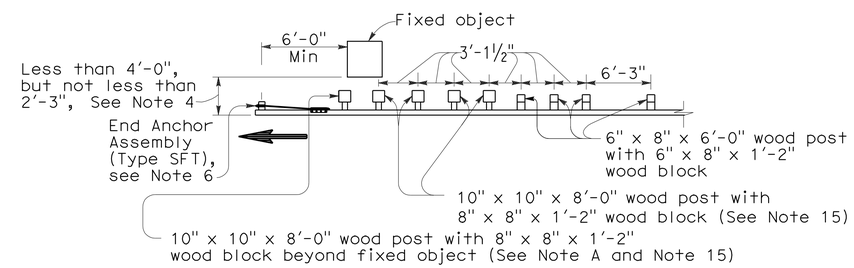

NOTE A: For a series of fixed objects (bridge columns, overhead sign supports, etc.) additional 10" x 10" x 8'-0" wood post with 8" x 8" x 1'-2" wood blocks at 3'-1½" center to center spacing are to be used between fixed objects.

STRENGTHENED RAILING SECTIONS FOR FIXED OBJECT

Use strengthened railing sections with Types 16A, 16B or 16C Layouts where minimum clearance between the face of the guard railing and fixed object(s) is less than 4'-0", but not less than 2'-3". See Note 4

NOTES:

1. Line post, blocks and hardware to be used are shown on Revised Standard Plans A77A1, A77A2, A77B1, A77C1 and A77C2.
2. Guard railing post spacing to be 6'-3" center to center, except as otherwise noted.
3. Except as noted, line posts are 6" x 8" x 6'-0" wood with 6" x 8" x 1'-2" wood blocks. W6 x 9 steel posts, 6'-0" in length, with 6" x 8" x 1'-2" notched wood blocks or notched recycled plastic blocks may be used for 6" x 8" x 6'-0" wood line posts with 6" x 8" x 1'-2" wood blocks where applicable and when specified.
4. A 4'-0" minimum clearance is required between the face of the railing and the face of a fixed object located directly behind standard guard railing sections with post spacing of 6'-3". Construct guard railing as shown in the detail "Strengthened Railing Sections for Fixed Objects" on this plan, where the clearance between the face of the railing and the face of a fixed object is less than 4'-0", but not less than 2'-3". Where the clearance is less than 2'-3", a concrete wall or barrier should be constructed to shield the fixed object(s).
5. Direction of adjacent traffic indicated by ⟶.
6. For End Anchor Assembly (Type SFT) details, see Standard Plan A77H1.
7. In-line Terminal System End Treatments are used where site conditions will not accommodate a flared end treatment.
8. The type of terminal system to be used will be shown on the Project Plans.
9. The 15:1 or flatter flare used with Type 16C Layout is based on the edge of the paved shoulder or offset line of edge of the traveled way. The length of guard railing within the 15:1 or flatter flare is based on site conditions and should be a length equal to multiples of 12'-6".
10. For details of the Buried Post End Anchor used with Type 16C Layout, see Standard Plan A77I2.
11. As site conditions dictate, construct additional guard railing to shield fixed object(s). Additional guard railing length equal to multiples of 12'-6". Post spacing at 6'-3" except as specified in Note 4.
12. Layout Types 16A, 16B or 16C are typically used where guard railing is recommended to shield roadside fixed object(s) and a crashworthy end treatment is required for only one direction of traffic.
13. Where placement of dike is required with guard railing, see Revised Standard Plan RSP A77C4 for dike positioning details.
14. For typical flare offsets for 25'-0" length parabola with maximum offset of 1'-0", see Revised Standard Plan RSP A77E1.
15. W6 x 15 steel post, 8'-0" in length, with 8" x 8" x 1'-2" notched wood block or notched recycled plastic blocks may be used in place of the 10" x 10" x 8'-0" wood post with 8" x 8" x 1'-2" wood block shown in the "Strengthened Railing Sections Detail".

STATE OF CALIFORNIA
DEPARTMENT OF TRANSPORTATION

METAL BEAM GUARD RAILING TYPICAL LAYOUTS FOR ROADSIDE FIXED OBJECTS

NO SCALE

RSP A77G3 DATED JUNE 6, 2008 SUPERSEDES STANDARD PLAN A77G3 DATED MAY 1, 2006 - PAGE 61 OF THE STANDARD PLANS BOOK DATED MAY 2006.

REVISED STANDARD PLAN RSP A77G3

2006 REVISED STANDARD PLAN RSP A77G3

12-10-07

DIST	COUNTY	ROUTE	POST MILES TOTAL PROJECT	SHEET NO.	TOTAL SHEETS
01	Men	101	R0.1/R101.6	66	75

Randell D. Hiatt
REGISTERED CIVIL ENGINEER

June 6, 2008
PLANS APPROVAL DATE

REGISTERED PROFESSIONAL ENGINEER
Randell D. Hiatt
No. C50200
Exp. 6-30-09
CIVIL
STATE OF CALIFORNIA

The State of California or its officers or agents shall not be responsible for the accuracy or completeness of electronic copies of this plan sheet.

To accompany plans dated 9-28-09

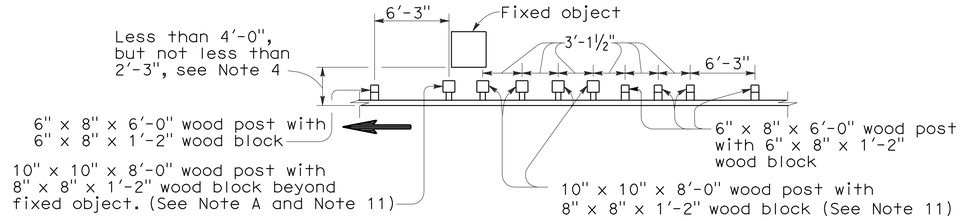

NOTE A: For a series of fixed objects (bridge columns, overhead sign supports, etc.) additional 10" x 10" x 8'-0" wood post with 8" x 8" x 1'-2" wood blocks at 3'-1½" center to center spacing are to be used between fixed object(s).

STRENGTHENED RAILING SECTIONS FOR FIXED OBJECT

Use strengthened railing sections with Layout Types 16D or 16E where minimum clearance between the guard railing and fixed object(s) is less than 4'-0", but not less than 2'-3". See Note 4.

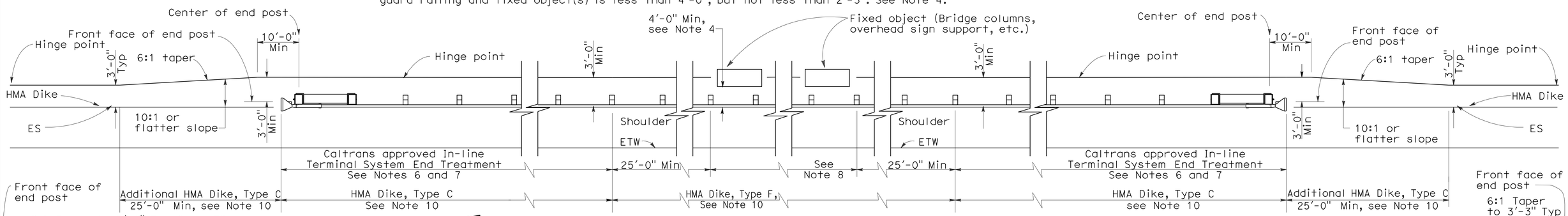

TYPE 16D LAYOUT

(GUARD RAILING INSTALLATION AT ROADSIDE FIXED OBJECT OR OBJECTS WITH AN IN-LINE END TREATMENT AT EACH END OF RAILING)
See Note 9

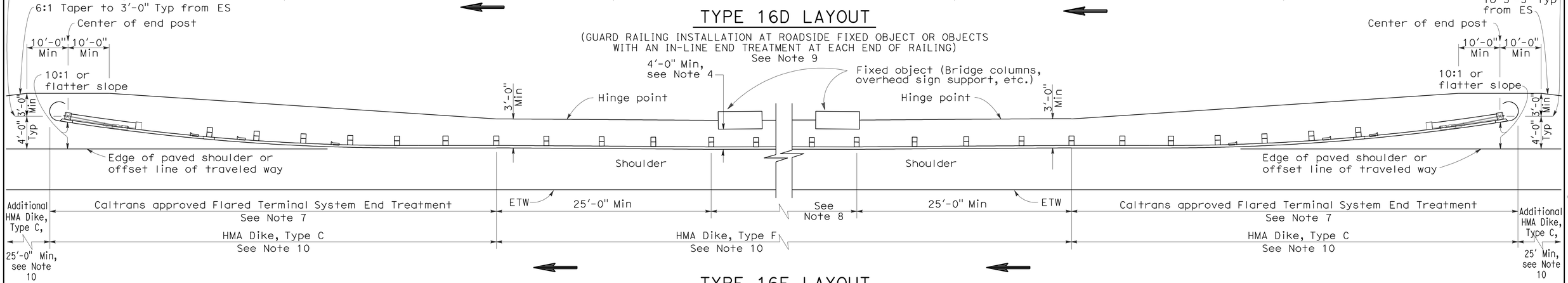

TYPE 16E LAYOUT

(GUARD RAILING INSTALLATION AT ROADSIDE FIXED OBJECT OR OBJECTS WITH A FLARED END TREATMENT AT EACH END OF RAILING)
See Note 9

NOTES:

1. Line post, blocks and hardware to be used are shown on Standard Plans A77A1, A77A2, A77B1, A77C1 and A77C2.
2. Guard railing post spacing to be 6'-3" center to center, except as otherwise noted.
3. Except as noted, line posts are 6" x 8" x 6'-0" wood with 6" x 8" x 1'-2" wood blocks. W6 x 9 steel posts, 6'-0" in length, with 6" x 8" x 1'-2" notched wood blocks or notched recycled plastic blocks may be used for 6" x 8" x 6'-0" wood line posts with 6" x 8" x 1'-2" wood blocks where applicable and when specified.
4. A 4'-0" minimum clearance is required between the face of the railing and the face of a fixed object located directly behind standard guard railing sections with post spacing at 6'-3". Construct guard railing as shown in the detail "Strengthened Railing Sections for Fixed Objects" on this plan, where the clearance between the face of the railing and the face of a fixed object is less than 4'-0", but not less than 2'-3". Where the clearance is less than 2'-3", a concrete wall or barrier should be constructed to shield the fixed object(s).
5. Direction of adjacent traffic indicated by ⟶ .
6. In-line Terminal System End Treatments are used where site conditions will not accommodate a flared end treatment.
7. The type of terminal system to be used will be shown on the Project Plans.
8. As site conditions dictate, construct additional guard railing to shield fixed object(s). Additional guard railing length equal to multiples of 12'-6". Post spacing at 6'-3", except as specified in Note 4.
9. Layout Types 16D through 16L, shown on the A77G Series of Revised Standard Plans, are typically used where guard railing is recommended to shield roadside fixed object(s) and a crashworthy end treatment is required for both directions of traffic.
10. Where placement of dike is required with guard railing, see Revised Standard Plan RSP A77C4 for dike positioning details.
11. W6 x 15 steel post, 8'-0" in length, with 8" x 8" x 1'-2" notched wood block or notched recycled plastic block may be used in place of the 10" x 10" x 8'-0" wood post with 8" x 8" x 1'-2" wood block shown in the "Strengthened Railing Sections Detail."

STATE OF CALIFORNIA
DEPARTMENT OF TRANSPORTATION

METAL BEAM GUARD RAILING TYPICAL LAYOUTS FOR ROADSIDE FIXED OBJECTS

NO SCALE

RSP A77G4 DATED JUNE 6, 2008 SUPERSEDES STANDARD PLAN A77G4
DATED MAY 1, 2006 - PAGE 62 OF THE STANDARD PLANS BOOK DATED MAY 2006.

REVISED STANDARD PLAN RSP A77G4

2006 REVISED STANDARD PLAN RSP A77G4

12-10-07

DIST	COUNTY	ROUTE	POST MILES TOTAL PROJECT	SHEET NO.	TOTAL SHEETS
01	Men	101	R0.1/R101.6	67	75

Randell D. Hiatt
REGISTERED CIVIL ENGINEER

June 6, 2008
PLANS APPROVAL DATE

REGISTERED PROFESSIONAL ENGINEER
Randell D. Hiatt
No. C50200
Exp. 6-30-09
CIVIL
STATE OF CALIFORNIA

The State of California or its officers or agents shall not be responsible for the accuracy or completeness of electronic copies of this plan sheet.

To accompany plans dated 9-28-09

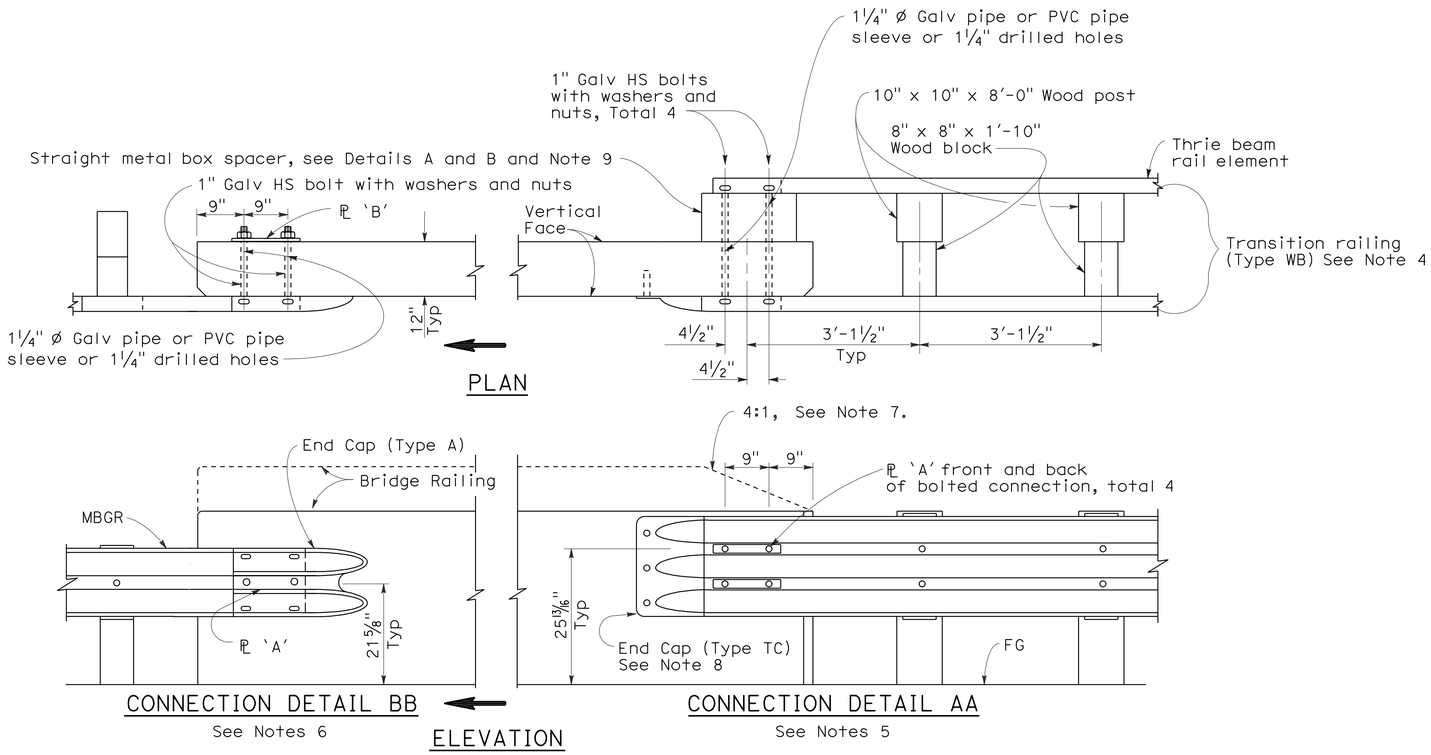

GUARD RAILING CONNECTION TO BRIDGE RAILING WITHOUT SIDEWALK

NOTES:

1. See Revised Standard Plan RSP A77J2 for additional connection details to bridges without sidewalks.
2. Additional details of posts, blocks and hardware are shown on Standard Plan A77B1, A77C1 and A77C2.
3. Direction of adjacent traffic indicated by ➡.
4. For additional details of Transition Railing (Type WB), see Standard Plan A77J4. Transition Railing (Type WB) transitions the 12 gage w-beam standard railing section of guard railing to a heavier gage nested thrie beam railing section which is connected to the concrete bridge railing.
5. For typical use of Connection Detail AA, see Layout Types 12A and 12B on Revised Standard Plan RSP A77F1, Layout Types 12C and 12D on Standard Plan A77F2, and Layout Type 12E on Revised Standard Plan RSP A77F3.
6. For typical use of Connection Detail BB, see Layout Type 12D (structure departure railing connection) on Standard Plan A77F2 and Layout Type 12DD on Standard Plan A77F5.
7. Where the height of the bridge railing exceeds the height of the thrie beam railing by more than 1" at Connection Detail AA, taper the top of the end of the bridge railing at 4:1 to match the top elevation of the thrie beam rail.
8. For details of End Cap (Type TC), see Standard Plan A77J4.
9. See Standard Plan A77J4 for additional details regarding depth dimension for straight metal box spacer.

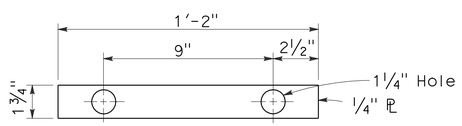

PLATE 'A'

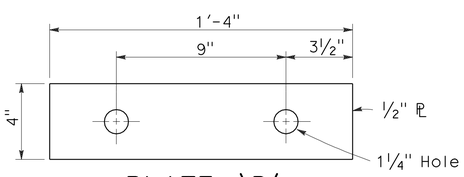

PLATE 'B'
(For backside of connection BB)

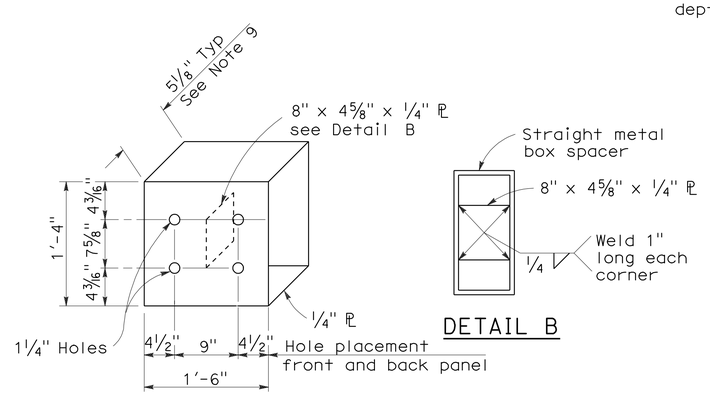

DETAIL A

DETAIL B

STRAIGHT METAL BOX SPACER

STATE OF CALIFORNIA
DEPARTMENT OF TRANSPORTATION

METAL BEAM GUARD RAILING CONNECTIONS TO BRIDGE RAILINGS WITHOUT SIDEWALKS DETAILS No.1

NO SCALE

RSP A77J1 DATED JUNE 6, 2008 SUPERSEDES STANDARD PLAN A77J1 DATED MAY 1, 2006 - PAGE 72 OF THE STANDARD PLANS BOOK DATED MAY 2006.

REVISED STANDARD PLAN RSP A77J1

2006 REVISED STANDARD PLAN RSP A77J1

12-10-07

DIST	COUNTY	ROUTE	POST MILES TOTAL PROJECT	SHEET NO.	TOTAL SHEETS
01	Men	101	R0.1/R101.6	68	75

Randell D. Hiatt
REGISTERED CIVIL ENGINEER

June 6, 2008
PLANS APPROVAL DATE

REGISTERED PROFESSIONAL ENGINEER
Randell D. Hiatt
No. C50200
Exp. 6-30-09
CIVIL
STATE OF CALIFORNIA

The State of California or its officers or agents shall not be responsible for the accuracy or completeness of electronic copies of this plan sheet.

To accompany plans dated 9-28-09

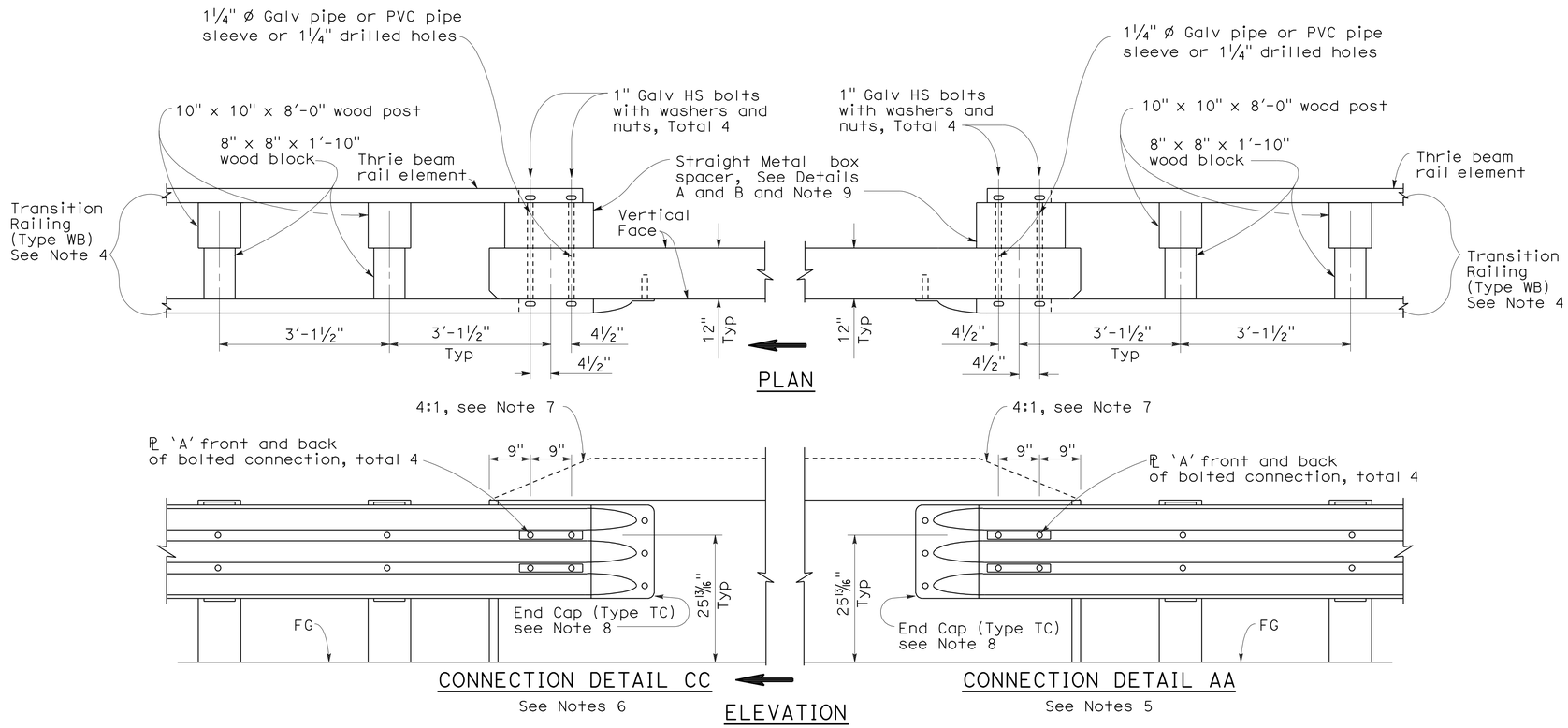

GUARD RAILING CONNECTION TO BRIDGE RAILING WITHOUT SIDEWALK

NOTES:

1. See Revised Standard Plan RSP A77J1 for additional connection details to bridges without sidewalks.
2. Additional details of posts, blocks and hardware are shown on Standard Plan A77B1, A77C1 and A77C2.
3. Direction of adjacent traffic indicated by ⟹.
4. For additional details of Transition Railing (Type WB), see Standard Plan A77J4. Transition Railing (Type WB) transitions the 12 gage w-beam standard railing section of guard railing to a heavier gage nested thrie beam railing section which is connected to the concrete bridge railing.
5. For typical use of Connection Detail AA, see Layout Types 12A and 12B on Revised Standard Plan RSP A77F1, Layout Types 12C and 12D on Standard Plan A77F2, and Layout Type 12E on Revised Standard Plan RSP A77F3.
6. For typical use of Connection Detail CC, see Layout Types 12AA and 12BB on Standard Plan A77F4 and Layout Type 12CC on Standard Plan A77F5.
7. Where the height of the bridge railing exceeds the height of the thrie beam railing by more than 1" at Connection Detail AA and connection Detail CC, taper the top of the end of the bridge railing at 4:1 to match the top elevation of the thrie beam railing.
8. For details of End Cap (Type TC), see Standard Plans A77J4.
9. See Standard Plans A77J4 for additional details regarding depth dimension for straight metal box spacer.

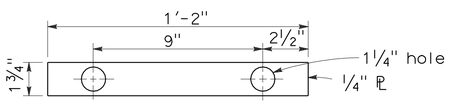

PLATE 'A'

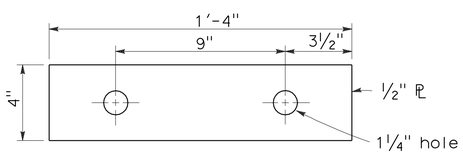

PLATE 'B'
(For backside of connection BB)

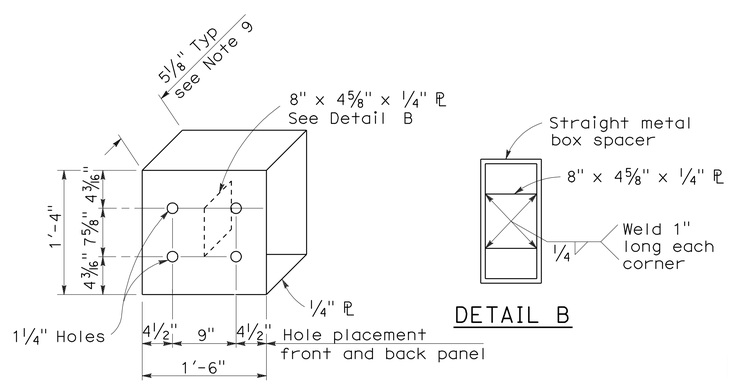

DETAIL A

DETAIL B

STRAIGHT METAL BOX SPACER

STATE OF CALIFORNIA
DEPARTMENT OF TRANSPORTATION

METAL BEAM GUARD RAILING CONNECTIONS TO BRIDGE RAILINGS WITHOUT SIDEWALKS DETAILS No.2

NO SCALE

RSP A77J2 DATED JUNE 6, 2008 SUPERSEDES STANDARD PLAN A77J2 DATED MAY 1, 2006 - PAGE 73 OF THE STANDARD PLANS BOOK DATED MAY 2006.

REVISED STANDARD PLAN RSP A77J2

2006 REVISED STANDARD PLAN RSP A77J2

12-10-07

DIST	COUNTY	ROUTE	POST MILES TOTAL PROJECT	SHEET NO.	TOTAL SHEETS
01	Men	101	R0.1/R101.6	69	75

Randell D. Hiatt
REGISTERED CIVIL ENGINEER

June 5, 2009
PLANS APPROVAL DATE

REGISTERED PROFESSIONAL ENGINEER Randell D. Hiatt No. C50200 Exp. 6-30-09 CIVIL STATE OF CALIFORNIA

The State of California or its officers or agents shall not be responsible for the accuracy or completeness of electronic copies of this plan sheet.

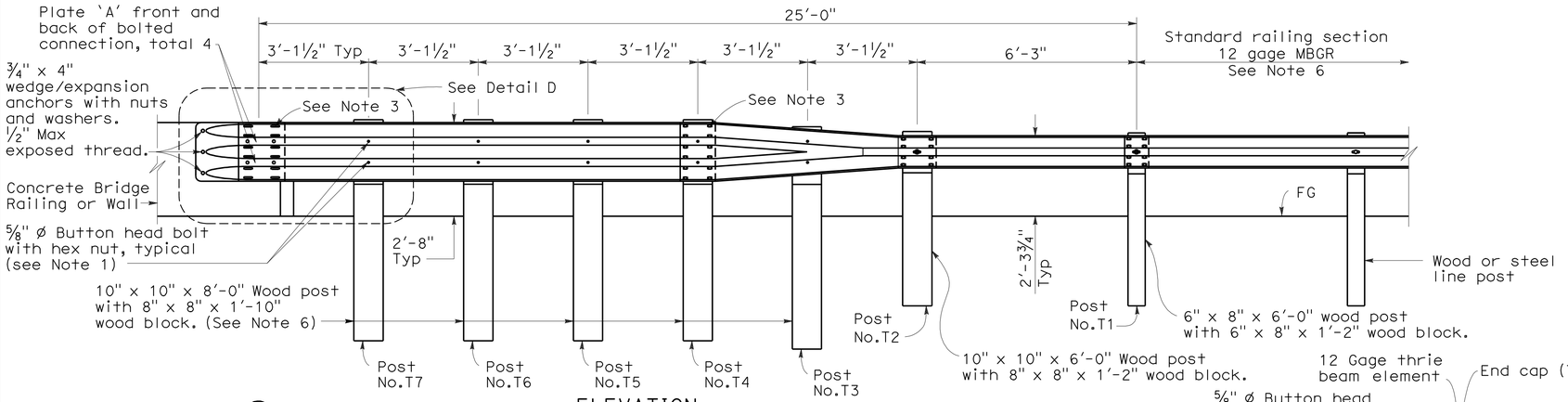

ELEVATION

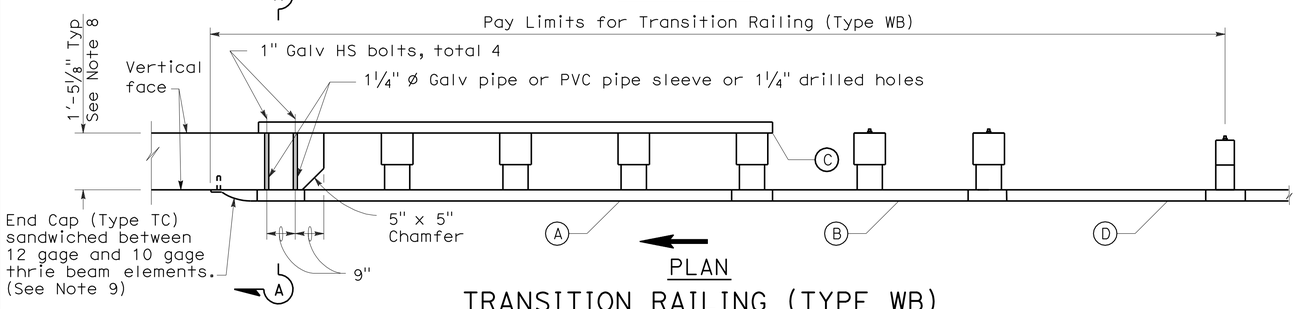

PLAN

TRANSITION RAILING (TYPE WB)

(No Blockout Attachment)

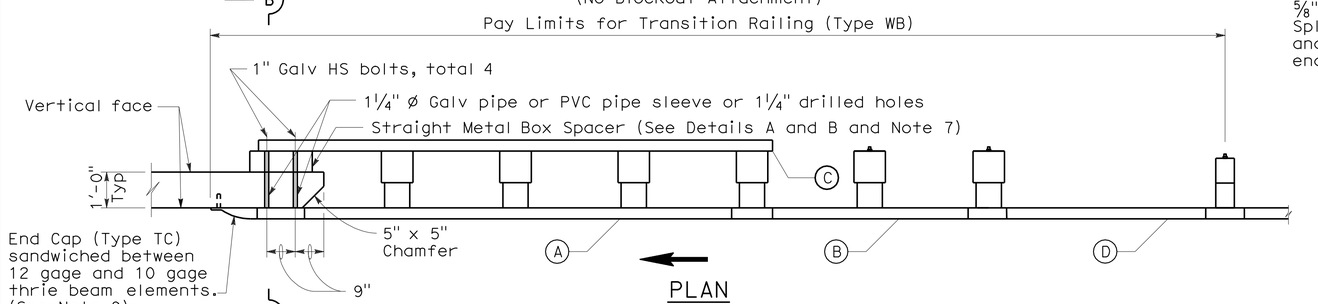

PLAN

TRANSITION RAILING (TYPE WB)

(Blockout Attachment)

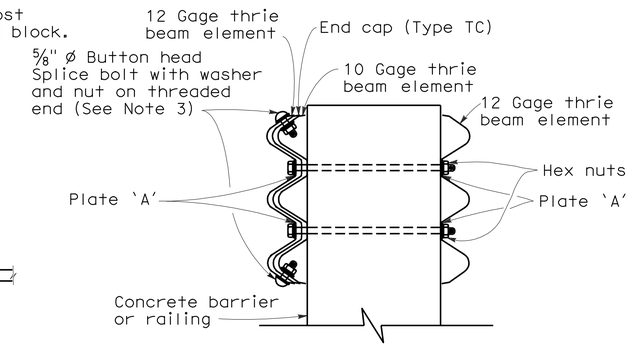

SECTION A-A

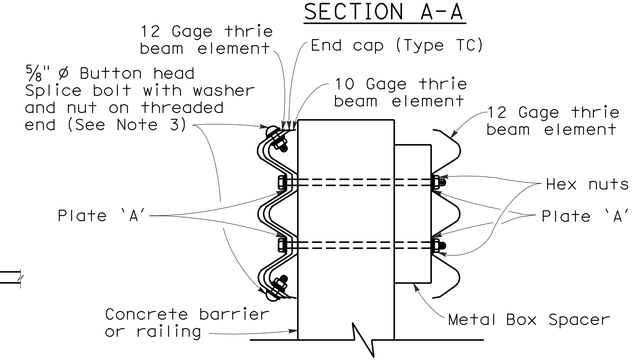

SECTION B-B

LEGEND

(A) Nested thrie beam elements (one 12 gage element nested over one 10 gage element).

(B) One 10 gage "W" beam to thrie beam element.

(C) One 12 gage thrie beam element.

(D) One 10 gage "W" beam rail element (7'-3½" length)

10 gage = 0.135" thick

12 gage = 0.108" thick

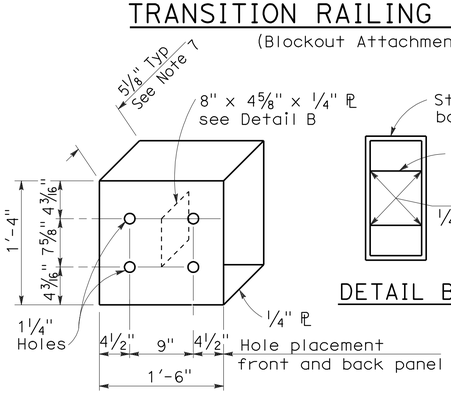

DETAIL A

STRAIGHT METAL BOX SPACER

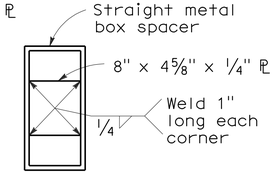

DETAIL B

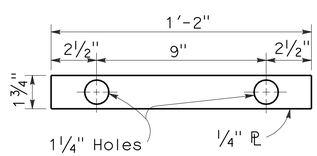

DETAIL C

PLATE 'A'

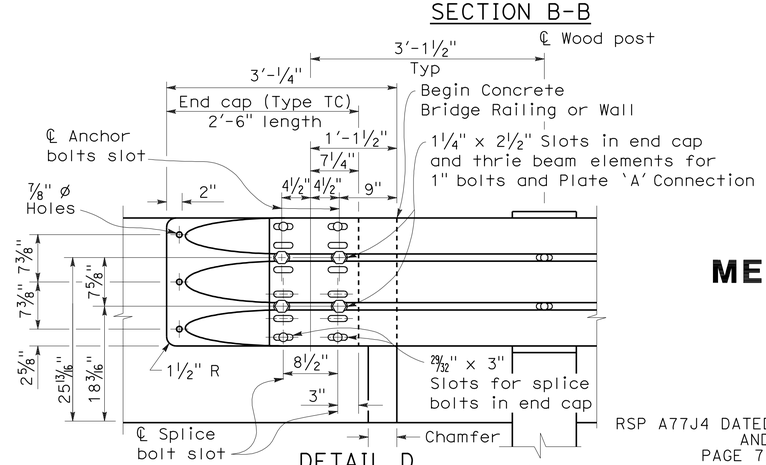

DETAIL D

NOTES:

To accompany plans dated 9-28-09

1. Use 5/8 " Ø Button head bolts and hex nuts for connections to posts. No washer on rail face for bolted connections to post.
2. The nested rail elements, end cap, and 'W' beam to thrie beam element may be spliced together prior to bolting the elements to the wood post and concrete barrier or railing.
3. Exterior splice bolt holes for rail element splices at Post No.T4 and the connection to the concrete barrier or railing shall be the standard 29/32 " x 1 1/8 " slot size. Interior splice bolt holes at these locations may be increased up to 1 1/4 " Ø. Only the top 2 and the bottom 2 splice bolts with washers and nuts are required for rail splices at Post No.T4 and the connection to the concrete barrier or railing.
4. Direction of adjacent traffic indicated by →.
5. The top elevation of Post Nos.T2 through T7 shall not project more than 1" above the top elevation of the rail element.
6. Typically, the railing connected to Transition Railing (Type WB) will be either standard railing section of metal beam guard railing or an approved Caltrans end treatment attached to Post No.T1.
7. The depth of the metal box spacer varies from the 5 1/8 " to 1 1/2 " and is dependent on the width of the concrete railing or wall. The combined dimension for the depth of the metal box spacer plus the width of railing or wall is typically 17 1/8 ". Where the space between the backside of the concrete railing or wall and the rear thrie beam element is less than 1 1/2 ", metal plates similar to Plate 'A' are to be used as spacers.
8. Where the width of the concrete railing or wall is greater than 17 1/8 ", wood blocks are to be used to fill the space created between the backside of Posts No.4 through No.7 and the rear thrie beam element. These wood blocks shall be 8" in width and 1'-2" in length. The dimension between the front thrie beam element and the rear thrie beam element is to match the width of the concrete railing or wall.
9. End cap may be installed over 12 gage and 10 gage thrie beam elements where transition railing is installed on the departure end of bridge railing.

STATE OF CALIFORNIA
DEPARTMENT OF TRANSPORTATION

METAL BEAM GUARD RAILING TRANSITION RAILING (TYPE WB)

NO SCALE

RSP A77J4 DATED JUNE 5, 2009 SUPERSEDES RSP A77J4 DATED JUNE 6, 2008 AND STANDARD PLAN A77J4 DATED MAY 1, 2006 - PAGE 75 OF THE STANDARD PLANS BOOK DATED MAY 2006.

REVISED STANDARD PLAN RSP A77J4

2006 REVISED STANDARD PLAN RSP A77J4

5-14-09

DIST	COUNTY	ROUTE	POST MILES TOTAL PROJECT	SHEET NO.	TOTAL SHEETS
01	Men	101	R0.1/R101.6	70	75

Randell D. Hiatt
REGISTERED CIVIL ENGINEER

June 6, 2008
PLANS APPROVAL DATE

REGISTERED PROFESSIONAL ENGINEER
Randell D. Hiatt
No. C50200
Exp. 6-30-09
CIVIL
STATE OF CALIFORNIA

The State of California or its officers or agents shall not be responsible for the accuracy or completeness of electronic copies of this plan sheet.

To accompany plans dated 9-28-09

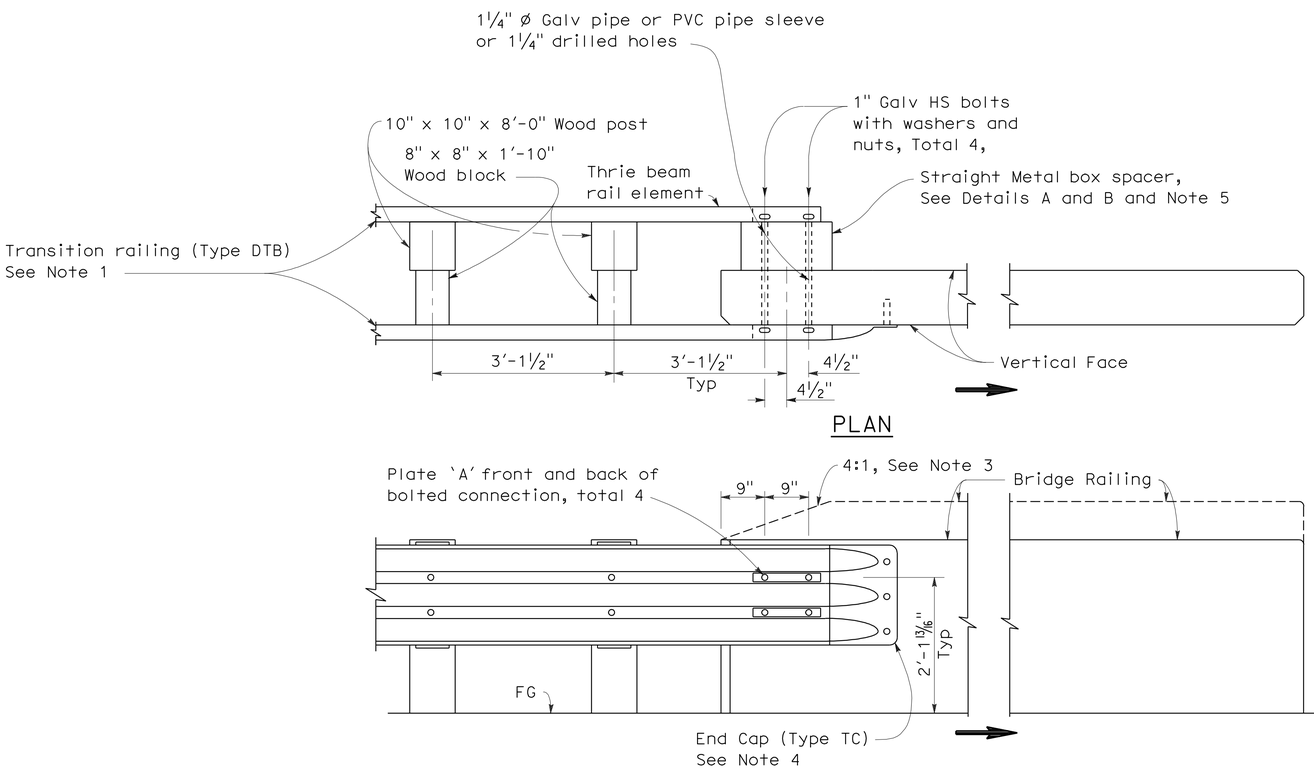

CONNECTION DETAIL 1A
See Note 2

DOUBLE THRIE BEAM BARRIER CONNECTION TO BRIDGE RAILING WITHOUT SIDEWALK

NOTES:

1. For additional details of Transition Railing (Type DTB), see Standard Plans A78K. Transition Railing (Type DTB) transitions the standard 12 gage double thrie beam barrier to a heavier gage double thrie beam railing section then to a heavier gage nested double thrie beam barrier section which then is connected to the concrete bridge railing.
2. For typical use of Connection Detail 1A, see Type 25A Connection Layout on Revised Standard Plan RSP A78H.
3. Where the height of the bridge railing exceeds the height of the thrie beam railing by more than 1" at Connection Detail 1A, taper the top of the end of the bridge railing at 4:1 to match the top elevation of the thrie beam railing.
4. For details of End Cap (Type TC), see Standard Plan A78C1.
5. See Standard Plan A78K for additional details regarding depth dimension for straight metal box spacer.
6. Direction of adjacent traffic indicated by ⟹.

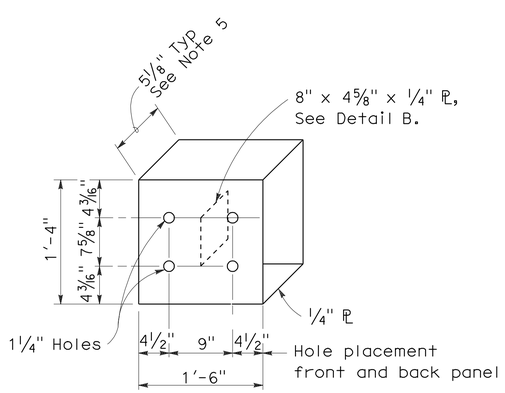

DETAIL A

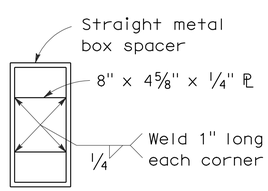

DETAIL B

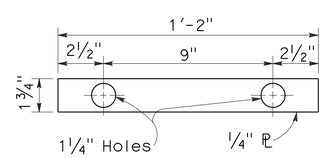

DETAIL C

STRAIGHT METAL BOX SPACER

PLATE 'A'

STATE OF CALIFORNIA
DEPARTMENT OF TRANSPORTATION

DOUBLE THRIE BEAM BARRIER CONNECTION TO BRIDGE RAILINGS WITHOUT SIDEWALKS

NO SCALE

RSP A78F1 DATED JUNE 6, 2008 SUPERSEDES STANDARD PLAN A78F1
DATED MAY 1, 2006 - PAGE 92 OF THE STANDARD PLANS BOOK DATED MAY 2006.

REVISED STANDARD PLAN RSP A78F1

2006 REVISED STANDARD PLAN RSP A78F1

12-10-07

DIST	COUNTY	ROUTE	POST MILES TOTAL PROJECT	SHEET NO.	TOTAL SHEETS
01	Men	101	R0.1/R101.6	71	75

Randell D. Hiatt
REGISTERED CIVIL ENGINEER

June 6, 2008
PLANS APPROVAL DATE

REGISTERED PROFESSIONAL ENGINEER
Randell D. Hiatt
No. C50200
Exp. 6-30-09
CIVIL
STATE OF CALIFORNIA

The State of California or its officers or agents shall not be responsible for the accuracy or completeness of electronic copies of this plan sheet.

To accompany plans dated 9-28-09

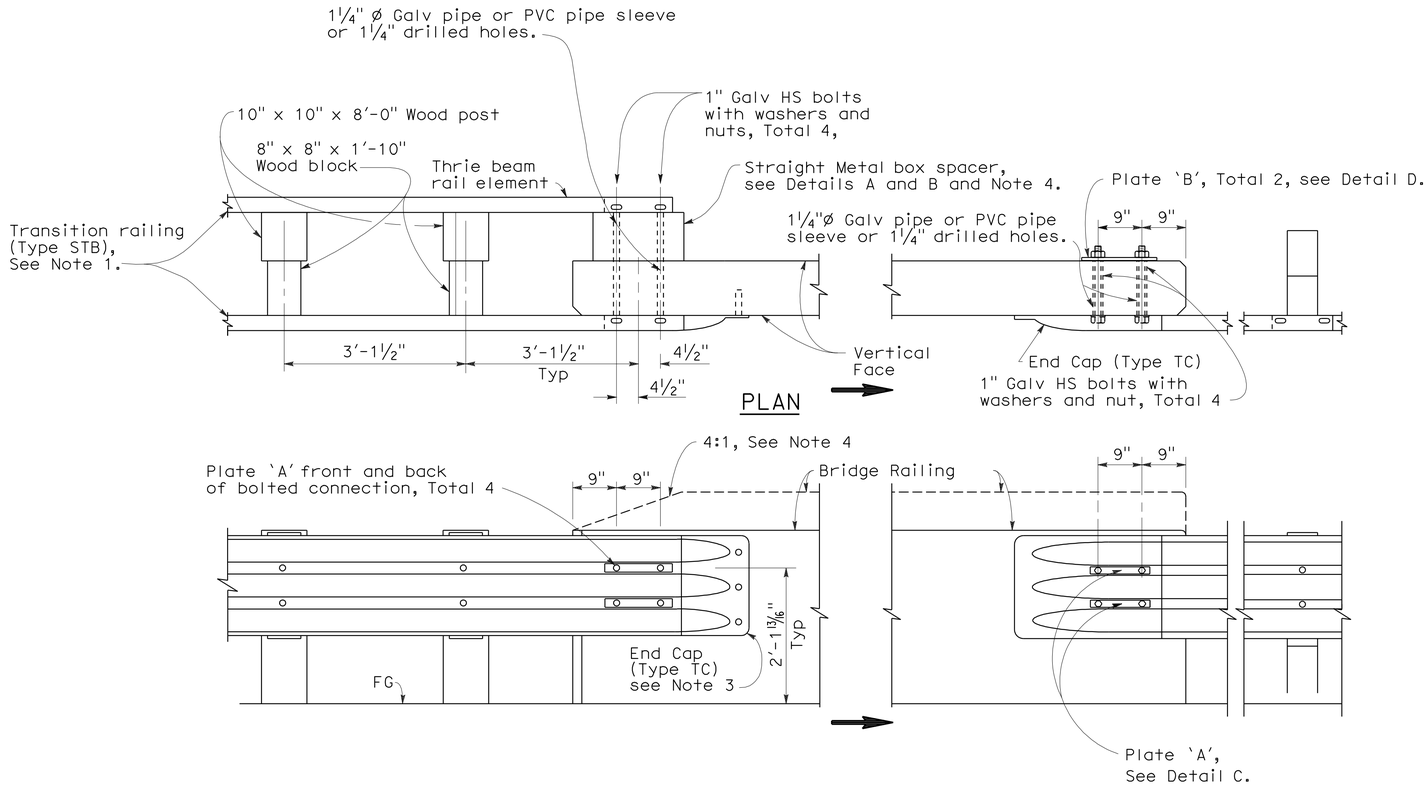

SINGLE THRIE BEAM BARRIER CONNECTION TO BRIDGE RAILING WITHOUT SIDEWALK

NOTES:

1. For additional details of Transition Railing (Type STB), see Standard Plans A78J. Transition Railing (Type STB) transitions the standard 12 gage single thrie beam barrier to a heavier gage single thrie beam railing section then to a heavier gage nested double thrie beam barrier section which then is connected to the concrete bridge railing.
2. Where the height of the bridge railing exceeds the height of the thrie beam railing by more than 1" at Connection Detail 2A, taper the top of the end of the bridge railing at 4:1 to match the top elevation of the thrie beam railing.
3. For details of End Cap (Type TC), see Standard Plan A78C1.
4. See Standard Plan A78J for additional details regarding depth dimension for straight metal box spacer.
5. Direction of adjacent traffic indicated by ⟹.

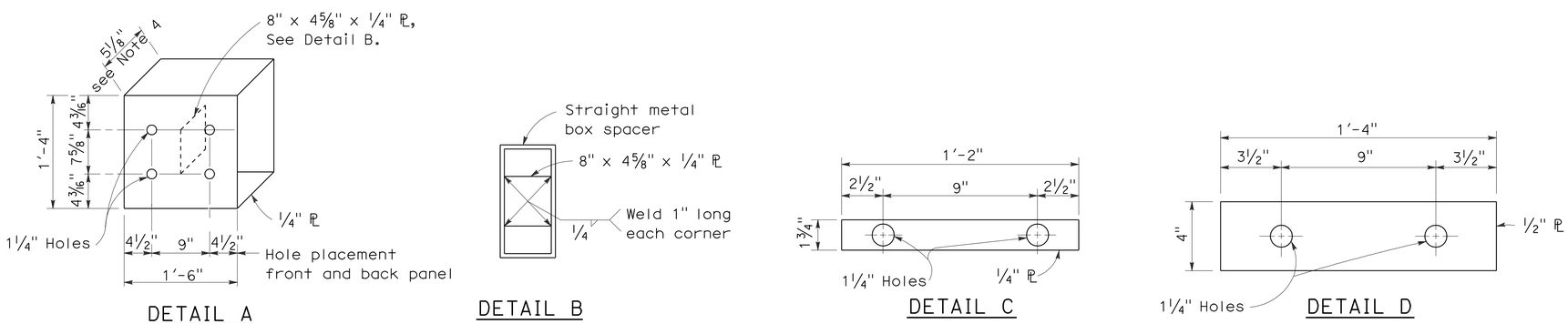

DETAIL A

DETAIL B

DETAIL C

DETAIL D

STRAIGHT METAL BOX SPACER

PLATE 'A'

PLATE 'B'

STATE OF CALIFORNIA
DEPARTMENT OF TRANSPORTATION

SINGLE THRIE BEAM BARRIER CONNECTIONS TO BRIDGE RAILINGS WITHOUT SIDEWALKS

NO SCALE

RSP A78F2 DATED JUNE 6, 2008 SUPERSEDES STANDARD PLAN A78F2
DATED MAY 1, 2006 - PAGE 93 OF THE STANDARD PLANS BOOK DATED MAY 2006.

REVISED STANDARD PLAN RSP A78F2

2006 REVISED STANDARD PLAN RSP A78F2

12-10-07

DIST	COUNTY	ROUTE	POST MILES TOTAL PROJECT	SHEET NO.	TOTAL SHEETS
01	Men	101	R0.1/R101.6	72	75

Randell D. Hiatt
REGISTERED CIVIL ENGINEER

June 6, 2008
PLANS APPROVAL DATE

REGISTERED PROFESSIONAL ENGINEER
Randell D. Hiatt
No. C50200
Exp. 6-30-09
CIVIL
STATE OF CALIFORNIA

The State of California or its officers or agents shall not be responsible for the accuracy or completeness of electronic copies of this plan sheet.

To accompany plans dated 9-28-09

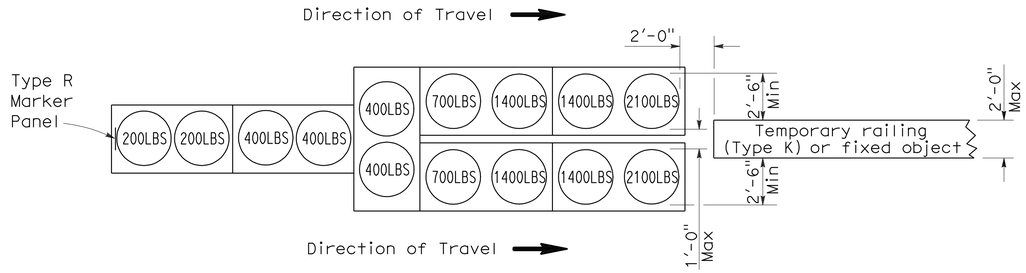

ARRAY 'TU14'

Approach speed 45 mph or more

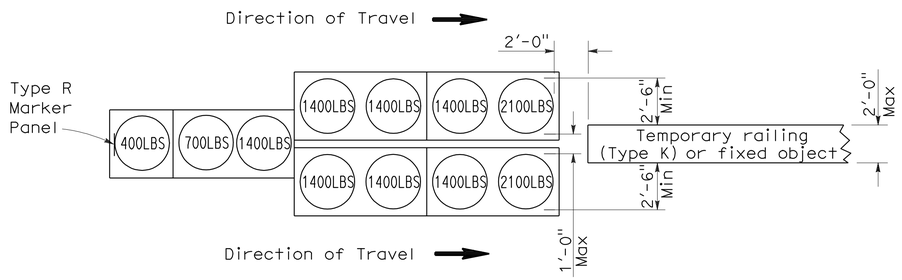

ARRAY 'TU11'

Approach speed less than 45 mph

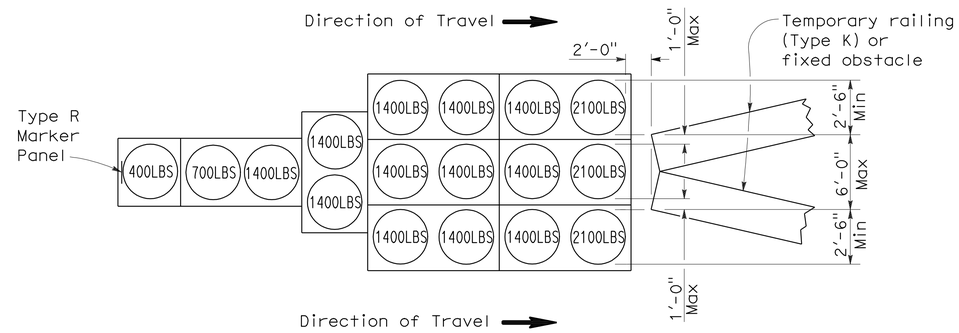

ARRAY 'TU17'

Approach speed less than 45 mph

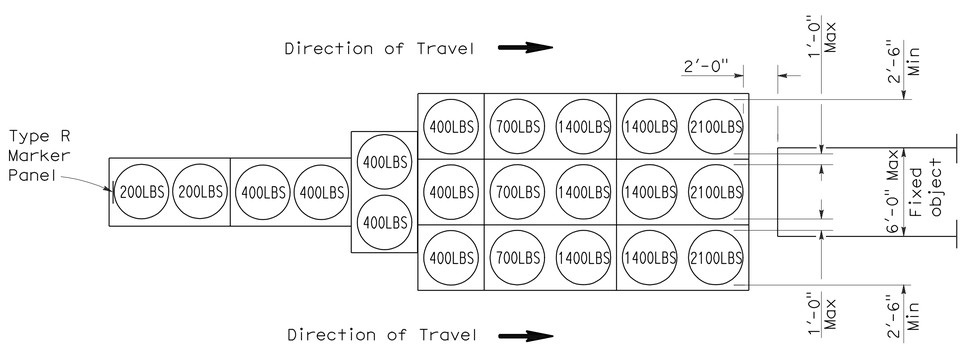

ARRAY 'TU21'

Approach speed 45 mph or more

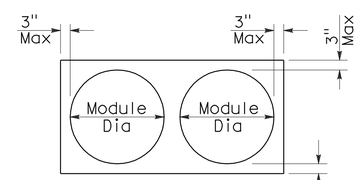

PLAN

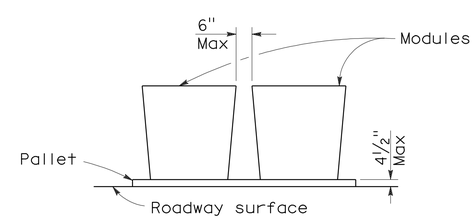

ELEVATION

CRASH CUSHION PALLET DETAIL

See Note 7

NOTES:

1. (XXX) Indicates sand filled module location and weight of sand in pounds for each module. Module spacing is based on the greater diameter of the module.
2. All sand weights are nominal.
3. Temporary crash cushion arrays shall not encroach on the traveled way.
4. Place the top of Type R marker panel 1" below the module lid.
5. Refer to Standard Plan A73B for marker details.
6. Approach speeds indicated conform to NCHRP 350 Report criteria.
7. Use of pallets is optional.

STATE OF CALIFORNIA
DEPARTMENT OF TRANSPORTATION

TEMPORARY CRASH CUSHION, SAND FILLED (UNIDIRECTIONAL)

NO SCALE

RSP T1A DATED JUNE 6, 2008 SUPERSEDES STANDARD PLAN T1A
DATED MAY 1, 2006 - PAGE 211 OF THE STANDARD PLANS BOOK DATED MAY 2006.

REVISED STANDARD PLAN RSP T1A

2006 REVISED STANDARD PLAN RSP T1A

5-15-08

DIST	COUNTY	ROUTE	POST MILES TOTAL PROJECT	SHEET NO.	TOTAL SHEETS
01	Men	101	R0.1/R101.6	73	75

Randell D. Hiatt
REGISTERED CIVIL ENGINEER

June 6, 2008
PLANS APPROVAL DATE

REGISTERED PROFESSIONAL ENGINEER
Randell D. Hiatt
No. C50200
Exp. 6-30-09
CIVIL
STATE OF CALIFORNIA

The State of California or its officers or agents shall not be responsible for the accuracy or completeness of electronic copies of this plan sheet.

To accompany plans dated 9-28-09

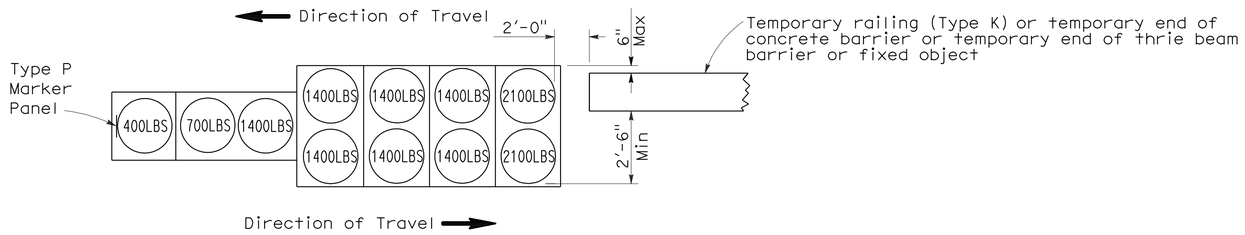

ARRAY 'TB11'

Approach speed less than 45 mph

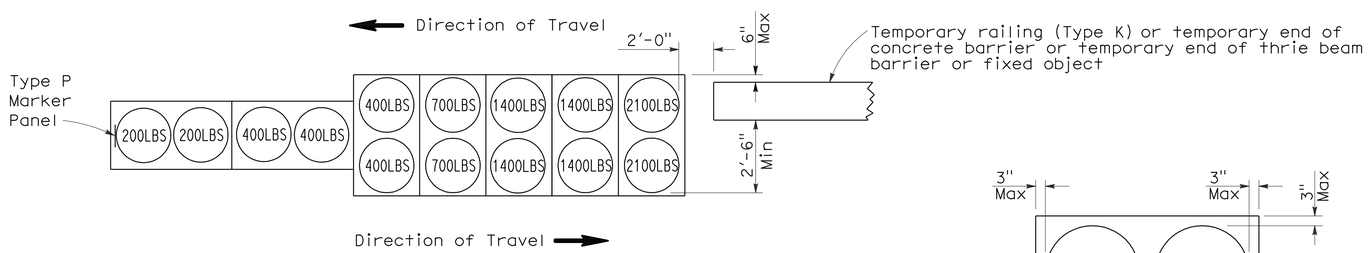

ARRAY 'TB14'

Approach speed 45 mph or more

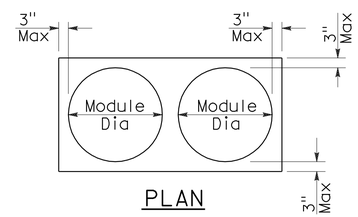

PLAN

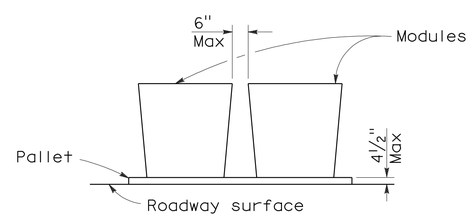

ELEVATION

CRASH CUSHION PALLET DETAIL

See Note 7

NOTES:

1. (XXX) Indicates sand filled module location and weight of sand in pounds for each module. Module spacing is based on the greater diameter of the module.
2. All sand weights are nominal.
3. Temporary crash cushion arrays shall not encroach on the traveled way.
4. Place the Type P marker panel so that the bottom of the panel rests upon the pallet.
5. Refer to Standard Plan A73B for marker details.
6. Approach speeds indicated conform to NCHRP 350 Report criteria.
7. Use of pallets is optional.

STATE OF CALIFORNIA
DEPARTMENT OF TRANSPORTATION

TEMPORARY CRASH CUSHION, SAND FILLED (BIDIRECTIONAL)

NO SCALE

RSP T1B DATED JUNE 6, 2008 SUPERSEDES STANDARD PLAN T1B
DATED MAY 1, 2006 - PAGE 212 OF THE STANDARD PLANS BOOK DATED MAY 2006.

REVISED STANDARD PLAN RSP T1B

2006 REVISED STANDARD PLAN RSP T1B

5-15-08

DIST	COUNTY	ROUTE	POST MILES TOTAL PROJECT	SHEET NO.	TOTAL SHEETS
01	Men	101	R0.1/R101.6	74	75

Randell D. Hiatt
REGISTERED CIVIL ENGINEER

June 6, 2008
PLANS APPROVAL DATE

REGISTERED PROFESSIONAL ENGINEER
Randell D. Hiatt
No. C50200
Exp. 6-30-09
CIVIL
STATE OF CALIFORNIA

The State of California or its officers or agents shall not be responsible for the accuracy or completeness of electronic copies of this plan sheet.

To accompany plans dated 9-28-09

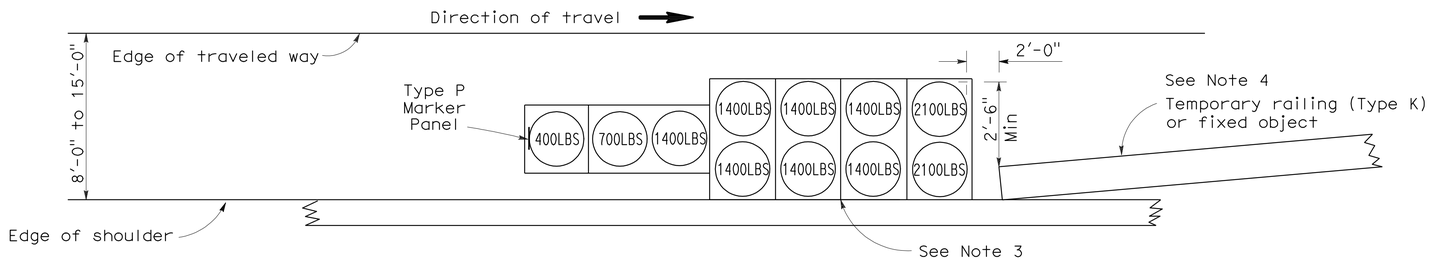

ARRAY 'TS11'

Approach speed less than 45 mph
See Note 9

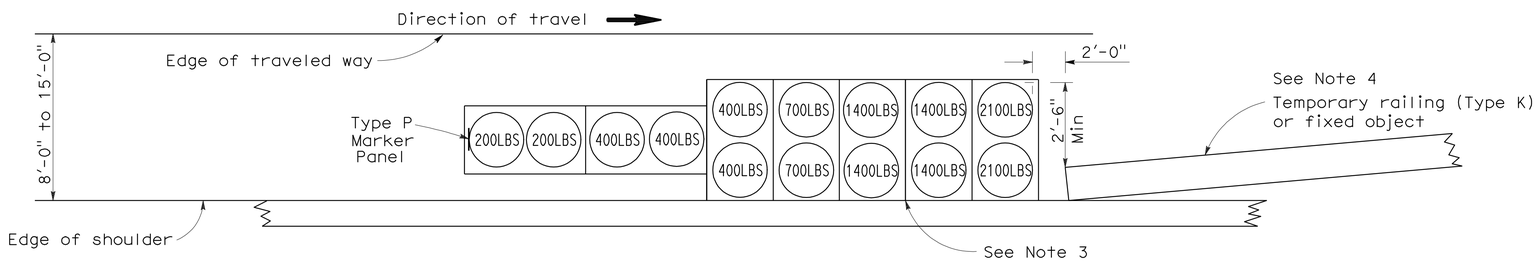

ARRAY 'TS14'

Approach speed 45 mph or more
See Note 9

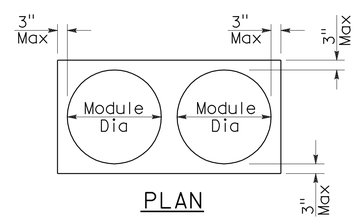

PLAN

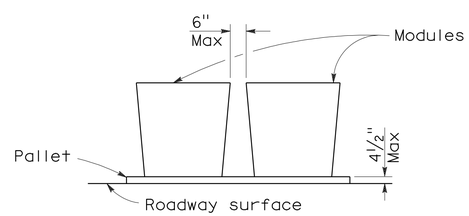

ELEVATION

CRASH CUSHION PALLET DETAIL

See Note 11

NOTES:

1. (XXX) Indicates sand filled module location and weight of sand in pounds for each module. Module spacing is based on the greater diameter of the module.
2. All sand weights are nominal.
3. The temporary crash cushion arrays shown on this plan shall be used only in locations where there will be traffic on one side of the temporary crash cushion array.
4. If the fixed object or approach end of the temporary railing is less than 15'-0" from the edge of traveled way, a temporary crash cushion is required in a construction or work zone.
5. Temporary crash cushion arrays shall not encroach on the traveled way.
6. Arrays for median shoulders shall conform to details shown on this plan for outside shoulders.
7. Place the Type P marker panel so that the bottom of the panel rests upon the pallet and faces traffic.
8. Refer to Standard Plan A73B for marker details.
9. For shoulder widths less than 8'-0", appropriate approved crash cushion protection, other than sand filled modules, shall be provided at fixed objects and at approach ends of temporary railing. The specific type of crash cushion shall be as shown on the project plans or as specified in the Special Provisions, or if not shown on the project plans or specified in the Special Provisions, shall be as approved by the Engineer.
10. Approach speeds indicated conform to NCHRP 350 Report criteria.
11. Use of pallets is optional.

STATE OF CALIFORNIA
DEPARTMENT OF TRANSPORTATION

TEMPORARY CRASH CUSHION, SAND FILLED (SHOULDER INSTALLATIONS)

NO SCALE

RSP T2 DATED JUNE 6, 2008 SUPERSEDES STANDARD PLAN T2
DATED MAY 1, 2006 - PAGE 213 OF THE STANDARD PLANS BOOK DATED MAY 2006.

REVISED STANDARD PLAN RSP T2

2006 REVISED STANDARD PLAN RSP T2

5-15-08

DIST	COUNTY	ROUTE	POST MILES TOTAL PROJECT	SHEET NO.	TOTAL SHEETS
01	Men	101	R0.1/R101.6	75	75

Greg W. Edwards
REGISTERED CIVIL ENGINEER

November 17, 2006
PLANS APPROVAL DATE

REGISTERED PROFESSIONAL ENGINEER
Greg W. Edwards
No. C36386
Exp. 6-30-08
CIVIL
STATE OF CALIFORNIA

The State of California or its officers or agents shall not be responsible for the accuracy or completeness of electronic copies of this plan sheet.

To accompany plans dated 9-28-09

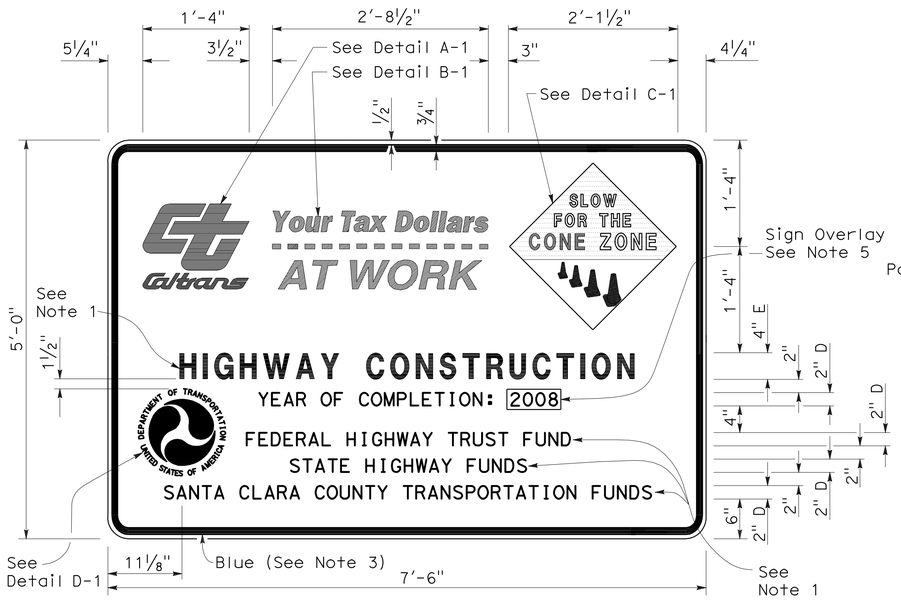

TYPE 1

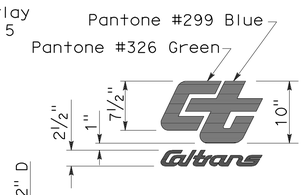

DETAIL A-1

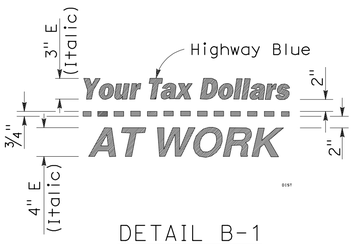

DETAIL B-1
(See Note 3)

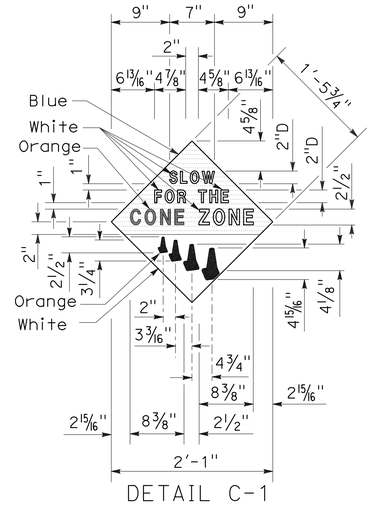

DETAIL C-1
(See Note 4)

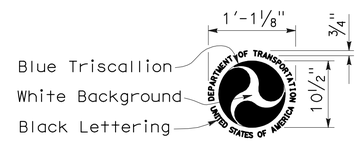

DETAIL D-1
(See Note 6)

NOTES:

1. The sign messages shown for type of project and fund types are examples only. See the Special Provisions for the applicable type of project and fund type messages to be used.
2. Except as otherwise shown, the legend of sign shall be black on a white background (non-reflective).
3. The border of the signs and details "B-1" and "B-2" shall be blue (non-reflective).
4. The diamond in details "C-1" and "C-2" shall be blue for the background of message, " SLOW FOR THE CONE ZONE", and white background for the orange cones. The color and type of font for the "SLOW FOR THE CONE ZONE" message shall be: "SLOW" white D; "FOR THE" white D; "CONE" orange Arial font; "ZONE" white Arial font.
5. Year of completion of project construction shown on the overlay is an example only. See the Special Provisions.
6. Use when the Project involves Federal Highway Trust Fund.

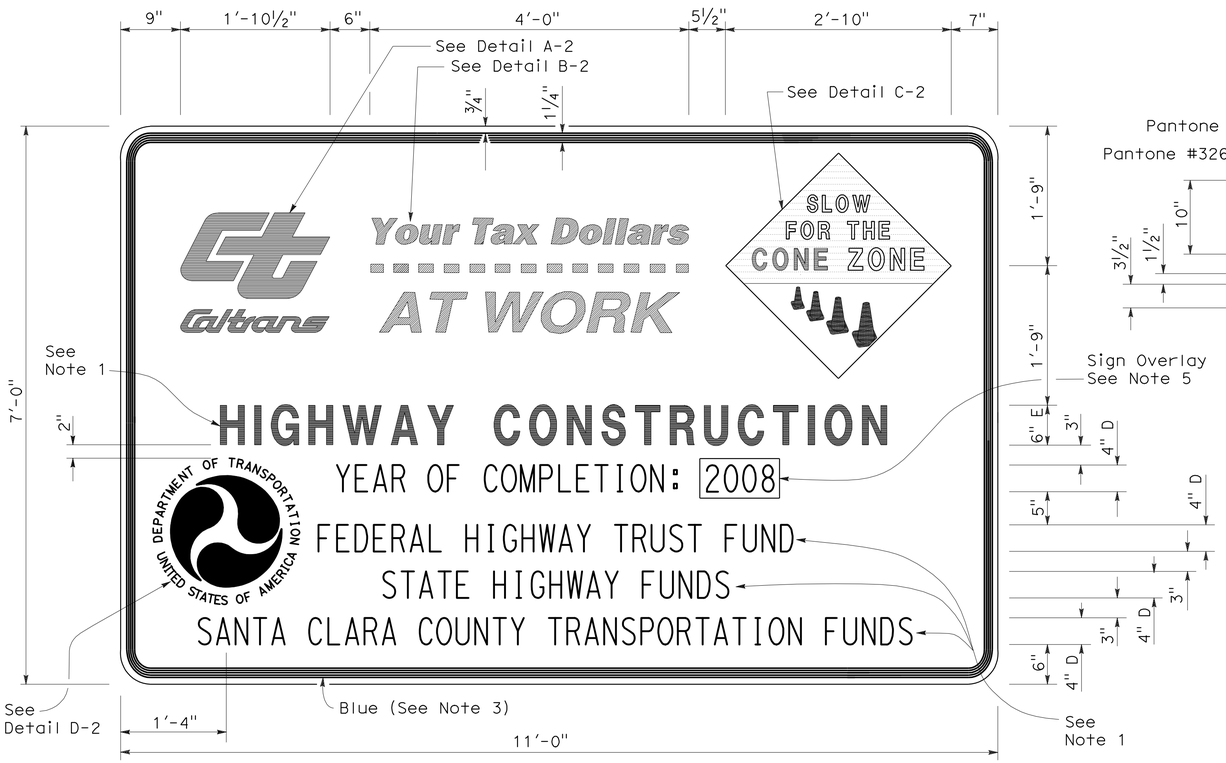

TYPE 2

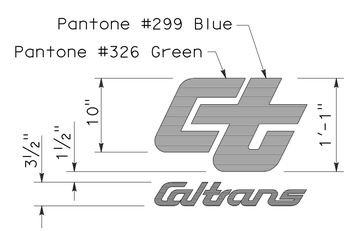

DETAIL A-2

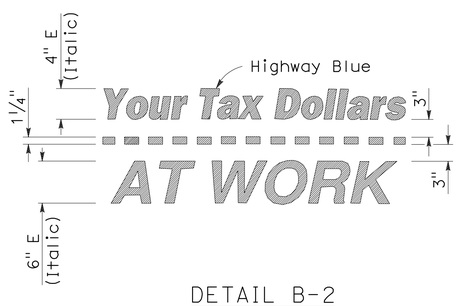

DETAIL B-2
(See Note 3)

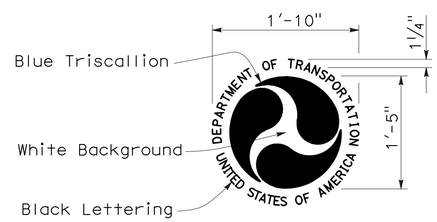

DETAIL D-2
(See Note 6)

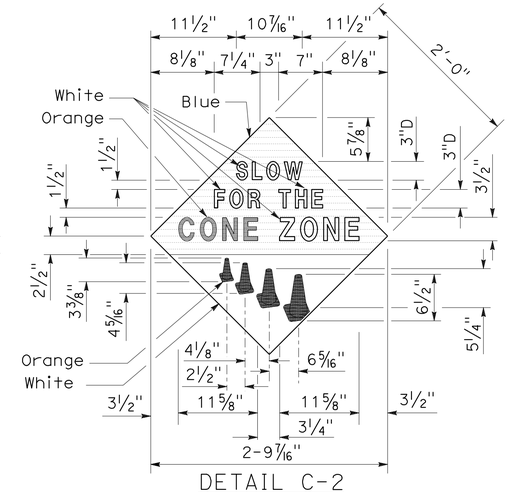

DETAIL C-2
(See Note 4)

STATE OF CALIFORNIA
DEPARTMENT OF TRANSPORTATION

CONSTRUCTION PROJECT FUNDING IDENTIFICATION SIGNS

NO SCALE

RSP T7 DATED NOVEMBER 17, 2006 SUPERSEDES STANDARD PLAN T7
DATED MAY 1, 2006 - PAGE 217 OF THE STANDARD PLANS BOOK DATED MAY 2006.

REVISED STANDARD PLAN RSP T7

2006 REVISED STANDARD PLAN RSP T7

9-7-06