Dist	COUNTY	ROUTE	POST MILES TOTAL PROJECT	SHEET No.	TOTAL SHEETS
01	Men	128,253	Var	1	106

STATE OF CALIFORNIA
DEPARTMENT OF TRANSPORTATION

STP-X045(021)E

PROJECT PLANS FOR CONSTRUCTION ON
STATE HIGHWAY
IN MENDOCINO COUNTY
AT VARIOUS LOCATIONS

TO BE SUPPLEMENTED BY STANDARD PLANS DATED MAY 2006

INDEX OF PLANS

SHEET No.	DESCRIPTION
1	TITLE AND LOCATION MAP
2	LOCATIONS OF CONSTRUCTION
3	EROSION CONTROL QUANTITIES
4-71	DRAINAGE PLANS, PROFILES, DETAILS AND QUANTITIES
72	CONSTRUCTION AREA SIGNS
73-77	STAGE CONSTRUCTION, TRAFFIC HANDLING PLANS AND QUANTITIES
78	PAVEMENT DELINEATION PLAN AND QUANTITIES
79-81	SUMMARY OF QUANTITIES
82-106	REVISED AND NEW STANDARD PLANS

THE STANDARD PLANS LIST APPLICABLE TO THIS CONTRACT IS INCLUDED IN THE NOTICE TO BIDDERS AND SPECIAL PROVISIONS BOOK.

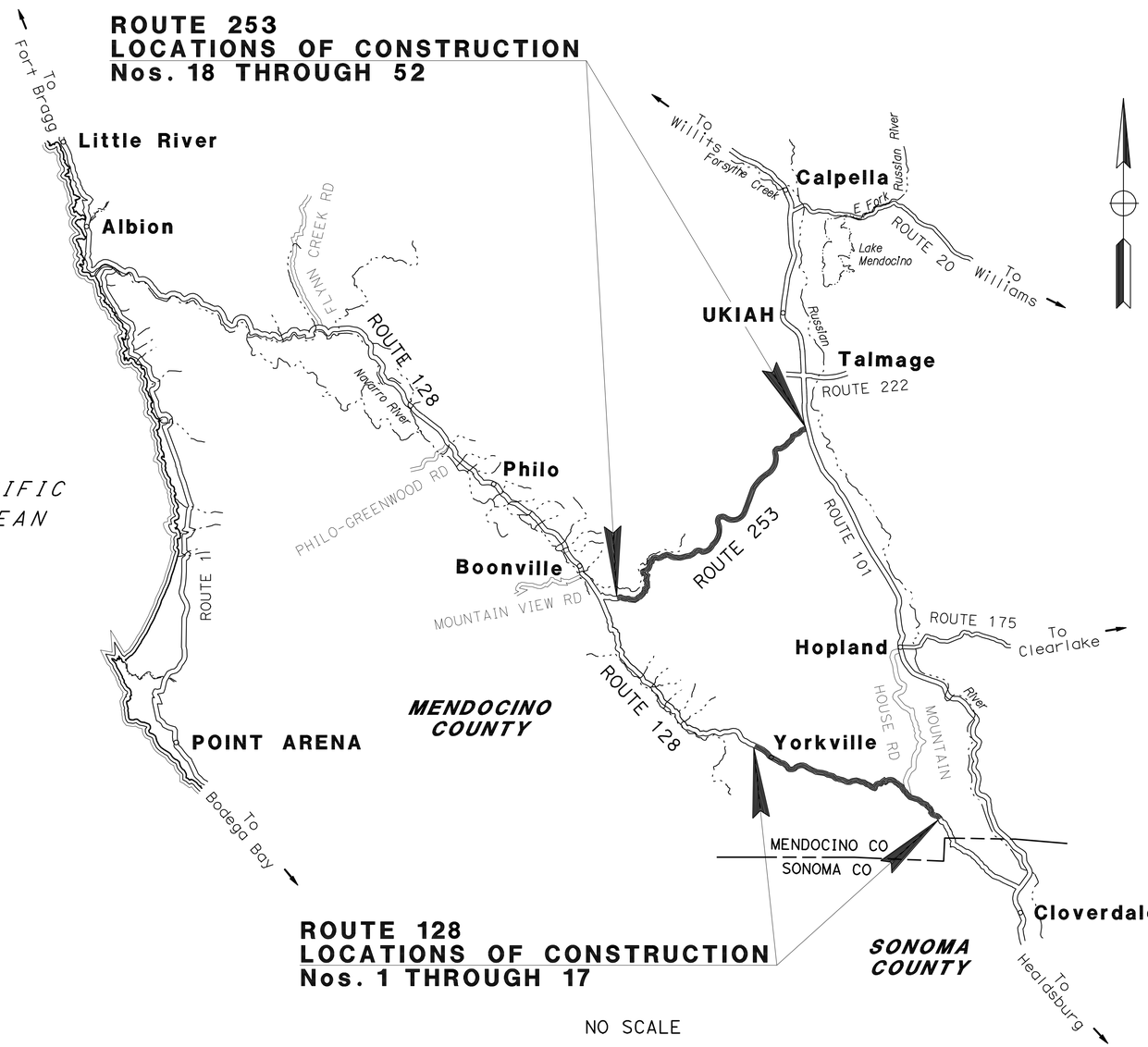

NO SCALE

LOCATION MAP

NOTE:

THE TABLE OF LOCATIONS OF CONSTRUCTION IS SHOWN ON THE LOCATIONS OF CONSTRUCTION SHEET.

Sarju D. Patel 11-23-09
PROJECT ENGINEER DATE
REGISTERED CIVIL ENGINEER

April 12, 2010
PLANS APPROVAL DATE

REGISTERED PROFESSIONAL ENGINEER
SARJU D. PATEL
No. C 65611
Exp. 09-30-11
CIVIL
STATE OF CALIFORNIA

THE STATE OF CALIFORNIA OR ITS OFFICERS OR AGENTS SHALL NOT BE RESPONSIBLE FOR THE ACCURACY OR COMPLETENESS OF SCANNED COPIES OF THIS PLAN SHEET.

PROJECT MANAGER: GRACE TELL
DESIGN ENGINEER: ROBERT E. POLGAR

THE CONTRACTOR SHALL POSSESS THE CLASS (OR CLASSES) OF LICENSE AS SPECIFIED IN THE "NOTICE TO BIDDERS."

CONTRACT No.	01-378154
PROJECT ID	0100000135

LAST REVISION 08-24-09
DATE PLOTTED => 14-JAN-2011
TIME PLOTTED => 10:44

Dist	COUNTY	ROUTE	POST MILES TOTAL PROJECT	SHEET No.	TOTAL SHEETS
01	Men	128,253	Var	2	106

Sarju D. Patel 11-23-09
REGISTERED CIVIL ENGINEER DATE

4-12-10
PLANS APPROVAL DATE

REGISTERED PROFESSIONAL ENGINEER
SARJU D. PATEL
No. C 65611
Exp. 09-30-11
CIVIL
STATE OF CALIFORNIA

THE STATE OF CALIFORNIA OR ITS OFFICERS OR AGENTS SHALL NOT BE RESPONSIBLE FOR THE ACCURACY OR COMPLETENESS OF SCANNED COPIES OF THIS PLAN SHEET.

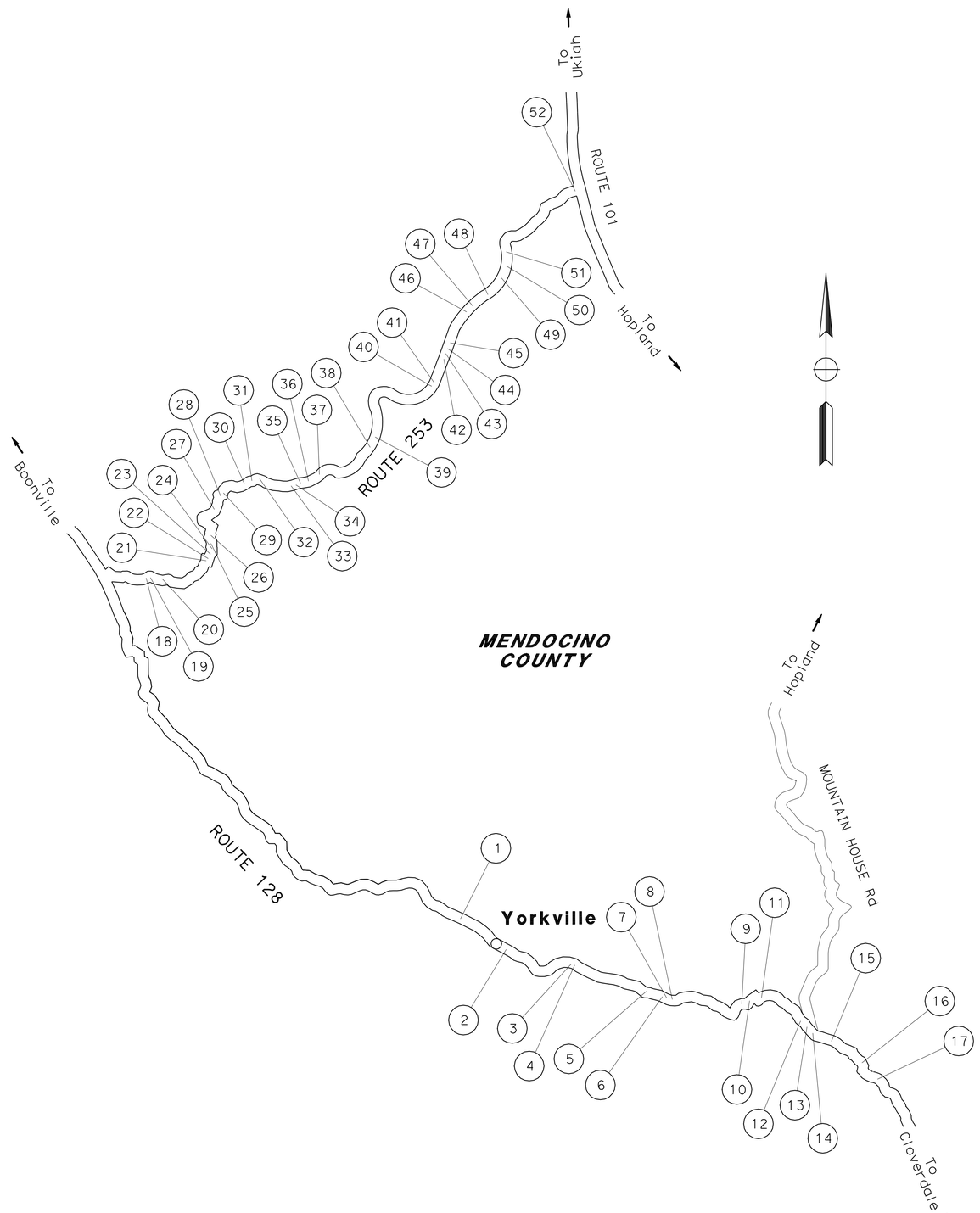

LOCATIONS OF CONSTRUCTION

Loc	COUNTY	ROUTE	PM	Loc	COUNTY	ROUTE	PM
1	Men	128	40.85	27	Men	253	3.86
2	Men	128	41.46	28	Men	253	4.18
3	Men	128	42.93	29	Men	253	4.25
4	Men	128	42.97	30	Men	253	4.78
5	Men	128	44.40	31	Men	253	4.97
6	Men	128	44.75	32	Men	253	5.15
7	Men	128	44.81	33	Men	253	5.90
8	Men	128	44.90	34	Men	253	6.01
9	Men	128	46.58	35	Men	253	6.17
10	Men	128	46.74	36	Men	253	6.34
11	Men	128	47.03	37	Men	253	6.63
12	Men	128	48.21	38	Men	253	8.11
13	Men	128	48.46	39	Men	253	8.42
14	Men	128	48.50	40	Men	253	10.62
15	Men	128	48.92	41	Men	253	10.68
16	Men	128	49.66	42	Men	253	11.37
17	Men	128	50.00	43	Men	253	11.53
18	Men	253	0.99	44	Men	253	11.62
19	Men	253	1.06	45	Men	253	11.74
20	Men	253	1.38	46	Men	253	12.61
21	Men	253	2.81	47	Men	253	12.80
22	Men	253	2.85	48	Men	253	13.73
23	Men	253	2.98	49	Men	253	13.96
24	Men	253	3.06	50	Men	253	14.31
25	Men	253	3.13	51	Men	253	14.62
26	Men	253	3.34	52	Men	253	17.15

LOCATIONS OF CONSTRUCTION

NO SCALE

LC-1

STATE OF CALIFORNIA - DEPARTMENT OF TRANSPORTATION
03-DESIGN
Caltrans

FUNCTIONAL SUPERVISOR: ROBERT E. POLGAR
CALCULATED-DESIGNED BY: SARJU D. PATEL
CHECKED BY: W. KEITH MACK
REVISED BY
DATE REVISED

LAST REVISION 08-24-09
DATE PLOTTED => 15-APR-2010
TIME PLOTTED => 14:42

Dist	COUNTY	ROUTE	POST MILES TOTAL PROJECT	SHEET No.	TOTAL SHEETS
01	Men	128,253	Var	3	106

Sarju D. Patel 11-23-09
REGISTERED CIVIL ENGINEER DATE

4-12-10
PLANS APPROVAL DATE

REGISTERED PROFESSIONAL ENGINEER
SARJU D. PATEL
No. C 65611
Exp. 09-30-11
CIVIL
STATE OF CALIFORNIA

THE STATE OF CALIFORNIA OR ITS OFFICERS OR AGENTS SHALL NOT BE RESPONSIBLE FOR THE ACCURACY OR COMPLETENESS OF SCANNED COPIES OF THIS PLAN SHEET.

EROSION CONTROL

DRAINAGE SYSTEM No.	LOCATION ROUTE	LOCATION PM	FIBER ROLL	COMPOST BLANKET	HYDROSEED	(N) COMPOST (COMPOST BLANKET)	(N) COMPOST (HYDROSEED)	(N) PURE LIVE SEED	(N) FIBER	(N) STABILIZING EMULSION	(N) STRAW	(N) AREA
			LF	CY	SQFT	CY	CY	LB	LB	LB	TON	SQFT
1	128	40.85	20	0.3		0.3		0.30				55
2	128	41.46	40	2.3		2.3		2.07				375
3	128	42.93										
4	128	42.97										
5	128	44.40										
6	128	44.75	20	1.1		1.1		0.96				175
7	128	44.81										
8	128	44.90	20	2.5		2.5		2.20				400
9	128	46.58	10									
10	128	46.74	40		620		1.0	3.42	15.66	2.13	0.06	620
11	128	47.03	110		640		1.0	3.53	16.16	2.20	0.06	640
12	128	48.21	55	2.9		2.9		2.59				470
13	128	48.46										
14	128	48.50	25	1.6		1.6		1.43				260
15	128	48.92	40		620		1.0	3.42	15.66	2.13	0.06	620
16	128	49.66										
17	128	50.00	60	2.1		2.1		1.87				340
18	253	0.99	50	3.0		3.0		2.64				480
19	253	1.06	40	1.4		1.4		1.24				225
20	253	1.38	80		875		1.4	4.82	22.10	3.01	0.08	875
21	253	2.81	135		2400		3.7	13.22	60.61	8.26	0.22	2400
22	253	2.85	130		2800		4.4	15.43	70.71	9.64	0.26	2800
23	253	2.98	65		770		1.2	4.24	19.44	2.65	0.07	770
24	253	3.06	20	1.4		1.4		1.24				225
25	253	3.13	30	3.1		3.1		2.75				500
26	253	3.34	20	2.1		2.1		1.87				340
SUBTOTAL			1010	23.8	8725	23.8	13.7	69.24	220.34	30.02	0.81	12570

DRAINAGE SYSTEM No.	LOCATION ROUTE	LOCATION PM	FIBER ROLL	COMPOST BLANKET	HYDROSEED	(N) COMPOST (COMPOST BLANKET)	(N) COMPOST (HYDROSEED)	(N) PURE LIVE SEED	(N) FIBER	(N) STABILIZATING EMULSION	(N) STRAW	(N) AREA
			LF	CY	SQFT	CY	CY	LB	LB	LB	TON	SQFT
27	253	3.86	30	3.0		3.0		2.64				480
28	253	4.18										
29	253	4.25	360		3500		5.5	19.28	88.38	12.05	0.32	3500
30	253	4.78	40	3.0		3.0		2.70				490
31	253	4.97	20									
32	253	5.15	20	3.0		3.0		2.64				480
33	253	5.90	40	1.6		1.6		1.38				250
34	253	6.01	20	0.9		0.9		0.83				150
35	253	6.17	300		3200		5.0	17.63	80.81	11.02	0.29	3200
36	253	6.34	130		1100		1.7	6.06	27.78	3.79	0.10	1100
37	253	6.63	365		2670		5.0	17.63	80.81	11.02	0.29	3200
38	253	8.11	70		592		0.9	3.25	14.90	2.03	0.05	590
39	253	8.42	130		1077	9.3		8.26	37.88	5.17	0.14	1500
40	253	10.62		1.8			0.5	1.60				290
41	253	10.68	50		700	4.2		3.72	17.07	2.33	0.06	676
42	253	11.37	30	2.5			0.6	2.20				400
43	253	11.53										
44	253	11.62	25		808	3.7		3.31	15.15	2.07	0.06	600
45	253	11.74	25	2.1			0.5	1.87				340
46	253	12.61	30	2.5			0.6	2.20				400
47	253	12.80										
48	253	13.73	30		862	5.6		4.96	22.75	3.10	0.08	901
49	253	13.96	25	2.5			0.6	2.20				400
50	253	14.31										
51	253	14.62	50		765	3.9		3.42	15.66	2.13	0.06	620
52	253	17.15										
SUBTOTAL			1790	22.9	15274	38.2	20.9	107.78	401.19	54.71	1.45	19567
TOTAL			2800	46.7	23999	62.0	34.6	177.02	621.53	84.73	2.26	32137

(N) = NOT A SEPARATE PAY ITEM, FOR INFORMATION ONLY.

EROSION CONTROL QUANTITIES

ECQ-1

STATE OF CALIFORNIA - DEPARTMENT OF TRANSPORTATION
Caltrans
03-DESIGN
FUNCTIONAL SUPERVISOR: ROBERT E. POLGAR
CALCULATED-DESIGNED BY: W. KEITH MACK
CHECKED BY
REVISED BY: S. PATEL
DATE REVISED: 09-28-09
SARJU D. PATEL

LAST REVISION 07-07-09
DATE PLOTTED => 15-APR-2010
TIME PLOTTED => 14:42

Dist	COUNTY	ROUTE	POST MILES TOTAL PROJECT	SHEET No.	TOTAL SHEETS
01	Men	128,253	Var	4	106

Larisa V. Sasevich 11-23-09
REGISTERED CIVIL ENGINEER DATE

4-12-10
PLANS APPROVAL DATE

REGISTERED PROFESSIONAL ENGINEER LARISA V. SASEVICH No. C 71520 Exp. 12-31-09 CIVIL STATE OF CALIFORNIA

THE STATE OF CALIFORNIA OR ITS OFFICERS OR AGENTS SHALL NOT BE RESPONSIBLE FOR THE ACCURACY OR COMPLETENESS OF SCANNED COPIES OF THIS PLAN SHEET.

NOTES:

1. FOR ACCURATE RIGHT OF WAY DATA, CONTACT RIGHT OF WAY ENGINEERING AT DISTRICT OFFICE.
2. THIS PLAN ACCURATE FOR DRAINAGE WORK ONLY.
3. FOR ROCK SLOPE PROTECTION DETAILS SEE DRAINAGE DETAIL SHEETS.
4. THE ANGLE OF EACH ELBOW IS APPROXIMATE. THE EXACT ANGLE WILL BE DETERMINED IN THE FIELD BY THE ENGINEER.
5. FOR MINOR CONCRETE (BACKFILL) DETAILS SEE DRAINAGE DETAIL SHEET.
6. FOR PLASTIC PIPE LINER DETAILS SEE DRAINAGE DETAIL SHEETS.
8. INLET AND/OR OUTLET STRUCTURE SKEW ANGLE IS MEASURED FROM A LINE PERPENDICULAR TO THE CULVERT ALIGNMENT.
9. LOCATIONS OF UTILITY FACILITIES SHOWN ON THESE PLANS ARE APPROXIMATE AND SHALL BE VERIFIED BY THE CONTRACTOR PRIOR TO CONSTRUCTION.
10. UTILITY OWNERSHIP ON THIS PROJECT:
    - ELECTRICAL - PACIFIC GAS & ELECTRIC (PG&E Elect)
    - TELEPHONE - AMERICAN TELEPHONE & TELEGRAPH (AT&T Tel)
    - FIBER OPTIC - AMERICAN TELEPHONE & TELEGRAPH (AT&T FO)
      - LEVEL 3 COMMUNICATIONS (L3 FO)
    - WATER - WILLOW COUNTY WATER (WILLOW Co WATER)
11. ALL UTILITY ELEVATIONS SHOWN REFER TO THE TOP OF THE UTILITY CONDUIT UNLESS OTHERWISE INDICATED.

T12N R12W MDB&M
SECTION 8

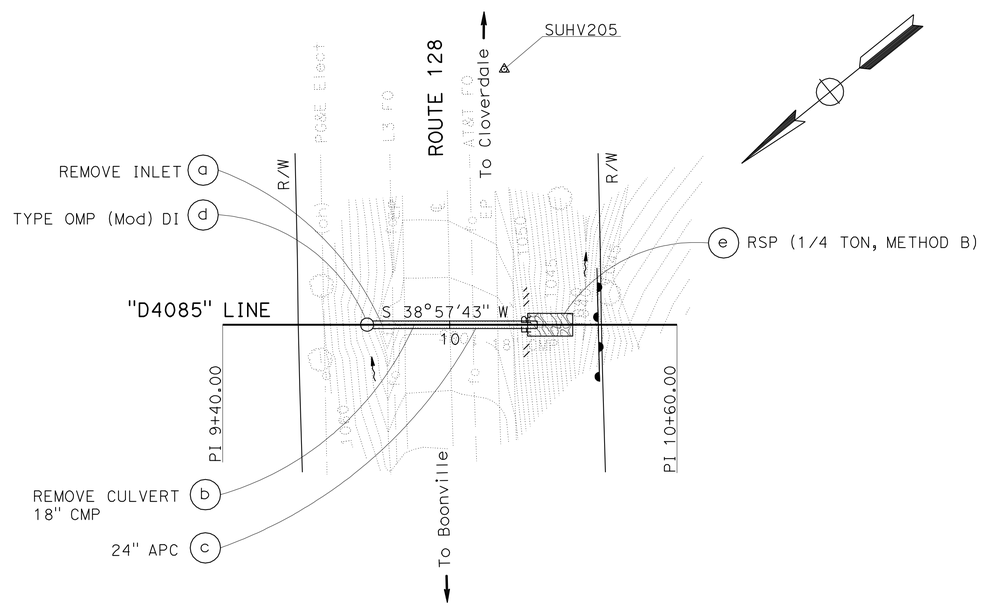

DRAINAGE SYSTEM (1)
ROUTE 128
PM 40.85
SCALE: 1" = 20'

LEGEND:

- (X) DRAINAGE SYSTEM No.
- (x) DRAINAGE UNIT
- ROCK SLOPE PROTECTION
- CULVERT INVERT MIX
- Temp FENCE (TYPE ESA)
- \\ FR \\ FIBER ROLL

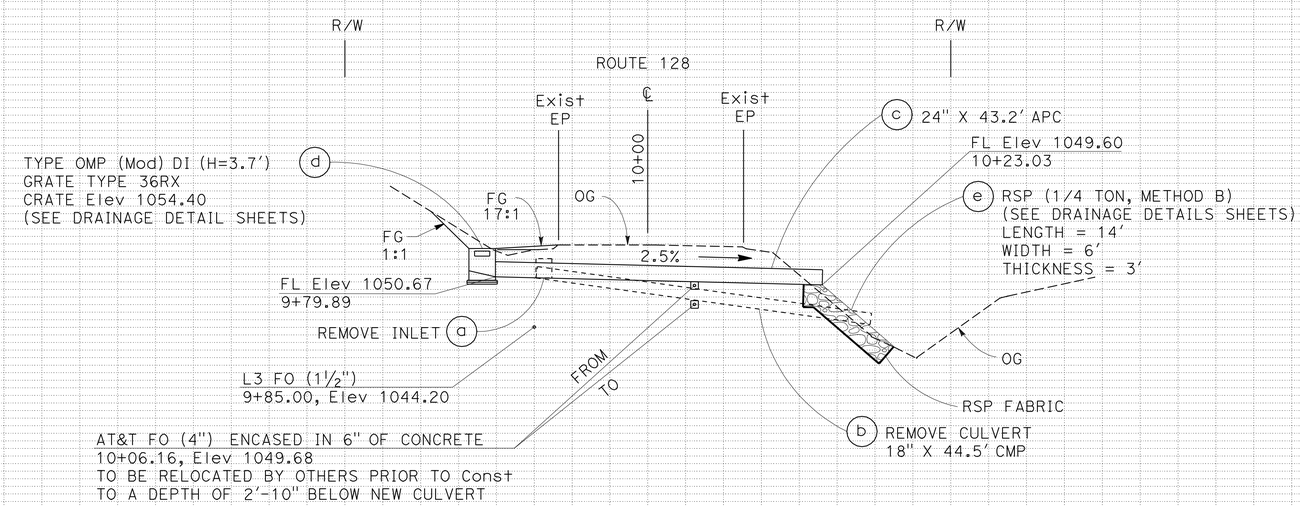

DRAINAGE SYSTEM (1)
SCALE: Horiz 1" = 10'
Vert 1" = 10'

DRAINAGE PLAN AND PROFILE

SCALE AS SHOWN

D-1

Station	9+40	9+60	9+80	10+00	10+20	10+40	10+60
CY Exc							
CY Emb							

STATE OF CALIFORNIA - DEPARTMENT OF TRANSPORTATION	Caltrans 03-DESIGN	FUNCTIONAL SUPERVISOR ROBERT E. POLGAR	CALCULATED-DESIGNED BY LARISA V. SASEVICH
			CHECKED BY SARJU D. PATEL
			REVISED BY L.SASEVICH
			DATE REVISED 11-23-09

LAST REVISION 11-23-09
DATE PLOTTED => 19-OCT-2010
TIME PLOTTED => 06:17

Dist	COUNTY	ROUTE	POST MILES TOTAL PROJECT	SHEET No.	TOTAL SHEETS
01	Men	128,253	Var	5	106

Larisa V. Sasevich 11-23-09
REGISTERED CIVIL ENGINEER DATE

4-12-10
PLANS APPROVAL DATE

REGISTERED PROFESSIONAL ENGINEER LARISA V. SASEVICH No. C 71520 Exp. 12-31-09 CIVIL STATE OF CALIFORNIA

THE STATE OF CALIFORNIA OR ITS OFFICERS OR AGENTS SHALL NOT BE RESPONSIBLE FOR THE ACCURACY OR COMPLETENESS OF SCANNED COPIES OF THIS PLAN SHEET.

T12N R12W MDB&M
SECTION 17

NOTES:

1. FOR ACCURATE RIGHT OF WAY DATA, CONTACT RIGHT OF WAY ENGINEERING AT DISTRICT OFFICE.
2. THIS PLAN ACCURATE FOR DRAINAGE WORK ONLY.
3. INLET STRUCTURE SKEW ANGLE IS MEASURED FROM A LINE PERPENDICULAR TO the CULVERT ALIGNMENT.

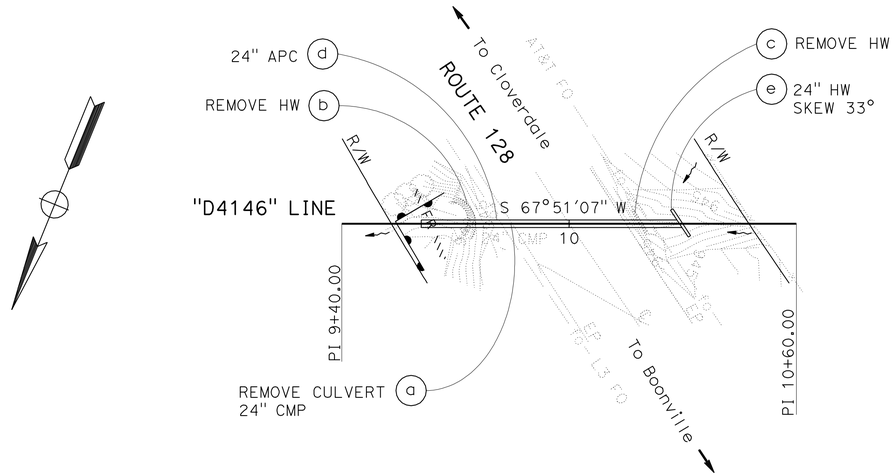

DRAINAGE SYSTEM (2)

ROUTE 128
PM 41.46
SCALE: 1" = 20'

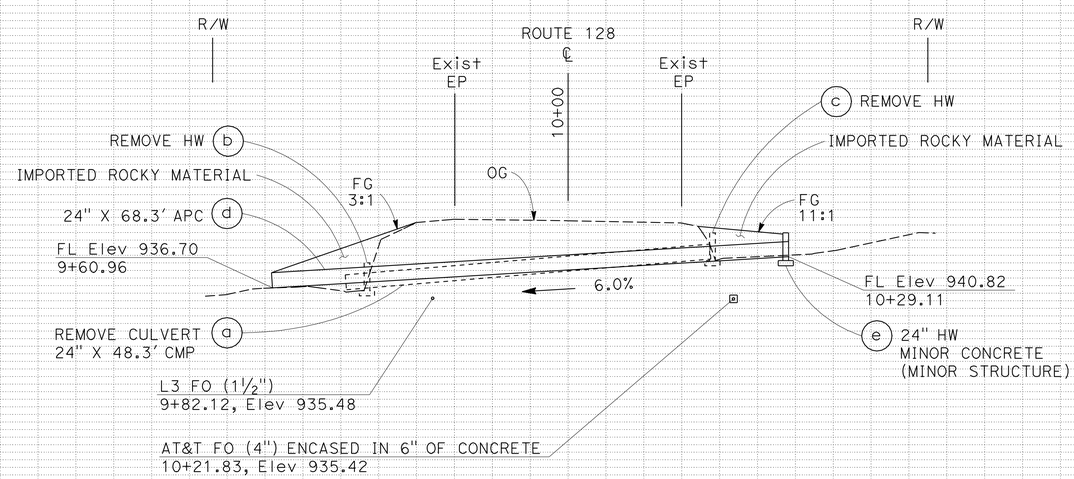

DRAINAGE SYSTEM (2)

SCALE: Horiz 1" = 10'
Vert 1" = 10'

DRAINAGE PLAN AND PROFILE

SCALE AS SHOWN

D-2

Station	9+40	9+60	9+80	10+00	10+20	10+40	10+60
CY Exc							
CY Emb							

STATE OF CALIFORNIA - DEPARTMENT OF TRANSPORTATION
Caltrans 03-DESIGN

FUNCTIONAL SUPERVISOR: ROBERT E. POLGAR
CALCULATED-DESIGNED BY: LARISA V. SASEVICH
CHECKED BY: SARJU D. PATEL
REVISED BY: L.SASEVICH
DATE REVISED: 11-23-09

LAST REVISION 11-23-09
DATE PLOTTED => 15-APR-2010
TIME PLOTTED => 14:42

Dist	COUNTY	ROUTE	POST MILES TOTAL PROJECT	SHEET No.	TOTAL SHEETS
01	Men	128,253	Var	6	106

Larisa V. Sasevich 11-23-09
REGISTERED CIVIL ENGINEER DATE

4-12-10
PLANS APPROVAL DATE

REGISTERED PROFESSIONAL ENGINEER LARISA V. SASEVICH No. C 71520 Exp. 12-31-09 CIVIL STATE OF CALIFORNIA

THE STATE OF CALIFORNIA OR ITS OFFICERS OR AGENTS SHALL NOT BE RESPONSIBLE FOR THE ACCURACY OR COMPLETENESS OF SCANNED COPIES OF THIS PLAN SHEET.

T12N R12W MDB&M
SECTION 15

NOTES:

1. FOR ACCURATE RIGHT OF WAY DATA, CONTACT RIGHT OF WAY ENGINEERING AT DISTRICT OFFICE.
2. THIS PLAN ACCURATE FOR DRAINAGE WORK ONLY.
3. FOR MINOR CONCRETE (BACKFILL) DETAILS SEE DRAINAGE DETAIL SHEET.

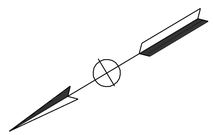

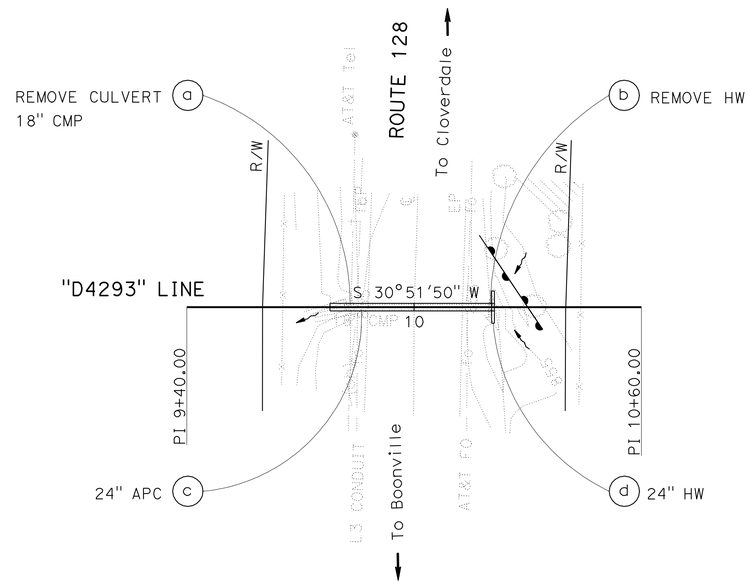

DRAINAGE SYSTEM 3
ROUTE 128
PM 42.93
SCALE: 1" = 20'

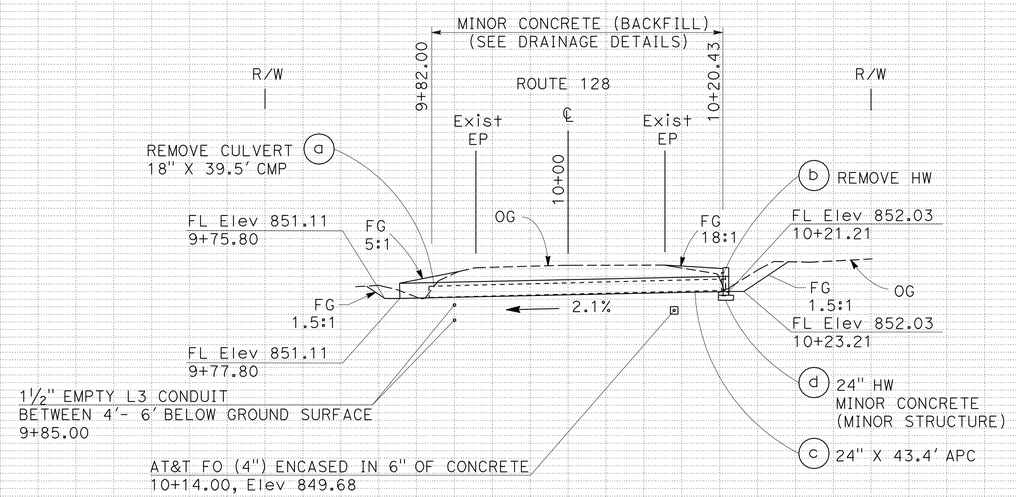

DRAINAGE SYSTEM 3
SCALE: Horiz 1" = 10'
Vert 1" = 10'

DRAINAGE PLAN AND PROFILE
SCALE AS SHOWN

D-3

Station	9+40	9+60	9+80	10+00	10+20	10+40	10+60
CY Exc							
CY Emb							

STATE OF CALIFORNIA - DEPARTMENT OF TRANSPORTATION
Caltrans 03-DESIGN

FUNCTIONAL SUPERVISOR: ROBERT E. POLGAR
CALCULATED-DESIGNED BY: LARISA V. SASEVICH
CHECKED BY: SARJU D. PATEL
REVISED BY: L.SASEVICH
DATE REVISED: 11-23-09

LAST REVISION 11-23-09
DATE PLOTTED => 15-APR-2010
TIME PLOTTED => 14:42

Dist	COUNTY	ROUTE	POST MILES TOTAL PROJECT	SHEET No.	TOTAL SHEETS
01	Men	128,253	Var	7	106

Larisa V. Sasevich 11-23-09
REGISTERED CIVIL ENGINEER DATE

4-12-10
PLANS APPROVAL DATE

REGISTERED PROFESSIONAL ENGINEER LARISA V. SASEVICH No. C 71520 Exp. 12-31-09 CIVIL STATE OF CALIFORNIA

THE STATE OF CALIFORNIA OR ITS OFFICERS OR AGENTS SHALL NOT BE RESPONSIBLE FOR THE ACCURACY OR COMPLETENESS OF SCANNED COPIES OF THIS PLAN SHEET.

T12N R12W MDB&M
SECTION 15

NOTES:

1. FOR ACCURATE RIGHT OF WAY DATA, CONTACT RIGHT OF WAY ENGINEERING AT DISTRICT OFFICE.
2. THIS PLAN ACCURATE FOR DRAINAGE WORK ONLY.
3. FOR MINOR CONCRETE (BACKFILL) DETAILS SEE DRAINAGE DETAIL SHEET.
4. INLET AND OUTLET STRUCTURE SKEW ANGLE IS MEASURED FROM A LINE PERPENDICULAR TO THE CULVERT ALIGNMENT.

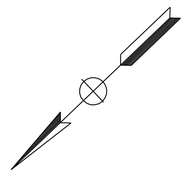

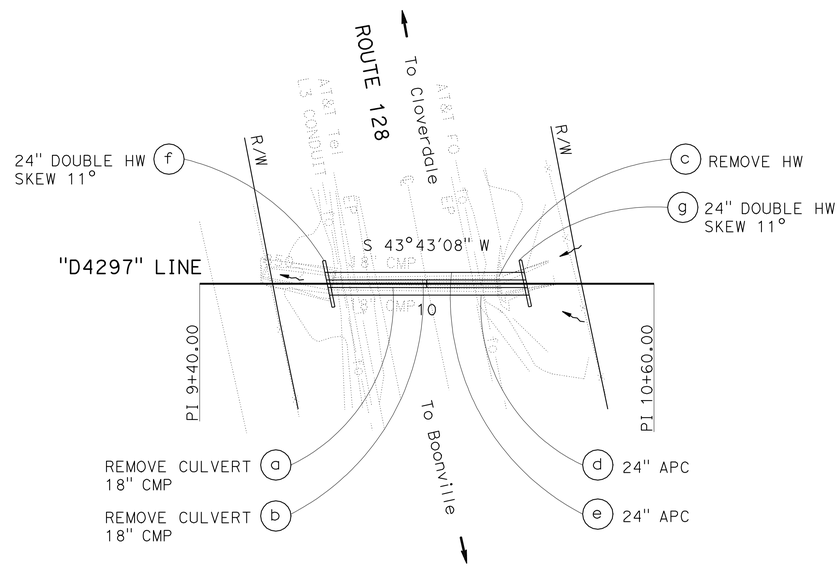

DRAINAGE SYSTEM 4
ROUTE 128
PM 42.97
SCALE: 1" = 20'

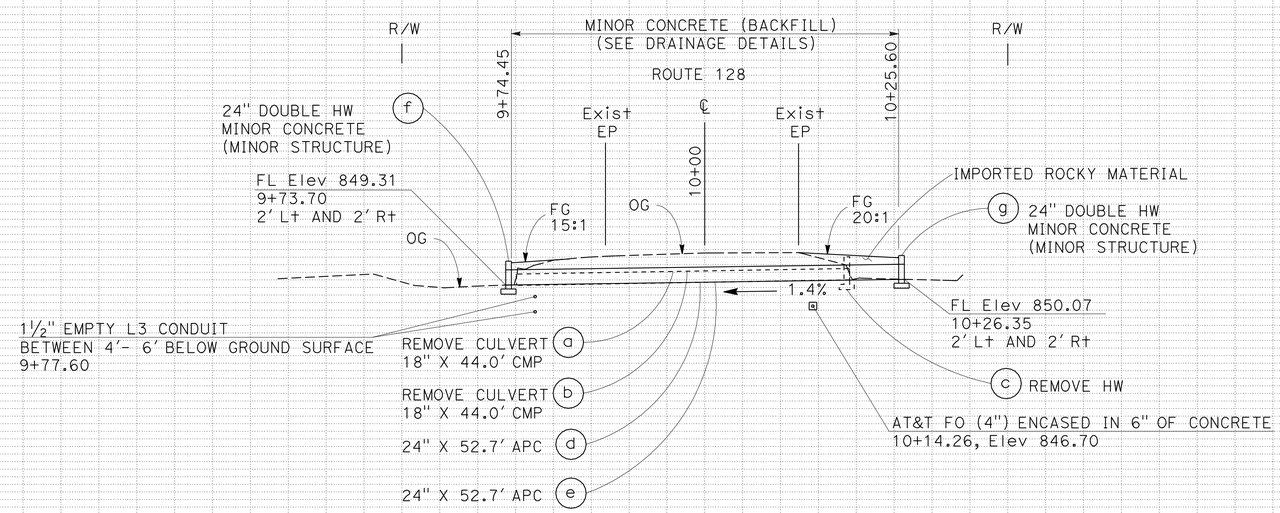

DRAINAGE SYSTEM 4
SCALE: Horiz 1" = 10'
Vert 1" = 10'

DRAINAGE PLAN AND PROFILE
SCALE AS SHOWN

D-4

Station	9+40	9+60	9+80	10+00	10+20	10+40	10+60
CY Exc							
CY Emb							

REVISED BY	L.SASEVICH
DATE REVISED	11-23-09
LARISA V. SASEVICH	
SARJU D. PATEL	
CALCULATED-DESIGNED BY	
CHECKED BY	
FUNCTIONAL SUPERVISOR	ROBERT E. POLGAR

STATE OF CALIFORNIA - DEPARTMENT OF TRANSPORTATION
Caltrans
03-DESIGN

LAST REVISION 11-23-09
DATE PLOTTED => 13-OCT-2010
TIME PLOTTED => 15:06

Dist	COUNTY	ROUTE	POST MILES TOTAL PROJECT	SHEET No.	TOTAL SHEETS
01	Men	128,253	Var	8	106

Larisa V. Sasevich 11-23-09
REGISTERED CIVIL ENGINEER DATE

4-12-10
PLANS APPROVAL DATE

REGISTERED PROFESSIONAL ENGINEER LARISA V. SASEVICH No. C 71520 Exp. 12-31-09 CIVIL STATE OF CALIFORNIA

THE STATE OF CALIFORNIA OR ITS OFFICERS OR AGENTS SHALL NOT BE RESPONSIBLE FOR THE ACCURACY OR COMPLETENESS OF SCANNED COPIES OF THIS PLAN SHEET.

T12N R12W MDB&M
SECTION 14

NOTES:

1. FOR ACCURATE RIGHT OF WAY DATA, CONTACT RIGHT OF WAY ENGINEERING AT DISTRICT OFFICE.
2. THIS PLAN ACCURATE FOR DRAINAGE WORK ONLY.
3. FOR MINOR CONCRETE (BACKFILL) DETAILS SEE DRAINAGE DETAIL SHEET.

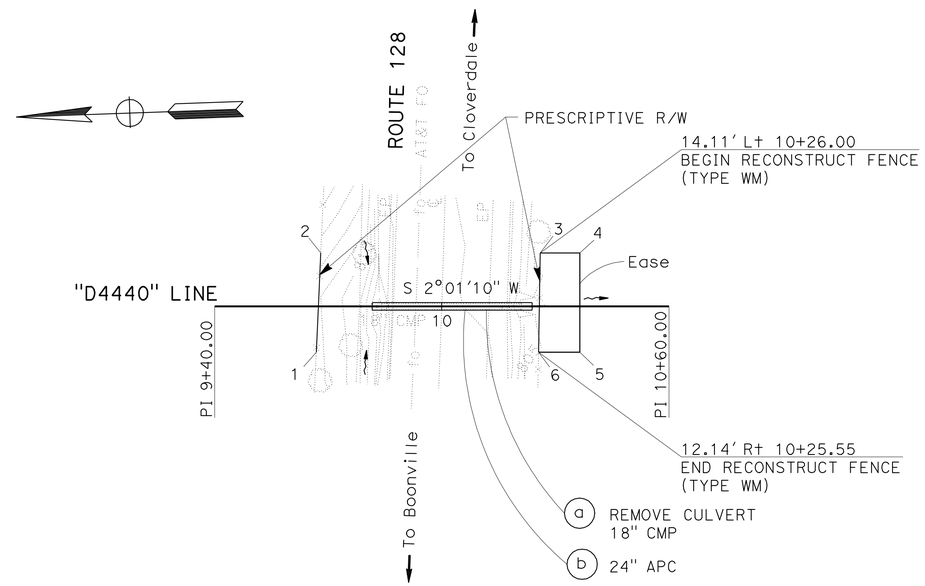

POINT	STATION	OFFSET
1	9+66.86	12.14' Rt
2	9+68.03	14.11' Lt
3	10+26.00	14.11' Lt
4	10+36.44	14.11' Lt
5	10+36.44	12.14' Rt
6	10+25.55	12.14' Rt

DRAINAGE SYSTEM 5

ROUTE 128
PM 44.40
SCALE: 1" = 20'

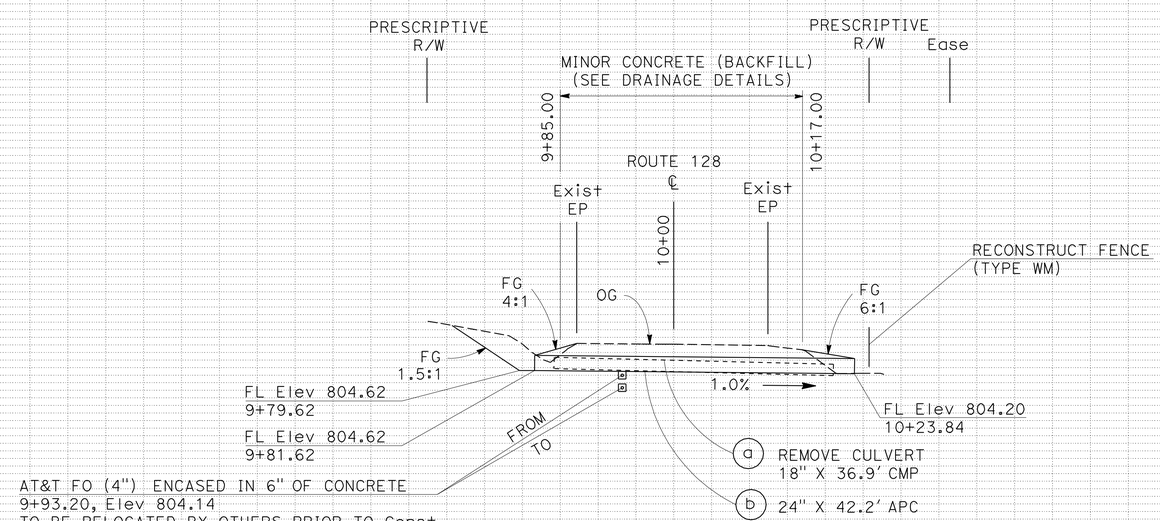

DRAINAGE SYSTEM 5

SCALE: Horiz 1" = 10'
Vert 1" = 10'

DRAINAGE PLAN AND PROFILE

SCALE AS SHOWN

D-5

Station	9+40	9+60	9+80	10+00	10+20	10+40	10+60
CY Exc							
CY Emb							

820 810 800 790

REVISED BY L.SASEVICH
DATE REVISED 11-23-09
LARISA V. SASEVICH
SARJU D. PATEL
CALCULATED-DESIGNED BY
CHECKED BY
FUNCTIONAL SUPERVISOR ROBERT E. POLGAR

STATE OF CALIFORNIA - DEPARTMENT OF TRANSPORTATION
Caltrans 03-DESIGN

LAST REVISION 11-23-09
DATE PLOTTED => 13-OCT-2010
TIME PLOTTED => 15:06

Dist	COUNTY	ROUTE	POST MILES TOTAL PROJECT	SHEET No.	TOTAL SHEETS
01	Men	128,253	Var	9	106

Larisa V. Sasevich 11-23-09
REGISTERED CIVIL ENGINEER DATE

4-12-10
PLANS APPROVAL DATE

REGISTERED PROFESSIONAL ENGINEER LARISA V. SASEVICH No. C 71520 Exp. 12-31-09 CIVIL STATE OF CALIFORNIA

THE STATE OF CALIFORNIA OR ITS OFFICERS OR AGENTS SHALL NOT BE RESPONSIBLE FOR THE ACCURACY OR COMPLETENESS OF SCANNED COPIES OF THIS PLAN SHEET.

T12N R12W MDB&M
SECTION 14

NOTES:

1. FOR ACCURATE RIGHT OF WAY DATA, CONTACT RIGHT OF WAY ENGINEERING AT DISTRICT OFFICE.
2. THIS PLAN ACCURATE FOR DRAINAGE WORK ONLY.
3. FOR ROCK SLOPE PROTECTION DETAILS SEE DRAINAGE DETAIL SHEETS.
4. CONTRACTOR TO COORDINATE WITH THE ENGINEER TO PROTECT IN PLACE AT&T FO LINE. THE ENGINEER IS TO BE CONTACTED A MINIMUM OF 10 WORKING DAYS PRIOR TO WORKING AT THIS LOCATION.
5. CONTRACTOR TO COORDINATE WITH THE ENGINEER TO DISCONECT EXIST 2" PVC WATER LINE. THE ENGINEER IS TO BE CONTACTED A MINIMUM OF 10 WORKING DAYS PRIOR TO WORKING AT THIS LOCATION.

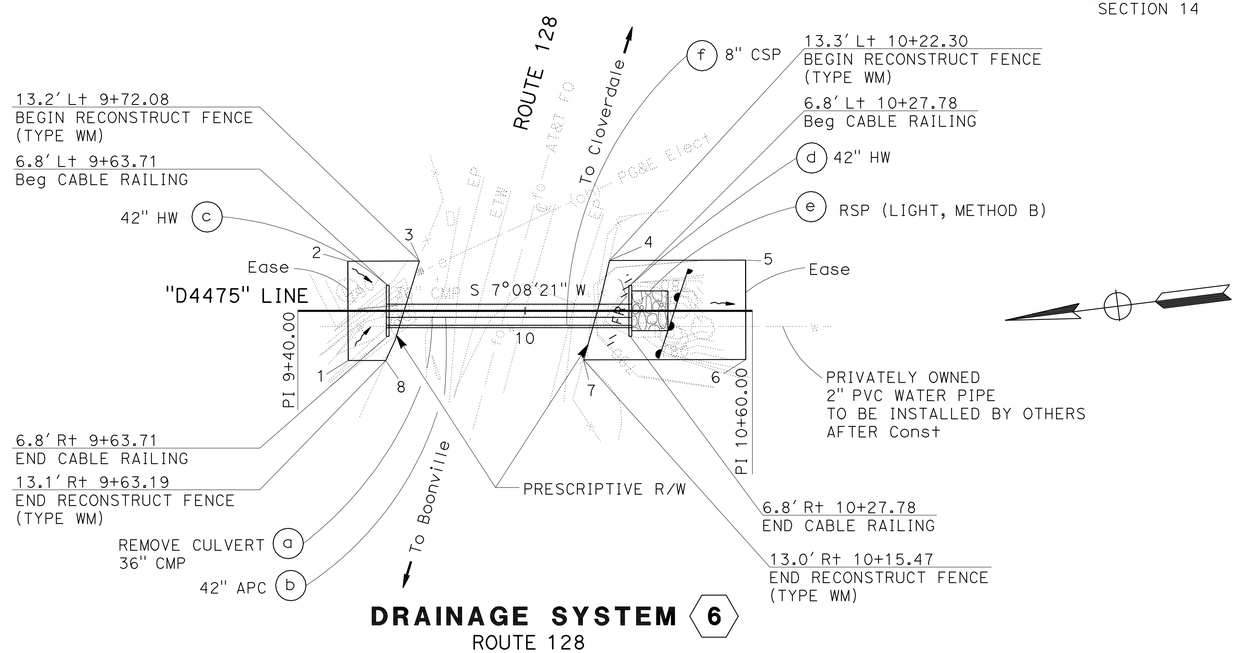

POINT	STATION	OFFSET
1	9+53.28	13.13' Rt
2	9+53.21	13.12' Lt
3	9+72.08	13.17' Lt
4	10+22.30	13.29' Lt
5	10+58.20	13.37' Lt
6	10+58.27	12.87' Rt
7	10+15.47	12.98' Rt
8	9+63.19	13.10' Rt

DRAINAGE SYSTEM (6)
ROUTE 128
PM 44.75
SCALE: 1" = 20'

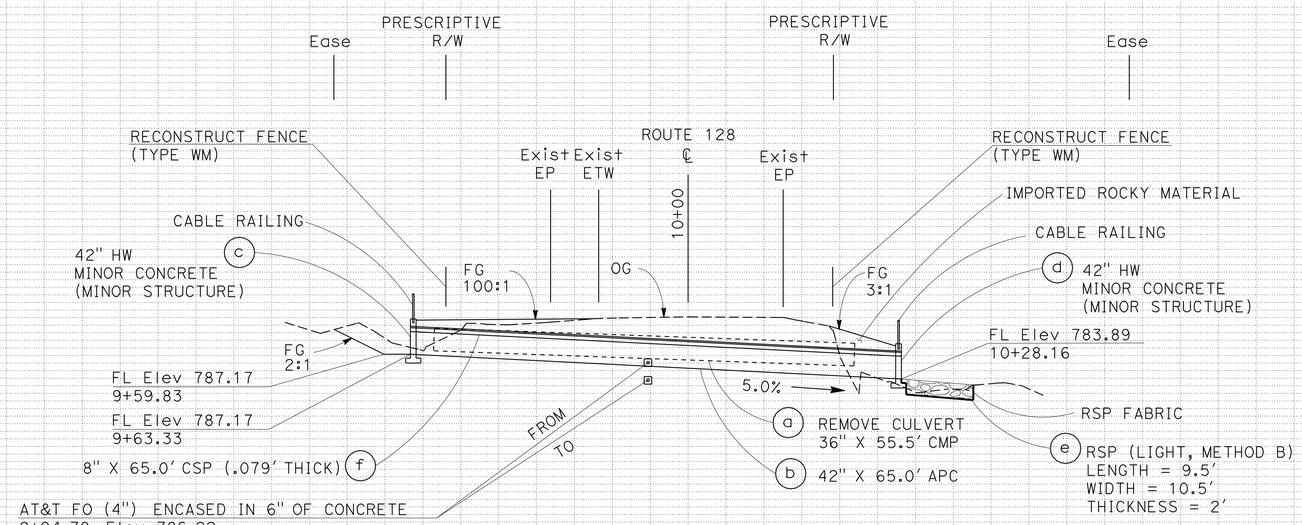

DRAINAGE SYSTEM (6)
SCALE: Horiz 1" = 10'
Vert 1" = 10'

DRAINAGE PLAN AND PROFILE
SCALE AS SHOWN

D-6

STATE OF CALIFORNIA - DEPARTMENT OF TRANSPORTATION
Caltrans 03-DESIGN

FUNCTIONAL SUPERVISOR: ROBERT E. POLGAR
CALCULATED-DESIGNED BY: LARISA V. SASEVICH
CHECKED BY: SARJU D. PATEL
REVISED BY: L.SASEVICH
DATE REVISED: 11-23-09

LAST REVISION 11-23-09
DATE PLOTTED => 15-APR-2010
TIME PLOTTED => 14:43

Dist	COUNTY	ROUTE	POST MILES TOTAL PROJECT	SHEET No.	TOTAL SHEETS
01	Men	128,253	Var	10	106

Larisa V. Sasevich 11-23-09
REGISTERED CIVIL ENGINEER DATE

4-12-10
PLANS APPROVAL DATE

REGISTERED PROFESSIONAL ENGINEER LARISA V. SASEVICH No. C 71520 Exp. 12-31-09 CIVIL STATE OF CALIFORNIA

THE STATE OF CALIFORNIA OR ITS OFFICERS OR AGENTS SHALL NOT BE RESPONSIBLE FOR THE ACCURACY OR COMPLETENESS OF SCANNED COPIES OF THIS PLAN SHEET.

T12N R12W MDB&M
SECTION 14

NOTES:

1. FOR ACCURATE RIGHT OF WAY DATA, CONTACT RIGHT OF WAY ENGINEERING AT DISTRICT OFFICE.
2. THIS PLAN ACCURATE FOR DRAINAGE WORK ONLY.
3. DRAINAGE INLET SHALL BE SET TO PROFILE GRADE OF PAVEMENT.
4. FOR MINOR CONCRETE (BACKFILL) DETAILS SEE DRAINAGE DETAIL SHEET.
5. INLET STRUCTURE SKEW ANGLE IS MEASURED FROM A LINE PERPENDICULAR TO THE CULVERT ALIGNMENT.

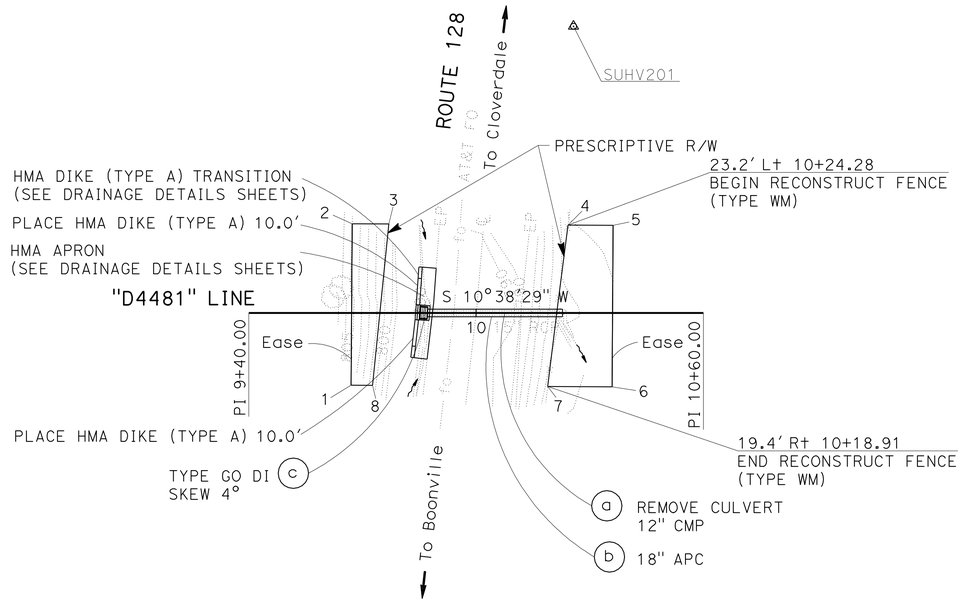

POINT	STATION	OFFSET
1	9+67.00	19.07' Rt
2	9+67.27	23.58' Lt
3	9+76.95	23.52' Lt
4	10+24.28	23.22' Lt
5	10+36.17	23.15' Lt
6	10+35.90	19.50' Rt
7	10+18.91	19.39' Rt
8	9+72.65	19.11' Rt

DRAINAGE SYSTEM 7

ROUTE 128
PM 44.81
SCALE: 1" = 20'

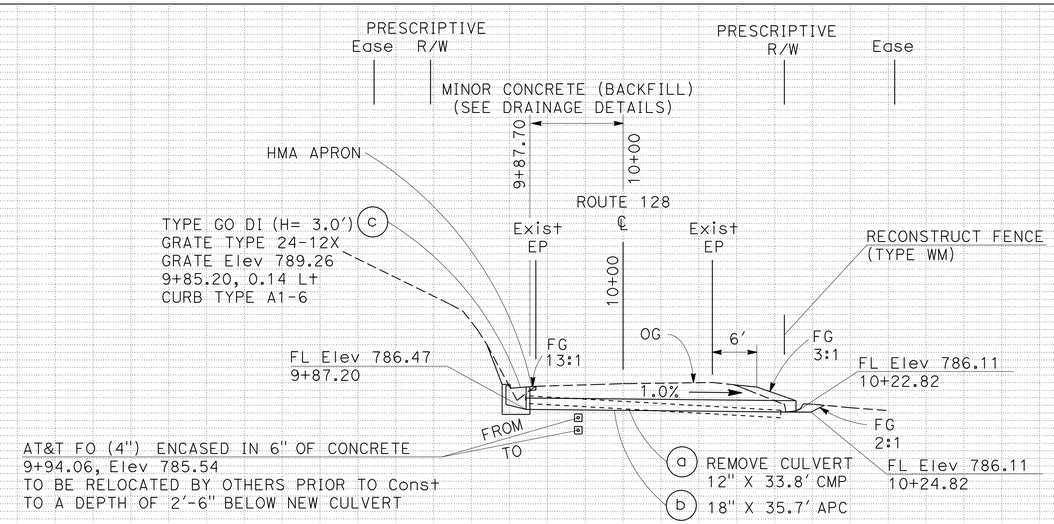

DRAINAGE SYSTEM 7

SCALE: Horiz 1" = 10'
Vert 1" = 10'

DRAINAGE PLAN AND PROFILE

SCALE AS SHOWN

D-7

Station	9+40	9+60	9+80	10+00	10+20	10+40	10+60
CY Exc							
CY Emb							

REVISED BY	L.SASEVICH	CALCULATED-DESIGNED BY	LARISA V. SASEVICH
DATE REVISED	11-23-09	CHECKED BY	SARJU D. PATEL
FUNCTIONAL SUPERVISOR	ROBERT E. POLGAR		

STATE OF CALIFORNIA - DEPARTMENT OF TRANSPORTATION
Caltrans
03-DESIGN

LAST REVISION 11-23-09
DATE PLOTTED => 15-APR-2010
TIME PLOTTED => 14:43

Dist	COUNTY	ROUTE	POST MILES TOTAL PROJECT	SHEET No.	TOTAL SHEETS
01	Men	128,253	Var	11	106

Larisa V. Sasevich 11-23-09
REGISTERED CIVIL ENGINEER DATE

4-12-10
PLANS APPROVAL DATE

REGISTERED PROFESSIONAL ENGINEER LARISA V. SASEVICH No. C 71520 Exp. 12-31-09 CIVIL STATE OF CALIFORNIA

THE STATE OF CALIFORNIA OR ITS OFFICERS OR AGENTS SHALL NOT BE RESPONSIBLE FOR THE ACCURACY OR COMPLETENESS OF SCANNED COPIES OF THIS PLAN SHEET.

T12N R12W MDB&M
SECTION 14

NOTES:

1. FOR ACCURATE RIGHT OF WAY DATA, CONTACT RIGHT OF WAY ENGINEERING AT DISTRICT OFFICE.
2. THIS PLAN ACCURATE FOR DRAINAGE WORK ONLY.
3. DRAINAGE INLET SHALL BE SET TO PROFILE GRADE OF PAVEMENT.
4. FOR MINOR CONCRETE (BACKFILL) DETAILS SEE DRAINAGE DETAIL SHEET.
5. CONTRACTOR TO COORDINATE WITH THE ENGINEER TO PROTECT IN PLACE AT&T FO LINE. THE ENGINEER IS TO BE CONTACTED A MINIMUM OF 10 WORKING DAYS PRIOR TO WORKING AT THIS LOCATION.

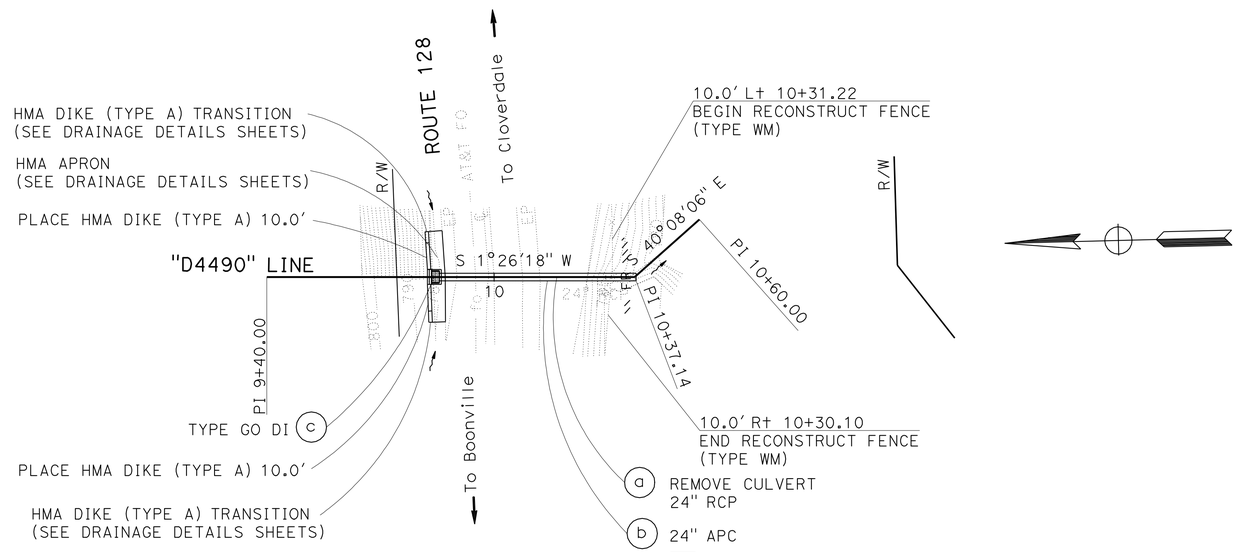

DRAINAGE SYSTEM 8

ROUTE 128
PM 44.90
SCALE: 1" = 20'

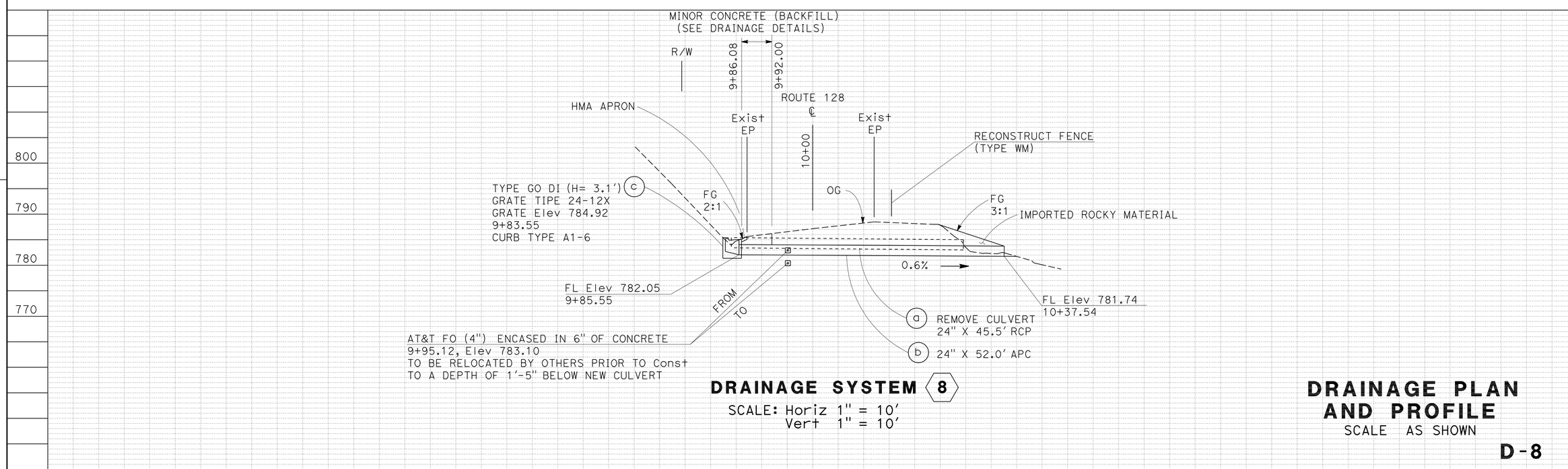

DRAINAGE SYSTEM 8

SCALE: Horiz 1" = 10'
Vert 1" = 10'

DRAINAGE PLAN AND PROFILE

SCALE AS SHOWN

D-8

REVISED BY	DATE REVISED
L.SASEVICH	11-23-09

CALCULATED-DESIGNED BY: LARISA V. SASEVICH
CHECKED BY: SARJU D. PATEL
FUNCTIONAL SUPERVISOR: ROBERT E. POLGAR

STATE OF CALIFORNIA - DEPARTMENT OF TRANSPORTATION
Caltrans 03-DESIGN

LAST REVISION 11-23-09
DATE PLOTTED => 15-APR-2010
TIME PLOTTED => 14:43

Dist	COUNTY	ROUTE	POST MILES TOTAL PROJECT	SHEET No.	TOTAL SHEETS
01	Men	128,253	Var	12	106

Larisa V. Sasevich 11-23-09
REGISTERED CIVIL ENGINEER DATE

4-12-10
PLANS APPROVAL DATE

REGISTERED PROFESSIONAL ENGINEER LARISA V. SASEVICH No. C 71520 Exp. 12-31-09 CIVIL STATE OF CALIFORNIA

THE STATE OF CALIFORNIA OR ITS OFFICERS OR AGENTS SHALL NOT BE RESPONSIBLE FOR THE ACCURACY OR COMPLETENESS OF SCANNED COPIES OF THIS PLAN SHEET.

NOTES:

1. FOR ACCURATE RIGHT OF WAY DATA, CONTACT RIGHT OF WAY ENGINEERING AT DISTRICT OFFICE.
2. THIS PLAN ACCURATE FOR DRAINAGE WORK ONLY.
3. FOR ROCK SLOPE PROTECTION DETAILS SEE DRAINAGE DETAIL SHEETS.

T12N R11W MDB&M
SECTION 18

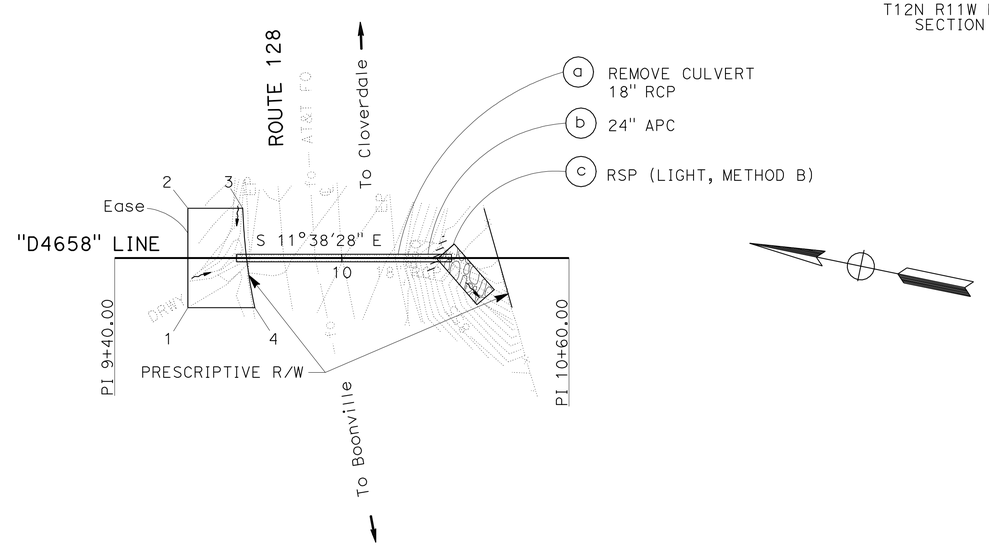

POINT	STATION	OFFSET
1	9+67.00	19.07' Rt
2	9+67.27	23.58' Lt
3	9+76.95	23.52' Lt
4	10+24.28	23.22' Lt

DRAINAGE SYSTEM 9

ROUTE 128
PM 46.58
SCALE: 1" = 20'

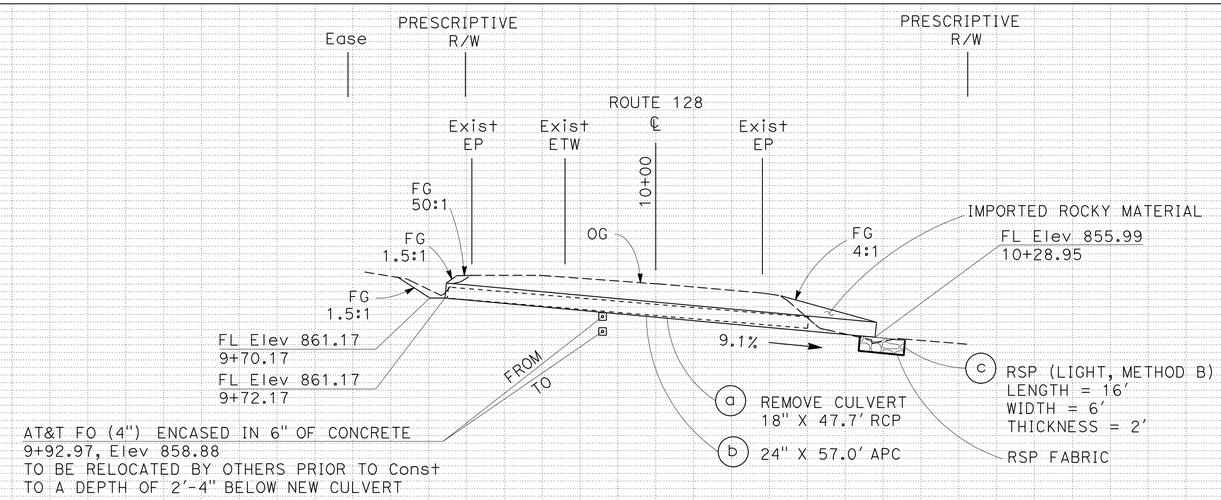

DRAINAGE SYSTEM 9

SCALE: Horiz 1" = 10'
Vert 1" = 10'

DRAINAGE PLAN AND PROFILE

SCALE AS SHOWN

D-9

STATE OF CALIFORNIA - DEPARTMENT OF TRANSPORTATION
Caltrans 03-DESIGN

FUNCTIONAL SUPERVISOR: ROBERT E. POLGAR
CALCULATED-DESIGNED BY: LARISA V. SASEVICH
CHECKED BY: SARJU D. PATEL
REVISED BY: L.SASEVICH
DATE REVISED: 11-23-09

LAST REVISION 11-23-09
DATE PLOTTED => 15-APR-2010
TIME PLOTTED => 14:08

Dist	COUNTY	ROUTE	POST MILES TOTAL PROJECT	SHEET No.	TOTAL SHEETS
01	Men	128,253	Var	13	106

Larisa V. Sasevich 11-23-09
REGISTERED CIVIL ENGINEER DATE

4-12-10
PLANS APPROVAL DATE

REGISTERED PROFESSIONAL ENGINEER LARISA V. SASEVICH No. C 71520 Exp. 12-31-09 CIVIL STATE OF CALIFORNIA

THE STATE OF CALIFORNIA OR ITS OFFICERS OR AGENTS SHALL NOT BE RESPONSIBLE FOR THE ACCURACY OR COMPLETENESS OF SCANNED COPIES OF THIS PLAN SHEET.

T12N R11W MDB&M
SECTION 19

NOTES:

1. FOR ACCURATE RIGHT OF WAY DATA, CONTACT RIGHT OF WAY ENGINEERING AT DISTRICT OFFICE.
2. THIS PLAN ACCURATE FOR DRAINAGE WORK ONLY.

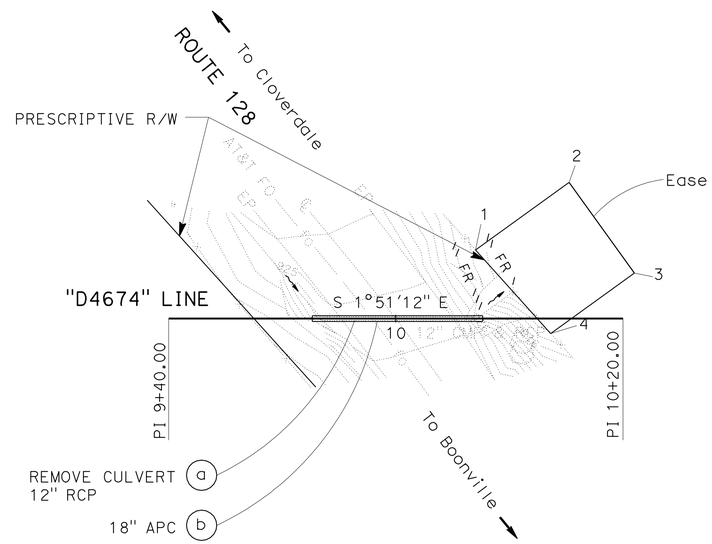

POINT	STATION	OFFSET
1	10+31.67	14.81' Rt
2	10+62.15	14.78' Rt
3	10+62.11	14.75' Lt
4	10+34.87	14.72' Lt

DRAINAGE SYSTEM 10

ROUTE 128
PM 46.74
SCALE: 1" = 20'

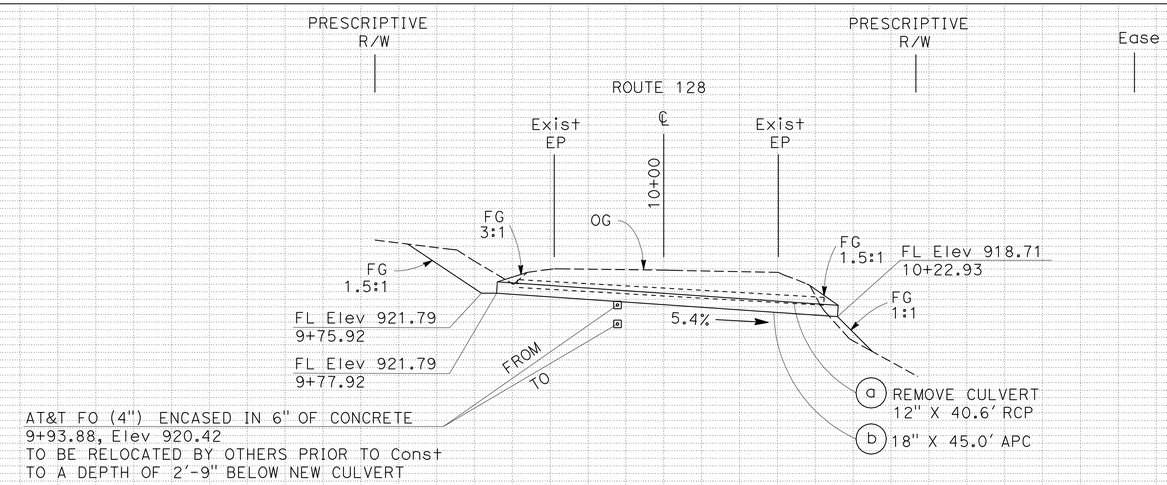

DRAINAGE SYSTEM 10

SCALE: Horiz 1" = 10'
Vert 1" = 10'

DRAINAGE PLAN AND PROFILE

SCALE AS SHOWN

D-10

REVISED BY	DATE REVISED
L.SASEVICH	11-23-09

CALCULATED-DESIGNED BY: LARISA V. SASEVICH
CHECKED BY: SARJU D. PATEL
FUNCTIONAL SUPERVISOR: ROBERT E. POLGAR

STATE OF CALIFORNIA - DEPARTMENT OF TRANSPORTATION
Caltrans
03-DESIGN

LAST REVISION 11-23-09
DATE PLOTTED => 15-APR-2010
TIME PLOTTED => 14:08

Dist	COUNTY	ROUTE	POST MILES TOTAL PROJECT	SHEET No.	TOTAL SHEETS
01	Men	128,253	Var	14	106

Larisa V. Sasevich 11-23-09
REGISTERED CIVIL ENGINEER DATE

4-12-10
PLANS APPROVAL DATE

REGISTERED PROFESSIONAL ENGINEER LARISA V. SASEVICH No. C 71520 Exp. 12-31-09 CIVIL STATE OF CALIFORNIA

THE STATE OF CALIFORNIA OR ITS OFFICERS OR AGENTS SHALL NOT BE RESPONSIBLE FOR THE ACCURACY OR COMPLETENESS OF SCANNED COPIES OF THIS PLAN SHEET.

T12N R11W MDB&M
SECTION 18

NOTES:

1. FOR ACCURATE RIGHT OF WAY DATA, CONTACT RIGHT OF WAY ENGINEERING AT DISTRICT OFFICE.
2. THIS PLAN ACCURATE FOR DRAINAGE WORK ONLY.
3. DRAINAGE INLET SHALL BE SET TO PROFILE GRADE OF PAVEMENT.
4. FOR ROCK SLOPE PROTECTION DETAILS SEE DRAINAGE DETAIL SHEETS.

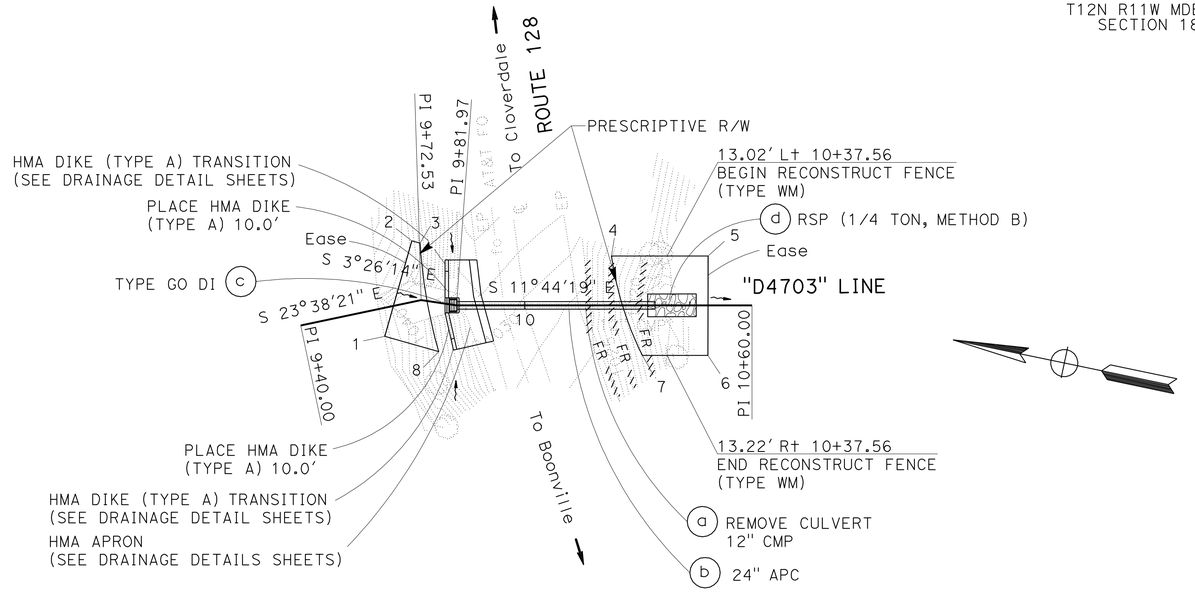

DRAINAGE SYSTEM (11)
ROUTE 128
PM 47.03
SCALE: 1" = 20'

POINT	STATION	BEARING	OFFSET
1	9+61.14	-	7.36' Rt
2	9+72.53	S 69°25'49" W	15.88' Lt
3	9+72.53	S 77°9'32" W	15.08' Lt
4	10+22.90	-	13.03' Lt
5	10+48.37	-	13.01' Lt
6	10+48.36	-	13.23' Rt
7	10+31.03	-	13.22' Rt
8	9+79.09	-	12.80' Rt

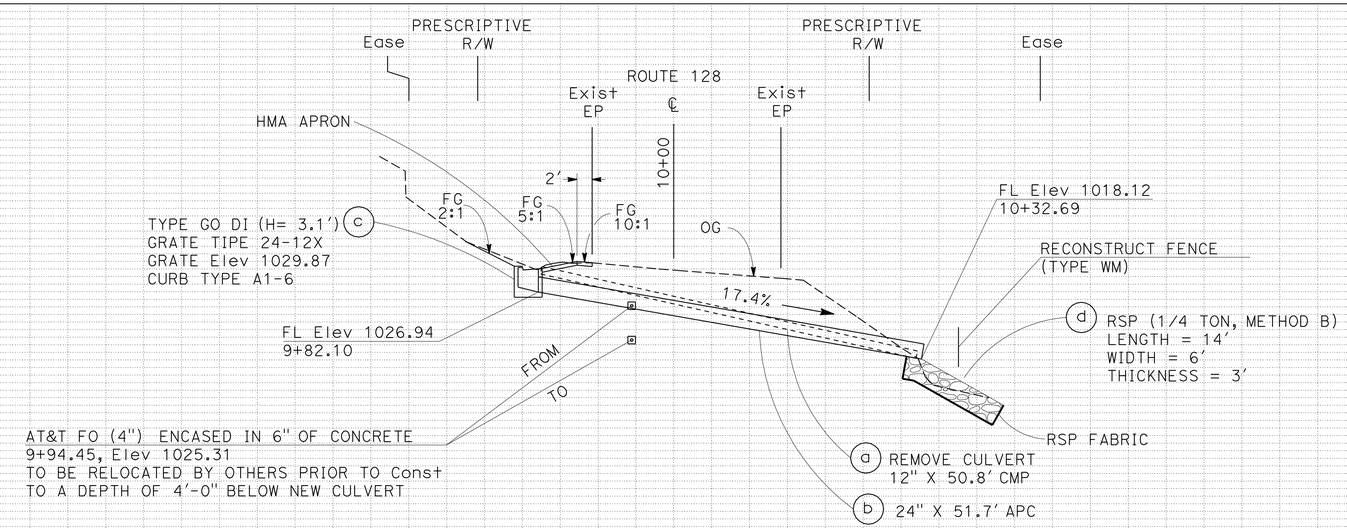

DRAINAGE SYSTEM (11)
SCALE: Horiz 1" = 10'
Vert 1" = 10'

DRAINAGE PLAN AND PROFILE
SCALE AS SHOWN

D-11

REVISED BY	L.SASEVICH
DATE REVISED	11-23-09
LARISA V. SASEVICH	
SARJU D. PATEL	
CALCULATED-DESIGNED BY	
CHECKED BY	
FUNCTIONAL SUPERVISOR	ROBERT E. POLGAR

STATE OF CALIFORNIA - DEPARTMENT OF TRANSPORTATION
Caltrans
03-DESIGN

LAST REVISION 11-23-09
DATE PLOTTED => 15-APR-2010
TIME PLOTTED => 14:08

Dist	COUNTY	ROUTE	POST MILES TOTAL PROJECT	SHEET No.	TOTAL SHEETS
01	Men	128,253	Var	15	106

Larisa V. Sasevich 11-23-09
REGISTERED CIVIL ENGINEER DATE

4-12-10
PLANS APPROVAL DATE

REGISTERED PROFESSIONAL ENGINEER LARISA V. SASEVICH No. C 71520 Exp. 12-31-09 CIVIL STATE OF CALIFORNIA

THE STATE OF CALIFORNIA OR ITS OFFICERS OR AGENTS SHALL NOT BE RESPONSIBLE FOR THE ACCURACY OR COMPLETENESS OF SCANNED COPIES OF THIS PLAN SHEET.

T12N R11W MDB&M
SECTION 20

NOTES:

1. FOR ACCURATE RIGHT OF WAY DATA, CONTACT RIGHT OF WAY ENGINEERING AT DISTRICT OFFICE.
2. THIS PLAN ACCURATE FOR DRAINAGE WORK ONLY.
3. INLET AND OUTLET STRUCTURE SKEW ANGLE IS MEASURED FROM A LINE PERPENDICULAR TO THE CULVERT ALIGNMENT.

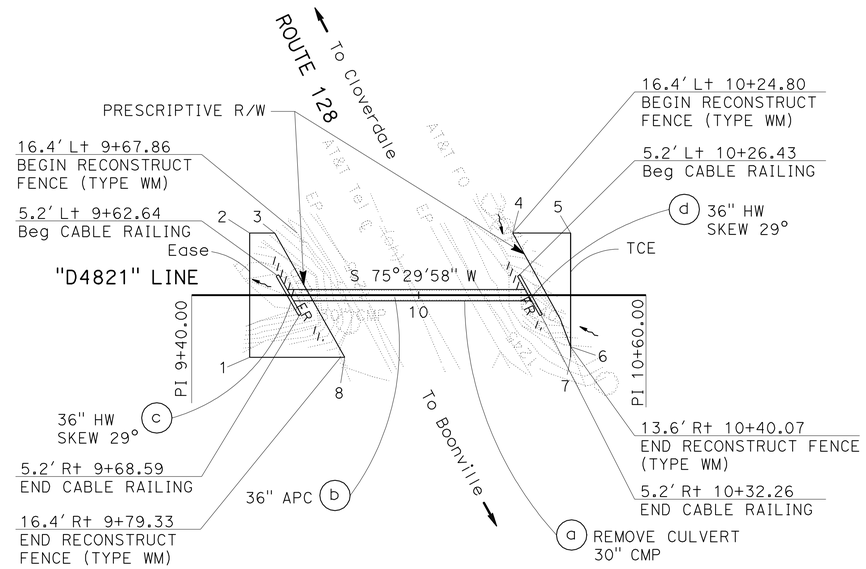

DRAINAGE SYSTEM 12

ROUTE 128
PM 48.21
SCALE: 1" = 20′

POINT	STATION	OFFSET
1	9+55.30	16.40′ R+
2	9+55.30	16.41′ L+
3	9+61.97	16.40′ L+
4	10+24.80	16.40′ L+
5	10+40.07	16.40′ L+
6	10+40.07	13.61′ R+
7	10+40.07	16.41′ R+
8	9+80.43	16.40′ R+

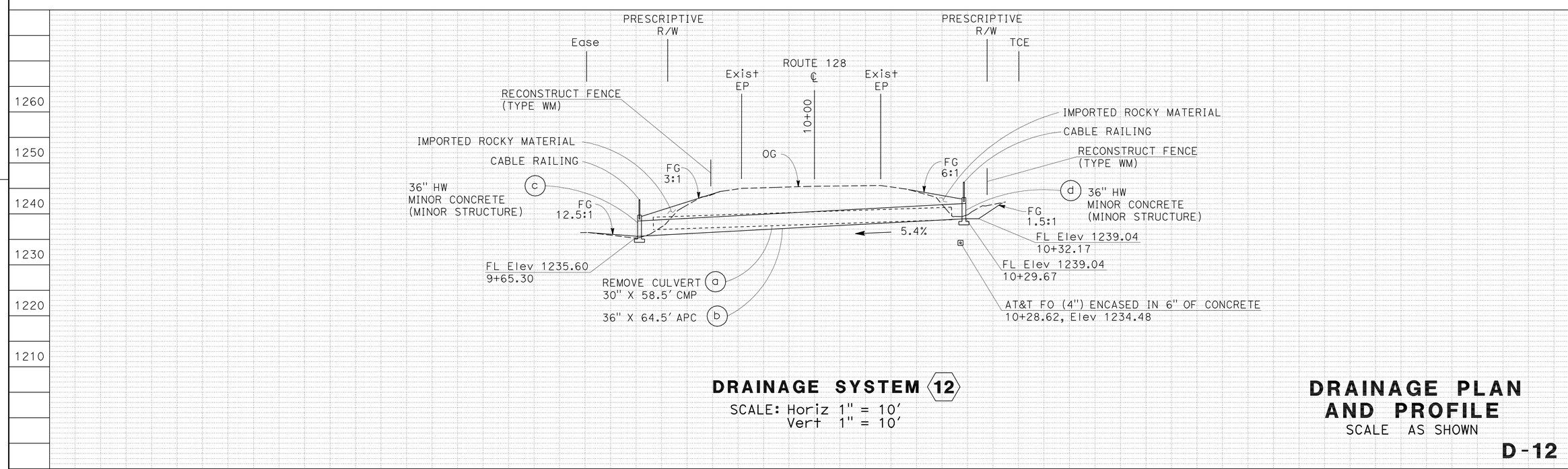

DRAINAGE SYSTEM 12

SCALE: Horiz 1" = 10′
Vert 1" = 10′

DRAINAGE PLAN AND PROFILE

SCALE AS SHOWN

D-12

STATE OF CALIFORNIA - DEPARTMENT OF TRANSPORTATION
Caltrans 03-DESIGN

FUNCTIONAL SUPERVISOR: ROBERT E. POLGAR
CALCULATED-DESIGNED BY: LARISA V. SASEVICH
CHECKED BY: SARJU D. PATEL
REVISED BY: L.SASEVICH
DATE REVISED: 11-23-09

LAST REVISION 11-23-09
DATE PLOTTED => 13-OCT-2010
TIME PLOTTED => 15:06

Dist	COUNTY	ROUTE	POST MILES TOTAL PROJECT	SHEET No.	TOTAL SHEETS
01	Men	128,253	Var	16	106

Larisa V. Sasevich 11-23-09
REGISTERED CIVIL ENGINEER DATE

4-12-10
PLANS APPROVAL DATE

REGISTERED PROFESSIONAL ENGINEER LARISA V. SASEVICH No. C 71520 Exp. 12-31-09 CIVIL STATE OF CALIFORNIA

THE STATE OF CALIFORNIA OR ITS OFFICERS OR AGENTS SHALL NOT BE RESPONSIBLE FOR THE ACCURACY OR COMPLETENESS OF SCANNED COPIES OF THIS PLAN SHEET.

T12N R11W MDB&M
SECTION 20

NOTES:

1. FOR ACCURATE RIGHT OF WAY DATA, CONTACT RIGHT OF WAY ENGINEERING AT DISTRICT OFFICE.
2. THIS PLAN ACCURATE FOR DRAINAGE WORK ONLY.
3. FOR MINOR CONCRETE (BACKFILL) DETAILS SEE DRAINAGE DETAIL SHEET.

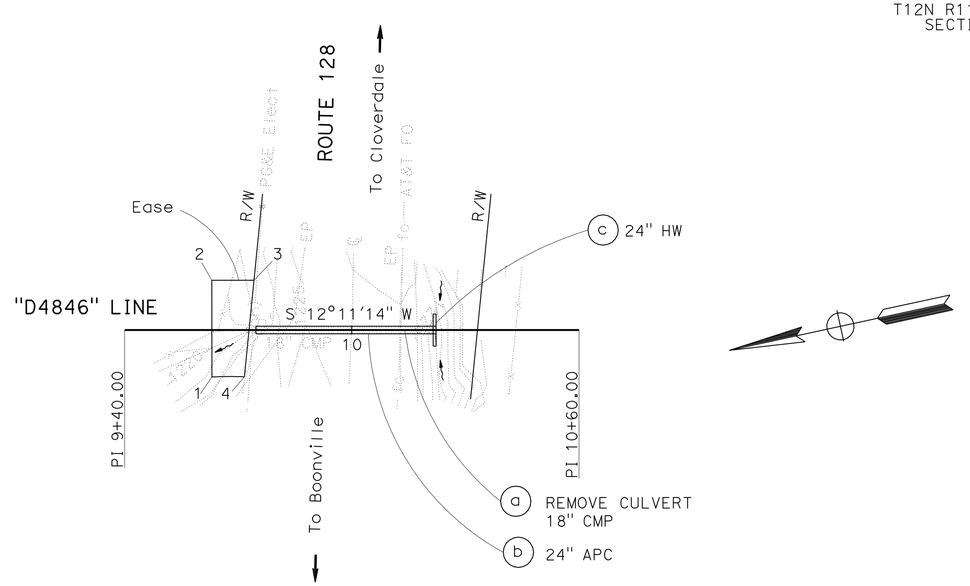

DRAINAGE SYSTEM 13
ROUTE 128
PM 48.46
SCALE: 1" = 20'

POINT	STATION	OFFSET
1	9+63.05	12.38' Rt
2	9+63.04	13.15' Lt
3	9+74.15	13.15' Lt
4	9+73.63	12.34' Rt

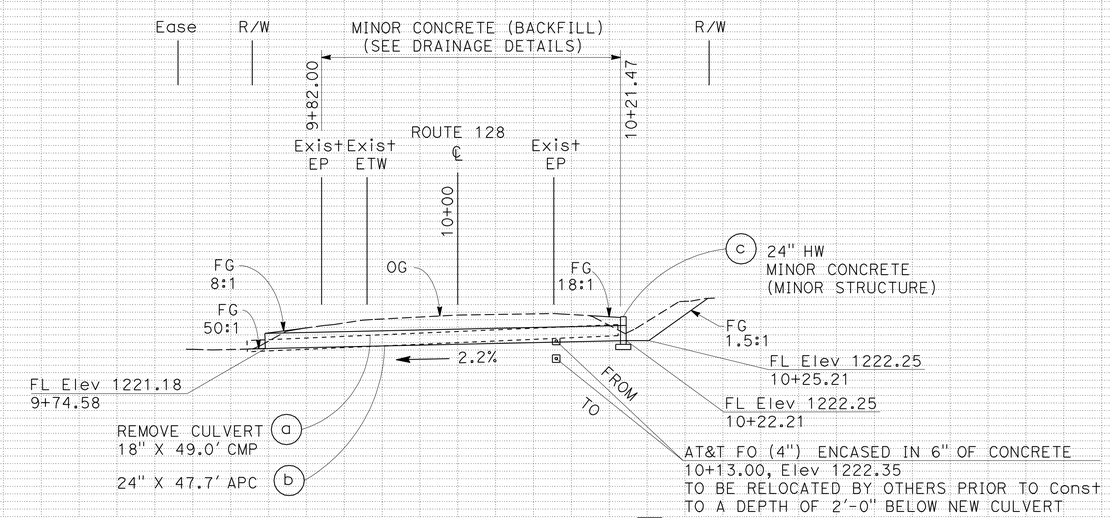

DRAINAGE SYSTEM 13
SCALE: Horiz 1" = 10'
Vert 1" = 10'

DRAINAGE PLAN AND PROFILE
SCALE AS SHOWN

D-13

Station	9+40	9+60	9+80	10+00	10+20	10+40	10+60
CY Exc							
CY Emb							

REVISED BY	DATE REVISED
L.SASEVICH	11-23-09

CALCULATED-DESIGNED BY: LARISA V. SASEVICH
CHECKED BY: SARJU D. PATEL
FUNCTIONAL SUPERVISOR: ROBERT E. POLGAR

STATE OF CALIFORNIA - DEPARTMENT OF TRANSPORTATION
Caltrans
03-DESIGN

LAST REVISION 11-23-09
DATE PLOTTED => 19-OCT-2010
TIME PLOTTED => 07:56

Dist	COUNTY	ROUTE	POST MILES TOTAL PROJECT	SHEET No.	TOTAL SHEETS
01	Men	128,253	Var	17	106

Larisa V. Sasevich 11-23-09
REGISTERED CIVIL ENGINEER DATE

4-12-10
PLANS APPROVAL DATE

REGISTERED PROFESSIONAL ENGINEER LARISA V. SASEVICH No. C 71520 Exp. 12-31-09 CIVIL STATE OF CALIFORNIA

THE STATE OF CALIFORNIA OR ITS OFFICERS OR AGENTS SHALL NOT BE RESPONSIBLE FOR THE ACCURACY OR COMPLETENESS OF SCANNED COPIES OF THIS PLAN SHEET.

T12N R11W MDB&M
SECTION 20

NOTES:

1. FOR ACCURATE RIGHT OF WAY DATA, CONTACT RIGHT OF WAY ENGINEERING AT DISTRICT OFFICE.
2. THIS PLAN ACCURATE FOR DRAINAGE WORK ONLY.
3. FOR MINOR CONCRETE (BACKFILL) DETAILS SEE DRAINAGE DETAIL SHEET.
4. INLET STRUCTURE SKEW ANGLE IS MEASURED FROM A LINE PERPENDICULAR TO THE CULVERT ALIGNMENT.

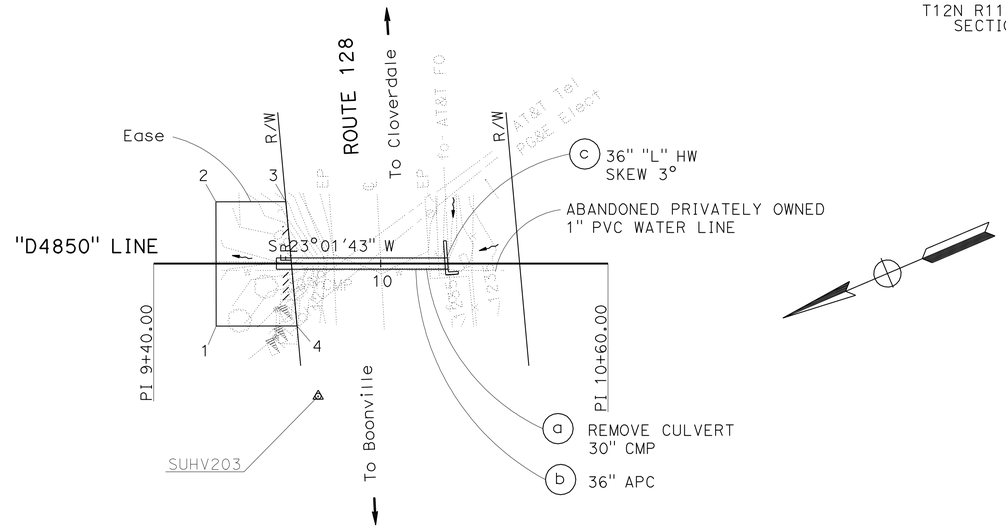

POINT	STATION	OFFSET
1	9+56.53	16.52' R+
2	9+56.46	16.29' L+
3	9+74.91	16.33' L+
4	9+77.88	16.48' R+

DRAINAGE SYSTEM 14

ROUTE 128
PM 48.50
SCALE: 1" = 20'

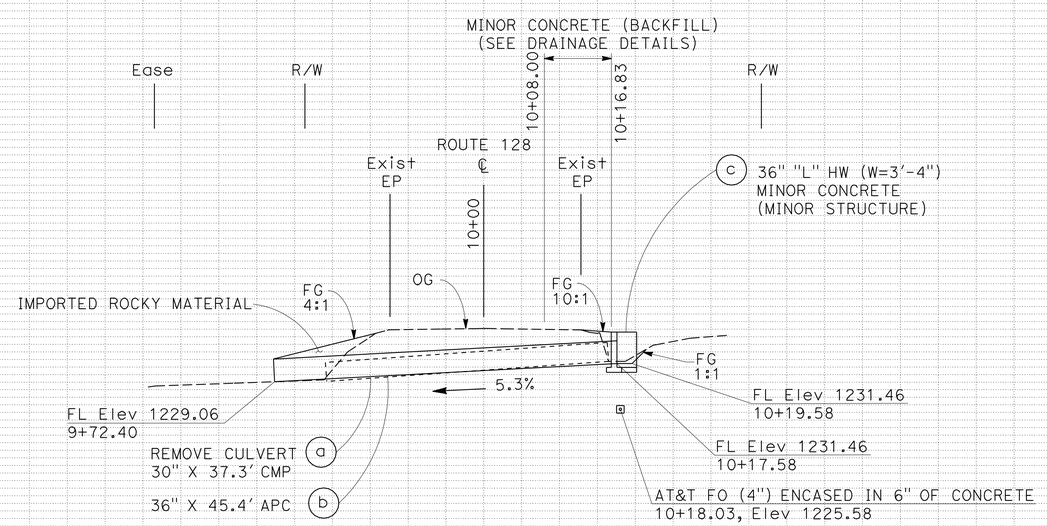

DRAINAGE SYSTEM 14

SCALE: Horiz 1" = 10'
Vert 1" = 10'

DRAINAGE PLAN AND PROFILE

SCALE AS SHOWN

D-14

Station	9+40	9+60	9+80	10+00	10+20	10+40	10+60
CY Exc							
CY Emb							

STATE OF CALIFORNIA - DEPARTMENT OF TRANSPORTATION
Caltrans 03-DESIGN

FUNCTIONAL SUPERVISOR: ROBERT E. POLGAR
CALCULATED-DESIGNED BY: LARISA V. SASEVICH
CHECKED BY: SARJU D. PATEL
REVISED BY: L.SASEVICH
DATE REVISED: 11-23-09

LAST REVISION 11-23-09
DATE PLOTTED => 15-APR-2010
TIME PLOTTED => 14:48

Dist	COUNTY	ROUTE	POST MILES TOTAL PROJECT	SHEET No.	TOTAL SHEETS
01	Men	128,253	Var	18	106

Larisa V. Sasevich 11-23-09
REGISTERED CIVIL ENGINEER DATE

4-12-10
PLANS APPROVAL DATE

REGISTERED PROFESSIONAL ENGINEER LARISA V. SASEVICH No. C 71520 Exp. 12-31-09 CIVIL STATE OF CALIFORNIA

THE STATE OF CALIFORNIA OR ITS OFFICERS OR AGENTS SHALL NOT BE RESPONSIBLE FOR THE ACCURACY OR COMPLETENESS OF SCANNED COPIES OF THIS PLAN SHEET.

T12N R11W MDB&M
SECTION 21

NOTES:

1. FOR ACCURATE RIGHT OF WAY DATA, CONTACT RIGHT OF WAY ENGINEERING AT DISTRICT OFFICE.
2. THIS PLAN ACCURATE FOR DRAINAGE WORK ONLY.
3. DRAINAGE INLET SHALL BE SET TO PROFILE GRADE OF PAVEMENT.
4. FOR ROCK SLOPE PROTECTION DETAILS SEE DRAINAGE DETAIL SHEETS.
5. THE ANGLE OF EACH ELBOW IS APPROXIMATE. THE EXACT ANGLE WILL BE DETERMINED IN THE FIELD BY THE ENGINEER.
6. INLET STRUCTURE SKEW ANGLE IS MEASURED FROM A LINE PERPENDICULAR TO THE CULVERT ALIGNMENT.

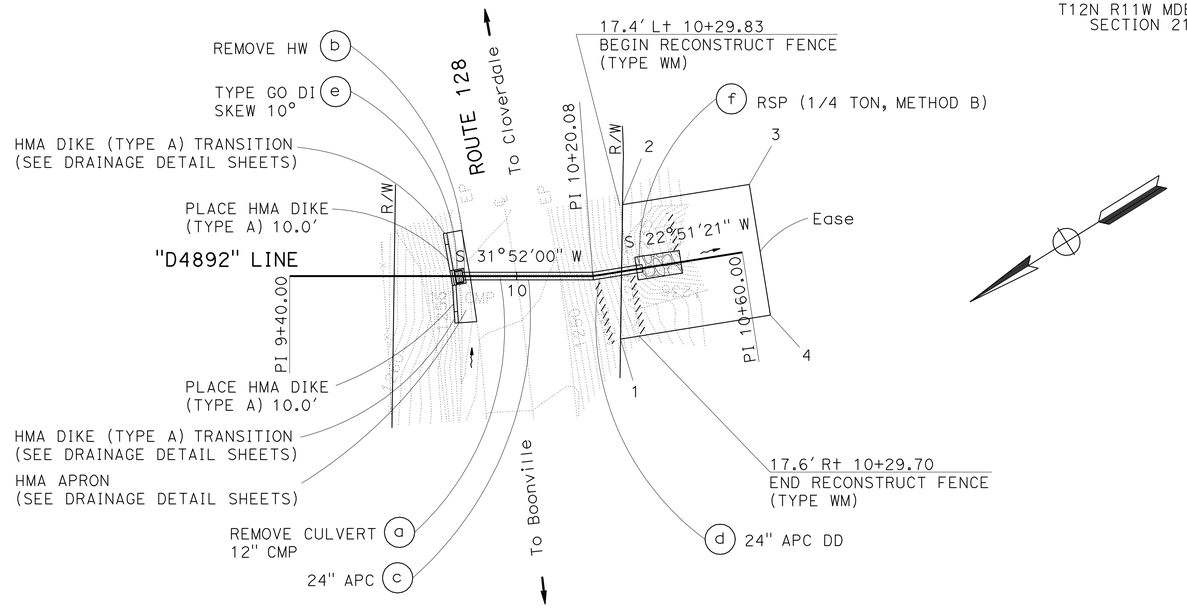

DRAINAGE SYSTEM (15)
ROUTE 128
PM 48.92
SCALE: 1" = 20'

POINT	STATION	OFFSET
1	10+24.77	17.58' Rt
2	10+30.68	17.37' Lt
3	10+64.58	17.40' Lt
4	10+64.80	17.54' Rt

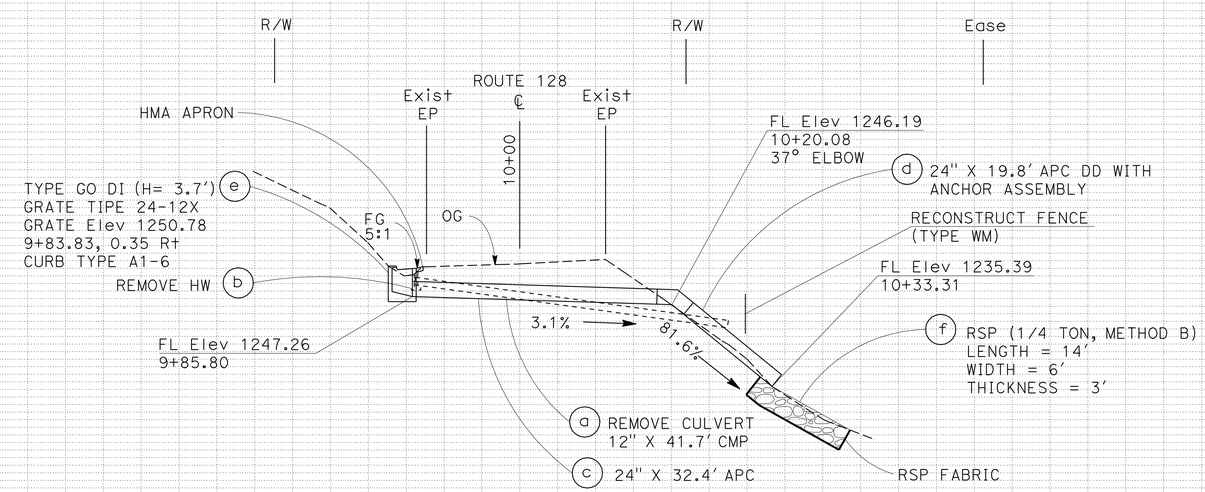

DRAINAGE SYSTEM (15)
SCALE: Horiz 1" = 10'
Vert 1" = 10'

DRAINAGE PLAN AND PROFILE

SCALE AS SHOWN

D-15

STATE OF CALIFORNIA - DEPARTMENT OF TRANSPORTATION
Caltrans
03-DESIGN

FUNCTIONAL SUPERVISOR: ROBERT E. POLGAR
CALCULATED-DESIGNED BY: LARISA V. SASEVICH
CHECKED BY: SARJU D. PATEL
REVISED BY: L.SASEVICH
DATE REVISED: 11-23-09

LAST REVISION 11-23-09
DATE PLOTTED => 15-APR-2010
TIME PLOTTED => 14:48

Dist	COUNTY	ROUTE	POST MILES TOTAL PROJECT	SHEET No.	TOTAL SHEETS
01	Men	128,253	Var	19	106

Sarju D. Patel 11-23-09
REGISTERED CIVIL ENGINEER DATE

4-12-10
PLANS APPROVAL DATE

REGISTERED PROFESSIONAL ENGINEER SARJU D. PATEL No. C 65611 Exp. 9-30-11 CIVIL STATE OF CALIFORNIA

THE STATE OF CALIFORNIA OR ITS OFFICERS OR AGENTS SHALL NOT BE RESPONSIBLE FOR THE ACCURACY OR COMPLETENESS OF SCANNED COPIES OF THIS PLAN SHEET.

NOTES:

1. FOR ACCURATE RIGHT OF WAY DATA, CONTACT RIGHT OF WAY ENGINEERING AT DISTRICT OFFICE.
2. THIS PLAN ACCURATE FOR DRAINAGE WORK ONLY.
3. SEE STANDARD PLAN D80, NOTE 9, FOR ADDITIONAL Reinf REQUIRMENTS.
4. INVERT OF CIP RCB Culv WILL BE FLAT.
5. THE LOCATION OF RSP IS APPROXIMATE. THE EXACT PLACEMENT WILL BE DETERMINED IN THE FIELD BY THE ENGINEER.

POINT	STATION	OFFSET
1	9+60.98	38.66′ Rt
2	9+36.42	3.98′ Lt
3	9+60.70	17.97′ Lt
4	9+85.34	24.64′ Rt

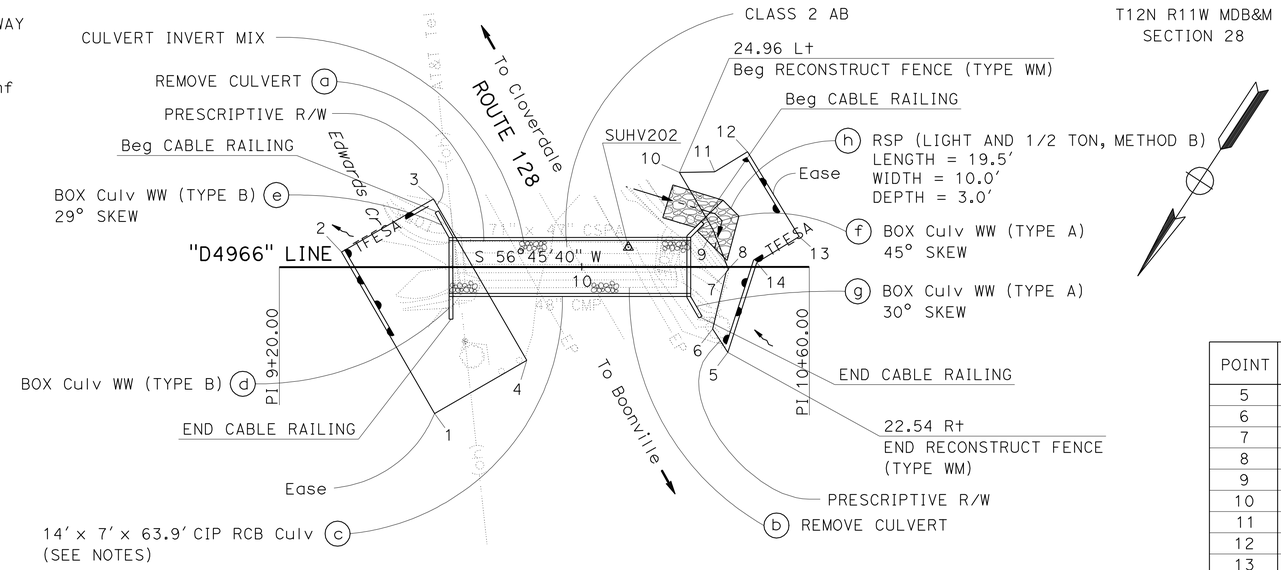

T12N R11W MDB&M
SECTION 28

POINT	STATION	OFFSET
5	10+38.52	22.54′ Rt
6	10+34.54	16.35′ Rt
7	10+38.09	1.52′ Rt
8	10+38.67	0.63′ Rt
9	10+34.70	9.81′ Lt
10	10+25.77	24.96′ Lt
11	10+35.09	25.12′ Lt
12	10+43.75	30.39′ Lt
13	10+57.40	7.97′ Lt
14	10+46.18	1.15′ Lt

DRAINAGE SYSTEM No. 16

ROUTE 128
PM 49.66
SCALE: 1" = 20′

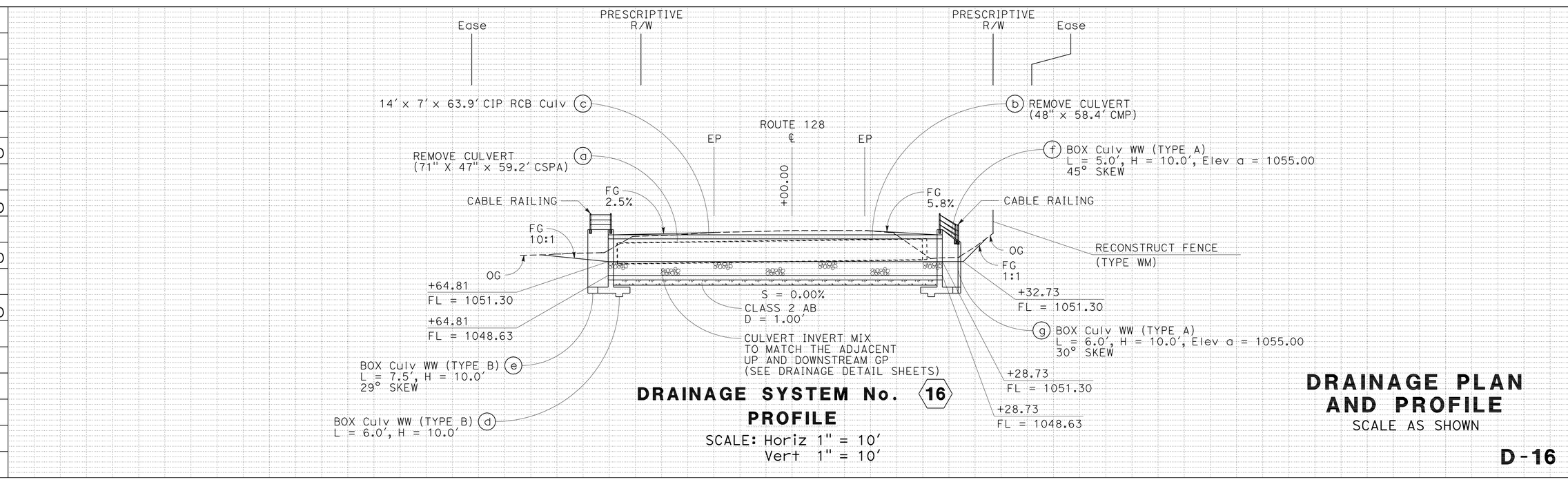

DRAINAGE SYSTEM No. 16
PROFILE
SCALE: Horiz 1" = 10′
Vert 1" = 10′

DRAINAGE PLAN AND PROFILE
SCALE AS SHOWN

D-16

REVISED BY S. PATEL | DATE REVISED 03-18-10
CALCULATED-DESIGNED BY SARJU D. PATEL | CHECKED BY W. KEITH MACK
FUNCTIONAL SUPERVISOR ROBERT E. POLGAR
STATE OF CALIFORNIA - DEPARTMENT OF TRANSPORTATION 03-DESIGN Caltrans

LAST REVISION 07-07-09 | DATE PLOTTED => 15-APR-2010 | TIME PLOTTED => 14:48

Dist	COUNTY	ROUTE	POST MILES TOTAL PROJECT	SHEET No.	TOTAL SHEETS
01	Men	128,253	Var	20	106

Larisa V. Sasevich 11-23-09
REGISTERED CIVIL ENGINEER DATE

4-12-10
PLANS APPROVAL DATE

REGISTERED PROFESSIONAL ENGINEER LARISA V. SASEVICH No. C 71520 Exp. 12-31-09 CIVIL STATE OF CALIFORNIA

THE STATE OF CALIFORNIA OR ITS OFFICERS OR AGENTS SHALL NOT BE RESPONSIBLE FOR THE ACCURACY OR COMPLETENESS OF SCANNED COPIES OF THIS PLAN SHEET.

T12N R11W MDB&M
SECTION 28

NOTES:

1. FOR ACCURATE RIGHT OF WAY DATA, CONTACT RIGHT OF WAY ENGINEERING AT DISTRICT OFFICE.
2. THIS PLAN ACCURATE FOR DRAINAGE WORK ONLY.
3. FOR ROCK SLOPE PROTECTION DETAILS SEE DRAINAGE DETAIL SHEETS.
4. THE ANGLE OF EACH ELBOW IS APPROXIMATE. THE EXACT ANGLE WILL BE DETERMINED IN THE FIELD BY THE ENGINEER.

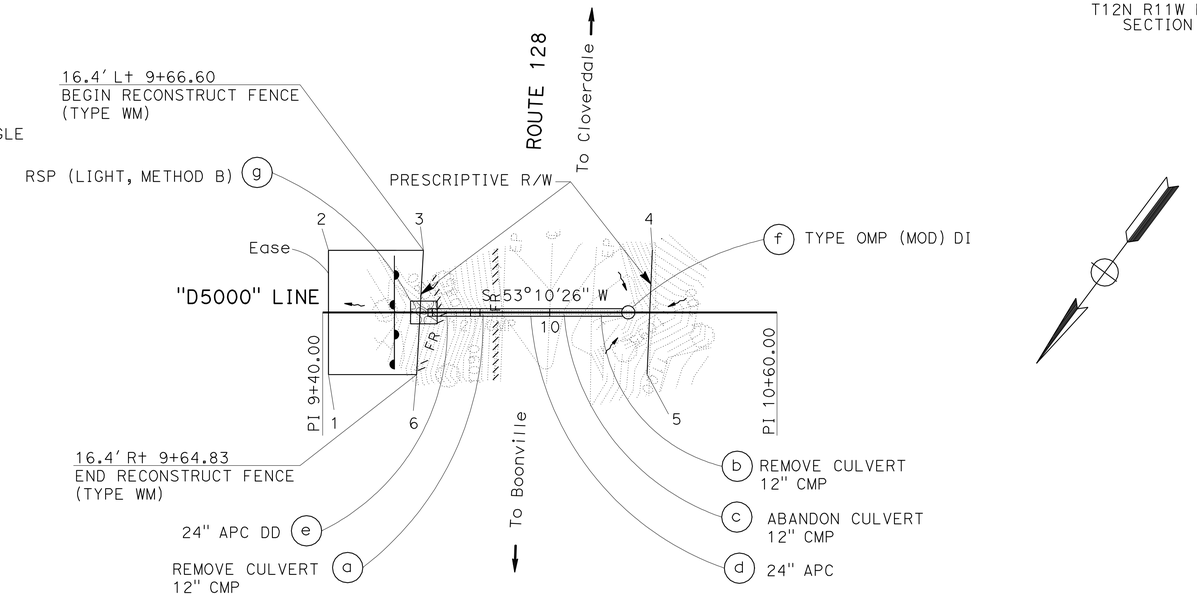

POINT	STATION	OFFSET
1	9+41.58	16.41' Rt
2	9+41.58	16.40' Lt
3	9+66.60	16.41' Lt
4	10+27.07	16.41' Lt
5	10+25.67	16.40' Lt
6	9+64.83	16.41' Rt

DRAINAGE SYSTEM 17
ROUTE 128
PM 50.00
SCALE: 1" = 20'

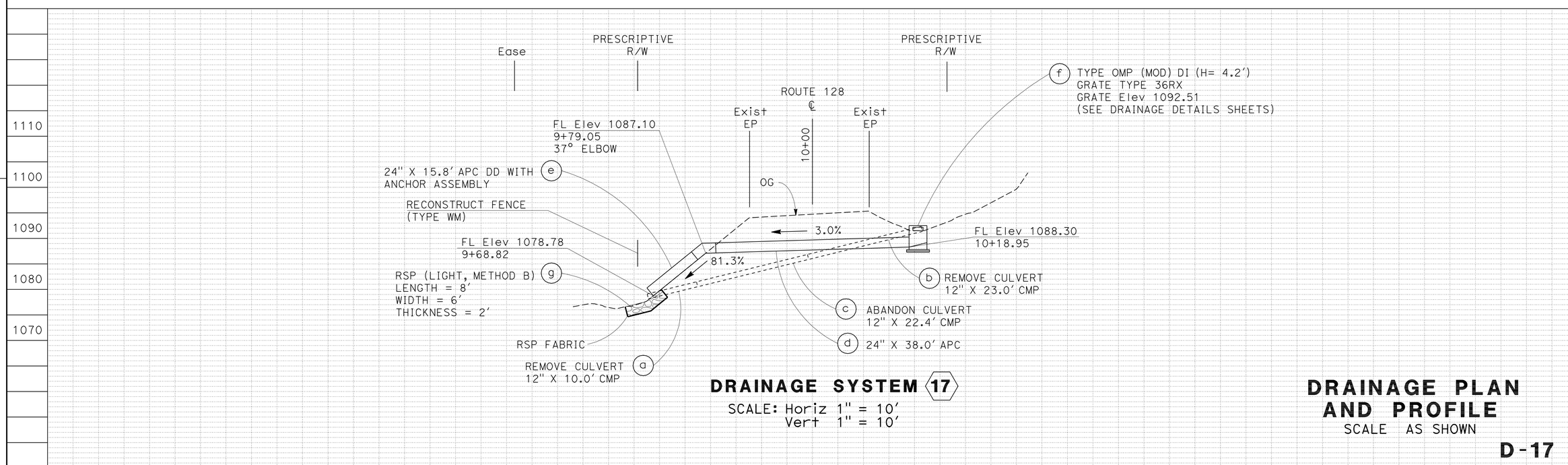

DRAINAGE SYSTEM 17
SCALE: Horiz 1" = 10'
Vert 1" = 10'

DRAINAGE PLAN AND PROFILE
SCALE AS SHOWN

D-17

STATE OF CALIFORNIA - DEPARTMENT OF TRANSPORTATION
Caltrans
03-DESIGN

FUNCTIONAL SUPERVISOR: ROBERT E. POLGAR
CALCULATED-DESIGNED BY: LARISA V. SASEVICH
CHECKED BY: SARJU D. PATEL
REVISED BY: L.SASEVICH
DATE REVISED: 11-23-09

LAST REVISION 11-23-09
DATE PLOTTED => 19-OCT-2010
TIME PLOTTED => 06:17

Dist	COUNTY	ROUTE	POST MILES TOTAL PROJECT	SHEET No.	TOTAL SHEETS
01	Men	128,253	Var	21	106

REGISTERED CIVIL ENGINEER 11-23-09 DATE

4-12-10
PLANS APPROVAL DATE

REGISTERED PROFESSIONAL ENGINEER W. KEITH MACK No. C 73964 Exp. 6-30-11 CIVIL STATE OF CALIFORNIA

THE STATE OF CALIFORNIA OR ITS OFFICERS OR AGENTS SHALL NOT BE RESPONSIBLE FOR THE ACCURACY OR COMPLETENESS OF SCANNED COPIES OF THIS PLAN SHEET.

NOTES:

1. FOR ACCURATE RIGHT OF WAY DATA, CONTACT RIGHT OF WAY ENGINEERING AT DISTRICT OFFICE.
2. THIS PLAN ACCURATE FOR DRAINAGE WORK ONLY.

T13N R13W MDB&M
SECTION 7

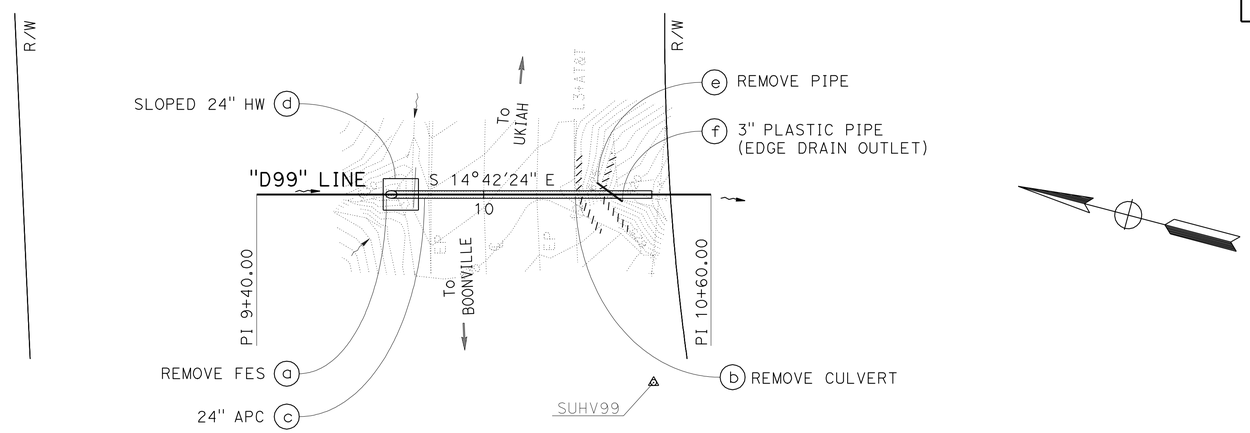

DRAINAGE SYSTEM 18

ROUTE 253
PM 0.99
SCALE: 1" = 20'

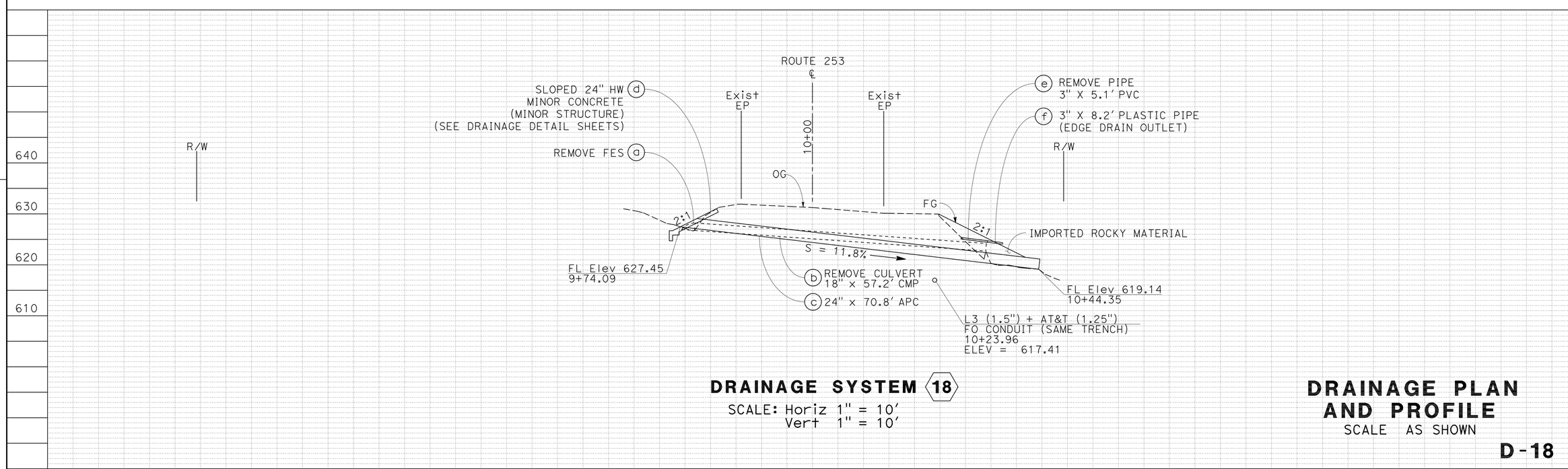

DRAINAGE SYSTEM 18

SCALE: Horiz 1" = 10'
Vert 1" = 10'

DRAINAGE PLAN AND PROFILE

SCALE AS SHOWN

D-18

REVISED BY	DATE REVISED
W. K. MACK	11/23/09

CALCULATED-DESIGNED BY: W. KEITH MACK
CHECKED BY: SARJU PATEL

FUNCTIONAL SUPERVISOR: ROBERT POLGAR

STATE OF CALIFORNIA - DEPARTMENT OF TRANSPORTATION
Caltrans
03-DESIGN

LAST REVISION 11-23-09
DATE PLOTTED => 15-APR-2010
TIME PLOTTED => 15:24

Dist	COUNTY	ROUTE	POST MILES TOTAL PROJECT	SHEET No.	TOTAL SHEETS
01	Men	128,253	Var	22	106

REGISTERED CIVIL ENGINEER 11-23-09 DATE

4-12-10
PLANS APPROVAL DATE

REGISTERED PROFESSIONAL ENGINEER W. KEITH MACK No. C 73964 Exp. 6-30-11 CIVIL STATE OF CALIFORNIA

THE STATE OF CALIFORNIA OR ITS OFFICERS OR AGENTS SHALL NOT BE RESPONSIBLE FOR THE ACCURACY OR COMPLETENESS OF SCANNED COPIES OF THIS PLAN SHEET.

NOTES:

1. FOR ACCURATE RIGHT OF WAY DATA, CONTACT RIGHT OF WAY ENGINEERING AT DISTRICT OFFICE.
2. THIS PLAN ACCURATE FOR DRAINAGE WORK ONLY.

T13N R13W MDB&M
SECTION 7

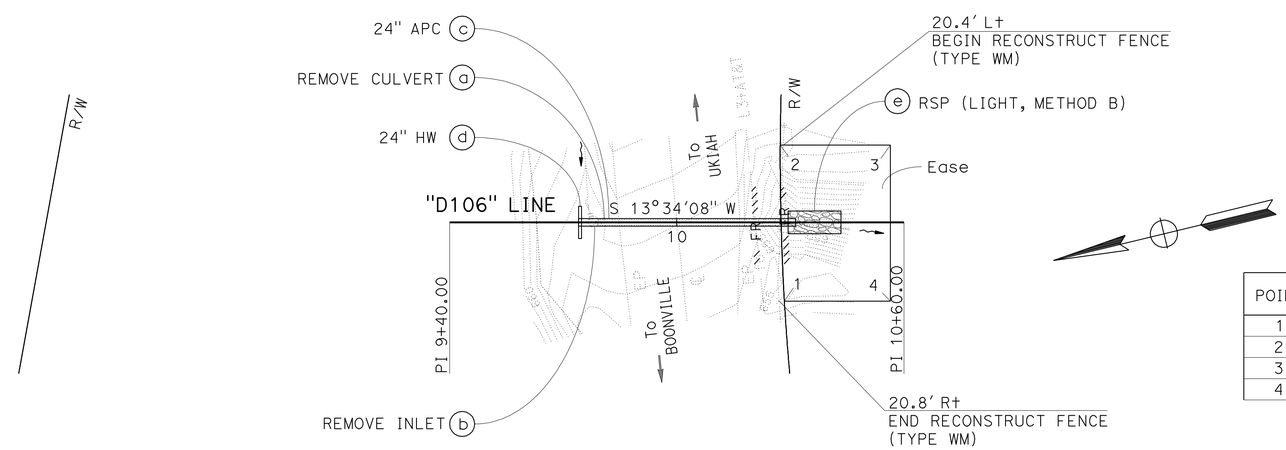

POINT	STATION	OFFSET
1	10+28.41	20.81' R+
2	10+27.31	20.37' L+
3	10+56.37	20.37' L+
4	10+56.37	20.81' R+

DRAINAGE SYSTEM 19

ROUTE 253
PM 1.06
SCALE: 1" = 20'

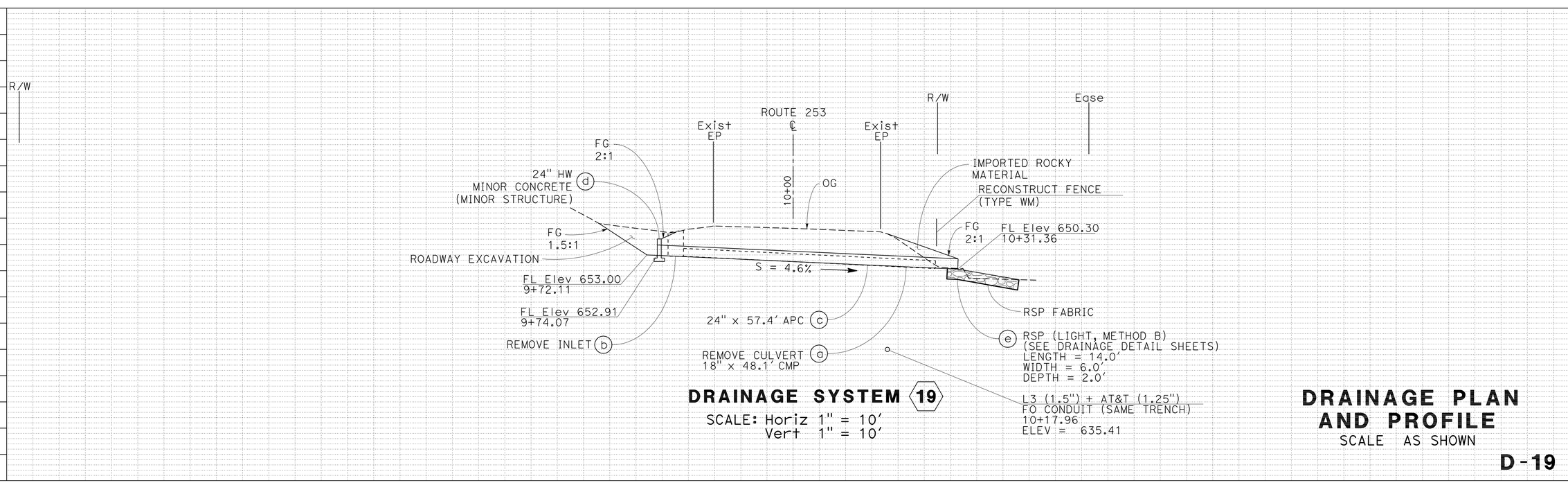

DRAINAGE SYSTEM 19

SCALE: Horiz 1" = 10'
Vert 1" = 10'

DRAINAGE PLAN AND PROFILE

SCALE AS SHOWN

D-19

W. K. MACK	11/23/09
REVISED BY	DATE REVISED
W. KEITH MACK	
SARJU PATEL	
CALCULATED-DESIGNED BY	
CHECKED BY	
FUNCTIONAL SUPERVISOR	
ROBERT POLGAR	

STATE OF CALIFORNIA - DEPARTMENT OF TRANSPORTATION
Caltrans
03-DESIGN

LAST REVISION 11-23-09
DATE PLOTTED => 15-APR-2010
TIME PLOTTED => 15:24

Dist	COUNTY	ROUTE	POST MILES TOTAL PROJECT	SHEET No.	TOTAL SHEETS
01	Men	128,253	Var	23	106

REGISTERED CIVIL ENGINEER 11-23-09 DATE

4-12-10
PLANS APPROVAL DATE

REGISTERED PROFESSIONAL ENGINEER W. KEITH MACK No. C 73964 Exp. 6-30-11 CIVIL STATE OF CALIFORNIA

THE STATE OF CALIFORNIA OR ITS OFFICERS OR AGENTS SHALL NOT BE RESPONSIBLE FOR THE ACCURACY OR COMPLETENESS OF SCANNED COPIES OF THIS PLAN SHEET.

NOTES:

1. FOR ACCURATE RIGHT OF WAY DATA, CONTACT RIGHT OF WAY ENGINEERING AT DISTRICT OFFICE.
2. THIS PLAN ACCURATE FOR DRAINAGE WORK ONLY.

T13N R13W MDB&M
SECTION 7

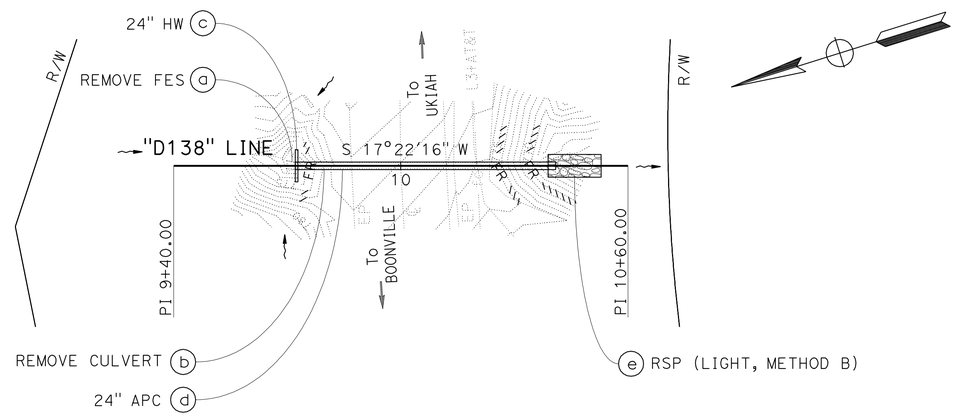

DRAINAGE SYSTEM 20

ROUTE 253
PM 1.38
SCALE: 1" = 20'

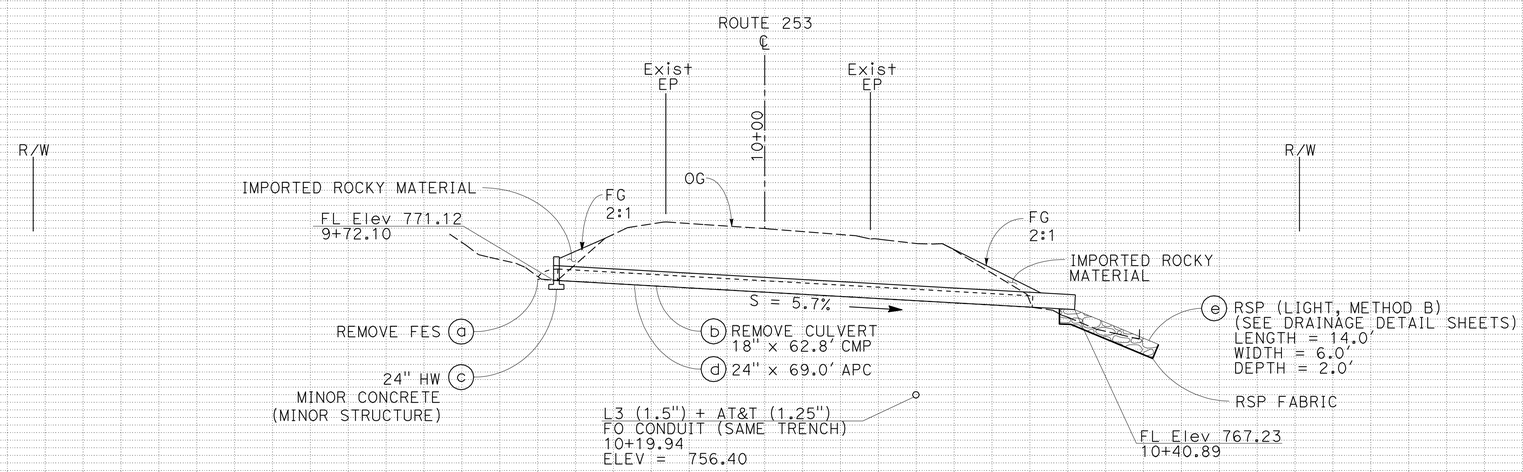

DRAINAGE SYSTEM 20

SCALE: Horiz 1" = 10'
Vert 1" = 10'

DRAINAGE PLAN AND PROFILE

SCALE AS SHOWN

D-20

Station	9+40	9+60	9+80	10+00	10+20	10+40	10+60
CY Exc							
CY Emb							

REVISED BY	W. K. MACK
DATE REVISED	11/23/09
CALCULATED-DESIGNED BY	W. KEITH MACK
CHECKED BY	SARJU PATEL
FUNCTIONAL SUPERVISOR	ROBERT POLGAR

STATE OF CALIFORNIA - DEPARTMENT OF TRANSPORTATION
Caltrans
03-DESIGN

LAST REVISION 11-23-09
DATE PLOTTED => 15-APR-2010
TIME PLOTTED => 15:24

Dist	COUNTY	ROUTE	POST MILES TOTAL PROJECT	SHEET No.	TOTAL SHEETS
01	Men	128,253	Var	24	106

Robert E. Polgar 4-7-10
REGISTERED CIVIL ENGINEER DATE

4-12-10
PLANS APPROVAL DATE

REGISTERED PROFESSIONAL ENGINEER ROBERT E. POLGAR No. C 51768 Exp. 6-30-10 CIVIL STATE OF CALIFORNIA

THE STATE OF CALIFORNIA OR ITS OFFICERS OR AGENTS SHALL NOT BE RESPONSIBLE FOR THE ACCURACY OR COMPLETENESS OF SCANNED COPIES OF THIS PLAN SHEET.

NOTES:

1. FOR ACCURATE RIGHT OF WAY DATA, CONTACT RIGHT OF WAY ENGINEERING AT DISTRICT OFFICE.
2. THIS PLAN ACCURATE FOR DRAINAGE WORK ONLY.

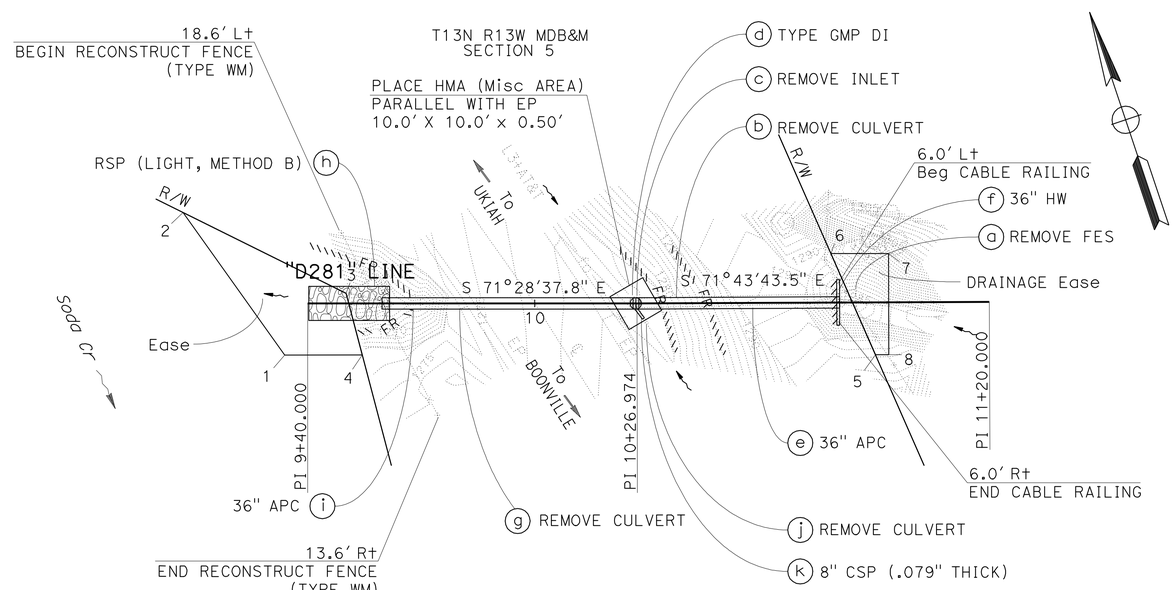

DRAINAGE SYSTEM 21

ROUTE 253
PM 2.81
SCALE: 1" = 20'

POINT	STATION	OFFSET
1	9+33.97	13.63' Rt
2	9+07.08	24.02' Lt
3	9+50.15	2.66' Lt
4	9+54.43	13.63' Rt
5	10+89.89	13.85' Rt
6	10+78.25	12.91' Lt
7	10.93.48	12.85' Lt
8	10+93.37	13.86' Rt

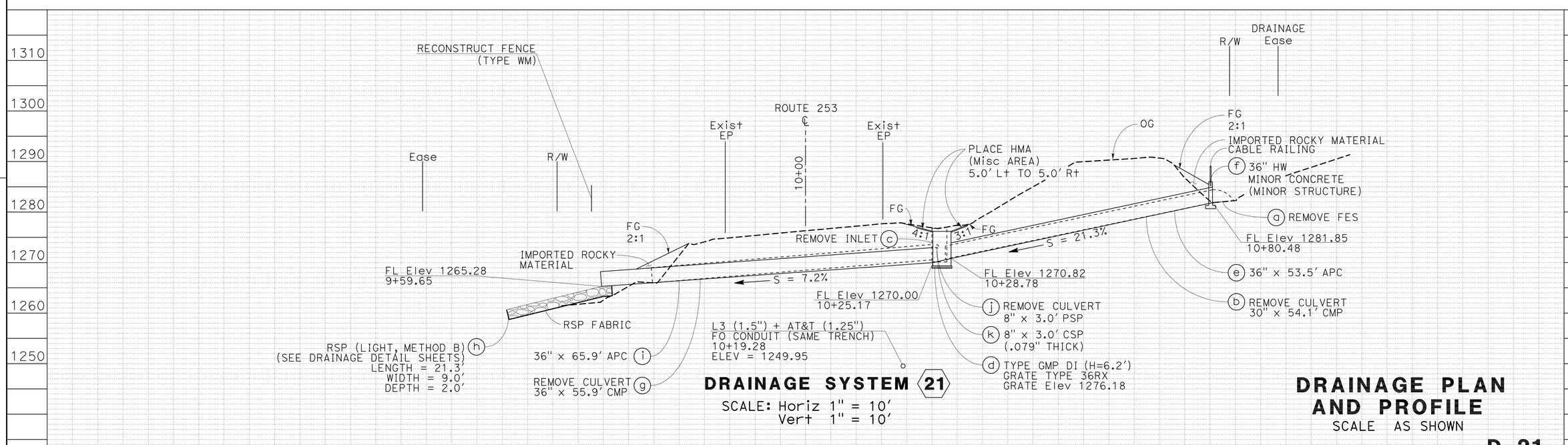

DRAINAGE SYSTEM 21

SCALE: Horiz 1" = 10'
Vert 1" = 10'

DRAINAGE PLAN AND PROFILE

SCALE AS SHOWN

D-21

STATE OF CALIFORNIA - DEPARTMENT OF TRANSPORTATION
Caltrans 03-DESIGN

FUNCTIONAL SUPERVISOR: ROBERT POLGAR
CALCULATED-DESIGNED BY: ROBERT POLGAR
CHECKED BY: SARJU PATEL
REVISED BY: W. K. MACK
DATE REVISED: 03/11/10

LAST REVISION 03-11-10
DATE PLOTTED => 15-APR-2010
TIME PLOTTED => 15:24

Dist	COUNTY	ROUTE	POST MILES TOTAL PROJECT	SHEET No.	TOTAL SHEETS
01	Men	128,253	Var	25	106

REGISTERED CIVIL ENGINEER 11-23-09 DATE

4-12-10
PLANS APPROVAL DATE

REGISTERED PROFESSIONAL ENGINEER W. KEITH MACK No. C 73964 Exp. 6-30-11 CIVIL STATE OF CALIFORNIA

THE STATE OF CALIFORNIA OR ITS OFFICERS OR AGENTS SHALL NOT BE RESPONSIBLE FOR THE ACCURACY OR COMPLETENESS OF SCANNED COPIES OF THIS PLAN SHEET.

NOTES:

1. FOR ACCURATE RIGHT OF WAY DATA, CONTACT RIGHT OF WAY ENGINEERING AT DISTRICT OFFICE.
2. THIS PLAN ACCURATE FOR DRAINAGE WORK ONLY.
3. THE ANGLE OF EACH ELBOW IS APPROXIMATE. THE EXACT ANGLE WILL BE DETERMINED IN THE FIELD BY THE ENGINEER.

POINT	STATION	OFFSET
1	8+70.35	25.28′ Rt
2	8+53.69	8.94′ Lt
3	8+81.43	22.60′ Lt
4	9+12.65	17.87′ Rt

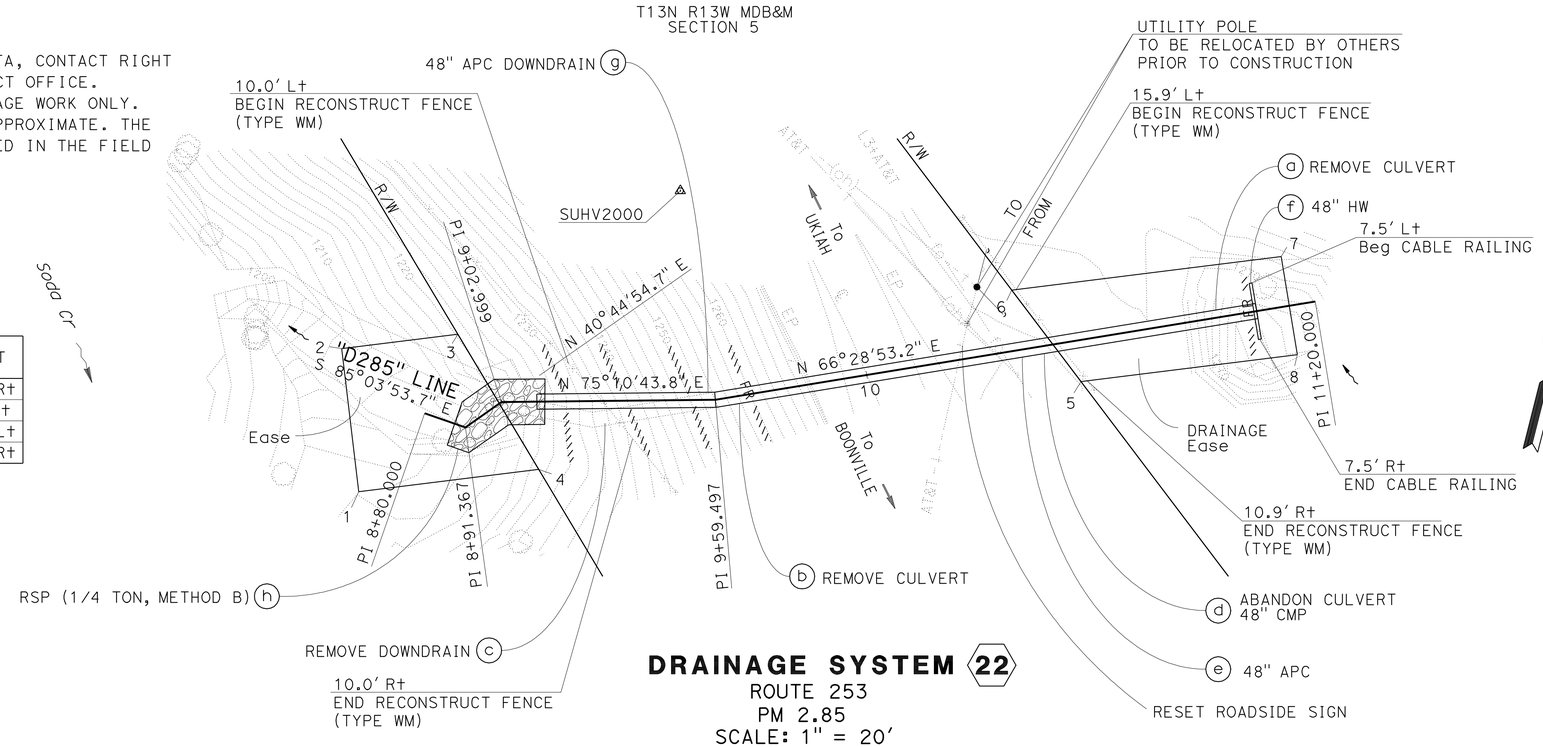

POINT	STATION	OFFSET
5	10+55.51	10.88′ Rt
6	10+41.38	15.92′ Lt
7	11+13.02	13.12′ Lt
8	11+13.02	13.12′ Rt

DRAINAGE SYSTEM 22
ROUTE 253
PM 2.85
SCALE: 1" = 20′

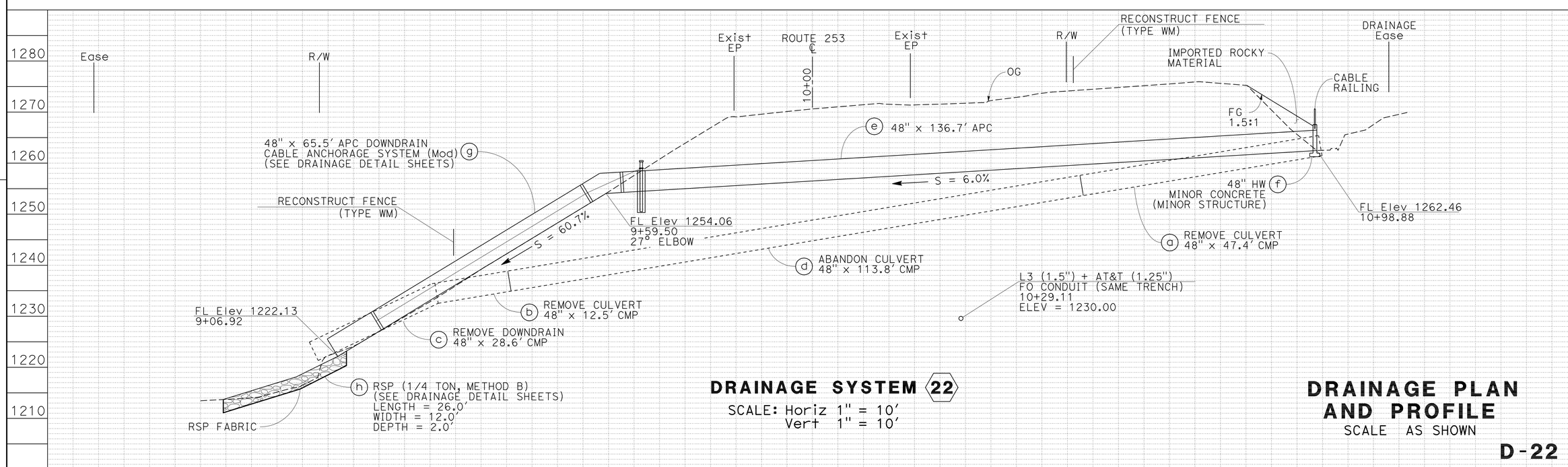

DRAINAGE SYSTEM 22
SCALE: Horiz 1" = 10′
Vert 1" = 10′

DRAINAGE PLAN AND PROFILE
SCALE AS SHOWN

D-22

STATE OF CALIFORNIA - DEPARTMENT OF TRANSPORTATION
Caltrans® 03-DESIGN

FUNCTIONAL SUPERVISOR: ROBERT POLGAR
CALCULATED-DESIGNED BY: W. KEITH MACK
CHECKED BY: SARJU PATEL
REVISED BY: W. K. MACK
DATE REVISED: 11/23/09

LAST REVISION 11-23-09
DATE PLOTTED => 15-APR-2010
TIME PLOTTED => 15:53

Dist	COUNTY	ROUTE	POST MILES TOTAL PROJECT	SHEET No.	TOTAL SHEETS
01	Men	128,253	Var	26	106

REGISTERED CIVIL ENGINEER 11-23-09 DATE

4-12-10
PLANS APPROVAL DATE

REGISTERED PROFESSIONAL ENGINEER W. KEITH MACK No. C 73964 Exp. 6-30-11 CIVIL STATE OF CALIFORNIA

THE STATE OF CALIFORNIA OR ITS OFFICERS OR AGENTS SHALL NOT BE RESPONSIBLE FOR THE ACCURACY OR COMPLETENESS OF SCANNED COPIES OF THIS PLAN SHEET.

NOTES:

1. FOR ACCURATE RIGHT OF WAY DATA, CONTACT RIGHT OF WAY ENGINEERING AT DISTRICT OFFICE.
2. THIS PLAN ACCURATE FOR DRAINAGE WORK ONLY.
3. THE ANGLE OF EACH ELBOW IS APPROXIMATE. THE EXACT ANGLE WILL BE DETERMINED IN THE FIELD BY THE ENGINEER.

POINT	STATION	OFFSET
1	9+29.00	13.12′ R+
2	9+29.00	13.12′ L+
3	9+63.77	13.12′ L+
4	9+59.86	13.12′ R+

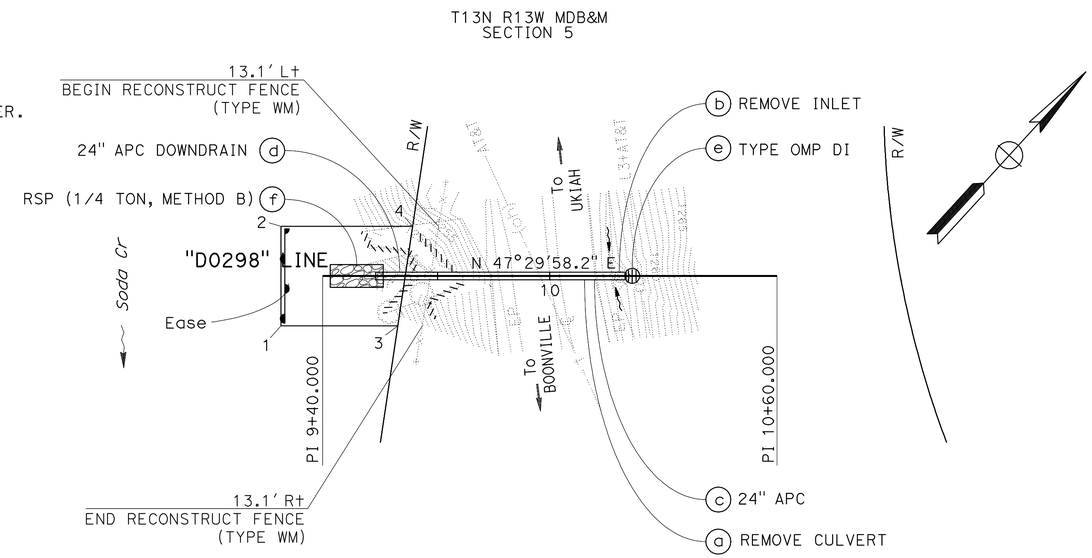

DRAINAGE SYSTEM 23

ROUTE 253
PM 2.98
SCALE: 1" = 20′

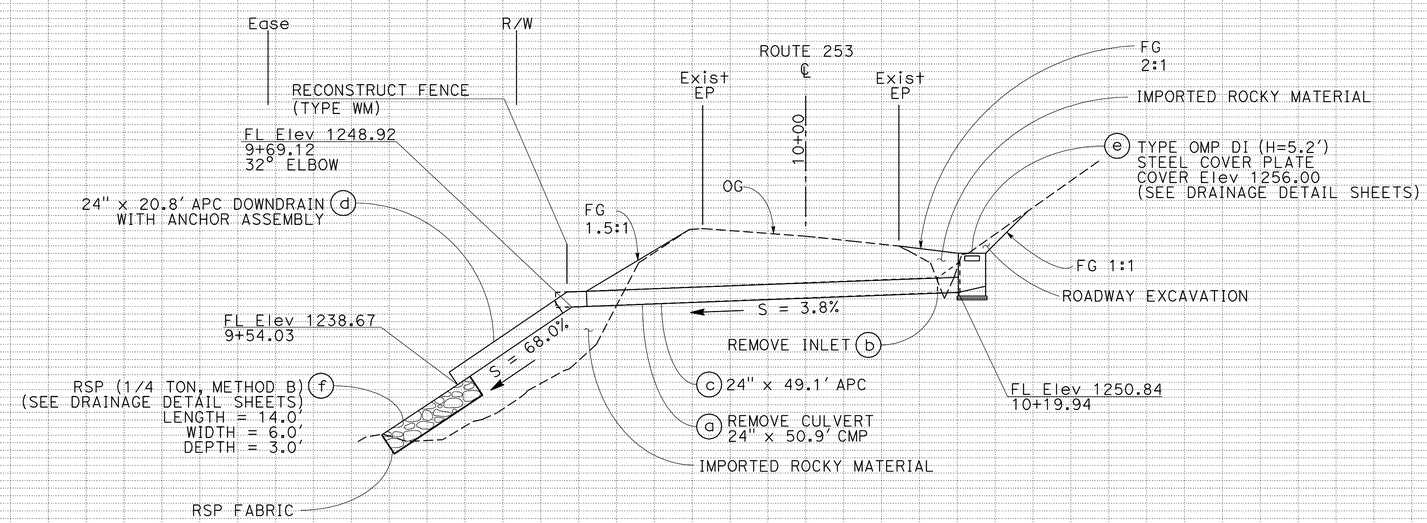

DRAINAGE SYSTEM 23

SCALE: Horiz 1" = 10′
Vert 1" = 10′

DRAINAGE PLAN AND PROFILE

SCALE AS SHOWN

D-23

STATE OF CALIFORNIA - DEPARTMENT OF TRANSPORTATION
Caltrans 03-DESIGN

FUNCTIONAL SUPERVISOR: ROBERT POLGAR
CALCULATED-DESIGNED BY: W. KEITH MACK
CHECKED BY: SARJU PATEL
REVISED BY: W. K. MACK
DATE REVISED: 11/23/09

LAST REVISION 11-23-09
DATE PLOTTED => 15-APR-2010
TIME PLOTTED => 15:53

Dist	COUNTY	ROUTE	POST MILES TOTAL PROJECT	SHEET No.	TOTAL SHEETS
01	Men	128,253	Var	27	106

REGISTERED CIVIL ENGINEER 11-23-09 DATE

4-12-10
PLANS APPROVAL DATE

REGISTERED PROFESSIONAL ENGINEER W. KEITH MACK No. C 73964 Exp. 6-30-11 CIVIL STATE OF CALIFORNIA

THE STATE OF CALIFORNIA OR ITS OFFICERS OR AGENTS SHALL NOT BE RESPONSIBLE FOR THE ACCURACY OR COMPLETENESS OF SCANNED COPIES OF THIS PLAN SHEET.

NOTES:

1. FOR ACCURATE RIGHT OF WAY DATA, CONTACT RIGHT OF WAY ENGINEERING AT DISTRICT OFFICE.
2. THIS PLAN ACCURATE FOR DRAINAGE WORK ONLY.
3. DRAINAGE INLET SHALL BE SET TO PROFILE GRADE OF PAVEMENT.
4. THE ANGLE OF EACH ELBOW IS APPROXIMATE. THE EXACT ANGLE WILL BE DETERMINED IN THE FIELD BY THE ENGINEER.

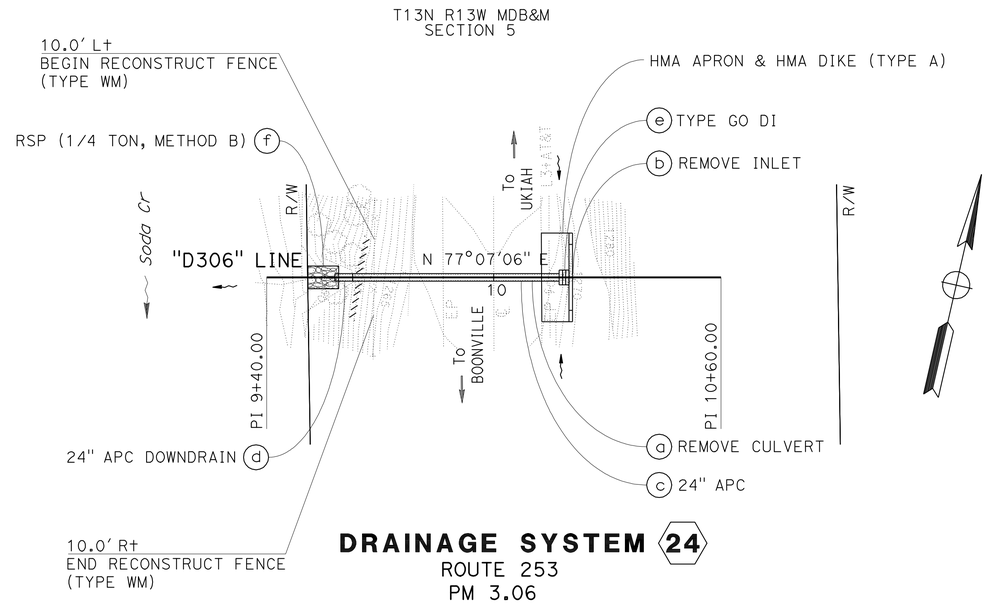

DRAINAGE SYSTEM 24
ROUTE 253
PM 3.06
SCALE: 1" = 20'

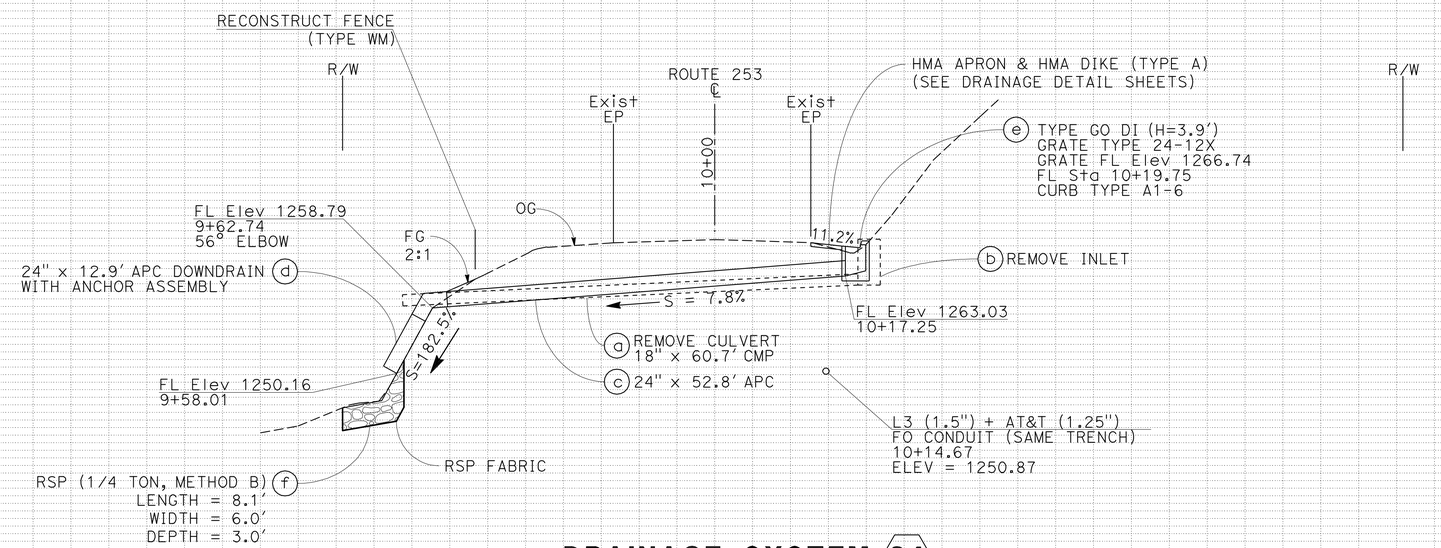

DRAINAGE SYSTEM 24
SCALE: Horiz 1" = 10'
Vert 1" = 10'

DRAINAGE PLAN AND PROFILE
SCALE AS SHOWN

D-24

REVISED BY	W. K. MACK
DATE REVISED	02/23/10
CALCULATED-DESIGNED BY	W. KEITH MACK
CHECKED BY	SARJU PATEL
FUNCTIONAL SUPERVISOR	ROBERT POLGAR

STATE OF CALIFORNIA - DEPARTMENT OF TRANSPORTATION
Caltrans
03-DESIGN

LAST REVISION 02-23-10
DATE PLOTTED => 15-APR-2010
TIME PLOTTED => 15:24

Dist	COUNTY	ROUTE	POST MILES TOTAL PROJECT	SHEET No.	TOTAL SHEETS
01	Men	128,253	Var	28	106

REGISTERED CIVIL ENGINEER 11-23-09 DATE

4-12-10
PLANS APPROVAL DATE

REGISTERED PROFESSIONAL ENGINEER W. KEITH MACK No. C 73964 Exp. 6-30-11 CIVIL STATE OF CALIFORNIA

THE STATE OF CALIFORNIA OR ITS OFFICERS OR AGENTS SHALL NOT BE RESPONSIBLE FOR THE ACCURACY OR COMPLETENESS OF SCANNED COPIES OF THIS PLAN SHEET.

NOTES:

1. FOR ACCURATE RIGHT OF WAY DATA, CONTACT RIGHT OF WAY ENGINEERING AT DISTRICT OFFICE.
2. THIS PLAN ACCURATE FOR DRAINAGE WORK ONLY.
3. DRAINAGE INLET SHALL BE SET TO PROFILE GRADE OF PAVEMENT.
4. THE ANGLE OF EACH ELBOW IS APPROXIMATE. THE EXACT ANGLE WILL BE DETERMINED IN THE FIELD BY THE ENGINEER.

T13N R13W MDB&M
SECTION 5

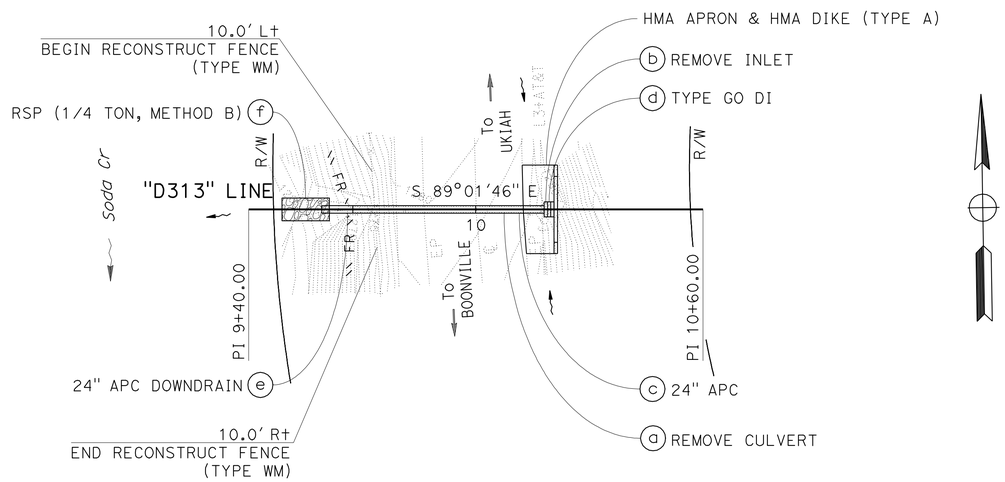

DRAINAGE SYSTEM 25

ROUTE 253
PM 3.13
SCALE: 1" = 20'

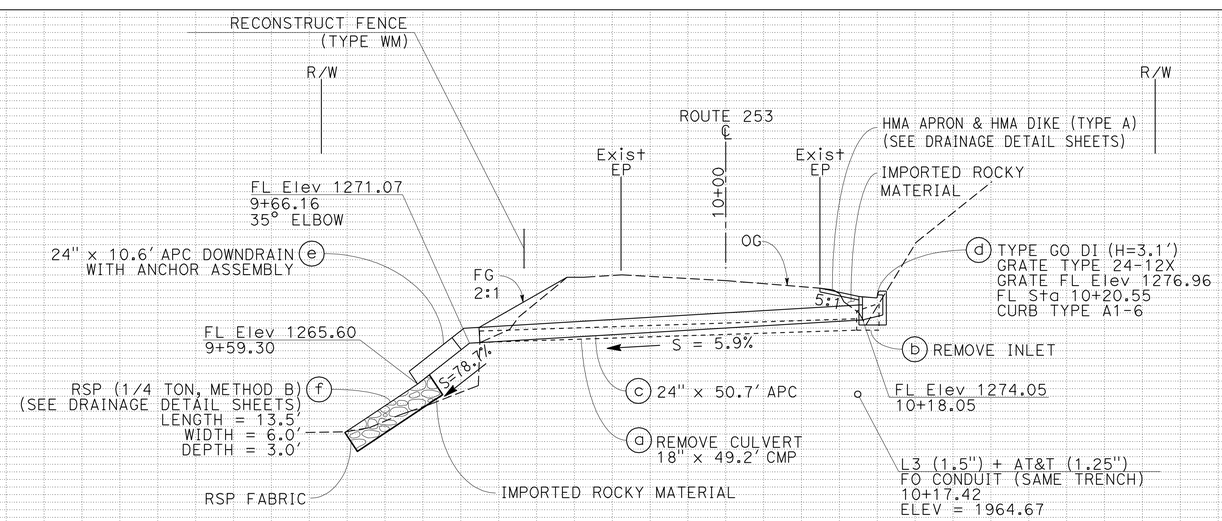

DRAINAGE SYSTEM 25

SCALE: Horiz 1" = 10'
Vert 1" = 10'

DRAINAGE PLAN AND PROFILE

SCALE AS SHOWN

D-25

REVISED BY	DATE REVISED
W. K. MACK	11/23/09

CALCULATED-DESIGNED BY	W. KEITH MACK
CHECKED BY	SARJU PATEL

FUNCTIONAL SUPERVISOR: ROBERT POLGAR

STATE OF CALIFORNIA - DEPARTMENT OF TRANSPORTATION
Caltrans
03-DESIGN

LAST REVISION 11-23-09
DATE PLOTTED => 15-APR-2010
TIME PLOTTED => 15:25

Dist	COUNTY	ROUTE	POST MILES TOTAL PROJECT	SHEET No.	TOTAL SHEETS
01	Men	128,253	Var	29	106

REGISTERED CIVIL ENGINEER 11-23-09 DATE

4-12-10
PLANS APPROVAL DATE

REGISTERED PROFESSIONAL ENGINEER W. KEITH MACK No. C 73964 Exp. 6-30-11 CIVIL STATE OF CALIFORNIA

THE STATE OF CALIFORNIA OR ITS OFFICERS OR AGENTS SHALL NOT BE RESPONSIBLE FOR THE ACCURACY OR COMPLETENESS OF SCANNED COPIES OF THIS PLAN SHEET.

NOTES:

1. FOR ACCURATE RIGHT OF WAY DATA, CONTACT RIGHT OF WAY ENGINEERING AT DISTRICT OFFICE.
2. THIS PLAN ACCURATE FOR DRAINAGE WORK ONLY.
3. DRAINAGE INLET SHALL BE SET TO PROFILE GRADE OF PAVEMENT.

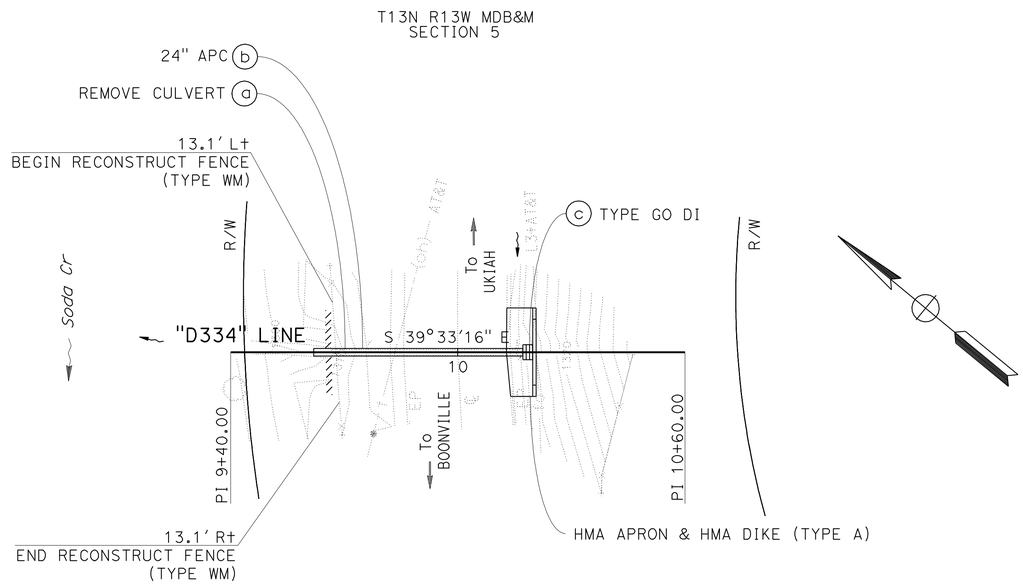

DRAINAGE SYSTEM (26)
ROUTE 253
PM 3.34
SCALE: 1" = 20'

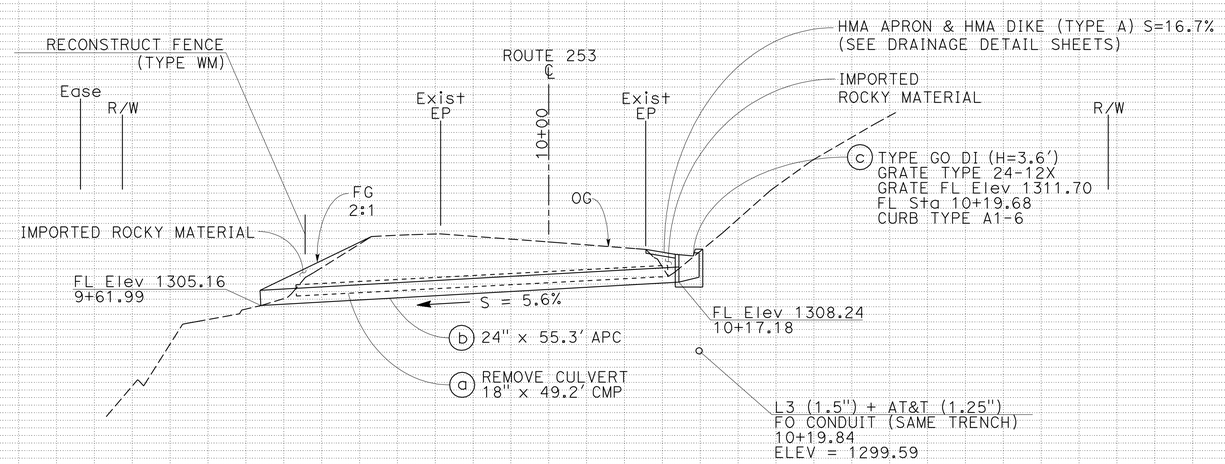

DRAINAGE SYSTEM (26)
SCALE: Horiz 1" = 10'
Vert 1" = 10'

DRAINAGE PLAN AND PROFILE

SCALE AS SHOWN

D-26

REVISED BY	DATE REVISED
W. K. MACK	11/23/09

CALCULATED-DESIGNED BY: W. KEITH MACK
CHECKED BY: SARJU PATEL
FUNCTIONAL SUPERVISOR: ROBERT POLGAR

STATE OF CALIFORNIA - DEPARTMENT OF TRANSPORTATION
Caltrans
03-DESIGN

LAST REVISION 11-23-09
DATE PLOTTED => 15-APR-2010
TIME PLOTTED => 15:25

Dist	COUNTY	ROUTE	POST MILES TOTAL PROJECT	SHEET No.	TOTAL SHEETS
01	Men	128,253	Var	30	106

REGISTERED CIVIL ENGINEER 11-23-09 DATE

4-12-10
PLANS APPROVAL DATE

REGISTERED PROFESSIONAL ENGINEER W. KEITH MACK No. C 73964 Exp. 6-30-11 CIVIL STATE OF CALIFORNIA

THE STATE OF CALIFORNIA OR ITS OFFICERS OR AGENTS SHALL NOT BE RESPONSIBLE FOR THE ACCURACY OR COMPLETENESS OF SCANNED COPIES OF THIS PLAN SHEET.

NOTES:

1. FOR ACCURATE RIGHT OF WAY DATA, CONTACT RIGHT OF WAY ENGINEERING AT DISTRICT OFFICE.
2. THIS PLAN ACCURATE FOR DRAINAGE WORK ONLY.

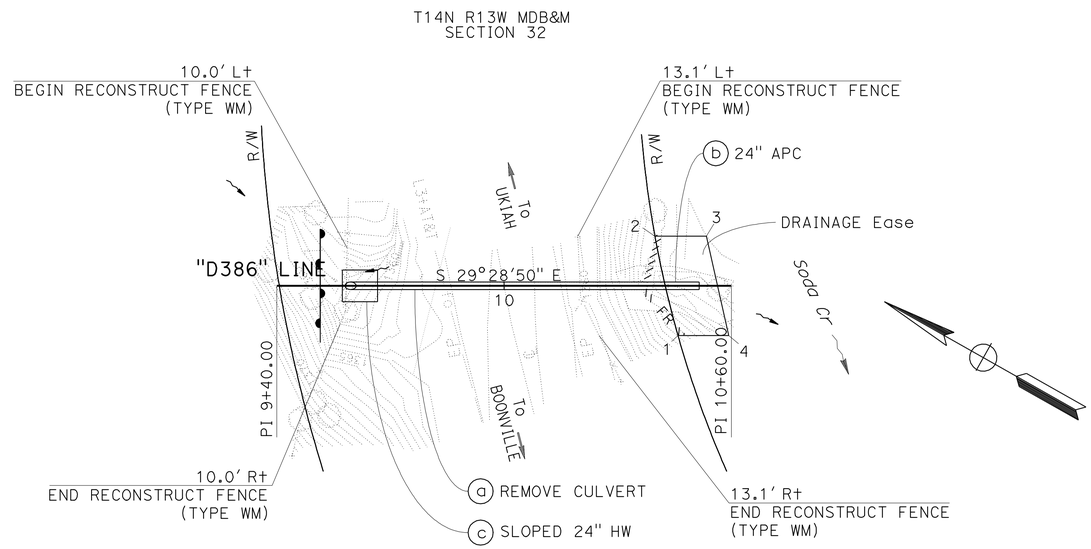

POINT	STATION	OFFSET
1	10+45.92	13.12' Rt
2	10+39.84	13.12' Lt
3	10+53.40	13.12' Lt
4	10+59.31	13.12' Rt

DRAINAGE SYSTEM 27

ROUTE 253
PM 3.86
SCALE: 1" = 20'

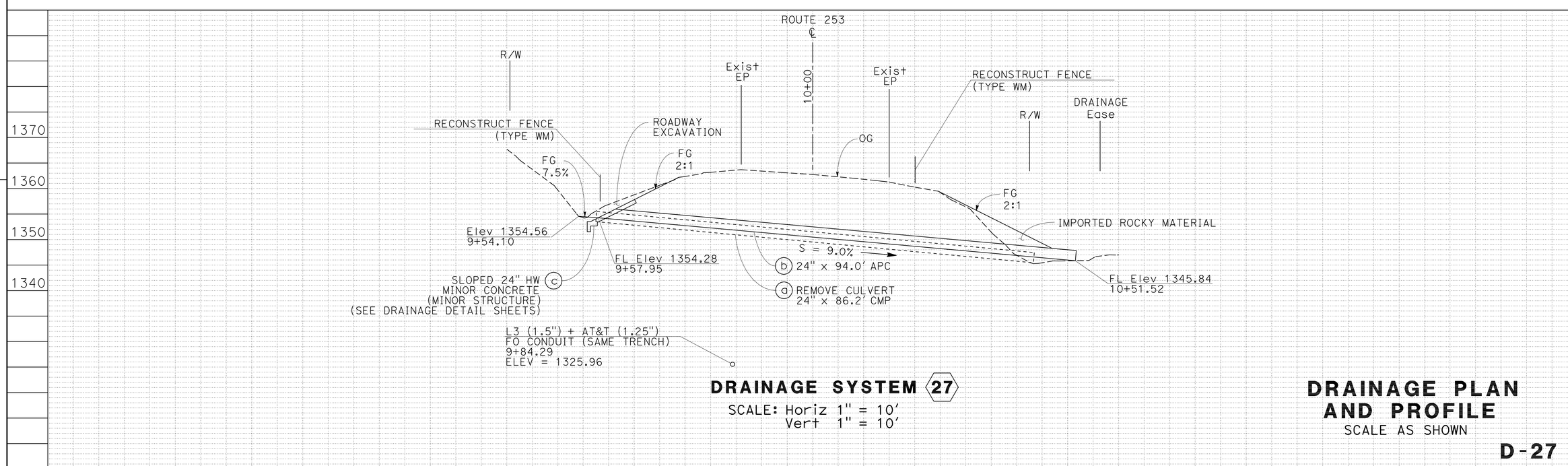

DRAINAGE SYSTEM 27

SCALE: Horiz 1" = 10'
Vert 1" = 10'

DRAINAGE PLAN AND PROFILE

SCALE AS SHOWN

D-27

REVISED BY	DATE REVISED
W. K. MACK	11/23/09

CALCULATED-DESIGNED BY: W. KEITH MACK
CHECKED BY: SARJU PATEL

FUNCTIONAL SUPERVISOR: ROBERT POLGAR

STATE OF CALIFORNIA - DEPARTMENT OF TRANSPORTATION
Caltrans
03-DESIGN

LAST REVISION 11-23-09
DATE PLOTTED => 15-APR-2010
TIME PLOTTED => 14:41

Dist	COUNTY	ROUTE	POST MILES TOTAL PROJECT	SHEET No.	TOTAL SHEETS
01	Men	128,253	Var	31	106

REGISTERED CIVIL ENGINEER 11-23-09 DATE

4-12-10
PLANS APPROVAL DATE

REGISTERED PROFESSIONAL ENGINEER W. KEITH MACK No. C 73964 Exp. 6-30-11 CIVIL STATE OF CALIFORNIA

THE STATE OF CALIFORNIA OR ITS OFFICERS OR AGENTS SHALL NOT BE RESPONSIBLE FOR THE ACCURACY OR COMPLETENESS OF SCANNED COPIES OF THIS PLAN SHEET.

NOTES:

1. FOR ACCURATE RIGHT OF WAY DATA, CONTACT RIGHT OF WAY ENGINEERING AT DISTRICT OFFICE.
2. THIS PLAN ACCURATE FOR DRAINAGE WORK ONLY.
3. INLET AND/OR OUTLET STRUCTURE SKEW ANGLE IS MEASURED FROM A LINE PERPENDICULAR TO THE CULVERT ALIGNMENT.

T14N R13W MDB&M
SECTION 32

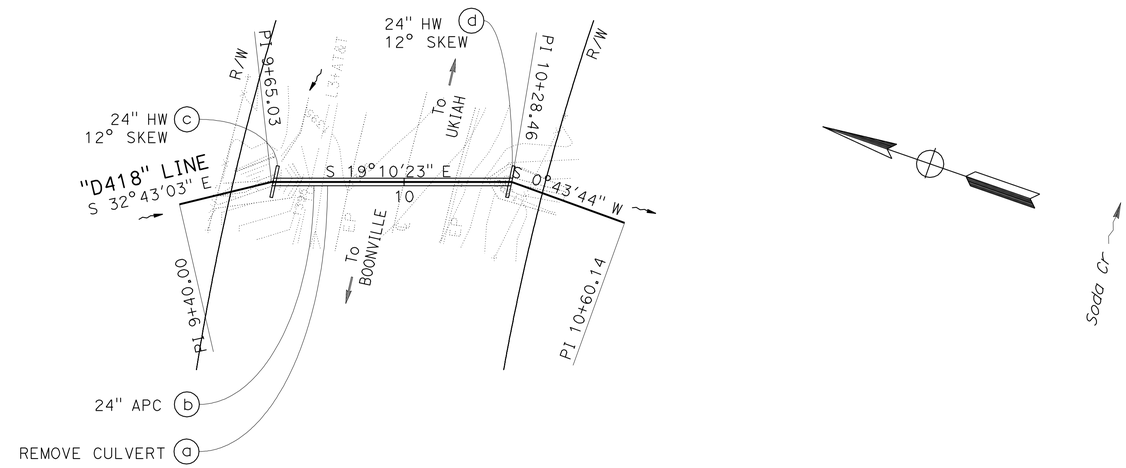

DRAINAGE SYSTEM 28

ROUTE 253
PM 4.18
SCALE: 1" = 20'

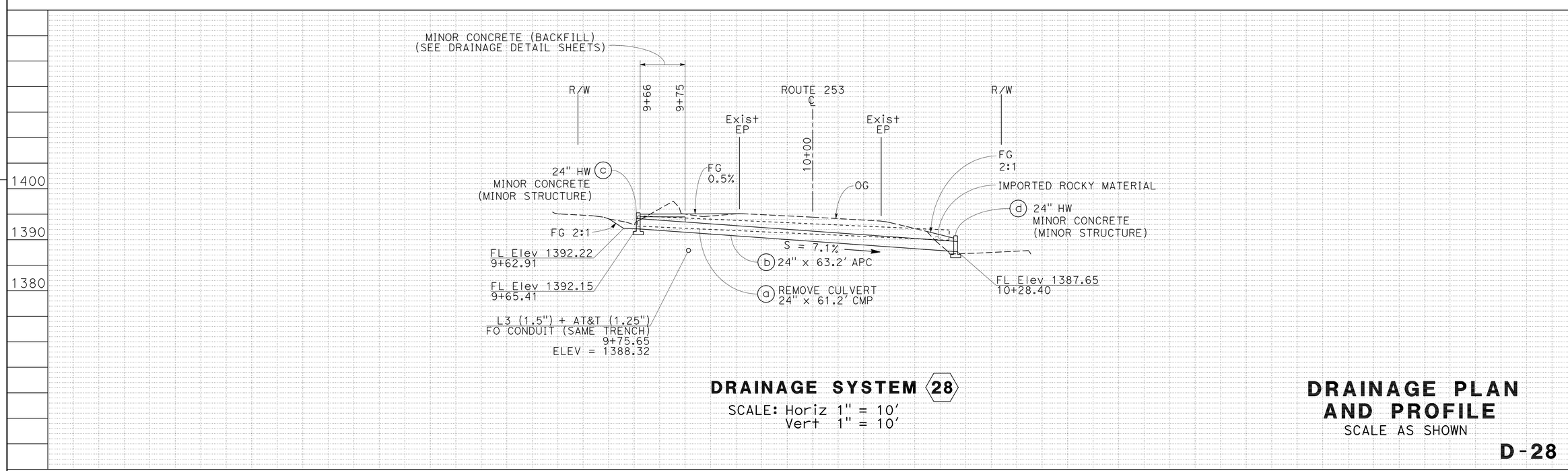

DRAINAGE SYSTEM 28

SCALE: Horiz 1" = 10'
Vert 1" = 10'

DRAINAGE PLAN AND PROFILE

SCALE AS SHOWN

D-28

REVISED BY	DATE REVISED
W. K. MACK	11/23/09

CALCULATED-DESIGNED BY: W. KEITH MACK
CHECKED BY: SARJU PATEL

FUNCTIONAL SUPERVISOR: ROBERT POLGAR

STATE OF CALIFORNIA - DEPARTMENT OF TRANSPORTATION
Caltrans
03-DESIGN

LAST REVISION 11-23-09
DATE PLOTTED => 15-APR-2010
TIME PLOTTED => 14:41

Dist	COUNTY	ROUTE	POST MILES TOTAL PROJECT	SHEET No.	TOTAL SHEETS
01	Men	128,253	Var	32	106

REGISTERED CIVIL ENGINEER 11-23-09 DATE

4-12-10
PLANS APPROVAL DATE

REGISTERED PROFESSIONAL ENGINEER W. KEITH MACK No. C 73964 Exp. 6-30-11 CIVIL STATE OF CALIFORNIA

THE STATE OF CALIFORNIA OR ITS OFFICERS OR AGENTS SHALL NOT BE RESPONSIBLE FOR THE ACCURACY OR COMPLETENESS OF SCANNED COPIES OF THIS PLAN SHEET.

NOTES:

1. FOR ACCURATE RIGHT OF WAY DATA, CONTACT RIGHT OF WAY ENGINEERING AT DISTRICT OFFICE.
2. THIS PLAN ACCURATE FOR DRAINAGE WORK ONLY.

POINT	STATION	OFFSET
1	9+03.37	87.60′ R+
2	9+03.37	21.98′ R+
3	9+03.37	21.98′ L+
4	9+36.42	21.98′ L+
5	9+50.97	21.98′ R+
6	9+72.68	87.60′ R+

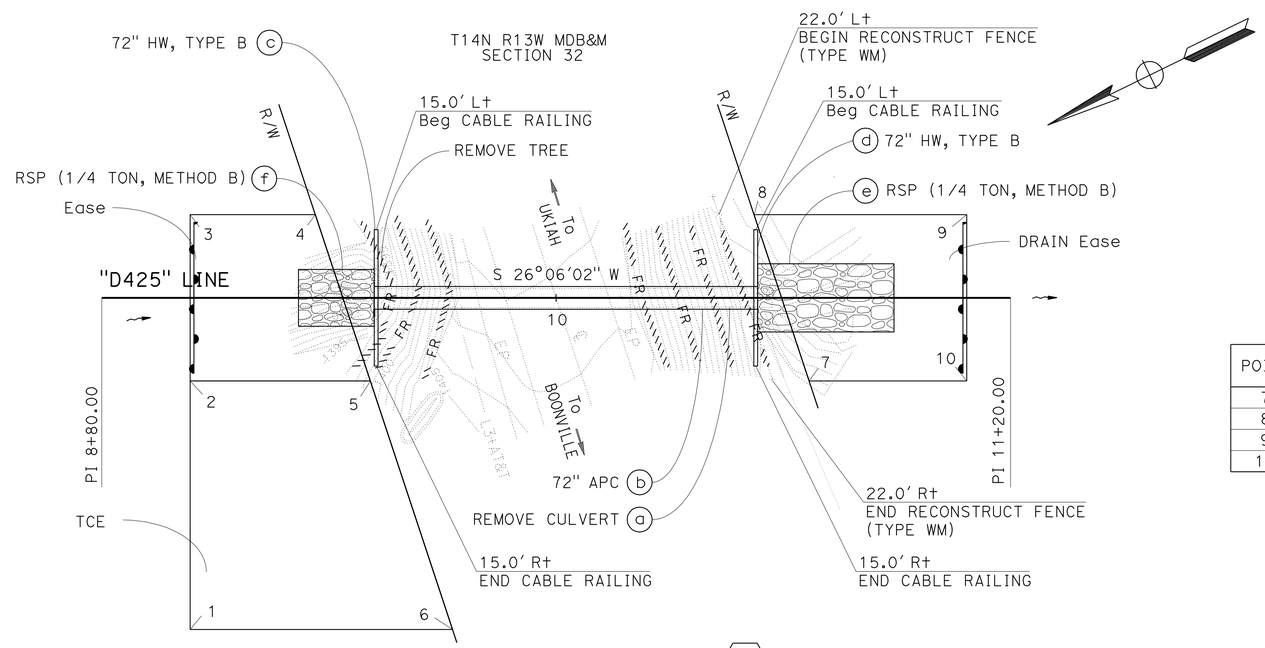

Soda Cr

POINT	STATION	OFFSET
7	10+66.80	21.98′ R+
8	10+52.28	21.98′ L+
9	11+08.40	21.98′ L+
10	11+08.40	21.98′ L+

DRAINAGE SYSTEM (29)

ROUTE 253
PM 4.25
SCALE: 1" = 20′

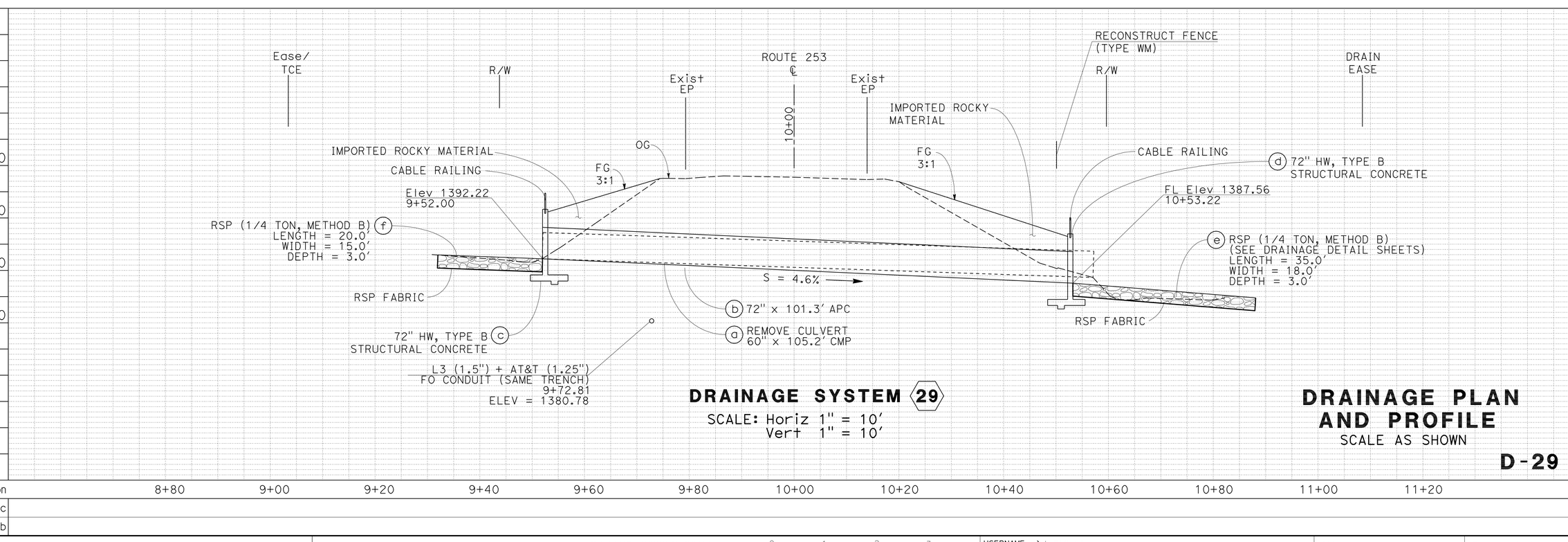

DRAINAGE SYSTEM (29)

SCALE: Horiz 1" = 10′
Vert 1" = 10′

DRAINAGE PLAN AND PROFILE

SCALE AS SHOWN

D-29

STATE OF CALIFORNIA - DEPARTMENT OF TRANSPORTATION
Caltrans 03-DESIGN

FUNCTIONAL SUPERVISOR: ROBERT POLGAR
CALCULATED-DESIGNED BY: W. KEITH MACK
CHECKED BY: SARJU PATEL
REVISED BY: W. K. MACK
DATE REVISED: 02/23/10

LAST REVISION 02-23-10
DATE PLOTTED => 15-APR-2010
TIME PLOTTED => 14:41

Dist	COUNTY	ROUTE	POST MILES TOTAL PROJECT	SHEET No.	TOTAL SHEETS
01	Men	128,253	Var	33	106

REGISTERED CIVIL ENGINEER 11-23-09 DATE

4-12-10
PLANS APPROVAL DATE

REGISTERED PROFESSIONAL ENGINEER
W. KEITH MACK
No. C 73964
Exp. 6-30-11
CIVIL
STATE OF CALIFORNIA

THE STATE OF CALIFORNIA OR ITS OFFICERS OR AGENTS SHALL NOT BE RESPONSIBLE FOR THE ACCURACY OR COMPLETENESS OF SCANNED COPIES OF THIS PLAN SHEET.

NOTES:

1. FOR ACCURATE RIGHT OF WAY DATA, CONTACT RIGHT OF WAY ENGINEERING AT DISTRICT OFFICE.
2. THIS PLAN ACCURATE FOR DRAINAGE WORK ONLY.

T14N R13W MDB&M
SECTION 33

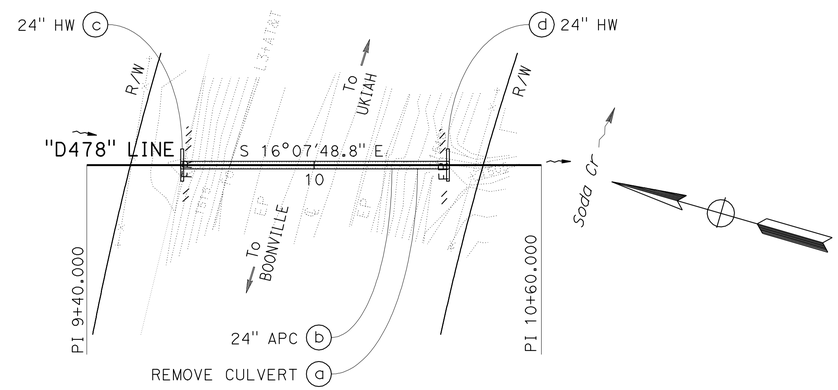

DRAINAGE SYSTEM 30

ROUTE 253
PM 4.78
SCALE: 1" = 20'

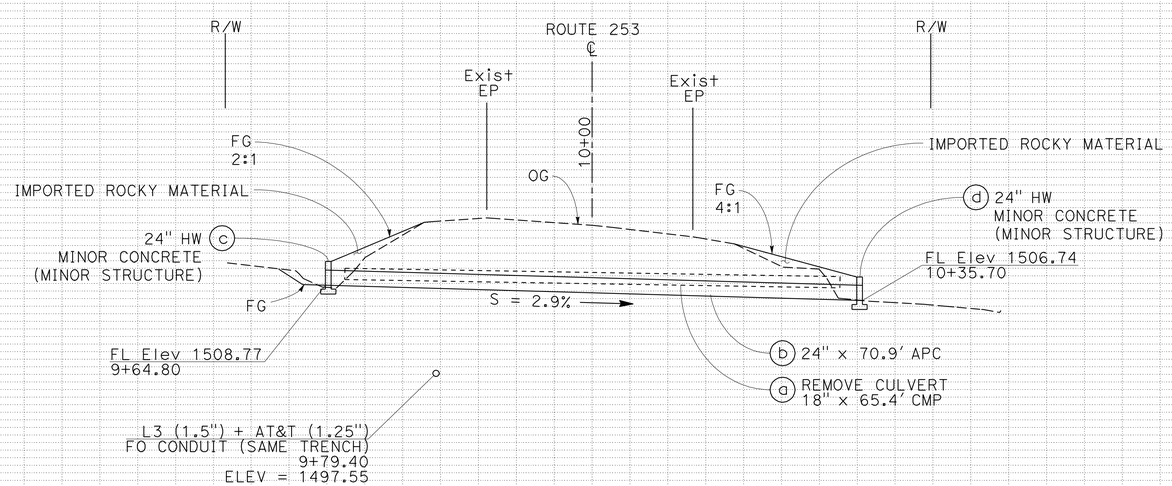

DRAINAGE SYSTEM 30

SCALE: Horiz 1" = 10'
Vert 1" = 10'

DRAINAGE PLAN AND PROFILE

SCALE AS SHOWN

D-30

REVISED BY	W. K. MACK
DATE REVISED	11/23/09
CALCULATED-DESIGNED BY	W. KEITH MACK
CHECKED BY	SARJU PATEL
FUNCTIONAL SUPERVISOR	ROBERT POLGAR

STATE OF CALIFORNIA - DEPARTMENT OF TRANSPORTATION
Caltrans
03-DESIGN

LAST REVISION 11-23-09
DATE PLOTTED => 15-APR-2010
TIME PLOTTED => 14:41

Dist	COUNTY	ROUTE	POST MILES TOTAL PROJECT	SHEET No.	TOTAL SHEETS
01	Men	128,253	Var	34	106

REGISTERED CIVIL ENGINEER 11-23-09 DATE

4-12-10
PLANS APPROVAL DATE

REGISTERED PROFESSIONAL ENGINEER W. KEITH MACK No. C 73964 Exp. 6-30-11 CIVIL STATE OF CALIFORNIA

THE STATE OF CALIFORNIA OR ITS OFFICERS OR AGENTS SHALL NOT BE RESPONSIBLE FOR THE ACCURACY OR COMPLETENESS OF SCANNED COPIES OF THIS PLAN SHEET.

NOTES:

1. FOR ACCURATE RIGHT OF WAY DATA, CONTACT RIGHT OF WAY ENGINEERING AT DISTRICT OFFICE.
2. THIS PLAN ACCURATE FOR DRAINAGE WORK ONLY.

POINT	STATION	OFFSET
1	9+54.93	18.94′ Rt
2	9+31.01	41.67′ Rt
3	8+96.33	11.76′ Rt
4	10+01.89	59.05′ Lt
5	10+97.76	59.05′ Lt
6	10+97.98	21.45′ Rt

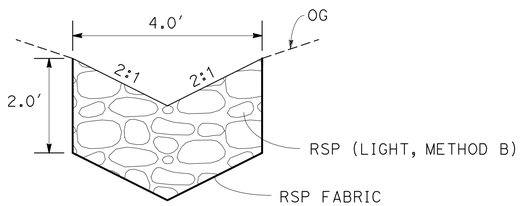

SECTION A-A
RSP LINED DITCH
NO SCALE

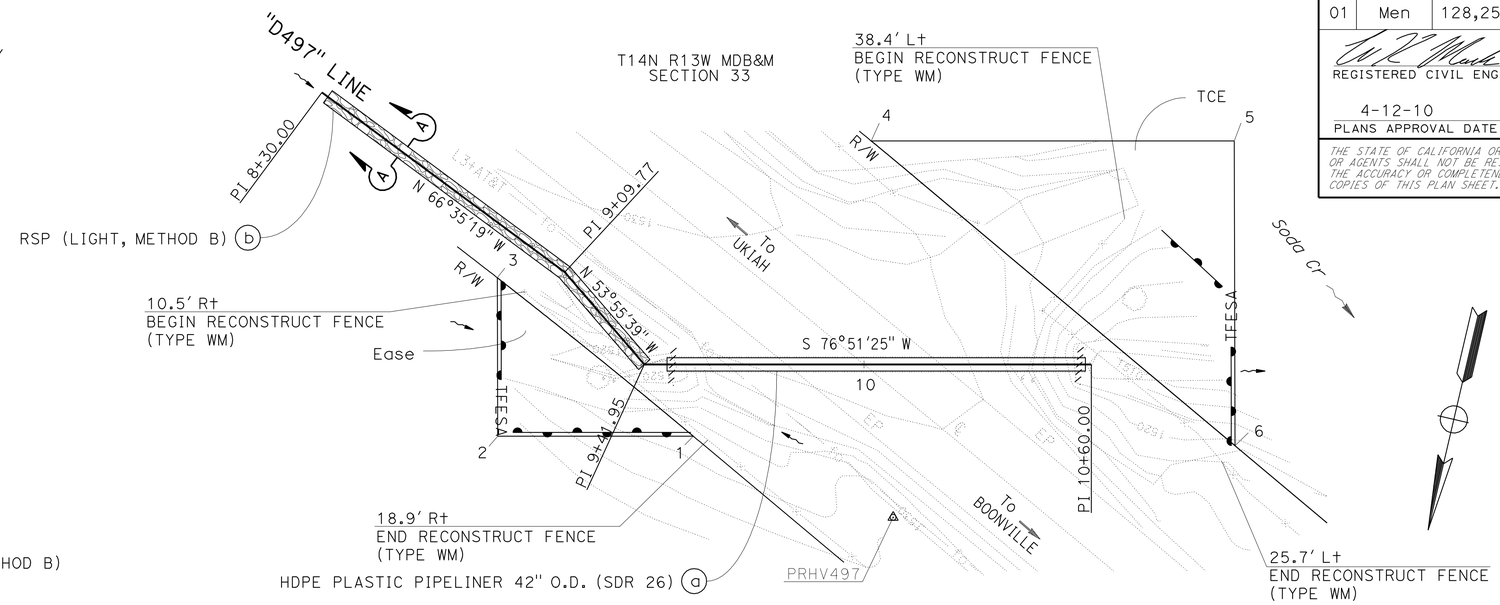

DRAINAGE SYSTEM 31
ROUTE 253
PM 4.97
SCALE: 1″ = 20′

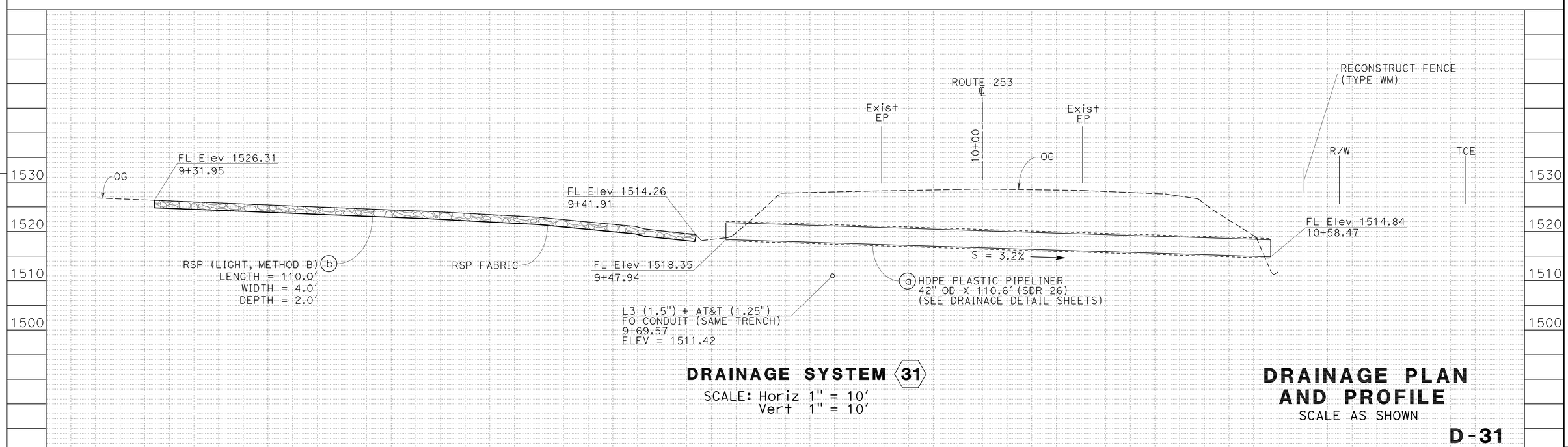

DRAINAGE SYSTEM 31
SCALE: Horiz 1″ = 10′
Vert 1″ = 10′

DRAINAGE PLAN AND PROFILE
SCALE AS SHOWN

D-31

W. K. MACK 02/23/10 — REVISED BY / DATE REVISED
W. KEITH MACK — SARJU PATEL — CALCULATED-DESIGNED BY / CHECKED BY
ROBERT POLGAR — FUNCTIONAL SUPERVISOR
STATE OF CALIFORNIA - DEPARTMENT OF TRANSPORTATION — Caltrans — 03-DESIGN

LAST REVISION 02-23-10 — DATE PLOTTED => 15-APR-2010 — TIME PLOTTED => 14:41

Dist	COUNTY	ROUTE	POST MILES TOTAL PROJECT	SHEET No.	TOTAL SHEETS
01	Men	128,253	Var	35	106

REGISTERED CIVIL ENGINEER 11-23-09 DATE

4-12-10
PLANS APPROVAL DATE

REGISTERED PROFESSIONAL ENGINEER W. KEITH MACK No. C 73964 Exp. 6-30-11 CIVIL STATE OF CALIFORNIA

THE STATE OF CALIFORNIA OR ITS OFFICERS OR AGENTS SHALL NOT BE RESPONSIBLE FOR THE ACCURACY OR COMPLETENESS OF SCANNED COPIES OF THIS PLAN SHEET.

NOTES:

1. FOR ACCURATE RIGHT OF WAY DATA, CONTACT RIGHT OF WAY ENGINEERING AT DISTRICT OFFICE.
2. THIS PLAN ACCURATE FOR DRAINAGE WORK ONLY.
3. THE ANGLE OF EACH ELBOW IS APPROXIMATE. THE EXACT ANGLE WILL BE DETERMINED IN THE FIELD BY THE ENGINEER.

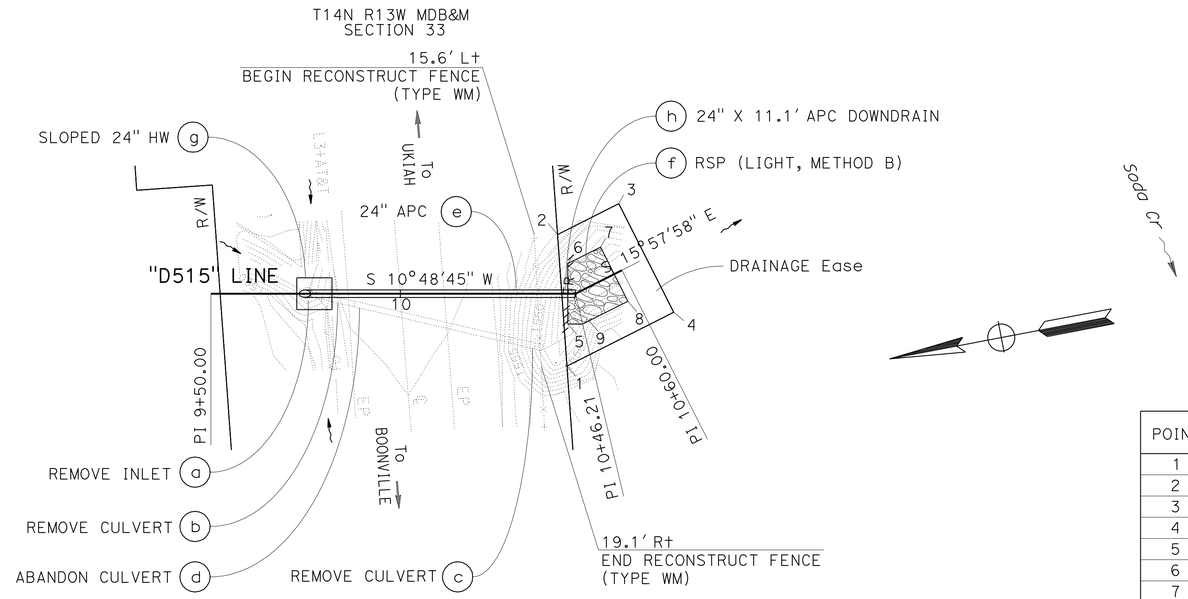

DRAINAGE SYSTEM 32
ROUTE 253
PM 5.15
SCALE: 1" = 20'

POINT	STATION	OFFSET
1	10+44.00	19.12' R+
2	10+41.51	15.63' L+
3	10+67.16	16.08' L+
4	10+67.16	16.08' R+
5	10+44.31	8.00' R+
6	10+44.31	7.70' L+
7	10+57.69	8.00' L+
8	10+57.69	8.00' R+
9	10+46.22	8.00' R+

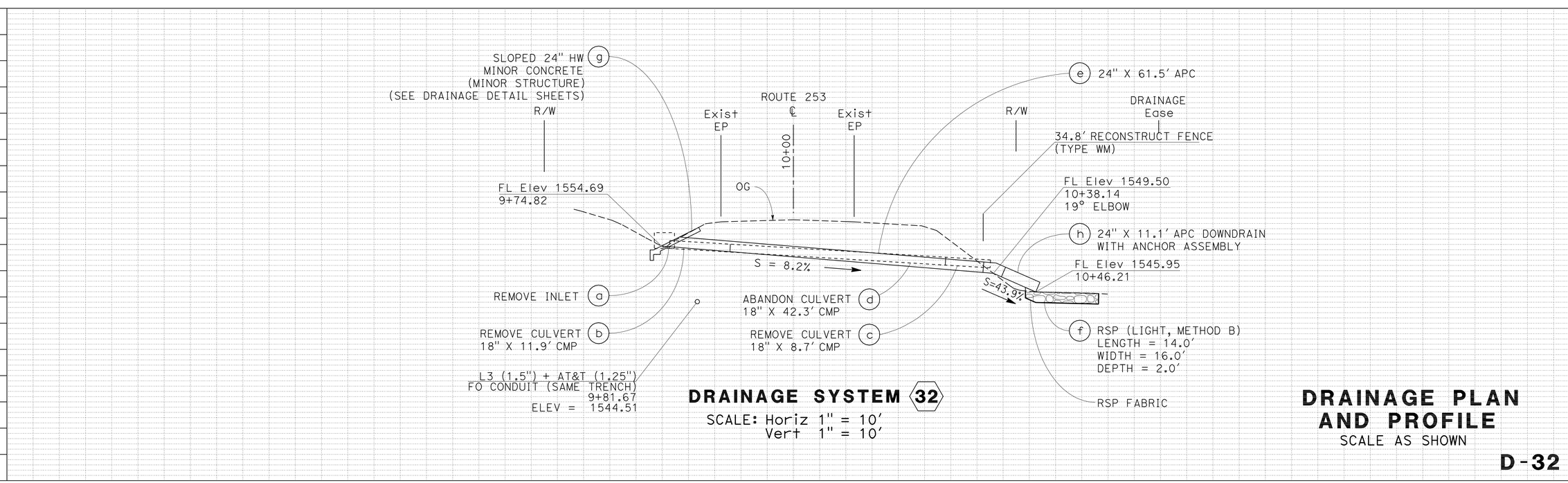

DRAINAGE SYSTEM 32
SCALE: Horiz 1" = 10'
Vert 1" = 10'

DRAINAGE PLAN AND PROFILE
SCALE AS SHOWN

D-32

W. K. MACK 11/23/09 — REVISED BY / DATE REVISED
W. KEITH MACK — CALCULATED-DESIGNED BY
SARJU PATEL — CHECKED BY
ROBERT POLGAR — FUNCTIONAL SUPERVISOR

STATE OF CALIFORNIA - DEPARTMENT OF TRANSPORTATION
Caltrans
03-DESIGN

LAST REVISION 11-23-09
DATE PLOTTED => 15-APR-2010
TIME PLOTTED => 14:41

Dist	COUNTY	ROUTE	POST MILES TOTAL PROJECT	SHEET No.	TOTAL SHEETS
01	Men	128,253	Var	36	106

REGISTERED CIVIL ENGINEER 11-23-09 DATE

4-12-10
PLANS APPROVAL DATE

REGISTERED PROFESSIONAL ENGINEER W. KEITH MACK No. C 73964 Exp. 6-30-11 CIVIL STATE OF CALIFORNIA

THE STATE OF CALIFORNIA OR ITS OFFICERS OR AGENTS SHALL NOT BE RESPONSIBLE FOR THE ACCURACY OR COMPLETENESS OF SCANNED COPIES OF THIS PLAN SHEET.

NOTES:

1. FOR ACCURATE RIGHT OF WAY DATA, CONTACT RIGHT OF WAY ENGINEERING AT DISTRICT OFFICE.
2. THIS PLAN ACCURATE FOR DRAINAGE WORK ONLY.
3. DRAINAGE INLET SHALL BE SET TO PROFILE GRADE OF PAVEMENT.
4. THE ANGLE OF EACH ELBOW IS APPROXIMATE. THE EXACT ANGLE WILL BE DETERMINED IN THE FIELD BY THE ENGINEER.

T14N R13W MDB&M
SECTION 34

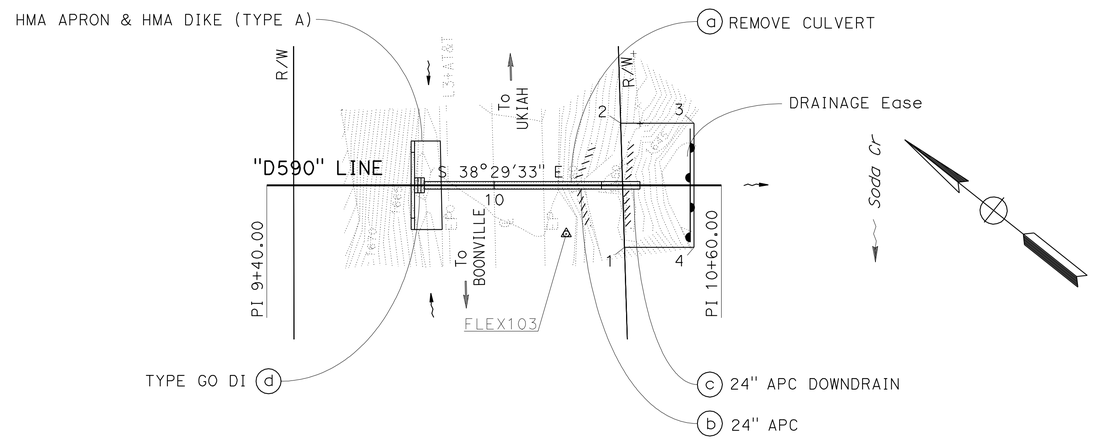

POINT	STATION	OFFSET
1	10+34.41	16.40' R+
2	10+33.46	16.40' L+
3	10+52.77	16.40' L+
4	10+52.73	16.40' R+

DRAINAGE SYSTEM 33

ROUTE 253
PM 5.90
SCALE: 1" = 20'

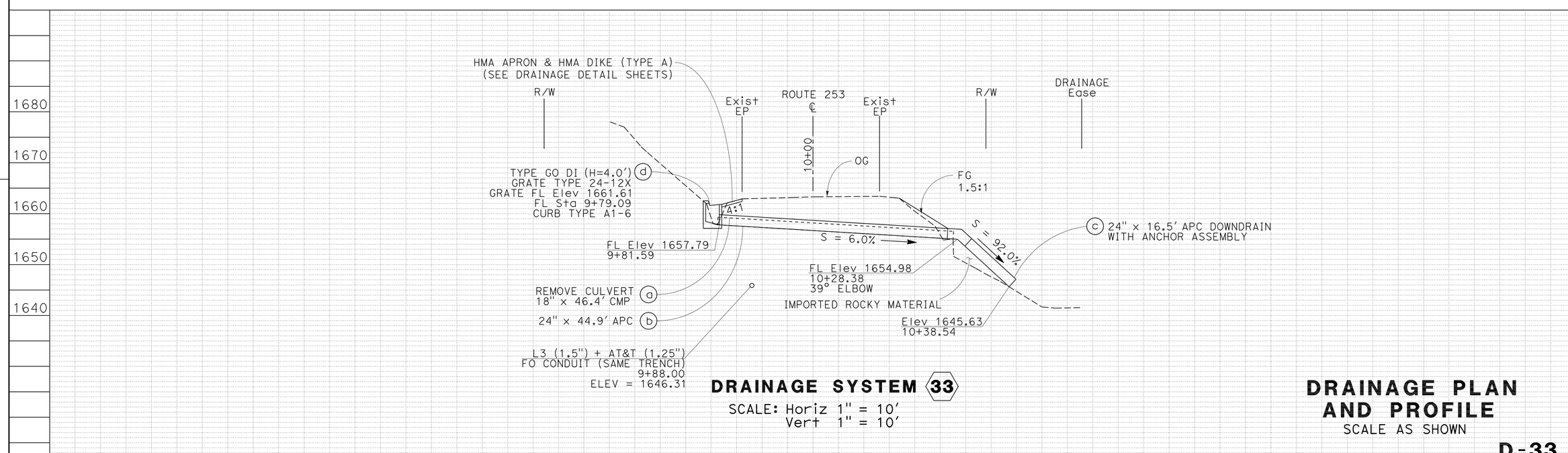

DRAINAGE SYSTEM 33

SCALE: Horiz 1" = 10'
Vert 1" = 10'

DRAINAGE PLAN AND PROFILE

SCALE AS SHOWN

D-33

REVISED BY W. K. MACK
DATE REVISED 11/23/09
CALCULATED-DESIGNED BY W. KEITH MACK
CHECKED BY SARJU PATEL
FUNCTIONAL SUPERVISOR ROBERT POLGAR

STATE OF CALIFORNIA - DEPARTMENT OF TRANSPORTATION
Caltrans
03-DESIGN

LAST REVISION 11-23-09
DATE PLOTTED => 15-APR-2010
TIME PLOTTED => 14:41

Dist	COUNTY	ROUTE	POST MILES TOTAL PROJECT	SHEET No.	TOTAL SHEETS
01	Men	128,253	Var	37	106

REGISTERED CIVIL ENGINEER 11-23-09 DATE

4-12-10
PLANS APPROVAL DATE

REGISTERED PROFESSIONAL ENGINEER W. KEITH MACK No. C 73964 Exp. 6-30-11 CIVIL STATE OF CALIFORNIA

THE STATE OF CALIFORNIA OR ITS OFFICERS OR AGENTS SHALL NOT BE RESPONSIBLE FOR THE ACCURACY OR COMPLETENESS OF SCANNED COPIES OF THIS PLAN SHEET.

NOTES:

1. FOR ACCURATE RIGHT OF WAY DATA, CONTACT RIGHT OF WAY ENGINEERING AT DISTRICT OFFICE.
2. THIS PLAN ACCURATE FOR DRAINAGE WORK ONLY.
3. INLET AND/OR OUTLET STRUCTURE SKEW ANGLE IS MEASURED FROM A LINE PERPENDICULAR TO CULVERT ALIGNMENT.

T14N R13W MDB&M
SECTION 34

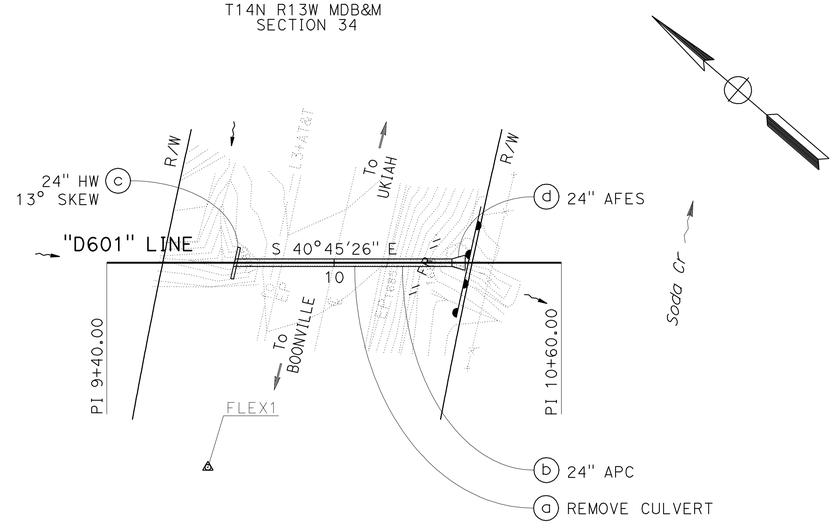

DRAINAGE SYSTEM 34

ROUTE 253
PM 6.01
SCALE: 1" = 20'

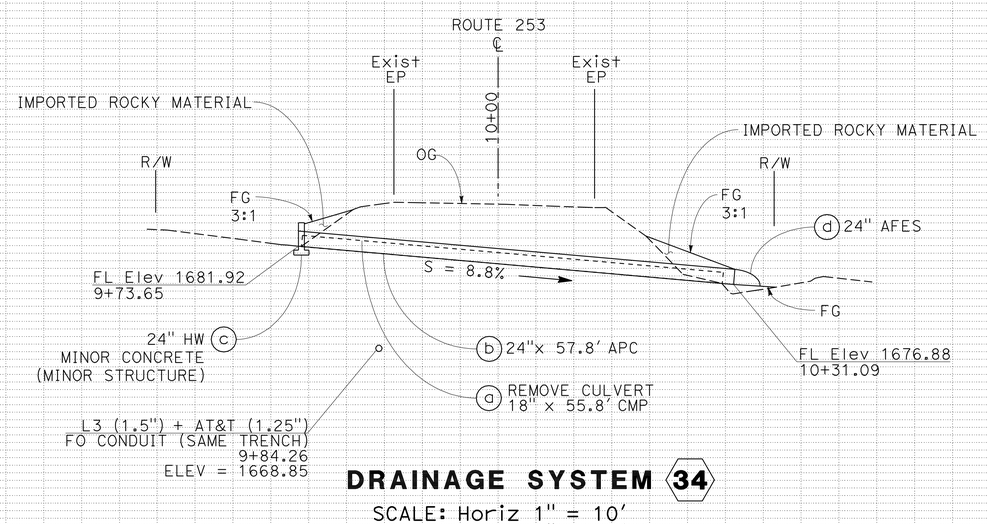

DRAINAGE SYSTEM 34

SCALE: Horiz 1" = 10'
Vert 1" = 10'

DRAINAGE PLAN AND PROFILE

SCALE AS SHOWN

D-34

STATE OF CALIFORNIA - DEPARTMENT OF TRANSPORTATION
Caltrans 03-DESIGN

FUNCTIONAL SUPERVISOR: ROBERT POLGAR
CALCULATED-DESIGNED BY: W. KEITH MACK
CHECKED BY: SARJU PATEL
REVISED BY: W. K. MACK
DATE REVISED: 11/23/09

LAST REVISION 11-23-09
DATE PLOTTED => 15-APR-2010
TIME PLOTTED => 14:42

Dist	COUNTY	ROUTE	POST MILES TOTAL PROJECT	SHEET No.	TOTAL SHEETS
01	Men	128,253	Var	38	106

REGISTERED CIVIL ENGINEER 11-23-09 DATE

4-12-10
PLANS APPROVAL DATE

REGISTERED PROFESSIONAL ENGINEER W. KEITH MACK No. C 73964 Exp. 6-30-11 CIVIL STATE OF CALIFORNIA

THE STATE OF CALIFORNIA OR ITS OFFICERS OR AGENTS SHALL NOT BE RESPONSIBLE FOR THE ACCURACY OR COMPLETENESS OF SCANNED COPIES OF THIS PLAN SHEET.

NOTES:

1. FOR ACCURATE RIGHT OF WAY DATA, CONTACT RIGHT OF WAY ENGINEERING AT DISTRICT OFFICE.
2. THIS PLAN ACCURATE FOR DRAINAGE WORK ONLY.
3. INLET AND/OR OUTLET STRUCTURE SKEW ANGLE IS MEASURED FROM A LINE PERPENDICULAR TO THE CULVERT ALIGNMENT.

POINT	STATION	OFFSET
1	8+76.09	36.19′ Rt
2	8+76.09	5.54′ Lt
3	9+29.10	36.19′ Rt
4	9+11.60	3.00′ Rt
5	9+05.00	0.60′ Rt
6	9+00.80	18.30′ Lt
7	9+16.40	21.80′ Lt
8	9+18.00	14.60′ Lt

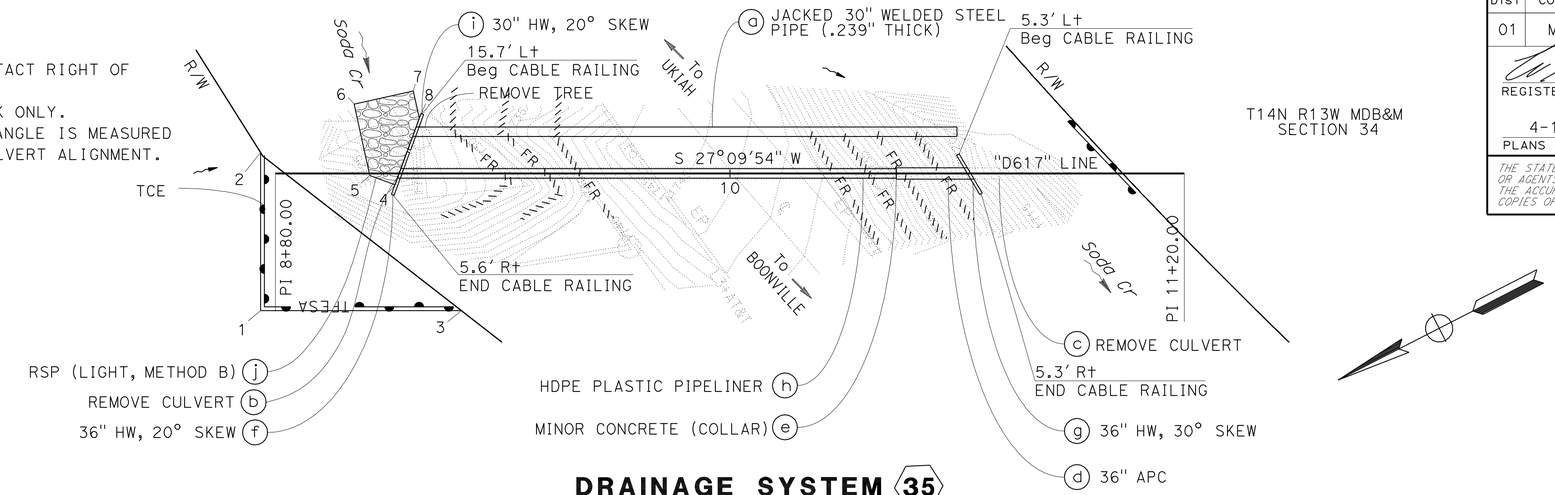

T14N R13W MDB&M
SECTION 34

DRAINAGE SYSTEM 35

ROUTE 253
PM 6.17
SCALE: 1" = 20′

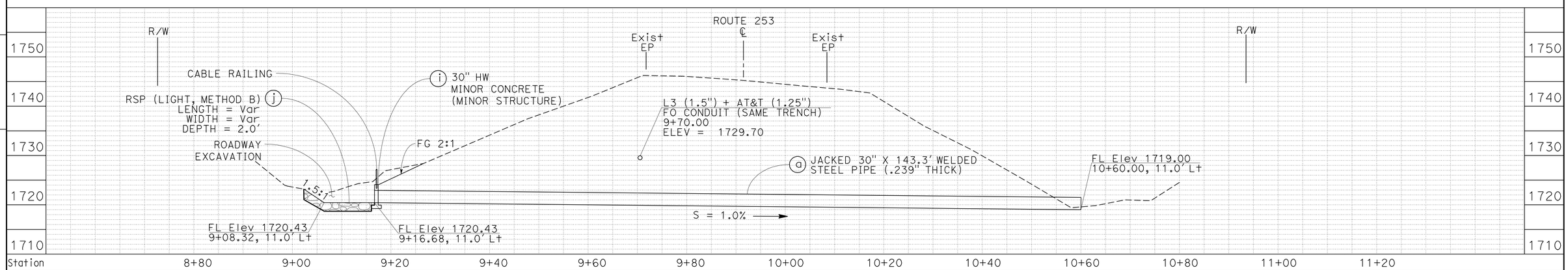

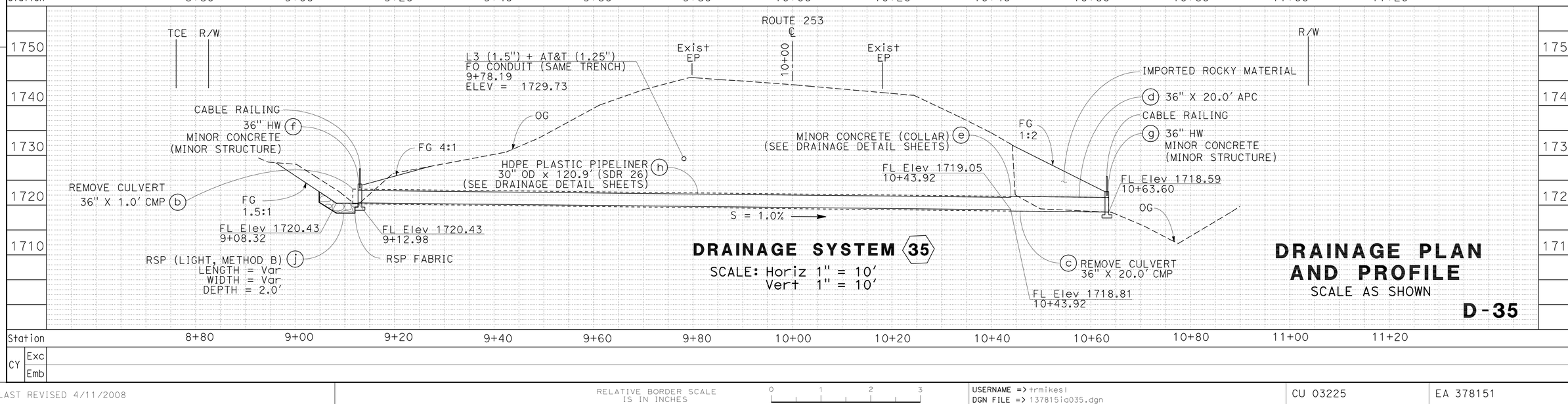

DRAINAGE SYSTEM 35

SCALE: Horiz 1" = 10′
Vert 1" = 10′

DRAINAGE PLAN AND PROFILE

SCALE AS SHOWN

D-35

CY	
Exc	
Emb	

REVISED BY | DATE REVISED
W. KEITH MACK | SARJU PATEL
CALCULATED-DESIGNED BY | CHECKED BY
FUNCTIONAL SUPERVISOR: ROBERT POLGAR

STATE OF CALIFORNIA - DEPARTMENT OF TRANSPORTATION
Caltrans
03-DESIGN

LAST REVISION 00-00-00 | DATE PLOTTED => 13-OCT-2010 | TIME PLOTTED => 15:07

Dist	COUNTY	ROUTE	POST MILES TOTAL PROJECT	SHEET No.	TOTAL SHEETS
01	Men	128,253	Var	39	106

REGISTERED CIVIL ENGINEER 11-23-09 DATE

4-12-10
PLANS APPROVAL DATE

REGISTERED PROFESSIONAL ENGINEER W. KEITH MACK No. C 73964 Exp. 6-30-11 CIVIL STATE OF CALIFORNIA

THE STATE OF CALIFORNIA OR ITS OFFICERS OR AGENTS SHALL NOT BE RESPONSIBLE FOR THE ACCURACY OR COMPLETENESS OF SCANNED COPIES OF THIS PLAN SHEET.

NOTES:

1. FOR ACCURATE RIGHT OF WAY DATA, CONTACT RIGHT OF WAY ENGINEERING AT DISTRICT OFFICE.
2. THIS PLAN ACCURATE FOR DRAINAGE WORK ONLY.

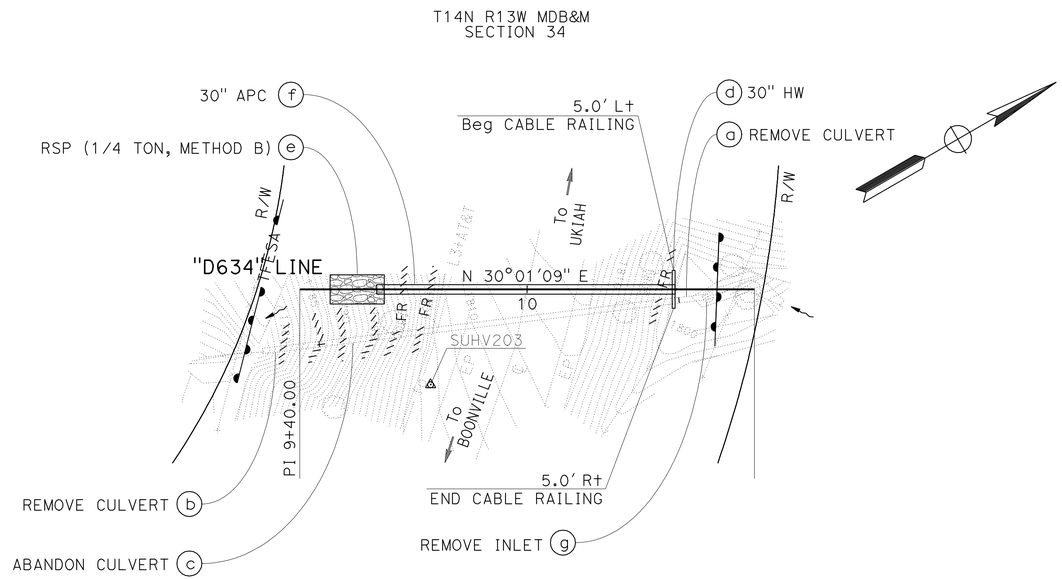

DRAINAGE SYSTEM 36

ROUTE 253
PM 6.34
SCALE: 1" = 20'

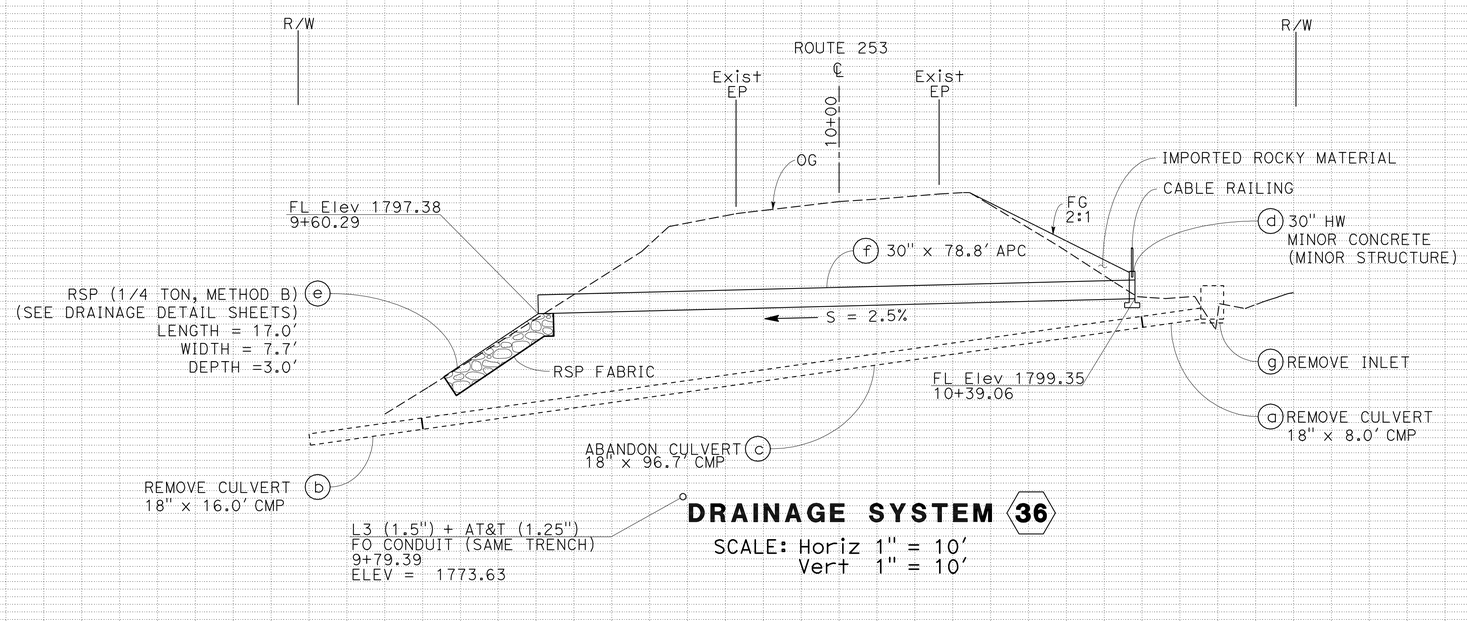

DRAINAGE SYSTEM 36

SCALE: Horiz 1" = 10'
Vert 1" = 10'

DRAINAGE PLAN AND PROFILE

SCALE AS SHOWN

D-36

W. K. MACK	REVISED BY
11/23/09	DATE REVISED
W. KEITH MACK	CALCULATED-DESIGNED BY
SARJU PATEL	CHECKED BY
ROBERT POLGAR	FUNCTIONAL SUPERVISOR

STATE OF CALIFORNIA - DEPARTMENT OF TRANSPORTATION
Caltrans
03-DESIGN

LAST REVISION 11-23-09
DATE PLOTTED => 15-APR-2010
TIME PLOTTED => 14:42

Dist	COUNTY	ROUTE	POST MILES TOTAL PROJECT	SHEET No.	TOTAL SHEETS
01	Men	128,253	Var	40	106

REGISTERED CIVIL ENGINEER 11-23-09 DATE

4-12-10
PLANS APPROVAL DATE

REGISTERED PROFESSIONAL ENGINEER W. KEITH MACK No. C 73964 Exp. 6-30-11 CIVIL STATE OF CALIFORNIA

THE STATE OF CALIFORNIA OR ITS OFFICERS OR AGENTS SHALL NOT BE RESPONSIBLE FOR THE ACCURACY OR COMPLETENESS OF SCANNED COPIES OF THIS PLAN SHEET.

NOTES:

1. FOR ACCURATE RIGHT OF WAY DATA, CONTACT RIGHT OF WAY ENGINEERING AT DISTRICT OFFICE.
2. THIS PLAN ACCURATE FOR DRAINAGE WORK ONLY.
3. PIPE STAKES FOR ANCHOR ASSEMBLY TO BE INSERTED THROUGH BRACKET WELDED TO DOWNDRAIN.
4. THE ANGLE OF EACH ELBOW IS APPROXIMATE. THE EXACT ANGLE WILL BE DETERMINED IN THE FIELD BY THE ENGINEER.

T14N R13W MDB&M
SECTION 34

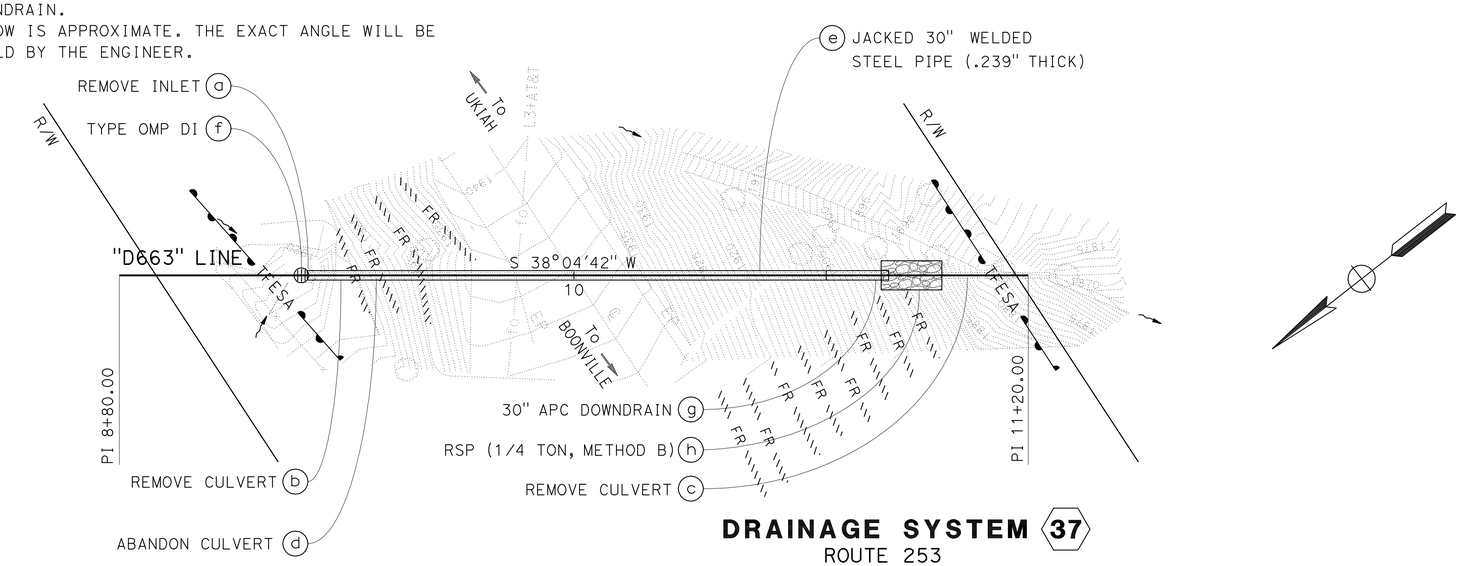

DRAINAGE SYSTEM 37

ROUTE 253
PM 6.63
SCALE: 1" = 20'

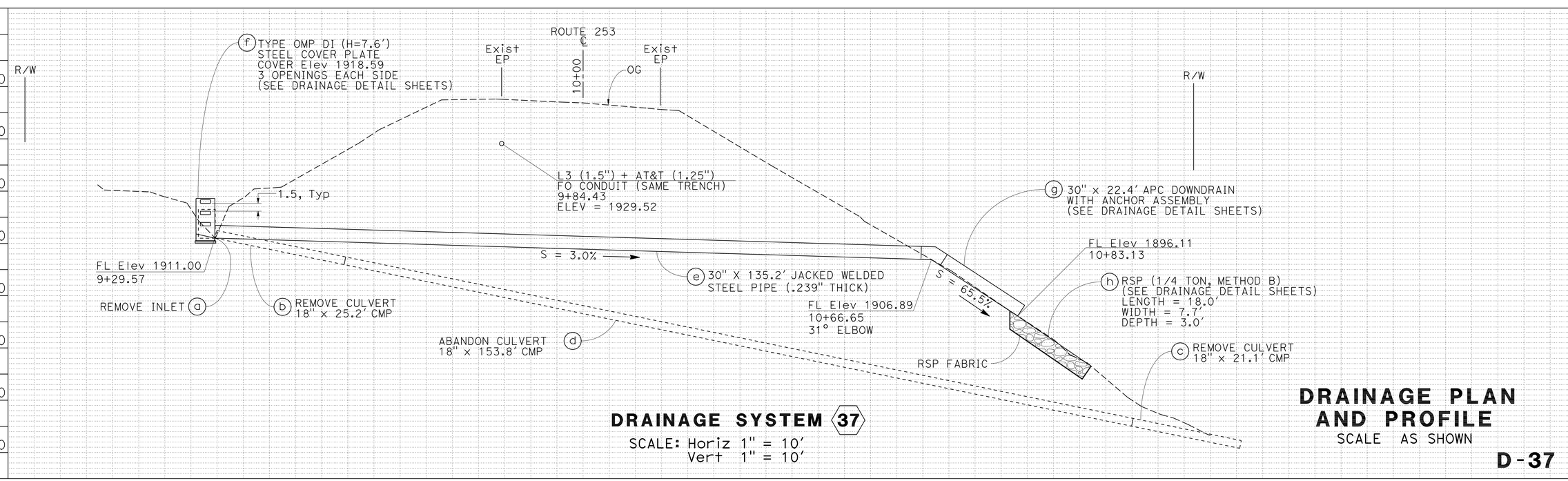

DRAINAGE SYSTEM 37

SCALE: Horiz 1" = 10'
Vert 1" = 10'

DRAINAGE PLAN AND PROFILE

SCALE AS SHOWN

D-37

REVISED BY	DATE REVISED
W. K. MACK	11/23/09

CALCULATED-DESIGNED BY: W. KEITH MACK
CHECKED BY: SARJU PATEL

FUNCTIONAL SUPERVISOR: ROBERT POLGAR

STATE OF CALIFORNIA - DEPARTMENT OF TRANSPORTATION
03-DESIGN
Caltrans

LAST REVISION 11-23-09
DATE PLOTTED => 15-APR-2010
TIME PLOTTED => 14:44

Dist	COUNTY	ROUTE	POST MILES TOTAL PROJECT	SHEET No.	TOTAL SHEETS
01	Men	128,253	Var	41	106

REGISTERED CIVIL ENGINEER 11-23-09 DATE

4-12-10
PLANS APPROVAL DATE

REGISTERED PROFESSIONAL ENGINEER W. KEITH MACK No. C 73964 Exp. 6-30-11 CIVIL STATE OF CALIFORNIA

THE STATE OF CALIFORNIA OR ITS OFFICERS OR AGENTS SHALL NOT BE RESPONSIBLE FOR THE ACCURACY OR COMPLETENESS OF SCANNED COPIES OF THIS PLAN SHEET.

NOTES:

1. FOR ACCURATE RIGHT OF WAY DATA, CONTACT RIGHT OF WAY ENGINEERING AT DISTRICT OFFICE.
2. THIS PLAN ACCURATE FOR DRAINAGE WORK ONLY.
3. THE ANGLE OF EACH ELBOW IS APPROXIMATE. THE EXACT ANGLE WILL BE DETERMINED IN THE FIELD BY THE ENGINEER.

T14N R13W MDB&M
SECTION 26

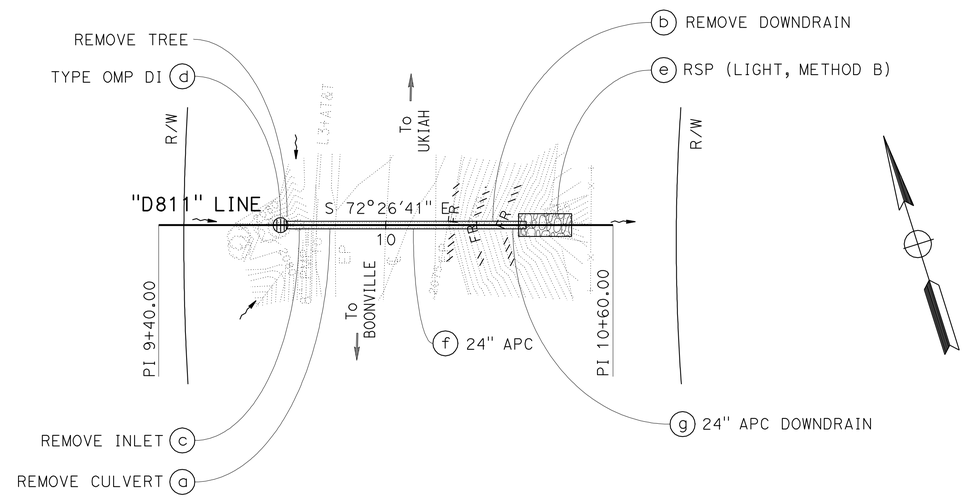

DRAINAGE SYSTEM (38)

ROUTE 253
PM 8.11
SCALE: 1" = 20'

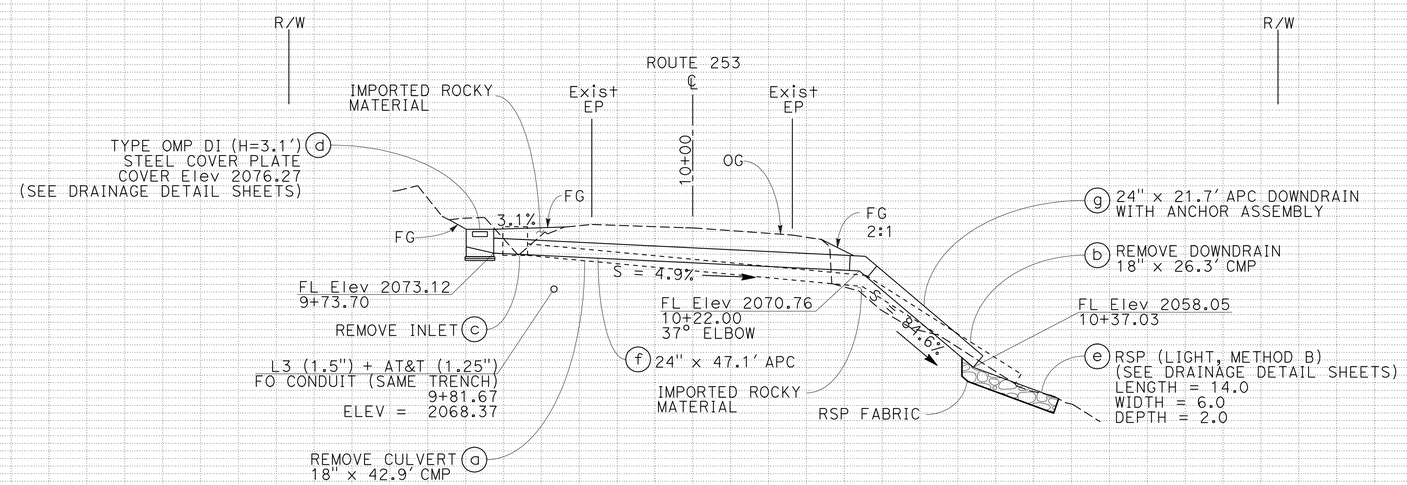

DRAINAGE SYSTEM (38)

SCALE: Horiz 1" = 10'
Vert 1" = 10'

DRAINAGE PLAN AND PROFILE

SCALE AS SHOWN

D-38

REVISED BY	DATE REVISED
W. K. MACK	11/23/09

CALCULATED-DESIGNED BY: W. KEITH MACK
CHECKED BY: SARJU PATEL

FUNCTIONAL SUPERVISOR: ROBERT POLGAR

STATE OF CALIFORNIA - DEPARTMENT OF TRANSPORTATION
Caltrans
03-DESIGN

LAST REVISION 11-23-09
DATE PLOTTED => 15-APR-2010
TIME PLOTTED => 14:45

Dist	COUNTY	ROUTE	POST MILES TOTAL PROJECT	SHEET No.	TOTAL SHEETS
01	Men	128,253	Var	42	106

11-23-09
REGISTERED CIVIL ENGINEER DATE

4-12-10
PLANS APPROVAL DATE

REGISTERED PROFESSIONAL ENGINEER
W. KEITH MACK
No. C 73964
Exp. 6-30-11
CIVIL
STATE OF CALIFORNIA

THE STATE OF CALIFORNIA OR ITS OFFICERS OR AGENTS SHALL NOT BE RESPONSIBLE FOR THE ACCURACY OR COMPLETENESS OF SCANNED COPIES OF THIS PLAN SHEET.

NOTES:

1. FOR ACCURATE RIGHT OF WAY DATA, CONTACT RIGHT OF WAY ENGINEERING AT DISTRICT OFFICE.
2. THIS PLAN ACCURATE FOR DRAINAGE WORK ONLY.
3. INLET AND/OR OUTLET STRUCTURE SKEW ANGLE IS MEASURED FROM A LINE PERPENDICULAR TO THE CULVERT ALIGNMENT.
4. THE ANGLE OF EACH ELBOW IS APPROXIMATE. THE EXACT ANGLE WILL BE DETERMINED IN THE FIELD BY THE ENGINEER.

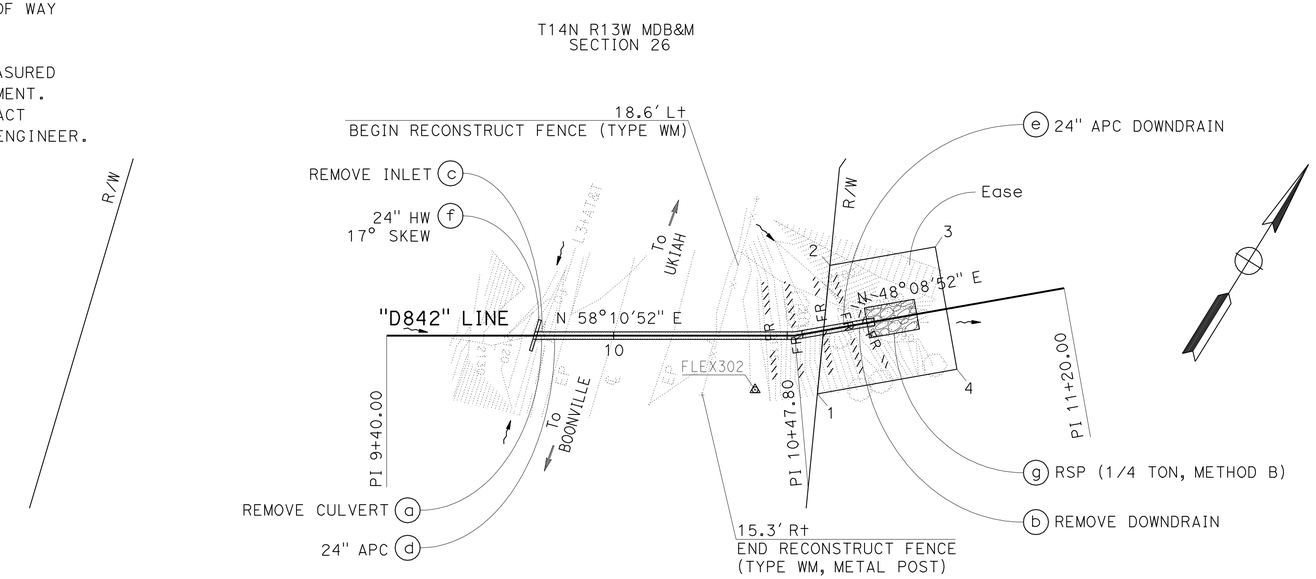

POINT	STATION	OFFSET
1	10+50.96	16.14' Rt
2	10+60.13	16.67' Lt
3	10+88.43	16.67' Lt
4	10+88.43	16.14' Rt

DRAINAGE SYSTEM 39
ROUTE 253
PM 8.42
SCALE: 1" = 20'

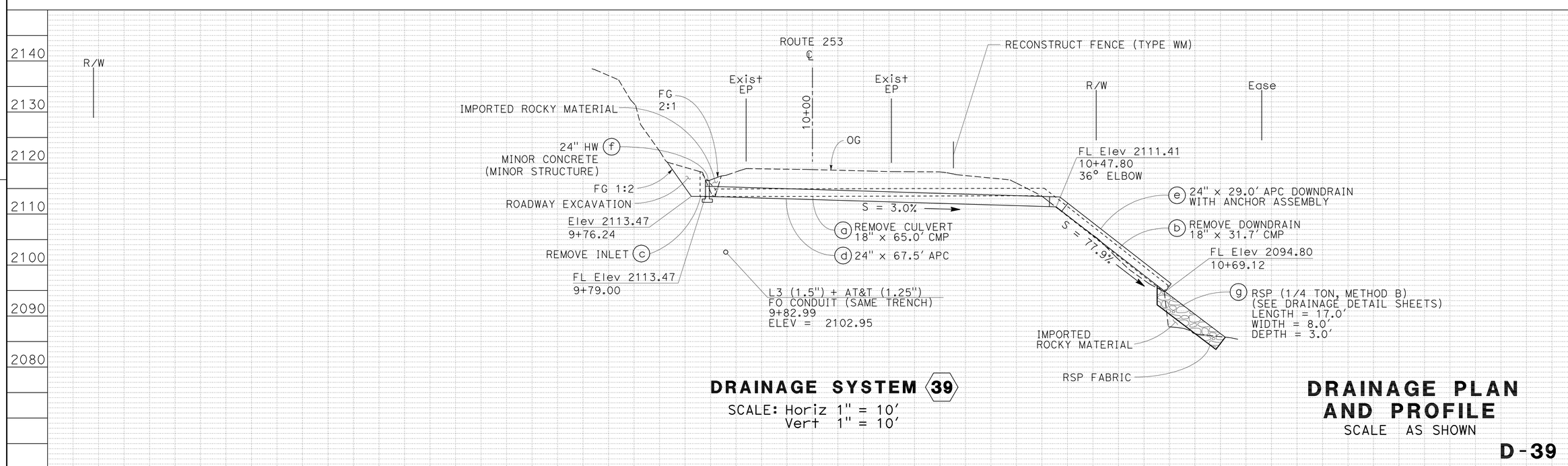

DRAINAGE SYSTEM 39
SCALE: Horiz 1" = 10'
Vert 1" = 10'

DRAINAGE PLAN AND PROFILE
SCALE AS SHOWN

D-39

W. K. MACK	11/23/09
REVISED BY	DATE REVISED
W. KEITH MACK	SARJU PATEL
CALCULATED-DESIGNED BY	CHECKED BY
FUNCTIONAL SUPERVISOR	ROBERT POLGAR

STATE OF CALIFORNIA - DEPARTMENT OF TRANSPORTATION
Caltrans
03-DESIGN

LAST REVISION 11-23-09
DATE PLOTTED => 15-APR-2010
TIME PLOTTED => 14:45

Dist	COUNTY	ROUTE	POST MILES TOTAL PROJECT	SHEET No.	TOTAL SHEETS
01	Men	128,253	Var	43	106

REGISTERED CIVIL ENGINEER 11-23-09 DATE

4-12-10
PLANS APPROVAL DATE

REGISTERED PROFESSIONAL ENGINEER W. KEITH MACK No. C 73964 Exp. 6-30-11 CIVIL STATE OF CALIFORNIA

THE STATE OF CALIFORNIA OR ITS OFFICERS OR AGENTS SHALL NOT BE RESPONSIBLE FOR THE ACCURACY OR COMPLETENESS OF SCANNED COPIES OF THIS PLAN SHEET.

NOTES:

1. FOR ACCURATE RIGHT OF WAY DATA, CONTACT RIGHT OF WAY ENGINEERING AT DISTRICT OFFICE.
2. THIS PLAN ACCURATE FOR DRAINAGE WORK ONLY.

T14N R13W MDB&M
SECTION 24

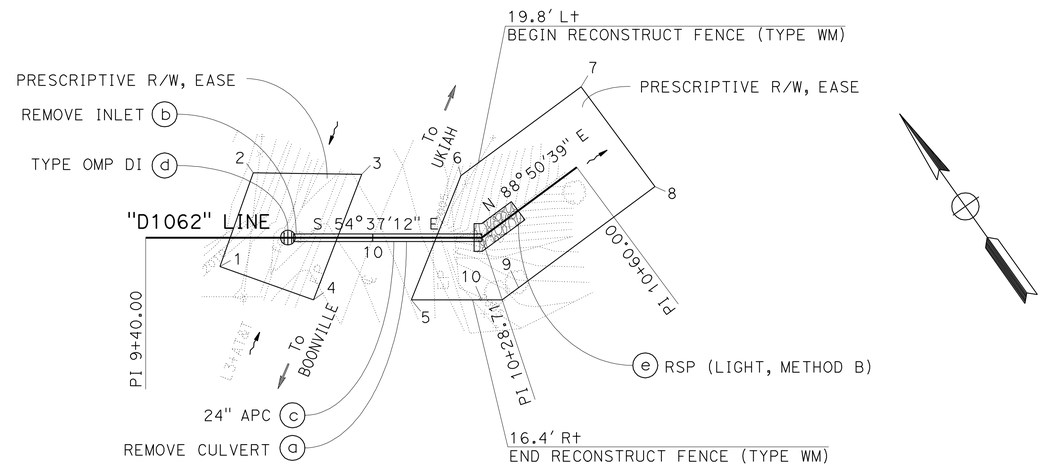

POINT	STATION	OFFSET
1	9+59.62	7.59' Rt
2	9+68.44	17.13' Lt
3	9+57.09	16.75' Lt
4	9+44.35	16.41' Rt

POINT	STATION	OFFSET
5	10+10.22	16.40' Rt
6	10+23.26	16.40' Lt
7	10+73.56	16.40' Lt
8	10+73.56	16.40' Rt
9	10+28.72	16.40' Rt
10	10+28.70	16.40' Rt

DRAINAGE SYSTEM 40

ROUTE 253
PM 10.62
SCALE: 1" = 20'

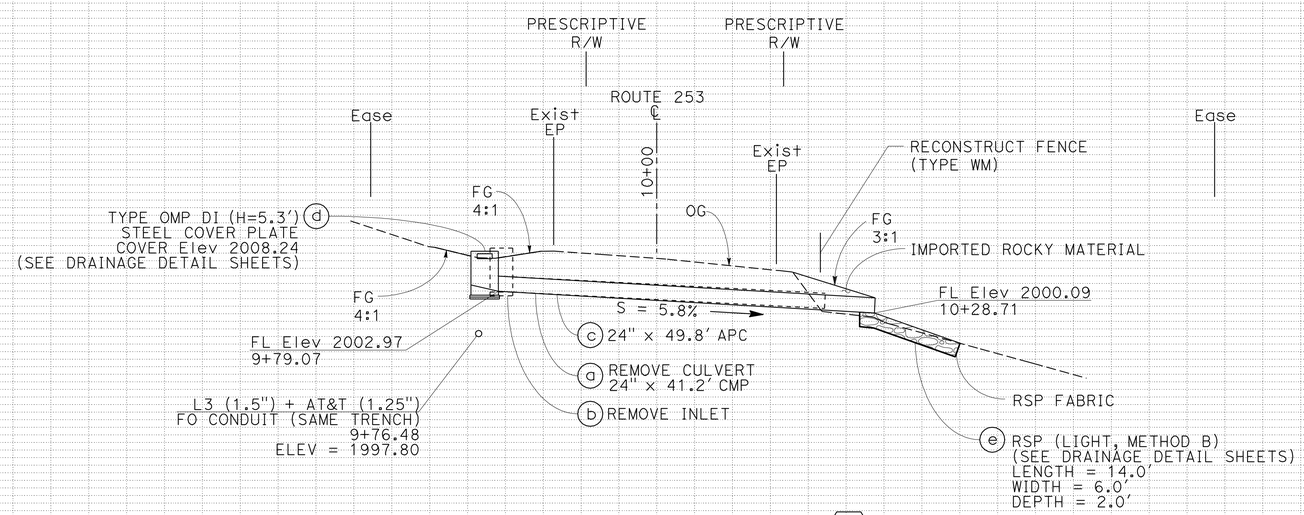

DRAINAGE SYSTEM 40

SCALE: Horiz 1" = 10'
Vert 1" = 10'

DRAINAGE PLAN AND PROFILE

SCALE AS SHOWN

D-40

REVISED BY	DATE REVISED
W. K. MACK	11/23/09

CALCULATED-DESIGNED BY: W. KEITH MACK
CHECKED BY: SARJU PATEL

FUNCTIONAL SUPERVISOR: ROBERT POLGAR

STATE OF CALIFORNIA - DEPARTMENT OF TRANSPORTATION
Caltrans
03-DESIGN

LAST REVISION 11-23-09
DATE PLOTTED => 15-APR-2010
TIME PLOTTED => 14:45

Dist	COUNTY	ROUTE	POST MILES TOTAL PROJECT	SHEET No.	TOTAL SHEETS
01	Men	128,253	Var	44	106

REGISTERED CIVIL ENGINEER 11-23-09 DATE

4-12-10
PLANS APPROVAL DATE

REGISTERED PROFESSIONAL ENGINEER W. KEITH MACK No. C 73964 Exp. 6-30-11 CIVIL STATE OF CALIFORNIA

THE STATE OF CALIFORNIA OR ITS OFFICERS OR AGENTS SHALL NOT BE RESPONSIBLE FOR THE ACCURACY OR COMPLETENESS OF SCANNED COPIES OF THIS PLAN SHEET.

NOTES:

1. FOR ACCURATE RIGHT OF WAY DATA, CONTACT RIGHT OF WAY ENGINEERING AT DISTRICT OFFICE.
2. THIS PLAN ACCURATE FOR DRAINAGE WORK ONLY.
3. THE ANGLE OF EACH ELBOW IS APPROXIMATE. THE EXACT ANGLE WILL BE DETERMINED IN THE FIELD BY THE ENGINEER.

POINT	STATION	OFFSET
1	9+61.24	4.12′ R+
2	9+74.53	18.51′ L+
3	9+78.11	16.41′ L+
4	9+64.44	6.00′ R+

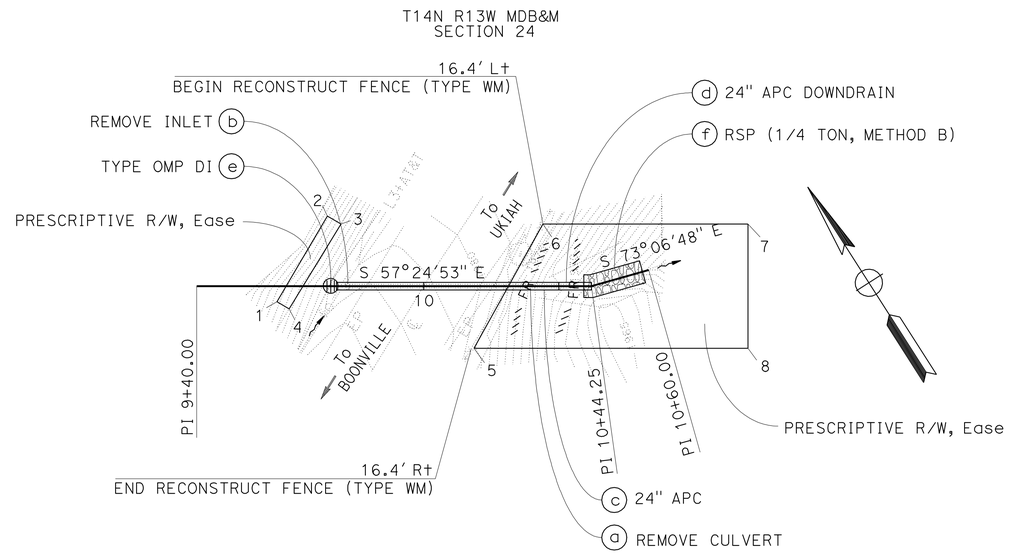

POINT	STATION	OFFSET
5	10+13.22	16.40′ R+
6	10+31.43	16.40′ L+
7	10+85.63	4.60′ L+
8	10+85.60	26.98′ R+

DRAINAGE SYSTEM 41

ROUTE 253
PM 10.68
SCALE: 1" = 20′

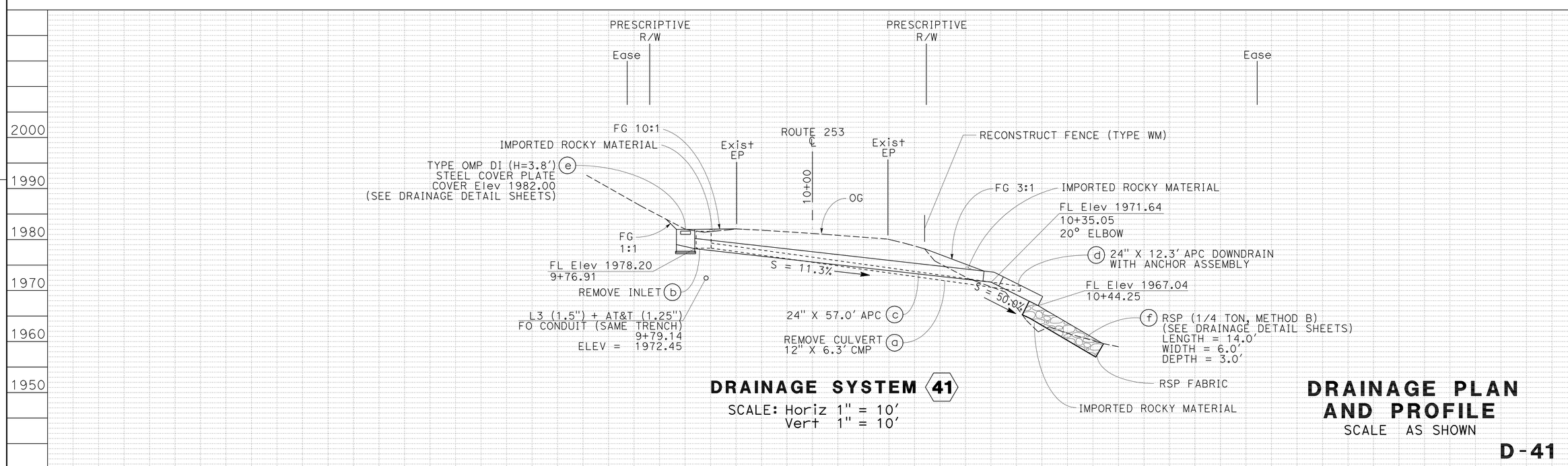

DRAINAGE SYSTEM 41

SCALE: Horiz 1" = 10′
Vert 1" = 10′

DRAINAGE PLAN AND PROFILE

SCALE AS SHOWN

D-41

W. K. MACK	11/23/09
REVISED BY	DATE REVISED
W. KEITH MACK	SARJU PATEL
CALCULATED-DESIGNED BY	CHECKED BY
FUNCTIONAL SUPERVISOR	ROBERT POLGAR

STATE OF CALIFORNIA - DEPARTMENT OF TRANSPORTATION
Caltrans 03-DESIGN

LAST REVISION 11-23-09
DATE PLOTTED => 15-APR-2010
TIME PLOTTED => 14:45

Dist	COUNTY	ROUTE	POST MILES TOTAL PROJECT	SHEET No.	TOTAL SHEETS
01	Men	128,253	Var	45	106

REGISTERED CIVIL ENGINEER 11-23-09 DATE

4-12-10
PLANS APPROVAL DATE

REGISTERED PROFESSIONAL ENGINEER W. KEITH MACK No. C 73964 Exp. 6-30-11 CIVIL STATE OF CALIFORNIA

THE STATE OF CALIFORNIA OR ITS OFFICERS OR AGENTS SHALL NOT BE RESPONSIBLE FOR THE ACCURACY OR COMPLETENESS OF SCANNED COPIES OF THIS PLAN SHEET.

NOTES:

1. FOR ACCURATE RIGHT OF WAY DATA, CONTACT RIGHT OF WAY ENGINEERING AT DISTRICT OFFICE.
2. THIS PLAN ACCURATE FOR DRAINAGE WORK ONLY.

T14N R13W MDB&M
SECTION 24

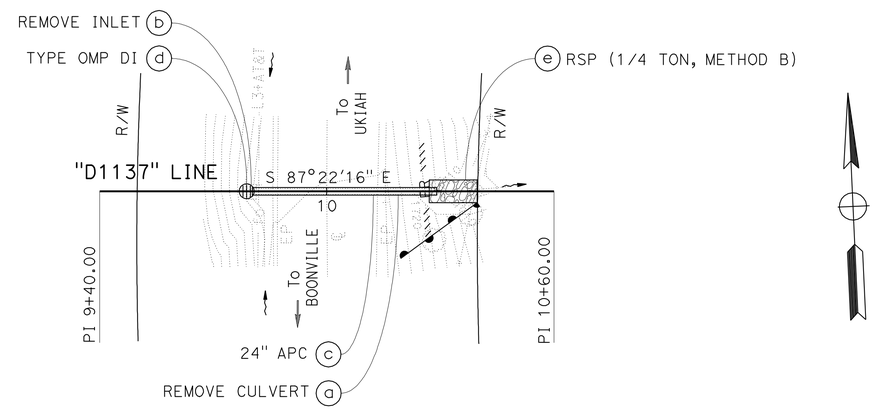

DRAINAGE SYSTEM 42

ROUTE 253
PM 11.37
SCALE: 1" = 20'

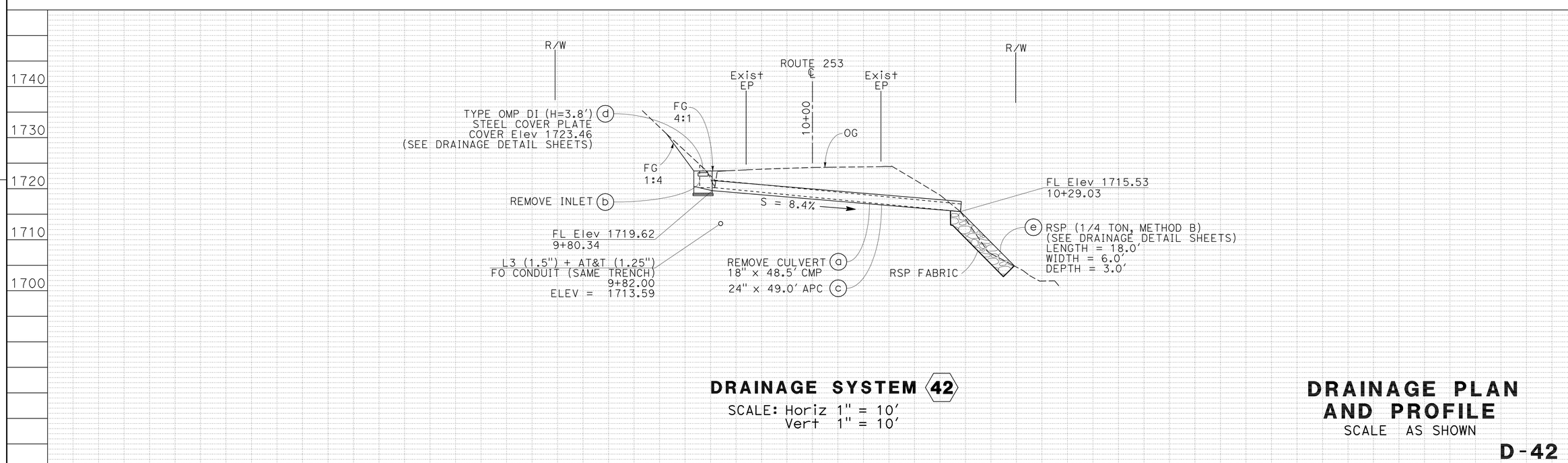

DRAINAGE SYSTEM 42

SCALE: Horiz 1" = 10'
Vert 1" = 10'

DRAINAGE PLAN AND PROFILE

SCALE AS SHOWN

D-42

W. K. MACK	11/23/09
REVISED BY	DATE REVISED
W. KEITH MACK	SARJU PATEL
CALCULATED-DESIGNED BY	CHECKED BY
FUNCTIONAL SUPERVISOR	ROBERT POLGAR

STATE OF CALIFORNIA - DEPARTMENT OF TRANSPORTATION
Caltrans 03-DESIGN

LAST REVISION 11-23-09
DATE PLOTTED => 15-APR-2010
TIME PLOTTED => 14:45

Dist	COUNTY	ROUTE	POST MILES TOTAL PROJECT	SHEET No.	TOTAL SHEETS
01	Men	128,253	Var	46	106

REGISTERED CIVIL ENGINEER 11-23-09 DATE

4-12-10
PLANS APPROVAL DATE

REGISTERED PROFESSIONAL ENGINEER W. KEITH MACK No. C 73964 Exp. 6-30-11 CIVIL STATE OF CALIFORNIA

THE STATE OF CALIFORNIA OR ITS OFFICERS OR AGENTS SHALL NOT BE RESPONSIBLE FOR THE ACCURACY OR COMPLETENESS OF SCANNED COPIES OF THIS PLAN SHEET.

NOTES:

1. FOR ACCURATE RIGHT OF WAY DATA, CONTACT RIGHT OF WAY ENGINEERING AT DISTRICT OFFICE.
2. THIS PLAN ACCURATE FOR DRAINAGE WORK ONLY.
3. CONTRACTOR TO COORDINATE WITH THE ENGINEER TO PROTECT IN PLACE THE UNDERGROUND FO LINE. THE ENGINEER IS TO BE CONTACTED A MINIMUM OF 5 WORKING DAYS PRIOR TO WORKING AT THIS LOCATION.

T14N R13W MDB&M
SECTION 13

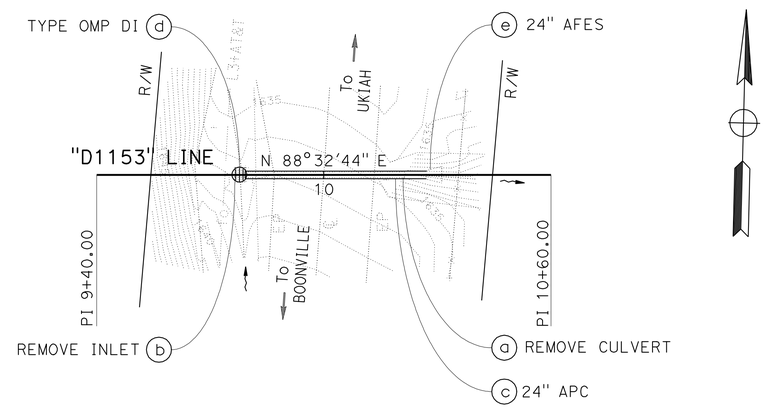

DRAINAGE SYSTEM 43

ROUTE 253
PM 11.53
SCALE: 1" = 20'

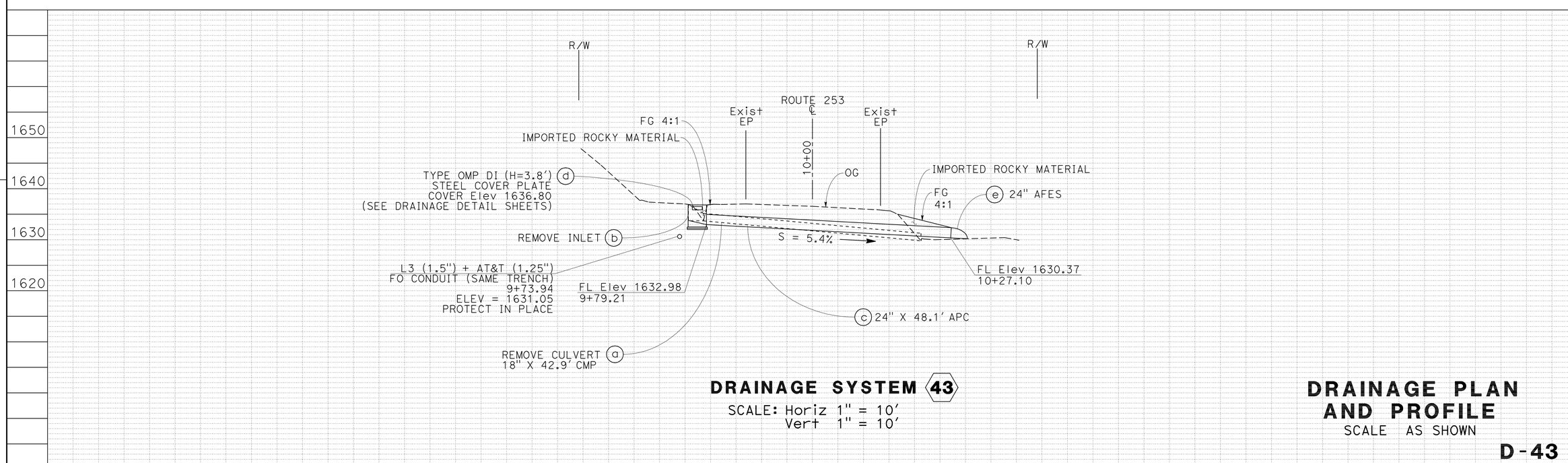

DRAINAGE SYSTEM 43

SCALE: Horiz 1" = 10'
Vert 1" = 10'

DRAINAGE PLAN AND PROFILE

SCALE AS SHOWN

D-43

STATE OF CALIFORNIA - DEPARTMENT OF TRANSPORTATION
Caltrans 03-DESIGN

FUNCTIONAL SUPERVISOR: ROBERT POLGAR

CALCULATED-DESIGNED BY: W. KEITH MACK
CHECKED BY: SARJU PATEL

REVISED BY: W. K. MACK
DATE REVISED: 11/23/09

LAST REVISION 11-23-09
DATE PLOTTED => 15-APR-2010
TIME PLOTTED => 14:45

Dist	COUNTY	ROUTE	POST MILES TOTAL PROJECT	SHEET No.	TOTAL SHEETS
01	Men	128,253	Var	47	106

REGISTERED CIVIL ENGINEER 11-23-09 DATE

4-12-10
PLANS APPROVAL DATE

REGISTERED PROFESSIONAL ENGINEER W. KEITH MACK No. C 73964 Exp. 6-30-11 CIVIL STATE OF CALIFORNIA

THE STATE OF CALIFORNIA OR ITS OFFICERS OR AGENTS SHALL NOT BE RESPONSIBLE FOR THE ACCURACY OR COMPLETENESS OF SCANNED COPIES OF THIS PLAN SHEET.

NOTES:

1. FOR ACCURATE RIGHT OF WAY DATA, CONTACT RIGHT OF WAY ENGINEERING AT DISTRICT OFFICE.
2. THIS PLAN ACCURATE FOR DRAINAGE WORK ONLY.
3. DRAINAGE INLET SHALL BE SET TO PROFILE GRADE OF OG.

T14N R13W MDB&M
SECTION 13

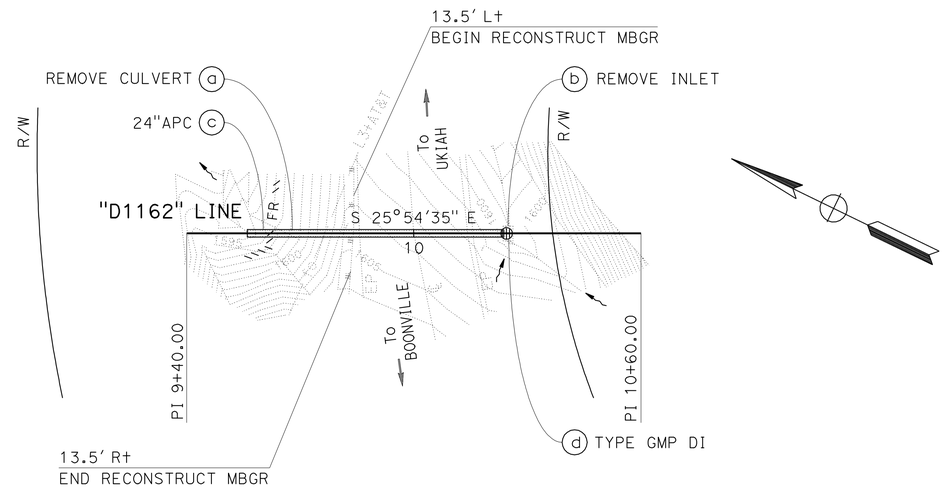

SUHV100

DRAINAGE SYSTEM 44
ROUTE 253
PM 11.62
SCALE: 1" = 20'

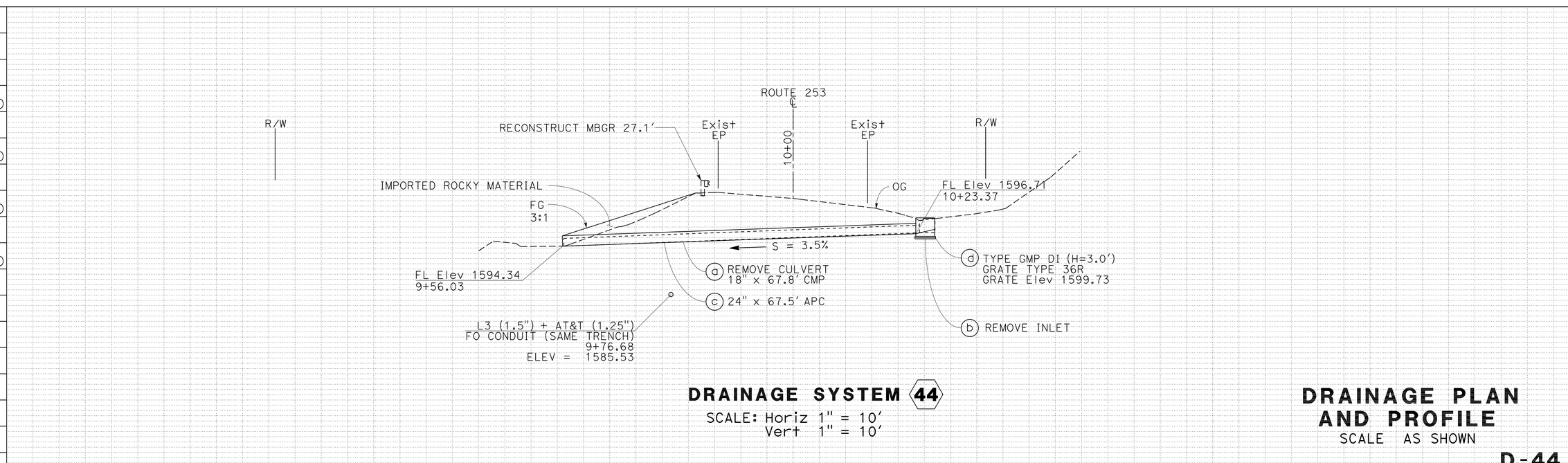

DRAINAGE SYSTEM 44
SCALE: Horiz 1" = 10'
Vert 1" = 10'

DRAINAGE PLAN AND PROFILE
SCALE AS SHOWN

D-44

W. K. MACK	11/23/09
REVISED BY	DATE REVISED
W. KEITH MACK	SARJU PATEL
CALCULATED-DESIGNED BY	CHECKED BY
FUNCTIONAL SUPERVISOR	ROBERT POLGAR

STATE OF CALIFORNIA - DEPARTMENT OF TRANSPORTATION
Caltrans
03-DESIGN

LAST REVISION 11-23-09
DATE PLOTTED => 15-APR-2010
TIME PLOTTED => 14:45

Dist	COUNTY	ROUTE	POST MILES TOTAL PROJECT	SHEET No.	TOTAL SHEETS
01	Men	128,253	Var	48	106

REGISTERED CIVIL ENGINEER 11-23-09 DATE

4-12-10
PLANS APPROVAL DATE

REGISTERED PROFESSIONAL ENGINEER W. KEITH MACK No. C 73964 Exp. 6-30-11 CIVIL STATE OF CALIFORNIA

THE STATE OF CALIFORNIA OR ITS OFFICERS OR AGENTS SHALL NOT BE RESPONSIBLE FOR THE ACCURACY OR COMPLETENESS OF SCANNED COPIES OF THIS PLAN SHEET.

NOTES:

1. FOR ACCURATE RIGHT OF WAY DATA, CONTACT RIGHT OF WAY ENGINEERING AT DISTRICT OFFICE.
2. THIS PLAN ACCURATE FOR DRAINAGE WORK ONLY.
3. INLET AND/OR OUTLET STRUCTURE SKEW ANGLE IS MEASURED FROM A LINE PERPENDICULAR TO THE CULVERT ALIGNMENT.

T14N R13W MDB&M
SECTION 13

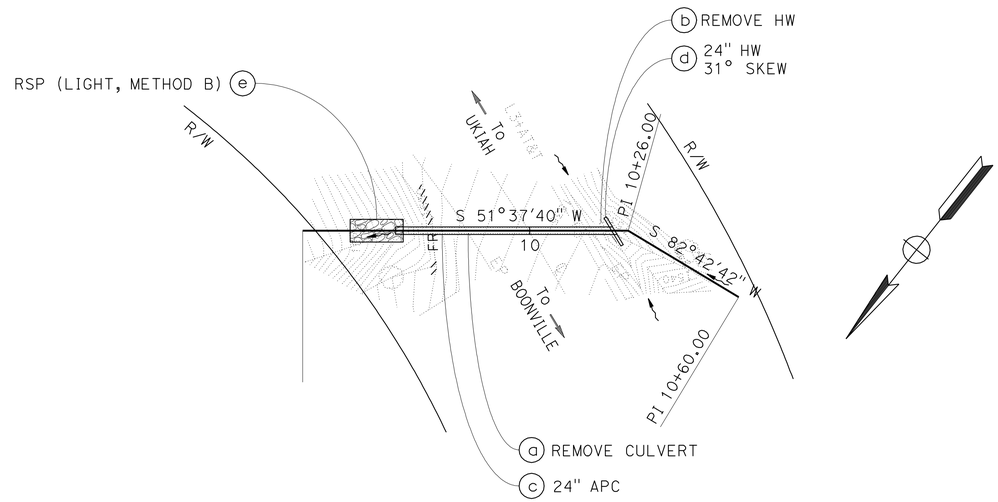

DRAINAGE SYSTEM (45)

ROUTE 253
PM 11.74
SCALE: 1" = 20'

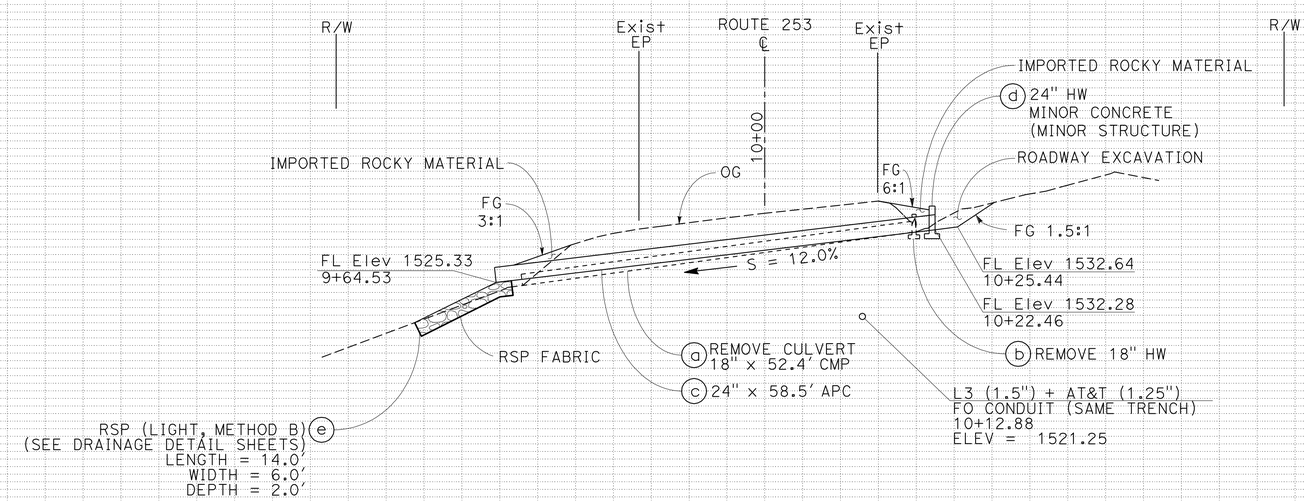

DRAINAGE SYSTEM (45)

SCALE: Horiz 1" = 10'
Vert 1" = 10'

DRAINAGE PLAN AND PROFILE

SCALE AS SHOWN

D-45

Station	9+40	9+60	9+80	10+00	10+20	10+40	10+60
CY Exc							
CY Emb							

STATE OF CALIFORNIA - DEPARTMENT OF TRANSPORTATION
Caltrans 03-DESIGN

FUNCTIONAL SUPERVISOR: ROBERT POLGAR
CALCULATED-DESIGNED BY: W. KEITH MACK
CHECKED BY: SARJU PATEL
REVISED BY: W. K. MACK
DATE REVISED: 11/23/09

LAST REVISION 11-23-09
DATE PLOTTED => 15-APR-2010
TIME PLOTTED => 14:45

Dist	COUNTY	ROUTE	POST MILES TOTAL PROJECT	SHEET No.	TOTAL SHEETS
01	Men	128,253	Var	49	106

REGISTERED CIVIL ENGINEER 11-23-09 DATE

4-12-10
PLANS APPROVAL DATE

REGISTERED PROFESSIONAL ENGINEER W. KEITH MACK No. C 73964 Exp. 6-30-11 CIVIL STATE OF CALIFORNIA

THE STATE OF CALIFORNIA OR ITS OFFICERS OR AGENTS SHALL NOT BE RESPONSIBLE FOR THE ACCURACY OR COMPLETENESS OF SCANNED COPIES OF THIS PLAN SHEET.

NOTES:

1. FOR ACCURATE RIGHT OF WAY DATA, CONTACT RIGHT OF WAY ENGINEERING AT DISTRICT OFFICE.
2. THIS PLAN ACCURATE FOR DRAINAGE WORK ONLY.
3. THE ANGLE OF EACH ELBOW IS APPROXIMATE. THE EXACT ANGLE WILL BE DETERMINED IN THE FIELD BY THE ENGINEER.

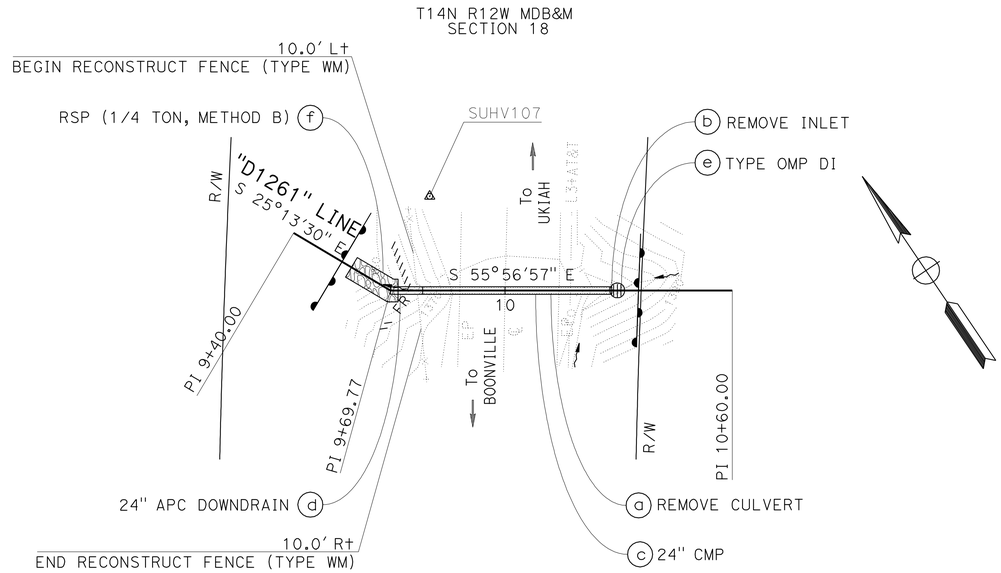

DRAINAGE SYSTEM 46

ROUTE 253
PM 12.61
SCALE: 1" = 20'

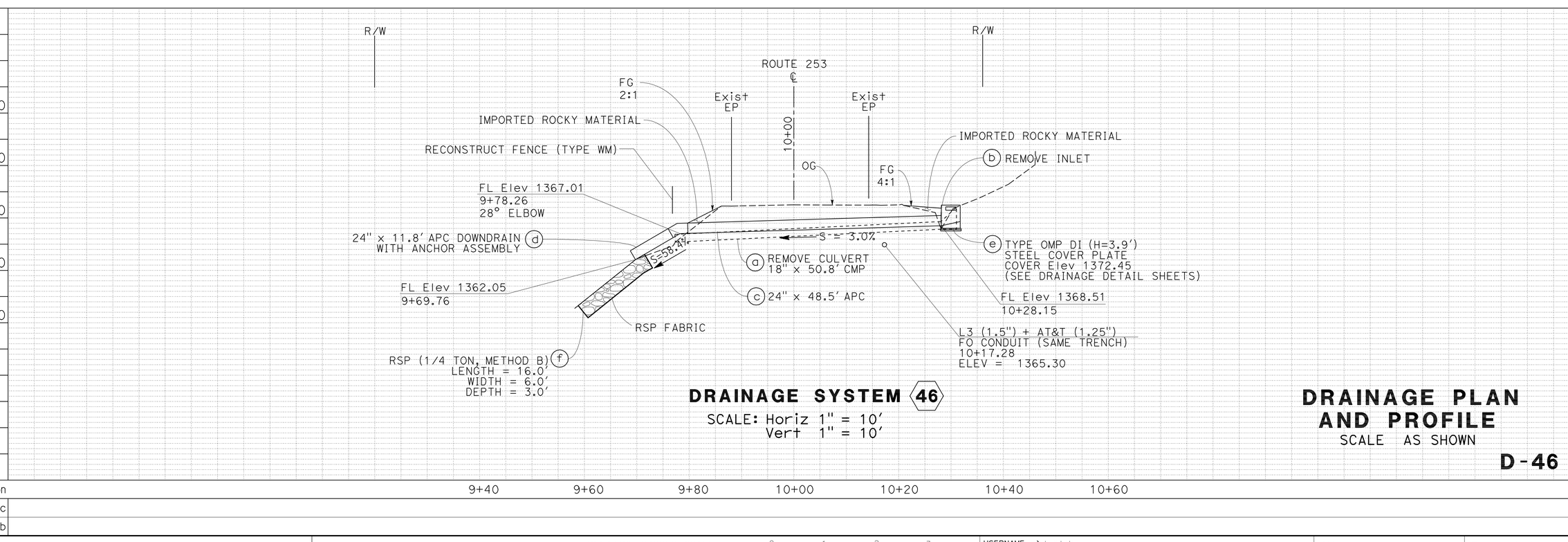

DRAINAGE SYSTEM 46

SCALE: Horiz 1" = 10'
Vert 1" = 10'

DRAINAGE PLAN AND PROFILE

SCALE AS SHOWN

D-46

W. K. MACK	11/23/09
REVISED BY	DATE REVISED
W. KEITH MACK	SARJU PATEL
CALCULATED-DESIGNED BY	CHECKED BY
FUNCTIONAL SUPERVISOR	ROBERT POLGAR

STATE OF CALIFORNIA - DEPARTMENT OF TRANSPORTATION
Caltrans
03-DESIGN

LAST REVISION 11-23-09
DATE PLOTTED => 15-APR-2010
TIME PLOTTED => 14:45

Dist	COUNTY	ROUTE	POST MILES TOTAL PROJECT	SHEET No.	TOTAL SHEETS
01	Men	128,253	Var	50	106

REGISTERED CIVIL ENGINEER 11-23-09 DATE

4-12-10
PLANS APPROVAL DATE

REGISTERED PROFESSIONAL ENGINEER W. KEITH MACK No. C 73964 Exp. 6-30-11 CIVIL STATE OF CALIFORNIA

THE STATE OF CALIFORNIA OR ITS OFFICERS OR AGENTS SHALL NOT BE RESPONSIBLE FOR THE ACCURACY OR COMPLETENESS OF SCANNED COPIES OF THIS PLAN SHEET.

NOTES:

1. FOR ACCURATE RIGHT OF WAY DATA, CONTACT RIGHT OF WAY ENGINEERING AT DISTRICT OFFICE.
2. THIS PLAN ACCURATE FOR DRAINAGE WORK ONLY.
3. INLET AND/OR OUTLET STRUCTURE SKEW ANGLE IS MEASURED FROM A LINE PERPENDICULAR TO THE CULVERT ALIGNMENT.
4. DRAINAGE INLET SHALL BE SET TO PROFILE GRADE OF FG.
5. EXACT PLACEMENT OF RSP TO BE DETERMINED IN FIELD BY THE ENGINEER.

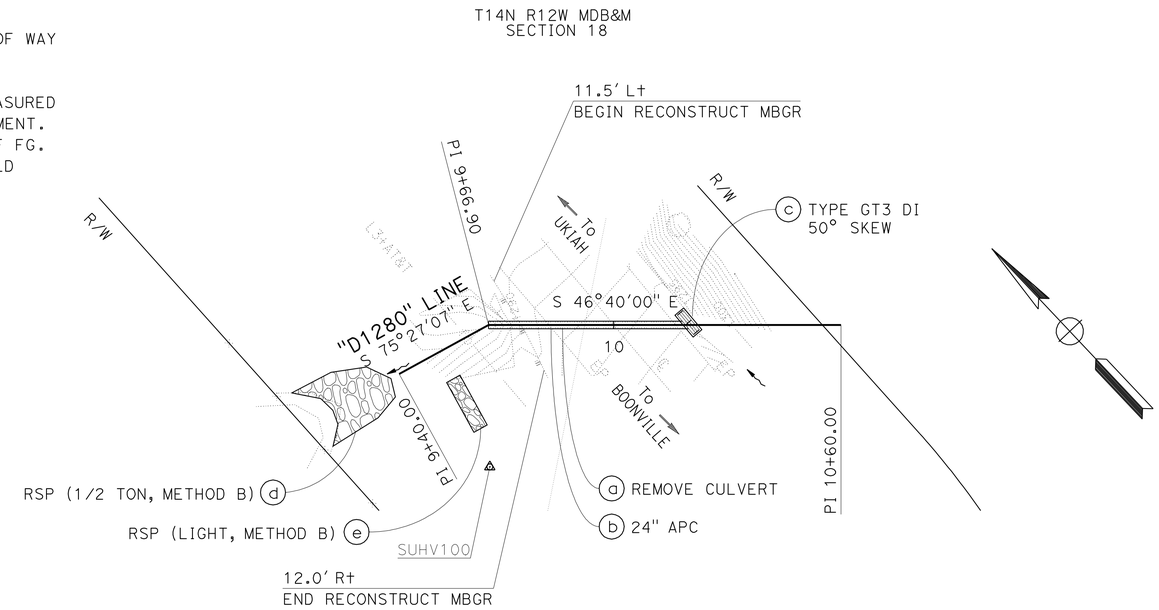

DRAINAGE SYSTEM 47

ROUTE 253
PM 12.80
SCALE: 1" = 20'

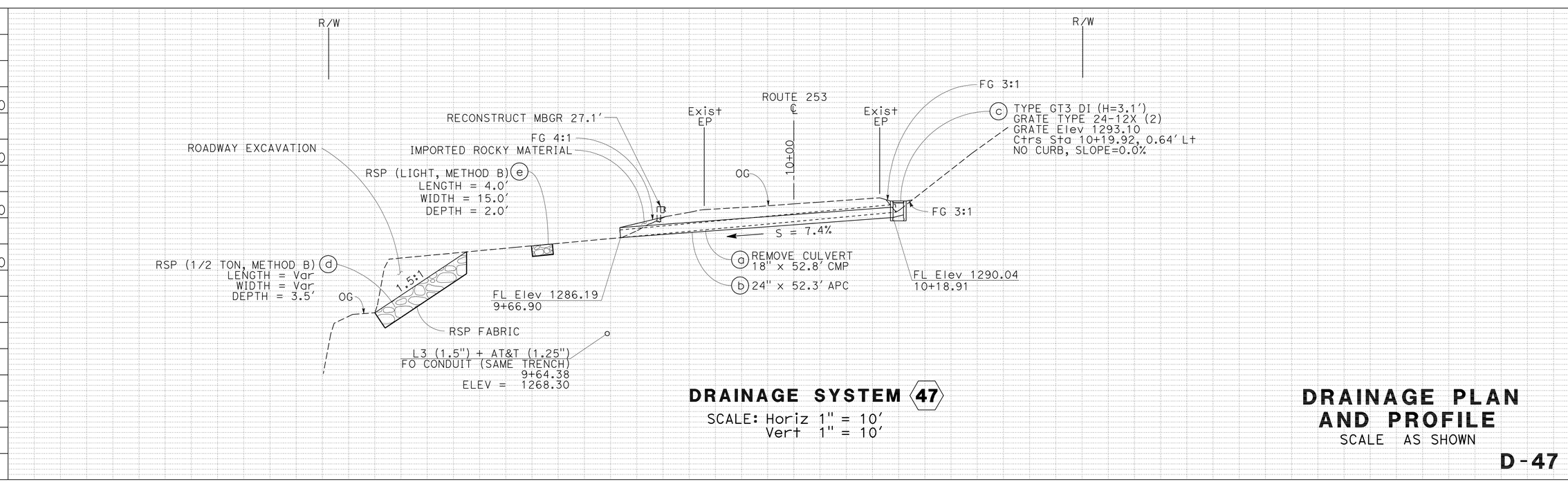

DRAINAGE SYSTEM 47

SCALE: Horiz 1" = 10'
Vert 1" = 10'

DRAINAGE PLAN AND PROFILE

SCALE AS SHOWN

D-47

REVISED BY	W. K. MACK
DATE REVISED	02/23/10
CALCULATED-DESIGNED BY	W. KEITH MACK
CHECKED BY	SARJU PATEL
FUNCTIONAL SUPERVISOR	ROBERT POLGAR

STATE OF CALIFORNIA - DEPARTMENT OF TRANSPORTATION
Caltrans
03-DESIGN

LAST REVISION 02-23-10
DATE PLOTTED => 15-APR-2010
TIME PLOTTED => 14:45

Dist	COUNTY	ROUTE	POST MILES TOTAL PROJECT	SHEET No.	TOTAL SHEETS
01	Men	128,253	Var	51	106

REGISTERED CIVIL ENGINEER 11-23-09 DATE

4-12-10
PLANS APPROVAL DATE

REGISTERED PROFESSIONAL ENGINEER W. KEITH MACK No. C 73964 Exp. 6-30-11 CIVIL STATE OF CALIFORNIA

THE STATE OF CALIFORNIA OR ITS OFFICERS OR AGENTS SHALL NOT BE RESPONSIBLE FOR THE ACCURACY OR COMPLETENESS OF SCANNED COPIES OF THIS PLAN SHEET.

NOTES:

1. FOR ACCURATE RIGHT OF WAY DATA, CONTACT RIGHT OF WAY ENGINEERING AT DISTRICT OFFICE.
2. THIS PLAN ACCURATE FOR DRAINAGE WORK ONLY.
3. DRAINAGE INLET SHALL BE SET TO PROFILE GRADE OF OG.
4. THE ANGLE OF EACH ELBOW IS APPROXIMATE. THE EXACT ANGLE WILL BE DETERMINED IN THE FIELD BY THE ENGINEER.

T14N R12W MDB&M
SECTION 17

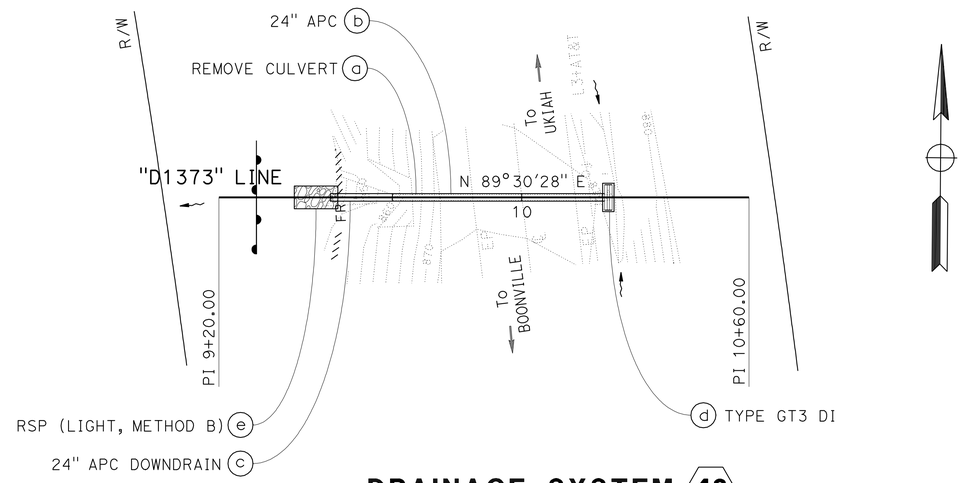

DRAINAGE SYSTEM (48)
ROUTE 253
PM 13.73
SCALE: 1" = 20'

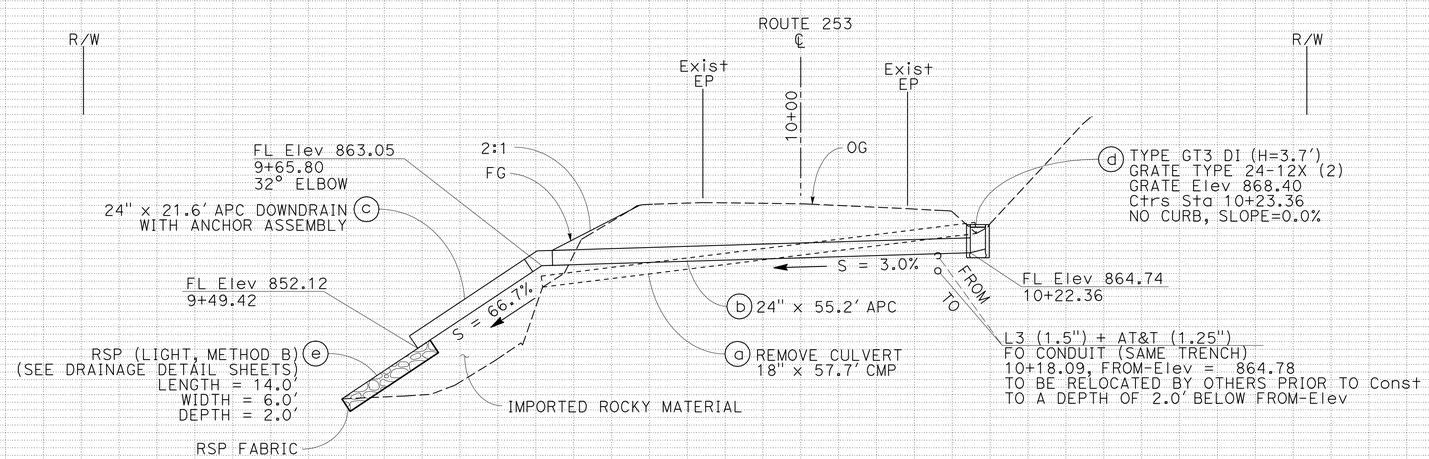

DRAINAGE SYSTEM (48)
SCALE: Horiz 1" = 10'
Vert 1" = 10'

DRAINAGE PLAN AND PROFILE
SCALE AS SHOWN

D-48

Station	9+20	9+40	9+60	9+80	10+00	10+20	10+40	10+60
CY Exc								
CY Emb								

STATE OF CALIFORNIA - DEPARTMENT OF TRANSPORTATION
Caltrans 03-DESIGN

FUNCTIONAL SUPERVISOR: ROBERT POLGAR
CALCULATED-DESIGNED BY: W. KEITH MACK
CHECKED BY: SARJU PATEL
REVISED BY: W. K. MACK
DATE REVISED: 11/23/09

LAST REVISION 11-23-09
DATE PLOTTED => 15-APR-2010
TIME PLOTTED => 15:26

Dist	COUNTY	ROUTE	POST MILES TOTAL PROJECT	SHEET No.	TOTAL SHEETS
01	Men	128,253	Var	52	106

REGISTERED CIVIL ENGINEER 11-23-09 DATE

4-12-10
PLANS APPROVAL DATE

REGISTERED PROFESSIONAL ENGINEER W. KEITH MACK No. C 73964 Exp. 6-30-11 CIVIL STATE OF CALIFORNIA

THE STATE OF CALIFORNIA OR ITS OFFICERS OR AGENTS SHALL NOT BE RESPONSIBLE FOR THE ACCURACY OR COMPLETENESS OF SCANNED COPIES OF THIS PLAN SHEET.

NOTES:

1. FOR ACCURATE RIGHT OF WAY DATA, CONTACT RIGHT OF WAY ENGINEERING AT DISTRICT OFFICE.
2. THIS PLAN ACCURATE FOR DRAINAGE WORK ONLY.
3. INLET AND/OR OUTLET STRUCTURE SKEW ANGLE IS MEASURED FROM A LINE PERPENDICULAR TO THE CULVERT ALIGNMENT.
4. DRAINAGE INLET SHALL BE SET TO PROFILE GRADE OF PAVEMENT.

T14N R12W MDB&M
SECTION 18

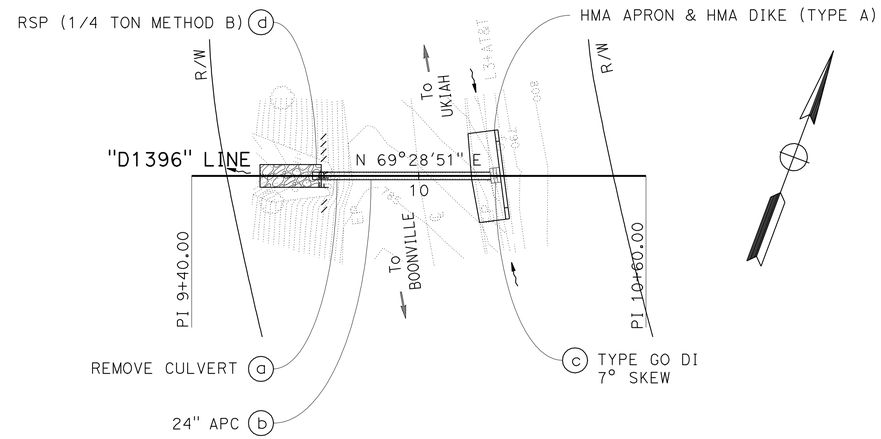

DRAINAGE SYSTEM 49

ROUTE 253
PM 13.96
SCALE: 1" = 20'

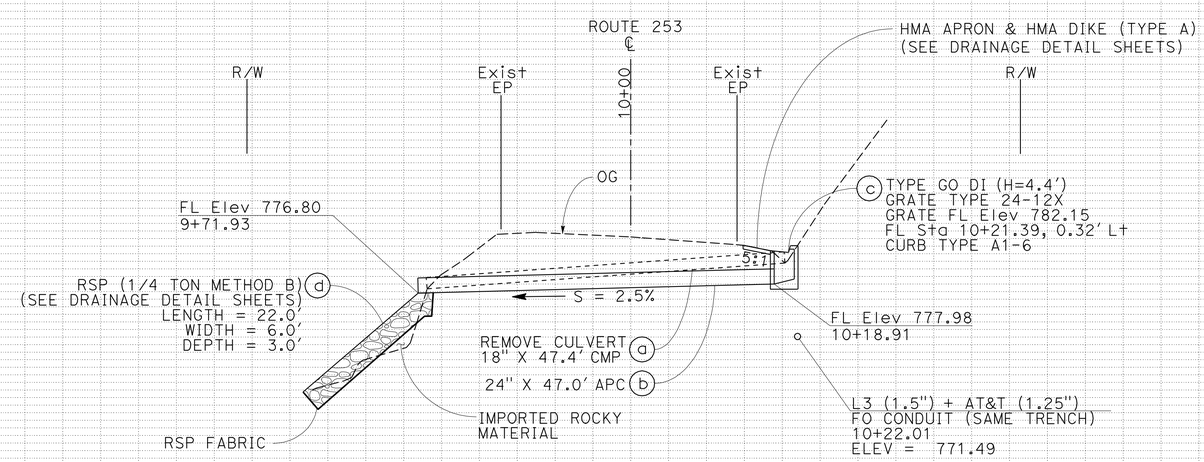

DRAINAGE SYSTEM 49

SCALE: Horiz 1" = 10'
Vert 1" = 10'

DRAINAGE PLAN AND PROFILE

SCALE AS SHOWN

D-49

Station	9+40	9+60	9+80	10+00	10+20	10+40	10+60
CY Exc							
CY Emb							

REVISED BY W. K. MACK — DATE REVISED 11/23/09
CALCULATED-DESIGNED BY W. KEITH MACK — CHECKED BY SARJU PATEL
FUNCTIONAL SUPERVISOR ROBERT POLGAR

STATE OF CALIFORNIA - DEPARTMENT OF TRANSPORTATION
Caltrans 03-DESIGN

LAST REVISION 11-23-09 — DATE PLOTTED => 15-APR-2010 — TIME PLOTTED => 15:27

Dist	COUNTY	ROUTE	POST MILES TOTAL PROJECT	SHEET No.	TOTAL SHEETS
01	Men	128,253	Var	53	106

REGISTERED CIVIL ENGINEER 11-23-09 DATE

4-12-10
PLANS APPROVAL DATE

REGISTERED PROFESSIONAL ENGINEER W. KEITH MACK No. C 73964 Exp. 6-30-11 CIVIL STATE OF CALIFORNIA

THE STATE OF CALIFORNIA OR ITS OFFICERS OR AGENTS SHALL NOT BE RESPONSIBLE FOR THE ACCURACY OR COMPLETENESS OF SCANNED COPIES OF THIS PLAN SHEET.

NOTES:

1. FOR ACCURATE RIGHT OF WAY DATA, CONTACT RIGHT OF WAY ENGINEERING AT DISTRICT OFFICE.
2. THIS PLAN ACCURATE FOR DRAINAGE WORK ONLY.

T14N R12W MDB&M
SECTION 7

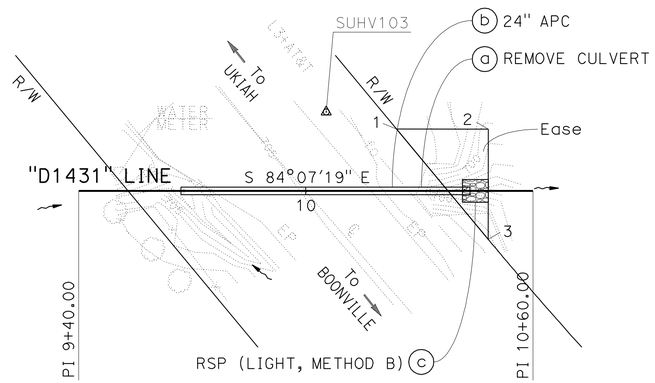

POINT	STATION	OFFSET
1	10+23.95	16.38' Lt
2	10+48.22	16.33' Lt
3	10+48.14	12.75' Rt

DRAINAGE SYSTEM 50

ROUTE 253
PM 14.31
SCALE: 1" = 20'

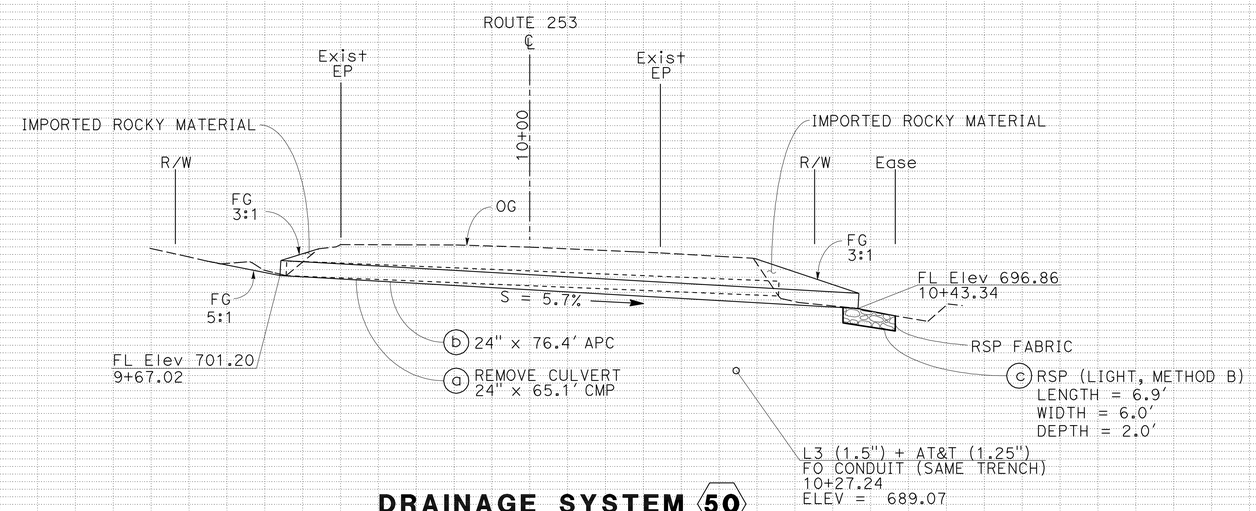

DRAINAGE SYSTEM 50

SCALE: Horiz 1" = 10'
Vert 1" = 10'

DRAINAGE PLAN AND PROFILE

SCALE AS SHOWN

D-50

W. K. MACK	02/23/10
REVISED BY	DATE REVISED
W. KEITH MACK	SARJU PATEL
CALCULATED-DESIGNED BY	CHECKED BY
FUNCTIONAL SUPERVISOR	ROBERT POLGAR

STATE OF CALIFORNIA - DEPARTMENT OF TRANSPORTATION
Caltrans
03-DESIGN

LAST REVISION 02-23-10
DATE PLOTTED => 15-APR-2010
TIME PLOTTED => 15:27

Dist	COUNTY	ROUTE	POST MILES TOTAL PROJECT	SHEET No.	TOTAL SHEETS
01	Men	128,253	Var	54	106

11-23-09
REGISTERED CIVIL ENGINEER DATE

4-12-10
PLANS APPROVAL DATE

REGISTERED PROFESSIONAL ENGINEER
W. KEITH MACK
No. C 73964
Exp. 6-30-11
CIVIL
STATE OF CALIFORNIA

THE STATE OF CALIFORNIA OR ITS OFFICERS OR AGENTS SHALL NOT BE RESPONSIBLE FOR THE ACCURACY OR COMPLETENESS OF SCANNED COPIES OF THIS PLAN SHEET.

NOTES:

1. FOR ACCURATE RIGHT OF WAY DATA, CONTACT RIGHT OF WAY ENGINEERING AT DISTRICT OFFICE.
2. THIS PLAN ACCURATE FOR DRAINAGE WORK ONLY.
3. CONTRACTOR TO COORDINATE WITH THE ENGINEER TO PROTECT IN PLACE THE UNDERGROUND WILLOW COUNTY WATERLINE.
4. THE ENGINEER IS TO BE CONTACTED A MINIMUM OF 10 DAYS PRIOR TO WORKING AT THIS LOCATION.

POINT	STATION	OFFSET
1	9+57.00	19.58′ R+
2	9+57.00	19.79′ L+
3	9+67.96	19.79′ L+
4	9+63.69	19.58′ R+

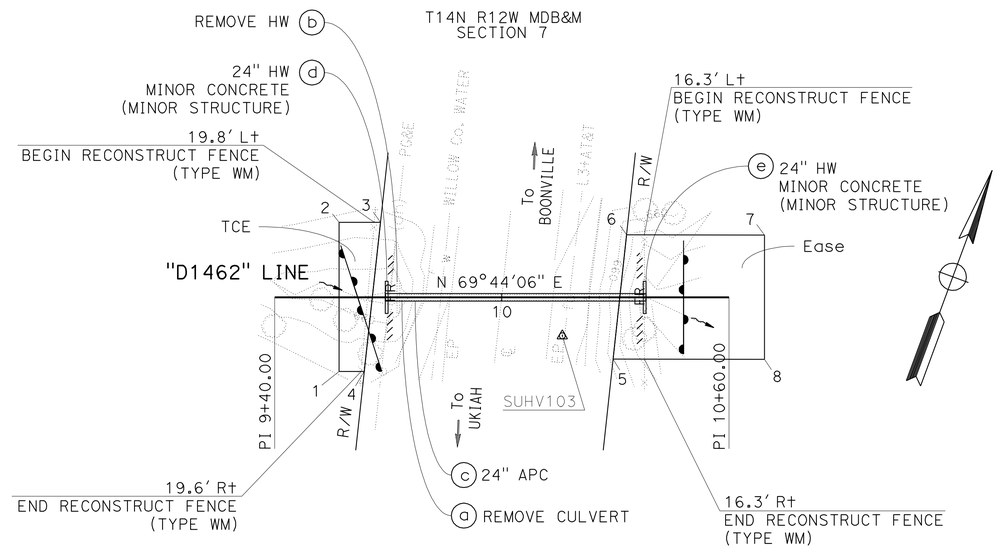

POINT	STATION	OFFSET
5	10+29.35	16.34′ R+
6	10+32.96	16.45′ L+
7	10+69.34	16.45′ L+
8	10+69.34	16.34′ R+

DRAINAGE SYSTEM (51)

ROUTE 253
PM 14.62
SCALE: 1" = 20′

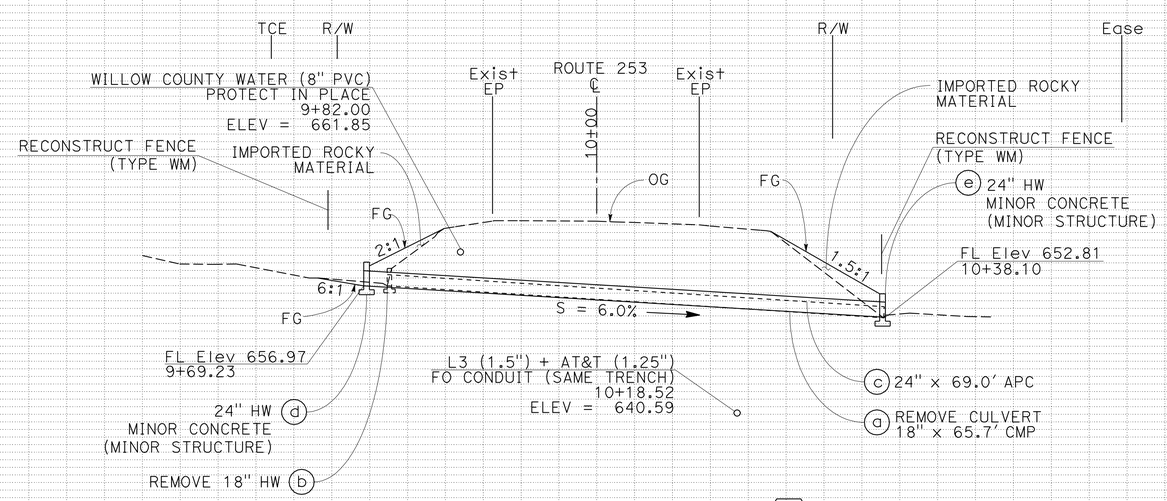

DRAINAGE SYSTEM (51)

SCALE: Horiz 1" = 10′
Vert 1" = 10′

DRAINAGE PLAN AND PROFILE

SCALE AS SHOWN

D-51

Station	9+40	9+60	9+80	10+00	10+20	10+40	10+60
CY Exc							
CY Emb							

REVISED BY: W. K. MACK — DATE REVISED: 02/23/10
CALCULATED-DESIGNED BY: W. KEITH MACK — CHECKED BY: SARJU PATEL
FUNCTIONAL SUPERVISOR: ROBERT POLGAR

STATE OF CALIFORNIA - DEPARTMENT OF TRANSPORTATION
Caltrans
03-DESIGN

LAST REVISION 02-23-10 — DATE PLOTTED => 15-APR-2010 — TIME PLOTTED => 15:27

Dist	COUNTY	ROUTE	POST MILES TOTAL PROJECT	SHEET No.	TOTAL SHEETS
01	Men	128,253	Var	55	106

REGISTERED CIVIL ENGINEER 11-23-09 DATE

4-12-10
PLANS APPROVAL DATE

REGISTERED PROFESSIONAL ENGINEER W. KEITH MACK No. C 73964 Exp. 6-30-11 CIVIL STATE OF CALIFORNIA

THE STATE OF CALIFORNIA OR ITS OFFICERS OR AGENTS SHALL NOT BE RESPONSIBLE FOR THE ACCURACY OR COMPLETENESS OF SCANNED COPIES OF THIS PLAN SHEET.

NOTES:

1. FOR ACCURATE RIGHT OF WAY DATA, CONTACT RIGHT OF WAY ENGINEERING AT DISTRICT OFFICE.
2. THIS PLAN ACCURATE FOR DRAINAGE WORK ONLY.
3. FOR WORK ON RAMP, SEE STANDARD PLAN T14 - TRAFFIC CONTROL SYSTEM FOR RAMP CLOSURE.
3. INLET AND/OR OUTLET STRUCTURE SKEW ANGLE IS MEASURED FROM A LINE PERPENDICULAR TO THE CULVERT ALIGNMENT.

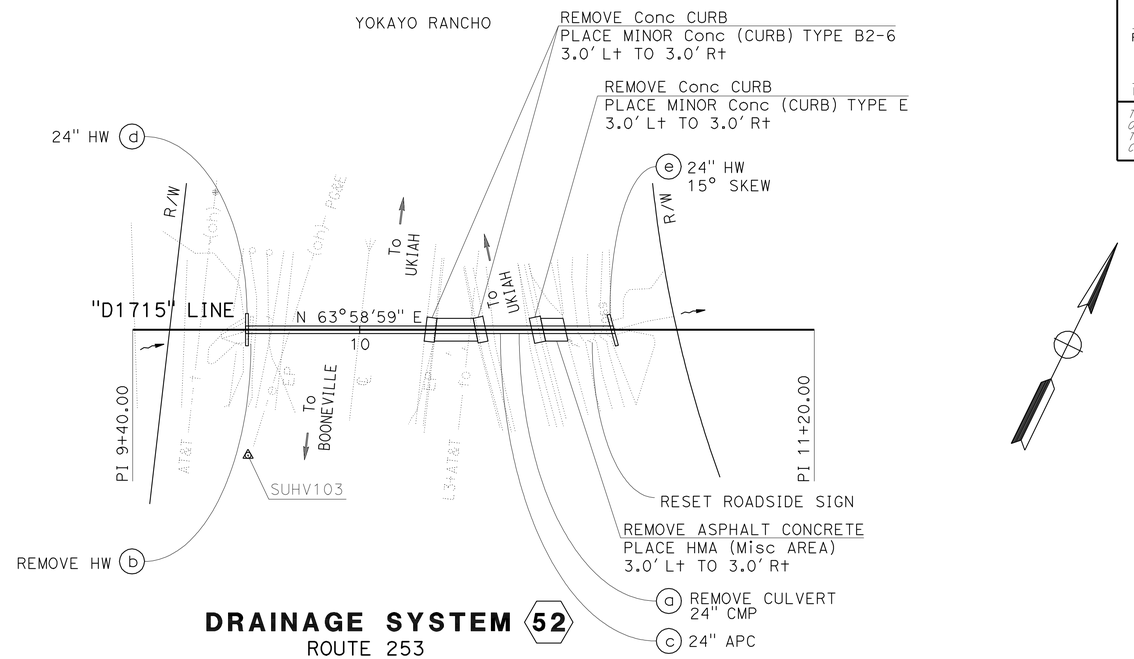

DRAINAGE SYSTEM 52
ROUTE 253
PM 17.15
SCALE: 1" = 20'

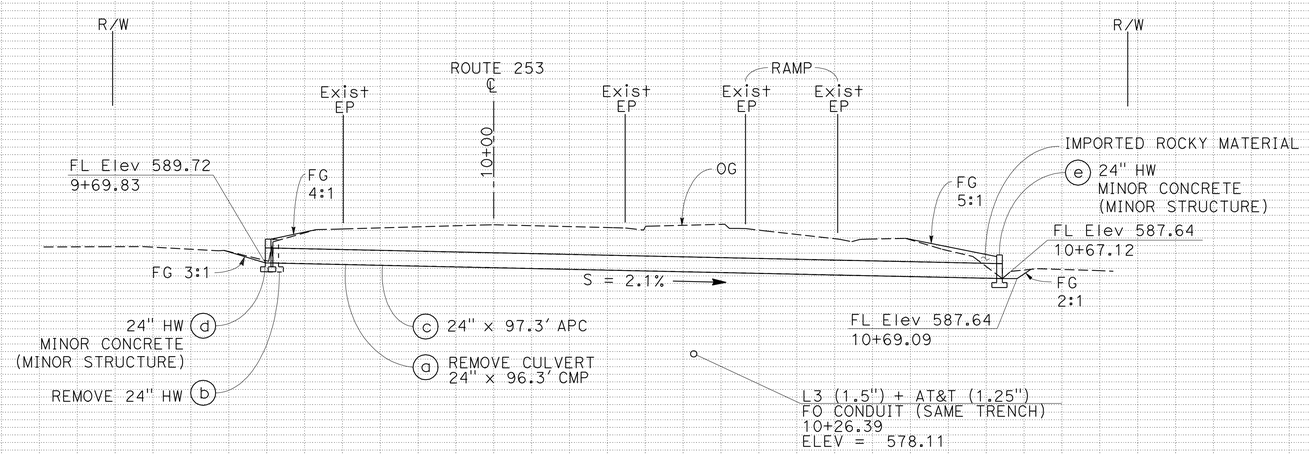

DRAINAGE SYSTEM 52
SCALE: Horiz 1" = 10'
Vert 1" = 10'

DRAINAGE PLAN AND PROFILE
SCALE AS SHOWN

D-52

REVISED BY	W. K. MACK
DATE REVISED	11/23/09
CALCULATED-DESIGNED BY	W. KEITH MACK
CHECKED BY	SARJU PATEL
FUNCTIONAL SUPERVISOR	ROBERT POLGAR

STATE OF CALIFORNIA - DEPARTMENT OF TRANSPORTATION
Caltrans
03-DESIGN

LAST REVISION 11-23-09
DATE PLOTTED => 15-APR-2010
TIME PLOTTED => 15:27

Dist	COUNTY	ROUTE	POST MILES TOTAL PROJECT	SHEET No.	TOTAL SHEETS
01	Men	128,253	Var	56	106

Sarju D. Patel 11-23-09
REGISTERED CIVIL ENGINEER DATE

4-12-10
PLANS APPROVAL DATE

REGISTERED PROFESSIONAL ENGINEER
SARJU D. PATEL
No. C 65611
Exp. 09-30-11
CIVIL
STATE OF CALIFORNIA

THE STATE OF CALIFORNIA OR ITS OFFICERS OR AGENTS SHALL NOT BE RESPONSIBLE FOR THE ACCURACY OR COMPLETENESS OF SCANNED COPIES OF THIS PLAN SHEET.

NOTE:

1. FOR LENGTH, WIDTH, AND THICKNESS OF RSP SEE DRAINAGE PLAN AND PROFILE SHEETS.

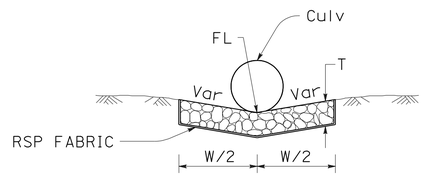

SECTION B-B

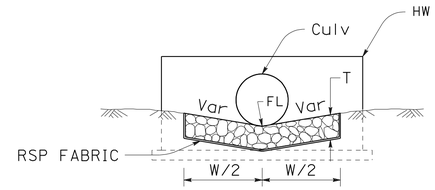

SECTION B-B

ABBREVIATIONS:

L - LENGTH OF RSP
W - WIDTH OF RSP
T - THICKNESS OF RSP

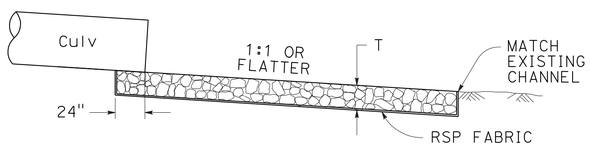

SECTION A-A

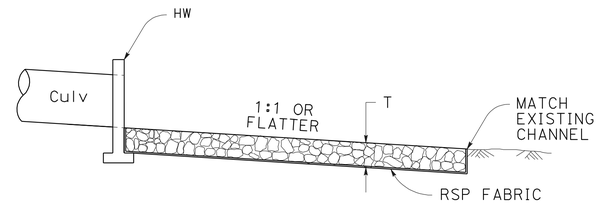

SECTION A-A

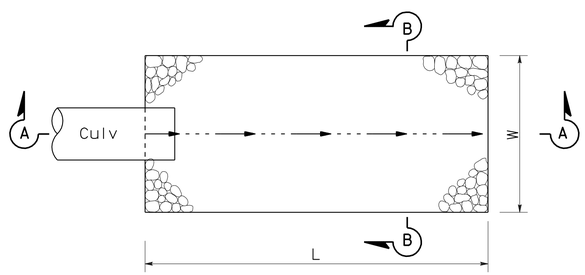

PLAN

RSP WITHOUT END TREATMENT

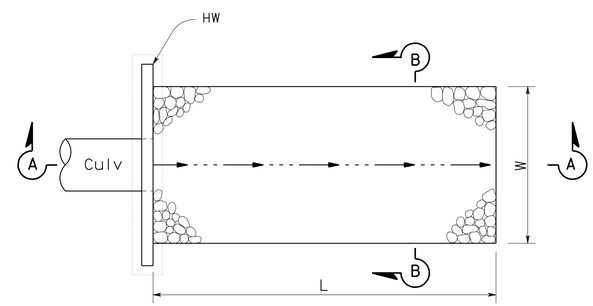

PLAN

RSP WITH HW END TREATMENT

DRAINAGE SYSTEM No.	LOCATION ROUTE	LOCATION PM
1	128	40.85
9	128	46.58
11	128	47.03
15	128	48.92
17	128	50.00
19	253	1.06
20	253	1.38
21	253	2.81

DRAINAGE SYSTEM No.	LOCATION ROUTE	LOCATION PM
22	253	2.85
23	253	2.98
25	253	3.13
32	253	5.15
36	253	6.34
37	253	6.63
38	253	8.11
39	253	8.42

DRAINAGE SYSTEM No.	LOCATION ROUTE	LOCATION PM
40	253	10.62
41	253	10.68
42	253	11.37
45	253	11.74
46	253	12.61
48	253	13.73
49	253	13.96

DRAINAGE SYSTEM No.	LOCATION ROUTE	LOCATION PM
6	128	44.75
29	253	4.25
35	253	6.17

DRAINAGE DETAILS

NO SCALE

DD-1

REVISED BY	DATE REVISED
S. PATEL	09-28-09

SARJU D. PATEL
W. KEITH MACK
CALCULATED-DESIGNED BY
CHECKED BY
FUNCTIONAL SUPERVISOR
ROBERT E. POLGAR

STATE OF CALIFORNIA - DEPARTMENT OF TRANSPORTATION
03-DESIGN
Caltrans

LAST REVISION 08-25-09
DATE PLOTTED => 15-APR-2010
TIME PLOTTED => 15:27

Dist	COUNTY	ROUTE	POST MILES TOTAL PROJECT	SHEET No.	TOTAL SHEETS
01	Men	128,253	Var	57	106

Sarju D. Patel 11-23-09
REGISTERED CIVIL ENGINEER DATE

4-12-10
PLANS APPROVAL DATE

REGISTERED PROFESSIONAL ENGINEER
SARJU D. PATEL
No. C 65611
Exp. 09-30-11
CIVIL
STATE OF CALIFORNIA

THE STATE OF CALIFORNIA OR ITS OFFICERS OR AGENTS SHALL NOT BE RESPONSIBLE FOR THE ACCURACY OR COMPLETENESS OF SCANNED COPIES OF THIS PLAN SHEET.

NOTE:

1. SEE STANDARD PLAN SHEET D75A FOR INLET OPENING DETAILS.

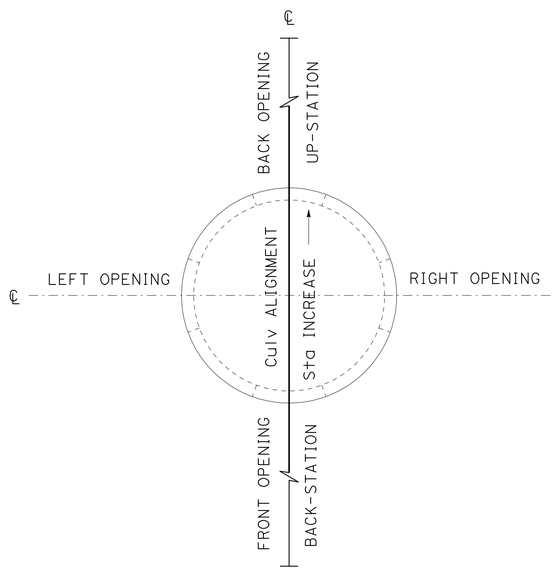

PLAN

INLET (TYPE OMP) SIDE OPENINGS

DRAINAGE SYSTEM No.	LOCATION		OPENINGS			
	ROUTE	PM	BACK	FRONT	RIGHT	LEFT
1	128	40.85	-	-	1	1
17	128	50.00	1	1	1	1
23	253	2.98	-	-	1	1
37	253	6.63	3	3	3	3
38	253	8.11	-	1	1	1
40	253	10.62	-	1	1	-
41	253	10.68	-	-	1	-
42	253	11.37	-	-	1	1
43	253	11.53	-	-	1	-
46	253	12.61	1	1	1	1

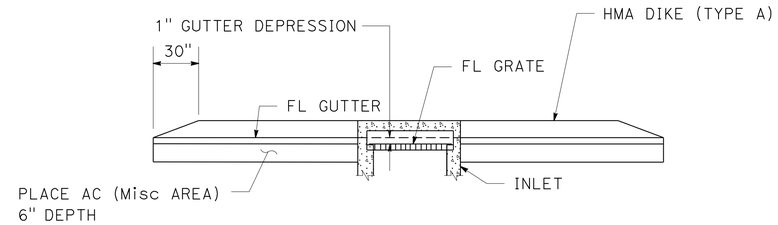

SECTION A-A

TYPE GO INLET

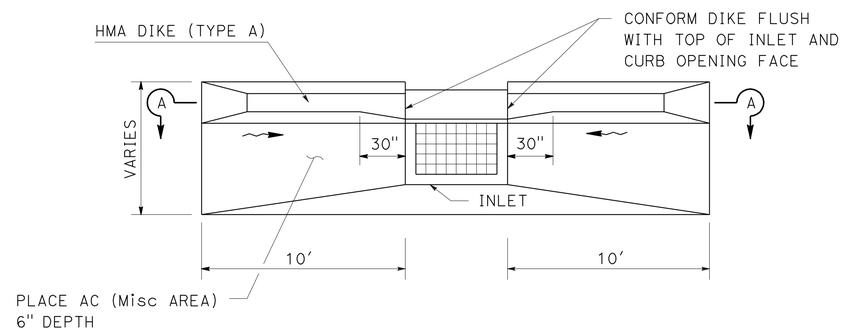

PLAN

PAVED APRON

DRAINAGE SYSTEM No.	LOCATION	
	ROUTE	PM
7	128	44.81
8	128	44.90
11	128	47.03
15	128	48.92
24	253	3.06
25	253	3.13
26	253	3.34
33	253	5.90
49	253	13.96

DRAINAGE DETAILS

NO SCALE

DD-2

STATE OF CALIFORNIA - DEPARTMENT OF TRANSPORTATION
Caltrans
03-DESIGN

CALCULATED-DESIGNED BY	S. PATEL	REVISED BY	SARJU D. PATEL
CHECKED BY	10-28-09	DATE REVISED	W. KEITH MACK

FUNCTIONAL SUPERVISOR: ROBERT E. POLGAR

LAST REVISION 08-25-09 | DATE PLOTTED => 15-APR-2010 | TIME PLOTTED => 15:27

Dist	COUNTY	ROUTE	POST MILES TOTAL PROJECT	SHEET No.	TOTAL SHEETS
01	Men	128,253	Var	58	106

Sarju D. Patel 11-23-09
REGISTERED CIVIL ENGINEER DATE

4-12-10
PLANS APPROVAL DATE

REGISTERED PROFESSIONAL ENGINEER
SARJU D. PATEL
No. C 65611
Exp. 09-30-11
CIVIL
STATE OF CALIFORNIA

THE STATE OF CALIFORNIA OR ITS OFFICERS OR AGENTS SHALL NOT BE RESPONSIBLE FOR THE ACCURACY OR COMPLETENESS OF SCANNED COPIES OF THIS PLAN SHEET.

NOTES:

1. PLACE MARKER MIN 2' AND MAX 12' FROM EP, EXACT LOCATION TO BE DETERMINED BY THE ENGINEER.
2. PIPE EXTENSION SHALL BE POSITIONED TO PROVIDE FOR A SMOOTH TRANSITION AT THE PIPE FLOW LINE, INTERIOR FORM SHALL BE PLACED TO PREVENT CONCRETE INTRUSION INTO PIPE INTERIOR.

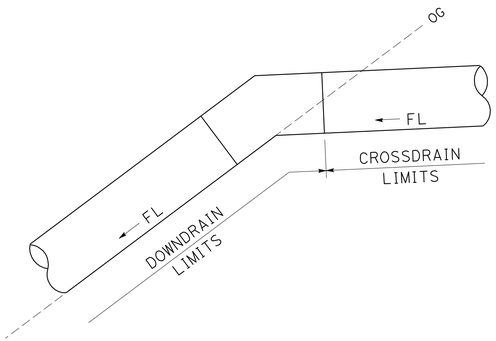

LIMITS OF MEASUREMENT FOR PAYMENT

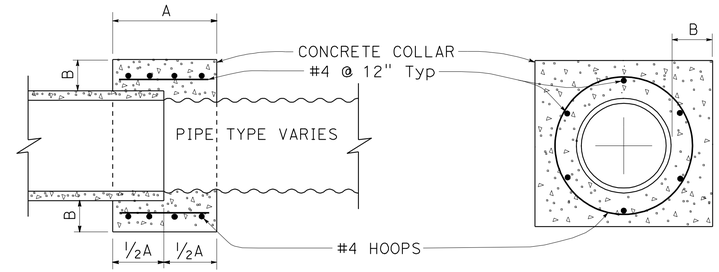

PIPE DIAMETER	A	B	HOOPS
30" TO 48"	36"	10"	4

REINFORCED CONCRETE COLLAR

DRAINAGE SYSTEM No.	LOCATION	
	ROUTE	PM
35	253	6.17

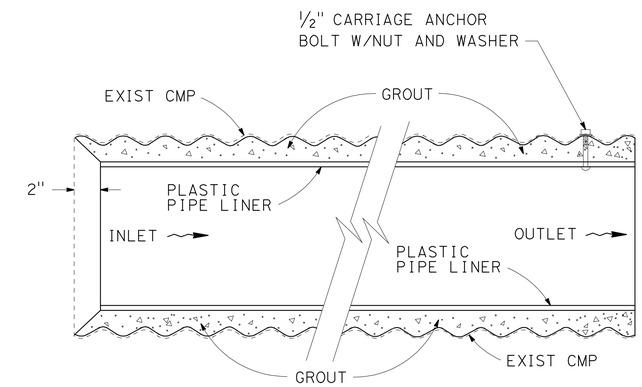

PLASTIC PIPE-LINER

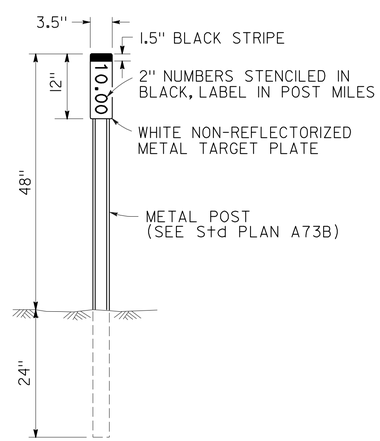

MARKER (CULVERT)

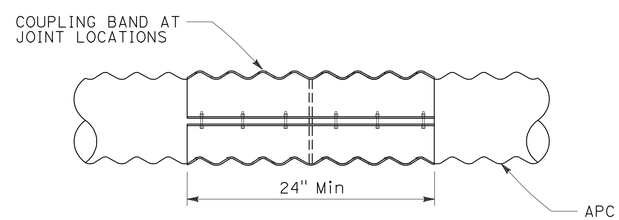

JOINT COUPLING BAND

DRAINAGE SYSTEM No.	LOCATION	
	ROUTE	PM
31	253	4.97
35	253	6.17

DRAINAGE DETAILS

NO SCALE

DD-3

STATE OF CALIFORNIA - DEPARTMENT OF TRANSPORTATION	03-DESIGN	Caltrans	
FUNCTIONAL SUPERVISOR	ROBERT E. POLGAR		
CALCULATED-DESIGNED BY	S. PATEL	REVISED BY	
CHECKED BY	W. KEITH MACK	DATE REVISED	10-07-09

LAST REVISION 08-25-09 | DATE PLOTTED => 15-APR-2010 | TIME PLOTTED => 15:27

Dist	COUNTY	ROUTE	POST MILES TOTAL PROJECT	SHEET No.	TOTAL SHEETS
01	Men	128,253	Var	59	106

Sarju D. Patel 11-23-09
REGISTERED CIVIL ENGINEER DATE

4-12-10
PLANS APPROVAL DATE

REGISTERED PROFESSIONAL ENGINEER
SARJU D. PATEL
No. C 65611
Exp. 09-30-11
CIVIL
STATE OF CALIFORNIA

THE STATE OF CALIFORNIA OR ITS OFFICERS OR AGENTS SHALL NOT BE RESPONSIBLE FOR THE ACCURACY OR COMPLETENESS OF SCANNED COPIES OF THIS PLAN SHEET.

NOTE:

1. SEE STANDARD PLANS A62D, A62DA, AND A62F FOR EXCAVATION AND BACKFILL DETAILS.

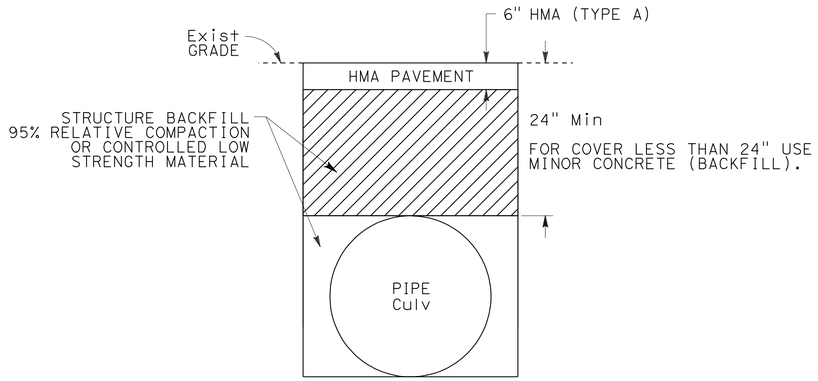

STRUCTURE BACKFILL UNDER Exist Pvmt

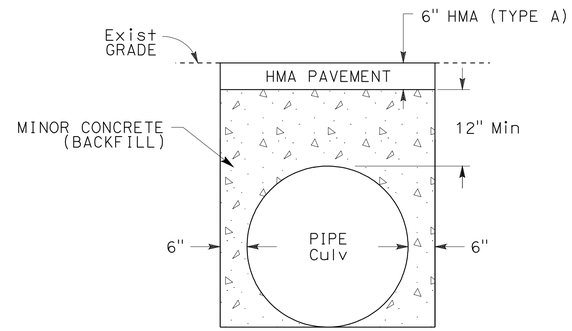

MINOR CONCRETE (BACKFILL)

DRAINAGE SYSTEM No.	LOCATION ROUTE	LOCATION PM
1	128	40.85
2	128	41.46
6	128	44.75
7	128	44.81
8	128	44.90
9	128	46.58
10	128	46.74
11	128	47.03
12	128	48.21
14	128	48.50
15	128	48.92
17	128	50.00
18	253	0.99
19	253	1.06
20	253	1.38
21	253	2.81
22	253	2.85
23	253	2.98
24	253	3.06
25	253	3.13
26	253	3.34
27	253	3.86
28	253	4.18

DRAINAGE SYSTEM No.	LOCATION ROUTE	LOCATION PM
29	253	4.25
30	253	4.78
32	253	5.15
33	253	5.90
34	253	6.01
36	253	6.34
37	253	6.63
38	253	8.11
39	253	8.42
40	253	10.62
41	253	10.68
42	253	11.37
43	253	11.53
44	253	11.62
45	253	11.74
46	253	12.61
47	253	12.80
48	253	13.73
49	253	13.96
50	253	14.31
51	253	14.62
52	253	17.15

DRAINAGE SYSTEM No.	LOCATION ROUTE	LOCATION PM
3	128	42.93
4	128	42.97
5	128	44.40
7	128	44.81
8	128	44.90
13	128	48.46
14	128	48.50
28	253	4.18

DRAINAGE DETAILS

NO SCALE

DD-4

STATE OF CALIFORNIA - DEPARTMENT OF TRANSPORTATION
Caltrans
03-DESIGN

FUNCTIONAL SUPERVISOR: ROBERT E. POLGAR
CALCULATED-DESIGNED BY: SARJU D. PATEL
CHECKED BY: W. KEITH MACK
REVISED BY: S. PATEL
DATE REVISED: 03-18-10

LAST REVISION 07-07-09
DATE PLOTTED => 15-APR-2010
TIME PLOTTED => 15:27

Dist	COUNTY	ROUTE	POST MILES TOTAL PROJECT	SHEET No.	TOTAL SHEETS
01	Men	128,253	Var	60	106

Sarju D. Patel 11-23-09
REGISTERED CIVIL ENGINEER DATE

4-12-10
PLANS APPROVAL DATE

REGISTERED PROFESSIONAL ENGINEER
SARJU D. PATEL
No. C 65611
Exp. 09-30-11
CIVIL
STATE OF CALIFORNIA

THE STATE OF CALIFORNIA OR ITS OFFICERS OR AGENTS SHALL NOT BE RESPONSIBLE FOR THE ACCURACY OR COMPLETENESS OF SCANNED COPIES OF THIS PLAN SHEET.

NOTE:
1. SEE STANDARD PLAN D-89 FOR DETAILS NOT SHOWN.

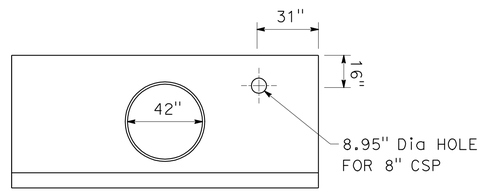

HEADWALL (Mod)

DRAINAGE SYSTEM No.	LOCATION	
	ROUTE	PM
6	128	44.75

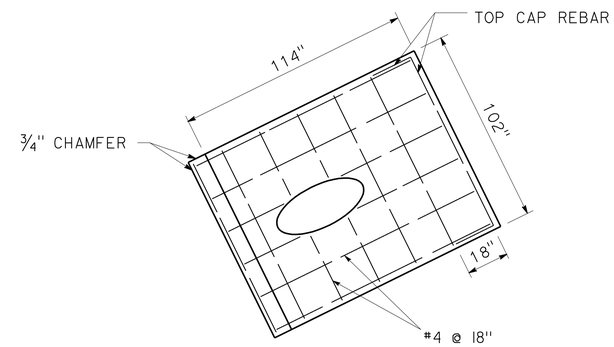

FACE

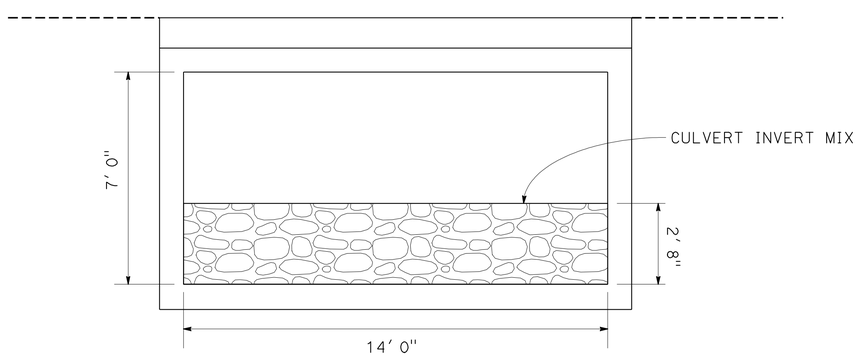

TYPICAL SECTION

CULVERT INVERT MIX

DRAINAGE SYSTEM No.	LOCATION	
	ROUTE	PM
16	128	49.66

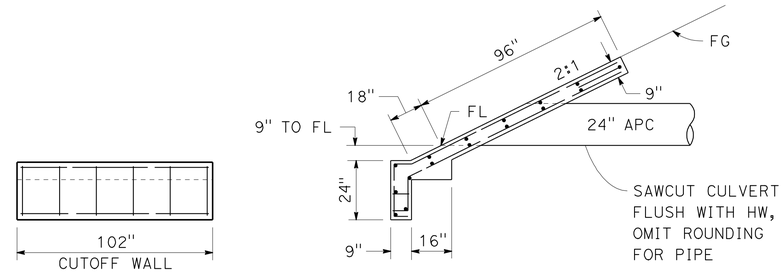

TYPICAL SECTION

SLOPED HEADWALL

DRAINAGE SYSTEM No.	LOCATION	
	ROUTE	PM
18	253	0.99
27	253	3.86
32	253	5.15

DRAINAGE DETAILS

NO SCALE

DD-5

STATE OF CALIFORNIA - DEPARTMENT OF TRANSPORTATION
Caltrans
03-DESIGN
FUNCTIONAL SUPERVISOR: ROBERT E. POLGAR
CALCULATED-DESIGNED BY: SARJU D. PATEL
CHECKED BY: W. KEITH MACK
REVISED BY: W. K. MACK
DATE REVISED: 01-28-10

LAST REVISION 01-28-10 | DATE PLOTTED => 15-APR-2010 | TIME PLOTTED => 15:27

Dist	COUNTY	ROUTE	POST MILES TOTAL PROJECT	SHEET No.	TOTAL SHEETS
01	Men	128,253	Var	61	106

Sanju D. Patel 11-23-09
REGISTERED CIVIL ENGINEER DATE

4-12-10
PLANS APPROVAL DATE

REGISTERED PROFESSIONAL ENGINEER SARJU D. PATEL No. C 65611 Exp. 09-30-11 CIVIL STATE OF CALIFORNIA

THE STATE OF CALIFORNIA OR ITS OFFICERS OR AGENTS SHALL NOT BE RESPONSIBLE FOR THE ACCURACY OR COMPLETENESS OF SCANNED COPIES OF THIS PLAN SHEET.

NOTE:

1. SEE STANDARD PLAN SHEET D87A FOR ANCHOR ASSEMBLY DETAILS.
2. SEE STANDARD PLAN SHEET D87C FOR CABLE ANCHORAGE SYSTEM DETAILS.

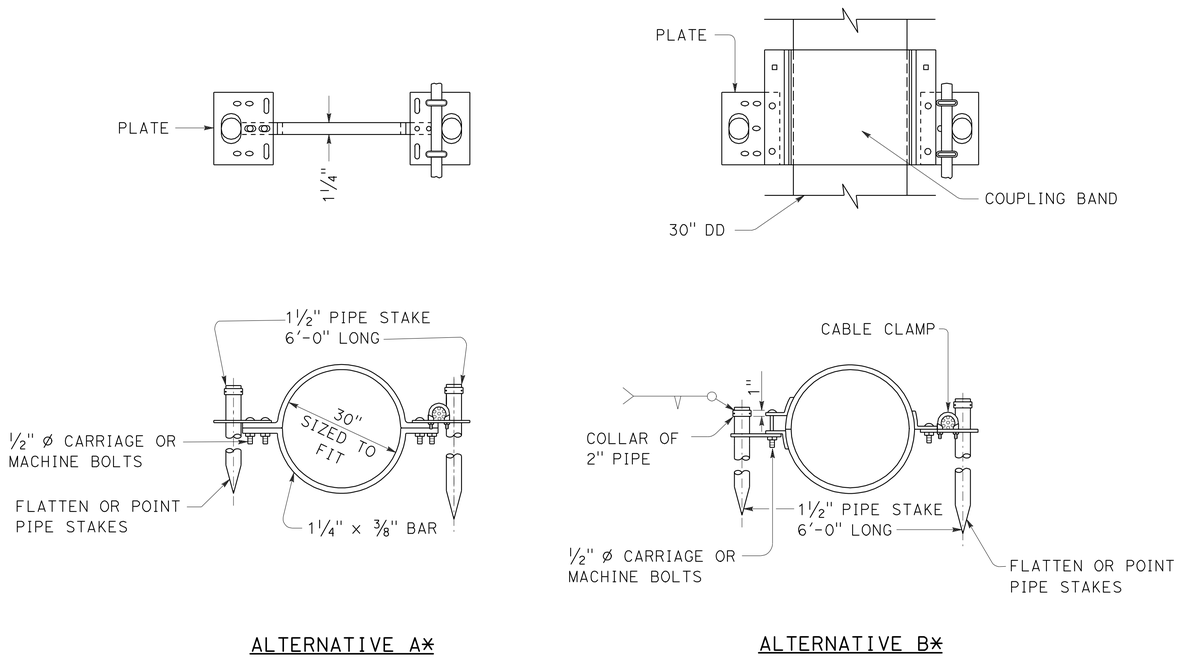

ALTERNATIVE A*

ALTERNATIVE B*

* - IF WELDED STEEL PIPE IS SELECTED AS THE DD MATERIAL, PLATES SHALL BE WELDED DIRECTLY TO THE PIPE.

ALTERNATE PIPE DOWNDRAIN ANCHOR ASSEMBLY (Mod)

DRAINAGE SYSTEM No.	LOCATION	
	ROUTE	PM
37	253	6.63

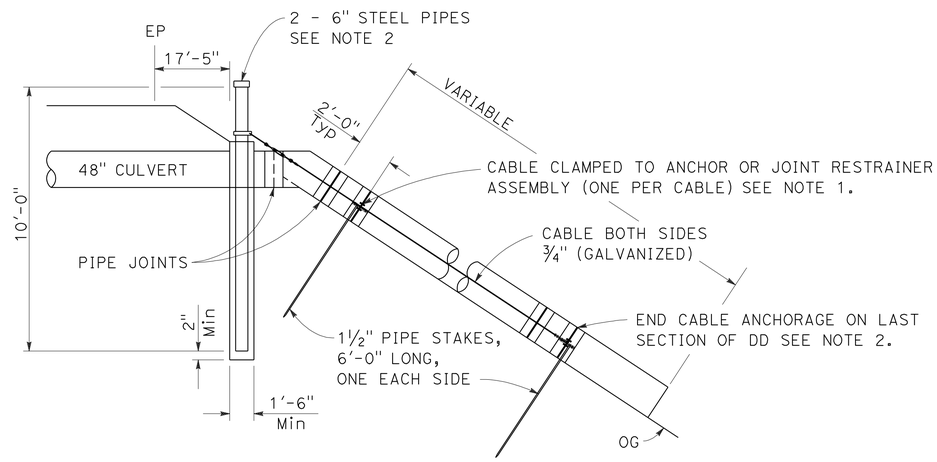

CABLE ANCHORAGE SYSTEM (Mod)

DRAINAGE SYSTEM No.	LOCATION	
	ROUTE	PM
22	253	2.85

DRAINAGE DETAILS

NO SCALE

DD-6

STATE OF CALIFORNIA - DEPARTMENT OF TRANSPORTATION
03-DESIGN
FUNCTIONAL SUPERVISOR: ROBERT E. POLGAR
SARJU D. PATEL — W. KEITH MACK
REVISED BY: S. PATEL — DATE REVISED: 11-17-09
CALCULATED-DESIGNED BY / CHECKED BY

LAST REVISION 09-25-09 | DATE PLOTTED => 15-APR-2010 | TIME PLOTTED => 16:05

Dist	COUNTY	ROUTE	POST MILES TOTAL PROJECT	SHEET No.	TOTAL SHEETS
01	Men	128,253	Var	62	106

Sarju D. Patel 11-23-09
REGISTERED CIVIL ENGINEER DATE

4-12-10
PLANS APPROVAL DATE

REGISTERED PROFESSIONAL ENGINEER
SARJU D. PATEL
No. C 65611
Exp. 09-30-11
CIVIL
STATE OF CALIFORNIA

THE STATE OF CALIFORNIA OR ITS OFFICERS OR AGENTS SHALL NOT BE RESPONSIBLE FOR THE ACCURACY OR COMPLETENESS OF SCANNED COPIES OF THIS PLAN SHEET.

NOTES:
1. DOWNDRAINS AND FLARED END SECTION SHALL BE SAME MATERIAL AS CULVERT.
2. ALL CULVERT PIPE JOINTS ARE POSITIVE JOINT TYPE.
3. THE JOINT CLASSIFICATION FOR DOWNDRAINS SHALL BE DOWNDRAIN.
4. LENGTHS OF PIPES AND ANGLES OF ELBOWS SHALL BE VERIFIED IN THE FIELD BY THE CONTRACTOR.
5. FOR MINIMUM ALLOWABLE CLASS OF RCP, SEE STANDARD PLAN A62D.

ABBREVIATIONS:
HDPE - HIGH DENSITY POLYETHYLENE

ALTERNATIVE PIPE CULVERT (APC) AND DOWNDRAIN (AP DD) ALLOWABLE PIPE MATERIAL AND PROTECTION

DRAINAGE SYSTEM No. (PLAN Sht No.)	ROUTE	PM	Galv CSP 0.109" (12 Ga) THICK	Galv CSP 0.138" (10 Ga) THICK	Galv CSP POLYMERIC Sht COATED 0.079" (14 Ga) THICK	Galv CSP POLYMERIC Sht COATED 0.109" (12 Ga) THICK	Galv CSP POLYMERIC Sht COATED 0.138" (10 Ga) THICK	CAP 0.079" (14 Ga)	RCP
1	128	40.85		X	X			X	X *
2		41.46		X	X			X	X *
3		42.93		X	X			X	X *
4		42.97	X		X			X	X *
5		44.40		X	X			X	X *
6		44.75		X	X			X	X *
7		44.81	X		X				X *
8		44.90	X		X			X	
9		46.58	X		X			X	X *
10		46.74		X	X				
11		47.03		X	X			X	X *
12		48.21		X	X			X	X *
13		48.46		X	X			X	X *
14		48.50		X	X			X	X *
15		48.92		X	X				
17	128	50.00		X	X				
18	253	0.99	X		X			X	X **
19		1.06							X **
20		1.38	X		X			X	X **
21		2.81		X	X			X	X *
22		2.85					X		
23		2.98	X		X				
24		3.06		X	X				
25		3.13	X		X				
26	253	3.34		X	X			X	X *

DRAINAGE SYSTEM No. (PLAN Sht No.)	ROUTE	PM	Galv CSP 0.109" (12 Ga) THICK	Galv CSP 0.138" (10 Ga) THICK	Galv CSP POLYMERIC Sht COATED 0.079" (14 Ga) THICK	Galv CSP POLYMERIC Sht COATED 0.109" (12 Ga) THICK	Galv CSP POLYMERIC Sht COATED 0.138" (10 Ga) THICK	CAP 0.079" (14 Ga)	RCP
27	253	3.86							X *
28		4.18		X	X			X	X *
29		4.25							X *
30		4.78		X	X			X	X *
32		5.15				X			
33		5.90		X	X				
34		6.01		X	X			X	X *
35		6.17							X *
36		6.34	X		X			X	X *
37		6.63		X	X				
38		8.11		X	X				
39		8.42	X		X				
40		10.62	X		X			X	X *
41		10.68		X	X				
42		11.37	X		X			X	X *
43		11.53		X	X			X	X *
44		11.62		X	X				
45		11.74							X *
46		12.61	X		X			X	X *
47		12.80	X		X				X **
48		13.73				X			
49		13.96							X *
50		14.31	X		X			X	X *
51		14.62	X		X			X	X *
52	253	17.15		X	X			X	X *

* - TYPE IP (MS) MODIFIED CEMENT OR TYPE II MODIFIED CEMENT.
** - TYPE II MODIFIED CEMENT OR TYPE V CEMENT 400KG/M3 WITH 25% MINERAL ADMIXTURE REPLACEMENT (BY WEIGHT). MAXIMUM WATER-TO-CEMENTITIOUS MATERIAL RATIO OF 0.40.

DRAINAGE QUANTITIES

DQ-1

CALCULATED-DESIGNED BY: SARJU D. PATEL
CHECKED BY: W. KEITH MACK
REVISED BY: S. PATEL
DATE REVISED: 09-28-09
FUNCTIONAL SUPERVISOR: ROBERT E. POLGAR

STATE OF CALIFORNIA - DEPARTMENT OF TRANSPORTATION
Caltrans
03-DESIGN

LAST REVISION 08-20-09
DATE PLOTTED => 15-APR-2010
TIME PLOTTED => 16:05

Dist	COUNTY	ROUTE	POST MILES TOTAL PROJECT	SHEET No.	TOTAL SHEETS
01	Men	128,253	Var	63	106

Sarju D. Patel 11-23-09
REGISTERED CIVIL ENGINEER DATE

4-12-10
PLANS APPROVAL DATE

REGISTERED PROFESSIONAL ENGINEER SARJU D. PATEL No. C 65611 Exp. 09-30-11 CIVIL STATE OF CALIFORNIA

THE STATE OF CALIFORNIA OR ITS OFFICERS OR AGENTS SHALL NOT BE RESPONSIBLE FOR THE ACCURACY OR COMPLETENESS OF SCANNED COPIES OF THIS PLAN SHEET.

DRAINAGE QUANTITIES

DRAINAGE SYSTEM No. (PLAN Sht No.)	DRAINAGE UNIT No.	ROUTE	PM	REMOVE INLET	REMOVE Culv	REMOVE DD	REMOVE HW	REMOVE FES	REMOVE PIPE	ABANDON Culv	SAND BACKFILL	APC 18"	APC 24"	APC 30"	APC 36"	APC 42"	APC 48"	APC 72"	8" CSP (.079" THICK)	3" PP	JACKED 30" WSP (.239" THICK)	HDPE PLASTIC PIPELINER (SDR 26) 30" OD	HDPE PLASTIC PIPELINER (SDR 26) 42" OD	AP DD 24"	AP DD 30"	AP DD 48"	(N) APC ELBOW	(N) CABLE ANCHORAGE SYSTEM	ANCHOR ASSEMBLY	24" AFES	RSP (METHOD B) (LIGHT)	RSP (METHOD B) (1/4 TON)	RSP (METHOD B) (1/2 TON)	RSP (METHOD B) FABRIC	(N) H OF INLET	36" CSP INLET (.168" THICK)	MINOR Conc (MINOR Str)	STRUCTURAL Conc	Misc I & S	BAR Reinf STEEL (EPOXY COATED)	CLASS 2 AB *	CULVERT INVERT MIX	(N) Max COVER	MARKER (Culv)	DESCRIPTION	DRAINAGE UNIT No.	DRAINAGE SYSTEM No. (PLAN Sht No.)
				EA	EA	EA	EA	EA	EA	EA	CY	LF	LF	LF	LF	LF	LF	LF	LF	LF	LF	LF	LF	LF	LF	LF	EA	LF	EA	EA	CY	CY	CY	SQYD	LF	LF	CY	CY	LB	LB	CY	CY	LF	EA			
1	a	128	40.85	1																																									REMOVE INLET	a	1
	b				1																																								REMOVE Culv (18" x 44.5′ CMP)	b	
	c												43.2																														2.7	2	24" APC	c	
	d																																		3.7	4.2	0.55		215						TYPE OMP (Mod) DI	d	
	e																															9.3		26.7											RSP (1/4 TON, METHOD B)	e	
2	a	128	41.46		1																																								REMOVE Culv (24" x 48.3′ CMP)	a	2
	b						1																																						REMOVE HW	b	
	c						1																																						REMOVE HW	c	
	d												68.3																														5.6	2	24" APC	d	
	e																																				1.20								24" HW	e	
3	a	128	42.93		1																																								REMOVE Culv (12" x 39.5′ CMP)	a	3
	b						1																																						REMOVE HW	b	
	c												43.4																														1.9	2	24" APC	c	
	d																																				1.20								24" HW	d	
4	a	128	42.97		1																																								REMOVE Culv (18" x 44.0′ CMP)	a	4
	b				1																																								REMOVE Culv (18" x 44.0′ CMP)	b	
	c						1																																						REMOVE HW	c	
	d												52.7																														1.9	2	24" APC	d	
	e												52.7																														1.9		24" APC	e	
	f																																				1.72								DOUBLE 24" HW	f	
	g																																				1.72								DOUBLE 24" HW	g	
5	a	128	44.40		1								42.2																																REMOVE Culv (18" x 36.9′ CMP)	a	5
	b																																										1.6	2	24" APC	b	
6	a	128	44.75		1																																								REMOVE Culv (36" x 55.5′ CMP)	a	6
	b															65.0																											3.8	2	42" APC	b	
	c																																				2.34								42" HW	c	
	d																																				2.34								42" HW	d	
	e																														8.6			24.2											RSP (LIGHT, METHOD B)	e	
	f																		65.0																										8" CSP (.079" THICK)	f	
7	a	128	44.81		1																																								REMOVE Culv (12" x 33.8′ CMP)	a	7
	b											35.7																															2.9	2	18" APC	b	
	c																																		3.0		1.24		239						TYPE GO DI W/24-12X GRATE	c	
SHEET TOTALS				1	8		4					35.7	302.5			65.0			65.0												8.6	9.3		50.9		4.2	12.31		454					14			

(N) = NOT A SEPARATE PAY ITEM, FOR INFORMATION ONLY.
* - Qty INCLUDED IN THE Rdwy QUANTITIES TABLE (SEE SUMMARY OF QUANTITIES SHEET Q-1).

DRAINAGE QUANTITIES

DQ-2

STATE OF CALIFORNIA - DEPARTMENT OF TRANSPORTATION
Caltrans
03-DESIGN
FUNCTIONAL SUPERVISOR: ROBERT E. POLGAR
CALCULATED-DESIGNED BY: SARJU D. PATEL
CHECKED BY: LARISA SASEVICH
REVISED BY: S. PATEL
DATE REVISED: 11-02-09

LAST REVISION DATE PLOTTED => 15-APR-2010
07-07-09 TIME PLOTTED => 16:06

Dist	COUNTY	ROUTE	POST MILES TOTAL PROJECT	SHEET No.	TOTAL SHEETS
01	Men	128,253	Var	64	106

Sarju D. Patel 11-23-09
REGISTERED CIVIL ENGINEER DATE

4-12-10
PLANS APPROVAL DATE

REGISTERED PROFESSIONAL ENGINEER
SARJU D. PATEL
No. C 65611
Exp. 09-30-11
CIVIL
STATE OF CALIFORNIA

THE STATE OF CALIFORNIA OR ITS OFFICERS OR AGENTS SHALL NOT BE RESPONSIBLE FOR THE ACCURACY OR COMPLETENESS OF SCANNED COPIES OF THIS PLAN SHEET.

DRAINAGE QUANTITIES

DRAINAGE SYSTEM No. (PLAN Sht No.)	DRAINAGE UNIT No.	ROUTE	PM	REMOVE: INLET	REMOVE: Culv	REMOVE: DD	REMOVE: HW	REMOVE: FES	REMOVE: PIPE	ABANDON Culv	SAND BACKFILL	APC: 18"	APC: 24"	APC: 30"	APC: 36"	APC: 42"	APC: 48"	APC: 72"	8" CSP (.079" THICK)	3" PP	JACKED 30" WSP (.239" THICK)	HDPE PLASTIC PIPELINER (SDR 26): 30" OD	HDPE PLASTIC PIPELINER (SDR 26): 42" OD	AP DD: 24"	AP DD: 30"	AP DD: 48"	(N) APC ELBOW	(N) CABLE ANCHORAGE SYSTEM	ANCHOR ASSEMBLY	24" AFES	RSP (METHOD B): (LIGHT)	RSP (METHOD B): (1/4 TON)	RSP (METHOD B): (1/2 TON)	RSP (METHOD B): FABRIC	(N) H OF INLET	36" CSP INLET (.168" THICK)	MINOR Conc (MINOR Str)	STRUCTURAL Conc	Misc I & S	BAR Reinf STEEL (EPOXY COATED)	CLASS 2 AB *	CULVERT INVERT MIX	(N) Max COVER	MARKER (Culv)	DESCRIPTION	DRAINAGE UNIT No.	DRAINAGE SYSTEM No. (PLAN Sht No.)
				EA	EA	EA	EA	EA	EA	EA	CY	LF	LF	LF	LF	LF	LF	LF	LF	LF	LF	LF	LF	LF	LF	LF	EA	LF	EA	EA	CY	CY	CY	SQYD	LF	LF	CY	CY	LB	LB	CY	CY	LF	EA			
8	a	128	44.90		1																																								REMOVE Culv (24" x 45.5' CMP)	a	8
	b												52.0																														4.5	2	24" APC	b	
	c																																				1.27		239						TYPE GO DI W/24-12X GRATE	c	
9	a	128	46.58		1																																								REMOVE Culv (12" x 47.7' CMP)	a	9
	b												57.0																														2.5	2	24" APC	b	
	c																														7.1			22.2											RSP (LIGHT, METHOD B)	c	
10	a	128	46.74		1																																								REMOVE Culv (12" x 40.6' RCP)	a	10
	b											45.0																															3.3	2	18" APC	b	
11	a	128	47.03		1																																								REMOVE Culv (12" x 50.8' CMP)	a	11
	b												51.7																														5.6	2	24" APC	b	
	c																																		3.1		1.27		239						TYPE GO DI W/24-12X GRATE	c	
	d																															9.3		26.7											RSP (1/4 TON, METHOD B)	d	
12	a	128	48.21		1																																								REMOVE Culv (30" x 58.5' CMP)	a	12
	b														64.1																												5.3	2	36" APC	b	
	c																																				1.95								36" HW	c	
	d																																				1.95								36" HW	d	
13	a	128	48.46		1																																								REMOVE Culv (18" x 49.0' CMP)	a	13
	b												47.7																														1.9	2	24" APC	b	
	c																																				1.20								24" HW	c	
14	a	128	48.50		1																																								REMOVE Culv (30" x 37.3' CMP)	a	14
	b														45.4																												3.1	2	36" APC	b	
	c																																				1.88								36" HW (TYPE L, W=3'-4")	c	
15	a	128	48.92		1																																								REMOVE Culv (12" x 41.7' CMP)	a	15
	b					1																																							REMOVE HW	b	
	c												32.4																														3.7	2	24" APC	c	
	d																							19.8			1		2																24" AP DD	d	
	e																																		3.7		1.41		239						TYPE GO DI W/24-12X GRATE	e	
	f																															9.3		26.7											RSP (1/4 TON, METHOD B)	f	
SHEET TOTALS					8		1					45.0	240.8		109.5									19.8			1		2		7.1	18.6		75.6			10.93		717					16			

(N) = NOT A SEPARATE PAY ITEM, FOR INFORMATION ONLY.
* - Qty INCLUDED IN THE Rdwy QUANTITIES TABLE (SEE SUMMARY OF QUANTITIES SHEET Q-1).

DRAINAGE QUANTITIES

DQ-3

SARJU D. PATEL | S. PATEL | REVISED BY
LARISA SASEVICH | 11-02-09 | DATE REVISED
CALCULATED-DESIGNED BY
CHECKED BY
FUNCTIONAL SUPERVISOR
ROBERT E. POLGAR
STATE OF CALIFORNIA - DEPARTMENT OF TRANSPORTATION
03-DESIGN
Caltrans

LAST REVISION 07-07-09 | DATE PLOTTED => 15-APR-2010 | TIME PLOTTED => 16:06

Dist	COUNTY	ROUTE	POST MILES TOTAL PROJECT	SHEET No.	TOTAL SHEETS
01	Men	128,253	Var	65	106

Sarju D. Patel 11-23-09
REGISTERED CIVIL ENGINEER DATE

4-12-10
PLANS APPROVAL DATE

REGISTERED PROFESSIONAL ENGINEER SARJU D. PATEL No. C 65611 Exp. 09-30-11 CIVIL STATE OF CALIFORNIA

THE STATE OF CALIFORNIA OR ITS OFFICERS OR AGENTS SHALL NOT BE RESPONSIBLE FOR THE ACCURACY OR COMPLETENESS OF SCANNED COPIES OF THIS PLAN SHEET.

DRAINAGE QUANTITIES

DRAINAGE SYSTEM No. (PLAN Sht No.)	DRAINAGE UNIT No.	ROUTE	PM	REMOVE INLET (EA)	REMOVE Culv (EA)	REMOVE DD (EA)	REMOVE HW (EA)	REMOVE FES (EA)	REMOVE PIPE (EA)	ABANDON Culv (EA)	SAND BACKFILL (CY)	APC 18" (LF)	APC 24" (LF)	APC 30" (LF)	APC 36" (LF)	APC 42" (LF)	APC 48" (LF)	APC 72" (LF)	8" CSP (.079" THICK) (LF)	3" PP (LF)	JACKED 30" WSP (.239" THICK) (LF)	HDPE PLASTIC PIPELINER (SDR 26) 30" OD (LF)	HDPE PLASTIC PIPELINER (SDR 26) 42" OD (LF)	AP DD 24" (LF)	AP DD 30" (LF)	AP DD 48" (LF)	(N) APC ELBOW (EA)	(N) CABLE ANCHORAGE SYSTEM (LF)	ANCHOR ASSEMBLY (EA)	24" AFES (EA)	RSP (METHOD B) (LIGHT) (CY)	RSP (METHOD B) (1/4 TON) (CY)	RSP (METHOD B) (1/2 TON) (CY)	RSP (METHOD B) FABRIC (SQYD)	(N) H OF INLET (LF)	36" CSP INLET (.168" THICK) (LF)	MINOR Conc (MINOR Str) (CY)	STRUCTURAL Conc (CY)	Misc I & S (LB)	BAR Reinf STEEL (EPOXY COATED) (LB)	CLASS 2 AB * (CY)	CULVERT INVERT MIX (CY)	(N) Max COVER (LF)	MARKER (Culv) (EA)	DESCRIPTION	DRAINAGE UNIT No.	DRAINAGE SYSTEM No. (PLAN Sht No.)
16	a	128	49.66		1																																									REMOVE Culv (71" X 47" x 59.2' CSPA)	a	16
	b				1																																									REMOVE Culv (48" x 58.4' CMP)	b	
	c																																					85.68		24333	44.9	88.4	0.8	2	14' x 7' x 63.9' CIP RCB Culv	c	
	d																																					4.02		294					WW (TYPE B) - L=6', H=10'	d	
	e																																					5.03		368					WW (TYPE B) - L=7.5', H=10'	e	
	f																																					3.35		245					WW (TYPE A) - L=5', H=10', Elev a = 1055	f	
	g																																					4.02		294					WW (TYPE A) - L=6', H=10', Elev a = 1055	g	
	h																															11.4		10.3	43.9										RSP (LIGHT AND 1/2 TON, METHOD B)	h	
17	a	128	50.00		1																																									REMOVE Culv (12" x 10.0' CMP)	a	17
	b				1																																									REMOVE Culv (12" x 23.0' CMP)	b	
	c									1	1.1																																			ABANDON Culv	c	
	d												38.0																														5.3	2	24" APC	d	
	e																							15.8			1		2																	24" AP DD	e	
	f																																			4.2	4.7	0.55		215						TYPE OMP (Mod) DI	f	
	g																															4.4			15.6											RSP (LIGHT, METHOD B)	g	
18	a	253	0.99					1																																						REMOVE FES	a	18
	b				1																																									REMOVE Culv (18" x 57.2' CMP)	b	
	c												70.8																														6.4	2	24" APC	c	
	d																																					2.90		232					SLOPED 24" HW	d	
	e								1																																					REMOVE PIPE (3" x 5.1' PVC)	e	
	f																			8.2																										3" PP (EDGE DRAIN OUTLET)	f	
19	a	253	1.06		1																																									REMOVE Culv (18" x 48.1' CMP)	a	19
	b			1																																										REMOVE INLET	b	
	c												57.4																														4.4	2	24" APC	c	
	d																																					1.20							24" HW	d	
	e																															6.2			20.0											RSP (LIGHT, METHOD B)	e	
20	a	253	1.38					1																																						REMOVE FES	a	20
	b				1																																									REMOVE Culv (18" x 62.8' CMP)	b	
	c																																					1.20							24" HW	c	
	d												69.0																														6.6	2	24" APC	d	
	e																															6.2			20.0											RSP (LIGHT, METHOD B)	e	
SHEET TOTALS				1	7			2	1	1	1.1		235.2							8.2				15.8			1		2		28.2		10.3	99.5		4.7	5.85	102.10	447	25534	44.9	88.4		10			

(N) = NOT A SEPARATE PAY ITEM, FOR INFORMATION ONLY.
* - Qty INCLUDED IN THE Rdwy QUANTITIES TABLE (SEE SUMMARY OF QUANTITIES SHEET Q-1).

DRAINAGE QUANTITIES

DQ-4

STATE OF CALIFORNIA - DEPARTMENT OF TRANSPORTATION
Caltrans
03-DESIGN
FUNCTIONAL SUPERVISOR: ROBERT E. POLGAR
CALCULATED-DESIGNED BY: SARJU D. PATEL
CHECKED BY: W. K. MACK & L. SASEVICH
REVISED BY: S. PATEL
DATE REVISED: 03-18-10

LAST REVISION DATE PLOTTED => 15-APR-2010
07-07-09 TIME PLOTTED => 16:06

Dist	COUNTY	ROUTE	POST MILES TOTAL PROJECT	SHEET No.	TOTAL SHEETS
01	Men	128,253	Var	66	106

Sarju D. Patel 11-23-09
REGISTERED CIVIL ENGINEER DATE

4-12-10
PLANS APPROVAL DATE

REGISTERED PROFESSIONAL ENGINEER
SARJU D. PATEL
No. C 65611
Exp. 09-30-11
CIVIL
STATE OF CALIFORNIA

THE STATE OF CALIFORNIA OR ITS OFFICERS OR AGENTS SHALL NOT BE RESPONSIBLE FOR THE ACCURACY OR COMPLETENESS OF SCANNED COPIES OF THIS PLAN SHEET.

DRAINAGE QUANTITIES

DRAINAGE SYSTEM No. (PLAN Sht No.)	DRAINAGE UNIT No.	ROUTE	PM	REMOVE INLET EA	REMOVE Culv EA	REMOVE DD EA	REMOVE HW EA	REMOVE FES EA	REMOVE PIPE EA	ABANDON Culv EA	SAND BACKFILL CY	APC 18" LF	APC 24" LF	APC 30" LF	APC 36" LF	APC 42" LF	APC 48" LF	APC 72" LF	8" CSP (.079" THICK) LF	3" PP LF	JACKED 30" WSP (.239" THICK) LF	HDPE PLASTIC PIPELINER (SDR 26) 30" OD LF	HDPE PLASTIC PIPELINER (SDR 26) 42" OD LF	AP DD 24" LF	AP DD 30" LF	AP DD 48" LF	(N) APC ELBOW EA	(N) CABLE ANCHORAGE SYSTEM LF	ANCHOR ASSEMBLY EA	24" AFES EA	RSP (METHOD B) (LIGHT) CY	RSP (METHOD B) (1/4 TON) CY	RSP (METHOD B) (1/2 TON) CY	RSP (METHOD B) FABRIC SQYD	(N) H OF INLET LF	36" CSP INLET (.168" THICK) LF	MINOR Conc (MINOR Str) CY	STRUCTURAL Conc CY	Misc I & S LB	BAR Reinf STEEL (EPOXY COATED) LB	CLASS 2 AB * CY	CULVERT INVERT MIX CY	(N) Max COVER LF	MARKER (Culv) EA	DESCRIPTION	DRAINAGE UNIT No.	DRAINAGE SYSTEM No. (PLAN Sht No.)
21	a	253	2.81					1																																					REMOVE FES	a	21
	b				1																																								REMOVE Culv (30" x 54.1' CMP)	b	
	c			1																																									REMOVE INLET	c	
	d																																		6.2	6.7	0.51		215						TYPE GMP DI W/36RX GRATE	d	
	e														53.5																												11.2		36" APC	e	
	f																																				1.95								36" HW	f	
	g				1																																								REMOVE Culv (36" x 55.9' CMP)	g	
	h																														14.2			36.5											RSP (LIGHT, METHOD B)	h	
	i														65.9																												5.5	2	36" APC	i	
	j				1																																								REMOVE Culv (8" x 3.0' CSP)	j	
	k																		3.0																										8" CSP (.079 THICK)	k	
22	a	253	2.85		1																																								REMOVE Culv (48" x 47.4' CMP)	a	22
	b				1																																								REMOVE Culv (48" x 12.5' CMP)	b	
	c					1																																							REMOVE DD	c	
	d									1	53.0																																		ABANDON Culv	d	
	e																136.7																										11.0	2	48" APC	e	
	f																																				2.75								48" HW	f	
	g																									65.5	1	65.5																	48" AP DD	g	
	h																															23.1		53.3											RSP (1/4 TON, METHOD B)	h	
23	a	253	2.98		1																																								REMOVE Culv (24" x 50.9' CMP)	a	23
	b			1																																									REMOVE INLET	b	
	c												49.1																														7.8	2	24" APC	c	
	d																							20.8			1		2																	24" AP DD	d	
	e																																		5.2	5.7	0.47		177						TYPE OMP DI W/PLATE COVER	e	
	f																															9.3		26.7											RSP (1/4 TON, METHOD B)	f	
24	a	253	3.06		1																																								REMOVE Culv (18" x 60.7' CMP)	a	24
	b			1																																									REMOVE INLET	b	
	c												52.8																														4.9	2	24" APC	c	
	d																							12.9			1		2																	24" AP DD	d	
	e																																		3.9		1.46		239						TYPE GO DI W/24-12X GRATE	e	
	f																															6.2		20.4											RSP (1/4 TON, METHOD B)	f	
SHEET TOTALS				3	7	1		1		1	53.0		101.9		119.4		136.7		3.0					33.7		65.5	3	65.5	4		14.2	38.6		136.9		12.4	7.14		631					8			

(N) = NOT A SEPARATE PAY ITEM, FOR INFORMATION ONLY.
* - Qty INCLUDED IN THE Rdwy QUANTITIES TABLE (SEE SUMMARY OF QUANTITIES SHEET Q-1).

DRAINAGE QUANTITIES

DQ-5

STATE OF CALIFORNIA - DEPARTMENT OF TRANSPORTATION
Caltrans
03-DESIGN
FUNCTIONAL SUPERVISOR: ROBERT E. POLGAR
CALCULATED-DESIGNED BY: S. PATEL
CHECKED BY: W. KEITH MACK
REVISED BY: S. PATEL
DATE REVISED: 03-18-10

LAST REVISION DATE PLOTTED => 15-APR-2010
07-07-09 TIME PLOTTED => 16:06

Dist	COUNTY	ROUTE	POST MILES TOTAL PROJECT	SHEET No.	TOTAL SHEETS
01	Men	128,253	Var	67	106

Sarju D. Patel 11-23-09
REGISTERED CIVIL ENGINEER DATE

4-12-10
PLANS APPROVAL DATE

REGISTERED PROFESSIONAL ENGINEER SARJU D. PATEL No. C 65611 Exp. 09-30-11 CIVIL STATE OF CALIFORNIA

THE STATE OF CALIFORNIA OR ITS OFFICERS OR AGENTS SHALL NOT BE RESPONSIBLE FOR THE ACCURACY OR COMPLETENESS OF SCANNED COPIES OF THIS PLAN SHEET.

DRAINAGE QUANTITIES

DRAINAGE SYSTEM No. (PLAN Sht No.)	DRAINAGE UNIT No.	ROUTE	PM	REMOVE INLET EA	REMOVE Culv EA	REMOVE DD EA	REMOVE HW EA	REMOVE FES EA	REMOVE PIPE EA	ABANDON Culv EA	SAND BACKFILL CY	APC 18" LF	APC 24" LF	APC 30" LF	APC 36" LF	APC 42" LF	APC 48" LF	APC 72" LF	8" CSP (.079" THICK) LF	3" PP LF	JACKED 30" WSP (.239" THICK) LF	HDPE PLASTIC PIPELINER (SDR 26) 30" OD LF	HDPE PLASTIC PIPELINER (SDR 26) 42" OD LF	AP DD 24" LF	AP DD 30" LF	AP DD 48" LF	(N) APC ELBOW EA	(N) CABLE ANCHORAGE SYSTEM LF	ANCHOR ASSEMBLY EA	24" AFES EA	RSP (METHOD B) (LIGHT) CY	RSP (METHOD B) (1/4 TON) CY	RSP (METHOD B) (1/2 TON) CY	RSP (METHOD B) FABRIC SQYD	(N) H OF INLET LF	36" CSP INLET (.168" THICK) LF	MINOR Conc (MINOR Str) CY	STRUCTURAL Conc CY	Misc I & S LB	BAR Reinf STEEL (EPOXY COATED) LB	CLASS 2 AB * CY	CULVERT INVERT MIX CY	(N) Max COVER LF	MARKER (Culv) EA	DESCRIPTION	DRAINAGE UNIT No.	DRAINAGE SYSTEM No. (PLAN Sht No.)
25	a	253	3.13		1																																								REMOVE Culv (18" x 49.2' CMP)	a	25
	b			1																																								REMOVE INLET	b	
	c												50.7																													6.0	2	24" APC	c	
	d																																		3.1		1.26		239					TYPE GO DI W/24-12X GRATE	d	
	e																							10.6			1		2															24" AP DD	e	
	f																															9.0		26.0										RSP (1/4 TON, METHOD B)	f	
26	a	253	3.34		1																																							REMOVE Culv (18" x 49.2' CMP)	a	26
	b												55.3																													6.4	2	24" APC	b	
	c																																		3.6		1.39		239					TYPE GO DI W/24-12X GRATE	c	
27	a	253	3.86		1																																							REMOVE Culv (24" x 86.2' CMP)	a	27
	b												94.0																													10.3	2	24" APC	b	
	c																																				2.90		232					SLOPED 24" HW	c	
28	a	253	4.18		1																																							REMOVE Culv (24" x 61.2' CMP)	a	28
	b												63.2																													2.8	2	24" APC	b	
	c																																				1.20							24" HW	c	
	d																																				1.20							24" HW	d	
29	a	253	4.25		1																																							REMOVE Culv (60" x 105.2' CMP)	a	29
	b																	101.3																								13.2	2	72" APC	b	
	c																																					16.43		1319					72" HW	c	
	d																																					16.43		1319					72" HW	d	
	e																															70.0		109.3										RSP (1/4 TON, METHOD B)	e	
	f																															33.3		60.7										RSP (1/4 TON, METHOD B)	f	
30	a	253	4.78		1																																							REMOVE Culv (18" x 65.4' CMP)	a	30
	b												70.9																													7.5	2	24" APC	b	
	c																																				1.20							24" HW	c	
	d																																				1.20							24" HW	d	
31	a	253	4.97																				110.6																				2	HDPE PLASTIC PIPELINER 42" O.D. (SDR 26)	a	31
	b																													32.6			101.3											RSP (LIGHT, METHOD B)	b	
SHEET TOTALS				1	6								334.1					101.3					110.6	10.6			1		2		32.6	112.3		297.3			10.35	32.86	710	2638				14			

(N) = NOT A SEPARATE PAY ITEM, FOR INFORMATION ONLY.
* - Qty INCLUDED IN THE Rdwy QUANTITIES TABLE (SEE SUMMARY OF QUANTITIES SHEET Q-1).

DRAINAGE QUANTITIES

DQ-6

STATE OF CALIFORNIA - DEPARTMENT OF TRANSPORTATION
Caltrans
03-DESIGN
FUNCTIONAL SUPERVISOR: ROBERT E. POLGAR
CALCULATED-DESIGNED BY: SARJU D. PATEL
CHECKED BY: W. KEITH MACK
REVISED BY: S. PATEL
DATE REVISED: 03-18-10

LAST REVISION DATE PLOTTED => 15-APR-2010
07-07-09 TIME PLOTTED => 16:06

Dist	COUNTY	ROUTE	POST MILES TOTAL PROJECT	SHEET No.	TOTAL SHEETS
01	Men	128,253	Var	68	106

Sarju D. Patel 11-23-09
REGISTERED CIVIL ENGINEER DATE

4-12-10
PLANS APPROVAL DATE

REGISTERED PROFESSIONAL ENGINEER SARJU D. PATEL No. C 65611 Exp. 09-30-11 CIVIL STATE OF CALIFORNIA

THE STATE OF CALIFORNIA OR ITS OFFICERS OR AGENTS SHALL NOT BE RESPONSIBLE FOR THE ACCURACY OR COMPLETENESS OF SCANNED COPIES OF THIS PLAN SHEET.

DRAINAGE QUANTITIES

DRAINAGE SYSTEM No. (PLAN Sht No.)	DRAINAGE UNIT No.	ROUTE	PM	REMOVE INLET (EA)	REMOVE Culv (EA)	REMOVE DD (EA)	REMOVE HW (EA)	REMOVE FES (EA)	REMOVE PIPE (EA)	ABANDON Culv (EA)	SAND BACKFILL (CY)	APC 18" (LF)	APC 24" (LF)	APC 30" (LF)	APC 36" (LF)	APC 42" (LF)	APC 48" (LF)	APC 72" (LF)	8" CSP (.079" THICK) (LF)	3" PP (LF)	JACKED 30" WSP (.239" THICK) (LF)	HDPE PLASTIC PIPELINER (SDR 26) 30" OD (LF)	HDPE PLASTIC PIPELINER (SDR 26) 42" OD (LF)	AP DD 24" (LF)	AP DD 30" (LF)	AP DD 48" (LF)	(N) APC ELBOW (EA)	(N) CABLE ANCHORAGE SYSTEM (LF)	ANCHOR ASSEMBLY (EA)	24" AFES (EA)	RSP (METHOD B) (LIGHT) (CY)	RSP (METHOD B) (1/4 TON) (CY)	RSP (METHOD B) (1/2 TON) (CY)	RSP (METHOD B) FABRIC (SQYD)	(N) H OF INLET (LF)	36" CSP INLET (.168" THICK) (LF)	MINOR Conc (MINOR Str) (CY)	STRUCTURAL Conc (CY)	Misc I & S (LB)	BAR Reinf STEEL (EPOXY COATED) (LB)	CLASS 2 AB * (CY)	CULVERT INVERT MIX (CY)	(N) Max COVER (LF)	MARKER (Culv) (EA)	DESCRIPTION	DRAINAGE UNIT No.	DRAINAGE SYSTEM No. (PLAN Sht No.)
32	a	253	5.15	1																																										REMOVE INLET	a	32
	b				1																																									REMOVE Culv (18" x 11.9′ CMP)	b	
	c				1																																									REMOVE Culv (18" x 8.7′ CMP)	c	
	d									1	2.8																																			ABANDON Culv	d	
	e												61.5																														6.0	2	24" APC	e	
	f																														6.2			20.0												RSP (LIGHT, METHOD B)	f	
	g																																				2.90		232						SLOPED 24" HW	g	
	h																							11.1			1		2																	24" AP DD	h	
33	a	253	5.90		1																																									REMOVE Culv (18" x 46.4′ CMP)	a	33
	b												44.9																														5.5	2	24" APC	b	
	c																							16.5			1		2																	24" AP DD	c	
	d																																		4.0		1.49		239						TYPE GO DI W/24-12X GRATE	d	
34	a	253	6.01		1																																									REMOVE Culv (18" x 55.8′ CMP)	a	34
	b												57.8																														7.5	2	24" APC	b	
	c																																				1.20								24" HW	c	
	d																													1															24" AFES	d	
35	a	253	6.17																		143.3																								JACKED 30" WSP (.239 THICK)	a	35
	b				1																																									REMOVE Culv (36" x 1.0′ CMP)	b	
	c				1																																									REMOVE Culv (36" x 20.0′ CMP)	c	
	d														20.0																												10.5	2	36" APC	d	
	e																																				1.12		54						Conc COLLAR	e	
	f																																				1.95								36" HW	f	
	g																																				1.95								36" HW	g	
	h																					120.9																							HDPE PLASTIC PIPELINER 30" O.D. (SDR 26)	h	
	i																																				1.52								30" HW	i	
	j																														20.7			47.7											RSP (LIGHT, METHOD B)	j	
36	a	253	6.34		1																																									REMOVE Culv (18" x 8.0′ CMP)	a	36
	b				1																																									REMOVE Culv (18" x 16.0′ CMP)	b	
	c									1	6.4																																			ABANDON Culv	c	
	d																																				1.52								30" HW	d	
	e																															14.5		35.0											RSP (1/4 TON, METHOD B)	e	
	f													78.8																													12.2	2	30" APC	f	
	g			1																																										REMOVE INLET	g	
SHEET TOTALS				2	8					2	9.2		164.2	78.8	20.0						143.3	120.9		27.6			2		4	1	26.9	14.5		102.7			13.65		525					10			

(N) = NOT A SEPARATE PAY ITEM, FOR INFORMATION ONLY.
* - Qty INCLUDED IN THE Rdwy QUANTITIES TABLE (SEE SUMMARY OF QUANTITIES SHEET Q-1).

DRAINAGE QUANTITIES

DQ-7

STATE OF CALIFORNIA - DEPARTMENT OF TRANSPORTATION
Caltrans
03-DESIGN
FUNCTIONAL SUPERVISOR: ROBERT E. POLGAR
CALCULATED-DESIGNED BY: S. PATEL
CHECKED BY: W. KEITH MACK
REVISED BY: S. PATEL
DATE REVISED: 11-02-09

LAST REVISION DATE PLOTTED => 15-APR-2010
07-07-09 TIME PLOTTED => 16:06

Dist	COUNTY	ROUTE	POST MILES TOTAL PROJECT	SHEET No.	TOTAL SHEETS
01	Men	128,253	Var	69	106

Sarju D. Patel 11-23-09
REGISTERED CIVIL ENGINEER DATE

4-12-10
PLANS APPROVAL DATE

REGISTERED PROFESSIONAL ENGINEER SARJU D. PATEL No. C 65611 Exp. 09-30-11 CIVIL STATE OF CALIFORNIA

THE STATE OF CALIFORNIA OR ITS OFFICERS OR AGENTS SHALL NOT BE RESPONSIBLE FOR THE ACCURACY OR COMPLETENESS OF SCANNED COPIES OF THIS PLAN SHEET.

DRAINAGE QUANTITIES

DRAINAGE SYSTEM No. (PLAN Sht No.)	DRAINAGE UNIT No.	ROUTE	PM	REMOVE INLET EA	REMOVE Culv EA	REMOVE DD EA	REMOVE HW EA	REMOVE FES EA	REMOVE PIPE EA	ABANDON Culv EA	SAND BACKFILL CY	APC 18" LF	APC 24" LF	APC 30" LF	APC 36" LF	APC 42" LF	APC 48" LF	APC 72" LF	8" CSP (.079" THICK) LF	3" PP LF	JACKED 30" WSP (.239" THICK) LF	HDPE PLASTIC PIPELINER (SDR 26) 30" OD LF	HDPE PLASTIC PIPELINER (SDR 26) 42" OD LF	AP DD 24" LF	AP DD 30" LF	AP DD 48" LF	(N) APC ELBOW EA	(N) CABLE ANCHORAGE SYSTEM LF	ANCHOR ASSEMBLY EA	24" AFES EA	RSP (METHOD B) (LIGHT) CY	RSP (METHOD B) (1/4 TON) CY	RSP (METHOD B) (1/2 TON) CY	RSP (METHOD B) FABRIC SQYD	(N) H OF INLET LF	36" CSP INLET (.168" THICK) LF	MINOR Conc (MINOR Str) CY	STRUCTURAL Conc CY	Misc I & S LB	BAR Reinf STEEL (EPOXY COATED) LB	CLASS 2 AB * CY	CULVERT INVERT MIX CY	(N) Max COVER LF	MARKER (Culv) EA	DESCRIPTION	DRAINAGE UNIT No.	DRAINAGE SYSTEM No. (PLAN Sht No.)
37	a	253	6.63	1																																									REMOVE INLET	a	37
	b				1																																								REMOVE Culv (18" x 25.2' CMP)	b	
	c				1																																								REMOVE Culv (18" x 21.1' CMP)	c	
	d									1	10.1																																		ABANDON Culv	d	
	e																				135.2																					25.7	2		JACKED 30" WSP (.239 THICK)	e	
	f																																		7.6	8.1	0.47		177						TYPE OMP DI W/PLATE COVER	f	
	g																								22.4		1		2																30" AP DD	g	
	h																															15.4		36.5											RSP (1/4 TON, METHOD B)	h	
38	a	253	8.11		1																																								REMOVE Culv (18" x 42.9' CMP)	a	38
	b					1																																							REMOVE DD	b	
	c			1																																									REMOVE INLET	c	
	d																																		3.1	3.6	0.47		177						TYPE OMP DI W/PLATE COVER	d	
	e																														6.2			20.0											RSP (LIGHT, METHOD B)	e	
	f												47.1																													2.7	2		24" APC	f	
	g																							21.7			1		2																24" AP DD	g	
39	a	253	8.42		1																																								REMOVE Culv (18" x 65.0' CMP)	a	39
	b					1																																							REMOVE DD	b	
	c			1																																									REMOVE INLET	c	
	d												67.5																													4.2	2		24" APC	d	
	e																							29.0			1		3																24" AP DD	e	
	f																																				1.20								24" HW	f	
	g																															15.1		35.8											RSP (1/4 TON, METHOD B)	g	
40	a	253	10.62		1																																								REMOVE Culv (24" x 41.2' CMP)	a	40
	b			1																																									REMOVE INLET	b	
	c												49.8																													3.7	2		24" APC	c	
	d																																		5.3	5.8	0.47		177						TYPE OMP DI W/PLATE COVER	d	
	e																														6.2			20.0											RSP (LIGHT, METHOD B)	e	
41	a	253	10.68		1																																								REMOVE Culv (12" x 6.3' CMP)	a	41
	b			1																																									REMOVE INLET	b	
	c												57.0																													4.2	2		24" APC	c	
	d																							12.3			1		2																24" AP DD	d	
	e																																		3.8	4.3	0.47		177						TYPE OMP DI W/PLATE COVER	e	
	f																															9.3		26.7											RSP (1/4 TON, METHOD B)	f	
SHEET TOTALS				5	6	2				1	10.1		221.4								135.2			63.0	22.4		4		9		12.4	39.8		139.0		21.8	3.08		708				10			

(N) = NOT A SEPARATE PAY ITEM, FOR INFORMATION ONLY.
* - Qty INCLUDED IN THE Rdwy QUANTITIES TABLE (SEE SUMMARY OF QUANTITIES SHEET Q-1).

DRAINAGE QUANTITIES

DQ-8

STATE OF CALIFORNIA - DEPARTMENT OF TRANSPORTATION
Caltrans
03-DESIGN
FUNCTIONAL SUPERVISOR: ROBERT E. POLGAR
CALCULATED-DESIGNED BY: S. PATEL
CHECKED BY: W. KEITH MACK
REVISED BY: S. PATEL
DATE REVISED: 11-02-09

LAST REVISION 07-07-09 DATE PLOTTED => 15-APR-2010 TIME PLOTTED => 16:06

Dist	COUNTY	ROUTE	POST MILES TOTAL PROJECT	SHEET No.	TOTAL SHEETS
01	Men	128,253	Var	70	106

Sarju D. Patel 11-23-09
REGISTERED CIVIL ENGINEER DATE

4-12-10
PLANS APPROVAL DATE

REGISTERED PROFESSIONAL ENGINEER SARJU D. PATEL No. C 65611 Exp. 09-30-11 CIVIL STATE OF CALIFORNIA

THE STATE OF CALIFORNIA OR ITS OFFICERS OR AGENTS SHALL NOT BE RESPONSIBLE FOR THE ACCURACY OR COMPLETENESS OF SCANNED COPIES OF THIS PLAN SHEET.

DRAINAGE QUANTITIES

DRAINAGE SYSTEM No. (PLAN Sht No.)	DRAINAGE UNIT No.	ROUTE	PM	REMOVE INLET EA	REMOVE Culv EA	REMOVE DD EA	REMOVE HW EA	REMOVE FES EA	REMOVE PIPE EA	ABANDON Culv EA	SAND BACKFILL CY	APC 18" LF	APC 24" LF	APC 30" LF	APC 36" LF	APC 42" LF	APC 48" LF	APC 72" LF	8" CSP (.079" THICK) LF	3" PP LF	JACKED 30" WSP (.239" THICK) LF	HDPE PLASTIC PIPELINER (SDR 26) 30" OD LF	HDPE PLASTIC PIPELINER (SDR 26) 42" OD LF	AP DD 24" LF	AP DD 30" LF	AP DD 48" LF	(N) APC ELBOW EA	(N) CABLE ANCHORAGE SYSTEM LF	ANCHOR ASSEMBLY EA	24" AFES EA	RSP (METHOD B) (LIGHT) CY	RSP (METHOD B) (1/4 TON) CY	RSP (METHOD B) (1/2 TON) CY	RSP (METHOD B) FABRIC SQYD	(N) H OF INLET LF	36" CSP INLET (.168" THICK) LF	MINOR Conc (MINOR Str) CY	STRUCTURAL Conc CY	Misc I & S LB	BAR Reinf STEEL (EPOXY COATED) LB	CLASS 2 AB * CY	CULVERT INVERT MIX CY	(N) Max COVER LF	MARKER (Culv) EA	DESCRIPTION	DRAINAGE UNIT No.	DRAINAGE SYSTEM No. (PLAN Sht No.)
42	a	253	11.37		1																																									REMOVE Culv (18" x 48.5' CMP)	a	42
	b			1																																									REMOVE INLET	b	
	c												49.0																														5.7	2	24" APC	c	
	d																																		3.8	4.4	0.47		177						TYPE OMP DI W/PLATE COVER	d	
	e																															12.0		32.0											RSP (1/4 TON, METHOD B)	e	
43	a	253	11.53		1																																									REMOVE Culv (18" x 42.9' CMP)	a	43
	b			1																																									REMOVE INLET	b	
	c												48.1																														2.8	2	24" APC	c	
	d																																		3.8	4.3	0.47		177						TYPE OMP DI W/PLATE COVER	d	
	e																													1															24" AFES	e	
44	a	253	11.62		1																																									REMOVE Culv (18" x 67.8' CMP)	a	44
	b			1																																									REMOVE INLET	b	
	c												67.5																														7.3	2	24" APC	c	
	d																																		3.0	3.5	0.47		215						TYPE GMP DI W/36RX GRATE	d	
45	a	253	11.74		1																																									REMOVE Culv (18" x 52.4' CMP)	a	45
	b						1																																							REMOVE HW	b	
	c												58.5																														2.8	2	24" APC	c	
	d																																				1.20								24" HW	d	
	e																														6.2			20.0												RSP (LIGHT, METHOD B)	e	
46	a	253	12.61		1																																									REMOVE Culv (18" x 50.8' CMP)	a	46
	b			1																																									REMOVE INLET	b	
	c												48.5																														3.1	2	24" APC	c	
	d																							11.8			1		2																24" AP DD	d	
	e																																		3.9	4.4	0.47		177						TYPE OMP DI W/PLATE COVER	e	
	f																															10.7		29.3											RSP (1/4 TON, METHOD B)	f	
47	a	253	12.80		1																																									REMOVE Culv (18" x 52.8' CMP)	a	47
	b												52.3																														3.2	2	24" APC	b	
	c																																		3.1		1.76		478						TYPE GT3 DI W/24-12X (2) GRATE	c	
	d																																46.3	74.7											RSP (1/2 TON, METHOD B)	d	
	e																														4.4			16.9											RSP (LIGHT, METHOD B)	e	
SHEET TOTALS				4	6		1						323.9											11.8			1		2	1	10.6	22.7	46.3	172.9		16.6	4.84		1224					12			

(N) = NOT A SEPARATE PAY ITEM, FOR INFORMATION ONLY.
* - Qty INCLUDED IN THE Rdwy QUANTITIES TABLE (SEE SUMMARY OF QUANTITIES SHEET Q-1).

DRAINAGE QUANTITIES

DQ-9

STATE OF CALIFORNIA - DEPARTMENT OF TRANSPORTATION
03-DESIGN
FUNCTIONAL SUPERVISOR: ROBERT E. POLGAR
CALCULATED-DESIGNED BY: S. PATEL
CHECKED BY: W. KEITH MACK
REVISED BY: S. PATEL
DATE REVISED: 03-18-10

LAST REVISION DATE PLOTTED => 15-APR-2010
07-07-09 TIME PLOTTED => 16:06

Dist	COUNTY	ROUTE	POST MILES TOTAL PROJECT	SHEET No.	TOTAL SHEETS
01	Men	128,253	Var	71	106

Sarju D. Patel 11-23-09
REGISTERED CIVIL ENGINEER DATE

4-12-10
PLANS APPROVAL DATE

REGISTERED PROFESSIONAL ENGINEER
SARJU D. PATEL
No. C 65611
Exp. 09-30-11
CIVIL
STATE OF CALIFORNIA

THE STATE OF CALIFORNIA OR ITS OFFICERS OR AGENTS SHALL NOT BE RESPONSIBLE FOR THE ACCURACY OR COMPLETENESS OF SCANNED COPIES OF THIS PLAN SHEET.

DRAINAGE QUANTITIES

DRAINAGE SYSTEM No. (PLAN Sht No.)	DRAINAGE UNIT No.	ROUTE	PM	REMOVE INLET	REMOVE Culv	REMOVE DD	REMOVE HW	REMOVE FES	REMOVE PIPE	ABANDON Culv	SAND BACKFILL	APC 18"	APC 24"	APC 30"	APC 36"	APC 42"	APC 48"	APC 72"	8" CSP (.079" THICK)	3" PP	JACKED 30" WSP (.239" THICK)	HDPE PLASTIC PIPELINER (SDR 26) 30" OD	HDPE PLASTIC PIPELINER (SDR 26) 42" OD	AP DD 24"	AP DD 30"	AP DD 48"	(N) APC ELBOW	(N) CABLE ANCHORAGE SYSTEM	ANCHOR ASSEMBLY	24" AFES	RSP (METHOD B) (LIGHT)	RSP (METHOD B) (1/4 TON)	RSP (METHOD B) (1/2 TON)	RSP (METHOD B) FABRIC	(N) H OF INLET	36" CSP INLET (.168" THICK)	MINOR Conc (MINOR Str)	STRUCTURAL Conc	Misc I & S	BAR Reinf STEEL (EPOXY COATED)	CLASS 2 AB *	CULVERT INVERT MIX	(N) Max COVER	MARKER (Culv)	DESCRIPTION	DRAINAGE UNIT No.	DRAINAGE SYSTEM No. (PLAN Sht No.)
				EA	EA	EA	EA	EA	EA	EA	CY	LF	LF	LF	LF	LF	LF	LF	LF	LF	LF	LF	LF	LF	LF	LF	EA	LF	EA	EA	CY	CY	CY	SQYD	LF	LF	CY	CY	LB	LB	CY	CY	LF	EA			
48	a	253	13.73		1																																								REMOVE Culv (18" x 57.7' CMP)	a	48
	b												55.2																														5.7	2	24" APC	b	
	c																							21.6			1		2																24" AP DD	c	
	d																																		3.7		1.97		478						TYPE GT3 DI W/24-12X (2) GRATE	d	
	e																														6.2			20.0											RSP (LIGHT, METHOD B)	e	
49	a	253	13.96		1																																								REMOVE Culv (18" x 47.4' CMP)	a	49
	b												47.0																														5.5	2	24" APC	b	
	c																																		4.4		1.58		239						TYPE GO DI W/24-12X GRATE	c	
	d																															14.7		37.3											RSP (1/4 TON, METHOD B)	d	
50	a	253	14.31		1																																								REMOVE Culv (24" x 65.1' CMP)	a	50
	b												76.4																														3.9	2	24" APC	b	
	c																														3.1			12.1											RSP (LIGHT, METHOD B)	c	
51	a	253	14.62		1																																								REMOVE Culv (18" x 65.7' CMP)	a	51
	b						1																																						REMOVE HW	b	
	c												69.0																														8.8	2	24" APC	c	
	d																																				1.20								24" HW	d	
	e																																				1.20								24" HW	e	
52	a	253	17.15		1																																								REMOVE Culv (24" x 96.3' CMP)	a	52
	b						1																																						REMOVE HW	b	
	c												97.3																														4.4	2	24" APC	c	
	d																																				1.20								24" HW	d	
	e																																				1.20								24" HW	e	
SHEET TOTALS					5		2						344.9											21.6			1		2		9.3	14.7		69.4			8.35		717					10			
Sht DQ-2 TOTALS				1	8		4					35.7	302.5			65.0			65.0												8.6	9.3		50.9		4.2	12.31		454					14			
Sht DQ-3 TOTALS					8		1					45.0	240.8		109.5									19.8			1		2		7.1	18.6		75.6			10.93		717					16			
Sht DQ-4 TOTALS				1	7			2	1	1	1.1		235.2							8.2				15.8			1		2		28.2		10.3	99.5		4.7	5.85	102.10	447	25534	44.9	88.4		10			
Sht DQ-5 TOTALS				3	7	1		1		1	53.0		101.9		119.4		136.7		3.0					33.7		65.5	3	65.5	4		14.2	38.6		136.9		12.4	7.14		631					8			
Sht DQ-6 TOTALS				1	6								334.1					101.3					110.6	10.6			1		2		32.6	112.3		297.3			10.35	32.86	710	2638					14			
Sht DQ-7 TOTALS				2	8					2	9.2		164.2	78.8	20.0						143.3	120.9		27.6			2		4	1	26.9	14.5		102.7			13.65		525					10			
Sht DQ-8 TOTALS				5	6	2				1	10.1		221.4								135.2			63.0	22.4		4		9		12.4	39.8		139.0		21.8	3.08		708					10			
Sht DQ-9 TOTALS				4	6		1						323.9											11.8			1		2	1	10.6	22.7	46.3	172.9		16.6	4.84		1224					12			
GRAND TOTALS				17	61	3	8	3	1	5	73.4	80.7	2268.9	78.8	248.9	65.0	136.7	101.3	68.0	8.2	278.5	120.9	110.6	203.9	22.4	65.5	14	65.5	27	2	149.9	270.5	56.6	1144.2		59.7	76.50	134.96	6133	28172	44.9	88.4		104			

(N) = NOT A SEPARATE PAY ITEM, FOR INFORMATION ONLY.
* - Qty INCLUDED IN THE Rdwy QUANTITIES TABLE (SEE SUMMARY OF QUANTITIES SHEET Q-1).

DRAINAGE QUANTITIES

DQ-10

STATE OF CALIFORNIA - DEPARTMENT OF TRANSPORTATION
Caltrans
03-DESIGN

FUNCTIONAL SUPERVISOR: ROBERT E. POLGAR
CALCULATED-DESIGNED BY: W. KEITH MACK
CHECKED BY: SARJU D. PATEL
REVISED BY: S. PATEL
DATE REVISED: 03-18-10

LAST REVISION DATE PLOTTED => 15-APR-2010
07-07-09 TIME PLOTTED => 16:06

Dist	COUNTY	ROUTE	POST MILES TOTAL PROJECT	SHEET No.	TOTAL SHEETS
01	Men	128,253	Var	72	106

Sarju D. Patel 11-23-09
REGISTERED CIVIL ENGINEER DATE

4-12-10
PLANS APPROVAL DATE

REGISTERED PROFESSIONAL ENGINEER
SARJU D. PATEL
No. C 65611
Exp. 09-30-11
CIVIL
STATE OF CALIFORNIA

THE STATE OF CALIFORNIA OR ITS OFFICERS OR AGENTS SHALL NOT BE RESPONSIBLE FOR THE ACCURACY OR COMPLETENESS OF SCANNED COPIES OF THIS PLAN SHEET.

NOTES:

1. SP = SPECIAL STATIONARY MOUNTED CONSTRUCTION AREA SIGN.
2. SP-1 SHALL HAVE BLACK LETTERS ON ORAGNE BACKGROUND.
3. EXACT SIGN LOCATIONS TO BE DETERMINED BY THE ENGINEER.

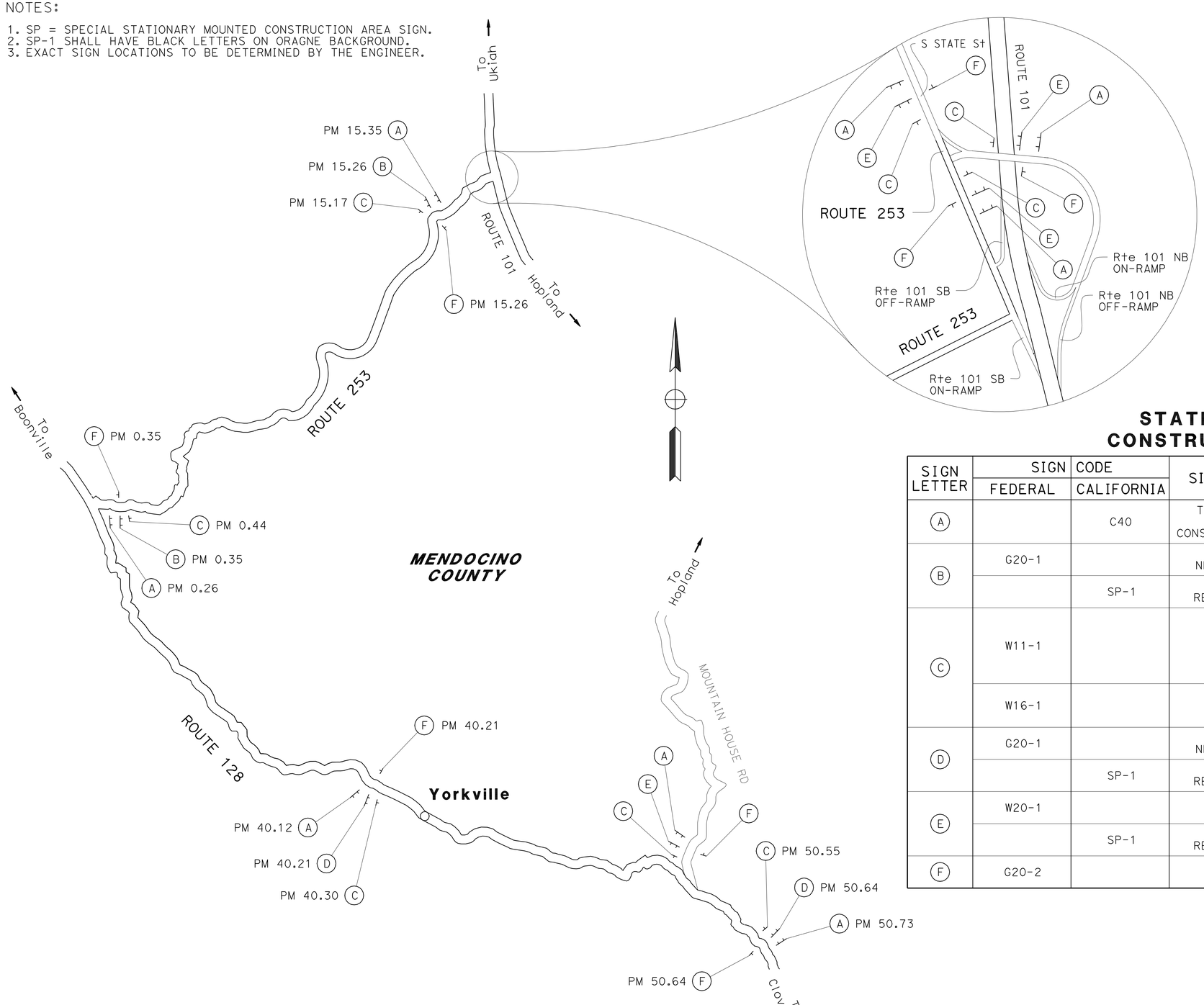

STATIONARY MOUNTED CONSTRUCTION AREA SIGNS

SIGN LETTER	SIGN CODE FEDERAL	SIGN CODE CALIFORNIA	SIGN MESSAGE	PANEL SIZE	No. OF POSTS AND SIZE	No. OF SIGNS
A		C40	TRAFFIC FINES DOUBLED IN CONSTRUCTION ZONES	108" x 42"	2 - 6" x 6"	8
B	G20-1		ROAD WORK NEXT 14 MILES	60" x 36"	2 - 4" x 6"	2
		SP-1	DRAINAGE REHABILITATION	60" x 24"		2
C	W11-1			30" x 30"	1 - 4" x 4"	8
	W16-1		SHARE THE ROAD	24" x 30"		8
D	G20-1		ROAD WORK NEXT 10 MILES	60" x 36"	2 - 4" x 6"	2
		SP-1	DRAINAGE REHABILITATION	60" x 24"		2
E	W20-1		ROAD WORK AHEAD	48" x 48"	2 - 4" x 6"	4
		SP-1	DRAINAGE REHABILITATION	60" x 24"		4
F	G20-2		END ROAD WORK	36" x 18"	1 - 4" x 4"	8

SP-1

DRAINAGE REHABILITATION 4" D

60" X 24"

CONSTRUCTION AREA SIGNS

NO SCALE

CS-1

REVISED BY	S. PATEL
DATE REVISED	09-24-09
CALCULATED-DESIGNED BY	SARJU D. PATEL
CHECKED BY	W. KEITH MACK
FUNCTIONAL SUPERVISOR	ROBERT E. POLGAR

STATE OF CALIFORNIA - DEPARTMENT OF TRANSPORTATION
03-DESIGN
Caltrans

LAST REVISION 08-24-09 | DATE PLOTTED => 15-APR-2010 | TIME PLOTTED => 17:00

Dist	COUNTY	ROUTE	POST MILES TOTAL PROJECT	SHEET No.	TOTAL SHEETS
01	Men	128,253	Var	73	106

Sarju D. Patel 11-23-09
REGISTERED CIVIL ENGINEER DATE

4-12-10
PLANS APPROVAL DATE

REGISTERED PROFESSIONAL ENGINEER SARJU D. PATEL No. C 65611 Exp. 09-30-11 CIVIL STATE OF CALIFORNIA

THE STATE OF CALIFORNIA OR ITS OFFICERS OR AGENTS SHALL NOT BE RESPONSIBLE FOR THE ACCURACY OR COMPLETENESS OF SCANNED COPIES OF THIS PLAN SHEET.

STAGE 1 NOTES:

1. REMOVE EXISTING TRAFFIC STRIPING.
2. PLACE TEMPORARY RAILING (TYPE K) FROM Sta 18+91.03 TO 22+10.23.
3. PLACE TEMPORARY TRAFFIC STRIPING AND OTHER TRAFFIC CONTROL DEVICES.
4. USING 24-HOUR ONE-WAY REVERSIBLE TRAFFIC CONTROL:
   CONSTRUCT LEFT SECTION OF CIP RCB CULVERT.
5. FOR PINNING TEMPORARY RAILING (TYPE K):
   USE 1" Ø PINS, 2' LONG, DRIVEN INTO Pvmt, Min 18" DEEP (TOTAL 4 PER PANEL).
6. DURING HOURS OF DARKNESS, THE FLAGGING-STATION AND FLAGGER SHALL BE ILLUMINATED (FOOTPRINT OF THE LIGHTING ON THE GROUND SHALL BE AT LEAST 20' IN Dia) AND CLEARLY VISIBLE TO APPROACHING TRAFFIC.

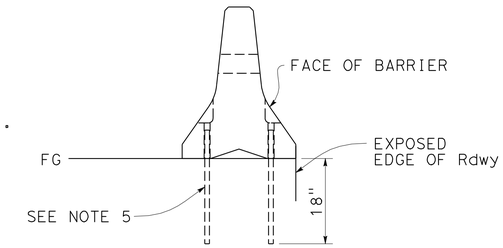

STAGE 1
Temp RAILING (TYPE K) PIN Det
NO SCALE

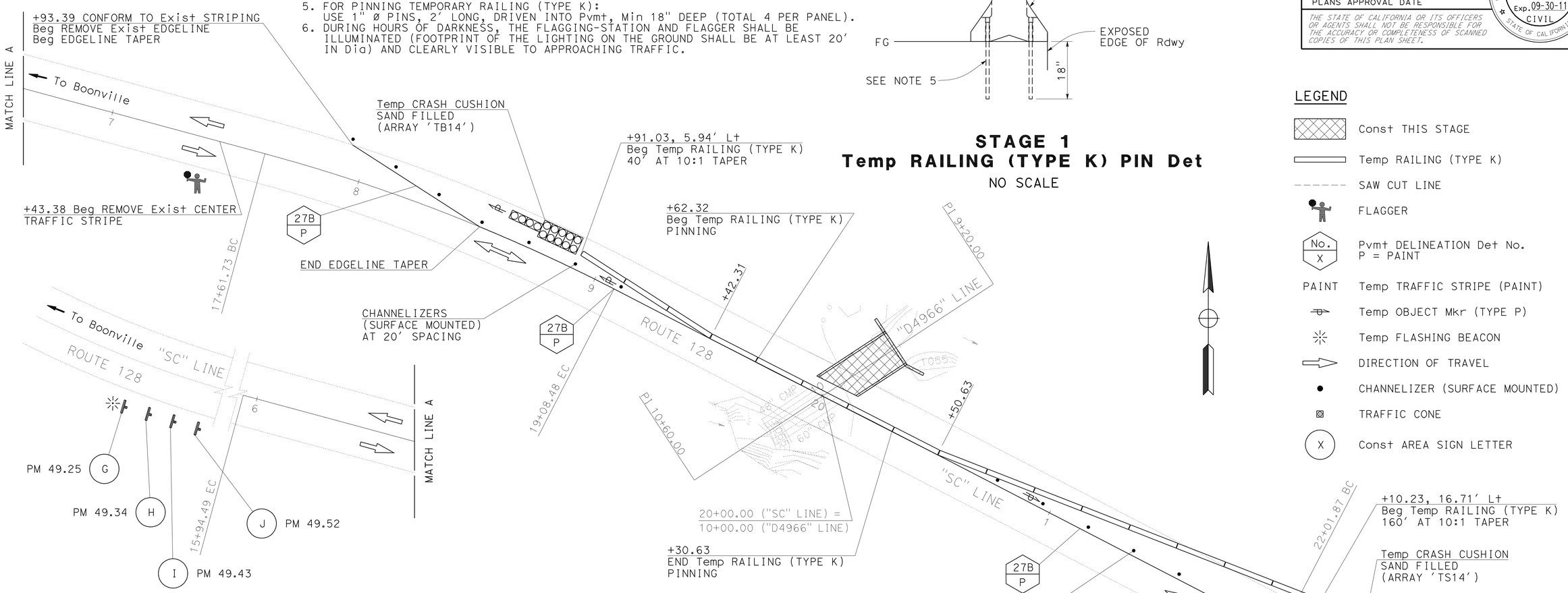

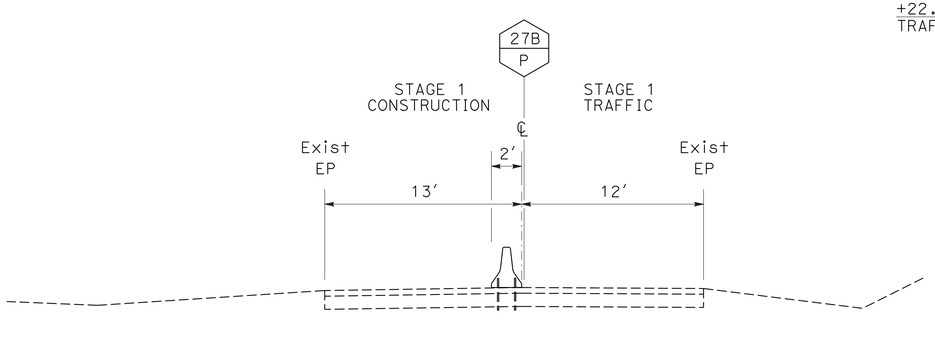

STAGE 1
TYPICAL SECTION
NO SCALE

PLAN
SCALE: 1" = 20'

STAGE 1
STAGE CONSTRUCTION AND TRAFFIC HANDLING PLAN
SCALE AS SHOWN

LEGEND

- Const THIS STAGE
- Temp RAILING (TYPE K)
- SAW CUT LINE
- FLAGGER
- No. / X — Pvmt DELINEATION Det No. P = PAINT
- PAINT — Temp TRAFFIC STRIPE (PAINT)
- Temp OBJECT Mkr (TYPE P)
- Temp FLASHING BEACON
- DIRECTION OF TRAVEL
- CHANNELIZER (SURFACE MOUNTED)
- TRAFFIC CONE
- X — Const AREA SIGN LETTER

SC-1

FUNCTIONAL SUPERVISOR	ROBERT E. POLGAR
CALCULATED-DESIGNED BY	SARJU D. PATEL
CHECKED BY	W. KEITH MACK
REVISED BY	S. PATEL
DATE REVISED	11-16-09

STATE OF CALIFORNIA - DEPARTMENT OF TRANSPORTATION
Caltrans
03-DESIGN

LAST REVISION 07-29-09 | DATE PLOTTED => 15-APR-2010 | TIME PLOTTED => 17:00

Dist	COUNTY	ROUTE	POST MILES TOTAL PROJECT	SHEET No.	TOTAL SHEETS
01	Men	128,253	Var	74	106

Sarju D. Patel 11-23-09
REGISTERED CIVIL ENGINEER DATE

4-12-10
PLANS APPROVAL DATE

REGISTERED PROFESSIONAL ENGINEER
SARJU D. PATEL
No. C 65611
Exp. 09-30-11
CIVIL
STATE OF CALIFORNIA

THE STATE OF CALIFORNIA OR ITS OFFICERS OR AGENTS SHALL NOT BE RESPONSIBLE FOR THE ACCURACY OR COMPLETENESS OF SCANNED COPIES OF THIS PLAN SHEET.

STAGE 2A NOTES:
1. REMOVE EXISTING TRAFFIC STRIPING AND OTHER TRAFFIC CONTROL DEVICES.
2. REMOVE TEMPORARY RAILING (TYPE K) FROM Sta 18+91.03 TO 22+10.23.
3. PLACE TRAFFIC CONTROL SYSTEM (SEE STANDARD PLAN T13).
4. USING 24-HOUR ONE-WAY REVERSIBLE TRAFFIC CONTROL: CONSTRUCT STRUCTURAL SECTION.
5. ALL CONES USED DURING THE HOURS OF DARKNESS SHALL BE FITTED WITH RETROREFLECTIVE BANDS (OR SLEEVES) AS SPECIFIED IN THE Spec.

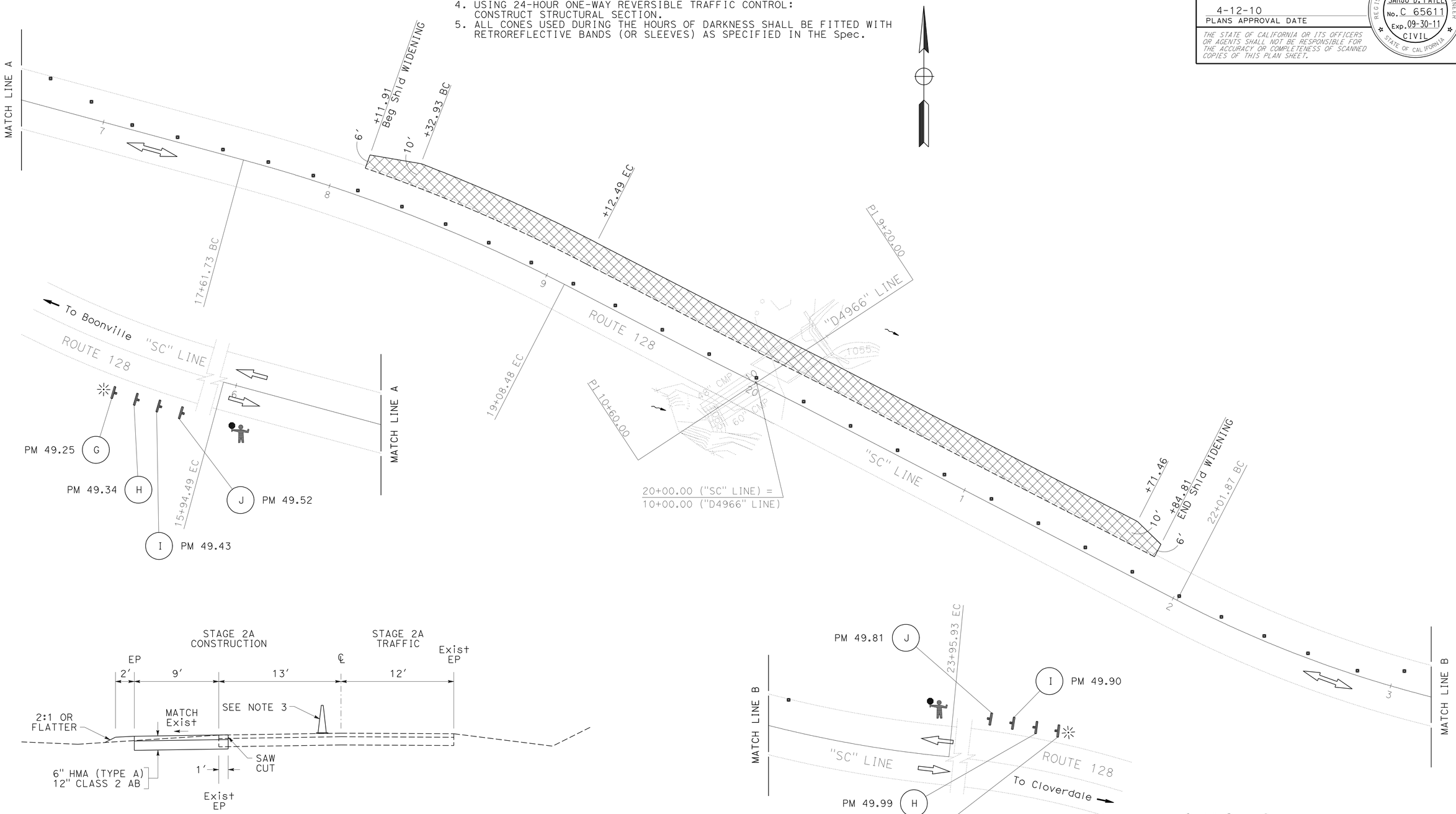

STAGE 2A
TYPICAL SECTION
NO SCALE

PLAN
SCALE: 1" = 20'

STAGE 2A
STAGE CONSTRUCTION AND TRAFFIC HANDLING PLAN
SCALE AS SHOWN

SC-2

REVISED BY	S. PATEL
DATE REVISED	11-16-09
CALCULATED-DESIGNED BY	SARJU D. PATEL
CHECKED BY	W. KEITH MACK
FUNCTIONAL SUPERVISOR	ROBERT E. POLGAR

STATE OF CALIFORNIA - DEPARTMENT OF TRANSPORTATION
Caltrans
03-DESIGN

LAST REVISION DATE PLOTTED => 15-APR-2010
07-29-09 TIME PLOTTED => 17:00

Dist	COUNTY	ROUTE	POST MILES TOTAL PROJECT	SHEET No.	TOTAL SHEETS
01	Men	128,253	Var	75	106

Sarju D. Patel 11-23-09
REGISTERED CIVIL ENGINEER DATE

4-12-10
PLANS APPROVAL DATE

REGISTERED PROFESSIONAL ENGINEER SARJU D. PATEL No. C 65611 Exp. 09-30-11 CIVIL STATE OF CALIFORNIA

THE STATE OF CALIFORNIA OR ITS OFFICERS OR AGENTS SHALL NOT BE RESPONSIBLE FOR THE ACCURACY OR COMPLETENESS OF SCANNED COPIES OF THIS PLAN SHEET.

STAGE 2B NOTES:
1. REMOVE EXISTING TRAFFIC STRIPING
2. PLACE TEMPORARY RAILING (TYPE K) FROM Sta 17+35.27 TO 22+34.05.
3. PLACE TEMPORARY TRAFFIC STRIPING AND OTHER TRAFFIC CONTROL DEVICES.
4. USING 24-HOUR ONE-WAY REVERSIBLE TRAFFIC CONTROL:
   CONSTRUCT RIGHT SECTION OF CIP RCB CULVERT.
5. FOR PINNING TEMPORARY RAILING (TYPE K):
   USE 1" Ø PINS, 12" LONG, DRIVEN INTO Pvmt, 6" DEEP FOR THE CENTER PANEL FROM Sta 19+95.41 TO 20+15.24 (TOTAL 4 PER PANEL).
   USE 1" Ø PINS, 2' LONG, DRIVEN INTO Pvmt, Min 18" DEEP FOR THE OTHER PANELS FROM Sta 19+63.91 TO 19+95.41 AND Sta 20+15.24 TO 20+55.24 (TOTAL 4 PER PANEL).
6. DURING HOURS OF DARKNESS, THE FLAGGING-STATION AND FLAGGER SHALL BE ILLUMINATED (FOOTPRINT OF THE LIGHTING ON THE GROUND SHALL BE AT LEAST 20' IN Dia) AND CLEARLY VISIBLE TO APPROACHING TRAFFIC.

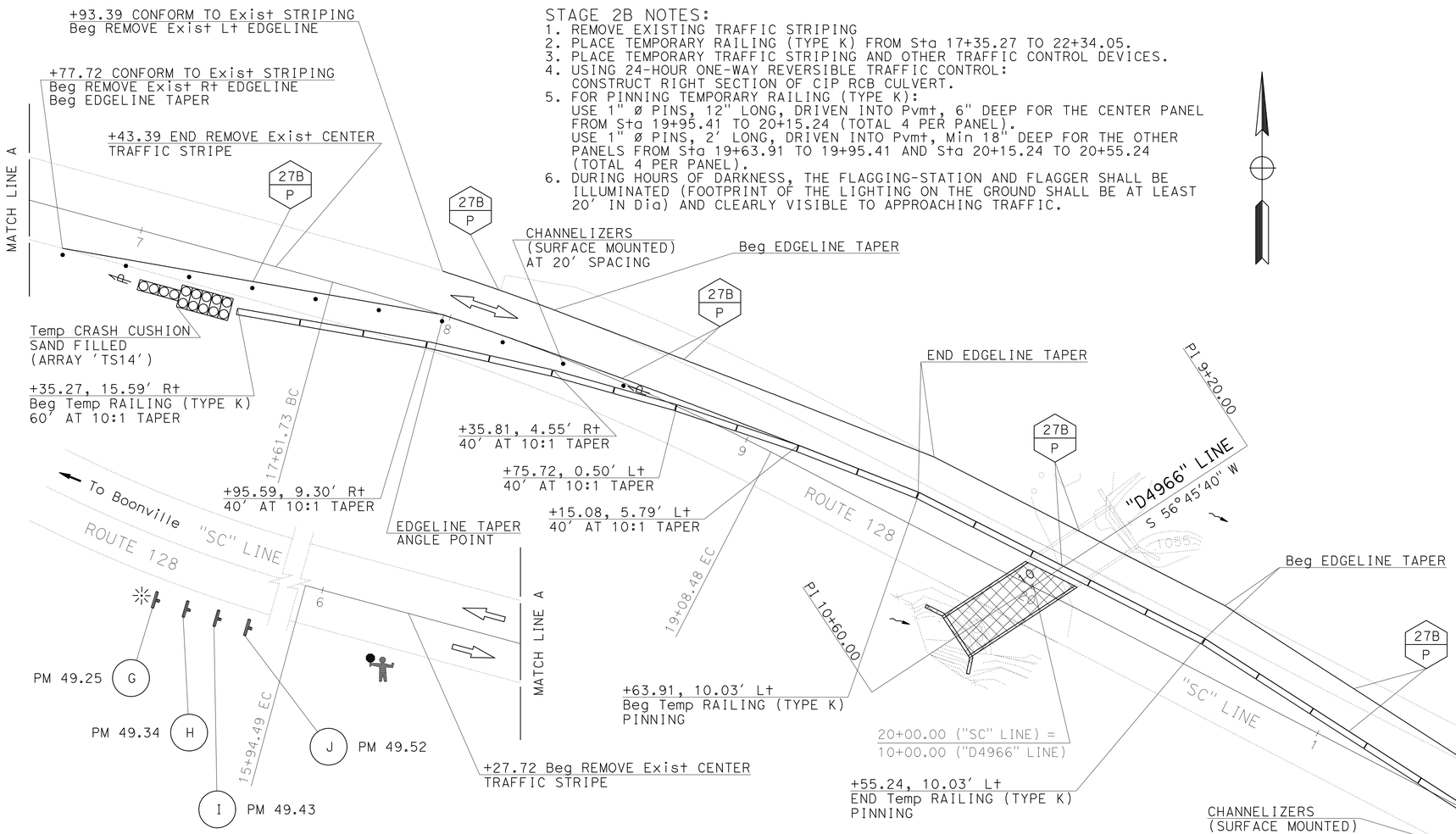

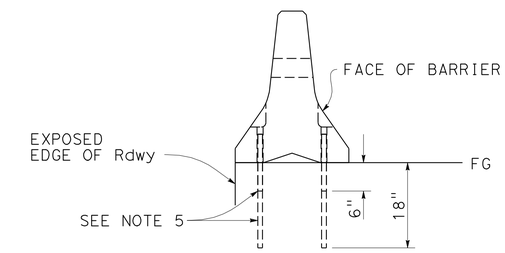

STAGE 2B
Temp RAILING (TYPE K) PIN Det
NO SCALE

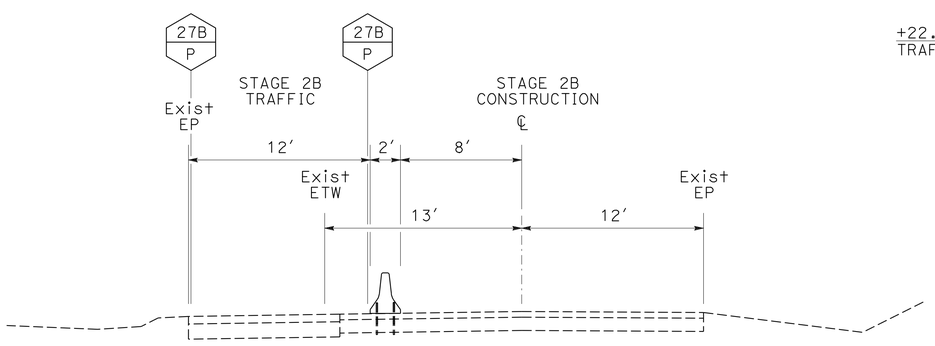

STAGE 2B
TYPICAL SECTION
NO SCALE

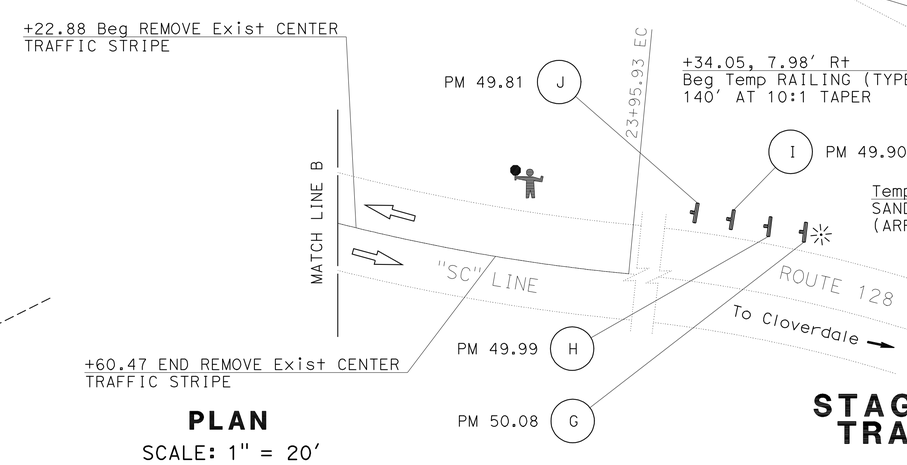

PLAN
SCALE: 1" = 20'

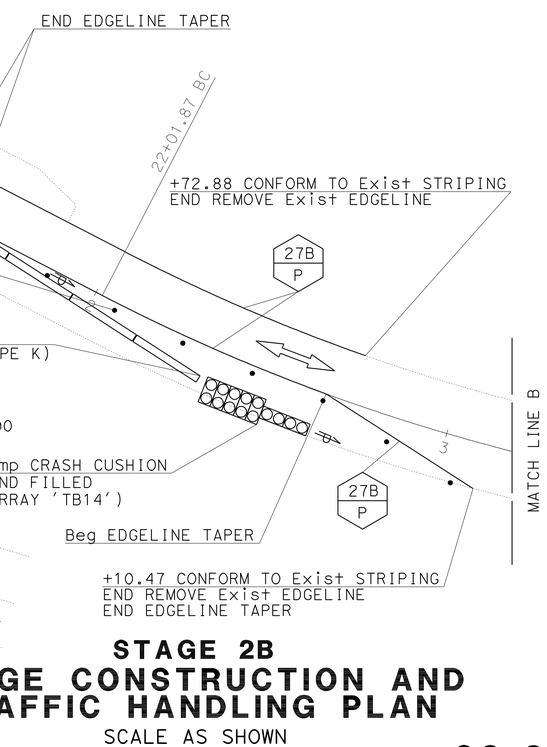

STAGE 2B
STAGE CONSTRUCTION AND TRAFFIC HANDLING PLAN
SCALE AS SHOWN

SC-3

STATE OF CALIFORNIA - DEPARTMENT OF TRANSPORTATION
Caltrans® 03-DESIGN

FUNCTIONAL SUPERVISOR: ROBERT E. POLGAR
CALCULATED-DESIGNED BY: SARJU D. PATEL
CHECKED BY: W. KEITH MACK
REVISED BY: S. PATEL
DATE REVISED: 11-16-09

LAST REVISION DATE PLOTTED => 15-APR-2010
07-29-09 TIME PLOTTED => 16:59

Dist	COUNTY	ROUTE	POST MILES TOTAL PROJECT	SHEET No.	TOTAL SHEETS
01	Men	128,253	Var	76	106

Sarju D. Patel 11-23-09
REGISTERED CIVIL ENGINEER DATE

4-12-10
PLANS APPROVAL DATE

REGISTERED PROFESSIONAL ENGINEER SARJU D. PATEL No. C 65611 Exp. 09-30-11 CIVIL STATE OF CALIFORNIA

THE STATE OF CALIFORNIA OR ITS OFFICERS OR AGENTS SHALL NOT BE RESPONSIBLE FOR THE ACCURACY OR COMPLETENESS OF SCANNED COPIES OF THIS PLAN SHEET.

STAGE 3 NOTES:
1. REMOVE TEMPORARY RAILING (TYPE K) FROM Sta 17+35.27 TO 22+34.05.
2. PLACE TRAFFIC CONTROL SYSTEM (SEE STANDARD PLAN T13).
3. USING ONE-WAY REVERSIBLE TRAFFIC CONTROL:
   PAVE FINAL LIFT OF HMA FROM Sta 16+27.72 TO 23+84.81.
   PLACE FINAL TRAFFIC STRIPING (SEE SHEET PD-1).

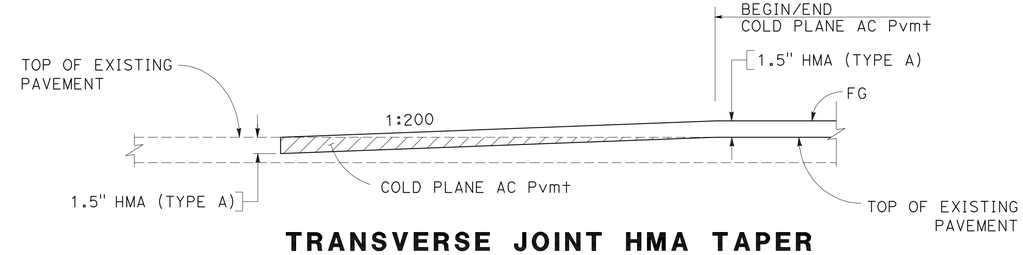

TRANSVERSE JOINT HMA TAPER
NO SCALE

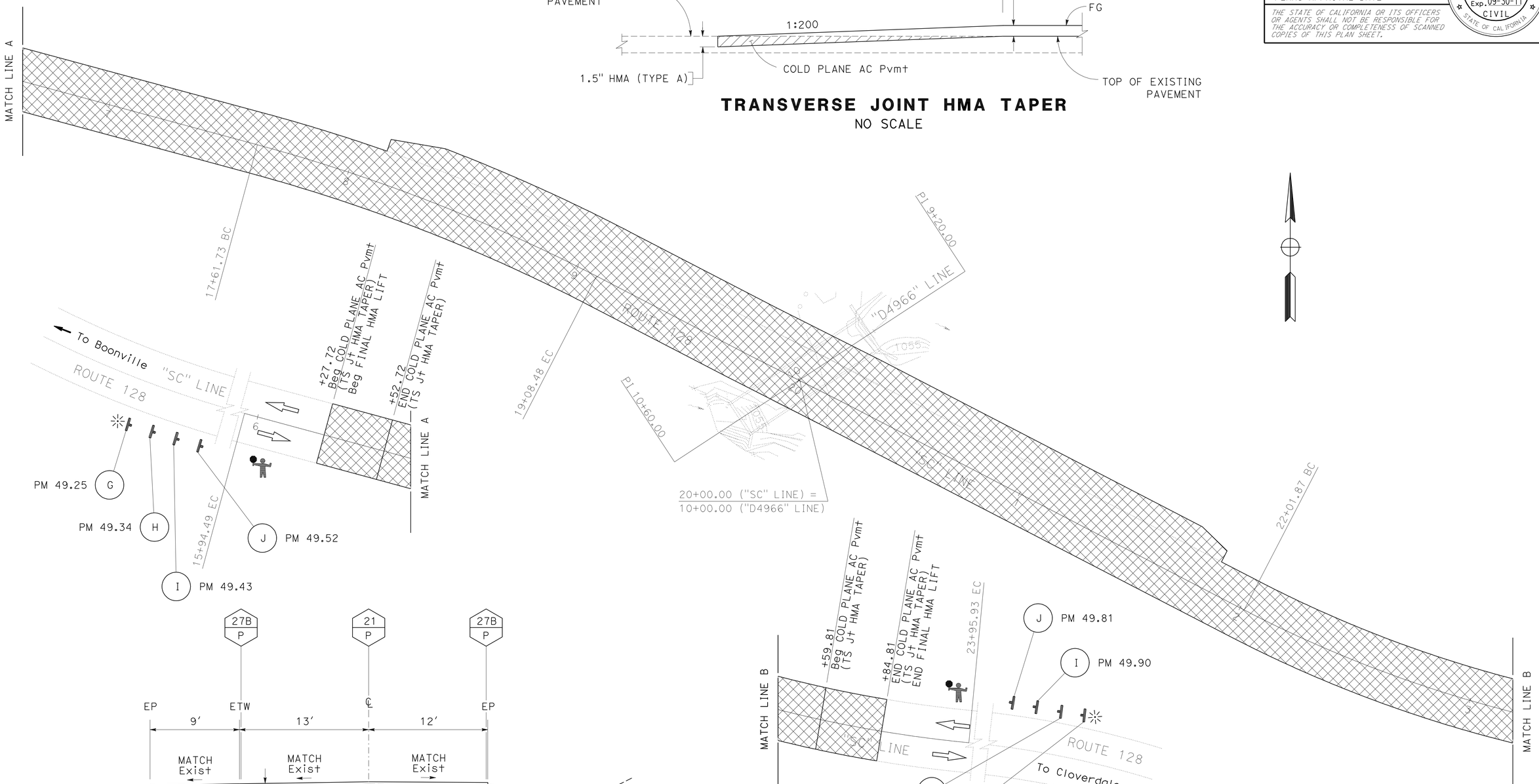

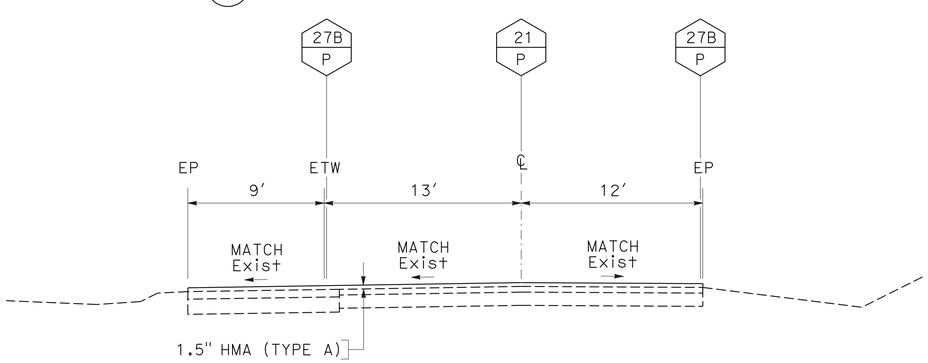

STAGE 3 TYPICAL SECTION
NO SCALE

PLAN
SCALE: 1" = 20'

STAGE 3 STAGE CONSTRUCTION AND TRAFFIC HANDLING PLAN
SCALE as shown

SC-4

STATE OF CALIFORNIA - DEPARTMENT OF TRANSPORTATION	03-DESIGN
FUNCTIONAL SUPERVISOR	ROBERT E. POLGAR
CALCULATED-DESIGNED BY	SARJU D. PATEL
CHECKED BY	W. KEITH MACK
REVISED BY	W. K. MACK
DATE REVISED	01-28-10

LAST REVISION 01-28-10 | DATE PLOTTED => 15-APR-2010 | TIME PLOTTED => 16:59

Dist	COUNTY	ROUTE	POST MILES TOTAL PROJECT	SHEET No.	TOTAL SHEETS
01	Men	128,253	Var	77	106

Sarju D. Patel 11-23-09
REGISTERED CIVIL ENGINEER DATE

4-12-10
PLANS APPROVAL DATE

REGISTERED PROFESSIONAL ENGINEER
SARJU D. PATEL
No. C 65611
Exp. 09-30-11
CIVIL
STATE OF CALIFORNIA

THE STATE OF CALIFORNIA OR ITS OFFICERS OR AGENTS SHALL NOT BE RESPONSIBLE FOR THE ACCURACY OR COMPLETENESS OF SCANNED COPIES OF THIS PLAN SHEET.

NOTES:
1. SEE SHEET CS-1 FOR ADDITIONAL CONSTRUCTION AREA SIGNS.
2. EXACT SIGN LOCATIONS TO BE DETERMINED BY THE ENGINEER.
3. ALL TEMPORARY WARNING SIGNS SHALL HAVE BLACK LEGEND ON ORAGNE BACKGROUND.
4. EACH ADVANCE WARNING SIGN SHALL BE EQUIPPED WITH AT LEAST 2 FLAGS (AT LEAST 16" x 16" IN SIZE AND SHALL BE ORANGE OR FLUORESCENT RED-ORANGE IN COLOR) FOR DAYTIME CLOSURE. FLASHING BEACONS SHALL BE PLACED AT THE LOCATIONS INDICATED FOR LANE CLOSURE DURING HOURS OF DARKNESS.

CONSTRUCTION AREA SIGNS

SIGN LETTER	SIGN CODE FEDERAL	SIGN CODE CALIFORNIA	SIGN MESSAGE	PANEL SIZE	No. OF POSTS AND SIZE	No. OF SIGNS
G	W20-1		ROAD WORK 2000 FT	36" x 36"	1 - 4" x 4" *	2
H	W20-4		ONE LANE ROAD 1500 FT	36" x 36"	1 - 4" x 4"	2
I		C9A		36" x 36"	1 - 4" x 4"	2
		C29	1000 FT	20" x 7"		2
J	W3-4		BE PREPARED TO STOP	36" x 36"	1 - 4" x 4"	2

* - MOUNTED ON POST WITH TEMPORARY FLASHING BEACON.

REMOVE TRAFFIC STRIPE

DESCRIPTION	STAGE 1		STAGE 2A & 2B		STAGE 3	SUBTOTAL	
	YELLOW	WHITE	YELLOW	WHITE	WHITE	YELLOW *	WHITE *
	LF	LF	LF	LF	LF	LF	LF
CENTERLINE	580		132			712	
L+ EDGELINE		480					480
R+ EDGELINE				633			633
Temp L+ EDGELINE				482	481		963
Temp R+ EDGELINE					637		637
SUBTOTAL						712	2713
TOTAL						3425	

* THERMOPLASTIC AND PAINTED TRAFFIC STRIPE.

TEMPORARY CRASH CUSHION MODULE

STAGE	LOCATION/ STATION ("SC" LINE)	ARRAY	TEMPORARY CRASH CUSHION MODULE
			EA
1	L+ 18+91.03	'TB14'	14
1	L+ 22+10.23	'TS14'	14
2B	R+ 17+35.27	'TS14'	14
2B	R+ 22+34.05	'TB14'	14
TOTAL			56

TEMPORARY FLASHING BEACON

LOCATION	QUANTITY
	EA
PM 49.25	1
PM 50.08	1
TOTAL	2

MARKER AND CHANNELIZER

STAGE	(N) MARKER * TYPE P	CHANNELIZER (SURFACE MOUNTED)
	EA	EA
1	4	17
2B	4	17
TOTAL	8	34

(N) - NOT A SEPARATE PAY ITEM, FOR INFORMATION ONLY.
* - INCLUDED AS PART OF CONSTRUCTION AREA SIGNS.

TEMPORARY TRAFFIC STRIPE (PAINT)

STAGE	DETAIL No. 27B
	LF
1	482
2B	1118
TOTAL	1600

TEMPORARY RAILING (TYPE K)

STAGE	STATION LIMITS ("SC" LINE)	LENGTH
		LF
1	18+91.03 TO 22+10.23	220
2B	17+35.27 TO 22+34.05	500
TOTAL		720

STAGE CONSTRUCTION AND TRAFFIC HANDLING QUANTITIES

SCQ-1

STATE OF CALIFORNIA - DEPARTMENT OF TRANSPORTATION
Caltrans
03-DESIGN
FUNCTIONAL SUPERVISOR: ROBERT E. POLGAR
CALCULATED-DESIGNED BY: SARJU D. PATEL
CHECKED BY: W. KEITH MACK
REVISED BY: S. PATEL
DATE REVISED: 11-16-09

LAST REVISION 07-29-09
DATE PLOTTED => 15-APR-2010
TIME PLOTTED => 16:59

Dist	COUNTY	ROUTE	POST MILES TOTAL PROJECT	SHEET No.	TOTAL SHEETS
01	Men	128,253	Var	78	106

Sarju D. Patel 11-23-09
REGISTERED CIVIL ENGINEER DATE

4-12-10
PLANS APPROVAL DATE

REGISTERED PROFESSIONAL ENGINEER
SARJU D. PATEL
No. C 65611
Exp. 09-30-11
CIVIL
STATE OF CALIFORNIA

THE STATE OF CALIFORNIA OR ITS OFFICERS OR AGENTS SHALL NOT BE RESPONSIBLE FOR THE ACCURACY OR COMPLETENESS OF SCANNED COPIES OF THIS PLAN SHEET.

NOTES:
1. PLACE PERMANENT TRAFFIC STRIPING.

LEGEND

(X) TRAFFIC STRIPE DETAIL No.

BEGIN OR END OF STRIPE

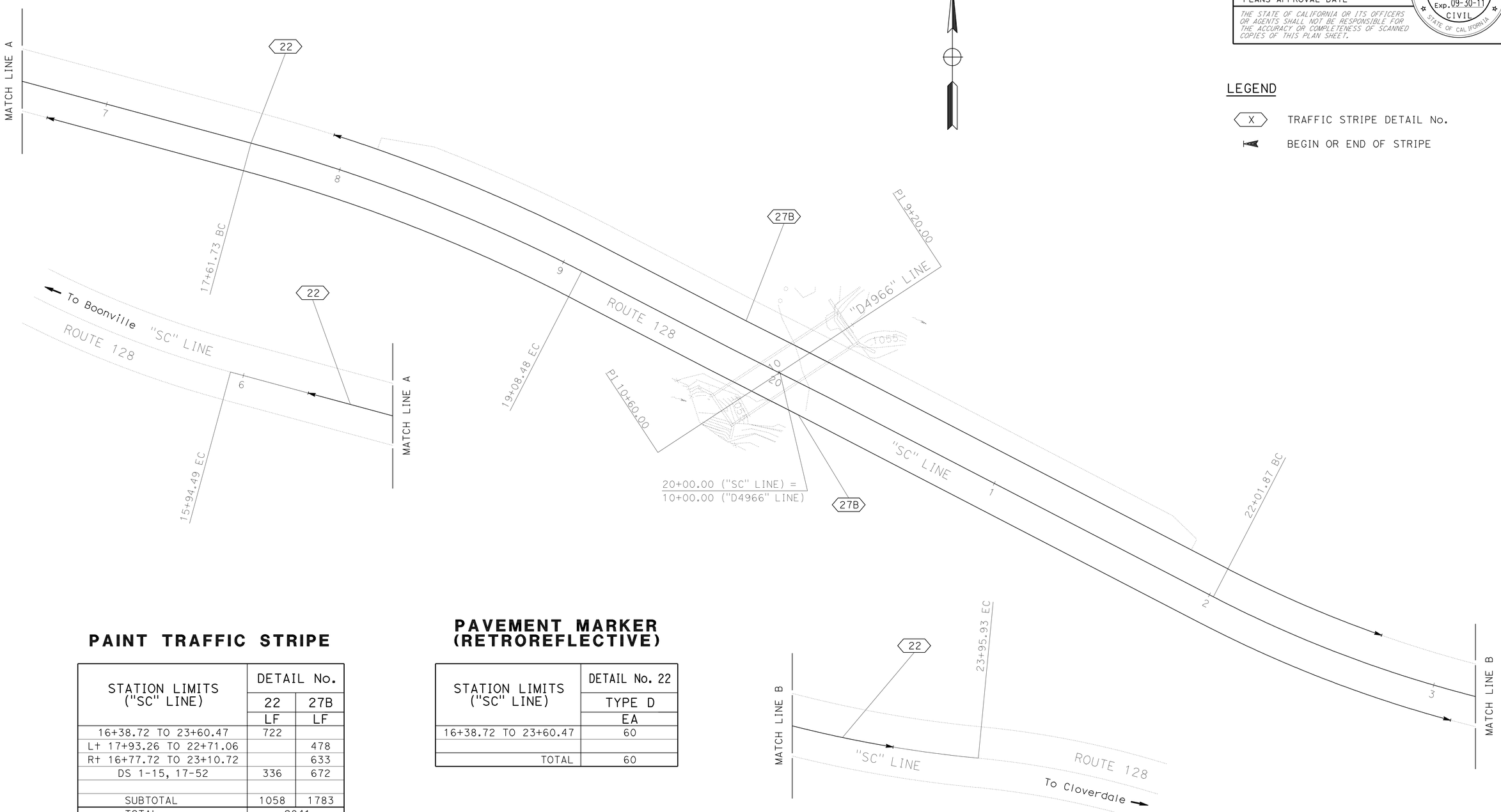

PAINT TRAFFIC STRIPE

STATION LIMITS ("SC" LINE)	DETAIL No.	
	22	27B
	LF	LF
16+38.72 TO 23+60.47	722	
L+ 17+93.26 TO 22+71.06		478
R+ 16+77.72 TO 23+10.72		633
DS 1-15, 17-52	336	672
SUBTOTAL	1058	1783
TOTAL	2841	

PAVEMENT MARKER (RETROREFLECTIVE)

STATION LIMITS ("SC" LINE)	DETAIL No. 22
	TYPE D
	EA
16+38.72 TO 23+60.47	60
TOTAL	60

PAVEMENT DELINEATION AND QUANTITIES

SCALE: 1" = 20'

PD-1

REVISED BY	W. K. MACK
DATE REVISED	01-29-10
SARJU D. PATEL	
W. KEITH MACK	
CALCULATED-DESIGNED BY	
CHECKED BY	
FUNCTIONAL SUPERVISOR	
ROBERT E. POLGAR	

STATE OF CALIFORNIA - DEPARTMENT OF TRANSPORTATION
Caltrans
03-DESIGN

LAST REVISION 01-29-10 | DATE PLOTTED => 15-APR-2010 | TIME PLOTTED => 16:59

Dist	COUNTY	ROUTE	POST MILES TOTAL PROJECT	SHEET No.	TOTAL SHEETS
01	Men	128,253	Var	79	106

Sarju D. Patel 11-23-09
REGISTERED CIVIL ENGINEER DATE

4-12-10
PLANS APPROVAL DATE

REGISTERED PROFESSIONAL ENGINEER
SARJU D. PATEL
No. C 65611
Exp. 09-30-11
CIVIL
STATE OF CALIFORNIA

THE STATE OF CALIFORNIA OR ITS OFFICERS OR AGENTS SHALL NOT BE RESPONSIBLE FOR THE ACCURACY OR COMPLETENESS OF SCANNED COPIES OF THIS PLAN SHEET.

ROADWAY QUANTITIES

DRAINAGE SYSTEM No.	LOCATION ROUTE	LOCATION PM	ROADWAY EXCAVATION (CY)	IMPORTED ROCKY MATERIAL (CY)	MINOR CONCRETE (BACKFILL) (CY)	CLASS 2 AB (CY)	PLACE HMA (Misc AREA) (SQYD)	HMA (TYPE A) (TON)	MINOR HMA (TON)
1	128	40.85	3.14						5.50
2	128	41.46		18.93					6.73
3	128	42.93	5.46		9.69				5.62
4	128	42.97		5.42	30.04				9.56
5	128	44.40	5.53		7.51				5.67
6	128	44.75	8.31	7.84					8.64
7	128	44.81	0.57		1.99		10.3	3.47	4.81
8	128	44.90		4.71	1.35		10.7	3.60	5.65
9	128	46.58	0.55	3.67					8.65
10	128	46.74	4.73						6.68
11	128	47.03	0.92				23.5	7.93	5.63
12	128	48.21	1.67	11.22					7.16
13	128	48.46	4.29		9.62				6.91
14	128	48.50	1.23	4.15	3.36				6.62
15	128	48.92					12.2	4.12	5.33
16	128	49.66	51.12			135.6		137.30	37.26
17	128	50.00							5.29
18	253	0.99		23.01					6.28
19	253	1.06	15.22	10.09					7.20
20	253	1.38		12.98					6.10
21	253	2.81		30.35			11.1	3.75	8.16
22	253	2.85		18.14					10.41
23	253	2.98		86.58					5.83
24	253	3.06					19.7	6.63	5.87
25	253	3.13		40.14			21.7	7.31	5.92
26	253	3.34		12.19			19.0	6.41	7.18
27	253	3.86	6.73	28.08					6.55
28	253	4.18	4.78	5.52	6.15				6.28
SUBTOTAL			114.25	323.02	69.71	135.6	128.2	180.52	217.49

DRAINAGE SYSTEM No.	LOCATION ROUTE	LOCATION PM	ROADWAY EXCAVATION (CY)	IMPORTED ROCKY MATERIAL (CY)	MINOR CONCRETE (BACKFILL) (CY)	CLASS 2 AB (CY)	PLACE HMA (Misc AREA) (SQYD)	HMA (TYPE A) (TON)	MINOR HMA (TON)
29	253	4.25		194.85					12.98
30	253	4.78		17.19					6.12
32	253	5.15							5.72
33	253	5.90		19.66			19.1	6.46	6.10
34	253	6.01		11.12					5.96
35	253	6.17	51.43	74.40					
36	253	6.34		11.51					6.56
38	253	8.11		24.58					5.96
39	253	8.42	11.50	7.25					6.44
40	253	10.62		13.39					6.59
41	253	10.68		42.93					6.73
42	253	11.37		1.59					5.96
43	253	11.53		15.72					5.96
44	253	11.62		16.41					6.41
45	253	11.74	4.40	15.47					7.11
46	253	12.61		11.41					5.92
47	253	12.80	48.60	4.17					7.56
48	253	13.73		70.81					6.10
49	253	13.96		19.69			21.7	7.33	7.20
50	253	14.31		20.85					9.52
51	253	14.62		15.31					6.14
52	253	17.15		3.81			4.0	1.33	11.10
SUBTOTAL			115.93	612.12			44.8	15.12	148.14
SUBTOTAL FROM DRAINAGE QUANTITIES:									
CLASS 2 AB *						44.9			
SUBTOTAL FROM SUMMARY OF QUANTITIES:									
PLACE HMA DIKE (TYPE A) **								4.95	
TOTAL			230.18	935.14	69.71	180.5	173.0	200.59	365.63

* - Q†y FROM THE DRAINAGE QUANTITIES TABLE (SEE DRAINAGE QUANTITIES SHEET DQ-10).
** - Q†y FROM PLACE HMA DIKE (TYPE A) TABLE (SEE SUMMARY OF QUANTITIES SHEET Q-2).

COLD PLANE AC PAVEMENT

DRAINAGE SYSTEM No.	LOCATION ROUTE	LOCATION PM	LOCATION STATION	QUANTITY (SQYD)
16	128	49.66	16+27.72 TO 16+52.72	69.5
			23+59.81 TO 23+84.81	69.5
TOTAL				139.0

REMOVE AC

DRAINAGE SYSTEM No.	LOCATION ROUTE	LOCATION PM	LOCATION R†/L†	QUANTITY (SQYD)
52	253	17.15	R†	2.68
TOTAL				2.68

REMOVE Conc CURB

DRAINAGE SYSTEM No.	LOCATION ROUTE	LOCATION PM	LOCATION R†/L†	QUANTITY (LF)
52	253	17.15	R†	19.8
TOTAL				19.8

SUMMARY OF QUANTITIES

Q-1

STATE OF CALIFORNIA - DEPARTMENT OF TRANSPORTATION
Caltrans
03-DESIGN
FUNCTIONAL SUPERVISOR: ROBERT E. POLGAR
CALCULATED-DESIGNED BY: SARJU D. PATEL
CHECKED BY: W. K. MACK & L. SASEVICH
REVISED BY: S. PATEL
DATE REVISED: 11-09-09

LAST REVISION 07-07-09
DATE PLOTTED => 15-APR-2010
TIME PLOTTED => 17:02

Dist	COUNTY	ROUTE	POST MILES TOTAL PROJECT	SHEET No.	TOTAL SHEETS
01	Men	128,253	Var	80	106

Sarju D. Patel 11-23-09
REGISTERED CIVIL ENGINEER DATE

4-12-10
PLANS APPROVAL DATE

REGISTERED PROFESSIONAL ENGINEER
SARJU D. PATEL
No. C 65611
Exp. 09-30-11
CIVIL
STATE OF CALIFORNIA

THE STATE OF CALIFORNIA OR ITS OFFICERS OR AGENTS SHALL NOT BE RESPONSIBLE FOR THE ACCURACY OR COMPLETENESS OF SCANNED COPIES OF THIS PLAN SHEET.

RECONSTRUCT FENCE (TYPE WM)

DRAINAGE SYSTEM No.	LOCATION ROUTE	PM	R+/L+	LENGTH LF
5	128	44.40	R+	26.3
6	128	44.75	R+	27.1
			L+	27.8
7	128	44.81	R+	43.8
8	128	44.90	R+	20.0
11	128	47.03	R+	26.4
12	128	48.21	R+	33.7
			L+	38.6
15	128	48.92	R+	34.9
16	128	49.66	R+	52.5
17	128	50.00	L+	32.9
19	253	1.06	R+	41.2
21	253	2.81	L+	36.5
22	253	2.85	R+	26.1
			L+	30.5
23	253	2.98	L+	26.3
24	253	3.06	L+	20.0
25	253	3.13	L+	20.0
26	253	3.34	L+	26.2
27	253	3.86	R+	20.0
			L+	27.4
29	253	4.25	R+	46.2
31	253	4.97	R+	94.7
			L+	60.7
32	253	5.15	R+	34.7
39	253	8.42	R+	35.2
40	253	10.62	R+	39.6
41	253	10.68	R+	37.9
46	253	12.61	L+	20.0
51	253	14.62	L+	72.0
			TOTAL	1079.2

CABLE RAILING

DRAINAGE SYSTEM No.	LOCATION ROUTE	PM	R+/L+	LENGTH LF
6	128	44.75	R+	13.5
			L+	13.5
12	128	48.21	R+	12.0
			L+	12.0
16	128	49.66	R+	26.3
			L+	28.4
21	253	2.81	R+	12.0
22	253	2.85	R+	15.0
29	253	4.25	R+	30.0
			L+	30.0
35	253	6.17	R+	22.0
			L+	12.0
36	253	6.34	R+	10.0
			TOTAL	236.7

PLACE HMA DIKE (TYPE A)

DRAINAGE SYSTEM No.	LOCATION ROUTE	PM	R+/L+	LENGTH LF	HMA (TYPE A) TON
7	128	44.81	L+	20	0.55
8	128	44.90	L+	20	0.55
11	128	47.03	L+	20	0.55
15	128	48.92	L+	20	0.55
24	253	3.06	R+	20	0.55
25	253	3.13	R+	20	0.55
26	253	3.34	R+	20	0.55
33	253	5.90	L+	20	0.55
49	253	13.96	R+	20	0.55
			TOTAL	180	4.95 *

* - Qty INCLUDED IN THE Rdwy QUANTITIES TABLE (SEE SUMMARY OF QUANTITIES SHEET Q-1).

RECONSTRUCT MBGR (WOOD POST)

DRAINAGE SYSTEM No.	LOCATION ROUTE	PM	R+/L+	LENGTH LF
44	253	11.62	L+	27.1
47	253	12.80	L+	27.1
			TOTAL	54.2

RESET ROADSIDE SIGN (ONE POST)

DRAINAGE SYSTEM No.	LOCATION ROUTE	PM	R+/L+	QUANTITY EA
22	253	2.85	R+	1
52	253	17.15	R+	1
			TOTAL	2

MINOR CONCRETE (CURB), (ISLAND PAVING)

DRAINAGE SYSTEM No.	LOCATION ROUTE	PM	(CURB) TYPE B2-6	TYPE E	(ISLAND PAVING)
			CY		
52	253	17.15	0.80	0.42	0.26
		TOTAL	1.22		0.26

SUMMARY OF QUANTITIES

Q-2

STATE OF CALIFORNIA - DEPARTMENT OF TRANSPORTATION
Caltrans
03-DESIGN

FUNCTIONAL SUPERVISOR: ROBERT E. POLGAR
CALCULATED-DESIGNED BY: SARJU D. PATEL
CHECKED BY: W. K. MACK & L. SASEVICH
REVISED BY: S. PATEL
DATE REVISED: 03-18-10

LAST REVISION DATE PLOTTED => 15-APR-2010
07-07-09 TIME PLOTTED => 17:05

Dist	COUNTY	ROUTE	POST MILES TOTAL PROJECT	SHEET No.	TOTAL SHEETS
01	Men	128,253	Var	81	106

Sarju D. Patel 11-23-09
REGISTERED CIVIL ENGINEER DATE

4-12-10
PLANS APPROVAL DATE

REGISTERED PROFESSIONAL ENGINEER
SARJU D. PATEL
No. C 65611
Exp. 09-30-11
CIVIL
STATE OF CALIFORNIA

THE STATE OF CALIFORNIA OR ITS OFFICERS OR AGENTS SHALL NOT BE RESPONSIBLE FOR THE ACCURACY OR COMPLETENESS OF SCANNED COPIES OF THIS PLAN SHEET.

WATER POLLUTION CONTROL

DRAINAGE SYSTEM No.	LOCATION ROUTE	LOCATION PM	Temp DI PROTECTION (EA)	Temp FIBER ROLL (LF)	Temp SILT FENCE (LF)
1	128	40.85			20
2	128	41.46			20
3	128	42.93		45	20
4	128	42.97		45	20
5	128	44.40		45	20
6	128	44.75			20
7	128	44.81	1	45	
8	128	44.90	1		
9	128	46.58			20
10	128	46.74			20
11	128	47.03	1		20
12	128	48.21			20
13	128	48.46		45	20
14	128	48.50			20
15	128	48.92	1		20
16	128	49.66		45	20
17	128	50.00			20
18	253	0.99			20
19	253	1.06			20
20	253	1.38			20
21	253	2.81	1		20
22	253	2.85			20
23	253	2.98			20
24	253	3.06	1		
25	253	3.13	1		20
26	253	3.34	1		
SUBTOTAL			8	270	440

DRAINAGE SYSTEM No.	LOCATION ROUTE	LOCATION PM	Temp DI PROTECTION (EA)	Temp FIBER ROLL (LF)	Temp SILT FENCE (LF)
27	253	3.86			20
28	253	4.18		45	20
29	253	4.25			30
30	253	4.78			20
31	253	4.97			20
32	253	5.15			25
33	253	5.90	1		
34	253	6.01			20
35	253	6.17	1		20
36	253	6.34			20
37	253	6.63	1		20
38	253	8.11			20
39	253	8.42			20
40	253	10.62	1	45	20
41	253	10.68	1		20
42	253	11.37	1		20
43	253	11.53	1	45	
44	253	11.62	1		
45	253	11.74			20
46	253	12.61	1		20
47	253	12.80	1	45	
48	253	13.73	1		20
49	253	13.96	1		20
50	253	14.31		45	20
51	253	14.62			20
52	253	17.15		45	20
SUBTOTAL			12	270	455
TOTAL			20	540	895

TEMPORARY FENCE (TYPE ESA)

DRAINAGE SYSTEM No.	LOCATION ROUTE	LOCATION PM	LOCATION R+/L+	LENGTH (LF)
1	128	40.85	R+	30
2	128	41.46	L+	30
3	128	42.93	R+	30
6	128	44.75	R+	25
16	128	49.66	R+	60
			L+	50
17	128	50.00	L+	30
23	253	2.98	L+	25
27	253	3.86	L+	30
29	253	4.25	R+	40
			L+	40
31	253	4.97	R+	65
			L+	90
33	253	5.90	R+	30
34	253	6.01	R+	30
35	253	6.17	R+	40
			L+	90
36	253	6.34	R+	30
			L+	50
37	253	6.63	R+	60
			L+	60
42	253	11.37	R+	25
46	253	12.61	R+	30
			L+	30
48	253	13.73	L+	30
51	253	14.62	R+	30
			L+	35
TOTAL				1115

SUMMARY OF QUANTITIES

Q-3

STATE OF CALIFORNIA - DEPARTMENT OF TRANSPORTATION
Caltrans
03-DESIGN

FUNCTIONAL SUPERVISOR: ROBERT E. POLGAR
CALCULATED-DESIGNED BY: SARJU D. PATEL
CHECKED BY: W. KEITH MACK
REVISED BY: S. PATEL
DATE REVISED: 10-27-09

LAST REVISION 07-07-09
DATE PLOTTED => 15-APR-2010
TIME PLOTTED => 16:59

DIST	COUNTY	ROUTE	POST MILES TOTAL PROJECT	SHEET NO.	TOTAL SHEETS
01	Men	128,253	Var	82	106

REGISTERED CIVIL ENGINEER

November 17, 2006
PLANS APPROVAL DATE

REGISTERED PROFESSIONAL ENGINEER Dallas Forester No. C37765 Exp. 12-31-06 CIVIL STATE OF CALIFORNIA

The State of California or its officers or agents shall not be responsible for the accuracy or completeness of electronic copies of this plan sheet.

To accompany plans dated 4-12-10

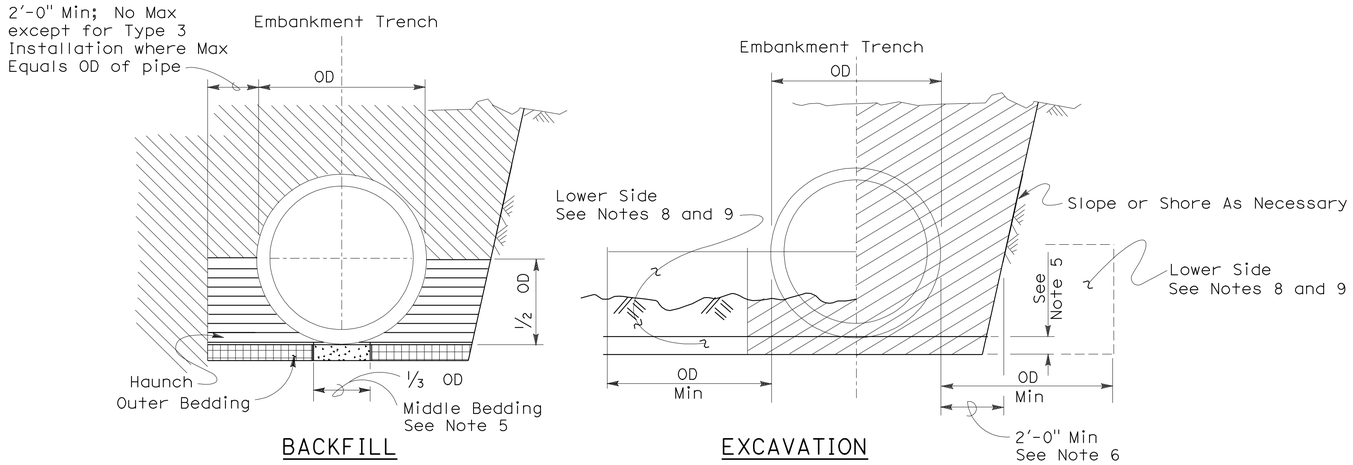

Roadway Embankment

Structure Backfill (Culvert) See Note 6

Structure Backfill (Culvert) See Note 6

Loose Backfill

Excavation Structure (Culvert)

TYPE 1 INSTALLATION:

The haunch and outer bedding shall be compacted to a minimum 90 percent relative compaction. In addition, the minimum sand equivalent in these areas shall be 30 and the maximum percentage passing the 75 μm sieve size shall be 12.

TYPE 2 INSTALLATION:

The haunch and outer bedding shall be compacted to a minimum 90 percent relative compaction. In addition, the minimum sand equivalent in these areas shall be 25.

TYPE 3 INSTALLATION:

The haunch and outer bedding shall be compacted to a minimum 85 percent relative compaction. 90 percent relative compaction will be required where the fill over the pipe is less than 4'-0" or 1/2 OD.

NOTES:

1. Unless otherwise shown on the plans or specified in the special provision, the Contractor shall have the option of selecting the class of RCP and the type of installation to be used, provided the height of cover does not exceed the value shown for the RCP selected.
   Example: 24" RCP culvert with maximum cover of 19'-0" the options are:
   a) Class III or stronger with Installation Type 1.
   b) Class III Special or stronger with Installation Type 2.
   c) Class IV Special or stronger with Installation Type 3.
   Cover is defined as the maximum vertical distance from top of the pipe to finished grade within the length of any given culvert.
2. The class of RCP and Installation Type selected shall be the same throughout the length of any given culvert.
3. The "length of any culvert" is defined as the culvert between:
   a) Successive drainage structure (inlets, junction boxes, headwalls, etc.).
   b) A drainage structure and the inlet or outlet end of the culvert.
   c) The inlet and outlet end of the culvert when there are no intervening drainage structures.
4. Oval and arch shaped RCP shall not be used.
5. 1/25 OD Min, not less than 3".
6. Slurry cement backfill may be substituted for backfill in the outer bedding and haunch areas. If slurry is used the outer and middle beddings shall be omitted. Prior to installation the soil under the middle 1/3 of the outside diameter of the pipe shall be softened by scarifying or other means to a minimum depth of 1/25 OD, but not less than 3". Where slurry cement backfill is used clear distance to trench wall may be reduced as set forth in Section 19-3.062 of the Standard Specifications.
7. Backfill shall be placed full width of excavation except where dimensions are shown for backfill width or thickness. Dimensions shown are minimums.
8. Lower side shall be suitable material as determined by the Engineer. Otherwise it shall be considered unsuitable as set forth in Section 19-2.02 of the Standard Specifications. See Note 9.
9. Where the pipe is placed in a trench, if the trench walls are sloped at 5 vertical to 1 horizontal or steeper for at least 90 percent of the trench height or up to not less than 12" from the grading plane, the firmness of the soil in the lower side need not be considered.
10. Non-reinforced precast concrete pipe sizes 3'-0" or smaller may be placed under installation Types 1, 2 or 3.

INSTALLATION TYPE 1

MINIMUM CLASS AND D-LOAD	COVER	
	108" Dia AND SMALLER	OVER 108" Dia
Class II 1000D	14.9'	12.9'
Class III 1350D	15.0' - 20.9'	13.0' - 18.9'
Class III Special 1700D	21.0' - 26.9'	19.0' - 24.9'
Class IV 2000D	27.0' - 31.9'	25.0' - 29.9'
Class IV Special 2500D	32.0' - 40.9'	30.0' - 38.9'
Class V 3000D	41.0' - 49.9'	39.0' - 46.9'
Class V Special 3600D	50.0' - 59.0'	47.0' - 58.0'

INSTALLATION TYPE 2

MINIMUM CLASS AND D-LOAD	COVER
Class II 1000D	9.9'
Class III 1350D	10.0'- 14.9'
Class III Special 1700D	15.0' - 19.9'
Class IV 2000D	20.0' - 24.9'
Class IV Special 2500D	25.0' - 31.9'
Class V 3000D	32.0' - 38.9'
Class V Special 3600D	39.0' - 47.0'

INSTALLATION TYPE 3

MINIMUM CLASS AND D-LOAD	COVER	
	48" Dia AND SMALLER	OVER 48" Dia
Class II 1000D	7.9'	5.9'
Class III 1350D	8.0' - 10.9'	6.0' - 8.9'
Class III Special 1700D	11.0' - 14.9'	9.0' - 12.9'
Class IV 2000D	15.0' - 17.9'	13.0' - 15.9'
Class IV Special 2500D	18.0' - 21.9'	16.0' - 19.9'
Class V 3000D	22.0' - 26.9'	20.0' - 24.9'
Class V Special 3600D	30.0' - 33.0'	25.0' - 31.0'

STATE OF CALIFORNIA
DEPARTMENT OF TRANSPORTATION

EXCAVATION AND BACKFILL CONCRETE PIPE CULVERTS

NO SCALE

RSP A62DA DATED NOVEMBER 17, 2006 SUPERSEDES STANDARD PLAN A62DA DATED MAY 1, 2006 - PAGE 20 OF THE STANDARD PLANS BOOK DATED MAY 2006.

REVISED STANDARD PLAN RSP A62DA

2006 REVISED STANDARD PLAN RSP A62DA

10-26-06

DIST	COUNTY	ROUTE	POST MILES TOTAL PROJECT	SHEET NO.	TOTAL SHEETS
01	Men	128,253	Var	83	106

REGISTERED CIVIL ENGINEER

June 5, 2009
PLANS APPROVAL DATE

REGISTERED PROFESSIONAL ENGINEER Glenn DeCou No. C34547 Exp. 9-30-09 CIVIL STATE OF CALIFORNIA

The State of California or its officers or agents shall not be responsible for the accuracy or completeness of electronic copies of this plan sheet.

To accompany plans dated 4-12-10

NOTES:

1. Offset to be 2'-0" at monument locations, measured at right angles to R/W lines. Taper to achieve offset to be at least 20'-0" long.
2. Line post spacing for wood post equals 12'-0" maximum. Line post spacing for metal post equals 10'-0" maximum.
3. See Standard Plan A86 for Barbed Wire and Wire Mesh dimensions and for steel post and wood post dimensions and weight.
4. Use wood posts when specified in the Special Provisions or shown on the Project Plans.

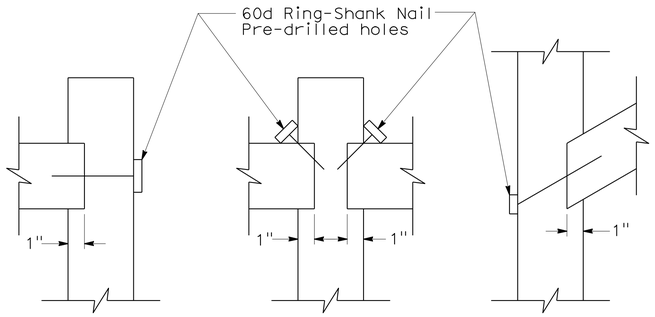

WOOD MORTISE DETAIL

See Note 4

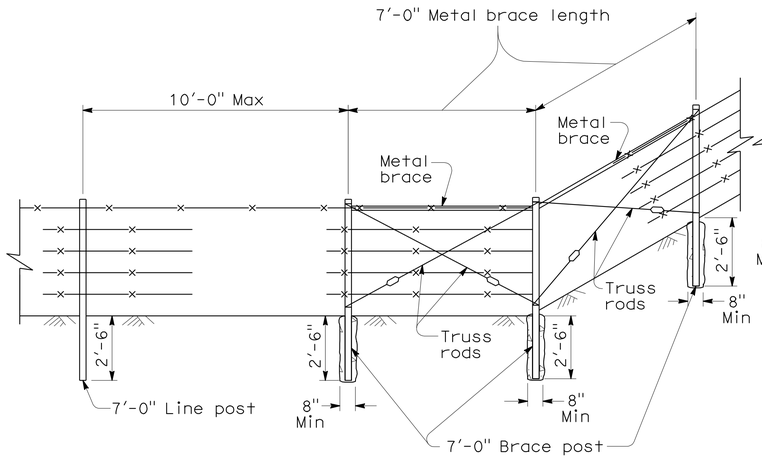

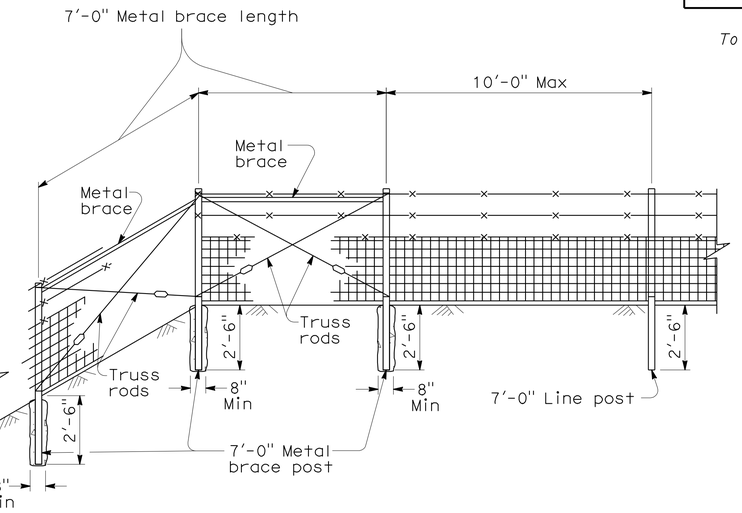

METAL POST

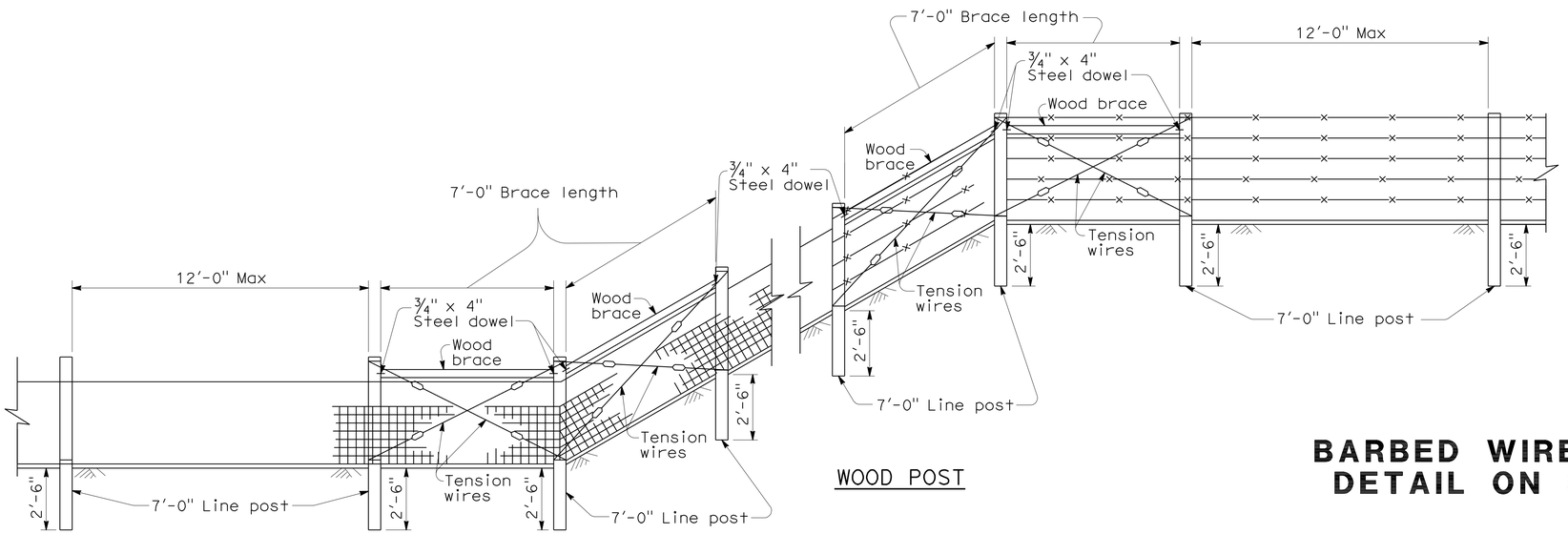

WOOD POST

FENCE ON SHARP BREAK IN GRADE

LEGEND

Wire Mesh fencing

Barbed Wire fencing

STATE OF CALIFORNIA
DEPARTMENT OF TRANSPORTATION

BARBED WIRE AND WIRE MESH FENCE DETAIL ON SHARP BREAK IN GRADE

NO SCALE

NSP A86A DATED JUNE 5, 2009 SUPPLEMENTS THE STANDARD PLANS BOOK DATED MAY 2006.

NEW STANDARD PLAN NSP A86A

2006 NEW STANDARD PLAN NSP A86A

5-12-09

DIST	COUNTY	ROUTE	POST MILES TOTAL PROJECT	SHEET NO.	TOTAL SHEETS
01	Men	128,253	Var	84	106

REGISTERED CIVIL ENGINEER

June 5, 2009
PLANS APPROVAL DATE

REGISTERED PROFESSIONAL ENGINEER Glenn DeCou No. C34547 Exp. 9-30-09 CIVIL STATE OF CALIFORNIA

The State of California or its officers or agents shall not be responsible for the accuracy or completeness of electronic copies of this plan sheet.

To accompany plans dated 4-12-10

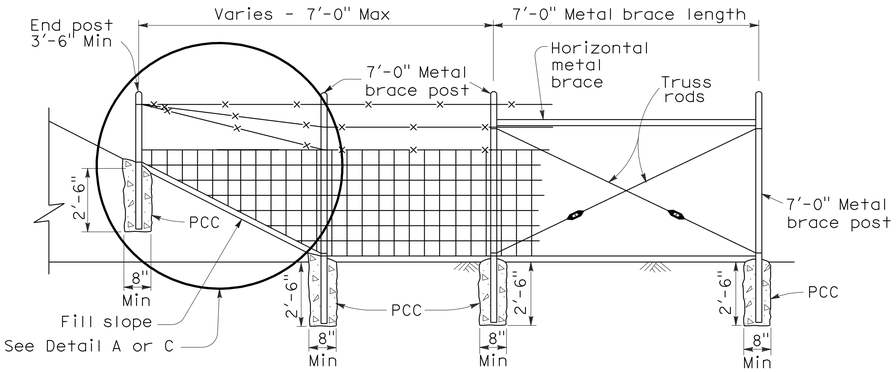

METAL POST

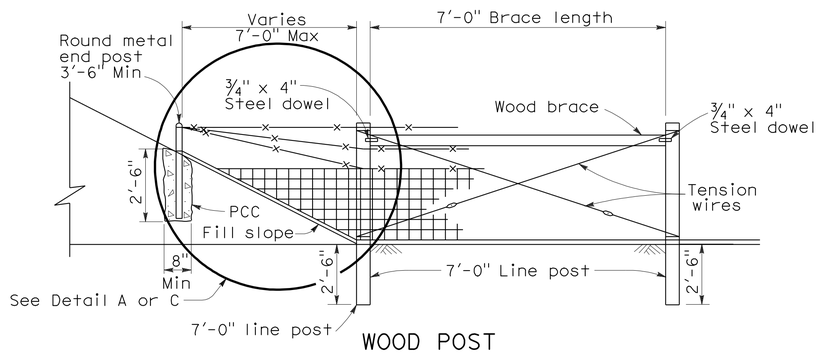

WOOD POST

METHOD OF ERECTING FENCE FOR FILL SLOPE

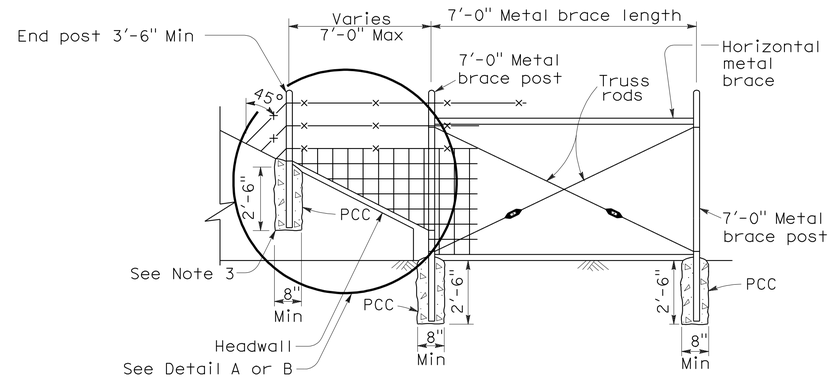

METAL POST

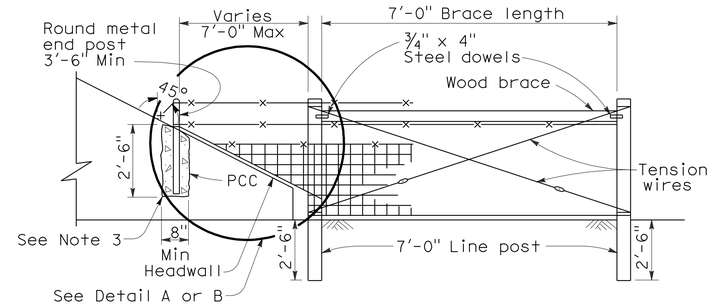

WOOD POST

METHOD OF TYING FENCE TO HEADWALL

NOTES:

1. Wire Mesh fencing shown, can also use Barbed Wire fencing.
2. See Standard Plan A86 for Wire Mesh and Barbed Wire fence dimensions.
3. See Standard Plan B11-7 Alternative Anchorage Detail for connection at headwall. Round metal post to be used for all fence types.

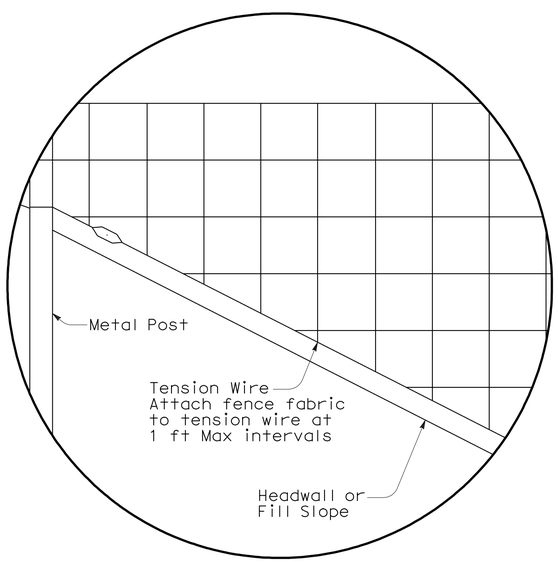

DETAIL A

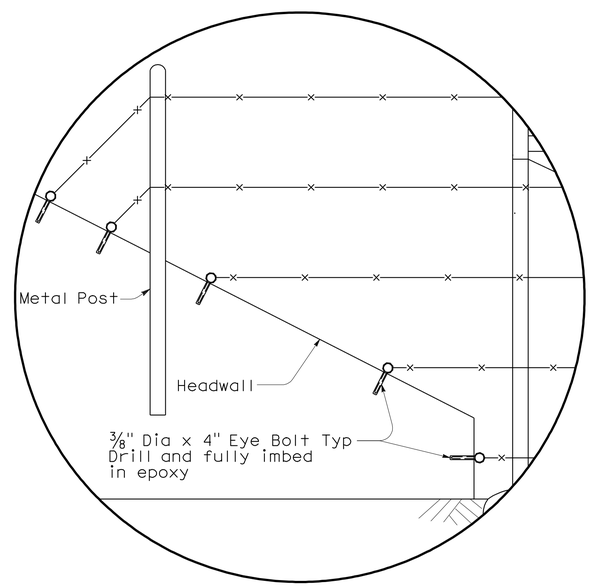

DETAIL B

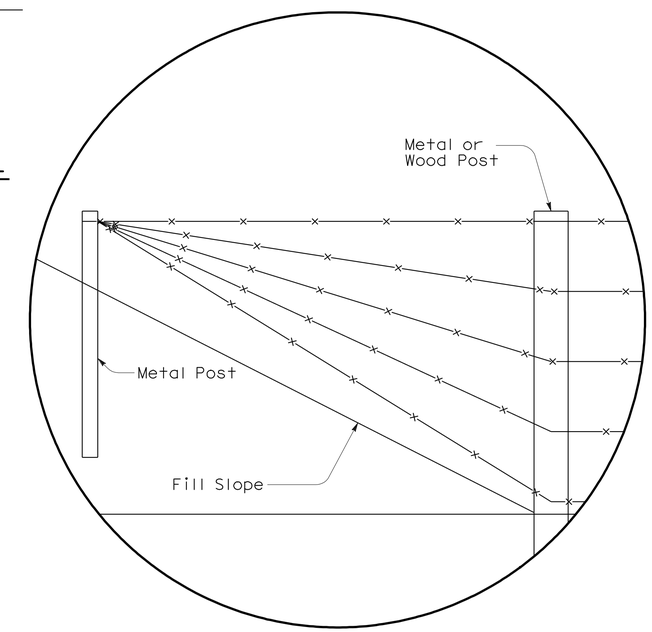

DETAIL C

STATE OF CALIFORNIA
DEPARTMENT OF TRANSPORTATION

BARBED WIRE AND WIRE MESH FENCE DETAILS

NSP A86B DATED JUNE 5, 2009 SUPPLEMENTS THE STANDARD PLANS BOOK DATED MAY 2006.

NEW STANDARD PLAN NSP A86B

2006 NEW STANDARD PLAN NSP A86B

DIST	COUNTY	ROUTE	POST MILES TOTAL PROJECT	SHEET NO.	TOTAL SHEETS
01	Men	128,253	Var	85	106

REGISTERED CIVIL ENGINEER

June 5, 2009
PLANS APPROVAL DATE

REGISTERED PROFESSIONAL ENGINEER Glenn DeCou No. C34547 Exp. 9-30-09 CIVIL STATE OF CALIFORNIA

The State of California or its officers or agents shall not be responsible for the accuracy or completeness of electronic copies of this plan sheet.

To accompany plans dated 4-12-10

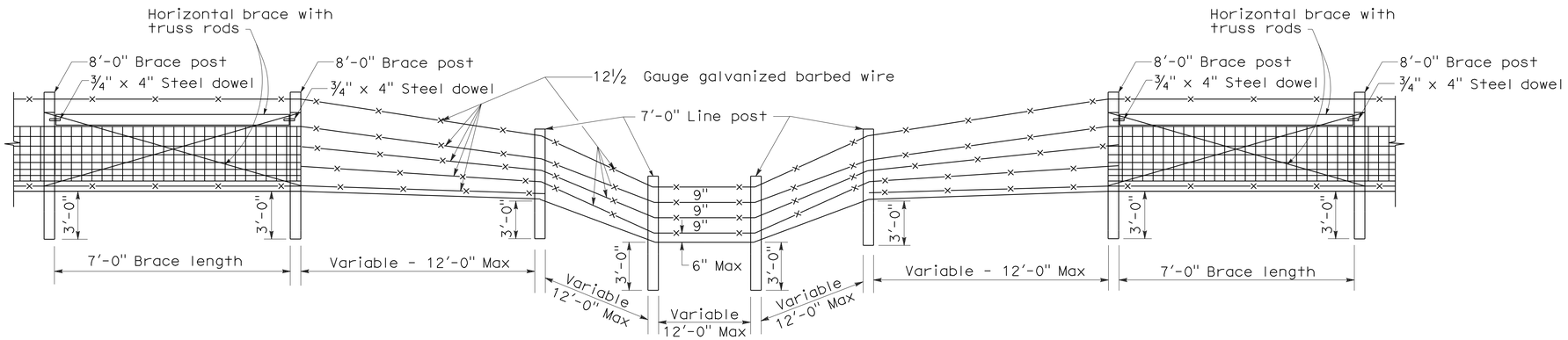

TYPE I

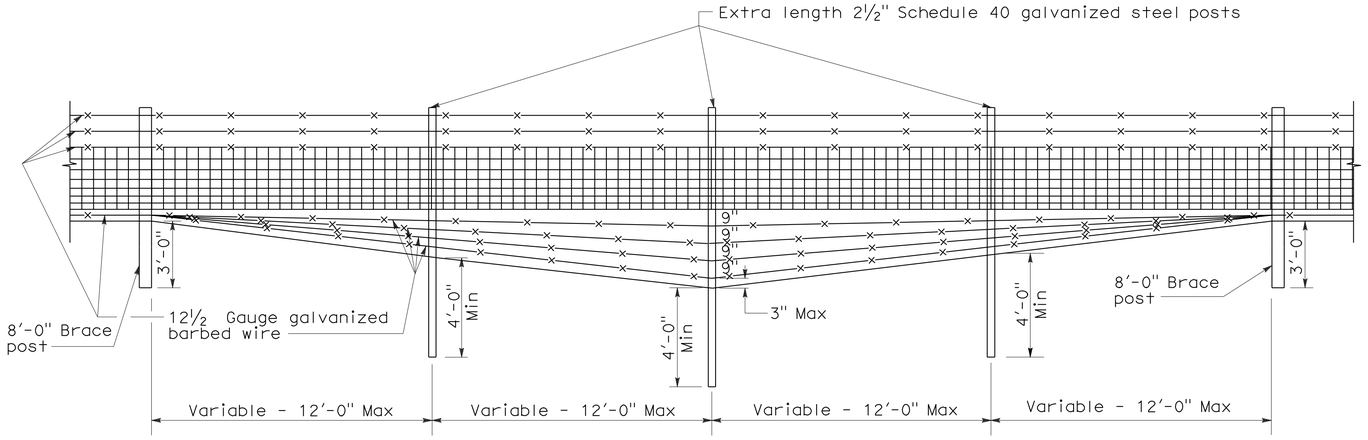

TYPE II

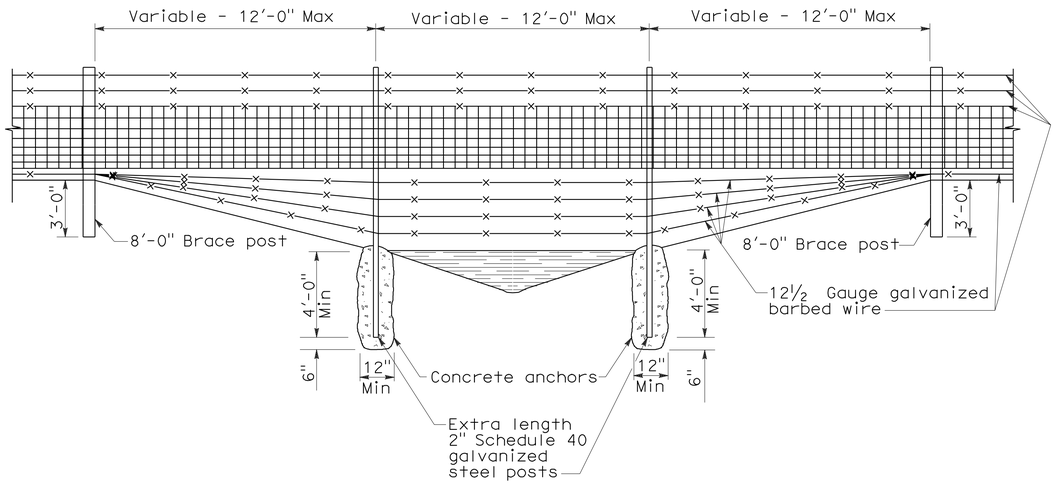

TYPE III

DITCH CROSSINGS

NOTES:

1. Type I Ditch Crossing shows wood posts. Steel posts may be used in place of wood.
2. Ditch crossing show Wire Mesh fencing. Barbed Wire fencing may be used in place of Wire Mesh.
3. See Standard Plan A86 for Wire Mesh and Barbed Wire fence dimensions.
4. See Standard Plan A86 for steel post installation.

STATE OF CALIFORNIA
DEPARTMENT OF TRANSPORTATION

BARBED WIRE AND WIRE MESH FENCE DETAILS AT DITCH CROSSING

NO SCALE

NSP A86C DATED JUNE 5, 2009 SUPPLEMENTS THE STANDARD PLANS BOOK DATED MAY 2006.

NEW STANDARD PLAN NSP A86C

2006 NEW STANDARD PLAN NSP A86C

5-12-09

DIST	COUNTY	ROUTE	POST MILES TOTAL PROJECT	SHEET NO.	TOTAL SHEETS
01	Men	128,253	Var	86	106

REGISTERED CIVIL ENGINEER

November 17, 2006
PLANS APPROVAL DATE

REGISTERED PROFESSIONAL ENGINEER Michael Janzen No. 44788 Exp. 03-31-08 CIVIL STATE OF CALIFORNIA

The State of California or its officers or agents shall not be responsible for the accuracy or completeness of electronic copies of this plan sheet.

To accompany plans dated 4-12-10

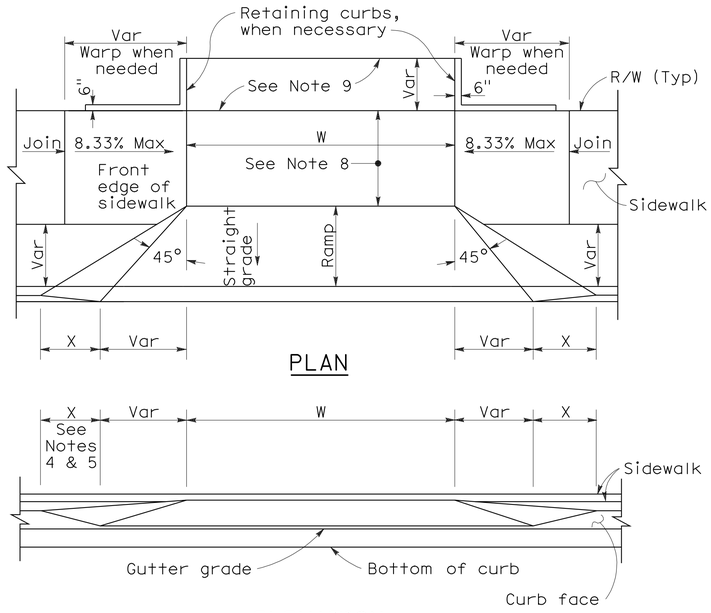

PLAN

ELEVATION

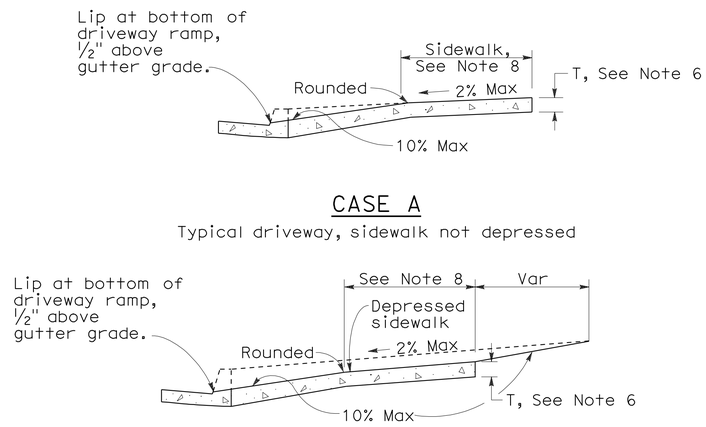

CASE A

Typical driveway, sidewalk not depressed

CASE B

Driveway with depressed sidewalk

SECTIONS

CURB QUANTITIES

TYPE	CUBIC YARDS PER LINEAR FOOT
A1-6	0.02585
A1-8	0.03084
A2-6	0.05903
A2-8	0.06379
A3-6	0.01036
A3-8	0.01435
B1-4	0.02185
B1-6	0.02930
B2-4	0.05515
B2-6	0.06171
B3-4	0.00641
B3-6	0.01074
B4	0.05709
D-4	0.04083
D-6	0.06804
E	0.06661

TABLE A

CURB TYPE	DIMENSIONS "H1"	"H2"	"W1"	"W2"
A1-6	1'-2"	6"	7½"	1½"
A1-8	1'-4"	8"	8"	2"
A2-6	1'-0"	6"	2'-7½"	1½"
A2-8	1'-2"	8"	2'-8"	2"
A3-6	6"	5"	7¼"	1¼"
A3-8	8"	7"	7¾"	1¾"
B1-4	1'-0"	4"	7½"	2½"
B1-6	1'-2"	6"	9"	4"
B2-4	10"	4"	2'-7½"	2½"
B2-6	1'-0"	6"	2'-9"	4"
B3-4	4"	3"	7"	2"
B3-6	6"	5"	8½"	3½"
D-4	10"	4"	1'-6"	1'-1"
D-6	1'-0"	6"	2'-2"	1'-8"

DRIVEWAYS

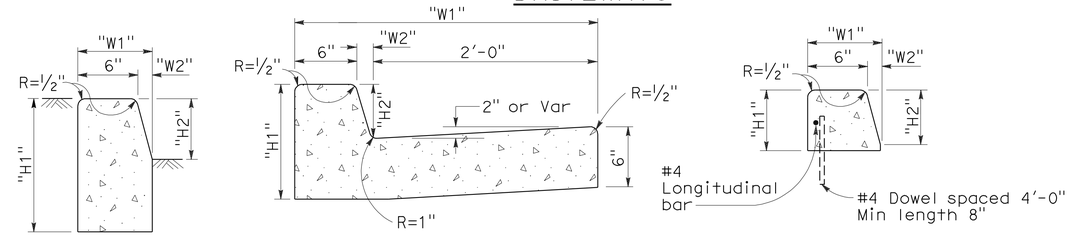

TYPE A1 CURBS
See Table A

TYPE A2 CURBS
See Table A

TYPE A3 CURBS
Superimposed on existing pavement
See Table A

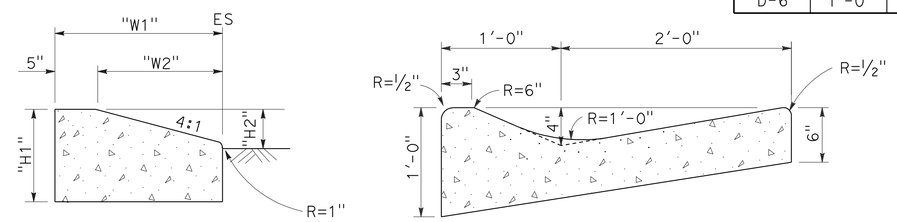

TYPE D CURBS
See Table A

TYPE E CURB

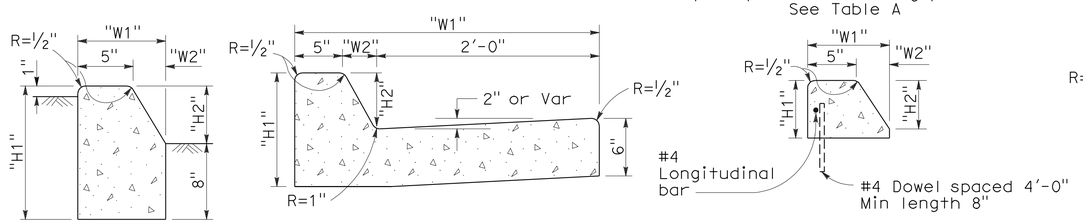

TYPE B1 CURBS
See Table A

TYPE B2 CURBS
See Table A

TYPE B3 CURBS
Superimposed on existing pavement
See Table A

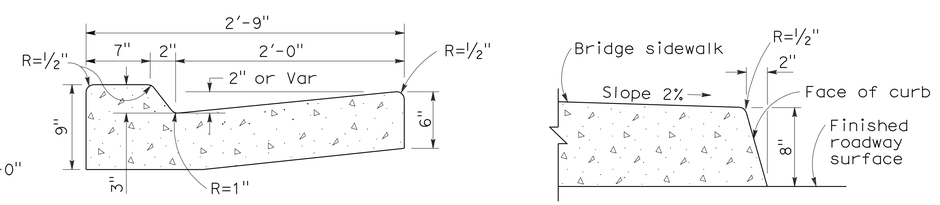

TYPE B4 CURBS

TYPE H CURB
On Bridges

CURBS

NOTES:

1. Case A driveway section typically applies.
2. Use Case B driveway section when ramp slopes would exceed 10% in Case A.
3. Use Case B driveway section when sidewalk cross slope would exceed 2% in Case A.
4. X=3'-0" except for curb heights over 10" where 4:1 slopes shall be used on curb slope.
5. X is a variable when sidewalk is located where wheelchairs may traverse the surface. Slopes shall not exceed 8.33%.
6. Sidewalk and ramp thickness "T" at driveway shall be 4" for residental and 6" for commercial.
7. Difference in slope of the driveway ramp and the slope of a line between the gutter and a point on the roadway 5'-0" from gutter line shall not exceed 15%. Reduce driveway ramp slope, not gutter slope, where required.
8. Minimum width of clear passageway for sidewalk shall be 4'-0".
9. Retaining curbs and acquisition of construction easement may be necessary for narrow sidewalks or curb heights in excess of 6".
10. Across the pedestrian route at curb ramp locations, the gutter pan slope shall not exceed 1" of depth for each 2'-0" of width.

STATE OF CALIFORNIA
DEPARTMENT OF TRANSPORTATION

CURBS AND DRIVEWAYS

NO SCALE

RSP A87A DATED NOVEMBER 17, 2006 SUPERSEDES STANDARD PLAN A87A DATED MAY 1, 2006 - PAGE 113 OF THE STANDARD PLANS BOOK DATED MAY 2006.

REVISED STANDARD PLAN RSP A87A

2006 REVISED STANDARD PLAN RSP A87A

10-25-06

DIST	COUNTY	ROUTE	POST MILES TOTAL PROJECT	SHEET NO.	TOTAL SHEETS
01	Men	128,253	Var	87	106

Robert B Schott
LICENSED LANDSCAPE ARCHITECT

April 3, 2009
PLANS APPROVAL DATE

The State of California or its officers or agents shall not be responsible for the accuracy or completeness of electronic copies of this plan sheet.

LICENSED LANDSCAPE ARCHITECT — Robert B. Schott — 3025 — Signature — 11-30-10 Renewal Date — 2-25-09 Date — STATE OF CALIFORNIA

To accompany plans dated 4-12-10

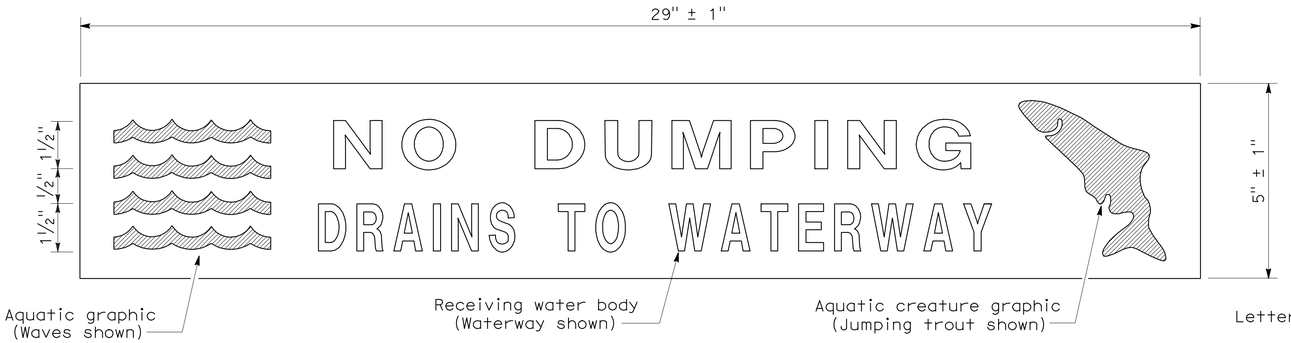

PLAN
DRAINAGE INLET MARKER
(PREFABRICATED THERMOPLASTIC)

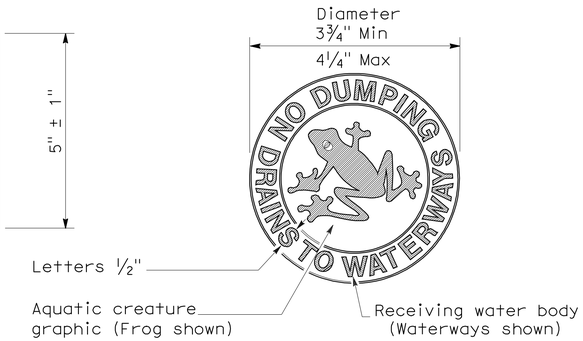

PLAN
DRAINAGE INLET MARKER
(MEDALLION)

PLAN
DRAINAGE INLET MARKER
(STAMPED CONCRETE IMPRINT)

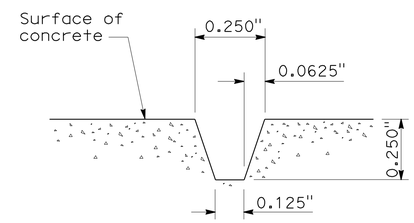

SECTION A-A
STAMPED CONCRETE
IMPRINT DETAIL

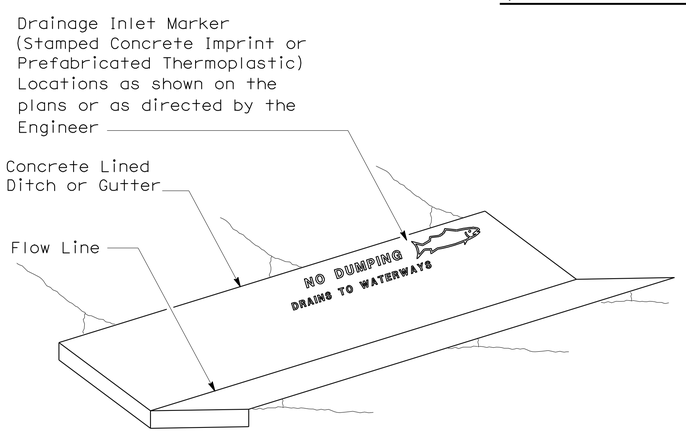

PERSPECTIVE
DRAINAGE INLET MARKER ON
CONCRETE LINED DITCH

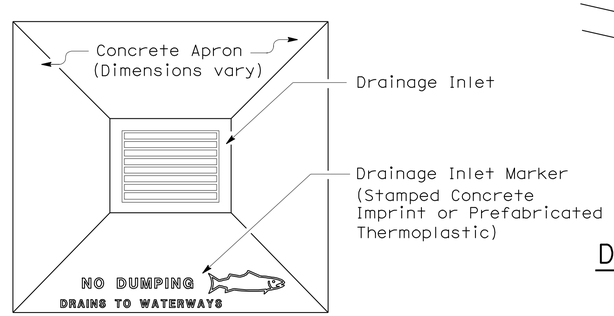

PLAN
DRAINAGE INLET MARKER ON
DRAINAGE INLET APRON

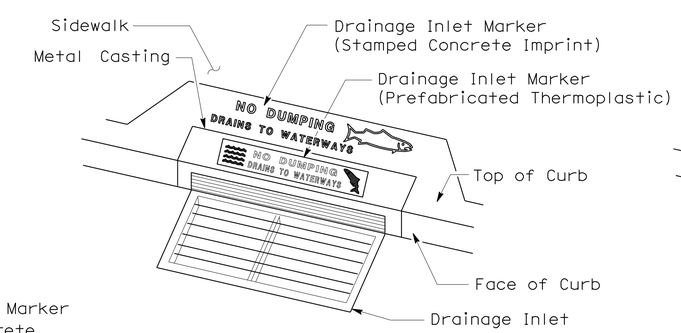

PERSPECTIVE
DRAINAGE INLET MARKER ON
DRAINAGE INLET

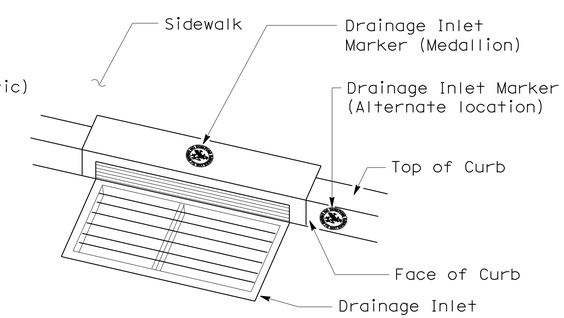

PERSPECTIVE
DRAINAGE INLET MARKER (MEDALLION)
ON DRAINAGE INLET

STATE OF CALIFORNIA
DEPARTMENT OF TRANSPORTATION

DRAINAGE INLET MARKERS

NO SCALE

NSP D71 DATED APRIL 3, 2009 SUPPLEMENTS
THE STANDARD PLANS BOOK DATED MAY 2006.

NEW STANDARD PLAN NSP D71

2006 NEW STANDARD PLAN NSP D71

7-24-08

DIST	COUNTY	ROUTE	POST MILES TOTAL PROJECT	SHEET NO.	TOTAL SHEETS
01	Men	128,253	Var	88	106

REGISTERED CIVIL ENGINEER

June 5, 2009
PLANS APPROVAL DATE

REGISTERED PROFESSIONAL ENGINEER Glenn DeCou No. C34547 Exp. 9-30-09 CIVIL STATE OF CALIFORNIA

The State of California or its officers or agents shall not be responsible for the accuracy or completeness of electronic copies of this plan sheet.

To accompany plans dated 4-12-10

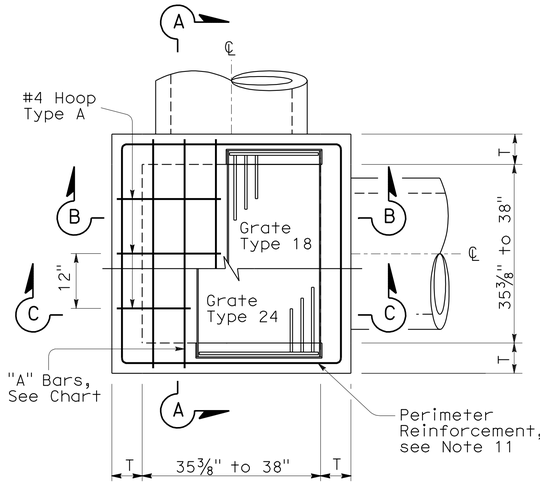

STANDARD TYPE G2 OR G4

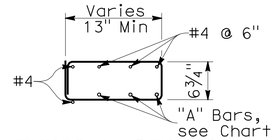

TYPICAL SECTION
(HOOP TYPE A)

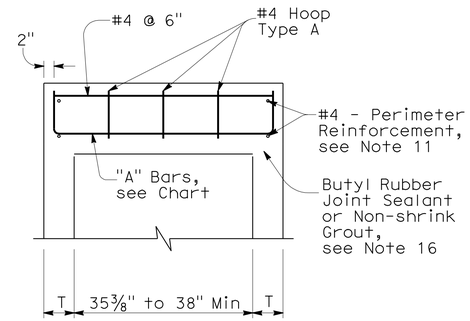

SECTION A-A

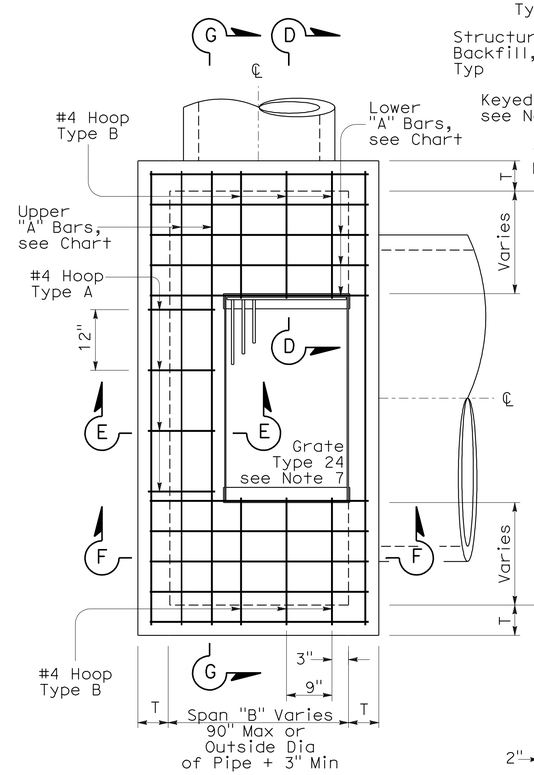

EXPANDED TYPE G2 OR G4
(Top Rebar Not Shown)

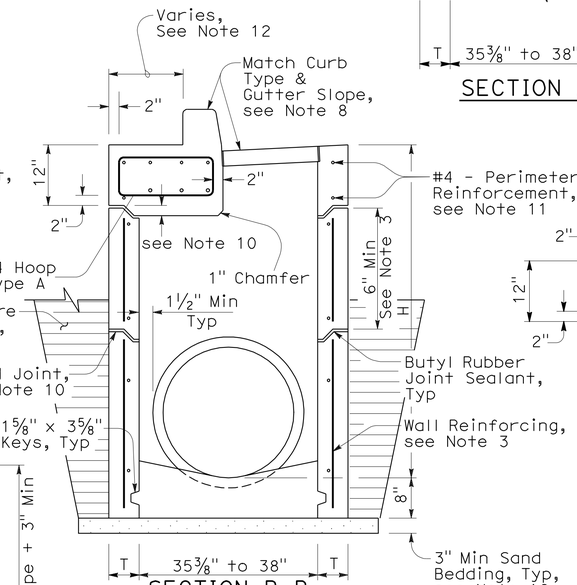

SECTION B-B
(with G4 Top)

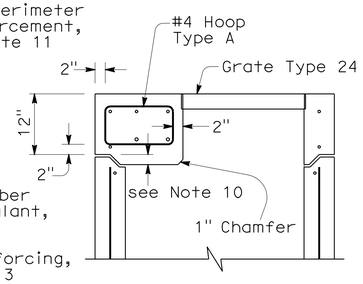

SECTION C-C
(with G2 Top)

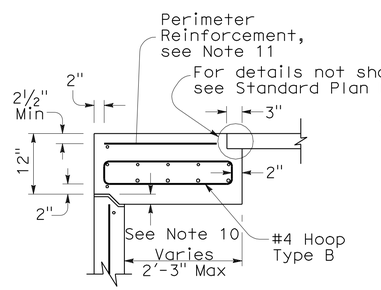

SECTION D-D

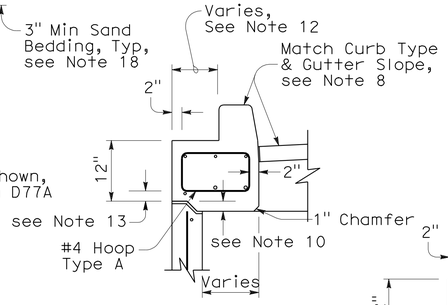

SECTION E-E
(with G4 Top)

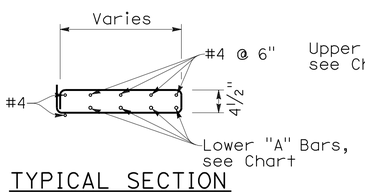

TYPICAL SECTION
(HOOP TYPE B)

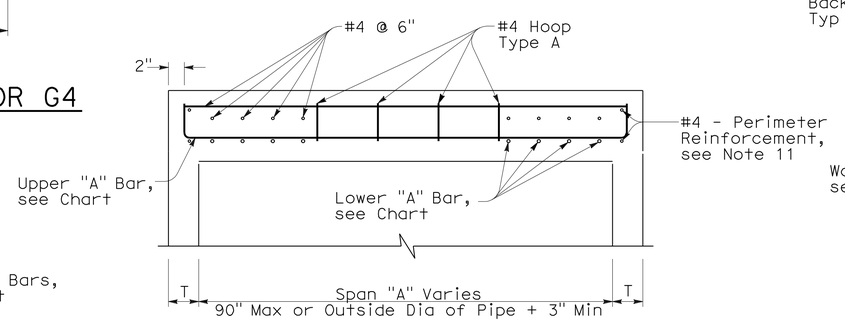

SECTION G-G

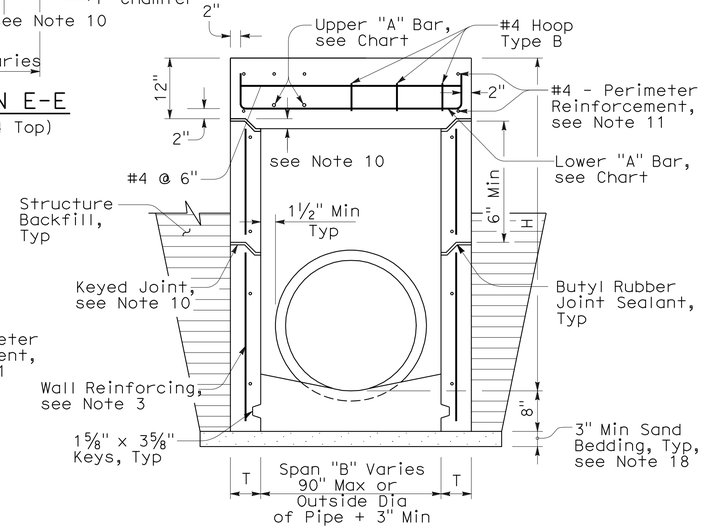

SECTION F-F
(with G2 Top)

NOTES:

1. "H" is the difference in elevation between the outlet pipe flow line and the normal gutter grade line undepressed.
2. For "T" wall thickness: T=6" when "H" is 8' or less. T=8" when "H" is over 8'.
3. Wall reinforcing not required when "H" is 8' or less and the unsupported width or length is 6'-0" or less. Reinforce wall exceeding these limits with #4 bars @ 1'-6" ± centers placed 2" clear to the inside of inlet unless otherwise shown. Short independent wall sections or height adjustment rings 6" to 24" high must have a minimum of two #4 horizontal bars.
4. Seal pre-cast inlets connection openings between wall and pipe with non-shrink grout or resilient connectors as specified in the Special Provisions.
5. Steps - None required where "H" is less than 2'-6". Where "H" is 2'-6" or more, install steps with lowest rung 1'-0" above the floor and highest rung not more than 6" below bottom of lid. The distance between steps must not exceed 1'-0" and be uniform throughout the length of the wall. Place steps in the wall without an opening. Steps inserts may be substituted for the bar steps. Step inserts must comply with State Industrial Safety Requirements. See Standard Plan D74C for step details.
6. Pipe(s) can be placed in any wall.
7. Set inlet so that grate bars are parallel to direction of principal surface flow.
8. Type G4 inlet can use Grate Type 18 or 24. Type G2 inlet uses Grate Type 24. See Revised Standard Plan RSP D77A and Standard Plan D77B for grate and frame details and weights of miscellaneous Iron and Steel.
9. G4 inlet details are the same as the G2 with the addition of a curb and sloped grate that matches the adjacent curb and gutter depression. See Standard Plans D78A & D78B for gutter and inlet depresssion details. See Revised Standard Plan RSP A87A & Standard Plan A87B for Curb and Dike Details.
10. Provide pre-cast inlets with separate top sections for final grade adjustment under Standard Specifcation Section 51-1.02. Provide keyed joints between the top and wall and multiple wall sections. Joint design may vary but must be 1" to 3" in depth.
11. Perimeter reinforcement serves as a rigid frame to position and attach the required structural reinforcement and may be tack welded at outer corners when using ASTM A706 weldable bars.
12. This dimension will vary with different grates, curbs types, box width and wall thickness.
13. 2" unless inlet is expanded in the Span "A" direction, then clearance is 2" plus the diameter of the lower "A" bar.
14. Place "A" Bars at an angle so hooked ends will maintain 2" clear coverage.
15. Refer to Standard Plan D73, Table A for concrete quantities.
16. Non-shrink grout can be used for upper most joint to facilitate final top grade adjustment.
17. Slope inlet floors 4:1 towards the outlet pipe. Pre-cast inlets may have monolithic sloped floors, flat floors, or no floors in which case a sloped floor must be cast in the field. Inlet floors do not require reinforcing.
18. Extend sand bedding under all structure backfill.

TOP REINFORCEMENT CHART

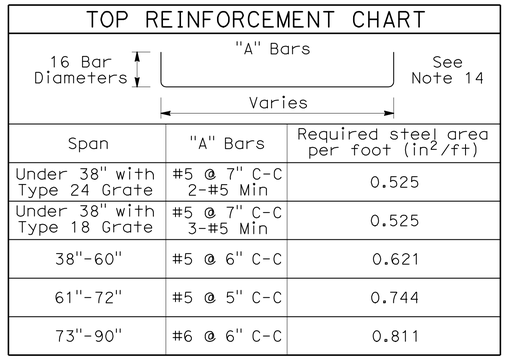

Span	"A" Bars	Required steel area per foot (in^2/ft)
Under 38" with Type 24 Grate	#5 @ 7" C-C 2-#5 Min	0.525
Under 38" with Type 18 Grate	#5 @ 7" C-C 3-#5 Min	0.525
38"-60"	#5 @ 6" C-C	0.621
61"-72"	#5 @ 5" C-C	0.744
73"-90"	#6 @ 6" C-C	0.811

STATE OF CALIFORNIA
DEPARTMENT OF TRANSPORTATION

DRAINAGE INLETS (PRECAST)

NO SCALE

NSP D73A DATED JUNE 5, 2009 SUPPLEMENTS THE STANDARD PLANS BOOK DATED MAY 2006.

NEW STANDARD PLAN NSP D73A

2006 NEW STANDARD PLAN NSP D73A

3-16-09

DIST	COUNTY	ROUTE	POST MILES TOTAL PROJECT	SHEET NO.	TOTAL SHEETS
01	Men	128,253	Var	89	106

REGISTERED CIVIL ENGINEER

June 15, 2007
PLANS APPROVAL DATE

REGISTERED PROFESSIONAL ENGINEER Glenn DeCou No. C34547 Exp. 9-30-07 CIVIL STATE OF CALIFORNIA

The State of California or its officers or agents shall not be responsible for the accuracy or completeness of electronic copies of this plan sheet.

To accompany plans dated 4-12-10

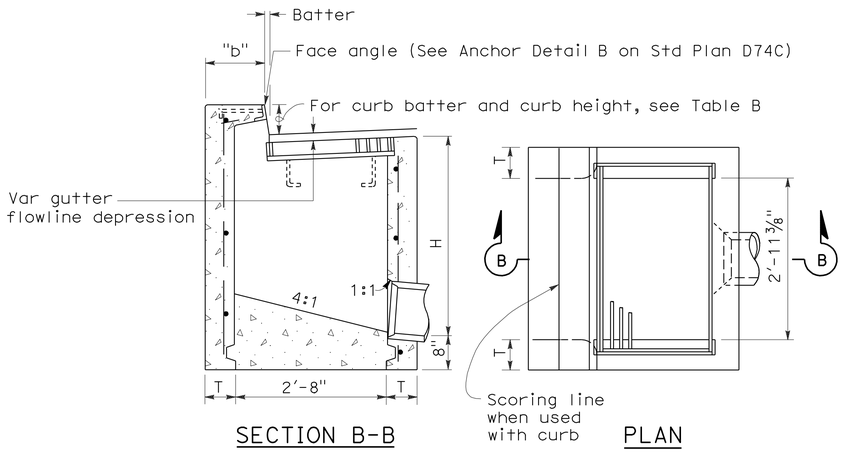

SECTION B-B PLAN

TYPE GO

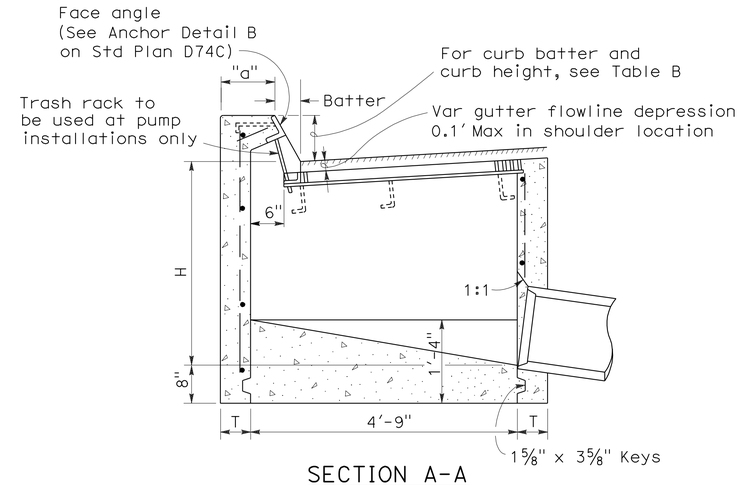

SECTION A-A

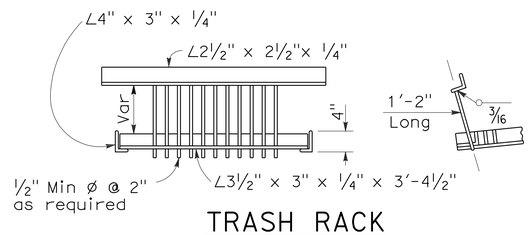

TRASH RACK

(For use with pump installation)

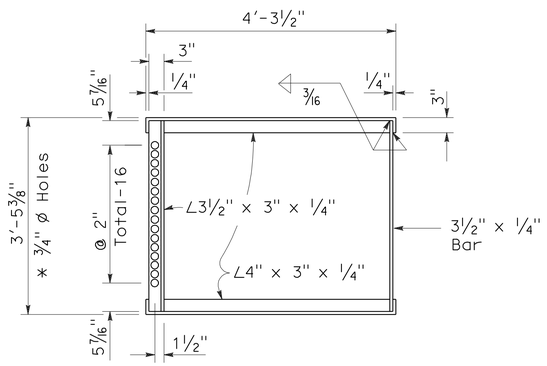

* 3/4" ø Holes required only with trash rack

GRATE FRAME FOR TYPE GDO INLET

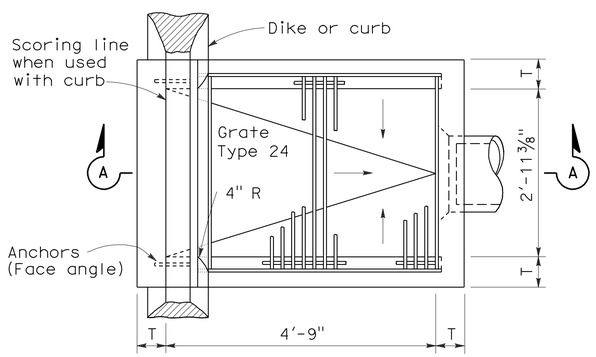

PLAN

TYPE GDO

TABLE A

CONCRETE QUANTITIES				
TYPE	H=3'-0" TO 8'-0" (T=6")		H=8'-1" TO 20'-0" (T=8")	
	H=3'-0" (CY)	ADDITIONAL PCC PER FOOT (CY)	H=8'-1" (CY)	ADDITIONAL PCC PER FOOT (CY)
GO	1.24	0.245	3.39	0.346
GDO	1.62	0.322	4.36	0.446

Table based on 8" floor slab, no deduction for pipe openings, and curb type giving highest quantity of concrete. No deductions or adjustments are to be made to these quantities because of pipe openings, different floor alternatives or different curb type.

TABLE B

CURB TYPE	NORMAL CURB HEIGHT	CURB BATTER	"a" DIMENSION	"b" DIMENSION
A1-6	6"	1 1/2"	T+7 1/2"	T+6 1/2"
A1-8	8"	2"	T+7"	T+6"
B1-6	6"	4"	T+5"	T+4"
Type A Dike	6"	3"	T+6"	T+5"

NOTES:

1. "H" is the difference in elevation between the outlet pipe flow line and the normal gutter grade line undepressed.
2. For "T" wall thickness, see Table A below.
3. Wall reinforcing not required when "H" is 8'-0" or less and the unsupported width or length is 7'-0" or less. Walls exceeding these limits shall be reinforced with #4 @ 18"± centers placed 1 1/2" clear to inside of box unless otherwise shown.
4. Inlet bottom reinforcing not required. See Standard Plan D74C for alternative reinforced bottom.
5. Steps - None required where "H" is less than 2'-6" Where "H" is 2'-6" or more, install steps with lowest rung 1'-0" above the floor and highest rung not more than 6" below top of inlet. The distance between steps shall not exceed 1'-0" and shall be uniform throughout the length of the wall. Place steps in the wall without an opening. Step inserts may be substituted for the bar steps. Step Inserts shall comply with State Industrial Safety requirements. See Standard Plan D74C for step details.
6. When shown on the project plans, place a 3/4" plain round protection bar horizontally across the length of the opening and bend back 4" into the inlet wall on each side.
7. Pipe(s) can be placed in any wall.
8. Curb section shall match adjacent curb.
9. Basin floors shall have wood trowel finish and shall slope toward the outlet pipe as shown.
10. Galvanizing - See Standard Specifications or Special Provisions.
11. See Standard Plan D77A and D77B for grate and frame details and weights of miscellaneous iron and Steel.
12. See Standard Plan D78A for gutter depression details.
13. Full penetration butt welds may be substituted for the fillet welds on all anchors.
14. Standard square, hexagon, round or equivalent headed anchors may be substituted for the right angle hooks on the anchors shown on this plan.
15. Cast-in-place or precast alternative is optional with contractor. See Standard Specifications.
16. Cast-in-place inlets to be formed around all pipes/stubs intersecing the inlet and concrete poured in one continuous operation. Precast inlets shall have mortared pipe connections conforming to details for Type GCP inlets on Standard Plan D75B. See Standard Specifications for mortar composition.

STATE OF CALIFORNIA
DEPARTMENT OF TRANSPORTATION

DRAINAGE INLETS

NO SCALE

RSP D74B DATED JUNE 15, 2007 SUPERSEDES STANDARD PLAN D74B DATED MAY 1, 2006 - PAGE 150 OF THE STANDARD PLANS BOOK DATED MAY 2006.

REVISED STANDARD PLAN RSP D74B

2006 REVISED STANDARD PLAN RSP D74B

4-16-07

DIST	COUNTY	ROUTE	POST MILES TOTAL PROJECT	SHEET NO.	TOTAL SHEETS
01	Men	128,253	Var	90	106

REGISTERED CIVIL ENGINEER

June 6, 2008
PLANS APPROVAL DATE

REGISTERED PROFESSIONAL ENGINEER Raymond Don Tsztoo No. C37332 Exp. 6-30-08 CIVIL STATE OF CALIFORNIA

The State of California or its officers or agents shall not be responsible for the accuracy or completeness of electronic copies of this plan sheet.

To accompany plans dated 4-12-10

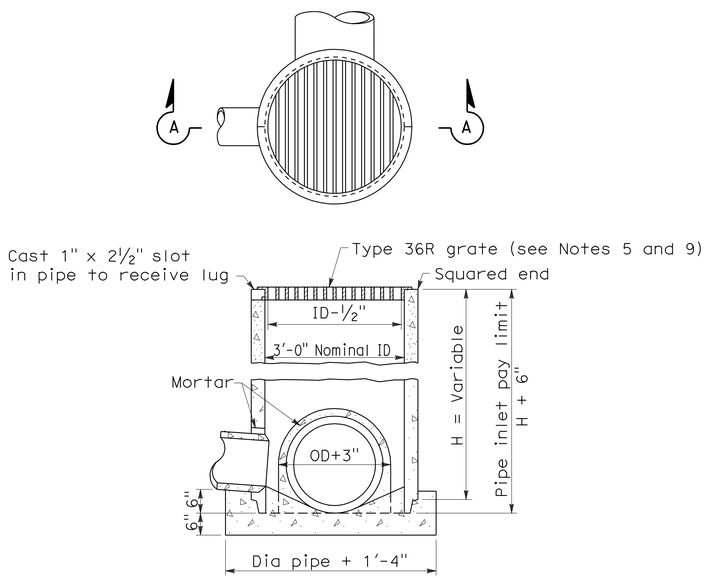

SECTION A-A

TYPE GCP

CONCRETE PIPE INLET WITH GRATE

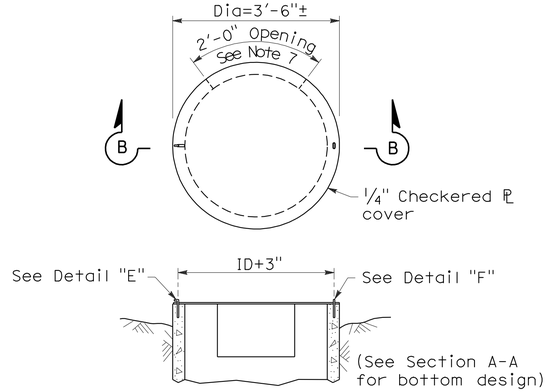

SECTION B-B

TYPE OCP or OCPI

CONCRETE PIPE INLET WITH STEEL COVER
(See Note 6)

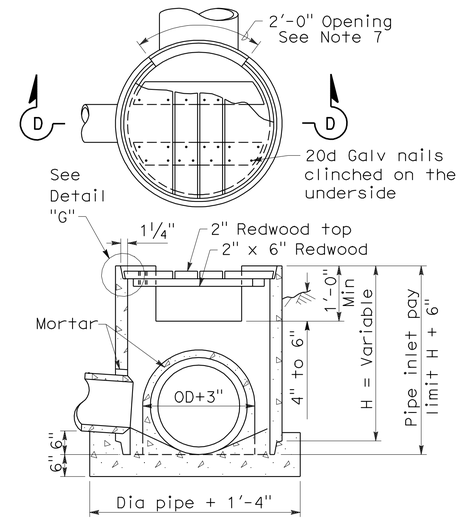

SECTION D-D

TYPE OCP or OCPI

CONCRETE PIPE INLET WITH REDWOOD COVER
(See Notes 6 and 10)

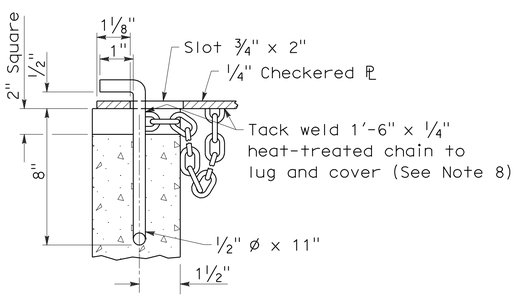

DETAIL "E"

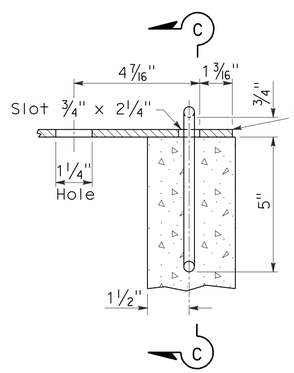

DETAIL "F"

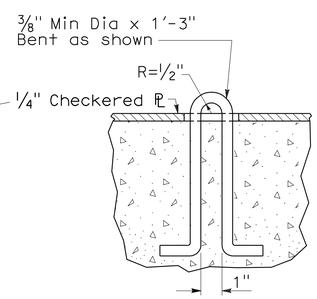

SECTION C-C

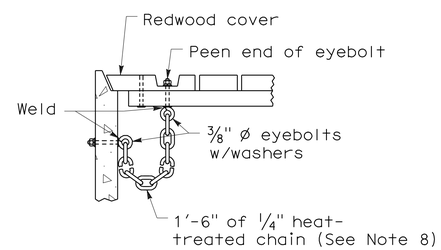

DETAIL "G"

NOTES:

1. For details of steel pipe inlets, see Standard Plan D75A.
2. For details of ladder and steps and when ladder or steps are required, see Standard Plan D75C.
3. Inlet pipes shall not protrude into basin.
4. Except for inlets used for junction boxes, basin floors shall have minimum slope of 4:1 from all directions toward outlet pipe, and a wood trowel finish.
5. See Revised Standard Plan RSP D77A and Standard Plan D77B for Grate and Frame Details and Weights of Miscellaneous Iron and Steel.
6. Designation of Type OCPI pipe inlets on plans indicates trash racks are to be furnished and installed on all side openings. See Standard Plan D75C for Trash Rack details.
7. More than one side opening may be required. Location and number as ordered by the Engineer. Opening may be cast in pipe.
8. Chain to be provided when specified.
9. Place pipe so bars of grate will be parallel with main surface flow.
10. Redwood covers shall only be placed at locations designated on the plans.

STATE OF CALIFORNIA
DEPARTMENT OF TRANSPORTATION

CONCRETE PIPE INLETS

NO SCALE

RSP D75B DATED JUNE 6, 2008 SUPERSEDES STANDARD PLAN D75B
DATED MAY 1, 2006 - PAGE 153 OF THE STANDARD PLANS BOOK DATED MAY 2006.

REVISED STANDARD PLAN RSP D75B

2006 REVISED STANDARD PLAN RSP D75B

5-20-08

DIST	COUNTY	ROUTE	POST MILES TOTAL PROJECT	SHEET NO.	TOTAL SHEETS
01	Men	128,253	Var	91	106

Raymond Don Tsztoo
REGISTERED CIVIL ENGINEER

January 18, 2008
PLANS APPROVAL DATE

REGISTERED PROFESSIONAL ENGINEER
Raymond Don Tsztoo
No. C37332
Exp. 6-30-08
CIVIL
STATE OF CALIFORNIA

The State of California or its officers or agents shall not be responsible for the accuracy or completeness of electronic copies of this plan sheet.

To accompany plans dated 4-12-10

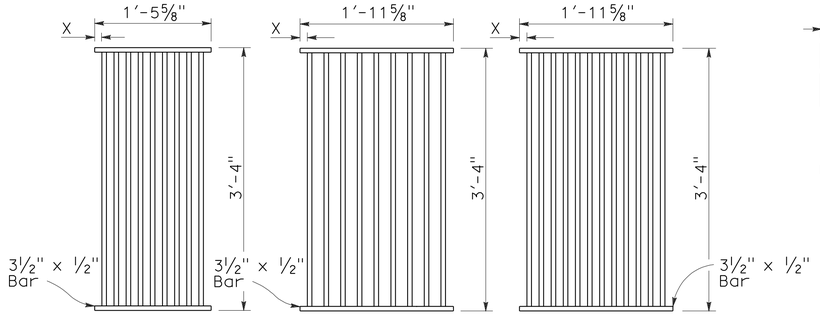

TYPE 18-9

1⅜" Clear spacing. Use within the roadbed on highways where bicycles and pedestrians are excluded.

TYPE 24-9

2" Clear spacing. Use in locations off the roadbed on all types of highways.

TYPE 24-12

1⅜" Clear spacing. Use within the roadbed on highways where bicycles and pedestrians are excluded.

RECTANGULAR GRATE DETAILS

(See table below)

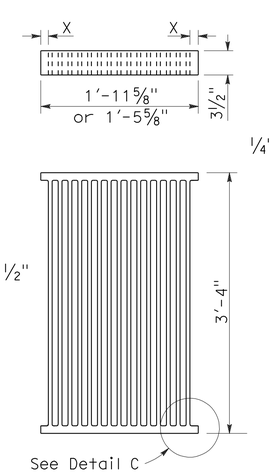

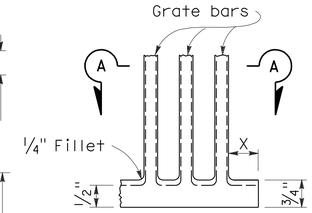

DETAIL C

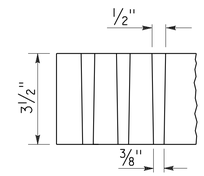

SECTION A-A

ALTERNATIVE CAST NODULAR IRON GRATE OR CAST STEEL GRATE

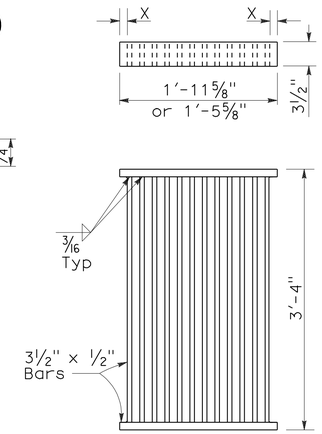

ALTERNATIVE WELDED GRATE

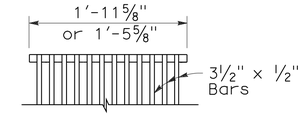

CAST END BLOCK

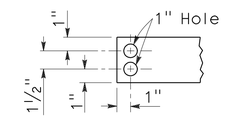

END OF BAR

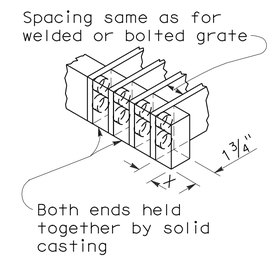

ALTERNATIVE CAST NODULAR IRON OR CAST STEEL END BLOCK GRATE

NOTES:

1. Grate type numbers refer to approximate width of grate in inches and number of bars, respectively.
2. Contractor has the option of using cast nodular iron, cast steel, welded, bolted, or cast end block grate.
3. See Special Provisions for requirements pertaining to galvanizing or asphalt dipping of grates and frames.
4. Rounded top of bars optional on all grates.
5. Pipe inlets with a grate shall be placed so that bars parallel direction of principle surface flow.
6. Full penetration butt welds may be substituted for the fillet welds on all anchors.
7. Standard square, hexagon, round or equivalent headed anchors may be substituted for the right angle hooks on the anchors shown on this plan.
8. Grate and frame weights are based on welded grates (weights of face angles, steps, protection bars, etc. are not included).

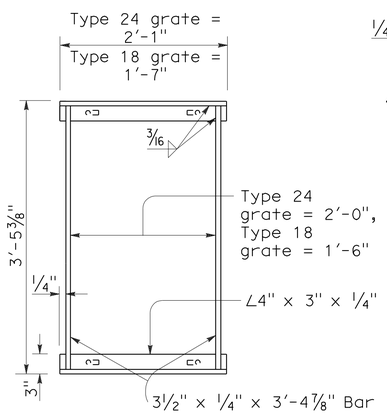

TYPICAL FRAME

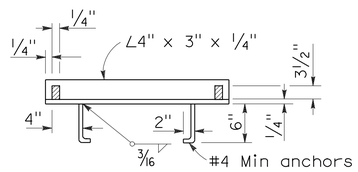

CROSS SECTION

(Thru frame)

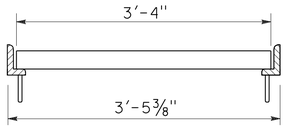

LONGITUDINAL SECTION

(Thru frame and grate)

RECTANGULAR FRAME DETAILS

(For all rectangular grates)

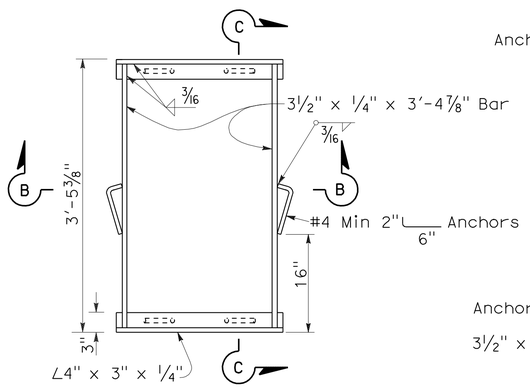

TYPICAL FRAME

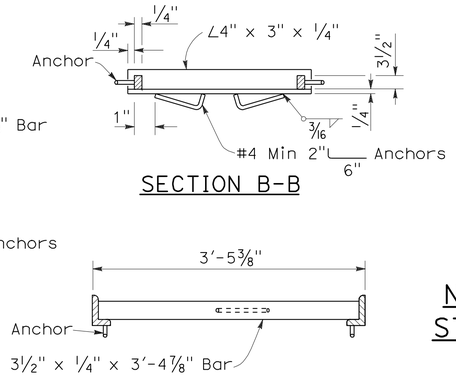

SECTION B-B

SECTION C-C

ALTERNATIVE ANCHOR FOR RECTANGULAR FRAME

(For details not shown, See Rectangular Frame Details)

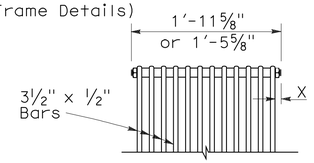

BOLTED END BLOCK

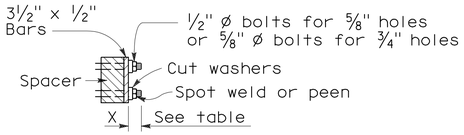

BOLTING DETAIL

ALTERNATIVE BOLTED GRATE

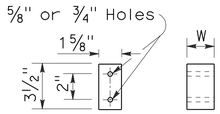

BAR SPACER

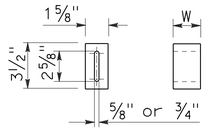

ALTERNATIVE SPACER

W = 1⅜" or 2"

GRATE BAR SPACING TABLE

TYPE	No. OF BARS	CLEAR BAR SPACING	X
18-9	9	1⅜"	1 1/16"
24-9	9	2"	1 9/16"
24-12	12	1⅜"	1¼"

INLET TYPE	COVER TYPE	WEIGHT LB
OS	PLATE	174
OL-7	PLATE	170
OL-10	PLATE	170
OL-14	PLATE	170
OL-21	PLATE	170
OCP	PLATE	112
OCPI	PLATE	112
OCPI	REDWOOD	42
OMP	PLATE	177
OMPI	PLATE	177

INLET TYPE	GRATE TYPE	No. OF GRATES	WEIGHT LB
GDO	24-12	2	634
GOL-7	24-12	1	326
GOL-10	24-12	1	326
GO,G1,G2,G3,G4 (TYPE 24)	24-9	1	263
	24-12	1	326
G4 (TYPE 18),G5,G6	18-9	1	249
GT1	18-9	2	498
GT2	18-9	2	498
GT3	24-12	2	652
GT4	24-12	2	652
TRASH RACK			22

BASIS FOR MISC IRON & STEEL FINAL PAY WEIGHTS FOR DRAINAGE INLETS

(See General Notes, No 8)

STATE OF CALIFORNIA
DEPARTMENT OF TRANSPORTATION

GRATE DETAILS

NO SCALE

RSP D77A DATED JANUARY 18, 2008 SUPERSEDES STANDARD PLAN D77A DATED MAY 1, 2006 - PAGE 155 OF THE STANDARD PLANS BOOK DATED MAY 2006.

REVISED STANDARD PLAN RSP D77A

2006 REVISED STANDARD PLAN RSP D77A

12-14-07

DIST	COUNTY	ROUTE	POST MILES TOTAL PROJECT	SHEET NO.	TOTAL SHEETS
01	Men	128,253	Var	92	106

Raymond Don Tsztoo
REGISTERED CIVIL ENGINEER

June 6, 2008
PLANS APPROVAL DATE

REGISTERED PROFESSIONAL ENGINEER
Raymond Don Tsztoo
No. C37332
Exp. 6-30-08
CIVIL
STATE OF CALIFORNIA

The State of California or its officers or agents shall not be responsible for the accuracy or completeness of electronic copies of this plan sheet.

To accompany plans dated 4-12-10

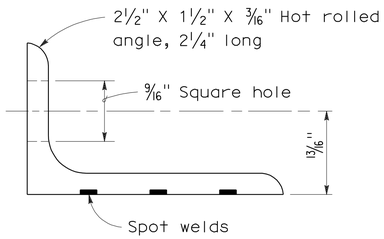

ANGLE

NOTES:

1. All ferrous metal coupling band connection hardware shall be galvanized or electroplated in accordance with the Standard Specifications.
2. Dimensions and thicknesses shown are minimum.
3. Spot welds shall develop minimum required strength of strap.
4. Fillet welds of equivalent strength may be substituted for spot welds or rivets.
5. Dimension depends upon whether end condition is lips up or lips down.

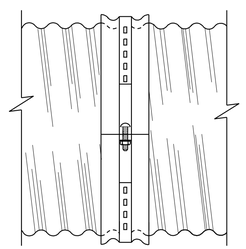

SIDE VIEW
ANGLE

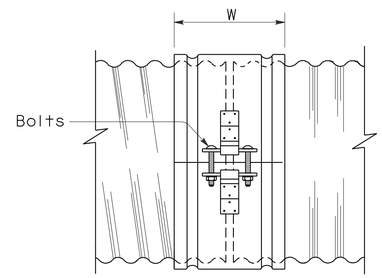

SIDE VIEW
SINGLE BAR AND STRAP

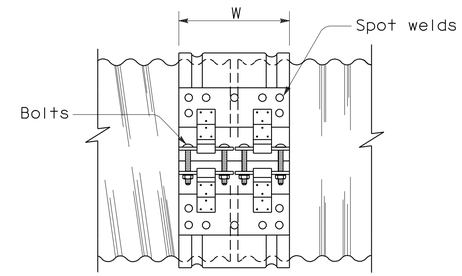

SIDE VIEW
DOUBLE BAR AND STRAP

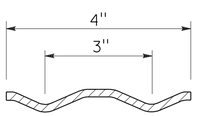

SECTION

H-4 HUGGER BAND

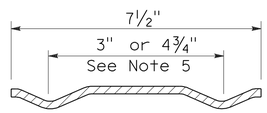

SECTION

H-7 HUGGER BAND

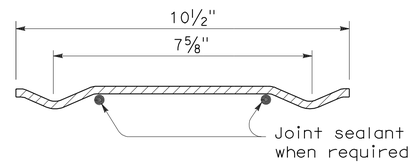

SECTION

H-10 HUGGER BAND

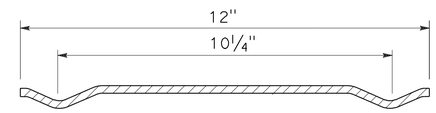

SECTION

H-12 HUGGER BAND

HUGGER COUPLING BANDS

STATE OF CALIFORNIA
DEPARTMENT OF TRANSPORTATION

CORRUGATED METAL PIPE COUPLING DETAILS No. 4 HUGGER COUPLING BANDS

NO SCALE

RSP D97D DATED JUNE 6, 2008 SUPERSEDES STANDARD PLAN D97D
DATED MAY 1, 2006 - PAGE 186 OF THE STANDARD PLANS BOOK DATED MAY 2006.

REVISED STANDARD PLAN RSP D97D

2006 REVISED STANDARD PLAN RSP D97D

3-24-08

DIST	COUNTY	ROUTE	POST MILES TOTAL PROJECT	SHEET NO.	TOTAL SHEETS
01	Men	128,253	Var	93	106

Raymond Don Tsztoo
REGISTERED CIVIL ENGINEER

June 6, 2008
PLANS APPROVAL DATE

REGISTERED PROFESSIONAL ENGINEER Raymond Don Tsztoo No. C37332 Exp. 6-30-08 CIVIL STATE OF CALIFORNIA

The State of California or its officers or agents shall not be responsible for the accuracy or completeness of electronic copies of this plan sheet.

To accompany plans dated 4-12-10

ANNULAR AND HELICAL PROFILE

COUPLING TYPE	PIPE CORRUGATION	PIPE SIZE	W OR A	PIPE WALL THICKNESS CSP	PIPE WALL THICKNESS CAP	BAND THICKNESS CSP	BAND THICKNESS CAP	BAR AND STRAP (CSP ONLY) STRAP THICKNESS	BOLTS Dia	BAR Dia	BAR YIELD STRENGTH	ANGLE DIMENSIONS CSP	ANGLE DIMENSIONS CAP	BOLTS (No. - Dia) CSP	BOLTS (No. - Dia) CAP	RIVETS ANGLE TO BAND CSP	RIVETS ANGLE TO BAND CAP	SPOT WELDS ANGLE TO BAND CSP
TWO PIECE INTEGRAL FLANGE	1½" × ¼"	6"-10"	7"	0.064"-0.079"	0.060"	0.064"	0.060"							2-⅜"	2-⅜"			
	2⅔" × ½"	12"-24"	12"		0.060"-0.105"		0.060"								3-½"			
UNIVERSAL	2⅔" × ½"	THROUGH 36"	12"	0.064"-0.138"	0.060"-0.135"	0.064"	0.060"	0.079"	½"	⅞"	32 ksi	2" × 2" × 3/16"	2" × 2" × 3/16"	3-½"	3-½"	3-⅜"	3-⅜"	5-½"
		42"-60"	16¼"	0.064"-0.168"	0.060"-0.164"	0.064"	0.060"	DOUBLE 0.079"	½"	⅞"	32 ksi	2" × 2" × ¼"	2" × 2" × ¼"	4-½"	4-½"	5-⅜"	5-⅜"	
ANNULAR	2⅔" × ½"	THROUGH 36"	12"	0.064"-0.138"	0.060"-0.135"	0.064"	0.060"					2" × 2" × 3/16"	2" × 2" × 3/16"	3-½"	3-½"	3-⅜"	3-⅜"	5-½"
		42"-60"	12"	0.064"-0.079"		0.064"						2" × 2" × 3/16"		3-½"		3-⅜"		5-½"
		42"-60"	12"	0.109"-0.168"	0.135"-0.164"	0.064"	0.075"					2" × 2" × ¼"	2" × 2" × ¼"	3-½"	3-½"	5-⅜"	5-⅜"	
		66"-72"	24"		0.164"		0.105"						2" × 2" × ¼"		5-½"		5-½"	
		66"-84"	24"	0.109"-0.168"		0.064"						2" × 2" × ¼"		5-½"		7-⅜"		
		42"-54"	12"		0.060"-0.105"		0.060"						2" × 2" × 3/16"		3-½"		3-⅜"	
	3" × 1"	48"-60"	14"	0.064"-0.079"		0.064"						2" × 2" × 3/16"		3-½"		3-⅜"		5-½"
		48"-60"	14"	0.109"		0.064"						2" × 2" × 3/16"		3-½"		5-⅜"		
		66"-120"	25"	0.064"-0.109"		0.064"						2" × 2" × 3/16"		5-½"		9-⅜"		
		42"-60"	14"		0.060"-0.105"		0.060"						2" × 2" × 3/16"		3-½"		5-⅜"	
		42"-60"	14"		0.135"		0.075"						2" × 2" × ¼"		3-½"		5-⅜"	
		66"-96"	25"		0.060"-0.135"		0.060"						2" × 2" × ¼"		5-½"		7-⅜"	
		96"-108"	25"		0.135"		0.075"						2" × 2" × ¼"		5-½"		7-⅜"	
HELICAL	2⅔" × ½"	THROUGH 36"	12"	0.064"-0.138"	0.060"-0.135"	0.064"	0.060"					2" × 2" × 3/16"	2" × 2" × 3/16"	3-½"	3-½"	3-⅜"	3-⅜"	5-½"
		42"-54"	12"		0.060"-0.105"		0.060"						2" × 2" × 3/16"		3-½"		3-⅜"	
		42"-60"	12"	0.064"-0.079"		0.064"						2" × 2" × 3/16"		3-½"		3-⅜"		5-½"
		42"-60"	12"	0.109"-0.168"	0.135"-0.164"	0.064"	0.075"					2" × 2" × ¼"	2" × 2" × ¼"	3-½"	3-½"	5-⅜"	5-⅜"	
		66'-84"	24"	0.109"-0.168"		0.064"						2" × 2" × ¼"		5-½"		7-⅜"		
		66"-72"	24"		0.164"		0.105"						2" × 2" × ¼"		5-½"		5-⅜"	
	3" × 1"	48"-60"	14"	0.064"-0.079"		0.064"						2" × 2" × 3/16"		3-½"		3-⅜"		5-½"
		48"-60"	14"	0.109"		0.064"						2" × 2" × 3/16"		3-½"		5-⅜"		
		66"-120"	25"	0.064"-0.109"		0.064"						2" × 2" × 3/16"		5-½"		9-⅜"		
		42"-60"	14"		0.060"-0.105"		0.060"						2" × 2" × 3/16"		3-½"		5-⅜"	
		42"-60"	14"		0.135"		0.075"						2" × 2" × ¼"		3-½"		5-⅜"	
		66"-96"	25"		0.060"-0.135"		0.060"						2" × 2" × ¼"		5-½"		7-⅜"	
		96"-108"	25"		0.135"		0.075"						2" × 2" × ¼"		5-½"		7-⅜"	
HUGGER	2⅔" × ½" REROLLED END	THROUGH 48"	10½"	0.109"		0.064"		0.079"	½"	⅞"	32 ksi							
		54"- 66"	10½"	0.109"		0.064"		DOUBLE 0.079"	½"	⅞"	32 ksi							
		THROUGH 54"	10½"	0.064"-0.079"		0.064"		0.079"	½"	⅞"	32 ksi							
		THROUGH 60"	10½"	0.138"		0.079"		DOUBLE 0.079"	½"	⅞"	32 ksi							
		66"-72"	10½"	0.138"		0.109"		DOUBLE 0.079"	½"	⅞"	32 ksi							
		THROUGH 72"	10½"	0.168"		0.109"		DOUBLE 0.109"	½"	⅞"	45 ksi							
	3" × 1" REROLLED END	48"-84"	10½"	0.109"		0.079"		DOUBLE 0.079"	½"	⅞"	32 ksi							
		48"-90"	10½"	0.064"-0.079"		0.064"		DOUBLE 0.079"	½"	⅞"	32 ksi							
		96"-102"	10½"	0.079"		0.079"		DOUBLE 0.079"	½"	⅞"	32 ksi							
		90"-120"	10½"	0.109"		0.109"		DOUBLE 0.109"	½"	⅞"	45 ksi							

SPIRAL RIB PROFILE

COUPLING TYPE	PIPE CORRUGATION	PIPE SIZE	W	PIPE WALL THICKNESS SSRP	PIPE WALL THICKNESS ASRP	BAND THICKNESS SSRP	BAND THICKNESS ASRP	BAR AND STRAP (SSRP ONLY) STRAP THICKNESS	BOLTS Dia	BAR Dia	BAR YIELD STRENGTH	ANGLE DIMENSIONS SSRP	ANGLE DIMENSIONS ASRP	BOLTS (No.- Dia) SSRP	BOLTS (No.- Dia) ASRP	RIVETS ANGLE TO BAND SSRP	RIVETS ANGLE TO BAND ASRP	SPOT WELDS ANGLE TO BAND SSRP
ANNULAR	2⅔" × ½" * REROLLED END	24"-36"	12"	0.064"-0.109"	0.060"-0.105"	0.064"	0.060"	0.079"	½"	⅞"	32 ksi	2" × 2" × 3/16"	2" × 2" × 3/16"	3-½"	3-½"	3-⅜"	3-⅜"	5-½"
		42"-60"	12"	0.064"-0.079"	0.075"-0.105"	0.064"	0.075"	0.079"	½"	⅞"	32 ksi	2" × 2" × 3/16"	2" × 2" × 3/16"	3-½"	3-½"	3-⅜"	3-⅜"	5-½"
		42"-60"	12"	0.109"		0.064"		0.079"	½"	⅞"	32 ksi	2" × 2" × ¼"		3-½"		5-⅜"		
		66"-84"	24"	0.109"		0.064"		0.079"	½"	⅞"	32 ksi	2" × 2" × ¼"		5-½"		7-⅜"		
HUGGER	2⅔" × ½" * REROLLED END	24"-54"	10½"	0.064"-0.079"		0.064"		0.079"	½"	⅞"	32 ksi							
		24"-48"	10½"	0.109"		0.064"		0.079"	½"	⅞"	32 ksi							
		54"-66"	10½"	0.109"		0.064"		Double 0.079"	½"	⅞"	32 ksi							

* See Note 13.

NOTES:

1. All ferrous metal coupling band connection hardware shall be galvanized or electroplated in accordance with the Standard Specifications.
2. For helically corrugated coupling bands, the connection angles may be oriented parallel to the pipe axis, provided connecting holes are slotted lengthwise sufficiently to allow adjustment for the helix angle.
3. Tension strap may be connected to band with either spot welds or fillet welds that develop minimum required strength of strap.
4. Use 1¼" gage line dimension on attached angle leg for rivets and spot welds.
5. Band thickness shall not be less than:
   a. 3 standard thicknesses lighter than the thickness of the pipe for Corrugated Steel Pipe.
   b. 2 standard thicknesses lighter than the thickness of the pipe and in no case lighter than 0.060" for Corrugated Aluminum Pipe.
6. Dimensions, thicknesses and strengths shown are minimum.
7. For pipe arches use same width band as for round pipe of equal periphery.
8. Fillet welds of equivalent strength may be substituted for spot welds or rivets.
9. Spot welds shall develop minimum required strength of strap.
10. Pipe with rerolled ends having at least two 2⅔" × ½" annular corrugations at each end with or without an upturned flange may be connected with any of the annular coupling bands shown for pipe of the same diameter and wall thickness and having 2⅔" × ½" corrugations.
11. In the case of H-12 huggerbands, two piece bands are required for diameters through 96" and three piece bands are required for diameters 102" through 120".
12. Two piece bands are required for pipes greater than 42" diameter.
13. All profiles of Spiral Rib Pipe (¾" × ¾" ribs at 7½" pitch and ¾" × 1" ribs at 11½" pitch in both steel and aluminum and ¾" × 1" ribs at 8½" pitch in steel only) shall be manufactured with rerolled ends. Corrugation profile of the rerolled ends shall be 2⅔" × ½" annual corrugations with a minimum of two full corrugations at each end.

STATE OF CALIFORNIA
DEPARTMENT OF TRANSPORTATION

CORRUGATED METAL PIPE COUPLING DETAILS No. 6 POSITIVE JOINT

NO SCALE

RSP D97F DATED JUNE 6, 2008 SUPERSEDES STANDARD PLAN D97F
DATED MAY 1, 2006 - PAGE 188 OF THE STANDARD PLANS BOOK DATED MAY 2006.

REVISED STANDARD PLAN RSP D97F

2006 REVISED STANDARD PLAN RSP D97F

4-2-08

DIST	COUNTY	ROUTE	POST MILES TOTAL PROJECT	SHEET NO.	TOTAL SHEETS
01	Men	128,253	Var	94	106

Raymond Don Tsztoo
REGISTERED CIVIL ENGINEER

June 6, 2008
PLANS APPROVAL DATE

REGISTERED PROFESSIONAL ENGINEER
Raymond Don Tsztoo
No. C37332
Exp. 6-30-08
CIVIL
STATE OF CALIFORNIA

The State of California or its officers or agents shall not be responsible for the accuracy or completeness of electronic copies of this plan sheet.

To accompany plans dated 4-12-10

ANNULAR AND HELICAL PROFILE

COUPLING TYPE	PIPE CORRUGATION	PIPE SIZE	W OR A	PIPE WALL THICKNESS		BAND THICKNESS		BAR AND STRAP (CSP ONLY)			ANGLE						
											DIMENSIONS		BOLTS (No.- Dia)		RIVETS ANGLE TO BAND		SPOT WELDS ANGLE TO BAND
				CSP	CAP	CSP	CAP	STRAP THICKNESS	BOLTS Dia	BAR Dia	CSP	CAP	CSP	CAP	CSP	CAP	CSP
TWO PIECE INTEGRAL FLANGE	1½′ × ¼"	6"	7"	0.064"-0.168"		0.052"							3-⅜"				
	1½′ × ¼"	8"-10"	7"	0.064"-0.168"	0.060"-0.164"	0.064"	0.060"						3-⅜"	3-⅜"			
ANNULAR	2⅔" × ½"	THROUGH 24"	12"	0.064"-0.168"	0.060"-0.164"	0.064"	0.060"				2" × 2" × 3/16"	2" × 2" × 3/16"	3-½"	3-½"	3-⅜"	3-⅜"	3-½"
HUGGER	2⅔" × ½" REROLLED END	THROUGH 24"	10½"	0.064"-0.168"		0.064"		0.079"	½"	⅞"							

SPIRAL RIB PROFILE

COUPLING TYPE	PIPE CORRUGATION	PIPE SIZE	W	PIPE WALL THICKNESS		BAND THICKNESS		BAR AND STRAP (SSRP ONLY)			ANGLE						
											DIMENSIONS		BOLTS (No.- Dia)		RIVETS ANGLE TO BAND		SPOT WELDS ANGLE TO BAND
				SSRP	ASRP	SSRP	ASRP	STRAP THICKNESS	BOLTS Dia	BAR Dia	SSRP	ASRP	SSRP	ASRP	SSRP	ASRP	SSRP
ANNULAR	2⅔" × ½" * REROLLED END	24"	12"	0.064"-0.168"	0.060"-0.164"	0.064"	0.060"				2" × 2" × 3/16"	2" × 2" × 3/16"	3-½"	3-½"	3-⅜"	3-⅜"	3-½"
HUGGER	2⅔" × ½" * REROLLED END	24"	10½"	0.064"-0.168"		0.064"		0.079"	½"	⅞"							

* See Note 12.

NOTES:

1. All ferrous metal coupling band connection hardware shall be galvanized or electro-plated in accordance with the Standard Specifications.
2. For helically corrugated coupling bands, the connection angles may be oriented parallel to the pipe axis, provided connecting holes are slotted lengthwise sufficiently to allow adjustment for the helix angle.
3. Tension strap may be connected to band with either spot welds or fillet welds that develop minimum required strength of strap.
4. Use 1¼" gage line dimension on attached angle leg for rivets and spot welds.
5. Band thickness shall not be less than:
   a. 3 standard thicknesses lighter than the thickness of the pipe for Corrugated Steel Pipe.
   b. 2 standard thicknesses lighter than the thickness of the pipe and in no case lighter than 0.060" for Corrugated Aluminum Pipe.
6. Dimensions, thicknesses and strengths shown are minimum.
7. For pipe arches use same width band as for round pipe of equal periphery.
8. Fillet welds of equivalent strenght may be substituted for spot welds or rivets.
9. Spot welds shall develop minimum required strength of strap.
10. Pipe with rerolled ends having at least two 2⅔" × ½" annular corrugations at each end with or without an upturned flange may be connected with any of the annular coupling bands shown for pipe of the same diameter and wall thickness and having 2⅔" × ½" corrugations.
11. For downdrain applications, two piece integral flange couplers shall have factory applied sleeve type rubber gaskets with a minimum length of 7" measured along the length of the pipe.
12. All profiles of Spiral Rib Pipe (¾" × ¾" ribs at 7½" pitch and ¾" × 1" ribs at 11½" pitch in both steel and aluminum and ¾" × 1" ribs at 8½" pitch in steel only) shall be manufactured with rerolled ends. Corrugation profile of the rerolled ends shall be 2⅔" × ½" annual corrugations with a minimum of two full corrugations at each end.

STATE OF CALIFORNIA
DEPARTMENT OF TRANSPORTATION

CORRUGATED METAL PIPE COUPLING DETAILS No. 7 DOWNDRAIN

NO SCALE

RSP D97G DATED JUNE 6, 2008 SUPERSEDES STANDARD PLAN D97G
DATED MAY 1, 2006 - PAGE 189 OF THE STANDARD PLANS BOOK DATED MAY 2006.

REVISED STANDARD PLAN RSP D97G

2006 REVISED STANDARD PLAN RSP D97G

4-4-08

DIST	COUNTY	ROUTE	POST MILES TOTAL PROJECT	SHEET NO.	TOTAL SHEETS
01	Men	128,253	Var	95	106

LICENSED LANDSCAPE ARCHITECT

April 3, 2009
PLANS APPROVAL DATE

The State of California or its officers or agents shall not be responsible for the accuracy or completeness of electronic copies of this plan sheet.

LICENSED LANDSCAPE ARCHITECT — Gregory A. Balzer — 02-28-11 Renewal Date — 03-04-09 Date — STATE OF CALIFORNIA

To accompany plans dated 4-12-10

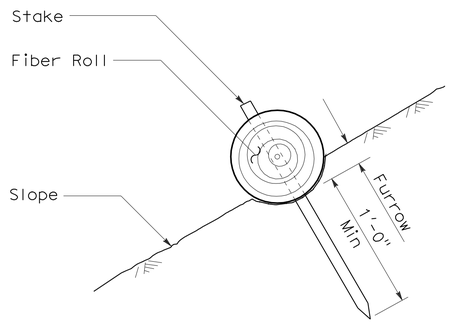

SECTION

FIBER ROLL (TYPE 1)

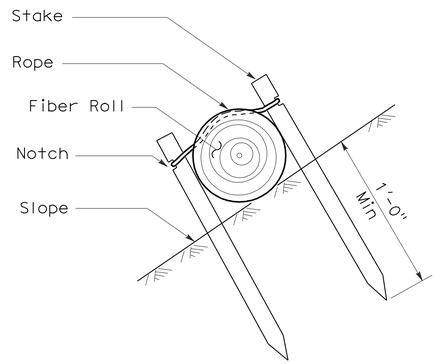

SECTION

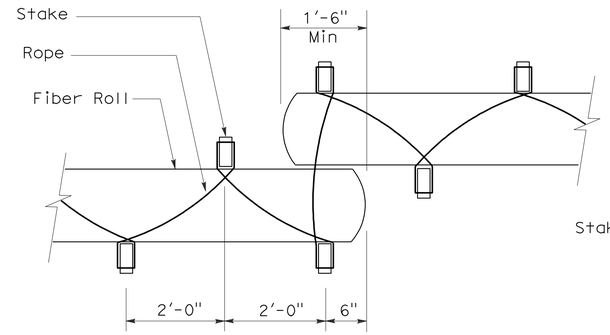

PLAN

FIBER ROLL (TYPE 2)

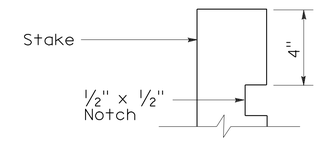

ELEVATION

STAKE NOTCH DETAIL

NOTES:

1. Fiber roll spacing varies depending upon slope inclination.
2. Installations shown in the perspectives are for slope inclination of 10:1 and steeper.

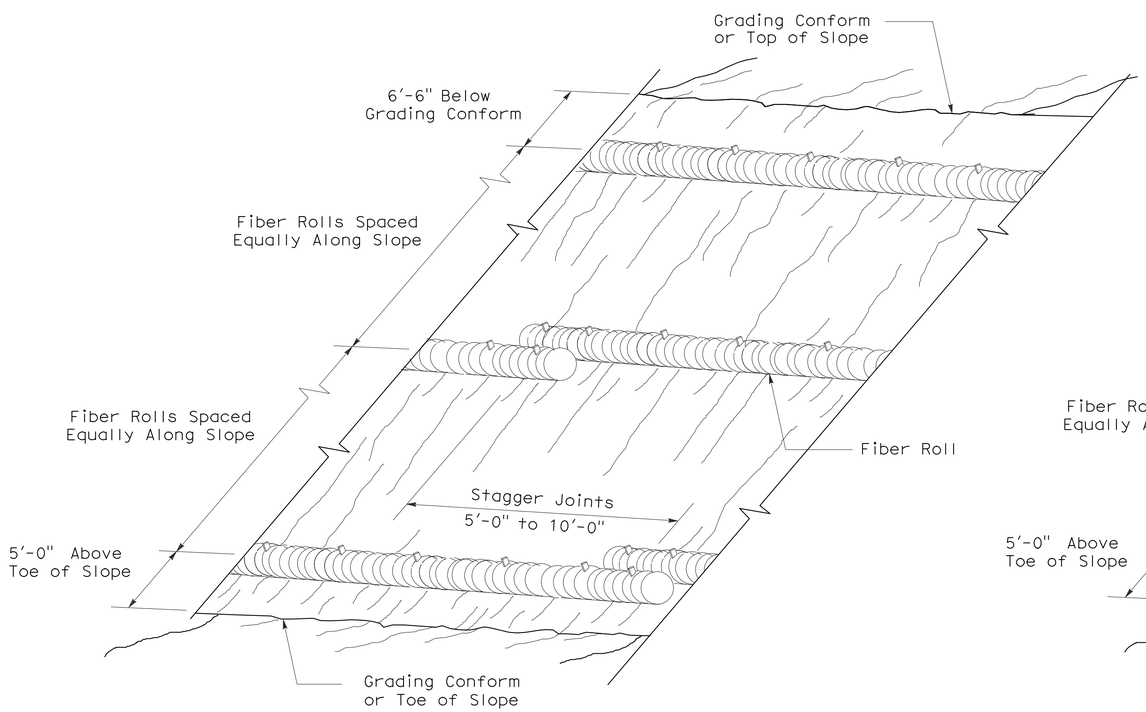

PERSPECTIVE

FIBER ROLL (TYPE 1)

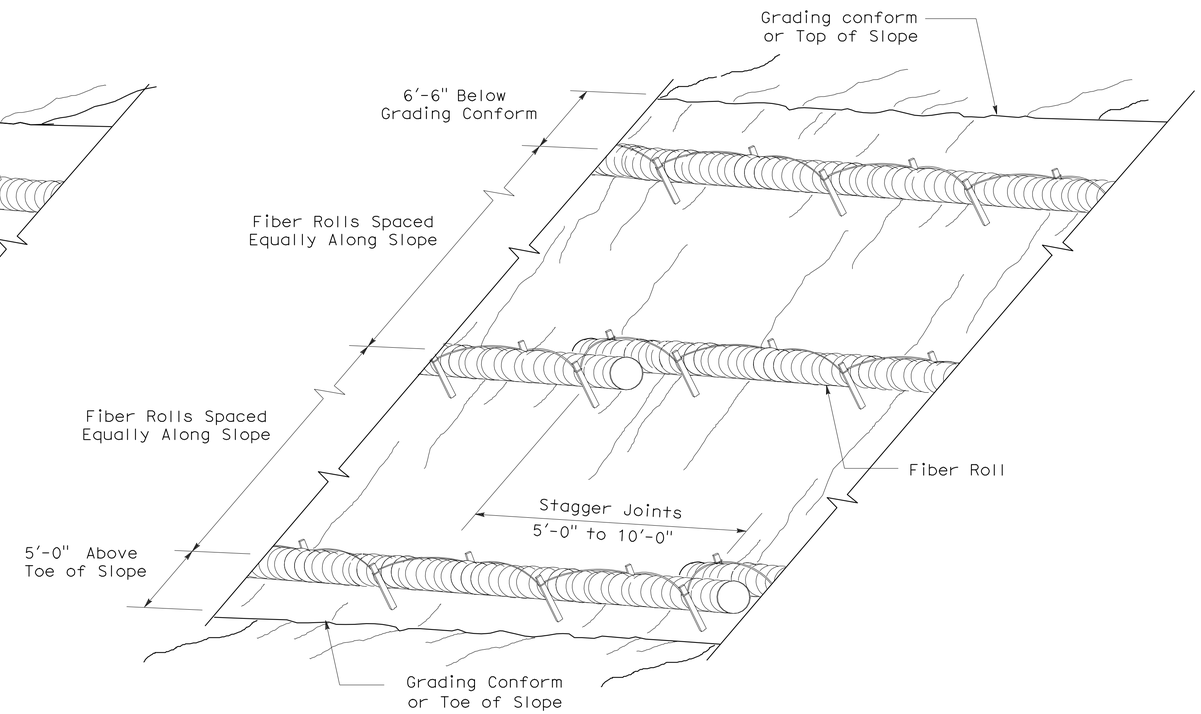

PERSPECTIVE

FIBER ROLL (TYPE 2)

STATE OF CALIFORNIA
DEPARTMENT OF TRANSPORTATION

EROSION CONTROL DETAILS (FIBER ROLL)

NO SCALE

RNSP H51 DATED APRIL 3, 2009 SUPERSEDES NSP H51 DATED DECEMBER 1, 2006 THAT SUPPLEMENTS THE STANDARD PLANS BOOK DATED MAY 2006.

REVISED NEW STANDARD PLAN RNSP H51

2006 REVISED NEW STANDARD PLAN RNSP H51

3-4-09

DIST	COUNTY	ROUTE	POST MILES TOTAL PROJECT	SHEET NO.	TOTAL SHEETS
01	Men	128,253	Var	96	106

LICENSED LANDSCAPE ARCHITECT

June 5, 2009
PLANS APPROVAL DATE

The State of California or its officers or agents shall not be responsible for the accuracy or completeness of electronic copies of this plan sheet.

LICENSED LANDSCAPE ARCHITECT — Gregory A. Balzer — 6-9-09 Signature — 2-28-11 Renewal Date — 5-14-09 Date — STATE OF CALIFORNIA

To accompany plans dated 4-12-10

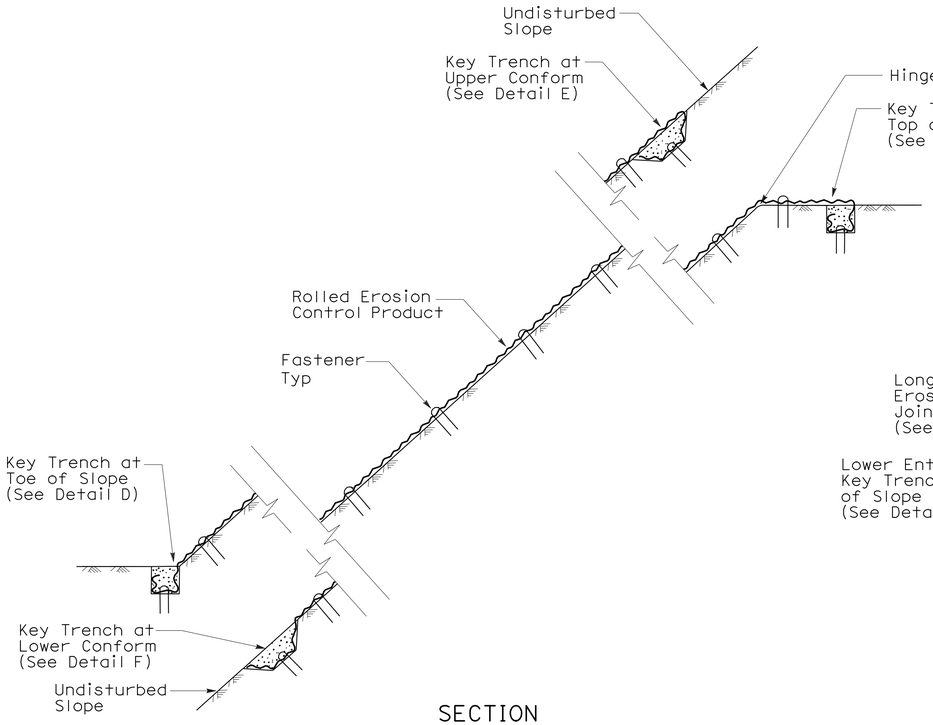

SECTION

ROLLED EROSION CONTROL PRODUCT ON SLOPE WITH VARIOUS KEY ENTRENCHMENTS

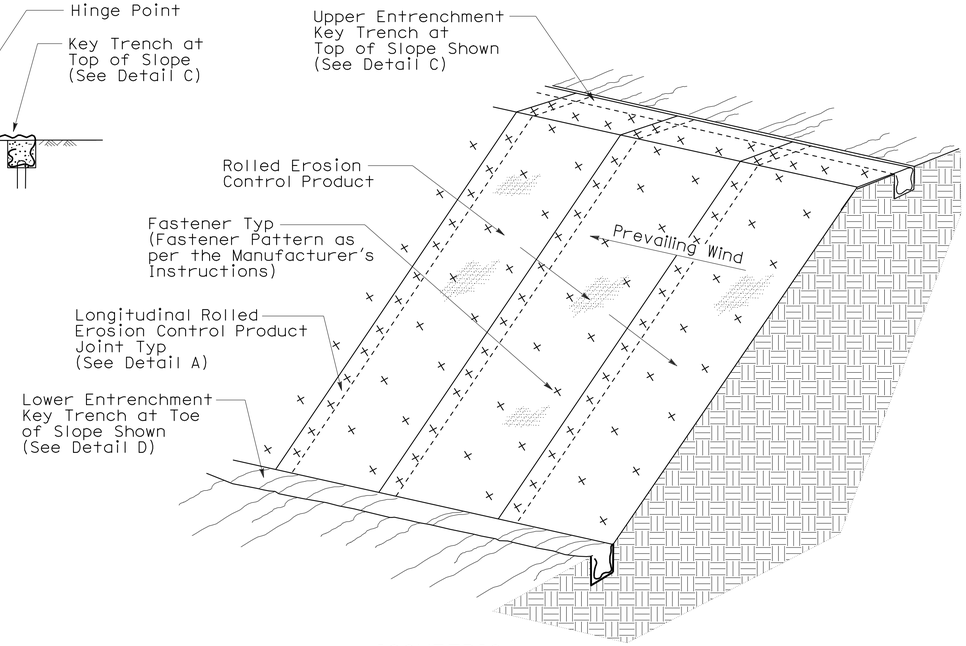

ISOMETRIC

ROLLED EROSION CONTROL PRODUCT ON SLOPE

NOTE:

1. Fiber Roll/Compost Sock shown for reference purposes only.
2. If transverse rolled erosion control product joints are required on slopes, see Detail B.

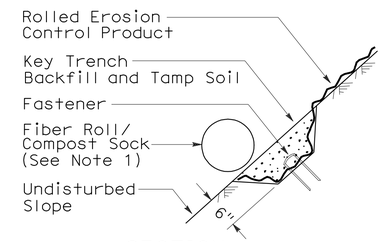

SECTION

DETAIL F
KEY TRENCH AT LOWER CONFORM

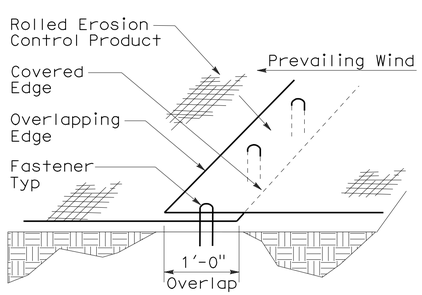

PERSPECTIVE

DETAIL A
LONGITUDINAL ROLLED EROSION CONTROL PRODUCT JOINT

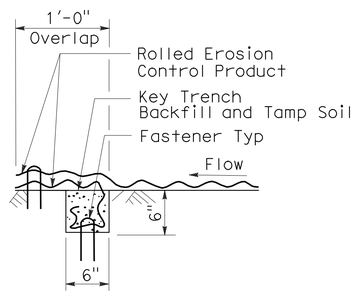

SECTION

DETAIL B
TRANSVERSE ROLLED EROSION CONTROL PRODUCT JOINT

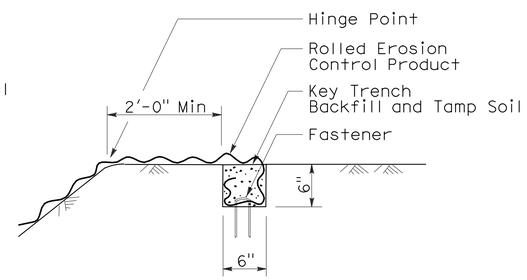

SECTION

DETAIL C
KEY TRENCH AT TOP OF SLOPE

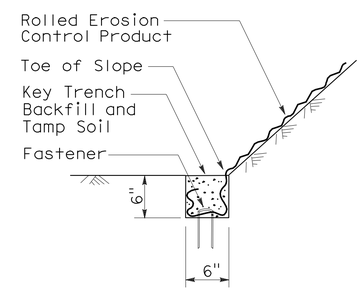

SECTION

DETAIL D
KEY TRENCH AT TOE OF SLOPE

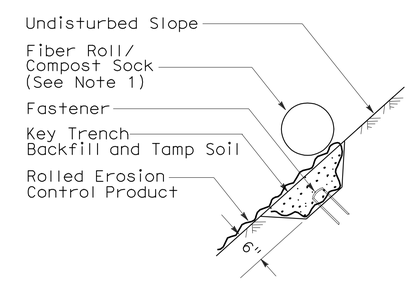

SECTION

DETAIL E
KEY TRENCH AT UPPER CONFORM

STATE OF CALIFORNIA
DEPARTMENT OF TRANSPORTATION

ROLLED EROSION CONTROL PRODUCT

NO SCALE

NSP H53 DATED JUNE 5, 2009 SUPPLEMENTS
THE STANDARD PLANS BOOK DATED MAY 2006.

NEW STANDARD PLAN NSP H53

2006 NEW STANDARD PLAN NSP H53

3-4-09

DIST	COUNTY	ROUTE	POST MILES TOTAL PROJECT	SHEET NO.	TOTAL SHEETS
01	Men	128,253	Var	97	106

Randell D. Hiatt
REGISTERED CIVIL ENGINEER

June 6, 2008
PLANS APPROVAL DATE

REGISTERED PROFESSIONAL ENGINEER
Randell D. Hiatt
No. C50200
Exp. 6-30-09
CIVIL
STATE OF CALIFORNIA

The State of California or its officers or agents shall not be responsible for the accuracy or completeness of electronic copies of this plan sheet.

To accompany plans dated 4-12-10

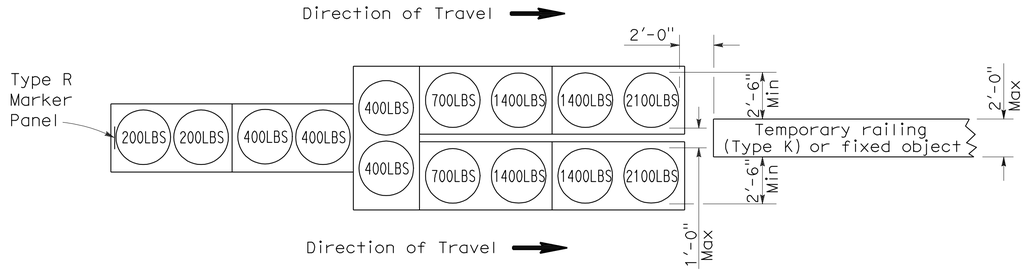

ARRAY 'TU14'

Approach speed 45 mph or more

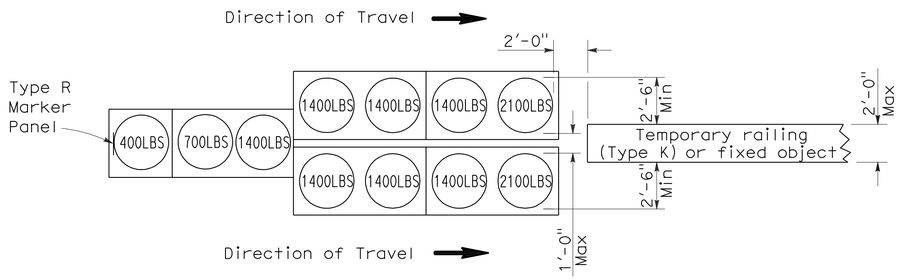

ARRAY 'TU11'

Approach speed less than 45 mph

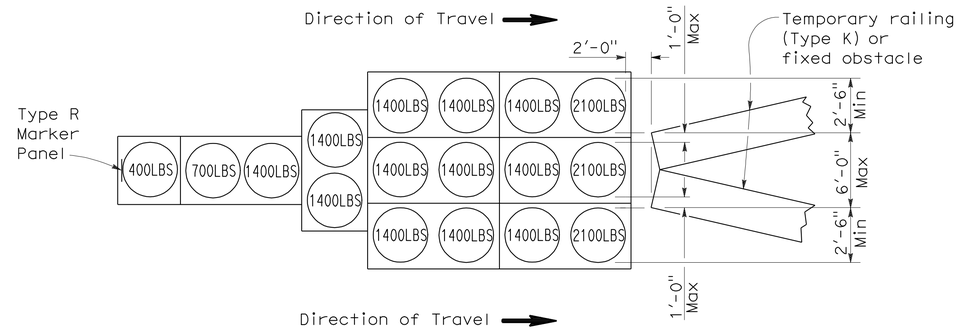

ARRAY 'TU17'

Approach speed less than 45 mph

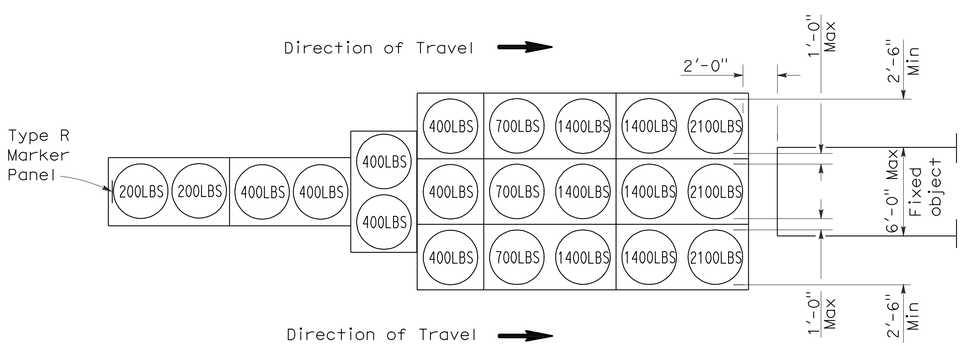

ARRAY 'TU21'

Approach speed 45 mph or more

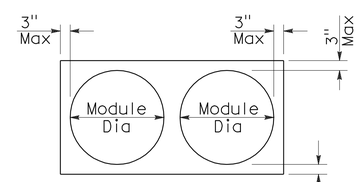

PLAN

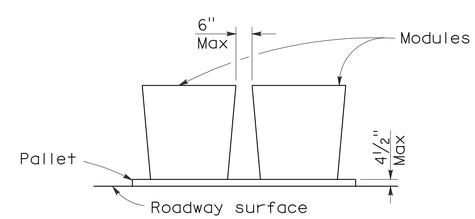

ELEVATION

CRASH CUSHION PALLET DETAIL

See Note 7

NOTES:

1. (XXX) Indicates sand filled module location and weight of sand in pounds for each module. Module spacing is based on the greater diameter of the module.
2. All sand weights are nominal.
3. Temporary crash cushion arrays shall not encroach on the traveled way.
4. Place the top of Type R marker panel 1" below the module lid.
5. Refer to Standard Plan A73B for marker details.
6. Approach speeds indicated conform to NCHRP 350 Report criteria.
7. Use of pallets is optional.

STATE OF CALIFORNIA
DEPARTMENT OF TRANSPORTATION

TEMPORARY CRASH CUSHION, SAND FILLED (UNIDIRECTIONAL)

NO SCALE

RSP T1A DATED JUNE 6, 2008 SUPERSEDES STANDARD PLAN T1A
DATED MAY 1, 2006 - PAGE 211 OF THE STANDARD PLANS BOOK DATED MAY 2006.

REVISED STANDARD PLAN RSP T1A

2006 REVISED STANDARD PLAN RSP T1A

DIST	COUNTY	ROUTE	POST MILES TOTAL PROJECT	SHEET NO.	TOTAL SHEETS
01	Men	128,253	Var	98	106

Randell D. Hiatt
REGISTERED CIVIL ENGINEER

June 6, 2008
PLANS APPROVAL DATE

REGISTERED PROFESSIONAL ENGINEER
Randell D. Hiatt
No. C50200
Exp. 6-30-09
CIVIL
STATE OF CALIFORNIA

The State of California or its officers or agents shall not be responsible for the accuracy or completeness of electronic copies of this plan sheet.

To accompany plans dated 4-12-10

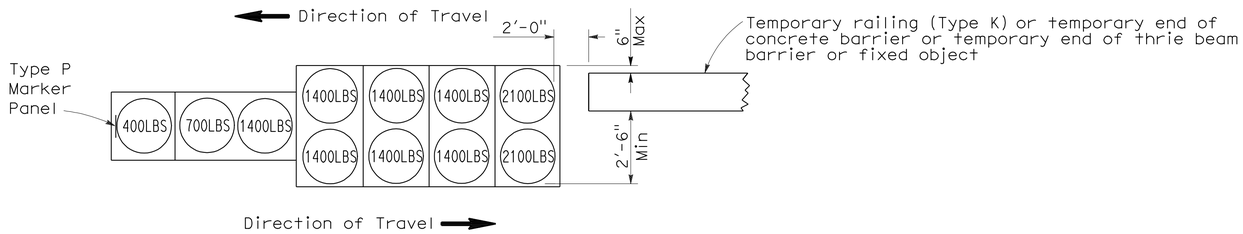

ARRAY 'TB11'

Approach speed less than 45 mph

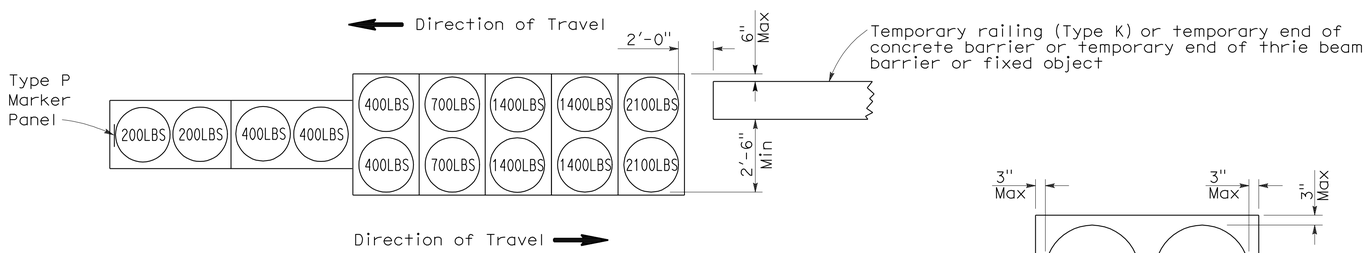

ARRAY 'TB14'

Approach speed 45 mph or more

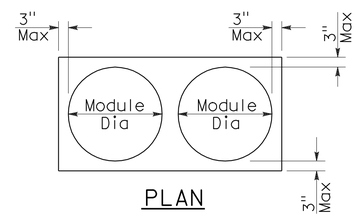

PLAN

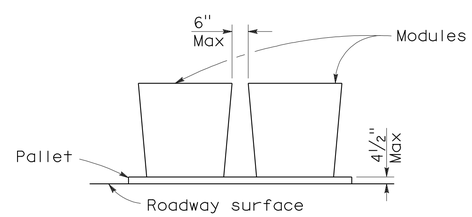

ELEVATION

CRASH CUSHION PALLET DETAIL

See Note 7

NOTES:

1. (XXX) Indicates sand filled module location and weight of sand in pounds for each module. Module spacing is based on the greater diameter of the module.
2. All sand weights are nominal.
3. Temporary crash cushion arrays shall not encroach on the traveled way.
4. Place the Type P marker panel so that the bottom of the panel rests upon the pallet.
5. Refer to Standard Plan A73B for marker details.
6. Approach speeds indicated conform to NCHRP 350 Report criteria.
7. Use of pallets is optional.

STATE OF CALIFORNIA
DEPARTMENT OF TRANSPORTATION

TEMPORARY CRASH CUSHION, SAND FILLED (BIDIRECTIONAL)

NO SCALE

RSP T1B DATED JUNE 6, 2008 SUPERSEDES STANDARD PLAN T1B
DATED MAY 1, 2006 - PAGE 212 OF THE STANDARD PLANS BOOK DATED MAY 2006.

REVISED STANDARD PLAN RSP T1B

2006 REVISED STANDARD PLAN RSP T1B

5-15-08

DIST	COUNTY	ROUTE	POST MILES TOTAL PROJECT	SHEET NO.	TOTAL SHEETS
01	Men	128,253	Var	99	106

Randell D. Hiatt
REGISTERED CIVIL ENGINEER

June 6, 2008
PLANS APPROVAL DATE

REGISTERED PROFESSIONAL ENGINEER
Randell D. Hiatt
No. C50200
Exp. 6-30-09
CIVIL
STATE OF CALIFORNIA

The State of California or its officers or agents shall not be responsible for the accuracy or completeness of electronic copies of this plan sheet.

To accompany plans dated 4-12-10

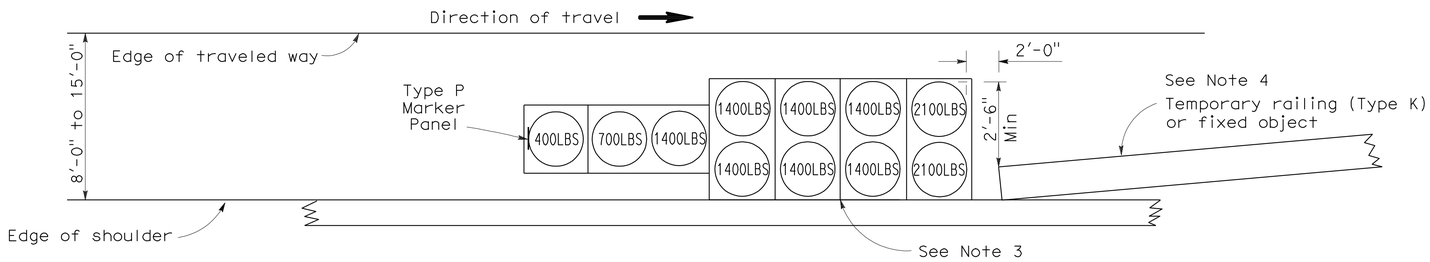

ARRAY 'TS11'

Approach speed less than 45 mph
See Note 9

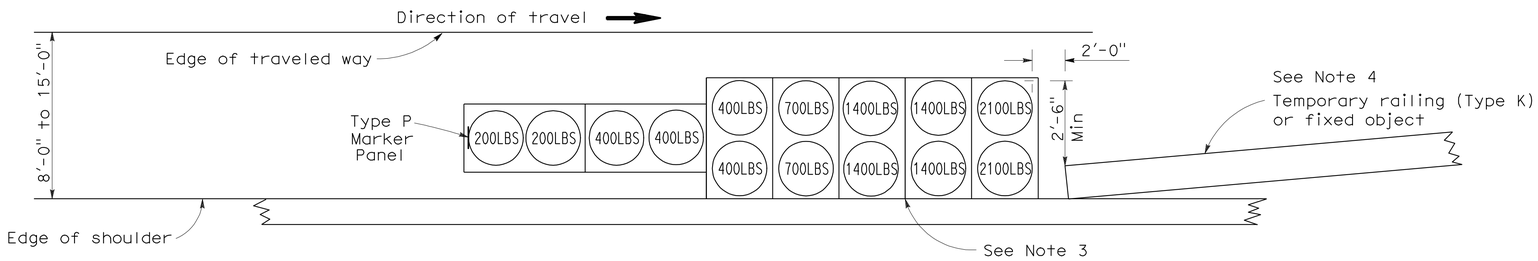

ARRAY 'TS14'

Approach speed 45 mph or more
See Note 9

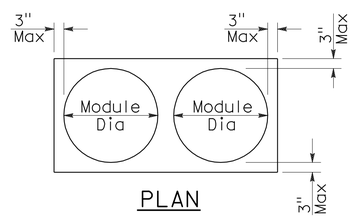

PLAN

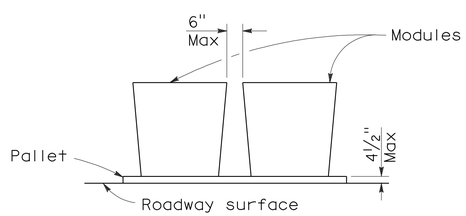

ELEVATION

CRASH CUSHION PALLET DETAIL

See Note 11

NOTES:

1. (XXX) Indicates sand filled module location and weight of sand in pounds for each module. Module spacing is based on the greater diameter of the module.
2. All sand weights are nominal.
3. The temporary crash cushion arrays shown on this plan shall be used only in locations where there will be traffic on one side of the temporary crash cushion array.
4. If the fixed object or approach end of the temporary railing is less than 15'-0" from the edge of traveled way, a temporary crash cushion is required in a construction or work zone.
5. Temporary crash cushion arrays shall not encroach on the traveled way.
6. Arrays for median shoulders shall conform to details shown on this plan for outside shoulders.
7. Place the Type P marker panel so that the bottom of the panel rests upon the pallet and faces traffic.
8. Refer to Standard Plan A73B for marker details.
9. For shoulder widths less than 8'-0", appropriate approved crash cushion protection, other than sand filled modules, shall be provided at fixed objects and at approach ends of temporary railing. The specific type of crash cushion shall be as shown on the project plans or as specified in the Special Provisions, or if not shown on the project plans or specified in the Special Provisions, shall be as approved by the Engineer.
10. Approach speeds indicated conform to NCHRP 350 Report criteria.
11. Use of pallets is optional.

STATE OF CALIFORNIA
DEPARTMENT OF TRANSPORTATION

TEMPORARY CRASH CUSHION, SAND FILLED (SHOULDER INSTALLATIONS)

NO SCALE

RSP T2 DATED JUNE 6, 2008 SUPERSEDES STANDARD PLAN T2
DATED MAY 1, 2006 - PAGE 213 OF THE STANDARD PLANS BOOK DATED MAY 2006.

REVISED STANDARD PLAN RSP T2

2006 REVISED STANDARD PLAN RSP T2

5-15-08

DIST	COUNTY	ROUTE	POST MILES TOTAL PROJECT	SHEET NO.	TOTAL SHEETS
01	Men	128,253	Var	100	106

REGISTERED CIVIL ENGINEER

November 17, 2006
PLANS APPROVAL DATE

REGISTERED PROFESSIONAL ENGINEER — Greg W. Edwards — No. C36386 — Exp. 6-30-08 — CIVIL — STATE OF CALIFORNIA

The State of California or its officers or agents shall not be responsible for the accuracy or completeness of electronic copies of this plan sheet.

To accompany plans dated 4-12-10

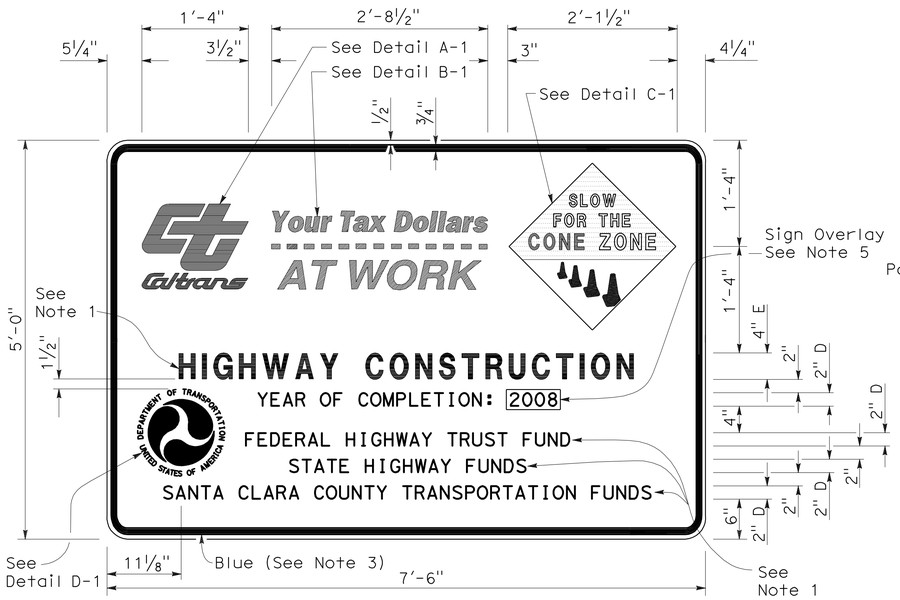

TYPE 1

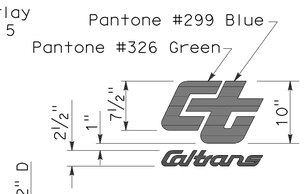

DETAIL A-1

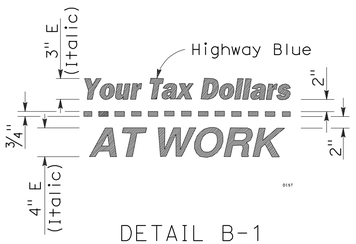

DETAIL B-1
(See Note 3)

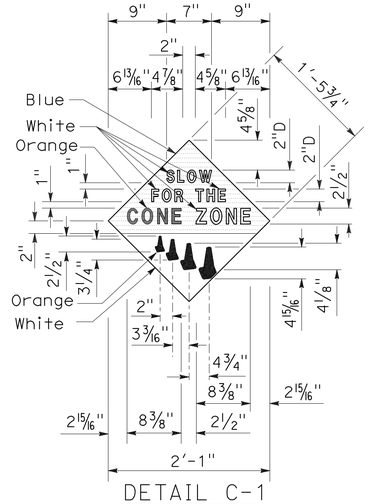

DETAIL C-1
(See Note 4)

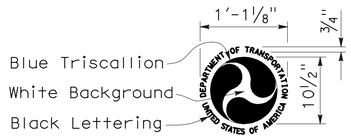

DETAIL D-1
(See Note 6)

NOTES:

1. The sign messages shown for type of project and fund types are examples only. See the Special Provisions for the applicable type of project and fund type messages to be used.
2. Except as otherwise shown, the legend of sign shall be black on a white background (non-reflective).
3. The border of the signs and details "B-1" and "B-2" shall be blue (non-reflective).
4. The diamond in details "C-1" and "C-2" shall be blue for the background of message, " SLOW FOR THE CONE ZONE", and white background for the orange cones. The color and type of font for the "SLOW FOR THE CONE ZONE" message shall be: "SLOW" white D; "FOR THE" white D; "CONE" orange Arial font; "ZONE" white Arial font.
5. Year of completion of project construction shown on the overlay is an example only. See the Special Provisions.
6. Use when the Project involves Federal Highway Trust Fund.

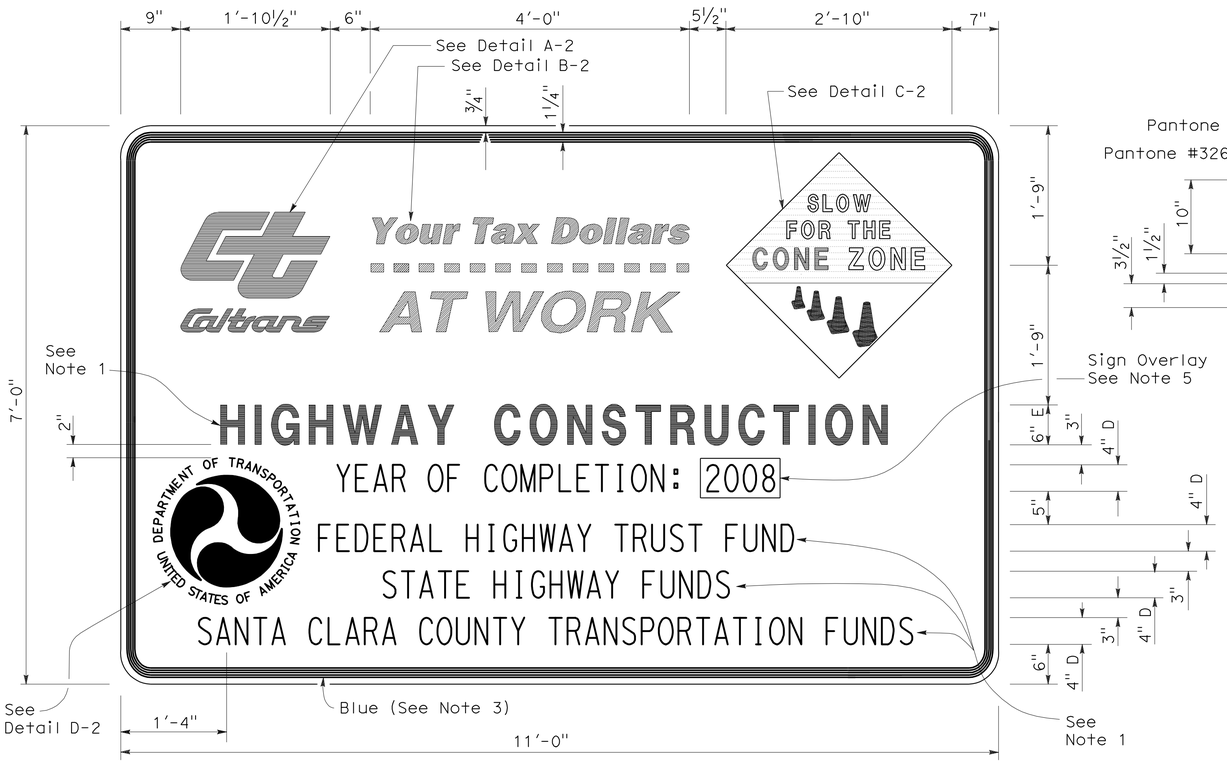

TYPE 2

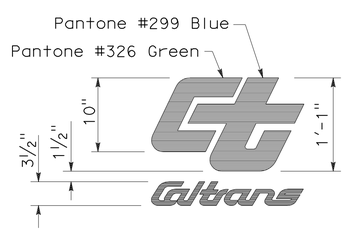

DETAIL A-2

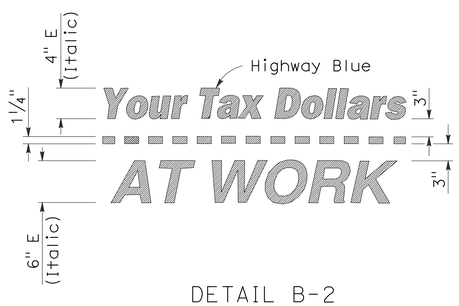

DETAIL B-2
(See Note 3)

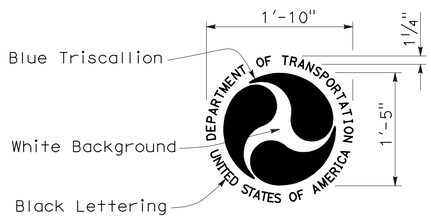

DETAIL D-2
(See Note 6)

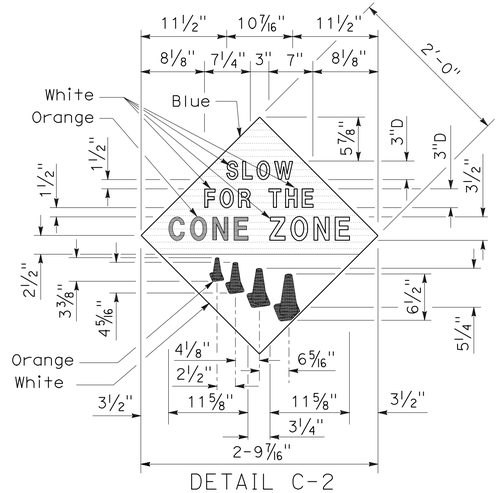

DETAIL C-2
(See Note 4)

STATE OF CALIFORNIA
DEPARTMENT OF TRANSPORTATION

CONSTRUCTION PROJECT FUNDING IDENTIFICATION SIGNS

NO SCALE

RSP T7 DATED NOVEMBER 17, 2006 SUPERSEDES STANDARD PLAN T7
DATED MAY 1, 2006 - PAGE 217 OF THE STANDARD PLANS BOOK DATED MAY 2006.

REVISED STANDARD PLAN RSP T7

2006 REVISED STANDARD PLAN RSP T7

9-7-06

DIST	COUNTY	ROUTE	POST MILES TOTAL PROJECT	SHEET NO.	TOTAL SHEETS
01	Men	128,253	Var	101	106

Robert B Schott
LICENSED LANDSCAPE ARCHITECT

April 3, 2009
PLANS APPROVAL DATE

LICENSED LANDSCAPE ARCHITECT
Robert B. Schott 3025
Signature
11-30-10
Renewal Date
2-25-09
Date
STATE OF CALIFORNIA

The State of California or its officers or agents shall not be responsible for the accuracy or completeness of electronic copies of this plan sheet.

To accompany plans dated 4-12-10

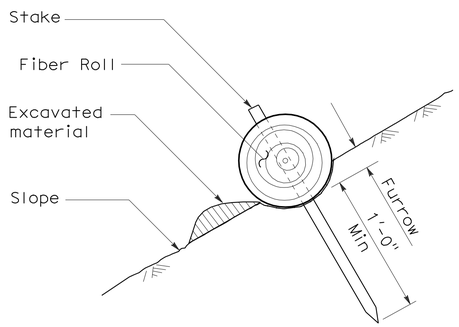

SECTION

TEMPORARY FIBER ROLL (TYPE 1)

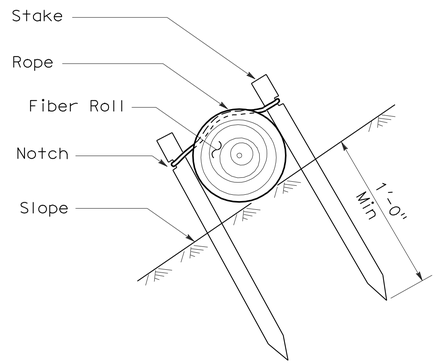

SECTION

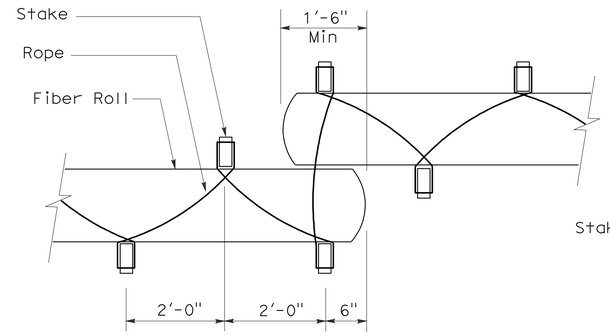

PLAN

TEMPORARY FIBER ROLL (TYPE 2)

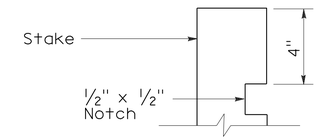

ELEVATION

STAKE NOTCH DETAIL

NOTES:

1. Temporary fiber roll spacing varies depending upon slope inclination.
2. Installations shown in the perspectives are for slope inclination of 10:1 and steeper.

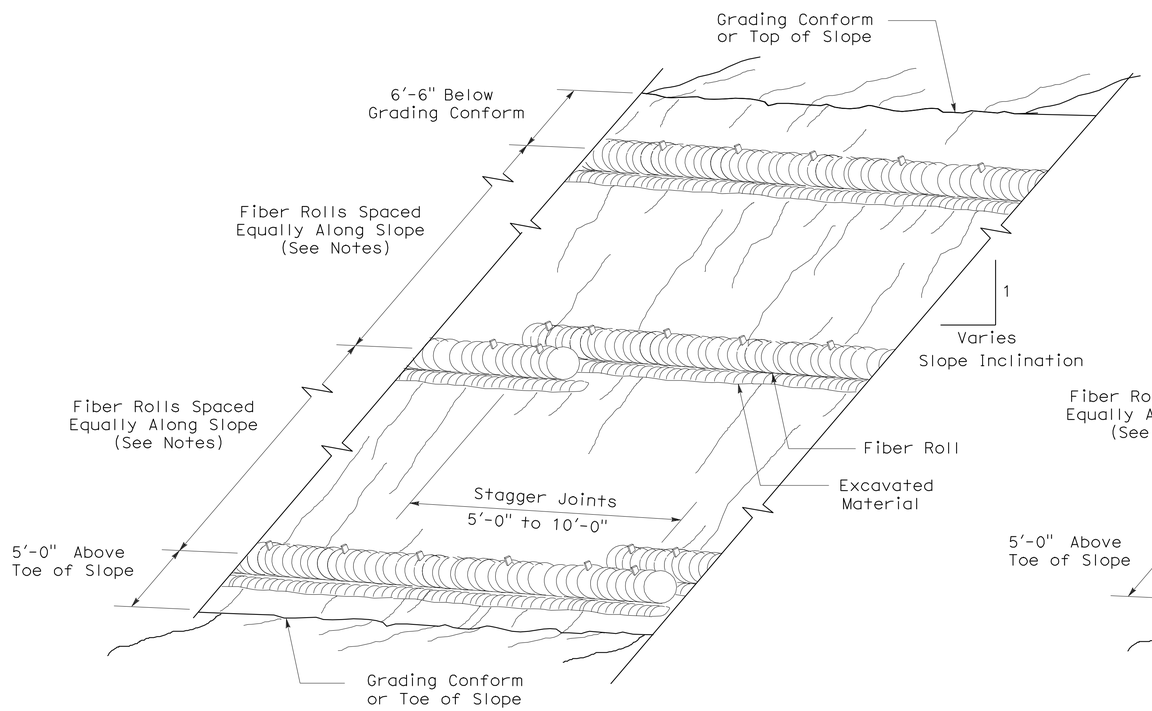

PERSPECTIVE

TEMPORARY FIBER ROLL (TYPE 1)

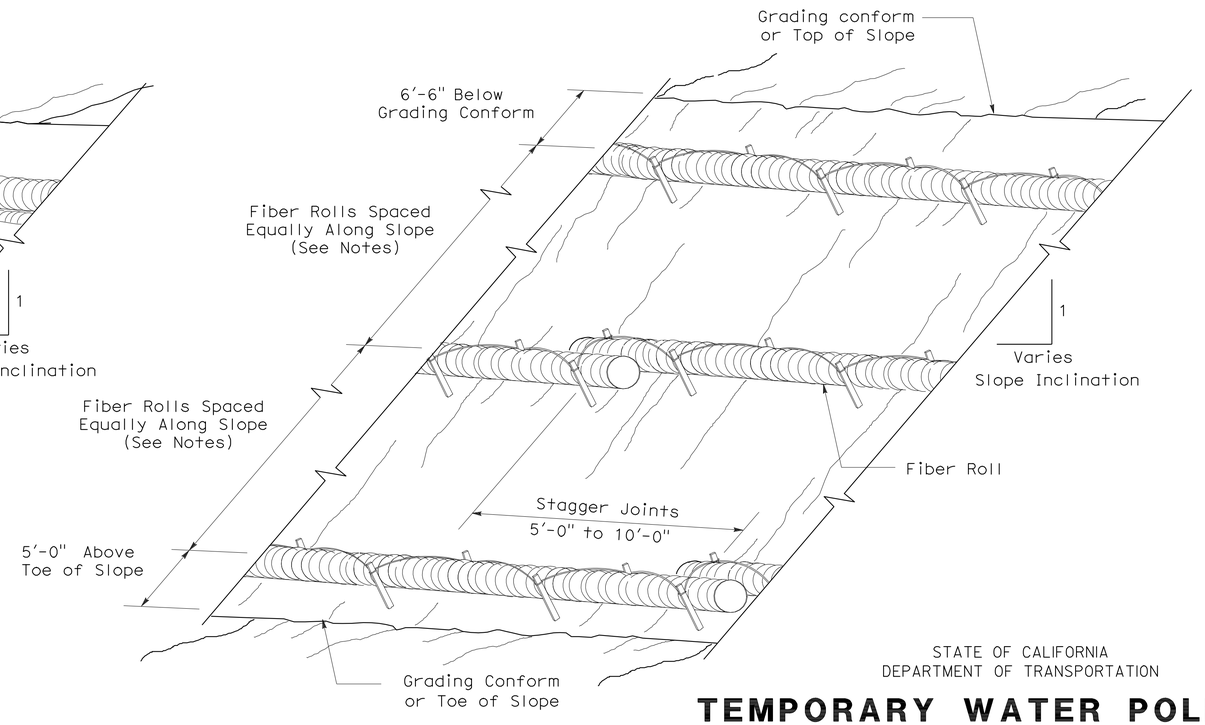

PERSPECTIVE

TEMPORARY FIBER ROLL (TYPE 2)

STATE OF CALIFORNIA
DEPARTMENT OF TRANSPORTATION

TEMPORARY WATER POLLUTION CONTROL DETAILS (TEMPORARY FIBER ROLL)

NO SCALE

RSP T56 DATED APRIL 3, 2009 SUPERSEDES STANDARD PLAN T56
DATED MAY 1, 2006 - PAGE 232 OF THE STANDARD PLANS BOOK DATED MAY 2006.

REVISED STANDARD PLAN RSP T56

2006 REVISED STANDARD PLAN RSP T56

DIST	COUNTY	ROUTE	POST MILES TOTAL PROJECT	SHEET NO.	TOTAL SHEETS
01	Men	128,253	Var	102	106

LICENSED LANDSCAPE ARCHITECT

August 15, 2008
PLANS Approval DATE

The State of California or its officers or agents shall not be responsible for the accuracy or completeness of electronic copies of this plan sheet.

LICENSED LANDSCAPE ARCHITECT — Robert B. Schott — Signature — 11-04-08 Renewal Date — 08-11-08 Date — STATE OF CALIFORNIA

To accompany plans dated 4-12-10

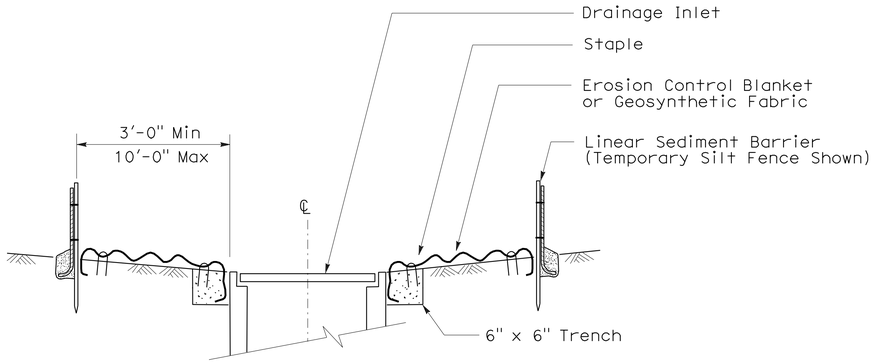

SECTION A-A

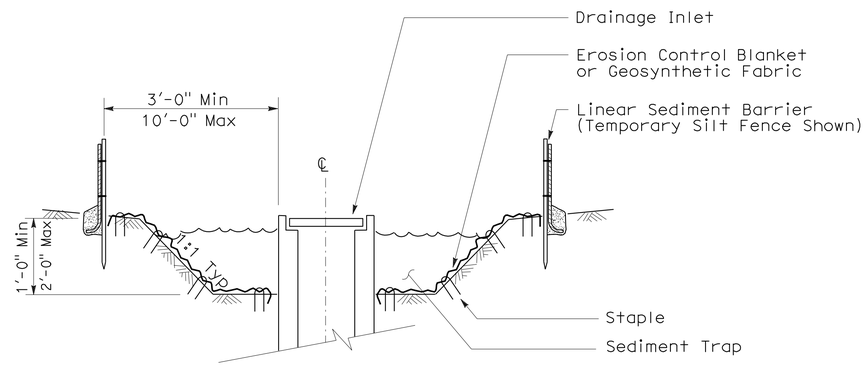

SECTION B-B

NOTES:

1. See Standard Plan T51 for Temporary Silt Fence.
2. Dimensions may vary to fit field conditions.

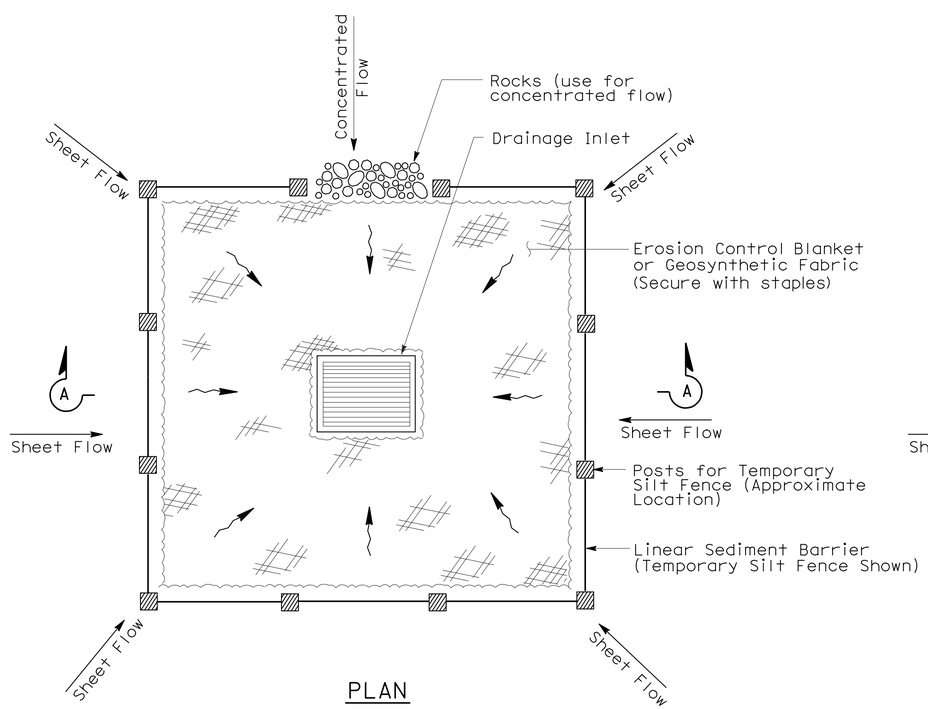

PLAN

TEMPORARY DRAINAGE INLET PROTECTION (TYPE 1)

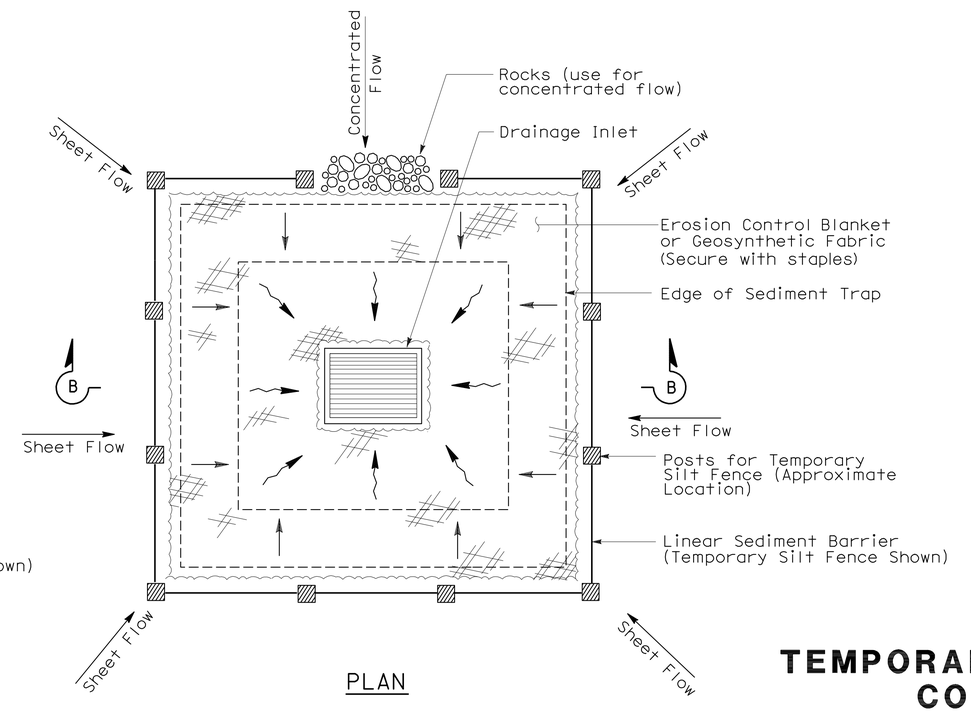

PLAN

TEMPORARY DRAINAGE INLET PROTECTION (TYPE 2) (EXCAVATED SEDIMENT TRAP)

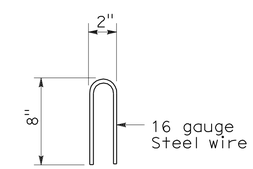

STAPLE DETAIL

STATE OF CALIFORNIA
DEPARTMENT OF TRANSPORTATION

TEMPORARY WATER POLLUTION CONTROL DETAILS (TEMPORARY DRAINAGE INLET PROTECTION)

NO SCALE

NSP T61 DATED AUGUST 15, 2008 SUPPLEMENTS THE STANDARD PLANS BOOK DATED MAY 2006.

NEW STANDARD PLAN NSP T61

2006 NEW STANDARD PLAN NSP T61

7-11-08

DIST	COUNTY	ROUTE	POST MILES TOTAL PROJECT	SHEET NO.	TOTAL SHEETS
01	Men	128,253	Var	103	106

LICENSED LANDSCAPE ARCHITECT

August 15, 2008
PLANS APPROVAL DATE

The State of California or its officers or agents shall not be responsible for the accuracy or completeness of electronic copies of this plan sheet.

LICENSED LANDSCAPE ARCHITECT — Robert B. Schott — Signature — 11-04-08 Renewal Date — 08-11-08 Date — STATE OF CALIFORNIA

To accompany plans dated 4-12-10

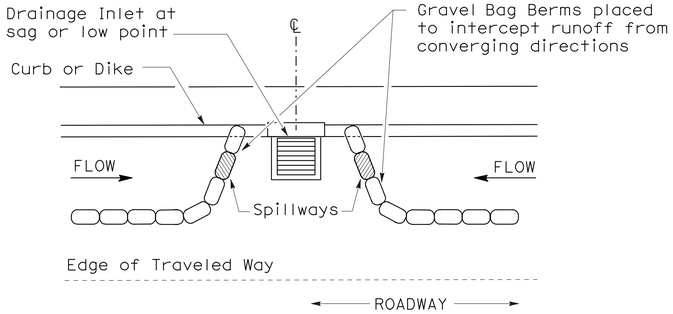

PLAN

CONFIGURATION FOR SAG POINT INLET (GRAVEL BAG BERM)

GRAVEL BAG BERM (TYPE 3A) SPACING TABLE

SLOPE OF ROADWAY (PERCENT)	1 to 3.9	4 to 5.9	6 to 7.9	8 to 10	10+
INTERVAL BETWEEN BERM	100′	75′	50′	25′	12′

For slope of less than 1%, install barriers only if erosion/sediment is prevalent

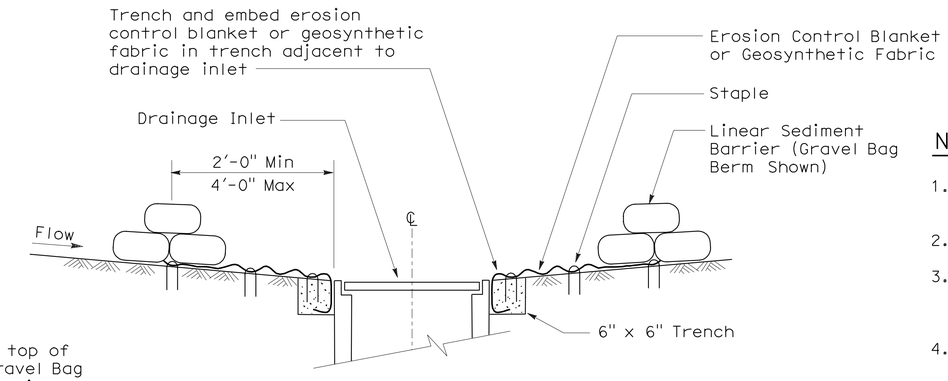

SECTION A-A

NOTES:

1. Place safety cones adjacent to drainage inlet protection.
2. Dimensions may vary to fit field conditions.
3. Install a minimum of 3 gravel bag berms upstream of each drainage inlet to be protected.
4. Position erosion control blanket or geosynthetic fabric at edge of concrete apron and secure in trench.
5. Erosion control blanket or geosynthetic fabric is not required if the area adjacent to the drainage inlet is vegetated or paved.

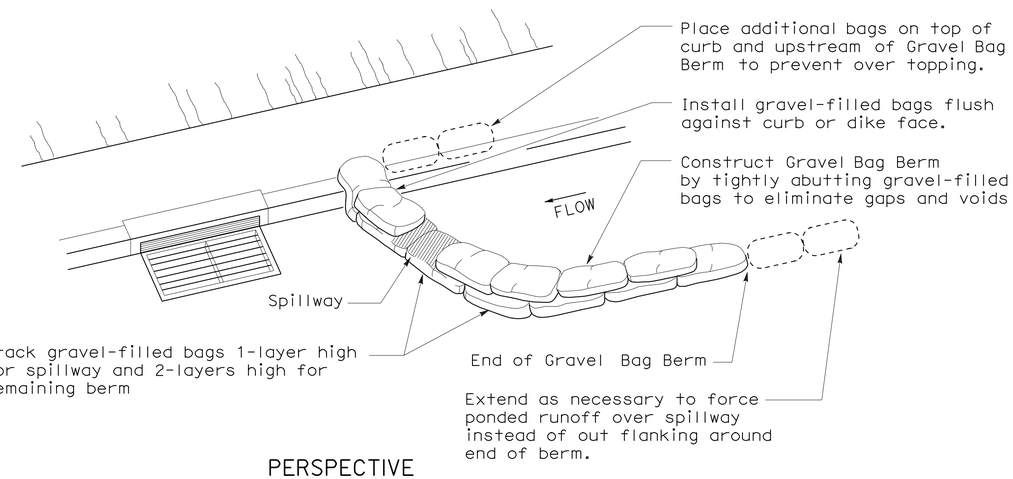

PERSPECTIVE

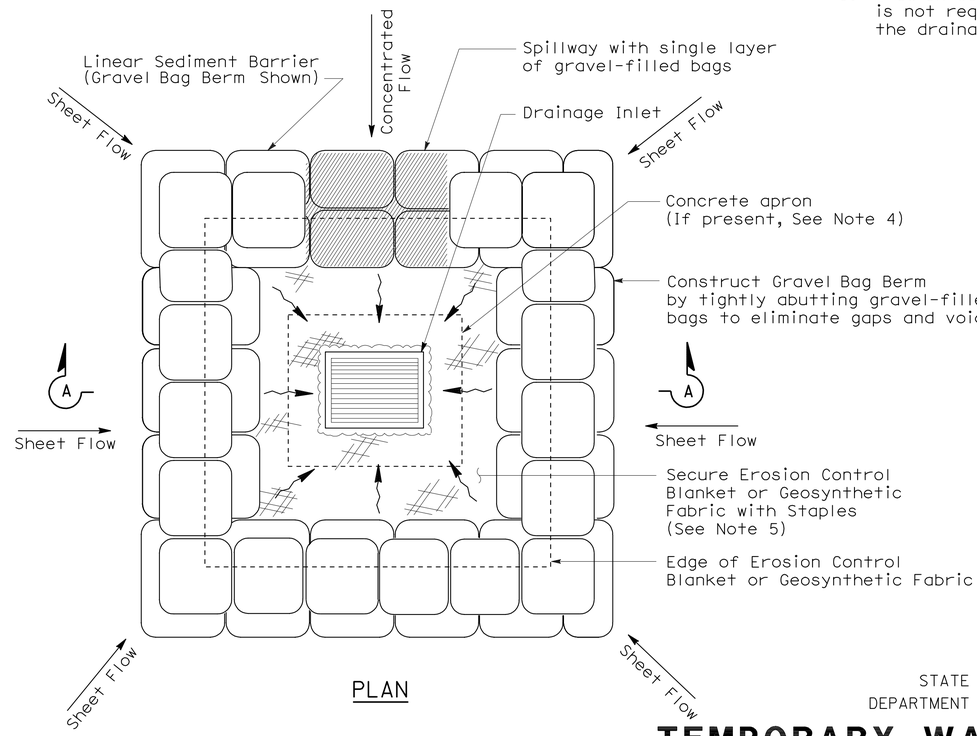

PLAN

TEMPORARY DRAINAGE INLET PROTECTION (TYPE 3B)

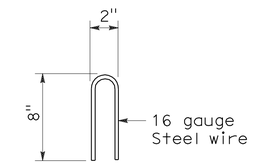

STAPLE DETAIL

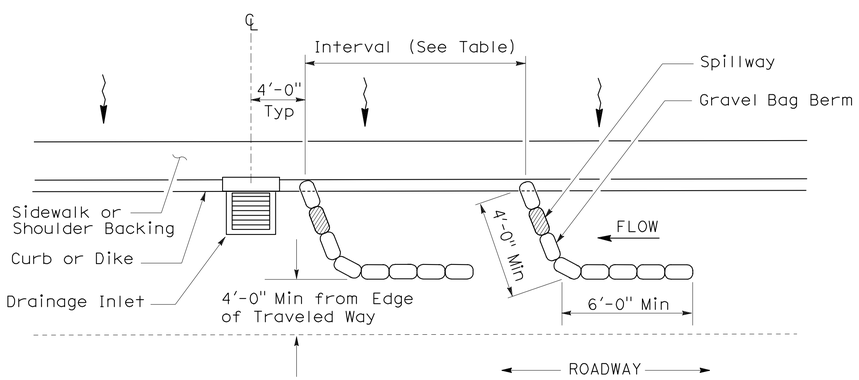

PLAN

TEMPORARY DRAINAGE INLET PROTECTION (TYPE 3A) (GRAVEL BAG BERM)

STATE OF CALIFORNIA
DEPARTMENT OF TRANSPORTATION

TEMPORARY WATER POLLUTION CONTROL DETAILS (TEMPORARY DRAINAGE INLET PROTECTION)

NO SCALE

NSP T62 DATED AUGUST 15, 2008 SUPPLEMENTS THE STANDARD PLANS BOOK DATED MAY 2006.

NEW STANDARD PLAN NSP T62

2006 NEW STANDARD PLAN NSP T62

7-11-08

DIST	COUNTY	ROUTE	POST MILES TOTAL PROJECT	SHEET NO.	TOTAL SHEETS
01	Men	128,253	Var	104	106

LICENSED LANDSCAPE ARCHITECT

August 15, 2008
PLANS APPROVAL DATE

The State of California or its officers or agents shall not be responsible for the accuracy or completeness of electronic copies of this plan sheet.

LICENSED LANDSCAPE ARCHITECT — Robert B. Schott — Signature — 11-04-08 Renewal Date — 08-11-08 Date — STATE OF CALIFORNIA

To accompany plans dated 4-12-10

FLEXIBLE SEDIMENT BARRIER SPACING TABLE

SLOPE OF ROADWAY (PERCENT)	0 to 0.9	1 to 1.9	2 to 2.9	3 to 4	5+
INTERVAL BETWEEN BARRIERS	50′	35′	30′	25′	20′
ANGLE FROM FACE OF CURB	70°	70°	70°	45°	45°
SUGGESTED BARRIER LENGTH	6′	6′	6′	6′	6′

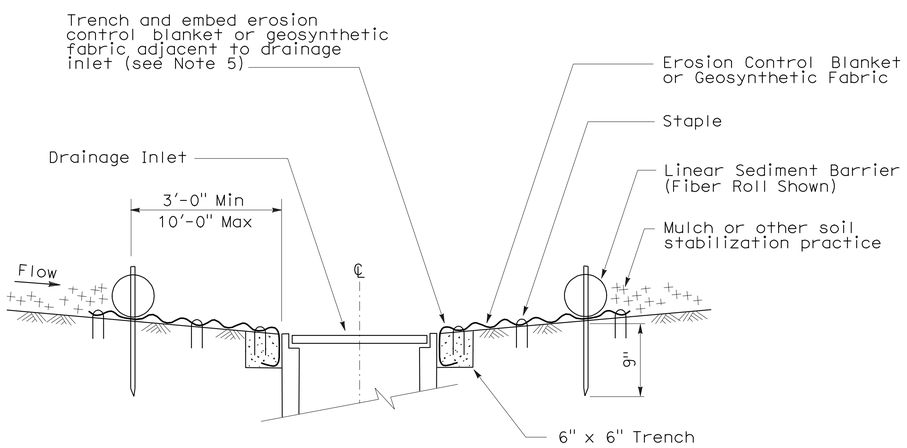

SECTION A-A

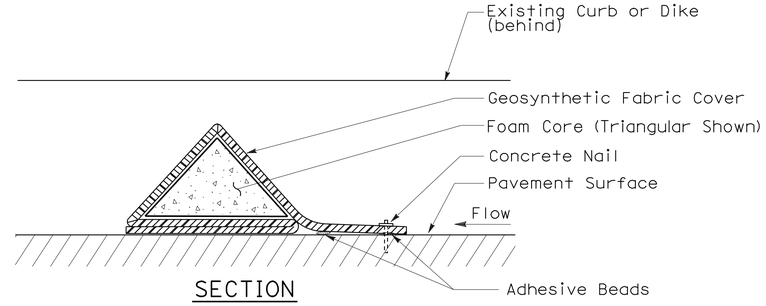

SECTION

FLEXIBLE SEDIMENT BARRIER DETAIL (FOAM BARRIER SHOWN)

NOTES:

1. See Standard Plan T51 for Temporary Silt Fence.
2. Dimensions may vary to fit field conditions.
3. Install a minimum of 3 flexible sediment barriers upstream of each drainage inlet to be protected.
4. Position erosion control blanket or geosynthetic fabric at edge of concrete apron and secure in trench.
5. Erosion control blanket or geosynthetic fabric is not required if the area adjacent to the drainage inlet is vegetated.

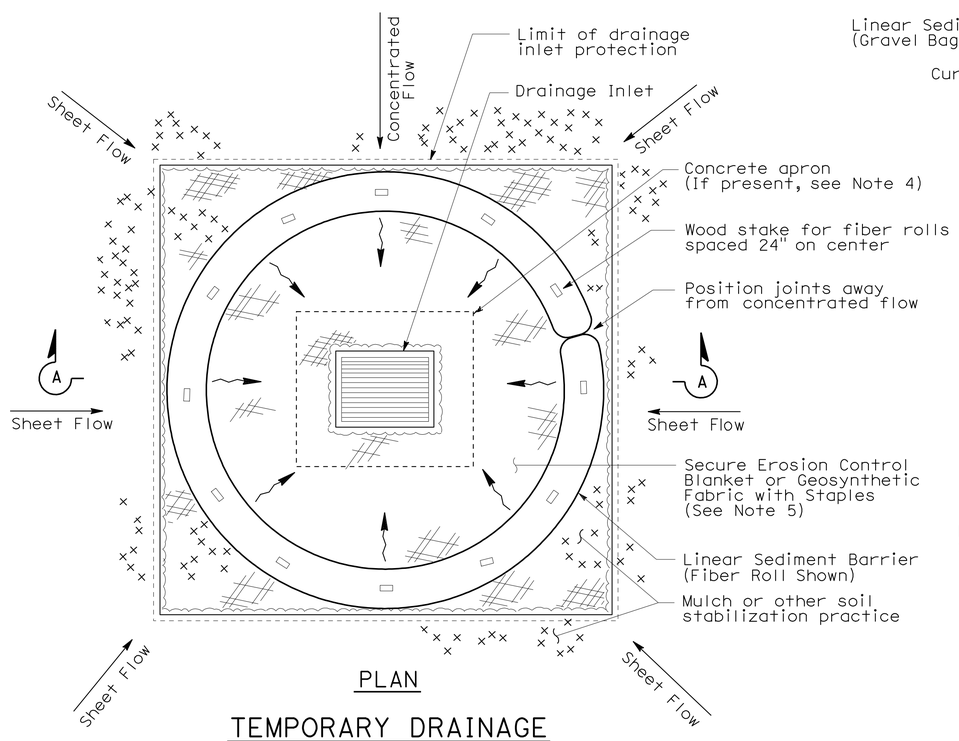

PLAN

TEMPORARY DRAINAGE INLET PROTECTION (TYPE 4A)

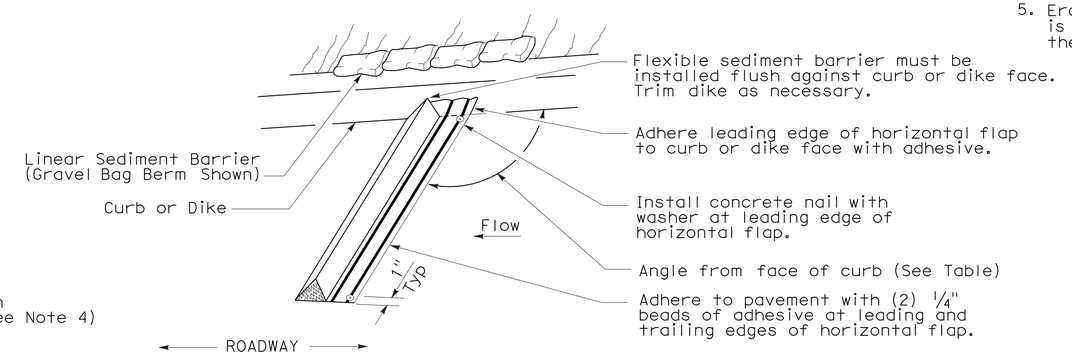

PERSPECTIVE

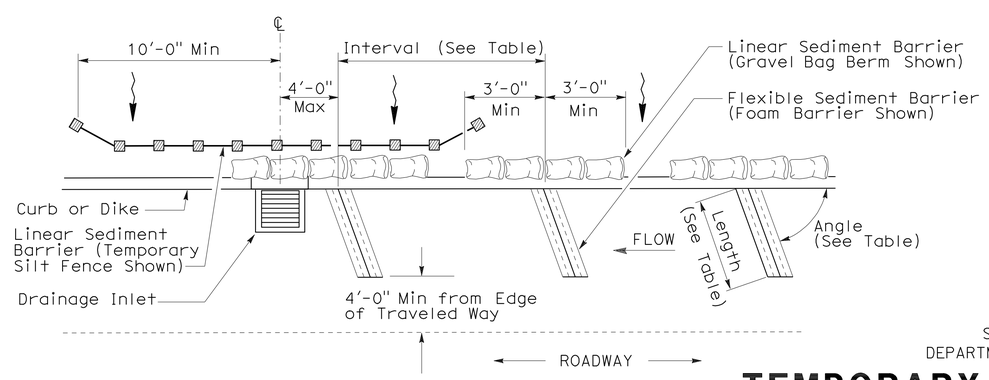

PLAN

TEMPORARY DRAINAGE INLET PROTECTION (TYPE 4B) FLEXIBLE SEDIMENT BARRIER

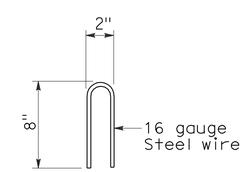

STAPLE DETAIL

STATE OF CALIFORNIA
DEPARTMENT OF TRANSPORTATION

TEMPORARY WATER POLLUTION CONTROL DETAILS (TEMPORARY DRAINAGE INLET PROTECTION)

NO SCALE

NSP T63 DATED AUGUST 15, 2008 SUPPLEMENTS THE STANDARD PLANS BOOK DATED MAY 2006.

NEW STANDARD PLAN NSP T63

2006 NEW STANDARD PLAN NSP T63

DIST	COUNTY	ROUTE	POST MILES TOTAL PROJECT	SHEET NO.	TOTAL SHEETS
01	Men	128,253	Var	105	106

LICENSED LANDSCAPE ARCHITECT

August 15, 2008
PLANS APPROVAL DATE

The State of California or its officers or agents shall not be responsible for the accuracy or completeness of electronic copies of this plan sheet.

LICENSED LANDSCAPE ARCHITECT — Robert B. Schott 3625 — Signature — 11-04-08 Renewal Date — 08-11-08 Date — STATE OF CALIFORNIA

To accompany plans dated 4-12-10

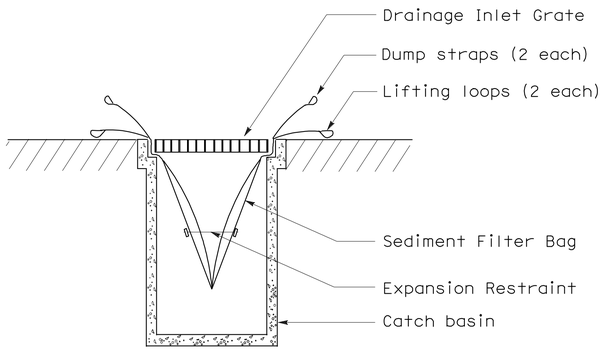

SECTION B-B

SEDIMENT FILTER BAG DETAIL

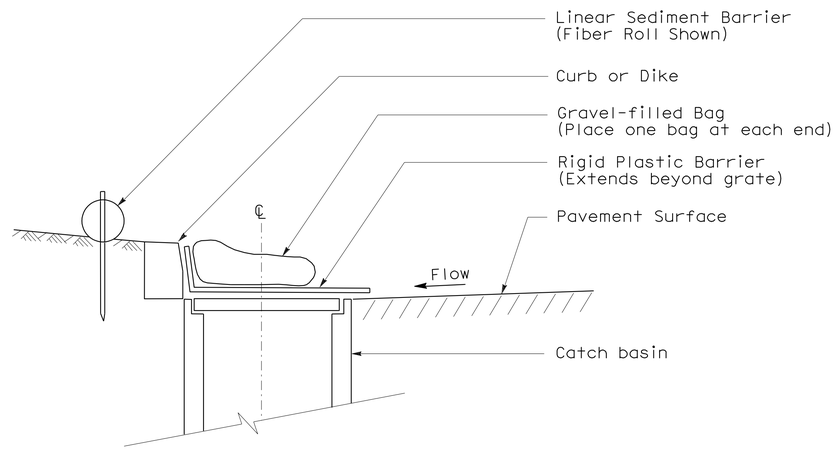

SECTION

TEMPORARY DRAINAGE INLET PROTECTION (TYPE 6A) (CATCH BASIN WITH GRATE)

NOTES:

1. See Standard Plan T51 for Temporary Silt Fence.
2. Dimensions may vary to fit field conditions.

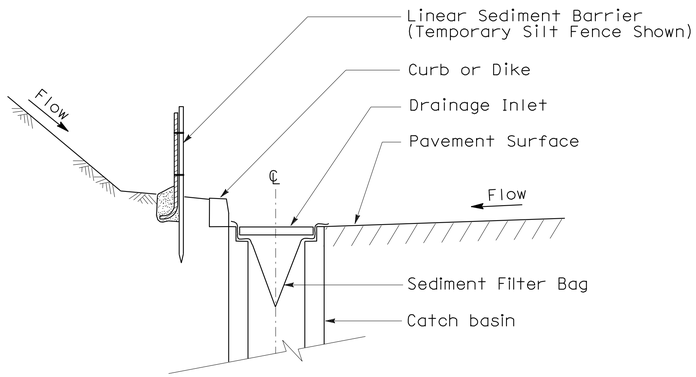

SECTION A-A

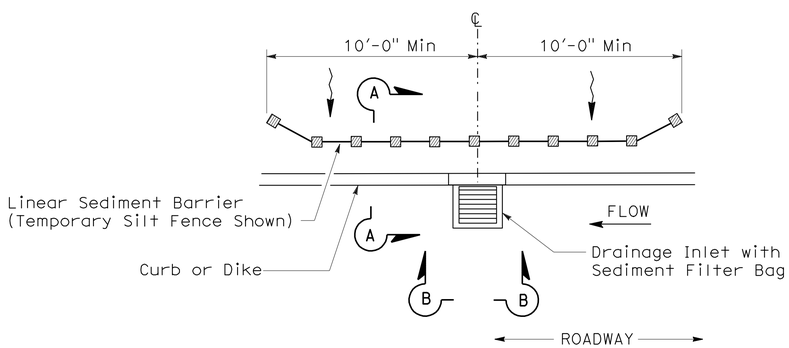

PLAN

TEMPORARY DRAINAGE INLET PROTECTION (TYPE 5) (SEDIMENT FILTER BAG)

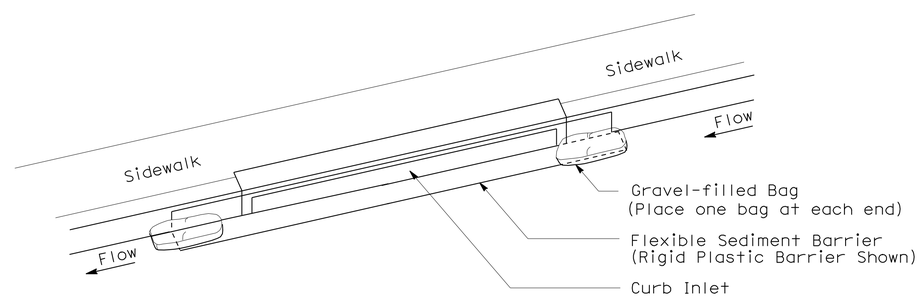

PERSPECTIVE

TEMPORARY DRAINAGE INLET PROTECTION (TYPE 6B) (CURB INLET WITHOUT GRATE)

STATE OF CALIFORNIA
DEPARTMENT OF TRANSPORTATION

TEMPORARY WATER POLLUTION CONTROL DETAILS (TEMPORARY DRAINAGE INLET PROTECTION)

NO SCALE

NSP T64 DATED AUGUST 15, 2008 SUPPLEMENTS THE STANDARD PLANS BOOK DATED MAY 2006.

NEW STANDARD PLAN NSP T64

2006 NEW STANDARD PLAN NSP T64

7-11-08

DIST	COUNTY	ROUTE	POST MILES TOTAL PROJECT	SHEET NO.	TOTAL SHEETS
01	Men	128,253	Var	106	106

LICENSED LANDSCAPE ARCHITECT

April 3, 2009
PLANS APPROVAL DATE

LICENSED LANDSCAPE ARCHITECT
Robert B. Schott 3025
Signature
11-30-10
Renewal Date
2-25-09
Date
STATE OF CALIFORNIA

The State of California or its officers or agents shall not be responsible for the accuracy or completeness of electronic copies of this plan sheet.

To accompany plans dated 4-12-10

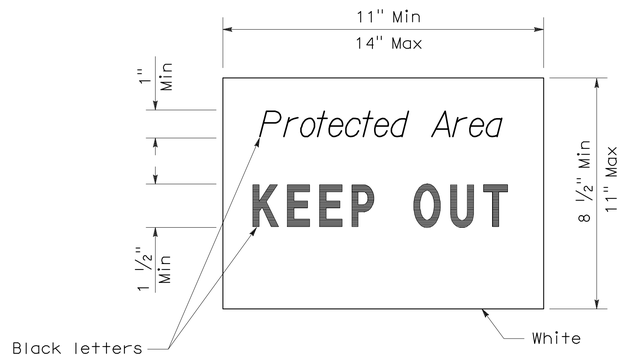

SIGN DETAIL

NOTE:

1. Temporary silt fence and temporary straw bale barrier shown for reference purposes only.

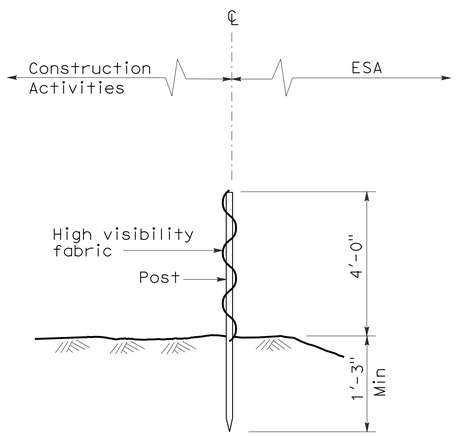

SECTION
TEMPORARY FENCE (TYPE ESA)

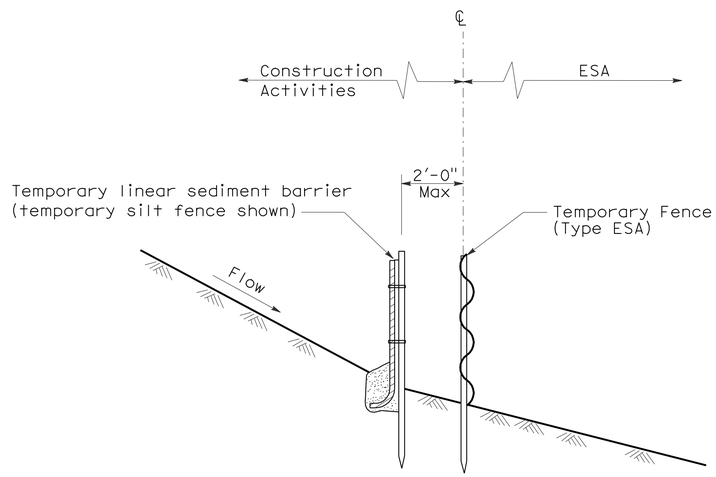

SECTION
PLACEMENT DETAIL
FOR TEMPORARY LINEAR SEDIMENT BARRIER
USED WITH TEMPORARY
FENCE (TYPE ESA)
(See Note 1)

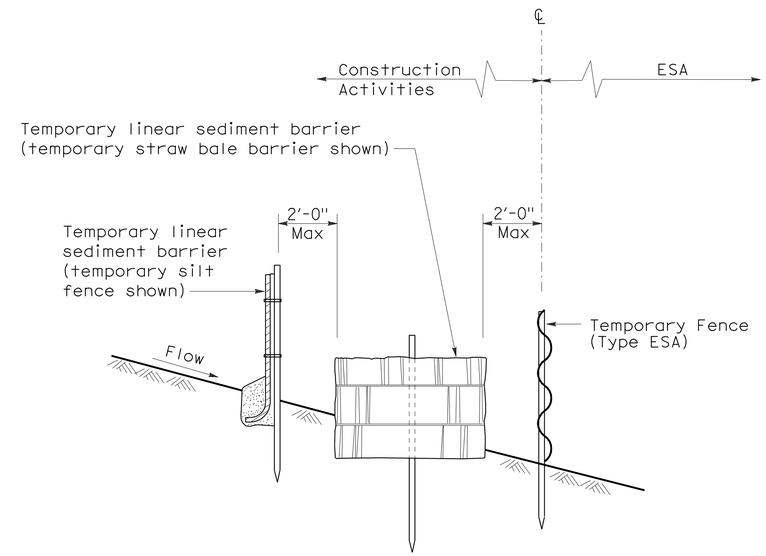

SECTION
PLACEMENT DETAIL
FOR TEMPORARY SILT FENCE
AND TEMPORARY STRAW BALE BARRIER
USED WITH TEMPORARY FENCE (TYPE ESA)
(See Note 1)

STATE OF CALIFORNIA
DEPARTMENT OF TRANSPORTATION

TEMPORARY WATER POLLUTION CONTROL DETAILS [TEMPORARY FENCE (TYPE ESA)]

NO SCALE

NSP T65 DATED APRIL 3, 2009 SUPPLEMENTS
THE STANDARD PLANS BOOK DATED MAY 2006.

NEW STANDARD PLAN NSP T65

2006 NEW STANDARD PLAN NSP T65