Dist	COUNTY	ROUTE	POST MILES TOTAL PROJECT	SHEET No.	TOTAL SHEETS
01	Men	128, 253	Var	1	47

ACSTP-X045(025)E

STATE OF CALIFORNIA
DEPARTMENT OF TRANSPORTATION

PROJECT PLANS FOR CONSTRUCTION ON
STATE HIGHWAY

IN MENDOCINO COUNTY AT VARIOUS LOCATIONS

TO BE SUPPLEMENTED BY STANDARD PLANS DATED 2010

INDEX OF PLANS

SHEET No.	DESCRIPTION
1	TITLE AND LOCATION MAP
2-29	DRAINAGE PLANS, PROFILES, DETAILS AND QUANTITIES
30	CONSTRUCTION AREA SIGNS
31-32	SUMMARY OF QUANTITIES
33	EROSION CONTROL LEGEND AND QUANTITIES
34-37	EROSION CONTROL PLANS
38-47	REVISED STANDARD PLANS

THE STANDARD PLANS LIST APPLICABLE TO THIS CONTRACT IS INCLUDED IN THE NOTICE TO BIDDERS AND SPECIAL PROVISIONS BOOK.

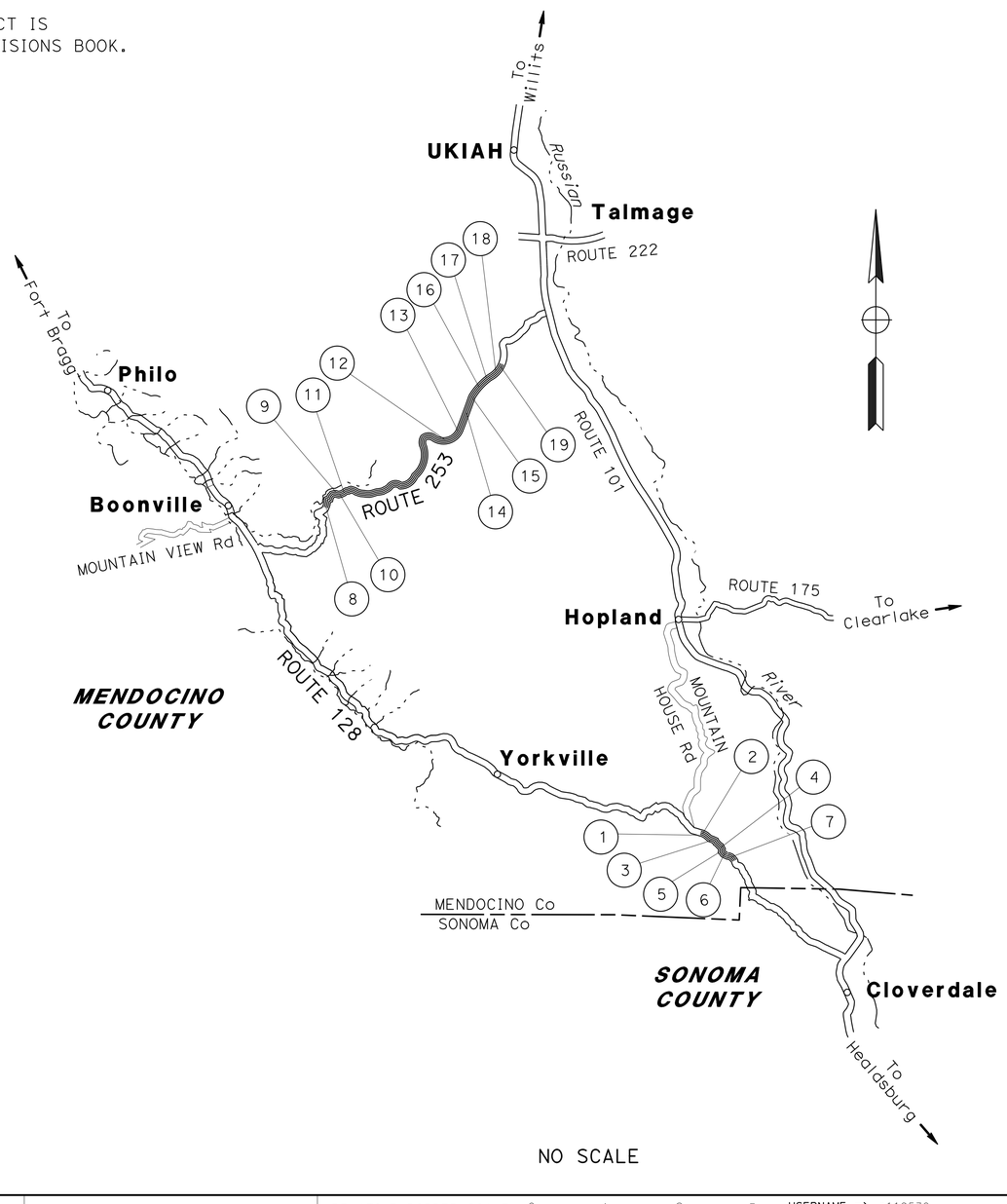

NO SCALE

LOCATION MAP

LOCATIONS OF CONSTRUCTION

Loc	COUNTY	ROUTE	PM
1	Men	128	48.61
2	Men	128	48.89
3	Men	128	49.15
4	Men	128	49.46
5	Men	128	49.72
6	Men	128	49.95
7	Men	128	50.29
8	Men	253	3.30
9	Men	253	3.67
10	Men	253	3.70
11	Men	253	3.76
12	Men	253	7.35
13	Men	253	7.62
14	Men	253	8.87
15	Men	253	9.60
16	Men	253	10.20
17	Men	253	10.41
18	Men	253	13.27
19	Men	253	13.36

PROJECT MANAGER: SEBASTIAN COHEN

DESIGN ENGINEER: SCOTT W. MANN

4-1-14
PROJECT ENGINEER DATE
REGISTERED CIVIL ENGINEER

REGISTERED PROFESSIONAL ENGINEER
W. KEITH MACK
No. 73964
Exp. 6-30-15
CIVIL
STATE OF CALIFORNIA

April 1, 2014
PLANS APPROVAL DATE

THE STATE OF CALIFORNIA OR ITS OFFICERS OR AGENTS SHALL NOT BE RESPONSIBLE FOR THE ACCURACY OR COMPLETENESS OF SCANNED COPIES OF THIS PLAN SHEET.

THE CONTRACTOR SHALL POSSESS THE CLASS (OR CLASSES) OF LICENSE AS SPECIFIED IN THE "NOTICE TO BIDDERS."

CONTRACT No.	01-378124
PROJECT ID	0100000132

LAST REVISION 08-13-13
DATE PLOTTED => 11-APR-2014
TIME PLOTTED => 13:29

Dist	COUNTY	ROUTE	POST MILES TOTAL PROJECT	SHEET No.	TOTAL SHEETS
01	Men	128, 253	Var	2	47

REGISTERED CIVIL ENGINEER 4-1-14 DATE

4-1-14
PLANS APPROVAL DATE

REGISTERED PROFESSIONAL ENGINEER W. KEITH MACK No. 73964 Exp. 6-30-15 CIVIL STATE OF CALIFORNIA

THE STATE OF CALIFORNIA OR ITS OFFICERS OR AGENTS SHALL NOT BE RESPONSIBLE FOR THE ACCURACY OR COMPLETENESS OF SCANNED COPIES OF THIS PLAN SHEET.

NOTES:

1. FOR ACCURATE RIGHT OF WAY DATA, CONTACT RIGHT OF WAY ENGINEERING AT THE DISTRICT OFFICE.
2. FOR ROCK SLOPE PROTECTION DETAILS SEE DRAINAGE DETAIL SHEETS.
3. THE ANGLE OF EACH ELBOW IS APPROXIMATE. THE EXACT ANGLE WILL BE DETERMINED IN THE FIELD BY THE ENGINEER.
4. FOR MINOR CONCRETE (BACKFILL) DETAILS SEE DRAINAGE DETAIL SHEET.
5. INLET AND/OR OUTLET STRUCTURE SKEW ANGLE IS MEASURED FROM A LINE PERPENDICULAR TO THE CULVERT ALIGNMENT.
6. LOCATIONS OF UTILITY FACILITIES SHOWN ON THESE PLANS ARE APPROXIMATE AND SHALL BE VERIFIED BY THE CONTRACTOR PRIOR TO CONSTRUCTION.
7. UTILITY OWNERSHIP ON THIS PROJECT:
   ELECTRICAL - PACIFIC GAS & ELECTRIC (PG&E Elect)
   TELEPHONE - AMERICAN TELEPHONE & TELEGRAPH (AT&T Tel)
   FIBER OPTIC - AMERICAN TELEPHONE & TELEGRAPH (AT&T FO)
   - LEVEL 3 COMMUNICATIONS (L3 FO)
8. ALL UTILITY ELEVATIONS SHOWN REFER TO THE TOP OF THE UTILITY CONDUIT UNLESS OTHERWISE INDICATED.

POINT	STATION	OFFSET
1	9+51.55	13.17′ Rt
2	9+43.09	13.25′ Rt
3	9+42.84	13.00′ Lt
4	9+67.54	13.23′ Lt

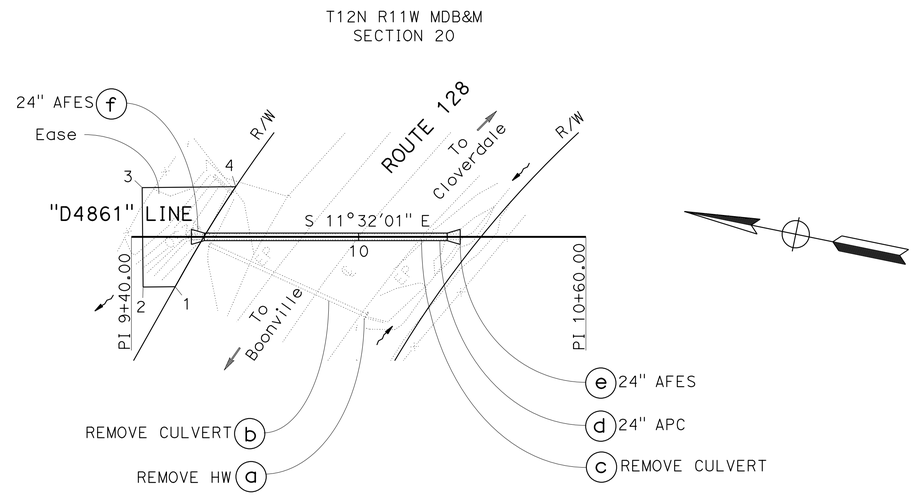

DRAINAGE SYSTEM No. (1)

ROUTE 128
PM 48.61
SCALE: 1" = 20′

LEGEND:

- (X) DRAINAGE SYSTEM No.
- (X) DRAINAGE UNIT
- ROCK SLOPE PROTECTION
- Temp FENCE (TYPE ESA)
- MINOR CONCRETE (BACKFILL)

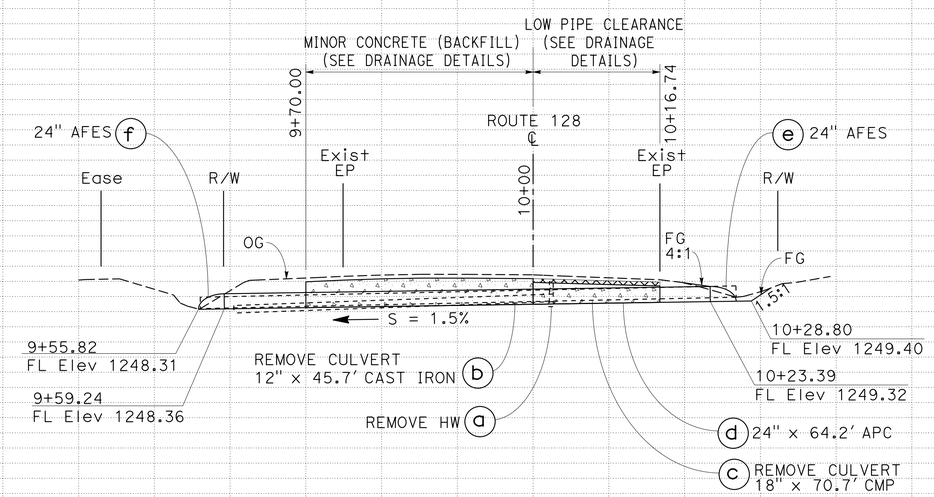

SCALE: Horiz 1" = 10′
Vert 1" = 10′

DRAINAGE PLAN AND PROFILE

SCALE AS SHOWN

D-1

STATION	9+40	9+60	9+80	10+00	10+20	10+40	10+60	TOTAL
CY Exc								
CY Emb								

APPROVED FOR DRAINAGE WORK ONLY

REVISED BY | DATE REVISED
W. KEITH MACK | SARJU PATEL
CALCULATED-DESIGNED BY | CHECKED BY
FUNCTIONAL SUPERVISOR: SCOTT W. MANN

STATE OF CALIFORNIA - DEPARTMENT OF TRANSPORTATION
Caltrans
03 - DESIGN

LAST REVISION 00-00-00 | DATE PLOTTED => 11-APR-2014 | TIME PLOTTED => 13:29

Dist	COUNTY	ROUTE	POST MILES TOTAL PROJECT	SHEET No.	TOTAL SHEETS
01	Men	128, 253	Var	3	47

REGISTERED CIVIL ENGINEER 4-1-14 DATE

4-1-14
PLANS APPROVAL DATE

REGISTERED PROFESSIONAL ENGINEER
W. KEITH MACK
No. C 73964
Exp. 6-30-15
CIVIL
STATE OF CALIFORNIA

THE STATE OF CALIFORNIA OR ITS OFFICERS OR AGENTS SHALL NOT BE RESPONSIBLE FOR THE ACCURACY OR COMPLETENESS OF SCANNED COPIES OF THIS PLAN SHEET.

NOTES:

1. FOR COMPLETE RIGHT OF WAY DATA, SEE RIGHT OF WAY RECORD MAPS AT DISTRICT OFFICE.
2. THIS PLAN ACCURATE FOR DRAINAGE WORK ONLY.
3. FOR MINOR CONCRETE (BACKFILL) DETAILS SEE DRAINAGE DETAIL SHEET.

POINT	STATION	OFFSET
1	10+34.29	13.13′ Rt
2	10+24.33	12.62′ Rt
3	10+25.79	13.59′ Lt
4	10+35.64	13.08′ Lt

T12N R11W MDB&M
SECTION 21

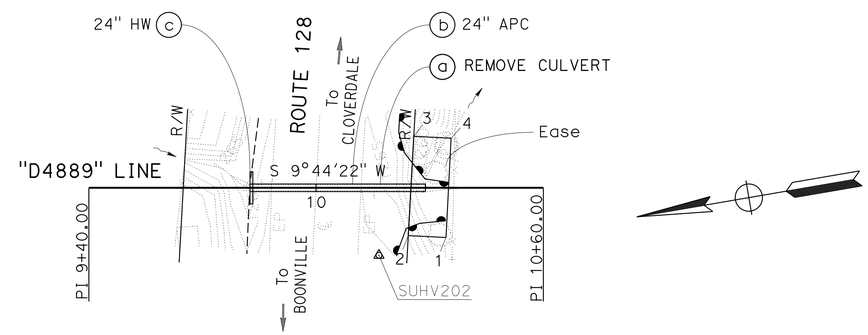

DRAINAGE SYSTEM (2)

ROUTE 128
PM 48.89
PLAN SCALE: 1" = 20′

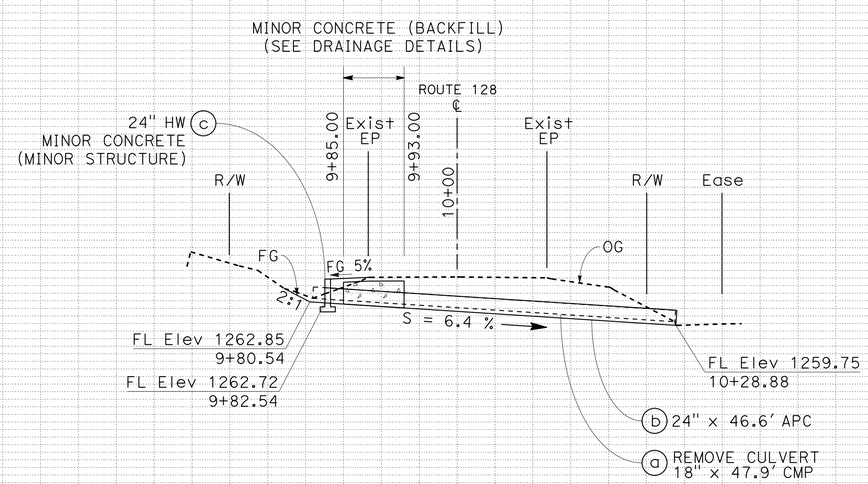

PROFILE SCALE: Horiz 1" = 10′
Vert 1" = 10′

DRAINAGE PLAN AND PROFILE

SCALE AS SHOWN

D-2

STATE OF CALIFORNIA - DEPARTMENT OF TRANSPORTATION
Caltrans
03-DESIGN

FUNCTIONAL SUPERVISOR: SCOTT W. MANN

CALCULATED-DESIGNED BY: W. KEITH MACK
CHECKED BY: SARJU PATEL

REVISED BY: D. YOST
DATE REVISED: 08-07-13

LAST REVISION 08-07-13
DATE PLOTTED => 11-APR-2014
TIME PLOTTED => 13:29

Dist	COUNTY	ROUTE	POST MILES TOTAL PROJECT	SHEET No.	TOTAL SHEETS
01	Men	128, 253	Var	4	47

REGISTERED CIVIL ENGINEER 4-1-14 DATE

4-1-14
PLANS APPROVAL DATE

REGISTERED PROFESSIONAL ENGINEER W. KEITH MACK No. 73964 Exp. 6-30-15 CIVIL STATE OF CALIFORNIA

THE STATE OF CALIFORNIA OR ITS OFFICERS OR AGENTS SHALL NOT BE RESPONSIBLE FOR THE ACCURACY OR COMPLETENESS OF SCANNED COPIES OF THIS PLAN SHEET.

NOTES:

1. FOR ACCURATE RIGHT OF WAY DATA, CONTACT RIGHT OF WAY ENGINEERING AT THE DISTRICT OFFICE.
2. FOR ROCK SLOPE PROTECTION DETAILS SEE DRAINAGE DETAIL SHEETS.

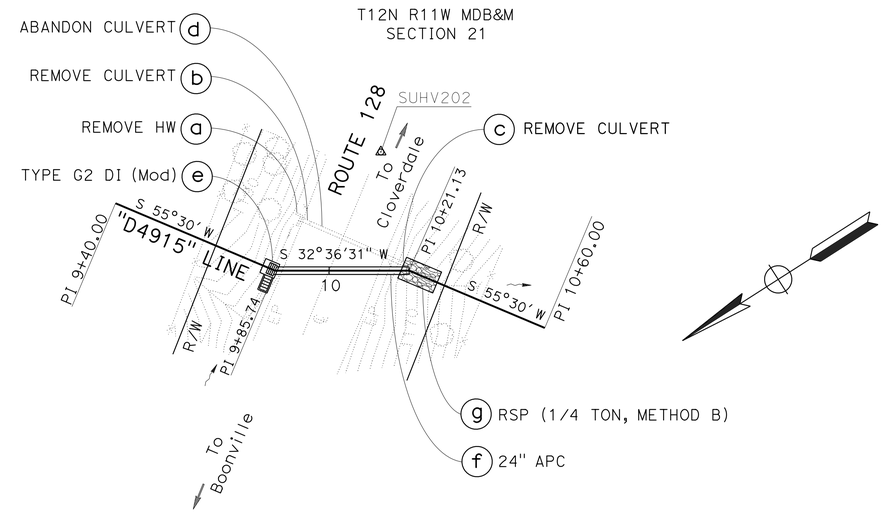

DRAINAGE SYSTEM No. 3

ROUTE 128
PM 49.15
SCALE: 1" = 20′

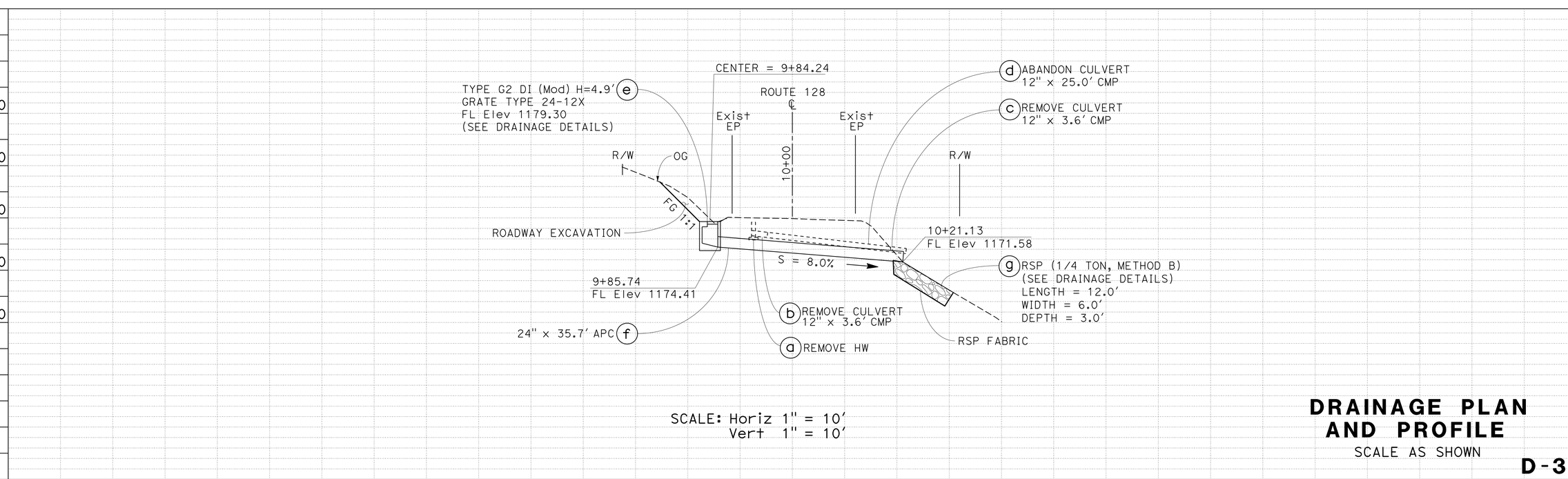

DRAINAGE PLAN AND PROFILE

SCALE AS SHOWN

D-3

APPROVED FOR DRAINAGE WORK ONLY

REVISED BY | DATE REVISED
W. KEITH MACK | SARJU PATEL
CALCULATED-DESIGNED BY | CHECKED BY
FUNCTIONAL SUPERVISOR: SCOTT W. MANN

STATE OF CALIFORNIA - DEPARTMENT OF TRANSPORTATION
Caltrans
03 - DESIGN

LAST REVISION 00-00-00 | DATE PLOTTED => 11-APR-2014 | TIME PLOTTED => 13:29

Dist	COUNTY	ROUTE	POST MILES TOTAL PROJECT	SHEET No.	TOTAL SHEETS
01	Men	128, 253	Var	5	47

REGISTERED CIVIL ENGINEER 4-1-14 DATE

4-1-14
PLANS APPROVAL DATE

REGISTERED PROFESSIONAL ENGINEER W. KEITH MACK No. 73964 Exp. 6-30-15 CIVIL STATE OF CALIFORNIA

THE STATE OF CALIFORNIA OR ITS OFFICERS OR AGENTS SHALL NOT BE RESPONSIBLE FOR THE ACCURACY OR COMPLETENESS OF SCANNED COPIES OF THIS PLAN SHEET.

NOTE:

FOR ACCURATE RIGHT OF WAY DATA, CONTACT RIGHT OF WAY ENGINEERING AT THE DISTRICT OFFICE.

POINT	STATION	OFFSET
1	10+33.16	13.10′ R+
2	10+25.42	13.10′ R+
3	10+31.59	13.10′ L+
4	10+37.64	13.10′ L+

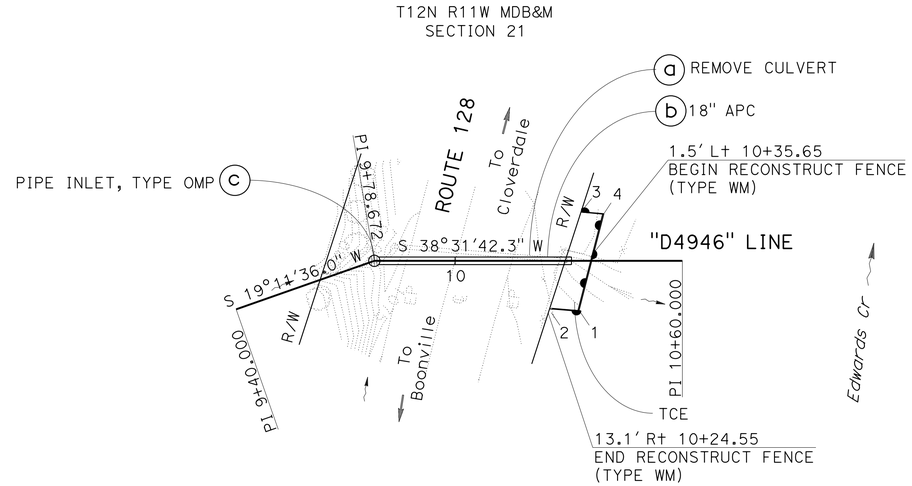

DRAINAGE SYSTEM No. 4

ROUTE 128
PM 49.46
SCALE: 1″ = 20′

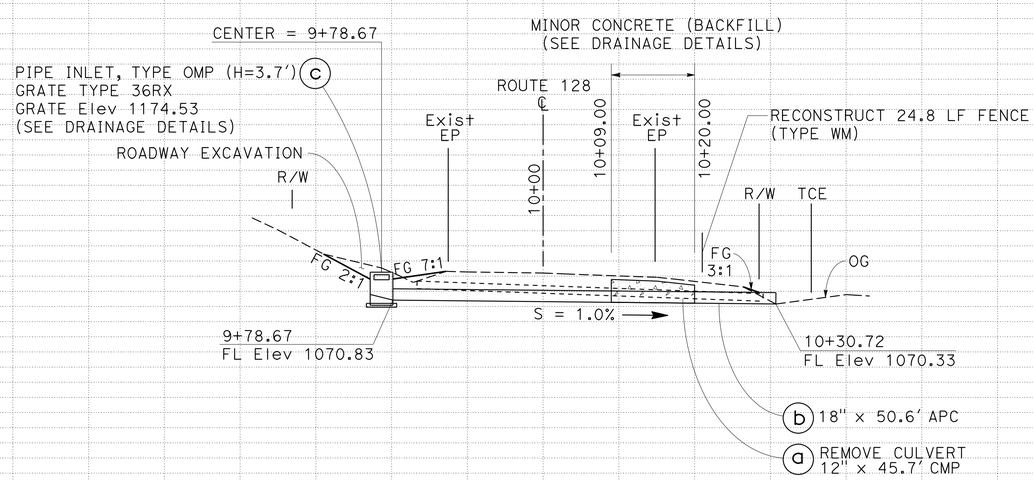

SCALE: Horiz 1″ = 10′
Vert 1″ = 10′

DRAINAGE PLAN AND PROFILE

SCALE AS SHOWN

D-4

APPROVED FOR DRAINAGE WORK ONLY

REVISED BY | DATE REVISED
W. KEITH MACK | SARJU PATEL
CALCULATED-DESIGNED BY | CHECKED BY
FUNCTIONAL SUPERVISOR: SCOTT W. MANN

STATE OF CALIFORNIA - DEPARTMENT OF TRANSPORTATION
Caltrans 03 - DESIGN

LAST REVISION 00-00-00 | DATE PLOTTED => 11-APR-2014 | TIME PLOTTED => 13:29

Dist	COUNTY	ROUTE	POST MILES TOTAL PROJECT	SHEET No.	TOTAL SHEETS
01	Men	128, 253	Var	6	47

REGISTERED CIVIL ENGINEER 4-1-14 DATE

4-1-14
PLANS APPROVAL DATE

REGISTERED PROFESSIONAL ENGINEER W. KEITH MACK No. 73964 Exp. 6-30-15 CIVIL STATE OF CALIFORNIA

THE STATE OF CALIFORNIA OR ITS OFFICERS OR AGENTS SHALL NOT BE RESPONSIBLE FOR THE ACCURACY OR COMPLETENESS OF SCANNED COPIES OF THIS PLAN SHEET.

NOTE:

FOR ACCURATE RIGHT OF WAY DATA, CONTACT RIGHT OF WAY ENGINEERING AT THE DISTRICT OFFICE.

T12N R11W MDB&M
SECTION 28

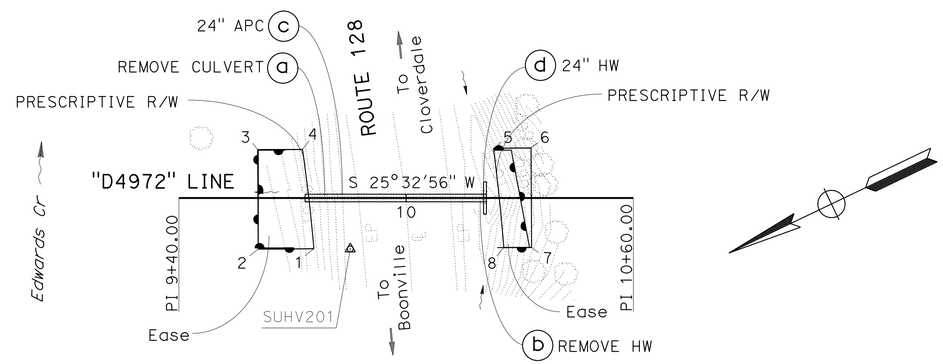

POINT	STATION	OFFSET
1	9+75.65	13.41' Rt
2	9+60.96	13.49' Rt
3	9+60.80	12.76' Lt
4	9+72.64	12.83' Lt
5	10+23.06	13.13' Lt
6	10+32.97	13.19' Lt
7	10+33.13	13.05' Rt
8	10+25.75	13.10' Rt

DRAINAGE SYSTEM No. 5

ROUTE 128
PM 49.72
SCALE: 1" = 20'

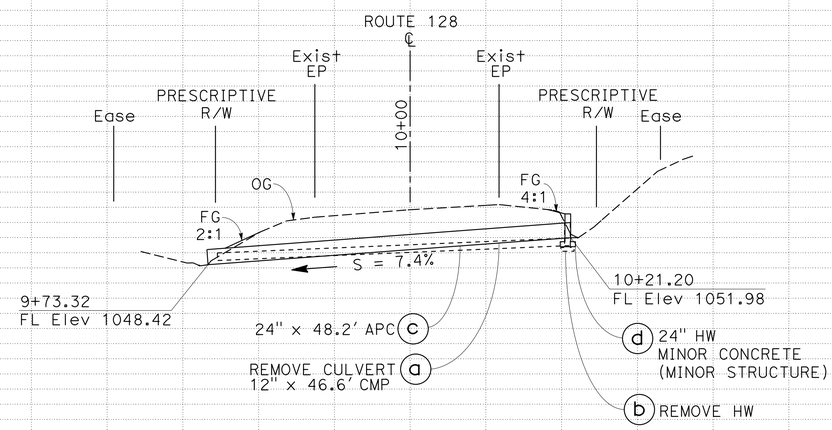

SCALE: Horiz 1" = 10'
Vert 1" = 10'

DRAINAGE PLAN AND PROFILE

SCALE AS SHOWN

D-5

STATION		9+40	9+60	9+80	10+00	10+20	10+40	10+60	TOTAL
CY	Exc								
	Emb								

APPROVED FOR DRAINAGE WORK ONLY

REVISED BY | DATE REVISED
W. KEITH MACK | SARJU PATEL
CALCULATED-DESIGNED BY | CHECKED BY
FUNCTIONAL SUPERVISOR: SCOTT W. MANN

STATE OF CALIFORNIA - DEPARTMENT OF TRANSPORTATION
Caltrans
03 - DESIGN

LAST REVISION 00-00-00 | DATE PLOTTED => 11-APR-2014 | TIME PLOTTED => 13:29

Dist	COUNTY	ROUTE	POST MILES TOTAL PROJECT	SHEET No.	TOTAL SHEETS
01	Men	128, 253	Var	7	47

REGISTERED CIVIL ENGINEER 4-1-14 DATE

4-1-14
PLANS APPROVAL DATE

REGISTERED PROFESSIONAL ENGINEER W. KEITH MACK No. 73964 Exp. 6-30-15 CIVIL STATE OF CALIFORNIA

THE STATE OF CALIFORNIA OR ITS OFFICERS OR AGENTS SHALL NOT BE RESPONSIBLE FOR THE ACCURACY OR COMPLETENESS OF SCANNED COPIES OF THIS PLAN SHEET.

NOTES:

1. FOR ACCURATE RIGHT OF WAY DATA, CONTACT RIGHT OF WAY ENGINEERING AT THE DISTRICT OFFICE.
2. FOR ROCK SLOPE PROTECTION DETAILS SEE DRAINAGE DETAIL SHEETS.

POINT	STATION	OFFSET
1	9+55.81	12.33′ R+
2	9+56.48	12.68′ L+
3	9+77.87	12.11′ L+

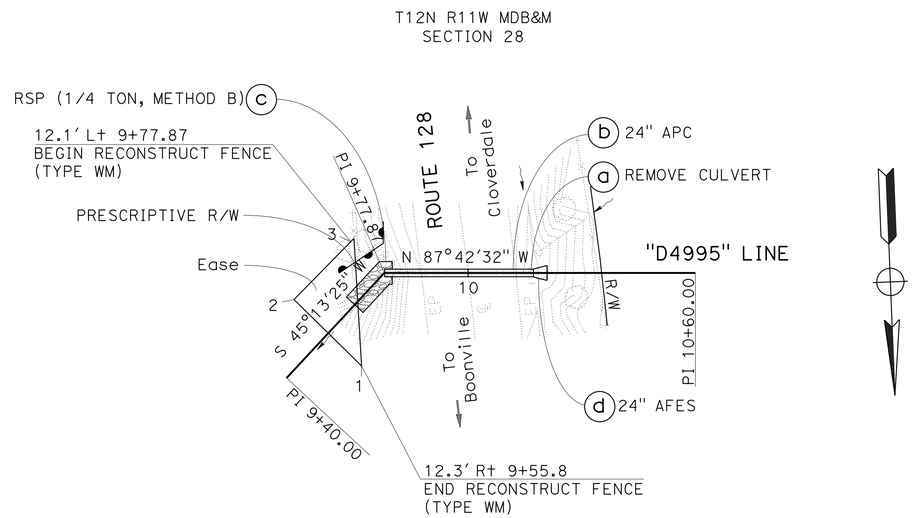

DRAINAGE SYSTEM No. 6

ROUTE 128
PM 49.95

SCALE: 1" = 20′

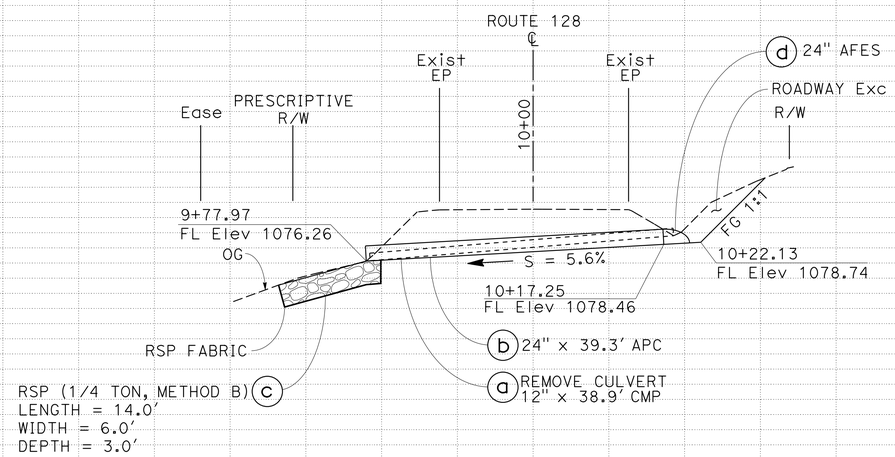

SCALE: Horiz 1" = 10′
Vert 1" = 10′

DRAINAGE PLAN AND PROFILE

SCALE AS SHOWN

D-6

STATION		9+40	9+60	9+80	10+00	10+20	10+40	10+60	TOTAL
CY	Exc								
	Emb								

APPROVED FOR DRAINAGE WORK ONLY

REVISED BY | DATE REVISED
W. KEITH MACK | SARJU PATEL
CALCULATED-DESIGNED BY | CHECKED BY
FUNCTIONAL SUPERVISOR: SCOTT W. MANN

STATE OF CALIFORNIA - DEPARTMENT OF TRANSPORTATION
Caltrans
03 - DESIGN

LAST REVISION 00-00-00 | DATE PLOTTED => 11-APR-2014 | TIME PLOTTED => 13:29

Dist	COUNTY	ROUTE	POST MILES TOTAL PROJECT	SHEET No.	TOTAL SHEETS
01	Men	128, 253	Var	8	47

REGISTERED CIVIL ENGINEER 4-1-14 DATE

4-1-14
PLANS APPROVAL DATE

REGISTERED PROFESSIONAL ENGINEER W. KEITH MACK No. 73964 Exp. 6-30-15 CIVIL STATE OF CALIFORNIA

THE STATE OF CALIFORNIA OR ITS OFFICERS OR AGENTS SHALL NOT BE RESPONSIBLE FOR THE ACCURACY OR COMPLETENESS OF SCANNED COPIES OF THIS PLAN SHEET.

NOTES:

1. FOR ACCURATE RIGHT OF WAY DATA, CONTACT RIGHT OF WAY ENGINEERING AT DISTRICT OFFICE.
2. CONTRACTOR TO ENSURE NO LOSS OF LANDOWNER LIVESTOCK DURING RECONSTRUCT FENCE OPERATIONS.
3. FOR ROCK SLOPE PROTECTION DETAILS SEE DRAINAGE DETAIL SHEETS.

POINT	STATION	OFFSET
1	9+55.62	13.24′ R+
2	9+44.18	13.27′ R+
3	9+44.12	12.98′ L+
4	9+58.71	13.01′ L+
5	10+29.44	13.16′ L+
6	10+44.09	10.79′ L+
7	10+41.85	15.37′ R+
8	10+27.41	13.09′ R+

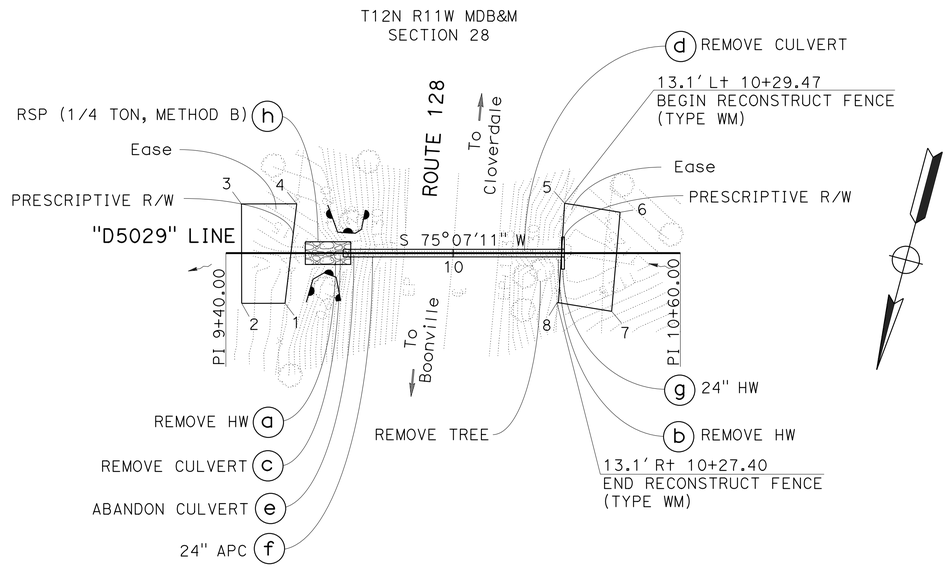

DRAINAGE SYSTEM No. 7

ROUTE 128
PM 50.29
SCALE: 1" = 20′

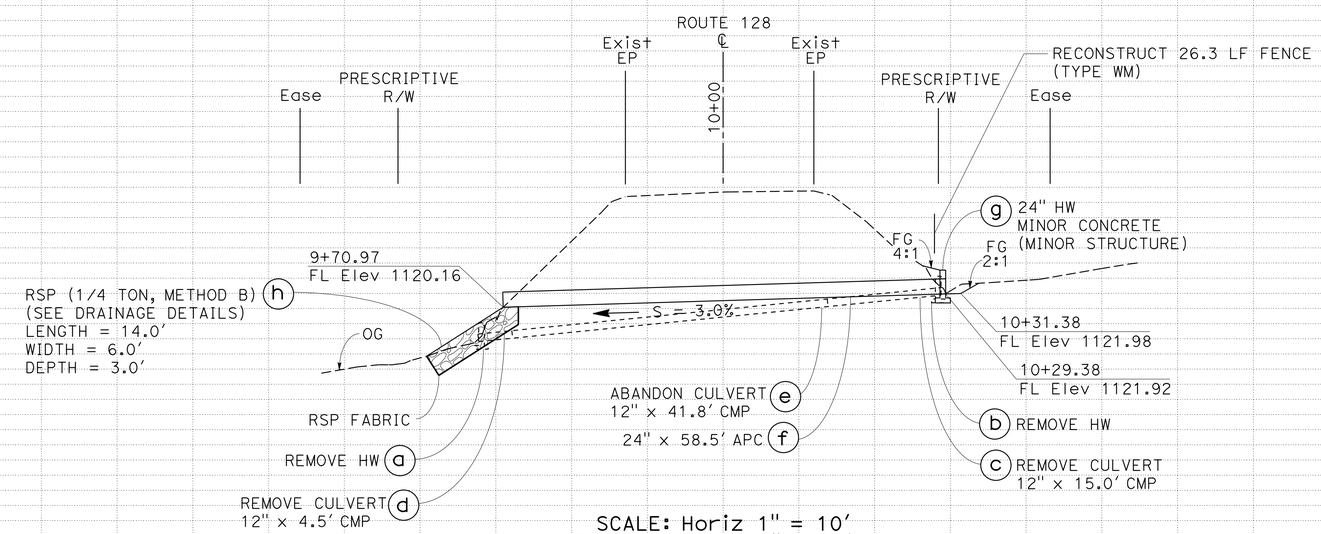

DRAINAGE PLAN AND PROFILE

SCALE AS SHOWN

D-7

STATION	9+40	9+60	9+80	10+00	10+20	10+40	10+60	TOTAL
CY Exc								
CY Emb								

APPROVED FOR DRAINAGE WORK ONLY

REVISED BY | DATE REVISED
W. KEITH MACK | SARJU PATEL
CALCULATED-DESIGNED BY | CHECKED BY
FUNCTIONAL SUPERVISOR: SCOTT W. MANN

STATE OF CALIFORNIA - DEPARTMENT OF TRANSPORTATION
Caltrans
03 - DESIGN

LAST REVISION 00-00-00 | DATE PLOTTED => 11-APR-2014 | TIME PLOTTED => 13:29

Dist	COUNTY	ROUTE	POST MILES TOTAL PROJECT	SHEET No.	TOTAL SHEETS
01	Men	128, 253	Var	9	47

REGISTERED CIVIL ENGINEER 4-1-14 DATE

4-1-14
PLANS APPROVAL DATE

REGISTERED PROFESSIONAL ENGINEER W. KEITH MACK No. 73964 Exp. 6-30-15 CIVIL STATE OF CALIFORNIA

THE STATE OF CALIFORNIA OR ITS OFFICERS OR AGENTS SHALL NOT BE RESPONSIBLE FOR THE ACCURACY OR COMPLETENESS OF SCANNED COPIES OF THIS PLAN SHEET.

NOTE:

FOR ACCURATE RIGHT OF WAY DATA, CONTACT RIGHT OF WAY ENGINEERING AT THE DISTRICT OFFICE.

T13N R13W MDB&M
SECTION 5

POINT	STATION	OFFSET
1	9+48.50	13.12′ R+
2	9+43.95	13.12′ R+
3	9+46.30	13.12′ L+
4	9+50.41	13.12′ L+

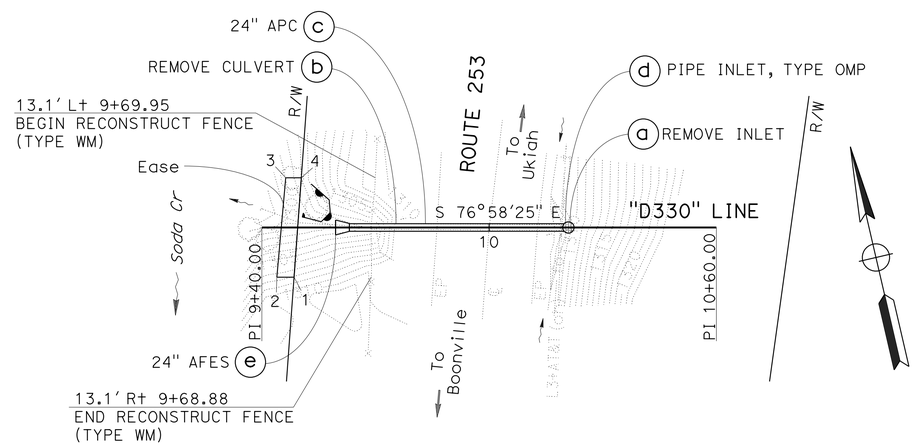

DRAINAGE SYSTEM No. 8

ROUTE 253
PM 3.30

SCALE: 1" = 20′

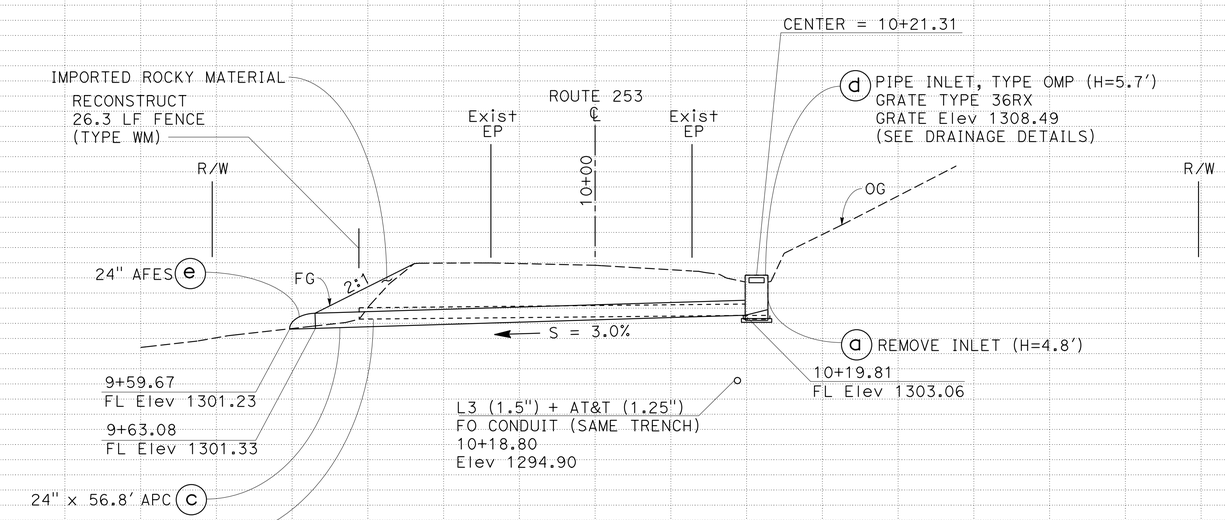

DRAINAGE PLAN AND PROFILE

SCALE AS SHOWN

D-8

STATION	9+40	9+60	9+80	10+00	10+20	10+40	10+60	TOTAL
CY Exc								
CY Emb								

APPROVED FOR DRAINAGE WORK ONLY

REVISED BY | DATE REVISED
W. KEITH MACK | SARJU PATEL
CALCULATED-DESIGNED BY | CHECKED BY
FUNCTIONAL SUPERVISOR: SCOTT W. MANN

STATE OF CALIFORNIA - DEPARTMENT OF TRANSPORTATION
Caltrans
03 - DESIGN

LAST REVISION 00-00-00 | DATE PLOTTED => 11-APR-2014 | TIME PLOTTED => 13:29

Dist	COUNTY	ROUTE	POST MILES TOTAL PROJECT	SHEET No.	TOTAL SHEETS
01	Men	128, 253	Var	10	47

REGISTERED CIVIL ENGINEER 4-1-14 DATE

4-1-14
PLANS APPROVAL DATE

REGISTERED PROFESSIONAL ENGINEER W. KEITH MACK No. 73964 Exp. 6-30-15 CIVIL STATE OF CALIFORNIA

THE STATE OF CALIFORNIA OR ITS OFFICERS OR AGENTS SHALL NOT BE RESPONSIBLE FOR THE ACCURACY OR COMPLETENESS OF SCANNED COPIES OF THIS PLAN SHEET.

NOTE:

FOR ACCURATE RIGHT OF WAY DATA, CONTACT RIGHT OF WAY ENGINEERING AT THE DISTRICT OFFICE.

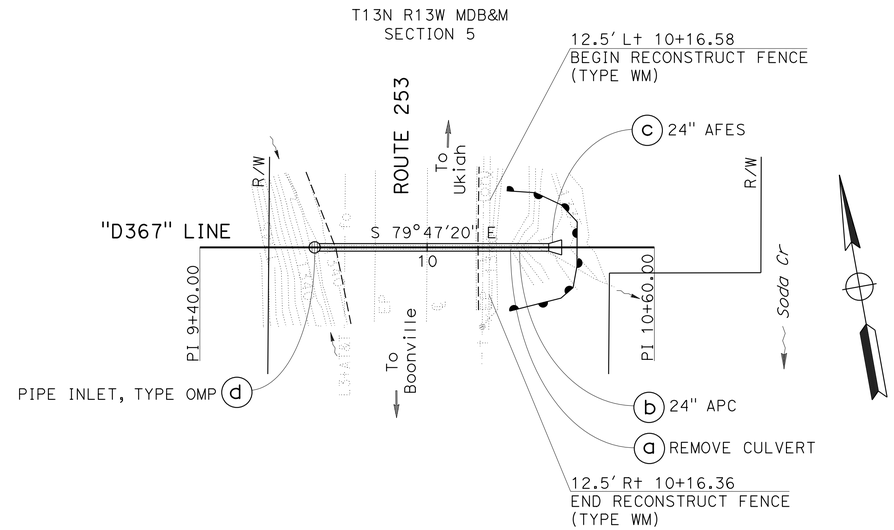

DRAINAGE SYSTEM No. 9

ROUTE 253
PM 3.67
SCALE: 1" = 20'

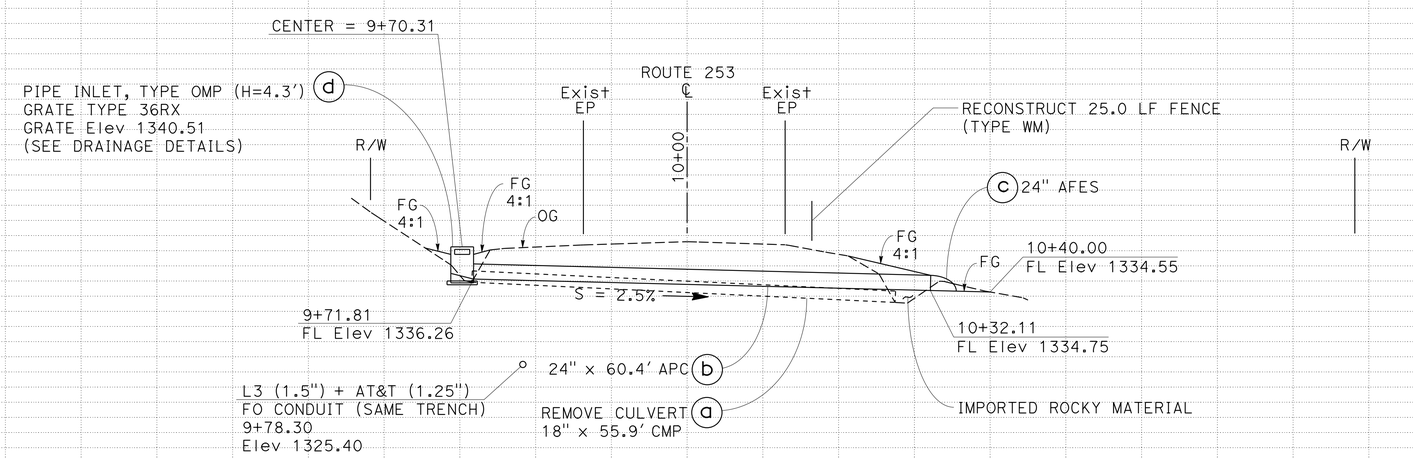

SCALE: Horiz 1" = 10'
Vert 1" = 10'

DRAINAGE PLAN AND PROFILE

SCALE AS SHOWN

D-9

STATION		9+40	9+60	9+80	10+00	10+20	10+40	10+60	TOTAL
CY	Exc								
	Emb								

APPROVED FOR DRAINAGE WORK ONLY

REVISED BY | DATE REVISED
W. KEITH MACK | SARJU PATEL
CALCULATED-DESIGNED BY | CHECKED BY
FUNCTIONAL SUPERVISOR: SCOTT W. MANN

STATE OF CALIFORNIA - DEPARTMENT OF TRANSPORTATION
Caltrans 03 - DESIGN

LAST REVISION 00-00-00 | DATE PLOTTED => 11-APR-2014 | TIME PLOTTED => 13:29

Dist	COUNTY	ROUTE	POST MILES TOTAL PROJECT	SHEET No.	TOTAL SHEETS
01	Men	128, 253	Var	11	47

REGISTERED CIVIL ENGINEER 4-1-14 DATE

4-1-14
PLANS APPROVAL DATE

REGISTERED PROFESSIONAL ENGINEER W. KEITH MACK No. 73964 Exp. 6-30-15 CIVIL STATE OF CALIFORNIA

THE STATE OF CALIFORNIA OR ITS OFFICERS OR AGENTS SHALL NOT BE RESPONSIBLE FOR THE ACCURACY OR COMPLETENESS OF SCANNED COPIES OF THIS PLAN SHEET.

NOTE:

FOR ACCURATE RIGHT OF WAY DATA, CONTACT RIGHT OF WAY ENGINEERING AT THE DISTRICT OFFICE.

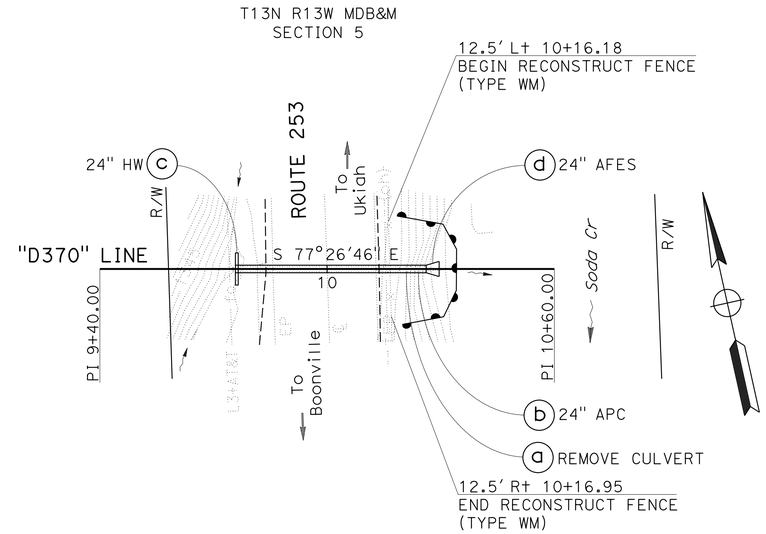

DRAINAGE SYSTEM No. 10

ROUTE 253
PM 3.70
SCALE: 1" = 20'

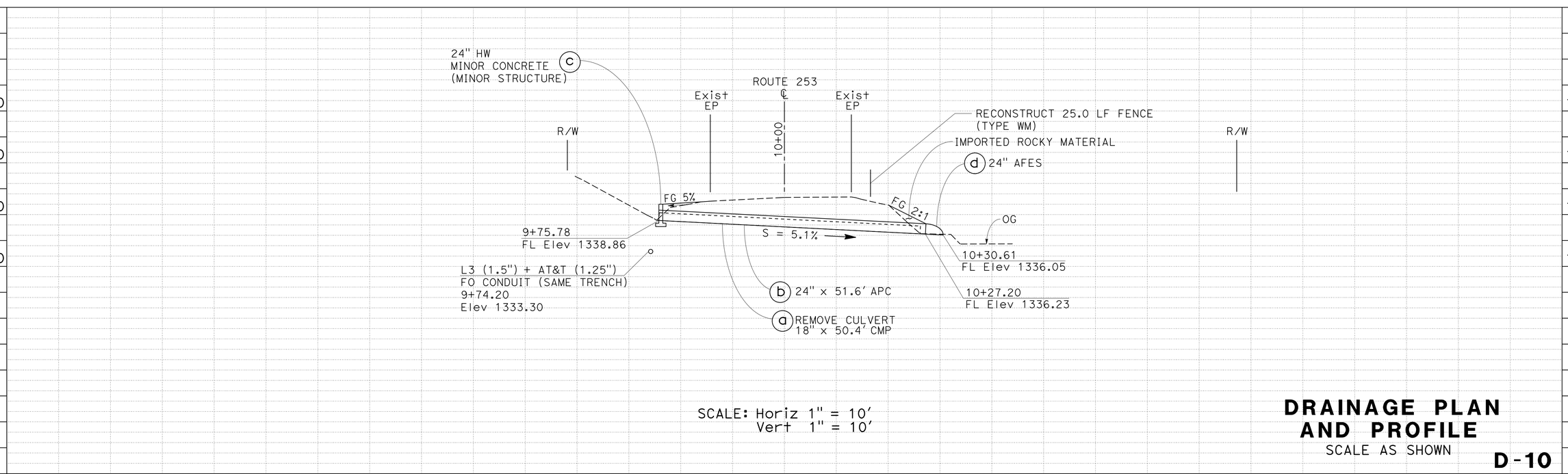

DRAINAGE PLAN AND PROFILE

SCALE AS SHOWN

D-10

STATION		9+40	9+60	9+80	10+00	10+20	10+40	10+60	TOTAL
CY	Exc								
	Emb								

APPROVED FOR DRAINAGE WORK ONLY

REVISED BY | DATE REVISED
W. KEITH MACK | SARJU PATEL
CALCULATED-DESIGNED BY | CHECKED BY
FUNCTIONAL SUPERVISOR: SCOTT W. MANN

STATE OF CALIFORNIA - DEPARTMENT OF TRANSPORTATION
Caltrans 03 - DESIGN

LAST REVISION 00-00-00 | DATE PLOTTED => 11-APR-2014 | TIME PLOTTED => 13:29

Dist	COUNTY	ROUTE	POST MILES TOTAL PROJECT	SHEET No.	TOTAL SHEETS
01	Men	128, 253	Var	12	47

REGISTERED CIVIL ENGINEER 4-1-14 DATE

4-1-14
PLANS APPROVAL DATE

REGISTERED PROFESSIONAL ENGINEER W. KEITH MACK No. 73964 Exp. 6-30-15 CIVIL STATE OF CALIFORNIA

THE STATE OF CALIFORNIA OR ITS OFFICERS OR AGENTS SHALL NOT BE RESPONSIBLE FOR THE ACCURACY OR COMPLETENESS OF SCANNED COPIES OF THIS PLAN SHEET.

NOTE:

FOR ACCURATE RIGHT OF WAY DATA, CONTACT RIGHT OF WAY ENGINEERING AT THE DISTRICT OFFICE.

T13N R13W MDB&M
SECTION 5

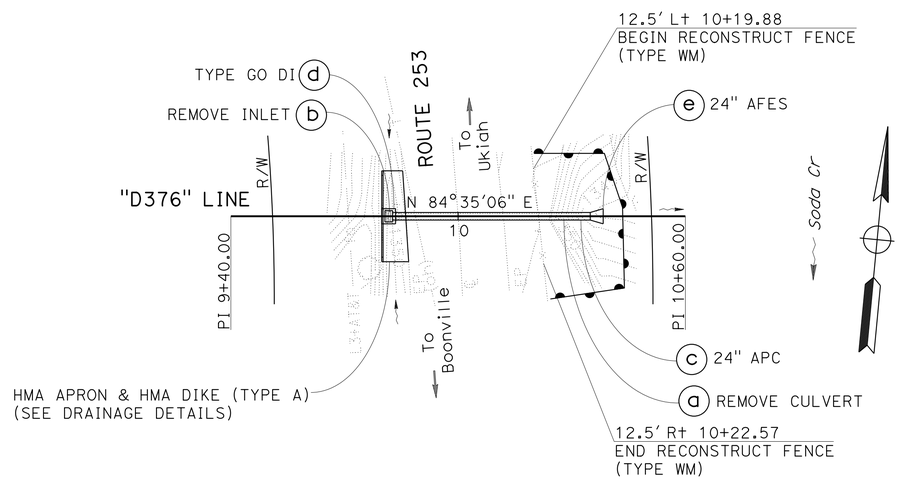

DRAINAGE SYSTEM No. 11

ROUTE 253
PM 3.76

SCALE: 1" = 20'

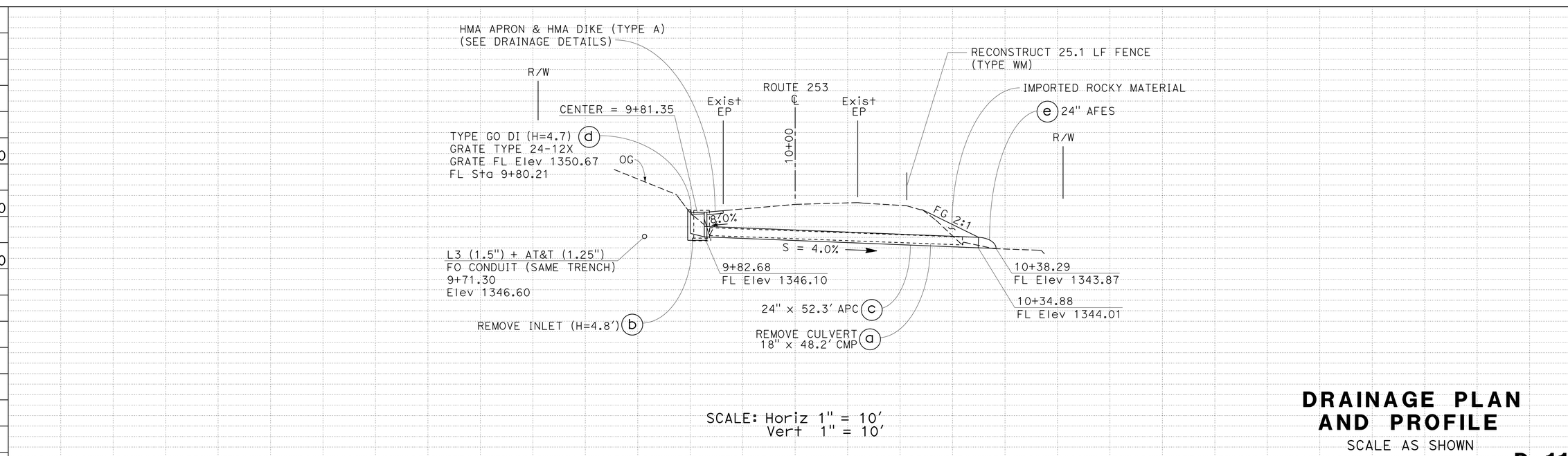

SCALE: Horiz 1" = 10'
Vert 1" = 10'

DRAINAGE PLAN AND PROFILE

SCALE AS SHOWN

D-11

APPROVED FOR DRAINAGE WORK ONLY

REVISED BY | DATE REVISED
W. KEITH MACK | SARJU PATEL
CALCULATED-DESIGNED BY | CHECKED BY
FUNCTIONAL SUPERVISOR: SCOTT W. MANN

STATE OF CALIFORNIA - DEPARTMENT OF TRANSPORTATION
Caltrans
03 - DESIGN

LAST REVISION 00-00-00 | DATE PLOTTED => 11-APR-2014 | TIME PLOTTED => 13:29

Dist	COUNTY	ROUTE	POST MILES TOTAL PROJECT	SHEET No.	TOTAL SHEETS
01	Men	128, 253	Var	13	47

REGISTERED CIVIL ENGINEER 4-1-14 DATE

4-1-14
PLANS APPROVAL DATE

REGISTERED PROFESSIONAL ENGINEER W. KEITH MACK No. 73964 Exp. 6-30-15 CIVIL STATE OF CALIFORNIA

THE STATE OF CALIFORNIA OR ITS OFFICERS OR AGENTS SHALL NOT BE RESPONSIBLE FOR THE ACCURACY OR COMPLETENESS OF SCANNED COPIES OF THIS PLAN SHEET.

NOTES:

1. FOR ACCURATE RIGHT OF WAY DATA, CONTACT RIGHT OF WAY ENGINEERING AT THE DISTRICT OFFICE.
2. FOR ROCK SLOPE PROTECTION DETAILS SEE DRAINAGE DETAIL SHEETS.

POINT	STATION	OFFSET
1	10+27.17	16.69′ L+
2	10+73.01	14.85′ L+
3	10+71.84	17.29′ R+
4	10+35.32	15.96′ R+

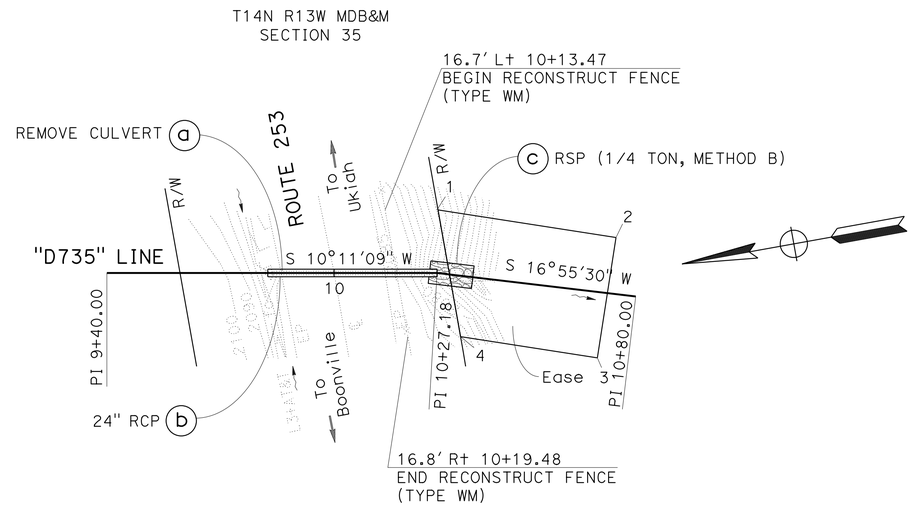

DRAINAGE SYSTEM No. 12

ROUTE 253
PM 7.35
SCALE: 1" = 20′

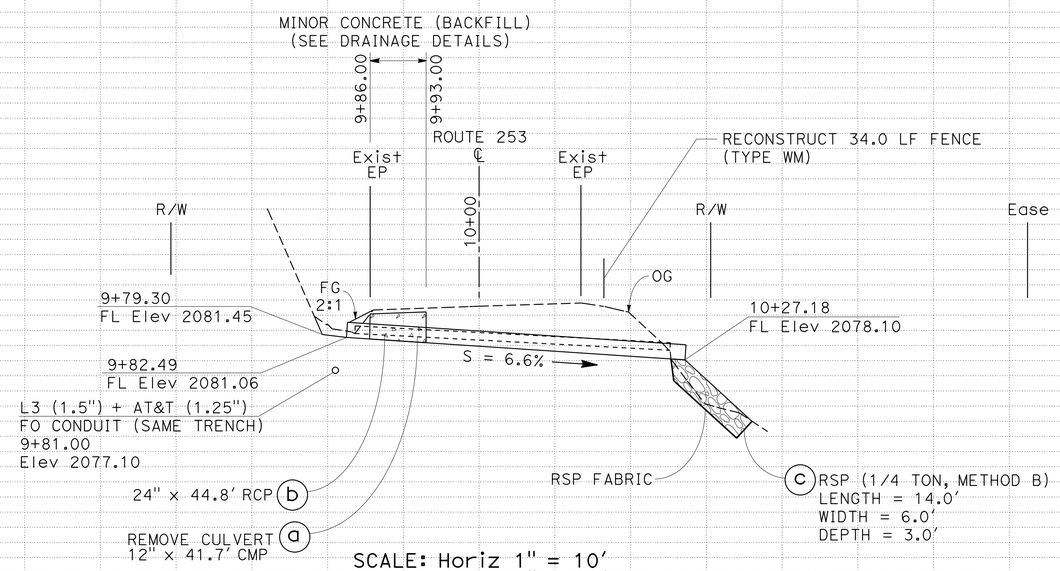

DRAINAGE PLAN AND PROFILE

SCALE AS SHOWN

D-12

APPROVED FOR DRAINAGE WORK ONLY

REVISED BY | DATE REVISED
W. KEITH MACK | SARJU PATEL
CALCULATED-DESIGNED BY | CHECKED BY
FUNCTIONAL SUPERVISOR: SCOTT W. MANN

STATE OF CALIFORNIA - DEPARTMENT OF TRANSPORTATION
Caltrans
03 - DESIGN

LAST REVISION 00-00-00 | DATE PLOTTED => 11-APR-2014 | TIME PLOTTED => 13:29

Dist	COUNTY	ROUTE	POST MILES TOTAL PROJECT	SHEET No.	TOTAL SHEETS
01	Men	128, 253	Var	14	47

REGISTERED CIVIL ENGINEER 4-1-14 DATE

4-1-14
PLANS APPROVAL DATE

REGISTERED PROFESSIONAL ENGINEER W. KEITH MACK No. 73964 Exp. 6-30-15 CIVIL STATE OF CALIFORNIA

THE STATE OF CALIFORNIA OR ITS OFFICERS OR AGENTS SHALL NOT BE RESPONSIBLE FOR THE ACCURACY OR COMPLETENESS OF SCANNED COPIES OF THIS PLAN SHEET.

NOTES:

1. FOR ACCURATE RIGHT OF WAY DATA, CONTACT RIGHT OF WAY ENGINEERING AT THE DISTRICT OFFICE.
2. FOR ROCK SLOPE PROTECTION DETAILS SEE DRAINAGE DETAIL SHEETS.

POINT	STATION	OFFSET
1	10+26.69	13.12′ Lt
2	10+43.31	13.12′ Lt
3	10+81.29	14.01′ Lt
4	10+77.14	18.01′ Rt
5	10+53.87	15.00′ Rt
6	10+53.85	13.10′ Rt
7	10+37.93	13.12′ Rt

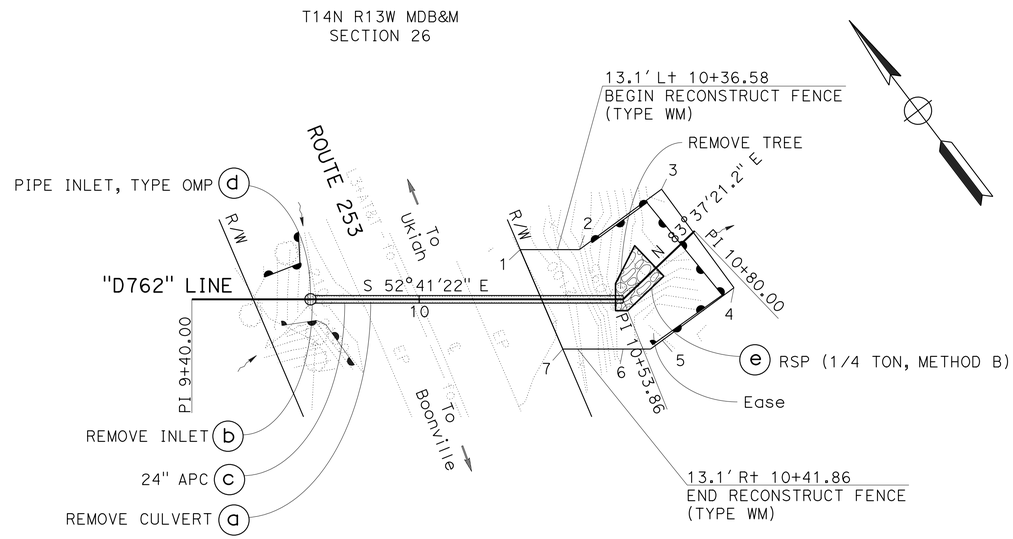

DRAINAGE SYSTEM No. 13

ROUTE 253
PM 7.62
SCALE: 1″ = 20′

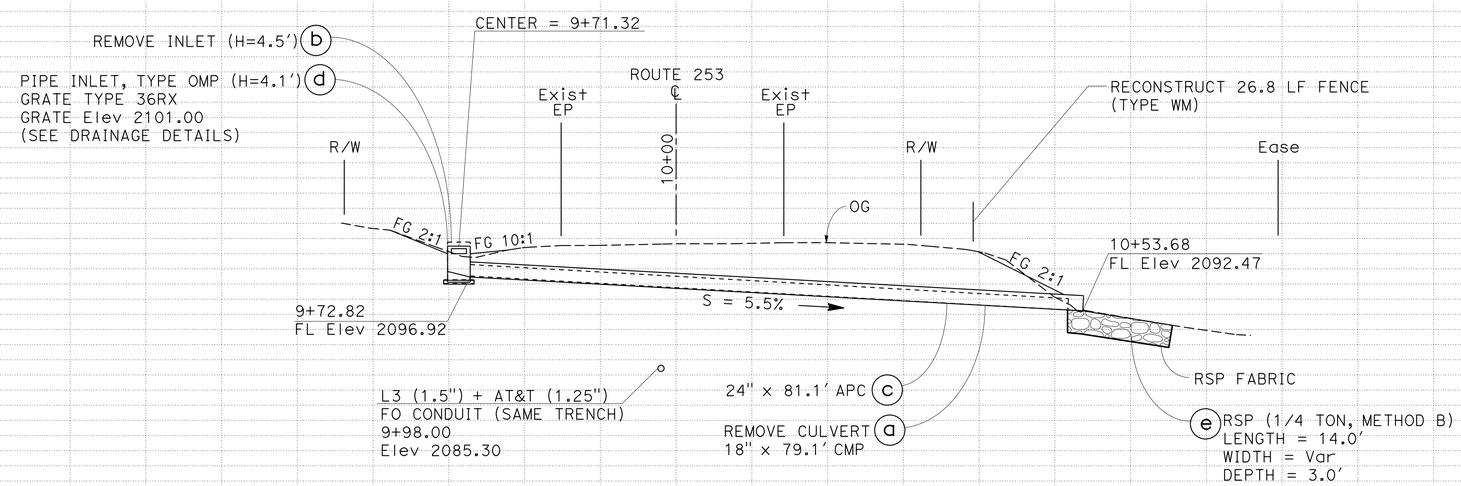

SCALE: Horiz 1″ = 10′
Vert 1″ = 10′

DRAINAGE PLAN AND PROFILE

SCALE AS SHOWN

D-13

STATION	9+40	9+60	9+80	10+00	10+20	10+40	10+60	TOTAL
CY Exc								
CY Emb								

APPROVED FOR DRAINAGE WORK ONLY

REVISED BY | DATE REVISED
W. KEITH MACK | SARJU PATEL
CALCULATED-DESIGNED BY | CHECKED BY
FUNCTIONAL SUPERVISOR: SCOTT W. MANN

STATE OF CALIFORNIA - DEPARTMENT OF TRANSPORTATION
Caltrans® 03 - DESIGN

LAST REVISION 00-00-00 | DATE PLOTTED => 11-APR-2014 | TIME PLOTTED => 13:29

Dist	COUNTY	ROUTE	POST MILES TOTAL PROJECT	SHEET No.	TOTAL SHEETS
01	Men	128, 253	Var	15	47

REGISTERED CIVIL ENGINEER 4-1-14 DATE

4-1-14
PLANS APPROVAL DATE

REGISTERED PROFESSIONAL ENGINEER W. KEITH MACK No. 73964 Exp. 6-30-15 CIVIL STATE OF CALIFORNIA

THE STATE OF CALIFORNIA OR ITS OFFICERS OR AGENTS SHALL NOT BE RESPONSIBLE FOR THE ACCURACY OR COMPLETENESS OF SCANNED COPIES OF THIS PLAN SHEET.

NOTES:

1. FOR ACCURATE RIGHT OF WAY DATA, CONTACT RIGHT OF WAY ENGINEERING AT DISTRICT OFFICE.
2. FOR ROCK SLOPE PROTECTION DETAILS SEE DRAINAGE DETAIL SHEETS.
3. THE ANGLE OF EACH ELBOW IS APPROXIMATE. THE EXACT ANGLE WILL BE DETERMINED IN THE FIELD BY THE ENGINEER.

T14N R13W MDB&M
SECTION 26

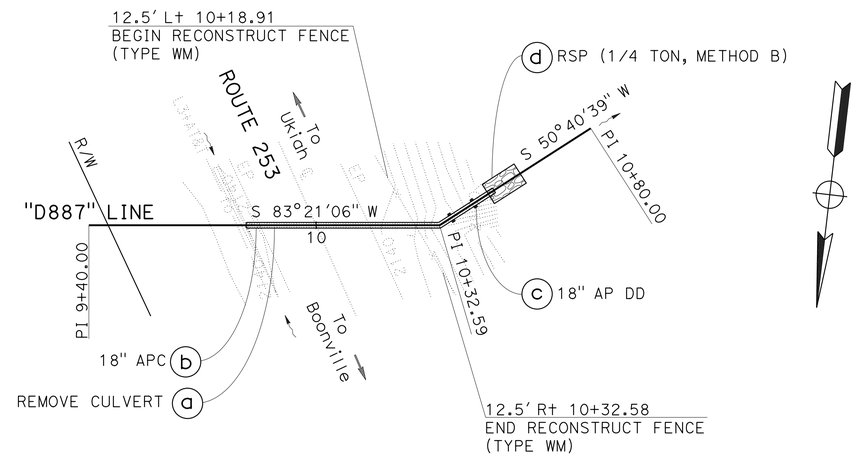

DRAINAGE SYSTEM No. 14

ROUTE 253
PM 8.87
SCALE: 1" = 20'

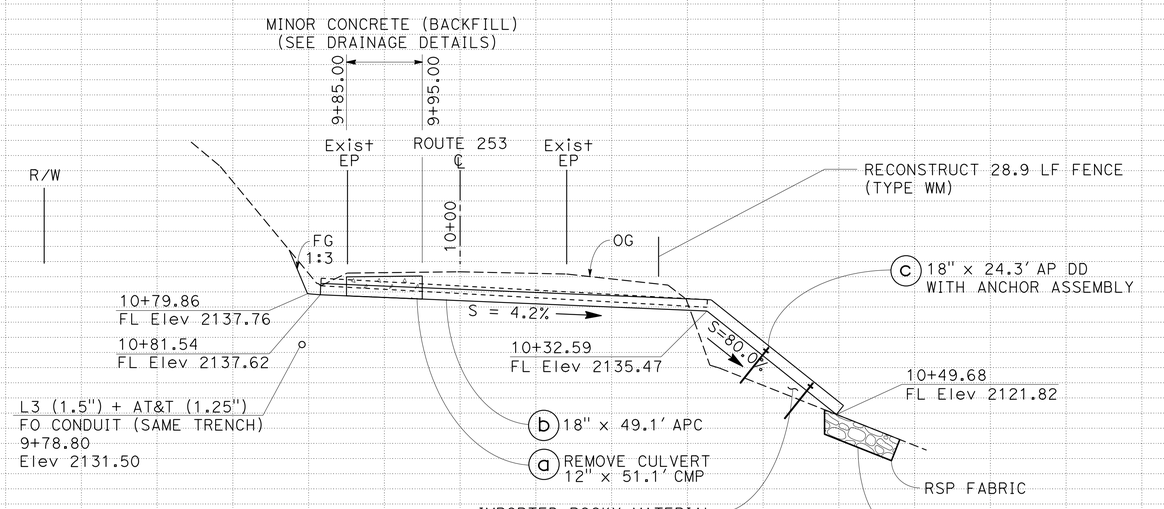

SCALE: Horiz 1" = 10'
Vert 1" = 10'

DRAINAGE PLAN AND PROFILE

SCALE AS SHOWN

D-14

STATION	9+40	9+60	9+80	10+00	10+20	10+40	10+60	TOTAL
CY Exc								
CY Emb								

APPROVED FOR DRAINAGE WORK ONLY

REVISED BY | DATE REVISED
W. KEITH MACK | SARJU PATEL
CALCULATED-DESIGNED BY | CHECKED BY
FUNCTIONAL SUPERVISOR: SCOTT W. MANN

STATE OF CALIFORNIA - DEPARTMENT OF TRANSPORTATION
Caltrans
03 - DESIGN

LAST REVISION 00-00-00 | DATE PLOTTED => 11-APR-2014 | TIME PLOTTED => 13:29

Dist	COUNTY	ROUTE	POST MILES TOTAL PROJECT	SHEET No.	TOTAL SHEETS
01	Men	128, 253	Var	16	47

REGISTERED CIVIL ENGINEER 4-1-14 DATE

4-1-14
PLANS APPROVAL DATE

REGISTERED PROFESSIONAL ENGINEER W. KEITH MACK No. 73964 Exp. 6-30-15 CIVIL STATE OF CALIFORNIA

THE STATE OF CALIFORNIA OR ITS OFFICERS OR AGENTS SHALL NOT BE RESPONSIBLE FOR THE ACCURACY OR COMPLETENESS OF SCANNED COPIES OF THIS PLAN SHEET.

NOTES:

1. FOR ACCURATE RIGHT OF WAY DATA, CONTACT RIGHT OF WAY ENGINEERING AT THE DISTRICT OFFICE.
2. FOR ROCK SLOPE PROTECTION DETAILS SEE DRAINAGE DETAIL SHEETS.

POINT	STATION	OFFSET
1	9+76.89	16.40′ R+
2	9+60.94	16.40′ R+
3	9+60.94	16.41′ L+
4	9+84.06	16.41′ L+
5	10+25.02	16.41′ L+
6	10+74.20	16.41′ L+
7	10+74.20	16.40′ R+
8	10+26.38	16.40′ R+

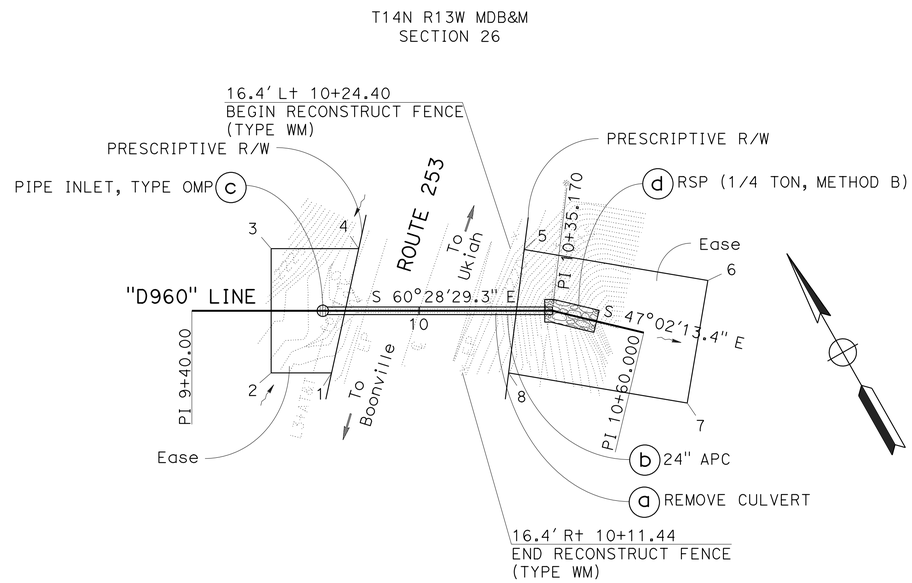

DRAINAGE SYSTEM No. 15

ROUTE 253
PM 9.60
SCALE: 1″ = 20′

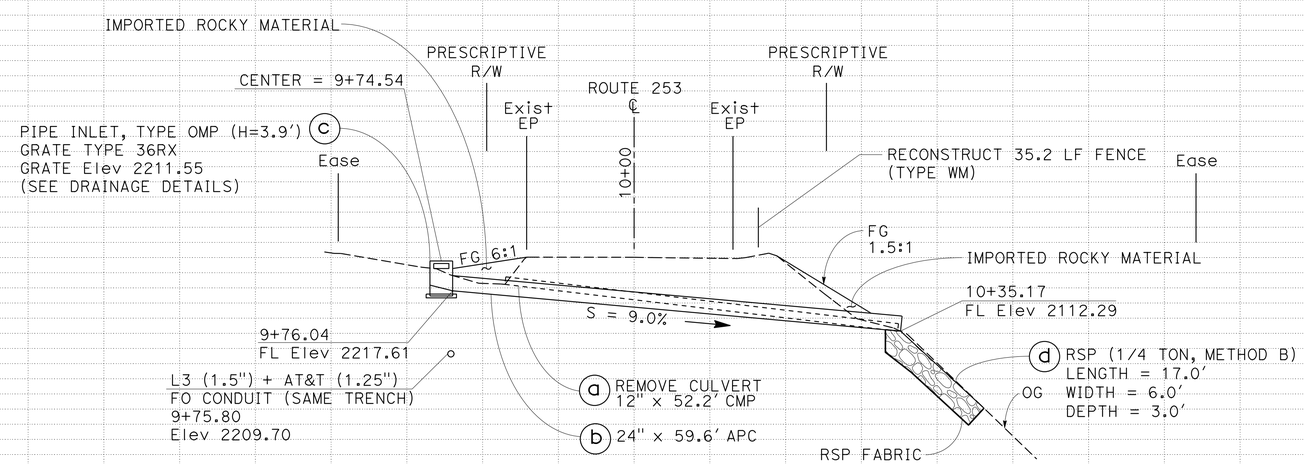

SCALE: Horiz 1″ = 10′
Vert 1″ = 10′

DRAINAGE PLAN AND PROFILE

SCALE AS SHOWN

D-15

STATION	9+40	9+60	9+80	10+00	10+20	10+40	10+60	TOTAL
CY Exc								
CY Emb								

APPROVED FOR DRAINAGE WORK ONLY

REVISED BY | DATE REVISED
W. KEITH MACK | SARJU PATEL
CALCULATED-DESIGNED BY | CHECKED BY
FUNCTIONAL SUPERVISOR: SCOTT W. MANN

STATE OF CALIFORNIA - DEPARTMENT OF TRANSPORTATION
Caltrans
03 - DESIGN

LAST REVISION 00-00-00 | DATE PLOTTED => 11-APR-2014 | TIME PLOTTED => 13:29

Dist	COUNTY	ROUTE	POST MILES TOTAL PROJECT	SHEET No.	TOTAL SHEETS
01	Men	128, 253	Var	17	47

REGISTERED CIVIL ENGINEER 4-1-14 DATE

4-1-14
PLANS APPROVAL DATE

REGISTERED PROFESSIONAL ENGINEER W. KEITH MACK No. 73964 Exp. 6-30-15 CIVIL STATE OF CALIFORNIA

THE STATE OF CALIFORNIA OR ITS OFFICERS OR AGENTS SHALL NOT BE RESPONSIBLE FOR THE ACCURACY OR COMPLETENESS OF SCANNED COPIES OF THIS PLAN SHEET.

NOTES:

1. FOR ACCURATE RIGHT OF WAY DATA, CONTACT RIGHT OF WAY ENGINEERING AT THE DISTRICT OFFICE.
2. FOR DOWNDRAIN AND PAVED GUTTER FLARE DETAILS NOT SHOWN, SEE Std PLAN D87A.
3. FOR ROCK SLOPE PROTECTION DETAILS SEE DRAINAGE DETAIL SHEETS.
4. THE ANGLE OF EACH ELBOW IS APPROXIMATE. THE EXACT ANGLE WILL BE DETERMINED IN THE FIELD BY THE ENGINEER.

POINT	STATION	OFFSET
1	9+76.07	16.41′ Rt
2	9+55.07	4.20′ Rt
3	9+68.26	18.49′ Lt
4	9+91.81	17.65′ Lt
5	10+23.11	16.40′ Lt
6	10+65.52	16.40′ Lt
7	10+65.52	16.41′ Rt
8	10+12.71	13.36′ Rt

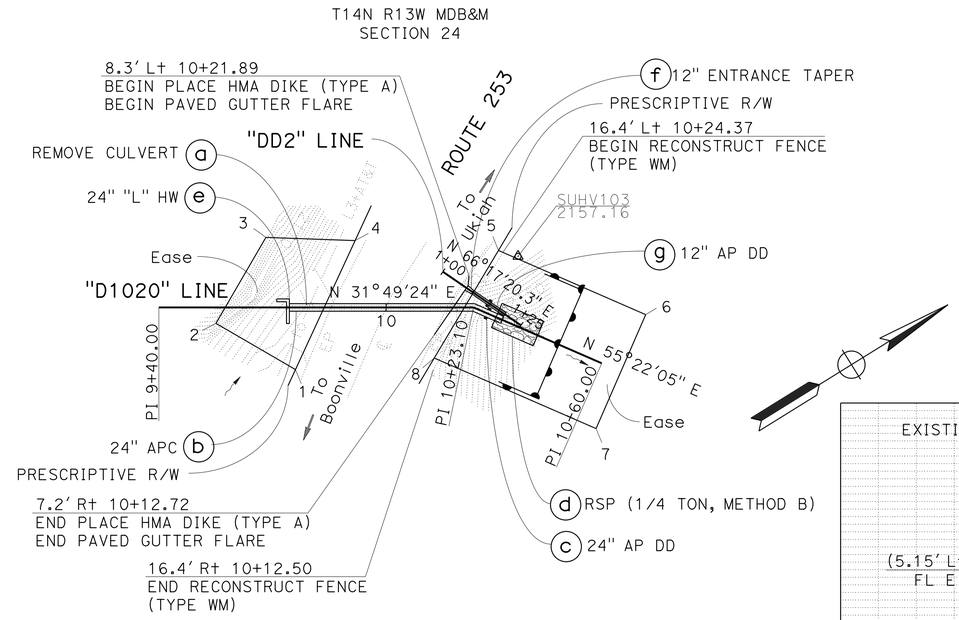

DRAINAGE SYSTEM (16)

ROUTE 253
PM 10.20
PLAN SCALE: 1" = 20′

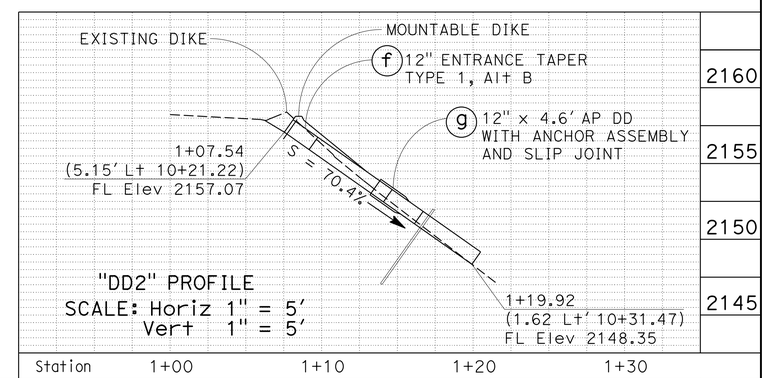

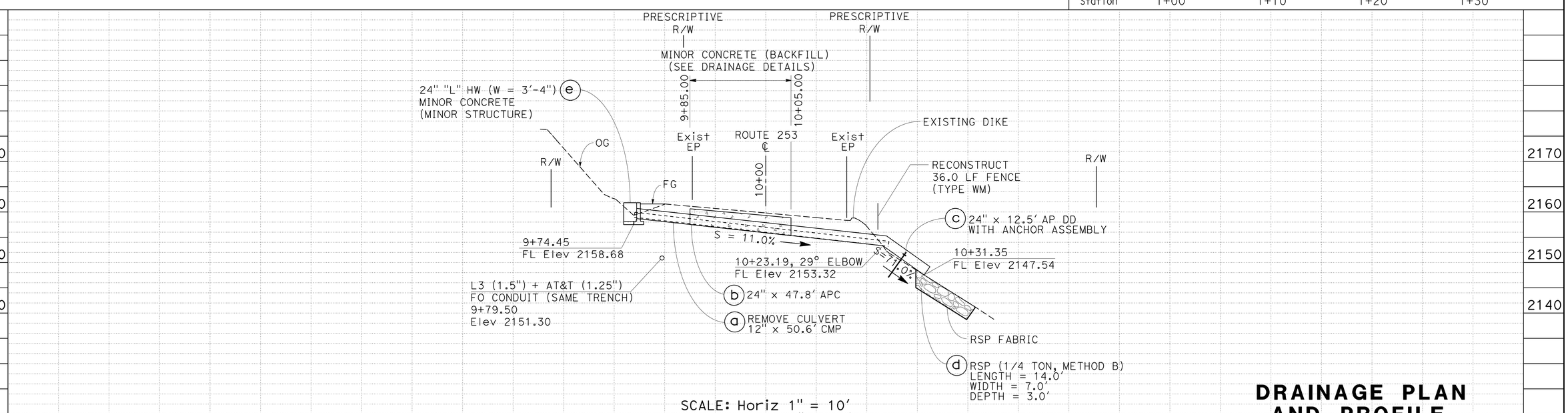

DRAINAGE PLAN AND PROFILE

SCALE AS SHOWN

D-16

APPROVED FOR DRAINAGE WORK ONLY

REVISED BY | DATE REVISED
W. KEITH MACK | SARJU PATEL
CALCULATED-DESIGNED BY | CHECKED BY
FUNCTIONAL SUPERVISOR: SCOTT W. MANN

STATE OF CALIFORNIA - DEPARTMENT OF TRANSPORTATION
Caltrans 03 - DESIGN

LAST REVISION 00-00-00 | DATE PLOTTED => 11-APR-2014 | TIME PLOTTED => 13:29

Dist	COUNTY	ROUTE	POST MILES TOTAL PROJECT	SHEET No.	TOTAL SHEETS
01	Men	128, 253	Var	18	47

REGISTERED CIVIL ENGINEER 4-1-14 DATE

4-1-14
PLANS APPROVAL DATE

REGISTERED PROFESSIONAL ENGINEER W. KEITH MACK No. 73964 Exp. 6-30-15 CIVIL STATE OF CALIFORNIA

THE STATE OF CALIFORNIA OR ITS OFFICERS OR AGENTS SHALL NOT BE RESPONSIBLE FOR THE ACCURACY OR COMPLETENESS OF SCANNED COPIES OF THIS PLAN SHEET.

NOTES:

1. FOR ACCURATE RIGHT OF WAY DATA, CONTACT RIGHT OF WAY ENGINEERING AT THE DISTRICT OFFICE.
2. FOR DOWNDRAIN AND PAVED GUTTER FLARE DETAILS NOT SHOWN, SEE Std PLAN D87A.
3. FOR ROCK SLOPE PROTECTION DETAILS SEE DRAINAGE DETAIL SHEETS.
4. THE ANGLE OF EACH ELBOW IS APPROXIMATE. THE EXACT ANGLE WILL BE DETERMINED IN THE FIELD BY THE ENGINEER.

POINT	STATION	OFFSET
1	9+74.75	13.76′ R+
2	9+58.27	4.34′ R+
3	9+71.30	18.45′ L+
4	9+92.96	17.70′ L+
5	10+27.54	16.41′ L+
6	10+71.75	16.40′ L+
7	10+71.75	16.41′ R+
8	10+24.32	16.40′ R+
9	10+08.86	16.41′ R+

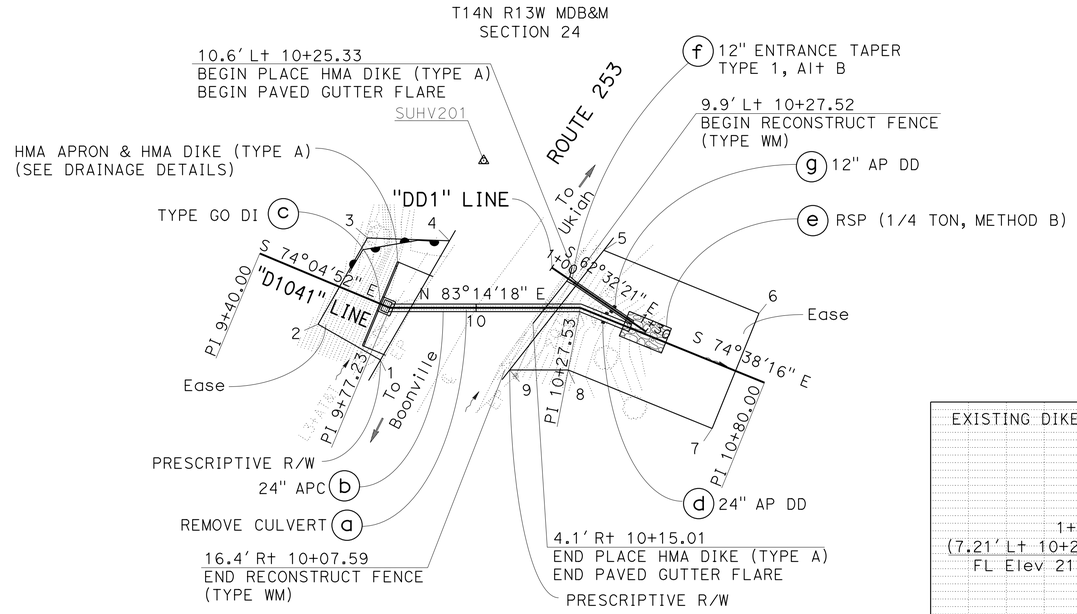

DRAINAGE SYSTEM No. 17

ROUTE 253
PM 10.41
SCALE: 1" = 20′

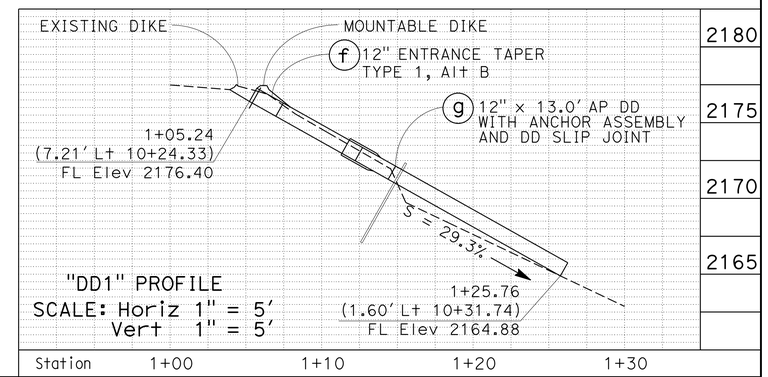

"DD1" PROFILE
SCALE: Horiz 1" = 5′
Vert 1" = 5′

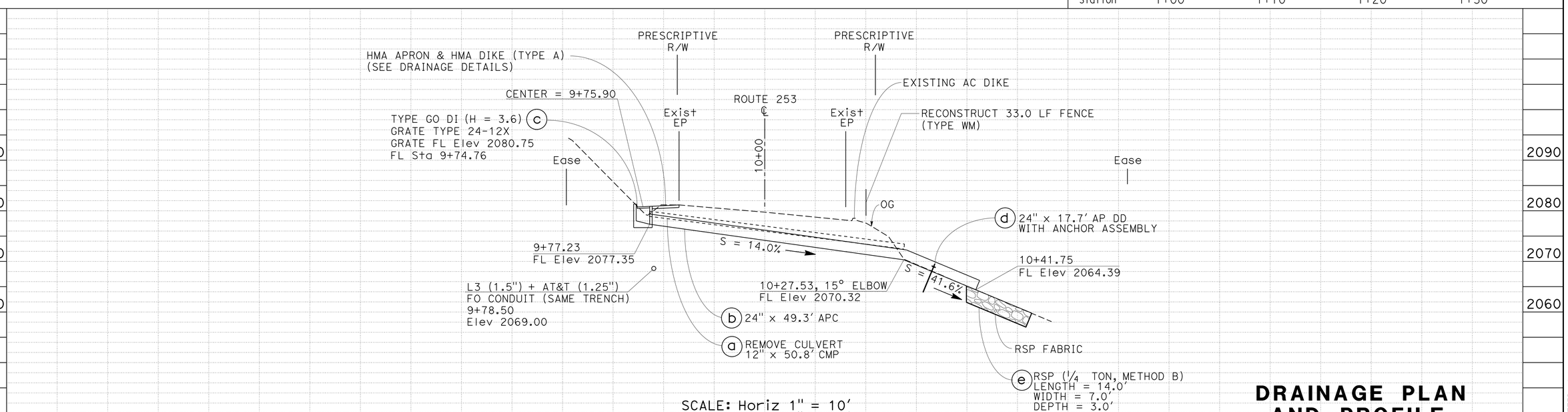

SCALE: Horiz 1" = 10′
Vert 1" = 10′

DRAINAGE PLAN AND PROFILE

SCALE AS SHOWN

D-17

APPROVED FOR DRAINAGE WORK ONLY

REVISED BY | DATE REVISED
W. KEITH MACK | SARJU PATEL
CALCULATED-DESIGNED BY | CHECKED BY
FUNCTIONAL SUPERVISOR: SCOTT W. MANN

STATE OF CALIFORNIA - DEPARTMENT OF TRANSPORTATION
Caltrans 03 - DESIGN

LAST REVISION 00-00-00 | DATE PLOTTED => 11-APR-2014 | TIME PLOTTED => 13:29

Dist	COUNTY	ROUTE	POST MILES TOTAL PROJECT	SHEET No.	TOTAL SHEETS
01	Men	128, 253	Var	19	47

REGISTERED CIVIL ENGINEER 4-1-14 DATE

4-1-14
PLANS APPROVAL DATE

REGISTERED PROFESSIONAL ENGINEER W. KEITH MACK No. C 73964 Exp. 6-30-15 CIVIL STATE OF CALIFORNIA

THE STATE OF CALIFORNIA OR ITS OFFICERS OR AGENTS SHALL NOT BE RESPONSIBLE FOR THE ACCURACY OR COMPLETENESS OF SCANNED COPIES OF THIS PLAN SHEET.

NOTES:

1. FOR COMPLETE RIGHT OF WAY DATA, SEE RIGHT OF WAY RECORD MAPS AT DISTRICT OFFICE.
2. THIS PLAN ACCURATE FOR DRAINAGE WORK ONLY.
3. FOR ROCK SLOPE PROTECTION DETAILS SEE DRAINAGE DETAIL SHEETS.
4. THE ANGLE OF EACH ELBOW IS APPROXIMATE. THE EXACT ANGLE WILL BE DETERMINED IN THE FIELD BY THE ENGINEER.

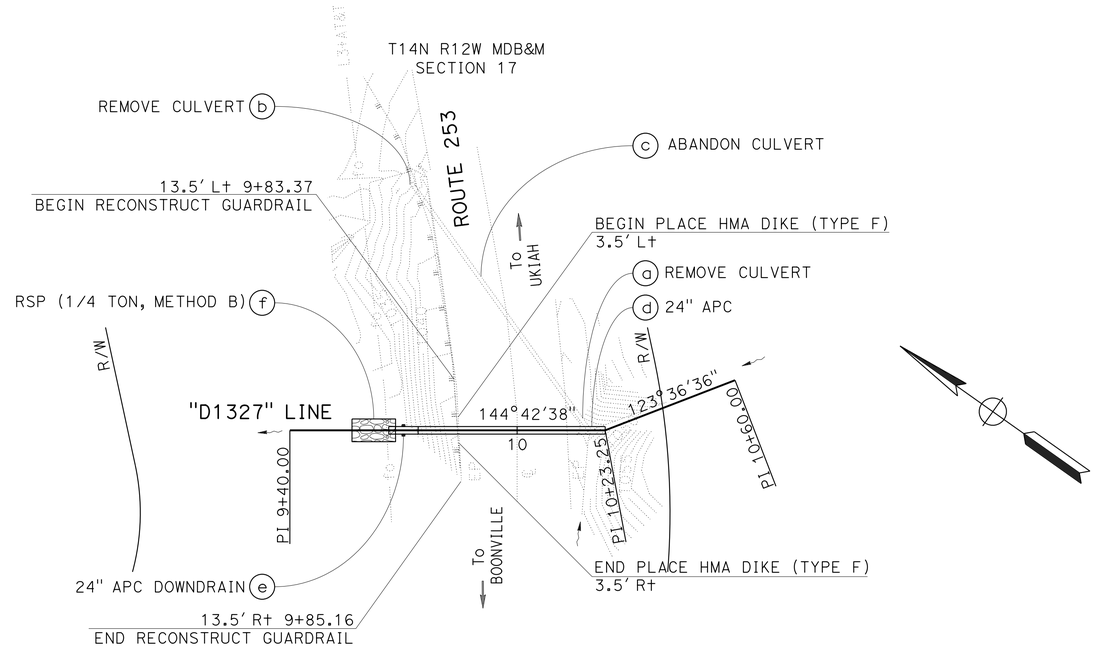

DRAINAGE SYSTEM 18

ROUTE 253
PM 13.27
PLAN SCALE: 1" = 20'

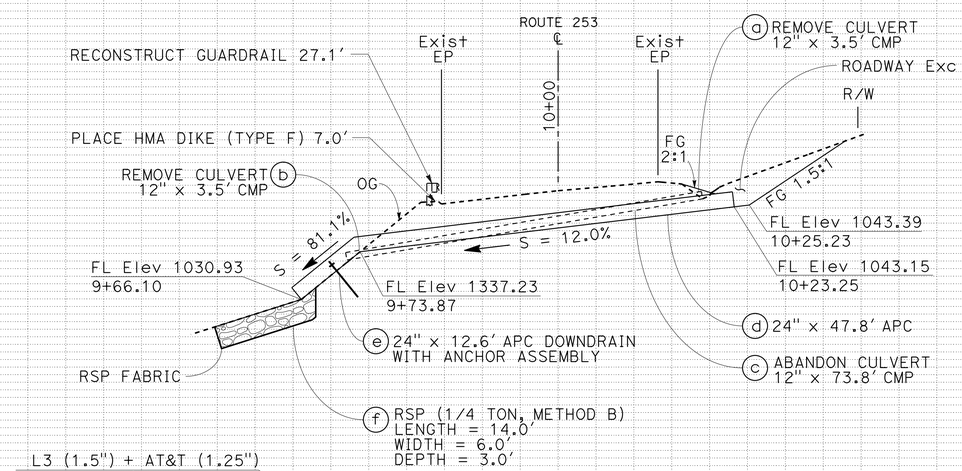

PROFILE SCALE: Horiz 1" = 10'
Vert 1" = 10'

DRAINAGE PLAN AND PROFILE

SCALE AS SHOWN

D-18

STATE OF CALIFORNIA - DEPARTMENT OF TRANSPORTATION
Caltrans 03-DESIGN

FUNCTIONAL SUPERVISOR: SCOTT W. MANN
CALCULATED-DESIGNED BY: W. KEITH MACK
CHECKED BY: SARJU PATEL
REVISED BY / DATE REVISED

LAST REVISION 03-25-11
DATE PLOTTED => 11-APR-2014
TIME PLOTTED => 13:29

Dist	COUNTY	ROUTE	POST MILES TOTAL PROJECT	SHEET No.	TOTAL SHEETS
01	Men	128, 253	Var	20	47

REGISTERED CIVIL ENGINEER 4-1-14 DATE

4-1-14
PLANS APPROVAL DATE

REGISTERED PROFESSIONAL ENGINEER W. KEITH MACK No. 73964 Exp. 6-30-15 CIVIL STATE OF CALIFORNIA

THE STATE OF CALIFORNIA OR ITS OFFICERS OR AGENTS SHALL NOT BE RESPONSIBLE FOR THE ACCURACY OR COMPLETENESS OF SCANNED COPIES OF THIS PLAN SHEET.

T14N R12W MDB&M
SECTION 17

NOTES:

1. FOR ACCURATE RIGHT OF WAY DATA, CONTACT RIGHT OF WAY ENGINEERING AT THE DISTRICT OFFICE.
2. FOR ROCK SLOPE PROTECTION DETAILS SEE DRAINAGE DETAIL SHEETS.

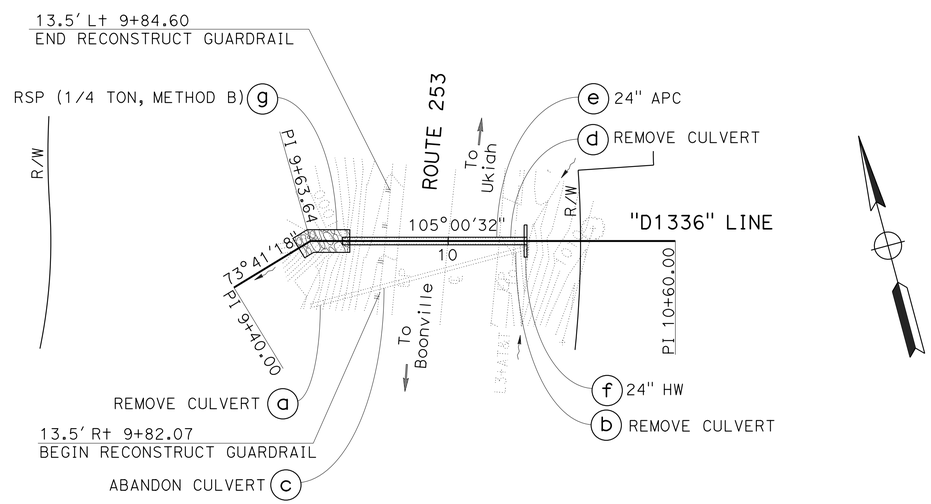

DRAINAGE SYSTEM No. 19

ROUTE 253
PM 13.36
SCALE: 1" = 20'

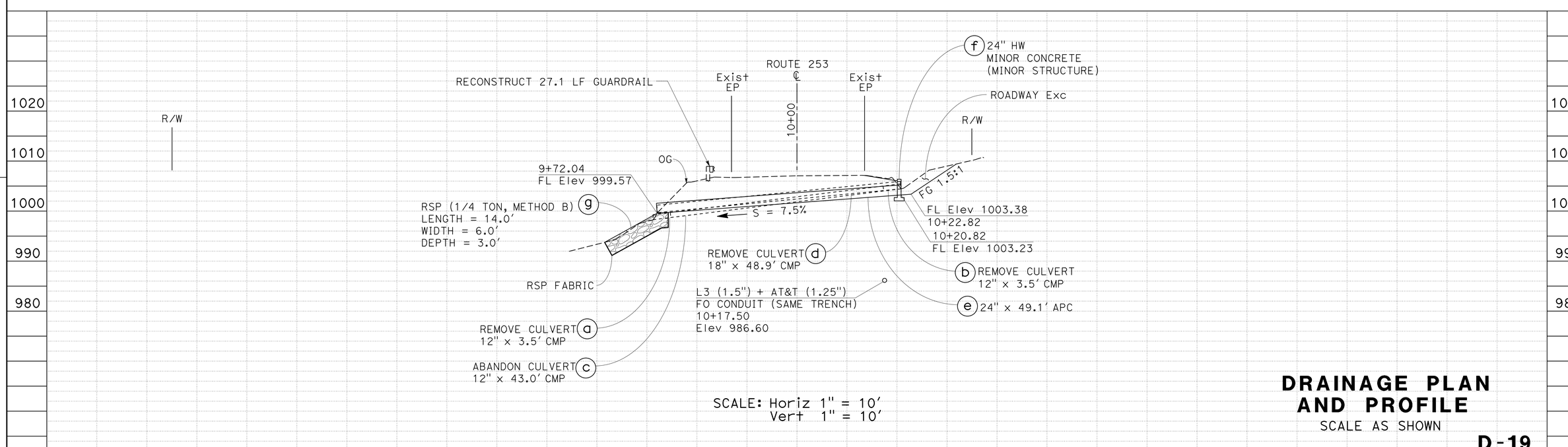

SCALE: Horiz 1" = 10'
Vert 1" = 10'

DRAINAGE PLAN AND PROFILE

SCALE AS SHOWN

D-19

APPROVED FOR DRAINAGE WORK ONLY

REVISED BY | DATE REVISED
W. KEITH MACK | SARJU PATEL
CALCULATED-DESIGNED BY | CHECKED BY
FUNCTIONAL SUPERVISOR: SCOTT W. MANN
STATE OF CALIFORNIA - DEPARTMENT OF TRANSPORTATION
Caltrans 03 - DESIGN

LAST REVISION 00-00-00 | DATE PLOTTED => 11-APR-2014 | TIME PLOTTED => 13:29

Dist	COUNTY	ROUTE	POST MILES TOTAL PROJECT	SHEET No.	TOTAL SHEETS
01	Men	128, 253	Var	21	47

REGISTERED CIVIL ENGINEER 4-1-14 DATE

4-1-14
PLANS APPROVAL DATE

REGISTERED PROFESSIONAL ENGINEER
W. KEITH MACK
No. C 73964
Exp. 06-30-15
CIVIL
STATE OF CALIFORNIA

THE STATE OF CALIFORNIA OR ITS OFFICERS OR AGENTS SHALL NOT BE RESPONSIBLE FOR THE ACCURACY OR COMPLETENESS OF SCANNED COPIES OF THIS PLAN SHEET.

NOTE:

1. FOR LENGTH, WIDTH, AND THICKNESS OF RSP SEE DRAINAGE PLAN AND PROFILE SHEETS.
2. PLACE MARKER MIN 2' AND MAX 12' FROM EP, EXACT LOCATION TO BE DETERMINED BY THE ENGINEER.

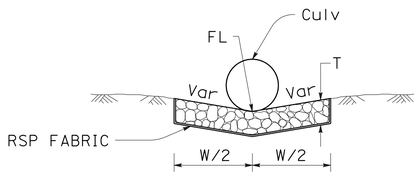

SECTION B-B

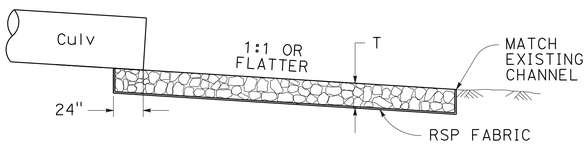

SECTION A-A

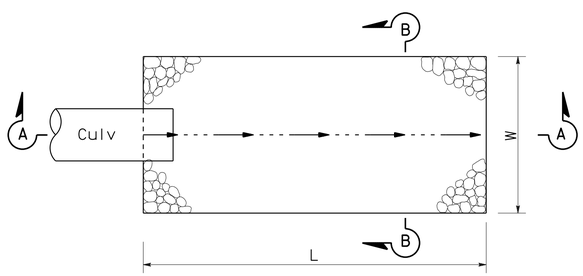

PLAN

ROCK SLOPE PROTECTION (RSP)

DRAINAGE SYSTEM No.	LOCATION ROUTE	LOCATION PM	DRAINAGE SYSTEM No.	LOCATION ROUTE	LOCATION PM
3	128	49.15	15	253	9.60
6	128	49.95	16	253	10.20
7	128	50.29	17	253	10.41
12	253	7.35	18	253	13.27
13	253	7.62	19	253	13.36
14	253	8.87			

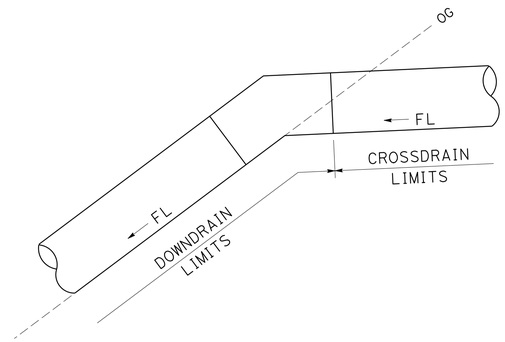

LIMITS OF MEASUREMENT FOR PAYMENT

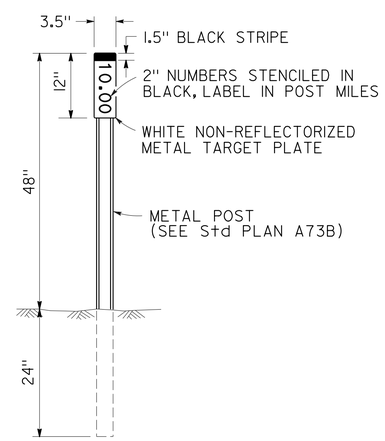

MARKER (CULVERT)

ABBREVIATIONS:

L - LENGTH OF RSP
W - WIDTH OF RSP
T - THICKNESS OF RSP

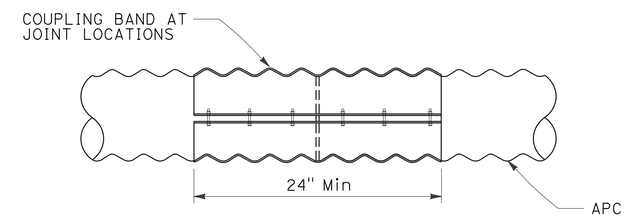

JOINT COUPLING BAND

DRAINAGE DETAILS

NO SCALE

DD-1

STATE OF CALIFORNIA - DEPARTMENT OF TRANSPORTATION
Caltrans
03-DESIGN
FUNCTIONAL SUPERVISOR: SCOTT W. MANN
CALCULATED-DESIGNED BY: W. KEITH MACK
CHECKED BY: SARJU PATEL
REVISED BY: D. YOST
DATE REVISED: 08-07-13

LAST REVISION 08-07-13 | DATE PLOTTED => 11-APR-2014 | TIME PLOTTED => 13:29

Dist	COUNTY	ROUTE	POST MILES TOTAL PROJECT	SHEET No.	TOTAL SHEETS
01	Men	128, 253	Var	22	47

REGISTERED CIVIL ENGINEER 4-1-14 DATE

4-1-14
PLANS APPROVAL DATE

REGISTERED PROFESSIONAL ENGINEER W. KEITH MACK No. C 73964 Exp. 06-30-15 CIVIL STATE OF CALIFORNIA

THE STATE OF CALIFORNIA OR ITS OFFICERS OR AGENTS SHALL NOT BE RESPONSIBLE FOR THE ACCURACY OR COMPLETENESS OF SCANNED COPIES OF THIS PLAN SHEET.

NOTE:

1. SEE STANDARD PLAN SHEET D75A FOR INLET OPENING DETAILS.

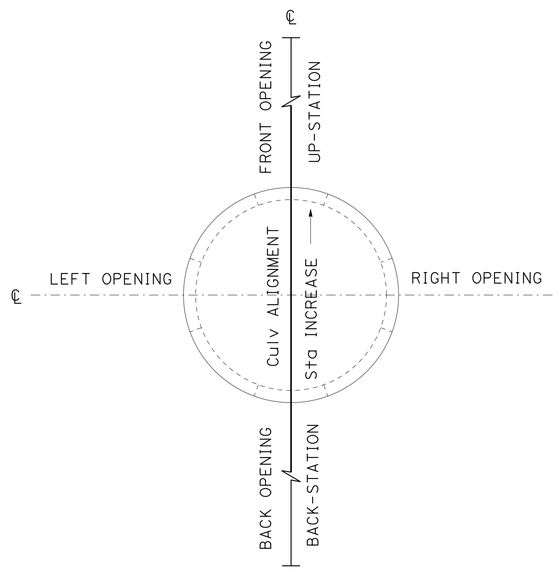

PLAN

INLET (TYPE OMP) SIDE OPENINGS

DRAINAGE SYSTEM No.	LOCATION		OPENINGS			
	ROUTE	PM	BACK	FRONT	RIGHT	LEFT
4	128	49.46	1	-	1	1
8	253	3.30	1	-	1	1
9	253	3.67	-	-	1	1
13	253	7.62	1	-	1	1
15	253	9.60	1	-	1	1

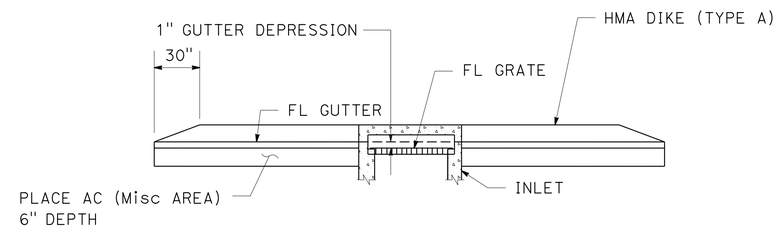

SECTION A-A

TYPE GO INLET

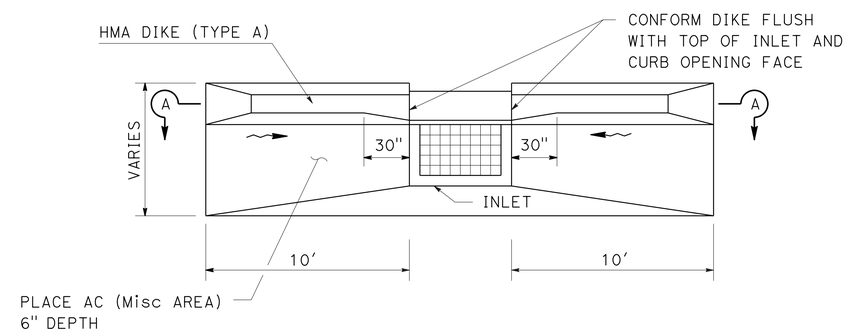

PLAN

PAVED APRON

DRAINAGE SYSTEM No.	LOCATION	
	ROUTE	PM
11	253	3.76
17	253	10.41

DRAINAGE DETAILS

NO SCALE

DD-2

STATE OF CALIFORNIA - DEPARTMENT OF TRANSPORTATION
Caltrans
03-DESIGN

FUNCTIONAL SUPERVISOR: SCOTT W. MANN
CALCULATED-DESIGNED BY: W. KEITH MACK
CHECKED BY: SARJU PATEL
REVISED BY: D. YOST
DATE REVISED: 08-07-13

LAST REVISION 08-07-13 | DATE PLOTTED => 11-APR-2014 | TIME PLOTTED => 13:29

Dist	COUNTY	ROUTE	POST MILES TOTAL PROJECT	SHEET No.	TOTAL SHEETS
01	Men	128, 253	Var	23	47

REGISTERED CIVIL ENGINEER 4-1-14 DATE

4-1-14
PLANS APPROVAL DATE

REGISTERED PROFESSIONAL ENGINEER W. KEITH MACK No. C 73964 Exp. 06-30-15 CIVIL STATE OF CALIFORNIA

THE STATE OF CALIFORNIA OR ITS OFFICERS OR AGENTS SHALL NOT BE RESPONSIBLE FOR THE ACCURACY OR COMPLETENESS OF SCANNED COPIES OF THIS PLAN SHEET.

NOTES:

1. SEE STANDARD PLANS A62D, A62DA, AND A62F FOR EXCAVATION AND BACKFILL DETAILS.
2. REBAR TO BE EPOXY-COATED.
3. LONGITUDINAL JOINT SAW CUT DEPTH MAX @ 2" PER WIDTH OF REINFORCED SLAB.
4. TAPER HMA FROM 6" DEPTH AT ROADWAY CENTERLINE, TO 4" DEPTH AT EP.

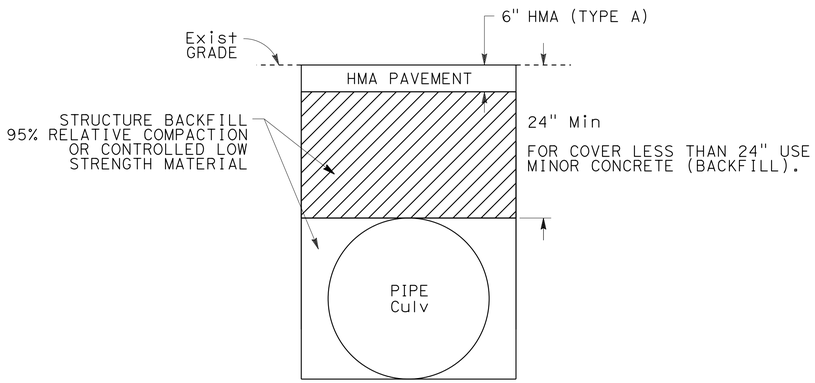

STRUCTURE BACKFILL UNDER Exist Pvmt

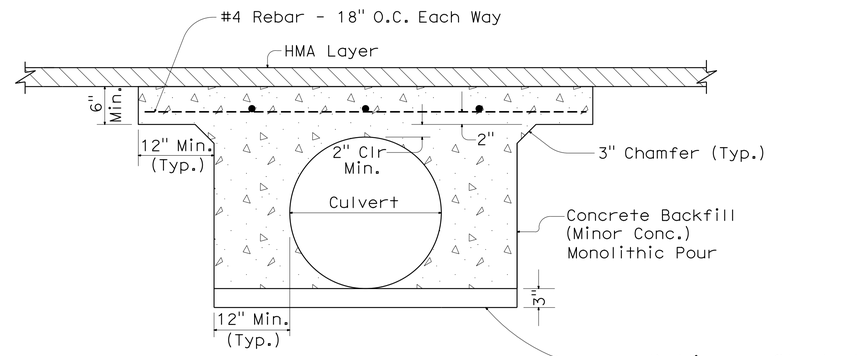

SECTION A-A

See Note 1

LEGEND:

Minor Concrete

Aspahlt Concrete

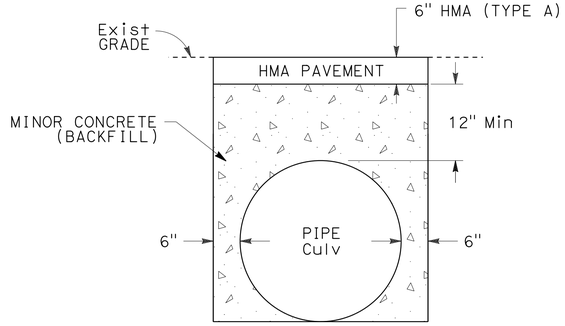

MINOR CONCRETE (BACKFILL)

DRAINAGE SYSTEM No.	LOCATION	
	ROUTE	PM
1	128	48.61
2	128	48.89
4	128	49.46
12	253	7.35
14	253	8.87
16	253	10.20

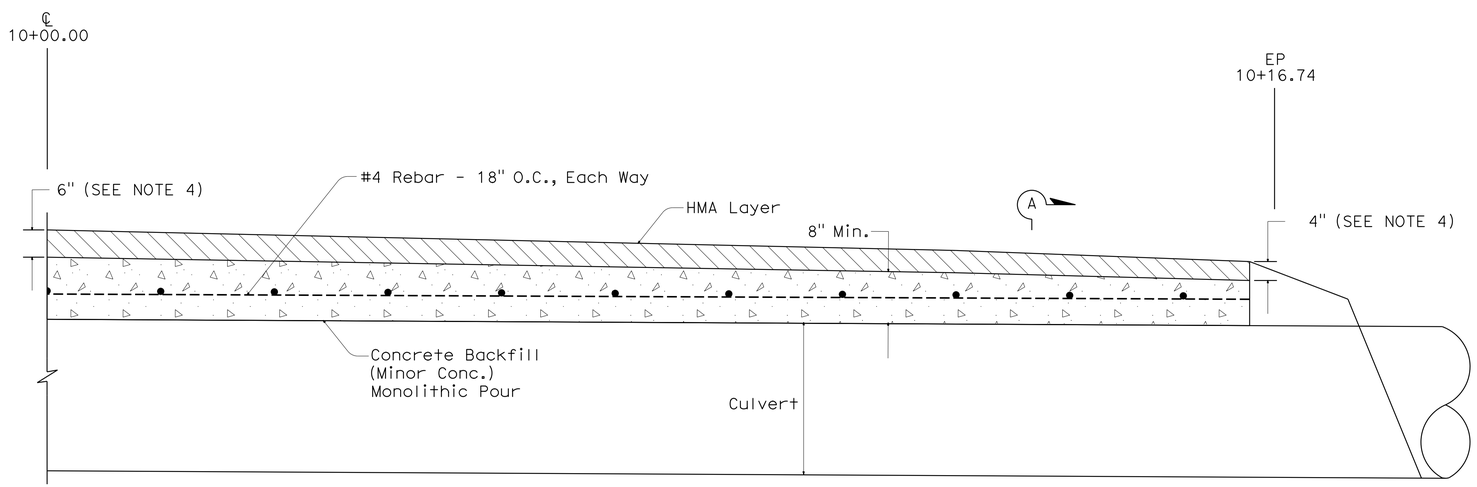

MEN 128 PM 48.61

Profile

DRAINAGE DETAILS

NO SCALE

DD-3

STATE OF CALIFORNIA - DEPARTMENT OF TRANSPORTATION
03-DESIGN
Caltrans®

FUNCTIONAL SUPERVISOR: SCOTT W. MANN
CALCULATED-DESIGNED BY: W. KEITH MACK
CHECKED BY: SARJU PATEL
REVISED BY: D. YOST
DATE REVISED: 08-07-13

LAST REVISION 08-07-13
DATE PLOTTED => 11-APR-2014
TIME PLOTTED => 13:29

Dist	COUNTY	ROUTE	POST MILES TOTAL PROJECT	SHEET No.	TOTAL SHEETS
01	Men	128, 253	Var	24	47

REGISTERED CIVIL ENGINEER 4-1-14 DATE

4-1-14
PLANS APPROVAL DATE

REGISTERED PROFESSIONAL ENGINEER W. KEITH MACK No. 73964 Exp. 6-30-15 CIVIL STATE OF CALIFORNIA

THE STATE OF CALIFORNIA OR ITS OFFICERS OR AGENTS SHALL NOT BE RESPONSIBLE FOR THE ACCURACY OR COMPLETENESS OF SCANNED COPIES OF THIS PLAN SHEET.

NOTE:
1. SEE STANDARD PLAN D-73 FOR DETAILS NOT SHOWN.

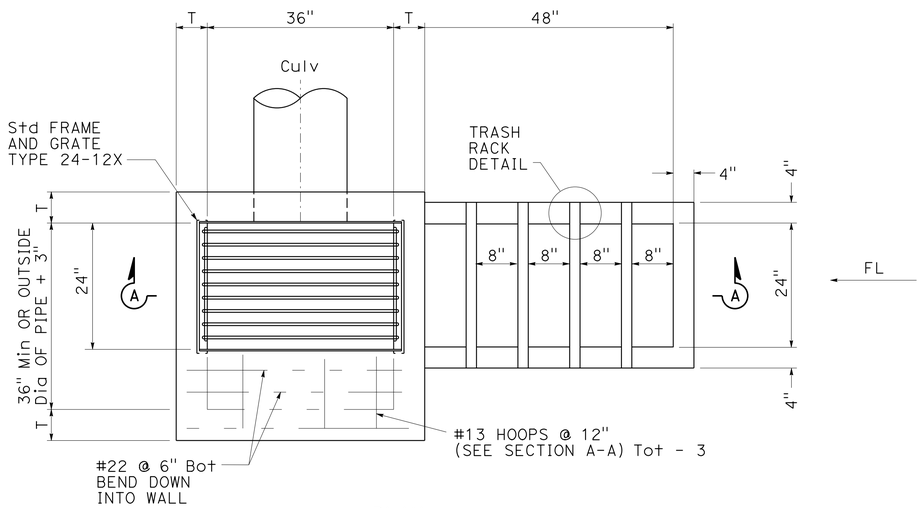

PLAN

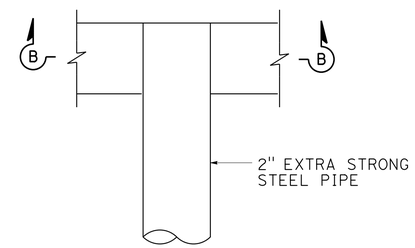

TRASH RACK DETAIL

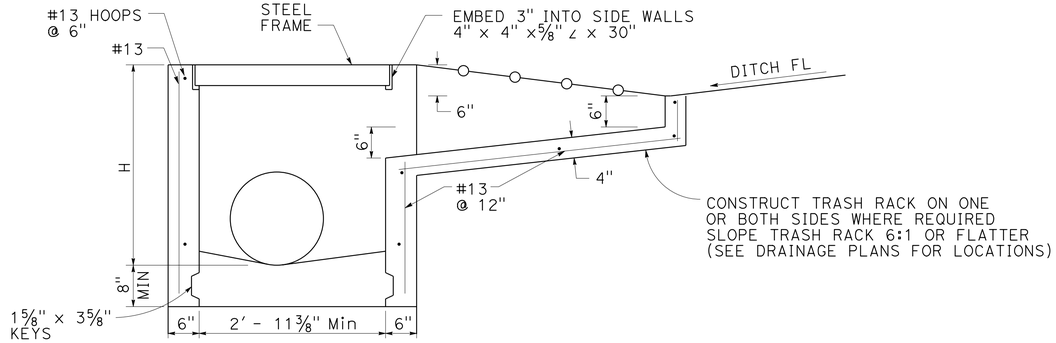

SECTION A-A

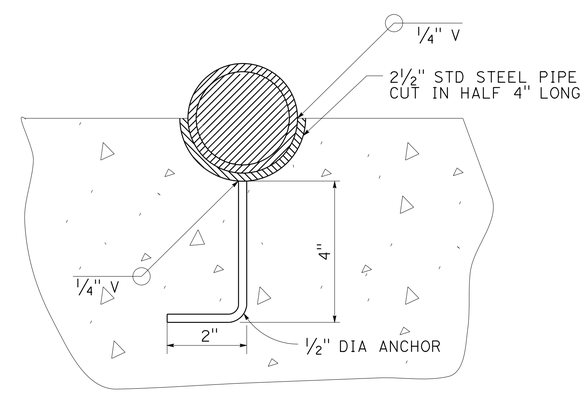

SECTION B-B

TYPE G2 (Mod) DI

DRAINAGE SYSTEM No.	LOCATION	
	ROUTE	PM
3	128	49.15

DRAINAGE DETAILS

NO SCALE

DD-4

STATE OF CALIFORNIA - DEPARTMENT OF TRANSPORTATION
Caltrans
03 - DESIGN
FUNCTIONAL SUPERVISOR: SCOTT W. MANN
CALCULATED-DESIGNED BY: W. KEITH MACK
CHECKED BY: SARJU PATEL
REVISED BY: D. YOST
DATE REVISED: 08-07-13

LAST REVISION 08-07-13 | DATE PLOTTED => 11-APR-2014 | TIME PLOTTED => 13:29

Dist	COUNTY	ROUTE	POST MILES TOTAL PROJECT	SHEET No.	TOTAL SHEETS
01	Men	128, 253	Var	25	47

REGISTERED CIVIL ENGINEER 4-1-14 DATE

4-1-14
PLANS APPROVAL DATE

REGISTERED PROFESSIONAL ENGINEER W. KEITH MACK No. 73964 Exp. 6-30-15 CIVIL STATE OF CALIFORNIA

THE STATE OF CALIFORNIA OR ITS OFFICERS OR AGENTS SHALL NOT BE RESPONSIBLE FOR THE ACCURACY OR COMPLETENESS OF SCANNED COPIES OF THIS PLAN SHEET.

NOTES:

1. DOWNDRAINS AND FLARED END SECTION SHALL BE SAME MATERIAL AS CULVERT.
2. ALL CULVERT PIPE JOINTS ARE POSITIVE JOINT TYPE.
3. THE JOINT CLASSIFICATION FOR DOWNDRAINS SHALL BE DOWNDRAIN.
4. LENGTHS OF PIPES AND ANGLES OF ELBOWS SHALL BE VERIFIED IN THE FIELD BY THE CONTRACTOR.
5. FOR MINIMUM ALLOWABLE CLASS OF RCP, SEE STANDARD PLAN A62D.

ALTERNATIVE PIPE CULVERT (APC) AND DOWNDRAIN (AP DD) ALLOWABLE PIPE MATERIAL AND PROTECTION

DRAINAGE SYSTEM No. (PLAN Sht No.)	ROUTE	PM	Galv CSP 0.138" (10 Ga) THICK	Galv CSP POLYMERIC Sht COATED 0.109" (12 Ga) THICK	CAP 0.079" (14 Ga)	RCP
1	128	48.61	X	X		X *
2		48.89	X	X		X *
3		49.15	X	X	X	X *
4		49.46	X	X		X **
5		49.72	X	X	X	X *
6		49.95	X	X	X	X *
7	128	50.29		X	X	X *
8	253	3.30	X	X	X	X ***
9		3.67	X	X	X	X ***
10		3.70	X	X	X	X ***
11		3.76	X	X	X	X ***
12		7.35				X ***
13		7.62	X	X	X	X ***
14		8.87	X	X		
15		9.60	X	X	X	X ***
16		10.20	X	X		
17		10.41	X	X	X	
18		13.27	X	X	X	
19	253	13.36	X	X	X	X ***

* - TYPE IP (MS) MODIFIED CEMENT OR TYPE II MODIFIED CEMENT.
** - TYPE II MODIFIED CEMENT OR TYPE V CEMENT 400KG/M3 WITH 25% MINERAL ADMIXTURE REPLACEMENT (BY WEIGHT). MAXIMUM WATER-TO-CEMENTITIOUS MATERIAL RATIO OF 0.40.
*** - TYPE IP (MS) MODIFIED CEMENT OR TYPE II MODIFIED CEMENT. MAXIMUM WATER-TO-CEMENTITIOUS MATERIAL RATIO OF 0.45.

DRAINAGE QUANTITIES
DQ-1

STATE OF CALIFORNIA - DEPARTMENT OF TRANSPORTATION
Caltrans 03 - DESIGN
FUNCTIONAL SUPERVISOR: SCOTT W. MANN
CALCULATED-DESIGNED BY: W. KEITH MACK
CHECKED BY: SARJU PATEL
REVISED BY
DATE REVISED

LAST REVISION 00-00-00
DATE PLOTTED => 11-APR-2014
TIME PLOTTED => 13:29

Dist	COUNTY	ROUTE	POST MILES TOTAL PROJECT	SHEET No.	TOTAL SHEETS
01	Men	128, 253	Var	26	47

REGISTERED CIVIL ENGINEER 4-1-14 DATE

4-1-14
PLANS APPROVAL DATE

REGISTERED PROFESSIONAL ENGINEER W. KEITH MACK No. 73964 Exp. 6-30-15 CIVIL STATE OF CALIFORNIA

THE STATE OF CALIFORNIA OR ITS OFFICERS OR AGENTS SHALL NOT BE RESPONSIBLE FOR THE ACCURACY OR COMPLETENESS OF SCANNED COPIES OF THIS PLAN SHEET.

DRAINAGE QUANTITIES

DRAINAGE SYSTEM No. (PLAN Sht No.)	DRAINAGE UNIT No.	ROUTE	PM	REMOVE INLET EA	REMOVE Culv EA	REMOVE HW EA	ABANDON Culv EA	SAND BACKFILL CY	APC 18" LF	APC 24" LF	AP DD 12" LF	AP DD 18" LF	AP DD 24" LF	(N) APC ELBOW EA	ANCHOR ASSEMBLY EA	12" DD SLIP JOINT EA	12" ENTRANCE TAPER TYPE 1, Alt B EA	24" AFES EA	RSP (1/4 TON, METHOD B) CY	RSP FABRIC (CLASS 8) SQYD	(N) H OF INLET LF	36" CSP INLET (.168" THICK) LF	MINOR Conc (MINOR Str) CY	Misc I & S LB	(N) Max COVER LF	MARKER (Culv) EA	DESCRIPTION	DRAINAGE UNIT No.	DRAINAGE SYSTEM No. (PLAN Sht No.)
1	a	128	48.61			1																					REMOVE HW	a	1
	b				1																						REMOVE Culv (12" x 45.7' CAST IRON)	b	
	c				1																						REMOVE Culv (18" x 70.7' CMP)	c	
	d									64.2															4.2	2	24" APC	d	
	e																	1									24" AFES	e	
	f																	1									24" AFES	f	
2	a	128	48.89		1																						REMOVE Culv (18" x 47.9' CMP)	a	2
	b									46.6															5.1	2	24" APC	b	
	c																						1.20				24" HW	c	
3	a	128	49.15			1																					REMOVE HW	a	3
	b				1																						REMOVE Culv (12" x 3.6' CMP)	b	
	c				1																						REMOVE Culv (12" x 3.6' CMP)	c	
	d						1	0.73																			ABANDON Culv (12" x 25.0' CMP)	d	
	e																				4.9		1.99	239			TYPE G2 DI (Mod) W/TYPE 24-12X GRATE	e	
	f									35.7															7.2	2	24" APC	f	
	g																		8.0	24.0							RSP (1/4 TON, METHOD B)	g	
4	a	128	49.46		1																						REMOVE Culv (12" x 45.7')	a	4
	b								50.6																3.9	2	18" CMP	b	
	c																				3.7	4.2	0.47	215			PIPE INLET, TYPE OMP W/36RX GRATE	c	
5	a	128	49.72		1																						REMOVE Culv (12" x 46.6' CMP)	a	5
	b					1																					REMOVE HW	b	
	c									48.2															5.2	2	24" CMP	c	
	d																						1.20				24" HW	d	
6	a	128	49.95		1																						REMOVE Culv (12" x 40.2' CMP)	a	6
	b									38.9															6.0	2	24" CMP	b	
	c																		9.3	26.7							RSP (1/4 TON, METHOD B)	c	
	d																	1									24" AFES	d	
SHEET TOTAL					8	3	1	0.73	50.6	233.6								3	17.3	50.7		4.2	4.86	454		12			

(N) - NOT A SEPARATE PAY ITEM, FOR INFORMATION ONLY.

DRAINAGE QUANTITIES

DQ-2

REVISED BY | DATE REVISED
W. KEITH MACK | SARJU PATEL
CALCULATED-DESIGNED BY | CHECKED BY
FUNCTIONAL SUPERVISOR
SCOTT W. MANN

STATE OF CALIFORNIA - DEPARTMENT OF TRANSPORTATION
Caltrans® 03 - DESIGN

LAST REVISION 00-00-00 | DATE PLOTTED => 11-APR-2014 | TIME PLOTTED => 13:29

Dist	COUNTY	ROUTE	POST MILES TOTAL PROJECT	SHEET No.	TOTAL SHEETS
01	Men	128, 253	Var	27	47

REGISTERED CIVIL ENGINEER 4-1-14 DATE

4-1-14
PLANS APPROVAL DATE

REGISTERED PROFESSIONAL ENGINEER W. KEITH MACK No. 73964 Exp. 6-30-15 CIVIL STATE OF CALIFORNIA

THE STATE OF CALIFORNIA OR ITS OFFICERS OR AGENTS SHALL NOT BE RESPONSIBLE FOR THE ACCURACY OR COMPLETENESS OF SCANNED COPIES OF THIS PLAN SHEET.

DRAINAGE QUANTITIES

DRAINAGE SYSTEM No. (PLAN Sht No.)	DRAINAGE UNIT No.	ROUTE	PM	REMOVE INLET EA	REMOVE Culv EA	REMOVE HW EA	ABANDON Culv EA	SAND BACKFILL CY	APC 18" LF	APC 24" LF	AP DD 12" LF	AP DD 18" LF	AP DD 24" LF	(N) APC ELBOW EA	ANCHOR ASSEMBLY EA	12" DD SLIP JOINT EA	12" ENTRANCE TAPER TYPE 1, Alt B EA	24" AFES EA	RSP (1/4 TON, METHOD B) CY	RSP FABRIC (CLASS 8) SQYD	(N) H OF INLET LF	36" CSP INLET (.168" THICK) LF	MINOR Conc (MINOR Str) CY	Misc I & S LB	(N) Max COVER LF	MARKER (Culv) EA	DESCRIPTION	DRAINAGE UNIT No.	DRAINAGE SYSTEM No. (PLAN Sht No.)
7	a	128	50.29			1																					REMOVE HW	a	7
	b					1																					REMOVE HW	b	
	c				1																						REMOVE Culv (12" x 15.0' CMP)	c	
	d				1																						REMOVE Culv (12" x 4.5' CMP)	d	
	e						1	1.22																			ABANDON Culv (12" x 41.8' CMP)	e	
	f									58.5															14.1	2	24" APC	f	
	g																						1.20				24" HW	g	
	h																		9.3	26.7							RSP (1/4 TON, METHOD B)	h	
8	a	253	3.30	1																	4.8						REMOVE INLET	a	8
	b				1																						REMOVE Culv (18" x 51.0' CMP)	b	
	c									56.8															8.2	2	24" APC	c	
	d																				5.7	6.2	0.47	215			TYPE OMP DI W/36RX GRATE	d	
	e																	1									24" AFES	e	
9	a	253	3.67		1																						REMOVE Culv (18" x 55.9' CMP)	a	9
	b									60.4															5.6	2	24" APC	b	
	c																	1									24" AFES	c	
	d																				4.3	4.8	0.47	215			PIPE INLET, TYPE OMP W/36RX GRATE	d	
10	a	253	3.70		1																						REMOVE Culv (18" x 50.4' CMP)	a	10
	b									51.6															6.4	2	24" APC	b	
	c																						1.20				24" HW	c	
	d																	1									24" AFES	d	
11	a	253	3.76		1																						REMOVE Culv (18" x 48.2' CMP)	a	11
	b			1																	4.8						REMOVE INLET	b	
	c									52.3															7.7	2	24" APC	c	
	d																				4.7		1.66	239			TYPE GO DI W/24-12X GRATE	d	
	e																	1									24" AFES	e	
12	a	253	7.35		1																						REMOVE Culv (12" x 41.7' CMP)	a	12
	b									44.8															7.7	2	24" APC	b	
	c																		9.3	26.7							RSP (1/4 TON, METHOD B)	c	
SHEET TOTALS				2	7	2	1	1.22		324.4								4	18.6	53.4		11.0	5.00	669		12			

(N) - NOT A SEPARATE PAY ITEM, FOR INFORMATION ONLY.

REVISED BY | DATE REVISED
W. KEITH MACK | SARJU PATEL
CALCULATED-DESIGNED BY | CHECKED BY
FUNCTIONAL SUPERVISOR
SCOTT W. MANN

STATE OF CALIFORNIA - DEPARTMENT OF TRANSPORTATION
Caltrans
03 - DESIGN

DRAINAGE QUANTITIES

DQ-3

LAST REVISION 00-00-00 | DATE PLOTTED => 11-APR-2014 | TIME PLOTTED => 13:29

Dist	COUNTY	ROUTE	POST MILES TOTAL PROJECT	SHEET No.	TOTAL SHEETS
01	Men	128, 253	Var	28	47

REGISTERED CIVIL ENGINEER 4-1-14 DATE

4-1-14
PLANS APPROVAL DATE

REGISTERED PROFESSIONAL ENGINEER W. KEITH MACK No. 73964 Exp. 6-30-15 CIVIL STATE OF CALIFORNIA

THE STATE OF CALIFORNIA OR ITS OFFICERS OR AGENTS SHALL NOT BE RESPONSIBLE FOR THE ACCURACY OR COMPLETENESS OF SCANNED COPIES OF THIS PLAN SHEET.

DRAINAGE QUANTITIES

DRAINAGE SYSTEM No. (PLAN Sht No.)	DRAINAGE UNIT No.	ROUTE	PM	REMOVE INLET EA	REMOVE Culv EA	REMOVE HW EA	ABANDON Culv EA	SAND BACKFILL CY	APC 18" LF	APC 24" LF	AP DD 12" LF	AP DD 18" LF	AP DD 24" LF	(N) APC ELBOW EA	ANCHOR ASSEMBLY EA	12" DD SLIP JOINT EA	12" ENTRANCE TAPER TYPE 1, Alt B EA	24" AFES EA	RSP (1/4 TON, METHOD B) CY	RSP FABRIC (CLASS 8) SQYD	(N) H OF INLET LF	36" CSP INLET (.168" THICK) LF	MINOR Conc (MINOR Str) CY	Misc I & S LB	(N) Max COVER LF	MARKER (Culv) EA	DESCRIPTION	DRAINAGE UNIT No.	DRAINAGE SYSTEM No. (PLAN Sht No.)
13	a	253	7.62		1																						REMOVE Culv (18" x 79.1' CMP)	a	13
	b			1																	4.5						REMOVE INLET	b	
	c									81.1															7.5	2	24" APC	c	
	d																				4.1	4.6	0.47	215			PIPE INLET, TYPE OMP W/36RX GRATE	d	
	e																		13.2	36.7							RSP (1/4 TON, METHOD B)	e	
14	a	253	8.87		1																						REMOVE Culv (12" x 51.1' CMP)	a	14
	b								49.1																4.4	2	18" APC	b	
	c											24.3		1	2												18" AP DD	c	
	d																		7.3	22.7							RSP (1/4 TON, METHOD B)	d	
15	a	253	9.60		1																						REMOVE Culv (12" x 52.2' CMP)	a	15
	b									59.6															8.8	2	24" APC	b	
	c																				3.9	4.4	0.47	215			PIPE INLET, TYPE OMP W/36RX GRATE	c	
	d																		11.3	30.7							RSP (1/4 TON, METHOD B)	d	
16	a	253	10.20		1																						REMOVE Culv (12" x 50.6' CMP)	a	16
	b									47.8															4.9	2	24" APC	b	
	c												12.5	1	1												24" AP DD	c	
	d																		10.9	28.9							RSP (1/4 TON, METHOD B)	d	
	e																						1.29				24" "L" HW (W = 3'-4")	e	
	f																1										12" ENTRANCE TAPER	f	
	g										4.6				1	1											12" AP DD	g	
17	a	253	10.41		1																						REMOVE Culv (12" x 50.8' CMP)	a	17
	b									49.3															6.5	2	24" APC	b	
	c																				3.6		1.39	239			TYPE GO DI W/24-12X GRATE	c	
	d												17.7	1	1												24" AP DD	d	
	e																		10.9	28.9							RSP (1/4 TON, METHOD B)	e	
	f																1										12" ENTRANCE TAPER	f	
	g										13.0				1	1											12" AP DD	g	
SHEET TOTALS				1	5				49.1	237.8	17.6	24.3	30.2	3	6	2	2	0	53.6	147.9		9	3.62	669		10			

(N) - NOT A SEPARATE PAY ITEM, FOR INFORMATION ONLY.

REVISED BY | DATE REVISED
W. KEITH MACK | SARJU PATEL
CALCULATED-DESIGNED BY | CHECKED BY
FUNCTIONAL SUPERVISOR
SCOTT W. MANN

STATE OF CALIFORNIA - DEPARTMENT OF TRANSPORTATION
Caltrans® 03 - DESIGN

DRAINAGE QUANTITIES
DQ-4

LAST REVISION 00-00-00 | DATE PLOTTED => 11-APR-2014 | TIME PLOTTED => 13:29

Dist	COUNTY	ROUTE	POST MILES TOTAL PROJECT	SHEET No.	TOTAL SHEETS
01	Men	128, 253	Var	29	47

REGISTERED CIVIL ENGINEER 4-1-14 DATE

4-1-14
PLANS APPROVAL DATE

REGISTERED PROFESSIONAL ENGINEER W. KEITH MACK No. 73964 Exp. 6-30-15 CIVIL STATE OF CALIFORNIA

THE STATE OF CALIFORNIA OR ITS OFFICERS OR AGENTS SHALL NOT BE RESPONSIBLE FOR THE ACCURACY OR COMPLETENESS OF SCANNED COPIES OF THIS PLAN SHEET.

DRAINAGE QUANTITIES

DRAINAGE SYSTEM No. (PLAN Sht No.)	DRAINAGE UNIT No.	ROUTE	PM	REMOVE INLET	REMOVE Culv	REMOVE HW	ABANDON Culv	SAND BACKFILL	APC 18"	APC 24"	AP DD 12"	AP DD 18"	AP DD 24"	(N) APC ELBOW	ANCHOR ASSEMBLY	12" DD SLIP JOINT	12" ENTRANCE TAPER TYPE 1, Alt B	24" AFES	RSP (1/4 TON, METHOD B)	RSP FABRIC (CLASS 8)	(N) H OF INLET	36" CSP INLET (.168" THICK)	MINOR Conc (MINOR Str)	Misc I & S	(N) Max COVER	MARKER (Culv)	DESCRIPTION	DRAINAGE UNIT No.	DRAINAGE SYSTEM No. (PLAN Sht No.)
				EA	EA	EA	EA	CY	LF	LF	LF	LF	LF	EA	EA	EA	EA	EA	CY	SQYD	LF	LF	CY	LB	LF	EA			
18	a	253	13.27		1																						REMOVE Culv (12" x 3.5' CMP)	a	18
	b				1																						REMOVE Culv (12" x 3.5' CMP)	b	
	c						1	2.16																			ABANDON Culv (12" x 73.8' CMP)	c	
	d									47.8															6.0	2	24" APC	d	
	e												12.6	1	1												24" AP DD	e	
	f																		9.3	26.7							RSP (1/4 TON, METHOD B)	f	
19	a	253	13.36		1																						REMOVE Culv (12" x 3.5' CMP)	a	19
	b				1																						REMOVE Culv (12" x 3.5' CMP)	b	
	c						1	1.60																			ABANDON Culv (12" x 43.0' CMP)	c	
	d				1																						REMOVE Culv (18" x 48.9' CMP)	d	
	e									48.9															6.5	2	24" APC	e	
	f																						1.20				24" HW	f	
	g																		9.3	26.7							RSP (1/4 TON, METHOD B)	g	
SHEET TOTALS					5		2	3.76		96.7			12.6	1	1				18.6	53.4			1.20			4			
Sht DQ-2 TOTALS					8	3	1	0.73	50.6	233.6								3	17.3	50.7		4.2	4.86	454		12			
Sht DQ-3 TOTALS				2	7	2	1	1.22		324.4								4	18.6	53.4		11.0	5.00	669		12			
Sht DQ-4 TOTALS				1	5				49.1	237.8	17.6	24.3	30.2	3	6	2	2	0	53.6	147.9		9	3.62	669		10			
GRAND TOTALS				3	25	5	4	5.71	99.7	892.5	17.6	24.3	42.8	4	7	2	2	7	108.1	305.4		24.2	14.68	1792		38			

(N) - NOT A SEPARATE PAY ITEM, FOR INFORMATION ONLY.

REVISED BY | DATE REVISED
W. KEITH MACK | SARJU PATEL
CALCULATED-DESIGNED BY | CHECKED BY
FUNCTIONAL SUPERVISOR
SCOTT W. MANN

STATE OF CALIFORNIA - DEPARTMENT OF TRANSPORTATION
Caltrans
03 - DESIGN

DRAINAGE QUANTITIES
DQ-5

LAST REVISION 00-00-00 | DATE PLOTTED => 11-APR-2014 TIME PLOTTED => 13:29

Dist	COUNTY	ROUTE	POST MILES TOTAL PROJECT	SHEET No.	TOTAL SHEETS
01	Men	128, 253	Var	30	47

REGISTERED CIVIL ENGINEER 4-1-14 DATE

4-1-14
PLANS APPROVAL DATE

REGISTERED PROFESSIONAL ENGINEER W. KEITH MACK No. 73964 Exp. 6-30-15 CIVIL STATE OF CALIFORNIA

THE STATE OF CALIFORNIA OR ITS OFFICERS OR AGENTS SHALL NOT BE RESPONSIBLE FOR THE ACCURACY OR COMPLETENESS OF SCANNED COPIES OF THIS PLAN SHEET.

NOTES:

1. EXACT SIGN LOCATIONS TO BE DETERMINED BY THE ENGINEER.

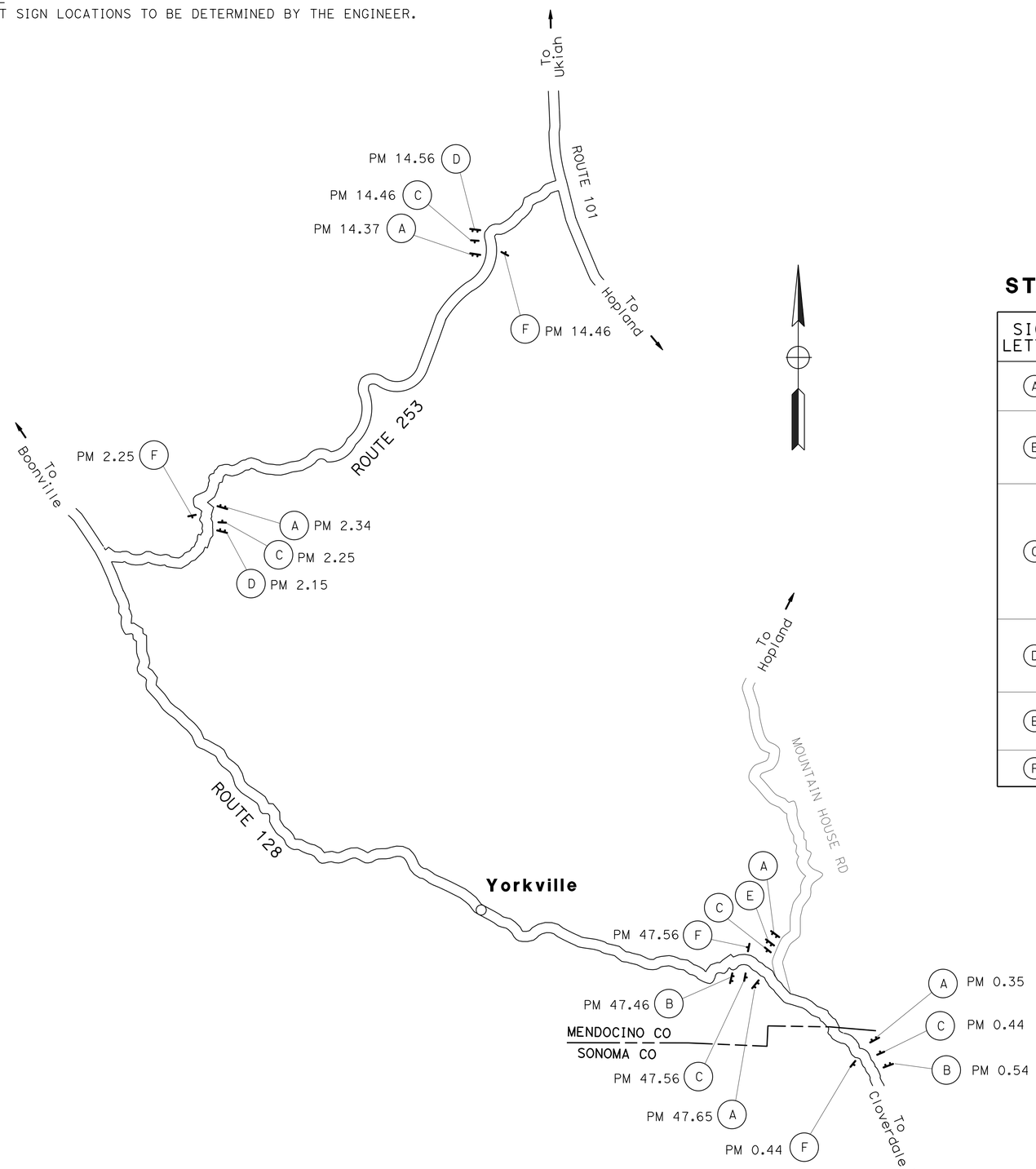

STATIONARY MOUNTED CONSTRUCTION AREA SIGNS

SIGN LETTER	SIGN CODE	SIGN MESSAGE	PANEL SIZE	No. OF POSTS AND SIZE	Qty OF SIGNS
A	C40(CA)	TRAFFIC FINES DOUBLED IN CONSTRUCTION ZONES	108" x 42"	2 - 6" x 8"	5
B	G20-1	ROAD WORK NEXT 3 MILES	60" x 36"	2 - 6" x 6"	2
	C23B(CA)	DRAINAGE REHABILITATION	60" x 24"		
C	W11-1		36" x 36"	1 - 6" x 6"	5
	W16-1	SHARE THE ROAD	24" x 30"		
D	G20-1	ROAD WORK NEXT 11 MILES	60" x 36"	2 - 6" x 6"	2
	C23B(CA)	DRAINAGE REHABILITATION	60" x 24"		
E	W20-1	ROAD WORK AHEAD	48" x 48"	1 - 6" x 6"	1
F	G20-2	END ROAD WORK	36" x 18"	1 - 4" x 4"	4

CONSTRUCTION AREA SIGNS

NO SCALE

CS-1

REVISED BY | DATE REVISED
W. KEITH MACK | SARJU PATEL
CALCULATED-DESIGNED BY | CHECKED BY
FUNCTIONAL SUPERVISOR: SCOTT W. MANN
STATE OF CALIFORNIA - DEPARTMENT OF TRANSPORTATION
03 - DESIGN
Caltrans

LAST REVISION 00-00-00 | DATE PLOTTED => 11-APR-2014 | TIME PLOTTED => 13:29

Dist	COUNTY	ROUTE	POST MILES TOTAL PROJECT	SHEET No.	TOTAL SHEETS
01	Men	128, 253	Var	31	47

REGISTERED CIVIL ENGINEER 4-1-14 DATE

4-1-14
PLANS APPROVAL DATE

REGISTERED PROFESSIONAL ENGINEER W. KEITH MACK No. 73964 Exp. 6-30-15 CIVIL STATE OF CALIFORNIA

THE STATE OF CALIFORNIA OR ITS OFFICERS OR AGENTS SHALL NOT BE RESPONSIBLE FOR THE ACCURACY OR COMPLETENESS OF SCANNED COPIES OF THIS PLAN SHEET.

ROADWAY QUANTITIES

DRAINAGE SYSTEM No.	LOCATION ROUTE	LOCATION PM	ROADWAY EXCAVATION	IMPORTED ROCKY MATERIAL	MINOR CONCRETE (BACKFILL)	BAR Reinf STEEL (EPOXY COATED)	PLACE HMA (Misc AREA)	HMA (TYPE A)	MINOR HMA
			CY			LB	SQYD	TON	
1	128	48.61			14.02	131			6.50
2		48.89			1.97				6.42
3		49.15	2.12						6.42
4		49.46	1.93		2.12				6.91
5		49.72							6.62
6		49.95	4.15						6.79
7	128	50.29							6.77
8	253	3.30		18.87					7.22
9		3.67		10.89					7.25
10		3.70		7.36					7.41
11		3.76		16.13			17.1	5.97	6.98
12		7.35			2.68				7.45
13		7.62							8.01
14		8.87		19.92	1.92				7.31
15		9.60		24.66					7.42
16		10.20			5.06		4.0	1.40	4.75
17		10.41					25.8	9.01	9.31
18		13.27	4.47						7.78
19	253	13.36	3.63						7.25
SUBTOTAL			16.30	97.83	27.77		46.9	16.38	134.57
PLACE HMA DIKE*								2.28	
TOTAL			16.30	97.83	27.77	131	46.9	18.66	134.57

* - Qty FROM HMA DIKE TABLE ON SAME SHEET.

HMA DIKE

DRAINAGE SYSTEM No.	LOCATION ROUTE	LOCATION PM	LOCATION R+/L+	PLACE HMA DIKE (TYPE A)	PLACE HMA DIKE (TYPE F)	HMA (TYPE A)*
				LF	LF	TON
11	253	3.76	L+	20		0.57
16	253	10.20	L+	20		0.52
17	253	10.41	L+	20		0.57
		10.41	R+	18		0.52
18	253	13.27	L+		7	0.10
TOTAL				78	7	2.28

* - Qty INCLUDED IN THE Rdwy QUANTITIES TABLE ON SAME SHEET.

RECONSTRUCT FENCE (TYPE WM)

DRAINAGE SYSTEM No.	LOCATION ROUTE	LOCATION PM	LOCATION R+/L+	LENGTH
				LF
4	128	49.46	R+	24.8
7	128	50.29	R+	26.3
8	253	3.30	L+	26.3
9	253	3.67	R+	25.0
10	253	3.70	R+	25.0
11	253	3.76	R+	25.1
12	253	7.35	R+	34.0
13	253	7.62	R+	26.8
14	253	8.87	R+	28.9
15	253	9.60	R+	35.2
16	253	10.20	R+	36.0
17	253	10.41	R+	33.0
TOTAL				346.4

RECONSTRUCT GUARDRAIL

DRAINAGE SYSTEM No.	LOCATION ROUTE	LOCATION PM	LOCATION R+/L+	LENGTH
				LF
18	253	13.27	L+	27.1
19	253	13.36	L+	27.1
TOTAL				54.2

PAINT TRAFFIC STRIP (2-COAT)

DRAINAGE SYSTEM No.	LOCATION ROUTE	LOCATION PM	DETAIL No. 22	DETAIL No. 27B
			LF	LF
1	128	48.61	14	28
2		48.89	6	12
3		49.15	7	14
4		49.46	8	16
5		49.72	6	12
6		49.95	6	12
7	128	50.29	6	12
8	253	3.30	6	12
9		3.67	6	12
10		3.70	6	12
11		3.76	6	12
12		7.35	6	12
13		7.62	7	14
14		8.87	6	12
15		9.60	7	14
16		10.20	7	14
17		10.41	8	16
18		13.27	6	12
19	253	13.36	6	12
SUBTOTAL			130	260
TOTAL			390	

SUMMARY OF QUANTITIES

Q-1

STATE OF CALIFORNIA - DEPARTMENT OF TRANSPORTATION
Caltrans 03 - DESIGN
FUNCTIONAL SUPERVISOR: SCOTT W. MANN
CALCULATED-DESIGNED BY: W. KEITH MACK
CHECKED BY: GINA LOPEZ
REVISED BY
DATE REVISED

LAST REVISION 00-00-00
DATE PLOTTED => 11-APR-2014
TIME PLOTTED => 13:29

Dist	COUNTY	ROUTE	POST MILES TOTAL PROJECT	SHEET No.	TOTAL SHEETS
01	Men	128, 253	Var	32	47

REGISTERED CIVIL ENGINEER 4-1-14 DATE

4-1-14
PLANS APPROVAL DATE

REGISTERED PROFESSIONAL ENGINEER W. KEITH MACK No. 73964 Exp. 6-30-15 CIVIL STATE OF CALIFORNIA

THE STATE OF CALIFORNIA OR ITS OFFICERS OR AGENTS SHALL NOT BE RESPONSIBLE FOR THE ACCURACY OR COMPLETENESS OF SCANNED COPIES OF THIS PLAN SHEET.

TEMPORARY WATER POLLUTION CONTROL

DRAINAGE SYSTEM No.	LOCATION ROUTE	LOCATION PM	Temp DI PROTECTION	Temp FIBER ROLL	Temp SILT FENCE	Temp CHECK DAM	Temp GRAVEL BAG BERM	Temp COVER
			EA	LF				SQYD
1	128	48.61			20	6	6	15
2	128	48.89			20	6	6	12
3	128	49.15	2	45	20	6	6	14
4	128	49.46	2	45	20	6	6	9
5	128	49.72			20	6	6	14
6	128	49.95			20	6	6	16
7	128	50.29			20	6	6	16
8	253	3.30	2	45	20	6	6	14
9	253	3.67	2	45	20	6	6	12
10	253	3.70			20	6	6	12
11	253	3.76	1	45	20	6	6	14
12	253	7.35			20	6	6	16
13	253	7.62	1	45	20	6	6	16
14	253	8.87			20	6	6	13
15	253	9.60	2	45	20	6	12	19
16	253	10.20			20	6	6	16
17	253	10.41	2	45	20	6	6	16
18	253	13.27			20	6	6	16
19	253	13.36			20	6	6	16
		TOTAL	14	360	380	114	120	276

TEMPORARY FENCE (TYPE ESA)

DRAINAGE SYSTEM No.	LOCATION ROUTE	LOCATION PM	LOCATION R+/L+ OF ℄	LENGTH
				LF
2	128	48.89	R+	45
4	128	49.46	R+	40
5	128	49.72	L+	45
	128	49.72	R+	40
6	128	49.95	L+	20
7	128	50.29	L+	40
8	253	3.30	L+	20
9	253	3.67	R+	60
10	253	3.70	R+	50
11	253	3.76	R+	75
13	253	7.62	L+	40
	253	7.62	R+	75
16	253	10.20	R+	50
17	253	10.41	L+	30
			TOTAL	630

SUMMARY OF QUANTITIES

Q-2

REVISED BY | DATE REVISED
W. KEITH MACK | GINA LOPEZ
CALCULATED-DESIGNED BY | CHECKED BY
FUNCTIONAL SUPERVISOR
SCOTT W. MANN

STATE OF CALIFORNIA - DEPARTMENT OF TRANSPORTATION
Caltrans
03 - DESIGN

LAST REVISION 00-00-00 | DATE PLOTTED => 11-APR-2014 TIME PLOTTED => 13:29

Dist	COUNTY	ROUTE	POST MILES TOTAL PROJECT	SHEET No.	TOTAL SHEETS
01	Men	128,253	Var	33	47

LICENSED LANDSCAPE ARCHITECT

4-1-14
PLANS APPROVAL DATE

LICENSED LANDSCAPE ARCHITECT — LAZZAROTTO, LAURA — Signature 08-31-15 Renewal Date 04-01-14 Date — STATE OF CALIFORNIA

THE STATE OF CALIFORNIA OR ITS OFFICERS OR AGENTS SHALL NOT BE RESPONSIBLE FOR THE ACCURACY OR COMPLETENESS OF SCANNED COPIES OF THIS PLAN SHEET.

FIBER ROLLS

SEQUENCE	ITEM	MATERIAL		REMARKS
		DESCRIPTION	TYPE	
Fiber Rolls must be installed before Erosion Control.	FIBER ROLLS	FIBER ROLL	TYPE B 8" TO 10" Dia	Type 1 Fiber Roll Installation

EROSION CONTROL TYPE 1

SEQUENCE	ITEM	MATERIAL		APPLICATION RATE
		DESCRIPTION	TYPE	
STEP 1	HYDROSEED	SEED	MIX 1	170 LB/ACRE
		FIBER	WOOD	1500 LB/ACRE
		TACKIFIER	PSYLLIUM	150 LB/ACRE

SEED MIX 1

SEED	BOTANICAL NAME (COMMON NAME)	PERCENT GERMINATION (MINIMUM)	POUNDS PURE LIVE SEED PER ACRE (SLOPE MEASUREMENT)
MIX 1	BROMUS CARINATUS [1] (CALIFORNIA BROME)	50	40
	ELYMUS GLAUCUS 'BERKELEY' [1] (WILD RYE, BERKELEY)	55	40
	ELYMUS X TRITICUM (REGREEN)	75	90

[1] SEED PRODUCED IN CALIFORNIA ONLY.

EROSION CONTROL QUANTITIES

DRAINAGE SYSTEM NO.	COUNTY	ROUTE	PM	HYDROSEED	PURE LIVE SEED (N)	FIBER ROLLS
				SQFT	LBS	LF
1	MEN	128	48.61	625	2.44	-
2	MEN	128	48.89	240	0.94	25
3	MEN	128	49.15	445	1.74	80
4	MEN	128	49.46	375	1.46	28
5	MEN	128	49.72	345	1.35	25
6	MEN	128	49.95	175	0.68	25
7	MEN	128	50.29	550	2.15	60
8	MEN	253	3.30	325	1.27	25
9	MEN	253	3.67	490	1.91	38
10	MEN	253	3.70	305	1.19	25
11	MEN	253	3.76	310	1.21	25
12	MEN	253	7.35	355	1.39	44
13	MEN	253	7.62	875	3.41	50
14	MEN	253	8.87	435	1.70	65
15	MEN	253	9.60	480	1.87	45
16	MEN	253	10.20	450	1.76	45
17	MEN	253	10.41	410	1.60	60
18	MEN	253	13.27	520	2.03	75
19	MEN	253	13.36	515	2.01	66
			TOTAL	8225	32.10	806

(N) NOT A SEPARATE PAY ITEM, FOR INFORMATION ONLY

EROSION CONTROL LEGEND AND QUANTITIES

ECL-1

STATE OF CALIFORNIA - DEPARTMENT OF TRANSPORTATION
Caltrans® LANDSCAPE

SENIOR LANDSCAPE ARCHITECT: RON FLORY
CALCULATED-DESIGNED BY: LAURA LAZZAROTTO
CHECKED BY:
REVISED BY: ---
DATE REVISED: ---

LAST REVISION 00-00-00
DATE PLOTTED => 11-APR-2014
TIME PLOTTED => 13:29

Dist	COUNTY	ROUTE	POST MILES TOTAL PROJECT	SHEET No.	TOTAL SHEETS
01	Men	128,253	Var	34	47

Laura Lazzarotto
LICENSED LANDSCAPE ARCHITECT

4-1-14
PLANS APPROVAL DATE

LICENSED LANDSCAPE ARCHITECT — LAURA LAZZAROTTO — Signature — 08-31-15 Renewal Date — 04-01-14 Date — STATE OF CALIFORNIA

THE STATE OF CALIFORNIA OR ITS OFFICERS OR AGENTS SHALL NOT BE RESPONSIBLE FOR THE ACCURACY OR COMPLETENESS OF SCANNED COPIES OF THIS PLAN SHEET.

NOTE:

1. FOR ACCURATE RIGHT OF WAY DATA, CONTACT RIGHT OF WAY ENGINEERING AT THE DISTRICT OFFICE.

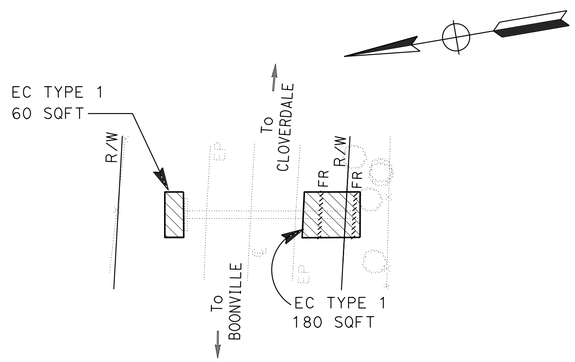

DRAINAGE SYSTEM 2
ROUTE 128
PM 48.89
SCALE: 1" = 20'

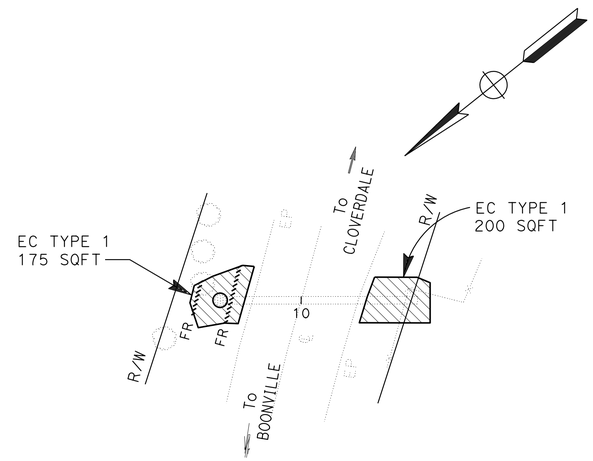

DRAINAGE SYSTEM 4
ROUTE 128
PM 49.46
SCALE: 1" = 20'

LEGEND

- ROCK SLOPE PROTECTION
- Temp FENCE (TYPE ESA)
- EC TYPE 1

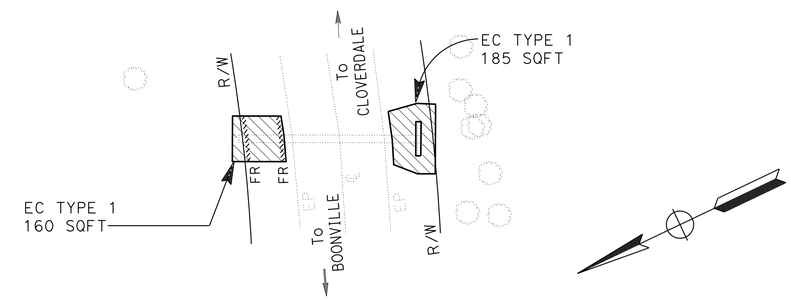

DRAINAGE SYSTEM 5
ROUTE 128
PM 49.72
SCALE: 1" = 20'

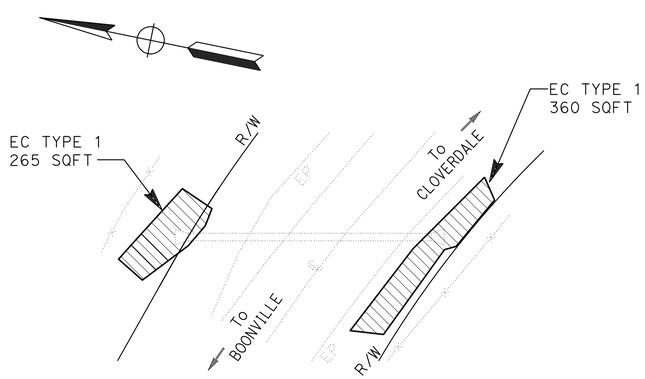

DRAINAGE SYSTEM 1
ROUTE 128
PM 48.61
SCALE: 1" = 20'

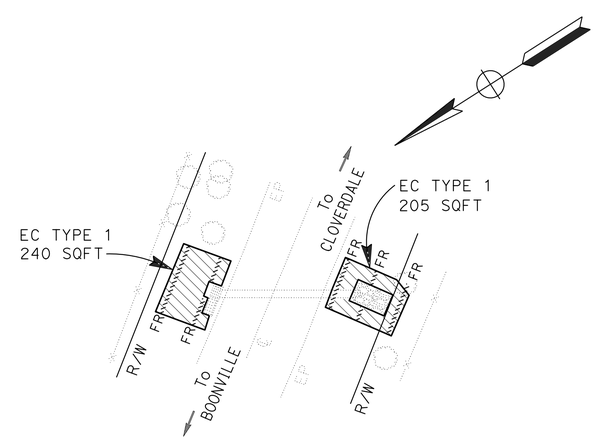

DRAINAGE SYSTEM 3
ROUTE 128
PM 49.15
SCALE: 1" = 20'

EROSION CONTROL PLAN

SCALE AS SHOWN

EC-1

STATE OF CALIFORNIA - DEPARTMENT OF TRANSPORTATION
Caltrans®
LANDSCAPE

SENIOR LANDSCAPE ARCHITECT: RON FLORY
CALCULATED-DESIGNED BY: LAURA LAZZAROTTO
CHECKED BY: LAURA LAZZAROTTO
REVISED BY: ---
DATE REVISED: ---

LAST REVISION 00-00-00
DATE PLOTTED => 11-APR-2014
TIME PLOTTED => 13:29

Dist	COUNTY	ROUTE	POST MILES TOTAL PROJECT	SHEET No.	TOTAL SHEETS
01	Men	128,253	Var	35	47

Laura Lazzarotto
LICENSED LANDSCAPE ARCHITECT

4-1-14
PLANS APPROVAL DATE

LICENSED LANDSCAPE ARCHITECT — LAURA LAZZAROTTO — Signature — 08-31-15 Renewal Date — 04-01-14 Date — STATE OF CALIFORNIA

THE STATE OF CALIFORNIA OR ITS OFFICERS OR AGENTS SHALL NOT BE RESPONSIBLE FOR THE ACCURACY OR COMPLETENESS OF SCANNED COPIES OF THIS PLAN SHEET.

NOTE:

1. FOR ACCURATE RIGHT OF WAY DATA, CONTACT RIGHT OF WAY ENGINEERING AT THE DISTRICT OFFICE.

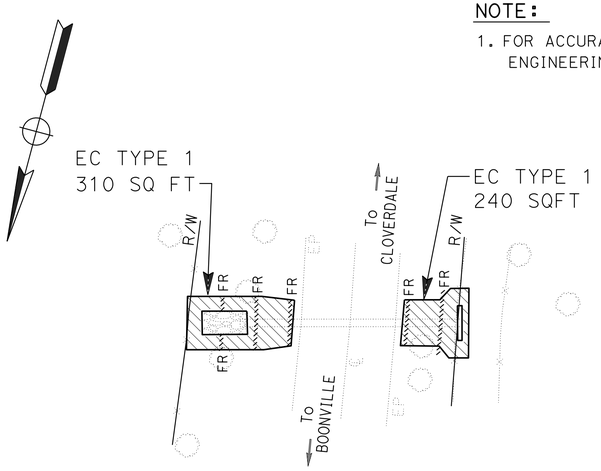

DRAINAGE SYSTEM 7
ROUTE 128
PM 50.29
SCALE: 1" = 20'

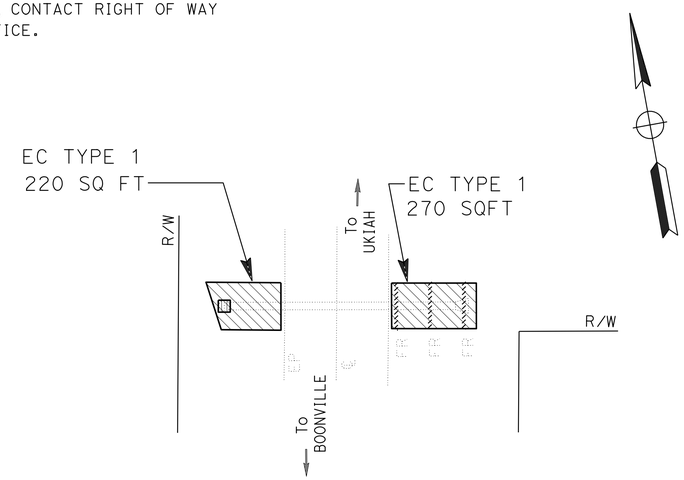

DRAINAGE SYSTEM 9
ROUTE 253
PM 3.67
SCALE: 1" = 20'

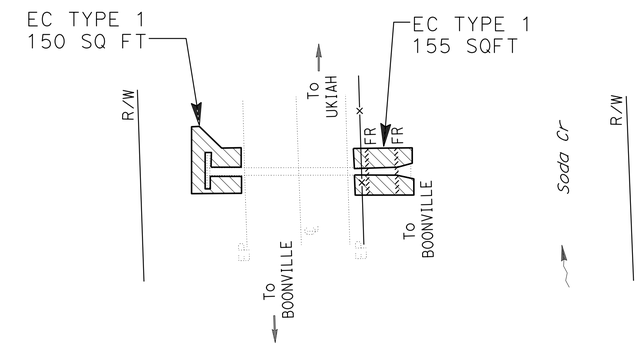

DRAINAGE SYSTEM 10
ROUTE 253
PM 3.70
SCALE: 1" = 20'

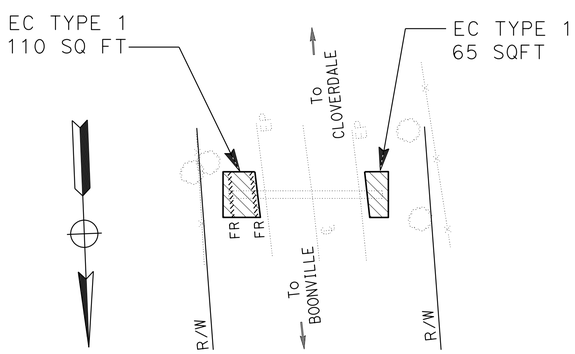

DRAINAGE SYSTEM 6
ROUTE 128
PM 49.95
SCALE: 1" = 20'

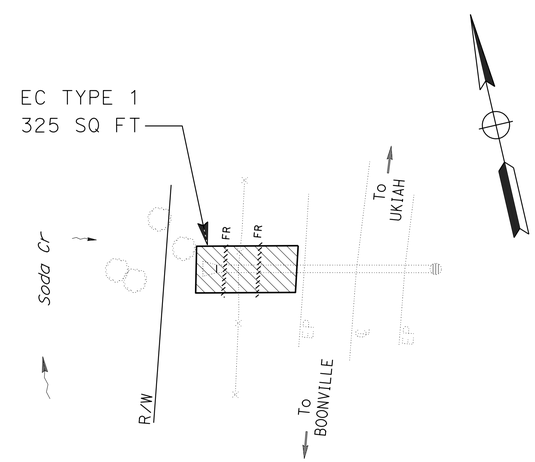

DRAINAGE SYSTEM 8
ROUTE 253
PM 3.30
SCALE: 1" = 20'

EROSION CONTROL PLAN

SCALE AS SHOWN

EC-2

STATE OF CALIFORNIA - DEPARTMENT OF TRANSPORTATION
Caltrans®
LANDSCAPE

SENIOR LANDSCAPE ARCHITECT: RON FLORY

CALCULATED-DESIGNED BY: LAURA LAZZAROTTO
CHECKED BY: LAURA LAZZAROTTO

REVISED BY: ---
DATE REVISED: ---

LAST REVISION 00-00-00
DATE PLOTTED => 11-APR-2014
TIME PLOTTED => 13:29

Dist	COUNTY	ROUTE	POST MILES TOTAL PROJECT	SHEET No.	TOTAL SHEETS
01	Men	128,253	Var	36	47

Laura Lazzarotto
LICENSED LANDSCAPE ARCHITECT

4-1-14
PLANS APPROVAL DATE

LICENSED LANDSCAPE ARCHITECT
L. LAZZAROTTO, 1/30/14
Laura Lazzarotto
08-31-15
Renewal Date
04-01-14
Date
STATE OF CALIFORNIA

THE STATE OF CALIFORNIA OR ITS OFFICERS OR AGENTS SHALL NOT BE RESPONSIBLE FOR THE ACCURACY OR COMPLETENESS OF SCANNED COPIES OF THIS PLAN SHEET.

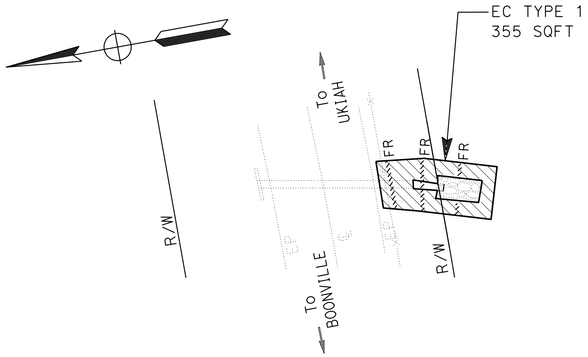

DRAINAGE SYSTEM 12
ROUTE 253
PM 7.35
SCALE: 1" = 20'

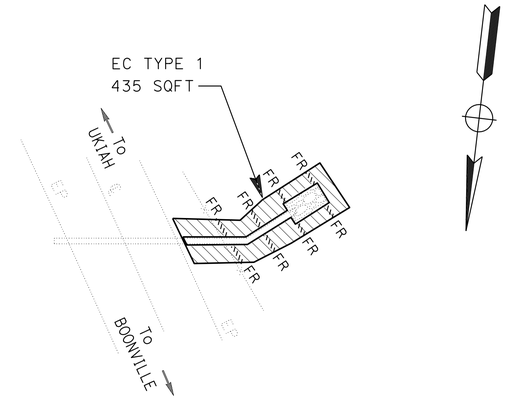

DRAINAGE SYSTEM 14
ROUTE 253
PM 8.87
SCALE: 1" = 20'

NOTE:

1. FOR ACCURATE RIGHT OF WAY DATA, CONTACT RIGHT OF WAY ENGINEERING AT THE DISTRICT OFFICE.

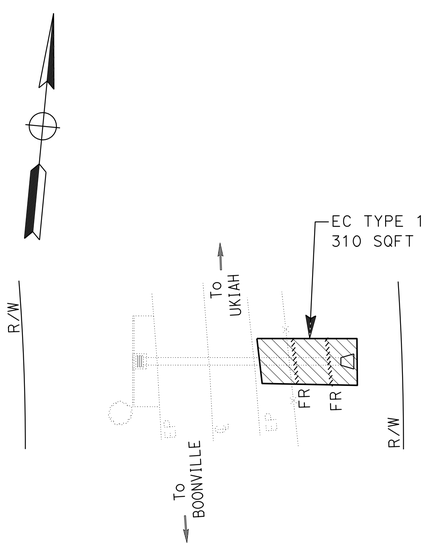

DRAINAGE SYSTEM 11
ROUTE 253
PM 3.76
SCALE: 1" = 20'

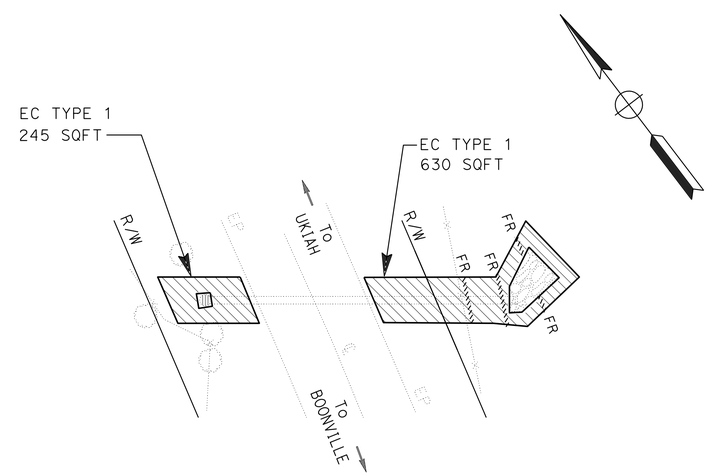

DRAINAGE SYSTEM 13
ROUTE 253
PM 7.62
SCALE: 1" = 20'

EROSION CONTROL PLAN

SCALE AS SHOWN

EC-3

STATE OF CALIFORNIA - DEPARTMENT OF TRANSPORTATION	LANDSCAPE	SENIOR LANDSCAPE ARCHITECT	RON FLORY
CALCULATED-DESIGNED BY	LAURA LAZZAROTTO	REVISED BY	---
CHECKED BY	LAURA LAZZAROTTO	DATE REVISED	---

LAST REVISION 00-00-00
DATE PLOTTED => 11-APR-2014
TIME PLOTTED => 13:29

Dist	COUNTY	ROUTE	POST MILES TOTAL PROJECT	SHEET No.	TOTAL SHEETS
01	Men	128,253	Var	37	47

Laura Lazzarotto
LICENSED LANDSCAPE ARCHITECT

4-1-14
PLANS APPROVAL DATE

LICENSED LANDSCAPE ARCHITECT — LAURA LAZZAROTTO, PRINCIPAL — Signature — 08-31-15 Renewal Date — 04-01-14 Date — STATE OF CALIFORNIA

THE STATE OF CALIFORNIA OR ITS OFFICERS OR AGENTS SHALL NOT BE RESPONSIBLE FOR THE ACCURACY OR COMPLETENESS OF SCANNED COPIES OF THIS PLAN SHEET.

NOTE:

1. FOR ACCURATE RIGHT OF WAY DATA, CONTACT RIGHT OF WAY ENGINEERING AT THE DISTRICT OFFICE.

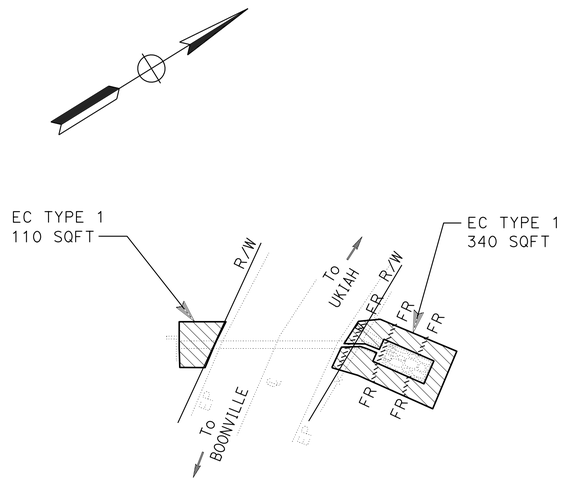

DRAINAGE SYSTEM 16
ROUTE 253
PM 10.20
SCALE: 1" = 20'

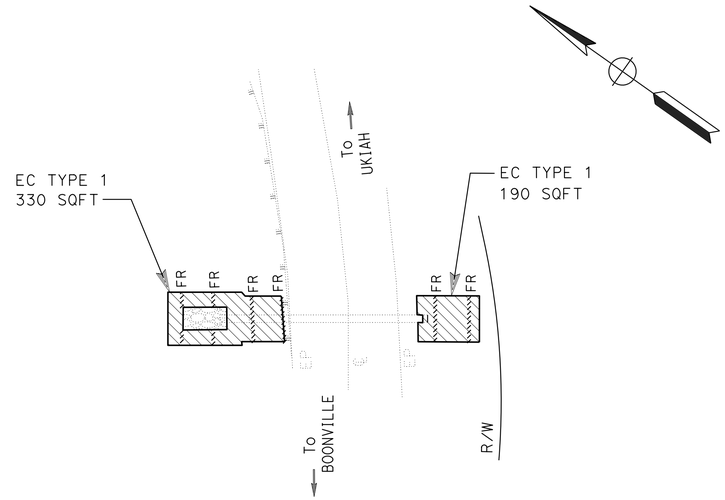

DRAINAGE SYSTEM 18
ROUTE 253
PM 13.27
SCALE: 1" = 20'

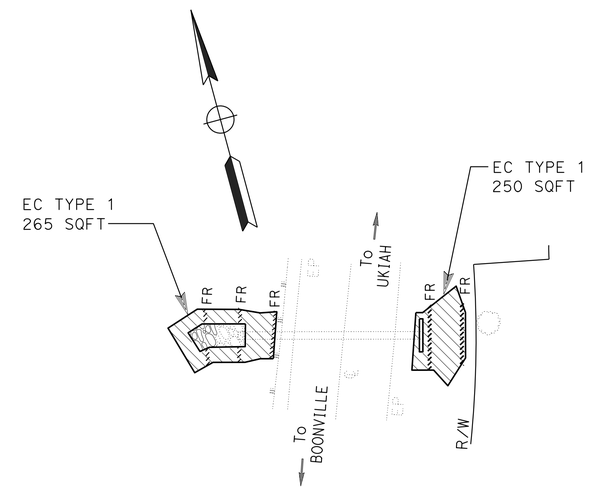

DRAINAGE SYSTEM 19
ROUTE 253
PM 13.36
SCALE: 1" = 20'

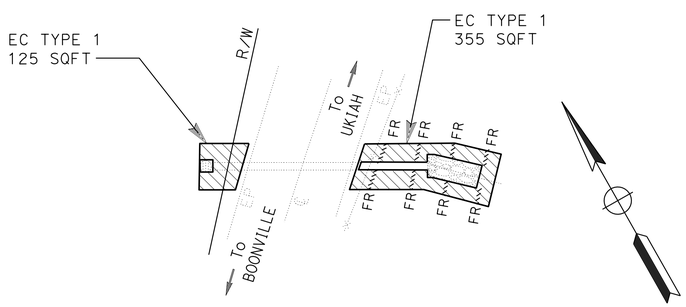

DRAINAGE SYSTEM 15
ROUTE 253
PM 9.60
SCALE: 1" = 20'

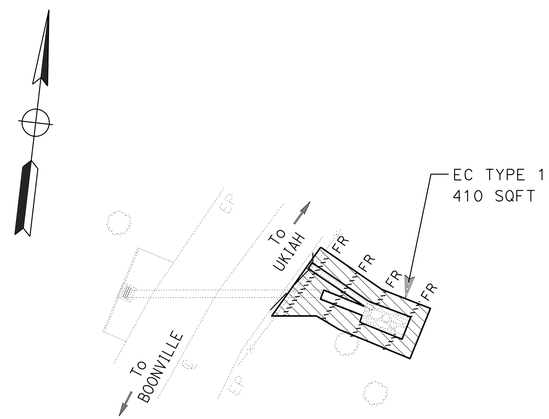

DRAINAGE SYSTEM 17
ROUTE 253
PM 10.41
SCALE: 1" = 20'

EROSION CONTROL PLAN

SCALE AS SHOWN

EC-4

STATE OF CALIFORNIA - DEPARTMENT OF TRANSPORTATION
Caltrans®
LANDSCAPE

SENIOR LANDSCAPE ARCHITECT: RON FLORY

CALCULATED-DESIGNED BY: LAURA LAZZAROTTO
CHECKED BY: LAURA LAZZAROTTO

REVISED BY: ---
DATE REVISED: ---

LAST REVISION: 00-00-00
DATE PLOTTED => 11-APR-2014
TIME PLOTTED => 13:29

M

Maint	MAINTENANCE
Max	MAXIMUM
MB	METAL BEAM
MBB	METAL BEAM BARRIER
MBGR	METAL BEAM GUARD RAILING
Med	MEDIAN
MGS	MIDWEST GUARDRAIL SYSTEM
MH	MANHOLE
Min	MINIMUM
Misc	MISCELLANEOUS
Misc I & S	MISCELLANEOUS IRON AND STEEL
Mkr	MARKER
Mod	MODIFIED,
	MODIFY
Mon	MONUMENT
MP	METAL PLATE
MPGR	METAL PLATE GUARD RAILING
MR	MOVEMENT RATING
MSE	MECHANICALLY STABILIZED EMBANKMENT
Mt	MOUNTAIN, MOUNT
Mtl	MATERIAL
MVP	MAINTENANCE VEHICLE PULLOUT

N

N	NORTH
NB	NORTHBOUND
No.	NUMBER (MUST HAVE PERIOD)
Nos.	NUMBERS (MUST HAVE PERIOD)
NPS	NOMINAL PIPE SIZE
NS	NEAR SIDE
NSP	NEW STANDARD PLAN
NTS	NOT TO SCALE

O

Oblr	OBLITERATE
OC	OVERCROSSING
OD	OUTSIDE DIAMETER
OF	OUTSIDE FACE
OG	ORIGINAL GROUND
OGAC	OPEN GRADED ASPHALT CONCRETE
OGFC	OPEN GRADED FRICTION COURSE
OH	OVERHEAD
OHWM	ORDINARY HIGH WATER MARK
O-O	OUT TO OUT
Opp	OPPOSITE
OSD	OVERSIDE DRAIN

P

p	PAGE
PAP	PERFORATED ALUMINUM PIPE
PB	PULL BOX
PC	POINT OF CURVATURE,
	PRECAST
PCC	POINT OF COMPOUND CURVE,
	PORTLAND CEMENT CONCRETE
PCMS	PORTABLE CHANGEABLE MESSAGE SIGN
PCP	PERFORATED CONCRETE PIPE,
	PRESTRESSED CONCRETE PIPE
PCVC	POINT OF COMPOUND VERTICAL CURVE
PEC	PERMIT TO ENTER AND CONSTRUCT
Ped	PEDESTRIAN
Ped OC	PEDESTRIAN OVERCROSSING
Ped UC	PEDESTRIAN UNDERCROSSING
Perm Mtl	PERMEABLE MATERIAL

P continued

PG	PROFILE GRADE
PI	POINT OF INTERSECTION
PJP	PARTIAL JOINT PENETRATION
Pkwy	PARKWAY
ℙ,PL	PLATE
P/L	PROPERTY LINE
PM	POST MILE,
	TIME FROM NOON TO MIDNIGHT
PN	PAVING NOTCH
POC	POINT OF HORIZONTAL CURVE
POT	POINT OF TANGENT
POVC	POINT OF VERTICAL CURVE
PP	PIPE PILE,
	PLASTIC PIPE,
	POWER POLE
PPL	PREFORMED PERMEABLE LINER
PPP	PERFORATED PLASTIC PIPE
PRC	POINT OF REVERSE CURVE
PRF	PAVEMENT REINFORCING FABRIC
PRVC	POINT OF REVERSE VERTICAL CURVE
PS&E	PLANS, SPECIFICATIONS AND ESTIMATES
PS, P/S	PRESTRESSED
PSP	PERFORATED STEEL PIPE
PT	POINT OF TANGENCY
PVC	POLYVINYL CHLORIDE
Pvmt	PAVEMENT

Q

Qty	QUANTITY

R

R	RADIUS
R & D	REMOVE AND DISPOSE
R & S	REMOVE AND SALVAGE
R/C	RATE OF CHANGE
RCA	REINFORCED CONCRETE ARCH
RCB	REINFORCED CONCRETE BOX
RCP	REINFORCED CONCRETE PIPE
RCPA	REINFORCED CONCRETE PIPE ARCH
Rd	ROAD
Reinf	REINFORCED,
	REINFORCEMENT,
	REINFORCING
Rel	RELOCATE
Repl	REPLACEMENT
Ret	RETAINING
Rev	REVISED, REVISION
Rdwy	ROADWAY
RHMA	RUBBERIZED HOT MIX ASPHALT
Riv	RIVER
RM	ROAD-MIXED
RP	RADIUS POINT,
	REFERENCE POINT
RR	RAILROAD
RSP	ROCK SLOPE PROTECTION,
	REVISED STANDARD PLAN
Rt	RIGHT
Rte	ROUTE
RW	REDWOOD,
	RETAINING WALL
R/W	RIGHT OF WAY
Rwy	RAILWAY

S

S	SOUTH,
	SUPPLEMENT
SAE	STRUCTURE APPROACH EMBANKMENT
Salv	SALVAGE
SAPP	STRUCTURAL ALUMINUM PLATE PIPE
SB	SOUTHBOUND
SC	SAND CUSHION
SCSP	SLOTTED CORRUGATED STEEL PIPE
SD	STORM DRAIN
Sec	SECOND,
	SECTION
Sep	SEPARATION
SG	SUBGRADE
Shld	SHOULDER
Sht	SHEET
Sim	SIMILAR
℄	STATION LINE
SM	SELECTED MATERIAL
Spec	SPECIAL,
	SPECIFICATIONS
SPP	SLOTTED PLASTIC PIPE
SS	SLOPE STAKE
SSBM	STRAP AND SADDLE BRACKET METHOD
SSD	STRUCTURAL SECTION DRAIN
SSPA	STRUCTURAL STEEL PLATE ARCH
SSPP	STRUCTURAL STEEL PLATE PIPE
SSPPA	STRUCTURAL STEEL PLATE PIPE ARCH
SSRP	STEEL SPIRAL RIB PIPE
St	STREET
Sta	STATION
STBB	SINGLE THRIE BEAM BARRIER
Std	STANDARD
Str	STRUCTURE
Surf	SURFACING
SW	SIDEWALK,
	SOUND WALL
Swr	SEWER
Sym	SYMMETRICAL
S4S	SURFACE 4 SIDES

T

T	SEMI-TANGENT
Tan	TANGENT
TBB	THRIE BEAM BARRIER
Tbr	TIMBER
TC	TOP OF CURB
TCB	TRAFFIC CONTROL BOX
TCE	TEMPORARY CONSTRUCTION EASEMENT
Tel	TELEPHONE
Temp	TEMPORARY
TG	TOP OF GRADE
Tot	TOTAL
TP	TELEPHONE POLE
TPB	TREATED PERMEABLE BASE
TPM	TREATED PERMEABLE MATERIAL
Trans	TRANSITION

T continued

TS	TRANSVERSE,
	TRAFFIC SIGNAL,
	TUBULAR STEEL
Typ	TYPICAL

U

UC	UNDERCROSSING
UD	UNDERDRAIN
UG	UNDERGROUND
UON	UNLESS OTHERWISE NOTED
UP	UNDERPASS

V

V	VALVE,
	DESIGN SPEED
Var	VARIABLE,
	VARIES
VC	VERTICAL CURVE
VCP	VITRIFIED CLAY PIPE
Vert	VERTICAL
Via	VIADUCT
Vol	VOLUME

W

W	WEST,
	WIDTH
WB	WESTBOUND
WH	WEEP HOLE
WM	WIRE MESH
WS	WATER SURFACE
WSP	WELDED STEEL PIPE
Wt	WEIGHT
WV	WATER VALVE
WW	WINGWALL
WWLOL	WINGWALL LAYOUT LINE

X

X Sec	CROSS SECTION
Xing	CROSSING

Y

Yr	YEAR
Yrs	YEARS

Dist	COUNTY	ROUTE	POST MILES TOTAL PROJECT	SHEET No.	TOTAL SHEETS
01	Men	128, 253	Var	38	47

Grace M. Tsushima
REGISTERED CIVIL ENGINEER

July 19, 2013
PLANS APPROVAL DATE

REGISTERED PROFESSIONAL ENGINEER Grace M. Tsushima No. C49814 Exp. 9-30-14 CIVIL STATE OF CALIFORNIA

THE STATE OF CALIFORNIA OR ITS OFFICERS OR AGENTS SHALL NOT BE RESPONSIBLE FOR THE ACCURACY OR COMPLETENESS OF SCANNED COPIES OF THIS PLAN SHEET.

TO ACCOMPANY PLANS DATED 4-1-14

UNIT OF MEASUREMENT SYMBOLS:

Some of the symbols used in the project plan quantity tables and in the Bid Item List are:

TABLE A

SYMBOL USED	DEFINITIONS
ACRE	ACRE
CF	CUBIC FOOT
CY	CUBIC YARD
EA	EACH
GAL	GALLON
LB	POUND
LF	LINEAR FOOT
SQFT	SQUARE FOOT
SQYD	SQUARE YARD
STA	100 FEET
TAB	TABLET
TON	2,000 POUNDS

Some of the symbols used in the plans other than in the project plan quantity tables are:

TABLE B

SYMBOL USED	DEFINITIONS
ksi	KIPS PER SQUARE INCH
ksf	KIPS PER SQUARE FOOT
psi	POUNDS PER SQUARE INCH
psf	POUNDS PER SQUARE FOOT
lb/ft^3, pcf	POUNDS PER CUBIC FOOT
tsf	TONS PER SQUARE FOOT
mph, MPH *	MILES PER HOUR
ø	NOMINAL DIAMETER
oz	OUNCE
lb	POUND
kip	1,000 POUNDS
cal	CALORIE
ft	FOOT OR FEET
gal	GALLON

* For use on a sign panel only

STATE OF CALIFORNIA
DEPARTMENT OF TRANSPORTATION

ABBREVIATIONS (SHEET 2 OF 2)

NO SCALE

RSP A10B DATED JULY 19, 2013 SUPERSEDES STANDARD PLAN A10B DATED MAY 20, 2011 - PAGE 2 OF THE STANDARD PLANS BOOK DATED 2010.

REVISED STANDARD PLAN RSP A10B

2010 REVISED STANDARD PLAN RSP A10B

6-7-13

Dist	COUNTY	ROUTE	POST MILES TOTAL PROJECT	SHEET No.	TOTAL SHEETS
01	Men	128, 253	Var	39	47

REGISTERED CIVIL ENGINEER

July 19, 2013
PLANS APPROVAL DATE

REGISTERED PROFESSIONAL ENGINEER
Michael Janzen
No. 44788
Exp. 03-31-14
CIVIL
STATE OF CALIFORNIA

THE STATE OF CALIFORNIA OR ITS OFFICERS OR AGENTS SHALL NOT BE RESPONSIBLE FOR THE ACCURACY OR COMPLETENESS OF SCANNED COPIES OF THIS PLAN SHEET.

TO ACCOMPANY PLANS DATED 4-1-14

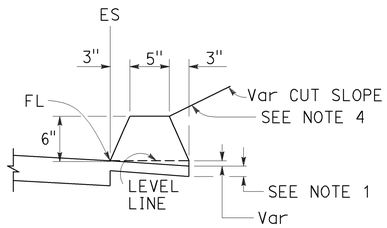

TYPE A
See Note 3

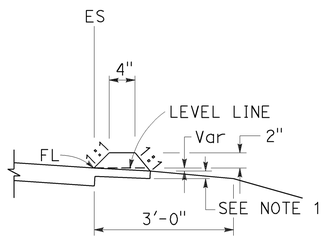

TYPE C

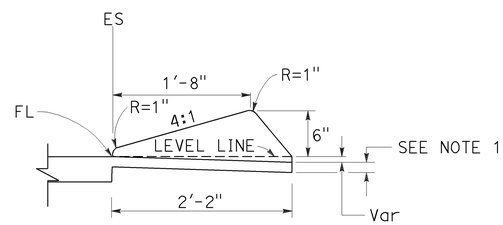

TYPE D

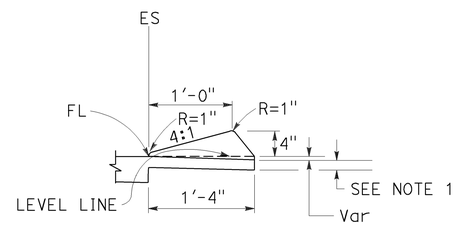

TYPE E

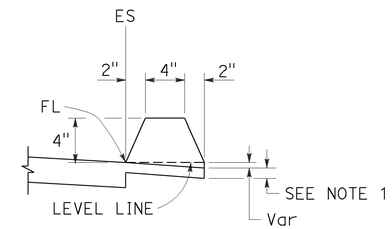

TYPE F
See Note 5

DIKES

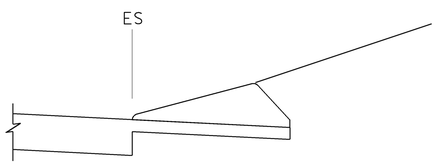

CASE C-1
Cut Slope

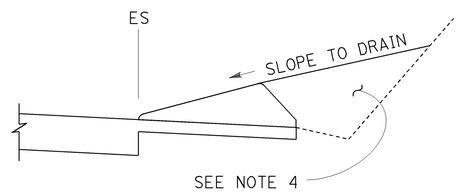

CASE C-2
Cut Slope

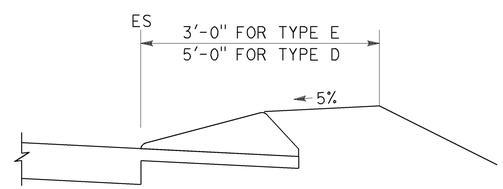

CASE F

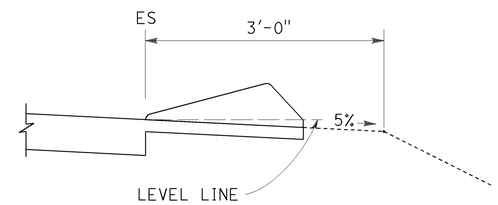

CASE R
See Note 2

TYPE D AND E BACKFILL DETAILS

NOTES:

1. For HMA shoulders only, extend top layer of HMA placed on the shoulder under dike with no joint at the ES. For projects with OGFC shoulders, do not extend OGFC under dike. See project plans for modified dike detail.
2. Case R applies to retrofit only projects where restrictive conditions do not provide enough width for Case F backfill.
3. Type A dike only to be used where restrictive slope conditions do not provide enough width to use Type D or Type E dike.
4. Fill and compact with excavated material to top of dike.
5. Use Type F dike, where dike is required with guard railing installations. See Revised Standard Plan RSP A77N4 for dike positioning details.

DIKE QUANTITIES

TYPE	CUBIC YARDS PER LINEAR FOOT
A	0.0135
C	0.0038
D	0.0293
E	0.0130
F	0.0066

Quantities based on 5% cross slope.

STATE OF CALIFORNIA
DEPARTMENT OF TRANSPORTATION

HOT MIX ASPHALT DIKES

NO SCALE

RSP A87B DATED JULY 19, 2013 SUPERSEDES STANDARD PLAN A87B
DATED MAY 20, 2011 - PAGE 120 OF THE STANDARD PLANS BOOK DATED 2010.

REVISED STANDARD PLAN RSP A87B

2010 REVISED STANDARD PLAN RSP A87B

6-27-13

TO ACCOMPANY PLANS DATED 4-1-14

Dist	COUNTY	ROUTE	POST MILES TOTAL PROJECT	SHEET No.	TOTAL SHEETS
01	Men	128, 253	Var	40	47

Glenn DeCou
REGISTERED CIVIL ENGINEER

October 19, 2012
PLANS APPROVAL DATE

REGISTERED PROFESSIONAL ENGINEER Glenn DeCou No. C34547 Exp. 9-30-13 CIVIL STATE OF CALIFORNIA

THE STATE OF CALIFORNIA OR ITS OFFICERS OR AGENTS SHALL NOT BE RESPONSIBLE FOR THE ACCURACY OR COMPLETENESS OF SCANNED COPIES OF THIS PLAN SHEET.

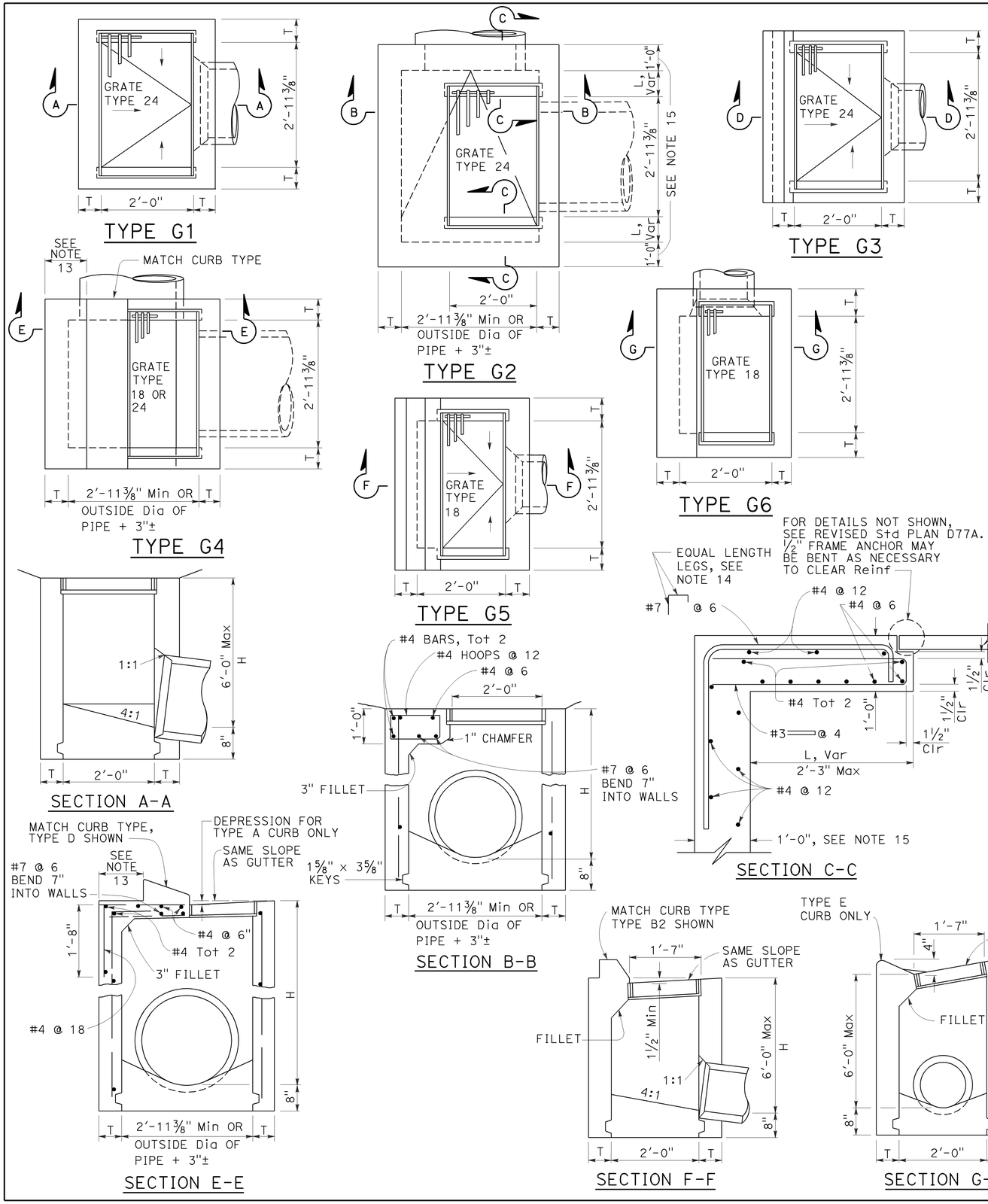

NOTES:

1. "H" is the difference in elevation between the outlet pipe flow line and the normal gutter grade line undepressed.
2. For "T" wall thickness, see Table A below.
3. Wall reinforcing not required when "H" is 8'-0" or less and the unsupported width or length is 7'-0" or less. Walls exceeding these limits shall be reinforced with #4 bars @ 1'-6" ± centers placed 1½" clear to inside of box unless otherwise shown.
4. Inlet bottom reinforcing not required. See Standard Plan D74C for alternative reinforced bottom and alternative half round bottom.
5. Steps-None required where "H" is less than 2'-6". Where "H" is 2'-6" or more, install steps with lowest rung 1'-0" above the floor and highest rung not more than 6" below top of inlet. The distance between steps shall not exceed 1'-0" and shall be uniform throughout the length of the wall. Place steps in the wall without an opening. Steps inserts may be substituted for the bar steps. Step inserts shall comply with State Industrial Safety requirements. See Standard Plan D74C for step details.
6. Details shown apply to both metal and concrete pipe.
7. Pipe(s) can be placed in any wall.
8. Curb section shall match adjacent curb.
9. Basin floors shall have wood trowel finish and a minimum slope of 12:3 from all directions toward outlet pipe.
10. Set inlet so that grate bars are parallel to direction of principal surface flow.
11. See Revised Standard Plans D77A and D77B for grate and frame details and weights of miscellaneous iron and steel.
12. See Standard Plan D78A for gutter depression details.
13. This dimenison will vary with different grates, curbs types, box width and wall thickness.
14. Bar may be rotated as necessary to clear opening. Where "L" is 6" or less, bar may be omitted.
15. Where "L" is 6" or less, wall thickness shall be as shown in Table A.
16. Cast-in-place inlets to be formed around all pipes/stubs intersecting the inlet, and concrete poured in one continuous operation. Precast inlets shall have mortared connections conforming to details for Type GCP Inlet shown on Standard Plan D75B. See Standard Specifications for mortar composition.

TABLE A

CONCRETE QUANTITIES				
TYPE	H=3'-0" TO 8'-0" (T=6")		H=8'-1" TO 20'-0" (T=8")	
	H=3'-0" (CY)	ADDITIONAL PCC PER FOOT (CY)	H=8'-1" (CY)	ADDITIONAL PCC PER FOOT (CY)
G-1	0.95	0.220	See Note A	SEE NOTE A
G-2*	1.31	0.255	3.50	0.357
G-3	1.03	0.220	See Note A	SEE NOTE A
G-4* (TYPE 24)	1.27	0.255	3.48	0.357
G-4* (TYPE 18)	1.30	0.255	3.50	0.357
G-5	1.02	0.220	SEE NOTE A	SEE NOTE A
G-6	1.04	0.220	SEE NOTE A	SEE NOTE A

TABLE BASED ON 8" FLOOR SLAB. NO DEDUCTIONS ARE TO BE MADE TO THESE QUANTITIES BECAUSE OF PIPE OPENINGS, DIFFERENT FLOOR ALTERNATIVES OR DIFFERENT CURB TYPES. * QUANTITIES FOR TYPE G-2 AND G-4 INLETS BASED ON THE MINIMUM INTERIOR DIMENSIONS.

NOTE A:

Maximum allowable height 6'-0".

STATE OF CALIFORNIA
DEPARTMENT OF TRANSPORTATION

DRAINAGE INLETS

NO SCALE

RSP D73 DATED OCTOBER 19, 2012 SUPERSEDES STANDARD PLAN D73 DATED MAY 20, 2011 - PAGE 156 OF THE STANDARD PLANS BOOK DATED 2010.

REVISED STANDARD PLAN RSP D73

2010 REVISED STANDARD PLAN RSP D73

7-19-12

Dist	COUNTY	ROUTE	POST MILES TOTAL PROJECT	SHEET No.	TOTAL SHEETS
01	Men	128, 253	Var	41	47

Raymond Don Tsztoo
REGISTERED CIVIL ENGINEER

April 19, 2013
PLANS APPROVAL DATE

REGISTERED PROFESSIONAL ENGINEER Raymond Don Tsztoo No. C37332 Exp. 6-30-14 CIVIL STATE OF CALIFORNIA

THE STATE OF CALIFORNIA OR ITS OFFICERS OR AGENTS SHALL NOT BE RESPONSIBLE FOR THE ACCURACY OR COMPLETENESS OF SCANNED COPIES OF THIS PLAN SHEET.

TO ACCOMPANY PLANS DATED 4-1-14

2010 REVISED STANDARD PLAN RSP D77A

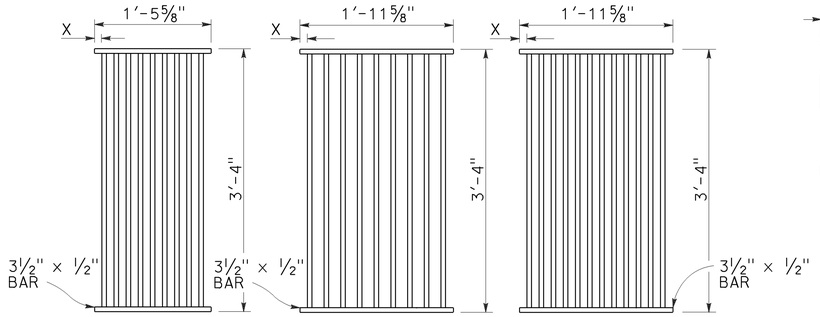

TYPE 18-9

1⅜" Clear spacing. Use within the roadbed on highways where bicycles and pedestrians are excluded.

TYPE 24-9

2" Clear spacing. Use in locations off the roadbed on all types of highways.

TYPE 24-12

1⅜" Clear spacing. Use within the roadbed on highways where bicycles and pedestrians are excluded.

RECTANGULAR GRATE DETAILS

(See table below)

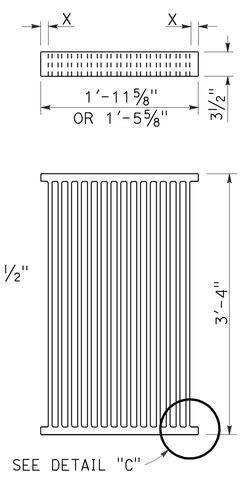

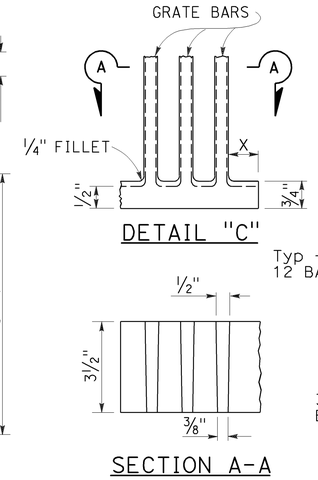

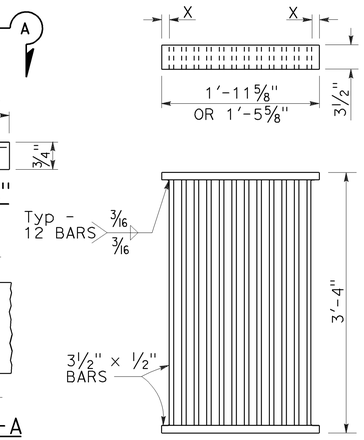

ALTERNATIVE CAST DUCTILE IRON GRATE OR CAST CARBON STEEL GRATE

ALTERNATIVE WELDED GRATE

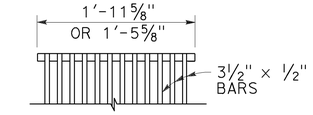

CAST END BLOCK

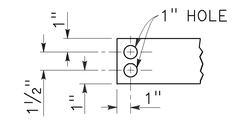

END OF BAR

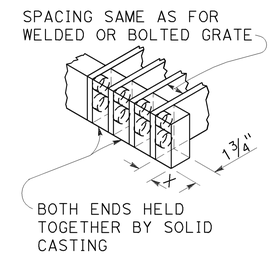

ALTERNATIVE CAST DUCTILE IRON OR CAST CARBON STEEL END BLOCK GRATE

NOTES:

1. Grate type numbers refer to approximate width of grate in inches and number of bars, respectively.
2. Contractor has the option of using cast ductile iron, cast carbon steel, welded, bolted, or cast end block grate.
3. Rounded top of bars optional on all grates.
4. Pipe inlets with a grate shall be placed so that bars parallel direction of principle surface flow.
5. Complete joint penetration butt welds may be substituted for the fillet welds on all anchors.
6. Standard square, hexagon, round or equivalent headed anchors may be substituted for the right angle hooks on the anchors shown on this plan.
7. Grate and frame weights are based on welded grates (weights of face angles, steps, protection bars, etc. are not included).
8. Connect chain to grate and frame only at locations shown on the plans. When chain is required, do not use cast ductile iron grates.

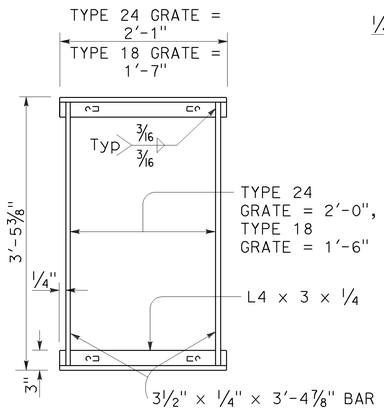

TYPICAL FRAME

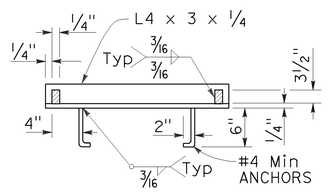

CROSS SECTION

(Thru frame)

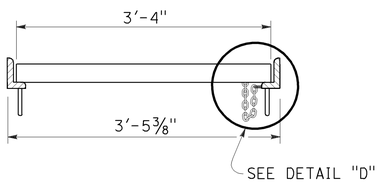

LONGITUDINAL SECTION

(Thru frame and grate)

RECTANGULAR FRAME DETAILS

(For all rectangular grates)

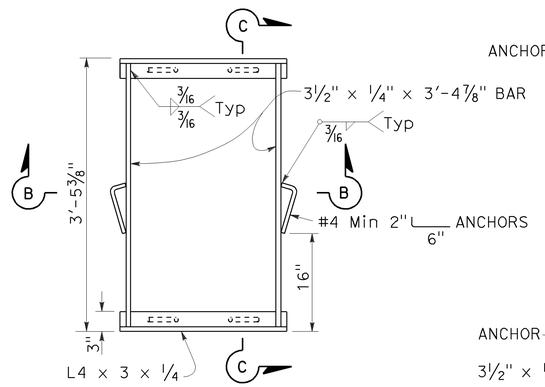

TYPICAL FRAME

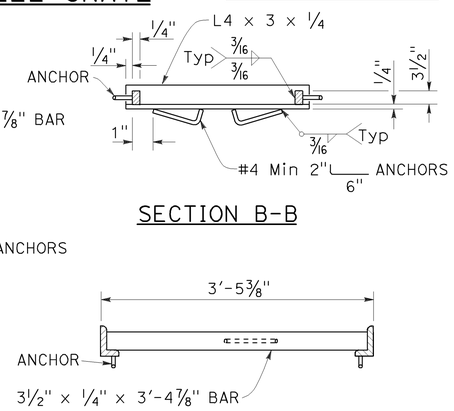

SECTION B-B

SECTION C-C

ALTERNATIVE ANCHOR FOR RECTANGULAR FRAME

(For details not shown, See Rectangular Frame Details)

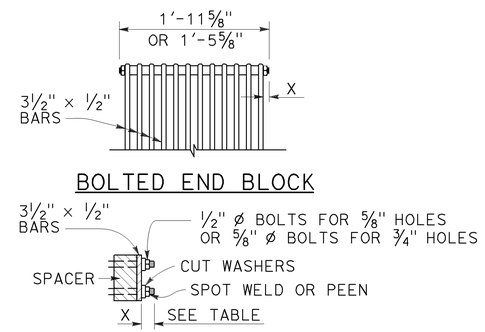

ALTERNATIVE BOLTED GRATE

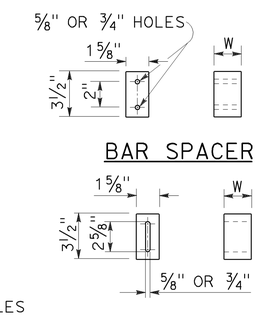

ALTERNATIVE SPACER

W = 1⅜" or 2"

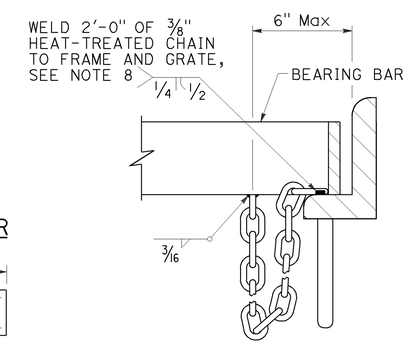

DETAIL "D"

(Steel grates only)

GRATE BAR SPACING TABLE

TYPE	No. OF BARS	CLEAR BAR SPACING	X
18-9	9	1⅜"	1 1/16"
24-9	9	2"	1 9/16"
24-12	12	1⅜"	1¼"

INLET TYPE	COVER TYPE	WEIGHT LB
OS	PLATE	174
OL-7	PLATE	170
OL-10	PLATE	170
OL-14	PLATE	170
OL-21	PLATE	170
OCP	PLATE	112
OCPI	PLATE	112
OCPI	REDWOOD	42
OMP	PLATE	177
OMPI	PLATE	177

INLET TYPE	GRATE TYPE	No. OF GRATES	WEIGHT LB
GDO	24-12	2	634
GOL-7	24-12	1	326
GOL-10	24-12	1	326
GO,G1,G2,G3,G4 (TYPE 24)	24-9	1	263
	24-12	1	326
G4 (TYPE 18),G5,G6	18-9	1	249
GT1	18-9	2	498
GT2	18-9	2	498
GT3	24-12	2	652
GT4	24-12	2	652
TRASH RACK			22
GRATE CHAIN			3

BASIS FOR Misc IRON & STEEL FINAL PAY WEIGHTS FOR DRAINAGE INLETS

(See Note 7)

STATE OF CALIFORNIA
DEPARTMENT OF TRANSPORTATION

GRATE DETAILS No. 1

NO SCALE

RSP D77A DATED APRIL 19, 2013 SUPERSEDES RSP D77A DATED JULY 20, 2012 AND STANDARD PLAN D77A DATED MAY 20, 2011 - PAGE 164 OF THE STANDARD PLANS BOOK DATED 2010.

REVISED STANDARD PLAN RSP D77A

4-4-13

Dist	COUNTY	ROUTE	POST MILES TOTAL PROJECT	SHEET No.	TOTAL SHEETS
01	Men	128, 253	Var	42	47

Raymond Don Tsztoo
REGISTERED CIVIL ENGINEER

April 19, 2013
PLANS APPROVAL DATE

REGISTERED PROFESSIONAL ENGINEER Raymond Don Tsztoo No. C37332 Exp. 6-30-14 CIVIL STATE OF CALIFORNIA

THE STATE OF CALIFORNIA OR ITS OFFICERS OR AGENTS SHALL NOT BE RESPONSIBLE FOR THE ACCURACY OR COMPLETENESS OF SCANNED COPIES OF THIS PLAN SHEET.

TO ACCOMPANY PLANS DATED 4-1-14

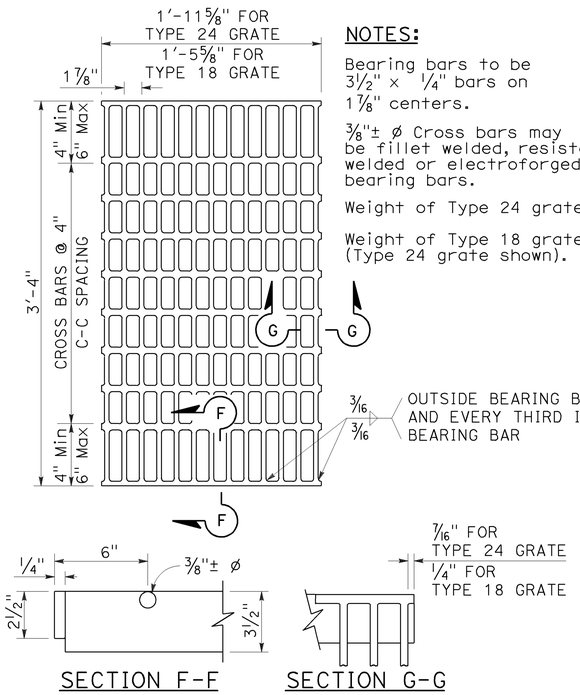

SECTION F-F SECTION G-G

TYPE 18-10 AND 24-13 GRATE

(Welded Steel)

NOTES:

Bearing bars to be 3½" × ¼" bars on 1⅞" centers.

⅜"± ø Cross bars may be fillet welded, resistance welded or electroforged to bearing bars.

Weight of Type 24 grate = 141 LBS.

Weight of Type 18 grate = 107 LBS. (Type 24 grate shown).

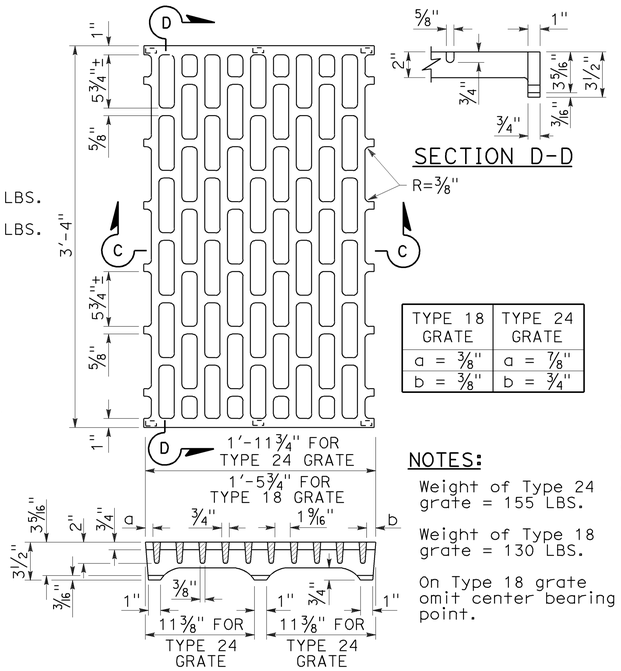

SECTION D-D

SECTION C-C

TYPE 18 GRATE	TYPE 24 GRATE
a = ⅜"	a = ⅞"
b = ⅜"	b = ¾"

NOTES:

Weight of Type 24 grate = 155 LBS.

Weight of Type 18 grate = 130 LBS.

On Type 18 grate omit center bearing point.

TYPE 18-8C AND 24-10C GRATE

(Cast ductile iron)

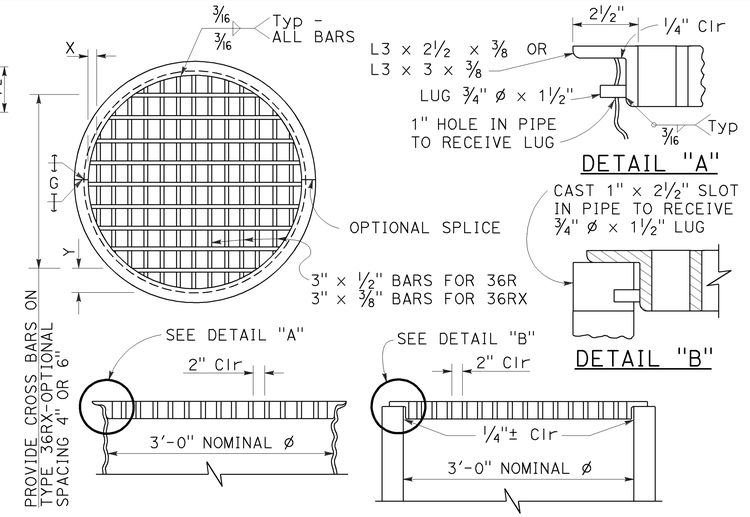

DETAIL "A"

DETAIL "B"

TYPE 36R AND 36RX GRATE DETAILS

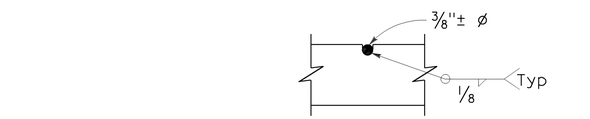

⅜"± ø Cross bars may be fillet welded, resistance welded or electroforged to bearing bars.

CROSS BAR DETAIL TYPE 36RX GRATE (WELDED STEEL)

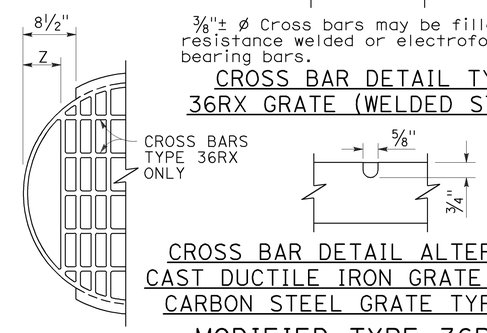

CROSS BAR DETAIL ALTERNATIVE CAST DUCTILE IRON GRATE OR CAST CARBON STEEL GRATE TYPE 36RX

MODIFIED TYPE 36R AND 36RX GRATE FOR ODI INLET

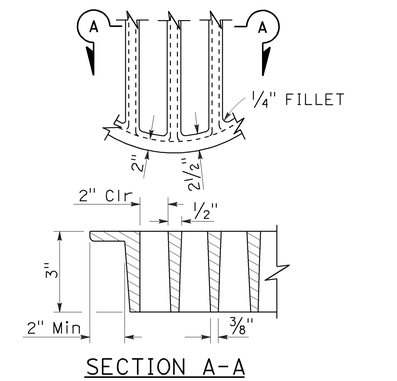

SECTION A-A

ALTERNATIVE CAST DUCTILE IRON GRATE OR CAST CARBON STEEL GRATE TYPE 36R AND 36RX

BASIS FOR Misc IRON AND STEEL FINAL PAY WEIGHTS FOR DRAINAGE INLETS

INLET TYPE	GRATE TYPE	No. OF GRATES	WEIGHT LB
GDO (SEE NOTE 4)	24-10C	2	391
	24-10S	2	456
	24-12X	2	473
	24-13	2	374
GO,GOL,G1,G2, G3,G4 (TYPE 24)	24-10C	1	202
	24-10S	1	229
	24-12X	1	239
	24-13	1	188
G4 (TYPE 18) G5,G6	18-8S	1	187
	18-9X	1	187
	18-10	1	149
GT1,GT2	18-8S	2	374
	18-9X	2	374
	18-10	2	298
GT3,GT4	24-10C	2	404
	24-10S	2	458
	24-12X	2	478
	24-13	2	376
ODI	36RX (Mod)	1	196
GMP,GCP,GCPI	36RX	1	215
ODI	36R (Mod)	1	220
GMP,GCP,GCPI	36R	1	236
TRASH RACK			22
GRATE CHAIN			3

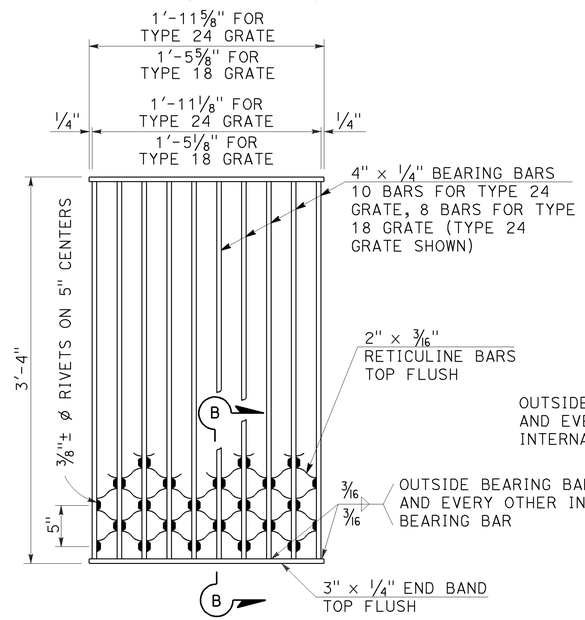

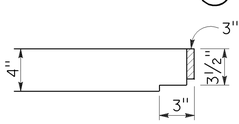

SECTION B-B

NOTES:

Weight of Type 24 grate = 182 LBS.
Weight of Type 18 grate = 145 LBS.

TYPE 18-8S AND 24-10S GRATE

(Welded Steel) Reticuline type

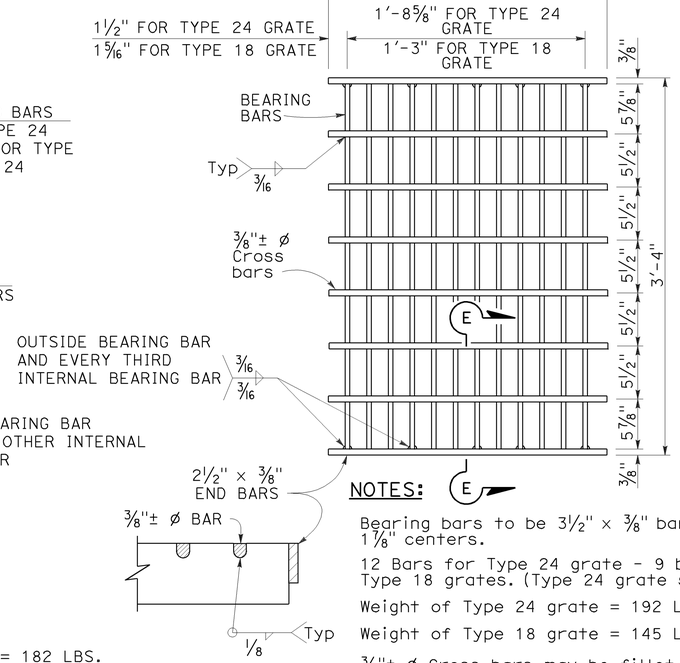

SECTION E-E

NOTES:

Bearing bars to be 3½" × ⅜" bars on 1⅞" centers.

12 Bars for Type 24 grate - 9 bars for Type 18 grates. (Type 24 grate shown).

Weight of Type 24 grate = 192 LBS.

Weight of Type 18 grate = 145 LBS.

⅜"± ø Cross bars may be fillet welded, resistance welded or electroforged to bearing bars.

TYPE 18-9X AND 24-12X GRATE

(Welded Steel)

NOTES:

1. When alternative grates are allowed - Final pay based on alternative with the lesser weight.
2. Use frame shown on Standard Plan D74A, D74B or RSP D77A as appropriate.
3. When Type 24-10S, 24-12X or 24-13 grates are used with GDO Inlets, a ¼" × 3½" × 3'-4⅞" steel bar shall be welded across the center of inlet frame to separate the individual grates.
4. See Revised Standard Plan RSP D77A for connecting chain to welded grate and frame. When chain is required, do not use cast ductile iron grate.

GRATE BAR SPACING TABLE

TYPE	No. OF BARS	CLEAR BAR SPACING	X	Y 4" SPACING	Y 6" SPACING	Z
36R	13	2"	2⅛"	-	-	-
36RX (STEEL)	15	2"	9/16"	3¾"	5¾"	-
36RX (CAST)	13	2"	2⅛"	3¾"	5¾"	-
36R Mod	12	2"	2⅛"	-	-	5"
36RX Mod (STEEL)	13	2"	9/16"	3¾"	5¾"	5 11/16"
36RX Mod (CAST)	12	2"	2⅛"	3¾"	5¾"	5"

STATE OF CALIFORNIA
DEPARTMENT OF TRANSPORTATION

GRATE DETAILS No. 2

NO SCALE

RSP D77B DATED APRIL 19, 2013 SUPERSEDES RSP D77B DATED JULY 20, 2012 AND STANDARD PLAN D77B DATED MAY 20, 2011 - PAGE 165 OF THE STANDARD PLANS BOOK DATED 2010.

REVISED STANDARD PLAN RSP D77B

2010 REVISED STANDARD PLAN RSP D77B

4-4-13

Dist	COUNTY	ROUTE	POST MILES TOTAL PROJECT	SHEET No.	TOTAL SHEETS
01	Men	128, 253	Var	43	47

LICENSED LANDSCAPE ARCHITECT

July 19, 2013
PLANS APPROVAL DATE

THE STATE OF CALIFORNIA OR ITS OFFICERS OR AGENTS SHALL NOT BE RESPONSIBLE FOR THE ACCURACY OR COMPLETENESS OF SCANNED COPIES OF THIS PLAN SHEET.

LICENSED LANDSCAPE ARCHITECT — Gregory A. Balzer — 2015 — 02-28-15 Renewal Date — 7-19-13 Date — STATE OF CALIFORNIA

TO ACCOMPANY PLANS DATED 4-1-14

A

AB	AGGREGATE BASE
ABS	ACRYLONITRILE-BUTADIENE-STYRENE
AC	ASPHALT CONCRETE
ACC	ARMOR-CLAD CONDUCTORS
Adj	ADJACENT/ADJUSTABLE
AIC	AUXILIARY IRRIGATION CONTROLLER
Alt	ALTERNATIVE
AMEND	AMENDMENT
ARV	AIR RELEASE VALVE
AUTO	AUTOMATIC
AUX	AUXILIARY
AVB	ATMOSPHERIC VACUUM BREAKER

B

B&B	BALLED AND BURLAPPED
B/B	BRASS/BRONZE
B/B/PL	BRASS/BRONZE/PLASTIC
B/PL	BRASS/PLASTIC
BFM	BONDED FIBER MATRIX
Bit Ctd	BITUMINOUS COATED
BP	BOOSTER PUMP
BPA	BACKFLOW PREVENTER ASSEMBLY
BPE	BACKFLOW PREVENTER ENCLOSURE
BV	BALL VALVE

C

C	CONDUIT
CAP	CORRUGATED ALUMINUM PIPE
CARV	COMBINATION AIR RELEASE VALVE
CB	COUPLING BAND
CCA	CAM COUPLER ASSEMBLY
CEC	CONTROLLER ENCLOSURE CABINET
CHDPE	CORRUGATED HIGH DENSITY POLYETHYLENE
CL	CHAIN LINK
CNC	CONTROL AND NEUTRAL CONDUCTORS
Conc	CONCRETE
CP	COPPER PIPE
CS	COMPOST SOCK
CSP	CORRUGATED STEEL PIPE
CST	CENTER STRIP
CV	CHECK VALVE

D

Dia	DIAMETER
DIP	DUCTILE IRON PIPE
DIT	DRIP IRRIGATION TUBING
DG	DECOMPOSED GRANITE
DN	DIAMETER NOMINAL
DVA	DRIP VALVE ASSEMBLY

E

EC	EROSION CONTROL
ECTC	EROSION CONTROL TECHNOLOGY COUNCIL
Elect	ELECTRIC/ELECTRICAL
Elev	ELEVATION
ELL	ELBOW
ENCL	ENCLOSURE
EP	EDGE OF PAVEMENT
ES	EDGE OF SHOULDER
EST	END STRIP
ESTB	ESTABLISHMENT
ETW	EDGE OF TRAVELED WAY

F

F	FULL CIRCLE
F/P	FULL/PART CIRCLE
FCV	FLOW CONTROL VALVE
FERT	FERTILIZER
FG	FINISHED GRADE
FH	FLEXIBLE HOSE
FIPT	FEMALE IRON PIPE THREAD
FIS	FERTILIZER INJECTOR SYSTEM
FL	FLOW LINE
FR	FIBER ROLL
FS	FLOW SENSOR
FSC	FLOW SENSOR CABLE
FV	FLUSH VALVE

G

Galv	GALVANIZED
GARV	GARDEN VALVE
GARVA	GARDEN VALVE ASSEMBLY
GM	GRAVEL MULCH
GPH	GALLONS PER HOUR
GPM	GALLONS PER MINUTE
GSP	GALVANIZED STEEL PIPE
GV	GATE VALVE

H

H	HALF CIRCLE
HDPE	HIGH DENSITY POLYETHYLENE
HP	HORSEPOWER/HINGE POINT
HPL	HIGH PRESSURE LINE
Hwy	HIGHWAY

I

IC	IRRIGATION CONTROLLER
ICC	IRRIGATION CONTROLLER(S) IN CONTROLLER ENCLOSURE CABINET
ID	INSIDE DIAMETER
IFS	IRRIGATION FILTRATION SYSTEM
IPS	IRON PIPE SIZE
IPT	IRON PIPE THREAD
Irr	IRRIGATION

L

L	LENGTH

M

Max	MAXIMUM
MBGR	METAL BEAM GUARD RAILING
MCV	MANUAL CONTROL VALVE
MIC	MASTER IRRIGATION CONTROLLER
Min	MINIMUM
MIPT	MALE IRON PIPE THREAD
Misc	MISCELLANEOUS
Mtl	MATERIAL
MVP	MAINTENANCE VEHICLE PULLOUT

N

NCN	NO COMMON NAME
NL	NOZZLE LINE
No.	NUMBER
NPT	NATIONAL PIPE THREAD

O

O/C	ON CENTER
OD	OUTSIDE DIAMETER
OL	OVERLAP

P

P	PART CIRCLE
PB	PULL BOX
PCC	PORTLAND CEMENT CONCRETE
PE	POLYETHYLENE
Pkt	PACKET
PL	PLASTIC
PLS	PURE LIVE SEED
PLT	PLANT/PLANTING
PLT ESTB	PLANT ESTABLISHMENT
PM	POST MILE
PR	PRESSURE RATED
PRLV	PRESSURE RELIEF VALVE
PRV	PRESSURE REGULATING VALVE
PVC	POLYVINYL CHLORIDE
Pvmt	PAVEMENT

Q

Q	QUARTER CIRCLE
QCV	QUICK COUPLING VALVE

R

R	RADIUS
RCP	REINFORCED CONCRETE PIPE
RCV	REMOTE CONTROL VALVE
RCVM	REMOTE CONTROL VALVE (MASTER)
RCVMF	REMOTE CONTROL VALVE (MASTER) W/FLOW SENSOR
RCVP	REMOTE CONTROL VALVE W/PRESSURE REGULATOR
RCW	RECYCLED WATER
RECP	ROLLED EROSION CONTROL PRODUCT
REQ	REQUIRED
RICS	REMOTE IRRIGATION CONTROL SYSTEM
R/W	RIGHT OF WAY

S

S	SLIP
SCH	SCHEDULE
SF	STATE-FURNISHED
Shld	SHOULDER
Sq	SQUARE
SST	SIDE STRIP
Sta	STATION
Std	STANDARD
SW	SIDEWALK/SOUND WALL

T

T	THIRD CIRCLE/THREAD
TLS	TRUCK LOADING STANDPIPE
TQ	THREE QUARTER CIRCLE
TRM	TURF REINFORCEMENT MAT
TT	TWO-THIRDS CIRCLE
TWSA	TREE WELL SPRINKLER ASSEMBLY
Typ	TYPICAL

U

UG	UNDERGROUND

W

W	WIDTH
W/	WITH
WM	WATER METER
WS	WYE STRAINER
WSA	WYE STRAINER ASSEMBLY
WSP	WELDED STEEL PIPE
WWM	WELDED WIRE MESH

NOTE:
For additional abbreviations, see Standard Plans A10A and A10B.

STATE OF CALIFORNIA
DEPARTMENT OF TRANSPORTATION

LANDSCAPE AND EROSION CONTROL ABBREVIATIONS

NO SCALE

RSP H1 DATED JULY 19, 2013 SUPERSEDES STANDARD PLAN H1 DATED MAY 20, 2011 - PAGE 218 OF THE STANDARD PLANS BOOK DATED 2010.

REVISED STANDARD PLAN RSP H1

2010 REVISED STANDARD PLAN RSP H1

6-28-13

Dist	COUNTY	ROUTE	POST MILES TOTAL PROJECT	SHEET No.	TOTAL SHEETS
01	Men	128, 253	Var	44	47

REGISTERED CIVIL ENGINEER

July 19, 2013
PLANS APPROVAL DATE

REGISTERED PROFESSIONAL ENGINEER
Gurinderpal Bhullar
No. C48815
Exp. 9-30-14
CIVIL
STATE OF CALIFORNIA

THE STATE OF CALIFORNIA OR ITS OFFICERS OR AGENTS SHALL NOT BE RESPONSIBLE FOR THE ACCURACY OR COMPLETENESS OF SCANNED COPIES OF THIS PLAN SHEET.

TO ACCOMPANY PLANS DATED 4-1-14

2010 REVISED STANDARD PLAN RSP T9

TABLE 1

TAPER LENGTH CRITERIA AND CHANNELIZING DEVICE SPACING

SPEED (S)	MINIMUM TAPER LENGTH * FOR WIDTH OF OFFSET 12 FEET (W)				MAXIMUM CHANNELIZING DEVICE SPACING		
					X	Y	Z **
	TANGENT 2L	MERGING L	SHIFTING L/2	SHOULDER L/3	TAPER	TANGENT	CONFLICT
mph	ft	ft	ft	ft	ft	ft	ft
20	160	80	40	27	20	40	10
25	250	125	63	42	25	50	12
30	360	180	90	60	30	60	15
35	490	245	123	82	35	70	17
40	640	320	160	107	40	80	20
45	1080	540	270	180	45	90	22
50	1200	600	300	200	50	100	25
55	1320	660	330	220	55	110	27
60	1440	720	360	240	60	120	30
65	1560	780	390	260	65	130	32
70	1680	840	420	280	70	140	35

* - For other offsets, use the following merging taper length formula for L:
For speed of 40 mph or less, $L = WS^2/60$
For speed of 45 mph or more, $L = WS$

Where: L = Taper length in feet
W = Width of offset in feet
S = Posted speed limit, off-peak 85th-percentile speed prior to work starting, or the anticipated operating speed in mph

** - Use for taper and tangent sections where there are no pavement markings or where there is a conflict between existing pavement markings and channelizers (CA).

TABLE 2

LONGITUDINAL BUFFER SPACE AND FLAGGER STATION SPACING

SPEED *	Min D **	DOWNGRADE Min D ***		
		-3%	-6%	-9%
mph	ft	ft	ft	ft
20	115	116	120	126
25	155	158	165	173
30	200	205	215	227
35	250	257	271	287
40	305	315	333	354
45	360	378	400	427
50	425	446	474	507
55	495	520	553	593
60	570	598	638	686
65	645	682	728	785
70	730	771	825	891

* - Speed is posted speed limit, off-peak 85th-percentile speed prior to work starting, or the anticipated operating speed in mph

** - Longitudinal buffer space or flagger station spacing

*** - Use on sustained downgrade steeper than -3 percent and longer than 1 mile.

TABLE 3

ADVANCE WARNING SIGN SPACING

ROAD TYPE	DISTANCE BETWEEN SIGNS *		
	A	B	C
	ft	ft	ft
URBAN - 25 mph OR LESS	100	100	100
URBAN - MORE THAN 25 mph TO 40 mph	250	250	250
URBAN - MORE THAN 40 mph	350	350	350
RURAL	500	500	500
EXPRESSWAY / FREEWAY	1000	1500	2640

* - The distances are approximate, are intended for guidance purposes only, and should be applied with engineering judgment. These distances should be adjusted by the Engineer for field conditions, if necessary, by increasing or decreasing the recommmended distances.

STATE OF CALIFORNIA
DEPARTMENT OF TRANSPORTATION

TRAFFIC CONTROL SYSTEM TABLES FOR LANE AND RAMP CLOSURES

NO SCALE

RSP T9 DATED JULY 19, 2013 SUPERSEDES RSP T9 DATED APRIL 19, 2013 THAT SUPPLEMENTS THE STANDARD PLANS BOOK DATED 2010.

REVISED STANDARD PLAN RSP T9

Dist	COUNTY	ROUTE	POST MILES TOTAL PROJECT	SHEET No.	TOTAL SHEETS
01	Men	128, 253	Var	45	47

REGISTERED CIVIL ENGINEER

April 19, 2013
PLANS APPROVAL DATE

REGISTERED PROFESSIONAL ENGINEER Gurinderpal Bhullar No. C48815 Exp. 9-30-14 CIVIL STATE OF CALIFORNIA

THE STATE OF CALIFORNIA OR ITS OFFICERS OR AGENTS SHALL NOT BE RESPONSIBLE FOR THE ACCURACY OR COMPLETENESS OF SCANNED COPIES OF THIS PLAN SHEET.

TO ACCOMPANY PLANS DATED 4-1-14

NOTES:

See Revised Standard Plan RSP T9 for tables.

Use cone spacing X for taper segment, Y for tangent segment or Z for conflict situations, as approriate, per Table 1, unless X, Y, or Z cone spacing is shown on this sheet.

Unless otherwise specified in the special provisions, all temporary warning signs shall have black legend on fluorescent orange background.

California codes are designated by (CA). Otherwise, Federal (MUTCD) codes are shown.

TYPICAL LANE CLOSURE WITH REVERSIBLE CONTROL

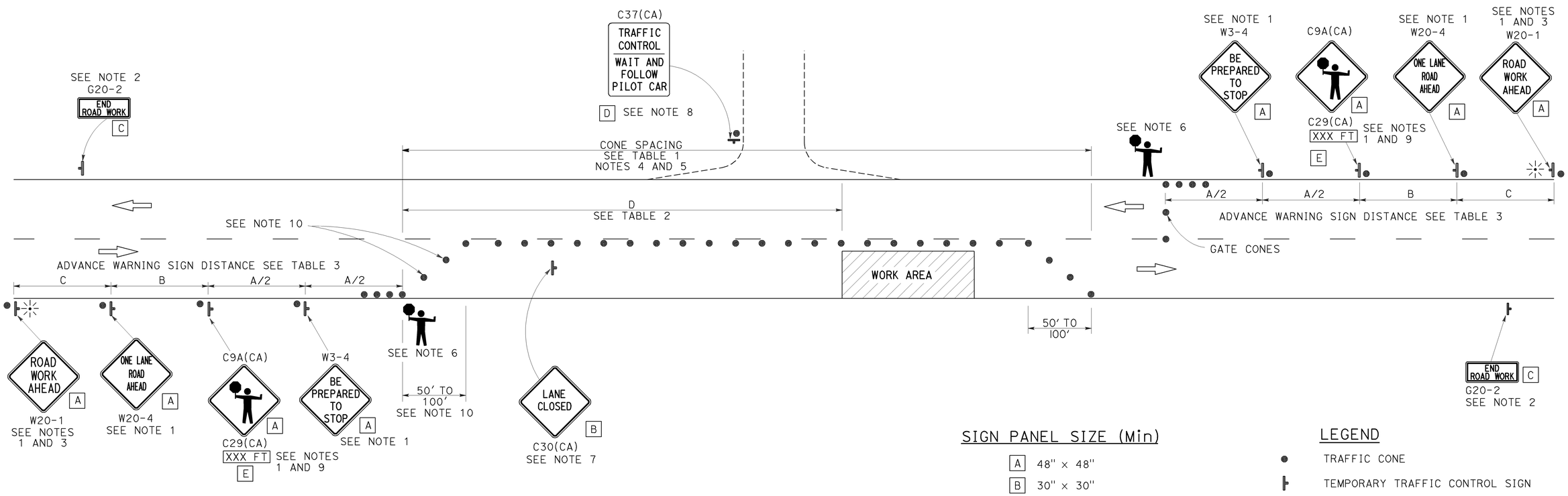

SIGN PANEL SIZE (Min)

A	48" × 48"
B	30" × 30"
C	36" × 18"
D	36" × 42"
E	20" × 7"

LEGEND

- TRAFFIC CONE
- TEMPORARY TRAFFIC CONTROL SIGN
- PORTABLE FLASHING BEACON
- FLAGGER

NOTES:

1. Each advance warning sign in each direction of travel shall be equipped with at least two flags for daytime closure. Each flag shall be at least 16" x 16" in size and shall be orange or fluorescent red-orange in color. Flashing beacons shall be placed at the locations indicated for lane closure during hours of darkness.
2. A G20-2 "END ROAD WORK" sign, as appropriate, shall be placed at the end of the lane control unless the end of work area is obvious, or ends within a larger project's limits.
3. If the W20-1 sign would follow within 2000' of a stationary W20-1 or G20-1 "ROAD WORK NEXT _____ MILES", use a W20-4 sign for the first advance warning sign.
4. All cones used for lane closures during the hours of darkness shall be fitted with retroreflective bands (or sleeves) as specified in the specifications.
5. Portable delineators, placed at one-half the spacing indicated for traffic cones, may be used instead of cones for daytime closures only.
6. Additional advance flaggers may be required. Flagger should stand in a conspicuous place, be visible to approaching traffic as well as approaching vehicles after the first vehicle has stopped. During the hours of darkness, the flagging-station and flagger shall be illuminated and clearly visible to approaching traffic. The illumination footprint of the lighting on the ground shall be at least 20' in diameter. Place a minimum of four cones at 50' intervals in advance of flagger station as shown.
7. Place C30(CA) "LANE CLOSED" sign at 500' to 1000' intervals throughout extended work areas. They are optional if the work area is visible from the flagger station.
8. When a pilot car is used, place a C37(CA) "TRAFFIC CONTROL-WAIT AND FOLLOW PILOT CAR" sign with black legend on white background at all intersections, driveways and alleys without a flagger within traffic control area. Signs shall be clean and visible at all times. Where traffic can not be effectively self-regulated, at least one flagger shall be used at each intersection within traffic control area.
9. An optional C29(CA) sign may be placed below the C9A(CA) sign.
10. Either traffic cones or barricades shall be placed on the taper. Barricades shall be Type I, II, or III.

STATE OF CALIFORNIA
DEPARTMENT OF TRANSPORTATION

TRAFFIC CONTROL SYSTEM FOR LANE CLOSURE ON TWO LANE CONVENTIONAL HIGHWAYS

NO SCALE

RSP T13 DATED APRIL 19, 2013 SUPERSEDES STANDARD PLAN T13 DATED MAY 20, 2011 - PAGE 241 OF THE STANDARD PLANS BOOK DATED 2010.

REVISED STANDARD PLAN RSP T13

2010 REVISED STANDARD PLAN RSP T13

4-2-13

Dist	COUNTY	ROUTE	POST MILES TOTAL PROJECT	SHEET No.	TOTAL SHEETS
01	Men	128, 253	Var	46	47

REGISTERED CIVIL ENGINEER

April 19, 2013
PLANS APPROVAL DATE

REGISTERED PROFESSIONAL ENGINEER Gurinderpal Bhullar No. C48815 Exp. 9-30-14 CIVIL STATE OF CALIFORNIA

THE STATE OF CALIFORNIA OR ITS OFFICERS OR AGENTS SHALL NOT BE RESPONSIBLE FOR THE ACCURACY OR COMPLETENESS OF SCANNED COPIES OF THIS PLAN SHEET.

TO ACCOMPANY PLANS DATED 4-1-14

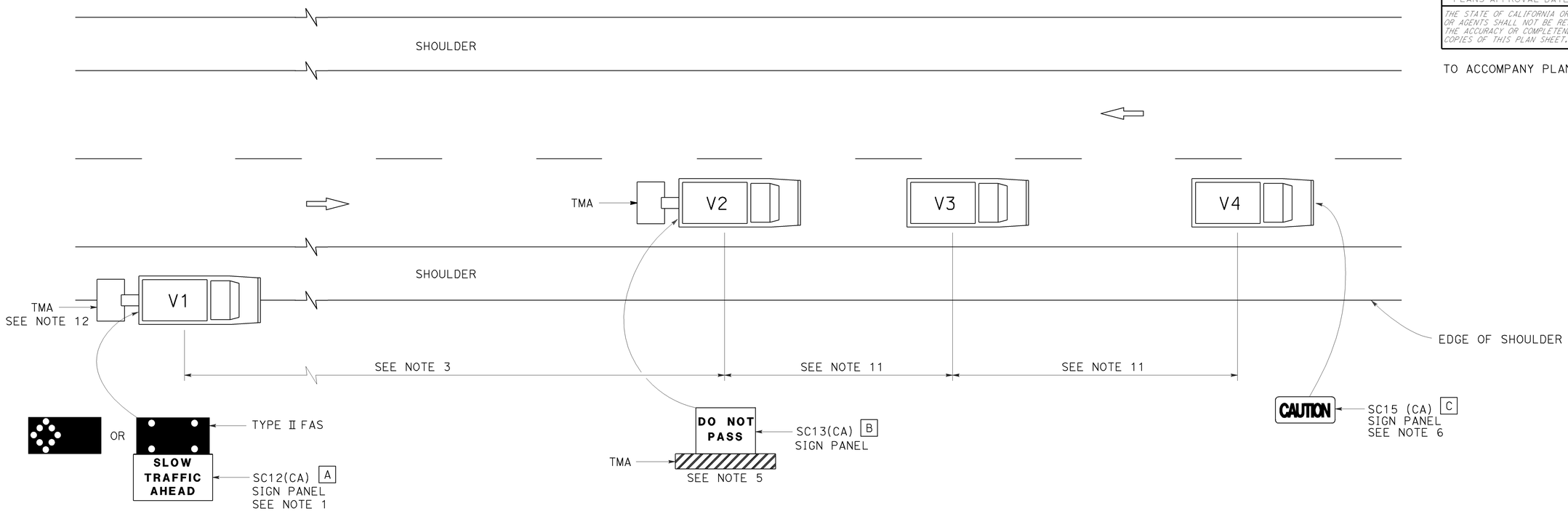

LEGEND

V1	SIGN VEHICLE
V2	SHADOW VEHICLE
V3	WORK/APPLICATION VEHICLE
V4	SIGN VEHICLE
TMA	TRUCK-MOUNTED ATTENUATOR
	FLASHING ARROW SIGN (FAS) IN FLASHING CAUTION MODE
	FLASHING ARROW SIGN (FAS) IN ALTERNATING DIAMOND CAUTION

SIGN PANEL SIZE (Min)

A	72" x 42"
B	54" x 42"
C	54" x 24"

NOTES:

1. Either a changeable message sign or a SC12(CA) "SLOW TRAFFIC AHEAD" sign shall be mounted on the rear of sign vehicle V1. The changeable message sign shall be sequenced to show the "CAUTION" message first, follow by the "SLOW TRAFFIC AHEAD" message. A Type II flashing arrow sign may be used with the SC12(CA) sign panel.
2. Sign vehicle V1 should be positioned where highly visible when shoulders are not available.
3. If traffic queues develop, sign vehicle V1 should be positioned upstream from the end of queue.
4. Vehicle-mounted sign panels shall have Type III or above retroreflective sheeting, black on white, or black on fluorescent orange, with 6" minimum series D letters per Caltrans sign specifications.
5. Shadow vehicle shall be equipped with a truck-mounted attenuator. The sign panel shown shall be mounted on the rear of shadow vehicle V2. The message "LANE CLOSED" may be used in place of the "DO NOT PASS" message.
6. The sign panel shown shall be mounted on the front of sign vehicle V4, facing opposing traffic.
7. All vehicles shall be equipped with flashing or rotating amber lights.
8. Sign vehicle V4 will not be required when the work and vehicles V2 and V3 are 2′ or more from the centerline of the highway during the work or application operations.
9. All vehicles used for lane closures shall be equipped with two-way radios and the vehicle operators shall maintain communication during the work or application operation.
10. This plan shall not be used where workers would be on foot in the work area. Use a stationary type lane closure (Revised Standard Plan T13) for this condition.
11. Minimize spacing between vehicles V2 and V3 and vehicles V3 and V4 to deter road users from driving in between them.
12. If sign vehicle V1 encroaches into the traffic lane due to insufficient shoulder width, sign vehicle V1 shall be equipped with a truck-mounted attenuator. Sign vehicle V1 shall stay as close to the edge of shoulder as practicable.

STATE OF CALIFORNIA
DEPARTMENT OF TRANSPORTATION

TRAFFIC CONTROL SYSTEM FOR MOVING LANE CLOSURE ON TWO LANE HIGHWAYS

NO SCALE

RSP T17 DATED APRIL 19, 2013 SUPERSEDES STANDARD PLAN T17
DATED MAY 20, 2011 - PAGE 245 OF THE STANDARD PLANS BOOK DATED 2010.

REVISED STANDARD PLAN RSP T17

2010 REVISED STANDARD PLAN RSP T17

12-18-12

Dist	COUNTY	ROUTE	POST MILES TOTAL PROJECT	SHEET No.	TOTAL SHEETS
01	Men	128, 253	Var	47	47

REGISTERED CIVIL ENGINEER

October 21, 2011
PLANS APPROVAL DATE

REGISTERED PROFESSIONAL ENGINEER Tillat Satter No. C42892 Exp. 3-31-12 CIVIL STATE OF CALIFORNIA

THE STATE OF CALIFORNIA OR ITS OFFICERS OR AGENTS SHALL NOT BE RESPONSIBLE FOR THE ACCURACY OR COMPLETENESS OF SCANNED COPIES OF THIS PLAN SHEET.

TO ACCOMPANY PLANS DATED 4-1-14

2010 REVISED STANDARD PLAN RSP B11-47

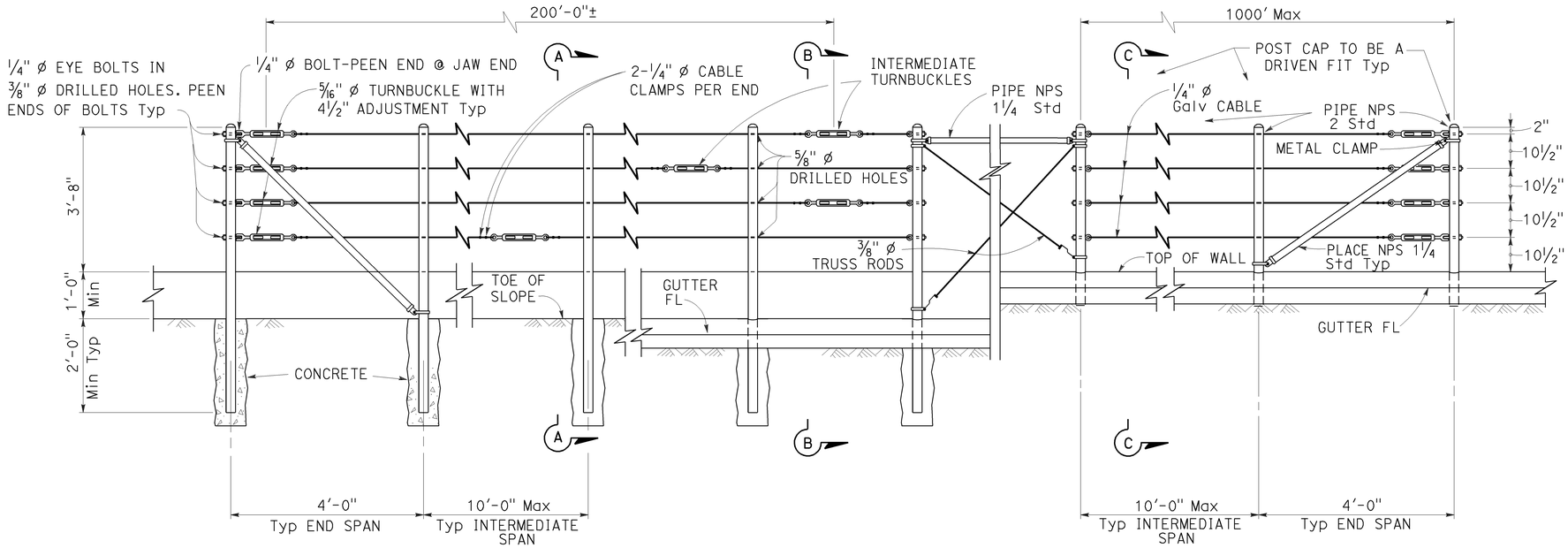

EXISTING WALL (WITHOUT GUTTER)
Existing

RETAINING WALL (WITH GUTTER)
Existing

RETAINING WALL (WITH GUTTER)
New construction

ELEVATION

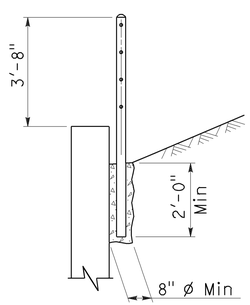

SECTION A-A
Existing

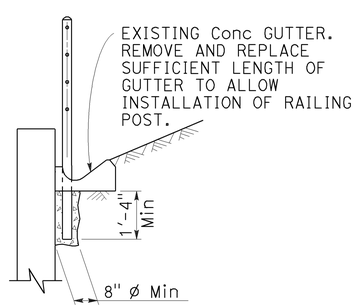

SECTION B-B
Existing

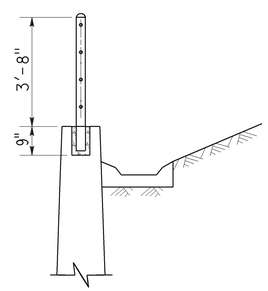

SECTION C-C
New construction

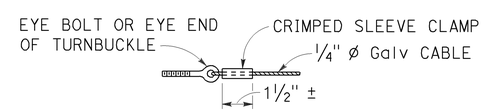

ALTERNATIVE CABLE CONNECTION

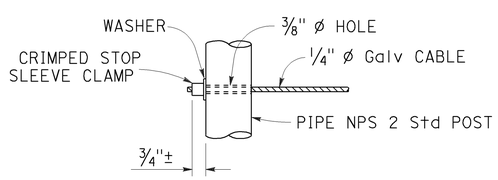

ALTERNATIVE DEAD END ANCHORAGE

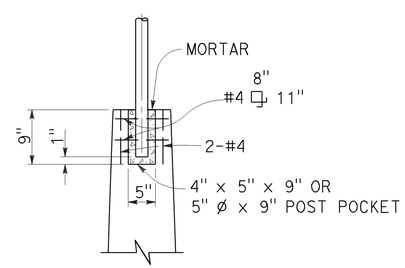

POST POCKET

NOTES:

1. Maximum distance between turnbuckles shall be 200'-0"±.
2. Intermediate turnbuckles to be placed in adjacent spans.
3. Cable shall not be spliced between intermediate turnbuckles and end posts.
4. Posts to be vertical.
5. Alignment of holes in posts may vary to conform to slope of top of retaining wall.
6. The Contractor shall verify all dependent dimensions in the field before ordering or fabricating any material.
7. Line posts shall be braced horizontally and trussed diagonally in both directions at intervals not to exceed 1000'.
8. Post pockets to be centered in top of wall.
9. Typical end spans, braced in both directions, shall be constructed at changes in line where the angle of deflection is 15° or more.
10. Provide thimbles at all cable loops.

STATE OF CALIFORNIA
DEPARTMENT OF TRANSPORTATION

CABLE RAILING

NO SCALE

RSP B11-47 DATED OCTOBER 21, 2011 SUPERSEDES STANDARD PLAN B11-47 DATED MAY 20, 2011 - PAGE 293 OF THE STANDARD PLANS BOOK DATED 2010.

REVISED STANDARD PLAN RSP B11-47

9-14-11