ACNH-Q101(223)E

Dist	COUNTY	ROUTE	POST MILES TOTAL PROJECT	SHEET No.	TOTAL SHEETS
01	Hum	101	79.9/87.8	1	49

INDEX OF PLANS

SHEET No	DESCRIPTION
1	TITLE AND LOCATION MAP
2-3	TYPICAL CROSS SECTION
4-13	CONSTRUCTION DETAILS
14	CONSTRUCTION AREA SIGNS
15-25	PAVEMENT DELINEATION DETAILS AND QUANTITIES
26-28	SUMMARY OF QUANTITIES
29-31	ELECTRICAL PLANS
32-49	NEW OR REVISED STANDARD PLANS

THE STANDARD PLANS LIST APPLICABLE TO THIS CONTRACT IS INCLUDED IN THE NOTICE TO BIDDERS AND SPECIAL PROVISIONS BOOK.

STATE OF CALIFORNIA

DEPARTMENT OF TRANSPORTATION

PROJECT PLANS FOR CONSTRUCTION ON

STATE HIGHWAY

IN HUMBOLDT COUNTY IN AND NEAR EUREKA AND ARCATA FROM EUREKA SLOUGH BRIDGE TO ARCATA OVERHEAD

TO BE SUPPLEMENTED BY STANDARD PLANS DATED MAY 2006

LOCATION MAP

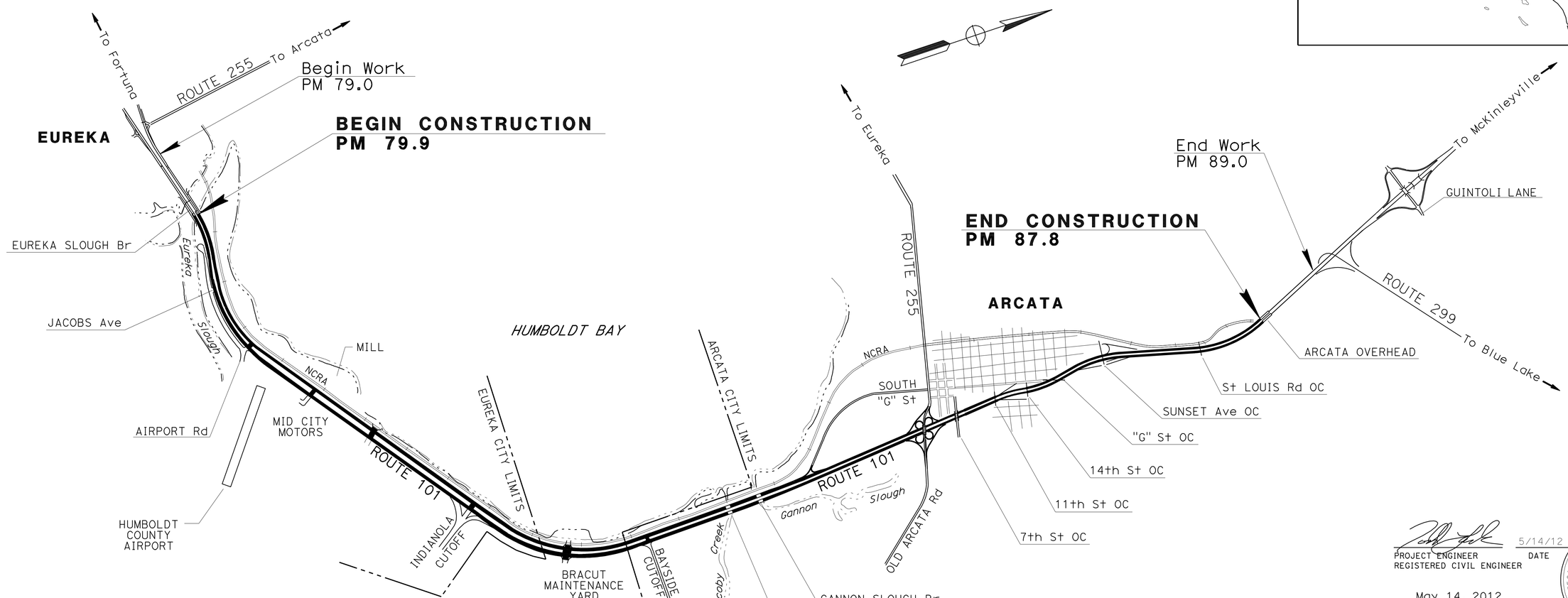

THE CONTRACTOR SHALL POSSESS THE CLASS (OR CLASSES) OF LICENSE AS SPECIFIED IN THE "NOTICE TO BIDDERS."

NO SCALE

PROJECT MANAGER: Kim Floyd

DESIGN ENGINEER: Lena R. Ashley

PROJECT ENGINEER REGISTERED CIVIL ENGINEER — DATE 5/14/12

REGISTERED PROFESSIONAL ENGINEER — Todd Lark — No. 52481 — Exp. 12/31/12 — CIVIL — STATE OF CALIFORNIA

May 14, 2012

PLANS APPROVAL DATE

THE STATE OF CALIFORNIA OR ITS OFFICERS OR AGENTS SHALL NOT BE RESPONSIBLE FOR THE ACCURACY OR COMPLETENESS OF SCANNED COPIES OF THIS PLAN SHEET.

CONTRACT No.	01-3633U4
PROJECT ID	0112000238

LAST REVISION 00-00-00 — DATE PLOTTED => 14-JUN-2012 — TIME PLOTTED => 09:59

Dist	COUNTY	ROUTE	POST MILES TOTAL PROJECT	SHEET No.	TOTAL SHEETS
01	Hum	101	79.9/87.8	2	49

REGISTERED CIVIL ENGINEER 5/14/12 DATE

May 14, 2012
PLANS APPROVAL DATE

REGISTERED PROFESSIONAL ENGINEER Todd Lark No. 52481 Exp. 12/31/12 CIVIL STATE OF CALIFORNIA

THE STATE OF CALIFORNIA OR ITS OFFICERS OR AGENTS SHALL NOT BE RESPONSIBLE FOR THE ACCURACY OR COMPLETENESS OF SCANNED COPIES OF THIS PLAN SHEET.

NOTES:

1. DIMENSIONS OF THE PAVEMENT STRUCTURE (STRUCTURAL SECTIONS) ARE SUBJECT TO TOLERANCES SPECIFIED IN THE STANDARD SPECIFICATIONS.
2. SUPERELEVATIONS AS SHOWN OR AS DIRECTED BY THE ENGINEER.
3. HMA-CO ON OUTSIDE SHOULDER AT SHOULDER RUMBLE STRIP LOCATIONS, SEE SHEETS PDD-1, PDD-2 & Q-1 FOR EXACT LOCATIONS.
4. FOR COMPLETE RIGHT OF WAY AND ACCURATE ACCESS DATA, SEE RIGHT OF WAY RECORD MAPS AT DISTRICT OFFICE.
5. FOR EDGE TREATMENT SEE NEW STANDARD PLAN P74 AND P75

LEGEND:

HMA-A = HOT MIX ASPHALT (TYPE A-WMA)

HMA-O = HOT MIX ASPHALT (OPEN GRADED-WMA)

HMA-CO = HOT MIX ASPHALT (COLORIZED OPEN GRADED-WMA)

LL = LANE LINE

DESIGN DESIGNATION (ROUTE 101)

(2012) ADT= 37,600 D= 60%
(2022) ADT= 43,100 T= 3%
(2022) DHV= V= 50 MPH
TI_{20} = 11.0

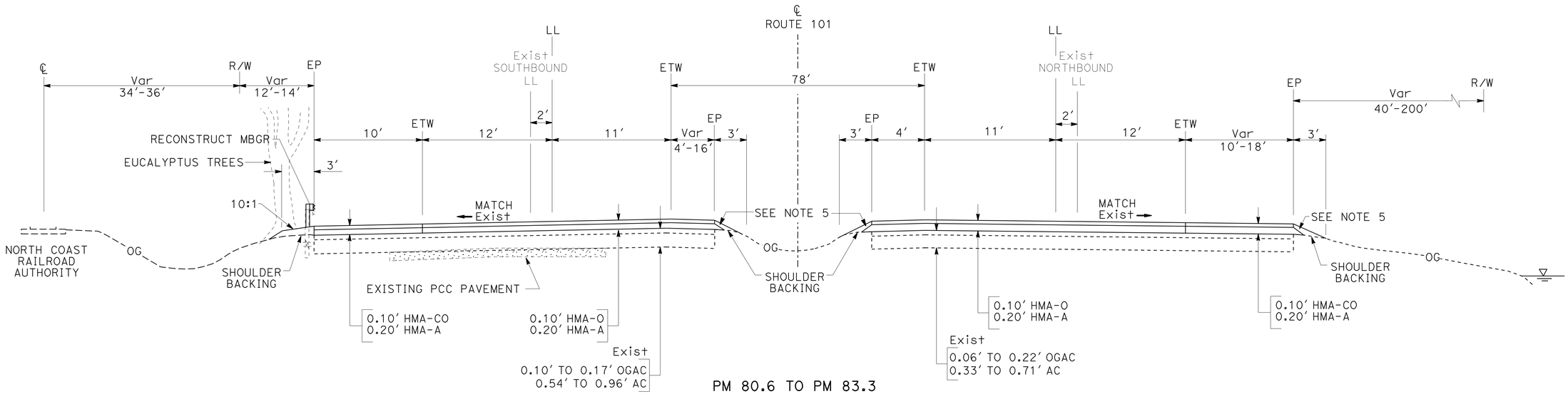

PM 80.6 TO PM 83.3

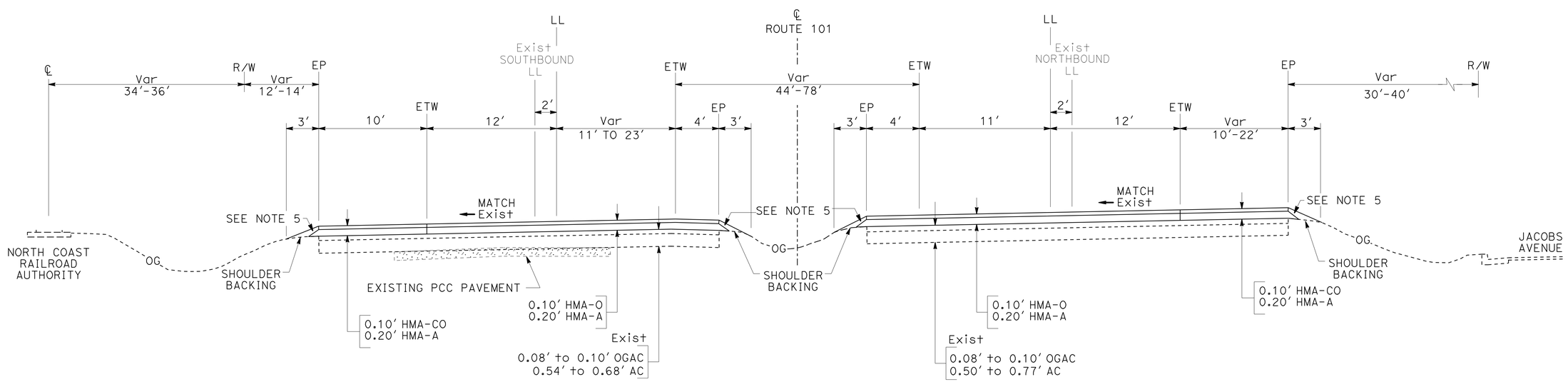

PM 79.9 TO PM 80.6

TYPICAL CROSS SECTIONS X-1

NO SCALE

REVISED BY | DATE REVISED
Todd Lark | Amal Rashid
CALCULATED-DESIGNED BY | CHECKED BY
FUNCTIONAL SUPERVISOR: Lena R. Ashley

STATE OF CALIFORNIA - DEPARTMENT OF TRANSPORTATION
Caltrans
DESIGN

LAST REVISION 00-00-00 | DATE PLOTTED => 14-JUN-2012 | TIME PLOTTED => 09:59

Dist	COUNTY	ROUTE	POST MILES TOTAL PROJECT	SHEET No.	TOTAL SHEETS
01	Hum	101	79.9/87.8	3	49

REGISTERED CIVIL ENGINEER 5/14/12 DATE

May 14, 2012
PLANS APPROVAL DATE

REGISTERED PROFESSIONAL ENGINEER
Todd Lark
No. 52481
Exp. 12/31/12
CIVIL
STATE OF CALIFORNIA

THE STATE OF CALIFORNIA OR ITS OFFICERS OR AGENTS SHALL NOT BE RESPONSIBLE FOR THE ACCURACY OR COMPLETENESS OF SCANNED COPIES OF THIS PLAN SHEET.

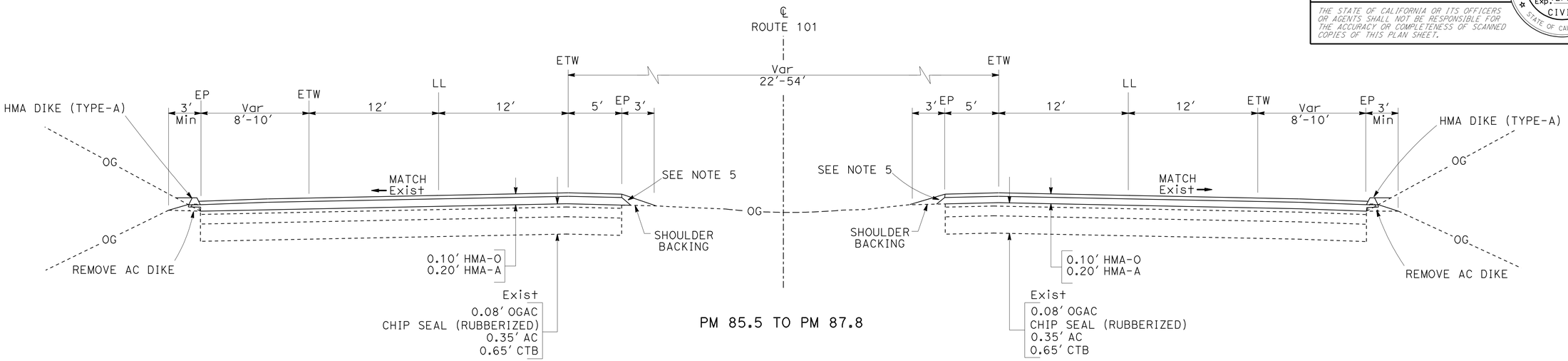

PM 85.5 TO PM 87.8

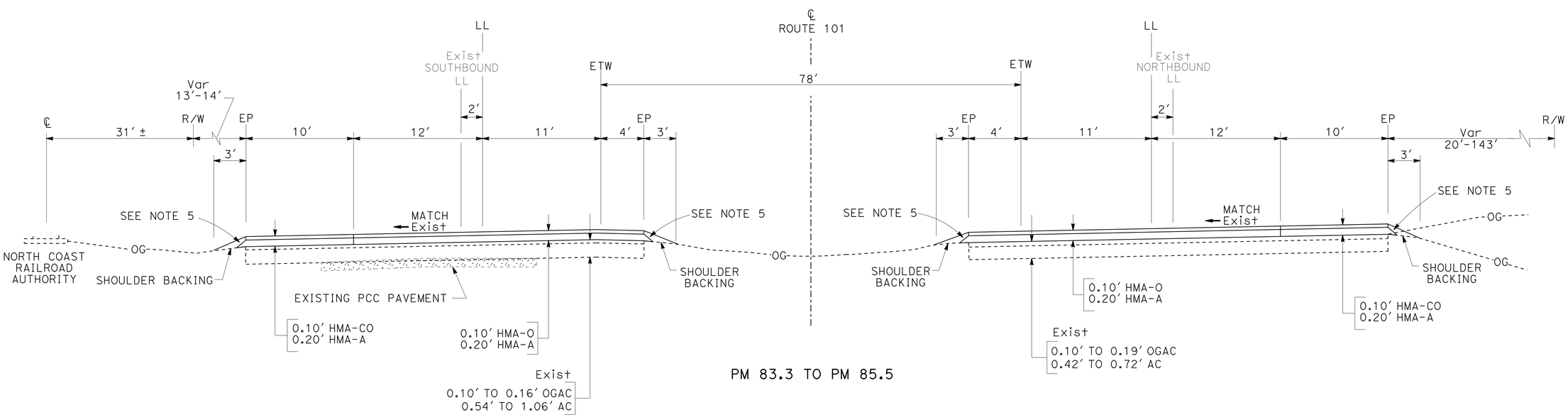

PM 83.3 TO PM 85.5

TYPICAL CROSS SECTIONS X-2

NO SCALE

REVISED BY | DATE REVISED
Todd Lark | Amal Rashid
CALCULATED-DESIGNED BY | CHECKED BY
FUNCTIONAL SUPERVISOR: Lena R. Ashley

STATE OF CALIFORNIA - DEPARTMENT OF TRANSPORTATION
Caltrans®
DESIGN

LAST REVISION 00-00-00 | DATE PLOTTED => 14-JUN-2012 | TIME PLOTTED => 09:59

Dist	COUNTY	ROUTE	POST MILES TOTAL PROJECT	SHEET No.	TOTAL SHEETS
01	Hum	101	79.9/87.8	4	49

REGISTERED CIVIL ENGINEER 5/14/12 DATE

May 14, 2012
PLANS APPROVAL DATE

REGISTERED PROFESSIONAL ENGINEER Todd Lark No. 52481 Exp. 12/31/12 CIVIL STATE OF CALIFORNIA

THE STATE OF CALIFORNIA OR ITS OFFICERS OR AGENTS SHALL NOT BE RESPONSIBLE FOR THE ACCURACY OR COMPLETENESS OF SCANNED COPIES OF THIS PLAN SHEET.

NOTES:

1. SEE QUANTITIES FOR LOCATIONS OF AC DIKE AND MBGR.
2. FOR EDGE TREATMENT SEE NEW STANDARD PLAN P74 AND P75

LEGEND:

HMA-A = HOT MIX ASPHALT (TYPE A-WMA)
HMA-O = HOT MIX ASPHALT (OPEN GRADED-WMA)

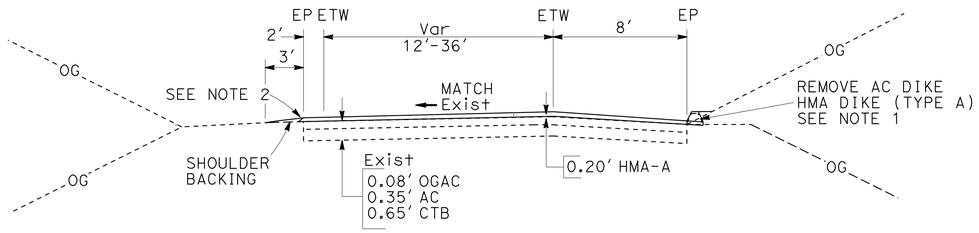

RAMP TYPE A

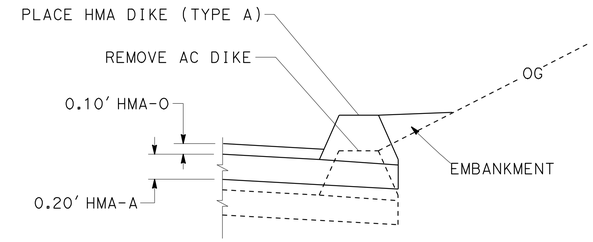

AC DIKE (TYPE A) PLACEMENT DETAIL

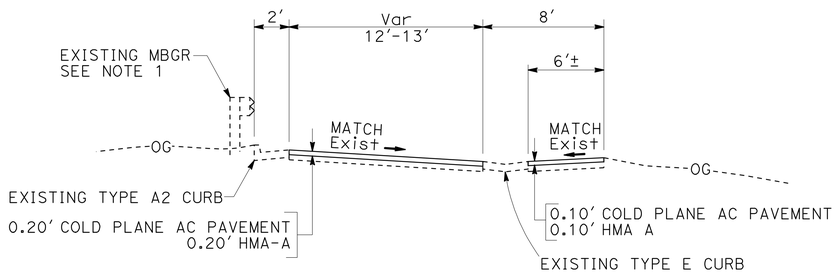

RAMP TYPE B

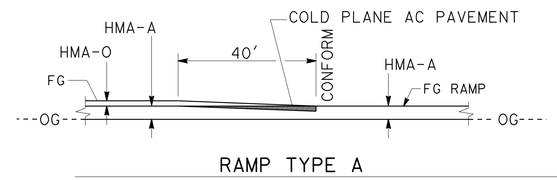

RAMP TYPE A

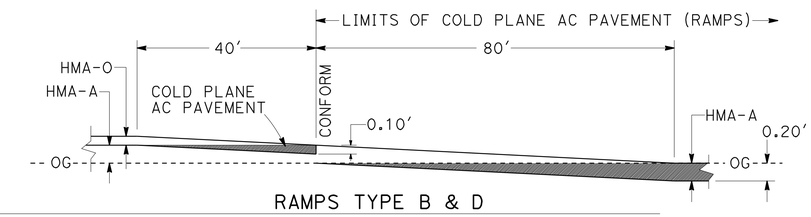

RAMPS TYPE B & D

CONFORM HMA-O TO HMA-A

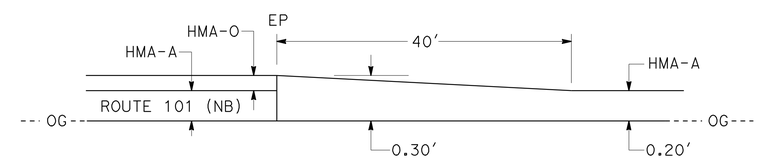

CONFORM AT RAMP INTERSECTION

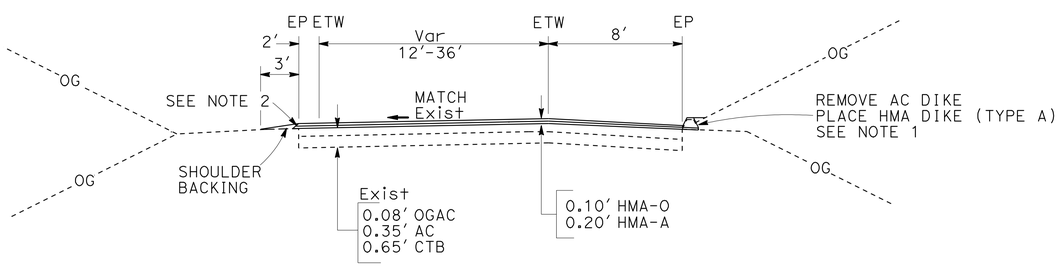

RAMP TYPE C

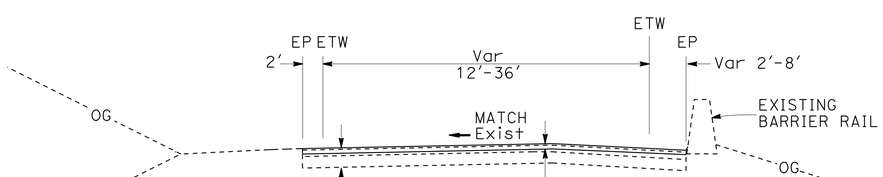

RAMP TYPE D

LEGEND:

LIMITS OF SURFACING

LIMITS OF COLD PLANE AC SURFACING

LOCATION	PM	A (Ft)	B (Ft)
JACOBS AVENUE	80.25 Rt	40	20
AIRPORT ROAD	80.84 Rt	50	20
MID CITY MOTORS	81.35 Rt	50	20
CALIFORNIA REDWOOD	81.35 Lt	20	10
CALIFORNIA REDWOOD	81.84 Lt	20	10
PRIVATE ROAD	81.84 Rt	20	10
INDIANOLA CUTOFF	82.67 Rt	500	40
BRACUT WEST	83.38 Lt	20	10
BRACUT EAST	83.38 Rt	60	20
BAYSIDE CUTOFF	83.92 Rt	500	40

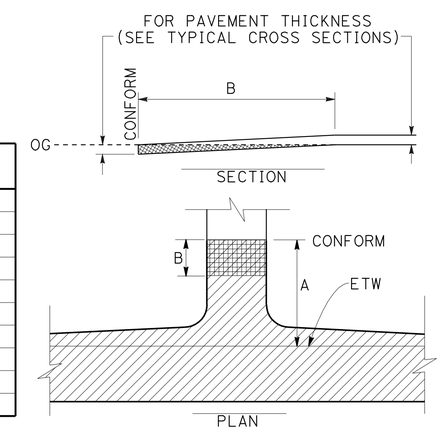

CONFORM PAVING AT ROAD CONNECTION

CONSTRUCTION DETAILS
C-1

NO SCALE

STATE OF CALIFORNIA - DEPARTMENT OF TRANSPORTATION
Caltrans®
DESIGN

FUNCTIONAL SUPERVISOR: Lena R. Ashley
CALCULATED-DESIGNED BY: Amal Rashid
CHECKED BY: Todd Lark
REVISED BY
DATE REVISED

LAST REVISION 00-00-00
DATE PLOTTED => 14-JUN-2012
TIME PLOTTED => 09:59

Dist	COUNTY	ROUTE	POST MILES TOTAL PROJECT	SHEET No.	TOTAL SHEETS
01	Hum	101	79.9/87.8	5	49

REGISTERED CIVIL ENGINEER 5/14/12 DATE

May 14, 2012
PLANS APPROVAL DATE

REGISTERED PROFESSIONAL ENGINEER Todd Lark No. 52481 Exp. 12/31/12 CIVIL STATE OF CALIFORNIA

THE STATE OF CALIFORNIA OR ITS OFFICERS OR AGENTS SHALL NOT BE RESPONSIBLE FOR THE ACCURACY OR COMPLETENESS OF SCANNED COPIES OF THIS PLAN SHEET.

LEGEND:

LIMITS OF HMA-A WITH HMA-O OVERLAY

LIMITS OF HMA-A PAVING

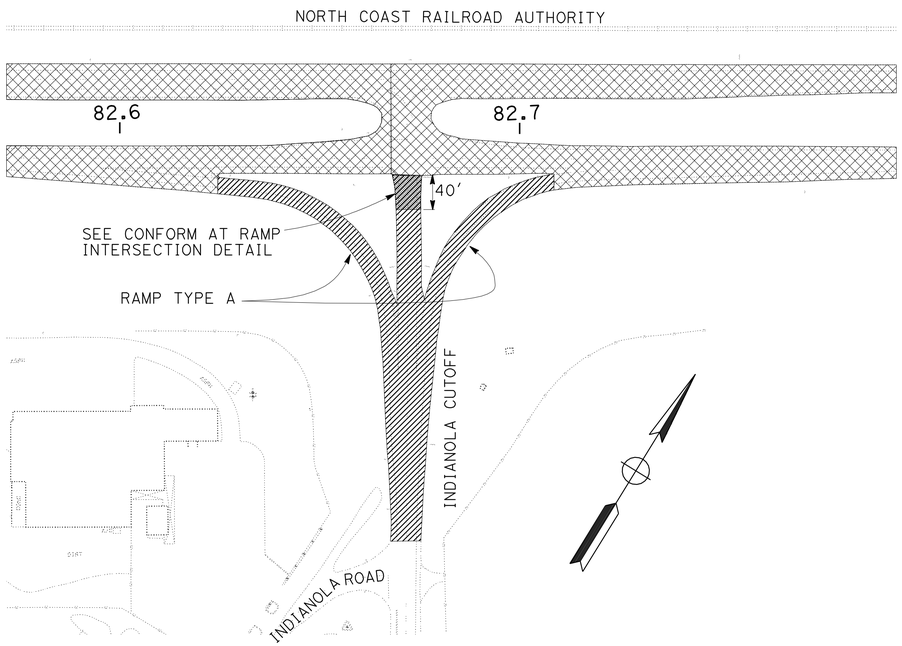

PAVING AT INDIANOLA CUTOFF

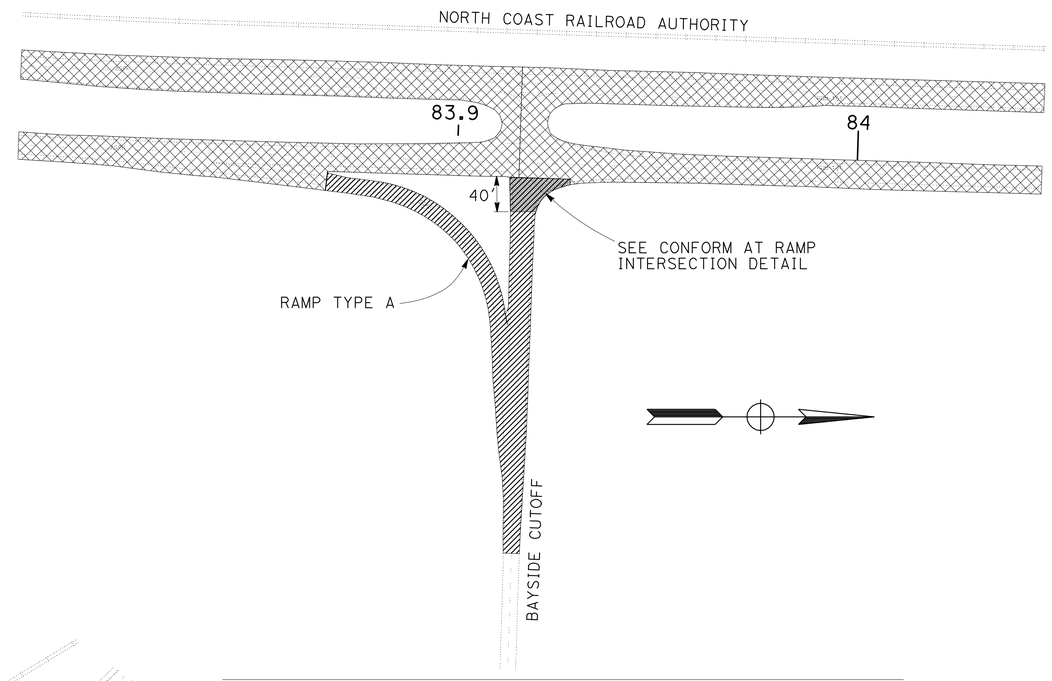

PAVING AT BAYSIDE CUTOFF

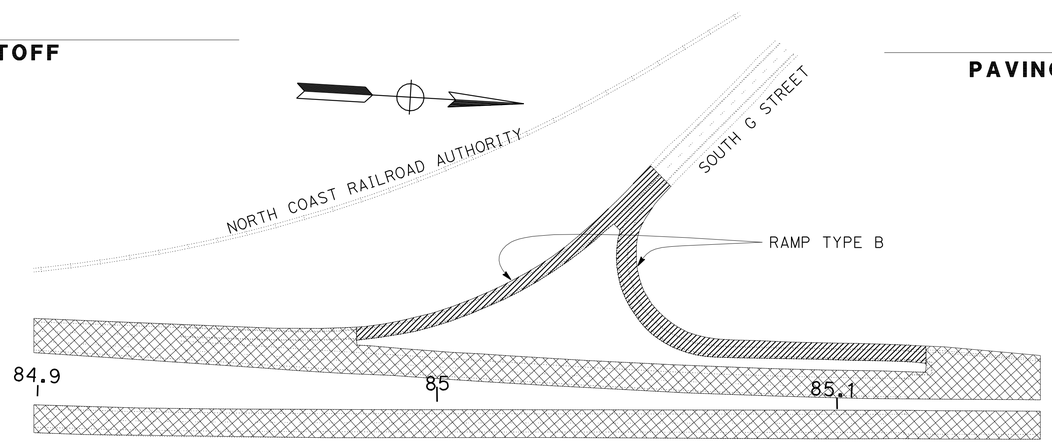

PAVING AT SOUTH G STREET

CONSTRUCTION DETAILS
C-2

NO SCALE

STATE OF CALIFORNIA - DEPARTMENT OF TRANSPORTATION
Caltrans®
DESIGN

FUNCTIONAL SUPERVISOR: Lena R. Ashley
CALCULATED-DESIGNED BY: Amal Rashid
CHECKED BY: Todd Lark
REVISED BY
DATE REVISED

LAST REVISION 00-00-00
DATE PLOTTED => 14-JUN-2012
TIME PLOTTED => 09:59

Dist	COUNTY	ROUTE	POST MILES TOTAL PROJECT	SHEET No.	TOTAL SHEETS
01	Hum	101	79.9/87.8	6	49

REGISTERED CIVIL ENGINEER 5/14/12 DATE

May 14, 2012
PLANS APPROVAL DATE

REGISTERED PROFESSIONAL ENGINEER
Todd Lark
No. 52481
Exp. 12/31/12
CIVIL
STATE OF CALIFORNIA

THE STATE OF CALIFORNIA OR ITS OFFICERS OR AGENTS SHALL NOT BE RESPONSIBLE FOR THE ACCURACY OR COMPLETENESS OF SCANNED COPIES OF THIS PLAN SHEET.

LEGEND:

- LIMITS OF HMA-A WITH HMA-O OVERLAY
- LIMITS OF HMA-A PAVING

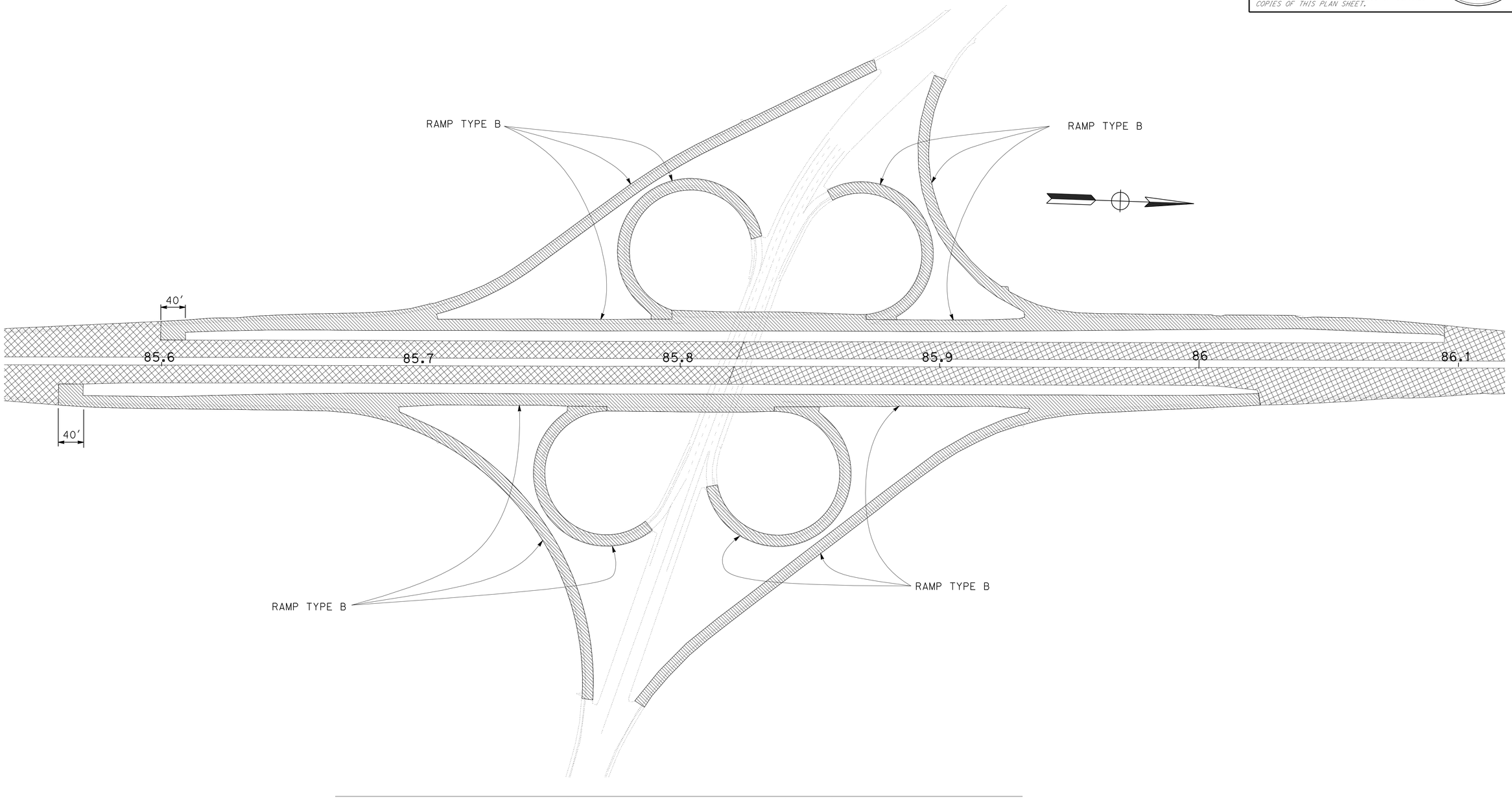

PAVING AT ROUTE 255 INTERCHANGE

CONSTRUCTION DETAILS
C-3

NO SCALE

REVISED BY | DATE REVISED
Todd Lark | Amal Rashid
CALCULATED-DESIGNED BY | CHECKED BY
FUNCTIONAL SUPERVISOR
Lena R. Ashley

STATE OF CALIFORNIA - DEPARTMENT OF TRANSPORTATION
Caltrans
DESIGN

LAST REVISION 00-00-00
DATE PLOTTED => 14-JUN-2012
TIME PLOTTED => 09:59

Dist	COUNTY	ROUTE	POST MILES TOTAL PROJECT	SHEET No.	TOTAL SHEETS
01	Hum	101	79.9/87.8	7	49

REGISTERED CIVIL ENGINEER 5/14/12 DATE

May 14, 2012
PLANS APPROVAL DATE

REGISTERED PROFESSIONAL ENGINEER
Todd Lark
No. 52481
Exp. 12/31/12
CIVIL
STATE OF CALIFORNIA

THE STATE OF CALIFORNIA OR ITS OFFICERS OR AGENTS SHALL NOT BE RESPONSIBLE FOR THE ACCURACY OR COMPLETENESS OF SCANNED COPIES OF THIS PLAN SHEET.

LEGEND:

- LIMITS OF HMA-A WITH HMA-O OVERLAY
- LIMITS OF HMA-A PAVING

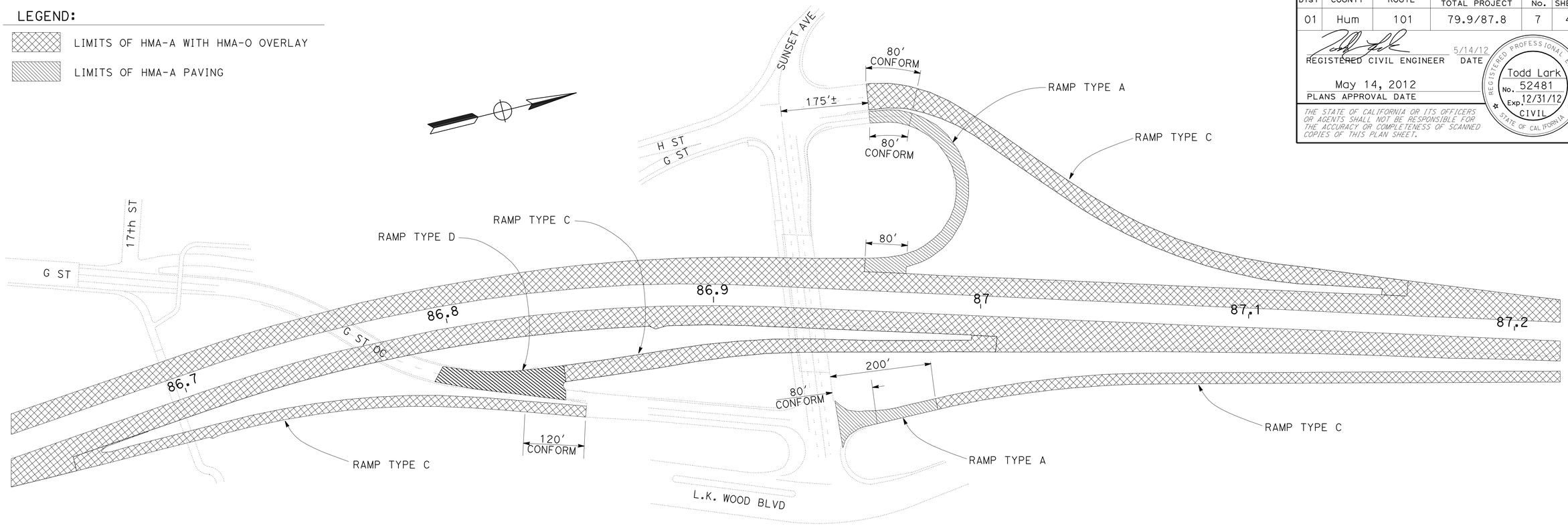

PAVING AT NORTH G ST. AND SUNSET AVE

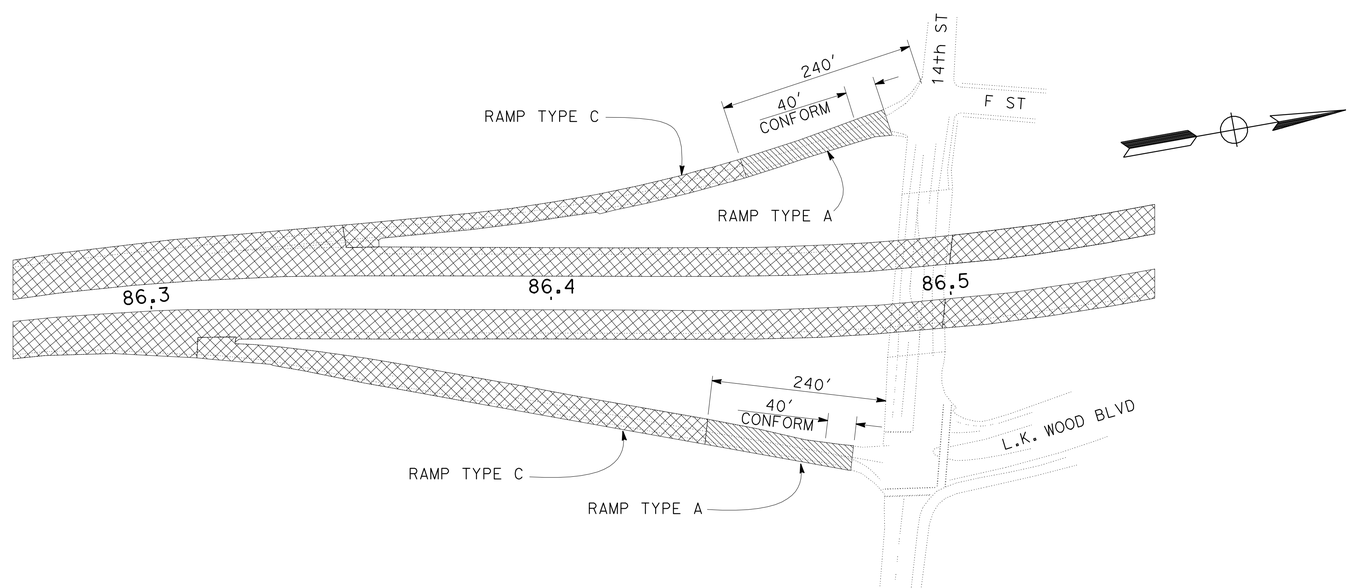

PAVING AT 14th STREET RAMPS

CONSTRUCTION DETAILS C-4

NO SCALE

REVISED BY	DATE REVISED

CALCULATED-DESIGNED BY	CHECKED BY
Todd Lark	Amal Rashid

FUNCTIONAL SUPERVISOR: Lena R. Ashley

STATE OF CALIFORNIA - DEPARTMENT OF TRANSPORTATION
Caltrans
DESIGN

LAST REVISION 00-00-00 | DATE PLOTTED => 14-JUN-2012 | TIME PLOTTED => 09:59

Dist	COUNTY	ROUTE	POST MILES TOTAL PROJECT	SHEET No.	TOTAL SHEETS
01	Hum	101	79.9/87.8	8	49

REGISTERED CIVIL ENGINEER 5/14/12 DATE

May 14, 2012
PLANS APPROVAL DATE

REGISTERED PROFESSIONAL ENGINEER Todd Lark No. 52481 Exp. 12/31/12 CIVIL STATE OF CALIFORNIA

THE STATE OF CALIFORNIA OR ITS OFFICERS OR AGENTS SHALL NOT BE RESPONSIBLE FOR THE ACCURACY OR COMPLETENESS OF SCANNED COPIES OF THIS PLAN SHEET.

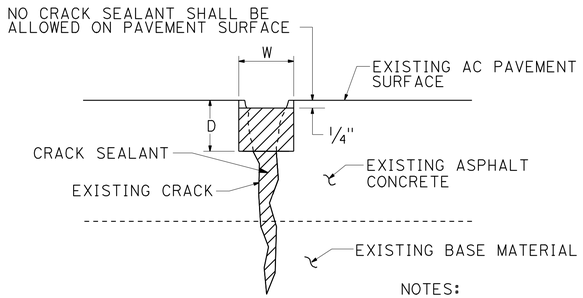

SECTION

NOTES:
1. ALL CRACKS 1/4" WIDE OR GREATER ARE TO BE ROUTED AND SEALED
2. IF ANY PART OF ANY CRACK IS 1/4" OR WIDER, THEN THE ENTIRE CRACK WILL BE ROUTED AND SEALED.
3. NO SEALANT MATERIAL WILL BE ALLOWED ON HMA PAVEMENT SURFACE

W = WIDTH OF ROUTING=WIDTH OF CRACK +1/4" MIN.
D = DEPTH OF ROUTING=W+1/4" MIN.

CRACK SEALANT

CRACK TREATMENT

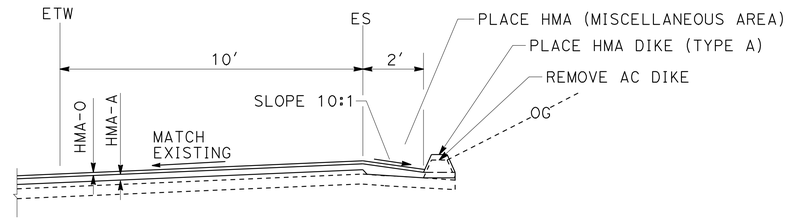

PAVED DITCH

PM 87.40/87.47

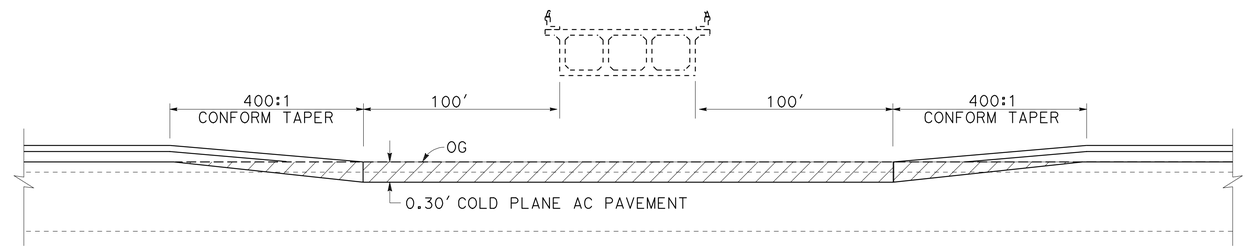

ELEVATION

PAVING CONFORM UNDER BRIDGE/STRUCTURE

ROUTE 255 OVERCROSSING PM 85.82
7th STREET OVERCROSSING PM 86.08

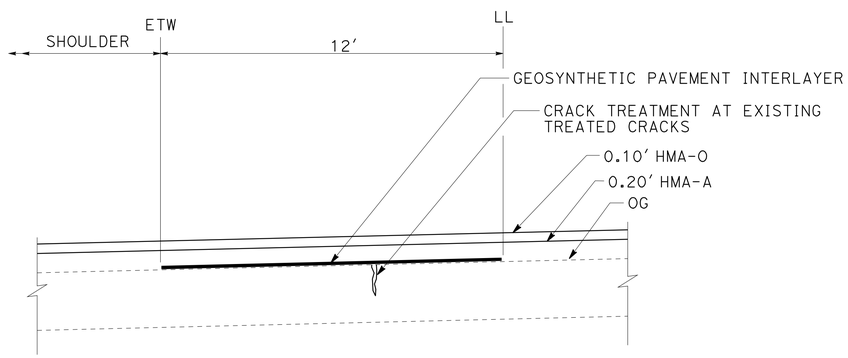

GEOSYNTHETIC PAVEMENT INTERLAYER DETAIL

SOUTHBOUND US 101, NO. 2 LANE
PM 81.26/81.28
PM 81.46/81.80
PM 82.35/82.41

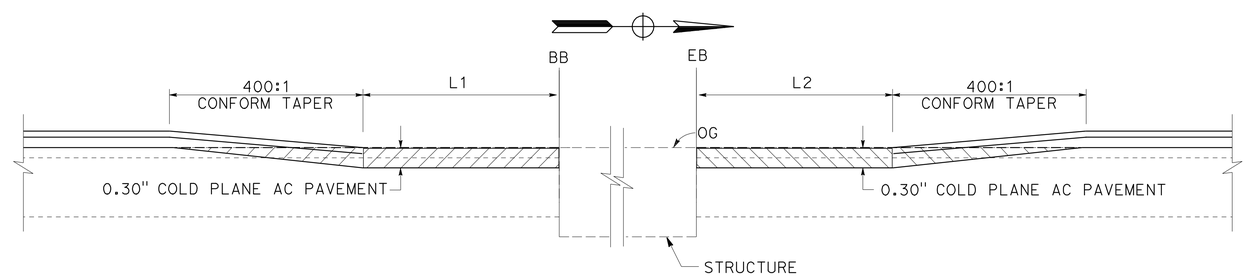

STRUCTURE	LOCATION PM	L1 (Ft)	L2 (Ft)
EUREKA SLOUGH BRIDGE	79.95 Lt	0	100
EUREKA SLOUGH BRIDGE	79.95 Rt	0	100
JACOBY CREEK BRIDGE	84.50 Lt	100	100
JACOBY CREEK BRIDGE	84.50 Rt	100	100
GANNON SLOUGH BRIDGE	84.70 Lt	100	100
GANNON SLOUGH BRIDGE	84.70 Rt	100	200
ARCATA OVERHEAD	87.84 Lt	100	0
ARCATA OVERHEAD	87.84 Rt	100	0

PAVING CONFORM AT BRIDGE/STRUCTURE

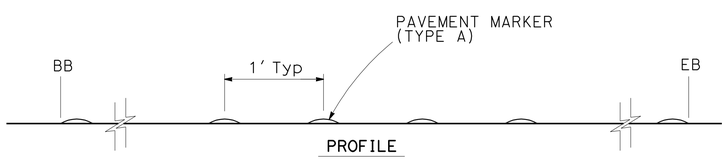

PROFILE

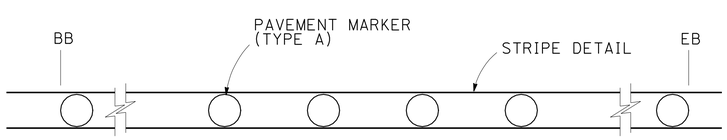

PLAN

SIMULATED RUMBLE STRIP ON BRIDGE DECK

CONSTRUCTION DETAILS
C-5

NO SCALE

STATE OF CALIFORNIA - DEPARTMENT OF TRANSPORTATION
Caltrans®
DESIGN

FUNCTIONAL SUPERVISOR: Lena R. Ashley
CALCULATED-DESIGNED BY: Amal Rashid
CHECKED BY: Todd Lark
REVISED BY
DATE REVISED

LAST REVISION 00-00-00
DATE PLOTTED => 14-JUN-2012
TIME PLOTTED => 09:59

Dist	COUNTY	ROUTE	POST MILES TOTAL PROJECT	SHEET No.	TOTAL SHEETS
01	Hum	101	79.9/87.8	9	49

REGISTERED CIVIL ENGINEER 5/14/12 DATE

May 14, 2012
PLANS APPROVAL DATE

REGISTERED PROFESSIONAL ENGINEER Todd Lark No. 52481 Exp. 12/31/12 CIVIL STATE OF CALIFORNIA

THE STATE OF CALIFORNIA OR ITS OFFICERS OR AGENTS SHALL NOT BE RESPONSIBLE FOR THE ACCURACY OR COMPLETENESS OF SCANNED COPIES OF THIS PLAN SHEET.

LEGEND

INDICATES LOCATION OF CLEAN EXPANSION JOINT AND INSTALL NEW AL JOINT SEAL

LIMITS OF REMOVE ASPHALT CONCRETE SURFACING (1¼" THICK)

LIMITS OF HMA (OPEN GRADED-WMA) 1¼" THICK

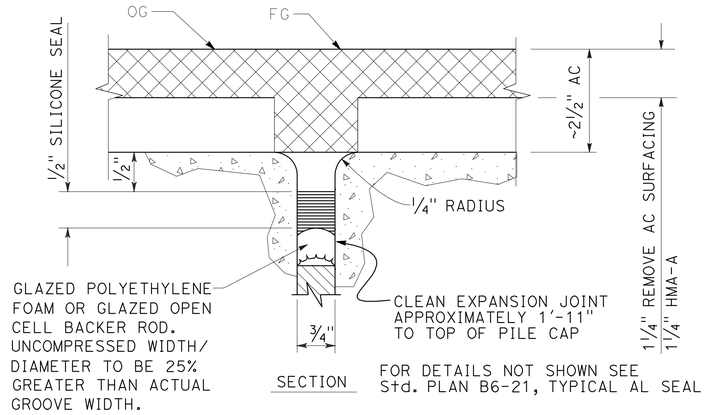

SECTION

FOR DETAILS NOT SHOWN SEE Std. PLAN B6-21, TYPICAL AL SEAL

EXPANSION JOINT DETAIL

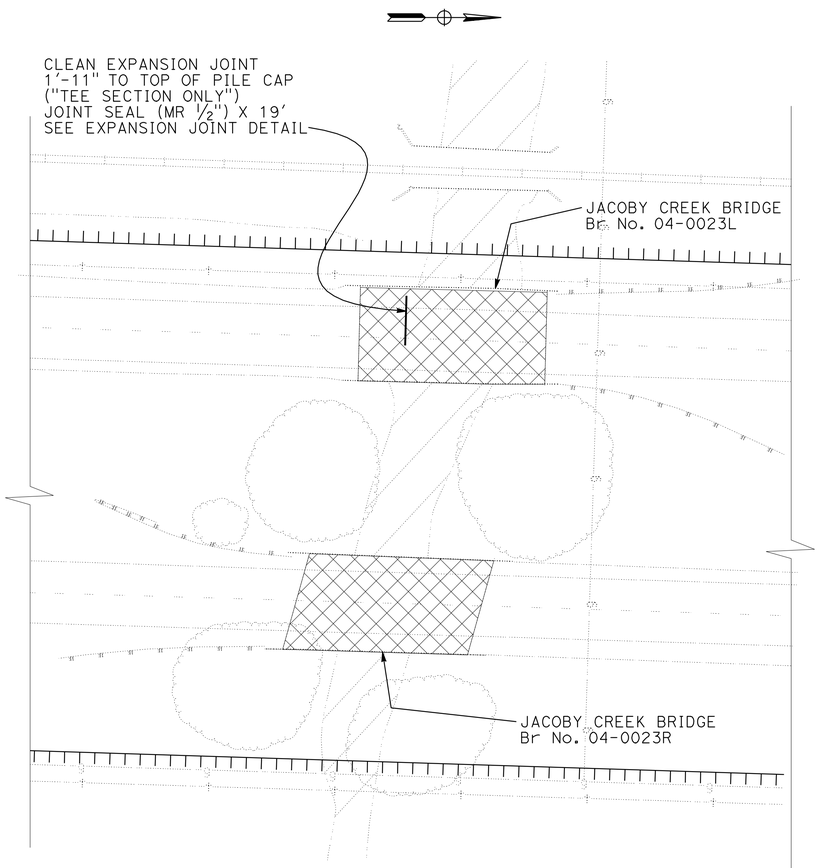

JACOBY CREEK
PM 84.50

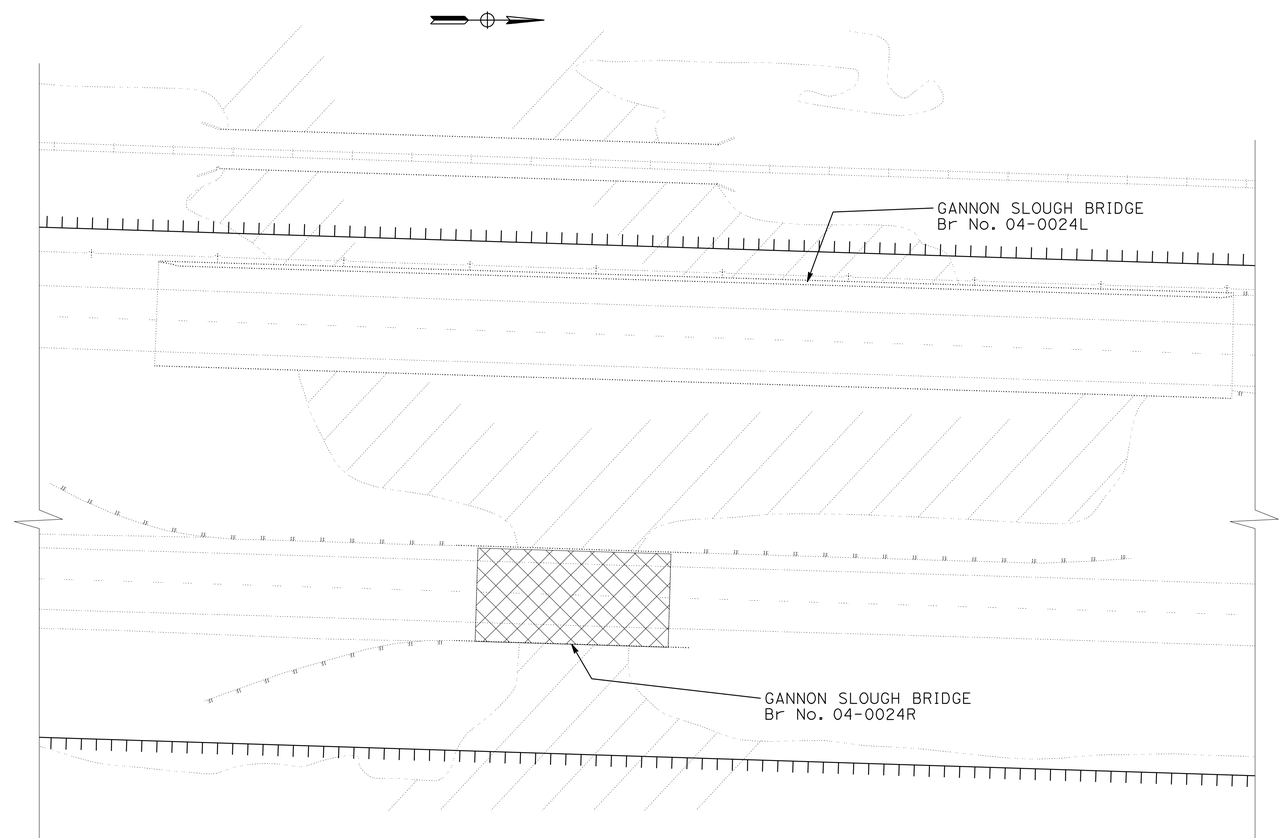

GANNON SLOUGH
PM 84.70

CONSTRUCTION DETAILS
C-6

NO SCALE

STATE OF CALIFORNIA - DEPARTMENT OF TRANSPORTATION
Caltrans
DESIGN

FUNCTIONAL SUPERVISOR: Lena R. Ashley
CALCULATED-DESIGNED BY: Amal Rashid
CHECKED BY: Todd Lark
REVISED BY
DATE REVISED

LAST REVISION 00-00-00
DATE PLOTTED => 14-JUN-2012
TIME PLOTTED => 09:59

Dist	COUNTY	ROUTE	POST MILES TOTAL PROJECT	SHEET No.	TOTAL SHEETS
01	Hum	101	79.9/87.8	10	49

REGISTERED CIVIL ENGINEER 5/14/12 DATE

May 14, 2012
PLANS APPROVAL DATE

REGISTERED PROFESSIONAL ENGINEER Todd Lark No. 52481 Exp. 12/31/12 CIVIL STATE OF CALIFORNIA

THE STATE OF CALIFORNIA OR ITS OFFICERS OR AGENTS SHALL NOT BE RESPONSIBLE FOR THE ACCURACY OR COMPLETENESS OF SCANNED COPIES OF THIS PLAN SHEET.

NOTES

1. ALL EXISTING UTILITY FACILITIES HAVE NOT BEEN PLOTTEDON THESE PLANS
2. LIMITS OF PROPOSED SURFACING SHALL BE DIRECTED BY THE ENGINEER.
3. REINFORCING STEEL IS POTENTIALLY PRESENT IN THE CONCRETE COLLARS.
4. THE CONTRACTOR SHALL COMPLETELY DEMOLISH EXISTING CONCRETE COLLARS TO A DEPTH OF 12".

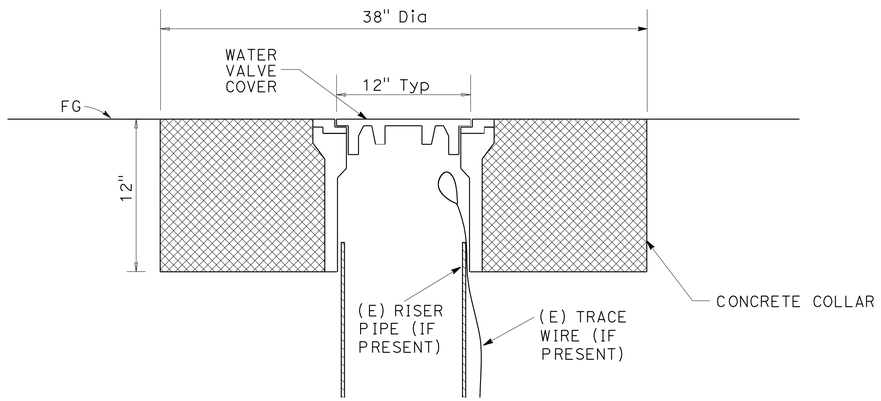

WATER VALVE

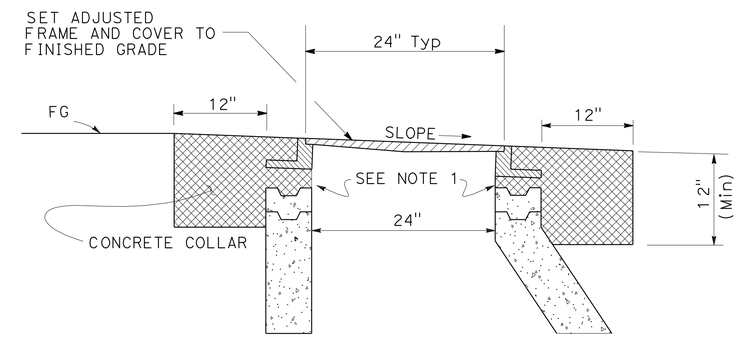

SEWER

NOTES:

1. SHIMS SHALL BE PLACED UNDER THE FRAME AND COVER ON TOP OF THE HIGHEST GRADE RING AS NEEDED SUCH THAT THE FRAME AND COVER ARE FLUSH WITH THE FINISHED GRADE OF THE STREET. THE MINIMUM SHIM HEIGHT IS 1". CONCRETE SHALL BE PLACED IN BETWEEN THE HIGHEST GRADE RING AND THE SHIMMED FRAME AND LID WHEN THE CONCRETE COLLAR IS CONSTRUCTED, IN EFFECT CREATING A 'CAST-IN-PLACE' GRADE RING OF VARYING THICKNESS.
2. ALL GRADE RINGS SHALL BE SEALED WITH NON-SHRINK GROUT ON BOTH INNER AND OUTER FACES OF EACH JOINT.
3. REPLACE FRAME AND COVER AT LOCATIONS SHOWN ON PLANS.

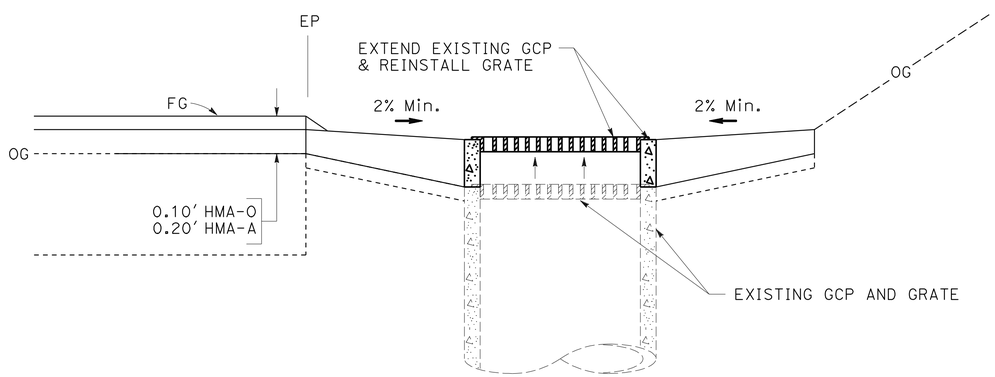

DRAINAGE INLET

ADJUST FRAME AND COVER/GRATE TO GRADE

CONSTRUCTION DETAILS C-7

NO SCALE

STATE OF CALIFORNIA - DEPARTMENT OF TRANSPORTATION
Caltrans® DESIGN
FUNCTIONAL SUPERVISOR: Lena R. Ashley
CALCULATED-DESIGNED BY: Amal Rashid
CHECKED BY: Todd Lark
REVISED BY
DATE REVISED

LAST REVISION 00-00-00
DATE PLOTTED => 14-JUN-2012
TIME PLOTTED => 09:59

Dist	COUNTY	ROUTE	POST MILES TOTAL PROJECT	SHEET No.	TOTAL SHEETS
01	Hum	101	79.9/87.8	11	49

REGISTERED CIVIL ENGINEER 5/14/12 DATE

May 14, 2012
PLANS APPROVAL DATE

REGISTERED PROFESSIONAL ENGINEER Todd Lark No. 52481 Exp. 12/31/12 CIVIL STATE OF CALIFORNIA

THE STATE OF CALIFORNIA OR ITS OFFICERS OR AGENTS SHALL NOT BE RESPONSIBLE FOR THE ACCURACY OR COMPLETENESS OF SCANNED COPIES OF THIS PLAN SHEET.

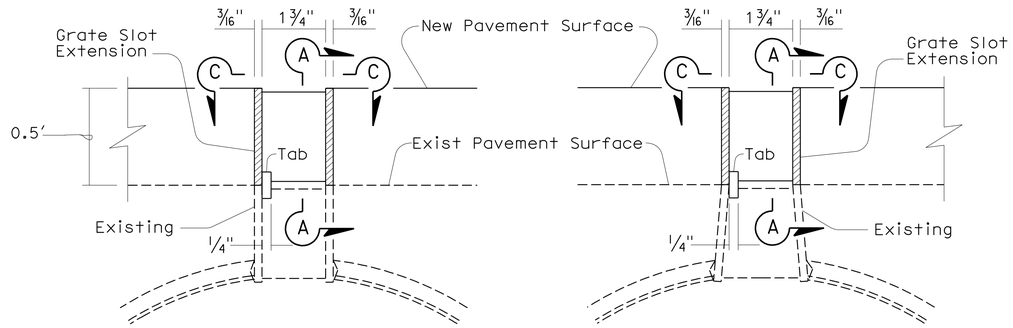

RECTANGULAR SPACER

TAPERED SPACER

SLOTTED CORRUGATED STEEL PIPE

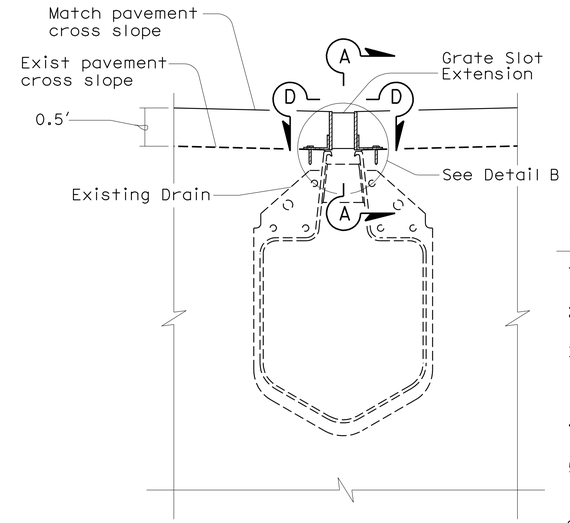

SLOTTED PLASTIC PIPE

NOTES:

1. For Slotted Plastic Pipe Drain Details, see New Standard Plan NSP D98D.
2. For Slotted Corrugated Steel Pipe Drain Details, see Standard Plan D98A and D98B.
3. The cross bar spacer shall be welded to the bearing bars in such a manner as to develop a minimum tensile strength of 12,000 LBS normal to the longitudinal axis of the bearing bars.
4. The cross bar spacer on the extension shall line up with the existing cross bar spacers.
5. The maximum variance from a straight line between the extreme top corners of the bearing bars shall be 1/2" in 20'-0".
6. Dimensions shown are minimums unless otherwise indicated.
7. Contractor to provide an adequate method of keeping the asphalt concrete out of grate slot, during paving operations.
8. Existing heel guard shall be removed prior to placement of extension
9. Use heel guard when specified. See Standard Plan D98B for heel guard details.
10. Grate Slot Extension shall continue over any discontinuities in the existing grate slot.

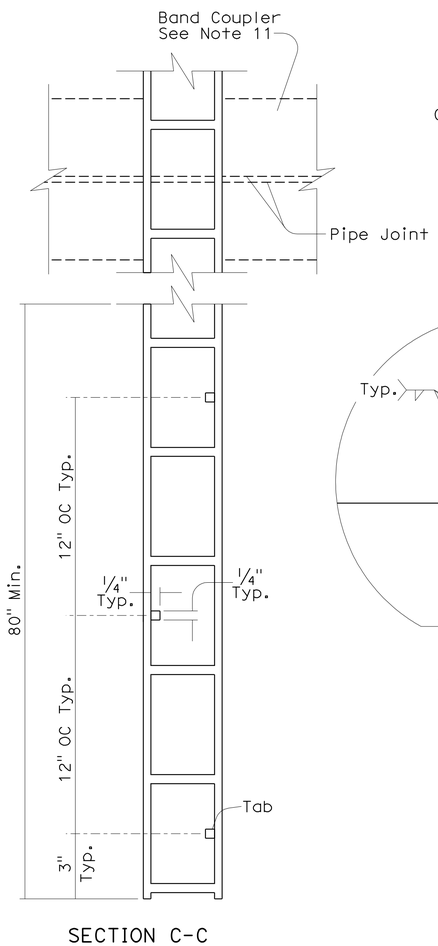

SECTION C-C

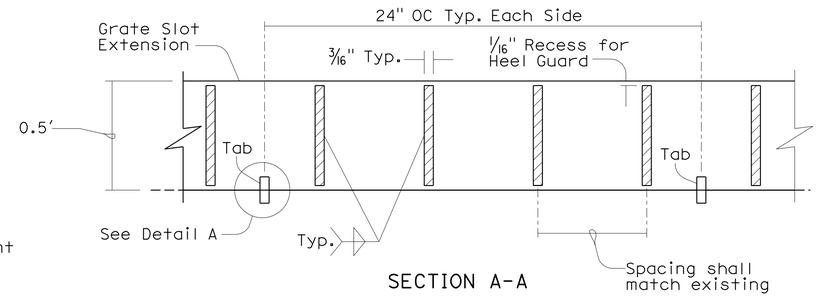

SECTION A-A

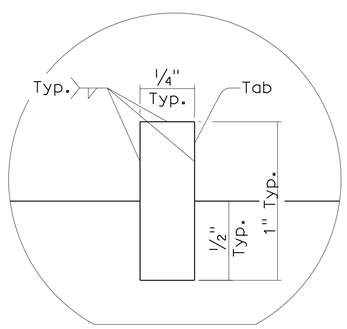

DETAIL A
ALIGNMENT TAB

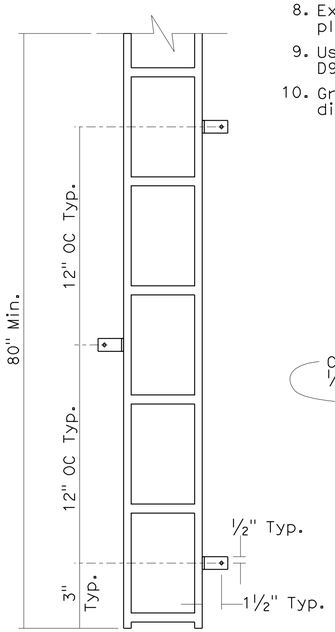

SECTION D-D

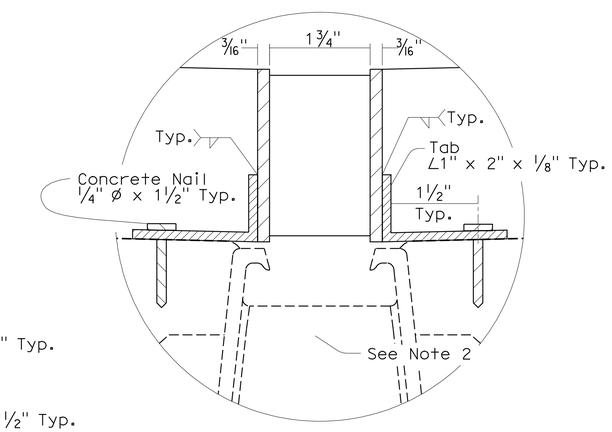

DETAIL B

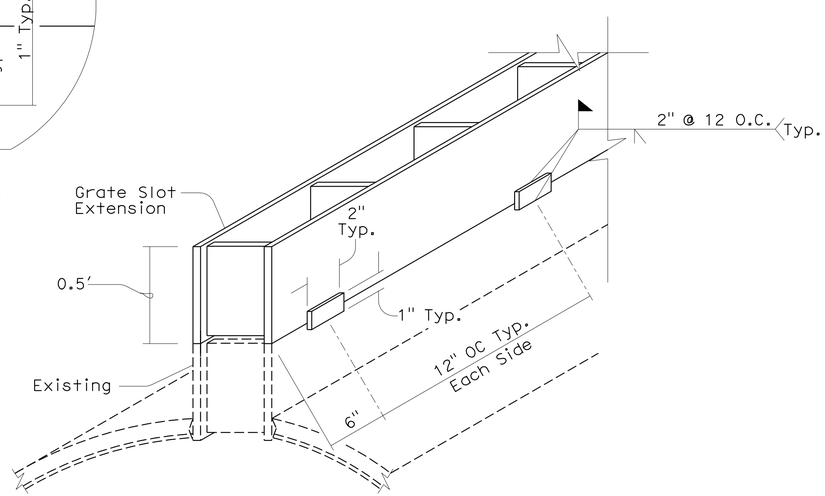

SLOTTED CORRUGATED STEEL PIPE

CONSTRUCTION DETAILS
C-8

NO SCALE

STATE OF CALIFORNIA - DEPARTMENT OF TRANSPORTATION
Caltrans
DESIGN

FUNCTIONAL SUPERVISOR: Lena R. Ashley
CALCULATED-DESIGNED BY: Todd Lark
CHECKED BY: Amal Rashid
REVISED BY
DATE REVISED

LAST REVISION 00-00-00
DATE PLOTTED => 14-JUN-2012
TIME PLOTTED => 09:59

Dist	COUNTY	ROUTE	POST MILES TOTAL PROJECT	SHEET No.	TOTAL SHEETS
01	Hum	101	79.9/87.8	12	49

REGISTERED CIVIL ENGINEER 5/14/12 DATE

May 14, 2012
PLANS APPROVAL DATE

REGISTERED PROFESSIONAL ENGINEER Todd Lark No. 52481 Exp. 12/31/12 CIVIL STATE OF CALIFORNIA

THE STATE OF CALIFORNIA OR ITS OFFICERS OR AGENTS SHALL NOT BE RESPONSIBLE FOR THE ACCURACY OR COMPLETENESS OF SCANNED COPIES OF THIS PLAN SHEET.

LEGEND:

DIRECTION OF TRAVEL

STRIPING DETAIL No.

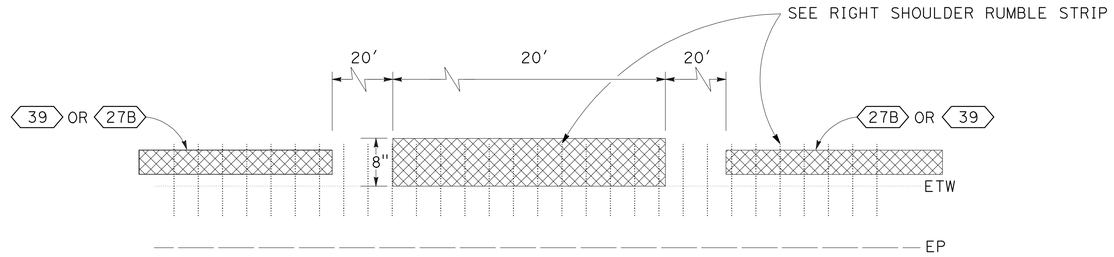

PLAN

AERIAL ENFORCEMENT MARKING

NORTHBOUND ROUTE 101 ONLY

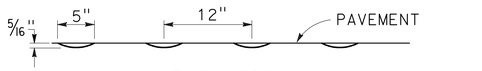

ELEVATION
RIGHT SHOULDER

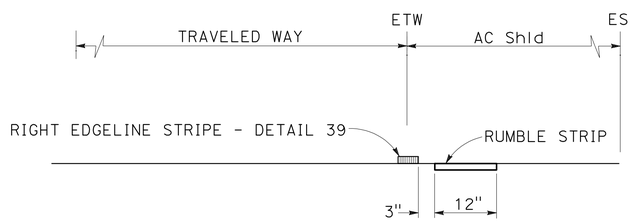

SECTION A-A

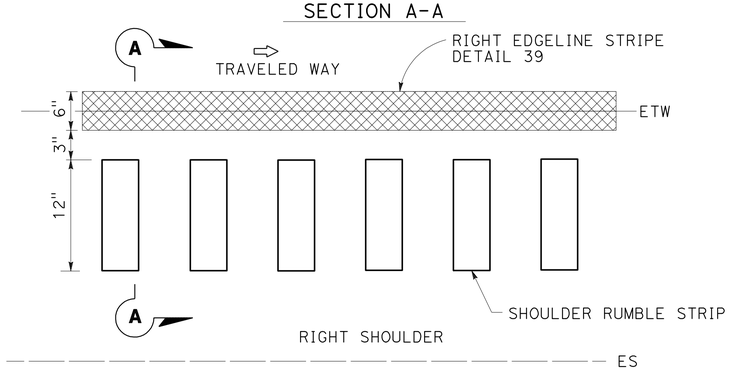

PLAN

SHOULDER RUMBLE STRIP

FOR USE WITH STRIPE DETAIL 39

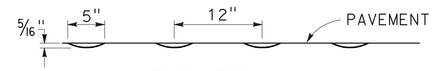

ELEVATION
RIGHT SHOULDER

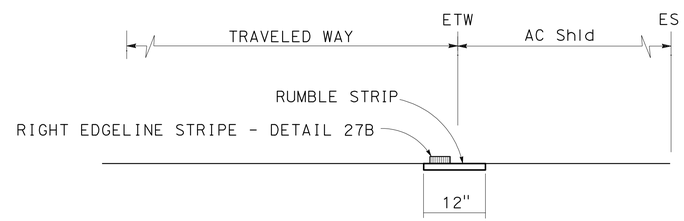

SECTION B-B

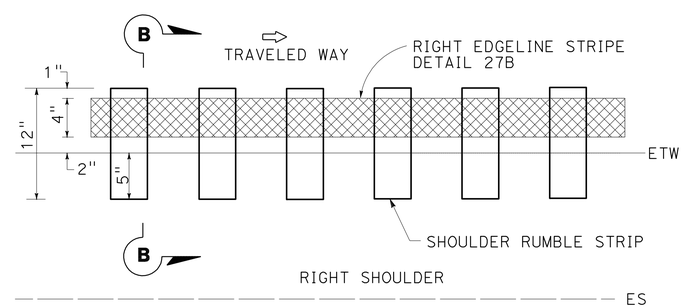

PLAN

SHOULDER RUMBLE STRIP

FOR USE WITH STRIPE DETAIL 27B

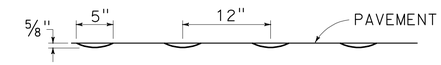

ELEVATION
LEFT SHOULDER

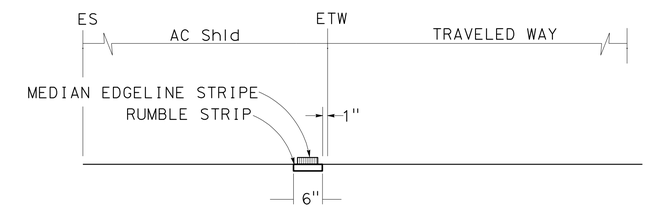

SECTION C-C

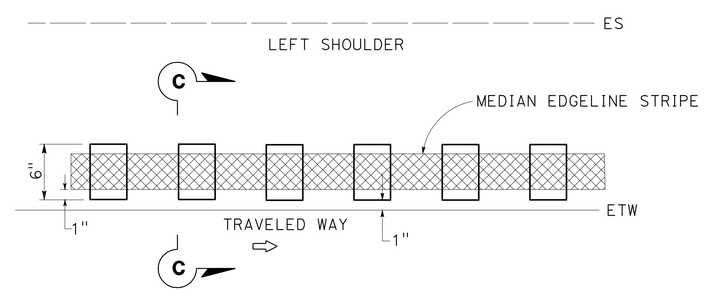

PLAN

CENTERLINE RUMBLE STRIP

CONSTRUCTION DETAILS
C-9

NO SCALE

STATE OF CALIFORNIA - DEPARTMENT OF TRANSPORTATION
Caltrans® DESIGN

FUNCTIONAL SUPERVISOR: Lena R. Ashley
CALCULATED-DESIGNED BY: Sheri Rodriguez
CHECKED BY: Amal Rashid
REVISED BY
DATE REVISED

LAST REVISION 00-00-00
DATE PLOTTED => 14-JUN-2012
TIME PLOTTED => 09:59

Dist	COUNTY	ROUTE	POST MILES TOTAL PROJECT	SHEET No.	TOTAL SHEETS
01	Hum	101	79.9/87.8	13	49

REGISTERED CIVIL ENGINEER 5/14/12 DATE

May 14, 2012
PLANS APPROVAL DATE

REGISTERED PROFESSIONAL ENGINEER Todd Lark No. 52481 Exp. 12/31/12 CIVIL STATE OF CALIFORNIA

THE STATE OF CALIFORNIA OR ITS OFFICERS OR AGENTS SHALL NOT BE RESPONSIBLE FOR THE ACCURACY OR COMPLETENESS OF SCANNED COPIES OF THIS PLAN SHEET.

NOTES:

1. EXISTING UTILITY FACILITIES HAVE NOT BEEN PLOTTED ON THESE PLANS.
2. EXACT LOCATION OF NESTED RAIL ELEMENTS TO BE DETERMINED BY THE ENGINEER.

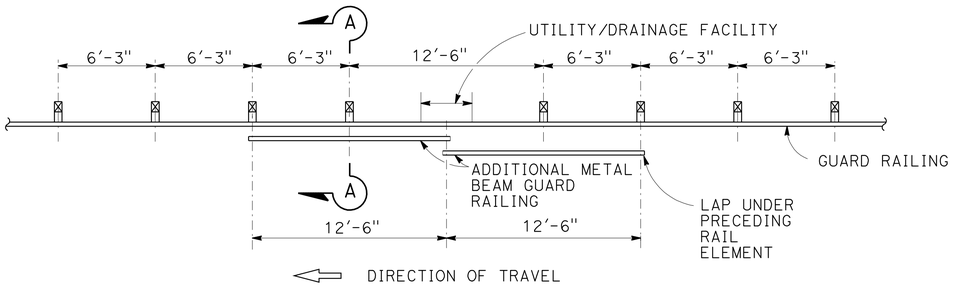

CASE 1
ONE POST OMITTED
(SPLICE IN CENTER)

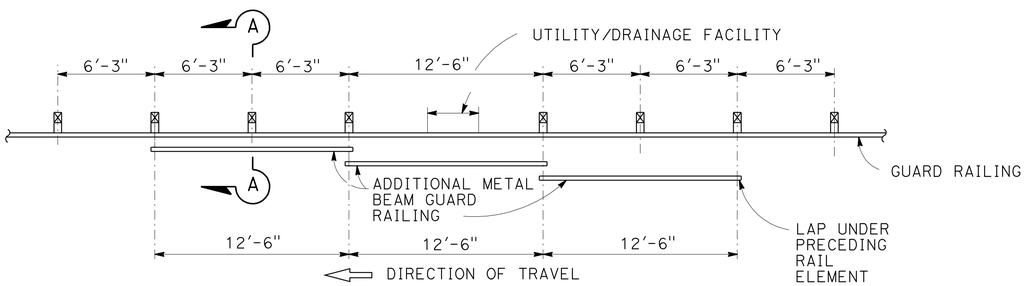

CASE 2
ONE POST OMITTED
(SPLICE AT POSTS)

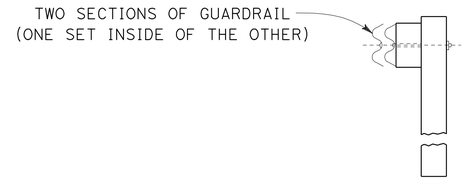

SECTION A-A

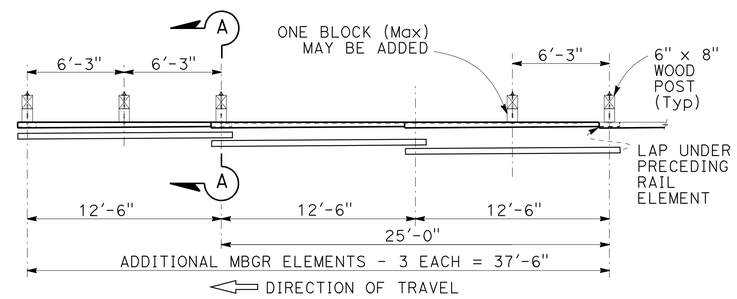

PLAN

ELEVATION

CASE 3
TWO POSTS OMITTED

FOR DETAILS NOT SHOWN SEE STANDARD PLAN A77A1.

NESTED RAIL ELEMENTS

CONSTRUCTION DETAILS
C-10

NO SCALE

REVISED BY	DATE REVISED

CALCULATED-DESIGNED BY	CHECKED BY
Todd Lark	Amal Rashid

FUNCTIONAL SUPERVISOR: Lena R. Ashley

STATE OF CALIFORNIA - DEPARTMENT OF TRANSPORTATION
Caltrans
DESIGN

LAST REVISION 00-00-00 | DATE PLOTTED => 14-JUN-2012 | TIME PLOTTED => 09:59

Dist	COUNTY	ROUTE	POST MILES TOTAL PROJECT	SHEET No.	TOTAL SHEETS
01	Hum	101	79.9/87.8	14	49

REGISTERED CIVIL ENGINEER 5/14/12 DATE

May 14, 2012
PLANS APPROVAL DATE

REGISTERED PROFESSIONAL ENGINEER Todd Lark No. 52481 Exp. 12/31/12 CIVIL STATE OF CALIFORNIA

THE STATE OF CALIFORNIA OR ITS OFFICERS OR AGENTS SHALL NOT BE RESPONSIBLE FOR THE ACCURACY OR COMPLETENESS OF SCANNED COPIES OF THIS PLAN SHEET.

STATIONARY MOUNTED CONSTRUCTION AREA SIGNS

SIGN ◯	SIGN CODE	SIGN MESSAGE	PANEL SIZE	NUMBER OF POSTS AND SIZE	NUMBER OF SIGNS
A	C40 (CA)	TRAFFIC FINES DOUBLED IN CONSTRUCTION ZONES	144"x60"	2 - 6"x8"	3
B	G20-1	ROAD WORK NEXT 8 MILES	90"x48"	2 - 6"x6"	3
	C23B (CA)	HIGHWAY REPAIR	54"x24"		
C	W11-1	BICYCLE SYMBOL	48"x48"	1 - 6"x6"	3
	W16-1	SHARE THE ROAD	24"x30"		
D	G20-2	END ROAD WORK	48"x24"	1 - 4"x6"	2
E	W20-1	ROAD WORK AHEAD	36"x36"	1 - 4"x6"	13

NOTE: EXACT SIGN LOCATIONS TO BE DETERMINED BY THE ENGINEER.

4" Caps
BLACK ON ORANGE

SAFETY IMPROVEMENT

C23B (CA)

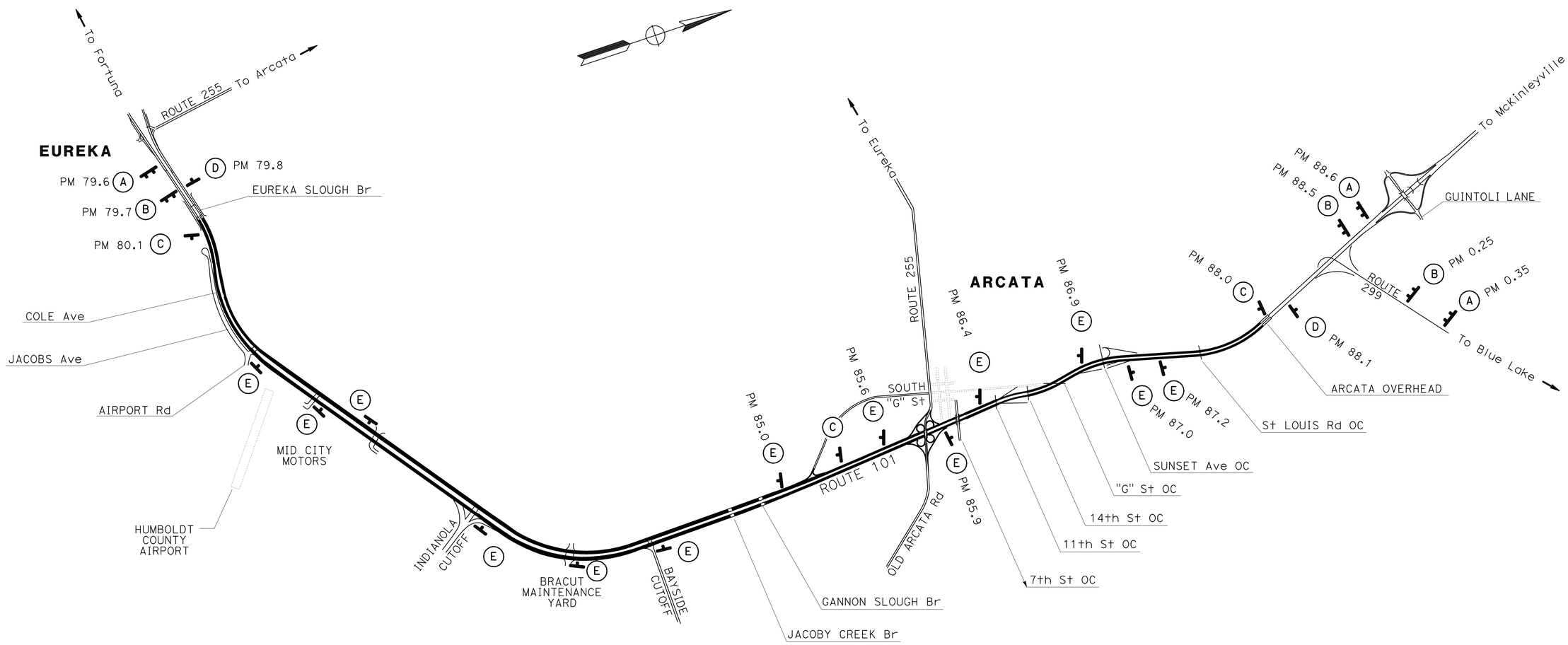

CONSTRUCTION AREA SIGNS
CS-1

NO SCALE

STATE OF CALIFORNIA - DEPARTMENT OF TRANSPORTATION
Caltrans
DESIGN

FUNCTIONAL SUPERVISOR: Lena R. Ashley
CALCULATED-DESIGNED BY: Todd Lark
CHECKED BY: Amal Rashid
REVISED BY
DATE REVISED

LAST REVISION 00-00-00
DATE PLOTTED => 14-JUN-2012
TIME PLOTTED => 09:59

Dist	COUNTY	ROUTE	POST MILES TOTAL PROJECT	SHEET No.	TOTAL SHEETS
01	Hum	101	79.9/87.8	15	49

REGISTERED CIVIL ENGINEER 5/14/12 DATE

May 14, 2012
PLANS APPROVAL DATE

REGISTERED PROFESSIONAL ENGINEER Todd Lark No. 52481 Exp. 12/31/12 CIVIL STATE OF CALIFORNIA

THE STATE OF CALIFORNIA OR ITS OFFICERS OR AGENTS SHALL NOT BE RESPONSIBLE FOR THE ACCURACY OR COMPLETENESS OF SCANNED COPIES OF THIS PLAN SHEET.

NOTE:

1. EXISTING UTILITY FACILITIES HAVE NOT BEEN PLOTTED ON THESE PLANS.
2. PLACEMENT OF COLORED HMA ALONG OUTSIDE SHOULDERS TO COINCIDE WITH RUMBLE STRIP LOCATIONS.

LEGEND:

- DIRECTION OF TRAVEL
- STRIPING DETAIL No.
- RUMBLE STRIP
- LIMIT LINE PAVEMENT MARKING
- YIELD LINE PAVEMENT MARKING

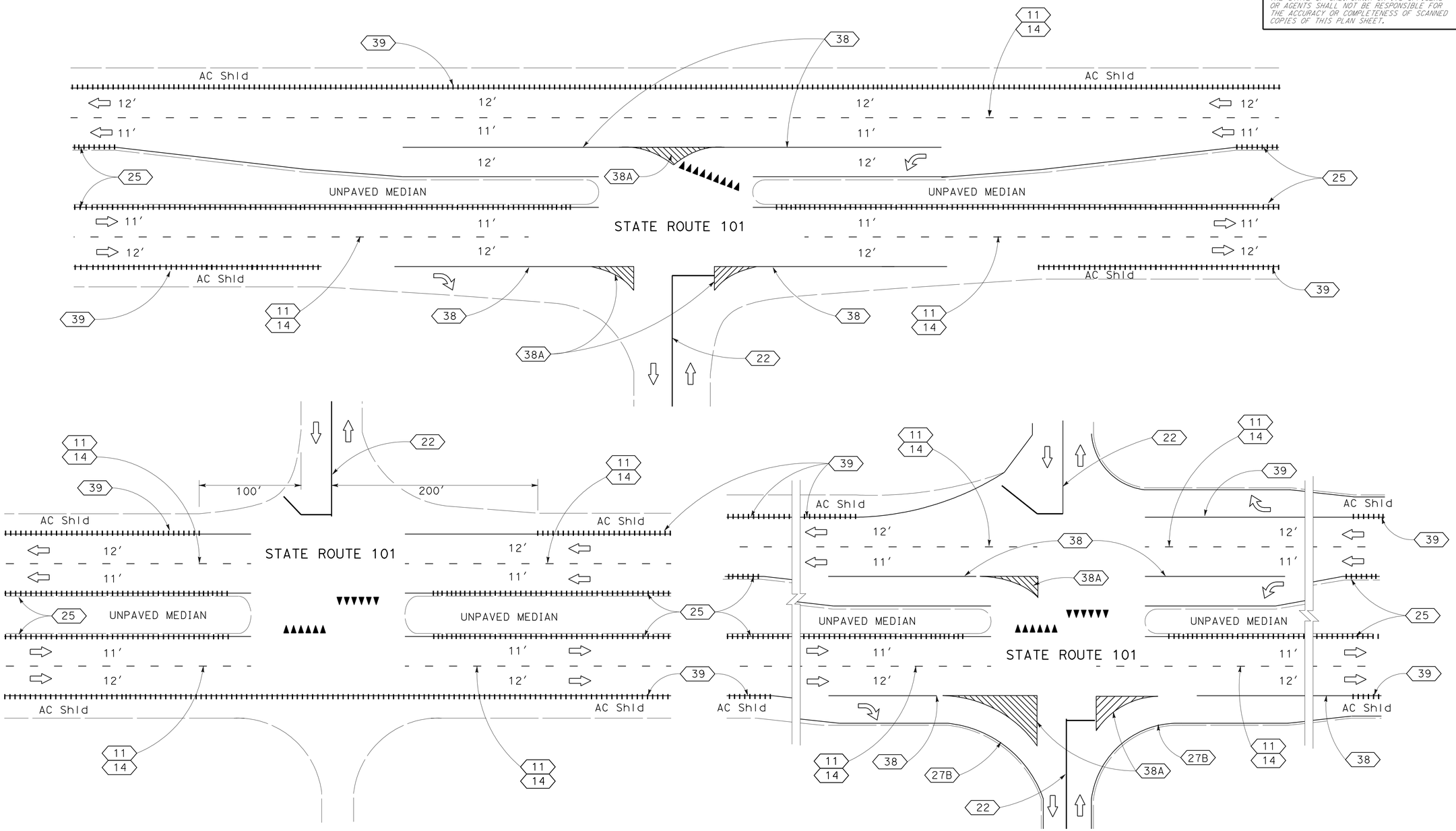

TYPICAL AT INTERSECTING ROADS AND MAJOR DRIVEWAYS

RUMBLE STRIP & PAVEMENT DELINEATION DETAILS

PAVEMENT DELINEATION DETAILS PDD-1

NO SCALE

STATE OF CALIFORNIA - DEPARTMENT OF TRANSPORTATION
Caltrans®
DESIGN

FUNCTIONAL SUPERVISOR: Lena R. Ashley
CALCULATED-DESIGNED BY: Sheri Rodriguez
CHECKED BY: Amal Rashid
REVISED BY
DATE REVISED

LAST REVISION 00-00-00
DATE PLOTTED => 14-JUN-2012
TIME PLOTTED => 09:59

Dist	COUNTY	ROUTE	POST MILES TOTAL PROJECT	SHEET No.	TOTAL SHEETS
01	Hum	101	79.9/87.8	16	49

REGISTERED CIVIL ENGINEER 5/14/12 DATE

May 14, 2012
PLANS APPROVAL DATE

REGISTERED PROFESSIONAL ENGINEER Todd Lark No. 52481 Exp. 12/31/12 CIVIL STATE OF CALIFORNIA

THE STATE OF CALIFORNIA OR ITS OFFICERS OR AGENTS SHALL NOT BE RESPONSIBLE FOR THE ACCURACY OR COMPLETENESS OF SCANNED COPIES OF THIS PLAN SHEET.

NOTE:

1. EXISTING UTILITY FACILITIES HAVE NOT BEEN PLOTTED ON THESE PLANS.
2. PLACEMENT OF HMA-CO ALONG OUTSIDE SHOULDERS TO COINCIDE WITH RUMBLE STRIP LOCATIONS.

LEGEND:

HMA-CO = HOT MIX ASPHALT (COLORIZED OPEN GRADED-WMA)
⇨ DIRECTION OF TRAVEL
⬡ STRIPING DETAIL No.
RUMBLE STRIP

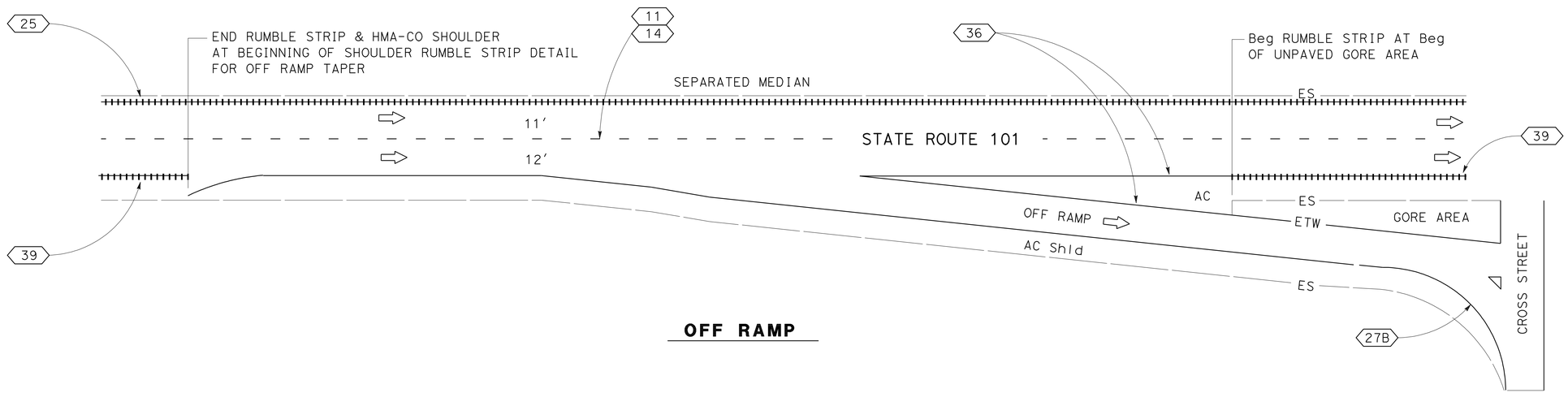

OFF RAMP

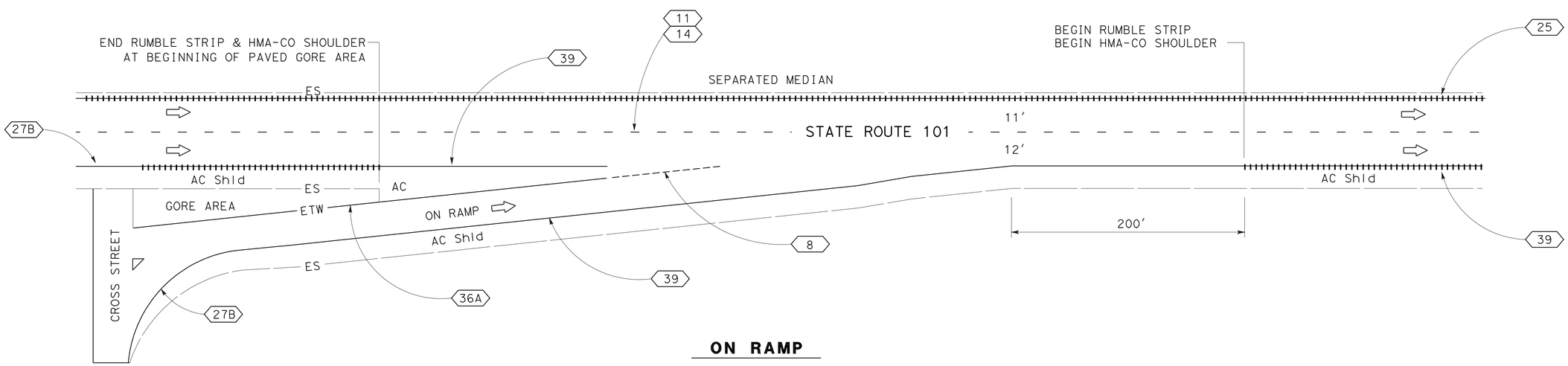

ON RAMP

TYPICAL AT INTERSECTING ROADS AND RAMPS

RUMBLE STRIP & PAVEMENT DELINEATION DETAILS

PAVEMENT DELINEATION DETAILS
PDD-2

NO SCALE

REVISED BY | DATE REVISED
Todd Lark | Amal Rashid
CALCULATED-DESIGNED BY | CHECKED BY
FUNCTIONAL SUPERVISOR: Lena R. Ashley

STATE OF CALIFORNIA - DEPARTMENT OF TRANSPORTATION
Caltrans
DESIGN

LAST REVISION 00-00-00 | DATE PLOTTED => 14-JUN-2012 | TIME PLOTTED => 09:59

Dist	COUNTY	ROUTE	POST MILES TOTAL PROJECT	SHEET No.	TOTAL SHEETS
01	Hum	101	79.9/87.8	17	49

REGISTERED CIVIL ENGINEER 5/14/12 DATE

May 14, 2012
PLANS APPROVAL DATE

REGISTERED PROFESSIONAL ENGINEER
Todd Lark
No. 52481
Exp. 12/31/12
CIVIL
STATE OF CALIFORNIA

THE STATE OF CALIFORNIA OR ITS OFFICERS OR AGENTS SHALL NOT BE RESPONSIBLE FOR THE ACCURACY OR COMPLETENESS OF SCANNED COPIES OF THIS PLAN SHEET.

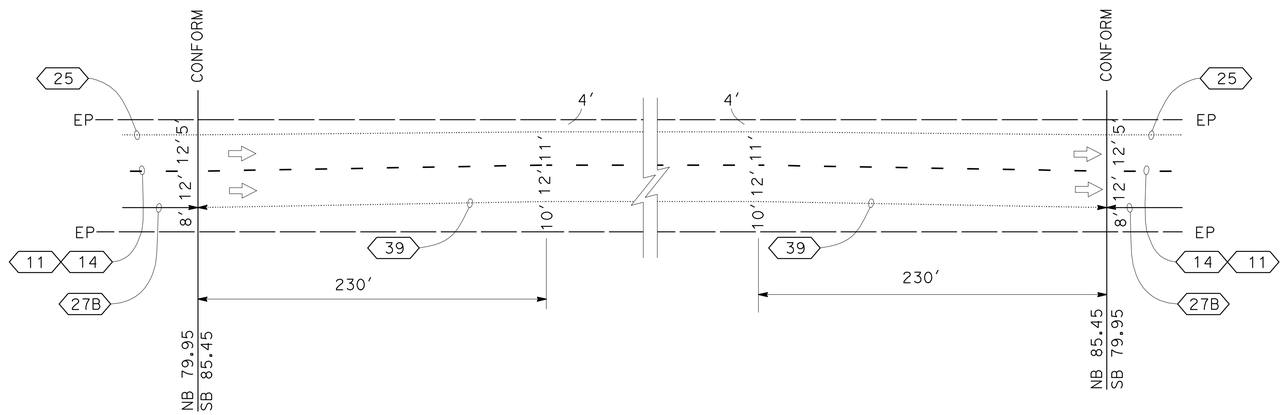

ROTATE DETAIL 180° FOR SYMMETRY

STRIPING TRANSITION DETAIL

PAVEMENT DELINEATION DETAILS
PDD-3

NO SCALE

REVISED BY	Todd Lark
DATE REVISED	Amal Rashid
CALCULATED-DESIGNED BY	
CHECKED BY	
FUNCTIONAL SUPERVISOR	Lena R. Ashley

STATE OF CALIFORNIA - DEPARTMENT OF TRANSPORTATION
Caltrans
DESIGN

LAST REVISION 00-00-00
DATE PLOTTED => 14-JUN-2012
TIME PLOTTED => 09:59

Dist	COUNTY	ROUTE	POST MILES TOTAL PROJECT	SHEET No.	TOTAL SHEETS
01	Hum	101	79.9/87.8	18	49

REGISTERED CIVIL ENGINEER 5/14/12 DATE

May 14, 2012
PLANS APPROVAL DATE

REGISTERED PROFESSIONAL ENGINEER Todd Lark No. 52481 Exp. 12/31/12 CIVIL STATE OF CALIFORNIA

THE STATE OF CALIFORNIA OR ITS OFFICERS OR AGENTS SHALL NOT BE RESPONSIBLE FOR THE ACCURACY OR COMPLETENESS OF SCANNED COPIES OF THIS PLAN SHEET.

REMOVE THERMOPLASTIC PAVEMENT MARKING

LOCATION (PM)	L+/R+ RAMP/MEDIAN	TYPE/LEGEND	AREA SQFT	REMARKS	LOCATION (PM)	L+/R+ RAMP/MEDIAN	TYPE/LEGEND	AREA SQFT	REMARKS
80.19	R+	TYPE V ARROW (2)	66		82.73	L+	TYPE V ARROW (2)	66	
80.24	R+	TYPE V ARROW (2)	66		82.73	L+	TYPE III (L) ARROW	42	
80.24	R+	TYPE III (R) ARROW	42		83.31	R+	TYPE V ARROW (2)	66	
80.26	R+	STOP	22	JACOBS AVENUE	83.31	R+	TYPE III (R) ARROW	42	
80.26	R+	LIMIT LINE	24	JACOBS AVENUE	83.35	R+	TYPE V ARROW (2)	66	
80.27	L+	TYPE V ARROW (2)	66		83.35	R+	TYPE III (R) ARROW	42	
80.32	L+	TYPE V ARROW (2)	66		83.37	Med	LIMIT LINE	36	BRACUT
80.76	R+	TYPE V ARROW (2)	66		83.38	Med	STOP	22	BRACUT
80.76	R+	TYPE III (R) ARROW	42		83.38	Med	LIMIT LINE	12	BRACUT
80.78	R+	TYPE V ARROW (2)	66		83.38	Med	RAILROAD CROSSING	70	BRACUT
80.82	R+	TYPE V ARROW (2)	66		83.38	R+	STOP	22	BRACUT
80.82	R+	TYPE III (R) ARROW	42		83.38	R+	LIMIT LINE	12	BRACUT
80.83	R+	STOP	22	AIRPORT ROAD	83.39	L+	TYPE V ARROW (2)	66	
80.83	R+	LIMIT LINE	12	AIRPORT ROAD	83.39	L+	TYPE III (L) ARROW	42	
80.84	Med	LIMIT LINE	25		83.40	L+	TYPE III (R) ARROW	42	
80.85	L+	TYPE V ARROW (2)	66		83.44	L+	TYPE V ARROW (2)	66	
80.85	L+	TYPE III (L) ARROW	42		83.49	L+	TYPE III (L) ARROW	42	
80.88	L+	TYPE III (L) ARROW	42		83.86	R+	TYPE V ARROW (2)	66	
80.90	L+	TYPE V ARROW (2)	66		83.87	RAMP	TYPE V ARROW	33	BAYSIDE CUTOFF NB OFF
81.29	R+	TYPE V ARROW (2)	66		83.90	R+	TYPE V ARROW (2)	66	
81.34	R+	TYPE V ARROW (2)	66		83.91	RAMP	TYPE V ARROW	33	BAYSIDE CUTOFF NB OFF
81.34	R+	TYPE III (R) ARROW	42		83.91	Med	LIMIT LINE	24	BAYSIDE CUTOFF
81.35	Med	LIMIT LINE	24		83.92	R+	STOP (2)	44	BAYSIDE CUTOFF
81.35	R+	STOP	22	MID CITY	83.92	R+	LIMIT LINE	34	BAYSIDE CUTOFF
81.35	R+	LIMIT LINE	12	MID CITY	83.92	R+	STOP	22	BAYSIDE CUTOFF
81.37	L+	TYPE V ARROW (2)	66		83.92	R+	AHEAD	31	BAYSIDE CUTOFF
81.37	L+	TYPE III (L) ARROW	42		83.93	L+	TYPE V ARROW (2)	66	
81.39	L+	TYPE III (L) ARROW	42		83.93	L+	TYPE III (L) ARROW	42	
81.42	L+	TYPE V ARROW (2)	66		83.96	L+	TYPE III (L) ARROW	42	
81.78	R+	TYPE V ARROW (2)	66		83.98	L+	TYPE V ARROW (2)	66	
81.82	R+	TYPE V ARROW (2)	66		86.39	RAMP	STOP (2)	44	NB OFF AT 14TH
81.83	Med	LIMIT LINE	22		86.40	RAMP	AHEAD (2)	62	NB OFF AT 14TH
81.84	Med	STOP	22	CALIFORNIA REDWOOD CO	86.42	RAMP	TYPE III (R) ARROW	42	NB OFF AT 14TH
81.84	Med	LIMIT LINE	22		86.43	RAMP	TYPE V ARROW	33	SB ON AT 14TH
81.84	Med	RAILROAD CROSSING	110		86.44	RAMP	ONLY	22	NB OFF AT 14TH
81.85	L+	TYPE V ARROW (2)	66		86.46	RAMP	TYPE II (L) ARROW	45	NB OFF AT 14TH
81.91	L+	TYPE V ARROW (2)	66		86.46	RAMP	TYPE III (R) ARROW	42	NB OFF AT 14TH
82.61	R+	TYPE V ARROW (2)	66		86.46	RAMP	ONLY	22	NB OFF AT 14TH
82.63	RAMP	TYPE V ARROW	33	INDIANOLA NB OFF	86.83	RAMP	TYPE V ARROW (2)	66	NB ON FROM G STREET
82.66	Med	LIMIT LINE	23	INDIANOLA CUTOFF	86.83	RAMP	PED	18	G STREET TO SUNSET
82.66	R+	TYPE V ARROW (2)	66		86.83	RAMP	PED	18	NB OFF AT SUNSET
82.67	RAMP	TYPE V ARROW	33	INDIANOLA NB OFF	86.94	RAMP	TYPE V ARROW	33	NB ON FROM G STREET
82.67	R+	STOP	22	INDIANOLA CUTOFF	86.95	RAMP	TYPE V ARROW	33	NB ON FROM SUNSET
82.67	R+	LIMIT LINE	16	INDIANOLA CUTOFF	87.06	RAMP	AHEAD (2)	62	SB OFF AT SUNSET
82.68	RAMP	TYPE V ARROW	33	INDIANOLA NB ON	87.07	RAMP	STOP (2)	44	SB OFF AT SUNSET
82.69	L+	TYPE V ARROW (2)	66						
82.69	L+	TYPE III (L) ARROW	42				TOTAL	4108	

PAVEMENT DELINEATION QUANTITIES
PDQ-1

REVISED BY | DATE REVISED
Sheri Rodriguez | Amal Rashid
CALCULATED-DESIGNED BY | CHECKED BY
FUNCTIONAL SUPERVISOR: Lena R. Ashley

STATE OF CALIFORNIA - DEPARTMENT OF TRANSPORTATION
Caltrans DESIGN

LAST REVISION 00-00-00 | DATE PLOTTED => 14-JUN-2012 | TIME PLOTTED => 09:59

Dist	COUNTY	ROUTE	POST MILES TOTAL PROJECT	SHEET No.	TOTAL SHEETS
01	Hum	101	79.9/87.8	19	49

REGISTERED CIVIL ENGINEER 5/14/12 DATE

May 14, 2012
PLANS APPROVAL DATE

REGISTERED PROFESSIONAL ENGINEER
Todd Lark
No. 52481
Exp. 12/31/12
CIVIL
STATE OF CALIFORNIA

THE STATE OF CALIFORNIA OR ITS OFFICERS OR AGENTS SHALL NOT BE RESPONSIBLE FOR THE ACCURACY OR COMPLETENESS OF SCANNED COPIES OF THIS PLAN SHEET.

TEMPORARY TRAFFIC STRIPE (PAINT)

LOCATION (PM) FROM	LOCATION (PM) TO	DIRECTION/ RAMP	DETAIL NUMBER	6" WHITE	4" WHITE	4" BROKEN WHITE	4" YELLOW	REMARKS
				LF				
79.95	87.84	NB	11, 24, 27B		41660	41660	41660	
79.95	87.84	SB	11, 24, 27B		41660	41660	41660	
80.23	80.26	NB	38A	145				CHANNELIZATION AT JACOBS AVE - QTY INCLUDES TRAFFIC ISLAND
80.73	80.88	SB	38A	1350				L+-TURN CHANNELIZATION AT AIRPORT RD
80.75	80.83	NB	38A	445				CHANNELIZATION AT AIRPORT RD - QTY INCLUDES TRAFFIC ISLAND
80.84	80.94	NB	38A	630				CHANNELIZATION AT AIRPORT RD - QTY INCLUDES TRAFFIC ISLAND
81.31	81.35	NB	38A	225				CHANNELIZATION AT MID CITY - QTY INCLUDES TRAFFIC ISLAND
81.31	81.39	SB	38A	490				L+-TURN CHANNELIZATION AT MID CITY
81.36	81.42	NB	38A	370				CHANNELIZATION AT MID CITY - QTY INCLUDES TRAFFIC ISLAND
82.57	82.74	SB	38A	885				L+-TURN CHANNELIZATION AT INDIANOLA CUTOFF
82.62	82.67	RAMP	27B	625				NB OFF AT INDIANOLA
82.68	82.71	RAMP	27B	445				NB ON AT INDIANOLA
83.27	83.37	SB	38A	890				LT-TURN CHANNELIZATION AT BRACUT
83.32	83.37	NB	38A	450				CHANNELIZATION AT BRACUT - QTY INCLUDES TRAFFIC ISLAND
83.38	83.46	NB	38A	535				CHANNELIZATION AT BRACUT - QTY INCLUDES TRAFFIC ISLAND
83.84	83.97	SB	38A	625				LT-TURN CHANNELIZATION AT BAYSIDE CUTOFF
83.87	83.92	RAMP	27B	620				NB OFF AT BAYSIDE
84.93	85.05	RAMP	27B	700				SB ON AT G STREET
85.05	85.12	RAMP	27B	580				SB OFF AT G STREET
85.51	85.86	RAMP	27B	2050				SB ON FROM 255
85.57	85.81	RAMP	27B	1400				NB OFF TO SUNNY BRAE
85.66	85.77	RAMP	27B	550				255 COLLECTOR RAMP
85.68	85.80	RAMP	27B	650				255 COLLECTOR RAMP
85.79	85.82	RAMP	27B	1450				NB ON & OFF (LOOP RAMPS)
85.80	86.48	RAMP	27B	3950				NB ON FROM SUNNY BRAE TO NB OFF AT 14TH
85.83	85.85	RAMP	27B	1400				SB ON & OFF (LOOP RAMPS)
85.84	85.96	RAMP	27B	650				255 COLLECTOR RAMP
85.87	85.95	RAMP	27B	430				255 COLLECTOR RAMP
85.90	86.49	RAMP	27B	3600				SB ON FROM 14TH TO SB OFF TO 255
86.62	86.85	RAMP	27B	1220				NB OFF AT SUNSET
86.79	86.85	RAMP	27B	250				G STREET TO SUNSET CONNECTOR
86.83	87.07	RAMP	27B	1280				NB ON FROM G STREET
86.91	86.95	RAMP	27B	825				SB ON FROM SUNSET
86.94	87.31	RAMP	27B	1950				NB ON FROM SUNSET
86.95	87.20	RAMP	27B	1400				SB OFF AT SUNSET
			SUBTOTAL	33065	83320	83320	83320	
			TOTAL	283025				

PAVEMENT DELINEATION QUANTITIES
PDQ-2

STATE OF CALIFORNIA - DEPARTMENT OF TRANSPORTATION
Caltrans
DESIGN

FUNCTIONAL SUPERVISOR: Lena R. Ashley
CALCULATED-DESIGNED BY: Sheri Rodriguez
CHECKED BY: Amal Rashid
REVISED BY
DATE REVISED

LAST REVISION 00-00-00
DATE PLOTTED => 14-JUN-2012
TIME PLOTTED => 09:59

Dist	COUNTY	ROUTE	POST MILES TOTAL PROJECT	SHEET No.	TOTAL SHEETS
01	Hum	101	79.9/87.8	20	49

REGISTERED CIVIL ENGINEER 5/14/12 DATE

May 14, 2012
PLANS APPROVAL DATE

REGISTERED PROFESSIONAL ENGINEER Todd Lark No. 52481 Exp. 12/31/12 CIVIL STATE OF CALIFORNIA

THE STATE OF CALIFORNIA OR ITS OFFICERS OR AGENTS SHALL NOT BE RESPONSIBLE FOR THE ACCURACY OR COMPLETENESS OF SCANNED COPIES OF THIS PLAN SHEET.

TEMPORARY PAVEMENT MARKING (PAINT)

LOCATION (PM)	L+/R+ RAMP/ MEDIAN	ORIENTATION	TYPE/LEGEND	AREA SQFT	REMARKS	LOCATION (PM)	L+/R+ RAMP/ MEDIAN	ORIENTATION	TYPE/LEGEND	AREA SQFT	REMARKS
80.19	R+	FNBT	TYPE V ARROW (2)	66		82.67	R+	FWBT	STOP	22	INDIANOLA CUTOFF
80.24	R+	FNBT	TYPE V ARROW (2)	66		82.67	R+	FWBT	AHEAD	31	INDIANOLA CUTOFF
80.24	R+	FNBT	TYPE III (R) ARROW	42		82.68	Med	FNBT	YIELD LINE	18	INDIANOLA CUTOFF
80.26	R+	FNBT	STOP	22	JACOBS AVENUE	82.69	L+	FSBT	TYPE V ARROW (2)	66	
80.26	R+	FNBT	LIMIT LINE	24	JACOBS AVENUE	82.69	L+	FSBT	TYPE III (L) ARROW	42	
80.76	R+	FNBT	TYPE V ARROW (2)	66		82.73	L+	FSBT	TYPE V ARROW (2)	66	
80.76	R+	FNBT	TYPE III (R) ARROW	42		82.73	L+	FSBT	TYPE III (L) ARROW	42	
80.82	R+	FNBT	TYPE V ARROW (2)	66		83.31	R+	FNBT	TYPE V ARROW (2)	66	
80.82	R+	FNBT	TYPE III (R) ARROW	42		83.31	R+	FNBT	TYPE III (R) ARROW	42	
80.83	R+	FNBT	STOP	22	AIRPORT ROAD	83.36	R+	FNBT	TYPE V ARROW (2)	66	
80.83	R+	FNBT	LIMIT LINE	12	AIRPORT ROAD	83.36	R+	FNBT	TYPE III (R) ARROW	42	
80.84	Med	FNBT	YIELD LINE	18	AIRPORT ROAD	83.37	L+	FSBT	STOP	22	BRACUT INDUSTRIAL PARK
80.85	L+	FSBT	TYPE V ARROW (2)	66		83.37	L+	FSBT	LIMIT LINE	40	BRACUT INDUSTRIAL PARK
80.85	L+	FSBT	TYPE III (L) ARROW	42		83.37	Med	FSBT	YIELD LINE	15	BRACUT
80.88	L+	FSBT	TYPE V ARROW (2)	66		83.38	Med	FNBT	YIELD LINE	12	BRACUT
80.88	L+	FSBT	TYPE III (L) ARROW	42		83.38	R+	FNBT	STOP	22	BRACUT
81.29	R+	FNBT	TYPE V ARROW (2)	66		83.38	R+	FNBT	LIMIT LINE	12	BRACUT
81.34	R+	FNBT	TYPE V ARROW (2)	66		83.39	L+	FSBT	TYPE V ARROW (2)	66	
81.34	R+	FNBT	TYPE III (R) ARROW	42		83.39	L+	FSBT	TYPE III (L) ARROW	42	
81.35	R+	FNBT	STOP	22	MID CITY	83.40	L+	FSBT	TYPE III (R) ARROW	42	
81.35	R+	FNBT	LIMIT LINE	12	MID CITY	83.44	L+	FSBT	TYPE V ARROW (2)	66	
81.36	Med	FNBT	YIELD LINE	18	MID CITY	83.49	L+	FSBT	TYPE III (L) ARROW	42	
81.37	L+	FSBT	TYPE V ARROW (2)	66		83.86	R+	FNBT	TYPE V ARROW (2)	66	
81.37	L+	FSBT	TYPE III (L) ARROW	42		83.90	R+	FNBT	TYPE V ARROW (2)	66	
81.39	L+	FSBT	TYPE V ARROW (2)	66		83.92	R+	FNBT	STOP (2)	44	BAYSIDE CUTOFF
81.39	L+	FSBT	TYPE III (L) ARROW	42		83.92	R+	FNBT	LIMIT LINE	34	BAYSIDE CUTOFF
81.78	R+	FNBT	TYPE V ARROW (2)	66		83.92	R+	FWBT	STOP	22	BAYSIDE CUTOFF
81.83	Med	FSBT	YIELD LINE	12	CALIFORNIA REDWOOD CO	83.92	R+	FWBT	AHEAD	31	BAYSIDE CUTOFF
81.83	L+	FSBT	STOP	22	CALIFORNIA REDWOOD CO	83.92	Med	FNBT	YIELD LINE	18	BAYSIDE CUTOFF
81.83	L+	FSBT	LIMIT LINE	40	CALIFORNIA REDWOOD CO	83.93	L+	FSBT	TYPE V ARROW (2)	66	
81.83	R+	FNBT	TYPE V ARROW (2)	66		83.93	L+	FSBT	TYPE III (L) ARROW	42	
81.84	Med	FNBT	YIELD LINE	15	CALIFORNIA REDWOOD CO	83.96	L+	FSBT	TYPE V ARROW (2)	66	
81.86	L+	FSBT	TYPE V ARROW (2)	66		83.96	L+	FSBT	TYPE III (L) ARROW	42	
81.91	L+	FSBT	TYPE V ARROW (2)	66		86.47	RAMP	FNBT	TYPE II (L) ARROW	45	NB OFF AT 14TH
82.61	R+	FNBT	TYPE V ARROW (2)	66		86.47	RAMP	FNBT	TYPE III (R) ARROW	42	NB OFF AT 14TH
82.66	R+	FNBT	TYPE V ARROW (2)	66		86.48	RAMP	FNBT	STOP (2)	44	NB OFF AT 14TH
82.67	R+	FNBT	STOP	22	INDIANOLA CUTOFF	86.48	RAMP	FNBT	LIMIT LINE	34	NB OFF AT 14TH
82.67	R+	FNBT	LIMIT LINE	16	INDIANOLA CUTOFF						
									TOTAL	3215	

PAVEMENT DELINEATION QUANTITIES
PDQ-3

STATE OF CALIFORNIA - DEPARTMENT OF TRANSPORTATION
Caltrans® DESIGN

FUNCTIONAL SUPERVISOR: Lena R. Ashley
CALCULATED-DESIGNED BY: Sheri Rodriguez
CHECKED BY: Amal Rashid
REVISED BY
DATE REVISED

LAST REVISION 00-00-00
DATE PLOTTED => 14-JUN-2012
TIME PLOTTED => 09:59

Dist	COUNTY	ROUTE	POST MILES TOTAL PROJECT	SHEET No.	TOTAL SHEETS
01	Hum	101	79.9/87.8	21	49

REGISTERED CIVIL ENGINEER 5/14/12 DATE

May 14, 2012
PLANS APPROVAL DATE

REGISTERED PROFESSIONAL ENGINEER Todd Lark No. 52481 Exp. 12/31/12 CIVIL STATE OF CALIFORNIA

THE STATE OF CALIFORNIA OR ITS OFFICERS OR AGENTS SHALL NOT BE RESPONSIBLE FOR THE ACCURACY OR COMPLETENESS OF SCANNED COPIES OF THIS PLAN SHEET.

LEGEND
(NOR) = NON-REFLECTIVE
(H) = HAZARDOUS WASTE

TRAFFIC STRIPE AND PAVEMENT MARKER QUANTITIES

LOCATION (PM) FROM	LOCATION (PM) TO	Lt/Rt RAMP	DETAIL No.	DETAIL LENGTH	REMOVE THERMOPLASTIC TRAFFIC STRIPE WHITE	REMOVE THERMOPLASTIC TRAFFIC STRIPE YELLOW(H)	THERMOPLASTIC TRAFFIC STRIPE (ENHANCED WET NIGHT VISIBILITY) 4" WHITE	4" YELLOW	6" WHITE	8" WHITE	4" WHITE (BROKEN 36-12)	4" WHITE (BROKEN 17-7)	8" WHITE (BROKEN 12-3)	PAVEMENT MARKERS (NOR) TYPE A	RETROREFLECTIVE TYPE C	TYPE D	TYPE G	TYPE H	REMARKS
				LF										EA					
79.95	80.00	Rt	39	230					230										
79.95	80.83	Rt	25	4650				4650										97	
79.95	80.83	Rt	11 & 14	4650							4650			384	97				
79.95	80.84	Lt	25	4700				4700										98	
79.95	81.84	Lt	39	10000					10000										
79.95	81.84	Lt	11 & 13	10000							10000			832			209		
80.00	80.00	Rt	AEM	20	40					20									AERIAL ENFORCEMENT MARKING. SEE Const DETAILS
80.00	80.83	Rt	39	4360					4360										
80.23	80.26	Rt	38	145	290					145							7		
80.26	80.26	Rt	24	140				140											ISLAND ON JACOBS AVE (WITH HATCHING AT 4' OC)
80.73	80.88	Lt	38	800	1900					950							34		INCLUDES ISLAND (WITH HATCHING AT 4' OC). SEE PDD-1
80.75	80.83	Rt	38	400	800					400							17		
80.82	80.83	Rt	38A	95	190					95									GORE AT AIRPORT RD (WITH HATCHING AT 4' OC)
80.83	80.83	Rt	22	55				110								10			AIRPORT RD
80.84	80.85	Rt	38A	200	400					200									GORE AT AIRPORT RD (WITH HATCHING AT 4' OC)
80.84	80.94	Rt	38	550	1100					550							23		
80.84	81.00	Rt	39	820					820										
80.84	81.35	Rt	25	2695				2700										57	
80.84	81.35	Rt	11 & 14	2700							2700			224	57				
80.85	81.34	Lt	25	2600				2600										55	
81.00	81.00	Rt	AEM	20	40					20									AERIAL ENFORCEMENT MARKING. SEE Const DETAILS
81.00	81.35	Rt	39	1820					1820										
81.31	81.35	Rt	38	190	380					190							8		
81.31	81.39	Lt	38	490	1280					640							21		INCLUDES ISLAND (WITH HATCHING AT 4' OC). SEE PDD-1
81.35	81.35	Rt	22	85				170								16			MID CITY
81.35	81.36	Rt	38A	120	240					120									GORE AT MID CITY (WITH HATCHING AT 4' OC)
81.35	81.84	Lt	25	2600				2600										55	
81.36	81.36	Rt	38	50	100					50							3		
81.36	81.37	Rt	38A	130	260					130									GORE AT MID CITY (WITH HATCHING AT 4' OC)
81.36	81.42	Rt	38	310	620					310							26		
81.36	81.84	Rt	25	2535				2550										54	
81.36	82.00	Rt	39	3350					3350										
81.36	82.67	Rt	11 & 14	6920							6920			576	145				
81.85	82.67	Rt	25	4330				4330										91	
81.85	82.67	Lt	25	4330				4330										91	
81.85	83.37	Lt	39	8030					8030										
81.85	83.37	Lt	11 & 14	8030							8030			668	168				
82.00	82.00	Rt	AEM	20	40					20									AERIAL ENFORCEMENT MARKING. SEE Const DETAILS
82.00	82.62	Rt	39	3250					3250										
82.57	82.74	Lt	38	885	2070					1035							37		INCLUDES ISLAND (WITH HATCHING AT 4' OC). SEE PDD-1
82.60	82.62	RAMP	36	105	420					210							10		NB OFF AT INDIANOLA
82.62	82.67	Rt	39	265					265										
82.62	82.67	RAMP	25A	370				370										16	NB OFF AT INDIANOLA
82.62	82.67	RAMP	27B	625			625												NB OFF AT INDIANOLA
82.67	82.67	Rt	22	425				850								72			INDIANOLA CUTOFF
82.67	82.67	Rt	27B	850			850												INDIANOLA CUTOFF
82.67	82.67	RAMP	27B	75			75												NB OFF AT INDIANOLA (GORE ON INDIANOLA)
82.67	82.68	RAMP	27B	80			80												NB ON AT INDIANOLA (GORE ON INDIANOLA)
82.68	82.71	RAMP	25A	325				325										14	NB ON AT INDIANOLA
82.68	82.71	RAMP	27B	445			445												NB ON AT INDIANOLA
82.68	82.72	Rt	39	195					195										
82.68	83.37	Rt	25	3700				3700										78	
82.68	83.37	Rt	11 & 14	3700							3700			308	78				
82.68	83.37	Lt	25	3650				3650										77	
82.71	82.72	RAMP	36A	40	80					40							2		NB ON AT INDIANOLA
			SHEET TOTAL		10250	0	2075	37775	32320	5125	36000	0	0	2992	545	98	397	783	

PAVEMENT DELINEATION QUANTITIES
PDQ-4

REVISED BY | DATE REVISED
Sheri Rodriguez | Amal Rashid
CALCULATED-DESIGNED BY | CHECKED BY
FUNCTIONAL SUPERVISOR: Lena R. Ashley
STATE OF CALIFORNIA - DEPARTMENT OF TRANSPORTATION
Caltrans® DESIGN

LAST REVISION 00-00-00 | DATE PLOTTED => 14-JUN-2012 | TIME PLOTTED => 09:59

LEGEND
(NOR) = NON-REFLECTIVE
(H) = HAZARDOUS WASTE

Dist	COUNTY	ROUTE	POST MILES TOTAL PROJECT	SHEET No.	TOTAL SHEETS
01	Hum	101	79.9/87.8	22	49

REGISTERED CIVIL ENGINEER 5/14/12 DATE

May 14, 2012
PLANS APPROVAL DATE

REGISTERED PROFESSIONAL ENGINEER Todd Lark No. 52481 Exp. 12/31/12 CIVIL STATE OF CALIFORNIA

THE STATE OF CALIFORNIA OR ITS OFFICERS OR AGENTS SHALL NOT BE RESPONSIBLE FOR THE ACCURACY OR COMPLETENESS OF SCANNED COPIES OF THIS PLAN SHEET.

TRAFFIC STRIPE AND PAVEMENT MARKER QUANTITIES

LOCATION (PM) FROM	LOCATION (PM) TO	Lt/Rt RAMP	DETAIL No.	DETAIL LENGTH	REMOVE THERMOPLASTIC TRAFFIC STRIPE WHITE	REMOVE THERMOPLASTIC TRAFFIC STRIPE YELLOW(H)	THERMOPLASTIC TRAFFIC STRIPE (ENHANCED WET NIGHT VISIBILITY) 4" WHITE	4" YELLOW	6" WHITE	8" WHITE	4" WHITE (BROKEN 36-12)	4" WHITE (BROKEN 17-7)	8" WHITE (BROKEN 12-3)	PAVEMENT MARKERS (NOR) TYPE A	RETROREFLECTIVE TYPE C	TYPE D	TYPE G	TYPE H	REMARKS
				LF										EA					
82.71	83.00	Rt	39	1530					1530										
82.72	82.74	RAMP	8	125								125							NB ON AT INDIANOLA
83.00	83.00	Rt	AEM	20	40					20									AERIAL ENFORCEMENT MARKING. SEE Const DETAILS
83.00	83.37	Rt	39	1920					1920										
83.27	83.37	Lt	38	570	1300					650							24		INCLUDES ISLAND (WITH HATCHING AT 4' OC). SEE PDD-1
83.32	83.37	Rt	38	315	630					315							14		
83.35	83.37	Rt	38A	520	1040					520									GORE AT BRACUT (WITH HATCHING AT 4' OC)
83.38	83.38	Rt	22	50				100								10			BRACUT
83.38	83.40	Rt	38A	200	400					200									GORE AT BRACUT (WITH HATCHING AT 4' OC)
83.38	83.40	Lt	38	80	160					80							4		Rt-TURN CHANNELIZATION
83.38	83.46	Rt	38	445	890					445							19		
83.38	83.50	Lt	38	610	1220					610							26		Lt-TURN CHANNELIZATION
83.38	83.87	Rt	39	2800					2800										
83.38	83.91	Rt	25	2800				2800										59	
83.38	83.91	Rt	11 & 14	2800							2800			232	59				
83.38	83.91	Lt	25	2800				2800										59	
83.38	84.93	Lt	39	8200					8200										
83.38	87.84	Lt	11,13&14	23550							23550			1960	20		471		
83.84	83.87	RAMP	36	160	640					320							14		NB OFF AT BAYSIDE
83.84	83.97	Lt	38	620	1540					770							26		INCLUDES ISLAND (WITH HATCHING AT 4' OC). SEE PDD-1
83.87	83.91	Rt	39	210					210										
83.87	83.92	RAMP	25A	345				345										15	NB OFF AT BAYSIDE
83.87	83.92	RAMP	27B	620			620												NB OFF AT BAYSIDE
83.92	83.92	Rt	22	475				950								80			BAYSIDE CUTOFF
83.92	83.92	Rt	27B	705			705									162			BAYSIDE CUTOFF
83.92	83.92	RAMP	27B	45			45												NB OFF AT BAYSIDE (GORE ON BAYSIDE)
83.92	84.00	Rt	39	400					400										
83.92	87.84	Rt	25	20700				20700										428	
83.92	87.84	Rt	11,13&14	20700							20700			1724	20		412		
83.92	87.84	Lt	25	20700		400		20700										428	REMOVE EXISTING STRIPE FROM GANNON SLOUGH BRIDGE (4-24L)
84.00	84.00	Rt	AEM	20	40					20									AERIAL ENFORCEMENT MARKING. SEE Const DETAILS
84.00	85.00	Rt	39	5250					5250										
84.89	84.93	RAMP	8	220								220							SB ON AT G STREET
84.93	84.98	RAMP	36A	230	460					230							10		SB ON AT G STREET
84.93	85.05	RAMP	27B	700			700												SB ON AT G STREET
84.93	85.12	Lt	39	1000	400				1000										REMOVE EXISTING STRIPE FROM GANNON SLOUGH BRIDGE (4-24L)
84.98	85.05	RAMP	25A	470				470										20	SB ON AT G STREET
85.00	85.00	Rt	AEM	20	40					20									AERIAL ENFORCEMENT MARKING. SEE Const DETAILS
85.00	85.57	Rt	39	2980					2980										
85.05	85.12	RAMP	25A	610				610										26	SB OFF AT G STREET
85.05	85.12	RAMP	27B	580			580												SB OFF AT G STREET
85.12	85.17	RAMP	36	265	1060					530							24		SB OFF AT G STREET
85.12	85.51	Lt	39	2060					2060										
85.47	85.51	RAMP	8	210								210							SB ON FROM 255/SUNNY BRAE
85.48	85.57	RAMP	36	465	1860					930							40		
85.51	85.61	RAMP	36A	500	1000					500							21		SB ON FROM 255/SUNNY BRAE
85.51	85.86	RAMP	27B	2050			2050												SB ON FROM 255
85.51	86.09	Lt	27B	3060			3060												
85.57	85.81	RAMP	25A	760				760										32	NB OFF TO SUNNY BRAE
85.57	85.81	RAMP	27B	1400			1400												NB OFF TO SUNNY BRAE
85.57	86.02	RAMP	25A	2400				2400										101	255 COLLECTOR RAMP
85.57	86.10	Rt	27B	2240			2760												
85.61	85.86	RAMP	25A	1320				1320										56	SB ON FROM 255
85.61	86.09	RAMP	25A	2535				2535										106	255 COLLECTOR RAMP
SHEET TOTAL					12720	400	11920	56490	26350	6160	47050	555	0	3916	99	252	1105	1330	

PAVEMENT DELINEATION QUANTITIES
PDQ-5

STATE OF CALIFORNIA - DEPARTMENT OF TRANSPORTATION
Caltrans® DESIGN
FUNCTIONAL SUPERVISOR: Lena R. Ashley
CALCULATED-DESIGNED BY: Sheri Rodriguez
CHECKED BY: Amal Rashid
REVISED BY / DATE REVISED

LAST REVISION 00-00-00
DATE PLOTTED => 14-JUN-2012
TIME PLOTTED => 09:59

Dist	COUNTY	ROUTE	POST MILES TOTAL PROJECT	SHEET No.	TOTAL SHEETS
01	Hum	101	79.9/87.8	23	49

REGISTERED CIVIL ENGINEER 5/14/12 DATE

May 14, 2012
PLANS APPROVAL DATE

REGISTERED PROFESSIONAL ENGINEER Todd Lark No. 52481 Exp. 12/31/12 CIVIL STATE OF CALIFORNIA

THE STATE OF CALIFORNIA OR ITS OFFICERS OR AGENTS SHALL NOT BE RESPONSIBLE FOR THE ACCURACY OR COMPLETENESS OF SCANNED COPIES OF THIS PLAN SHEET.

LEGEND
(NOR) = NON-REFLECTIVE
(H) = HAZARDOUS WASTE

TRAFFIC STRIPE AND PAVEMENT MARKER QUANTITIES

LOCATION (PM) FROM	LOCATION (PM) TO	L†/R† RAMP	DETAIL No.	DETAIL LENGTH	REMOVE THERMOPLASTIC TRAFFIC STRIPE WHITE	REMOVE THERMOPLASTIC TRAFFIC STRIPE YELLOW(H)	THERMOPLASTIC TRAFFIC STRIPE (ENHANCED WET NIGHT VISIBILITY) 4" WHITE	4" YELLOW	6" WHITE	8" WHITE	4" WHITE (BROKEN 36-12)	4" WHITE (BROKEN 17-7)	8" WHITE (BROKEN 12-3)	PAVEMENT MARKERS (NOR) TYPE A	RETROREFLECTIVE TYPE C	TYPE D	TYPE G	TYPE H	REMARKS
				LF										EA					
85.66	85.69	RAMP	27B	145			145												NB OFF TO SUNNY BRAE (GORE ON RAMP)
85.66	85.77	RAMP	27B	550			550												255 COLLECTOR RAMP
85.68	85.80	RAMP	27B	650			650												255 COLLECTOR RAMP
85.76	85.77	RAMP	27B	70			70												NB ON FROM NB 255 (GORE ON RAMP)
85.77	85.84	RAMP	37	370									370		8		18		255 COLLECTOR RAMP
85.79	85.76	RAMP	25A	490				490										21	NB ON FROM NB 255
85.79	85.80	RAMP	27B	70			70												SB OFF TO SUNNY BRAE (GORE ON RAMP)
85.79	85.82	RAMP	27B	1450			1450												NB ON & OFF (LOOP RAMPS)
85.79	85.83	RAMP	25A	600				600										26	SB OFF TO SUNNY BRAE
85.80	85.87	RAMP	37	370									370		8		18		255 COLLECTOR RAMP
85.80	85.93	RAMP	25A	1035				1035										44	NB ON FROM SUNNY BRAE
85.80	86.48	RAMP	27B	3950			3950												NB ON FROM SUNNY BRAE TO NB OFF AT 14TH
85.81	85.85	RAMP	25A	585				585										25	NB OFF TO SB 255
85.83	85.85	RAMP	27B	1400			1400												SB ON & OFF (LOOP RAMPS)
85.84	85.85	RAMP	27B	70			70												NB OFF TO SB 255 (GORE ON RAMP)
85.84	85.96	RAMP	27B	650			650												255 COLLECTOR RAMP
85.85	85.88	RAMP	25A	450				450										19	SB ON FROM SUNNY BRAE
85.87	85.88	RAMP	27B	60			60												SB ON FROM SUNNY BRAE (GORE)
85.87	85.95	RAMP	27B	430			430												255 COLLECTOR RAMP
85.90	85.93	RAMP	25A	575				575										24	SB OFF TO SB 255
85.90	86.49	RAMP	27B	3600			3600												SB ON FROM 14TH TO SB OFF TO 255
85.93	85.95	RAMP	27B	120			120												SB OFF TO SB 255 (GORE)
85.93	85.96	RAMP	27B	145			145												NB ON FROM SUNNY BRAE (GORE ON RAMP)
86.00	86.00	R†	AEM	20	40					20									AERIAL ENFORCEMENT MARKING. SEE Const DETAILS
86.00	86.10	R†	27B	500			500												
86.02	86.09	RAMP	36A	380	760					380							16		NB ON FROM 255/SUNNY BRAE
86.09	86.15	RAMP	36	320	1280					640							28		SB OFF TO 255/SUNNY BRAE
86.10	86.27	R†	37	900									900		8		54		AUXILIARY LANE
86.15	86.32	RAMP	37	900									900		8		54		AUXILIARY LANE
86.27	86.33	R†	36	330	1320					660							28		NB OFF AT 14TH
86.32	86.36	RAMP	36A	230	460					230							10		SB ON FROM 14TH
86.32	86.91	L†	27B	3120			3120												
86.33	86.48	RAMP	25A	800				800										34	NB OFF AT 14TH
86.33	86.62	R†	27B	1530			1530												
86.36	86.49	RAMP	25A	720				720										31	SB ON FROM 14TH
86.38	86.39	RAMP	8	65								65							NB OFF AT 14TH
86.39	86.48	RAMP	38A	500	1000					500									NB OFF AT 14TH
86.62	86.67	RAMP	36	250	1000					500							22		NB OFF AT SUNSET
86.62	86.85	RAMP	27B	1220			1220												NB OFF AT SUNSET
86.67	86.85	RAMP	25A	980				980										41	NB OFF AT SUNSET
86.67	87.00	R†	27B	1710			1710												
86.79	86.85	RAMP	9	370								370					9		NB ON FROM G STREET
86.79	86.85	RAMP	27B	250			250												G STREET TO SUNSET CONNECTOR
86.79	86.99	RAMP	25A	1050				1050										44	NB ON FROM G STREET
86.83	86.85	RAMP	36	50	200					100									G STREET TO SUNSET (GORE ON CONNECTOR)
86.83	87.07	RAMP	27B	1280			1280												NB ON FROM G STREET
86.88	86.91	RAMP	8	150								150							SB ON FROM SUNSET
86.90	86.94	RAMP	38A	175	540					350									NB OFF AT SUNSET
86.91	86.95	RAMP	27B	825			825												SB ON FROM SUNSET
86.91	86.97	RAMP	36A	330	660					330							14		SB ON FROM SUNSET
86.91	87.15	L†	27B	1300			1300												
86.94	87.25	RAMP	25A	1650				1650										69	NB ON FROM SUNSET
86.94	87.31	RAMP	27B	1950			1950												NB ON FROM SUNSET
86.95	86.97	RAMP	25A	535				535										23	SB ON FROM SUNSET
			SHEET TOTAL		7260	0	27045	9470	0	3710	0	585	2540	0	32	0	271	401	

PAVEMENT DELINEATION QUANTITIES
PDQ-6

STATE OF CALIFORNIA - DEPARTMENT OF TRANSPORTATION
Caltrans®
DESIGN

FUNCTIONAL SUPERVISOR: Lena R. Ashley
CALCULATED-DESIGNED BY: Sheri Rodriguez
CHECKED BY: Amal Rashid
REVISED BY
DATE REVISED

LAST REVISION 00-00-00
DATE PLOTTED => 14-JUN-2012
TIME PLOTTED => 09:59

Dist	COUNTY	ROUTE	POST MILES TOTAL PROJECT	SHEET No.	TOTAL SHEETS
01	Hum	101	79.9/87.8	24	49

REGISTERED CIVIL ENGINEER 5/14/12 DATE

May 14, 2012
PLANS APPROVAL DATE

REGISTERED PROFESSIONAL ENGINEER Todd Lark No. 52481 Exp. 12/31/12 CIVIL STATE OF CALIFORNIA

THE STATE OF CALIFORNIA OR ITS OFFICERS OR AGENTS SHALL NOT BE RESPONSIBLE FOR THE ACCURACY OR COMPLETENESS OF SCANNED COPIES OF THIS PLAN SHEET.

LEGEND
(NOR) = NON-REFLECTIVE
(H) = HAZARDOUS WASTE

TRAFFIC STRIPE AND PAVEMENT MARKER QUANTITIES

LOCATION (PM) FROM	LOCATION (PM) TO	L+/R+ RAMP	DETAIL No.	DETAIL LENGTH	REMOVE THERMOPLASTIC TRAFFIC STRIPE WHITE	REMOVE THERMOPLASTIC TRAFFIC STRIPE YELLOW(H)	THERMOPLASTIC TRAFFIC STRIPE (ENHANCED WET NIGHT VISIBILITY) 4" WHITE	4" YELLOW	6" WHITE	8" WHITE	4" WHITE (BROKEN 36-12)	4" WHITE (BROKEN 17-7)	8" WHITE (BROKEN 12-3)	PAVEMENT MARKERS (NOR) TYPE A	RETROREFLECTIVE TYPE C	TYPE D	TYPE G	TYPE H	REMARKS
				LF										EA					
86.95	87.11	RAMP	9	900								900					20		SB OFF AT SUNSET
86.95	87.15	RAMP	25A	1150				1150										48	SB OFF AT SUNSET
86.95	87.20	RAMP	27B	1400			1400												SB OFF AT SUNSET
86.99	87.07	RAMP	36A	380	760					380							16		NB ON FROM G STREET
87.00	87.00	R+	AEM	20	40					20									AERIAL ENFORCEMENT MARKING. SEE Const DETAILS
87.00	87.07	R+	27B	340			340												
87.07	87.09	RAMP	8	120								120							NB ON FROM G STREET
87.07	87.10	R+	8	130								130							
87.07	87.31	R+	27B	1270			1270												
87.15	87.20	RAMP	36	250	1000					500							22		SB OFF AT SUNSET
87.20	87.84	L+	27B	3170			3380												
87.25	87.31	RAMP	36A	300	600					300							13		NB ON FROM SUNSET
87.31	87.34	R+	8	145								145							
87.31	87.34	RAMP	8	150								150							NB ON FROM SUNSET
87.31	87.84	R+	27B	2590			2800												
SHEET TOTAL PDQ-4				10250		0	2075	37775	32320	5125	36000	0	0	2992	545	98	397	783	
SHEET TOTAL PDQ-5				12720		400	11920	56490	26350	6160	47050	555	0	3916	99	252	1105	1330	
SHEET TOTAL PDQ-6				7260		0	27045	9470	0	3710	0	585	2540	0	32	0	271	401	
SHEET TOTAL PDQ-7				2400		0	9190	1150	0	1200	0	1445	0	0	0	0	71	48	
SUB TOTALS							50230	104885							676	350	1844	2562	
TOTAL					32630	400	155115		58670	16195	83050	2585	2540	6908	5432				

ROADSIDE SIGNS

LOCATION (PM)	L+/R+ Med ORIENTATION	SIGN CODE	SIGN MESSAGE	PANEL SIZE	No. OF POSTS AND SIZE	ROADSIDE SIGN ONE POST	INSTALL ROADSIDE SIGN PANEL ON EXISTING POST	(N) REMOVE PANEL	FURNISH SINGLE SHEET ALUMINUM SIGN (0.080" UNFRAMED)	REMARKS
						EA			SQFT	
80.85	Med - FSBT	R1-2	YIELD	48"	1 - 4"x6"	1			6.93	
81.36	Med - FSBT	R1-2	YIELD	48"	1 - 4"x6"	1			6.93	
81.83	Med - FEBT	R1-2	YIELD	48"	1 - 4"x6"	1			6.93	
81.85	Med - FWBT	R1-2	YIELD	48"			1	1	6.93	REMOVE EXISTING R1-1
82.68	Med - FSBT	R1-2	YIELD	48"	1 - 4"x6"	1			6.93	
83.36	Med - FEBT	R1-2	YIELD	48"	1 - 4"x6"	1			6.93	
83.38	Med - FWBT	R1-2	YIELD	48"			1	1	6.93	REMOVE EXISTING R1-1
83.93	Med - FSBT	R1-2	YIELD	48"	1 - 4"x6"	1			6.93	
					TOTAL	6	2	2	55.44	

(N) - NOT A SEPARATE PAY ITEM, FOR INFORMATION ONLY

PAVEMENT DELINEATION AND ROAD SIDE SIGN QUANTITIES
PDQ-7

REVISED BY | DATE REVISED
Sheri Rodriguez | Amal Rashid
CALCULATED-DESIGNED BY | CHECKED BY
FUNCTIONAL SUPERVISOR: Lena R. Ashley
STATE OF CALIFORNIA - DEPARTMENT OF TRANSPORTATION
Caltrans DESIGN

LAST REVISION 00-00-00 | DATE PLOTTED => 14-JUN-2012 | TIME PLOTTED => 09:59

Dist	COUNTY	ROUTE	POST MILES TOTAL PROJECT	SHEET No.	TOTAL SHEETS
01	Hum	101	79.9/87.8	25	49

REGISTERED CIVIL ENGINEER 5/14/12 DATE

May 14, 2012
PLANS APPROVAL DATE

REGISTERED PROFESSIONAL ENGINEER Todd Lark No. 52481 Exp. 12/31/12 CIVIL STATE OF CALIFORNIA

THE STATE OF CALIFORNIA OR ITS OFFICERS OR AGENTS SHALL NOT BE RESPONSIBLE FOR THE ACCURACY OR COMPLETENESS OF SCANNED COPIES OF THIS PLAN SHEET.

THERMOPLASTIC PAVEMENT MARKING (ENHANCED WET NIGHT VISIBILITY)

LOCATION (PM)	L+/R+ RAMP/MEDIAN	ORIENTATION	TYPE/LEGEND	AREA SQFT	REMARKS	LOCATION (PM)	L+/R+ RAMP/MEDIAN	ORIENTATION	TYPE/LEGEND	AREA SQFT	REMARKS
80.19	R+	FNBT	TYPE V ARROW (2)	66		83.38	R+	FNBT	LIMIT LINE	12	BRACUT
80.24	R+	FNBT	TYPE V ARROW (2)	66		83.39	L+	FSBT	TYPE V ARROW (2)	66	
80.24	R+	FNBT	TYPE III (R) ARROW	42		83.39	L+	FSBT	TYPE III (L) ARROW	42	
80.26	R+	FNBT	STOP	22	JACOBS AVENUE	83.40	L+	FSBT	TYPE III (R) ARROW	42	
80.26	R+	FNBT	LIMIT LINE	24	JACOBS AVENUE	83.44	L+	FSBT	TYPE V ARROW (2)	66	
80.76	R+	FNBT	TYPE V ARROW (2)	66		83.49	L+	FSBT	TYPE III (L) ARROW	42	
80.76	R+	FNBT	TYPE III (R) ARROW	42		83.86	R+	FNBT	TYPE V ARROW (2)	66	
80.82	R+	FNBT	TYPE V ARROW (2)	66		83.90	R+	FNBT	TYPE V ARROW	33	BAYSIDE CUTOFF NB OFF
80.82	R+	FNBT	TYPE III (R) ARROW	42		83.90	R+	FNBT	TYPE V ARROW (2)	66	
80.83	R+	FNBT	STOP	22	AIRPORT ROAD	83.91	R+	FNBT	TYPE V ARROW	33	BAYSIDE CUTOFF NB OFF
80.83	R+	FNBT	LIMIT LINE	12	AIRPORT ROAD	83.92	R+	FNBT	STOP (2)	44	BAYSIDE CUTOFF
80.84	Med	FNBT	YIELD LINE	24	AIRPORT ROAD	83.92	R+	FNBT	LIMIT LINE	34	BAYSIDE CUTOFF
80.85	L+	FSBT	TYPE V ARROW (2)	66		83.92	R+	FWBT	STOP	22	BAYSIDE CUTOFF
80.85	L+	FSBT	TYPE III (L) ARROW	42		83.92	R+	FWBT	AHEAD	31	BAYSIDE CUTOFF
80.88	L+	FSBT	TYPE V ARROW (2)	66		83.92	Med	FNBT	YIELD LINE	24	BAYSIDE CUTOFF
80.90	L+	FSBT	TYPE III (L) ARROW	42		83.93	L+	FSBT	TYPE V ARROW (2)	66	
81.29	R+	FNBT	TYPE V ARROW (2)	66		83.93	L+	FSBT	TYPE III (L) ARROW	42	
81.34	R+	FNBT	TYPE V ARROW (2)	66		83.96	L+	FSBT	TYPE V ARROW (2)	66	
81.34	R+	FNBT	TYPE III (R) ARROW	42		83.96	L+	FSBT	TYPE III (L) ARROW	42	
81.35	R+	FNBT	STOP	22	MID CITY	85.04	L+	FSBT	TYPE I ARROW	31	SB ON AT G STREET
81.35	R+	FNBT	LIMIT LINE	12	MID CITY	85.04	L+	FSBT	TYPE V ARROW	33	SB OFF TO SOUTH G
81.36	Med	FNBT	YIELD LINE	24	MID CITY	85.06	L+	FSBT	TYPE V ARROW	33	SB OFF TO SOUTH G
81.37	L+	FSBT	TYPE V ARROW (2)	66		85.74	R+	FNBT	TYPE V ARROW	33	NB OFF TO SUNNY BRAE
81.37	L+	FSBT	TYPE III (L) ARROW	42		85.76	R+	FNBT	TYPE V ARROW	33	NB OFF TO SUNNY BRAE
81.39	L+	FSBT	TYPE V ARROW (2)	66		85.78	L+	FSBT	TYPE V ARROW	33	SB OFF TO SUNNY BRAE
81.39	L+	FSBT	TYPE III (L) ARROW	42		85.78	R+	FNBT	TYPE I ARROW	31	NB ON FROM 255
81.78	R+	FNBT	TYPE V ARROW (2)	66		85.79	R+	FNBT	TYPE I ARROW	31	NB ON FROM SUNNY BRAE
81.83	Med	FSBT	YIELD LINE	15	CALIFORNIA REDWOOD CO	85.81	R+	FNBT	TYPE V ARROW	33	NB OFF TO SB 255
81.83	L+	FSBT	STOP	22	CALIFORNIA REDWOOD CO	85.83	L+	FSBT	TYPE V ARROW	33	SB OFF TO SUNNY BRAE
81.83	L+	FSBT	LIMIT LINE	40	CALIFORNIA REDWOOD CO	85.86	L+	FSBT	TYPE I ARROW	31	SB ON FROM SUNNY BRAE
81.83	R+	FNBT	TYPE V ARROW (2)	66		85.86	L+	FSBT	TYPE I ARROW	31	SB ON FROM NB 255
81.84	Med	FNBT	YIELD LINE	15	CALIFORNIA REDWOOD CO	85.86	R+	FNBT	TYPE V ARROW	33	NB OFF TO SB 255
81.84	Med	FNBT	RAILROAD CROSSING	118	CALIFORNIA REDWOOD CO	85.90	L+	FSBT	TYPE V ARROW	33	SB OFF TO SB 255
81.86	L+	FSBT	TYPE V ARROW (2)	66		85.91	L+	FSBT	TYPE V ARROW	33	SB OFF TO SB 255
81.91	L+	FSBT	TYPE V ARROW (2)	66		86.39	R+	FNBT	STOP (2)	44	NB OFF AT 14TH
82.61	R+	FNBT	TYPE V ARROW (2)	66		86.40	R+	FNBT	AHEAD (2)	62	NB OFF AT 14TH
82.65	R+	FNBT	TYPE V ARROW	33	INDIANOLA NB OFF	86.44	R+	FNBT	Type II (L) ARROW	45	NB OFF AT 14TH
82.66	R+	FNBT	TYPE V ARROW (2)	66		86.44	R+	FNBT	TYPE III (R) ARROW	42	NB OFF AT 14TH
82.67	R+	FNBT	TYPE V ARROW	33	INDIANOLA NB OFF	86.46	R+	FNBT	Only	22	NB OFF AT 14TH
82.67	R+	FNBT	STOP	22	INDIANOLA CUTOFF	86.47	R+	FNBT	TYPE II (L) ARROW	45	NB OFF AT 14TH
82.67	R+	FNBT	LIMIT LINE	16	INDIANOLA CUTOFF	86.47	R+	FNBT	TYPE III (R) ARROW	42	NB OFF AT 14TH
82.68	R+	FNBT	TYPE I ARROW	31	INDIANOLA NB ON	86.48	R+	FNBT	STOP (2)	44	NB OFF AT 14TH
82.68	Med	FNBT	YIELD LINE	24	INDIANOLA CUTOFF	86.48	R+	FNBT	LIMIT LINE	34	NB OFF AT 14TH
82.69	L+	FSBT	TYPE V ARROW (2)	66		86.49	L+	FSBT	TYPE I ARROW	31	SB ON AT 14TH
82.69	L+	FSBT	TYPE III (L) ARROW	42		86.83	R+	FNBT	TYPE I ARROW (2)	62	NB ON FROM G STREET
82.73	L+	FSBT	TYPE V ARROW (2)	66		86.83	R+	FNBT	PED	18	G STREET TO SUNSET
82.73	L+	FSBT	TYPE III (L) ARROW	42		86.83	R+	FNBT	PED	18	NB OFF AT SUNSET
83.31	R+	FNBT	TYPE V ARROW (2)	66		86.84	R+	FNBT	XING	21	NB OFF AT SUNSET
83.31	R+	FNBT	TYPE III (R) ARROW	42		86.84	R+	FNBT	XING	21	G STREET TO SUNSET
83.35	R+	FNBT	TYPE V ARROW (2)	66		86.89	R+	FNBT	TYPE I ARROW	31	NB ON FROM G STREET
83.35	R+	FNBT	TYPE III (R) ARROW	42		86.95	R+	FNBT	TYPE I ARROW	31	NB ON FROM SUNSET
83.37	L+	FSBT	STOP	22	BRACUT INDUSTRIAL PARK	86.96	L+	FSBT	ONLY	22	SB OFF AT SUNSET
83.37	L+	FSBT	LIMIT LINE	40	BRACUT INDUSTRIAL PARK	86.96	L+	FSBT	TYPE V ARROW (2)	66	SB OFF AT SUNSET
83.37	Med	FSBT	YIELD LINE	15	BRACUT	87.06	L+	FSBT	AHEAD (2)	62	SB OFF AT SUNSET
83.38	Med	FNBT	YIELD LINE	15	BRACUT	87.07	L+	FSBT	STOP (2)	44	SB OFF AT SUNSET
83.38	Med	FNBT	RAILROAD CROSSING	118	BRACUT						
83.38	R+	FNBT	STOP	22	BRACUT				TOTAL	4718	

PAVEMENT DELINEATION QUANTITIES
PDQ-8

STATE OF CALIFORNIA - DEPARTMENT OF TRANSPORTATION
Caltrans DESIGN

FUNCTIONAL SUPERVISOR: Lena R. Ashley
CALCULATED-DESIGNED BY: Sheri Rodriguez
CHECKED BY: Amal Rashid
REVISED BY
DATE REVISED

LAST REVISION 00-00-00
DATE PLOTTED => 14-JUN-2012
TIME PLOTTED => 09:59

Dist	COUNTY	ROUTE	POST MILES TOTAL PROJECT	SHEET No.	TOTAL SHEETS
01	Hum	101	79.9/87.8	26	49

REGISTERED CIVIL ENGINEER 5/14/12 DATE

May 14, 2012
PLANS APPROVAL DATE

REGISTERED PROFESSIONAL ENGINEER Todd Lark No. 52481 Exp. 12/31/12 CIVIL STATE OF CALIFORNIA

THE STATE OF CALIFORNIA OR ITS OFFICERS OR AGENTS SHALL NOT BE RESPONSIBLE FOR THE ACCURACY OR COMPLETENESS OF SCANNED COPIES OF THIS PLAN SHEET.

REPLACE AC SURFACING

LOCATION (PM) FROM	LOCATION (PM) TO	LANE NUMBER	LENGTH	WIDTH	DEPTH	QUANTITY
			FT			CY
NORTHBOUND LANES						
80.06	80.07	2	90	6	0.33	6.6
80.09	80.11	2	110	6	0.33	8.1
80.18	80.20	2	120	6	0.33	8.8
80.39	80.69	2	1580	6	0.33	115.9
80.40	80.47	1	390	12	0.33	57.2
80.60	80.61	1	60	12	0.33	8.8
80.78	80.83	2	260	6	0.33	19.1
80.94	80.98	2	220	6	0.33	16.1
81.76	81.78	1	120	12	0.33	17.6
81.76	81.80	2	210	6	0.33	15.4
81.93	81.95	2	90	6	0.33	6.6
82.04	82.09	2	230	12	0.33	33.7
82.12	82.13	2	50	12	0.33	7.3
82.56	82.58	1	130	12	0.33	19.1
82.84	82.87	2	200	6	0.33	14.7
82.95	82.98	1	130	12	0.33	19.1
83.44	83.51	2	370	6	0.33	27.1
83.51	83.53	2	70	6	0.33	5.1
85.22	85.24	1	100	6	0.33	7.3
85.67	85.69	2	110	12	0.33	16.1
86.31	86.34	2	140	6	0.33	10.3
86.52	86.56	1	230	12	0.33	33.7
86.95	86.97	2	100	6	0.33	7.3
87.09	87.11	2	130	6	0.33	9.5
87.11	87.13	2	100	6	0.33	7.3
87.52	87.55	2	120	12	0.33	17.6
87.66	87.68	2	130	6	0.33	9.5
87.71	87.73	2	100	6	0.33	7.3
SOUTHBOUND LANES						
80.12	80.13	2	100	6	0.33	7.3
80.34	80.37	1	150	6	0.33	11.0
80.65	80.66	2	60	6	0.33	4.4
80.82	80.84	2	110	6	0.33	8.1
81.10	81.84	2	400	6	0.33	29.3
81.86	82.47	2	400	6	0.33	29.3
83.05	83.08	1	190	6	0.33	13.9
83.16	83.18	1	110	6	0.33	8.1
83.18	83.19	2	80	6	0.33	5.9
83.46	83.53	1	340	6	0.33	24.9
83.60	83.61	2	50	12	0.33	7.3
86.08	86.23	3	790	12	0.33	115.9
86.19	86.23	2	240	6	0.33	17.6
86.37	86.39	1	110	6	0.33	8.1
86.58	86.60	2	80	12	0.33	11.7
87.06	87.08	2	130	12	0.33	19.1
87.09	87.11	1	100	6	0.33	7.3
87.29	87.39	2	500	6	0.33	36.7
87.39	87.45	2	340	12	0.33	49.9
87.59	87.61	2	110	6	0.33	8.1
					TOTAL	956.3

EXACT LOCATIONS TO BE DETERMINED BY THE ENGINEER

ADJUST AC PAVEMENT SURFACE

LOCATION (PM)	COLD PLANE AC PAVEMENT	REMOVE AC SURFACING	REMARKS
	SQYD	SQFT	
79.95 L+	930		EUREKA SLOUGH BRIDGE
79.95 R+	930		EUREKA SLOUGH BRIDGE
80.25 R+	220		JACOBS Ave
80.84 R+	190		AIRPORT Rd
81.35 L+	40		CALIFORNIA REDWOOD Dwy
81.35 R+	150		MID CITY MOTOR WORLD Dwy
81.84 L+	200		CALIFORNIA REDWOOD Dwy
81.84 R+	50		PRIVATE Dwy
82.67 R+	200		INDIANOLA CUTOFF
83.38 L+	130		BRACUT WEST
83.38 R+	140		BRACUT EAST
83.92 R+	100		BAYSIDE CUTOFF
84.49 L+	1810	2740	JACOBY CREEK BRIDGE
84.49 R+	1810	2710	JACOBY CREEK BRIDGE
84.68 L+	1810		GANNON SLOUGH BRIDGE
84.70 R+	2220	2830	GANNON SLOUGH BRIDGE
85.00 L+	2750		SOUTH G STREET RAMPS
85.83 L+	3700		STATE ROUTE 255 OC CLEARANCE
85.83 R+	3700		STATE ROUTE 255 OC CLEARANCE
85.83 L+	15430		STATE ROUTE 255 RAMPS
85.83 R+	15220		STATE ROUTE 255 RAMPS
86.10 L+	3550		7th St OC CLEARANCE
86.10 R+	3550		7th St OC CLEARANCE
86.49 L+	190		14th St ON-RAMP
86.49 R+	180		14th St OFF-RAMP
86.80 R+	470		NORTH G St OC ON-RAMP
86.94 R+	290		SUNSET Ave NB OFF-RAMP
86.96 R+	470		SUNSET Ave NB ON-RAMP
86.97 L+	220		SUNSET Ave SB ON-RAMP
86.97 L+	440		SUNSET Ave SB OFF-RAMP
87.84 L+	980		ARCATA OH
87.84 R+	980		ARCATA OH
TOTAL	63050	8280	

RAMPS AND DRIVEWAYS

LOCATION (PM)	HMA (TYPE A-WMA)	HMA (OPEN GRADED-WMA)	TACK COAT	SHOULDER BACKING	REMARKS
	TON				
82.67	572		2.65	70	INDIANOLA CUTOFF
83.92	400		1.85	60	BAYSIDE CUTOFF
85.00	372		1.72		SOUTH G St
85.80	4531		20.97		STATE ROUTE 255 RAMPS
86.40	742	230	3.43	60	14th St RAMPS
87.00	2232	774	10.33	160	SUNSET AND NORTH G St
TOTAL	8849	1004	40.95	350	

WMA = USING WARM MIX TECHNOLOGY

ROADWAY

LOCATION (PM) FROM	LOCATION (PM) TO	GEOSYNTHETIC PAVEMENT INTERLAYER	PAVING ASPHALT (BINDER, GEOSYNTHETIC PAVEMENT INTERLAYER)	HMA (TYPE A-WMA)	HMA (OPEN GRADED-WMA)	HMA (COLORIZED OPEN GRADED-WMA)	TACK COAT	SHOULDER BACKING	REMARKS
		SQYD	TON						
	79.95								EUREKA SLOUGH BRIDGE
79.95	80.25			1901	429	346	8.38	350	JACOBS Ave
80.25	80.84			3984	976	652	17.56	780	AIRPORT Rd
80.84	81.35	140	0.15	3586	980	490	15.81	670	MID CITY MOTOR WORLD Dwy
81.35	81.84	2390	2.49	3285	752	588	14.48	650	CALIFORNIA REDWOOD Dwy
81.84	82.67	420	0.44	5413	1217	989	23.86	1120	INDIANOLA CUTOFF
82.67	83.38			4823	1216	756	21.26	960	BRACUT
83.38	83.92			3740	1014	519	16.49	730	BAYSIDE CUTOFF
83.92	84.50			3694	763	739	16.28	750	JACOBY CREEK BRIDGE
84.50	84.70			1173	257	251	5.17	190	GANNON SLOUGH BRIDGE
84.70	85.82			7293	2015	990	32.14	1340	STATE ROUTE 255
85.82	86.49			4955	2064		21.84	450	14th St OC
86.49	87.82			9181	3825		40.46	980	ARCATA OH (HMA-A-PULLOUT-NB PM 87.7)
SUBTOTAL		2950	3.08	53028	15508	6320	233.73	8970	
FROM RAMPS AND DRIVEWAYS				8849	1004		40.95	350	
FROM HMA DIKE				12					
FROM ADJUST FRAME AND COVER				36					
	TOTAL	2957	3.08	61925	16512	6320	274.68	9320	

WMA=USING WARM MIX TECHNOLOGY

SUMMARY OF QUANTITIES
Q-1

STATE OF CALIFORNIA - DEPARTMENT OF TRANSPORTATION
Caltrans® DESIGN

FUNCTIONAL SUPERVISOR: Lena R. Ashley
CALCULATED-DESIGNED BY: Amal Rashid
CHECKED BY: Todd Lark
REVISED BY
DATE REVISED

LAST REVISION 00-00-00
DATE PLOTTED => 14-JUN-2012
TIME PLOTTED => 09:59

Dist	COUNTY	ROUTE	POST MILES TOTAL PROJECT	SHEET No.	TOTAL SHEETS
01	Hum	101	79.9/87.8	27	49

REGISTERED CIVIL ENGINEER 5/14/12 DATE

May 14, 2012
PLANS APPROVAL DATE

REGISTERED PROFESSIONAL ENGINEER Todd Lark No. 52481 Exp. 12/31/12 CIVIL STATE OF CALIFORNIA

THE STATE OF CALIFORNIA OR ITS OFFICERS OR AGENTS SHALL NOT BE RESPONSIBLE FOR THE ACCURACY OR COMPLETENESS OF SCANNED COPIES OF THIS PLAN SHEET.

HMA DIKE

LOCATION (PM)		LOCATION		REMOVE AC DIKE	PLACE HMA DIKE (TYPE A)	HMA (TYPE A-WMA)
FROM	TO	BEGIN	END	LF		TON
86.18	86.48	NB 101	14th St (INCLUDES RAMP)	1880	1880	1.90
86.44	86.48	SB 101 14th St ON RAMP	14th St ON RAMP (WEST)	240	240	0.24
86.42	86.48	SB 101 14th St ON RAMP	14th St ON RAMP (EAST)	420	420	0.43
86.44	86.66	SB 101	SB 101	1200	1200	1.22
86.67	86.85	NB 101 SUNSET OFF RAMP (EAST)	NB 101 SUNSET OFFRAMP (EAST)	940	940	0.95
86.69	87.00	NB 101	NB 101	1550	1550	1.57
86.88	86.97	NB 101 G St ONRAMP (EAST)	NB 101 G St ONRAMP (EAST)	490	490	0.50
86.95	86.97	NB 101 SUNSET ONRAMP (EAST)	NB 101 SUNSET ONRAMP (EAST)	100	100	0.10
86.95	87.47	NB 101 SUNSET ONRAMP (EAST)	NB 101 ST LOUIS ROAD OC	2690	2690	2.72
86.98	86.98	SB 101 SUNSET ONRAMP	SB 101 SUNSET ONRAMP (EAST)	230		
86.95	86.97	SB 101 SUNSET OFFRAMP (EAST)	SB 101 SUNSET OFFRAMP (EAST)	120	120	0.12
87.30	87.47	SB 101	SB 101	830	830	0.84
87.54	87.80	SB 101	SB 101	1380	1380	1.40
			TOTAL	12070	11840	11.99

ADJUST FRAME AND COVER

LOCATION		PLACE HMA (MISCELLANEOUS AREA)	HMA (TYPE A-WMA)	ADJUST FRAME AND COVER TO GRADE			ADJUST FRAME AND GRATE TO GRADE	ADJUST SLOTTED DRAIN TO GRADE	REMARK
				SIZE					
				12"	24"	36"	36"		
PM	DESCRIPTION	SQYD	TON	EA				LF	
86.23	NB AUX. LANE, 14th St OFFRAMP	11	2.23						
86.35	NB 14th St OFFRAMP (WEST)	5	1.69				2	280	RAISE DI GRATE 0.50′
86.35	NB 14th St OFFRAMP (EAST)	1	0.34				1		RAISE DI GRATE 0.50′
86.38	SB 14th St ONRAMP				1				RAISE SEWER COVER 0.30′
86.47	NB 101	12	2.43						
86.52	NB 101	18	3.65						
86.57	NB 101	9	1.82						
86.57	SB 101	2	0.68				1		RAISE DI GRATE 0.50′
86.59	NB 101	18	3.65						
86.62	SB 101	2	0.54				1		RAISE DI GRATE 0.40′
86.63	NB 101 SUNSET OFFRAMP (EAST)	12	2.43				1		RAISE DI GRATE 0.30′
86.72	NB 101 SUNSET OFFRAMP (EAST)	4	0.81				1		RAISE DI GRATE 0.30′
86.72	NB 101	18	3.65						
86.76	SB 101	10	2.03						
86.88	NB 101 G St ONRAMP (WEST)	8	1.62						
86.91	NB 101 G St ONRAMP (WEST)	12	2.43						
87.07	SB SUNSET OFFRAMP SHOULDER			1					RAISE WATER VALVE BOX 0.30′
87.26	NB 101 SUNSET ONRAMP (WEST)	8	1.62				1		RAISE DI GRATE 0.30′
87.26	NB 101 SUNSET ONRAMP (EAST)	8	1.62						
87.47	NB 101	4	2.70				1		RAISE DI GRATE 1.00′
87.48	SB MEDIAN SHOULDER					1			RAISE UTILITY 0.30′
87.67	NB SHOULDER				1				RAISE ELECTRIC PB 0.30′
	SUBTOTAL			1	2	1			
	TOTAL	162	35.94	4			9	280	

SUMMARY OF QUANTITIES
Q-2

STATE OF CALIFORNIA - DEPARTMENT OF TRANSPORTATION
Caltrans
DESIGN

FUNCTIONAL SUPERVISOR: Lena R. Ashley
CALCULATED-DESIGNED BY: Todd Lark
CHECKED BY: Amal Rashid
REVISED BY
DATE REVISED

LAST REVISION 00-00-00
DATE PLOTTED => 14-JUN-2012
TIME PLOTTED => 09:59

Dist	COUNTY	ROUTE	POST MILES TOTAL PROJECT	SHEET No.	TOTAL SHEETS
01	Hum	101	79.9/87.8	28	49

REGISTERED CIVIL ENGINEER 5/14/12 DATE

May 14, 2012
PLANS APPROVAL DATE

REGISTERED PROFESSIONAL ENGINEER Todd Lark No. 52481 Exp. 12/31/12 CIVIL STATE OF CALIFORNIA

THE STATE OF CALIFORNIA OR ITS OFFICERS OR AGENTS SHALL NOT BE RESPONSIBLE FOR THE ACCURACY OR COMPLETENESS OF SCANNED COPIES OF THIS PLAN SHEET.

METAL BEAM GUARD RAILING

LOCATION (PM) FROM	TO	L+/R+	EXISTING LENGTH	REMOVE MBGR	MBGR (7' WOOD POST)	RECONSTRUCT MBGR	(N) STRENGTHENED RAILING SECTION	ALTERNATIVE IN-LINE TERMINAL SYSTEM	TERMINAL SYSTEM (TYPE X-TENSION)	END ANCHOR ASSEMBLY (TYPE SFT)	MBGR (ELEMENT)	GUARD RAILING DELINEATOR	REMARKS	MBGR LAYOUT TYPE
			LF					EA						
81.10	81.35	L+	1350			1350			1	1		4	FLARED INSTALLATION	16A
81.20		L+					22						10"x10" POSTS FOR FIXED OBJECT (TREE)	16A
81.22		L+					22						10"x10" POSTS FOR FIXED OBJECT (TREE)	16A
81.28		L+					22						10"x10" POSTS FOR FIXED OBJECT (TREE)	16A
81.36	81.83	L+	2475	37.5		2437.5			1	1		6	FLARED INSTALLATION	16A
81.86	82.41	L+	2900	37.5		2862.5		1		1		7		16A
82.03		L+					22						10"x10" POSTS FOR FIXED OBJECT (TREE)	16A
82.07	82.08	L+					100						10"x10" POSTS FOR FIXED OBJECT (TREE)	16A
82.10		L+					50						10"x10" POSTS FOR FIXED OBJECT (TREE)	16A
82.14							50						10"x10" POSTS FOR FIXED OBJECT (TREE)	16A
82.16							22						10"x10" POSTS FOR FIXED OBJECT (TREE)	16A
82.18							50						10"x10" POSTS FOR FIXED OBJECT (TREE)	16A
82.20	82.39						1000						10"x10" POSTS FOR FIXED OBJECT (TREE)	16A
83.63	83.67	R+	200	37.5		162.5		1		1		2		
83.63	83.67	L+	200	200	162.5			1		1		2		
84.28	84.30	L+	100	37.5		62.5		1		1	3	2	NESTED RAIL FOR MISSING POST AT HEADWALL	
85.50	84.30	R+	75	75		37.5	37.5	1				2	10"x10" POSTS FOR FIXED OBJECT (OH SIGN) RELOCATE 1' FOR Clr	16A
86.95	87.00	R+	250	37.5		212.5		1				2	SB SUNSET AVE OFFRAMP	16A
		TOTAL	462.5	162.5	162.5	7125	1397.5	6	2	6	3	27		

(N) - NOT A SEPARATE PAY ITEM, FOR INFORMATION ONLY

RUMBLE STRIP

LOCATION (PM) FROM	TO	RUMBLE STRIP CENTERLINE NB	CENTERLINE SB	SHOULDER NB	SHOULDER SB	REMARKS
		STA				
79.95	80.83	39.24	34.50			
79.95	80.25			11.84		
79.95	81.83				99.26	
80.27	80.83			21.00		
80.85	81.36	26.93	14.40			
80.85	81.36			12.25		
81.38	81.83	22.76	18.76			
81.38	82.66			56.58		
81.85	82.66	42.77	35.77			
81.85	83.36				79.73	
82.68	83.36	35.90	23.00			
82.68	83.36			23.00		
83.38	83.91	27.98	22.00			
83.38	83.91			13.00		
83.38	84.49				58.61	
83.93	84.49	24.60	29.57			
83.93	84.49			29.57		
84.51	84.70	10.03	10.03	10.03	10.03	
84.74	87.84	163.68	163.68			
84.74	86.00			59.52	43.52	
86.00	86.99			30.80	14.60	DO NOT PLACE RUMBLE STRIPS ON SB SHOULDER FROM PM 86.4 TO PM 86.65
87.00	87.84			23.00	22.46	DO NOT PLACE RUMBLE STRIPS ON SB SHOULDER FROM PM 87.5 TO PM 87.80
	SUBTOTAL	393.89	351.71	290.59	328.21	
	TOTAL	745.60		618.80		

SUMMARY OF QUANTITIES
Q-3

REVISED BY | DATE REVISED
Todd Lark | Amal Rashid
CALCULATED-DESIGNED BY | CHECKED BY
FUNCTIONAL SUPERVISOR: Lena R. Ashley

STATE OF CALIFORNIA - DEPARTMENT OF TRANSPORTATION
Caltrans DESIGN

LAST REVISION 00-00-00 | DATE PLOTTED => 14-JUN-2012 | TIME PLOTTED => 09:59

Dist	COUNTY	ROUTE	POST MILES TOTAL PROJECT	SHEET No.	TOTAL SHEETS
01	Hum	101	79.9/87.8	29	49

Brian T. Finck 5/14/12
REGISTERED ELECTRICAL ENGINEER DATE

May 14, 2012
PLANS APPROVAL DATE

REGISTERED PROFESSIONAL ENGINEER Brian T. Finck No. 17756 Exp. 6-30-12 ELECTRICAL STATE OF CALIFORNIA

THE STATE OF CALIFORNIA OR ITS OFFICERS OR AGENTS SHALL NOT BE RESPONSIBLE FOR THE ACCURACY OR COMPLETENESS OF SCANNED COPIES OF THIS PLAN SHEET.

NOTES:

1. FOR ACCURATE RIGHT OF WAY AND ACCESS DATA, CONTACT RIGHT OF WAY ENGINEERING AT THE DISTRICT OFFICE.
2. EXACT LOCATION OF LOOP DETECTORS AND PIEZO AXLE SENSORS TO BE DETERMINED BY THE ENGINEER.
3. LABEL LOOP DETECTORS AND PIEZO AXLE WIRES WITH DIRECTION AND LANE NUMBER

ABBREVIATIONS:

PC = PIEZO CABLE

LEGEND:

1 INSTALL NEW TYPE A LOOP DETECTORS AND DETECTOR HANDHOLES.
2 INSTALL NEW PIEZO AXLE SENSOR.
3 RC EXISTING dh

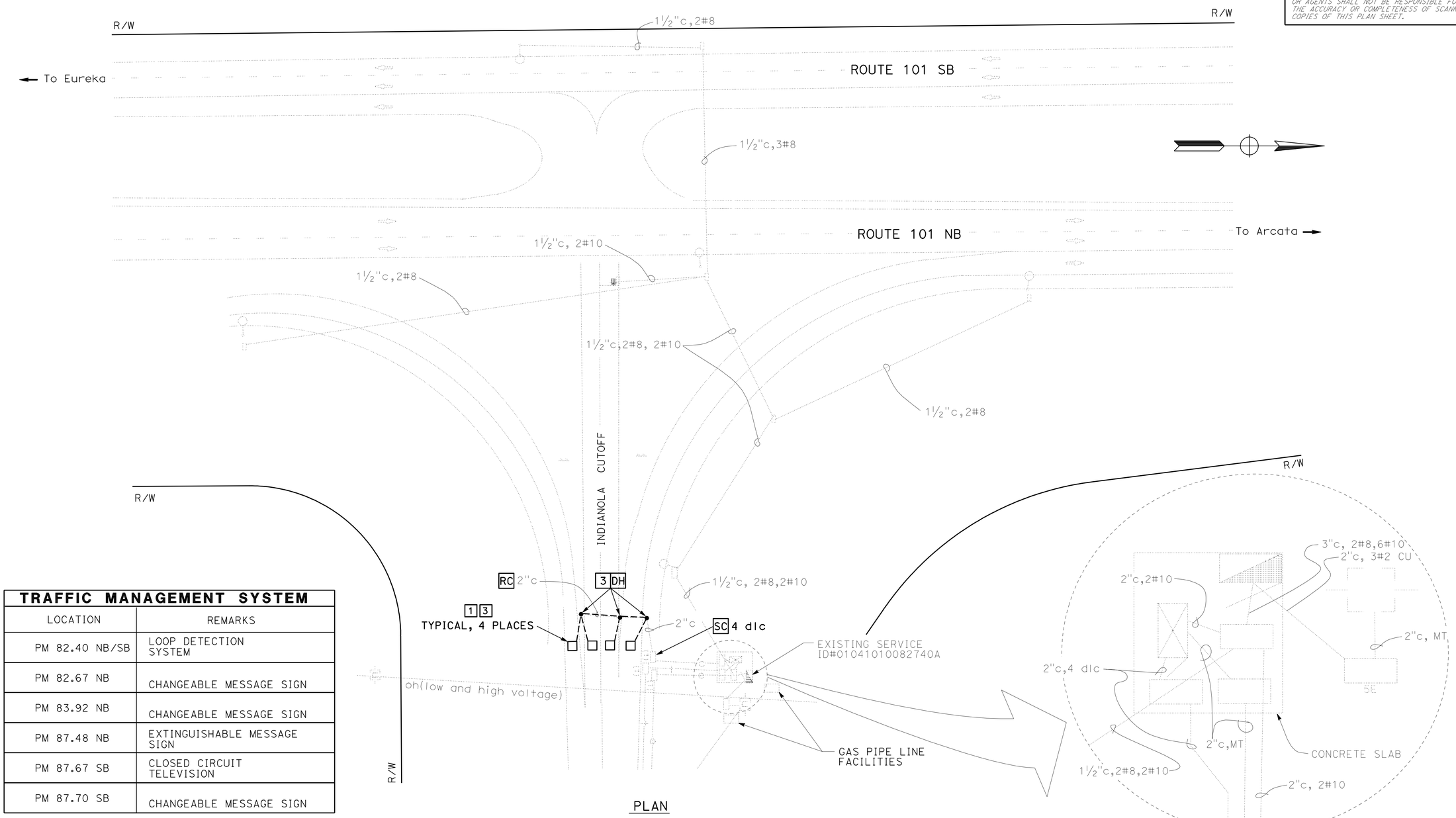

PLAN

TRAFFIC MANAGEMENT SYSTEM	
LOCATION	REMARKS
PM 82.40 NB/SB	LOOP DETECTION SYSTEM
PM 82.67 NB	CHANGEABLE MESSAGE SIGN
PM 83.92 NB	CHANGEABLE MESSAGE SIGN
PM 87.48 NB	EXTINGUISHABLE MESSAGE SIGN
PM 87.67 SB	CLOSED CIRCUIT TELEVISION
PM 87.70 SB	CHANGEABLE MESSAGE SIGN

TRAFFIC MONITORING STATION LOOP DETECTOR REPLACEMENT

HUM 101-PM 82.67 (TMS#INDIANOLA)

THIS SHEET ACCURATE FOR ELECTRICAL WORK ONLY

(MODIFY TRAFFIC MONITORING STATION)

ELECTRICAL PLAN

E-1

NO SCALE

STATE OF CALIFORNIA - DEPARTMENT OF TRANSPORTATION
Caltrans® TRAFFIC ELECTRICAL

FUNCTIONAL SUPERVISOR: Troy Arseneau
CALCULATED-DESIGNED BY: Mo Ketabchi
CHECKED BY: Brian Finck
REVISED BY
DATE REVISED

LAST REVISION 00-00-00
DATE PLOTTED => 14-JUN-2012
TIME PLOTTED => 10:00

Dist	COUNTY	ROUTE	POST MILES TOTAL PROJECT	SHEET No.	TOTAL SHEETS
01	Hum	101	79.9/87.8	30	49

Brian T. Finck 5/14/12
REGISTERED ELECTRICAL ENGINEER DATE

May 14, 2012
PLANS APPROVAL DATE

REGISTERED PROFESSIONAL ENGINEER
Brian T. Finck
No. 17756
Exp. 6-30-12
ELECTRICAL
STATE OF CALIFORNIA

THE STATE OF CALIFORNIA OR ITS OFFICERS OR AGENTS SHALL NOT BE RESPONSIBLE FOR THE ACCURACY OR COMPLETENESS OF SCANNED COPIES OF THIS PLAN SHEET.

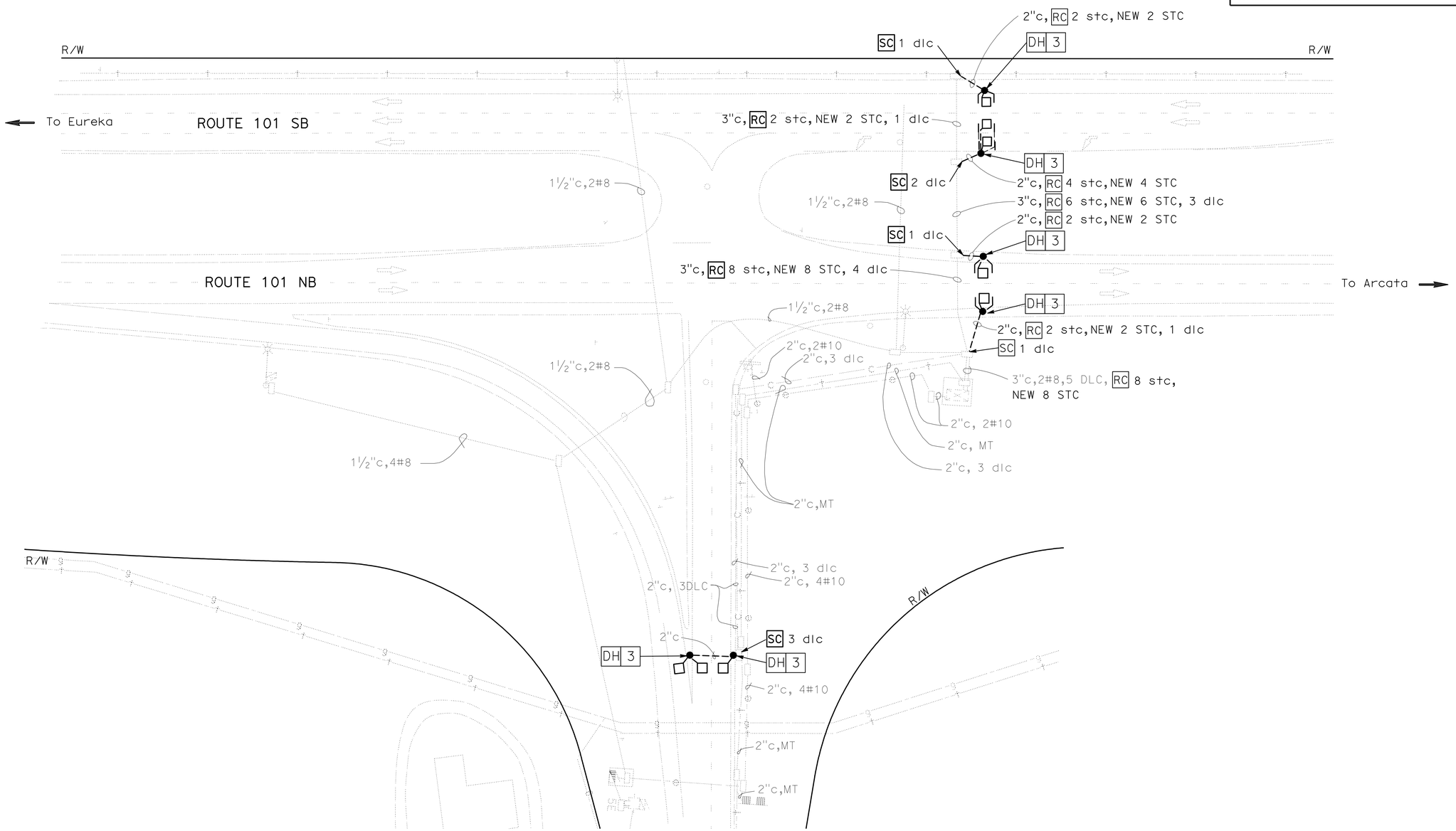

PLAN

TRAFFIC MONITORING STATION LOOP DETECTOR REPLACEMENT

HUM 101-PM 83.9 (TMS#803) BAYSIDE

THIS SHEET ACCURATE FOR ELECTRICAL WORK ONLY

(MODIFY TRAFFIC MONITORING STATION)
ELECTRICAL PLAN
E-2

NO SCALE

REVISED BY	DATE REVISED

CALCULATED-DESIGNED BY	CHECKED BY
Mo Ketabchi	Brian Finck

FUNCTIONAL SUPERVISOR: Troy Arseneau

STATE OF CALIFORNIA - DEPARTMENT OF TRANSPORTATION
Caltrans
TRAFFIC ELECTRICAL

LAST REVISION 00-00-00
DATE PLOTTED => 14-JUN-2012
TIME PLOTTED => 10:00

Dist	COUNTY	ROUTE	POST MILES TOTAL PROJECT	SHEET No.	TOTAL SHEETS
01	Hum	101	79.9/87.8	31	49

Brian T. Finck 5/14/12
REGISTERED ELECTRICAL ENGINEER DATE

May 14, 2012
PLANS APPROVAL DATE

REGISTERED PROFESSIONAL ENGINEER Brian T. Finck No. 17756 Exp. 6-30-12 ELECTRICAL STATE OF CALIFORNIA

THE STATE OF CALIFORNIA OR ITS OFFICERS OR AGENTS SHALL NOT BE RESPONSIBLE FOR THE ACCURACY OR COMPLETENESS OF SCANNED COPIES OF THIS PLAN SHEET.

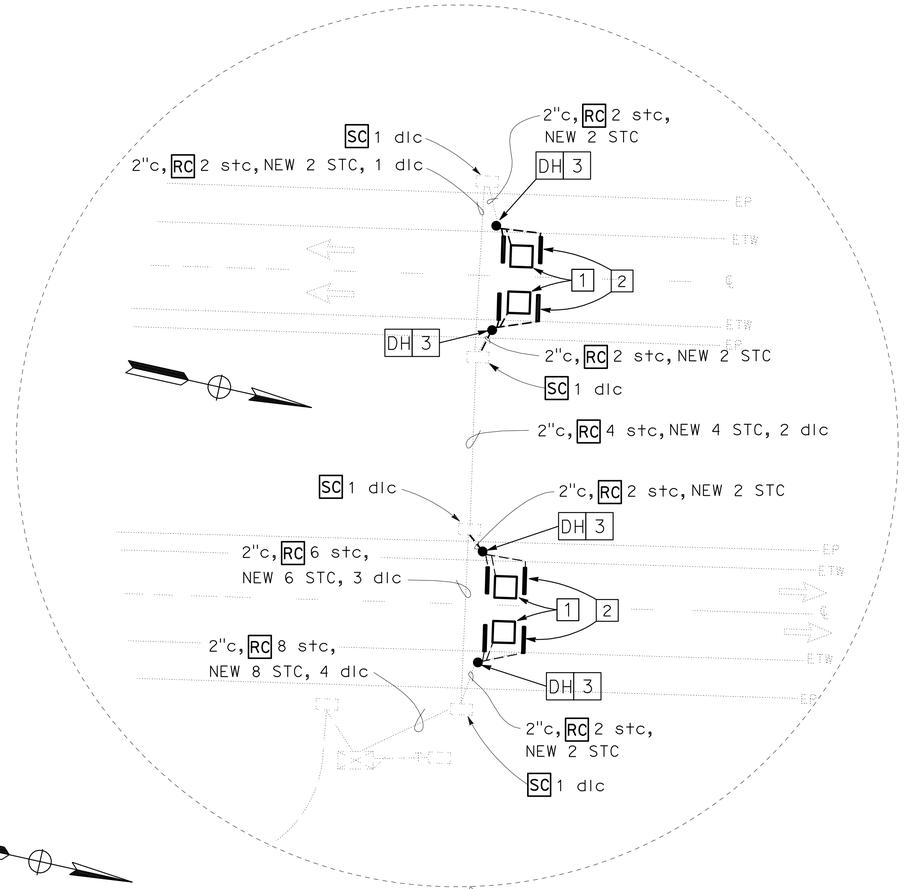

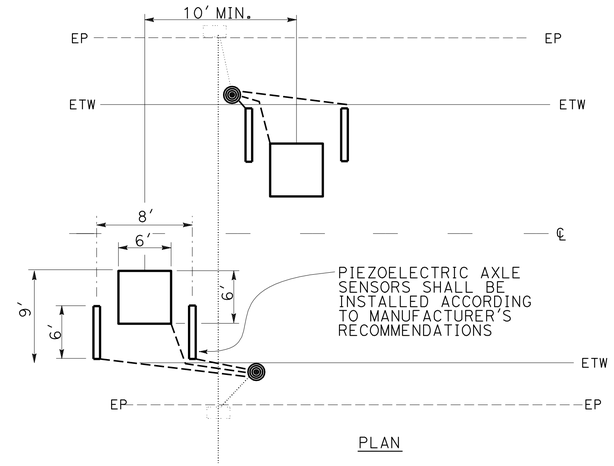

PLAN

PIEZO/LOOP PLACEMENT DETAIL

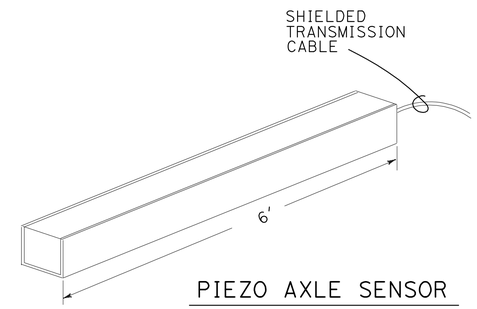

PIEZO AXLE SENSOR

PERSPECTIVE

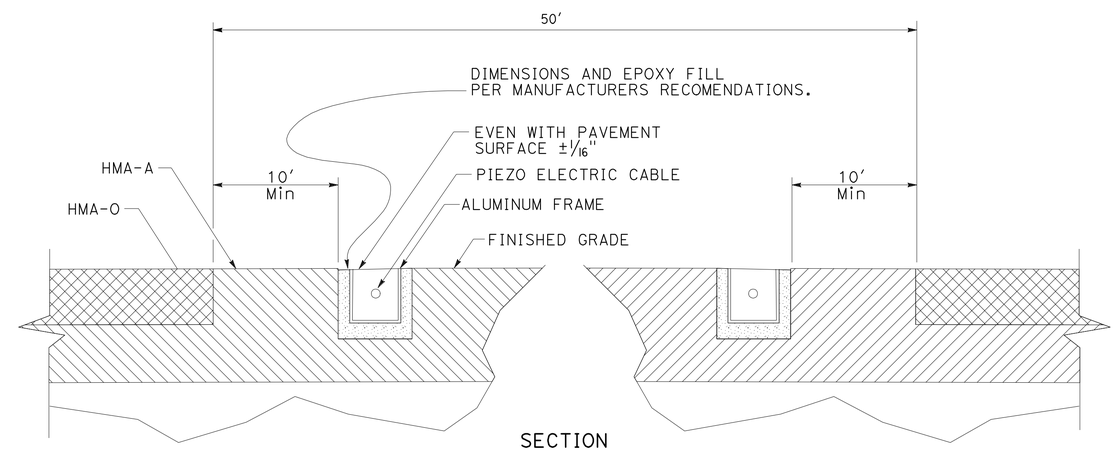

SECTION

CLASS 2 AXLE SENSOR DETAILS

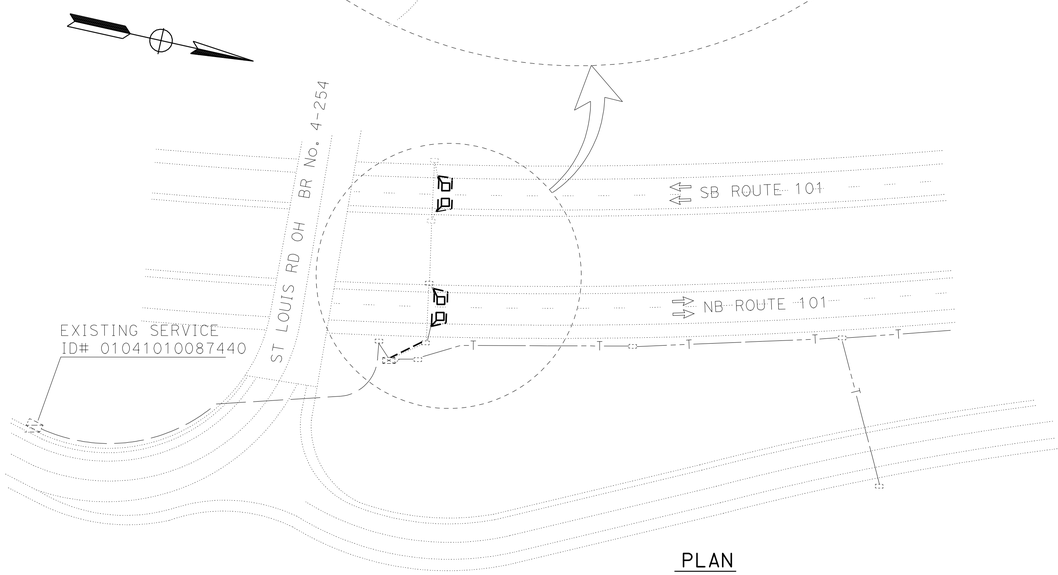

PLAN

TRAFFIC MONITORING STATION LOOP DETECTOR REPLACEMENT

HUM 101-PM 87.48 (NEAR ST. LOUIS ROAD)

(MODIFY TRAFFIC MONITORING STATION)

ELECTRICAL PLAN AND DETAILS E-3

THIS SHEET ACCURATE FOR ELECTRICAL WORK ONLY

NO SCALE NO SCALE

STATE OF CALIFORNIA - DEPARTMENT OF TRANSPORTATION
Caltrans
TRAFFIC ELECTRICAL

FUNCTIONAL SUPERVISOR: Troy Arseneau
CALCULATED-DESIGNED BY: Mo Ketabchi
CHECKED BY: Brian Finck
REVISED BY
DATE REVISED

LAST REVISION 00-00-00
DATE PLOTTED => 14-JUN-2012
TIME PLOTTED => 10:00

DIST	COUNTY	ROUTE	POST MILES TOTAL PROJECT	SHEET NO.	TOTAL SHEETS
01	Hum	101	79.9/87.8	32	49

REGISTERED CIVIL ENGINEER

April 20, 2012
PLANS APPROVAL DATE

REGISTERED PROFESSIONAL ENGINEER
Roberta L. McLaughlin
No. C40375
Exp. 3-31-13
CIVIL
STATE OF CALIFORNIA

The State of California or its officers or agents shall not be responsible for the accuracy or completeness of electronic copies of this plan sheet.

To accompany plans dated May 14, 2012

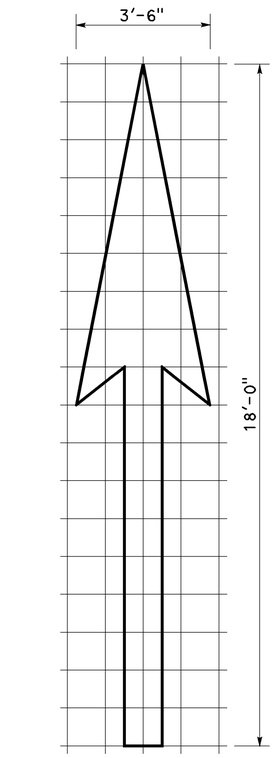

A=25 sq ft

TYPE I 18'-0" ARROW

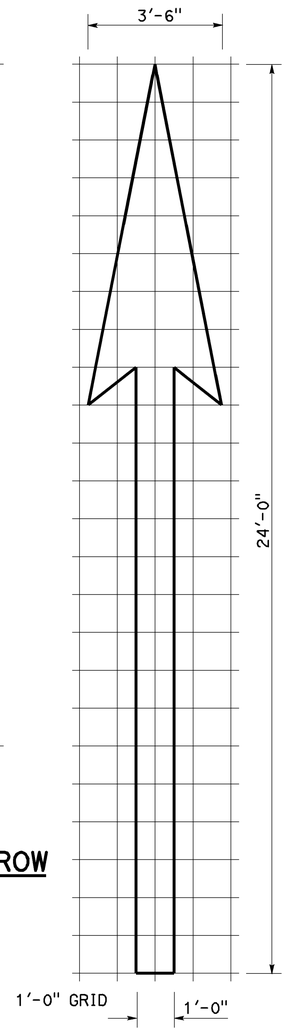

A=31 sq ft

TYPE I 24'-0" ARROW

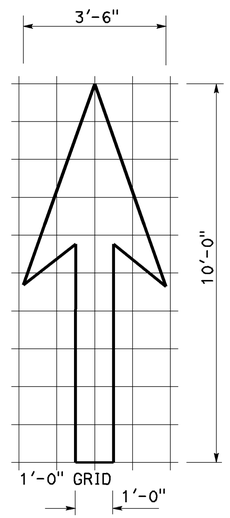

A=14 sq ft

TYPE I 10'-0" ARROW

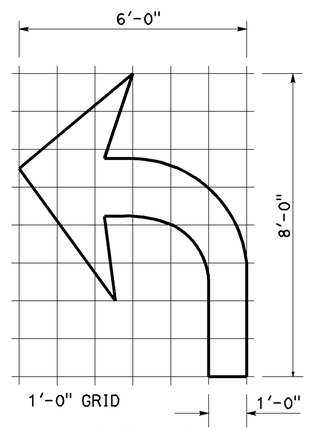

A=15 sq ft

TYPE IV (L) ARROW

(FOR TYPE IV (R) ARROW, USE MIRROR IMAGE)

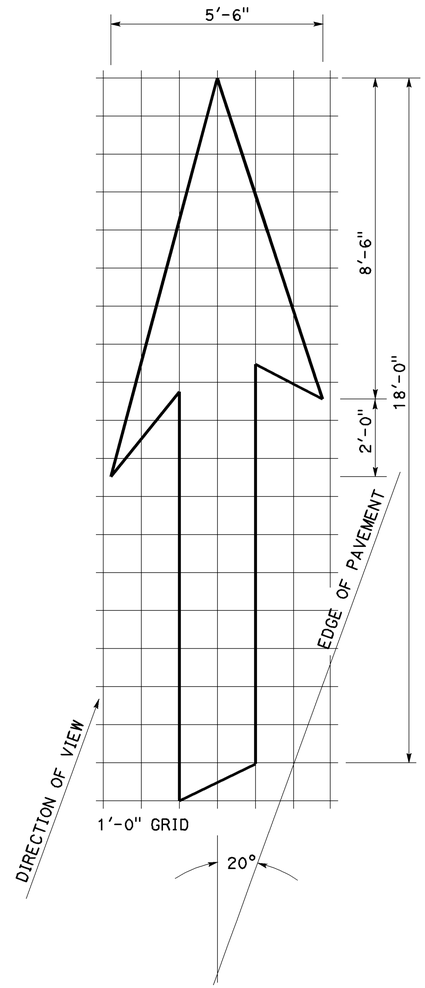

A=42 sq ft

TYPE VI ARROW

RIGHT LANE DROP ARROW (FOR LEFT LANE, USE MIRROR IMAGE)

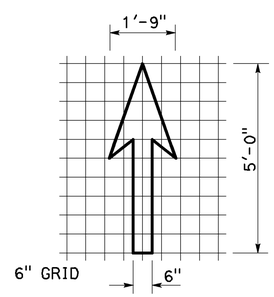

A=3.5 sq ft

BIKE LANE ARROW

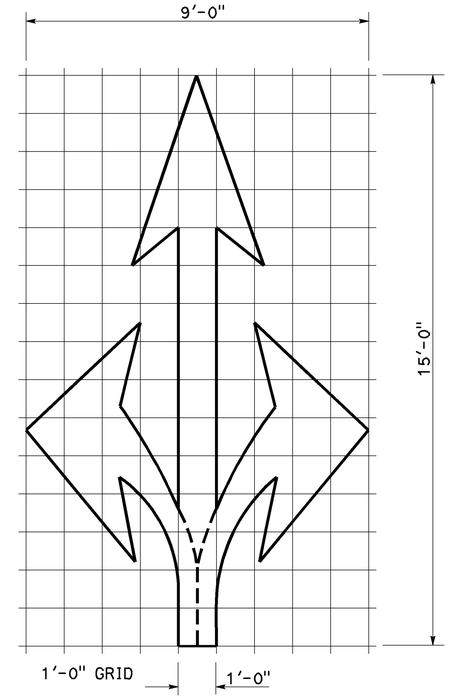

A=36 sq ft

TYPE VIII ARROW

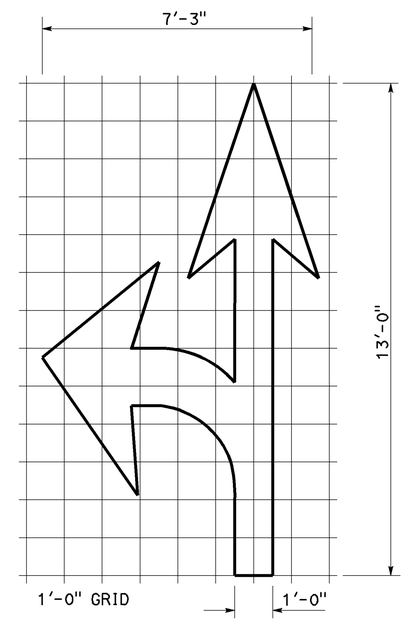

A=27 sq ft

TYPE VII (L) ARROW

(FOR TYPE VII (R) ARROW, USE MIRROR IMAGE)

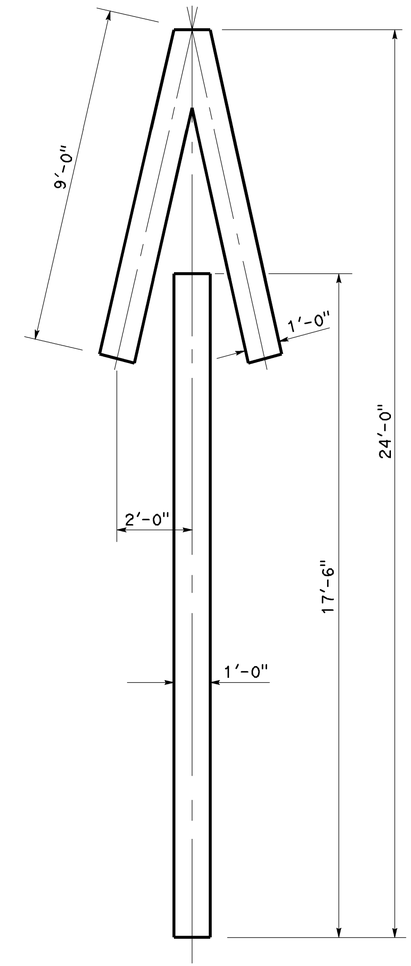

A=33 sq ft

TYPE V ARROW

NOTE:
MINOR VARIATIONS IN DIMENSIONS MAY BE ACCEPTED BY THE ENGINEER.

STATE OF CALIFORNIA
DEPARTMENT OF TRANSPORTATION

PAVEMENT MARKINGS ARROWS

NO SCALE

RSP A24A DATED APRIL 20, 2012 SUPERSEDES STANDARD PLAN A24A DATED MAY 1, 2006 - PAGE 9 OF THE STANDARD PLANS BOOK DATED MAY 2006.

REVISED STANDARD PLAN RSP A24A

2006 REVISED STANDARD PLAN RSP A24A

3-14-12

DIST	COUNTY	ROUTE	POST MILES TOTAL PROJECT	SHEET NO.	TOTAL SHEETS
01	Hum	101	79.9/87.8	33	49

REGISTERED CIVIL ENGINEER

June 6, 2008
PLANS APPROVAL DATE

REGISTERED PROFESSIONAL ENGINEER
Donald E. Howe
No. C46402
Exp. 3-31-09
CIVIL
STATE OF CALIFORNIA

The State of California or its officers or agents shall not be responsible for the accuracy or completeness of electronic copies of this plan sheet.

To accompany plans dated May 14, 2012

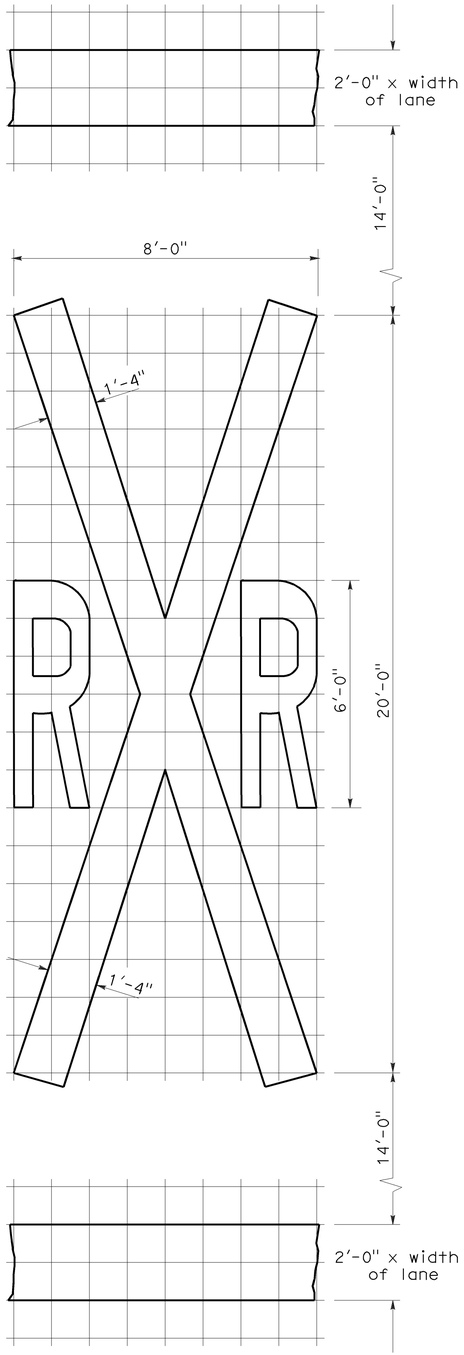

1'-0" GRID
A=70 sq ft ✳

RAILROAD CROSSING SYMBOL

✳70 sq ft DOES NOT INCLUDE THE 2'-0" x VARIABLE WIDTH TRANSVERSE LINES.

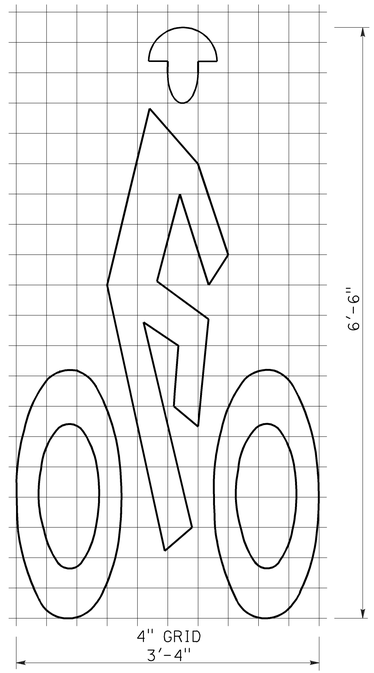

A=7 sq ft

BIKE LANE SYMBOL

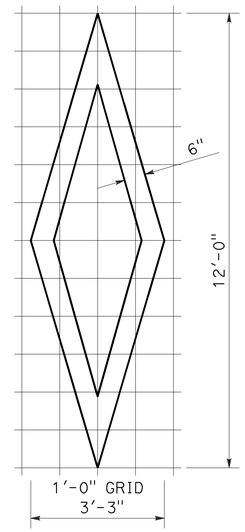

A=11 sq ft

DIAMOND SYMBOL

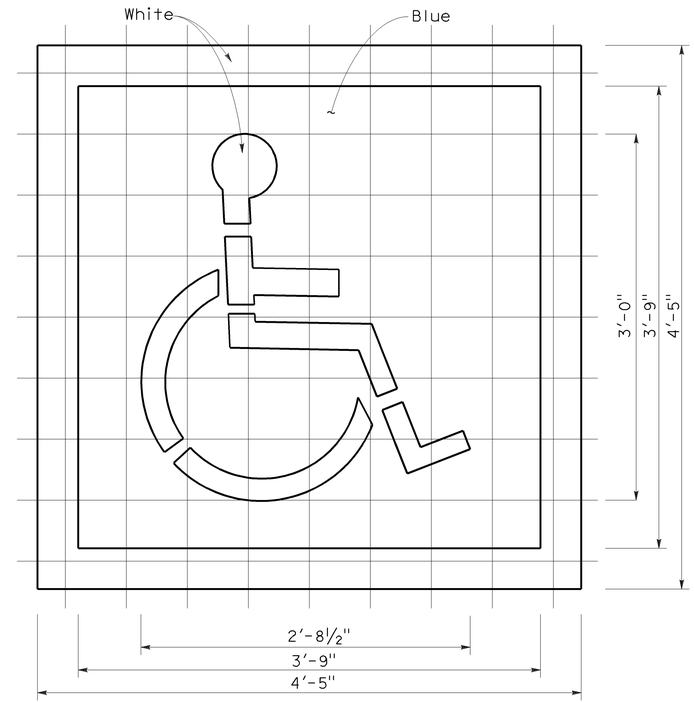

6" GRID
A (White) =9 sq ft
A (Blue) =14 sq ft

INTERNATIONAL SYMBOL OF ACCESSIBILITY MARKING

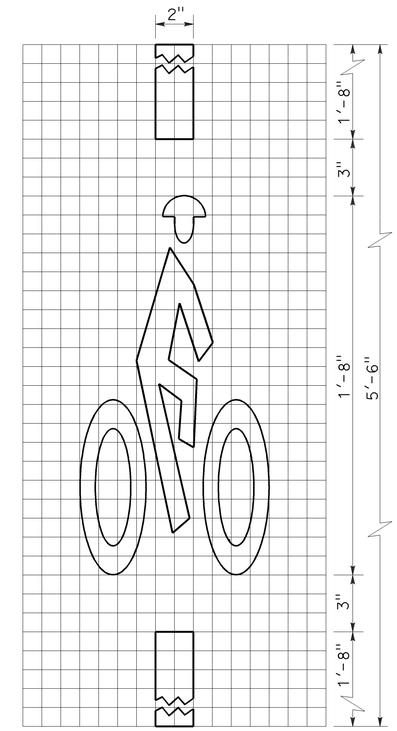

1" GRID
10"
A=2 sq ft

BICYCLE LOOP DETECTOR SYMBOL

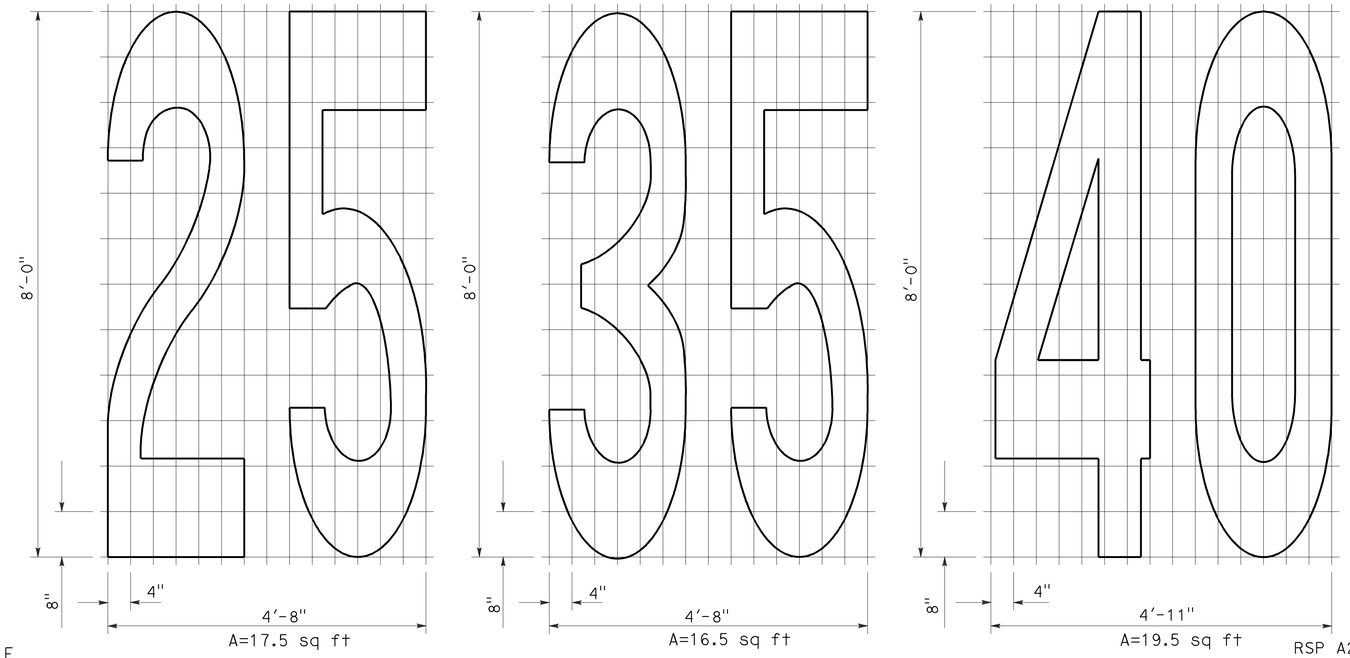

A=17.5 sq ft
A=16.5 sq ft
A=19.5 sq ft

NUMERALS

NOTE:

1. Minor variations in dimensions may be accepted by the Engineer.

STATE OF CALIFORNIA
DEPARTMENT OF TRANSPORTATION

PAVEMENT MARKINGS SYMBOLS AND NUMERALS

NO SCALE

RSP A24C DATED JUNE 6, 2008 SUPERSEDES STANDARD PLAN A24C DATED MAY 1, 2006 - PAGE 11 OF THE STANDARD PLANS BOOK DATED MAY 2006.

REVISED STANDARD PLAN RSP A24C

2006 REVISED STANDARD PLAN RSP A24C

5-27-08

Dist	COUNTY	ROUTE	POST MILES TOTAL PROJECT	SHEET No.	TOTAL SHEETS
01	Hum	101	79.9/87.8	34	49

Randell D. Hiatt
REGISTERED CIVIL ENGINEER

May 20, 2011
PLANS APPROVAL DATE

REGISTERED PROFESSIONAL ENGINEER
Randell D. Hiatt
No. C50200
Exp. 6-30-11
CIVIL
STATE OF CALIFORNIA

The State of California or its officers or agents shall not be responsible for the accuracy or completeness of electronic copies of this plan sheet.

To accompany plans dated May 14, 2012

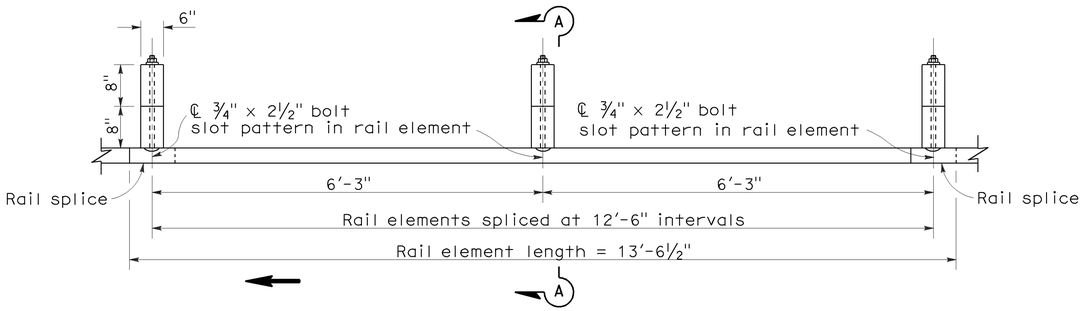

PLAN

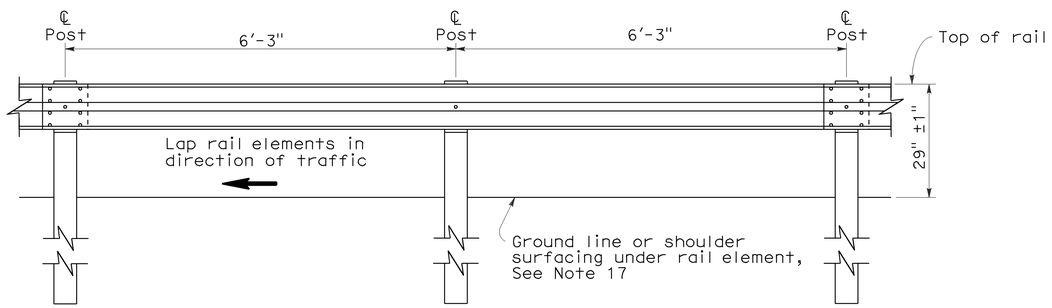

ELEVATION

METAL BEAM GUARD RAILING WITH WOOD POST AND BLOCKS

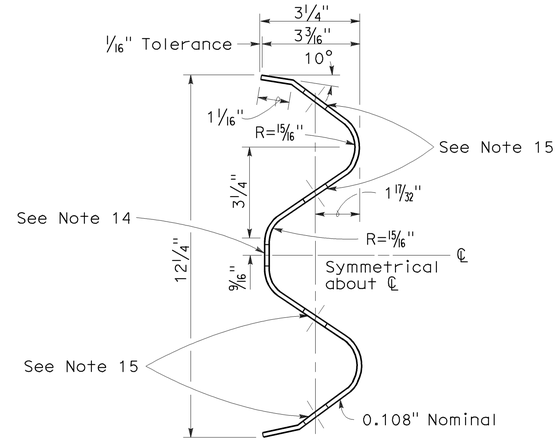

SECTION THRU
RAIL ELEMENT

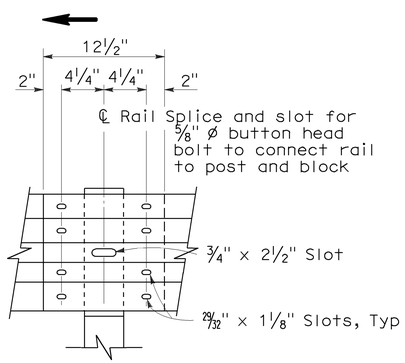

ELEVATION

RAIL ELEMENT SPLICE DETAIL

a) Connect the over lapped end of the rail elements with ⅝" ø x 1⅜" button head oval shoulder splice bolts inserted into the 29⁄32" x 1⅛" slots and bolted together with ⅝" ø recessed hex nuts. Recess of hex nut points toward rail element. A total of 8 bolts and nuts are to be used at each rail splice connection.

b) The ends of the rail elements are to be overlapped in the direction of traffic (see details).

c) Where end cap is to be attached to the end of a rail element, a total of 4 of the above described splice bolts and nuts are to be used.

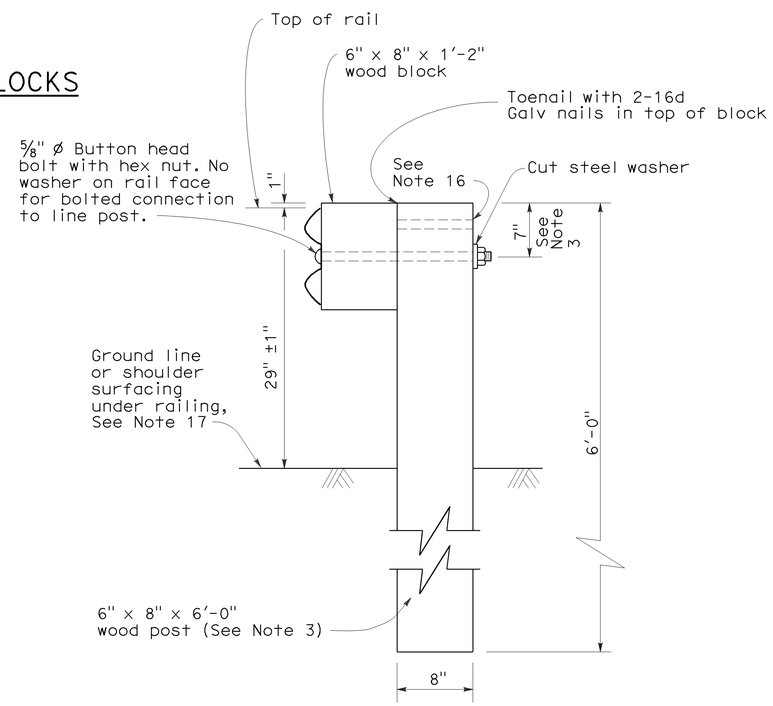

SECTION A-A
TYPICAL WOOD LINE
POST INSTALLATION
See Note 4

NOTES:

1. For details of steel post installations, see Standard Plan A77A2.
2. For details of standard hardware used to construct guard railing, see Standard Plan A77B1.
3. For details of wood posts and wood blocks used to construct guard railing, see Standard Plan A77C1.
4. For additional installation details, see Standard Plan A77C3.
5. Guard railing post spacing to be 6'-3" center to center, except as otherwise noted.
6. For guard railing typical layouts, see the A77E, A77F and A77G Series of Standard Plans.
7. For terminal system end treatment details, see the A77L Series of Standard Plans. To connect railing to terminal system end treatment, transition the top of railing height at a ratio of 120:1 to terminal system end treatment height plus one 12'-6" standard railing section at the transitioned height for a horizontal connection to the end treatment.
8. For guard railing end anchor details, see Standard Plans A77H1 and A77I2.
9. For details of guard railing transition to bridge railing, see Standard Plan A77J4.
10. For additional details of guard railing connection to bridge railings, see Standard Plans A77J1, A77J2 and A77K1.
11. For guard railing connection details to abutments and walls, see Standard Plan A77J3.
12. Direction of adjacent traffic indicated by ➡.
13. For typical guard railing delineation and dike positioning details, see Standard Plan A77C4.
14. Slotted hole for bolted connection of rail element to block and post. See "Section Thru Rail Element".
15. Slotted holes for splice bolts to overlap ends of rail element. See "Section Thru Rail Element".
16. Additional hole in uppermost portion of line post is for potential future adjustments of railing height. See Standard Plan A77C1.
17. Install posts in soil.

STATE OF CALIFORNIA
DEPARTMENT OF TRANSPORTATION

METAL BEAM GUARD RAILING STANDARD RAILING SECTION (WOOD POST WITH WOOD BLOCK)

NO SCALE

RSP A77A1 DATED MAY 20, 2011 SUPERSEDES STANDARD PLAN A77A1
DATED MAY 1, 2006 - PAGE 41 OF THE STANDARD PLANS BOOK DATED MAY 2006.

REVISED STANDARD PLAN RSP A77A1

2006 REVISED STANDARD PLAN RSP A77A1

3-10-11

To accompany plans dated May 14, 2012

Dist	COUNTY	ROUTE	POST MILES TOTAL PROJECT	SHEET No.	TOTAL SHEETS
01	Hum	101	79.9/87.8	35	49

Randell D. Hiatt
REGISTERED CIVIL ENGINEER

May 20, 2011
PLANS APPROVAL DATE

REGISTERED PROFESSIONAL ENGINEER
Randell D. Hiatt
No. C50200
Exp. 6-30-11
CIVIL
STATE OF CALIFORNIA

The State of California or its officers or agents shall not be responsible for the accuracy or completeness of electronic copies of this plan sheet.

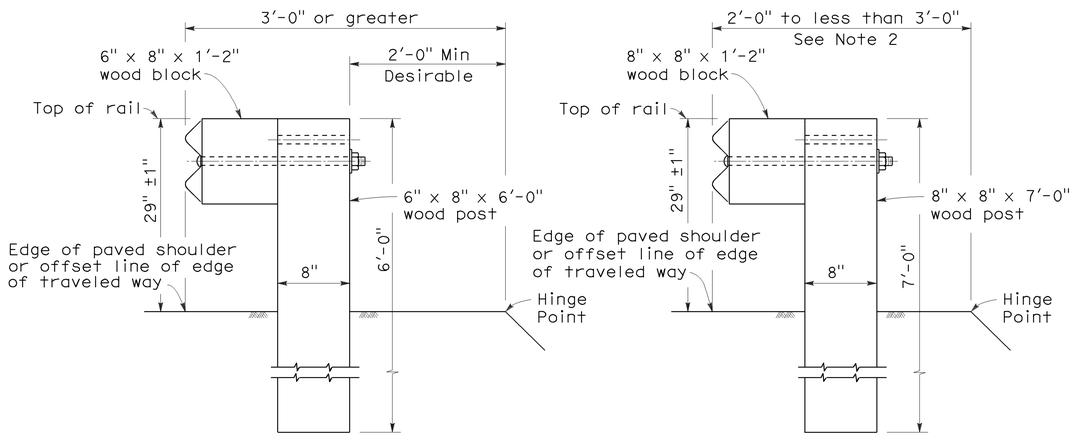

DETAIL A
TYPICAL ROADWAY INSTALLATION
See Note 1

DETAIL B
NARROW ROADWAY INSTALLATION
See Note 1

POST EMBEDMENT

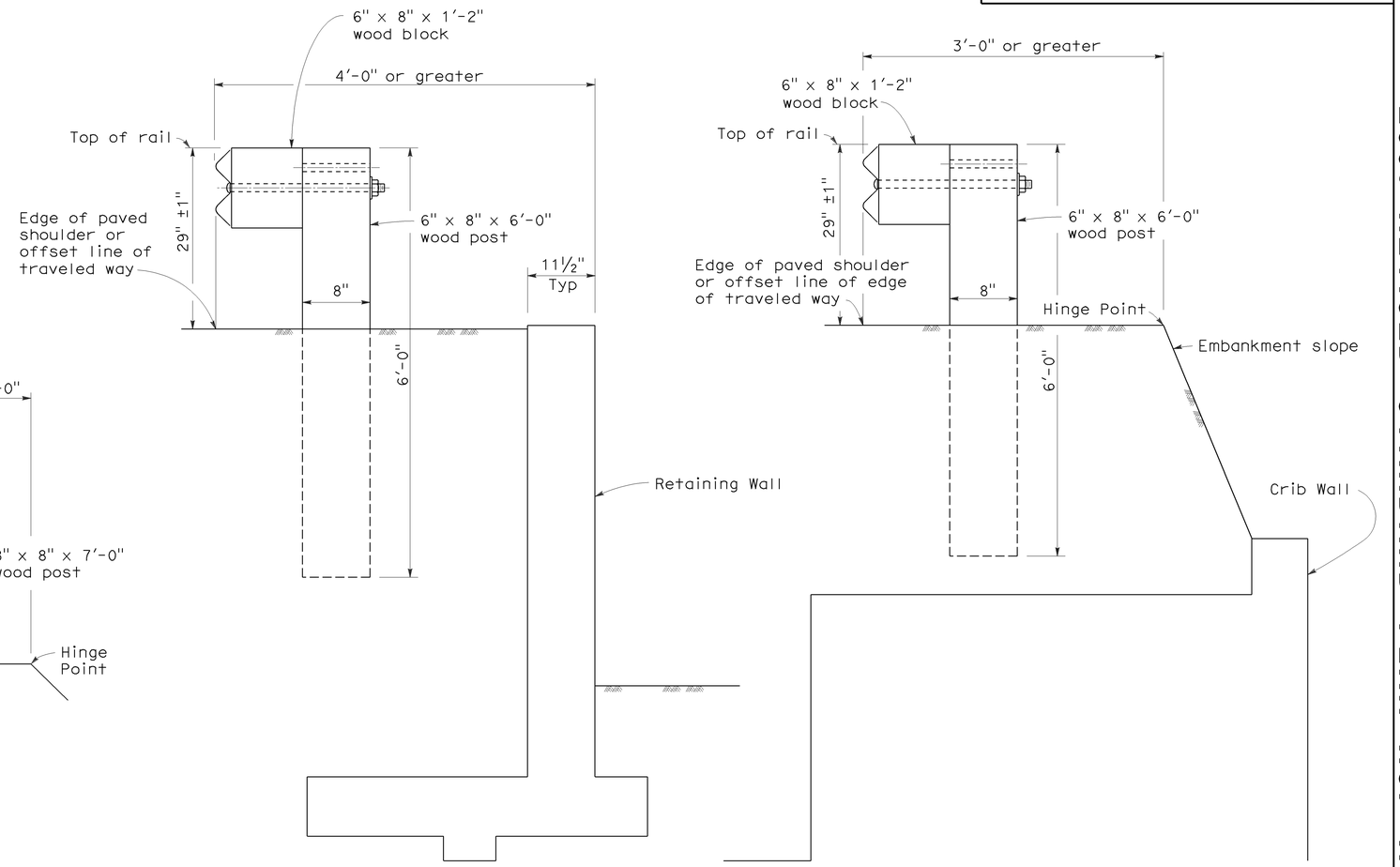

DETAIL C

DETAIL D

INSTALLATION AT EARTH RETAINING WALLS

NOTES:

1. These installation details also applicable to steel line post installations. For Detail A, C, and D, where steel line post installations are constructed, W6 x 9 steel post, 6'-0" in length, with 6" x 8" x 1'-2" notched wood blocks or notched recycled plastic blocks are to be used in place of the size of wood post and wood block shown. For Detail B, where steel line post installations are constructed, W6 x 9 steel post, 7'-0" in length, with 6" x 8" x 1'-2" notched wood blocks or notched recycled plastic blocks are to be used in place of the size of wood post and wood block shown. For additional installation details, see Standard Plans A77A1 and A77A2.
2. Where the distance between the face of the rail and the hinge point is less than 2'-0", see the Project Plans for special details.
3. For dike positioning with guard railing installations, see Standard Plan A77C4.

STATE OF CALIFORNIA
DEPARTMENT OF TRANSPORTATION

METAL BEAM GUARD RAILING TYPICAL LINE POST EMBEDMENT AND HINGE POINT OFFSET DETAILS

NO SCALE

RSP A77C3 DATED MAY 20, 2011 SUPERSEDES STANDARD PLAN A77C3
DATED MAY 1, 2006 - PAGE 46 OF THE STANDARD PLANS BOOK DATED MAY 2006.

REVISED STANDARD PLAN RSP A77C3

2006 REVISED STANDARD PLAN RSP A77C3

3-10-11

Dist	COUNTY	ROUTE	POST MILES TOTAL PROJECT	SHEET No.	TOTAL SHEETS
01	Hum	101	79.9/87.8	36	49

Randell D. Hiatt
REGISTERED CIVIL ENGINEER

May 20, 2011
PLANS APPROVAL DATE

REGISTERED PROFESSIONAL ENGINEER
Randell D. Hiatt
No. C50200
Exp. 6-30-11
CIVIL
STATE OF CALIFORNIA

The State of California or its officers or agents shall not be responsible for the accuracy or completeness of electronic copies of this plan sheet.

To accompany plans dated May 14, 2012

NOTES:

1. When necessary to place dike in front of face of guard railing, only Type C dike may be used. For dike details, see Standard Plan A87B.
2. For standard railing post embedment, see Standard Plans A77C3.
3. Guard railing delineation to be used where shown on the Project Plans.
4. When dike or curb is placed under guard railing, the maximum height of the dike or curb shall be 4". Mountable dike should not be used. For dike and curb details, see Standard Plans A87A and A87B.
5. For details of typical distance between the face of rail and hinge point, see Standard Plan A77C3.
6. For steel line posts, use 1/4 - 20 self-tapping screws in 0.22" diameter holes or 1/4" bolts in 9/32" diameter holes.

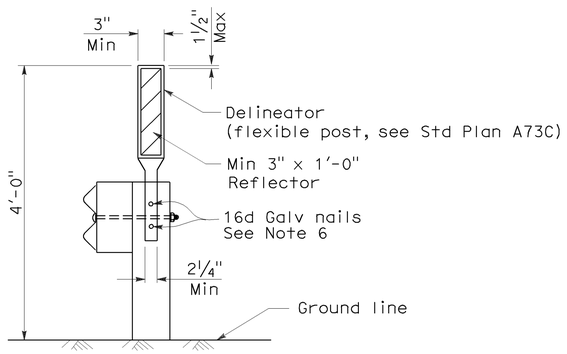

GUARD RAILING DELINEATION

See Note 3

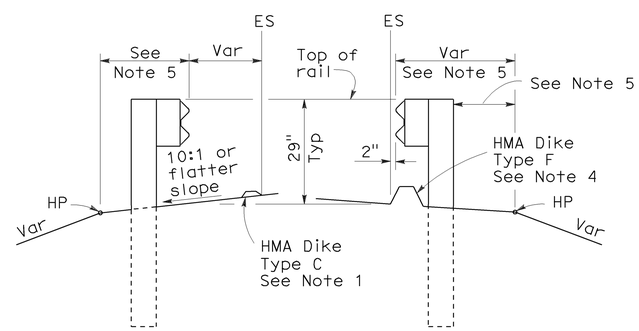

DIKE POSITIONING

See Note 1

STATE OF CALIFORNIA
DEPARTMENT OF TRANSPORTATION

METAL BEAM GUARD RAILING TYPICAL RAILING DELINEATION AND DIKE POSITIONING DETAILS

NO SCALE

RSP A77C4 DATED MAY 20, 2011 SUPERSEDES RSP A77C4 DATED JUNE 6, 2008 AND STANDARD PLAN A77C4 DATED MAY 1, 2006 - PAGE 47 OF THE STANDARD PLANS BOOK DATED MAY 2006.

REVISED STANDARD PLAN RSP A77C4

2006 REVISED STANDARD PLAN RSP A77C4

3-10-11

DIST	COUNTY	ROUTE	POST MILES TOTAL PROJECT	SHEET NO.	TOTAL SHEETS
01	Hum	101	79.9/87.8	37	49

Randell D. Hiatt
REGISTERED CIVIL ENGINEER

June 6, 2008
PLANS APPROVAL DATE

REGISTERED PROFESSIONAL ENGINEER Randell D. Hiatt No. C50200 Exp. 6-30-09 CIVIL STATE OF CALIFORNIA

The State of California or its officers or agents shall not be responsible for the accuracy or completeness of electronic copies of this plan sheet.

To accompany plans dated May 14, 2012

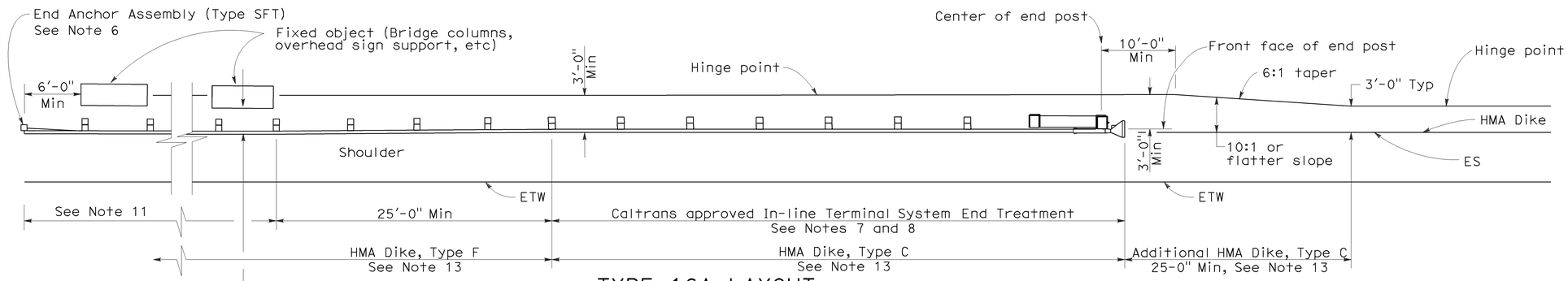

TYPE 16A LAYOUT

(GUARD RAILING INSTALLATION AT ROADSIDE FIXED OBJECT OR OBJECTS WITH AN IN-LINE END TREATMENT AT TRAFFIC APPROACH END OF RAILING)
See Notes 12 and 13

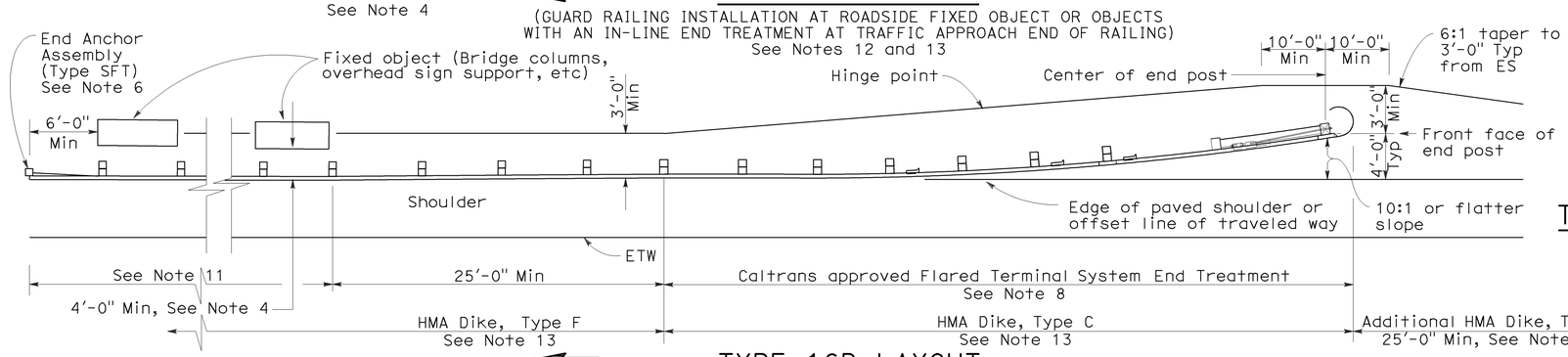

TYPE 16B LAYOUT

(GUARD RAILING INSTALLATION AT ROADSIDE FIXED OBJECT OR OBJECTS WITH A FLARED END TREATMENT AT TRAFFIC APPROACH END OF RAILING)
See Notes 12 and 13

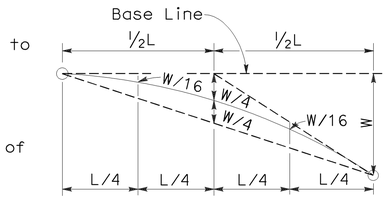

TYPICAL PARABOLIC LAYOUT

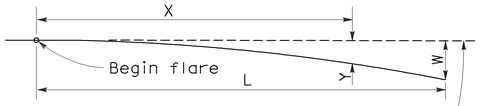

Base Line (Edge of paved shoulder or offset line of edge of traveled way)

$$Y = \frac{WX^2}{L^2}$$

Y = Offset from base line
W = Maximum offset
X = Distance along base line
L = Length of flare

PARABOLIC FLARE OFFSETS

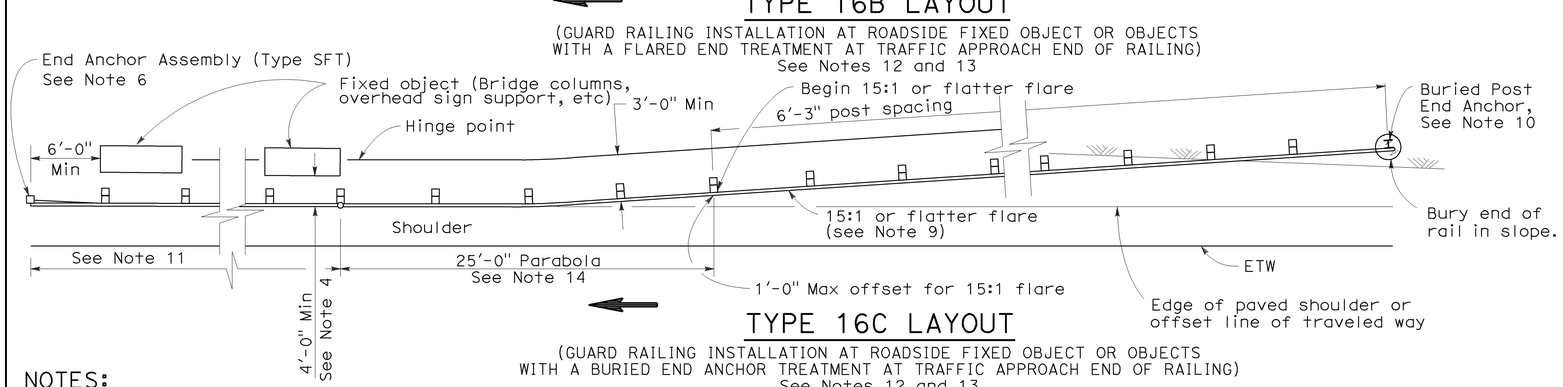

TYPE 16C LAYOUT

(GUARD RAILING INSTALLATION AT ROADSIDE FIXED OBJECT OR OBJECTS WITH A BURIED END ANCHOR TREATMENT AT TRAFFIC APPROACH END OF RAILING)
See Notes 12 and 13

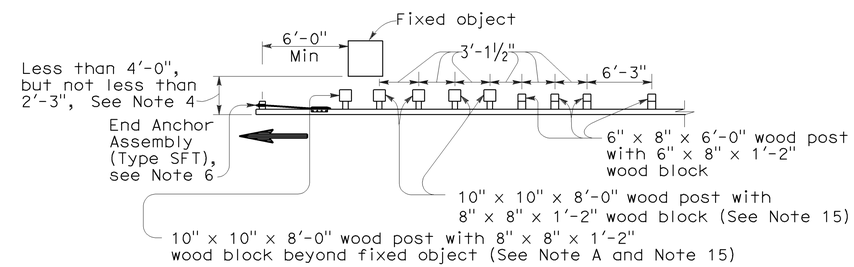

NOTE A: For a series of fixed objects (bridge columns, overhead sign supports, etc.) additional 10" x 10" x 8'-0" wood post with 8" x 8" x 1'-2" wood blocks at 3'-1½" center to center spacing are to be used between fixed objects.

STRENGTHENED RAILING SECTIONS FOR FIXED OBJECT

Use strengthened railing sections with Types 16A, 16B or 16C Layouts where minimum clearance between the face of the guard railing and fixed object(s) is less than 4'-0", but not less than 2'-3". See Note 4

NOTES:

1. Line post, blocks and hardware to be used are shown on Revised Standard Plans A77A1, A77A2, A77B1, A77C1 and A77C2.
2. Guard railing post spacing to be 6'-3" center to center, except as otherwise noted.
3. Except as noted, line posts are 6" x 8" x 6'-0" wood with 6" x 8" x 1'-2" wood blocks. W6 x 9 steel posts, 6'-0" in length, with 6" x 8" x 1'-2" notched wood blocks or notched recycled plastic blocks may be used for 6" x 8" x 6'-0" wood line posts with 6" x 8" x 1'-2" wood blocks where applicable and when specified.
4. A 4'-0" minimum clearance is required between the face of the railing and the face of a fixed object located directly behind standard guard railing sections with post spacing of 6'-3". Construct guard railing as shown in the detail "Strengthened Railing Sections for Fixed Objects" on this plan, where the clearance between the face of the railing and the face of a fixed object is less than 4'-0", but not less than 2'-3". Where the clearance is less than 2'-3", a concrete wall or barrier should be constructed to shield the fixed object(s).
5. Direction of adjacent traffic indicated by ⟶.
6. For End Anchor Assembly (Type SFT) details, see Standard Plan A77H1.
7. In-line Terminal System End Treatments are used where site conditions will not accommodate a flared end treatment.
8. The type of terminal system to be used will be shown on the Project Plans.
9. The 15:1 or flatter flare used with Type 16C Layout is based on the edge of the paved shoulder or offset line of edge of the traveled way. The length of guard railing within the 15:1 or flatter flare is based on site conditions and should be a length equal to multiples of 12'-6".
10. For details of the Buried Post End Anchor used with Type 16C Layout, see Standard Plan A77I2.
11. As site conditions dictate, construct additional guard railing to shield fixed object(s). Additional guard railing length equal to multiples of 12'-6". Post spacing at 6'-3" except as specified in Note 4.
12. Layout Types 16A, 16B or 16C are typically used where guard railing is recommended to shield roadside fixed object(s) and a crashworthy end treatment is required for only one direction of traffic.
13. Where placement of dike is required with guard railing, see Revised Standard Plan RSP A77C4 for dike positioning details.
14. For typical flare offsets for 25'-0" length parabola with maximum offset of 1'-0", see Revised Standard Plan RSP A77E1.
15. W6 x 15 steel post, 8'-0" in length, with 8" x 8" x 1'-2" notched wood block or notched recycled plastic blocks may be used in place of the 10" x 10" x 8'-0" wood post with 8" x 8" x 1'-2" wood block shown in the "Strengthened Railing Sections Detail".

STATE OF CALIFORNIA
DEPARTMENT OF TRANSPORTATION

METAL BEAM GUARD RAILING TYPICAL LAYOUTS FOR ROADSIDE FIXED OBJECTS

NO SCALE

RSP A77G3 DATED JUNE 6, 2008 SUPERSEDES STANDARD PLAN A77G3 DATED MAY 1, 2006 - PAGE 61 OF THE STANDARD PLANS BOOK DATED MAY 2006.

REVISED STANDARD PLAN RSP A77G3

2006 REVISED STANDARD PLAN RSP A77G3

12-10-07

Dist	COUNTY	ROUTE	POST MILES TOTAL PROJECT	SHEET No.	TOTAL SHEETS
01	Hum	101	79.9/87.8	38	49

Randell D. Hiatt
REGISTERED CIVIL ENGINEER

May 20, 2011
PLANS APPROVAL DATE

The State of California or its officers or agents shall not be responsible for the accuracy or completeness of electronic copies of this plan sheet.

REGISTERED PROFESSIONAL ENGINEER
Randell D. Hiatt
No. C50200
Exp. 6-30-11
CIVIL
STATE OF CALIFORNIA

To accompany plans dated May 14, 2012

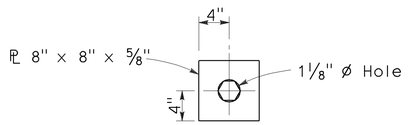

DETAIL A
CABLE CONNECTION
END PLATE

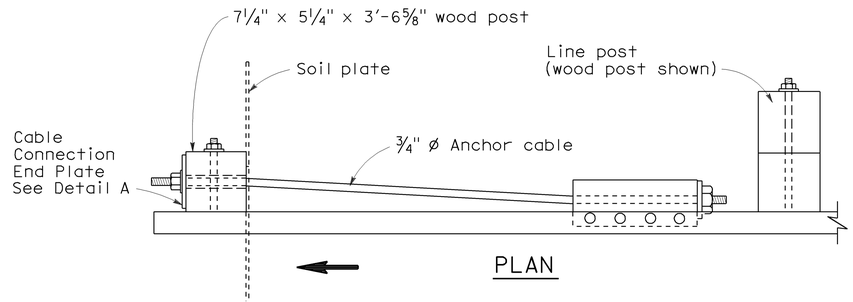

PLAN

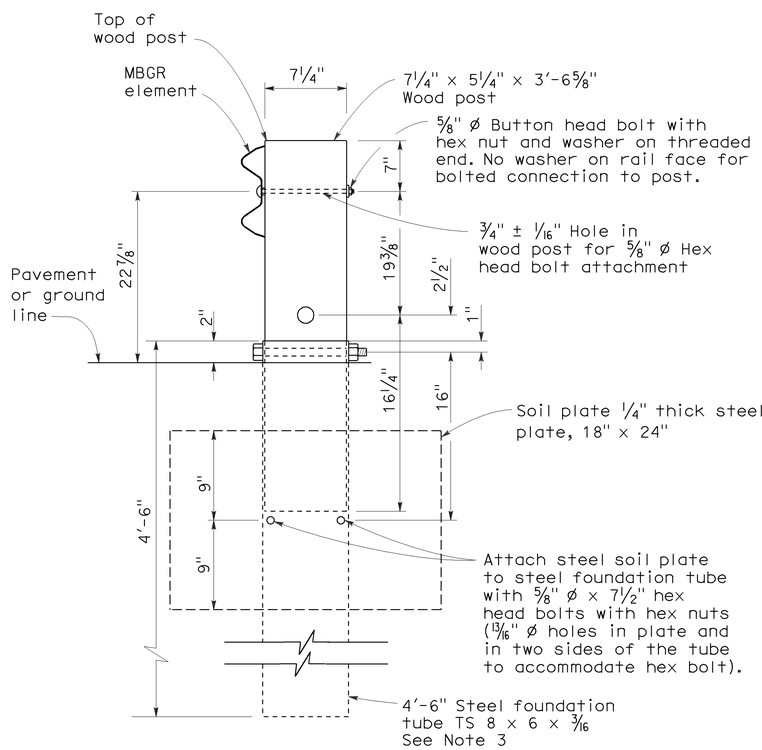

SECTION A-A

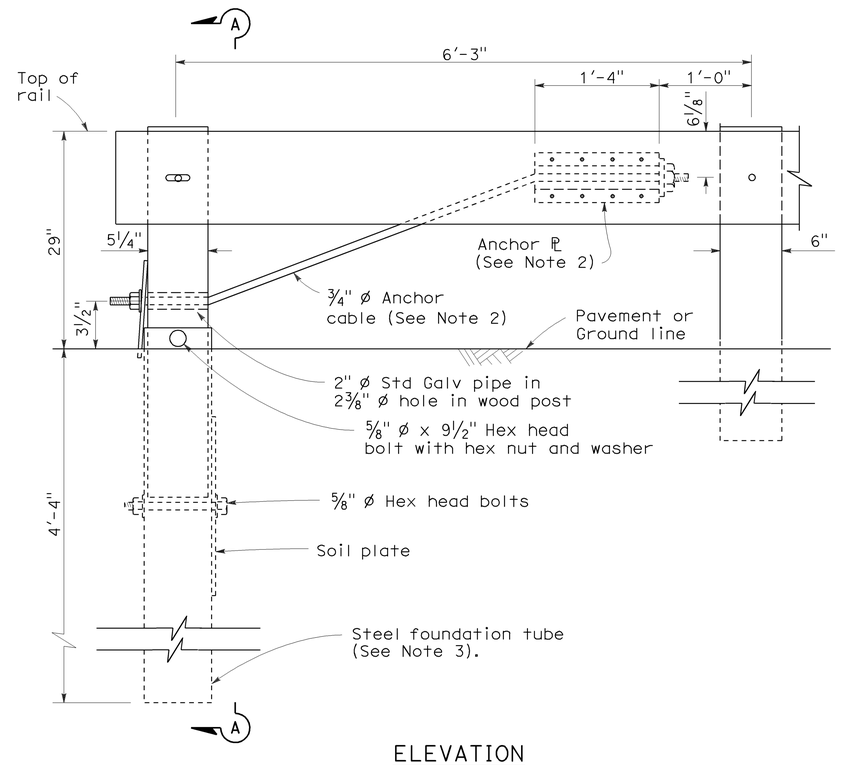

ELEVATION
END ANCHOR
ASSEMBLY (TYPE SFT)
See Note 1

NOTES:

1. See the A77E, A77F and A77G series of Standard Plans for typical use of End Anchor Assembly (Type SFT).
2. For details of the anchor plate and 3/4" cable, see Standard Plan A77H3.
3. A 6'-0" length steel foundation tube, TS 8 x 6 x 3/16, without a soil plate, may be furnished and installed in place of the 4'-6" length steel foundation tube and soil plate shown. Minimum embedment of the 6'-0" length tube shall be 5'-9". A 5/8" Ø hex head bolt and nut shall be installed in the hole in the 6'-0" length tube to keep the wood post from dropping into the tube.
4. Direction of traffic indicated by ⟹.
5. Install line post, steel foundation tube and soil plate in soil.

STATE OF CALIFORNIA
DEPARTMENT OF TRANSPORTATION

METAL RAILING END ANCHOR ASSEMBLY (TYPE SFT)

NO SCALE

RSP A77H1 DATED MAY 20, 2011 SUPERSEDES STANDARD PLAN A77H1
DATED MAY 1, 2006 - PAGE 67 OF THE STANDARD PLANS BOOK DATED MAY 2006.

REVISED STANDARD PLAN RSP A77H1

2006 REVISED STANDARD PLAN RSP A77H1

DIST	COUNTY	ROUTE	POST MILES TOTAL PROJECT	SHEET NO.	TOTAL SHEETS
01	Hum	101	79.9/87.8	39	49

REGISTERED ELECTRICAL ENGINEER

October 5, 2007
PLANS APPROVAL DATE

REGISTERED PROFESSIONAL ENGINEER Jeffery G. McRae No. E14512 Exp. 6-30-08 ELECTRICAL STATE OF CALIFORNIA

The State of California or its officers or agents shall not be responsible for the accuracy or completeness of electronic copies of this plan sheet.

To accompany plans dated May 14, 2012

2006 REVISED STANDARD PLAN RSP ES-1A

ELECTROLIERS

STANDARD TYPES
15, 15D
15 STRUCTURE
21, 21D STRUCTURE
30
31
32
35
36-20A

High mast light pole

Double Arm lighting standard

Existing electrolier

Electrolier foundation (Future installation)

NOTES:

1. Luminaires shall be 310 W HPS when installed on Type 21, 21D, 30, 31, 32, 35 and 36-20A Standards, unless otherwise specified. Luminaires shall be 200 W HPS when installed on other type standards or poles, unless otherwise specified.
2. Luminaires shall be the cutoff type, ANSI Type Ⅲ medium cutoff lighting distribution, unless otherwise specified.
3. Variations noted adjacent to symbol on project plans.

Electrolier (see project notes or project plans)

Luminaire on wood pole

STANDARD NOTES:

- AB Abandon. If applied to conduit, remove conductors.
- BC Install pull box in existing conduit run.
- BP Pedestrian barricade, type as indicated on plan.
- CB Install conduit into existing pull box.
- CC Connect new and existing conduit. Remove existing conductors and install conductors as indicated.
- CF Conduit to remain for future use. Remove conductors. Install pull wire or rope.
- DH Detector handhole.
- FA Foundation to be abandoned.
- IS Install sign on signal mast arm.
- NS No slip base on standard.
- PEC Photoelectric control.
- PEU Photoelectric unit.
- RC Equipment or material to be removed and become the property of the Contractor.
- RE Remove electrolier, fuses and ballast. Tape ends of conductors.
- RL Relocate equipment.
- RR Remove and reuse equipment.
- RS Remove and salvage equipment.
- SC Splice new to existing conductors.
- SD Service disconnect.
- SF Standard to remain for future use. Remove luminaire, pole conductors, fuses and ballast.
- TSP Telephone service point.

ABBREVIATIONS AND EQUIPMENT DESIGNATIONS

PROPOSED	EXISTING	
BBS	bbs	Battery backup system
BC	bc	Bolt circle
C	C	Conduit
CCTV	cctv	Closed circuit television
CKT	ckt	Circuit
CMS	cms	Changeable message sign
DLC	dlc	Loop detector lead-in cable
EMS	ems	Extinguishable message sign
EVC	evc	Emergency vehicle cable
EVD	evd	Emergency vehicle detector
FB	fb	Flashing beacon
FBCA	fbca	Flashing beacon control assembly
FBS	fbs	Flashing beacon with slip base
FO	fo	Fiber optic
G	G	Ground (Equipment Grounding Conductor)
GFCI	GFCI	Ground fault circuit interrupt
HAR	har	Highway advisory radio
HEX	hex	Hexagonal
HPS	hps	High pressure sodium
IISNS	iisns	Internally illuminated street name sign
ISL	isl	Induction sign lighting
LED	led	Light emitting diode
LMA	lma	Luminaire mast arm
LPS	lps	Low pressure sodium
LTG	ltg	Lighting
LUM	lum	Luminaire
MAT	mat	Mast arm mounting vehicle signal faces, top attachment
MAS	mas	Mast arm mounting vehicle signal faces, side attachment
MAS-4A	mas-4A	Mast arm mounting vehicle signal faces, side attachment - 4 signal section
MAS-4B	mas-4B	
MAS-4C	mas-4C	
MAS-5A	mas-5A	Mast arm mounting vehicle signal faces, side attachment - 5 signal section
MAS-5B	mas-5B	
MC	mc	Mercury contactor
M/M	m/m	Multiple to multiple transformer
MT	mt	Conduit with pull wire or rope only
MTG	mtg	Mounting
	mv	Mercury vapor lighting fixture
N	N	Neutral (Grounded Conductor)
NC	NC	Normally closed
NO	NO	Normally open
PB	pb	Pull box
PEC	pec	Photoelectric control (Type Ⅰ, Ⅱ, Ⅲ, Ⅳ or Ⅴ as shown)
PED	ped	Pedestrian
PEU	peu	Photoelectric unit
PPB	ppb	Pedestrian push button
RL		Relocated equipment
RM	rm	Ramp metering
SB	sb	Slip base
SIC	sic	Signal interconnect cable
SIG	sig	Signal
SMA	sma	Signal mast arm
SNS	sns	Street name sign
SP	sp	Service point
TDC	tdc	Telephone demarcation cabinet
TMS	tms	Traffic monitoring station
TOS	tos	Traffic Operations System
VEH	veh	Vehicle
XFMR	xfmr	Transformer
COMM	comm	Communication
RWIS	rwis	Roadway weather information system

SOFFIT AND WALL MOUNTED LUMINAIRES

Pendant, 70 W HPS unless otherwise specified.

Flush, 70 W HPS unless otherwise specified.

Wall surface, 70 W HPS unless otherwise specified.

Existing soffit or wall luminaire to remain unmodified.

Existing soffit or wall luminaire to be modified as specified.

NOTE:

Arrow indicates "street side" of luminaire.

STATE OF CALIFORNIA
DEPARTMENT OF TRANSPORTATION

ELECTRICAL SYSTEMS (SYMBOLS AND ABBREVIATIONS)

NO SCALE

RSP ES-1A DATED OCTOBER 5, 2007 SUPERSEDES STANDARD PLAN ES-1A DATED MAY 1, 2006 - PAGE 400 OF THE STANDARD PLANS BOOK DATED MAY 2006.

REVISED STANDARD PLAN RSP ES-1A

DIST	COUNTY	ROUTE	POST MILES TOTAL PROJECT	SHEET NO.	TOTAL SHEETS
01	Hum	101	79.9/87.8	40	49

REGISTERED ELECTRICAL ENGINEER

October 5, 2007
PLANS APPROVAL DATE

REGISTERED PROFESSIONAL ENGINEER Jeffery G. McRae No. E14512 Exp. 6-30-08 ELECTRICAL STATE OF CALIFORNIA

The State of California or its officers or agents shall not be responsible for the accuracy or completeness of electronic copies of this plan sheet.

To accompany plans dated May 14, 2012

CONDUIT

PROPOSED	EXISTING	
		Lighting Conduit, unless otherwise indicated or noted
		Traffic signal conduit
C	c	Communication conduit
T	t	Telephone conduit
F	f	Fire alarm conduit
FO	fo	Fiber optic conduit
		Conduit termination (RSP ES-9A C)
R	r	Conduit riser in/on structure or service pole

SERVICE EQUIPMENT

PROPOSED	EXISTING	
OH	oh	Overhead lines
U	U	Wood pole "U" indicates utility owned
		Pole guy with anchor
		Utility transformer - ground mounted
III		Service equipment enclosure type
		Service equipment enclosure door indicates front of enclosure
T	t	Telephone demarcation cabinet

POLE-MOUNTED SERVICE DESIGNATION

Type of installation

TYPE H SERVICE - 28'-10" ← Pole height above grade

ILLUMINATED OVERHEAD SIGN

PROPOSED	EXISTING	
		Overhead sign - Single post
		Overhead sign - Two post
		Overhead sign - Mounted on structure
		Overhead sign with electrolier

SIGNAL EQUIPMENT

PROPOSED	EXISTING	
		Pedestrian signal face
		Pedestrian push button post
		Pedestrian barricade
		Vehicle signal face (with backplate, 3-Section: red, yellow and green)
		Vehicle signal face with angle visors
PV	PV	Modifications of basic symbols: "L" Indicates all non-arrow sections louvered "LG" Indicates louvered green section only "PV" indicates 12" programmed visibility sections "8" indicates all 8" sections (only when specified)
		Type 15TS and Vehicle signal face
		Vehicle signal face with red, yellow and green left arrow sections
		Vehicle signal face with red and yellow sections and up green arrow
		Vehicle signal face (5 Section) with red, yellow and green sections and yellow and green right arrows
		Type 1 Standard and attached vehicle signal faces
		Standard with signal mast arm only and attached vehicle signal faces and internally illuminated street name sign
		Type 33 Standard, Left-turn vehicle signal face and sign
		Standard with luminaire and signal mast arms and attached vehicle signal faces
		Cantilever flashing beacon Type 9 Frame, with a sign unless otherwise specified or indicated
		Type 15-FBS Standard with two vehicle signal face sections with lens, backplate and visor with a sign
R	Y	Flashing beacon. One vehicle signal face section with lens, backplate and visor. "R" indicates red indication, "Y" indicates yellow indication
		Controller assembly. Door indicates front of cabinet

SIGNAL EQUIPMENT Cont

PROPOSED	EXISTING	
		Guard post
		Type 1 Standard with "Meter On" sign
		Emergency Vehicle detector

NOTES:

1. All signal sections shall be 12" unless shown otherwise.
2. Signal heads shall be provided with backplates unless shown otherwise.
3. Signal indication shall be LED.

STATE OF CALIFORNIA
DEPARTMENT OF TRANSPORTATION

ELECTRICAL SYSTEMS (SYMBOLS AND ABBREVIATIONS)

NO SCALE

RSP ES-1B DATED OCTOBER 5, 2007 SUPERCEDES STANDARD PLAN ES-1B DATED MAY 1, 2006 - PAGE 401 OF THE STANDARD PLANS BOOK DATED MAY 2006.

REVISED STANDARD PLAN RSP ES-1B

2006 REVISED STANDARD PLAN RSP ES-1B

7-10-07

DIST	COUNTY	ROUTE	POST MILES TOTAL PROJECT	SHEET NO.	TOTAL SHEETS
01	Hum	101	79.9/87.8	41	49

REGISTERED ELECTRICAL ENGINEER

October 5, 2007
PLANS APPROVAL DATE

REGISTERED PROFESSIONAL ENGINEER Jeffery G. McRae No. E14512 Exp. 6-30-08 ELECTRICAL STATE OF CALIFORNIA

The State of California or its officers or agents shall not be responsible for the accuracy or completeness of electronic copies of this plan sheet.

To accompany plans dated May 14, 2012

EQUIPMENT IDENTIFICATION

ILLUMINATED SIGN IDENTIFICATION NUMBER:

Sign No. 12345

- Sign number - Place on post or structure

10 ISL SCI 1.0

- Transformer rating (kVA)
- Lighting control type
- Number and type of fixtures

Do NOT place on standard or structure

ELECTROLIER OR EQUIPMENT IDENTIFICATION NUMBER:

12345 - 15'-0"

- Mast arm length, if shown. Do not place on standard or structure.
- Equipment number - Place on standard or structure. Existing equipment numbers are shown in parenthesis

CONDUIT AND CONDUCTOR IDENTIFICATION:

1½"C, 2#10, 15#14, 2 DLC

- Number and size of conductors and cables
- Size of conduit in inches

Ø1, Ø2, Ø2P, etc.	Traffic phase identification for signal faces, detectors and phase diagrams
1 2 3	Project note numbers
A B C	Equipment description, installation or item numbers
1 2 3	Conduit run numbers

SIGNAL AND LIGHTING STANDARD (TYPICAL DESIGNATION):

19A - 3 - 100

- Wind velocity = 100 mph
- Case 3 arm loading
- Standard type
- Standard Plan sheet number
- Detail number or letter

MISCELLANEOUS EQUIPMENT

PROPOSED	EXISTING	
CMS	cms	Changeable message sign
		Closed circuit television camera
		Highway advisory radio pole and antenna
EMS	ems	Extinguishable message sign
M V	m v	Detection device M = Microwave sensor V = Video image sensor

WIRING DIAGRAM LEGEND

P	Pole
CB	Circuit breaker
A	Ampere
V	Volt
M	Metered
UM	Unmetered
NB	Neutral bus
GB	Ground bus
G	Equipment grounding conductor
N	Grounded conductor (Neutral)

- External conductor
- Conductor or bus
- Tie point
- Contactor coil
- Contactor, Contact NO
- Terminal blocks
- Contactor, Contact NC
- Enclosure bond
- Grounding electrode
- Circuit breaker
- Receptacle

PULL BOXES

PROPOSED EXISTING

Pull box-No. 5 unless otherwise indicated or noted.

3 9A(21)

Pull box-Additional designations or descriptions

3 = No. 3½ pull box
5 = No. 5 pull box
6 = No. 6 pull box
7 = No. 7 (Ceiling pull box)
8 = No. 8 (Pendant soffit pull box)
9 = No. 9 pull box
9A = No. 9A pull box

(C) = Communications pull box
(E) = Pull box with extension
(S) = Sprinkler control pull box
(21) = Anchor bolts and conduit for future installation of Type 21 Standard
(T) = Traffic pull box

VEHICLE DETECTORS

5 J 9 U

- U = Upper
- L = Lower
- Slot number in input file
- Input file (I or J)
- Phase

PROPOSED	EXISTING	
		Type A detector loop. Outline of sawcut shown.
		Type B detector loop. Outline of sawcut shown.
		Type C detector loop. Outline of sawcut shown.
		Type D detector loop. Outline of sawcut shown.
		Type E detector loop. Outline of sawcut shown.
		Type Q detector loop. Outline of sawcut shown.
		Magnetic detector
DH	dh	Detector handhole
		Microwave or video detection zone

STATE OF CALIFORNIA
DEPARTMENT OF TRANSPORTATION

ELECTRICAL SYSTEMS (SYMBOLS AND ABBREVIATIONS)

NO SCALE

RSP ES-1C DATED OCTOBER 5, 2007 SUPERCEDES STANDARD PLAN ES-1C DATED MAY 1, 2006 - PAGE 402 OF THE STANDARD PLANS BOOK DATED MAY 2006.

REVISED STANDARD PLAN RSP ES-1C

2006 REVISED STANDARD PLAN RSP ES-1C

DIST	COUNTY	ROUTE	POST MILES TOTAL PROJECT	SHEET NO.	TOTAL SHEETS
01	Hum	101	79.9/87.8	42	49

REGISTERED ELECTRICAL ENGINEER

October 5, 2007
PLANS APPROVAL DATE

REGISTERED PROFESSIONAL ENGINEER Jeffery G. McRae No. E14512 Exp. 6-30-08 ELECTRICAL STATE OF CALIFORNIA

The State of California or its officers or agents shall not be responsible for the accuracy or completeness of electronic copies of this plan sheet.

To accompany plans dated May 14, 2012

LOOP INSTALLATION PROCEDURE

1. Loops shall be centered in lanes.
2. Saw slots in pavement for loop conductors as shown in details.
3. Distance between side of loop and a lead-in saw cut from adjacent detectors shall be 2'-0" minimum. Distance between lead-in saw cuts shall be 6" minimum.
4. Bottom of saw slot shall be smooth with no sharp edges.
5. Slots shall be washed until clean, blown out and thoroughly dried before installing loop conductors.
6. Adjacent loops on the same sensor unit channel shall be wound in opposite directions.
7. Identify and tag loop circuit pairs in the pull box with loop number, start (S) and finish (F) of conductor. Identify and tag lead-in-cable with sensor number and phase.
8. Install loop conductor in slot using a 3/16" to 1/4" thick wood paddle. Hold loop conductors with wood paddles (at the bottom of the sawed slot) during sealant placement.
9. No more than 2 twisted pairs shall be installed in one sawed slot.
10. Allow additional 5'-0" of slack length of conductor for the lead-in run to pull box.
11. The additional length of each conductor for each loop shall be twisted together into a pair (6 turns per 3'-4" minimum) before being placed in the slot and conduit leading to pull box.
12. Test each loop circuit for continuity, circuit resistance and insulation resistance at the pull box before filling slots.
13. Fill slots as shown in details.
14. Splice loop conductors to lead-in-cable. Splices shall be soldered.
15. End of lead-in-cable and Type 2 loop conductor shall be waterproofed prior to installing in conduit to prevent moisture from entering the cable.
16. Lead-in-cable shall not be spliced between the pull box and the controller cabinet terminals.
17. Test each loop circuit for continuity, circuit resistance and insulation resistance at the controller cabinet location.
18. Where loop conductors are not to be spliced to a lead-in-cable, the ends of the conductors shall be taped and waterproofed with electrical insulating coating.

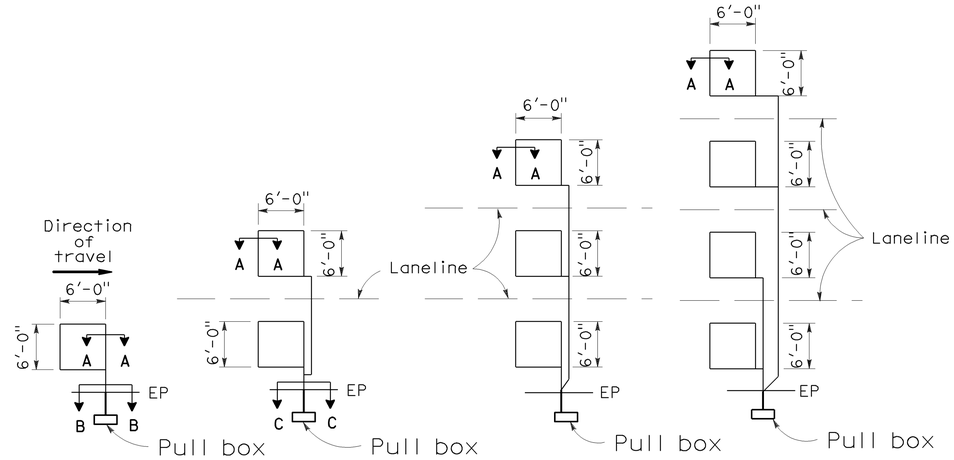

TYPE 1A INSTALLATION | TYPE 2A INSTALLATION | TYPE 3A INSTALLATION | TYPE 4A INSTALLATION

SAWCUT DETAILS

(Type A loop detector configurations illustrated)

1. 1A thru 4A = 1 Type A loop configuration in each lane.
2. 1B thru 4B = 1 Type B loop configuration in each lane.
3. 1C = 1 Type C loop configuration entering lanes as required.
4. 1D thru 4D = 1 Type D loop configuration in each lane.
5. 1E thru 4E = 1 Type E loop configuration in each lane.
6. 1Q thru 4Q = 1 Type Q loop configuration in each lane. (Use Type A, B, C, D, E or Q loop detector configurations only when specified or shown on plans)

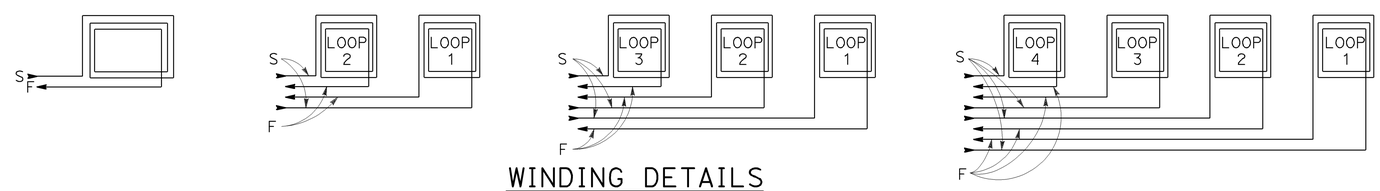

WINDING DETAILS

See Notes 6 and 7

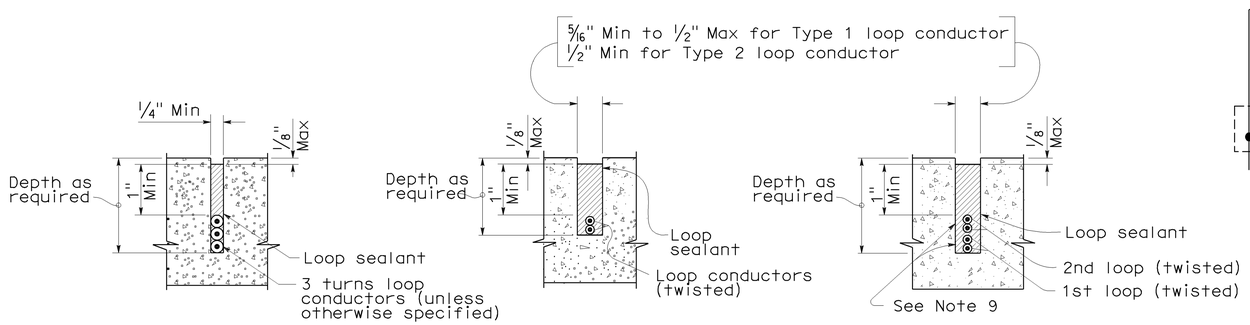

SECTION A-A | SECTION B-B | SECTION C-C

SLOT DETAILS - TYPE 1 AND TYPE 2 LOOP CONDUCTOR

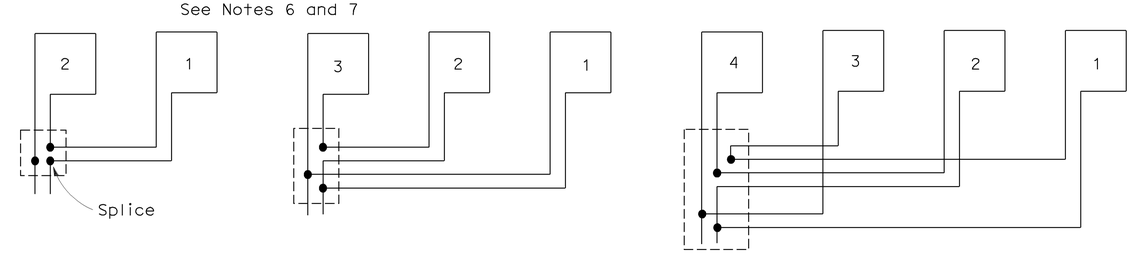

TYPICAL LOOP CONNECTIONS

(Dashed lines represent the pull box)

STATE OF CALIFORNIA
DEPARTMENT OF TRANSPORTATION

ELECTRICAL SYSTEMS (DETECTORS)

NO SCALE

RSP ES-5A DATED OCTOBER 5, 2007 SUPERCEDES STANDARD PLAN ES-5A DATED MAY 1, 2006 - PAGE 423 OF THE STANDARD PLANS BOOK DATED MAY 2006.

REVISED STANDARD PLAN RSP ES-5A

2006 REVISED STANDARD PLAN RSP ES-5A

8-17-07

DIST	COUNTY	ROUTE	POST MILES TOTAL PROJECT	SHEET No.	TOTAL SHEETS
01	Hum	101	79.9/87.8	43	49

REGISTERED CIVIL ENGINEER

January 20, 2012
PLANS APPROVAL DATE

REGISTERED PROFESSIONAL ENGINEER Cornelis M. Hakim No. C55610 Exp. 12-31-12 CIVIL STATE OF CALIFORNIA

The State of California or its officers or agents shall not be responsible for the accuracy or completeness of electronic copies of this plan sheet.

To accompany plans dated May 14, 2012

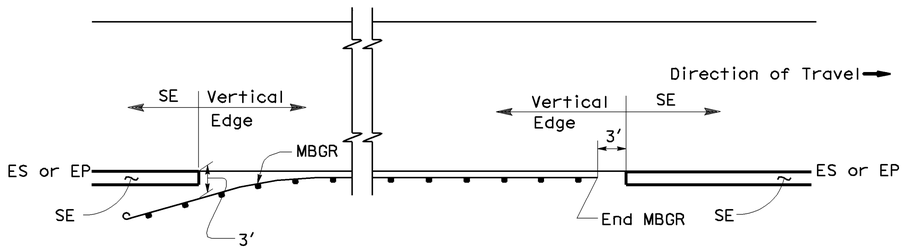

MBGR

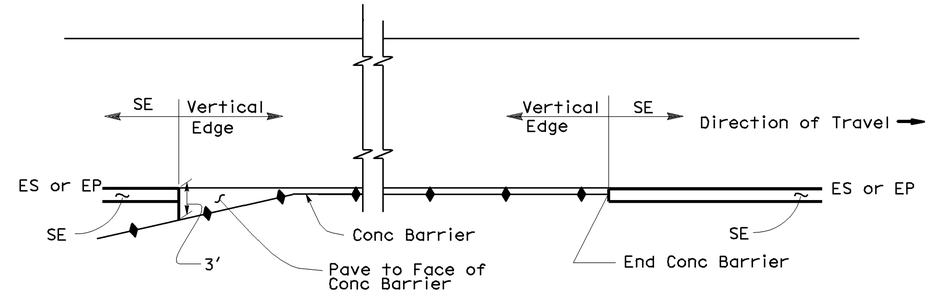

CONCRETE BARRIER

ABBREVIATIONS:

SE Safety Edge

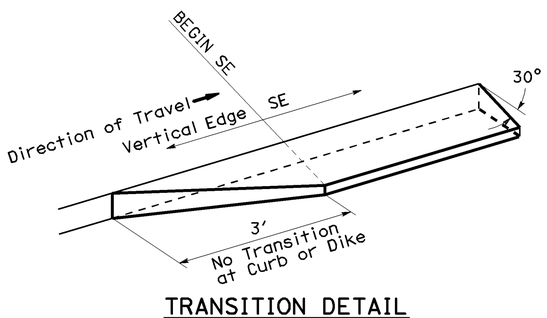

TRANSITION DETAIL FOR CONCRETE ONLY

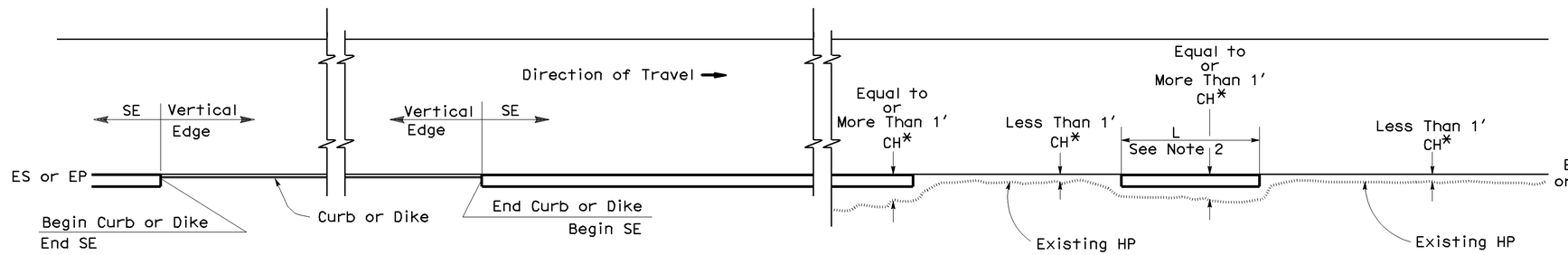

CURB OR DIKE

NARROW SIDE SLOPE

* CH = Distance from ES or EP to existing HP.

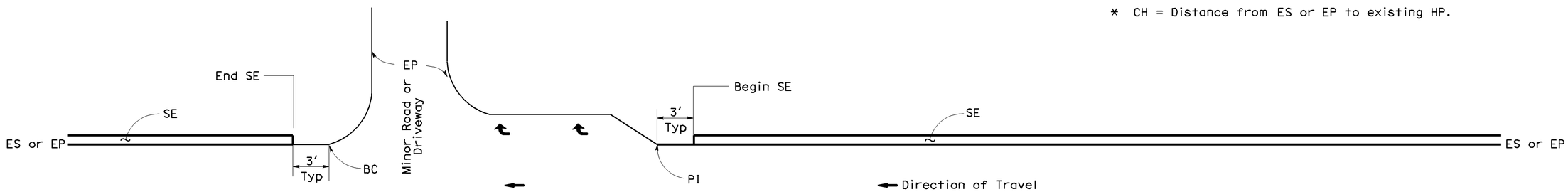

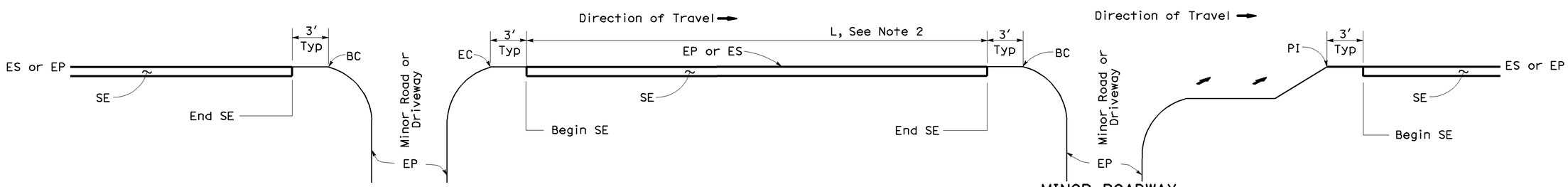

INTERSECTION

MINOR ROADWAY OR DRIVEWAY

DRIVEWAY AND INTERSECTION

STATE OF CALIFORNIA
DEPARTMENT OF TRANSPORTATION

PAVEMENT EDGE TREATMENTS

NO SCALE

NSP P74 DATED JANUARY 20, 2012 SUPPLEMENTS THE STANDARD PLANS BOOK DATED MAY 2006.

NOTES:

1. For details not shown, see New Standard Plans NSP P75 and NSP P76.
2. Safety edge is optional when L is less than 30′.

NEW STANDARD PLAN NSP P74

2006 NEW STANDARD PLAN NSP P74

01-05-12,

DIST	COUNTY	ROUTE	POST MILES TOTAL PROJECT	SHEET No.	TOTAL SHEETS
01	Hum	101	79.9/87.8	44	49

REGISTERED CIVIL ENGINEER

January 20, 2012
PLANS APPROVAL DATE

REGISTERED PROFESSIONAL ENGINEER Cornelis M. Hakim No. C55610 Exp. 12-31-12 CIVIL STATE OF CALIFORNIA

The State of California or its officers or agents shall not be responsible for the accuracy or completeness of electronic copies of this plan sheet.

To accompany plans dated May 14, 2012

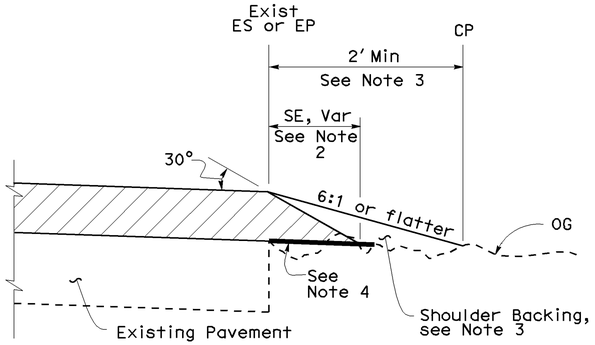

CASE A
Safety Edge

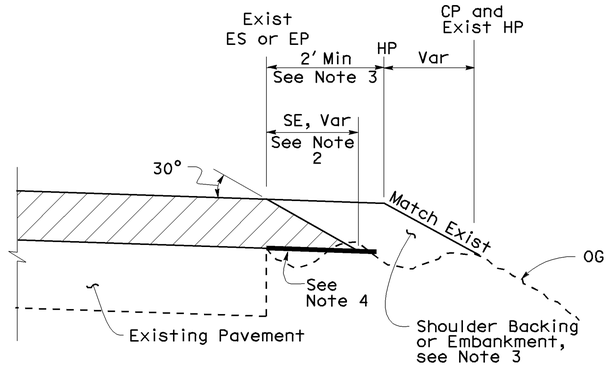

CASE B
Safety Edge

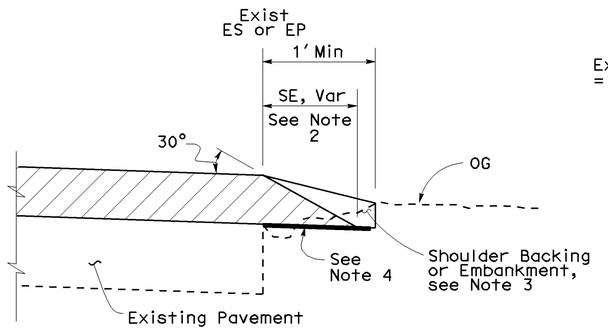

CASE C
Safety Edge

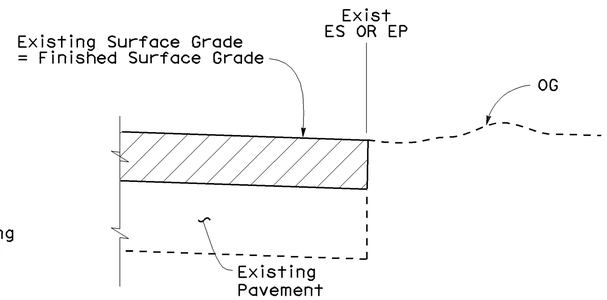

CASE D
Vertical Edge

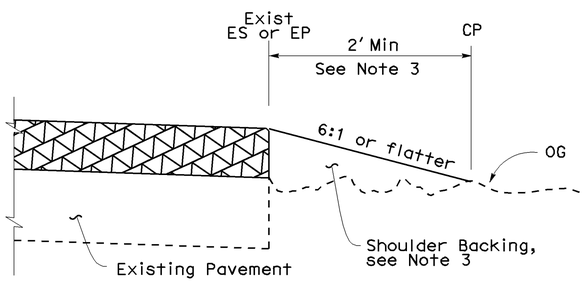

CASE E
Vertical Edge

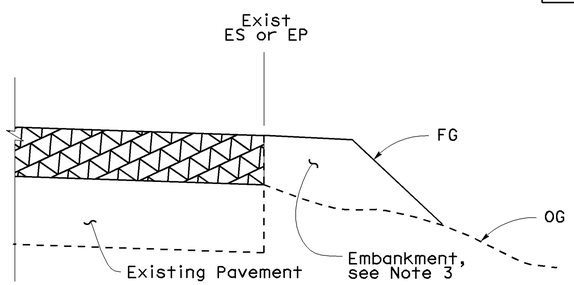

CASE F
Vertical Edge
* See Table A and New Std Plan NSP P74

LEGEND:

- HMA Overlay
- HMA or Concrete Overlay
- Concrete Overlay

ABBREVIATIONS:

SE	Safety Edge
TT	Total Thickness of SE

TABLE A
EDGE TREATMENT FOR VARIOUS OVERLAY THICKNESS AND CONDITIONS

	OVERLAY THICKNESS	
FIELD CONDITION	Less Than 0.15'	0.15' or More
Exist Slope 6:1 or Flatter	Case E	Case A
Exist Slope 3:1 to 6:1	Case E	Case B
Exist Slope Steeper Than 3:1	Case F	Case F
Cut Section (Replace, Cold Plane, Mill Pavement)	Case D	Case C

ADDITIONAL HMA OR CONCRETE QUANTITIES FOR SE/SIDE/MILE

TYPICAL CROSS SECTION	TT	TOTAL ADDITIONAL MATERIAL FOR SE/SIDE/MILE		
		HMA (TON)	CONCRETE (CY)*	CONCRETE (CY)**
TT	0.15'	NA	NA	NA
	0.20'	13.7	NA	NA
	0.30'	30.9	NA	NA
	0.40'	54.9	NA	NA
	0.45'	69.4	NA	NA
TT, 0.43'	0.50'	84.2	NA	NA
	0.60'	113.9	NA	NA
	0.70'	143.6	70.9	94.2
	0.80'	173.3	85.6	112.2
	0.90'	203.0	100.3	130.2
	1.00'	232.7	114.9	148.2
	1.10'	262.4	129.6	166.2
	1.20'	292.1	144.3	184.2

* For Detail "A"
** For Optional Detail "A"

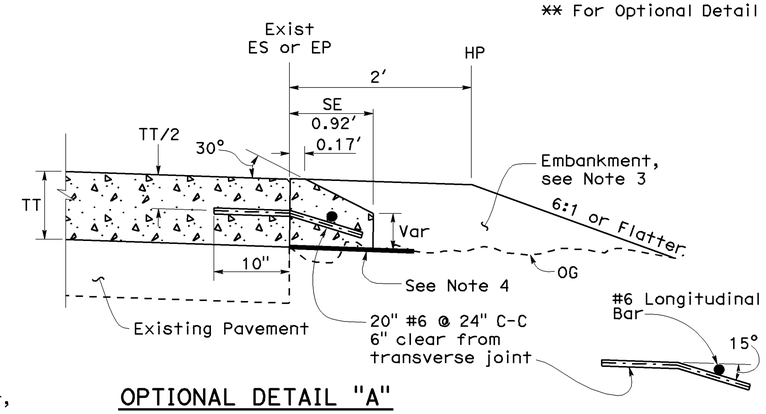

OPTIONAL DETAIL "A"
For concrete overlay
See Note 5

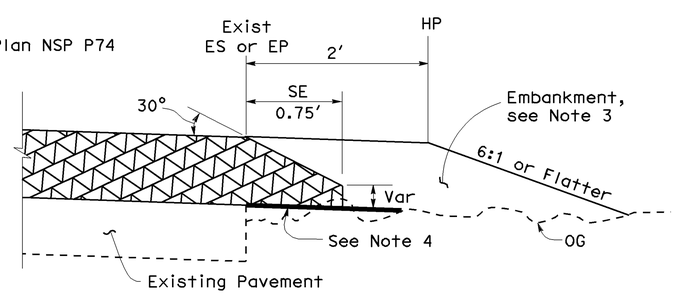

DETAIL "A"
For HMA overlay thickness more than 0.43' or concrete overlay

NOTES:

1. For limits of safety edge and vertical edge treatments, see New Standard Plan NSP P74.
2. Details shown for HMA overlay thickness less than 0.43'. See Detail "A" for HMA overlay thickness more than 0.43' or concrete overlay.
3. For locations and limits of shoulder backing or embankment see project plans.
4. Grade existing ground to place safety edge. 1' minimum width.
5. Safety edge transverse joint must match overlay transverse joint. End of #6 longitudinal bar must be 2" ±½" clear from transverse joint.
6. Safety edge is not needed in the area of MBGR, barrier, right turn lane and acceleration lane. See New Standard Plan NSP P74.

STATE OF CALIFORNIA
DEPARTMENT OF TRANSPORTATION

PAVEMENT EDGE TREATMENTS-OVERLAYS

NO SCALE

NSP P75 DATED JANUARY 20, 2012 SUPPLEMENTS THE STANDARD PLANS BOOK DATED MAY 2006.

NEW STANDARD PLAN NSP P75

2006 NEW STANDARD PLAN NSP P75

01-05-12

DIST	COUNTY	ROUTE	POST MILES TOTAL PROJECT	SHEET NO.	TOTAL SHEETS
01	Hum	101	79.9/87.8	45	49

Randell D. Hiatt
REGISTERED CIVIL ENGINEER

June 6, 2008
PLANS APPROVAL DATE

REGISTERED PROFESSIONAL ENGINEER
Randell D. Hiatt
No. C50200
Exp. 6-30-09
CIVIL
STATE OF CALIFORNIA

The State of California or its officers or agents shall not be responsible for the accuracy or completeness of electronic copies of this plan sheet.

To accompany plans dated May 14, 2012

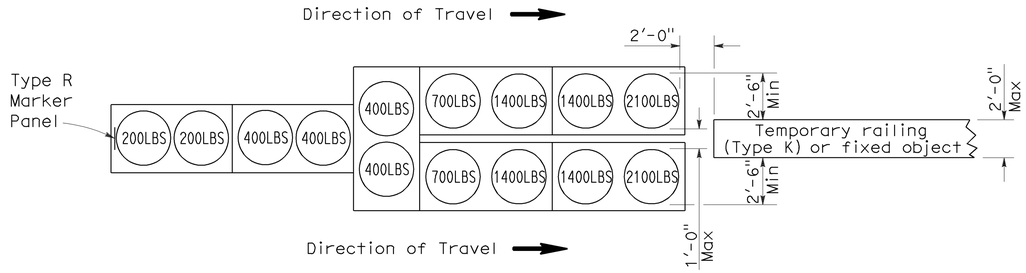

ARRAY 'TU14'

Approach speed 45 mph or more

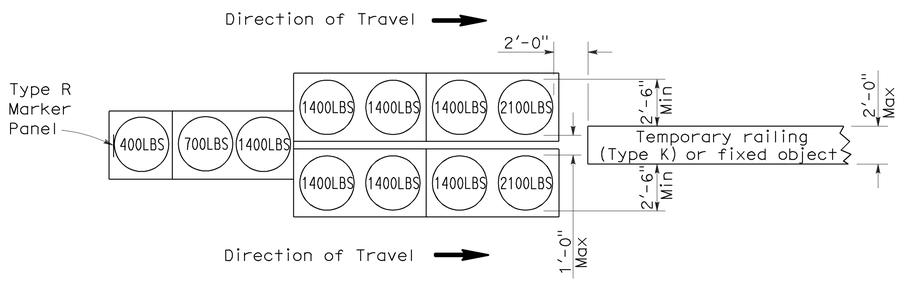

ARRAY 'TU11'

Approach speed less than 45 mph

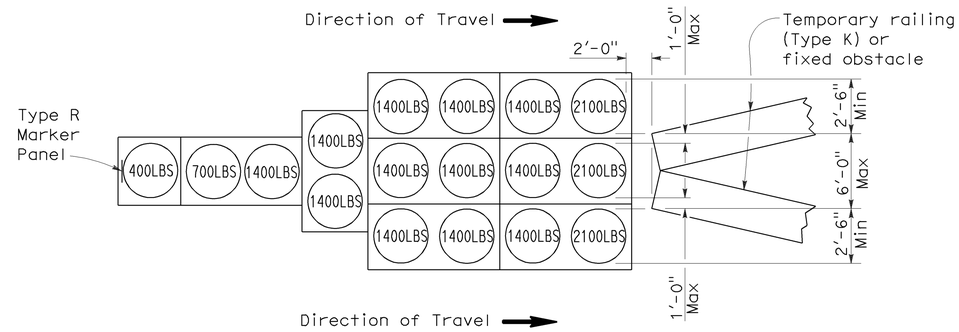

ARRAY 'TU17'

Approach speed less than 45 mph

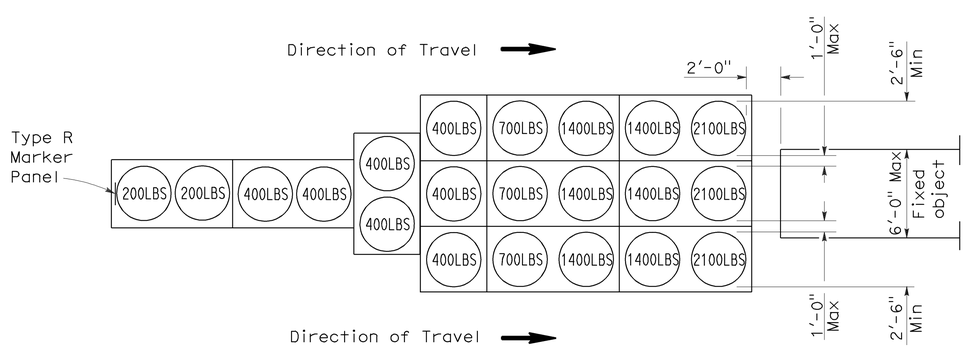

ARRAY 'TU21'

Approach speed 45 mph or more

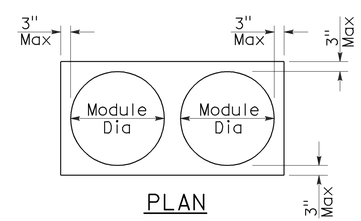

PLAN

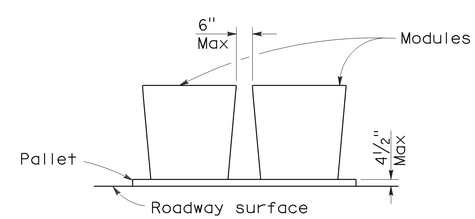

ELEVATION

CRASH CUSHION PALLET DETAIL

See Note 7

NOTES:

1. (XXX) Indicates sand filled module location and weight of sand in pounds for each module. Module spacing is based on the greater diameter of the module.
2. All sand weights are nominal.
3. Temporary crash cushion arrays shall not encroach on the traveled way.
4. Place the top of Type R marker panel 1" below the module lid.
5. Refer to Standard Plan A73B for marker details.
6. Approach speeds indicated conform to NCHRP 350 Report criteria.
7. Use of pallets is optional.

STATE OF CALIFORNIA
DEPARTMENT OF TRANSPORTATION

TEMPORARY CRASH CUSHION, SAND FILLED (UNIDIRECTIONAL)

NO SCALE

RSP T1A DATED JUNE 6, 2008 SUPERSEDES STANDARD PLAN T1A
DATED MAY 1, 2006 - PAGE 211 OF THE STANDARD PLANS BOOK DATED MAY 2006.

REVISED STANDARD PLAN RSP T1A

2006 REVISED STANDARD PLAN RSP T1A

DIST	COUNTY	ROUTE	POST MILES TOTAL PROJECT	SHEET NO.	TOTAL SHEETS
01	Hum	101	79.9/87.8	46	49

Randell D. Hiatt
REGISTERED CIVIL ENGINEER

June 6, 2008
PLANS APPROVAL DATE

REGISTERED PROFESSIONAL ENGINEER
Randell D. Hiatt
No. C50200
Exp. 6-30-09
CIVIL
STATE OF CALIFORNIA

The State of California or its officers or agents shall not be responsible for the accuracy or completeness of electronic copies of this plan sheet.

To accompany plans dated May 14, 2012

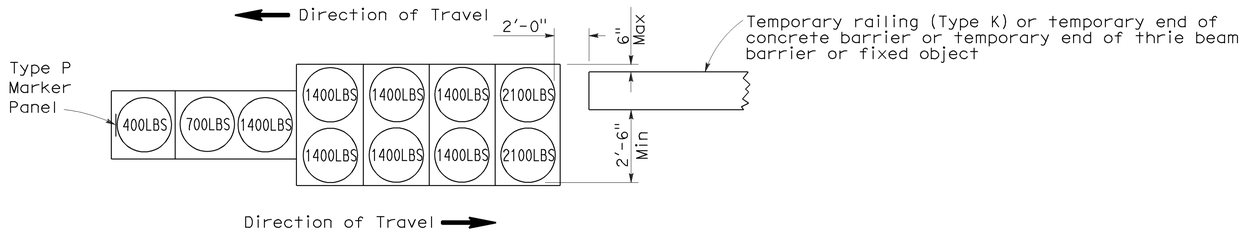

ARRAY 'TB11'

Approach speed less than 45 mph

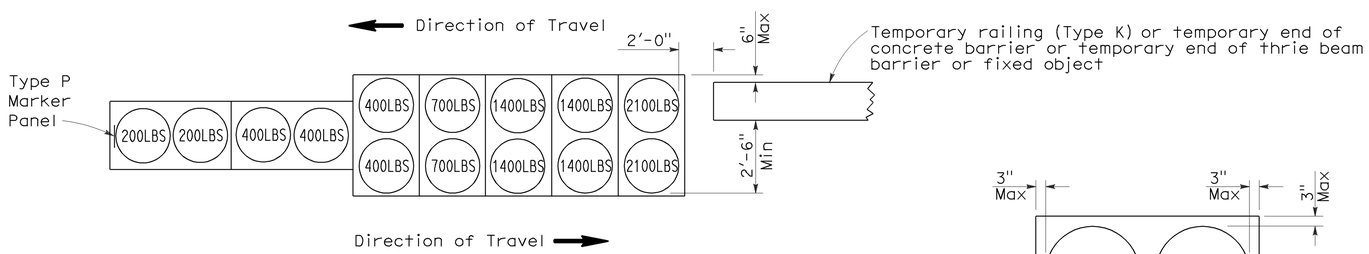

ARRAY 'TB14'

Approach speed 45 mph or more

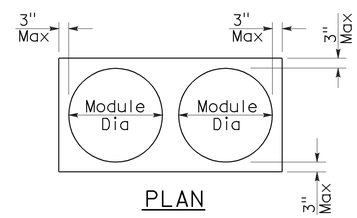

PLAN

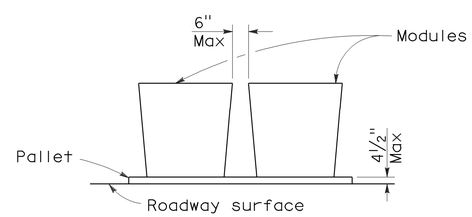

ELEVATION

CRASH CUSHION PALLET DETAIL

See Note 7

NOTES:

1. (XXX) Indicates sand filled module location and weight of sand in pounds for each module. Module spacing is based on the greater diameter of the module.
2. All sand weights are nominal.
3. Temporary crash cushion arrays shall not encroach on the traveled way.
4. Place the Type P marker panel so that the bottom of the panel rests upon the pallet.
5. Refer to Standard Plan A73B for marker details.
6. Approach speeds indicated conform to NCHRP 350 Report criteria.
7. Use of pallets is optional.

STATE OF CALIFORNIA
DEPARTMENT OF TRANSPORTATION

TEMPORARY CRASH CUSHION, SAND FILLED (BIDIRECTIONAL)

NO SCALE

RSP T1B DATED JUNE 6, 2008 SUPERSEDES STANDARD PLAN T1B
DATED MAY 1, 2006 - PAGE 212 OF THE STANDARD PLANS BOOK DATED MAY 2006.

REVISED STANDARD PLAN RSP T1B

2006 REVISED STANDARD PLAN RSP T1B

5-15-08

DIST	COUNTY	ROUTE	POST MILES TOTAL PROJECT	SHEET NO.	TOTAL SHEETS
01	Hum	101	79.9/87.8	47	49

Randell D. Hiatt
REGISTERED CIVIL ENGINEER

June 6, 2008
PLANS APPROVAL DATE

REGISTERED PROFESSIONAL ENGINEER
Randell D. Hiatt
No. C50200
Exp. 6-30-09
CIVIL
STATE OF CALIFORNIA

The State of California or its officers or agents shall not be responsible for the accuracy or completeness of electronic copies of this plan sheet.

To accompany plans dated May 14, 2012

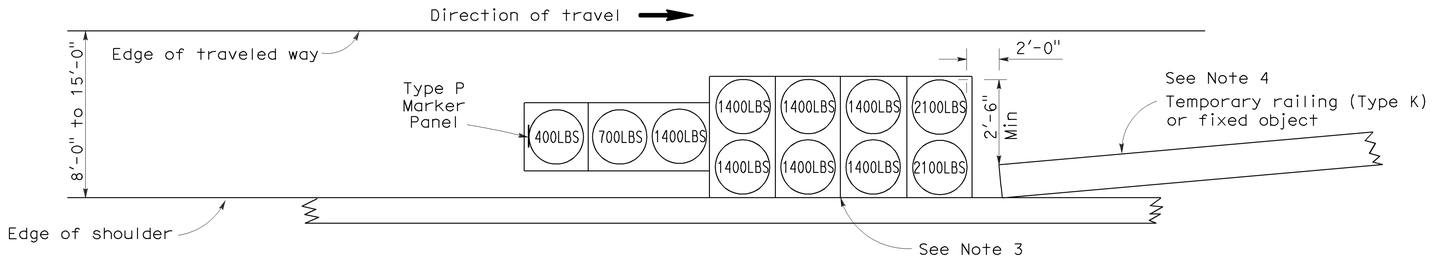

ARRAY 'TS11'

Approach speed less than 45 mph
See Note 9

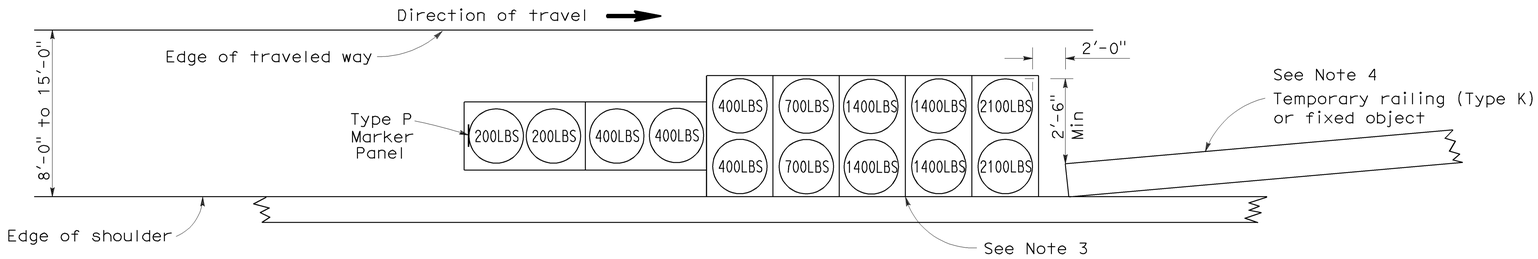

ARRAY 'TS14'

Approach speed 45 mph or more
See Note 9

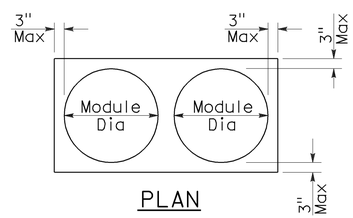

PLAN

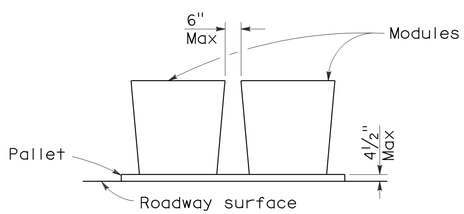

ELEVATION

CRASH CUSHION PALLET DETAIL

See Note 11

NOTES:

1. (XXX) Indicates sand filled module location and weight of sand in pounds for each module. Module spacing is based on the greater diameter of the module.
2. All sand weights are nominal.
3. The temporary crash cushion arrays shown on this plan shall be used only in locations where there will be traffic on one side of the temporary crash cushion array.
4. If the fixed object or approach end of the temporary railing is less than 15'-0" from the edge of traveled way, a temporary crash cushion is required in a construction or work zone.
5. Temporary crash cushion arrays shall not encroach on the traveled way.
6. Arrays for median shoulders shall conform to details shown on this plan for outside shoulders.
7. Place the Type P marker panel so that the bottom of the panel rests upon the pallet and faces traffic.
8. Refer to Standard Plan A73B for marker details.
9. For shoulder widths less than 8'-0", appropriate approved crash cushion protection, other than sand filled modules, shall be provided at fixed objects and at approach ends of temporary railing. The specific type of crash cushion shall be as shown on the project plans or as specified in the Special Provisions, or if not shown on the project plans or specified in the Special Provisions, shall be as approved by the Engineer.
10. Approach speeds indicated conform to NCHRP 350 Report criteria.
11. Use of pallets is optional.

STATE OF CALIFORNIA
DEPARTMENT OF TRANSPORTATION

TEMPORARY CRASH CUSHION, SAND FILLED (SHOULDER INSTALLATIONS)

NO SCALE

RSP T2 DATED JUNE 6, 2008 SUPERSEDES STANDARD PLAN T2
DATED MAY 1, 2006 - PAGE 213 OF THE STANDARD PLANS BOOK DATED MAY 2006.

REVISED STANDARD PLAN RSP T2

2006 REVISED STANDARD PLAN RSP T2

5-15-08

Dist	COUNTY	ROUTE	POST MILES TOTAL PROJECT	SHEET No.	TOTAL SHEETS
01	Hum	101	79.9/87.8	48	49

Randell D. Hiatt
REGISTERED CIVIL ENGINEER

May 20, 2011
PLANS APPROVAL DATE

REGISTERED PROFESSIONAL ENGINEER
Randell D. Hiatt
No. C50200
Exp. 6-30-11
CIVIL
STATE OF CALIFORNIA

The State of California or its officers or agents shall not be responsible for the accuracy or completeness of electronic copies of this plan sheet.

To accompany plans dated May 14, 2012

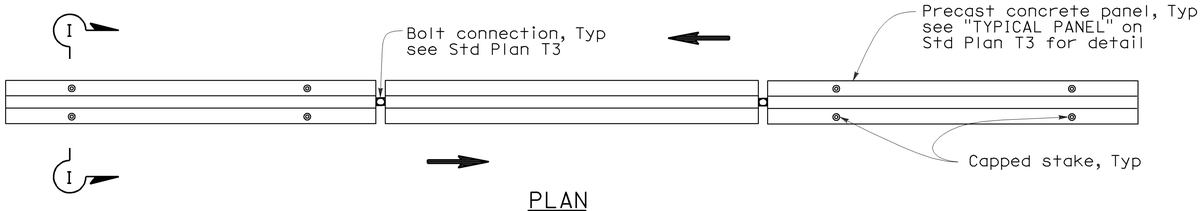

PLAN

RAILING STAKING CONFIGURATION FOR TWO-WAY TRAFFIC

See Note 1

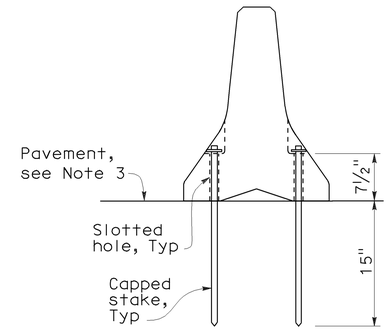

SECTION I-I

NOTES:

1. Where Type K Temporary Railing is placed as a temporary or long term barrier in two-way traffic on highways with less than 24" from the edge of traveled way, use four capped stakes per every other panel with end panels staked.
2. Where Type K Temporary Railing is placed 3" to 24" from the edge of an excavation on highways, use two capped stakes per panel along the traffic side.
3. Staked Type K Temporary Railing must be supported by at least 4" thick concrete, hot mix asphalt or existing asphalt concrete pavement.
4. The minimum yield strength for the washer must be 60,000 psi.
5. Direction of adjacent traffic indicated by ⟹.

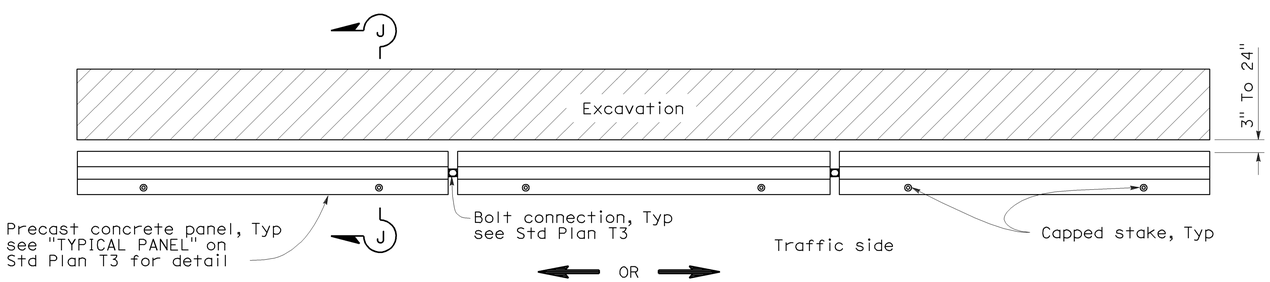

PLAN

RAILING STAKING CONFIGURATION ADJACENT TO AN EXCAVATION

See Note 2

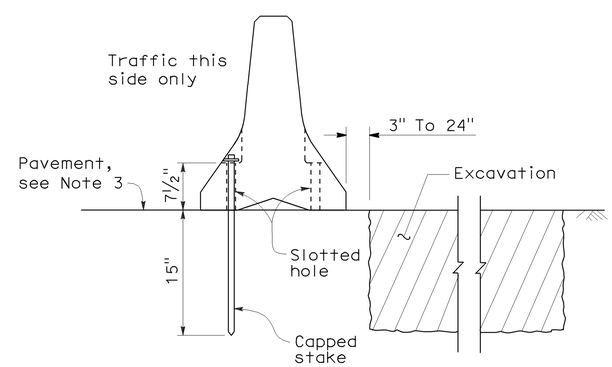

SECTION J-J

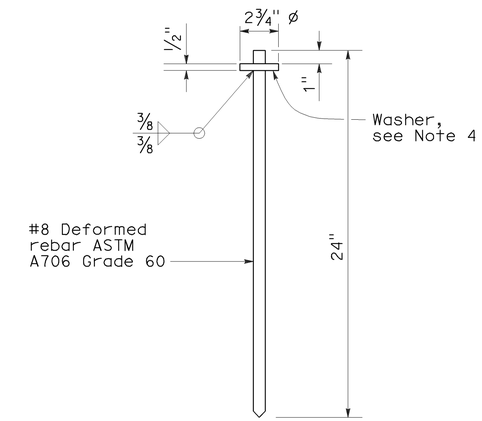

CAPPED STAKE DETAIL

STATE OF CALIFORNIA
DEPARTMENT OF TRANSPORTATION

TEMPORARY RAILING (TYPE K)

NO SCALE

NSP T3A DATED MAY 20, 2011 SUPPLEMENTS
THE STANDARD PLANS BOOK DATED MAY 2006.

NEW STANDARD PLAN NSP T3A

2006 NEW STANDARD PLAN NSP T3A

DIST	COUNTY	ROUTE	POST MILES TOTAL PROJECT	SHEET NO.	TOTAL SHEETS
01	Hum	101	79.9/87.8	49	49

Greg W. Edwards
REGISTERED CIVIL ENGINEER

November 17, 2006
PLANS APPROVAL DATE

REGISTERED PROFESSIONAL ENGINEER
Greg W. Edwards
No. C36386
Exp. 6-30-08
CIVIL
STATE OF CALIFORNIA

The State of California or its officers or agents shall not be responsible for the accuracy or completeness of electronic copies of this plan sheet.

To accompany plans dated May 14, 2012

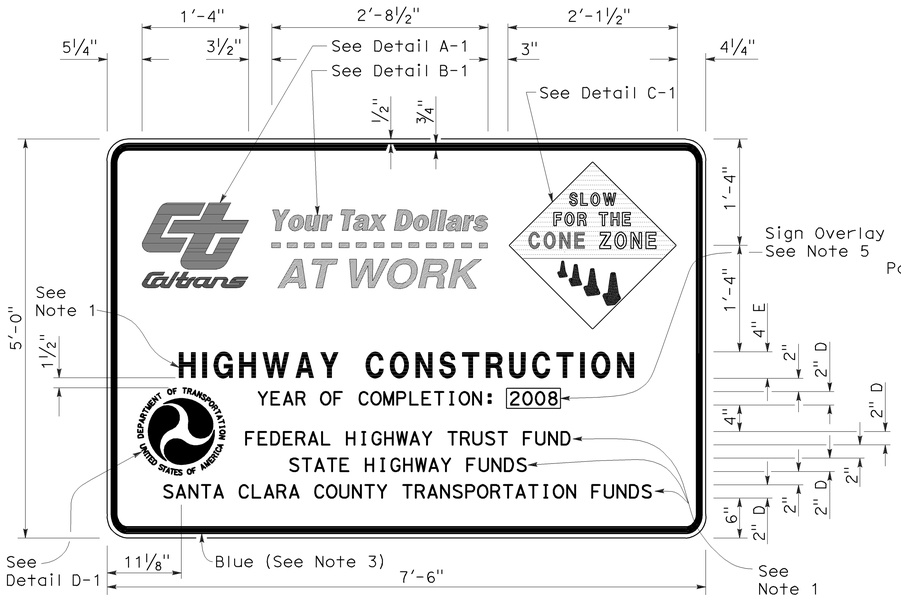

TYPE 1

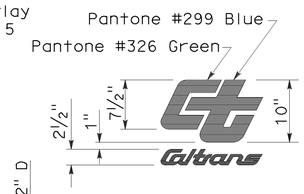

DETAIL A-1

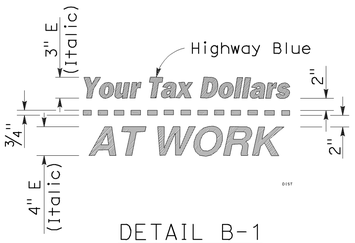

DETAIL B-1
(See Note 3)

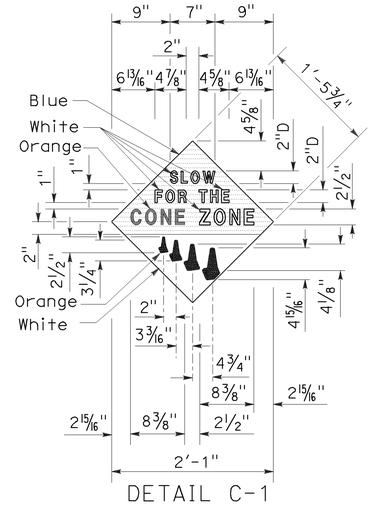

DETAIL C-1
(See Note 4)

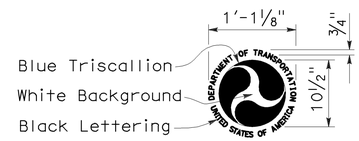

DETAIL D-1
(See Note 6)

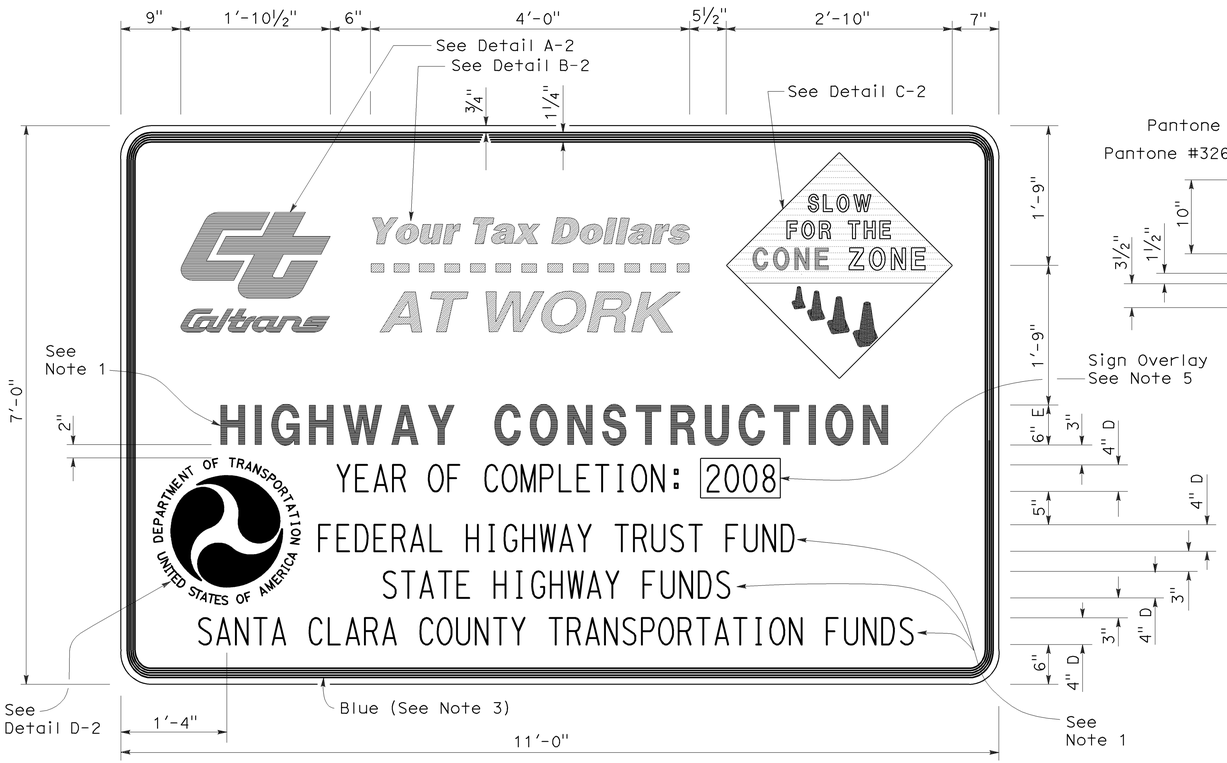

TYPE 2

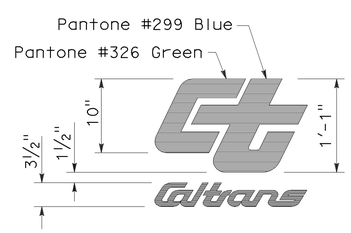

DETAIL A-2

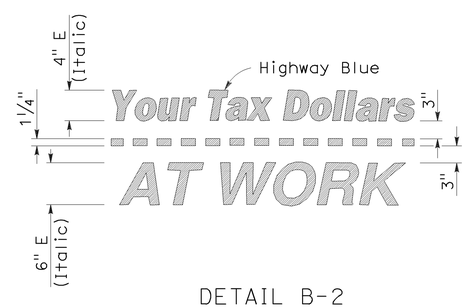

DETAIL B-2
(See Note 3)

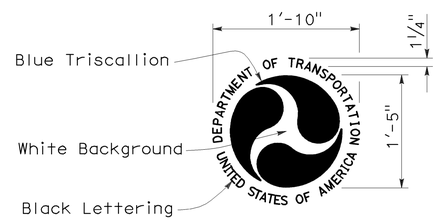

DETAIL D-2
(See Note 6)

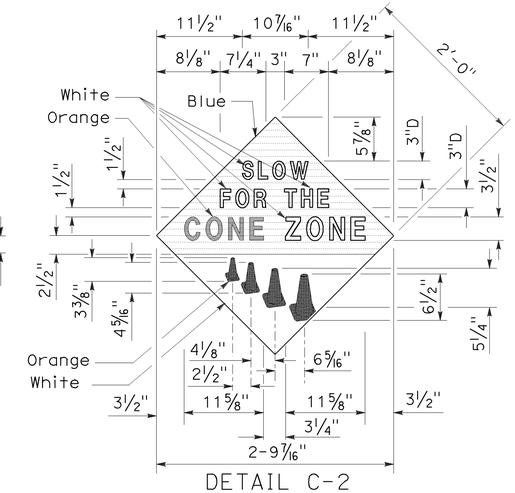

DETAIL C-2
(See Note 4)

NOTES:

1. The sign messages shown for type of project and fund types are examples only. See the Special Provisions for the applicable type of project and fund type messages to be used.
2. Except as otherwise shown, the legend of sign shall be black on a white background (non-reflective).
3. The border of the signs and details "B-1" and "B-2" shall be blue (non-reflective).
4. The diamond in details "C-1" and "C-2" shall be blue for the background of message, " SLOW FOR THE CONE ZONE", and white background for the orange cones. The color and type of font for the "SLOW FOR THE CONE ZONE" message shall be: "SLOW" white D; "FOR THE" white D; "CONE" orange Arial font; "ZONE" white Arial font.
5. Year of completion of project construction shown on the overlay is an example only. See the Special Provisions.
6. Use when the Project involves Federal Highway Trust Fund.

STATE OF CALIFORNIA
DEPARTMENT OF TRANSPORTATION

CONSTRUCTION PROJECT FUNDING IDENTIFICATION SIGNS

NO SCALE

RSP T7 DATED NOVEMBER 17, 2006 SUPERSEDES STANDARD PLAN T7
DATED MAY 1, 2006 - PAGE 217 OF THE STANDARD PLANS BOOK DATED MAY 2006.

REVISED STANDARD PLAN RSP T7

2006 REVISED STANDARD PLAN RSP T7

9-7-06