DIST.	COUNTY	ROUTE	KILOMETER POST TOTAL PROJECT	SHEET NO.	TOTAL SHEETS
01	Men	101	R69.4/R78.9	701	939

Caltrans Metri

9-15-11
REGISTERED ENGINEER - CIVIL

1-23-12
PLANS APPROVAL DATE

REGISTERED PROFESSIONAL ENGINEER M. Friedheim No. 57968 Exp. 6-30-12 CIVIL STATE OF CALIFORNIA

The State of California or its officers or agents shall not be responsible for the accuracy or completeness of electronic copies of this plan sheet.

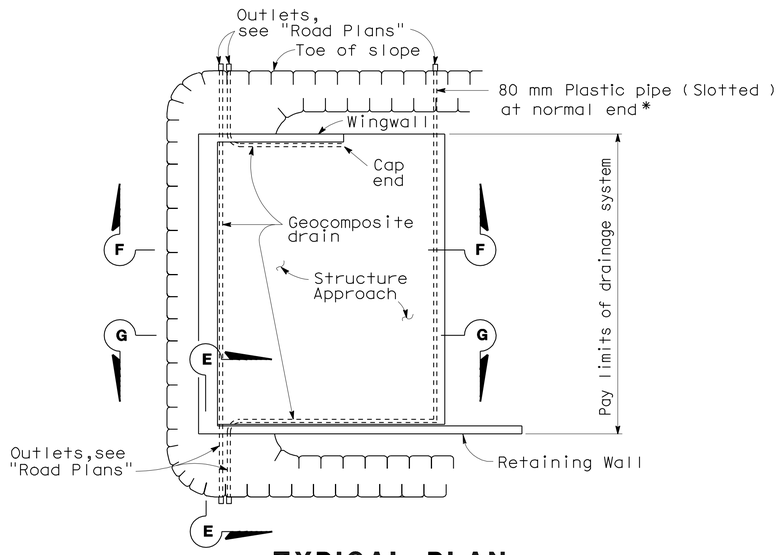

TYPICAL PLAN

*For pipe layout at staggered end,see "Detail B".

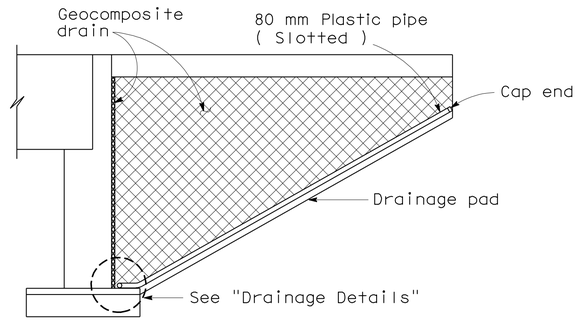

CANTILEVER WINGWALL
SECTION F-F

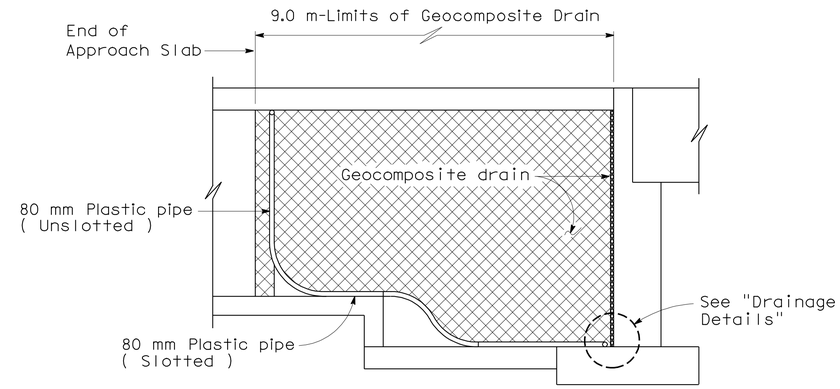

RETAINING WALL WINGWALL
SECTION G-G

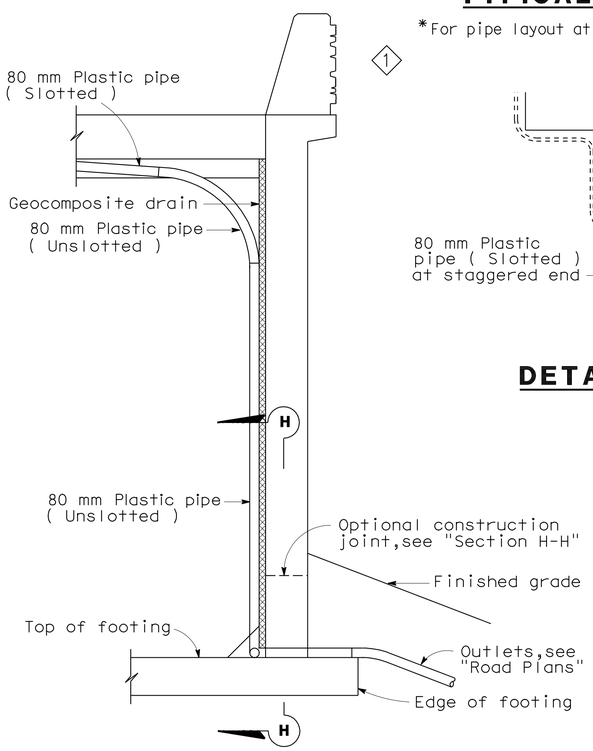

SECTION E-E

NOTE: Bends and junctions in 80 mm plastic pipe are 750 mm radius min.

1

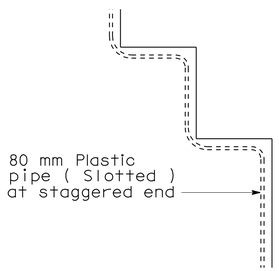

DETAIL B

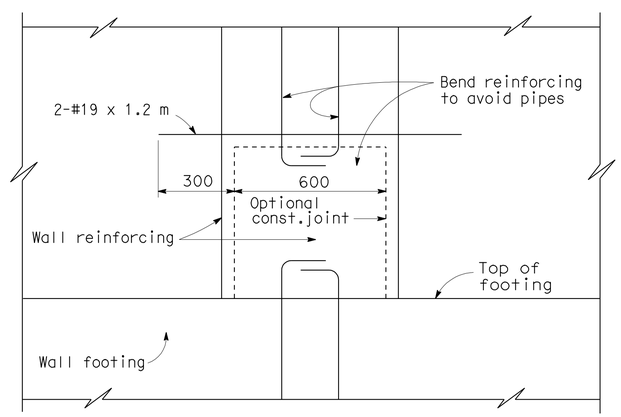

SECTION H-H

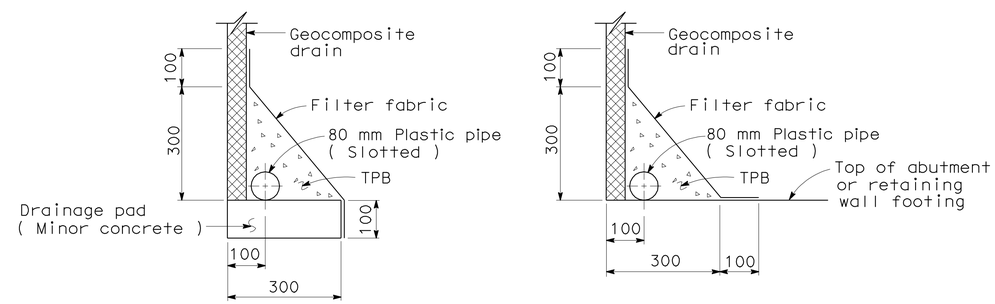

WITHOUT FOOTING **WITH FOOTING**

DRAINAGE DETAILS

SPECIAL DETAILS
NO SCALE
ALL DIMENSIONS ARE IN MILLIMETERS UNLESS OTHERWISE SHOWN

WILLITS BYPASS
HAEHL CREEK
STRUCTURE APPROACH DRAINAGE DETAILS

STANDARD DRAWING

RELEASE DATE	REVISED	DESIGN	BY M. TRAFFALIS	CHECKED E. THORKILDSEN	RELEASED BY
FILE NO.	xs3-110	DETAILS	BY R. YEE	CHECKED E. THORKILDSEN	OFFICE CHIEF
		SUBMITTED	BY M. HA	DRAWING DATE 4/98	

1 Modified barrier

STATE OF CALIFORNIA
DEPARTMENT OF TRANSPORTATION

DIVISION OF ENGINEERING SERVICES
STRUCTURE DESIGN
DESIGN BRANCH 2

BRIDGE NO. 10-0129RL
KILOMETER POST R70.578

CU 01
EA 262001

DISREGARD PRINTS BEARING EARLIER REVISION DATES
REVISION DATES (PRELIMINARY STAGE ONLY) 11-24-04 1-24-07 1-24-09

SHEET 21 OF 26

DS OSD 2147A (METRIC) (REV. 2/25/97)

ORIGINAL SCALE IN MILLIMETERS FOR REDUCED PLANS 0 10 20 30 40 50 60 70 80 90 100

USERNAME => s114640

10-0129rl_dmxs3-110.dgn

DATE PLOTTED => 28-JAN-2012 TIME PLOTTED => 07:37

DIST.	COUNTY	ROUTE	KILOMETER POST TOTAL PROJECT	SHEET NO.	TOTAL SHEETS
01	Men	101	R69.4/R78.9	702	939

Caltrans Metric

REGISTERED ENGINEER - CIVIL 9-15-11

1-23-12
PLANS APPROVAL DATE

REGISTERED PROFESSIONAL ENGINEER M. Friedheim No. 57968 Exp. 6-30-12 CIVIL STATE OF CALIFORNIA

The State of California or its officers or agents shall not be responsible for the accuracy or completeness of electronic copies of this plan sheet.

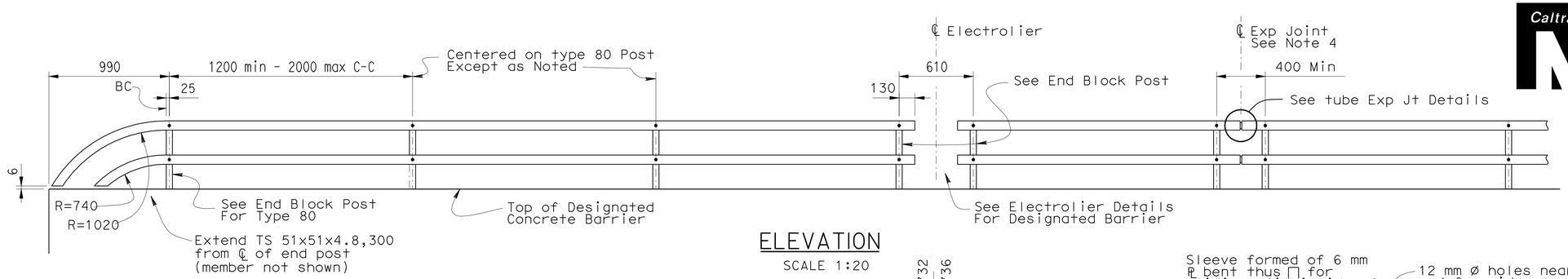

ELEVATION
SCALE 1:20

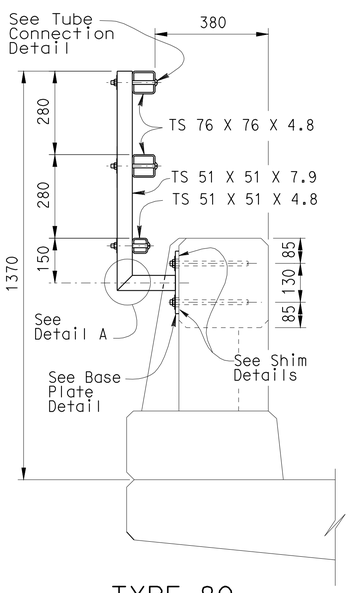

TYPE 80
END BLOCK POST
SCALE 1:10

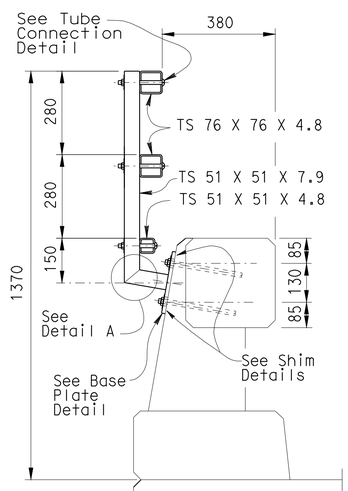

TYPE 80
SCALE 1:10

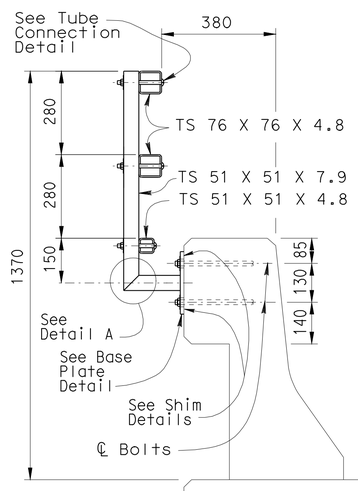

TYPE 25
SCALE 1:10

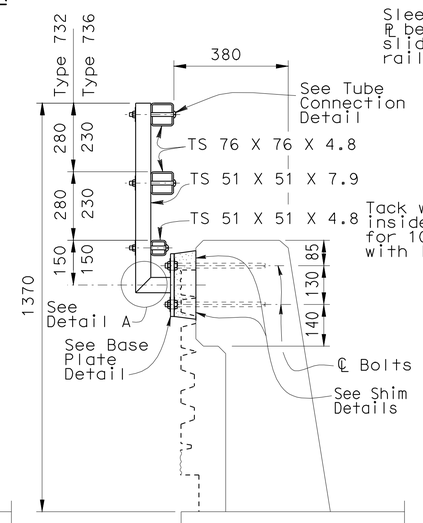

TYPE 732 OR 736 ◇1
NO SCALE

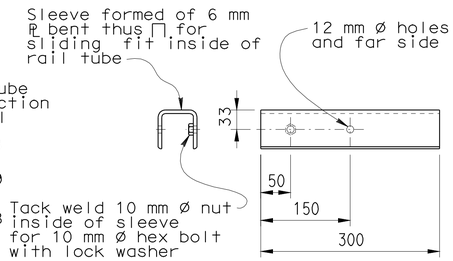

SLEEVE DETAIL
SCALE 1:5

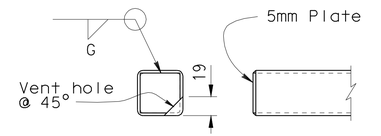

RAIL CAP DETAIL
SCALE 1:5

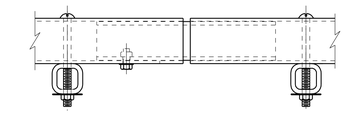

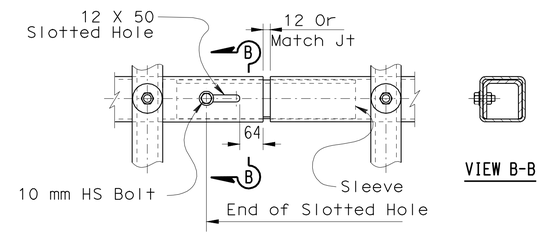

TUBE EXPANSION JOINT DETAILS
SCALE 1:5

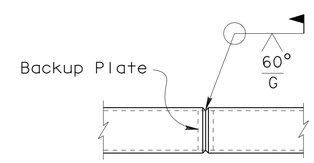

WELDED SPLICE DETAIL
SCALE 1:5

NOTES:

1. Galvanize rail assembly after fabrication.
2. Post shall be normal to railing.
3. Rail tubes shall be shop bent or fabricated to fit horizontal curve when radius is less than 300 m.
4. Tube splices shall be located in the tubes spanning deck or wall joints. Increase joint width in tubes to match expansion joint width and increase sleeve length correspondingly.
5. Top rail tube shall be continuous over not less than two posts except a short post spacing is permitted near deck or wall joints, electroliers, or other rail discontinuities as noted.
6. For details and reinforcement not shown see Standard Plans.
7. See project plans for limits of tubular bicycle railing.
8. CIP threaded rods may alternatively be installed using a drill and bond method with epoxy cartridges after forming and pouring barrier concrete. Plates to be placed against level surface.

SPECIAL DETAILS

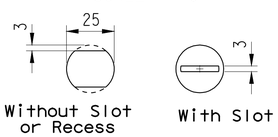

VIEW C-C
SCALE 1:1

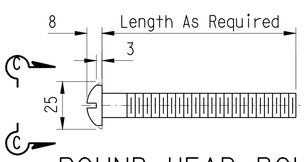

ROUND HEAD BOLT DETAIL
SCALE 1:1

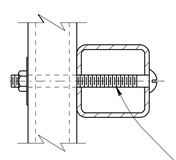

25 mm Ø Round Head Bolt w/Nut, & 50mm Ø Plate Washer, See Round Bolt Head Detail

TUBE CONNECTION DETAIL
SCALE 1:2.5

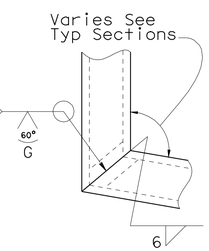

DETAIL A
SCALE 1:2.5

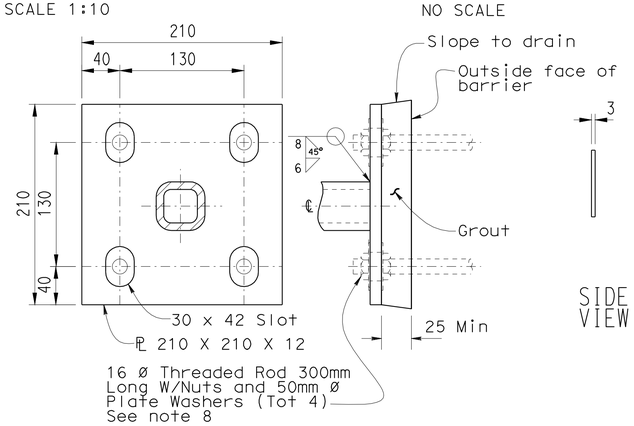

BASE PLATE DETAIL ◇2
SCALE 1:2.5

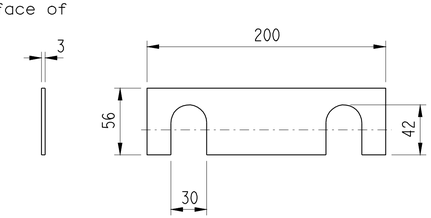

SHIM DETAILS
NO SCALE

RELEASE DATE	REVISED	DESIGN	BY TILLAT SATTER	CHECKED NEELIMA PATIL	RELEASED BY
FILE NO.	XS16-500	DETAILS	BY H.NGUYEN	CHECKED TILLAT SATTER	OFFICE CHIEF
		SUBMITTED	BY	DRAWING DATE 08/06	

◇1 Barrier modified
◇2 Plate details modified

STATE OF CALIFORNIA
DEPARTMENT OF TRANSPORTATION

DIVISION OF ENGINEERING SERVICES

BRIDGE NO. 10-0129RL
KILOMETER POST R70.578

WILLITS BYPASS
HAEHL CREEK
TUBULAR BICYCLE RAILING

DS OSD 2I39M (METRIC) (REV. 3/5/97)

ORIGINAL SCALE IN MILLIMETERS FOR REDUCED PLANS 0 10 20 30 40 50 60 70 80 90 100

CU 01
EA 262001

DISREGARD PRINTS BEARING EARLIER REVISION DATES

REVISION DATES (PRELIMINARY STAGE ONLY) 01-24-09 01-26-09 06-29-09

SHEET 22 OF 26

USERNAME => s114640 DATE PLOTTED => 28-JAN-2012 TIME PLOTTED => 07:37

USERNAME => s114640

FILE => 10-0129rl_dntubbicrail.dgn

VI=I

DIST	COUNTY	ROUTE	KILOMETER POST TOTAL PROJECT	SHEET No	TOTAL SHEETS
01	Men	101	R69.4/R78.9	703	939

REGISTERED CIVIL ENGINEER 5-19-09

1-23-12
PLANS APPROVAL DATE

REGISTERED GEOLOGIST — Reid Buell No. 1481 Exp. 4-30-11 — CERTIFIED ENGINEERING GEOLOGIST — STATE OF CALIFORNIA

The State of California or its officers or agents shall not be responsible for the accuracy or completeness of electronic copies of this plan sheet.

BENCH MARK

SURVEY CONTROL

26200-58

Fnd ALCAR @ C-1 106+8X3RT
1.644 m Rt ℄ PROPOSED "A" LINE Rte 101
Sta. 106+80.145
N 690615.313
E 1885757.840
Elev = 449.679

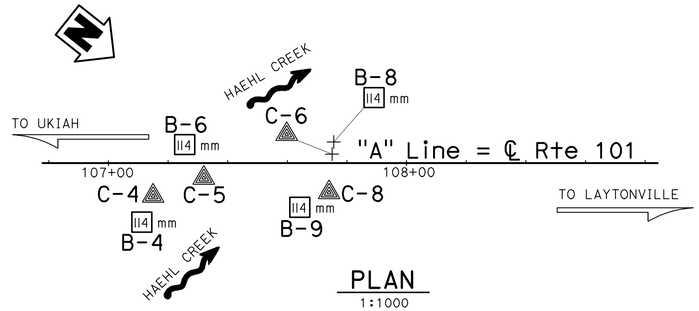

PLAN
1:1000

Notes:

1. Standard Penetration Tests (SPT) performed in Borings B-4 were advanced using a 63.5 kg CME Automatic Hammer.
2. Standard Penetration Tests (SPT) performed in Borings B-6. B-8, and B-9 were advanced using a 63.5 kg Safety Hammer.
3. E= Blow count for 0.3 m penetration extrapolated from blow count for less than 0.3 m (due to change in material or hard driving).
4. Ground water surface Elevations are subject to seasonal fluctuations and may occur at higher or lower Elevations depending on conditions at time of construction.
5. pp= Unconfined compressive strength determined in the field by "Pocket Penetrometer." Units shown are kilopascals (kPa).
6. Consistency descriptors shown on the LOTB sheets are based on the pocket penetrometer readings.

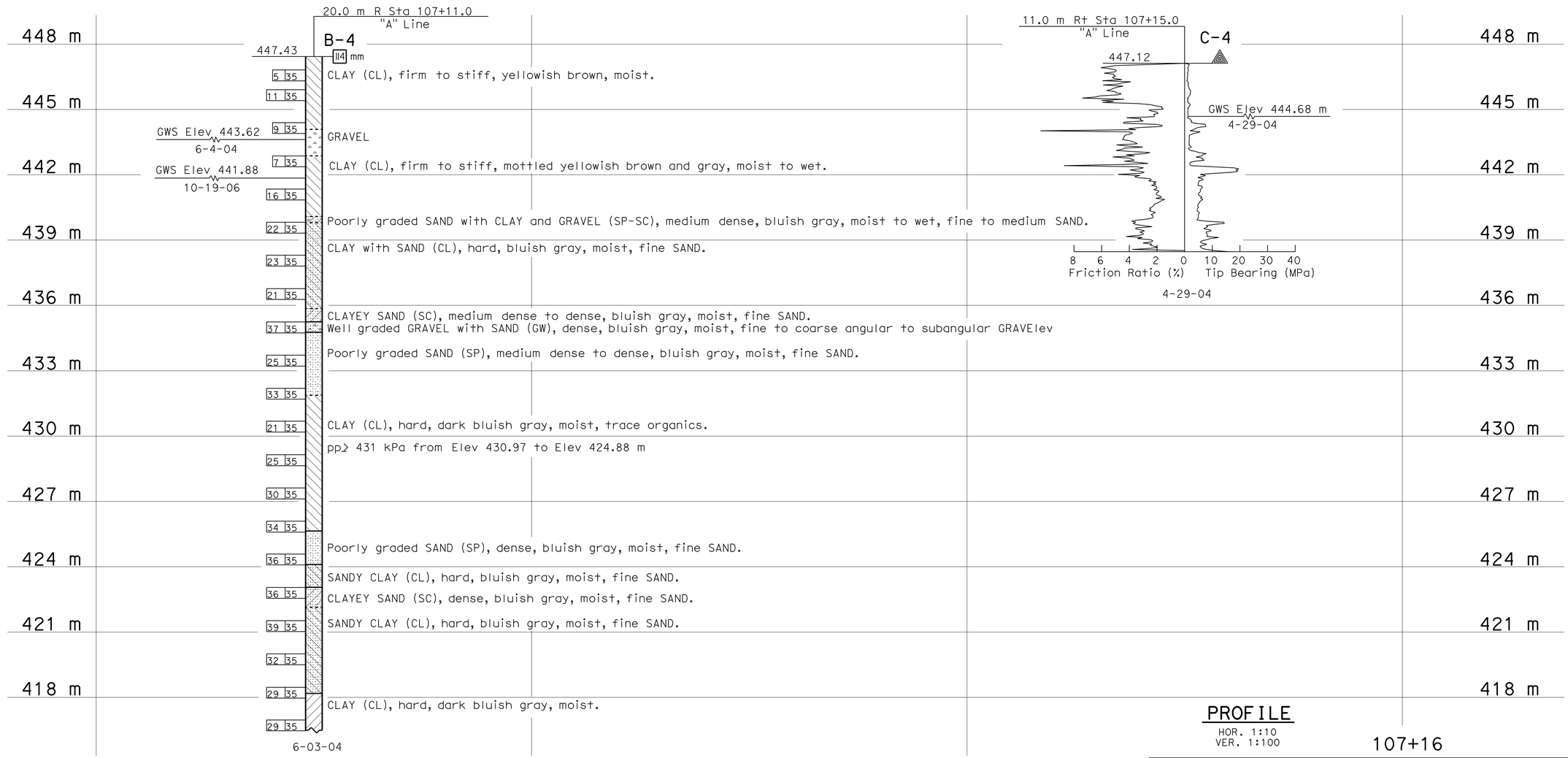

PROFILE
HOR. 1:10
VER. 1:100

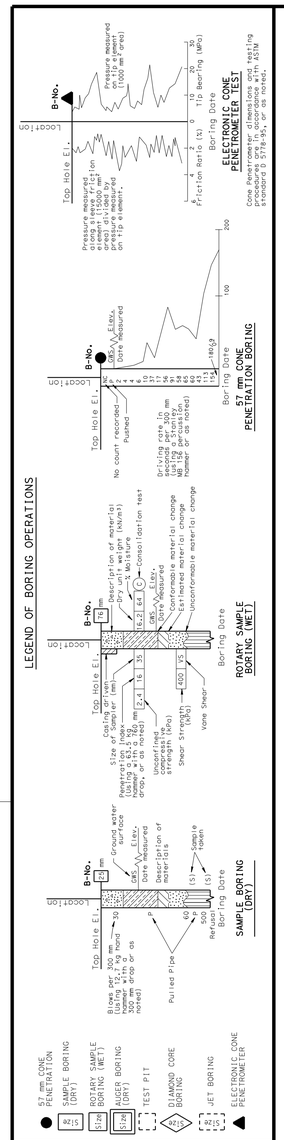

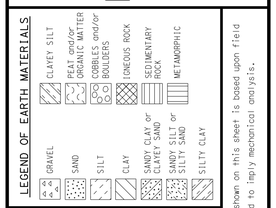

CONSISTENCY CLASSIFICATION FOR SOILS

According to the Standard Penetration Test

SPT N-Value (Blows/0.3m)	Granular	SPT N-Value (Blows/0.3m)	Cohesive
0-4	Very Loose	<2	Very Soft
5-10	Loose	2-4	Soft
11-30	Medium Dense	5-8	Firm
31-50	Dense	9-15	Stiff
>50	Very Dense	16-30	Very stiff
		>30	Hard

NOTE: Classification of earth material as shown on this sheet is based upon field inspection and is not to be construed to imply mechanical analysis.

OGS CIVIL LOG OF TEST BORINGS SHEET (METRIC) (REV. 4/04)

Caltrans Metric

ENGINEERING SERVICES	GEOTECHNICAL SERVICES
DRAWN BY	F. Nguyen 12/08
CHECKED BY	

FIELD INVESTIGATION BY: T. Alderman

STATE OF CALIFORNIA DEPARTMENT OF TRANSPORTATION

DIVISION OF ENGINEERING SERVICES STRUCTURE DESIGN — DESIGN BRANCH 2

BRIDGE NO. 10-0129RL
KILOMETER POST R70.578

WILLITS BYPASS
HAEHL CREEK
LOG OF TEST BORINGS 1 OF 4

ALL DIMENSIONS ARE IN METERS UNLESS OTHERWISE SHOWN

ORIGINAL SCALE IN MILLIMETERS FOR REDUCED PLANS 0 10 20 30 40 50 60 70 80 90 100

CU 01
EA 262001

DISREGARD PRINTS BEARING EARLIER REVISION DATES

REVISION DATES (PRELIMINARY STAGE ONLY) 04-23-09 05-14-09 05-19-09

SHEET 23 OF 26

FILE => 10-0129rl_dolotb01.dgn

USERNAME => s114640 DATE PLOTTED => 28-JAN-2012 TIME PLOTTED => 07:37

DIST	COUNTY	ROUTE	KILOMETER POST TOTAL PROJECT	SHEET No	TOTAL SHEETS
01	Men	101	R69.4/R78.9	704	939

REGISTERED CIVIL ENGINEER 5-19-09

1-23-12
PLANS APPROVAL DATE

REGISTERED GEOLOGIST
Reid Buell
No. 1481
Exp. 4-30-11
CERTIFIED ENGINEERING GEOLOGIST
STATE OF CALIFORNIA

The State of California or its officers or agents shall not be responsible for the accuracy or completeness of electronic copies of this plan sheet.

FOR PLAN VIEW, SEE
"LOG OF TEST BORINGS" 1 OF 4

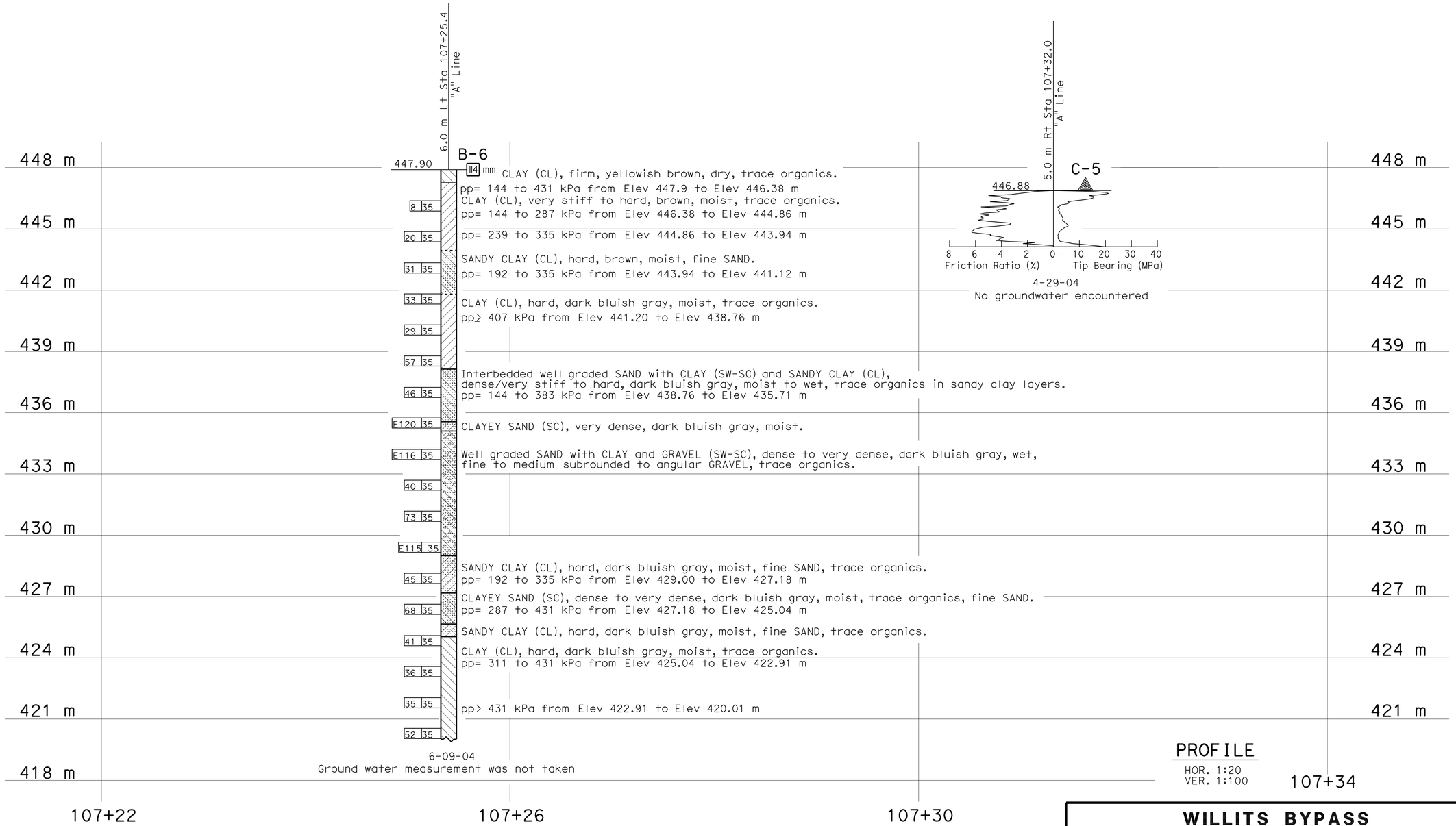

PROFILE
HOR. 1:20
VER. 1:100

LEGEND OF BORING OPERATIONS

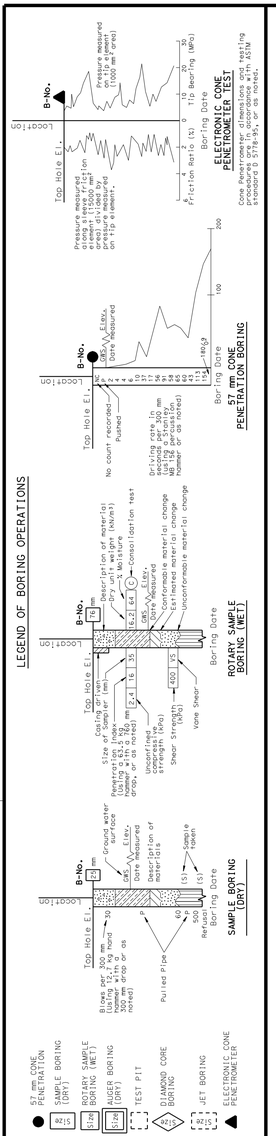

LEGEND OF EARTH MATERIALS

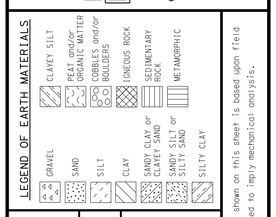

CONSISTENCY CLASSIFICATION FOR SOILS

According to the Standard Penetration Test

SPT N-Value (Blows/ 0.3m)	Granular	SPT N-Value (Blows/ 0.3m)	Cohesive
0-4	Very Loose	<2	Very Soft
5-10	Loose	2-4	Soft
11-30	Medium Dense	5-8	Firm
31-50	Dense	9-15	Stiff
>50	Very Dense	16-30	Very stiff
		>30	Hard

NOTE: Classification of earth material as shown on this sheet is based upon field inspection and is not to be construed to imply mechanical analysis.

OGS CIVIL LOG OF TEST BORINGS SHEET (METRIC) (REV. 4/04)

Caltrans Metric

ENGINEERING SERVICES	GEOTECHNICAL SERVICES
DRAWN BY	F. Nguyen 12/08
CHECKED BY	

FIELD INVESTIGATION BY: T. Alderman

STATE OF CALIFORNIA
DEPARTMENT OF TRANSPORTATION

DIVISION OF ENGINEERING SERVICES
STRUCTURE DESIGN
DESIGN BRANCH 2

BRIDGE NO. 10-0129RL
KILOMETER POST R70.578

WILLITS BYPASS
HAEHL CREEK
LOG OF TEST BORINGS 2 OF 4

ALL DIMENSIONS ARE IN METERS UNLESS OTHERWISE SHOWN

ORIGINAL SCALE IN MILLIMETERS FOR REDUCED PLANS 0 10 20 30 40 50 60 70 80 90 100

CU 01
EA 262001

DISREGARD PRINTS BEARING EARLIER REVISION DATES

REVISION DATES (PRELIMINARY STAGE ONLY) 04-28-09 05-11-09 05-19-09

SHEET 24 OF 26

FILE => 10-0129rl_dolotb02.dgn

USERNAME => s114640 DATE PLOTTED => 28-JAN-2012 TIME PLOTTED => 07:37

DIST	COUNTY	ROUTE	KILOMETER POST TOTAL PROJECT	SHEET No	TOTAL SHEETS
01	Men	101	R69.4/R78.9	705	939

REGISTERED CIVIL ENGINEER 5-19-09

1-23-12
PLANS APPROVAL DATE

REGISTERED GEOLOGIST
Reid Buell
No. 1481
Exp. 4-30-11
CERTIFIED ENGINEERING GEOLOGIST
STATE OF CALIFORNIA

The State of California or its officers or agents shall not be responsible for the accuracy or completeness of electronic copies of this plan sheet.

FOR PLAN VIEW, SEE
"LOG OF TEST BORINGS" 1 OF 4

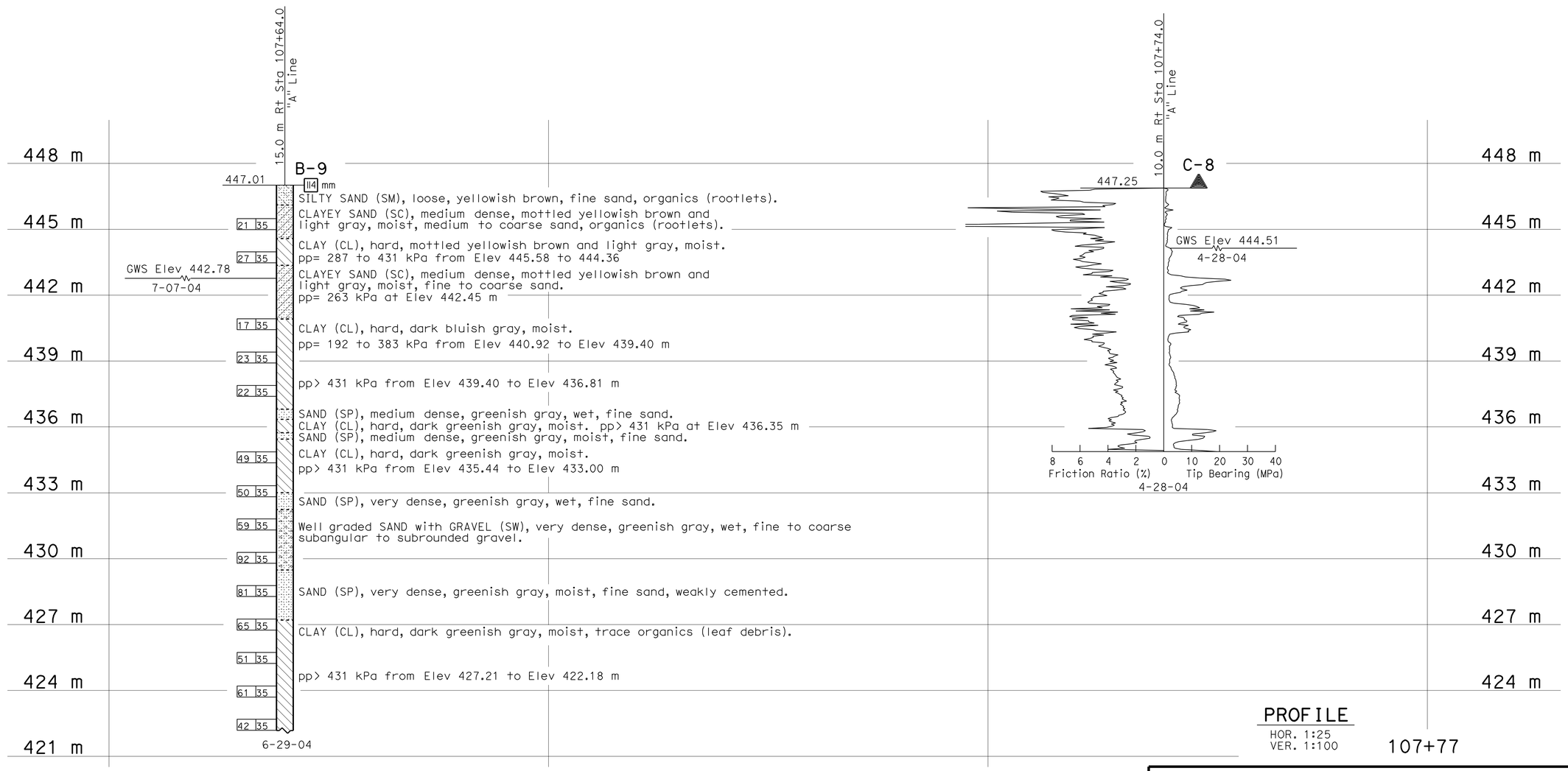

PROFILE
HOR. 1:25
VER. 1:100

LEGEND OF BORING OPERATIONS

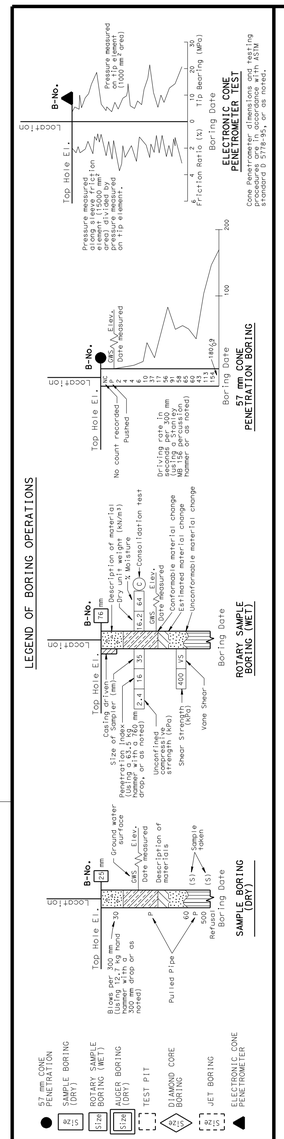

LEGEND OF EARTH MATERIALS

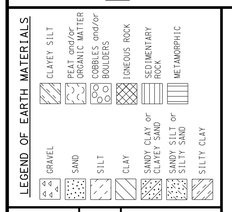

CONSISTENCY CLASSIFICATION FOR SOILS

According to the Standard Penetration Test

SPT N-Value (Blows/0.3ft)	Granular	SPT N-Value (Blows/0.3ft)	Cohesive
0-4	Very Loose	<2	Very Soft
5-10	Loose	2-4	Soft
11-30	Medium Dense	5-8	Firm
31-50	Dense	9-15	Stiff
>50	Very Dense	16-30	Very stiff
		>30	Hard

NOTE: Classification of earth material as shown on this sheet is based upon field inspection and is not to be construed to imply mechanical analysis.

OGS CIVIL LOG OF TEST BORINGS SHEET (METRIC) (REV. 4/04)

Caltrans Metric

ENGINEERING SERVICES	GEOTECHNICAL SERVICES
DRAWN BY F. Nguyen 12/08	
CHECKED BY	

FIELD INVESTIGATION BY: T. Alderman

STATE OF CALIFORNIA DEPARTMENT OF TRANSPORTATION

DIVISION OF ENGINEERING SERVICES STRUCTURE DESIGN
DESIGN BRANCH 2

BRIDGE NO. 10-0129RL
KILOMETER POST R70.578

WILLITS BYPASS
HAEHL CREEK
LOG OF TEST BORINGS 3 OF 4

ALL DIMENSIONS ARE IN METERS UNLESS OTHERWISE SHOWN

ORIGINAL SCALE IN MILLIMETERS FOR REDUCED PLANS 0 10 20 30 40 50 60 70 80 90 100

CU 01
EA 262001

DISREGARD PRINTS BEARING EARLIER REVISION DATES

REVISION DATES (PRELIMINARY STAGE ONLY) 04-23-09 05-11-09 05-19-09

SHEET 25 OF 26

FILE => 10-0129rl_dolotb03.dgn

USERNAME => s114640 DATE PLOTTED => 28-JAN-2012 TIME PLOTTED => 07:40

DIST	COUNTY	ROUTE	KILOMETER POST TOTAL PROJECT	SHEET No	TOTAL SHEETS
01	Men	101	R69.4/R78.9	706	939

REGISTERED CIVIL ENGINEER 5-19-09

1-23-12
PLANS APPROVAL DATE

REGISTERED GEOLOGIST
Reid Buell
No. 1481
Exp. 4-30-11
CERTIFIED ENGINEERING GEOLOGIST
STATE OF CALIFORNIA

The State of California or its officers or agents shall not be responsible for the accuracy or completeness of electronic copies of this plan sheet.

FOR PLAN VIEW, SEE
"LOG OF TEST BORINGS" 1 OF 4

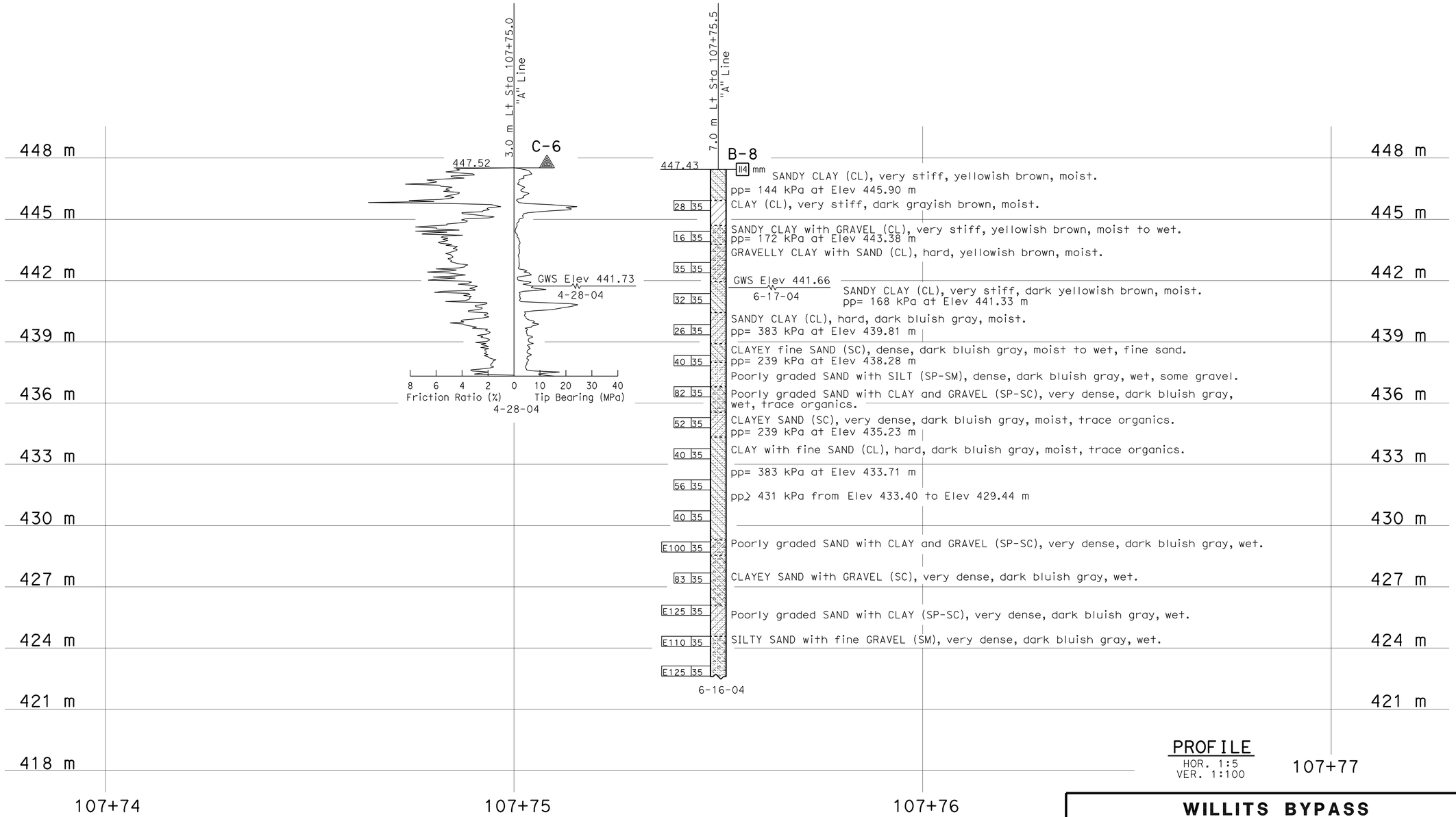

LEGEND OF BORING OPERATIONS

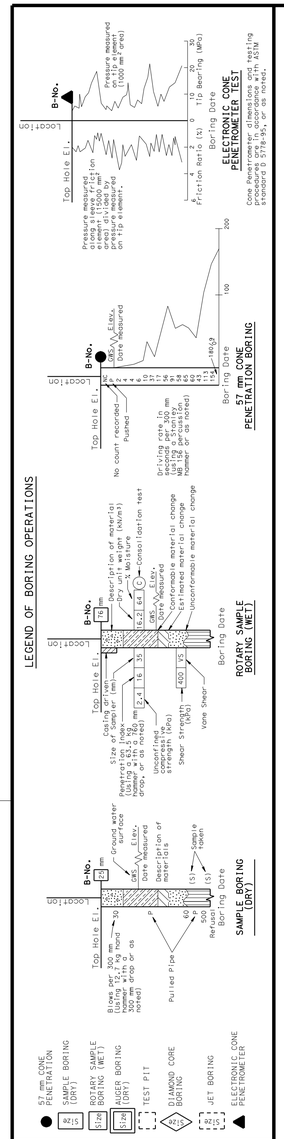

LEGEND OF EARTH MATERIALS

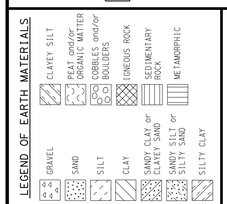

CONSISTENCY CLASSIFICATION FOR SOILS

According to the Standard Penetration Test

SPT N-Value (Blows/0.3m)	Granular	SPT N-Value (Blows/0.3m)	Cohesive
0-4	Very Loose	<2	Very Soft
5-10	Loose	2-4	Soft
11-30	Medium Dense	5-8	Firm
31-50	Dense	9-15	Stiff
>50	Very Dense	16-30	Very stiff
		>30	Hard

NOTE: Classification of earth material as shown on this sheet is based upon field inspection and is not to be construed to imply mechanical analysis.

OGS CIVIL LOG OF TEST BORINGS SHEET (METRIC) (REV. 4/04)

Caltrans Metric

ENGINEERING SERVICES	GEOTECHNICAL SERVICES
DRAWN BY	F. Nguyen 12/08
CHECKED BY	

FIELD INVESTIGATION BY: T. Alderman

STATE OF CALIFORNIA
DEPARTMENT OF TRANSPORTATION

DIVISION OF ENGINEERING SERVICES
STRUCTURE DESIGN
DESIGN BRANCH 2

BRIDGE NO. 10-0129RL
KILOMETER POST R70.578

WILLITS BYPASS
HAEHL CREEK
LOG OF TEST BORINGS 4 OF 4

ALL DIMENSIONS ARE IN METERS UNLESS OTHERWISE SHOWN

ORIGINAL SCALE IN MILLIMETERS FOR REDUCED PLANS 0 10 20 30 40 50 60 70 80 90 100

CU 01
EA 262001

DISREGARD PRINTS BEARING EARLIER REVISION DATES

REVISION DATES (PRELIMINARY STAGE ONLY) 04-25-09 05-11-09 05-19-08

SHEET 26 OF 26

FILE => 10-0129rl_dolotb04.dgn

USERNAME => s114640 DATE PLOTTED => 28-JAN-2012 TIME PLOTTED => 07:37

DIST	COUNTY	ROUTE	KILOMETER POST TOTAL PROJECT	SHEET No	TOTAL SHEETS
01	Men	101	R69.4/R78.9	707	939

REGISTERED CIVIL ENGINEER 9-15-11 DATE

1-23-12
PLANS APPROVAL DATE

REGISTERED PROFESSIONAL ENGINEER M. Friedheim No. 57968 Exp. 6-30-12 CIVIL STATE OF CALIFORNIA

The State of California or its officers or agents shall not be responsible for the accuracy or completeness of electronic copies of this plan sheet.

EAST HILL ROAD UC 10-0157
QUANTITIES

STRUCTURE EXCAVATION (BRIDGE)	255	m^3
STRUCTURE BACKFILL (BRIDGE)	192	m^3
FURNISH STEEL PILING (HP 250 X 85)	830	m
DRIVE STEEL PILE (HP 250 X 85)	34	EA
PRESTRESSING CAST-IN-PLACE CONCRETE	LUMP	SUM
STRUCTURAL CONCRETE, BRIDGE FOOTING	58	m^3
STRUCTURAL CONCRETE, BRIDGE	486	m^3
STRUCTURAL CONCRETE, APPROACH SLAB (TYPE N)	71	m^3
ARCHITECTURAL TEXTURE	11	m^2
JOINT SEAL (MR 50 MM)	26	m
BAR REINFORCING STEEL (BRIDGE)	71 100	kg
TUBULAR BICYCLE RAILING (MODIFIED)	115	m
CONCRETE BARRIER (TYPE 736 MODIFIED)	115	m

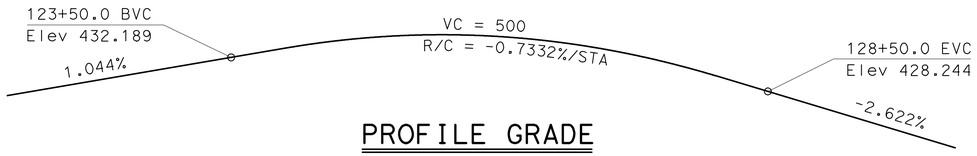

PROFILE GRADE
NO SCALE

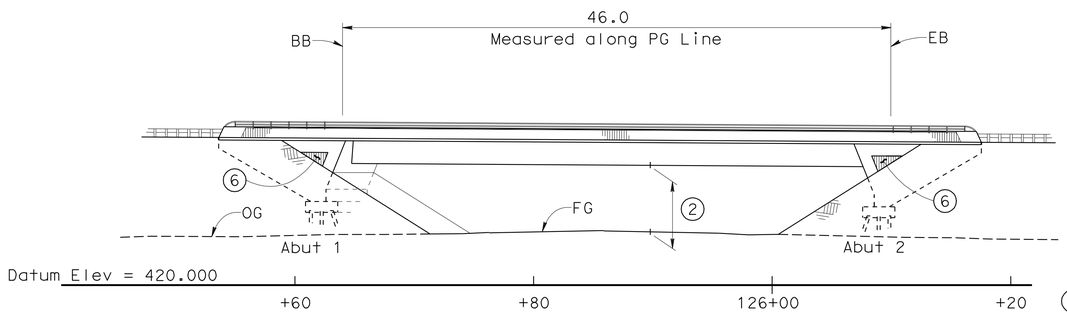

ELEVATION
1:250

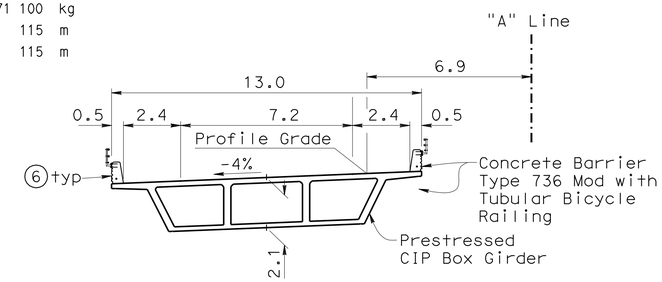

TYPICAL SECTION
1:125

NOTES:

1. Metal Beam Guardrail, See Road Plans
2. Minimum Vertical Clearance = 5.909
3. Paint "EAST HILL ROAD UC"
4. Paint Bridge Number and Year Constructed
5. Structure Approach Slab, Type N(9S)
6. Architectural Treatment

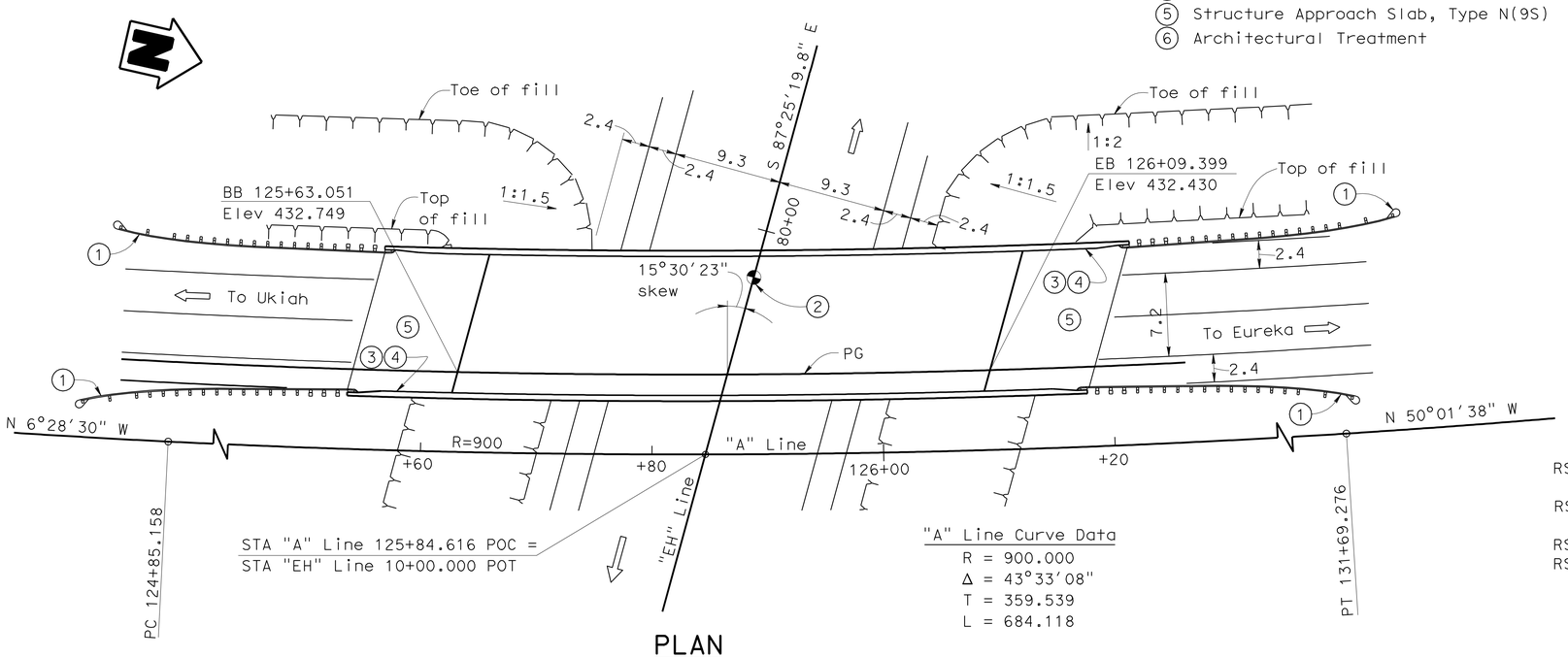

"A" Line Curve Data
R = 900.000
Δ = 43°33'08"
T = 359.539
L = 684.118

PLAN
1:250

Note: For General Notes and Pile Data Table, see "Deck Contours" sheet.

INDEX TO PLANS

1. General Plan
2. Deck Contours
3. Foundation Plan
4. Abutment Layout
5. Abutment Details No. 1
6. Abutment Details No. 2
7. Typical Section
8. Girder Layout
9. Bottom Girder Reinforcement
10. Aesthetic Details
11. Structure Approach Type N(9S)
12. Structure Approach Drainage Details
13. Tubular Bicycle Railing
14. Log of Test Borings

STANDARD PLANS DATED JULY 2004

A10A	ACRONYMS AND ABBREVIATIONS (A-L)
A10B	ACRONYMS AND ABBREVIATIONS (M-Z)
A10C	SYMBOLS (SHEET 1 OF 2)
A10D	SYMBOLS (SHEET 2 OF 2)
A62C	LIMITS OF PAYMENT FOR EXCAVATION AND BACKFILL-BRIDGE
B0-1	BRIDGE DETAILS
B0-5	BRIDGE DETAILS
B0-13	BRIDGE DETAILS
RSP B6-21	JOINT SEALS (MAXIMUM MOVEMENT RATING = 50 mm)
B7-1	BOX GIRDER DETAILS
RSP B8-5	CAST-IN-PLACE PRESTRESSED GIRDER DETAILS
B11-56	CONCRETE BARRIER TYPE 736
RSP ES-9B	ELECTRICAL SYSTEMS (ELECTRICAL DETAILS STRUCTURE INSTALLATIONS)
RSP ES-9C	ELECTRICAL SYSTEMS (ELECTRICAL DETAILS STRUCTURE INSTALLATIONS)

Standard Plan sheet number

Detail number

Caltrans Metric

DESIGN ENGINEER

	BY	CHECKED				
DESIGN	K. Truong/R. Asistin	G. Zuniga	LOAD FACTOR DESIGN	LIVE LOADING: HS20-44 AND ALTERNATIVE AND PERMIT DESIGN LOAD		
DETAILS	C. Figuerres	G. Zuniga	LAYOUT	G. Vincent	M. Friedheim	
QUANTITIES	I. Chernioglo	C. Schellenger	SPECIFICATIONS	I. Huang	PLANS AND SPECS COMPARED I. Huang	

ALL DIMENSIONS ARE IN METERS UNLESS OTHERWISE SHOWN

ORIGINAL SCALE IN MILLIMETERS FOR REDUCED PLANS 0 10 20 30 40 50 60 70 80 90 100

STATE OF CALIFORNIA DEPARTMENT OF TRANSPORTATION

DIVISION OF ENGINEERING SERVICES STRUCTURE DESIGN
DESIGN BRANCH 2

CU 01
EA 262001

BRIDGE NO. 10-0157
KILOMETER POST R72.388

DISREGARD PRINTS BEARING EARLIER REVISION DATES

REVISION DATES: 2-15-08 4-3-08 1-26-09 12-08-09

SHEET 1 OF 14

WILLITS BYPASS
EAST HILL ROAD UC
GENERAL PLAN

FILE => 10-0157_eagp.dgn

STRUCTURES DESIGN GENERAL PLAN SHEET (METRIC) (REV.03-17-04)

USERNAME => s114640 DATE PLOTTED => 28-JAN-2012 TIME PLOTTED => 07:59

DIST	COUNTY	ROUTE	KILOMETER POST TOTAL PROJECT	SHEET No	TOTAL SHEETS
01	Men	101	R69.4/R78.9	708	939

REGISTERED CIVIL ENGINEER 9-15-11 DATE

1-23-12
PLANS APPROVAL DATE

REGISTERED PROFESSIONAL ENGINEER M. Friedheim No. 57968 Exp. 6-30-12 CIVIL STATE OF CALIFORNIA

The State of California or its officers or agents shall not be responsible for the accuracy or completeness of electronic copies of this plan sheet.

Notes:
× = 2.5 m interval measured along station line
Contours do not include camber
Contour interval = 0.05 m
Contours are shown in meters

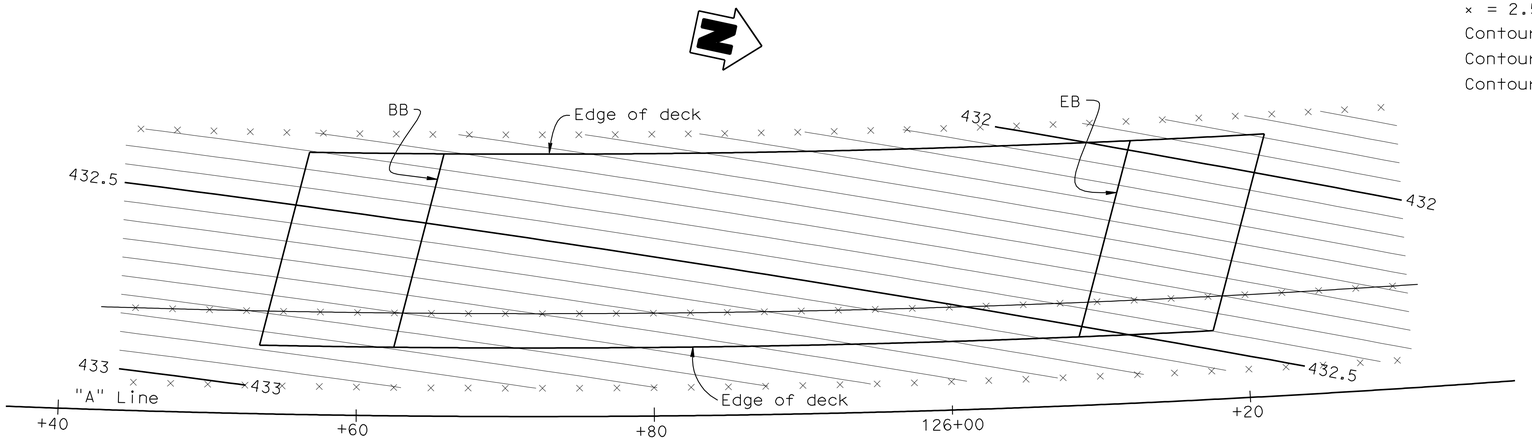

DECK CONTOURS

1:200

GENERAL NOTES (LOAD FACTOR DESIGN)

DESIGN: Bridge Design Specifications - April 2000 (LFD) (1996 AASHTO with interims and revisions by Caltrans).
Project Specific Design Criteria - March 2009.

SEISMIC DESIGN: Caltrans SDC Version 1.4 - June 2006

DEAD LOAD: Includes 1675 Pa for future wearing surface.
Includes 1460 N/m for future utilities.

LIVE LOAD: HS20-44 and alternative and permit design load.

SEISMIC LOADING: Modified Caltrans Seismic Design Criteria for Soil Profile Type D, PBA = 0.7 g. See Response Spectrum below.

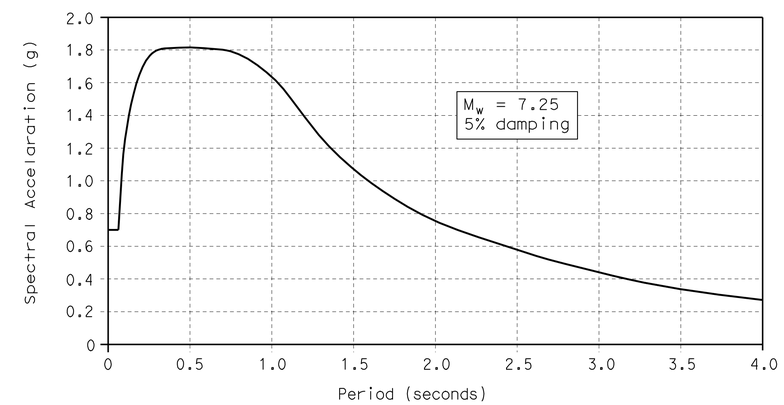

REINFORCED CONCRETE:
fy = 420 MPa
f'c = 25 MPa (See concrete strength and type limits for exceptions)

Transverse Deck Slab (working stress design)
fs = 140 MPa
f'c = 8 MPa
n = 10

PRESTRESSED CONCRETE: See Prestressing Notes on "Bottom Girder Reinforcement" sheet

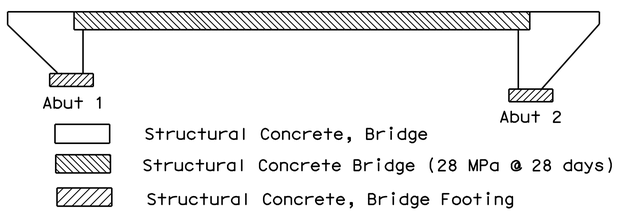

CONCRETE STRENGTH AND TYPE LIMITS

No Scale

PILE DATA TABLE

Location	Pile Type	Nominal Resistance		Design Tip Elevations	Specified Tip Elevations
		Compression	Tension		
Abut 1	HP 250 x 85	1250 KN	0 KN	404.6(1)	404.6
Abut 2	HP 250 x 85	1250 KN	0 KN	402.0(1)	402.0

Note: Design Pile Tip Elevation is controlled by the following demand: (1) compression

DESIGN	BY K. Truong/R. Asistin	CHECKED G. Zuniga
DETAILS	BY E. Montevirgen	CHECKED G. Zuniga
QUANTITIES	BY I. Cherniogio	CHECKED C. Schellenger

STATE OF CALIFORNIA
DEPARTMENT OF TRANSPORTATION

DIVISION OF ENGINEERING SERVICES
STRUCTURE DESIGN
DESIGN BRANCH 2

BRIDGE NO. 10-0157
KILOMETER POST R72.388

WILLITS BYPASS
EAST HILL ROAD UC
DECK CONTOURS

Caltrans Metric

ALL DIMENSIONS ARE IN METERS UNLESS OTHERWISE SHOWN

ORIGINAL SCALE IN MILLIMETERS FOR REDUCED PLANS 0 10 20 30 40 50 60 70 80 90 100

CU 01
EA 262001

DISREGARD PRINTS BEARING EARLIER REVISION DATES

REVISION DATES: 2-19-08 11-19-08 01-30-09

SHEET 2 OF 14

FILE => 10-0157_eddc.dgn

STRUCTURES DESIGN DETAIL SHEET (METRIC) (REV.03-17-04)

USERNAME => s114640 DATE PLOTTED => 28-JAN-2012 TIME PLOTTED => 07:37

NO	R	Δ	T	L
1	1000.000	1°38'6"	14.269	28.537
2	900.000	43°33'8"	359.540	684.118

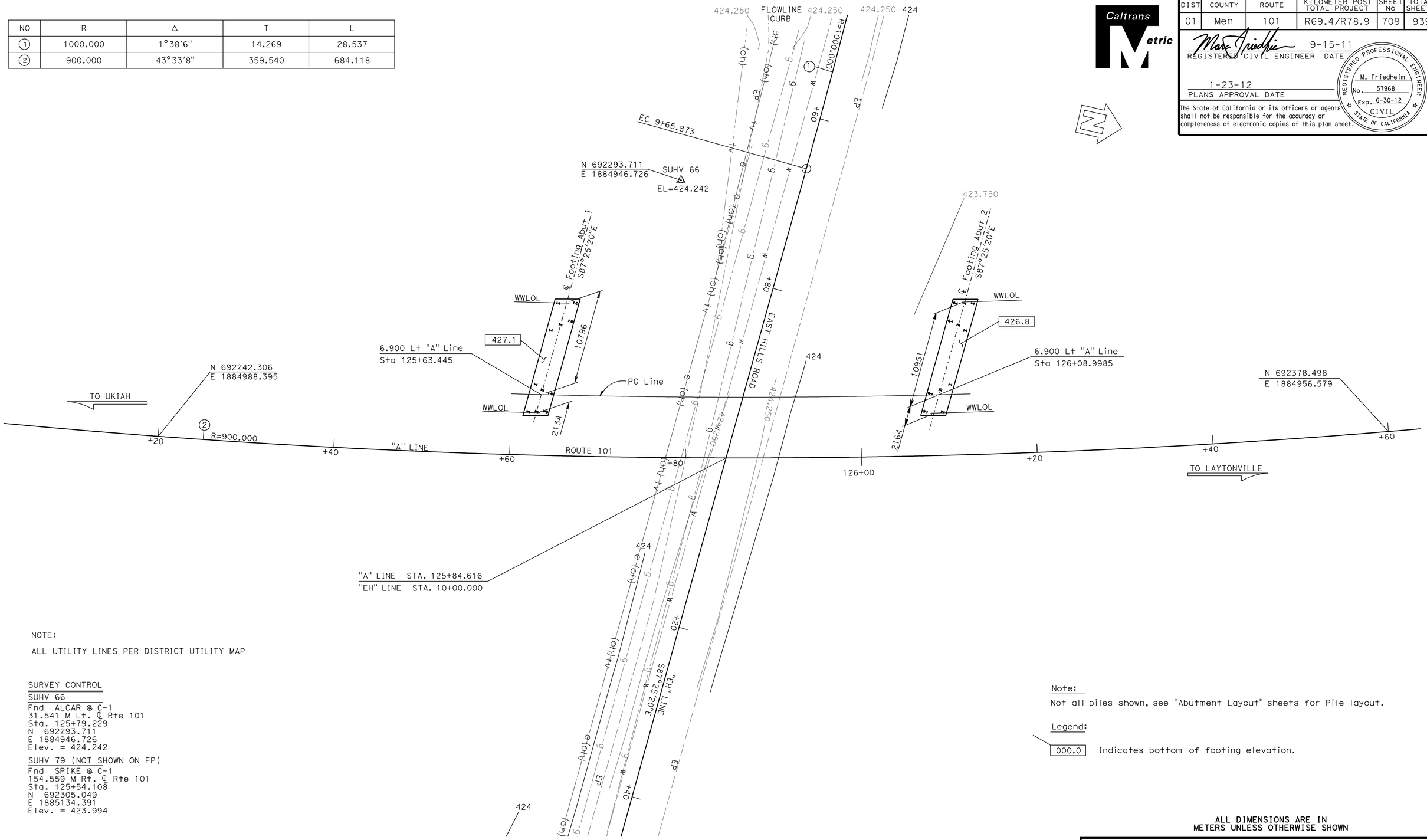

DIST	COUNTY	ROUTE	KILOMETER POST TOTAL PROJECT	SHEET No	TOTAL SHEETS
01	Men	101	R69.4/R78.9	709	939

Caltrans Metric

REGISTERED CIVIL ENGINEER 9-15-11 DATE

1-23-12
PLANS APPROVAL DATE

REGISTERED PROFESSIONAL ENGINEER M. Friedheim No. 57968 Exp. 6-30-12 CIVIL STATE OF CALIFORNIA

The State of California or its officers or agents shall not be responsible for the accuracy or completeness of electronic copies of this plan sheet.

NOTE:

ALL UTILITY LINES PER DISTRICT UTILITY MAP

SURVEY CONTROL

SUHV 66
Fnd ALCAR @ C-1
31.541 M Lt. ℄ Rte 101
Sta. 125+79.229
N 692293.711
E 1884946.726
Elev. = 424.242

SUHV 79 (NOT SHOWN ON FP)
Fnd SPIKE @ C-1
154.559 M Rt. ℄ Rte 101
Sta. 125+54.108
N 692305.049
E 1885134.391
Elev. = 423.994

Note:
Not all piles shown, see "Abutment Layout" sheets for Pile layout.

Legend:
000.0 Indicates bottom of footing elevation.

ALL DIMENSIONS ARE IN METERS UNLESS OTHERWISE SHOWN

PRELIMINARY INVESTIGATION SECTION

SCALE	VERT. DATUM NGVD 29	PHOTOGRAMMETRY AS OF:		
1:200	HORZ. DATUM NAD 83 (1991.35)	SURVEYED	BY DISTRICT/E. LOPEZ	DRAFTED BY F. BANDA 7/05
ALIGNMENT TIES DIST TRAVERSE SHEET		FIELD CHECKED	BY	CHECKED BY T. ZOLNIKOVA 7/05

	BY	CHECKED
DESIGN	K. Truong/R. Asistin	G.Zuniga
DETAILS	A. Chen	G.Zuniga
QUANTITIES	I. Chernioglo	C. Schellenger

STATE OF CALIFORNIA DEPARTMENT OF TRANSPORTATION

DIVISION OF ENGINEERING SERVICES STRUCTURES DESIGN DESIGN BRANCH 2

BRIDGE NO. 10-0157
KILOMETER POST R72.388

WILLITS BYPASS
EAST HILL ROAD UC
FOUNDATION PLAN

STRUCTURES FOUNDATION PLAN SHEET (METRIC) (REV.12-1-01)

ORIGINAL SCALE IN MILLIMETERS FOR REDUCED PLANS 0 10 20 30 40 50 60 70 80 90 100

CU 01
EA 262001

DISREGARD PRINTS BEARING EARLIER REVISION DATES

REVISION DATES (PRELIMINARY STAGE ONLY) 11-19-05 12-22-05 1-06-06 1-18-06 3-7-08 4-3-08 4-9-08 4-28-08

SHEET 3 OF 14

FILE => 10-0157_eefp.dgn

USERNAME => s114640 DATE PLOTTED => 28-JAN-2012 TIME PLOTTED => 07:38

DIST	COUNTY	ROUTE	KILOMETER POST TOTAL PROJECT	SHEET No	TOTAL SHEETS
01	Men	101	R69.4/R78.9	710	939

REGISTERED CIVIL ENGINEER 9-15-11 DATE

1-23-12
PLANS APPROVAL DATE

REGISTERED PROFESSIONAL ENGINEER M. Friedheim No. 57968 Exp. 6-30-12 CIVIL STATE OF CALIFORNIA

The State of California or its officers or agents shall not be responsible for the accuracy or completeness of electronic copies of this plan sheet.

NOTES:

1. For Bearing Pad, Backwall base, and Joint Protection Details, see "Abutment Details No. 2" sheet.
2. Angle Point Elevation shall be 700 mm above Top of Footing.
3. Additional bearing pad between girders shall be located at the obtuse corner of the bridge, typical both abutments.

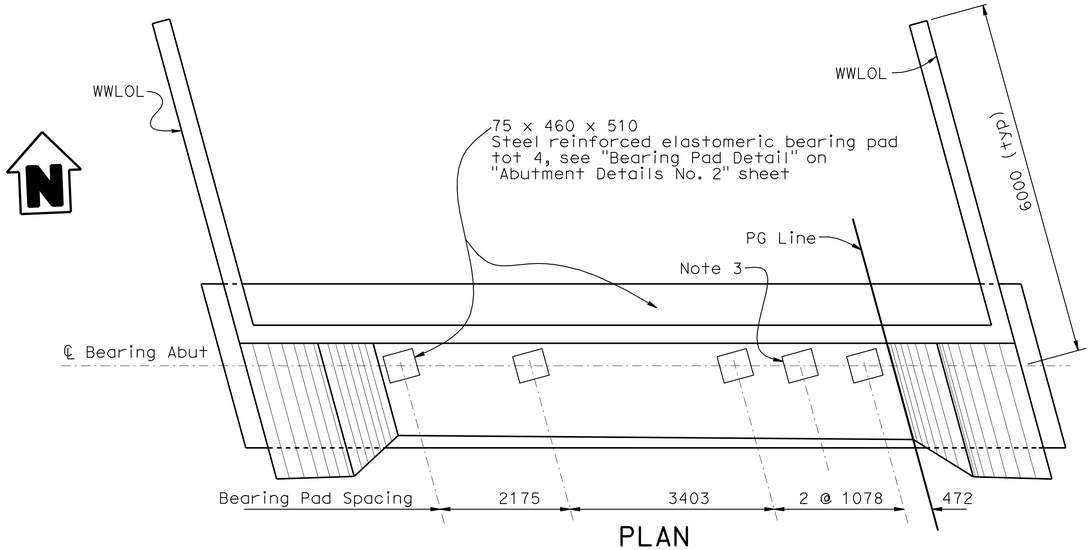

PLAN
1:50

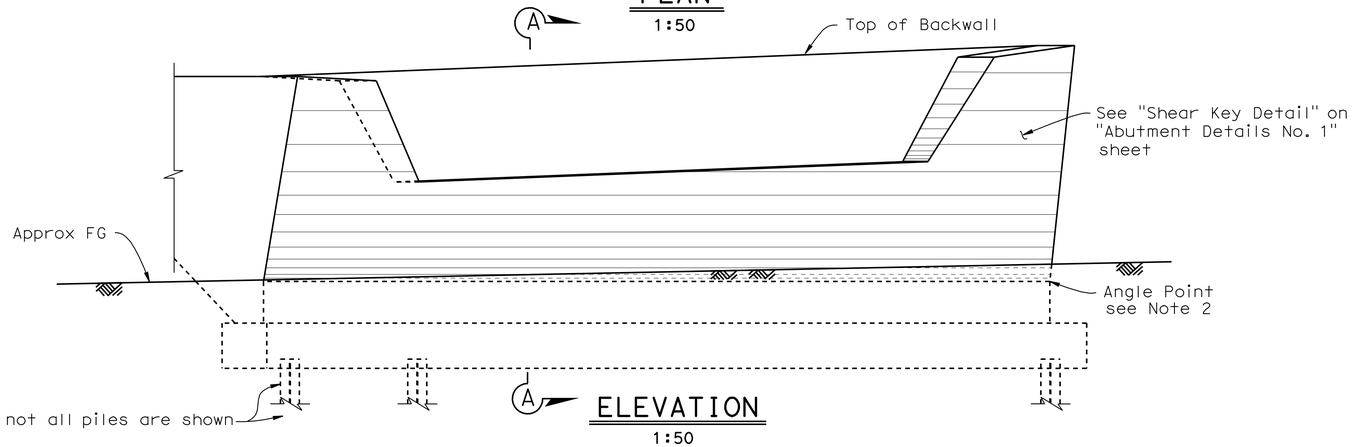

ELEVATION
1:50

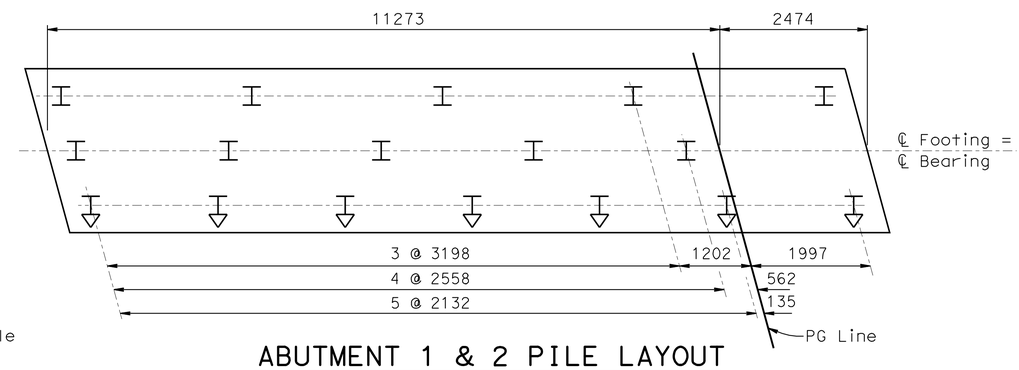

LEGEND:

Indicates plumb pile

Indicates battered pile

ABUTMENT 1 & 2 PILE LAYOUT
1:50

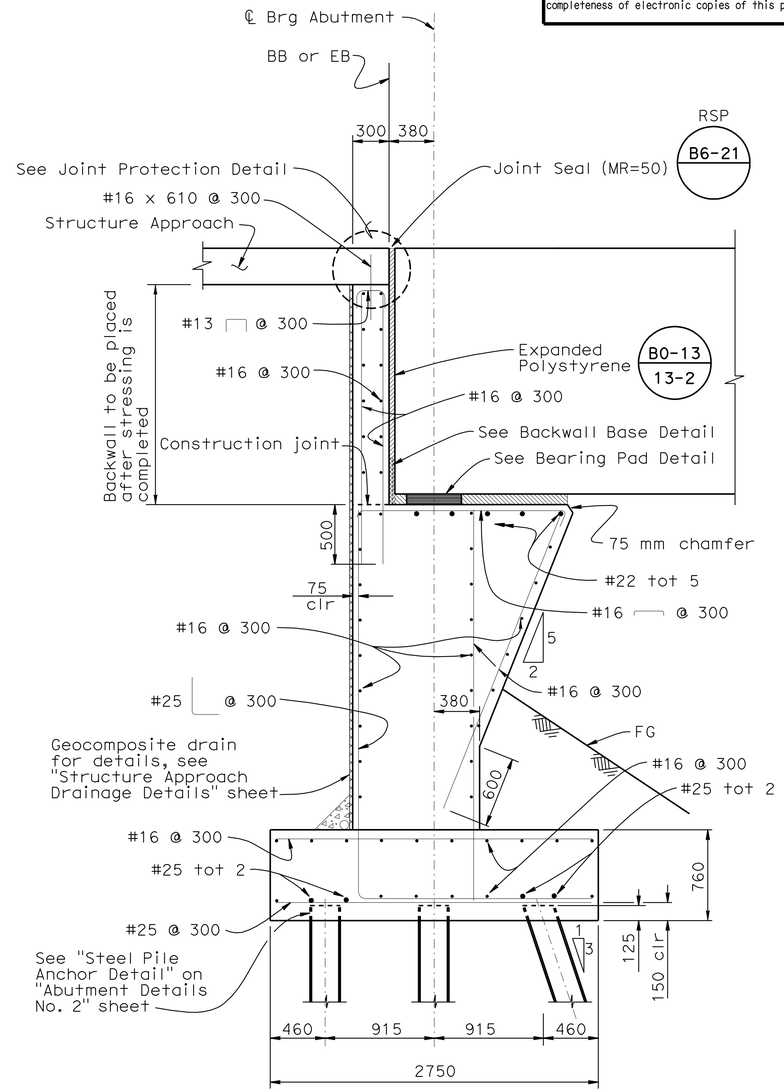

SECTION A-A
1:25

ABUT 2 SHOWN, ABUT 1 SIMILAR EXCEPT AS NOTED

Caltrans Metric

	BY	CHECKED
DESIGN	K. Truong/R. Asistin	G. Zuniga
DETAILS	A. Chen/E. Montevirgen	G. Zuniga
QUANTITIES	I. Cherniogio	C. Schellenger

STATE OF CALIFORNIA
DEPARTMENT OF TRANSPORTATION

DIVISION OF ENGINEERING SERVICES
STRUCTURE DESIGN
DESIGN BRANCH 2

BRIDGE NO. 10-0157
KILOMETER POST R72.388

WILLITS BYPASS
EAST HILL ROAD UC
ABUTMENT LAYOUT

ALL DIMENSIONS ARE IN MILLIMETERS UNLESS OTHERWISE SHOWN

ORIGINAL SCALE IN MILLIMETERS FOR REDUCED PLANS 0 10 20 30 40 50 60 70 80 90 100

CU 01
EA 262001

DISREGARD PRINTS BEARING EARLIER REVISION DATES

REVISION DATES: 2-19-08 4-9-08 11-19-08 3-04-09 4-20-09

SHEET 4 OF 14

FILE => 10-0157_efabtlyt.dgn

STRUCTURES DESIGN DETAIL SHEET (METRIC) (REV.03-17-04)

USERNAME => s114640 DATE PLOTTED => 28-JAN-2012 TIME PLOTTED => 07:38

DIST	COUNTY	ROUTE	KILOMETER POST TOTAL PROJECT	SHEET No	TOTAL SHEETS
01	Men	101	R69.4/R78.9	711	939

REGISTERED CIVIL ENGINEER 9-15-11 DATE

1-23-12
PLANS APPROVAL DATE

REGISTERED PROFESSIONAL ENGINEER M. Friedheim No. 57968 Exp. 6-30-12 CIVIL STATE OF CALIFORNIA

The State of California or its officers or agents shall not be responsible for the accuracy or completeness of electronic copies of this plan sheet.

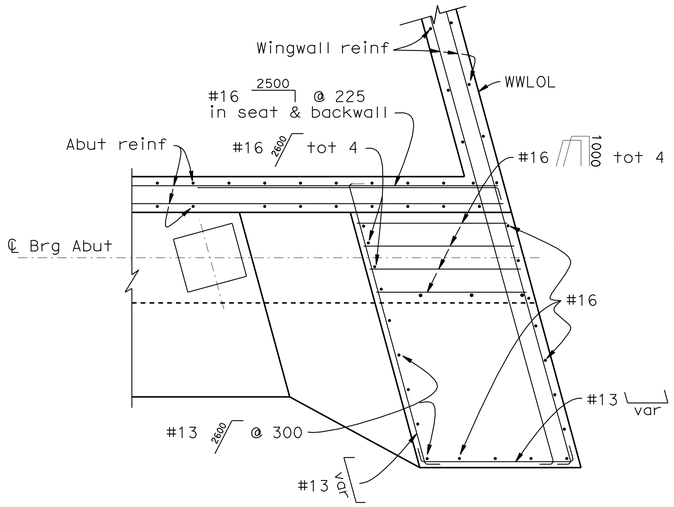

SECTION A-A
1:25

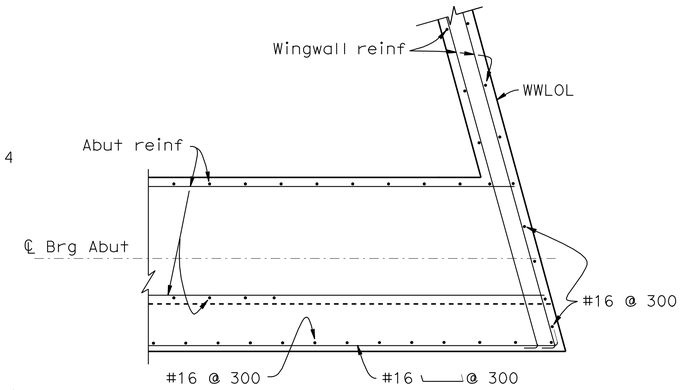

SECTION B-B
1:25

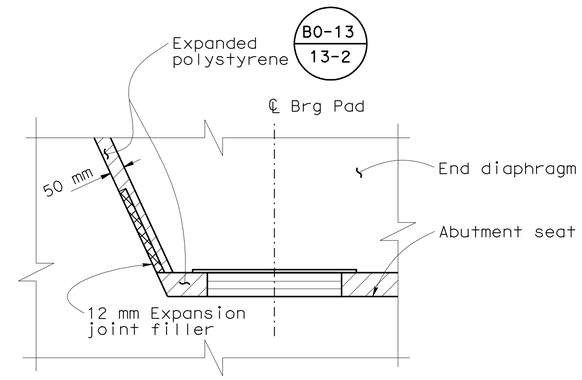

DETAIL X
1:10

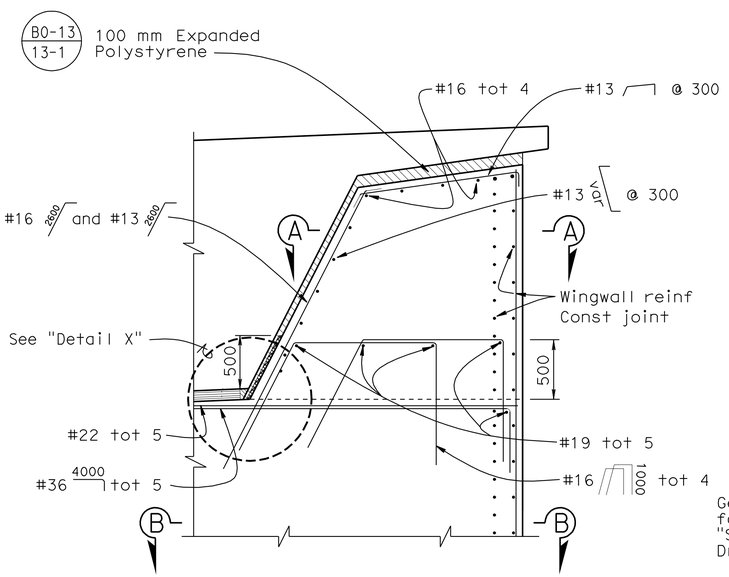

SHEAR KEY DETAIL
1:25

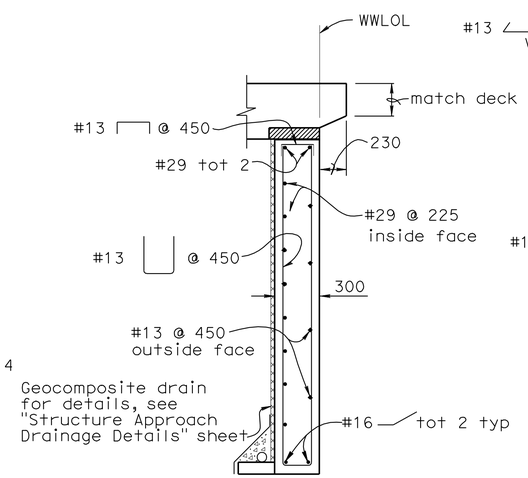

SECTION C-C
1:25

B0-1

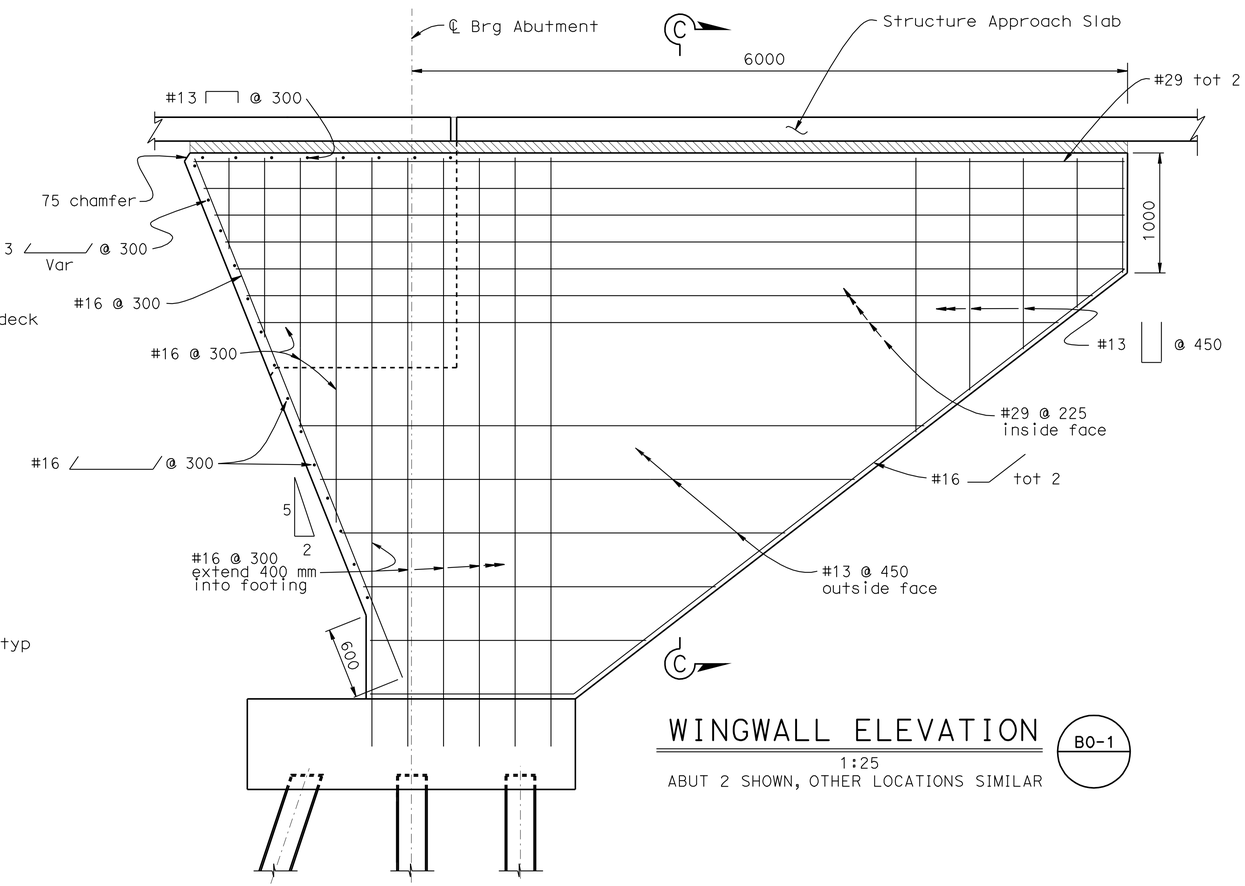

WINGWALL ELEVATION
1:25
ABUT 2 SHOWN, OTHER LOCATIONS SIMILAR

B0-1

Caltrans Metric

	BY	CHECKED
DESIGN	K. Truong	G. Zuniga
DETAILS	J. Klovach / A. Chen	G. Zuniga
QUANTITIES	I. Cherniogio	C. Schellenger

STATE OF CALIFORNIA
DEPARTMENT OF TRANSPORTATION

DIVISION OF ENGINEERING SERVICES
STRUCTURE DESIGN
DESIGN BRANCH 2

BRIDGE NO. 10-0157
KILOMETER POST R72.388

WILLITS BYPASS
EAST HILL ROAD UC
ABUTMENT DETAILS NO. 1

ALL DIMENSIONS ARE IN MILLIMETERS UNLESS OTHERWISE SHOWN

ORIGINAL SCALE IN MILLIMETERS FOR REDUCED PLANS 0 10 20 30 40 50 60 70 80 90 100

CU 01
EA 262001

DISREGARD PRINTS BEARING EARLIER REVISION DATES → 2-19-08

REVISION DATES

SHEET 5 OF 14

FILE => 10-0157_egabtdet01.dgn

STRUCTURES DESIGN DETAIL SHEET (METRIC) (REV.03-17-04)

USERNAME => s114640 DATE PLOTTED => 28-JAN-2012 TIME PLOTTED => 07:38

DIST	COUNTY	ROUTE	KILOMETER POST TOTAL PROJECT	SHEET No	TOTAL SHEETS
01	Men	101	R69.4/R78.9	712	939

REGISTERED CIVIL ENGINEER 9-15-11 DATE

1-23-12
PLANS APPROVAL DATE

REGISTERED PROFESSIONAL ENGINEER M. Friedheim No. 57968 Exp. 6-30-12 CIVIL STATE OF CALIFORNIA

The State of California or its officers or agents shall not be responsible for the accuracy or completeness of electronic copies of this plan sheet.

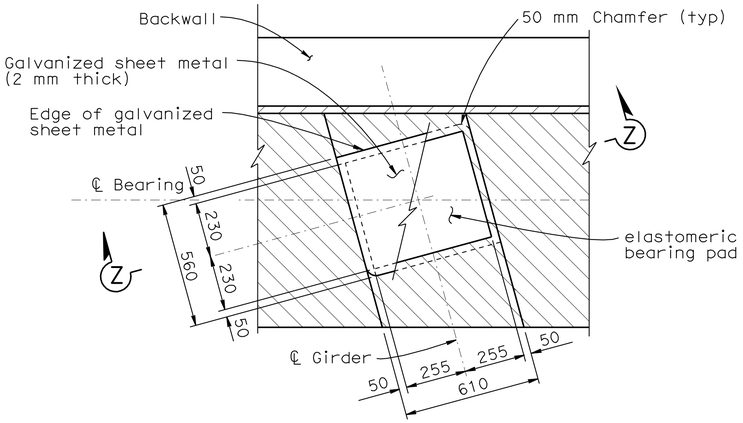

PLAN

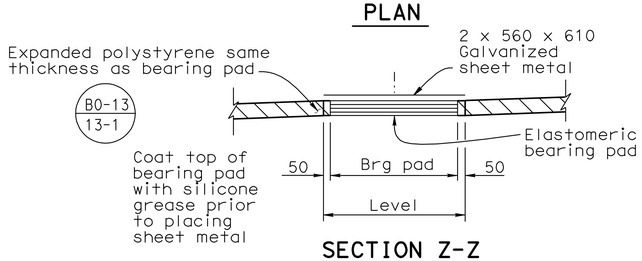

SECTION Z-Z

BEARING PAD DETAIL

No Scale

Details typical at all bearing pads

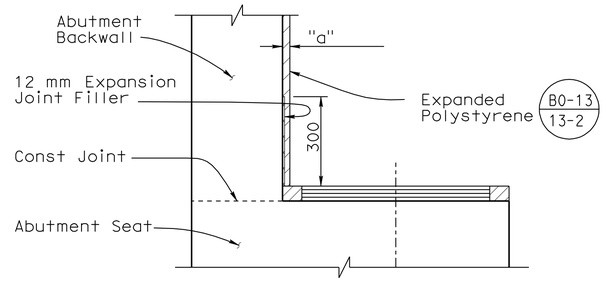

BACKWALL BASE DETAIL

No Scale

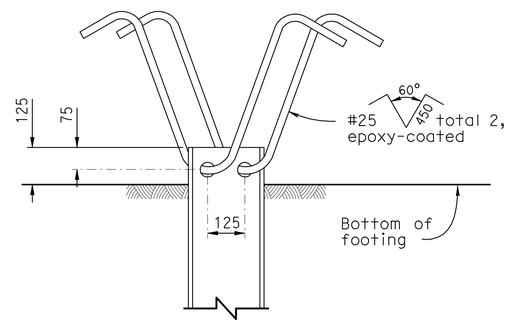

ELEVATION

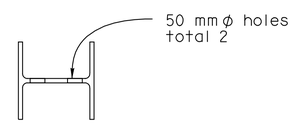

PLAN

STEEL PILE ANCHOR DETAIL

No Scale

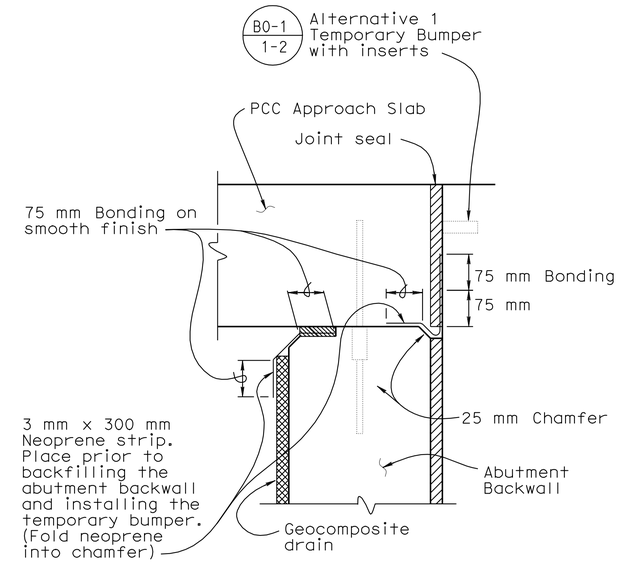

JOINT PROTECTION DETAIL

No Scale

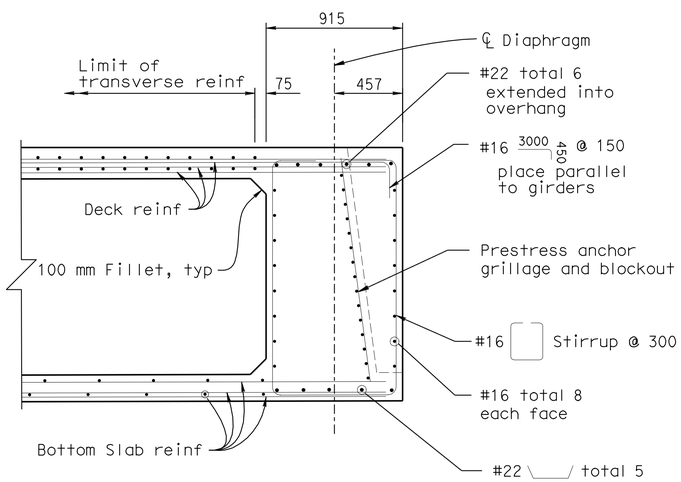

END DIAPHRAGM SECTION

B8-5

1:20

(Shown perpendicular to ℄ Abutment)

DESIGN	BY K. Truong	CHECKED G. Zuniga	
DETAILS	BY A. Chen	CHECKED G. Zuniga	
QUANTITIES	BY I. Cherniogio	CHECKED C. Schellenger	

STATE OF CALIFORNIA DEPARTMENT OF TRANSPORTATION

DIVISION OF ENGINEERING SERVICES STRUCTURE DESIGN

DESIGN BRANCH 2

BRIDGE NO. 10-0157

KILOMETER POST R72.388

CU 01
EA 262001

ALL DIMENSIONS ARE IN MILLIMETERS UNLESS OTHERWISE SHOWN

ORIGINAL SCALE IN MILLIMETERS FOR REDUCED PLANS 0 10 20 30 40 50 60 70 80 90 100

DISREGARD PRINTS BEARING EARLIER REVISION DATES 2-19-08

REVISION DATES

SHEET 6 OF 14

WILLITS BYPASS
EAST HILL ROAD UC
ABUTMENT DETAILS NO. 2

FILE => 10-0157_egabtdet02.dgn

STRUCTURES DESIGN DETAIL SHEET (METRIC) (REV.03-17-04)

USERNAME => s114640 DATE PLOTTED => 28-JAN-2012 TIME PLOTTED => 07:38

DIST	COUNTY	ROUTE	KILOMETER POST TOTAL PROJECT	SHEET No	TOTAL SHEETS
01	Men	101	R69.4/R78.9	713	939

REGISTERED CIVIL ENGINEER 9-15-11 DATE

1-23-12
PLANS APPROVAL DATE

REGISTERED PROFESSIONAL ENGINEER M. Friedheim No. 57968 Exp. 6-30-12 CIVIL STATE OF CALIFORNIA

The State of California or its officers or agents shall not be responsible for the accuracy or completeness of electronic copies of this plan sheet.

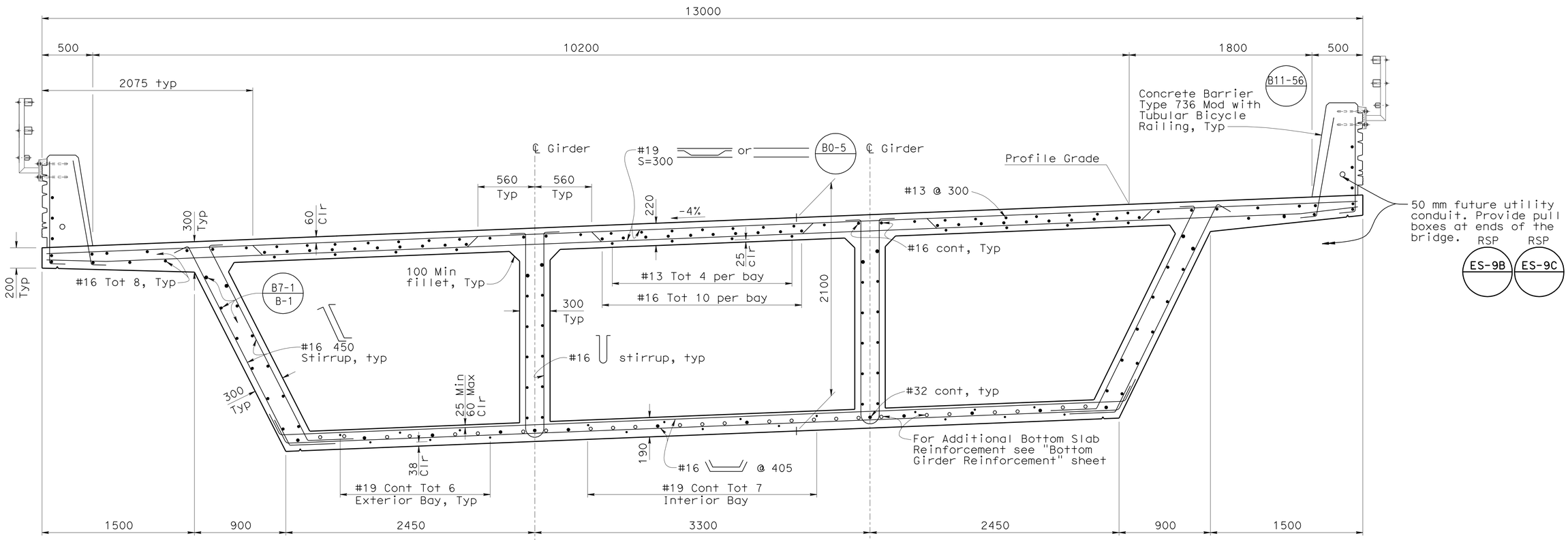

TYPICAL SECTION

1:20

B0-5 B7-1 B8-5

DESIGN	BY K. Truong/R. Asistin	CHECKED G. Zuniga	
DETAILS	BY C. Figuerres	CHECKED G. Zuniga	
QUANTITIES	BY I. Cherniogio	CHECKED C. Schellenger	

STATE OF CALIFORNIA DEPARTMENT OF TRANSPORTATION

DIVISION OF ENGINEERING SERVICES STRUCTURE DESIGN

DESIGN BRANCH 2

BRIDGE NO. 10-0157

KILOMETER POST R72.388

WILLITS BYPASS
EAST HILL ROAD UC
TYPICAL SECTION

ALL DIMENSIONS ARE IN MILLIMETERS UNLESS OTHERWISE SHOWN

ORIGINAL SCALE IN MILLIMETERS FOR REDUCED PLANS 0 10 20 30 40 50 60 70 80 90 100

CU 01
EA 262001

DISREGARD PRINTS BEARING EARLIER REVISION DATES

REVISION DATES 2-19-08 1-26-09 7-01-09

SHEET 7 OF 14

STRUCTURES DESIGN DETAIL SHEET (METRIC) (REV.03-17-04)

FILE => 10-0157_eits.dgn

USERNAME => s114640 DATE PLOTTED => 28-JAN-2012 TIME PLOTTED => 07:38

DIST	COUNTY	ROUTE	KILOMETER POST TOTAL PROJECT	SHEET No	TOTAL SHEETS
01	Men	101	R69.4/R78.9	714	939

REGISTERED CIVIL ENGINEER 9-15-11 DATE

1-23-12
PLANS APPROVAL DATE

REGISTERED PROFESSIONAL ENGINEER M. Friedheim No. 57968 Exp. 6-30-12 CIVIL STATE OF CALIFORNIA

The State of California or its officers or agents shall not be responsible for the accuracy or completeness of electronic copies of this plan sheet.

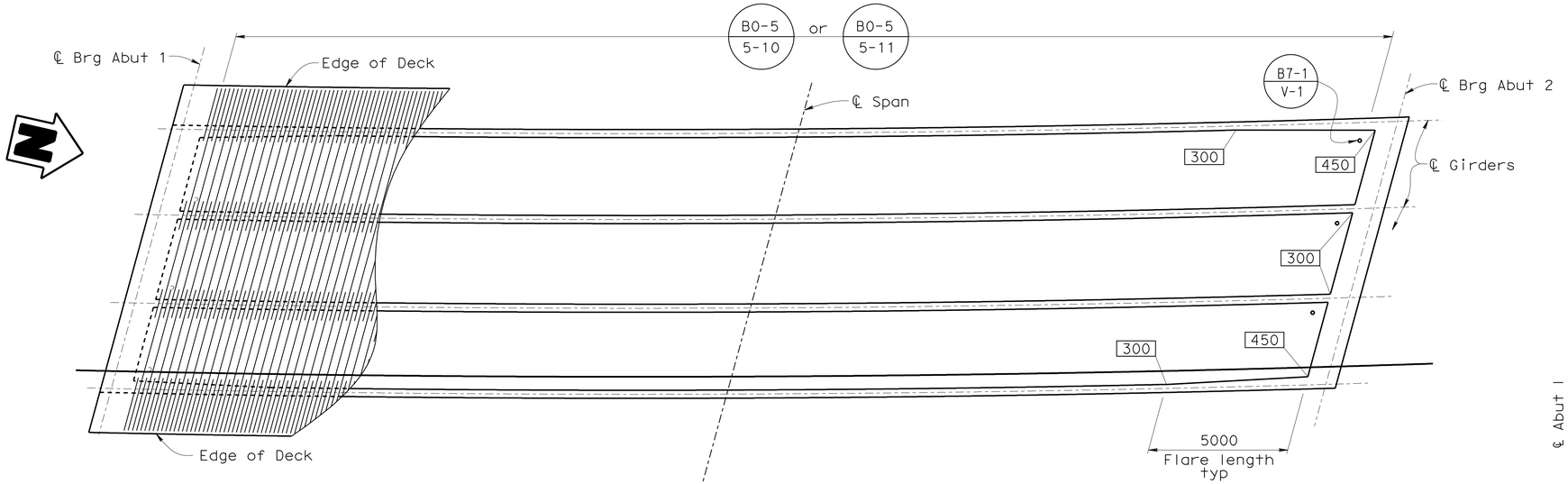

GIRDER LAYOUT

B7-1 B8-5

1:100

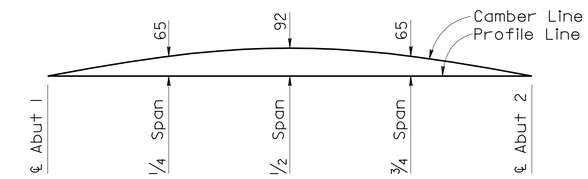

CAMBER DIAGRAM

No Scale

(Does not include allowance for falsework settlement)

NOTES:

1. For Prestressing notes see "Bottom Girder Reinforcement" sheet.

Girder stem width, symmetrical about ℄ span

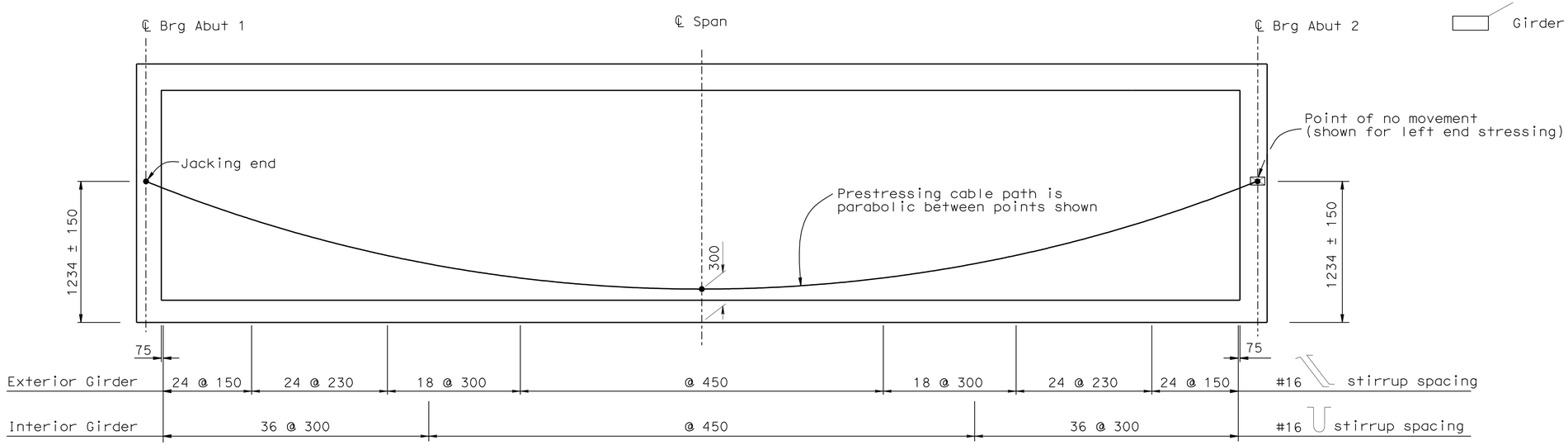

GIRDER ELEVATION

B7-1 B8-5

No Scale

Caltrans Metric

ALL DIMENSIONS ARE IN MILLIMETERS UNLESS OTHERWISE SHOWN

ORIGINAL SCALE IN MILLIMETERS FOR REDUCED PLANS 0 10 20 30 40 50 60 70 80 90 100

	BY	CHECKED
DESIGN	K. Truong/R. Asistin	G. Zuniga
DETAILS	A. Chen	G. Zuniga
QUANTITIES	I. Cherniogio	C. Schellenger

STATE OF CALIFORNIA DEPARTMENT OF TRANSPORTATION

DIVISION OF ENGINEERING SERVICES STRUCTURE DESIGN DESIGN BRANCH 2

CU 01
EA 262001

BRIDGE NO. 10-0157
KILOMETER POST R72.388

WILLITS BYPASS
EAST HILL ROAD UC
GIRDER LAYOUT

DISREGARD PRINTS BEARING EARLIER REVISION DATES

REVISION DATES: 9-29-05 12-22-05 1-31-06 2-06-06 9-19-06 2-19-08 3-20-08 4-9-08

SHEET 8 OF 14

STRUCTURES DESIGN DETAIL SHEET (METRIC) (REV.03-17-04)

FILE => 10-0157_ejglo.dgn

USERNAME => s114640 DATE PLOTTED => 28-JAN-2012 TIME PLOTTED => 07:38

DIST	COUNTY	ROUTE	KILOMETER POST TOTAL PROJECT	SHEET No	TOTAL SHEETS
01	Men	101	R69.4/R78.9	715	939

REGISTERED CIVIL ENGINEER 9-15-11 DATE

1-23-12
PLANS APPROVAL DATE

REGISTERED PROFESSIONAL ENGINEER M. Friedheim No. 57968 Exp. 6-30-12 CIVIL STATE OF CALIFORNIA

The State of California or its officers or agents shall not be responsible for the accuracy or completeness of electronic copies of this plan sheet.

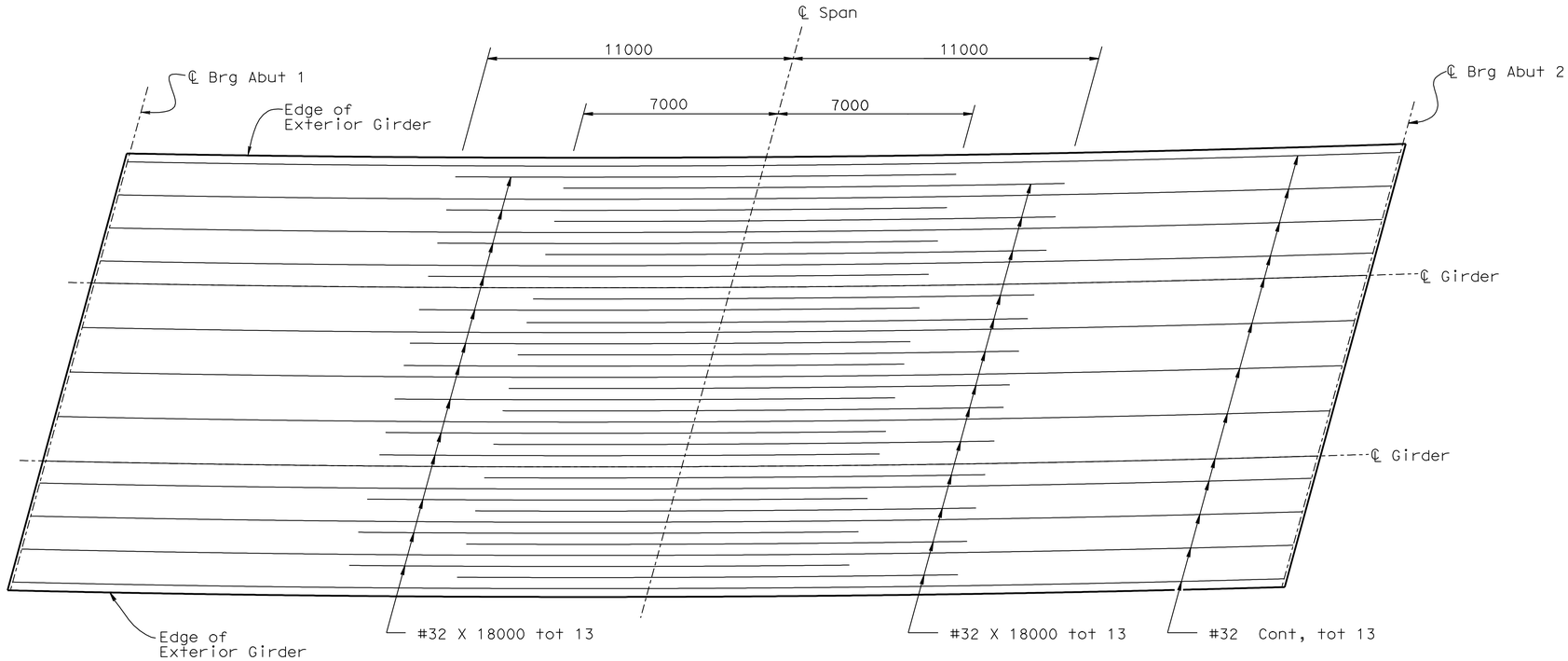

ADDITIONAL BOTTOM SLAB REINFORCEMENT

1:100 Horizontal
1:50 Vertical

PRESTRESSING NOTES

1860 MPa Low Relaxation Strand:

P_{jack} (Total) = 44570 KN

Anchor Set = 10 mm

Total Number of Girders = 4

Concrete: f'_c = 28 MPa @ 28 days

f'_{ci} = 25 MPa @ time of stressing

Contractor shall submit elongation calculations based on initial stress at

⊠ = 0.947 times jacking stress.

One end stressing shall be performed from either end.
Long term losses assumed to be 175 MPa
Design is based on μ = 0.15 and k = 0.000656/m

NOTE:

1. No splices are allowed in cut-off bars. Splices in continuous bars shall be service level splices and shall not be located within 9.0 m of each side of ℄ Span.

DESIGN	BY K. Truong/R. Asistin	CHECKED G. Zuniga	
DETAILS	BY A. Chen	CHECKED G. Zuniga	
QUANTITIES	BY I. Chernioglo	CHECKED C. Schellenger	

STATE OF CALIFORNIA
DEPARTMENT OF TRANSPORTATION

DIVISION OF ENGINEERING SERVICES
STRUCTURE DESIGN
DESIGN BRANCH 2

CU 01
EA 262001

BRIDGE NO. 10-0157
KILOMETER POST R72.388

DISREGARD PRINTS BEARING EARLIER REVISION DATES

WILLITS BYPASS
EAST HILL ROAD UC
BOTTOM GIRDER REINFORCEMENT

Caltrans Metric

ALL DIMENSIONS ARE IN MILLIMETERS UNLESS OTHERWISE SHOWN

ORIGINAL SCALE IN MILLIMETERS FOR REDUCED PLANS 0 10 20 30 40 50 60 70 80 90 100

REVISION DATES: 10-04-05 11-29-05 1-19-06 1-31-06 9-19-06 2-14-07 3-29-07 1-26-09

SHEET 9 OF 14

FILE => 10-0157_ekbgr.dgn

STRUCTURES DESIGN DETAIL SHEET (METRIC) (REV.03-17-04)

USERNAME => s14640 DATE PLOTTED => 28-JAN-2012 TIME PLOTTED => 07:38

DIST	COUNTY	ROUTE	KILOMETER POST TOTAL PROJECT	SHEET No	TOTAL SHEETS
01	Men	101	R69.4/R78.9	716	939

REGISTERED CIVIL ENGINEER 9-15-11 DATE

1-23-12
PLANS APPROVAL DATE

REGISTERED PROFESSIONAL ENGINEER M. Friedheim No. 57968 Exp. 6-30-12 CIVIL STATE OF CALIFORNIA

The State of California or its officers or agents shall not be responsible for the accuracy or completeness of electronic copies of this plan sheet.

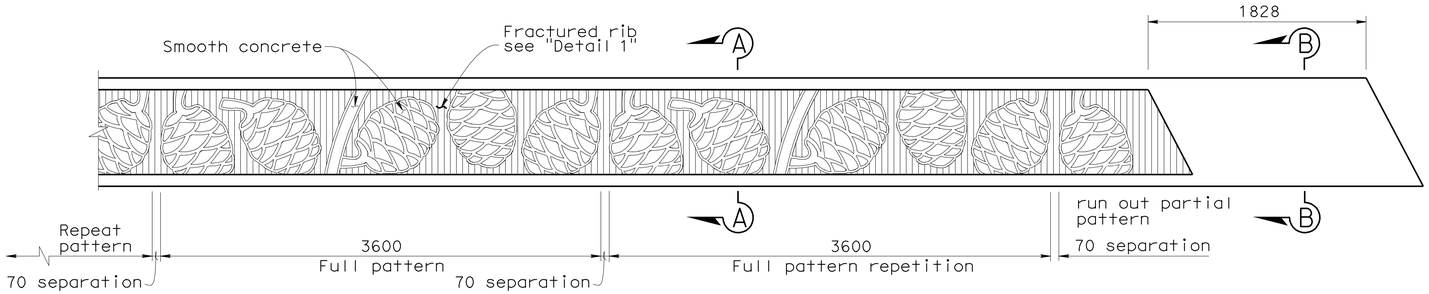

TYPE 736 BARRIER
PARTIAL ELEVATION
1:25

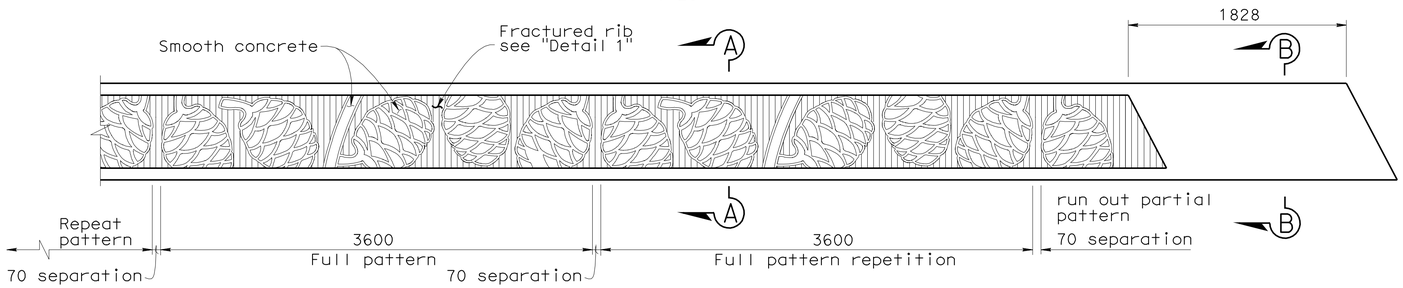

TYPE 732 BARRIER
PARTIAL ELEVATION
1:25

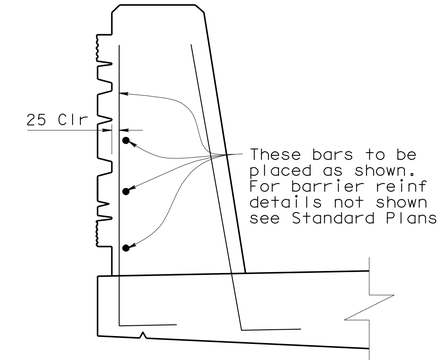

BARRIER REINFORCEMENT MODIFICATION
1:10

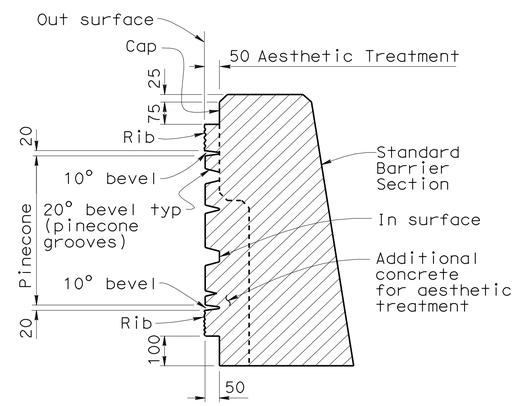

SECTION A-A
1:10

Standard Barrier Section (Transition)

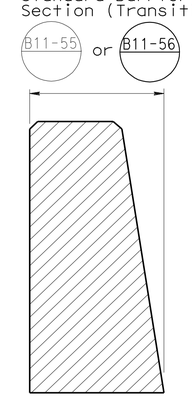

SECTION B-B
1:10

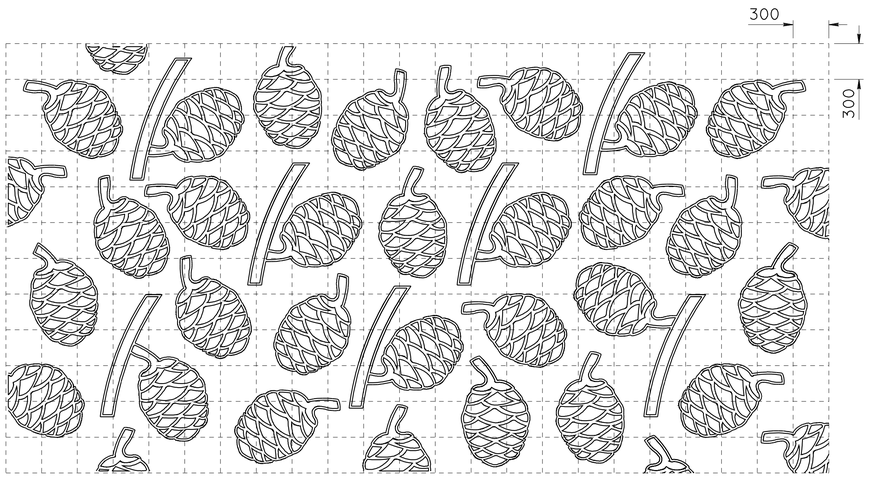

300 mm grid for reference only

RANDOM PINECONE PATTERN FOR WING WALLS
1:25

NOTE: Place random pinecone pattern on Fractured Rib Background
Fractured rib to be at same angle/alignment as abutment wall.
Relief similar to Barrier Section A-A

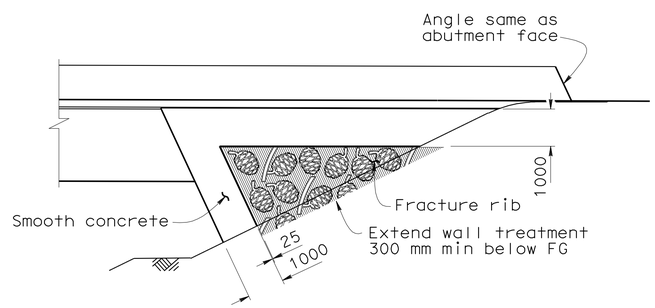

TYPICAL WINGWALL AESTHETIC TREATMENT
DETAIL D
1:80

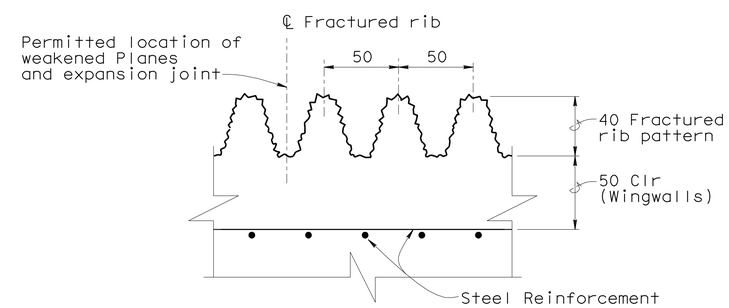

TYPICAL FRACTURED RIB TEXTURE
DETAIL 1
1:2

Caltrans Metric

	BY	CHECKED
DESIGN	V. Moore	M. Friedheim
DETAILS	V. Moore/C. Figuerres	M. Friedheim
QUANTITIES	I. Chernioglo	C. Schellenger

STATE OF CALIFORNIA
DEPARTMENT OF TRANSPORTATION

DIVISION OF ENGINEERING SERVICES
STRUCTURE DESIGN
DESIGN BRANCH 2

BRIDGE NO. 10-0157
KILOMETER POST R72.388

WILLITS BYPASS
EAST HILL ROAD UC
AESTHETIC DETAILS

ALL DIMENSIONS ARE IN MILLIMETERS UNLESS OTHERWISE SHOWN

ORIGINAL SCALE IN MILLIMETERS FOR REDUCED PLANS 0 10 20 30 40 50 60 70 80 90 100

CU 01
EA 262001

DISREGARD PRINTS BEARING EARLIER REVISION DATES

REVISION DATES: 9-26-06 10-26-06 1-26-09

SHEET 10 OF 14

FILE => 10-0157_evadet1.dgn

STRUCTURES DESIGN DETAIL SHEET (METRIC) (REV.03-17-04)

USERNAME => s114640 DATE PLOTTED => 28-JAN-2012 TIME PLOTTED => 07:38

DIST.	COUNTY	ROUTE	KILOMETER POST TOTAL PROJECT	SHEET NO.	TOTAL SHEETS
01	Men	101	R69.4/R78.9	717	939

Caltrans Metric

M. Friedheim 9-15-11
REGISTERED ENGINEER - CIVIL

1-23-12
PLANS APPROVAL DATE

REGISTERED PROFESSIONAL ENGINEER M. Friedheim No. 57968 Exp. 6-30-12 CIVIL STATE OF CALIFORNIA

The State of California or its officers or agents shall not be responsible for the accuracy or completeness of electronic copies of this plan sheet.

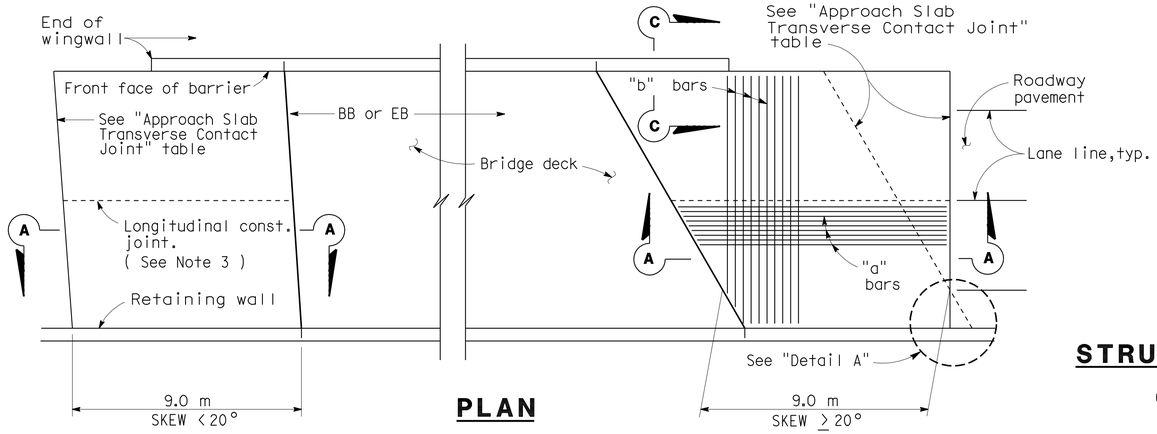

PLAN

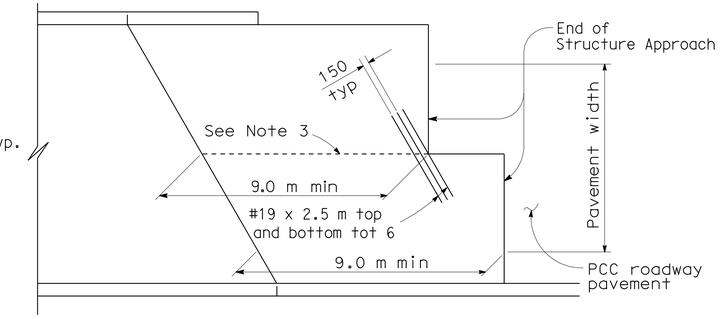

STRUCTURE APPROACH - END STAGGER DETAIL

APPROACH SLAB TRANSVERSE CONTACT JOINT		
APPROACH SKEW	WITH AC ROADWAY PAVEMENT	WITH PCC ROADWAY PAVEMENT
< 20°	Parallel to face of paving notch	Parallel to face of paving notch
20°- 45°	Parallel to face of P N use (Detail A)	Stagger lines 7.2 m to 10.8 m apart.
> 45°	Parallel to face of P N use (Detail A)	Stagger at each lane line.

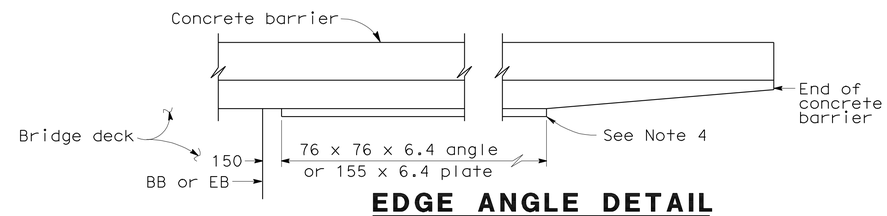

EDGE ANGLE DETAIL

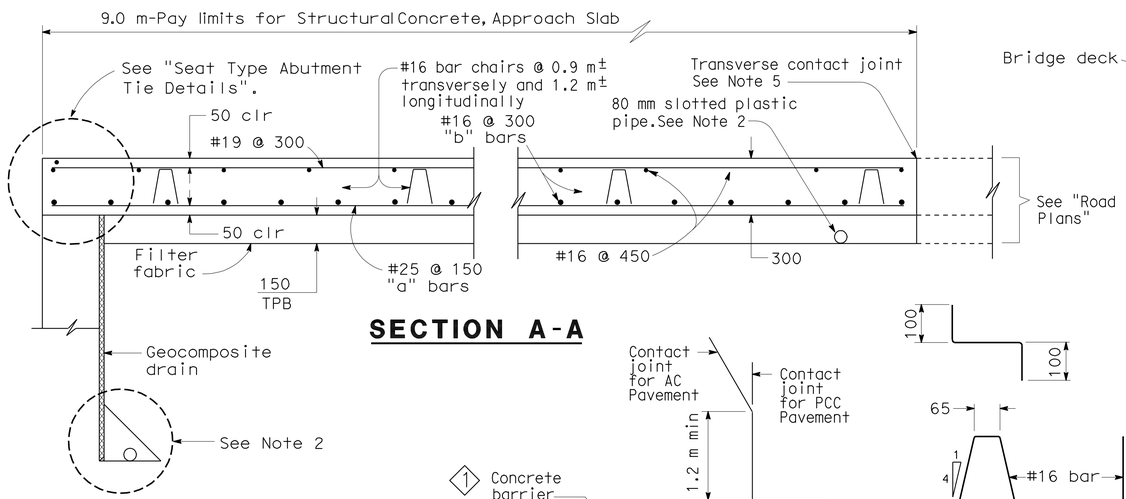

SECTION A-A

DETAIL A

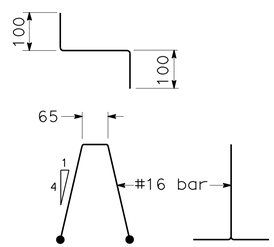

BAR CHAIR DETAIL

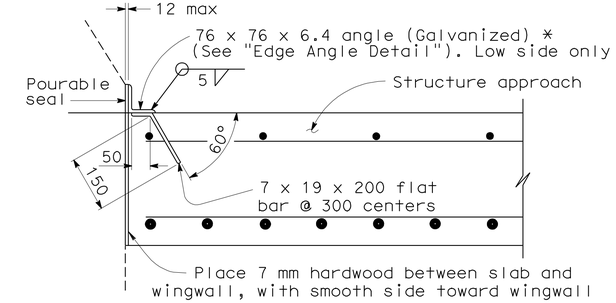

*(TO BE USED WITH TYPE 25 OR TYPE 27 CONCRETE BARRIER)

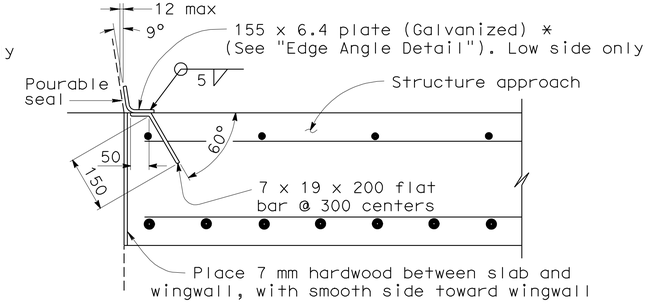

*(TO BE USED WITH TYPE 732 OR TYPE 736 CONCRETE BARRIER)

DETAIL B

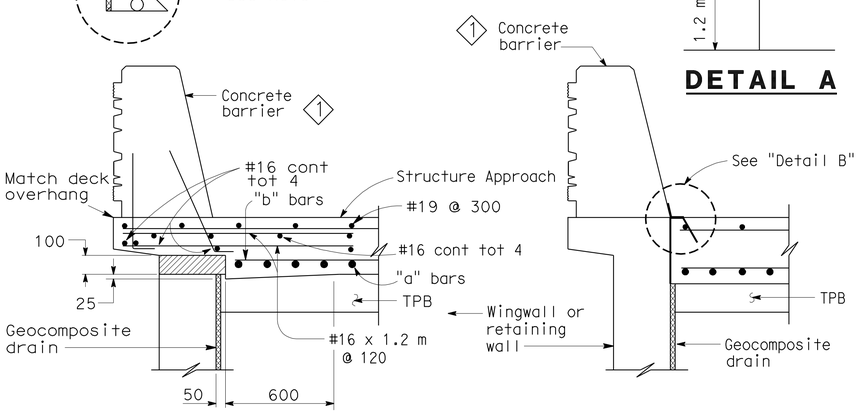

TYPE E-1

TYPE E-2

SECTION C-C

(Type E-1 to be used,unless otherwise shown on plans)

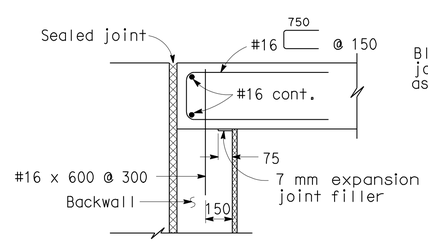

MR ≤ 50 mm

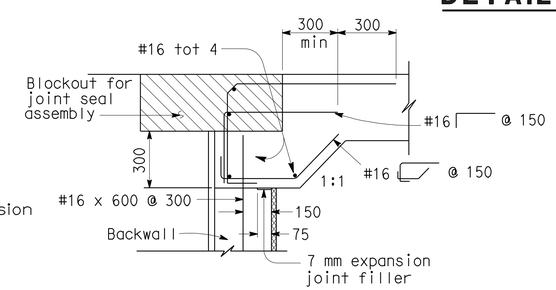

MR > 50 mm

SEAT TYPE ABUTMENT TIE DETAILS (SEE NOTE 1)

NOTES:

1. For details not shown,see Structure Plans. For MR ≤ 50 mm,adjust bar reinforcement to clear a sawcut for sealed joint,when required.
2. For drainage details,see "Structure Approach Drainage Details" sheet.
3. Longitudinal construction joints,when permitted by the Engineer, shall be located on lane lines.
4. End angle or plate at beginning of barrier transition, end of wingwall or end of structure approach as applicable.
5. For transverse contact joint with new PCC paving, refer to Standard Plan P30
6. At the contractor's option, approach slab transverse reinforcement may be placed parallel to paving notch. Spacing of transverse reinforcement is measured along ℄ roadway.

Remove all polystyrene.

SPECIAL DETAILS
NO SCALE
ALL DIMENSIONS ARE IN MILLIMETERS UNLESS OTHERWISE SHOWN

STANDARD DRAWING					
RELEASE DATE REVISED	DESIGN	BY M. TRAFFALIS	CHECKED E. THORKILDSEN	RELEASED BY	
FILE NO. xs3-120	DETAILS	BY R. YEE	CHECKED E. THORKILDSEN		
	SUBMITTED	BY M. HA	DRAWING DATE 4/98	OFFICE CHIEF	

1 Modified barrier

STATE OF CALIFORNIA
DEPARTMENT OF TRANSPORTATION

DIVISION OF ENGINEERING SERVICES
STRUCTURE DESIGN
DESIGN BRANCH 2

BRIDGE NO. 10-0157
KILOMETER POST R72.388

WILLITS BYPASS
EAST HILL ROAD UC
STRUCTURE APPROACH TYPE N(9S)

DS OSD 2147A (METRIC) (REV. 2/25/97)

ORIGINAL SCALE IN MILLIMETERS FOR REDUCED PLANS 0 10 20 30 40 50 60 70 80 90 100

CU 01
EA 262001

DISREGARD PRINTS BEARING EARLIER REVISION DATES

REVISION DATES (PRELIMINARY STAGE ONLY) 2-22-05 11-11-06 10-14-08 0-12-08 8-27-08 1-26-09 7-01-09

SHEET 11 OF 14

USERNAME => s114640

10-0157_exsdt01.dgn

DATE PLOTTED => 28-JAN-2012 TIME PLOTTED => 07:38

DIST.	COUNTY	ROUTE	KILOMETER POST TOTAL PROJECT	SHEET NO.	TOTAL SHEETS
01	Men	101	R69.4/R78.9	718	939

Caltrans Metric

REGISTERED ENGINEER - CIVIL 9-15-11

1-23-12
PLANS APPROVAL DATE

REGISTERED PROFESSIONAL ENGINEER M. Friedheim No. 57968 Exp. 6-30-12 CIVIL STATE OF CALIFORNIA

The State of California or its officers or agents shall not be responsible for the accuracy or completeness of electronic copies of this plan sheet.

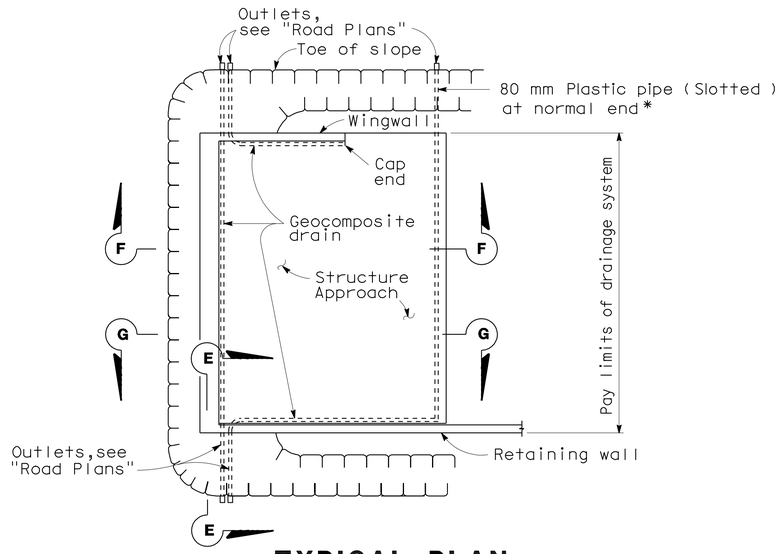

TYPICAL PLAN

*For pipe layout at staggered end, see "Detail B".

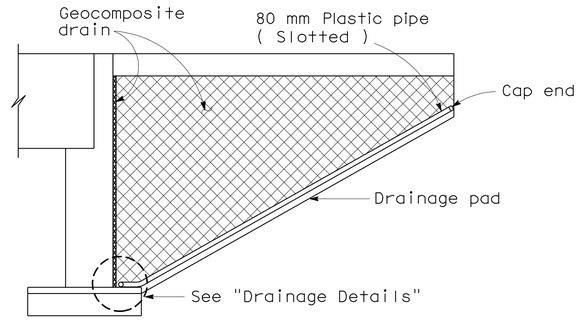

CANTILEVER WINGWALL SECTION F-F

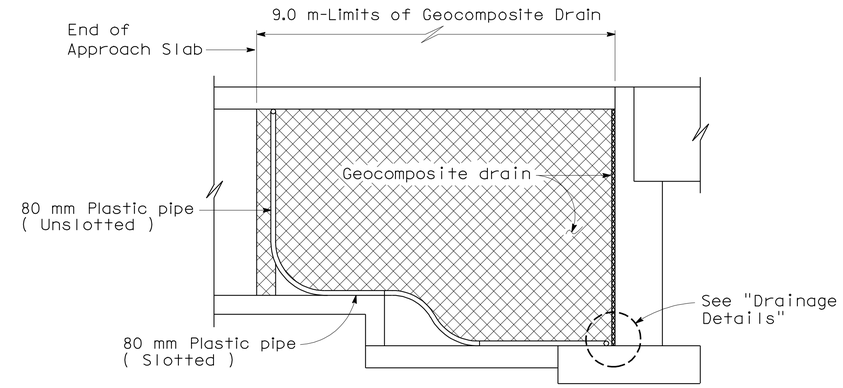

RETAINING WALL WINGWALL SECTION G-G

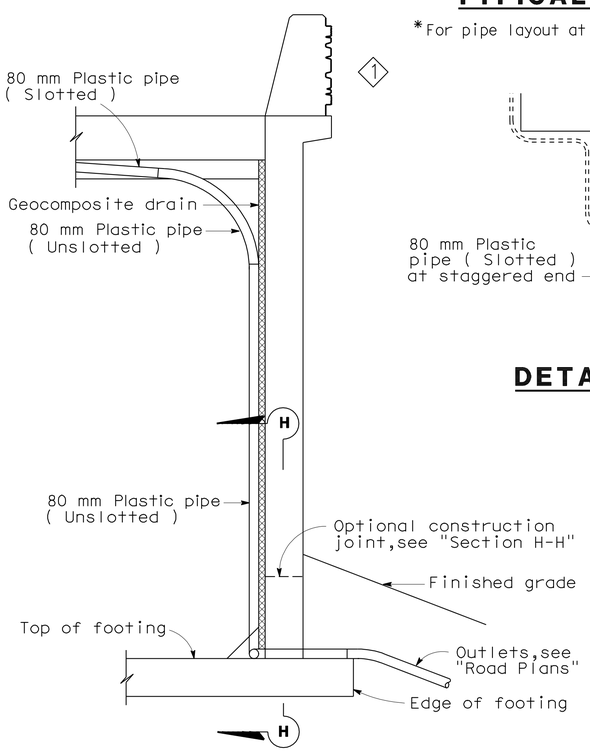

SECTION E-E

NOTE: Bends and junctions in 80 mm plastic pipe are 750 mm radius min.

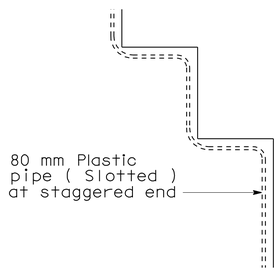

DETAIL B

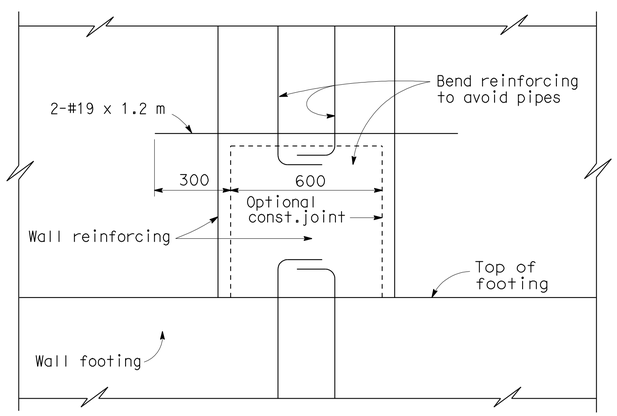

SECTION H-H

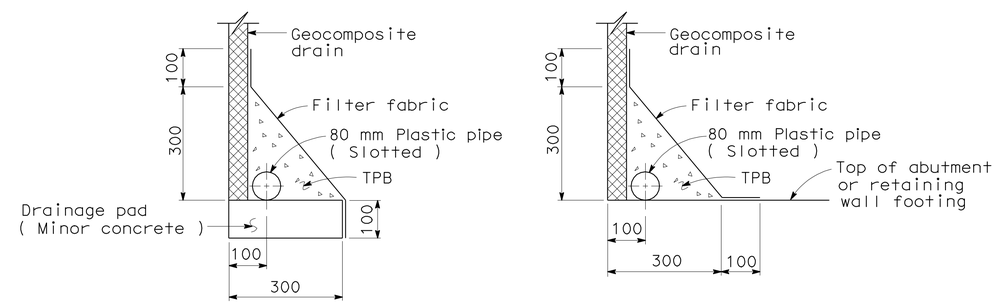

WITHOUT FOOTING WITH FOOTING

DRAINAGE DETAILS

SPECIAL DETAILS

NO SCALE

ALL DIMENSIONS ARE IN MILLIMETERS UNLESS OTHERWISE SHOWN

STANDARD DRAWING				
RELEASE DATE REVISED	DESIGN	BY M. TRAFFALIS	CHECKED E. THORKILDSEN	RELEASED BY
FILE NO. xs3-110	DETAILS	BY R. YEE	CHECKED E. THORKILDSEN	
	SUBMITTED	BY M. HA	DRAWING DATE 4/98	OFFICE CHIEF

1 Modified barrier

STATE OF CALIFORNIA DEPARTMENT OF TRANSPORTATION

DIVISION OF ENGINEERING SERVICES STRUCTURE DESIGN DESIGN BRANCH 2

BRIDGE NO. 10-0157
KILOMETER POST R72.388

WILLITS BYPASS
EAST HILL ROAD UC
STRUCTURE APPROACH DRAINAGE DETAILS

DS OSD 2147A (METRIC) (REV. 2/25/97)

ORIGINAL SCALE IN MILLIMETERS FOR REDUCED PLANS 0 10 20 30 40 50 60 70 80 90 100

CU 01
EA 262001

DISREGARD PRINTS BEARING EARLIER REVISION DATES

REVISION DATES (PRELIMINARY STAGE ONLY) 12-29-05 11-06 10-16-06 8-27-08 1-26-09

SHEET 12 OF 14

USERNAME => s114640

10-0157_exsdt02.dgn

DATE PLOTTED => 28-JAN-2012 TIME PLOTTED => 07:38

DIST.	COUNTY	ROUTE	KILOMETER POST TOTAL PROJECT	SHEET NO.	TOTAL SHEETS
01	Men	101	R69.4/R78.9	719	939

Caltrans Metric

REGISTERED ENGINEER - CIVIL 9-15-11

PLANS APPROVAL DATE 1-23-12

REGISTERED PROFESSIONAL ENGINEER M. Friedheim No. 57968 Exp. 6-30-12 CIVIL STATE OF CALIFORNIA

The State of California or its officers or agents shall not be responsible for the accuracy or completeness of electronic copies of this plan sheet.

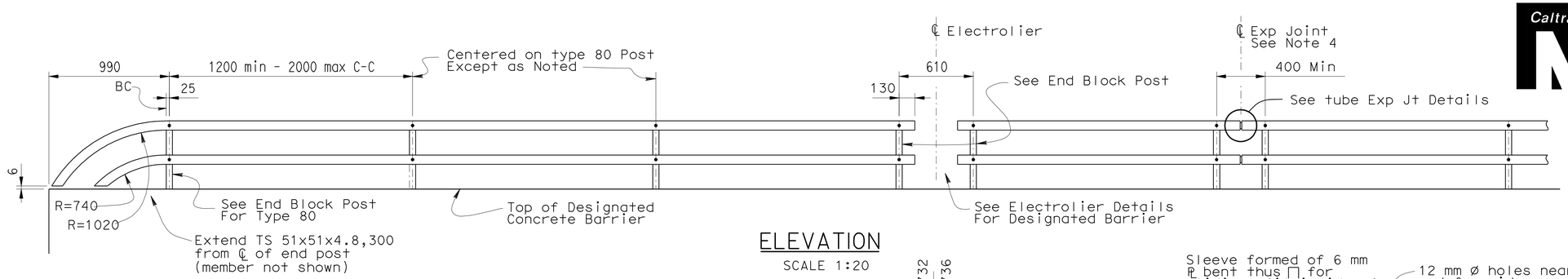

ELEVATION
SCALE 1:20

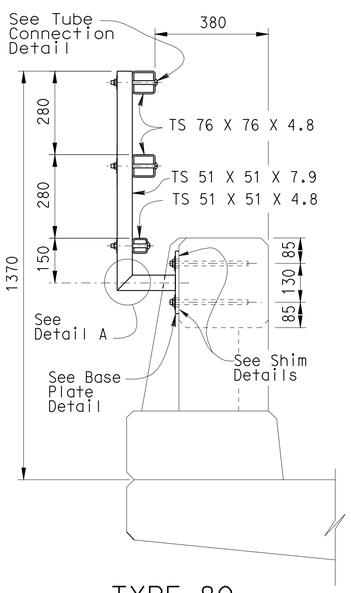

TYPE 80
END BLOCK POST
SCALE 1:10

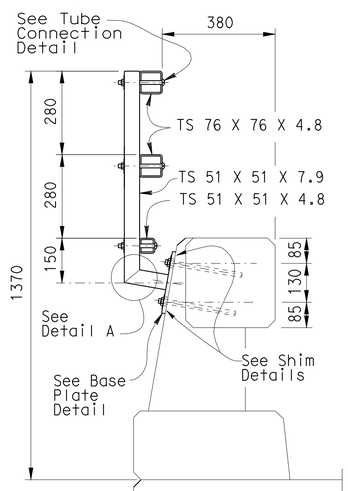

TYPE 80
SCALE 1:10

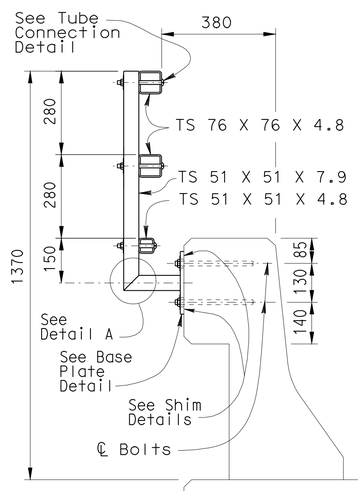

TYPE 25
SCALE 1:10

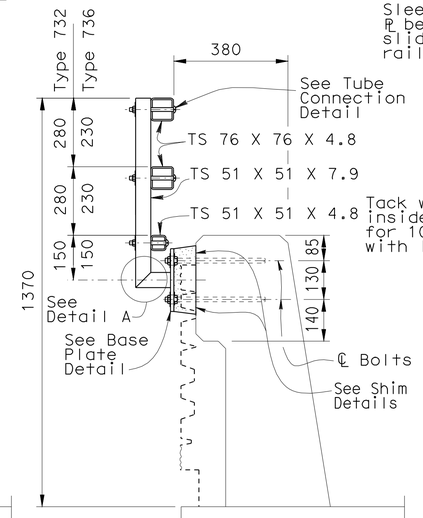

TYPE 732 OR 736 ◇1
NO SCALE

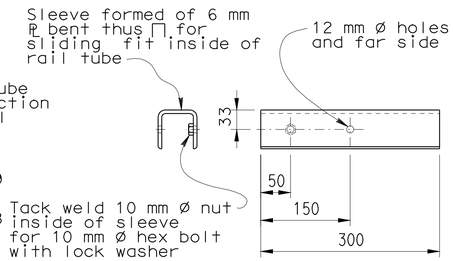

SLEEVE DETAIL
SCALE 1:5

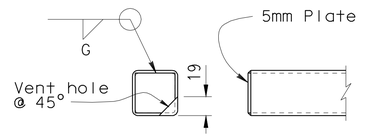

RAIL CAP DETAIL
SCALE 1:5

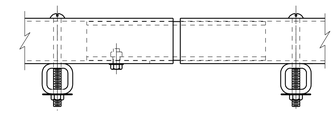

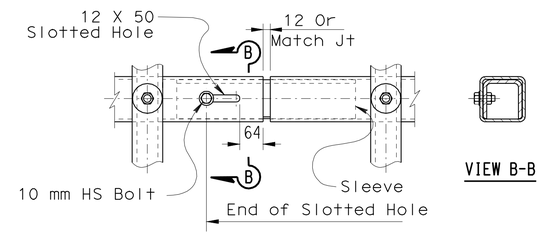

TUBE EXPANSION JOINT DETAILS
SCALE 1:5

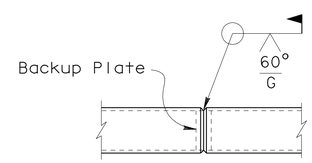

WELDED SPLICE DETAIL
SCALE 1:5

NOTES:

1. Galvanize rail assembly after fabrication.
2. Post shall be normal to railing.
3. Rail tubes shall be shop bent or fabricated to fit horizontal curve when radius is less than 300 m.
4. Tube splices shall be located in the tubes spanning deck or wall joints. Increase joint width in tubes to match expansion joint width and increase sleeve length correspondingly.
5. Top rail tube shall be continuous over not less than two posts except a short post spacing is permitted near deck or wall joints, electroliers, or other rail discontinuities as noted.
6. For details and reinforcement not shown see Standard Plans.
7. See project plans for limits of tubular bicycle railing.
8. CIP threaded rods may alternatively be installed using a drill and bond method with epoxy cartridges after forming and pouring barrier concrete. Plates to be placed against level surface.

SPECIAL DETAILS

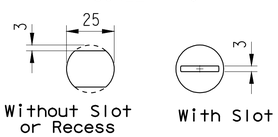

VIEW C-C
SCALE 1:1

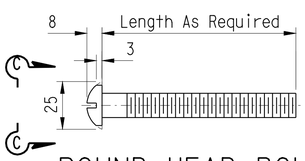

ROUND HEAD BOLT DETAIL
SCALE 1:1

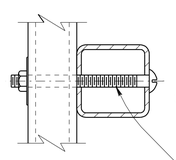

TUBE CONNECTION DETAIL
SCALE 1:2.5

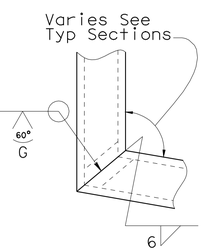

DETAIL A
SCALE 1:2.5

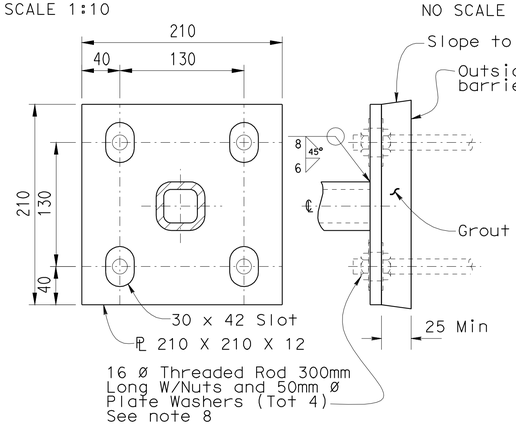

BASE PLATE DETAIL ◇2
SCALE 1:2.5

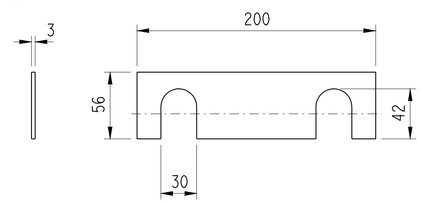

SHIM DETAILS
NO SCALE

RELEASE DATE	REVISED	DESIGN	BY TILLAT SATTER	CHECKED NEELIMA PATIL	RELEASED BY
FILE NO.	XS16-500	DETAILS	BY H.NGUYEN	CHECKED TILLAT SATTER	OFFICE CHIEF
		SUBMITTED	BY	DRAWING DATE 08/06	

◇1 Barrier modified
◇2 Plate details modified

STATE OF CALIFORNIA
DEPARTMENT OF TRANSPORTATION

DIVISION OF ENGINEERING SERVICES

BRIDGE NO. 10-0157
KILOMETER POST R72.388

WILLITS BYPASS
EAST HILL ROAD UC
TUBULAR BICYCLE RAILING

DS OSD 2I39M (METRIC) (REV. 3/5/97)

ORIGINAL SCALE IN MILLIMETERS FOR REDUCED PLANS 0 10 20 30 40 50 60 70 80 90 100

CU 01
EA 262001

DISREGARD PRINTS BEARING EARLIER REVISION DATES

REVISION DATES (PRELIMINARY STAGE ONLY) 2-24-08 1-26-09 01-30-09 07-15-09

SHEET 13 OF 14

USERNAME => s114640 DATE PLOTTED => 28-JAN-2012 TIME PLOTTED => 07:38

USERNAME => s114640 FILE => 10-0157_exsdt03.dgn VI=I

DIST	COUNTY	ROUTE	KILOMETER POST TOTAL PROJECT	SHEET No	TOTAL SHEETS
01	Men	101	R69.4/R78.9	720	939

CERTIFIED ENGINEERING GEOLOGIST — DATE 5-19-09

1-23-12
PLANS APPROVAL DATE

REGISTERED GEOLOGIST — Reid Buell — No. 1481 — Exp. 4-30-11 — CERTIFIED ENGINEERING GEOLOGIST — STATE OF CALIFORNIA

The State of California or its officers or agents shall not be responsible for the accuracy or completeness of electronic copies of this plan sheet.

BENCH MARK

SUHV 66
Fnd ALCAR @ C-1
31.541 m Lt ℄ Rte 101
Sta 125+79.229
N 692293.711
E 1884946.726
Elev = 424.242

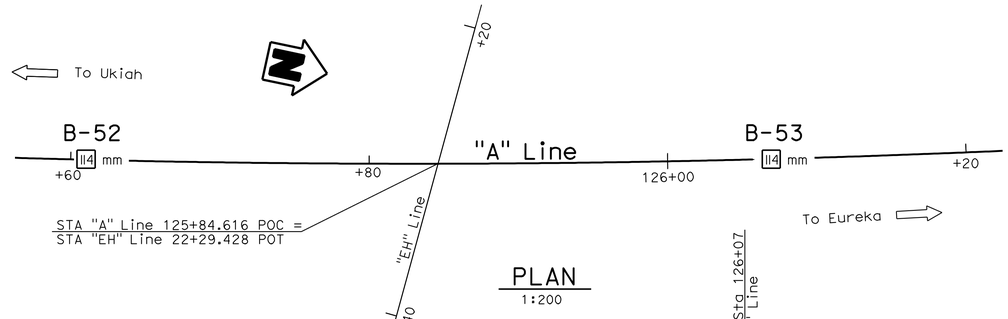

PLAN
1:200

Notes:

1. Standard Penetration Tests (SPT) performed in Borings B-80 and B-81 were advanced using a 63.5 kg Safety Hammer.
2. E=Blow count for 0.3 m penetration extrapolated from blow count for less than 0.3 m (due to change in material or hard driving).
3. pp= Unconfined commpressive strength determined in the field by "Pocket Penetrometer. " Units shown are kilopascals (kPa).
4. UU= Undrained shear strength determined in the laboratory by Unconsolidated-Undrained Triaxial Test. Units shown are kilopascals (kPa).
5. Consistency descriptors shown on the LOTB sheets are based on the pocket penetrometer readings.
6. Groundwater surface Elevations are subject to seasonal fluctuations and may occur at higher or lower Elevations depending on conditions at any particular time.

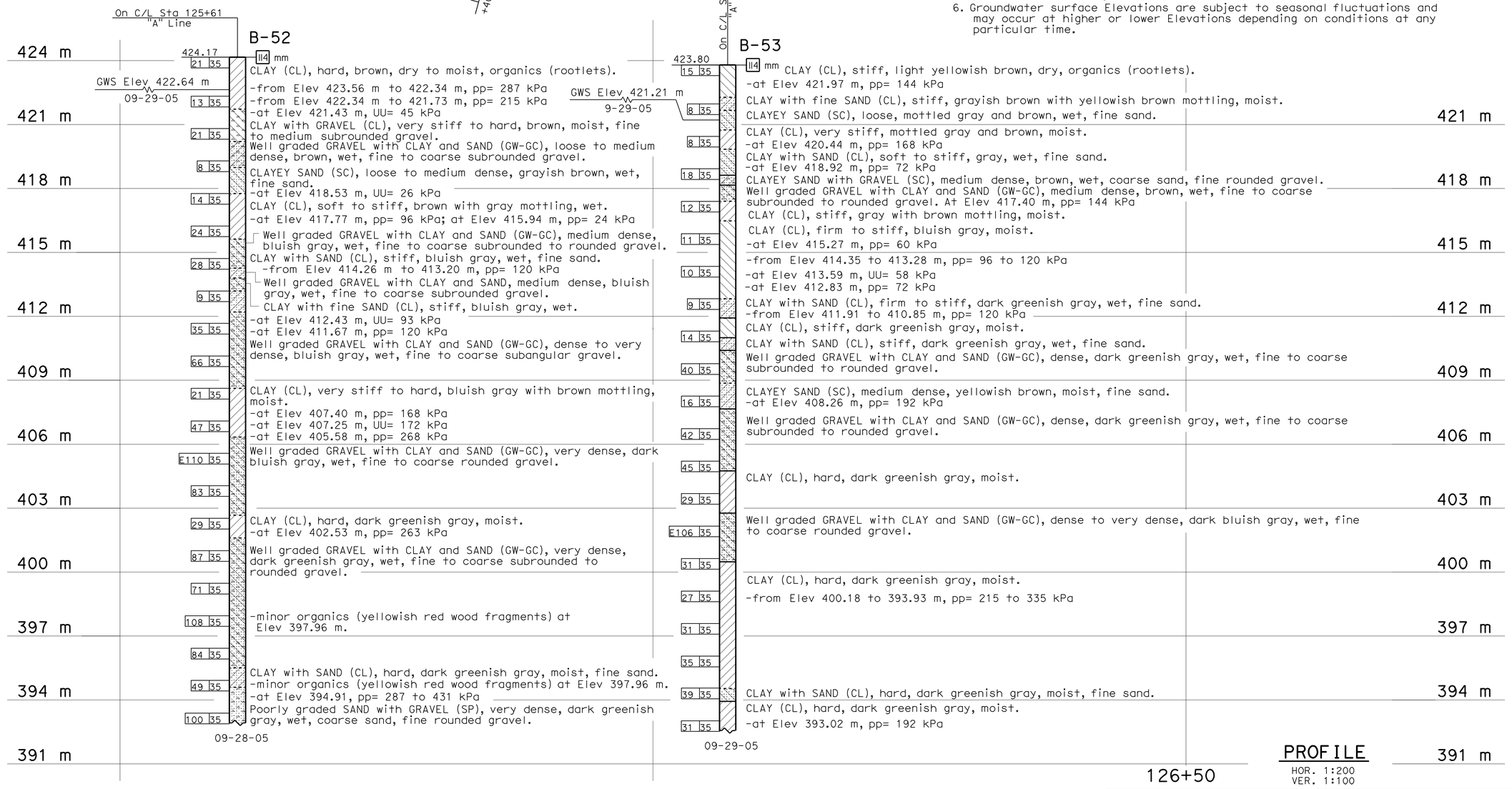

PROFILE
HOR. 1:200
VER. 1:100

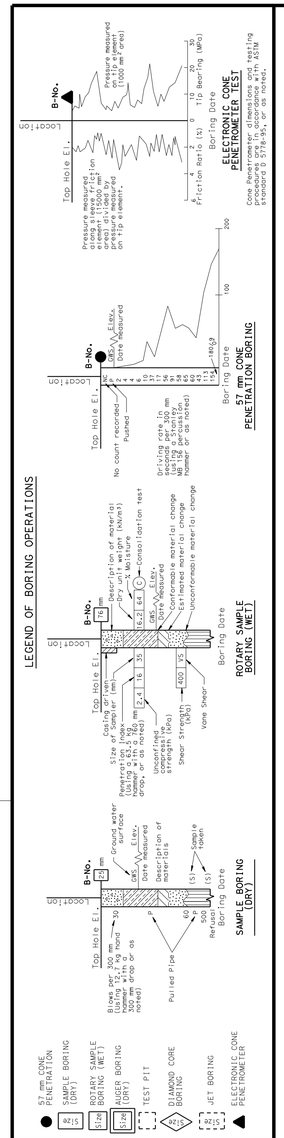

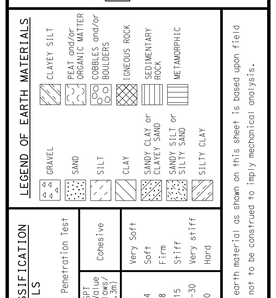

CONSISTENCY CLASSIFICATION FOR SOILS
According to the Standard Penetration Test

SPT N-Value (Blows/ 0.3m)	Granular	SPT N-Value (Blows/ 0.3m)	Cohesive
0-4	Very Loose	<2	Very Soft
5-10	Loose	2-4	Soft
11-30	Medium Dense	5-8	Firm
31-50	Dense	9-15	Stiff
>50	Very Dense	16-30	Very stiff
		>30	Hard

NOTE: Classification of earth material as shown on this sheet is based upon field inspection and is not to be construed to imply mechanical analysis.

OGS CIVIL LOG OF TEST BORINGS SHEET (METRIC) (REV. 4/04)

Caltrans Metric

ENGINEERING SERVICES	GEOTECHNICAL SERVICES
DRAWN BY	W. Tang 02/2009
CHECKED BY	

FIELD INVESTIGATION BY: T. Alderman

STATE OF CALIFORNIA DEPARTMENT OF TRANSPORTATION

DIVISION OF ENGINEERING SERVICES STRUCTURE DESIGN — DESIGN BRANCH 2

BRIDGE NO. 10-0157
KILOMETER POST R72.388

WILLITS BYPASS
EAST HILL ROAD UC
LOG OF TEST BORINGS

ALL DIMENSIONS ARE IN METERS UNLESS OTHERWISE SHOWN

ORIGINAL SCALE IN MILLIMETERS FOR REDUCED PLANS 0 10 20 30 40 50 60 70 80 90 100

CU 01
EA 262001

DISREGARD PRINTS BEARING EARLIER REVISION DATES

REVISION DATES (PRELIMINARY STAGE ONLY) 04-23-09 05-11-09 05-19-09

SHEET 14 OF 14

FILE => 10-0157_eylotb.dgn

USERNAME => s114640 DATE PLOTTED => 28-JAN-2012 TIME PLOTTED => 07:38

DIST	COUNTY	ROUTE	KILOMETER POST TOTAL PROJECT	SHEET No	TOTAL SHEETS
01	Men	101	R69.4/R78.9	721	939

REGISTERED CIVIL ENGINEER 9-15-11 DATE

1-23-12
PLANS APPROVAL DATE

REGISTERED PROFESSIONAL ENGINEER M. Friedheim No. 57968 Exp. 6-30-12 CIVIL STATE OF CALIFORNIA

The State of California or its officers or agents shall not be responsible for the accuracy or completeness of electronic copies of this plan sheet.

NOTES:

1. Metal Beam Guardrail, See Road Plans
2. Paint "HAEHL CREEK"
3. Paint Bridge Number and Year Constructed
4. Structure Approach Slab, Type N(9S)
5. See "Aesthetic Details" sheet
6. Concrete Barrier Type 736 Mod with Tubular Bicycle Railing

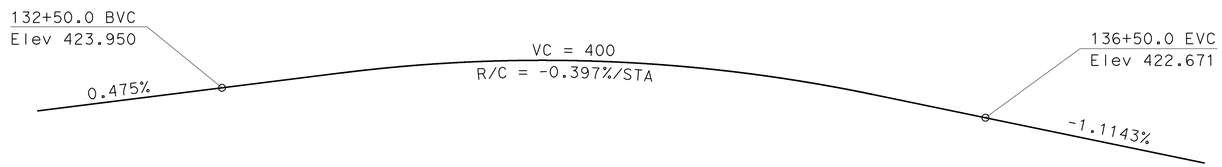

PROFILE GRADE

NO SCALE

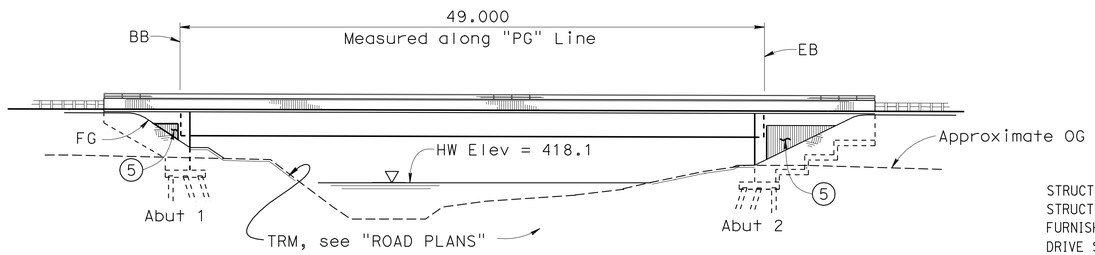

ELEVATION

1:250

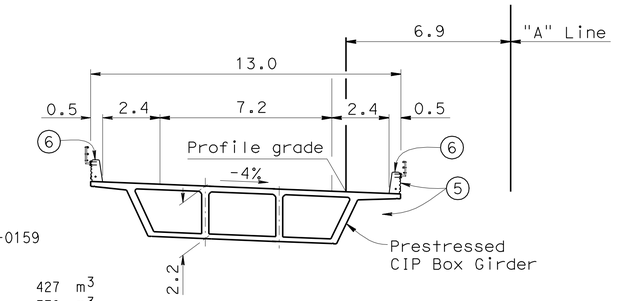

TYPICAL SECTION

1:125

HAEHL CREEK BRIDGE 10-0159
QUANTITIES

STRUCTURE EXCAVATION (BRIDGE)	427	m^3
STRUCTURE BACKFILL (BRIDGE)	378	m^3
FURNISH STEEL PILING (HP 250 X 62)	148	m
DRIVE STEEL PILE (HP 250 X 62)	6	EA
FURNISH PILING (CLASS 625)(ALTERNATIVE W)	1 147	m
DRIVE PILE (CLASS 625)(ALTERNATIVE W)	50	EA
PRESTRESSING CAST-IN-PLACE CONCRETE	LUMP SUM	
STRUCTURAL CONCRETE, BRIDGE FOOTING	67	m^3
STRUCTURAL CONCRETE, BRIDGE	445	m^3
STRUCTURAL CONCRETE, APPROACH SLAB (TYPE N)	74	m^3
ARCHITECTURAL TEXTURE	18	m^2
JOINT SEAL ASSEMBLY (MR 60 MM)	25	m
BAR REINFORCING STEEL (BRIDGE)	66 080	kg
TUBULAR BICYCLE RAILING (MODIFIED)	126	m
CONCRETE BARRIER (TYPE 736 MODIFIED)	126	m

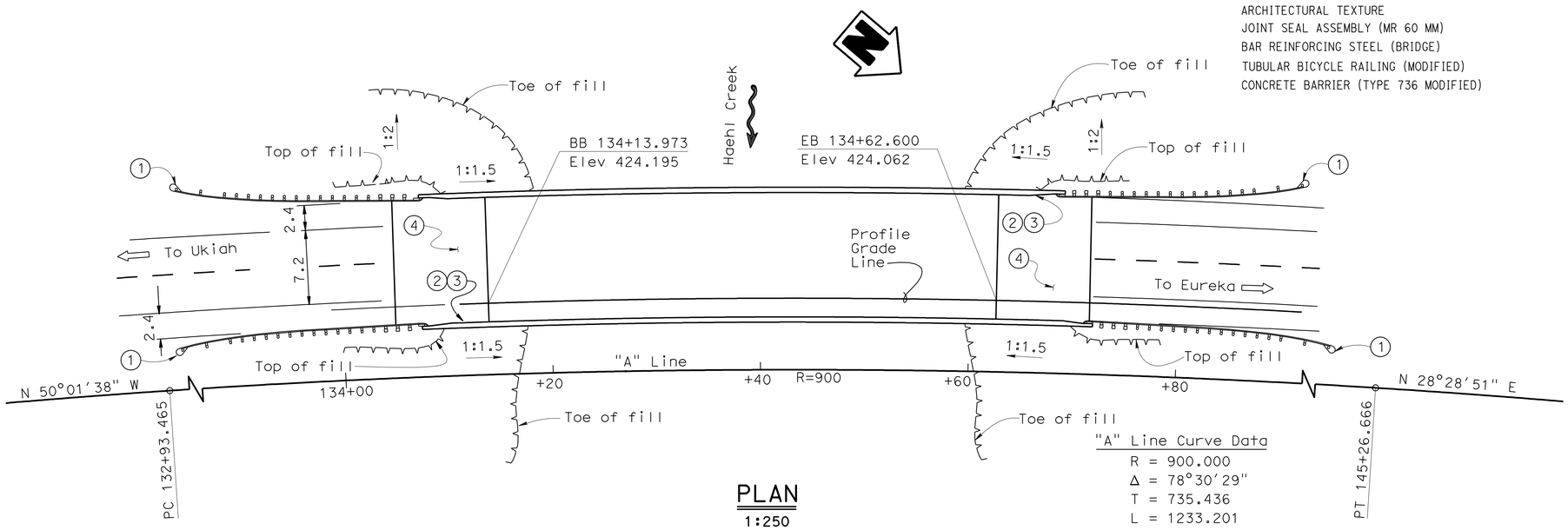

"A" Line Curve Data

R = 900.000
Δ = 78°30'29"
T = 735.436
L = 1233.201

PLAN

1:250

INDEX TO PLANS

1. GENERAL PLAN
2. DECK CONTOURS
3. FOUNDATION PLAN
4. ABUTMENT 1 LAYOUT
5. ABUTMENT 2 LAYOUT
6. ABUTMENT DETAILS NO. 1
7. ABUTMENT DETAILS NO. 2
8. ABUTMENT DETAILS NO. 3
9. TYPICAL SECTION
10. GIRDER LAYOUT
11. BOTTOM GIRDER REINFORCEMENT
12. AESTHETIC DETAILS
13. STRUCTURE APPROACH TYPE N(9S)
14. STRUCTURE APPROACH DRAINAGE DETAILS
15. JOINT SEAL ASSEMBLY (MAXIMUM MOVEMENT RATING = 100 mm)
16. TUBULAR BICYCLE RAILING
17. LOG OF TEST BORINGS NO. 1 OF 3
18. LOG OF TEST BORINGS NO. 2 OF 3
19. LOG OF TEST BORINGS NO. 3 OF 3

Note: For General Notes, Standard Plans and Pile Data Table, see "Deck Contours" sheet.

Caltrans Metric

DESIGN ENGINEER

	BY	CHECKED			
DESIGN	J. Lee/R. Odell	A. Okupe/M. Friedheim	LOAD FACTOR DESIGN	LIVE LOADING: HS20-44 AND ALTERNATIVE AND PERMIT DESIGN LOAD	
DETAILS	C. Figuerres	A. Okupe/M. Friedheim	LAYOUT	J. Lee	A. Okupe
QUANTITIES	R. Le	M. Friedheim	SPECIFICATIONS	I. Huang	PLANS AND SPECS COMPARED I. Huang

ALL DIMENSIONS ARE IN METERS UNLESS OTHERWISE SHOWN

ORIGINAL SCALE IN MILLIMETERS FOR REDUCED PLANS 0 10 20 30 40 50 60 70 80 90 100

STATE OF CALIFORNIA
DEPARTMENT OF TRANSPORTATION

DIVISION OF ENGINEERING SERVICES
STRUCTURE DESIGN
DESIGN BRANCH 2

CU 01
EA 262001

BRIDGE NO. 10-0159
KILOMETER POST R73.233

WILLITS BYPASS
HAEHL CREEK
GENERAL PLAN

DISREGARD PRINTS BEARING EARLIER REVISION DATES

REVISION DATES: 3-19-08 4-05-08 4-16-08 4-15-08 7-23-08 1-26-09 4-23-09 12-08-09 2-15-07

SHEET 1 OF 19

STRUCTURES DESIGN GENERAL PLAN SHEET (METRIC) (REV.03-17-04)

FILE => 10-0159_fagp01.dgn

USERNAME => s114640 DATE PLOTTED => 28-JAN-2012 TIME PLOTTED => 07:38

DIST	COUNTY	ROUTE	KILOMETER POST TOTAL PROJECT	SHEET No	TOTAL SHEETS
01	Men	101	R69.4/R78.9	722	939

REGISTERED CIVIL ENGINEER 9-15-11 DATE

1-23-12
PLANS APPROVAL DATE

REGISTERED PROFESSIONAL ENGINEER M. Friedheim No. 57968 Exp. 6-30-12 CIVIL STATE OF CALIFORNIA

The State of California or its officers or agents shall not be responsible for the accuracy or completeness of electronic copies of this plan sheet.

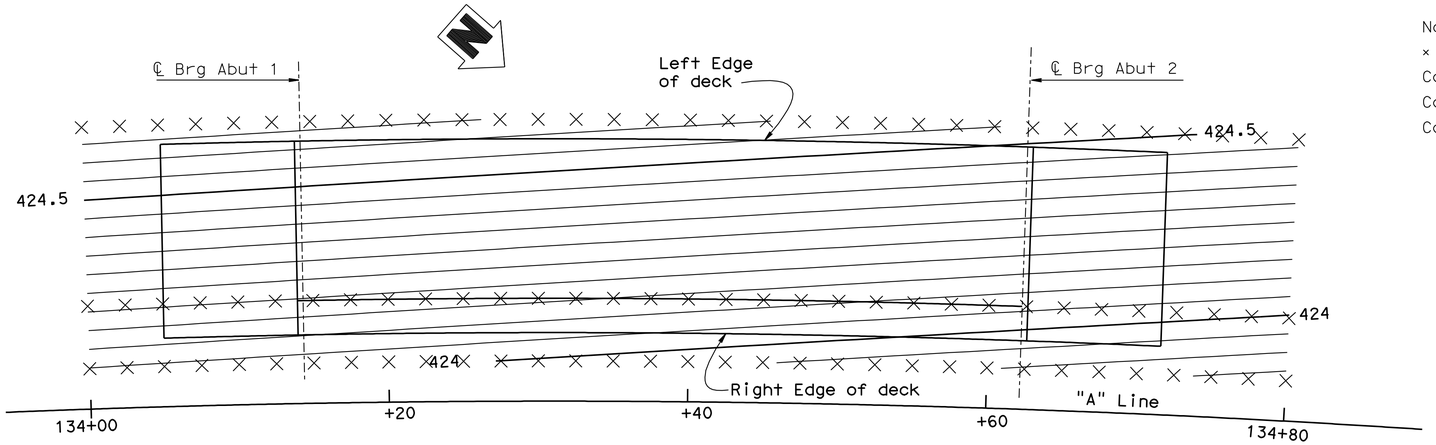

DECK CONTOURS

1:200

Notes:
× = 2.5 m interval measured along station line
Contours do not include camber
Contour interval = 0.05 m
Contours are shown in meters

GENERAL NOTES (LOAD FACTOR DESIGN)

DESIGN: Bridge Design Specifications - April 2000 (LFD) (1996 AASHTO with interims and revisions by Caltrans).
Project Specific Design Criteria - March 2009.

SEISMIC DESIGN: Caltrans SDC version 1.4 - June 2006

DEAD LOAD: Includes 1675 Pa for future wearing surface.
Includes 1460 N/m for future utilities.

LIVE LOAD: HS20-44 and alternative and permit design load.

SEISMIC LOADING: Modified Caltrans Seismic Design Criteria for Soil Profile Type D, PBA = 0.7 g. See Response Spectrum below.

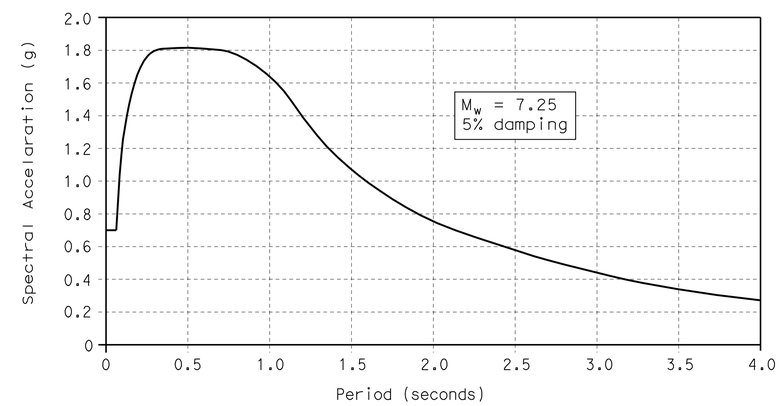

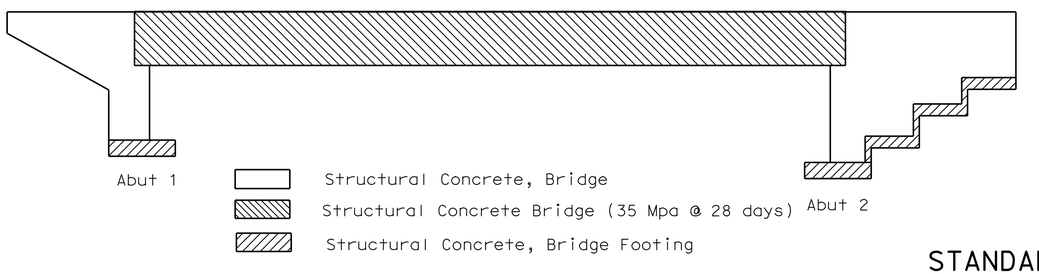

CONCRETE STRENGTH AND TYPE LIMITS

No Scale

REINFORCED CONCRETE:
fy = 420 MPa
f'c = 25 MPa (See concrete strength and type limits for exceptions)

Transverse Deck Slab (working stress design)
fs = 140 MPa
f'c = 8 MPa
n = 10

PRESTRESSED CONCRETE: See "Prestressing Notes" on "Girder Layout" sheet

STANDARD PLANS DATED JULY 2004

A10A	ACRONYMS AND ABBREVIATIONS (A-L)
A10B	ACRONYMS AND ABBREVIATIONS (M-Z)
A10C	SYMBOLS
A10D	SYMBOLS
A62C	LIMITS OF PAYMENT FOR EXCAVATION AND BACKFILL-BRIDGE
B0-1	BRIDGE DETAILS
B0-3	BRIDGE DETAILS
B0-5	BRIDGE DETAILS
B0-13	BRIDGE DETAILS
B2-5	PILE DETAILS CLASS 400 AND CLASS 625
B3-1	RETAINING WALL TYPE 1 H=1200 THROUGH 9100 MM
B3-8	RETAINING WALL DETAILS NO. 1
B7-1	BOX GIRDER DETAILS
B8-5	CAST-IN-PLACE PRESTRESSED GIRDER DETAILS
B11-56	CONCRETE BARRIER TYPE 736
RSP ES-9B	ELECTRICAL SYSTEMS (ELECTRICAL DETAILS STRUCTURE INSTALLATIONS)
RSP ES-9C	ELECTRICAL SYSTEMS (ELECTRICAL DETAILS STRUCTURE INSTALLATIONS)

Standard Plan sheet number
Detail number

PILE DATA TABLE

Location	Pile Type	Nominal Resistance		Design Tip Elevations	Specified Tip Elevations
		Compression	Tension		
Abut 1	Class 625 (Alt.W)	1250 KN	0 KN	396.0 (1,2)	396.0
Abut 2	Class 625 (Alt.W)	1250 KN	0 KN	396.0 (1,2)	396.0
Abut 2 RW	HP 250 x 62	800 KN	0 KN	396.0 (1,2)	396.0

Tip elevation controlled by the following demands:
(1) Compression
(2) Scour potential exists to Elev. 414.3

Caltrans Metric

	BY	CHECKED
DESIGN	J. Lee	A. Okupe
DETAILS	C. Figuerres	A. Okupe
QUANTITIES	R. Le	M. Friedheim

STATE OF CALIFORNIA
DEPARTMENT OF TRANSPORTATION

DIVISION OF ENGINEERING SERVICES
STRUCTURE DESIGN
DESIGN BRANCH 2

BRIDGE NO. 10-0159
KILOMETER POST R73.233

WILLITS BYPASS
HAEHL CREEK
DECK CONTOURS

ALL DIMENSIONS ARE IN MILLIMETERS UNLESS OTHERWISE SHOWN

ORIGINAL SCALE IN MILLIMETERS FOR REDUCED PLANS 0 10 20 30 40 50 60 70 80 90 100

CU 01
EA 262001

DISREGARD PRINTS BEARING EARLIER REVISION DATES

REVISION DATES: 9-18-05 11-11-08 01-30-09 7-01-09 2-09-07 2-15-07 3-25-08 4-08-08 4-14-08 4-15-08

SHEET 2 OF 19

FILE => 10-0159_fddc01.dgn

STRUCTURES DESIGN DETAIL SHEET (METRIC) (REV.03-17-04)

USERNAME => s114640 DATE PLOTTED => 28-JAN-2012 TIME PLOTTED => 07:38

DIST	COUNTY	ROUTE	KILOMETER POST TOTAL PROJECT	SHEET No	TOTAL SHEETS
01	Men	101	R69.4/R78.9	723	939

Caltrans Metric

REGISTERED CIVIL ENGINEER 9-15-11 DATE

1-23-12
PLANS APPROVAL DATE

REGISTERED PROFESSIONAL ENGINEER M. Friedheim No. 57968 Exp. 6-30-12 CIVIL STATE OF CALIFORNIA

The State of California or its officers or agents shall not be responsible for the accuracy or completeness of electronic copies of this plan sheet.

NO	R	Δ	T	L
Ⓐ	900.000	78°30'29"	735.436	1233.201

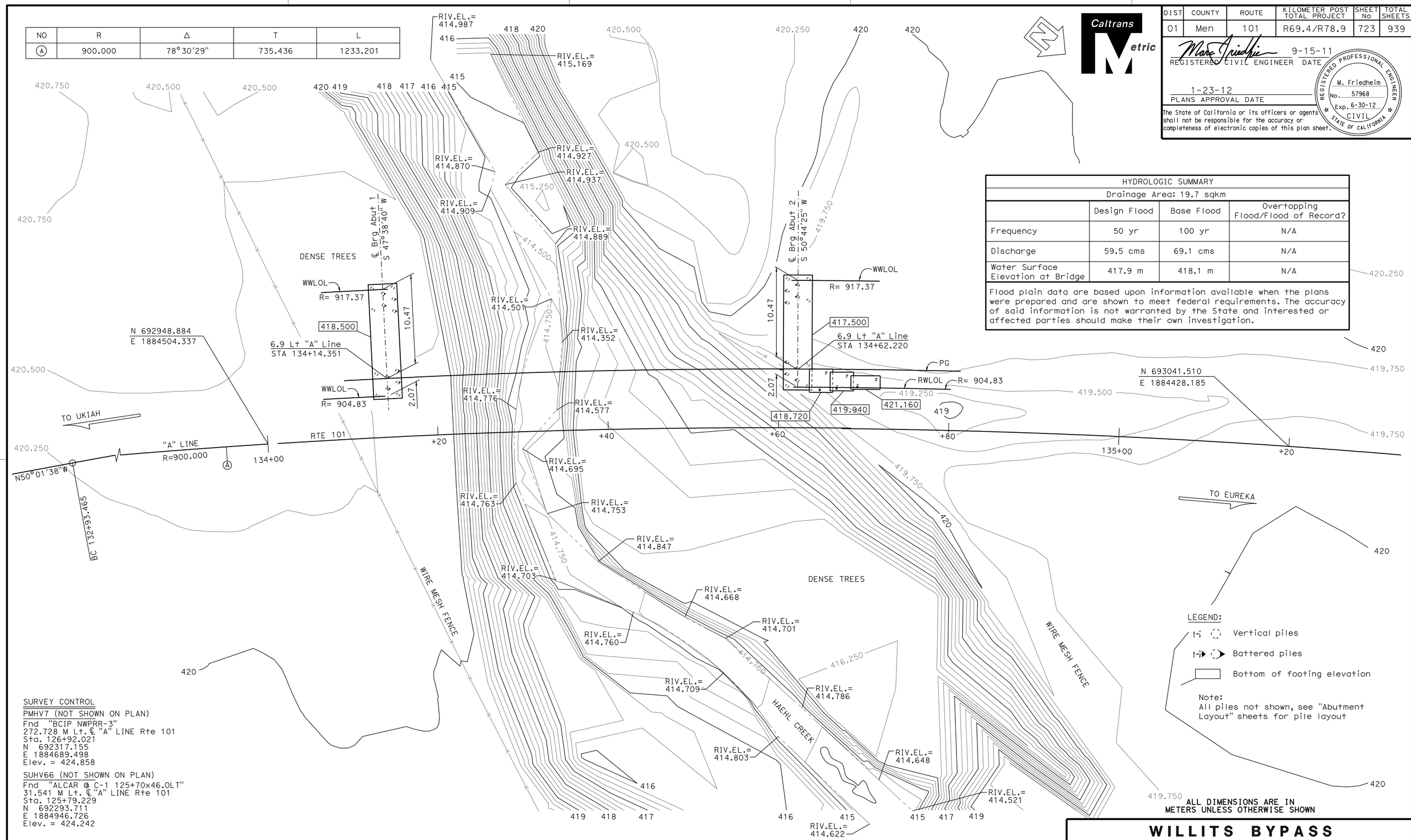

HYDROLOGIC SUMMARY			
Drainage Area: 19.7 sqkm			
	Design Flood	Base Flood	Overtopping Flood/Flood of Record?
Frequency	50 yr	100 yr	N/A
Discharge	59.5 cms	69.1 cms	N/A
Water Surface Elevation at Bridge	417.9 m	418.1 m	N/A

Flood plain data are based upon information available when the plans were prepared and are shown to meet federal requirements. The accuracy of said information is not warranted by the State and interested or affected parties should make their own investigation.

SURVEY CONTROL

PMHV7 (NOT SHOWN ON PLAN)
Fnd "BCIP NWPRR-3"
272.728 M Lt. ℄ "A" LINE Rte 101
Sta. 126+92.021
N 692317.155
E 1884689.498
Elev. = 424.858

SUHV66 (NOT SHOWN ON PLAN)
Fnd "ALCAR @ C-1 125+70x46.OLT"
31.541 M Lt. ℄ "A" LINE Rte 101
Sta. 125+79.229
N 692293.711
E 1884946.726
Elev. = 424.242

ALL DIMENSIONS ARE IN METERS UNLESS OTHERWISE SHOWN

PRELIMINARY INVESTIGATION SECTION

SCALE	VERT. DATUM NGVD29	PHOTOGRAMMETRY AS OF:		
1:200	HORZ. DATUM NAD83 (1991.35)	SURVEYED	BY DIST. 2000 & 2004	DRAFTED BY T.ZOLNIKOVA 08/2005
ALIGNMENT TIES DIST.TRAVERSE SHEET		FIELD CHECKED BY		CHECKED BY F.BANDA 08/2005

	BY	CHECKED
DESIGN	J. Lee	A. Okupe
DETAILS	C. Figuerres	A. Okupe
QUANTITIES	R. Le	M. Friedheim

STATE OF CALIFORNIA
DEPARTMENT OF TRANSPORTATION

DIVISION OF ENGINEERING SERVICES
STRUCTURE DESIGN
DESIGN BRANCH 2

BRIDGE NO. 10-0159
KILOMETER POST R73.233

WILLITS BYPASS
HAEHL CREEK
FOUNDATION PLAN

STRUCTURES FOUNDATION PLAN SHEET (METRIC) (REV.12-1-01)

ORIGINAL SCALE IN MILLIMETERS FOR REDUCED PLANS 0 10 20 30 40 50 60 70 80 90 100

CU 01
EA 262001

DISREGARD PRINTS BEARING EARLIER REVISION DATES

REVISION DATES (PRELIMINARY STAGE ONLY) 08/16/05 10/25/05 2/21/06 3/25/08 4/14/08 11-17-08

SHEET 3 OF 19

FILE => 10-0159_fefp01.dgn

USERNAME => s14640 DATE PLOTTED => 28-JAN-2012 TIME PLOTTED => 07:38

DIST	COUNTY	ROUTE	KILOMETER POST TOTAL PROJECT	SHEET No	TOTAL SHEETS
01	Men	101	R69.4/R78.9	724	939

REGISTERED CIVIL ENGINEER 9-15-11 DATE

1-23-12
PLANS APPROVAL DATE

REGISTERED PROFESSIONAL ENGINEER M. Friedheim No. 57968 Exp. 6-30-12 CIVIL STATE OF CALIFORNIA

The State of California or its officers or agents shall not be responsible for the accuracy or completeness of electronic copies of this plan sheet.

Notes:

1. For "Abutment Shear Key Reinforcement", see "Abutment Details No. 2" sheet.
2. For "Steel Pipe Pile Anchor Detail", see "Abutment Details No. 3" sheet.
3. For Bearing Pad, Joint Protection, and Backwall Base details, see "Abutment Details No. 3" sheet.
4. For "Section D-D and E-E", see "Abutment Details No. 1" sheet.
5. For "Abutment Wingwall Elevation", see "Abutment Details No. 2" sheet.
6. For "Joint Seal Assembly", see "Joint Seal Assembly (Maximum Movement Rating = 100 mm)" sheet.

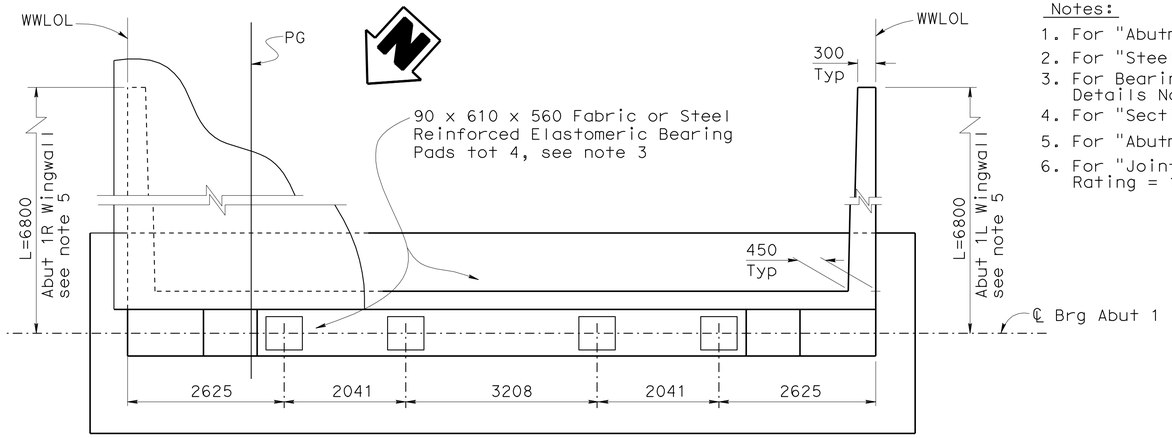

PLAN
1:50

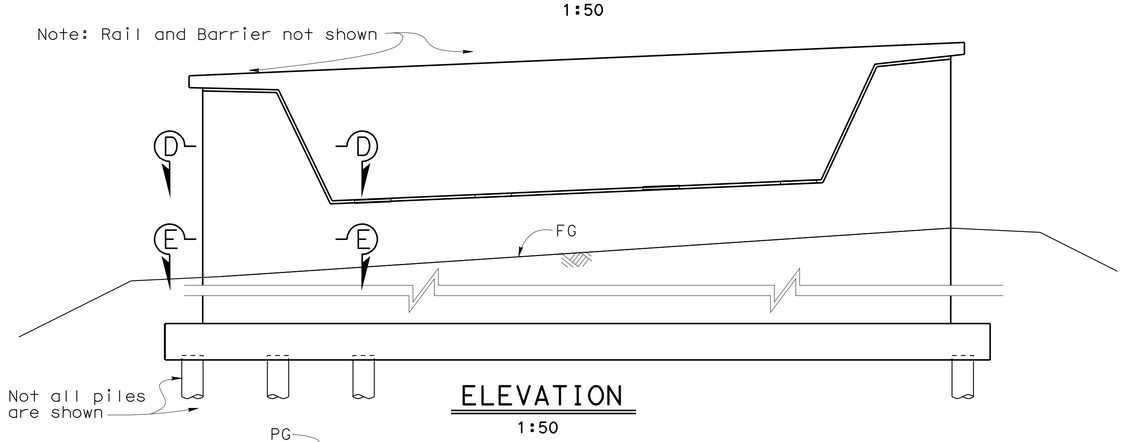

ELEVATION
1:50

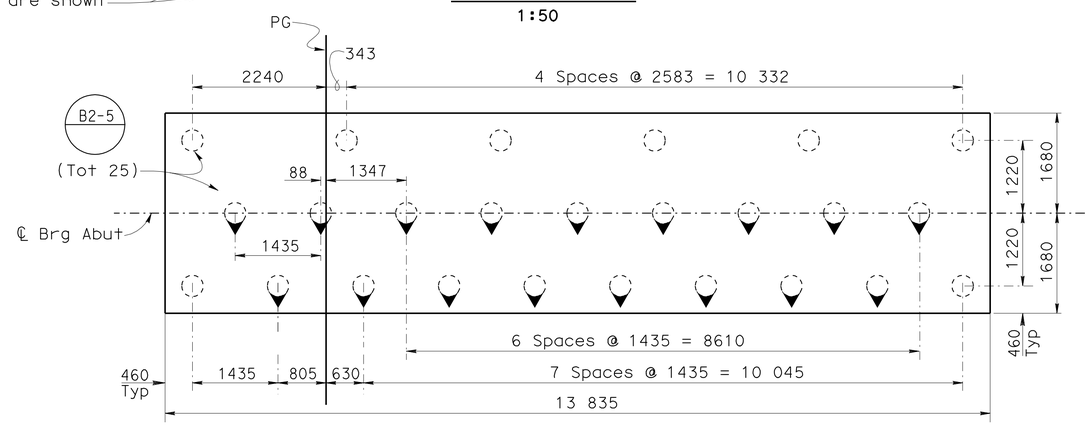

FOOTING PLAN
1:50

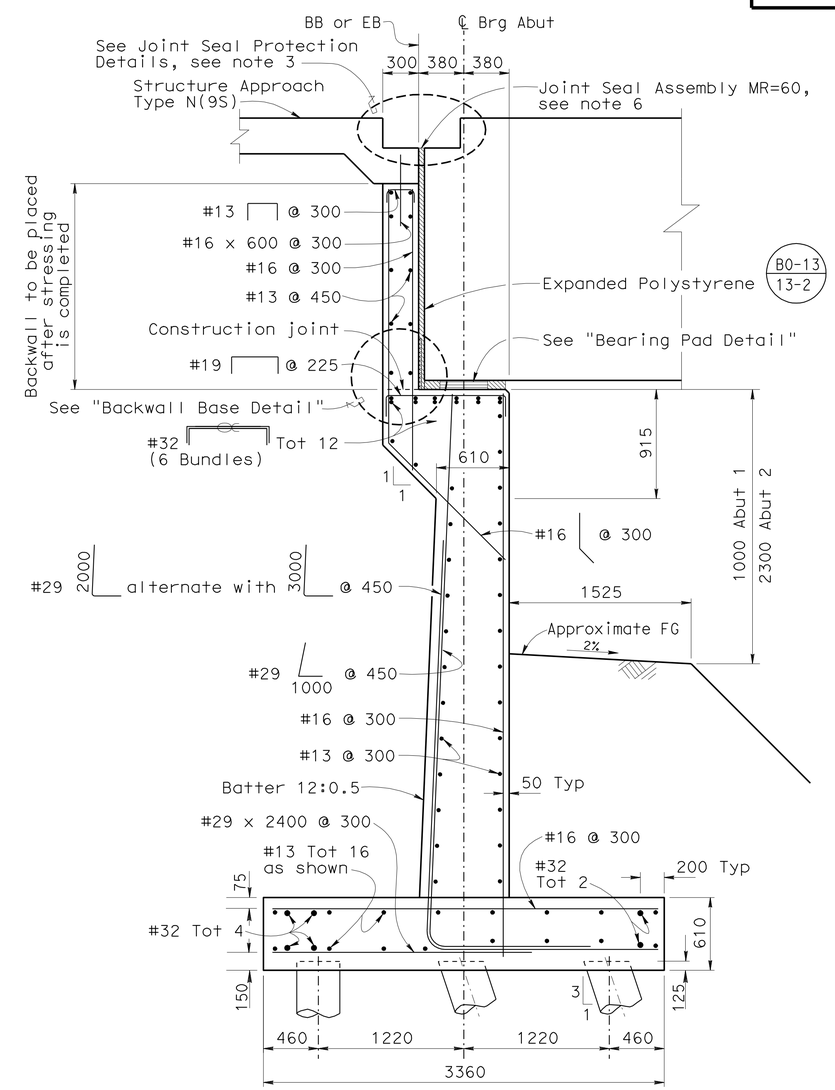

TYPICAL ABUTMENT SECTION
1:25
(Abut 1 shown, Abut 2 is similar)

Legend:

Indicates vertical piles

Indicates battered piles

	BY	CHECKED
DESIGN	J. Lee	A. Okupe
DETAILS	C. Figuerres	A. Okupe
QUANTITIES	R. Le	M. Friedheim

STATE OF CALIFORNIA
DEPARTMENT OF TRANSPORTATION

DIVISION OF ENGINEERING SERVICES
STRUCTURE DESIGN
DESIGN BRANCH 2

BRIDGE NO. 10-0159
KILOMETER POST R73.233

WILLITS BYPASS
HAEHL CREEK
ABUTMENT 1 LAYOUT

ALL DIMENSIONS ARE IN MILLIMETERS UNLESS OTHERWISE SHOWN

ORIGINAL SCALE IN MILLIMETERS FOR REDUCED PLANS 0 10 20 30 40 50 60 70 80 90 100

CU 01
EA 262001

DISREGARD PRINTS BEARING EARLIER REVISION DATES

REVISION DATES: 4-08-08 4-14-08 11-14-08 12-08-09 8-24-06 10-18-06 11-08-06 2-15-07 3-26-08

SHEET 4 OF 19

FILE => 10-0159_ffa01_to01.dgn

STRUCTURES DESIGN DETAIL SHEET (METRIC) (REV.03-17-04)

USERNAME => s114640 DATE PLOTTED => 28-JAN-2012 TIME PLOTTED => 07:38

DIST	COUNTY	ROUTE	KILOMETER POST TOTAL PROJECT	SHEET No	TOTAL SHEETS
01	Men	101	R69.4/R78.9	725	939

REGISTERED CIVIL ENGINEER 9-15-11 DATE

1-23-12
PLANS APPROVAL DATE

REGISTERED PROFESSIONAL ENGINEER M. Friedheim No. 57968 Exp. 6-30-12 CIVIL STATE OF CALIFORNIA

The State of California or its officers or agents shall not be responsible for the accuracy or completeness of electronic copies of this plan sheet.

Notes:

1. For "Abutment Shear Key Reinforcement", see "Abutment Details No. 2" sheet.
2. For "Bearing Pad, Backwall Base, and Joint Protection Details", see "Abutment Details No. 3" sheet.
3. For "Section F-F and G-G", see "Abutment Details No. 1" sheet.
4. For "Abutment 2 Retaining Wall Elevation", see "Abutment Details No. 1" sheet.
5. For "Steel Pipe Pile Anchor" detail, see "Abutment Details No. 3" sheet.
6. For "Abutment 2 Pile Layout", see "Footing Plan" on "Abutment 1 Layout" sheet

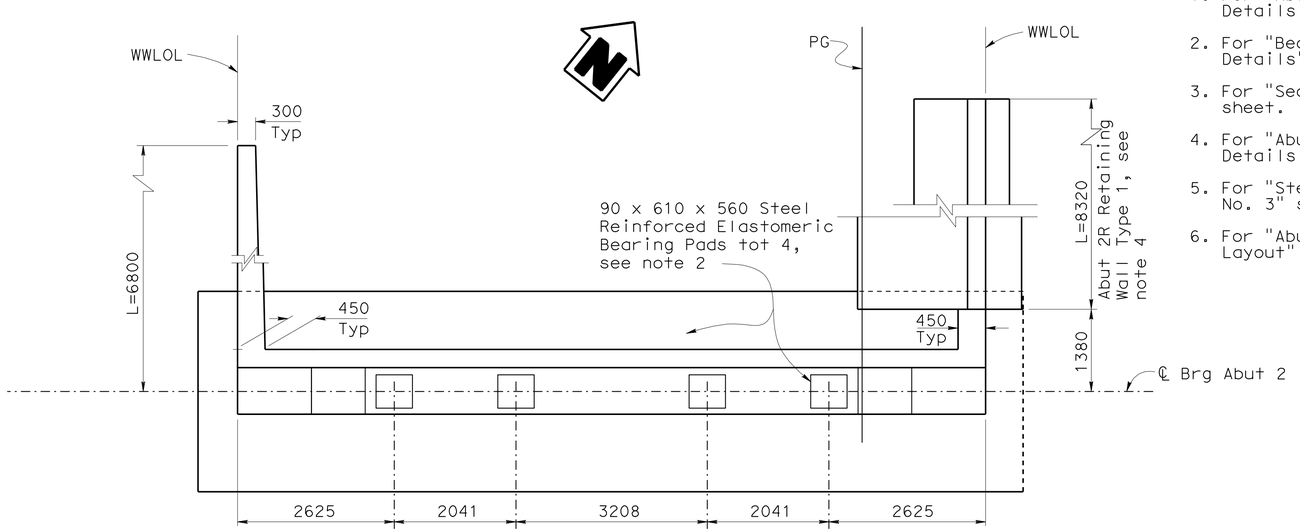

PLAN
1:50

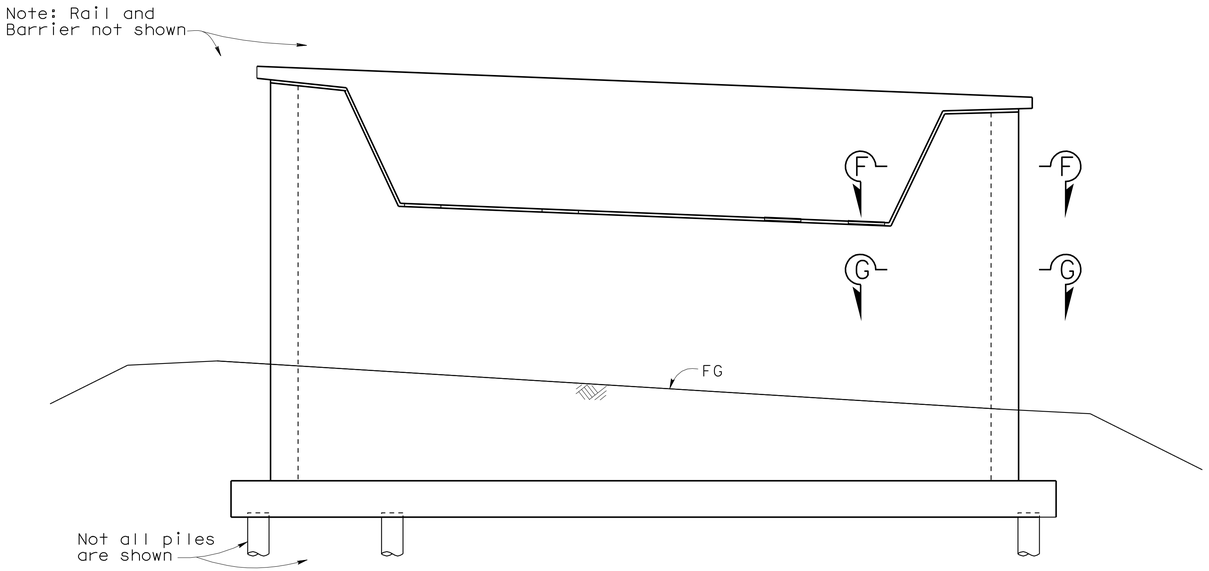

ELEVATION
1:50

Legend:

- Indicates vertical piles
- Indicates battered piles
- Indicates vertical piles
- Indicates 3:1 battered piles

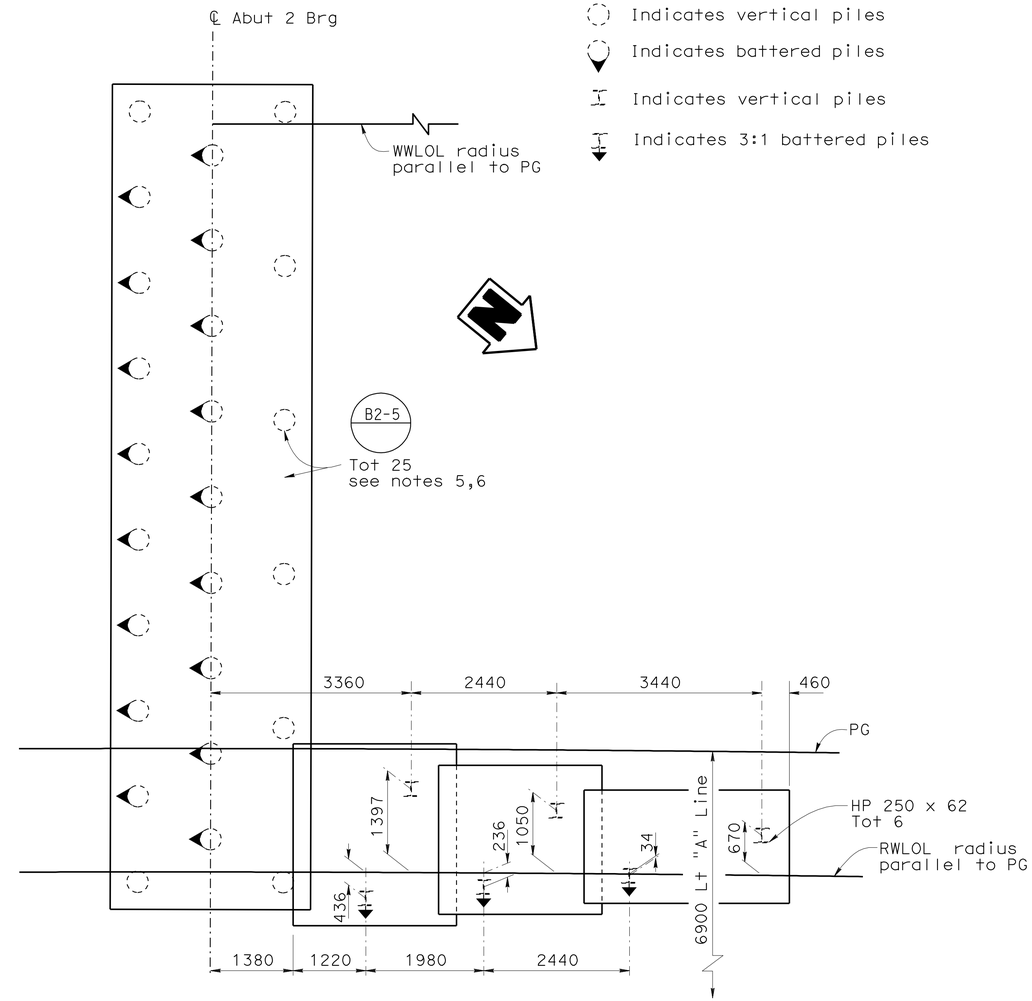

ABUTMENT 2 FOOTING LAYOUT
1:50

DESIGN	BY J. Lee	CHECKED A. Okupe	
DETAILS	BY C. Figuerres	CHECKED A. Okupe	
QUANTITIES	BY R. Le	CHECKED M. Friedheim	

STATE OF CALIFORNIA
DEPARTMENT OF TRANSPORTATION

DIVISION OF ENGINEERING SERVICES
STRUCTURE DESIGN
DESIGN BRANCH 2

BRIDGE NO. 10-0159
KILOMETER POST R73.233

WILLITS BYPASS
HAEHL CREEK
ABUTMENT 2 LAYOUT

Caltrans Metric

ALL DIMENSIONS ARE IN MILLIMETERS UNLESS OTHERWISE SHOWN

ORIGINAL SCALE IN MILLIMETERS FOR REDUCED PLANS 0 10 20 30 40 50 60 70 80 90 100

CU 01
EA 262001

DISREGARD PRINTS BEARING EARLIER REVISION DATES

REVISION DATES: 10-12-05 8-24-06 10-18-06 11-08-06 2-15-07 3-28-08 4-08-08 11-12-08 12-08-09

SHEET 5 OF 19

FILE => 10-0159_ffa01_lo02.dgn

STRUCTURES DESIGN DETAIL SHEET (METRIC) (REV.03-17-04)

USERNAME => s114640 DATE PLOTTED => 28-JAN-2012 TIME PLOTTED => 07:38

DIST	COUNTY	ROUTE	KILOMETER POST TOTAL PROJECT	SHEET No	TOTAL SHEETS
01	Men	101	R69.4/R78.9	726	939

REGISTERED CIVIL ENGINEER 9-15-11 DATE

1-23-12
PLANS APPROVAL DATE

REGISTERED PROFESSIONAL ENGINEER M. Friedheim No. 57968 Exp. 6-30-12 CIVIL STATE OF CALIFORNIA

The State of California or its officers or agents shall not be responsible for the accuracy or completeness of electronic copies of this plan sheet.

Notes:

1. For "Section H-H", see "Abutment Details No. 2" sheet
2. For location of sections D-D and E-E, see "Abutment 1 Layout" sheet
3. For location of sections F-F and G-G, see "Abutment 2 Layout" sheet

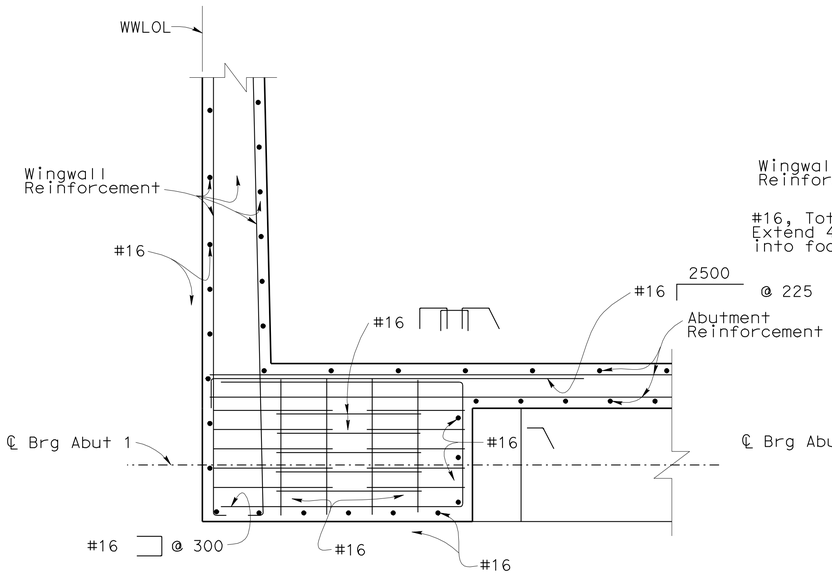

SECTION D-D
1:20

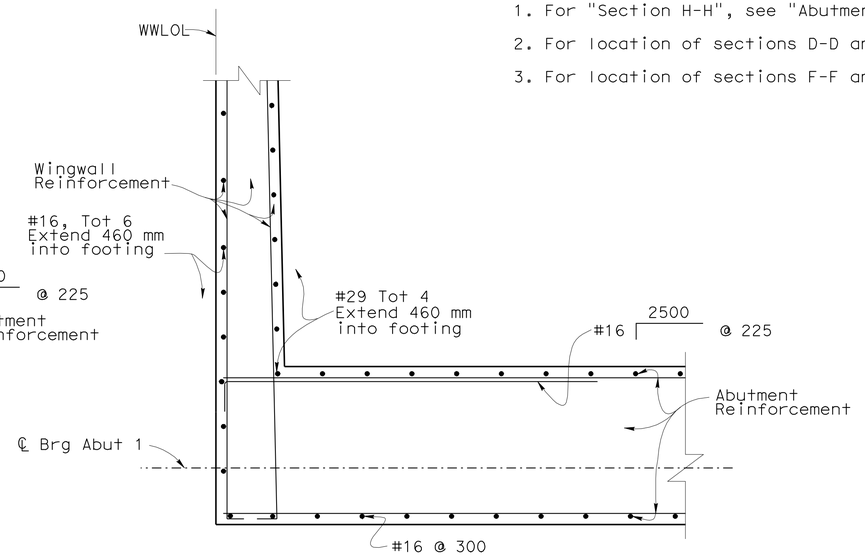

SECTION E-E
1:20

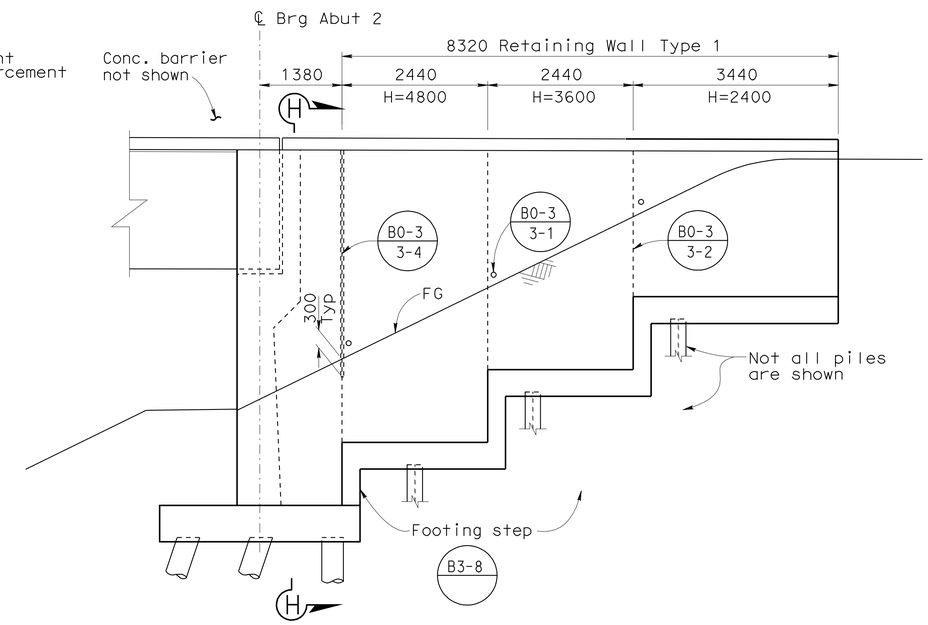

ABUTMENT 2 RETAINING WALL ELEVATION
1:50

B3-1

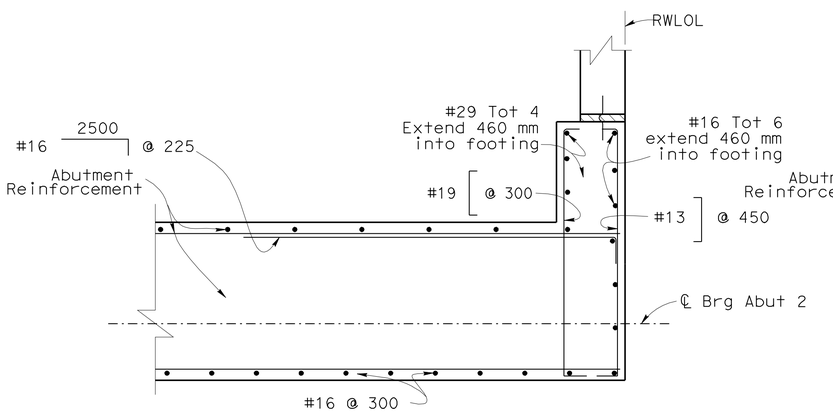

SECTION G-G
1:20

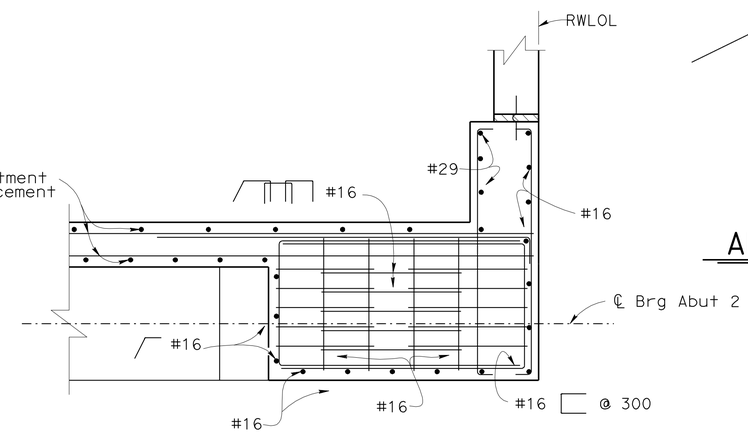

SECTION F-F
1:20

Caltrans Metric

	BY	CHECKED
DESIGN	J. Lee	A. Okupe
DETAILS	C. Figuerres	A. Okupe
QUANTITIES	R. Le	M. Friedheim

STATE OF CALIFORNIA
DEPARTMENT OF TRANSPORTATION

DIVISION OF ENGINEERING SERVICES
STRUCTURE DESIGN
DESIGN BRANCH 2

BRIDGE NO. 10-0159
KILOMETER POST R73.233

WILLITS BYPASS
HAEHL CREEK
ABUTMENT DETAILS NO. 1

ALL DIMENSIONS ARE IN MILLIMETERS UNLESS OTHERWISE SHOWN

ORIGINAL SCALE IN MILLIMETERS FOR REDUCED PLANS 0 10 20 30 40 50 60 70 80 90 100

CU 01
EA 262001

DISREGARD PRINTS BEARING EARLIER REVISION DATES

REVISION DATES: 10-22-05 11-02-05 2-21-06 3-03-06 11-08-06 2-15-07 2-23-07 3-28-08

SHEET 6 OF 19

FILE => 10-0159_ffa01dt01.dgn

STRUCTURES DESIGN DETAIL SHEET (METRIC) (REV.03-17-04)

USERNAME => s114640 DATE PLOTTED => 28-JAN-2012 TIME PLOTTED => 07:38

DIST	COUNTY	ROUTE	KILOMETER POST TOTAL PROJECT	SHEET No	TOTAL SHEETS
01	Men	101	R69.4/R78.9	727	939

REGISTERED CIVIL ENGINEER 9-15-11 DATE

1-23-12
PLANS APPROVAL DATE

REGISTERED PROFESSIONAL ENGINEER M. Friedheim No. 57968 Exp. 6-30-12 CIVIL STATE OF CALIFORNIA

The State of California or its officers or agents shall not be responsible for the accuracy or completeness of electronic copies of this plan sheet.

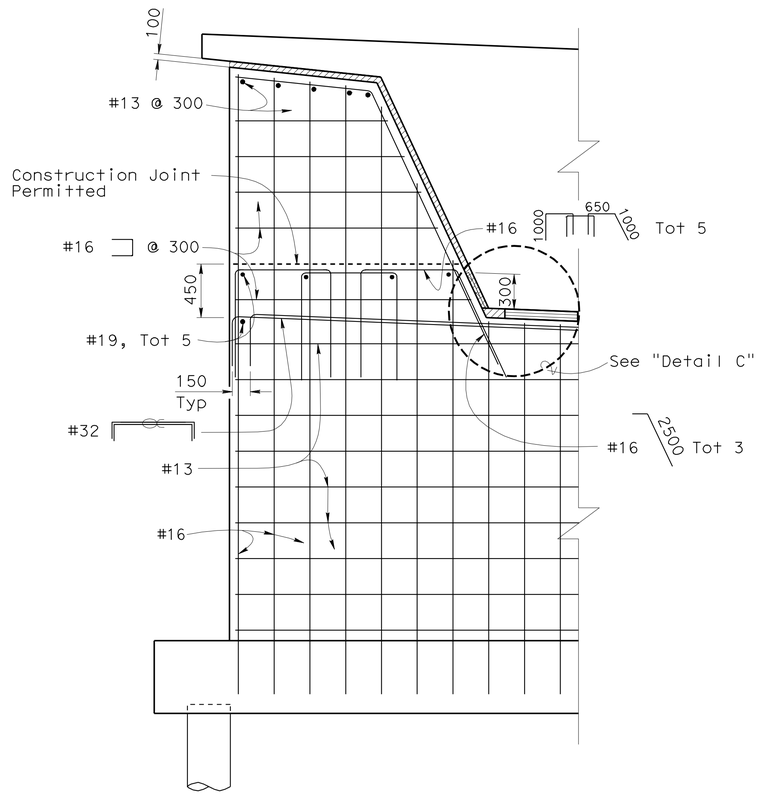

ABUTMENT SHEAR KEY REINFORCEMENT

1:25

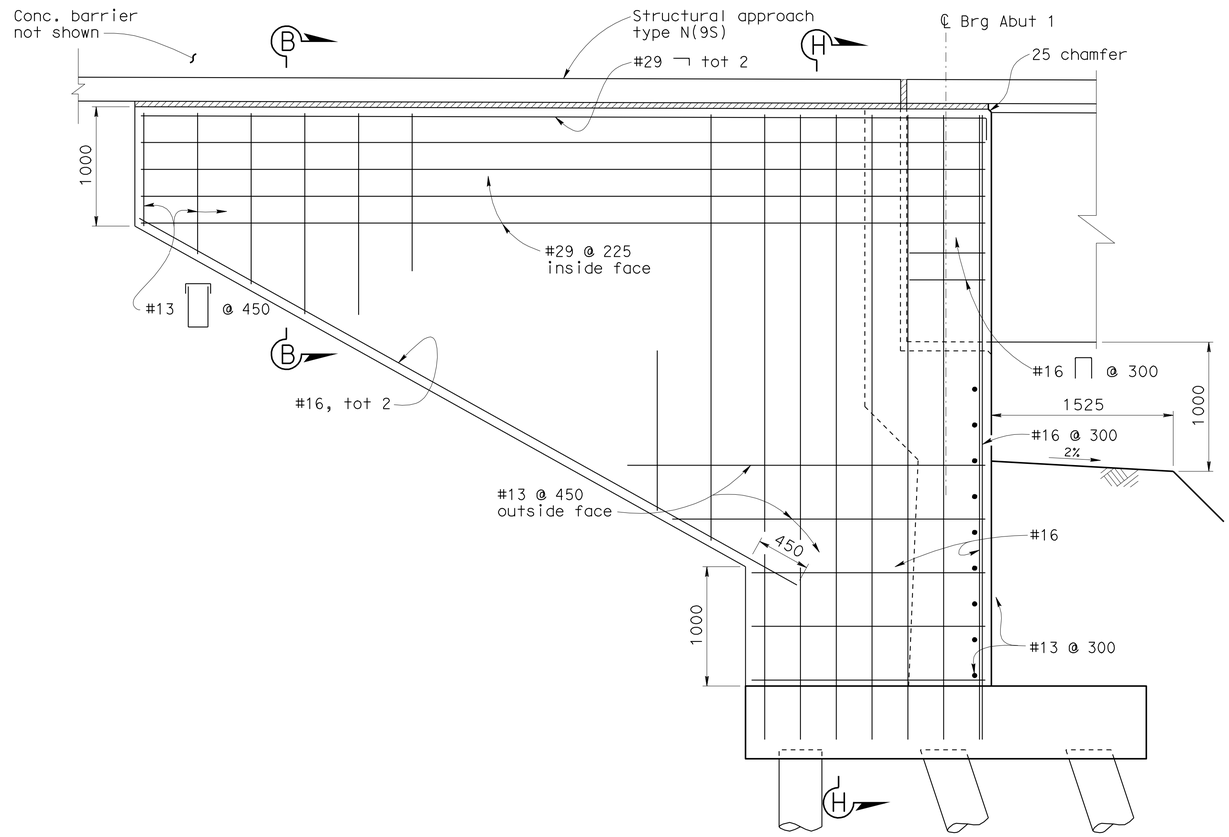

ABUTMENT WINGWALL ELEVATION

1:25

Note: Abutment 1 right shown, Abutment 1 and Abutment 2 left similar.

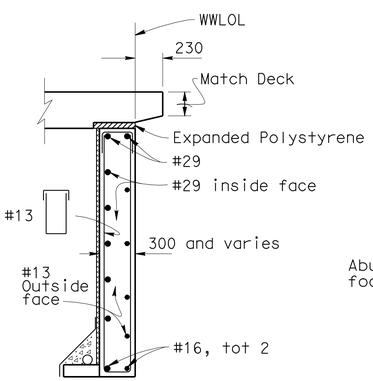

SECTION B-B

1:25

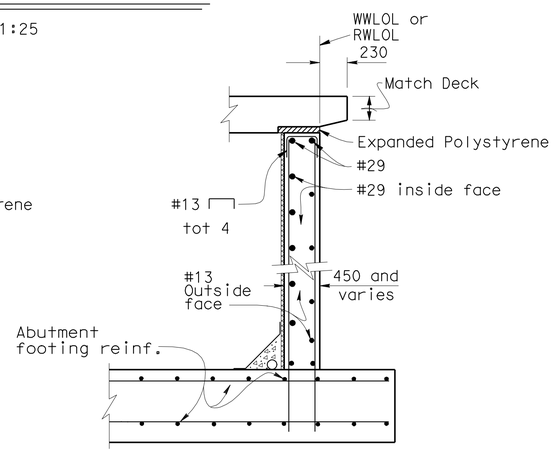

SECTION H-H

1:25

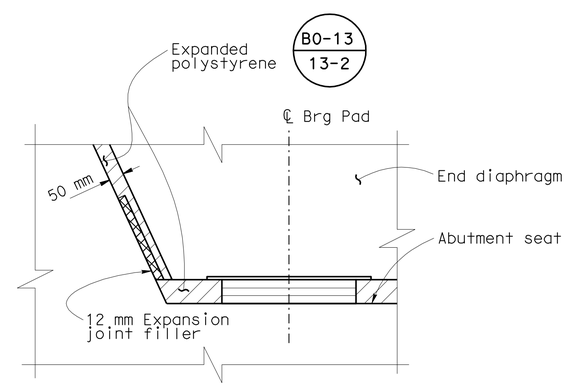

DETAIL C

1:10

DESIGN	BY J. Lee	CHECKED A. Okupe	
DETAILS	BY C. Figuerres	CHECKED A. Okupe	
QUANTITIES	BY R. Le	CHECKED M. Friedheim	

STATE OF CALIFORNIA
DEPARTMENT OF TRANSPORTATION

DIVISION OF ENGINEERING SERVICES
STRUCTURE DESIGN
DESIGN BRANCH 2

CU 01
EA 262001

BRIDGE NO. 10-0159
KILOMETER POST R73.233

WILLITS BYPASS
HAEHL CREEK
ABUTMENT DETAILS NO. 2

Caltrans Metric

ALL DIMENSIONS ARE IN MILLIMETERS UNLESS OTHERWISE SHOWN

ORIGINAL SCALE IN MILLIMETERS FOR REDUCED PLANS 0 10 20 30 40 50 60 70 80 90 100

DISREGARD PRINTS BEARING EARLIER REVISION DATES

REVISION DATES: 10-12-05 12-08-05 4-25-06 8-25-06 11-08-06 2-15-07 3-28-08 11-12-08 11-21-08

SHEET 7 OF 19

FILE => 10-0159_ffa01dt02.dgn

STRUCTURES DESIGN DETAIL SHEET (METRIC) (REV.03-17-04)

USERNAME => s114640 DATE PLOTTED => 28-JAN-2012 TIME PLOTTED => 07:38

DIST	COUNTY	ROUTE	KILOMETER POST TOTAL PROJECT	SHEET No	TOTAL SHEETS
01	Men	101	R69.4/R78.9	728	939

REGISTERED CIVIL ENGINEER 9-15-11 DATE

1-23-12
PLANS APPROVAL DATE

REGISTERED PROFESSIONAL ENGINEER M. Friedheim No. 57968 Exp. 6-30-12 CIVIL STATE OF CALIFORNIA

The State of California or its officers or agents shall not be responsible for the accuracy or completeness of electronic copies of this plan sheet.

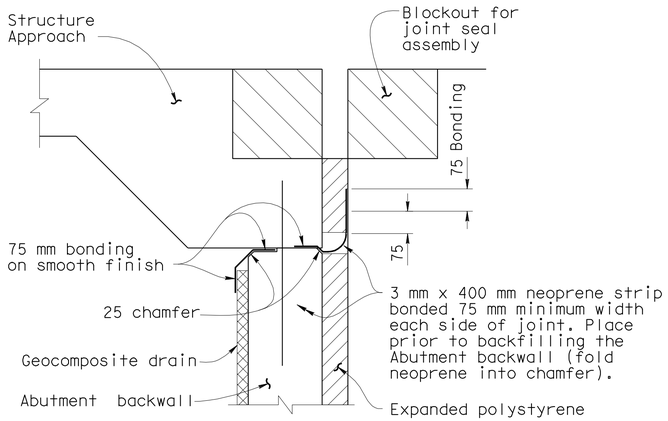

JOINT PROTECTION DETAIL

No Scale

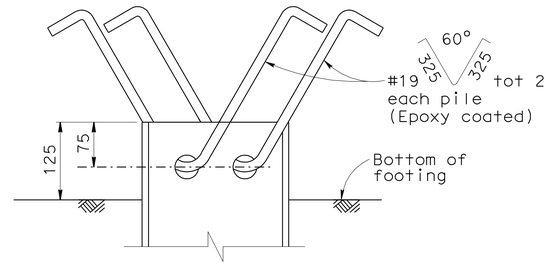

ELEVATION

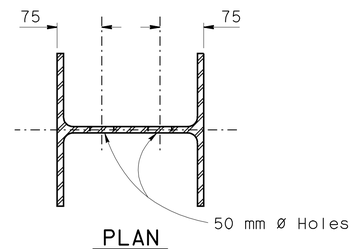

PLAN

STEEL HP PILE ANCHOR DETAIL

No Scale

Note:

1. For "a" dimension see "Joint Seal Assembly (Maximum Movement Rating = 100 mm)" sheet

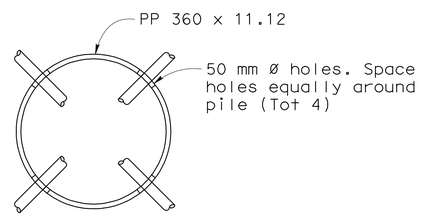

PLAN

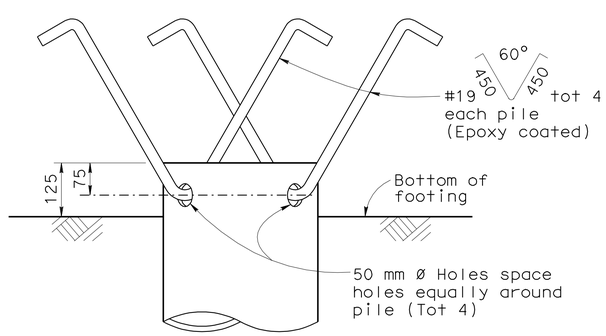

ELEVATION

STEEL PIPE PILE ANCHOR DETAIL

No Scale

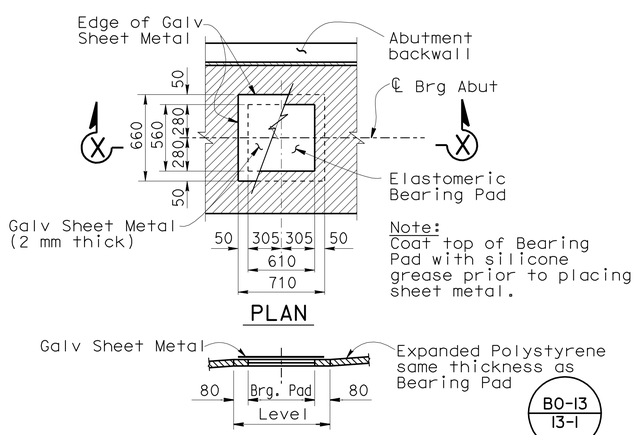

SECTION X-X

BEARING PAD DETAIL

No Scale
Details typical at all bearing pads

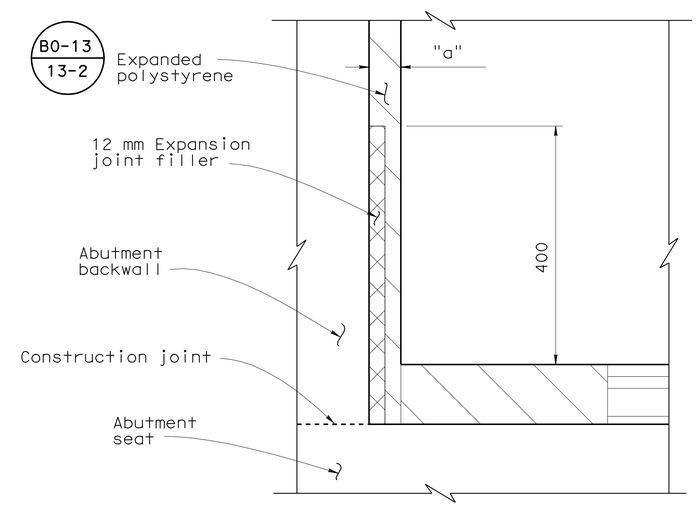

BACKWALL BASE DETAIL

No Scale

Caltrans Metric

	BY	CHECKED
DESIGN	J. Lee	A. Okupe
DETAILS	C. Figuerres	A. Okupe
QUANTITIES	R. Le	M. Friedheim

STATE OF CALIFORNIA
DEPARTMENT OF TRANSPORTATION

DIVISION OF ENGINEERING SERVICES
STRUCTURE DESIGN
DESIGN BRANCH 2

BRIDGE NO. 10-0159
KILOMETER POST R73.233

WILLITS BYPASS
HAEHL CREEK
ABUTMENT DETAILS NO. 3

ALL DIMENSIONS ARE IN MILLIMETERS UNLESS OTHERWISE SHOWN

ORIGINAL SCALE IN MILLIMETERS FOR REDUCED PLANS 0 10 20 30 40 50 60 70 80 90 100

CU 01
EA 262001

DISREGARD PRINTS BEARING EARLIER REVISION DATES

REVISION DATES: 10-27-05 2-24-06 3-03-06 8-24-06 10-18-06 11-08-06 3-28-08

SHEET 8 OF 19

FILE => 10-0159_ffa01dt03.dgn

STRUCTURES DESIGN DETAIL SHEET (METRIC) (REV.03-17-04)

USERNAME => s114640 DATE PLOTTED => 28-JAN-2012 TIME PLOTTED => 07:38

DIST	COUNTY	ROUTE	KILOMETER POST TOTAL PROJECT	SHEET No	TOTAL SHEETS
01	Men	101	R69.4/R78.9	729	939

REGISTERED CIVIL ENGINEER 9-15-11 DATE

1-23-12
PLANS APPROVAL DATE

REGISTERED PROFESSIONAL ENGINEER M. Friedheim No. 57968 Exp. 6-30-12 CIVIL STATE OF CALIFORNIA

The State of California or its officers or agents shall not be responsible for the accuracy or completeness of electronic copies of this plan sheet.

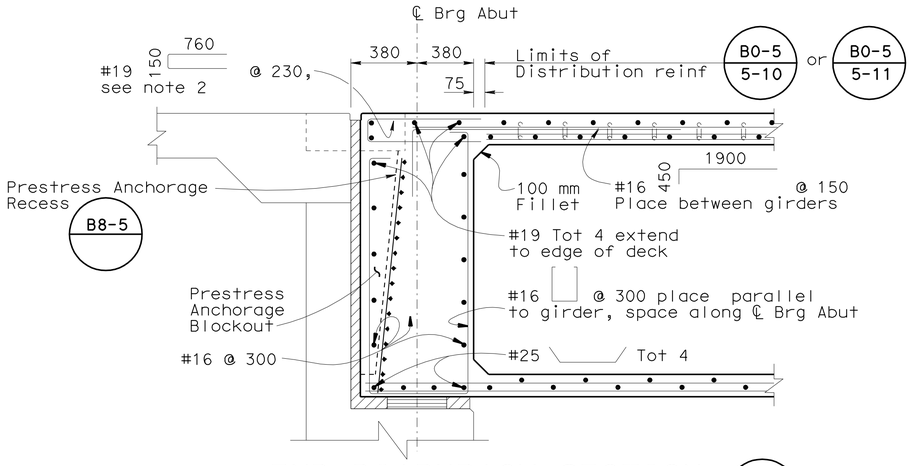

END DIAPHRAGM SECTION B8-5

1:20

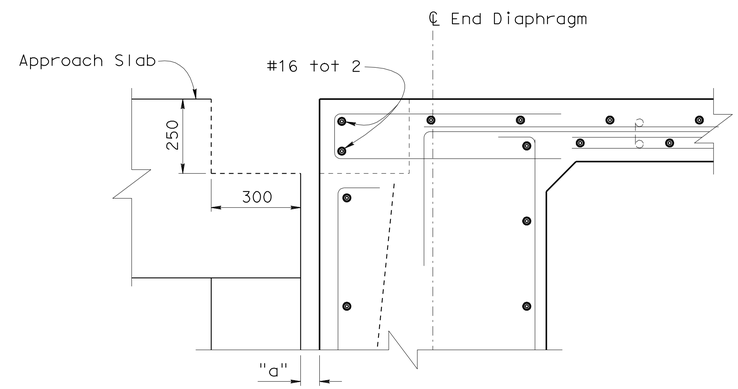

BLOCKOUT DETAIL

1:10

NOTES:

1. For "a" dimension see "Joint Seal Assembly (Maximum Movement Rating = 100 mm)" sheet.

2. Stagger with joint seal assembly anchor studs.

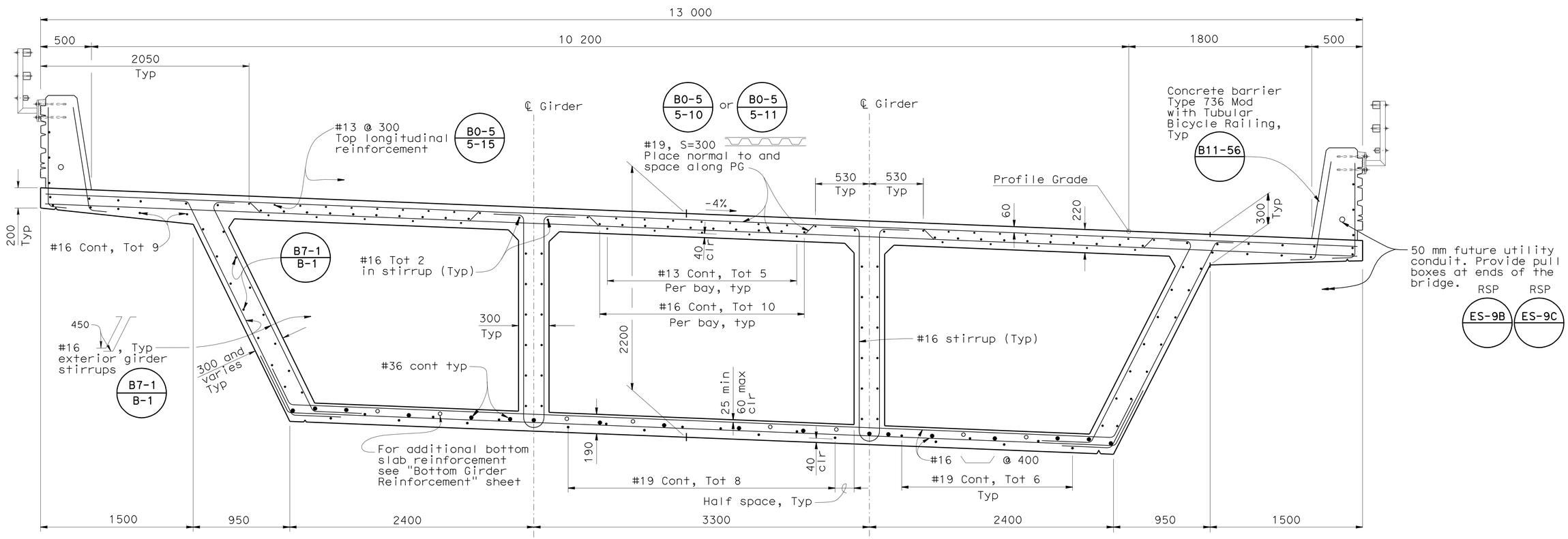

TYPICAL SECTION B0-5 B7-1 B8-5

1:20

DESIGN	BY J. Lee	CHECKED M. Friedheim	STATE OF CALIFORNIA DEPARTMENT OF TRANSPORTATION	DIVISION OF ENGINEERING SERVICES STRUCTURE DESIGN DESIGN BRANCH 2	BRIDGE NO. 10-0159
DETAILS	BY C. Figuerres/S. Ng	CHECKED M. Friedheim			KILOMETER POST R73.233
QUANTITIES	BY R. Le	CHECKED M. Friedheim			

WILLITS BYPASS

HAEHL CREEK

TYPICAL SECTION

Caltrans Metric

ALL DIMENSIONS ARE IN MILLIMETERS UNLESS OTHERWISE SHOWN

ORIGINAL SCALE IN MILLIMETERS FOR REDUCED PLANS 0 10 20 30 40 50 60 70 80 90 100

CU 01
EA 262001

DISREGARD PRINTS BEARING EARLIER REVISION DATES

REVISION DATES: 2-14-06 11-26-08 12-23-08 12-08-09 4-24-08 4-14-08 4-15-08 11-13-08 11-21-08

SHEET 9 OF 19

FILE => 10-0159_fkts01.dgn

STRUCTURES DESIGN DETAIL SHEET (METRIC) (REV.03-17-04)

USERNAME => s114640 DATE PLOTTED => 28-JAN-2012 07:38

DIST	COUNTY	ROUTE	KILOMETER POST TOTAL PROJECT	SHEET No	TOTAL SHEETS
01	Men	101	R69.4/R78.9	730	939

REGISTERED CIVIL ENGINEER 9-15-11 DATE

1-23-12
PLANS APPROVAL DATE

REGISTERED PROFESSIONAL ENGINEER M. Friedheim No. 57968 Exp. 6-30-12 CIVIL STATE OF CALIFORNIA

The State of California or its officers or agents shall not be responsible for the accuracy or completeness of electronic copies of this plan sheet.

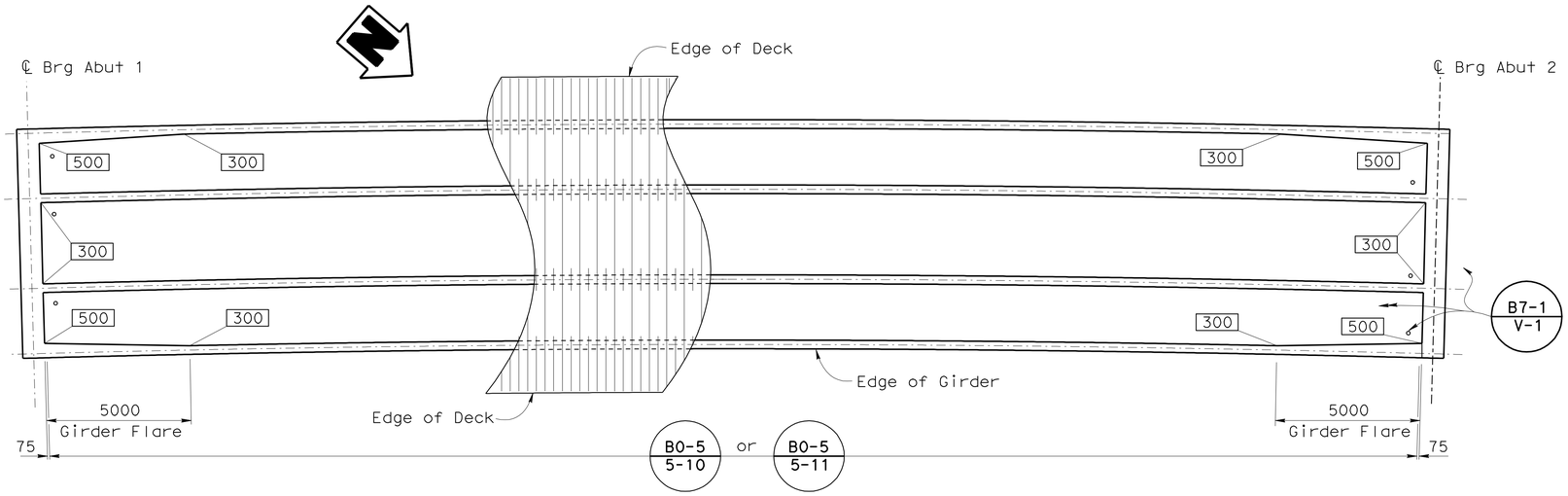

PLAN
1:100

Notes:

Girder stem width

Theoretical Pt of No Movement (Shown for right end stressing)

PRESTRESSING NOTES

Design based on 1860 MPa Low Relaxation Strand:

P_{jack} = 47,550 kN

Anchor Set = 10 mm

Total Number of Girders = 4

Concrete: f'_c = 35 MPa @ 28 days

f'_{ci} = 25 MPa @ time of stressing

Prestress: μ = 0.15

K = 0.000656/m

Long term losses assumed to be 172 MPa

Contractor shall submit elongation calculations based on initial stress at

☒ = 0.946 times jacking stress.

One end stressing shall be performed from either end.

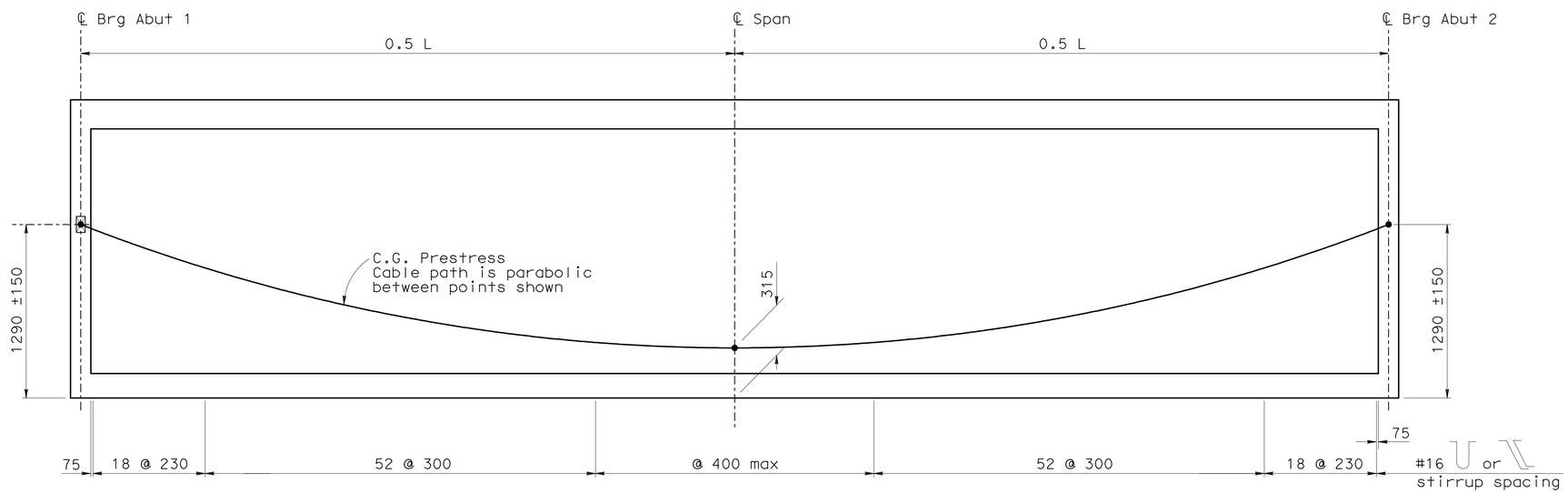

LONGITUDINAL SECTION
No Scale

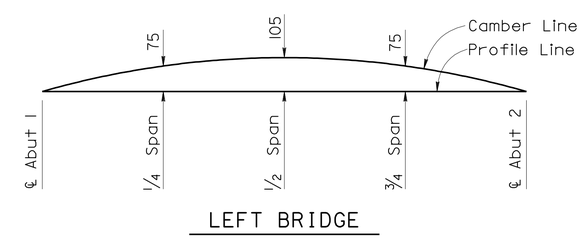

CAMBER DIAGRAM
No Scale

(Does not include allowance for falsework settlement)

Caltrans Metric

	BY	CHECKED
DESIGN	J. Lee	A. Okupe
DETAILS	C. Figuerres	A. Okupe
QUANTITIES	R. Le	M. Friedheim

STATE OF CALIFORNIA
DEPARTMENT OF TRANSPORTATION

DIVISION OF ENGINEERING SERVICES
STRUCTURE DESIGN
DESIGN BRANCH 2

BRIDGE NO. 10-0159
KILOMETER POST R73.233

WILLITS BYPASS
HAEHL CREEK
GIRDER LAYOUT

ALL DIMENSIONS ARE IN MILLIMETERS UNLESS OTHERWISE SHOWN

ORIGINAL SCALE IN MILLIMETERS FOR REDUCED PLANS 0 10 20 30 40 50 60 70 80 90 100

CU 01
EA 262001

DISREGARD PRINTS BEARING EARLIER REVISION DATES

REVISION DATES: 2-14-06 3-03-06 8-28-06 2-15-07 4-08-08 4-14-08 11-17-08

SHEET 10 OF 19

FILE => 10-0159_fig1o01.dgn

STRUCTURES DESIGN DETAIL SHEET (METRIC) (REV.03-17-04)

USERNAME => s114640 DATE PLOTTED => 28-JAN-2012 TIME PLOTTED => 07:38

DIST	COUNTY	ROUTE	KILOMETER POST TOTAL PROJECT	SHEET No	TOTAL SHEETS
01	Men	101	R69.4/R78.9	731	939

REGISTERED CIVIL ENGINEER 9-15-11 DATE

1-23-12
PLANS APPROVAL DATE

REGISTERED PROFESSIONAL ENGINEER M. Friedheim No. 57968 Exp. 6-30-12 CIVIL STATE OF CALIFORNIA

The State of California or its officers or agents shall not be responsible for the accuracy or completeness of electronic copies of this plan sheet.

Notes:

1. #36 Bars shall not be placed in this region.
2. No splices are allowed in cut-off bars. Splices in continuous bars shall be service level splices and shall not be located within 9.0 m of each side of ℄ Span.
3. Distribution bars not shown.

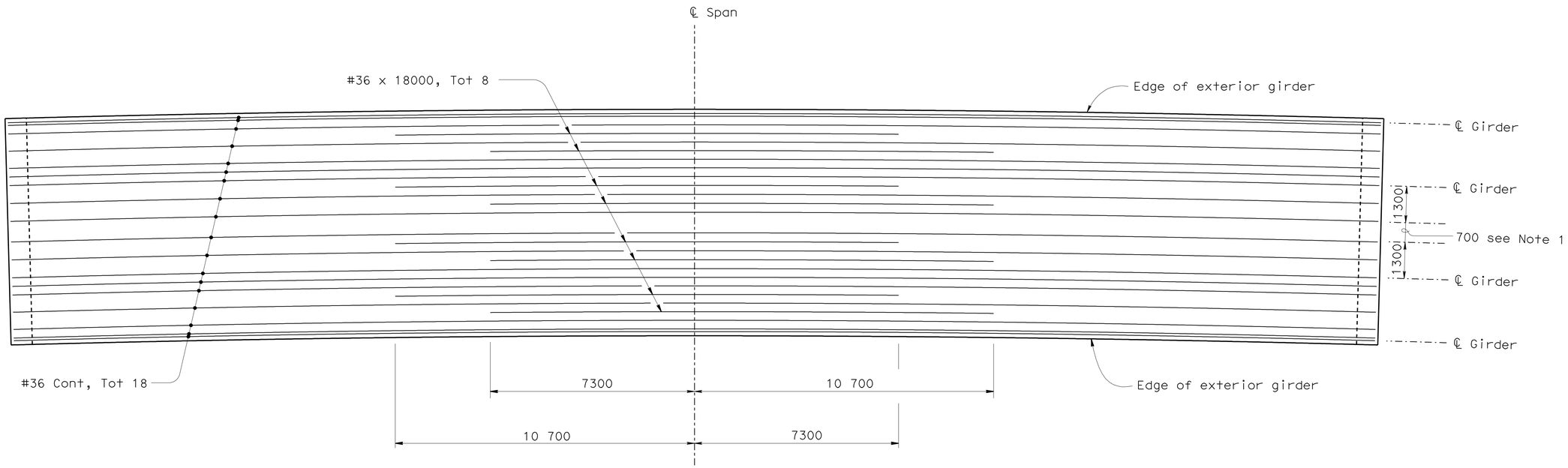

BOTTOM GIRDER REINFORCEMENT

1:80

DESIGN	BY J. Lee	CHECKED A. Okupe	
DETAILS	BY C. Figuerres	CHECKED A. Okupe	
QUANTITIES	BY R. Le	CHECKED M. Friedheim	

STATE OF CALIFORNIA
DEPARTMENT OF TRANSPORTATION

DIVISION OF ENGINEERING SERVICES
STRUCTURE DESIGN
DESIGN BRANCH 2

CU 01
EA 262001

BRIDGE NO. 10-0159
KILOMETER POST R73.233

WILLITS BYPASS
HAEHL CREEK
BOTTOM GIRDER REINFORCEMENT

Caltrans Metric

ALL DIMENSIONS ARE IN MILLIMETERS UNLESS OTHERWISE SHOWN

ORIGINAL SCALE IN MILLIMETERS FOR REDUCED PLANS 0 10 20 30 40 50 60 70 80 90 100

DISREGARD PRINTS BEARING EARLIER REVISION DATES

REVISION DATES: 9-12-05 2-14-06 3-03-06 8-24-06 2-15-07 4-02-08 4-14-08 11-12-08 11-21-08 12-23-08

SHEET 11 OF 19

FILE => 10-0159_fogr01.dgn

STRUCTURES DESIGN DETAIL SHEET (METRIC) (REV.03-17-04)

USERNAME => s109858 DATE PLOTTED => 28-JAN-2012 TIME PLOTTED => 08:41

DIST	COUNTY	ROUTE	KILOMETER POST TOTAL PROJECT	SHEET No	TOTAL SHEETS
01	Men	101	R69.4/R78.9	732	939

REGISTERED CIVIL ENGINEER 9-15-11 DATE

1-23-12
PLANS APPROVAL DATE

REGISTERED PROFESSIONAL ENGINEER M. Friedheim No. 57968 Exp. 6-30-12 CIVIL STATE OF CALIFORNIA

The State of California or its officers or agents shall not be responsible for the accuracy or completeness of electronic copies of this plan sheet.

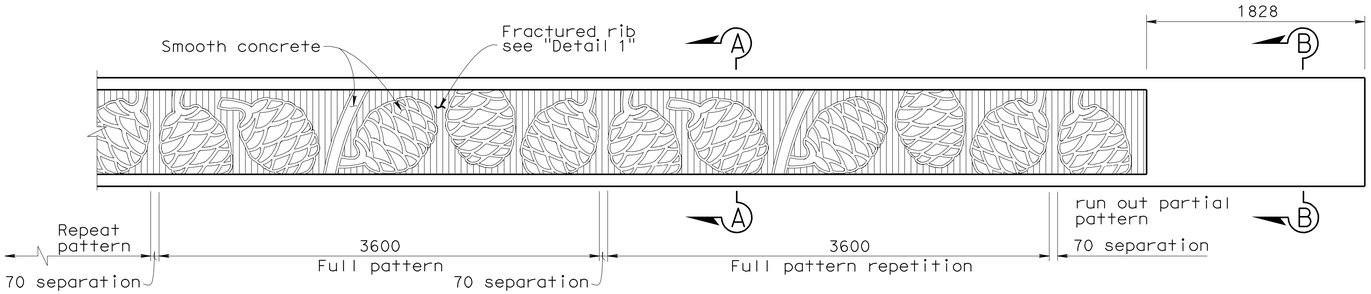

TYPE 736 BARRIER PARTIAL ELEVATION

1:25

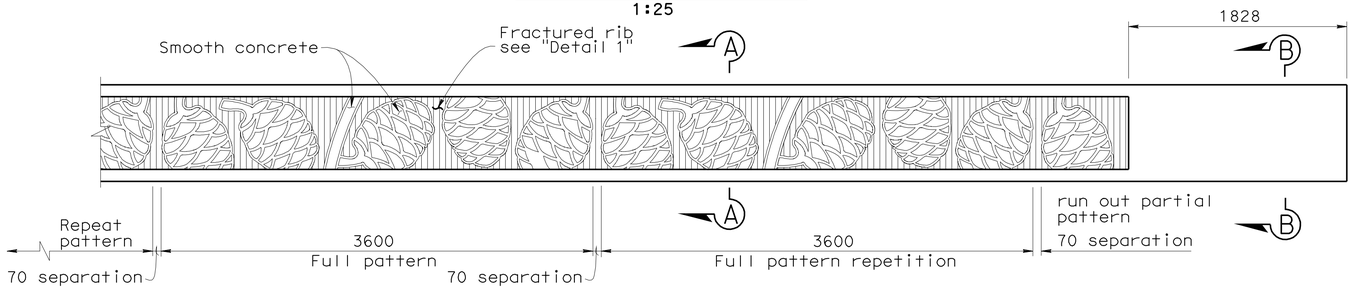

TYPE 732 BARRIER PARTIAL ELEVATION

1:25

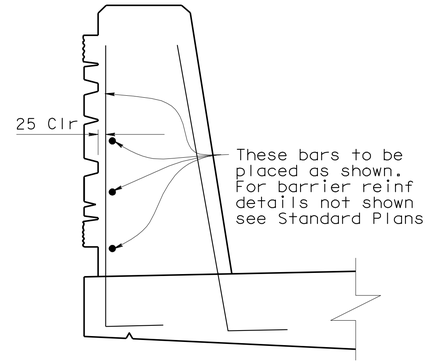

BARRIER REINFORCEMENT MODIFICATION

1:10

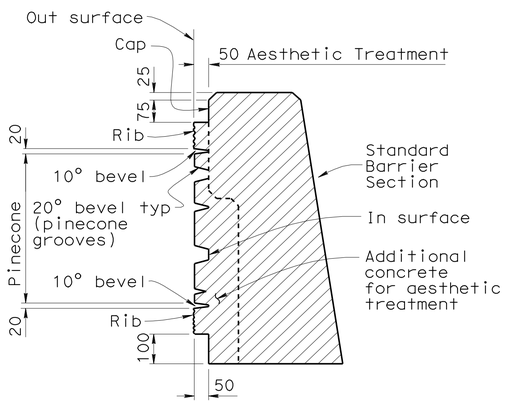

SECTION A-A

1:10

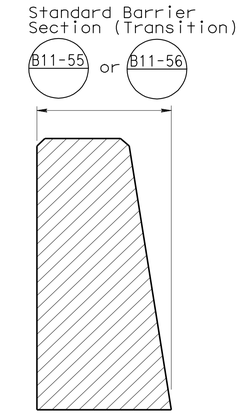

SECTION B-B

1:10

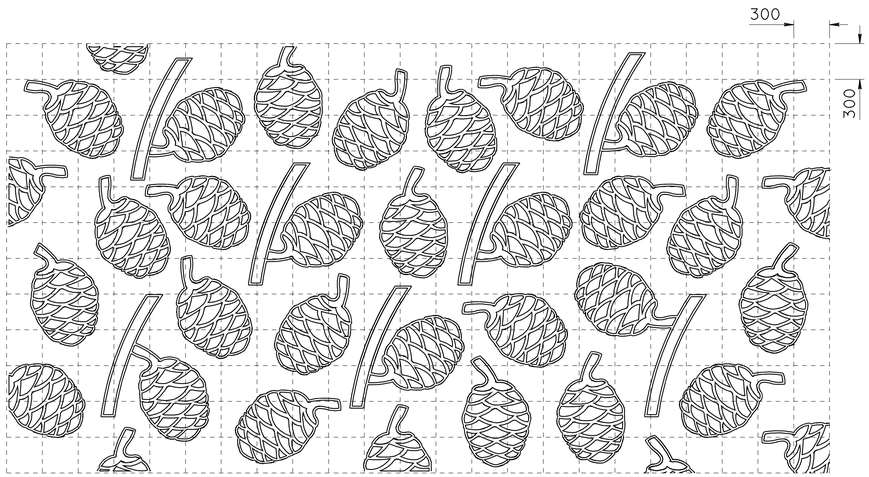

300 mm grid for reference only

RANDOM PINECONE PATTERN FOR WING WALLS

1:25

NOTE: Place random pinecone pattern on Fractured Rib Background
Fractured rib to be at same angle/alignment as abutment wall.
Relief similar to Barrier Section A-A

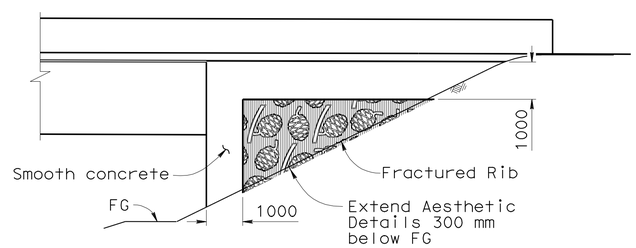

TYPICAL WINGWALL AESTHETIC TREATMENT

DETAIL D

1:80

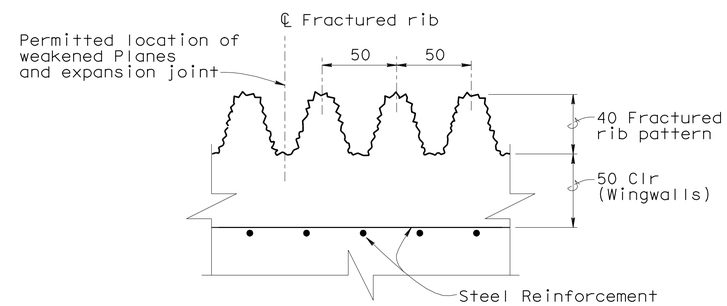

TYPICAL FRACTURED RIB TEXTURE

DETAIL 1

1:2

Caltrans Metric

	BY	CHECKED
DESIGN	V. Moore	M. Friedheim
DETAILS	C. Figuerres	M. Friedheim
QUANTITIES	R. Le	M. Friedheim

STATE OF CALIFORNIA DEPARTMENT OF TRANSPORTATION

DIVISION OF ENGINEERING SERVICES STRUCTURE DESIGN DESIGN BRANCH 2

BRIDGE NO. 10-0159
KILOMETER POST R73.233

WILLITS BYPASS
HAEHL CREEK
AESTHETIC DETAILS

ALL DIMENSIONS ARE IN MILLIMETERS UNLESS OTHERWISE SHOWN

ORIGINAL SCALE IN MILLIMETERS FOR REDUCED PLANS 0 10 20 30 40 50 60 70 80 90 100

CU 01
EA 262001

DISREGARD PRINTS BEARING EARLIER REVISION DATES

REVISION DATES: 9-26-06 10-18-06 10-18-06 2-26-07 4-08-08 1-26-09 2-20-09

SHEET 12 OF 19

FILE => 10-0159_fradet1.dgn

STRUCTURES DESIGN DETAIL SHEET (METRIC) (REV.03-17-04)

USERNAME => s109858 DATE PLOTTED => 28-JAN-2012 TIME PLOTTED => 08:41

DIST.	COUNTY	ROUTE	KILOMETER POST TOTAL PROJECT	SHEET NO.	TOTAL SHEETS
01	Men	101	R69.4/R78.9	733	939

Caltrans Metric

9-15-11
REGISTERED ENGINEER - CIVIL

1-23-12
PLANS APPROVAL DATE

REGISTERED PROFESSIONAL ENGINEER M. Friedheim No. 57968 Exp. 6-30-12 CIVIL STATE OF CALIFORNIA

The State of California or its officers or agents shall not be responsible for the accuracy or completeness of electronic copies of this plan sheet.

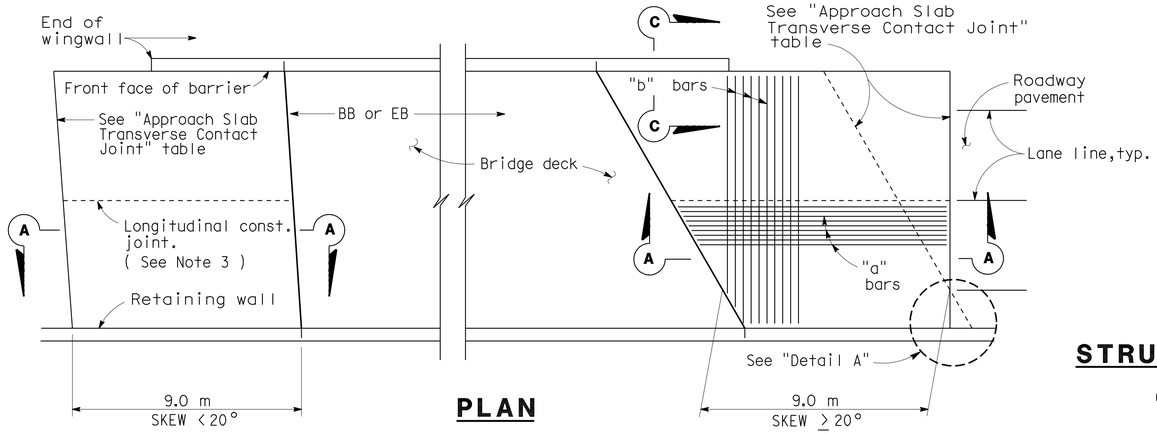

PLAN

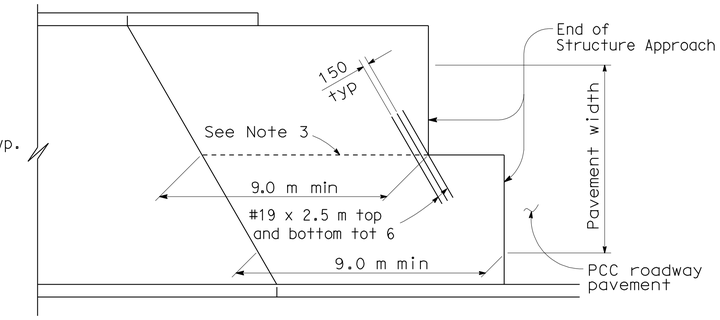

STRUCTURE APPROACH - END STAGGER DETAIL

APPROACH SLAB TRANSVERSE CONTACT JOINT		
APPROACH SKEW	WITH AC ROADWAY PAVEMENT	WITH PCC ROADWAY PAVEMENT
< 20°	Parallel to face of paving notch	Parallel to face of paving notch
20°- 45°	Parallel to face of P N use (Detail A)	Stagger lines 7.2 m to 10.8 m apart.
> 45°	Parallel to face of P N use (Detail A)	Stagger at each lane line.

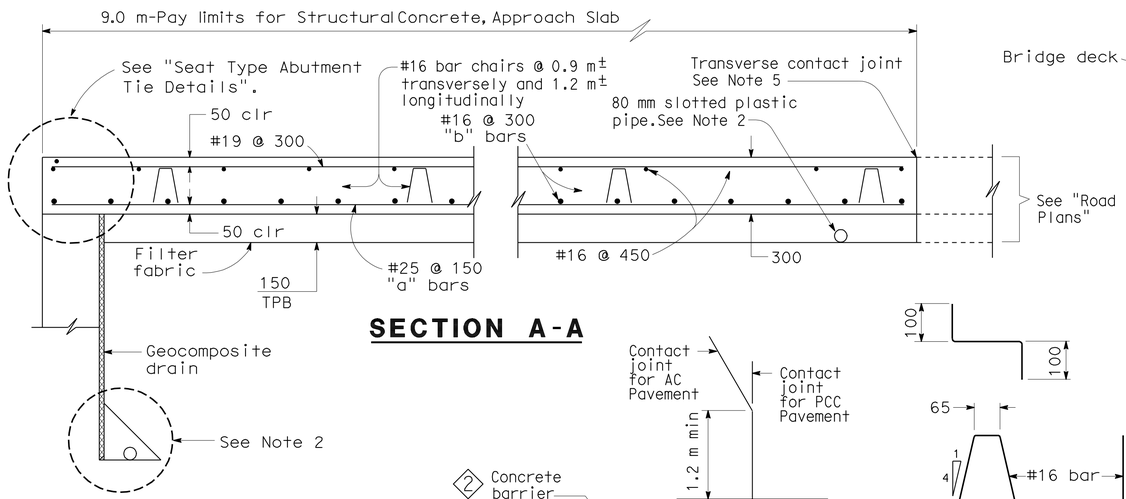

SECTION A-A

DETAIL A

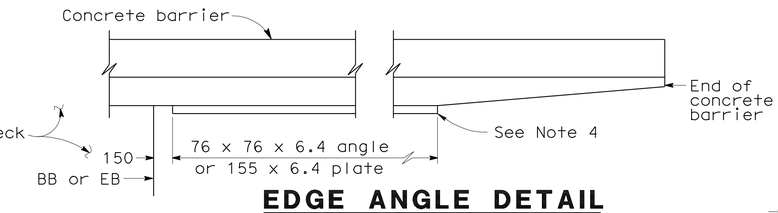

EDGE ANGLE DETAIL

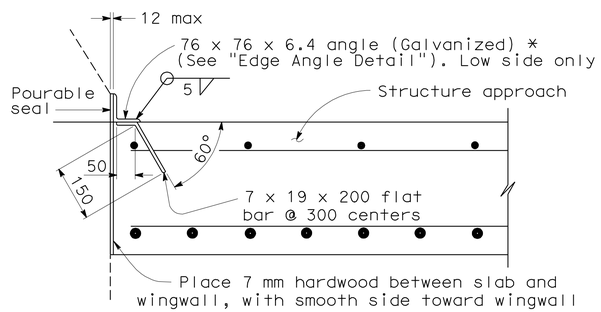

*(TO BE USED WITH TYPE 25 OR TYPE 27 CONCRETE BARRIER)

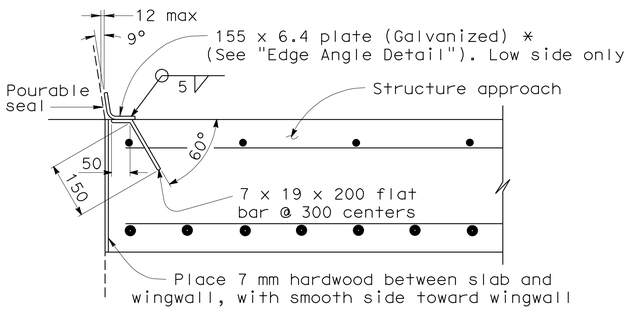

*(TO BE USED WITH TYPE 732 OR TYPE 736 CONCRETE BARRIER)

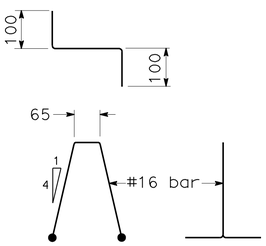

BAR CHAIR DETAIL

DETAIL B

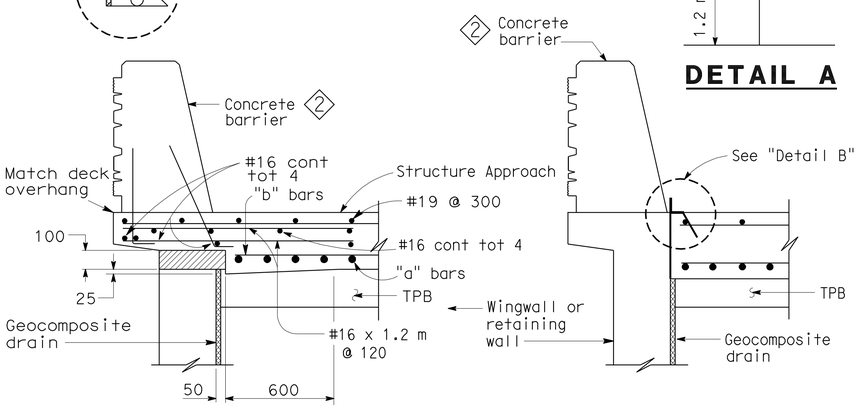

TYPE E-1 TYPE E-2

SECTION C-C

(Type E-1 to be used,unless otherwise shown on plans)

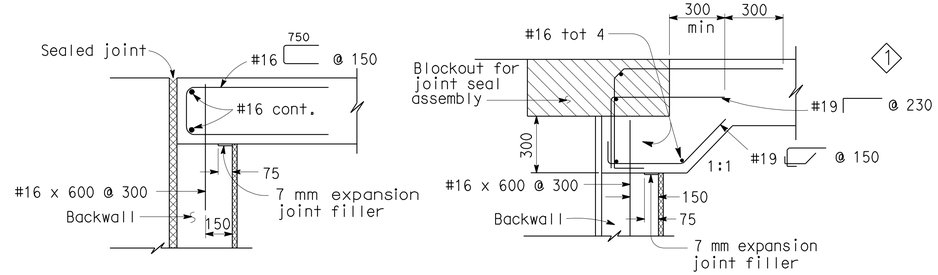

MR ≤ 50 mm MR > 50 mm

SEAT TYPE ABUTMENT TIE DETAILS (SEE NOTE 1)

NOTES:

1. For details not shown,see Structure Plans. For MR ≤ 50 mm,adjust bar reinforcement to clear a sawcut for sealed joint,when required.
2. For drainage details,see "Structure Approach Drainage Details" sheet.
3. Longitudinal construction joints,when permitted by the Engineer, shall be located on lane lines.
4. End angle or plate at beginning of barrier transition, end of wingwall or end of structure approach as applicable.
5. For transverse contact joint with new PCC paving, refer to Standard Plan P30.
6. At the contractor's option, approach slab transverse reinforcement may be placed parallel to paving notch. Spacing of transverse reinforcement is measured along ℄ roadway.

Remove all polystyrene.

SPECIAL DETAILS

NO SCALE

ALL DIMENSIONS ARE IN MILLIMETERS UNLESS OTHERWISE SHOWN

STANDARD DRAWING

RELEASE DATE	REVISED	DESIGN	BY M. TRAFFALIS	CHECKED E. THORKILDSEN	RELEASED BY
FILE NO.	xs3-120	DETAILS	BY R. YEE	CHECKED E. THORKILDSEN	
		SUBMITTED	BY M. HA	DRAWING DATE 4/98	OFFICE CHIEF

1 Revised detail
2 Modified barrier

STATE OF CALIFORNIA
DEPARTMENT OF TRANSPORTATION

DIVISION OF ENGINEERING SERVICES
STRUCTURE DESIGN
DESIGN BRANCH 2

BRIDGE NO. 10-0159
KILOMETER POST R73.233

WILLITS BYPASS
HAEHL CREEK
STRUCTURE APPROACH TYPE N(9S)

DS OSD 2147A (METRIC) (REV. 2/25/97)

ORIGINAL SCALE IN MILLIMETERS FOR REDUCED PLANS 0 10 20 30 40 50 60 70 80 90 100

CU 01
EA 262001

DISREGARD PRINTS BEARING EARLIER REVISION DATES

REVISION DATES (PRELIMINARY STAGE ONLY) 4-02-08 1-26-09 7-01-09

SHEET 13 OF 19

USERNAME => s109858

10-0159_fsatn9s.dgn

DATE PLOTTED => 28-JAN-2012 TIME PLOTTED => 08:41

DIST.	COUNTY	ROUTE	KILOMETER POST TOTAL PROJECT	SHEET NO.	TOTAL SHEETS
01	Men	101	R69.4/R78.9	734	939

Caltrans Metric

9-15-11
REGISTERED ENGINEER - CIVIL

1-23-12
PLANS APPROVAL DATE

REGISTERED PROFESSIONAL ENGINEER M. Friedheim No. 57968 Exp. 6-30-12 CIVIL STATE OF CALIFORNIA

The State of California or its officers or agents shall not be responsible for the accuracy or completeness of electronic copies of this plan sheet.

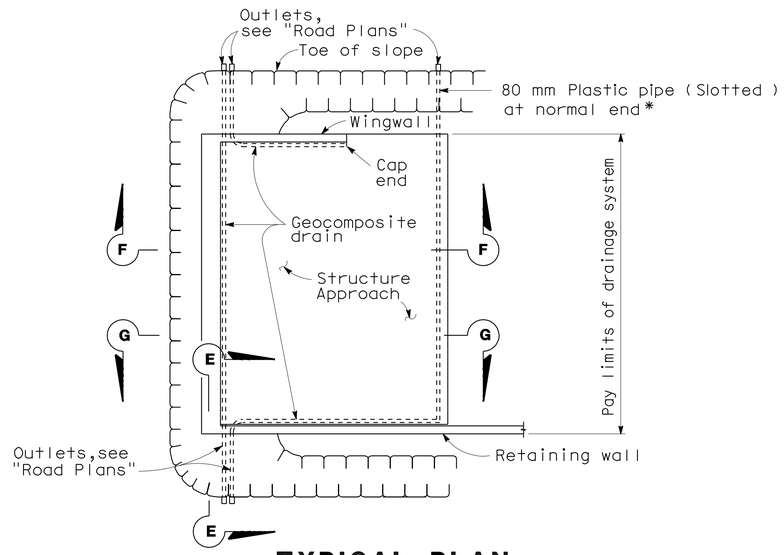

TYPICAL PLAN

*For pipe layout at staggered end, see "Detail B".

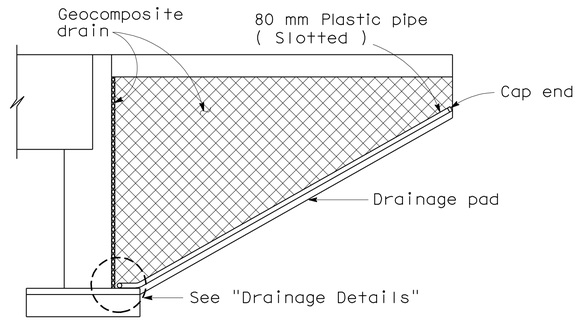

CANTILEVER WINGWALL SECTION F-F

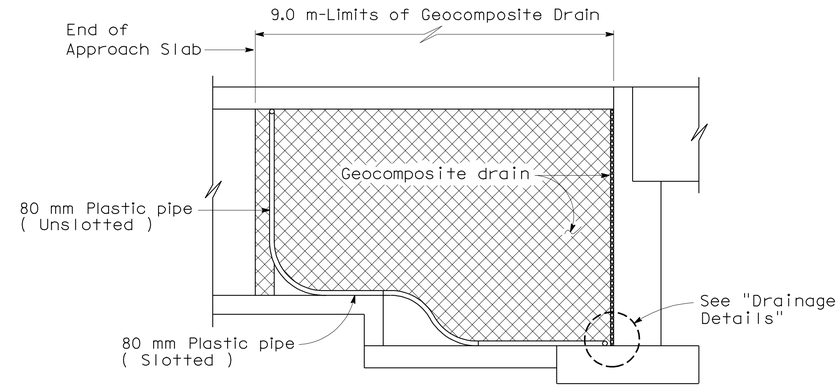

RETAINING WALL WINGWALL SECTION G-G

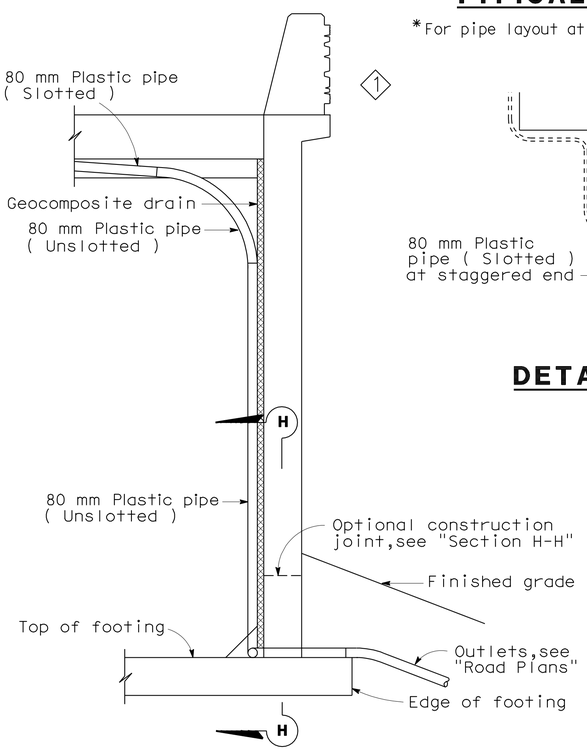

SECTION E-E

NOTE: Bends and junctions in 80 mm plastic pipe are 750 mm radius min.

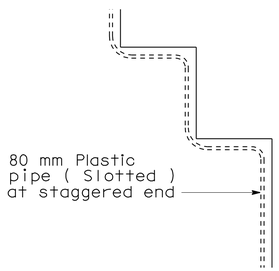

DETAIL B

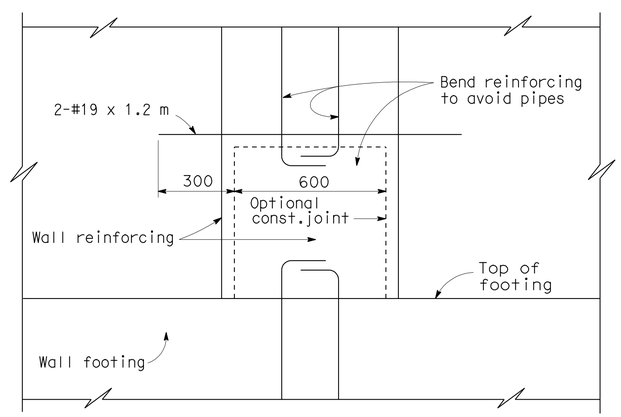

SECTION H-H

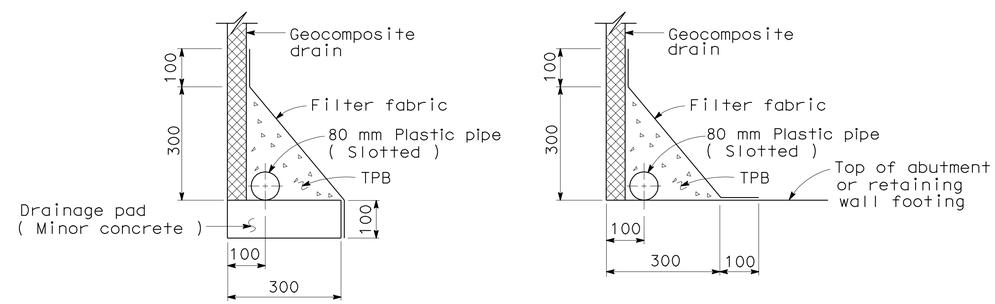

WITHOUT FOOTING WITH FOOTING

DRAINAGE DETAILS

SPECIAL DETAILS

NO SCALE
ALL DIMENSIONS ARE IN MILLIMETERS UNLESS OTHERWISE SHOWN

1 Modified barrier

STANDARD DRAWING				
RELEASE DATE REVISED	DESIGN	BY M. TRAFFALIS	CHECKED E. THORKILDSEN	RELEASED BY
FILE NO. xs3-110	DETAILS	BY R. YEE	CHECKED E. THORKILDSEN	OFFICE CHIEF
	SUBMITTED	BY M. HA	DRAWING DATE 4/98	

STATE OF CALIFORNIA DEPARTMENT OF TRANSPORTATION

DIVISION OF ENGINEERING SERVICES STRUCTURE DESIGN DESIGN BRANCH 2

BRIDGE NO. 10-0159
KILOMETER POST R73.233

WILLITS BYPASS
HAEHL CREEK
STRUCTURE APPROACH DRAINAGE DETAILS

DS OSD 2147A (METRIC) (REV. 2/25/97)

ORIGINAL SCALE IN MILLIMETERS FOR REDUCED PLANS 0 10 20 30 40 50 60 70 80 90 100

CU 01
EA 262001

DISREGARD PRINTS BEARING EARLIER REVISION DATES 4-02-08

REVISION DATES (PRELIMINARY STAGE ONLY)

SHEET 14 OF 19

USERNAME => s109858

10-0159_ftsadd.dgn

DATE PLOTTED => 28-JAN-2012 TIME PLOTTED => 08:42

DIST.	COUNTY	ROUTE	KILOMETER POST TOTAL PROJECT	SHEET NO.	TOTAL SHEETS
01	Men	101	R69.4/R78.9	735	939

Caltrans Metric

REGISTERED ENGINEER - CIVIL 9-15-11

1-23-12
PLANS APPROVAL DATE

REGISTERED PROFESSIONAL ENGINEER M. Friedheim No. 57968 Exp. 6-30-12 CIVIL STATE OF CALIFORNIA

The State of California or its officers or agents shall not be responsible for the accuracy or completeness of electronic copies of this plan sheet.

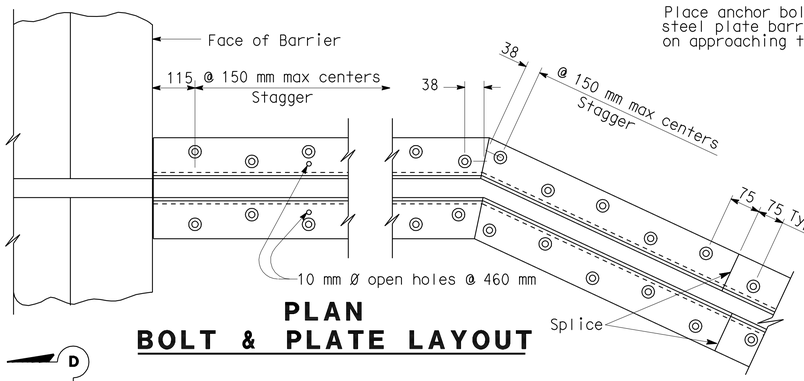

PLAN
BOLT & PLATE LAYOUT

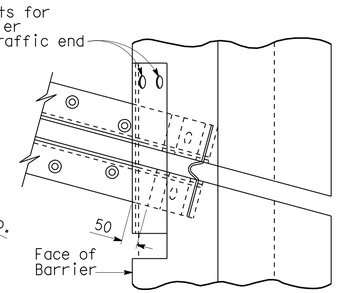

SKEW ≤ 20°

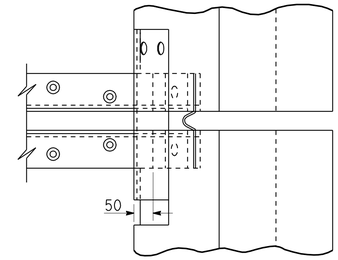

SKEW > 20°

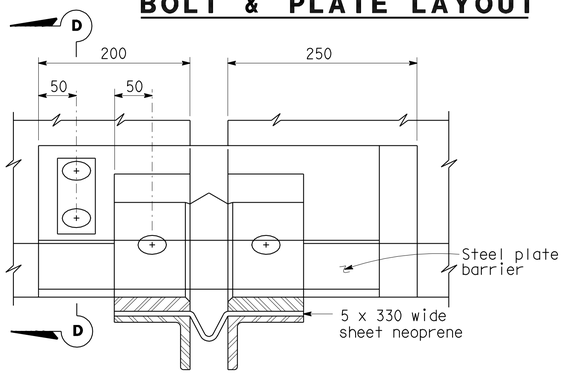

VIEW B-B

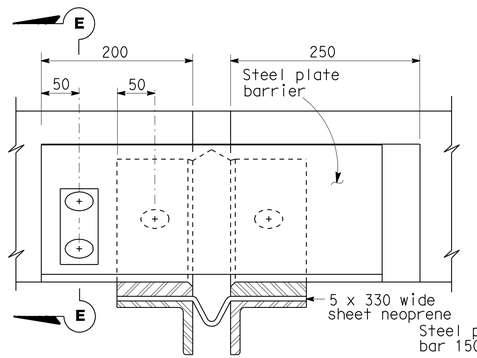

VIEW C-C

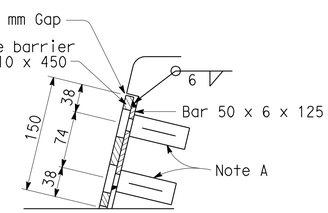

SECTION E-E

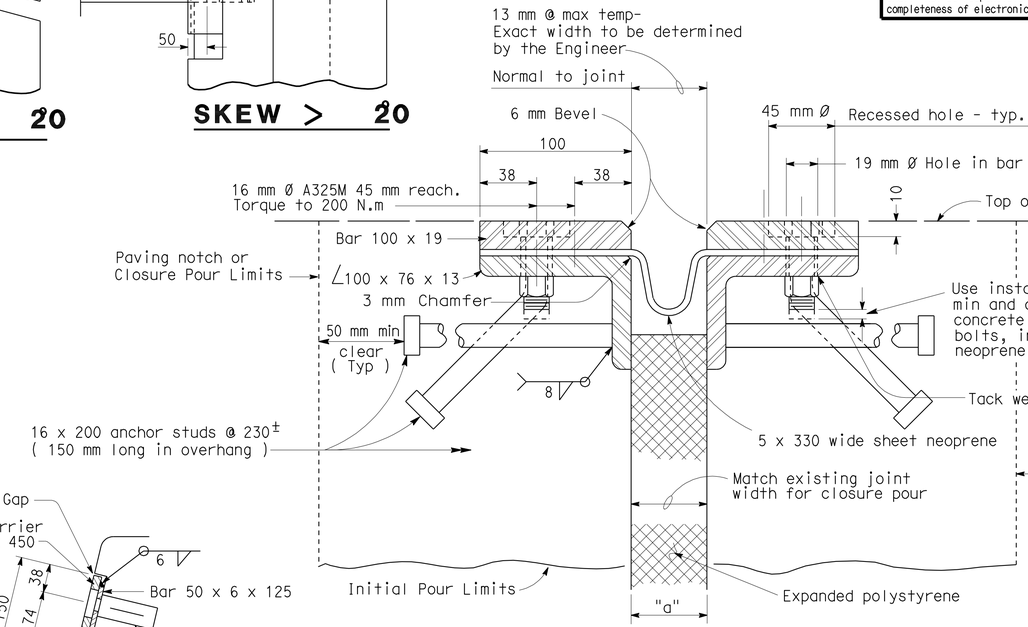

SECTION A-A

Note :
Stagger anchor studs @ 115 mm± on centers thus :

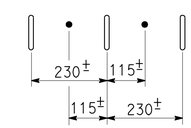

Joint Information			"a" Dimensions		
Location	Movement Rating (MR)	Skew	Winter	Spring & Fall	Summer
Abut 1	60	0	35	25	20
Abut 2	60	0	35	25	20

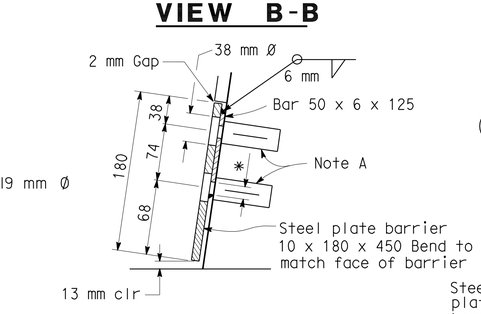

SECTION D-D ◇1

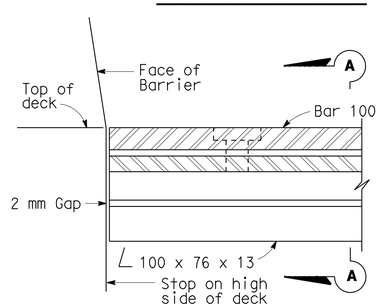

HIGH SIDE BARRIER DETAIL ◇1

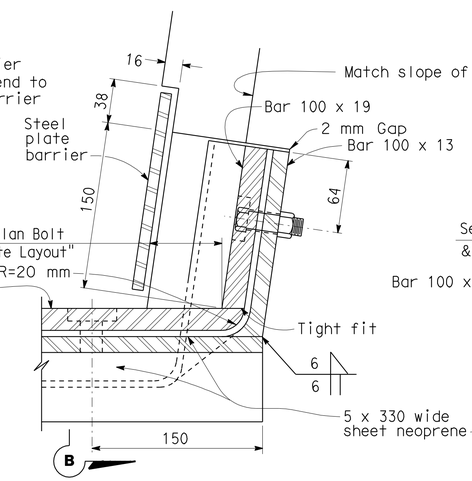

LOW SIDE BARRIER DETAIL ◇1

(See Note B)

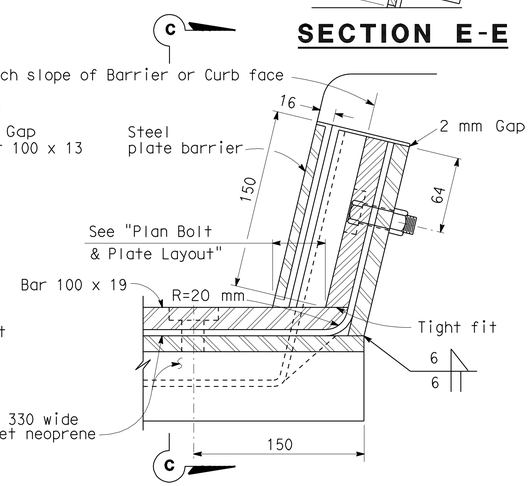

SIDEWALK DETAIL

(See Note B)

NOTES:

Full penetration butt welds may be substituted for fillet welds on all anchor studs.

Alternate types of anchor studs may be permitted subject to the approval by the Engineer.

Joint seal assembly to be used in conjunction with closure pour. (See other sheets for limits). Closure pour shall not be placed until final deck surface is within the tolerance specified.

Use joint at crown of roadway, at any change in transverse slope in deck and at changes in horizontal direction. Place other joints at or near lanes. All metal parts to be painted or galvanized after fabrication.

Sheet neoprene shall be fabricated in one continuous piece or joints shall be vulcanized. Neoprene shall be fabricated to bend around corners. 25 mm holes in neoprene sheets shall be drilled or punched so that the neoprene is not distorted at the time of installation.

NOTE A

Insert assembly or expansion anchorage for 16 x 45 A325M bolt.

NOTE B

Use the Sidewalk Detail at all sidewalk joints. Use the Barrier Detail at both sides if the roadway is crowned or if the difference in elevation between the ends of the seal is 150 mm or less.

NO SCALE

ALL DIMENSIONS ARE IN MILLIMETERS UNLESS OTHERWISE SHOWN

◇1 Modified for barrier shape

SPECIAL DETAILS

WILLITS BYPASS
HAEHL CREEK
JOINT SEAL ASSEMBLY (MAXIMUM MOVEMENT RATING = 100 mm)

STANDARD DRAWING

RELEASE DATE	REVISED	DESIGN	BY H. HERR	CHECKED R. LACALLE	RELEASED BY
FILE NO.	xs8-010	DETAILS	BY R. YEE	CHECKED R. LACALLE	
		SUBMITTED	BY C.W. PURKISS	DRAWING DATE 9/93	OFFICE CHIEF

STATE OF CALIFORNIA DEPARTMENT OF TRANSPORTATION

DIVISION OF ENGINEERING SERVICES STRUCTURE DESIGN

DESIGN BRANCH 2

BRIDGE NO. 10-0159

KILOMETER POST R73.233

CU 01
EA 262001

DISREGARD PRINTS BEARING EARLIER REVISION DATES

REVISION DATES (PRELIMINARY STAGE ONLY) 4-26-06 4-02-08

SHEET 15 OF 19

DS OSD 2147A (METRIC) (REV. 2/25/97)

ORIGINAL SCALE IN MILLIMETERS FOR REDUCED PLANS 0 10 20 30 40 50 60 70 80 90 100

USERNAME => s109858

10-0159_fxs8-010.dgn

DATE PLOTTED => 28-JAN-2012 TIME PLOTTED => 08:42

DIST.	COUNTY	ROUTE	KILOMETER POST TOTAL PROJECT	SHEET NO.	TOTAL SHEETS
01	Men	101	R69.4/R78.9	736	939

Caltrans Metric

REGISTERED ENGINEER - CIVIL 9-15-11

1-23-12
PLANS APPROVAL DATE

REGISTERED PROFESSIONAL ENGINEER M. Friedheim No. 57968 Exp. 6-30-12 CIVIL STATE OF CALIFORNIA

The State of California or its officers or agents shall not be responsible for the accuracy or completeness of electronic copies of this plan sheet.

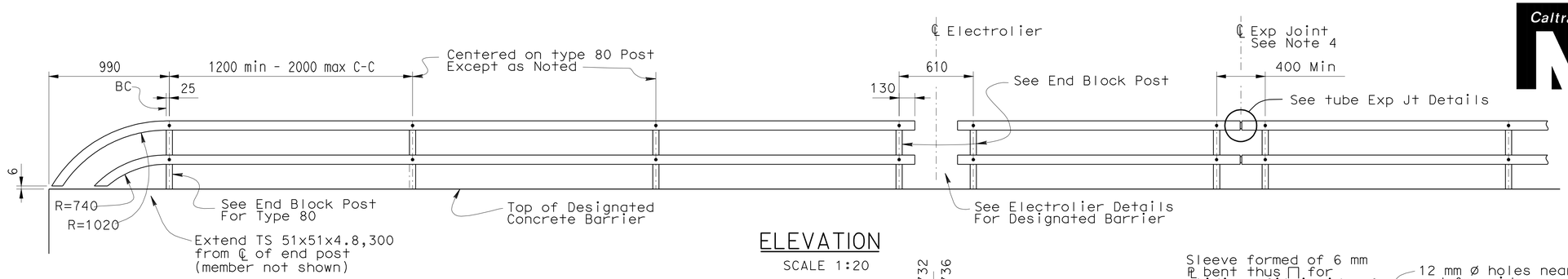

ELEVATION
SCALE 1:20

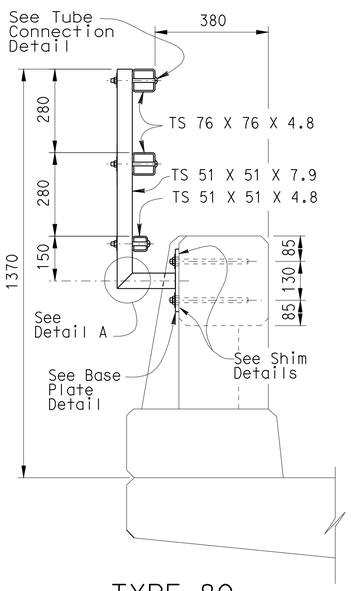

TYPE 80
END BLOCK POST
SCALE 1:10

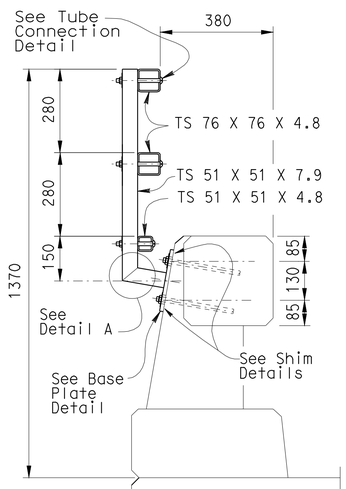

TYPE 80
SCALE 1:10

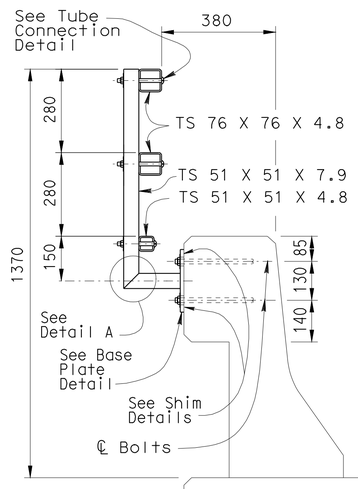

TYPE 25
SCALE 1:10

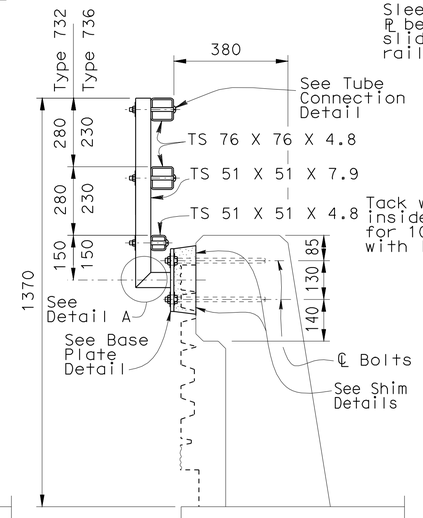

TYPE 732 OR 736 ◇1
NO SCALE

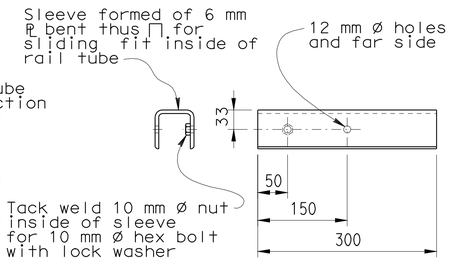

SLEEVE DETAIL
SCALE 1:5

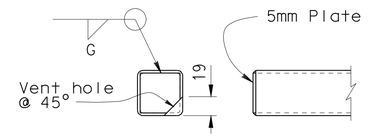

RAIL CAP DETAIL
SCALE 1:5

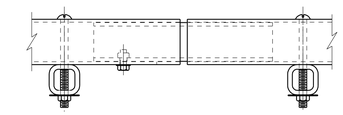

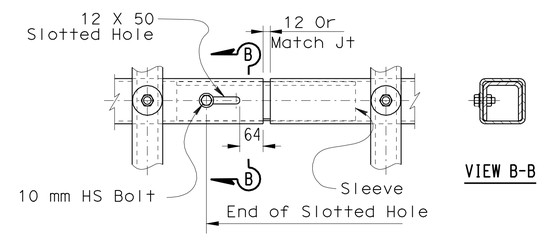

TUBE EXPANSION JOINT DETAILS
SCALE 1:5

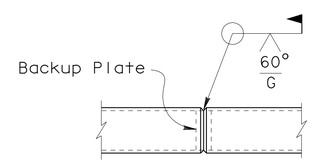

WELDED SPLICE DETAIL
SCALE 1:5

NOTES:

1. Galvanize rail assembly after fabrication.
2. Post shall be normal to railing.
3. Rail tubes shall be shop bent or fabricated to fit horizontal curve when radius is less than 300 m.
4. Tube splices shall be located in the tubes spanning deck or wall joints. Increase joint width in tubes to match expansion joint width and increase sleeve length correspondingly.
5. Top rail tube shall be continuous over not less than two posts except a short post spacing is permitted near deck or wall joints, electroliers, or other rail discontinuities as noted.
6. For details and reinforcement not shown see Standard Plans.
7. See project plans for limits of tubular bicycle railing.
8. CIP threaded rods may alternatively be installed using a drill and bond method with epoxy cartridges after forming and pouring barrier concrete. Plates to be placed against level surface.

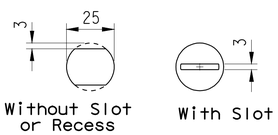

VIEW C-C
SCALE 1:1

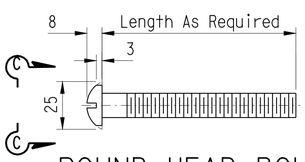

ROUND HEAD BOLT DETAIL
SCALE 1:1

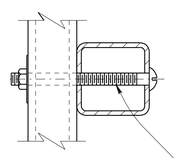

TUBE CONNECTION DETAIL
SCALE 1:2.5

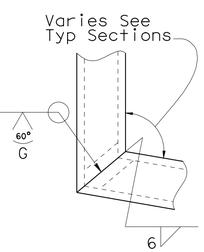

DETAIL A
SCALE 1:2.5

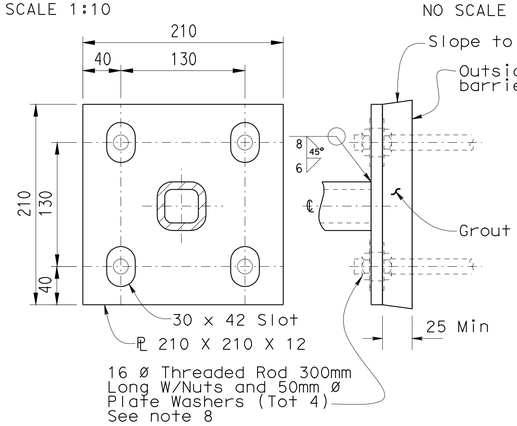

BASE PLATE DETAIL ◇2
SCALE 1:2.5

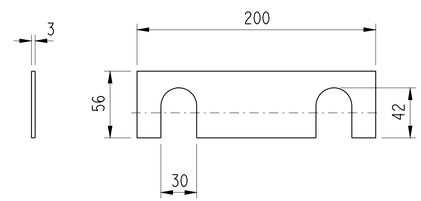

SHIM DETAILS
NO SCALE

SPECIAL DETAILS

WILLITS BYPASS
HAEHL CREEK
TUBULAR BICYCLE RAILING

RELEASE DATE	REVISED	DESIGN	BY TILLAT SATTER	CHECKED NEELIMA PATIL	RELEASED BY
FILE NO.	XS16-500	DETAILS	BY H.NGUYEN	CHECKED TILLAT SATTER	
		SUBMITTED	BY	DRAWING DATE 08/06	OFFICE CHIEF

◇1 Barrier modified
◇2 Plate details modified

STATE OF CALIFORNIA
DEPARTMENT OF TRANSPORTATION

DIVISION OF ENGINEERING SERVICES

BRIDGE NO. 10-0159
KILOMETER POST R73.233

CU 01
EA 262001

DS OSD 2139M (METRIC) (REV. 3/5/97)

ORIGINAL SCALE IN MILLIMETERS FOR REDUCED PLANS 0 10 20 30 40 50 60 70 80 90 100

DISREGARD PRINTS BEARING EARLIER REVISION DATES

REVISION DATES (PRELIMINARY STAGE ONLY) 4-02-08 1-26-09 01-30-09 7-01-09

SHEET 16 OF 19

USERNAME => s109858 DATE PLOTTED => 28-JAN-2012 TIME PLOTTED => 08:42

USERNAME => s109858

FILE => 10-0159_fxss16-500.dgn

VI=I

OGS CIVIL LOG OF TEST BORINGS SHEET (METRIC) (REV. 4/04)

CONSISTENCY CLASSIFICATION FOR SOILS

According to the Standard Penetration Test

SPT N-Value (Blows/ 0.3m)	Granular	SPT N-Value (Blows/ 0.3m)	Cohesive
0-4	Very Loose	<2	Very Soft
5-10	Loose	2-4	Soft
11-30	Medium Dense	5-8	Firm
31-50	Dense	9-15	Stiff
>50	Very Dense	16-30	Very stiff
		>30	Hard

NOTE: Classification of earth material as shown on this sheet is based upon field inspection and is not to be construed to imply mechanical analysis.

LEGEND OF EARTH MATERIALS

GRAVEL, SAND, SILT, CLAY, SANDY CLAY or CLAYEY SAND, SANDY SILT or SILTY SAND, SILTY CLAY, CLAYEY SILT, PEAT and/or ORGANIC MATTER, COBBLES and/or BOULDERS, IGNEOUS ROCK, SEDIMENTARY ROCK, METAMORPHIC

LEGEND OF BORING OPERATIONS

57 mm CONE PENETRATION; SAMPLE BORING (DRY); ROTARY SAMPLE BORING (WET); AUGER BORING (DRY); TEST PIT; DIAMOND CORE BORING; JET BORING; ELECTRONIC CONE PENETROMETER

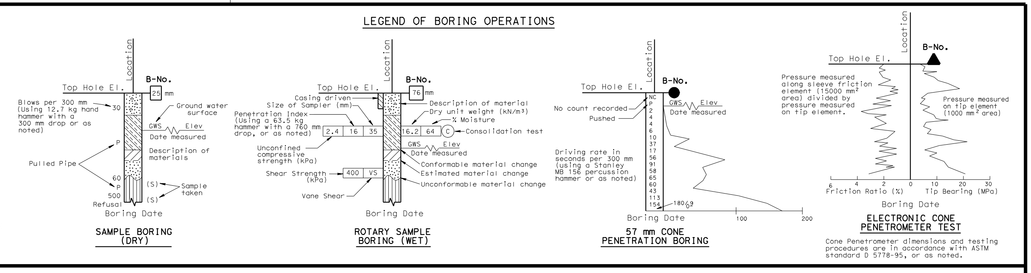

Caltrans Metric

ENGINEERING SERVICES | GEOTECHNICAL SERVICES

DRAWN BY W. Tang 02/2009

CHECKED BY

FIELD INVESTIGATION BY: T. Alderman

ALL DIMENSIONS ARE IN METERS UNLESS OTHERWISE SHOWN

ORIGINAL SCALE IN MILLIMETERS FOR REDUCED PLANS 0 10 20 30 40 50 60 70 80 90 100

STATE OF CALIFORNIA
DEPARTMENT OF TRANSPORTATION

DIVISION OF ENGINEERING SERVICES
STRUCTURE DESIGN
DESIGN BRANCH 2

CU 01
EA 262001

BRIDGE NO. 10-0159
KILOMETER POST R73.233

DISCARD PRINTS BEARING EARLIER REVISION DATES

REVISION DATES (PRELIMINARY STAGE ONLY) 02-28-09 02-24-09 05-18-09

LOG OF TEST BORINGS 1 OF 3

SHEET 17 OF 19

WILLITS BYPASS

HAEHL CREEK

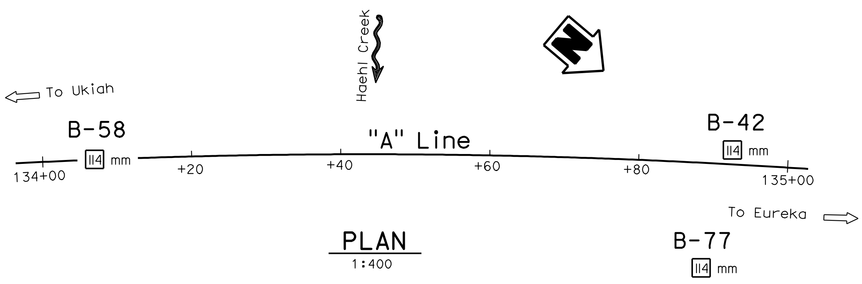

PLAN
1:400

BENCH MARK

SUHV66
Fnd "ALCAR @ C-1 125+70x46.0LT"
31.541 m Lt ℄ "A" LINE Rte 101
Sta 125+79.229
N 692293.711
E 1884946.726
Elev = 424.242

Notes:

1. Standard Penetration Tests (SPT) performed in Borings B-58 and B-77 were advanced using a 63.5 kg Diedrich Automatic Hammer.
2. Standard Penetration Tests (SPT) performed in Boring B-42 were advanced using a 63.5 kg Safety Hammer.
3. E=Blow count for 0.3 m penetration extrapolated from blow count for less than 0.3 m (due to change in material or hard driving).
4. pp= Unconfined commpressive strength determined in the field by "Pocket Penetrometer." Units shown are kilopascals (kPa).
5. Consistency descriptors shown on the LOTB sheets are based on the pocket penetrometer readings.
6. UU= Undrained shear strength determined in the laboratory by Unconsolidated-Undrained Triaxial Test. Units shown are kilopascals (kPa).
7. Groundwater surface elevations are subject to seasonal fluctuations and may occur at higher or lower elevations depending on conditions at any particular time.

On C/L Sta 134+07 "A" Line

B-58
114 mm
420.30

419 m — 9 35
CLAY with SAND and GRAVEL (CL), hard, brown, dry, fine sand, fine gravel. — 419 m
-at Elev 418.78 m, pp = 431 kPa.
-at Elev 418.17 m, UU = 147 kPa.

12 35
14 35
416 m — 9 35
CLAY with SAND and GRAVEL (CL), stiff to hard, mottled grayish brown, moist. — 416 m
-at Elev 417.25 m, pp = 371 kPa.
-at Elev 414.97 m, UU = 20 kPa.
-from Elev 415.73 to 414.20 m, pp = 144 kPa to 239 kPa.

GWS Elev 414.69 m
11-1-05

5 35
413 m
CLAY (CL), firm to very stiff, dark gray moist, some mottling, trace organics. — 413 m
-at Elev 413.44 m, UU = 8 kPa.
-from Elev 414.20 to 408.41 m, pp = 72 kPa to 168 kPa.
-at Elev 411.77 m, UU = 36 kPa.
-at Elev 410.24 m, UU = 66 kPa. — 410 m

5 35
8 35
410 m
5 35
SANDY CLAY (CL), firm to stiff, gray, wet, mottled.
-at Elev 409.63 m, pp = 96 kPa.
-at Elev 408.11 m, pp = 120 kPa.

11 35
407 m
CLAYEY SAND with GRAVEL (SC), medium dense, dark greenish gray, wet. — 407 m
SANDY CLAY with GRAVEL (CL), very stiff, dark greenish gray, moist, fine to coarse gravel.
-at Elev 407.19 m, pp = 192 kPa.

9 35
6 35
404 m
CLAY (CL), firm to hard, dark greenish gray, moist.
-from Elev 406.58 to 405.06 m, pp = 72 kPa. — 404 m
-at Elev 405.37 m, UU = 54 kPa.
-from Elev 405.06 to 403.54 m, pp = 132 kPa.
-at Elev 402.77 m, UU = 69 kPa.

8 35
15 35
401 m
-from Elev 403.54 to 400.48 m, pp = 120 kPa to 239 kPa. — 401 m

23 35
CLAYEY SAND with GRAVEL (SC), medium dense, grayish brown, moist to wet.

28 35
398 m
Well graded GRAVEL with CLAY and SAND (GW-GC), medium dense, brown, wet, fine to coarse subrounded to rounded gravel. — 398 m

25 35
23 35
395 m
Poorly graded GRAVEL with SILT and SAND (GP-GM), medium dense, brown, wet, fine to medium subrounded to rounded gravel. — 395 m

23 35
392 m — 392 m
CLAY (CL), very stiff to hard, bluish gray, moist.
-from Elev 392.26 to 391.34 m, mottled bluish gray and reddish yellow, pp = 180 kPa.
-from Elev 391.34 to 388.91 m, pp = 263 kPa.

22 35
389 m — 389 m
CLAYEY GRAVEL with SAND (GC), dense, brown, moist, medium to coarse subrounded gravel.

37 35
386 m — 386 m
GRAVEL with CLAY and SAND (GW-GC), dense, brown, moist, fine to coarse subrounded gravel.

383 m — 383 m
CLAY with SAND (CL), hard, bluish gray, moist, fine sand.
-from Elev 383.72 to 380.07 m, pp = 239 kPa to 431 kPa.

16 35
380 m — 380 m
CLAY (CL), hard, dark bluish gray, moist.
-from Elev 380.07 to 377.63 m, pp = 335 kPa

377 m — 377 m
CLAY (CL), hard, mottled bluish gray and reddish yellow, moist.
-from Elev 377.63 to 377.02 m, pp = 371 kPa.
-from Elev 377.02 to 373.97 m, pp = 0 to 431 kPa.

41 35
374 m — 374 m
GRAVEL with CLAY and SAND (GW-GC), dense, brown, moist, fine to coarse subrounded gravel.

CLAYEY GRAVEL with SAND (GC), dense, brown, moist, medium to coarse subrounded to rounded gravel.

371 m — 371 m
Well graded GRAVEL with SILT and SAND (GW-GM), very dense, brown, moist to wet, fine to coarse rounded gravel.

88 35

11-1-05

134+00 134+20

PROFILE
HOR. 1:100
VER. 1:100

CERTIFIED ENGINEERING GEOLOGIST 5-19-09 DATE

1-23-12
PLANS APPROVAL DATE

REGISTERED GEOLOGIST Reid Buell No. 1481 Exp. 4-30-11 CERTIFIED ENGINEERING GEOLOGIST STATE OF CALIFORNIA

The State of California or its officers or agents shall not be responsible for the accuracy or completeness of electronic copies of this plan sheet.

DIST	COUNTY	ROUTE	KILOMETER POST TOTAL PROJECT	SHEET NO	TOTAL SHEETS
01	Men	101	R69.4/R78.9	737	939

USERNAME => s109858 DATE PLOTTED => 28-JAN-2012 TIME PLOTTED => 08:42

OGS CIVIL LOG OF TEST BORINGS SHEET (METRIC) (REV. 4/04)

CONSISTENCY CLASSIFICATION FOR SOILS

According to the Standard Penetration Test

SPT N-Value (Blows/0.3m)	Granular	SPT N-Value (Blows/0.3m)	Cohesive
0-4	Very Loose	<2	Very Soft
5-10	Loose	2-4	Soft
11-30	Medium Dense	5-8	Firm
31-50	Dense	9-15	Stiff
>50	Very Dense	16-30	Very stiff
		>30	Hard

NOTE: Classification of earth material as shown on this sheet is based upon field inspection and is not to be construed to imply mechanical analysis.

LEGEND OF EARTH MATERIALS

GRAVEL, SAND, SILT, CLAY, SANDY CLAY or CLAYEY SAND, SANDY SILT or SILTY SAND, SILTY CLAY, CLAYEY SILT, PEAT and/or ORGANIC MATTER, COBBLES and/or BOULDERS, IGNEOUS ROCK, SEDIMENTARY ROCK, METAMORPHIC

LEGEND OF BORING OPERATIONS

57 mm CONE PENETRATION; SAMPLE BORING (DRY); ROTARY SAMPLE BORING (WET); AUGER BORING (DRY); TEST PIT; DIAMOND CORE BORING; JET BORING; ELECTRONIC CONE PENETROMETER

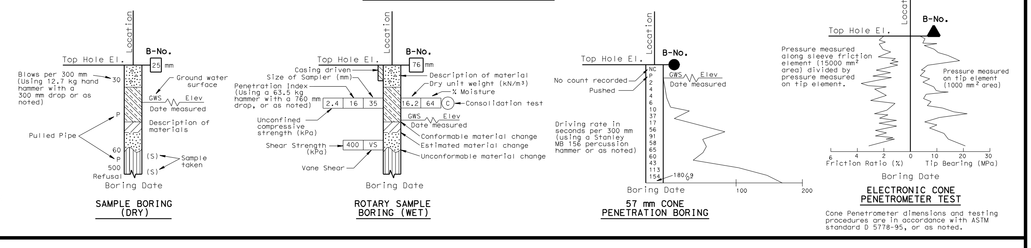

FOR PLAN VIEW, SEE "LOG OF TEST BORINGS" 1 OF 3

14 m Rt Sta 134+89 "A" Line

B-77 — 419.75 — 15 35 — 114 mm

419 m — CLAY (CL), stiff, light brown, dry.

CLAY (CL), hard, mottled reddish, brown and gray, moist.
-at Elev 418.23 m, pp > 431 kPa
SILTY fine SAND (SM), loose, brown, moist.

416 m — 9 35 — CLAY (CL), firm, brown, wet.
-at Elev 416.09 m, pp = 60 kPa
Fine SANDY CLAY (CL), soft to firm, brown with gray mottling, wet.
-from Elev 415.03 m to 414.26 m, pp = 12 kPa

GWS Elev 415.27 m 10-5-06

413 m — 6 35 — CLAY (CL), firm, gray with brown mottling, wet.
-from Elev 414.26 m to 412.74 m, pp = 60 kPa

Fine SAND (SP), loose, gray, wet.

410 m — 7 35 — CLAY (CL), firm to stiff, dark bluish gray with brown mottling, moist.
-from Elev 412.74 m to 407.56 m, pp = 48 kPa to 144 kPa

407 m — 8 35 — SILTY fine SAND (SM), loose, brown, wet.
CLAY (CL), firm to stiff, mottled brown and gray, moist.
-at Elev 407.25 m, pp = 96 kPa
CLAY (CL), stiff, dark bluish gray, moist.
-at Elev 406.64 m, pp = 132 kPa
Fine to medium SAND (SW), dark bluish gray, wet.

404 m — 9 35 — CLAY (CL), firm, dark bluish gray, moist.
-from Elev 406.19 m to 402.99 m, pp = 48 kPa to 96 kPa

CLAYEY GRAVEL (GC), dense, brown, moist, medium to coarse subrounded gravel.

401 m — 32 35 — CLAY (CL), firm, dark bluish gray, moist.
-from Elev 400.85 m to 399.94 m, pp = 60 kPa
-from Elev 399.94 m to 399.33 m, pp = 96 kPa

398 m — 12 35 — Fine SANDY CLAY (CL), stiff to very stiff, mottled reddish brown and bluish gray, moist.
-from Elev 399.33 to 397.50 m, pp = 96 to 192 kPa

CLAYEY GRAVEL with SAND (GC), dense to very dense, brown, moist, fine to coarse subrounded to rounded gravel.

395 m — 36 35

392 m — 48 35

389 m — 69 35

386 m — 68 35

383 m — 21 35 — Interbedded CLAYEY GRAVEL (GC) and CLAY (CL), medium dense/very stiff, brown clayey gravel, dark greenish gray clay, moist.

-from Elev 383.78 m to 380.73 m, pp = 144 kPa to 239 kPa

380 m — 24 35 — -from Elev 380.73 m to 377.69 m, pp = 144 kPa to 335 kPa

CLAY with trace of fine SAND (CL), very stiff to hard, dark greenish gray, moist.

377 m — 46 35 — CLAYEY GRAVEL with SAND (GC), dense to very dense, brown, moist, fine to medium rounded gravel.

374 m — 74 35

371 m — 57 35

368 m — 29 35 — CLAY with fine SAND (CL), hard, mottled greenish gray and reddish yellow, moist.
-from Elev 368.54 m to 366.41 m, pp = 215 kPa

365 m — E130 35 — CLAYEY GRAVEL with SAND (GC), very dense, light brownish gray, moist, fine to coarse rounded gravel.

362 m — 89 35

359 m — 111 35

10-5-06

356 m

134+90 — 135+10

PROFILE
HOR. 1:100
VER. 1:100

Caltrans Metric

ENGINEERING SERVICES | GEOTECHNICAL SERVICES

DRAWN BY: W. Tang 02/2009
CHECKED BY:
FIELD INVESTIGATION BY: T. Alderman

ALL DIMENSIONS ARE IN METERS UNLESS OTHERWISE SHOWN

ORIGINAL SCALE IN MILLIMETERS FOR REDUCED PLANS 0 10 20 30 40 50 60 70 80 90 100

STATE OF CALIFORNIA
DEPARTMENT OF TRANSPORTATION
DIVISION OF ENGINEERING SERVICES
STRUCTURE DESIGN
DESIGN BRANCH 2

CU 01
EA 262001

BRIDGE NO. 10-0159
KILOMETER POST R73.233

DISREGARD PRINTS BEARING EARLIER REVISION DATES

REVISION DATES (PRELIMINARY STAGE ONLY)
02-28-09 02-24-09 05-19-09

WILLITS BYPASS
HAEHL CREEK
LOG OF TEST BORINGS 2 OF 3

SHEET 18 OF 19

FILE => 10-0159_fy101b02.dgn

CERTIFIED ENGINEERING GEOLOGIST 5-19-09 DATE
REGISTERED GEOLOGIST
Reid Buell No. 1481 Exp. 4-30-11 ENGINEERING GEOLOGIST STATE OF CALIFORNIA
1-23-12
PLANS APPROVAL DATE

The State of California or its officers or agents shall not be responsible for the accuracy or completeness of electronic copies of this plan sheet.

DIST	COUNTY	ROUTE	KILOMETER POST TOTAL PROJECT	SHEET NO	TOTAL SHEETS
01	Men	101	R69.4/R78.9	738	939

USERNAME => s109858 DATE PLOTTED => 28-JAN-2012 TIME PLOTTED => 08:43

OGS CIVIL LOG OF TEST BORINGS SHEET (METRIC) (REV. 4/04)

CONSISTENCY CLASSIFICATION FOR SOILS

According to the Standard Penetration Test

SPT N-Value (Blows/ 0.3m)	Granular	SPT N-Value (Blows/ 0.3m)	Cohesive
0-4	Very Loose	<2	Very Soft
5-10	Loose	2-4	Soft
11-30	Medium Dense	5-8	Firm
31-50	Dense	9-15	Stiff
>50	Very Dense	16-30	Very stiff
		>30	Hard

NOTE: Classification of earth material as shown on this sheet is based upon field inspection and is not to be construed to imply mechanical analysis.

LEGEND OF EARTH MATERIALS

GRAVEL, SAND, SILT, CLAY, SANDY CLAY or CLAYEY SAND, SANDY SILT or SILTY SAND, SILTY CLAY, CLAYEY SILT, PEAT and/or ORGANIC MATTER, COBBLES and/or BOULDERS, IGNEOUS ROCK, SEDIMENTARY ROCK, METAMORPHIC

LEGEND OF BORING OPERATIONS

57 mm CONE PENETRATION; SAMPLE BORING (DRY); ROTARY SAMPLE BORING (WET); AUGER BORING (DRY); TEST PIT; DIAMOND CORE BORING; JET BORING; ELECTRONIC CONE PENETROMETER

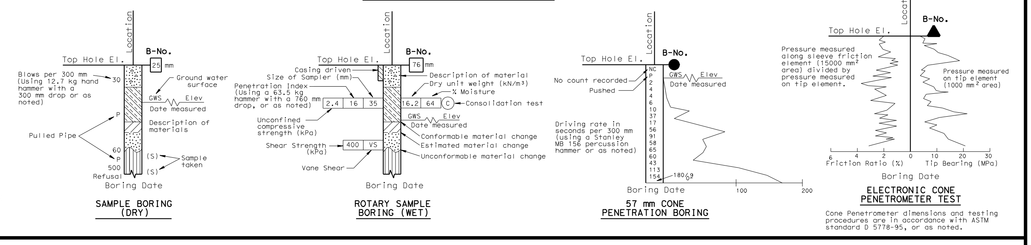

Cone Penetrometer dimensions and testing procedures are in accordance with ASTM standard D 5778-95, or as noted.

Caltrans Metric

ENGINEERING SERVICES | GEOTECHNICAL SERVICES

DRAWN BY: W. Tang 02/2009
CHECKED BY:
FIELD INVESTIGATION BY: T. Alderman

ALL DIMENSIONS ARE IN METERS UNLESS OTHERWISE SHOWN

ORIGINAL SCALE IN MILLIMETERS FOR REDUCED PLANS

STATE OF CALIFORNIA
DEPARTMENT OF TRANSPORTATION
DIVISION OF ENGINEERING SERVICES
STRUCTURE DESIGN
DESIGN BRANCH 2

CU 01
EA 262001

BRIDGE NO. 10-0159
KILOMETER POST R73.233

DISCARD PRINTS BEARING EARLIER REVISION DATES

REVISION DATES (PRELIMINARY STAGE ONLY)

HAEHL CREEK

WILLITS BYPASS

LOG OF TEST BORINGS 3 OF 3

SHEET 19 OF 19

FILE => 10-0159_fy10tb03.dgn

FOR PLAN VIEW, SEE "LOG OF TEST BORINGS" 1 OF 3

1.8 m Lt Sta 134+92.5 "A" Line

B-42

419.42 | 114 mm

GWS Elev 417.29 m 7-13-05

419 m — SANDY CLAY (CL) with GRAVEL, firm, very dark grayish brown, moist, fine to medium sand, fine subangular gravel, organics (rootlets).

CLAY (CL) with fine SAND, dark yellowish brown, moist.

416 m — SILTY GRAVEL with SAND (GM), medium dense to dense, dark yellowish brown, moist, fine to coarse subangular to subrounded sand and gravel.

413 m — SILTY SAND with GRAVEL (SM), medium dense, dark yellowish brown and dark greenish gray, moist, fine to medium sand, fine to coarse subrounded gravel.

CLAY with SAND (CL), stiff, dark bluish gray, moist.

410 m — -at Elev 410.28 m, pp=120 kPa.

Well graded GRAVEL with CLAY and SAND (GW-GC), medium dense, dark bluish gray, moist, fine to coarse sand, fine subrounded gravel.

407 m — SILTY SAND (SM), medium dense, dark bluish gray, moist, fine sand.

CLAY (CL), stiff, dark bluish gray, moist.

404 m — -from Elev 406.92 m to 403.42 m, pp=96 kPa to 144 kPa.

Well graded GRAVEL with CLAY and SAND (GW-GC) and COBBLES (10%), very dense, dark yellowish brown and dark greenish gray, moist to wet, fine to coarse subangular to rounded sand and gravel; cobbles (approx.100 mm in size), hard, moderately weathered, subrounded.

401 m

398 m

395 m

392 m

389 m

386 m

383 m — CLAY with SAND (CL), hard, dark greenish gray, moist, trace oxide staining.

-at Elev 383.27 m, pp=215 kPa.

SILTY SAND with GRAVEL (SM), very dense, dark gray, moist, fine to coarse subangular sand and gravel.

380 m — CLAY with SAND (CL), hard, dark bluish gray, moist, fine to medium sand, trace oxide staining.

377 m — Well graded gravel with CLAY and SAND (GW-GC) and COBBLES (10%), very dense, olive brown and dark greenish gray, moist, fine to coarse subangular to rounded sand and gravel; cobbles (approx. 100 mm in size), hard, moderately weathered, subrounded.

374 m

371 m

6 35 | 19 35 | 31 35 | 16 35 | 11 35 | 12 35 | 19 35 | 19 35 | 16 35 | 12 35 | E104 35 | 51 35 | 53 35 | E125 35 | 58 35 | 48 35 | 79 35 | 89 35 | E122 35 | 60 35 | 78 35

07-13-05

134+90 — 135+10

PROFILE

HOR. 1:100
VER. 1:100

CERTIFIED ENGINEERING GEOLOGIST — DATE 5-19-09

1-23-12
PLANS APPROVAL DATE

The State of California or its officers or agents shall not be responsible for the accuracy or completeness of electronic copies of this plan sheet.

REGISTERED GEOLOGIST — Reid Buell No. 1481 Exp. 4-30-11 — ENGINEERING GEOLOGIST — STATE OF CALIFORNIA

DIST	COUNTY	ROUTE	KILOMETER POST TOTAL PROJECT	SHEET NO	TOTAL SHEETS
01	Men	101	R69.4/R78.9	739	939

USERNAME => s109858 DATE PLOTTED => 28-JAN-2012 TIME PLOTTED => 08:43

DIST	COUNTY	ROUTE	KILOMETER POST TOTAL PROJECT	SHEET No	TOTAL SHEETS
01	Men	101	R69.4/R78.9	740	939

REGISTERED CIVIL ENGINEER 9-15-11 DATE

1-23-12
PLANS APPROVAL DATE

REGISTERED PROFESSIONAL ENGINEER M. Friedheim No. 57968 Exp. 6-30-12 CIVIL STATE OF CALIFORNIA

The State of California or its officers or agents shall not be responsible for the accuracy or completeness of electronic copies of this plan sheet.

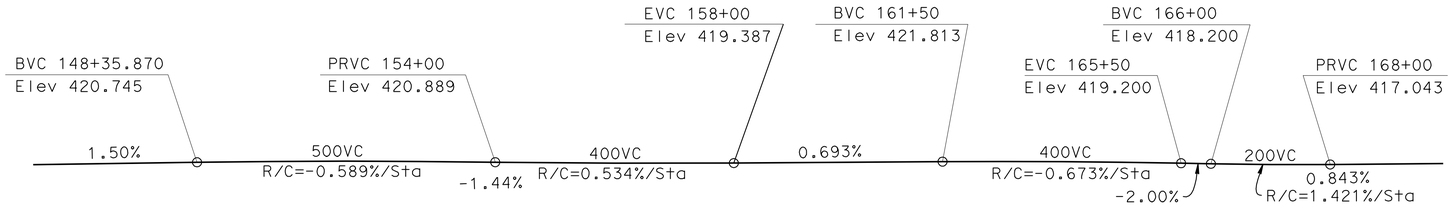

PROFILE GRADE

1:5000

FLOODWAY VIADUCT QUANTITIES 10-0165

STRUCTURE EXCAVATION (BRIDGE)	176	m^3
STRUCTURE EXCAVATION (TYPE A)	392	m^3
STRUCTURE EXCAVATION (TYPE D)	3 600	m^3
STRUCTURE EXCAVATION (TYPE DH)	214	m^3
STRUCTURE BACKFILL (BRIDGE)	2 290	m^3
FURNISH STEEL PILING (HP 250 X 85)	940	m
DRIVE STEEL PILE (HP 250 X 85)	26	EA
FURNISH STEEL PIPE PILING (610 MM)	13 766	m
DRIVE STEEL PIPE PILE (610 MM)	522	EA
PRESTRESSING CAST-IN-PLACE CONCRETE	LUMP	SUM
COLUMN EPOXY COATED PRESTRESSING STEEL	687	kg
SEAL COURSE CONCRETE	61	m^3
STRUCTURAL CONCRETE, BRIDGE FOOTING	1 925	m^3
STRUCTURAL CONCRETE, BRIDGE	15 560	m^3
STRUCTURAL CONCRETE, APPROACH SLAB (TYPE N)	73	m^3
ARCHITECTURAL TEXTURE	768	m^2
PTFE SPHERICAL BEARING	36	EA
JOINT SEAL ASSEMBLY (MR 100 MM)	26	m
JOINT SEAL ASSEMBLY (MR 161 MM - 240 MM)	26	m
JOINT SEAL ASSEMBLY (MR 241 MM - 320 MM)	65	m
BAR REINFORCING STEEL (BRIDGE)	2 838 000	kg
HEADED BAR REINFORCEMENT	8 148	EA
MISCELLANEOUS METAL (RESTRAINER-PIPE TYPE)	4 638	kg
MISCELLANEOUS METAL (BRIDGE)	16 600	kg
BRIDGE DECK DRAINAGE SYSTEM	4 900	kg
TUBULAR BICYCLE RAILING (MODIFIED)	3 645	m
CONCRETE BARRIER (TYPE 736 MODIFIED)	3 645	m

TYPICAL SECTION

1:100

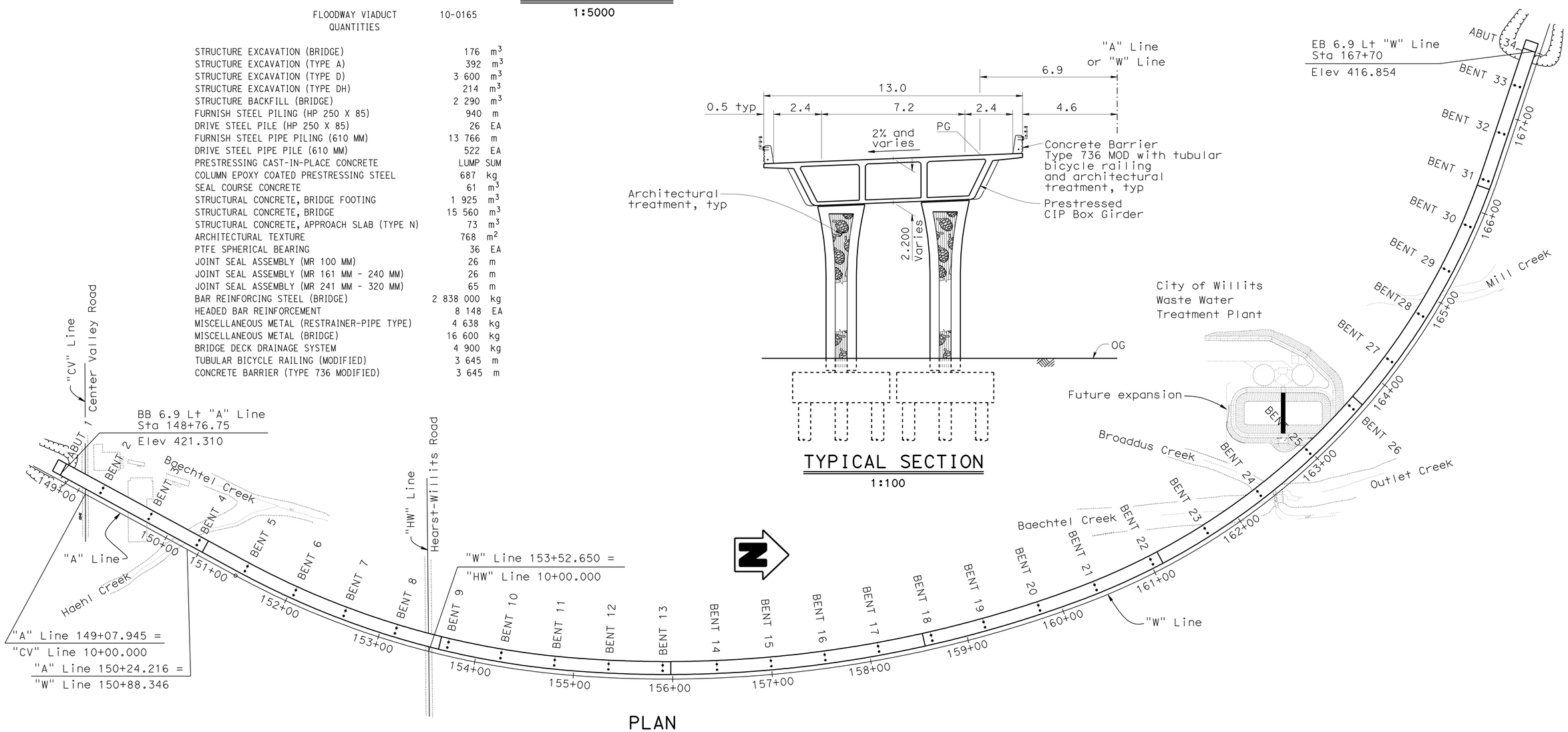

PLAN

1:2000

For Pile Data Table and Index to Plans see "INDEX TO PLANS" sheet
For General Notes see "GENERAL NOTES" sheet

Caltrans Metric

DESIGN ENGINEER

DESIGN	BY MF, MA, RO, CU, EH	CHECKED KS, EW, TB	LOAD FACTOR DESIGN	LIVE LOADING: HS20-44 AND ALTERNATIVE AND PERMIT DESIGN LOAD			
DETAILS	BY E. Montevirgen	CHECKED KS, EW, TB	LAYOUT	BY M. Friedheim	CHECKED M. Akkari		
QUANTITIES	BY Various	CHECKED Various	SPECIFICATIONS	BY I. Huang	PLANS AND SPECS COMPARED I. Huang		

ALL DIMENSIONS ARE IN METERS UNLESS OTHERWISE SHOWN

ORIGINAL SCALE IN MILLIMETERS FOR REDUCED PLANS 0 10 20 30 40 50 60 70 80 90 100

STATE OF CALIFORNIA DEPARTMENT OF TRANSPORTATION

DIVISION OF ENGINEERING SERVICES STRUCTURE DESIGN DESIGN BRANCH 2

CU 01
EA 262001

BRIDGE NO. 10-0165
KILOMETER POST R74.945

WILLITS BYPASS
FLOODWAY VIADUCT
GENERAL PLAN

DISREGARD PRINTS BEARING EARLIER REVISION DATES

REVISION DATES: 8-18-04 3-16-06 3-13-08 4-04-08 5-13-08 4-09-09 4-24-09 12-21-09

SHEET 1 OF 88

FILE => 10-0165_gagp01.dgn

STRUCTURES DESIGN GENERAL PLAN SHEET (METRIC) (REV.03-17-04)

USERNAME => s109858 DATE PLOTTED => 28-JAN-2012 TIME PLOTTED => 08:43

DIST	COUNTY	ROUTE	KILOMETER POST TOTAL PROJECT	SHEET No	TOTAL SHEETS
01	Men	101	R69.4/R78.9	741	939

REGISTERED CIVIL ENGINEER 9-15-11 DATE

1-23-12
PLANS APPROVAL DATE

REGISTERED PROFESSIONAL ENGINEER M. Friedheim No. 57968 Exp. 6-30-12 CIVIL STATE OF CALIFORNIA

The State of California or its officers or agents shall not be responsible for the accuracy or completeness of electronic copies of this plan sheet.

PILE DATA TABLE

Location	Pile Type	Nominal Resistance Compression (kN)	Nominal Resistance Tension (kN)	Design Tip Elevation (1)	Design Tip Elevation (2)	Design Tip Elevation (3)	Specified Tip Elevation
Abut 1	HP 250 x 85	1200	0	388.5	N/A	N/A	388.5
Bent 2	PP 610 x 13	2250	250	387.0	407.5	401.5	387.0
Bent 3	PP 610 x 13	2250	350	387.0	406.5	401.5	387.0
Bent 4	PP 610 x 13	2400	150	384.0	406.5	396.0	384.0
Bent 5	PP 610 x 13	2300	150	384.0	406.5	395.0	384.0
Bent 6	PP 610 x 13	2250	200	384.0	401.0	395.0	384.0
Bent 7	PP 610 x 13	2250	250	385.0	400.5	395.0	385.0
Bent 8	PP 610 x 16	2300	500	385.0	395.5	395.0	385.0
Bent 9	PP 610 x 16	2450	550	385.0	395.5	394.0	385.0
Bent 10	PP 610 x 13	2250	200	385.0	400.5	394.0	385.0
Bent 11	PP 610 x 13	2250	50	384.5	404.0	399.0	384.5
Bent 12	PP 610 x 13	2250	100	384.5	404.0	398.0	384.5
Bent 13	PP 610 x 19	2150	400	384.5	398.5	393.5	384.5
Bent 14	PP 610 x 16	2250	400	384.5	398.5	393.0	384.5
Bent 15	PP 610 x 13	2200	50	384.5	405.5	396.0	384.5
Bent 16	PP 610 x 13	2200	50	384.5	405.0	393.0	384.5
Bent 17	PP 610 x 13	2250	100	384.5	404.5	393.0	384.5
Bent 18	PP 610 x 19	2400	450	382.5	388.5	397.5	382.5
Bent 19	PP 610 x 13	1850	0	384.5	N/A	399.0	384.5
Bent 20	PP 610 x 13	2300	0	383.0	N/A	398.5	383.0
Bent 21	PP 610 x 19	2400	400	381.5	389.0	395.5	381.5
Bent 22	PP 610 x 19	2500	350	381.0	389.0	395.0	381.0
Bent 23	PP 610 x 19	2950	1050	379.5	384.5	397.0	379.5
Bent 24	PP 610 x 19	3250	900	376.0	381.5	391.0	376.0
Bent 25	PP 610 x 19	3100	900	379.5	386.0	397.0	379.5

PILE DATA TABLE (Cont.)

Location	Pile Type	Nominal Resistance Compression (kN)	Nominal Resistance Tension (kN)	Design Tip Elevation (1)	Design Tip Elevation (2)	Design Tip Elevation (3)	Specified Tip Elevation
Bent 26	PP 610 x 19	2900	900	375.0	388.5	392.5	375.0
Bent 27	PP 610 x 16	2300	300	380.0	399.0	394.5	380.0
Bent 28	PP 610 x 16	1900	450	380.5	397.0	394.0	380.5
Bent 29	PP 610 x 16	2000	400	376.0	393.5	394.0	376.0
Bent 30	PP 610 x 19	1950	400	376.0	394.5	393.5	376.0
Bent 31	PP 610 x 13	2050	0	376.0	N/A	393.5	376.0
Bent 32	PP 610 x 13	1950	0	377.0	N/A	393.5	377.0
Bent 33	PP 610 x 13	1950	0	377.0	N/A	396.5	377.0
Abut 34	HP 250 x 85	1200	0	370.5	N/A	N/A	370.5

Note: Design pile tip elevations are controlled by the following demands: (1) Compression (2) Tension (3) Lateral Loading (4) Scour potential exists to Elev 403.9 at bent 24

INDEX TO PLANS

Sheet No.	Title
1	GENERAL PLAN
2	INDEX TO PLANS
3	GENERAL NOTES
4	STRUCTURE PLAN NO. 1
5	STRUCTURE PLAN NO. 2
6	STRUCTURE PLAN NO. 3
7	STRUCTURE PLAN NO. 4
8	STRUCTURE PLAN NO. 5
9	DECK CONTOURS NO. 1
10	DECK CONTOURS NO. 2
11	DECK CONTOURS NO. 3
12	DECK CONTOURS NO. 4
13	DECK CONTOURS NO. 5
14	FOUNDATION PLAN NO. 1
15	FOUNDATION PLAN NO. 2
16	FOUNDATION PLAN NO. 3
17	FOUNDATION PLAN NO. 4
18	FOUNDATION PLAN NO. 5
19	FOUNDATION PLAN NO. 6
20	FOUNDATION PLAN NO. 7
21	FOUNDATION PLAN NO. 8
22	FOUNDATION PLAN NO. 9
23	FOUNDATION PLAN NO. 10
24	ABUTMENT 1 LAYOUT
25	ABUTMENT 34 LAYOUT
26	ABUTMENT DETAILS NO. 1
27	ABUTMENT DETAILS NO. 2
28	ABUTMENT DETAILS NO. 3
29	BENT LAYOUT NO. 1
30	BENT LAYOUT NO. 2
31	BENT LAYOUT NO. 3
32	BENT LAYOUT NO. 4
33	BENT DETAILS NO. 1
34	BENT DETAILS NO. 2
35	BENT DETAILS NO. 3
36	BENT DETAILS NO. 4
37	BENT DETAILS NO. 5
38	BENT DETAILS NO. 6
39	BENT DETAILS NO. 7
40	BENT DETAILS NO. 8
41	TYPICAL SECTION NO. 1
42	TYPICAL SECTION NO. 2
43	GIRDER LAYOUT NO. 1
44	GIRDER LAYOUT NO. 2
45	GIRDER LAYOUT NO. 3
46	GIRDER LAYOUT NO. 4
47	GIRDER LAYOUT NO. 5
48	GIRDER LAYOUT NO. 6
49	GIRDER LAYOUT NO. 7
50	GIRDER LAYOUT NO. 8
51	CAMBER DIAGRAM NO. 1
52	CAMBER DIAGRAM NO. 2
53	CAMBER DIAGRAM NO. 3
54	HINGE DETAILS NO. 1
55	HINGE DETAILS NO. 2
56	HINGE DETAILS NO. 3
57	HINGE DETAILS NO. 4
58	HINGE DETAILS NO. 5
59	HINGE DETAILS NO. 6
60	HINGE DETAILS NO. 7
61	PTFE/SPHERICAL BEARING DETAILS
62	DRAINAGE DETAILS NO. 1
63	DRAINAGE DETAILS NO. 2
64	DRAINAGE DETAILS NO. 3
65	AESTHETIC DETAILS NO. 1
66	AESTHETIC DETAILS NO. 2
67	AESTHETIC DETAILS NO. 3
68	JOINT SEAL ASSEMBLY (MAXIMUM MOVEMENT RATING = 100 MM)
69	JOINT SEAL - HINGE DETAILS (MOVEMENT RATING GREATER THAN 100 MM)
70	STRUCTURE APPROACH TYPE N(9S)
71	STRUCTURE APPROACH DRAINAGE DETAILS
72	TUBULAR BICYCLE RAILING
73	LOG OF TEST BORINGS NO. 1 OF 16
74	LOG OF TEST BORINGS NO. 2 OF 16
75	LOG OF TEST BORINGS NO. 3 OF 16
76	LOG OF TEST BORINGS NO. 4 OF 16
77	LOG OF TEST BORINGS NO. 5 OF 16
78	LOG OF TEST BORINGS NO. 6 OF 16
79	LOG OF TEST BORINGS NO. 7 OF 16
80	LOG OF TEST BORINGS NO. 8 OF 16
81	LOG OF TEST BORINGS NO. 9 OF 16
82	LOG OF TEST BORINGS NO. 10 OF 16
83	LOG OF TEST BORINGS NO. 11 OF 16
84	LOG OF TEST BORINGS NO. 12 OF 16
85	LOG OF TEST BORINGS NO. 13 OF 16
86	LOG OF TEST BORINGS NO. 14 OF 16
87	LOG OF TEST BORINGS NO. 15 OF 16
88	LOG OF TEST BORINGS NO. 16 OF 16

Caltrans Metric

	BY	CHECKED
DESIGN	A. Tern	T. Bui/M. Akkari
DETAILS	C. Figuerres/S. Ng	T. Bui/M. Akkari
QUANTITIES	G. Zuniga/G. Slocum	R. Odell/C. Udarbe

STATE OF CALIFORNIA
DEPARTMENT OF TRANSPORTATION

DIVISION OF ENGINEERING SERVICES
STRUCTURE DESIGN
DESIGN BRANCH 2

BRIDGE NO. 10-0165
KILOMETER POST R74.945

WILLITS BYPASS
FLOODWAY VIADUCT
INDEX TO PLANS

ALL DIMENSIONS ARE IN MILLIMETERS UNLESS OTHERWISE SHOWN

ORIGINAL SCALE IN MILLIMETERS FOR REDUCED PLANS 0 10 20 30 40 50 60 70 80 90 100

CU 01
EA 262001

DISREGARD PRINTS BEARING EARLIER REVISION DATES

REVISION DATES: 10-22-08 07-14-09 7-15-09 2-05-09 2-25-09 3-02-09 3-16-09 3-23-09 4-28-09

SHEET 2 OF 88

FILE => 10-0165_gaitp.dgn

STRUCTURES DESIGN DETAIL SHEET (METRIC) (REV.03-17-04)

USERNAME => s109358 DATE PLOTTED => 28-JAN-2012 TIME PLOTTED => 08:43

DIST	COUNTY	ROUTE	KILOMETER POST TOTAL PROJECT	SHEET No	TOTAL SHEETS
01	Men	101	R69.4/R78.9	742	939

REGISTERED CIVIL ENGINEER 9-15-11 DATE

1-23-12
PLANS APPROVAL DATE

REGISTERED PROFESSIONAL ENGINEER M. Friedheim No. 57968 Exp. 6-30-12 CIVIL STATE OF CALIFORNIA

The State of California or its officers or agents shall not be responsible for the accuracy or completeness of electronic copies of this plan sheet.

STANDARD PLANS DATED JULY 2004

A10A	ACRONYMS AND ABBREVIATIONS (A-L)
A10B	ACRONYMS AND ABBREVIATIONS (M-Z)
A10C	SYMBOLS
A10D	SYMBOLS
A62C	LIMITS OF PAYMENT FOR EXCAVATION AND BACKFILL-BRIDGE
B0-1	BRIDGE DETAILS
B0-3	BRIDGE DETAILS
B0-5	BRIDGE DETAILS
B0-13	BRIDGE DETAILS
B7-1	BOX GIRDER DETAILS
B7-6	DECK DRAINS TYPES D-1 AND D-2
B7-7	DECK DRAIN TYPE D-3
B7-8	DECK DRAINAGE DETAILS
B7-10	UTILITY OPENING BOX GIRDER
RSP B8-5	CAST-IN-PLACE PRESTRESSED GIRDER DETAILS
B11-56	CONCRETE BARRIER TYPE 736
B14-5	WATER SUPPLY LINE (DETAILS) (PIPE SIZES LESS THAN 100 mm)
RSP S2	OVERHEAD SIGNS- TRUSS, SINGLE POST TYPE- POST TYPE II THRU IX
RSP S3	OVERHEAD SIGNS- TRUSS, SINGLE POST TYPE- BASE PLATE AND ANCHORAGE DETAILS
RSP ES-9B	ELECTRICAL SYSTEMS (ELECTRICAL DETAILS STRUCTURE INSTALLATIONS)
RSP ES-9C	ELECTRICAL SYSTEMS (ELECTRICAL DETAILS STRUCTURE INSTALLATIONS)

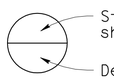

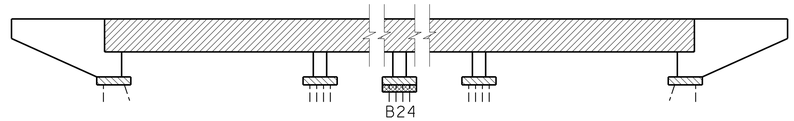

CONCRETE STRENGTH AND TYPE LIMITS

no scale

- Structural Concrete, Bridge
- Structural Concrete, Bridge (35 MPa @ 28 days)
- Structural Concrete, Bridge Footing
- Seal Course Concrete

GENERAL NOTES (LOAD FACTOR DESIGN)

DESIGN: Bridge Design Specifications - April 2000 (LFD) (1996 AASHTO with interims and revisions by Caltrans).
Project Specific Design Criteria - March 2009.

SEISMIC DESIGN: Caltrans SDC Version 1.4 - June 2006 with modifications

DEAD LOAD: Includes 1675 Pa for future wearing surface.

LIVE LOAD: HS20-44 and alternative and permit design load.

SEISMIC LOADING: Modified Caltrans Seismic Design Criteria for Soil Profile Type D, PBA = 0.7 g. See Response Spectrum below.

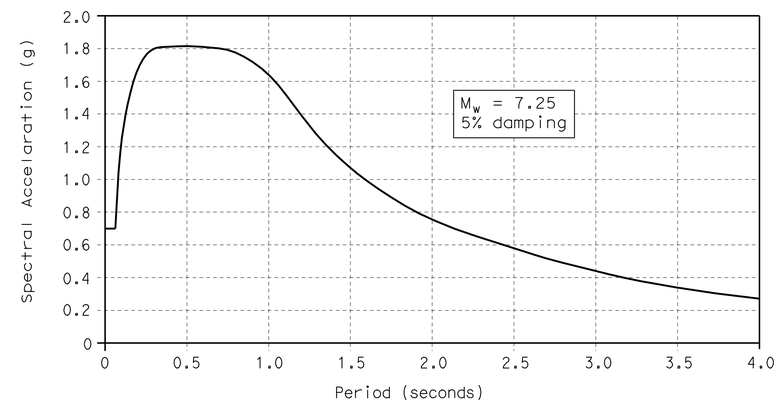

REINFORCED CONCRETE:
fy = 420 MPa (except as noted in these plans)
f'c = 25 MPa (See concrete strength and type limits for exceptions)

Transverse Deck Slab (working stress design)
fs = 140 MPa
f'c = 8 MPa
n = 10

PRESTRESSED CONCRETE: See "Prestressing Notes" on Girder Layout sheet

STRUCTURAL STEEL PIPE: (HINGES) ASTM 501 Grade 60

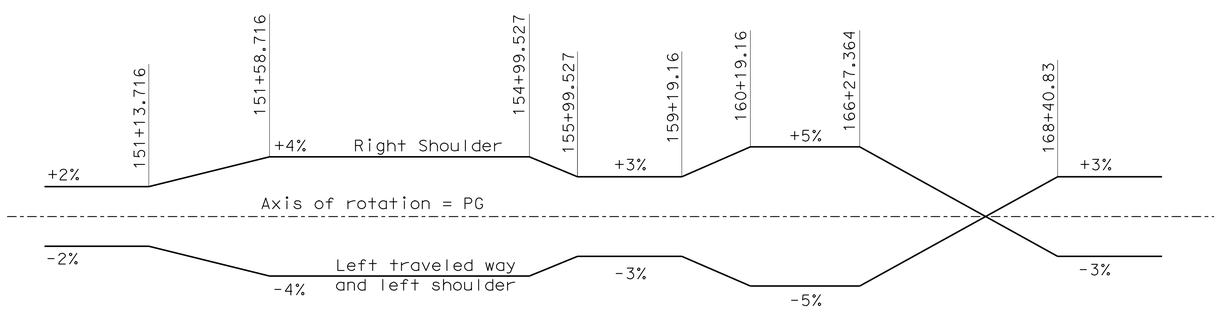

SUPERELEVATION DIAGRAM

no scale

NOTE: Diagram is symmetrical about the axis of rotation

	BY	CHECKED
DESIGN	M. Friedheim	KS, EW, TB, RO
DETAILS	S. Evans/S. Ng	KS, EW, TB, RO
QUANTITIES	G. Zuniga/G. Slocum	R. Odell/C. Udarbe

STATE OF CALIFORNIA DEPARTMENT OF TRANSPORTATION

DIVISION OF ENGINEERING SERVICES STRUCTURE DESIGN DESIGN BRANCH 2

BRIDGE NO. 10-0165
KILOMETER POST R74.945

WILLITS BYPASS
FLOODWAY VIADUCT
GENERAL NOTES

ALL DIMENSIONS ARE IN MILLIMETERS UNLESS OTHERWISE SHOWN

ORIGINAL SCALE IN MILLIMETERS FOR REDUCED PLANS 0 10 20 30 40 50 60 70 80 90 100

CU 01
EA 262001

DISREGARD PRINTS BEARING EARLIER REVISION DATES

REVISION DATES: 2-14-07, 8-05-08, 10-14-08, 3-25-09, 4-08-09, 4-20-09

SHEET 3 OF 88

FILE => 10-0165_ganotes.dgn

STRUCTURES DESIGN DETAIL SHEET (METRIC) (REV.03-17-04)

USERNAME => s109858 DATE PLOTTED => 28-JAN-2012 TIME PLOTTED => 08:44

DIST	COUNTY	ROUTE	KILOMETER POST TOTAL PROJECT	SHEET No	TOTAL SHEETS
01	Men	101	R69.4/R78.9	743	939

REGISTERED CIVIL ENGINEER 9-15-11 DATE

1-23-12
PLANS APPROVAL DATE

REGISTERED PROFESSIONAL ENGINEER M. Friedheim No. 57968 Exp. 6-30-12 CIVIL STATE OF CALIFORNIA

The State of California or its officers or agents shall not be responsible for the accuracy or completeness of electronic copies of this plan sheet.

NOTES:

1. Structure approach, Type N(9S)
2. MBGR, see "Road Plans"
3. Paint "Floodway Viaduct"
4. Paint bridge number and year constructed
5. Paint bent numbers

LEGEND:

- Indicates point of minimum vertical clearance
- Indicates Deck Drain Type D-2, see "Drainage Details No. 1 and 2" sheets
- Indicates Deck Drain Type D-3(Mod), see "Drainage Details No. 3" sheet

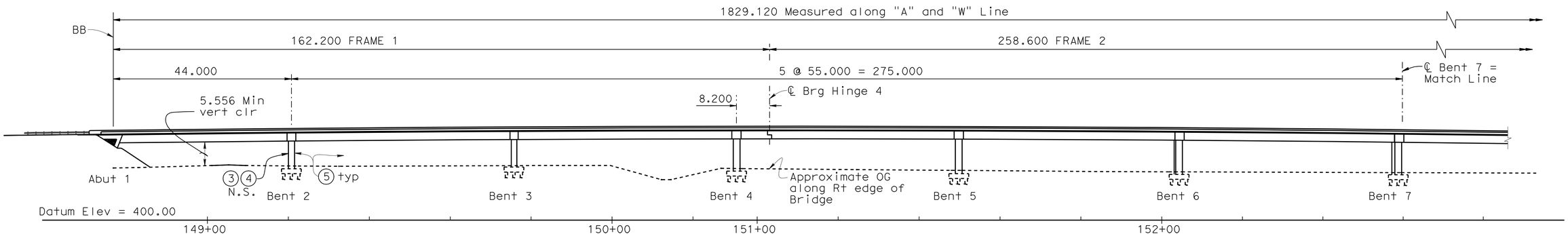

ELEVATION

1:500

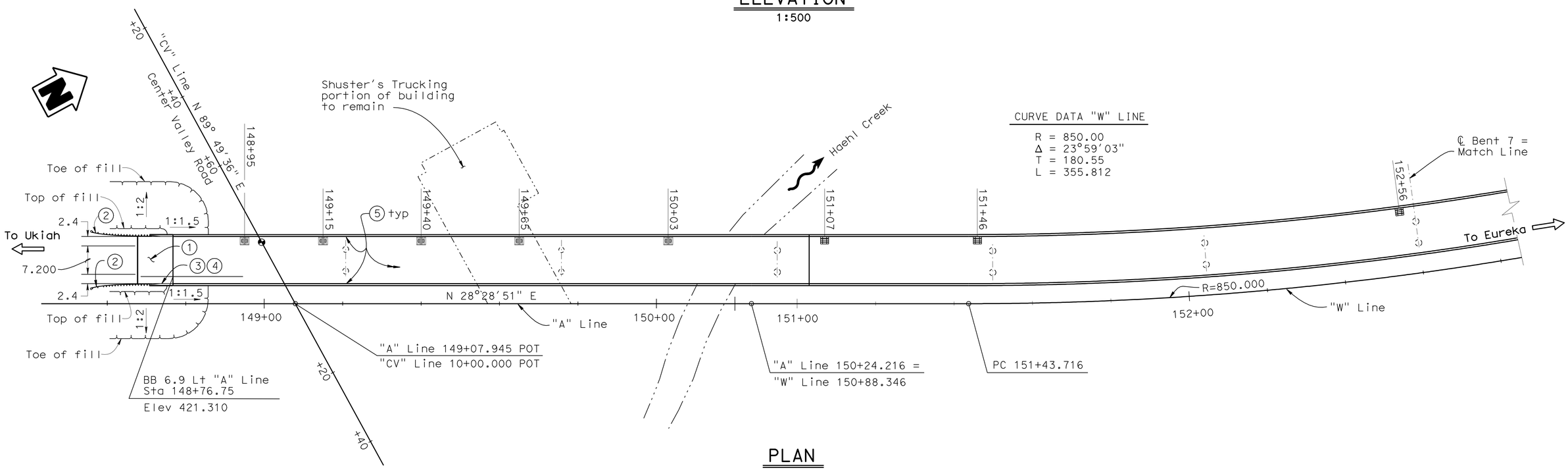

PLAN

1:500

	BY	CHECKED
DESIGN	E. Hall	R. Odell
DETAILS	C. Figuerres/E. Montevirgen	R. Odell
QUANTITIES	G. Zuniga/G. Slocum	R. Odell/C. Udarbe

STATE OF CALIFORNIA
DEPARTMENT OF TRANSPORTATION

DIVISION OF ENGINEERING SERVICES
STRUCTURE DESIGN
DESIGN BRANCH 2

BRIDGE NO. 10-0165
KILOMETER POST R74.945

WILLITS BYPASS
FLOODWAY VIADUCT
STRUCTURE PLAN NO. 1

ALL DIMENSIONS ARE IN METERS UNLESS OTHERWISE SHOWN

ORIGINAL SCALE IN MILLIMETERS FOR REDUCED PLANS 0 10 20 30 40 50 60 70 80 90 100

CU 01
EA 262001

DISREGARD PRINTS BEARING EARLIER REVISION DATES

REVISION DATES: 6-23-06 2-02-09 5-06-08 5-13-08 5-21-08 5-28-08 6-02-08 9-30-08 1-16-09

SHEET 4 OF 88

FILE => 10-0165_gcsp01.dgn

STRUCTURES DESIGN DETAIL SHEET (METRIC) (REV.03-17-04)

USERNAME => s109858 DATE PLOTTED => 28-JAN-2012 TIME PLOTTED => 08:44

DIST	COUNTY	ROUTE	KILOMETER POST TOTAL PROJECT	SHEET No	TOTAL SHEETS
01	Men	101	R69.4/R78.9	744	939

REGISTERED CIVIL ENGINEER 9-15-11 DATE

1-23-12
PLANS APPROVAL DATE

REGISTERED PROFESSIONAL ENGINEER M. Friedheim No. 57968 Exp. 6-30-12 CIVIL STATE OF CALIFORNIA

The State of California or its officers or agents shall not be responsible for the accuracy or completeness of electronic copies of this plan sheet.

LEGEND:

- Indicates point of minimum vertical clearance
- Indicates Deck Drain Type D-3(Mod), see "Drainage Details No. 3" sheet
- (3) Paint "Floodway Viaduct"
- (4) Paint bridge number and year constructed
- (5) Paint bent numbers

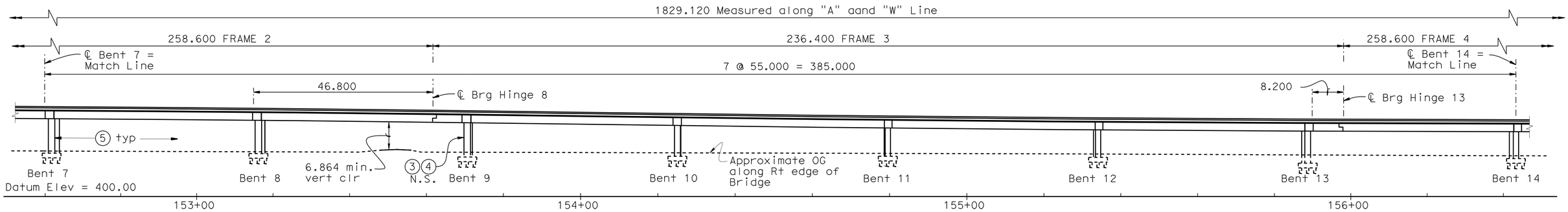

ELEVATION

1:500

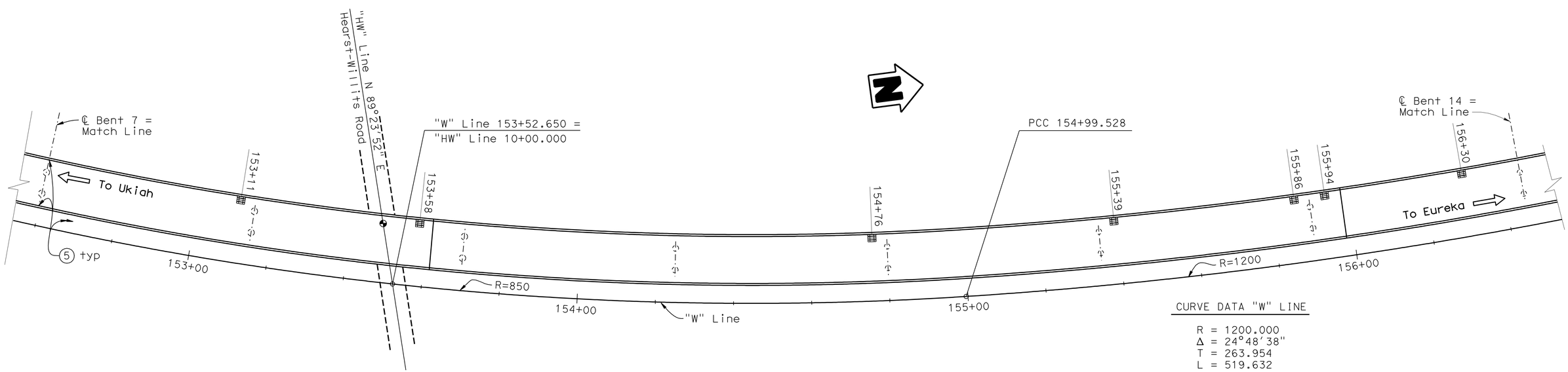

CURVE DATA "W" LINE

R = 1200.000
Δ = 24°48'38"
T = 263.954
L = 519.632

PLAN

1:500

Caltrans Metric

	BY	CHECKED
DESIGN	E. Hall	R. Odell
DETAILS	C. Figuerres/E. Montevirgen	R. Odell
QUANTITIES	G. Zuniga/G. Slocum	R. Odell/C. Udarbe

STATE OF CALIFORNIA
DEPARTMENT OF TRANSPORTATION

DIVISION OF ENGINEERING SERVICES
STRUCTURE DESIGN
DESIGN BRANCH 2

BRIDGE NO. 10-0165
KILOMETER POST R74.945

WILLITS BYPASS
FLOODWAY VIADUCT
STRUCTURE PLAN NO. 2

ALL DIMENSIONS ARE IN METERS UNLESS OTHERWISE SHOWN

ORIGINAL SCALE IN MILLIMETERS FOR REDUCED PLANS 0 10 20 30 40 50 60 70 80 90 100

CU 01
EA 262001

DISREGARD PRINTS BEARING EARLIER REVISION DATES

REVISION DATES: 6-20-06 10-24-06 2-08-07 5-08-08 5-13-08 5-21-08 5-28-08 6-02-08 10-2-08 2-02-09

SHEET 5 OF 88

FILE => 10-0165_gcsp02.dgn

STRUCTURES DESIGN DETAIL SHEET (METRIC) (REV.03-17-04)

USERNAME => s109858 DATE PLOTTED => 28-JAN-2012 TIME PLOTTED => 08:44

DIST	COUNTY	ROUTE	KILOMETER POST TOTAL PROJECT	SHEET No	TOTAL SHEETS
01	Men	101	R69.4/R78.9	745	939

REGISTERED CIVIL ENGINEER 9-15-11 DATE

1-23-12
PLANS APPROVAL DATE

REGISTERED PROFESSIONAL ENGINEER M. Friedheim No. 57968 Exp. 6-30-12 CIVIL STATE OF CALIFORNIA

The State of California or its officers or agents shall not be responsible for the accuracy or completeness of electronic copies of this plan sheet.

LEGEND:

▦ Indicates Deck Drain Type D-3(Mod), see "Drainage Details No. 3" sheet

(5) Paint bent numbers

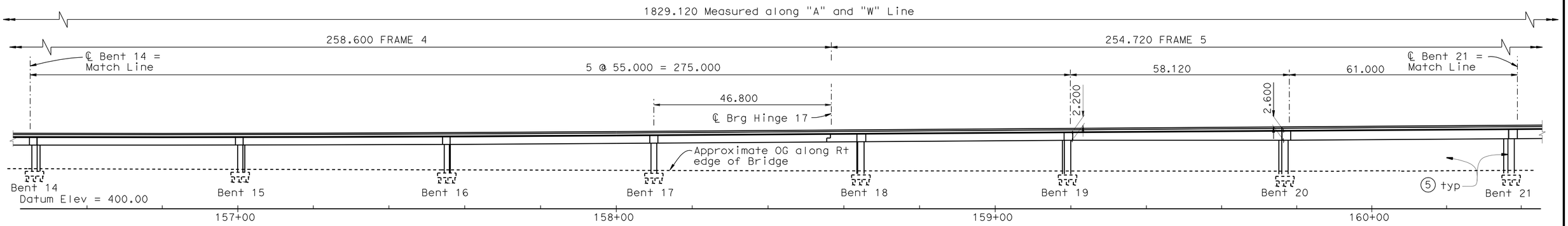

ELEVATION
1:500

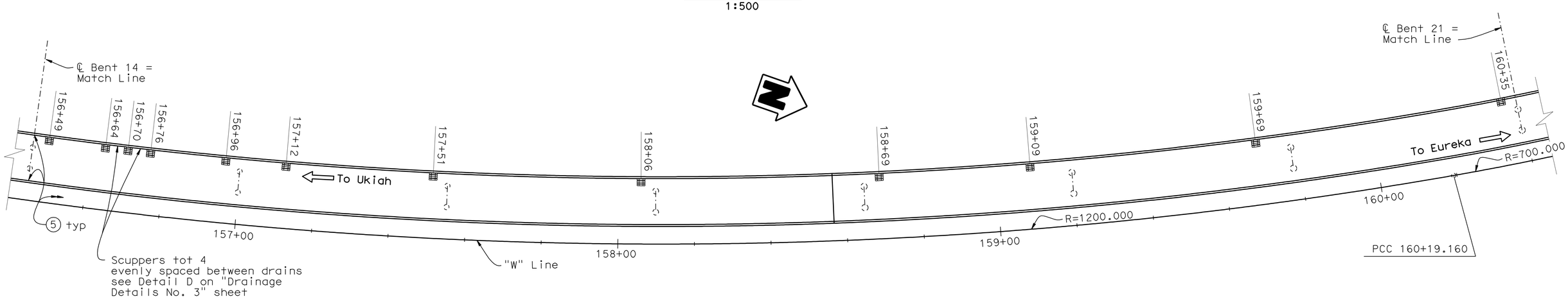

CURVE DATA "W" LINE

R = 1200.000
Δ = 24°48′38"
T = 263.954
L = 519.632

PLAN
1:500

CURVE DATA "W" LINE

R = 700.000
Δ = 51°15′20"
T = 335.801
L = 626.204

Caltrans Metric

	BY	CHECKED
DESIGN	E. Hall/R. Odell	G. Zuniga
DETAILS	C. Figuerres/E. Montevirgen	G. Zuniga
QUANTITIES	G. Zuniga/G. Slocum	R. Odell/C. Udarbe

STATE OF CALIFORNIA
DEPARTMENT OF TRANSPORTATION

DIVISION OF ENGINEERING SERVICES
STRUCTURE DESIGN
DESIGN BRANCH 2

BRIDGE NO. 10-0165
KILOMETER POST R74.945

WILLITS BYPASS
FLOODWAY VIADUCT
STRUCTURE PLAN NO. 3

ALL DIMENSIONS ARE IN METERS UNLESS OTHERWISE SHOWN

ORIGINAL SCALE IN MILLIMETERS FOR REDUCED PLANS 0 10 20 30 40 50 60 70 80 90 100

CU 01
EA 262001

DISREGARD PRINTS BEARING EARLIER REVISION DATES

REVISION DATES: 6-21-06 10-24-06 2-06-07 5-06-08 5-18-08 5-21-08 6-02-08 10-2-08 2-02-09

SHEET 6 OF 88

FILE => 10-0165_gcsp03.dgn

STRUCTURES DESIGN DETAIL SHEET (METRIC) (REV.03-17-04)

USERNAME => s103858 DATE PLOTTED => 28-JAN-2012 TIME PLOTTED => 08:44

DIST	COUNTY	ROUTE	KILOMETER POST TOTAL PROJECT	SHEET No	TOTAL SHEETS
01	Men	101	R69.4/R78.9	746	939

REGISTERED CIVIL ENGINEER 9-15-11 DATE

1-23-12
PLANS APPROVAL DATE

REGISTERED PROFESSIONAL ENGINEER M. Friedheim No. 57968 Exp. 6-30-12 CIVIL STATE OF CALIFORNIA

The State of California or its officers or agents shall not be responsible for the accuracy or completeness of electronic copies of this plan sheet.

LEGEND:

▦ Indicates Deck Drain Type D-3(Mod), see "Drainage Details No. 3" sheet

(5) Paint bent numbers

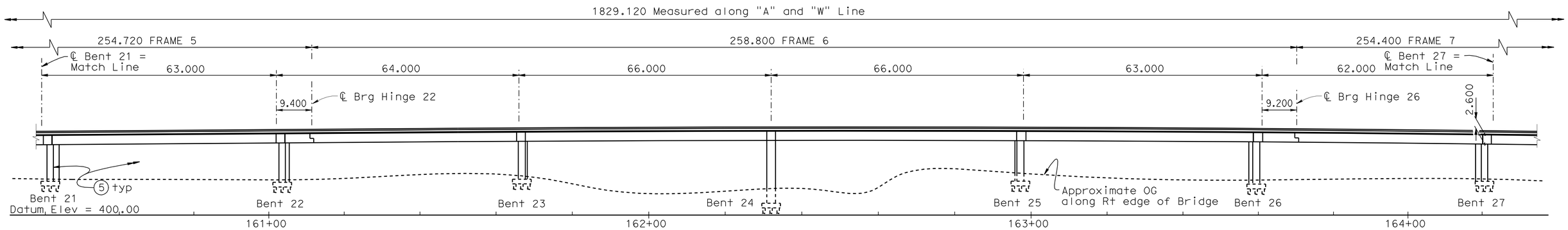

ELEVATION

1:500

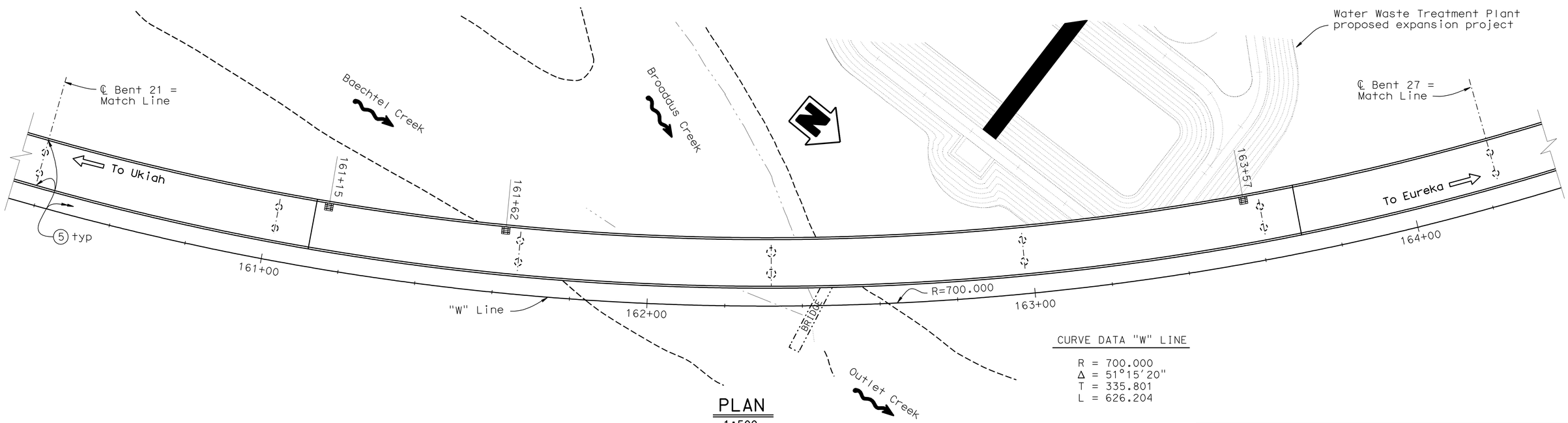

PLAN

1:500

CURVE DATA "W" LINE

R = 700.000
Δ = 51°15'20"
T = 335.801
L = 626.204

Caltrans Metric

	BY	CHECKED
DESIGN	R. Odell	G. Zuniga
DETAILS	C. Figuerres/E. Montevirgen	G. Zuniga
QUANTITIES	G. Zuniga/G. Slocum	R. Odell/C. Udarbe

STATE OF CALIFORNIA
DEPARTMENT OF TRANSPORTATION

DIVISION OF ENGINEERING SERVICES
STRUCTURE DESIGN
DESIGN BRANCH 2

BRIDGE NO. 10-0165
KILOMETER POST R74.945

WILLITS BYPASS
FLOODWAY VIADUCT
STRUCTURE PLAN NO. 4

ALL DIMENSIONS ARE IN METERS UNLESS OTHERWISE SHOWN

ORIGINAL SCALE IN MILLIMETERS FOR REDUCED PLANS 0 10 20 30 40 50 60 70 80 90 100

CU 01
EA 262001

DISREGARD PRINTS BEARING EARLIER REVISION DATES

REVISION DATES: 6-21-06 10-24-06 2-06-07 5-14-08 5-28-08 6-02-08 10-2-08 2-02-09 2-27-09

SHEET 7 OF 88

FILE => 10-0165_gcsp04.dgn

STRUCTURES DESIGN DETAIL SHEET (METRIC) (REV.03-17-04)

USERNAME => s109858 DATE PLOTTED => 28-JAN-2012 TIME PLOTTED => 08:44

DIST	COUNTY	ROUTE	KILOMETER POST TOTAL PROJECT	SHEET No	TOTAL SHEETS
01	Men	101	R69.4/R78.9	747	939

REGISTERED CIVIL ENGINEER — DATE 9-15-11

1-23-12
PLANS APPROVAL DATE

REGISTERED PROFESSIONAL ENGINEER — M. Friedheim — No. 57968 — Exp. 6-30-12 — CIVIL — STATE OF CALIFORNIA

The State of California or its officers or agents shall not be responsible for the accuracy or completeness of electronic copies of this plan sheet.

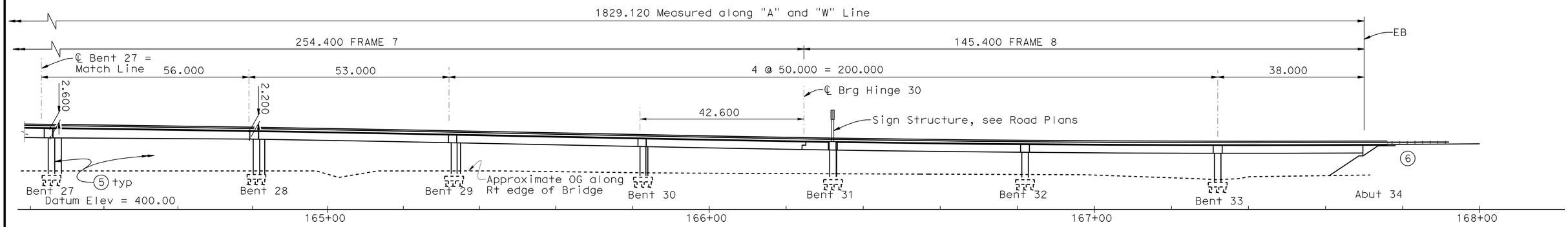

ELEVATION
1:500

LEGEND:

1. Structure approach, Type N(9S)
2. MBGR, see Road Plans
3. Paint "Floodway Viaduct"
4. Paint bridge number and year constructed
5. Paint bent numbers
6. See Road Plans for wick drain design at this abutment

▦ Indicates Deck Drain Type D-3 (mod) see "Drainage Details NO. 3" sheet

CURVE DATA "W" LINE

R = 700.000
Δ = 51°15′20"
T = 335.801
L = 626.204

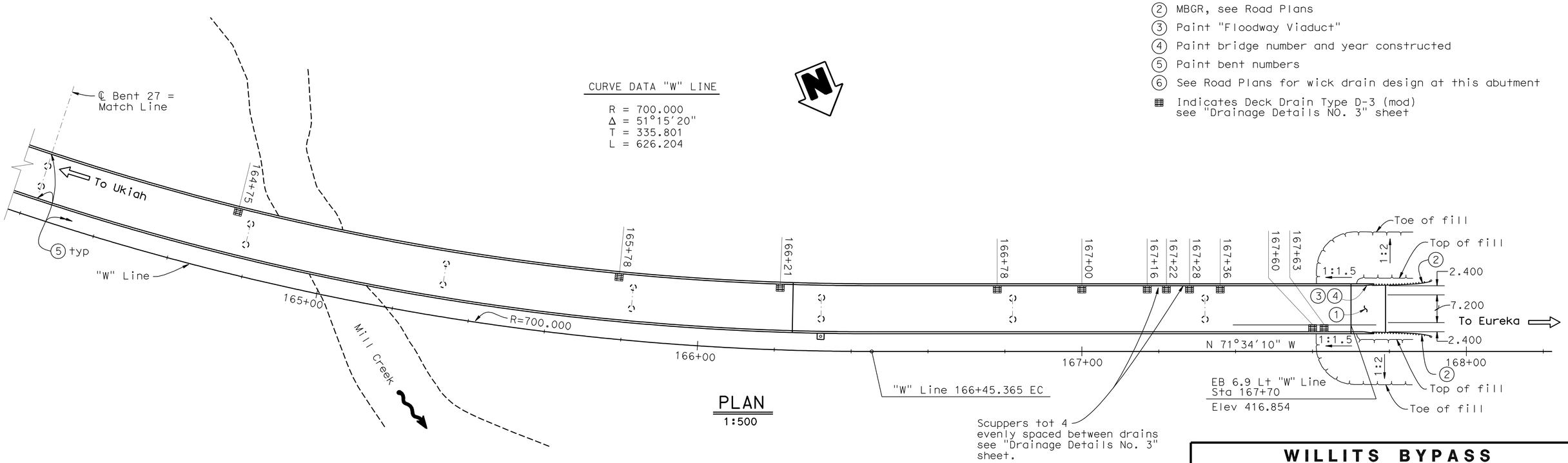

PLAN
1:500

DESIGN	BY R. Odell	CHECKED G. Zuniga	
DETAILS	BY C. Figuerres/E. Montevirgen	CHECKED G. Zuniga	
QUANTITIES	BY G. Zuniga/G. Slocum	CHECKED R. Odell/C. Udarbe	

STATE OF CALIFORNIA
DEPARTMENT OF TRANSPORTATION

DIVISION OF ENGINEERING SERVICES
STRUCTURE DESIGN
DESIGN BRANCH 2

BRIDGE NO. 10-0165
KILOMETER POST R74.945

WILLITS BYPASS
FLOODWAY VIADUCT
STRUCTURE PLAN NO. 5

ALL DIMENSIONS ARE IN METERS UNLESS OTHERWISE SHOWN

ORIGINAL SCALE IN MILLIMETERS FOR REDUCED PLANS 0 10 20 30 40 50 60 70 80 90 100

CU 01
EA 262001

DISREGARD PRINTS BEARING EARLIER REVISION DATES

REVISION DATES: 6-21-06 | 03-02-09 | 04-09-09 | 5-11-08 | 5-22-08 | 5-28-08 | 6-02-08 | 10-2-08 | 2-02-09

SHEET 8 OF 88

STRUCTURES DESIGN DETAIL SHEET (METRIC) (REV.03-17-04)

FILE => 10-0165_gcsp05.dgn

USERNAME => s103858 DATE PLOTTED => 28-JAN-2012 TIME PLOTTED => 08:44

DIST	COUNTY	ROUTE	KILOMETER POST TOTAL PROJECT	SHEET No	TOTAL SHEETS
01	Men	101	R69.4/R78.9	748	939

REGISTERED CIVIL ENGINEER 9-15-11 DATE

1-23-12
PLANS APPROVAL DATE

REGISTERED PROFESSIONAL ENGINEER M. Friedheim No. 57968 Exp. 6-30-12 CIVIL STATE OF CALIFORNIA

The State of California or its officers or agents shall not be responsible for the accuracy or completeness of electronic copies of this plan sheet.

Notes:
× = 2.5 m interval measured along station line
Contours do not include camber
Contour interval = 0.05 m

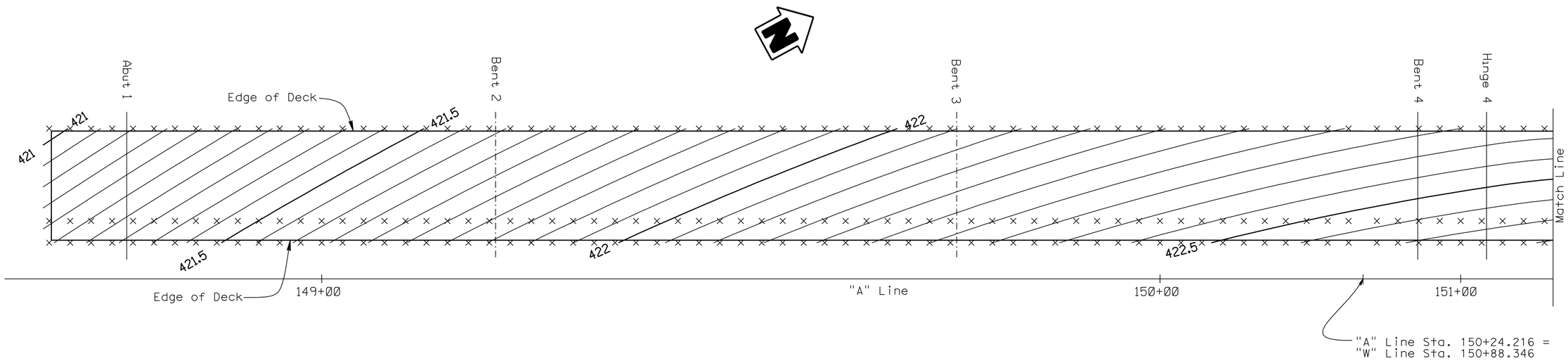

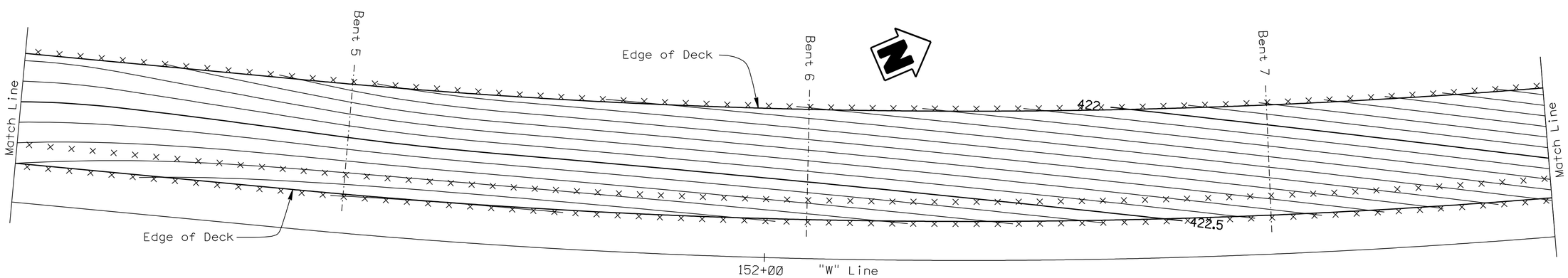

DECK CONTOURS

1:250

DESIGN	BY M. Friedheim	CHECKED E. Hall	
DETAILS	BY M. Friedheim	CHECKED E. Hall	
QUANTITIES	BY G. Zuniga/G. Slocum	CHECKED R. Odell/C. Udarbe	

STATE OF CALIFORNIA
DEPARTMENT OF TRANSPORTATION

DIVISION OF ENGINEERING SERVICES
STRUCTURE DESIGN
DESIGN BRANCH 2

BRIDGE NO. 10-0165
KILOMETER POST R74.945

WILLITS BYPASS
FLOODWAY VIADUCT
DECK CONTOURS NO. 1

ALL DIMENSIONS ARE IN METERS UNLESS OTHERWISE SHOWN

ORIGINAL SCALE IN MILLIMETERS FOR REDUCED PLANS 0 10 20 30 40 50 60 70 80 90 100

CU 01
EA 262001

DISREGARD PRINTS BEARING EARLIER REVISION DATES

REVISION DATES 4/17/08

SHEET 9 OF 88

FILE => 10-0165_gdkc01.dgn

STRUCTURES DESIGN DETAIL SHEET (METRIC) (REV.03-17-04)

USERNAME => s114640 DATE PLOTTED => 28-JAN-2012 TIME PLOTTED => 08:37

DIST	COUNTY	ROUTE	KILOMETER POST TOTAL PROJECT	SHEET No	TOTAL SHEETS
01	Men	101	R69.4/R78.9	749	939

REGISTERED CIVIL ENGINEER 9-15-11 DATE

1-23-12
PLANS APPROVAL DATE

REGISTERED PROFESSIONAL ENGINEER M. Friedheim No. 57968 Exp. 6-30-12 CIVIL STATE OF CALIFORNIA

The State of California or its officers or agents shall not be responsible for the accuracy or completeness of electronic copies of this plan sheet.

Notes:
× = 2.5 m interval measured along station line
Contours do not include camber
Contour interval = 0.05 m

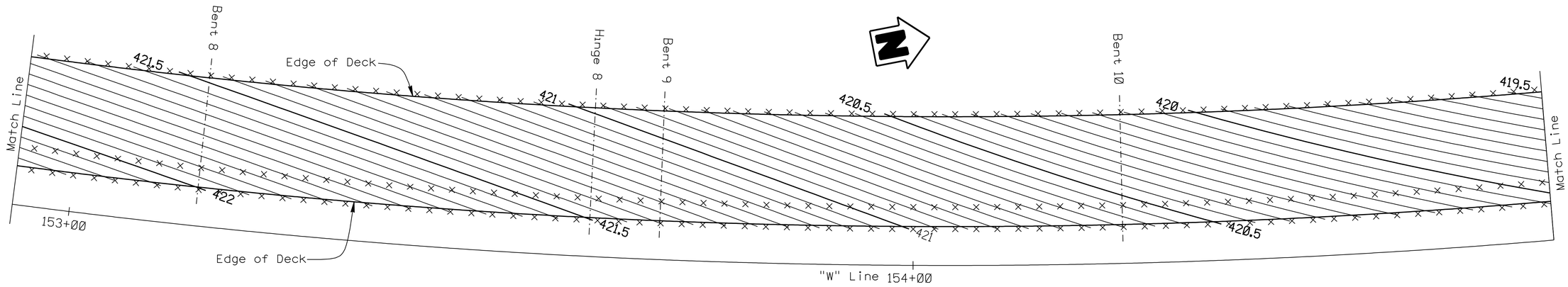

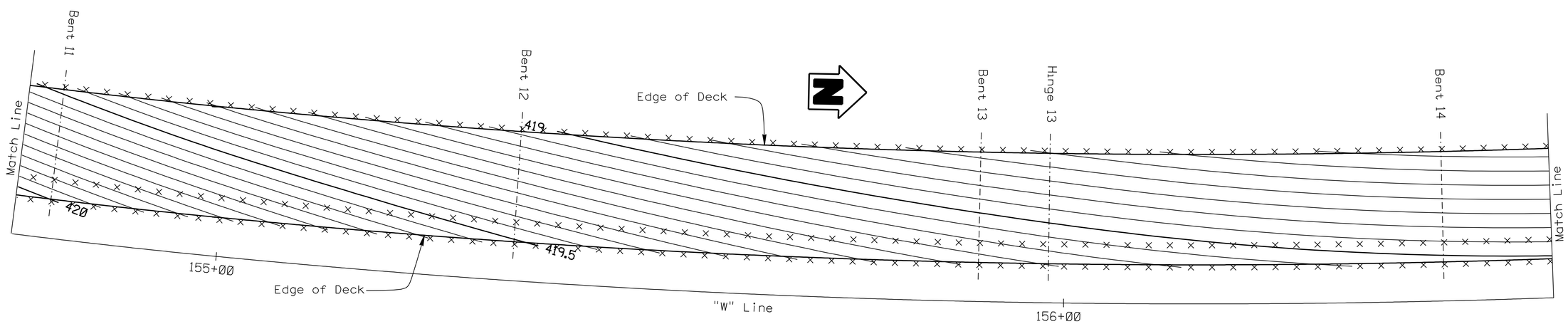

DECK CONTOURS

1:250

DESIGN	BY M. Friedheim	CHECKED E. Hall	
DETAILS	BY M. Friedheim	CHECKED E. Hall	
QUANTITIES	BY G. Zuniga/G. Slocum	CHECKED R. Odell/C. Udarbe	

STATE OF CALIFORNIA
DEPARTMENT OF TRANSPORTATION

DIVISION OF ENGINEERING SERVICES
STRUCTURE DESIGN
DESIGN BRANCH 2

BRIDGE NO. 10-0165
KILOMETER POST R74.945

WILLITS BYPASS
FLOODWAY VIADUCT
DECK CONTOURS NO. 2

ALL DIMENSIONS ARE IN METERS UNLESS OTHERWISE SHOWN

ORIGINAL SCALE IN MILLIMETERS FOR REDUCED PLANS 0 10 20 30 40 50 60 70 80 90 100

CU 01
EA 262001

DISREGARD PRINTS BEARING EARLIER REVISION DATES

REVISION DATES 4/17/08

SHEET 10 OF 88

FILE => 10-0165_gdkc02.dgn

STRUCTURES DESIGN DETAIL SHEET (METRIC) (REV.03-17-04)

USERNAME => s114640 DATE PLOTTED => 28-JAN-2012 TIME PLOTTED => 08:37

DIST	COUNTY	ROUTE	KILOMETER POST TOTAL PROJECT	SHEET No	TOTAL SHEETS
01	Men	101	R69.4/R78.9	750	939

REGISTERED CIVIL ENGINEER 9-15-11 DATE

1-23-12
PLANS APPROVAL DATE

REGISTERED PROFESSIONAL ENGINEER
M. Friedheim
No. 57968
Exp. 6-30-12
CIVIL
STATE OF CALIFORNIA

The State of California or its officers or agents shall not be responsible for the accuracy or completeness of electronic copies of this plan sheet.

Notes:
× = 2.5 m interval measured along station line
Contours do not include camber
Contour interval = 0.05 m

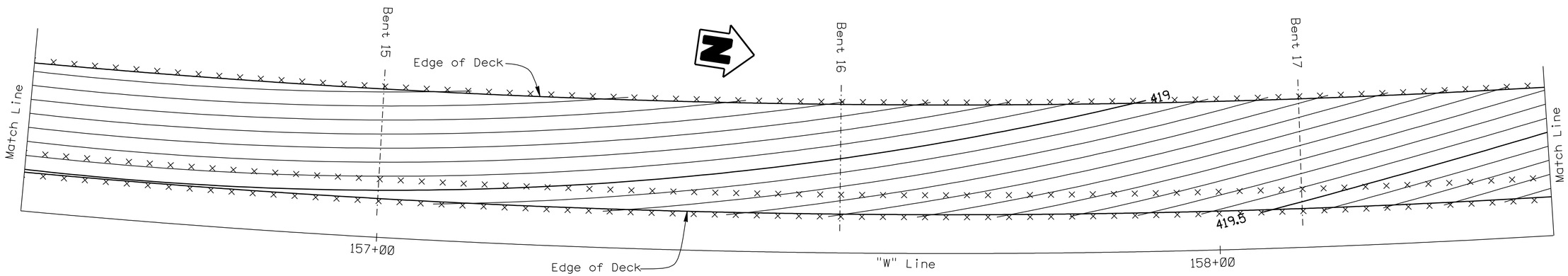

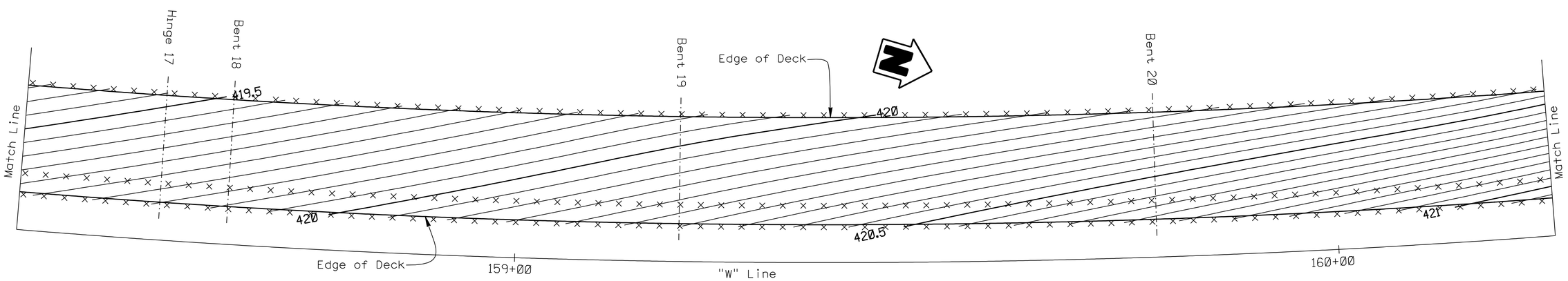

DECK CONTOURS

1:250

DESIGN	BY M. Friedheim	CHECKED E. Hall	
DETAILS	BY E. Montevirgen	CHECKED E. Hall	
QUANTITIES	BY G. Zuniga/G. Slocum	CHECKED R. Odell/C. Udarbe	

STATE OF CALIFORNIA
DEPARTMENT OF TRANSPORTATION

DIVISION OF ENGINEERING SERVICES
STRUCTURE DESIGN
DESIGN BRANCH 2

BRIDGE NO. 10-0165
KILOMETER POST R74.945

WILLITS BYPASS
FLOODWAY VIADUCT
DECK CONTOURS NO. 3

ALL DIMENSIONS ARE IN METERS UNLESS OTHERWISE SHOWN

ORIGINAL SCALE IN MILLIMETERS FOR REDUCED PLANS 0 10 20 30 40 50 60 70 80 90 100

CU 01
EA 262001

DISREGARD PRINTS BEARING EARLIER REVISION DATES

REVISION DATES 4/17/08

SHEET 11 OF 88

FILE => 10-0165_gdkc03.dgn

STRUCTURES DESIGN DETAIL SHEET (METRIC) (REV.03-17-04)

USERNAME => s114640 DATE PLOTTED => 28-JAN-2012 TIME PLOTTED => 08:37

DIST	COUNTY	ROUTE	KILOMETER POST TOTAL PROJECT	SHEET No	TOTAL SHEETS
01	Men	101	R69.4/R78.9	751	939

REGISTERED CIVIL ENGINEER 9-15-11 DATE

1-23-12
PLANS APPROVAL DATE

REGISTERED PROFESSIONAL ENGINEER M. Friedheim No. 57968 Exp. 6-30-12 CIVIL STATE OF CALIFORNIA

The State of California or its officers or agents shall not be responsible for the accuracy or completeness of electronic copies of this plan sheet.

Notes:
× = 2.5 m interval measured along station line
Contours do not include camber
Contour interval = 0.05 m

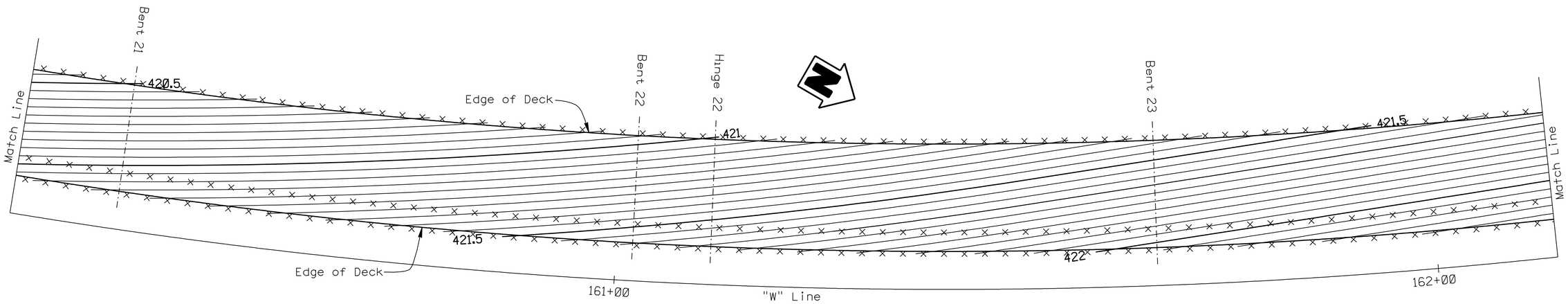

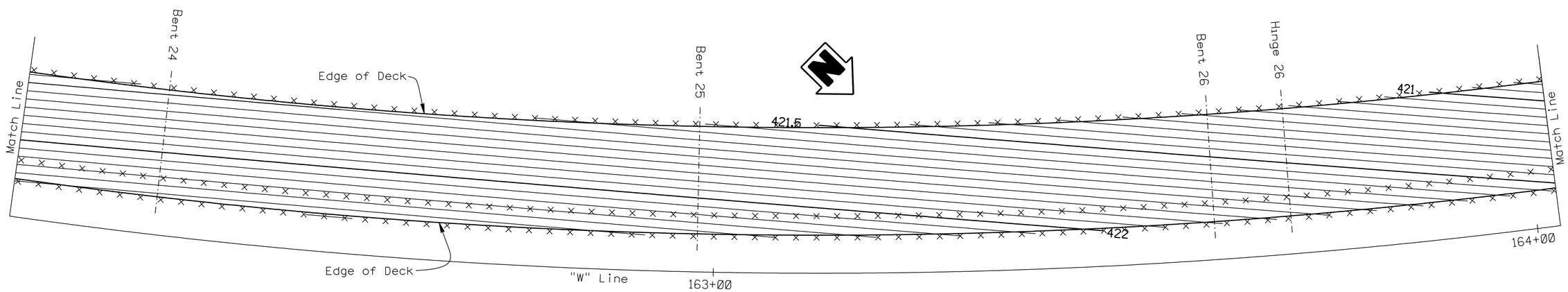

DECK CONTOURS

1:250

Caltrans Metric

	BY	CHECKED
DESIGN	M. Friedheim	R. Odell
DETAILS	M. Friedheim	R. Odell
QUANTITIES	G. Zuniga/G. Slocum	R. Odell/C. Udarbe

STATE OF CALIFORNIA
DEPARTMENT OF TRANSPORTATION

DIVISION OF ENGINEERING SERVICES
STRUCTURE DESIGN
DESIGN BRANCH 2

BRIDGE NO. 10-0165
KILOMETER POST R74.945

WILLITS BYPASS
FLOODWAY VIADUCT
DECK CONTOURS NO. 4

ALL DIMENSIONS ARE IN METERS UNLESS OTHERWISE SHOWN

ORIGINAL SCALE IN MILLIMETERS FOR REDUCED PLANS 0 10 20 30 40 50 60 70 80 90 100

CU 01
EA 262001

DISREGARD PRINTS BEARING EARLIER REVISION DATES

REVISION DATES 4/17/08

SHEET 12 OF 88

FILE => 10-0165_gdkc04.dgn

STRUCTURES DESIGN DETAIL SHEET (METRIC) (REV.03-17-04)

USERNAME => s114640 DATE PLOTTED => 28-JAN-2012 TIME PLOTTED => 08:37

DIST	COUNTY	ROUTE	KILOMETER POST TOTAL PROJECT	SHEET No	TOTAL SHEETS
01	Men	101	R69.4/R78.9	752	939

REGISTERED CIVIL ENGINEER 9-15-11 DATE

1-23-12
PLANS APPROVAL DATE

REGISTERED PROFESSIONAL ENGINEER
M. Friedheim
No. 57968
Exp. 6-30-12
CIVIL
STATE OF CALIFORNIA

The State of California or its officers or agents shall not be responsible for the accuracy or completeness of electronic copies of this plan sheet.

Notes:
× = 2.5 m interval measured along station line
Contours do not include camber
Contour interval = 0.05 m

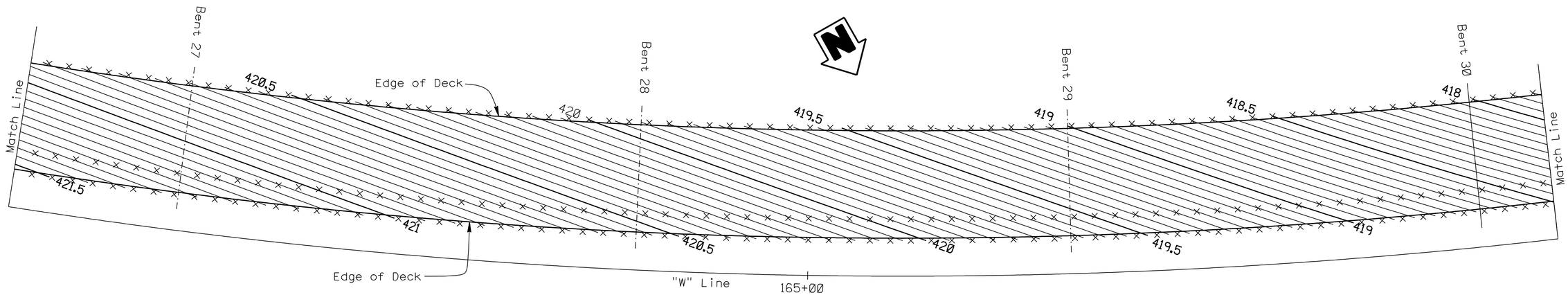

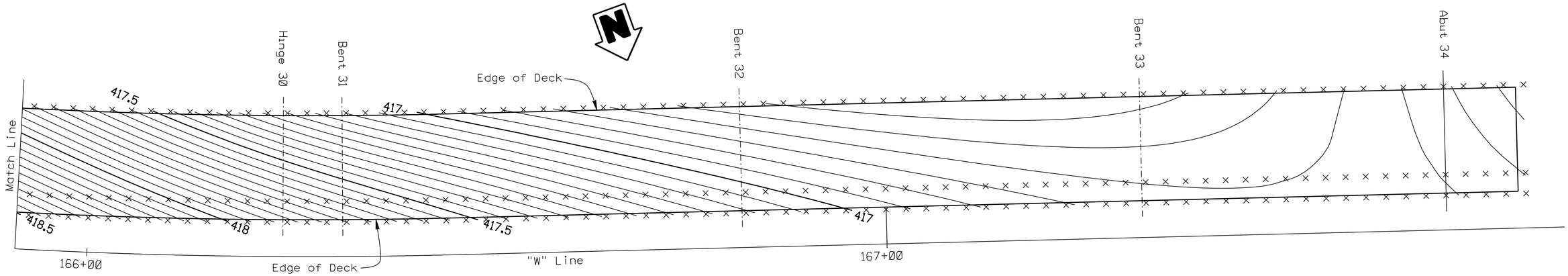

DECK CONTOURS

1:250

DESIGN	BY M. Friedheim	CHECKED R. Odell
DETAILS	BY M. Friedheim	CHECKED R. Odell
QUANTITIES	BY G. Zuniga/G. Slocum	CHECKED R. Odell/C. Udarbe

STATE OF CALIFORNIA
DEPARTMENT OF TRANSPORTATION

DIVISION OF ENGINEERING SERVICES
STRUCTURE DESIGN
DESIGN BRANCH 2

BRIDGE NO. 10-0165
KILOMETER POST R74.945

WILLITS BYPASS
FLOODWAY VIADUCT
DECK CONTOURS NO. 5

ALL DIMENSIONS ARE IN METERS UNLESS OTHERWISE SHOWN

ORIGINAL SCALE IN MILLIMETERS FOR REDUCED PLANS 0 10 20 30 40 50 60 70 80 90 100

CU 01
EA 262001

DISREGARD PRINTS BEARING EARLIER REVISION DATES

REVISION DATES: 4/17/08 12-09-09

SHEET 13 OF 88

FILE => 10-0165_gdkc05.dgn

STRUCTURES DESIGN DETAIL SHEET (METRIC) (REV.03-17-04)

USERNAME => s114640 DATE PLOTTED => 28-JAN-2012 TIME PLOTTED => 08:37

DIST	COUNTY	ROUTE	KILOMETER POST TOTAL PROJECT	SHEET No	TOTAL SHEETS
01	Men	101	R69.4/R78.9	753	939

Caltrans Metric

REGISTERED CIVIL ENGINEER 9-15-11 DATE

1-23-12
PLANS APPROVAL DATE

REGISTERED PROFESSIONAL ENGINEER M. Friedheim No. 57968 Exp. 6-30-12 CIVIL STATE OF CALIFORNIA

The State of California or its officers or agents shall not be responsible for the accuracy or completeness of electronic copies of this plan sheet.

SURVEY CONTROL

PM-46.81 (NOT SHOWN ON PLANS)
Fnd PK & ALUM WASHER
340.559 M Rt. ℄ Rte 101
Sta. 151+56.708
N 694334.333
E 1884940.412
Elev. = 412.093

SEWER (NOT SHOWN ON PLANS)
Fnd 2 1/4" BRASS DISK
159.985 M Lt. ℄ Rte 101
Sta. 163+10.608
N 695463.301
E 1884392.708
Elev. = 411.192

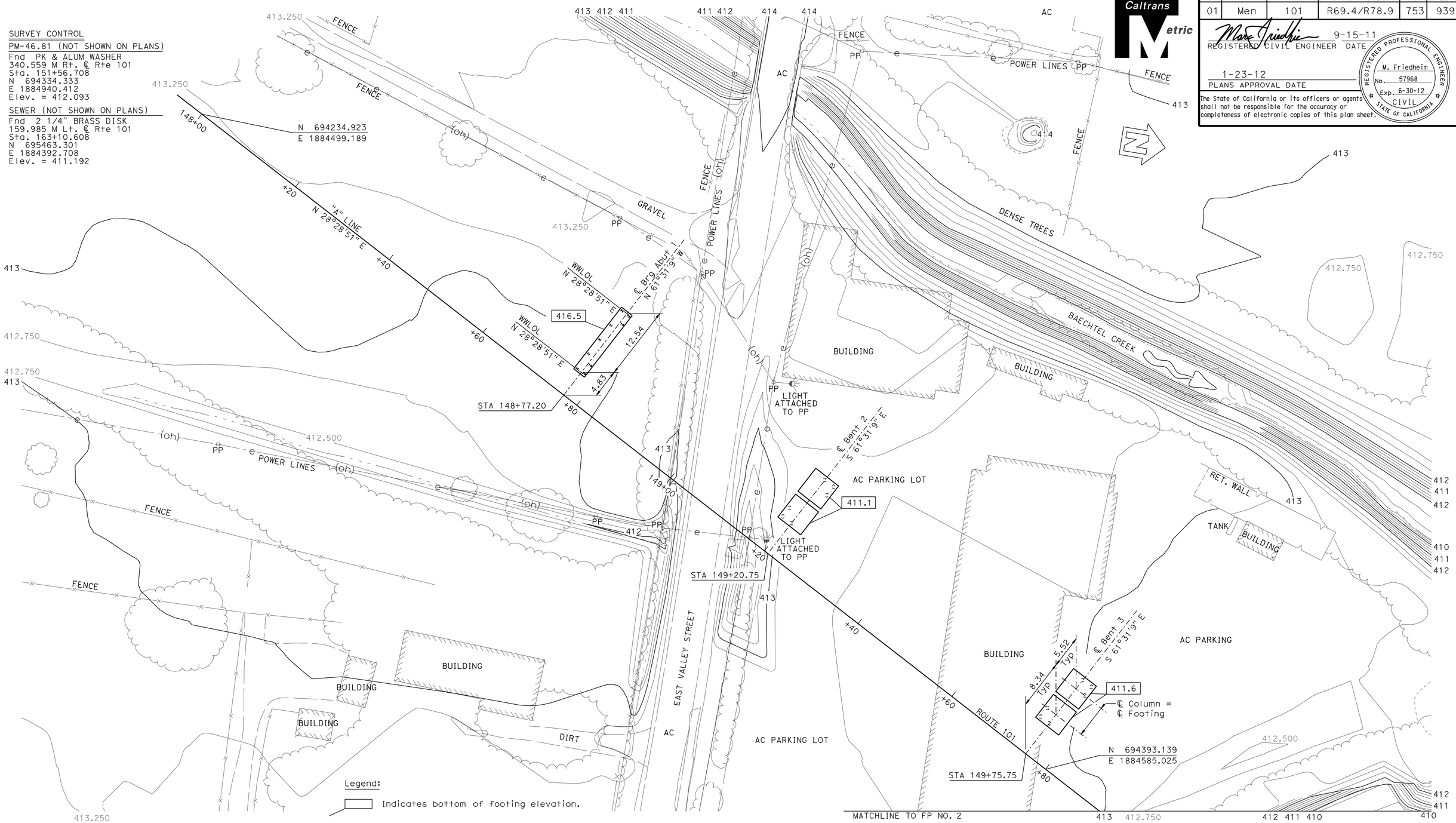

Legend:

Indicates bottom of footing elevation.

Note: Not all piles shown.

ALL DIMENSIONS ARE IN METERS UNLESS OTHERWISE SHOWN

WILLITS BYPASS
FLOODWAY VIADUCT
FOUNDATION PLAN NO. 1

PRELIMINARY INVESTIGATION SECTION

SCALE	VERT. DATUM NAVD 29	PHOTOGRAMMETRY AS OF:		
1:300	HORZ. DATUM NAD 83 (1991.35)	SURVEYED	BY T. GILLETT 12/04	DRAFTED BY J.MARTINEZ 02/09
ALIGNMENT TIES	DIST TRAVERSE SHEET	FIELD CHECKED	BY	CHECKED BY J.PALLARES 02/09

	BY	CHECKED
DESIGN	A. Tern	M. Akkari/T. Bui
DETAILS	J. Yang	M. Akkari/T. Bui
QUANTITIES	G. Zuniga/G. Slocum	R. Odell/C. Udarbe

STATE OF CALIFORNIA DEPARTMENT OF TRANSPORTATION

DIVISION OF STRUCTURES STRUCTURE DESIGN 2

BRIDGE NO. 10-0165
KILOMETER POST 74.945

STRUCTURES FOUNDATION PLAN SHEET (METRIC) (REV.12-1-01)

ORIGINAL SCALE IN MILLIMETERS FOR REDUCED PLANS 0 10 20 30 40 50 60 70 80 90 100

CU 01
EA 262001

DISREGARD PRINTS BEARING EARLIER REVISION DATES

REVISION DATES (PRELIMINARY STAGE ONLY) 2/18/05 2/25/09 03/04/09 04/16/09

SHEET 14 OF 88

FILE => 10-0165_gefp01.dgn

USERNAME => s14640 DATE PLOTTED => 28-JAN-2012 TIME PLOTTED => 08:37

DIST	COUNTY	ROUTE	KILOMETER POST TOTAL PROJECT	SHEET No	TOTAL SHEETS
01	Men	101	R69.4/R78.9	754	939

Caltrans Metric

REGISTERED CIVIL ENGINEER 9-15-11 DATE

1-23-12
PLANS APPROVAL DATE

REGISTERED PROFESSIONAL ENGINEER M. Friedheim No. 57968 Exp. 6-30-12 CIVIL STATE OF CALIFORNIA

The State of California or its officers or agents shall not be responsible for the accuracy or completeness of electronic copies of this plan sheet.

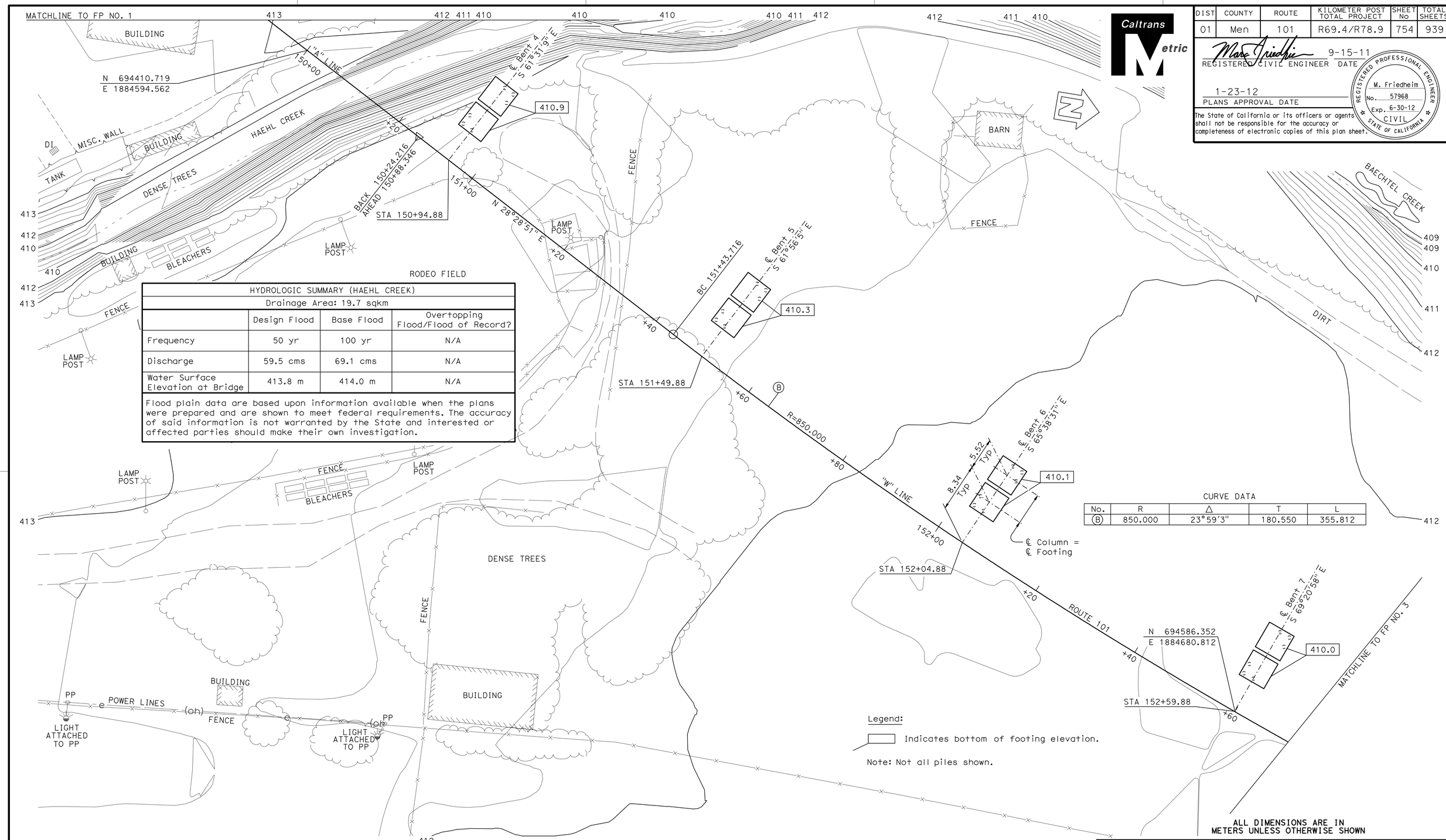

HYDROLOGIC SUMMARY (HAEHL CREEK)			
Drainage Area: 19.7 sqkm			
	Design Flood	Base Flood	Overtopping Flood/Flood of Record?
Frequency	50 yr	100 yr	N/A
Discharge	59.5 cms	69.1 cms	N/A
Water Surface Elevation at Bridge	413.8 m	414.0 m	N/A

Flood plain data are based upon information available when the plans were prepared and are shown to meet federal requirements. The accuracy of said information is not warranted by the State and interested or affected parties should make their own investigation.

CURVE DATA

No.	R	Δ	T	L
(B)	850.000	23°59'3"	180.550	355.812

PRELIMINARY INVESTIGATION SECTION

SCALE	VERT. DATUM NAVD 29	PHOTOGRAMMETRY AS OF:			
1:300	HORZ. DATUM NAD 83 (1991.35)	SURVEYED	BY T. GILLETT 12/04	DRAFTED	BY J.MARTINEZ 02/09
ALIGNMENT TIES	DIST TRAVERSE SHEET	FIELD CHECKED	BY	CHECKED	BY J.PALLARES 02/09

	BY	CHECKED
DESIGN	A. Tern	M. Akkari/T. Bui
DETAILS	J. Yang	M. Akkari/T. Bui
QUANTITIES	G. Zuniga/G. Slocum	R. Odell/C. Udarbe

STATE OF CALIFORNIA
DEPARTMENT OF TRANSPORTATION

DIVISION OF STRUCTURES
STRUCTURE DESIGN 2

BRIDGE NO. 10-0165
KILOMETER POST 74.945

WILLITS BYPASS
FLOODWAY VIADUCT
FOUNDATION PLAN NO. 2

STRUCTURES FOUNDATION PLAN SHEET (METRIC) (REV.12-1-01)

ORIGINAL SCALE IN MILLIMETERS FOR REDUCED PLANS 0 10 20 30 40 50 60 70 80 90 100

CU 01
EA 262001

DISREGARD PRINTS BEARING EARLIER REVISION DATES

REVISION DATES (PRELIMINARY STAGE ONLY) 2/4/05 2/25/09

SHEET 15 OF 88

FILE => 10-0165_gefp02.dgn

USERNAME => s114640 DATE PLOTTED => 28-JAN-2012 TIME PLOTTED => 08:38

DIST	COUNTY	ROUTE	KILOMETER POST TOTAL PROJECT	SHEET No	TOTAL SHEETS
01	Men	101	R69.4/R78.9	755	939

Caltrans Metric

REGISTERED CIVIL ENGINEER — DATE 9-15-11

1-23-12
PLANS APPROVAL DATE

REGISTERED PROFESSIONAL ENGINEER — M. Friedheim — No. 57968 — Exp. 6-30-12 — CIVIL — STATE OF CALIFORNIA

The State of California or its officers or agents shall not be responsible for the accuracy or completeness of electronic copies of this plan sheet.

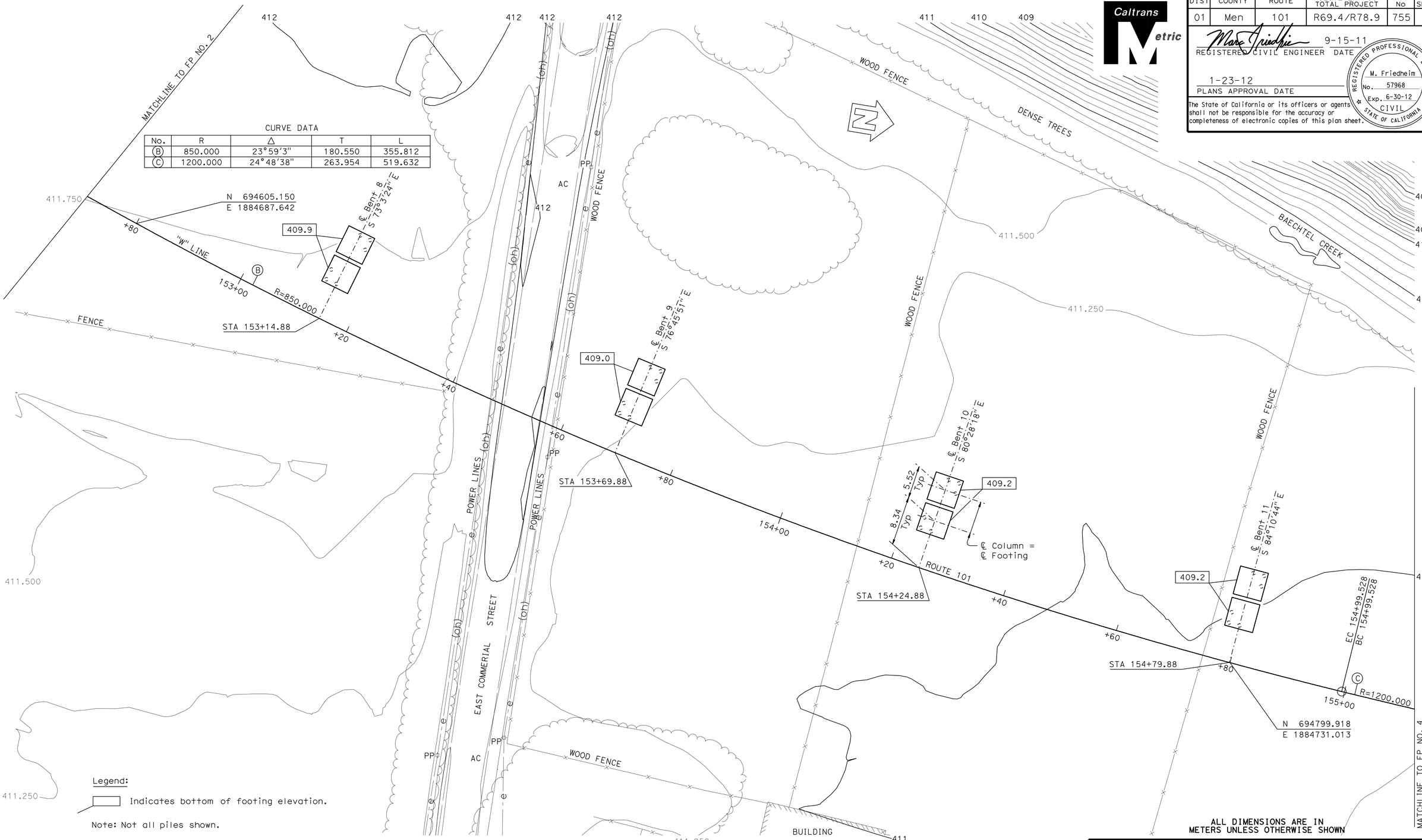

CURVE DATA

No.	R	Δ	T	L
(B)	850.000	23°59'3"	180.550	355.812
(C)	1200.000	24°48'38"	263.954	519.632

Legend:

Indicates bottom of footing elevation.

Note: Not all piles shown.

ALL DIMENSIONS ARE IN METERS UNLESS OTHERWISE SHOWN

WILLITS BYPASS
FLOODWAY VIADUCT
FOUNDATION PLAN NO. 3

PRELIMINARY INVESTIGATION SECTION

SCALE	VERT. DATUM NAVD 29	PHOTOGRAMMETRY AS OF:		
1:300	HORZ. DATUM NAD 83 (1991.35)	SURVEYED BY T. GILLETT 12/04	DRAFTED BY J.MARTINEZ 02/09	
ALIGNMENT TIES DIST TRAVERSE SHEET		FIELD CHECKED BY	CHECKED BY J.PALLARES 02/09	

	BY	CHECKED
DESIGN	A. Tern	M. Akkari/T. Bui
DETAILS	J. Yang	M. Akkari/T. Bui
QUANTITIES	G. Zuniga/G. Slocum	R. Odell/C. Udarbe

STATE OF CALIFORNIA
DEPARTMENT OF TRANSPORTATION

DIVISION OF STRUCTURES
STRUCTURE DESIGN 2

BRIDGE NO. 10-0165
KILOMETER POST 74.945

CU 01
EA 262001

STRUCTURES FOUNDATION PLAN SHEET (METRIC) (REV.12-1-01)

ORIGINAL SCALE IN MILLIMETERS FOR REDUCED PLANS 0 10 20 30 40 50 60 70 80 90 100

DISREGARD PRINTS BEARING EARLIER REVISION DATES

REVISION DATES (PRELIMINARY STAGE ONLY) 2/8/05 2/25/09

SHEET 16 OF 88

FILE => 10-0165_gefp03.dgn

USERNAME => s114640 DATE PLOTTED => 28-JAN-2012 TIME PLOTTED => 08:38

DIST	COUNTY	ROUTE	KILOMETER POST TOTAL PROJECT	SHEET No	TOTAL SHEETS
01	Men	101	R69.4/R78.9	756	939

Caltrans Metric

REGISTERED CIVIL ENGINEER 9-15-11 DATE

1-23-12
PLANS APPROVAL DATE

REGISTERED PROFESSIONAL ENGINEER M. Friedheim No. 57968 Exp. 6-30-12 CIVIL STATE OF CALIFORNIA

The State of California or its officers or agents shall not be responsible for the accuracy or completeness of electronic copies of this plan sheet.

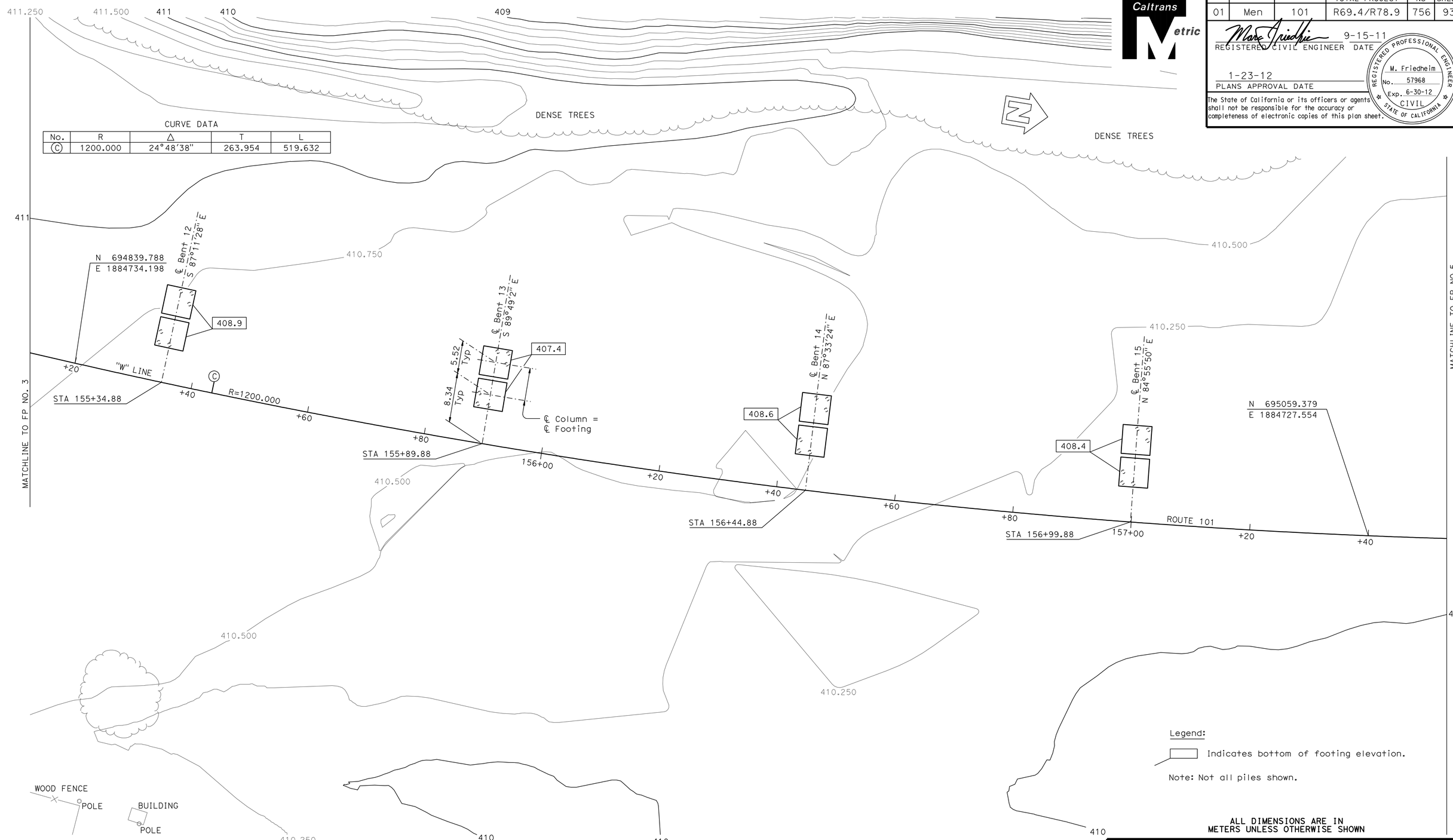

Legend:

Indicates bottom of footing elevation.

Note: Not all piles shown.

ALL DIMENSIONS ARE IN METERS UNLESS OTHERWISE SHOWN

WILLITS BYPASS
FLOODWAY VIADUCT
FOUNDATION PLAN NO. 4

PRELIMINARY INVESTIGATION SECTION

SCALE 1:300	VERT. DATUM NAVD 29	PHOTOGRAMMETRY AS OF:		
	HORZ. DATUM NAD 83 (1991.35)	SURVEYED BY T. GILLETT 12/04	DRAFTED BY J.MARTINEZ 02/09	
ALIGNMENT TIES DIST TRAVERSE SHEET		FIELD CHECKED BY	CHECKED BY J.PALLARES 02/09	

	BY	CHECKED
DESIGN	A. Tern	M. Akkari/T. Bui
DETAILS	J. Yang	M. Akkari/T. Bui
QUANTITIES	G. Zuniga/G. Slocum	R. Odell/C. Udarbe

STATE OF CALIFORNIA
DEPARTMENT OF TRANSPORTATION

DIVISION OF STRUCTURES
STRUCTURE DESIGN 2

BRIDGE NO. 10-0165
KILOMETER POST 74.945

CU 01
EA 262001

STRUCTURES FOUNDATION PLAN SHEET (METRIC) (REV.12-1-01)

ORIGINAL SCALE IN MILLIMETERS FOR REDUCED PLANS 0 10 20 30 40 50 60 70 80 90 100

DISREGARD PRINTS BEARING EARLIER REVISION DATES 2/18/05 2/25/09

REVISION DATES (PRELIMINARY STAGE ONLY)

SHEET 17 OF 88

FILE => 10-0165_gefp04.dgn

USERNAME => s114640 DATE PLOTTED => 28-JAN-2012 TIME PLOTTED => 08:38

DIST	COUNTY	ROUTE	KILOMETER POST TOTAL PROJECT	SHEET No	TOTAL SHEETS
01	Men	101	R69.4/R78.9	757	939

Caltrans Metric

REGISTERED CIVIL ENGINEER 9-15-11 DATE

1-23-12
PLANS APPROVAL DATE

REGISTERED PROFESSIONAL ENGINEER M. Friedheim No. 57968 Exp. 6-30-12 CIVIL STATE OF CALIFORNIA

The State of California or its officers or agents shall not be responsible for the accuracy or completeness of electronic copies of this plan sheet.

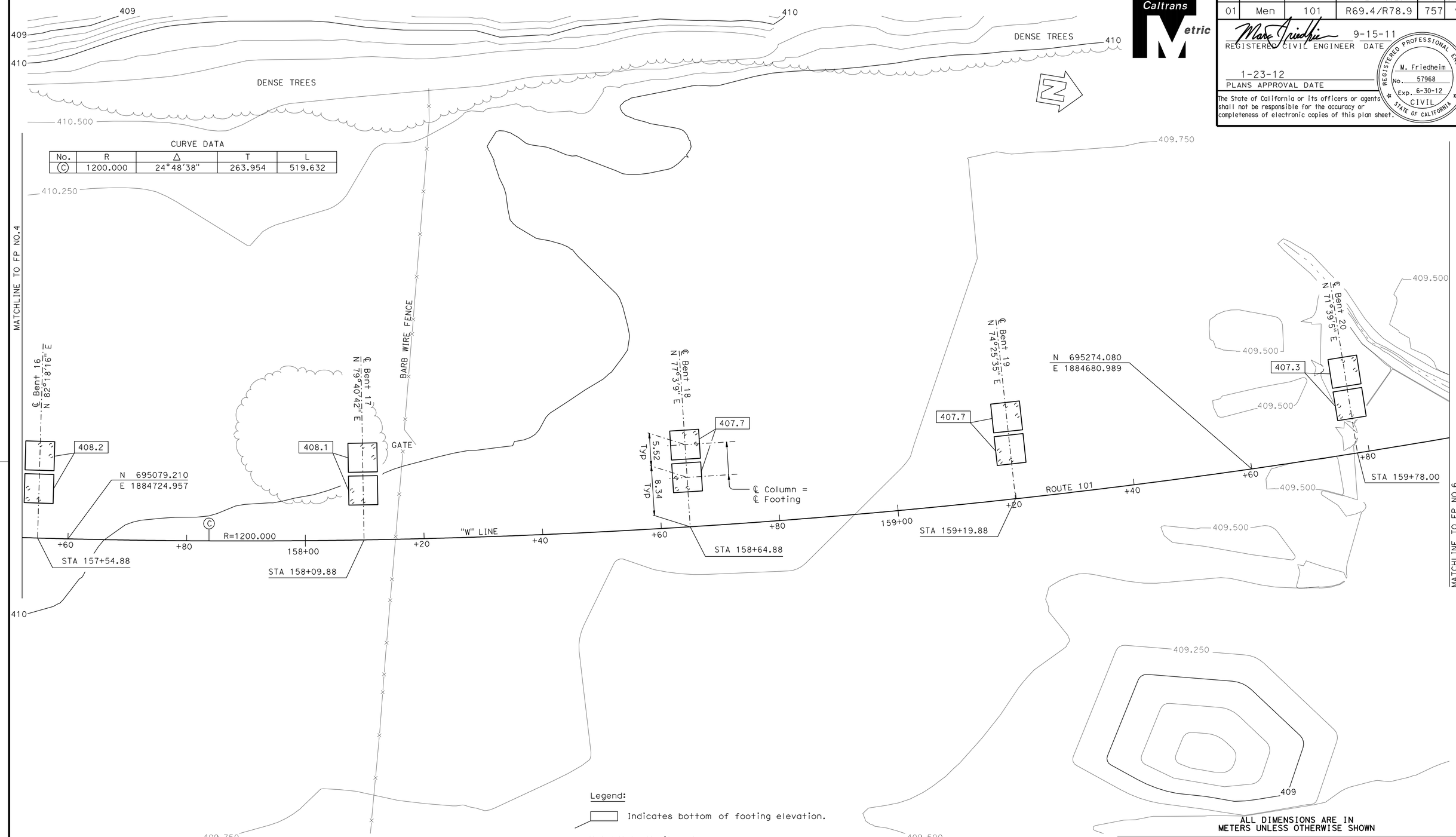

WILLITS BYPASS
FLOODWAY VIADUCT
FOUNDATION PLAN NO. 5

PRELIMINARY INVESTIGATION SECTION

SCALE	VERT. DATUM NAVD 29	PHOTOGRAMMETRY AS OF:			
1:300	HORZ. DATUM NAD 83 (1991.35)	SURVEYED	BY T. GILLETT 12/04	DRAFTED	BY J.MARTINEZ 02/09
ALIGNMENT TIES	DIST TRAVERSE SHEET	FIELD CHECKED	BY	CHECKED	BY J.PALLARES 02/09

	BY	CHECKED
DESIGN	A. Tern	M. Akkari/T. Bui
DETAILS	C. Figuerres	M. Akkari/T. Bui
QUANTITIES	G. Zuniga/G. Slocum	R. Odell/C. Udarbe

STATE OF CALIFORNIA DEPARTMENT OF TRANSPORTATION

DIVISION OF STRUCTURES STRUCTURE DESIGN 2

BRIDGE NO. 10-0165
KILOMETER POST 74.945

CU 01
EA 262001

DISREGARD PRINTS BEARING EARLIER REVISION DATES

REVISION DATES (PRELIMINARY STAGE ONLY): 2/6/05 2/25/09 12-09-09

SHEET 18 OF 88

STRUCTURES FOUNDATION PLAN SHEET (METRIC) (REV.12-1-01)

ORIGINAL SCALE IN MILLIMETERS FOR REDUCED PLANS 0 10 20 30 40 50 60 70 80 90 100

FILE => 10-0165_gefp05.dgn

USERNAME => s114640 DATE PLOTTED => 28-JAN-2012 TIME PLOTTED => 08:38

DIST	COUNTY	ROUTE	KILOMETER POST TOTAL PROJECT	SHEET No	TOTAL SHEETS
01	Men	101	R69.4/R78.9	758	939

Caltrans Metric

REGISTERED CIVIL ENGINEER 9-15-11 DATE

1-23-12
PLANS APPROVAL DATE

REGISTERED PROFESSIONAL ENGINEER M. Friedheim No. 57968 Exp. 6-30-12 CIVIL STATE OF CALIFORNIA

The State of California or its officers or agents shall not be responsible for the accuracy or completeness of electronic copies of this plan sheet.

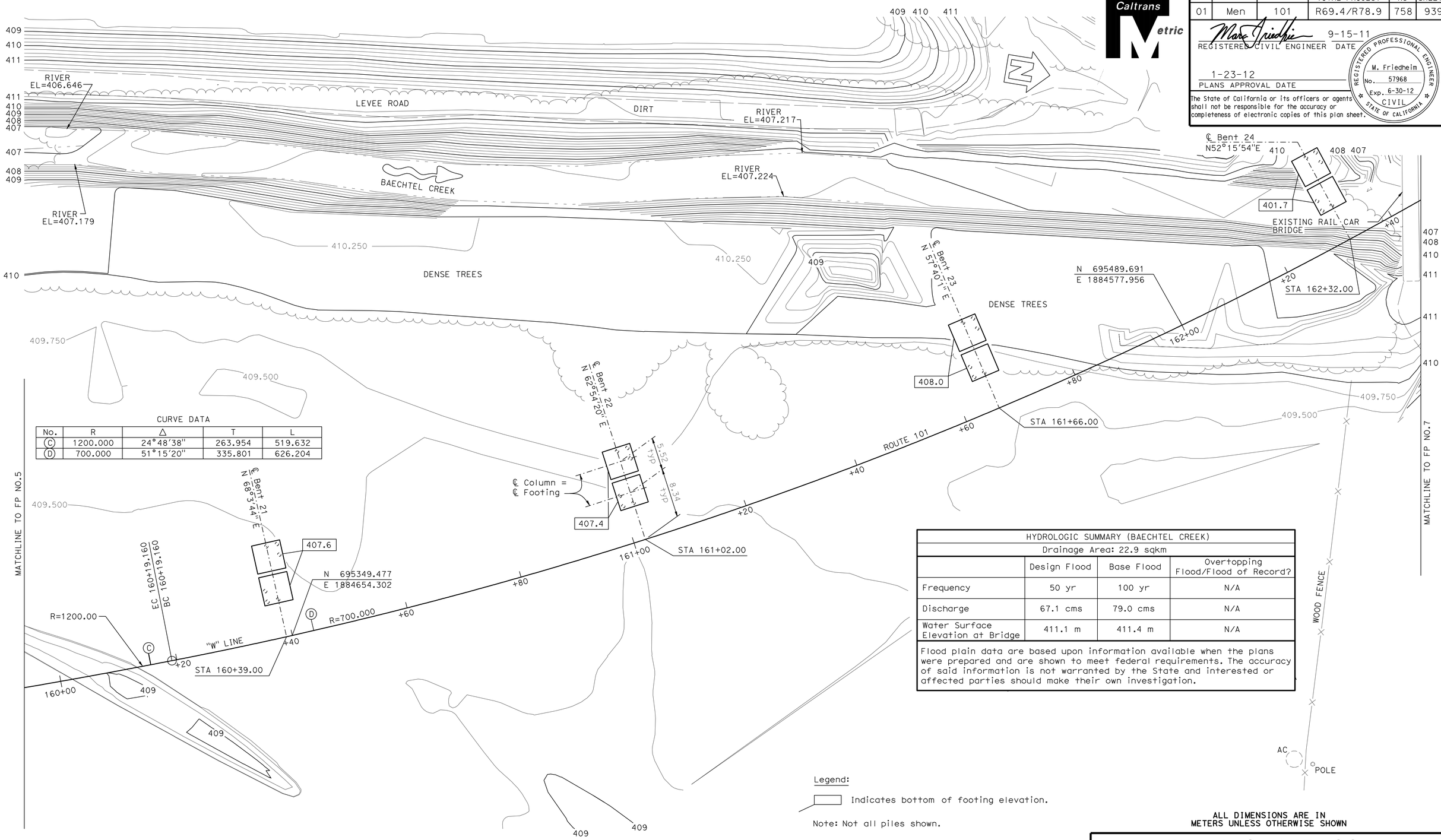

CURVE DATA

No.	R	Δ	T	L
C	1200.000	24°48'38"	263.954	519.632
D	700.000	51°15'20"	335.801	626.204

HYDROLOGIC SUMMARY (BAECHTEL CREEK)

Drainage Area: 22.9 sqkm

	Design Flood	Base Flood	Overtopping Flood/Flood of Record?
Frequency	50 yr	100 yr	N/A
Discharge	67.1 cms	79.0 cms	N/A
Water Surface Elevation at Bridge	411.1 m	411.4 m	N/A

Flood plain data are based upon information available when the plans were prepared and are shown to meet federal requirements. The accuracy of said information is not warranted by the State and interested or affected parties should make their own investigation.

Legend:

Indicates bottom of footing elevation.

Note: Not all piles shown.

ALL DIMENSIONS ARE IN METERS UNLESS OTHERWISE SHOWN

WILLITS BYPASS
FLOODWAY VIADUCT
FOUNDATION PLAN NO. 6

PRELIMINARY INVESTIGATION SECTION

SCALE 1:300	VERT. DATUM NAVD 29	PHOTOGRAMMETRY AS OF:	
	HORZ. DATUM NAD 83 (1991.35)	SURVEYED BY T. GILLETT 12/04	DRAFTED BY J.MARTINEZ 02/09
ALIGNMENT TIES DIST TRAVERSE SHEET		FIELD CHECKED BY	CHECKED BY J.PALLARES 02/09

	BY	CHECKED
DESIGN	A. Tern	M. Akkari/T. Bui
DETAILS	C. Figuerres	M. Akkari/T. Bui
QUANTITIES	G. Zuniga/G. Slocum	R. Odell/C. Udarbe

STATE OF CALIFORNIA DEPARTMENT OF TRANSPORTATION

DIVISION OF STRUCTURES STRUCTURE DESIGN 2

BRIDGE NO. 10-0165

KILOMETER POST 74.945

CU 01
EA 262001

DISREGARD PRINTS BEARING EARLIER REVISION DATES

REVISION DATES (PRELIMINARY STAGE ONLY): 2/13/08 2/12/09 4/09/09

SHEET 19 OF 88

STRUCTURES FOUNDATION PLAN SHEET (METRIC) (REV.12-1-01)

ORIGINAL SCALE IN MILLIMETERS FOR REDUCED PLANS 0 10 20 30 40 50 60 70 80 90 100

FILE => 10-0165_gefp06.dgn

USERNAME => s114640 DATE PLOTTED => 28-JAN-2012 TIME PLOTTED => 08:38

DIST	COUNTY	ROUTE	KILOMETER POST TOTAL PROJECT	SHEET No	TOTAL SHEETS
01	Men	101	R69.4/R78.9	759	939

Caltrans Metric

REGISTERED CIVIL ENGINEER 9-15-11 DATE

1-23-12
PLANS APPROVAL DATE

REGISTERED PROFESSIONAL ENGINEER M. Friedheim No. 57968 Exp. 6-30-12 CIVIL STATE OF CALIFORNIA

The State of California or its officers or agents shall not be responsible for the accuracy or completeness of electronic copies of this plan sheet.

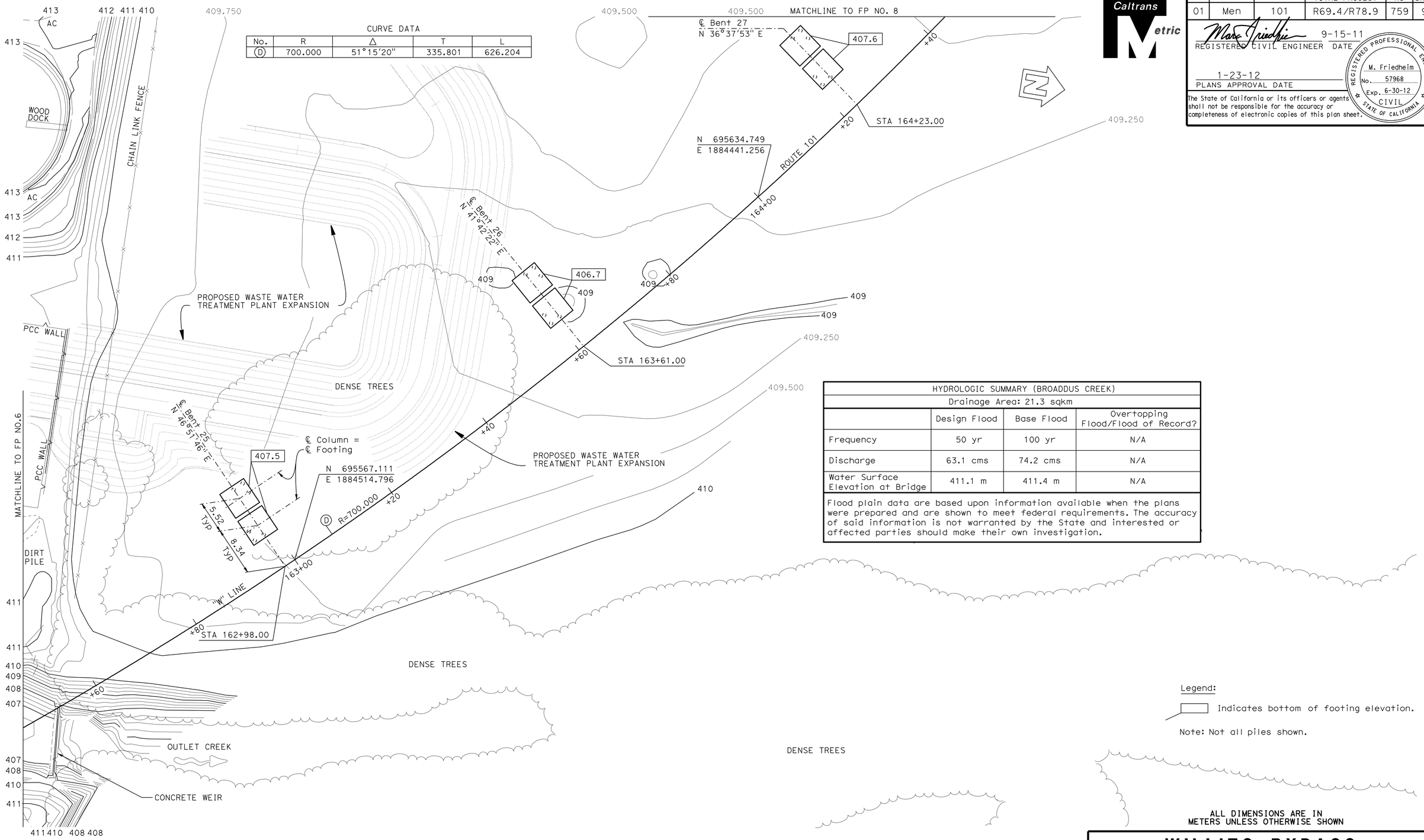

HYDROLOGIC SUMMARY (BROADDUS CREEK)			
Drainage Area: 21.3 sqkm			
	Design Flood	Base Flood	Overtopping Flood/Flood of Record?
Frequency	50 yr	100 yr	N/A
Discharge	63.1 cms	74.2 cms	N/A
Water Surface Elevation at Bridge	411.1 m	411.4 m	N/A

Flood plain data are based upon information available when the plans were prepared and are shown to meet federal requirements. The accuracy of said information is not warranted by the State and interested or affected parties should make their own investigation.

ALL DIMENSIONS ARE IN METERS UNLESS OTHERWISE SHOWN

WILLITS BYPASS
FLOODWAY VIADUCT
FOUNDATION PLAN NO. 7

PRELIMINARY INVESTIGATION SECTION

SCALE	VERT. DATUM NAVD 29	PHOTOGRAMMETRY AS OF:		
1:300	HORZ. DATUM NAD 83 (1991.35)	SURVEYED	BY T. GILLETT 12/04	DRAFTED BY J.MARTINEZ 02/09
ALIGNMENT TIES	DIST TRAVERSE SHEET	FIELD CHECKED BY		CHECKED BY J.PALLARES 02/09

	BY	CHECKED
DESIGN	A. Tern	M. Akkari/T. Bui
DETAILS	C. Figuerres	M. Akkari/T. Bui
QUANTITIES	G. Zuniga/G. Slocum	R. Odell/C. Udarbe

STATE OF CALIFORNIA DEPARTMENT OF TRANSPORTATION

DIVISION OF STRUCTURES STRUCTURE DESIGN 2

BRIDGE NO. 10-0165
KILOMETER POST 74.945

STRUCTURES FOUNDATION PLAN SHEET (METRIC) (REV.12-1-01)

ORIGINAL SCALE IN MILLIMETERS FOR REDUCED PLANS 0 10 20 30 40 50 60 70 80 90 100

CU 01
EA 262001

DISREGARD PRINTS BEARING EARLIER REVISION DATES

REVISION DATES (PRELIMINARY STAGE ONLY) 2/3/05 2/25/08 4/28/09

SHEET 20 OF 88

FILE => 10-0165_gefp07.dgn

USERNAME => s114640 DATE PLOTTED => 28-JAN-2012 TIME PLOTTED => 08:38

DIST	COUNTY	ROUTE	KILOMETER POST TOTAL PROJECT	SHEET No	TOTAL SHEETS
01	Men	101	R69.4/R78.9	760	939

Caltrans Metric

REGISTERED CIVIL ENGINEER 9-15-11 DATE

1-23-12
PLANS APPROVAL DATE

REGISTERED PROFESSIONAL ENGINEER M. Friedheim No. 57968 Exp. 6-30-12 CIVIL STATE OF CALIFORNIA

The State of California or its officers or agents shall not be responsible for the accuracy or completeness of electronic copies of this plan sheet.

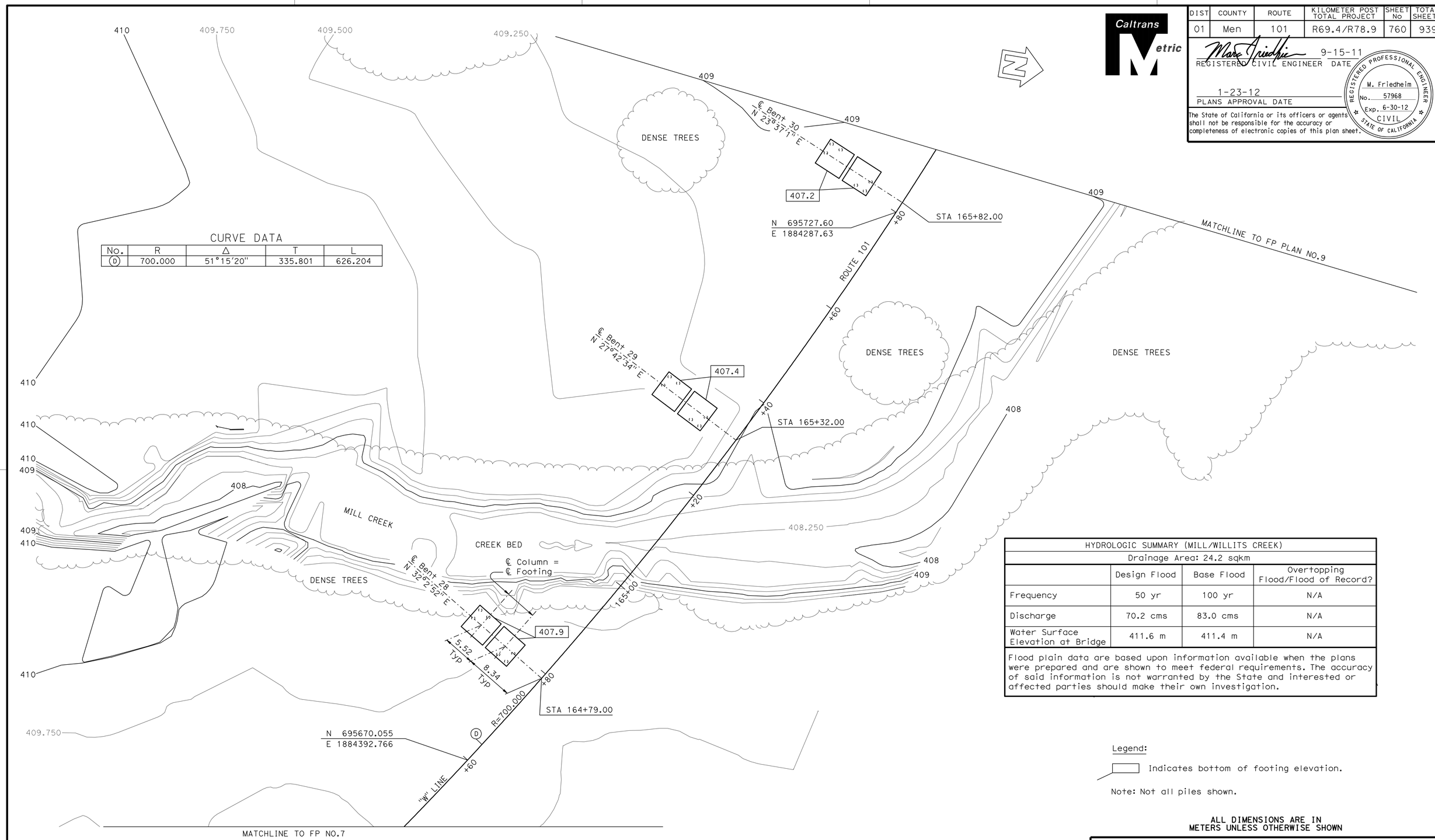

CURVE DATA

No.	R	Δ	T	L
(D)	700.000	51°15'20"	335.801	626.204

HYDROLOGIC SUMMARY (MILL/WILLITS CREEK)

Drainage Area: 24.2 sqkm

	Design Flood	Base Flood	Overtopping Flood/Flood of Record?
Frequency	50 yr	100 yr	N/A
Discharge	70.2 cms	83.0 cms	N/A
Water Surface Elevation at Bridge	411.6 m	411.4 m	N/A

Flood plain data are based upon information available when the plans were prepared and are shown to meet federal requirements. The accuracy of said information is not warranted by the State and interested or affected parties should make their own investigation.

Legend:

Indicates bottom of footing elevation.

Note: Not all piles shown.

ALL DIMENSIONS ARE IN METERS UNLESS OTHERWISE SHOWN

WILLITS BYPASS
FLOODWAY VIADUCT
FOUNDATION PLAN NO. 8

PRELIMINARY INVESTIGATION SECTION

SCALE 1:300	VERT. DATUM NAVD 29	PHOTOGRAMMETRY AS OF:	
	HORZ. DATUM NAD 83 (1991.35)	SURVEYED BY T. GILLETT 12/04	DRAFTED BY J.MARTINEZ 02/09
ALIGNMENT TIES DIST TRAVERSE SHEET		FIELD CHECKED BY	CHECKED BY J.PALLARES 02/09

	BY	CHECKED
DESIGN	A. Tern	M. Akkari/T. Bui
DETAILS	C. Figuerres	M. Akkari/T. Bui
QUANTITIES	G. Zuniga/G. Slocum	R. Odell/C. Udarbe

STATE OF CALIFORNIA DEPARTMENT OF TRANSPORTATION

DIVISION OF STRUCTURES STRUCTURE DESIGN 2

BRIDGE NO. 10-0165
KILOMETER POST 74.945

CU 01
EA 262001

STRUCTURES FOUNDATION PLAN SHEET (METRIC) (REV.12-1-01)

ORIGINAL SCALE IN MILLIMETERS FOR REDUCED PLANS 0 10 20 30 40 50 60 70 80 90 100

DISREGARD PRINTS BEARING EARLIER REVISION DATES

REVISION DATES (PRELIMINARY STAGE ONLY) 2/8/05 2/25/09 4/09/09

SHEET 21 OF 88

FILE => 10-0165_gefp08.dgn

USERNAME => s114640 DATE PLOTTED => 28-JAN-2012 TIME PLOTTED => 08:38

DIST	COUNTY	ROUTE	KILOMETER POST TOTAL PROJECT	SHEET No	TOTAL SHEETS
01	Men	101	R69.4/R78.9	761	939

Caltrans Metric

REGISTERED CIVIL ENGINEER 9-15-11 DATE

1-23-12
PLANS APPROVAL DATE

REGISTERED PROFESSIONAL ENGINEER M. Friedheim No. 57968 Exp. 6-30-12 CIVIL STATE OF CALIFORNIA

The State of California or its officers or agents shall not be responsible for the accuracy or completeness of electronic copies of this plan sheet.

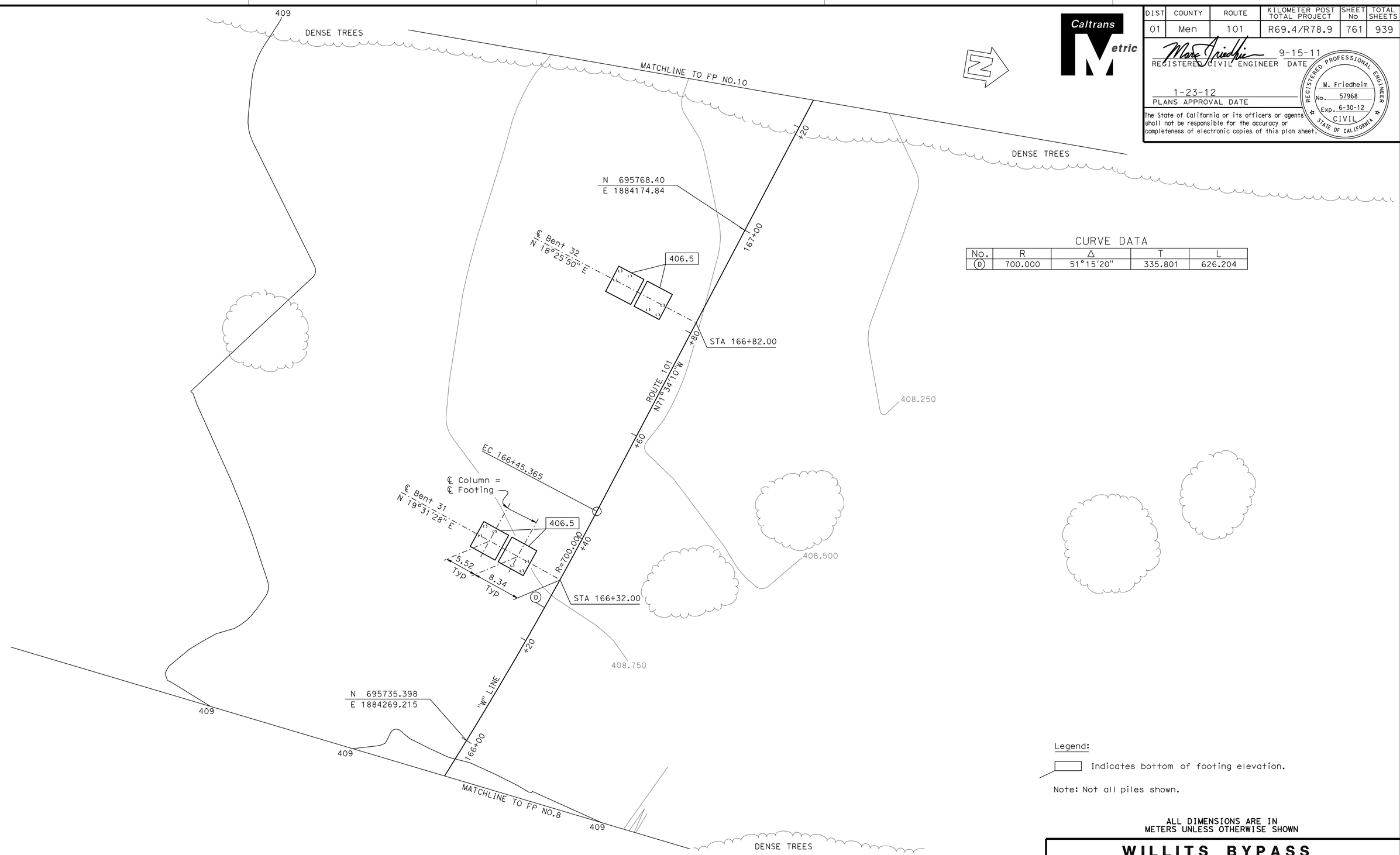

CURVE DATA

No.	R	Δ	T	L
D	700.000	51°15'20"	335.801	626.204

Legend:

Indicates bottom of footing elevation.

Note: Not all piles shown.

ALL DIMENSIONS ARE IN METERS UNLESS OTHERWISE SHOWN

WILLITS BYPASS
FLOODWAY VIADUCT
FOUNDATION PLAN NO. 9

PRELIMINARY INVESTIGATION SECTION							
SCALE 1:300	VERT. DATUM NAVD 29	PHOTOGRAMMETRY AS OF:					
	HORZ. DATUM NAD 83 (1991.35)	SURVEYED	BY T. GILLETT 12/04	DRAFTED	BY J.MARTINEZ 02/09		
ALIGNMENT TIES DIST TRAVERSE SHEET		FIELD CHECKED	BY	CHECKED	BY J.PALLARES 02/09		

	BY	CHECKED
DESIGN	A. Tern	M. Akkari/T. Bui
DETAILS	C. Figuerres	M. Akkari/T. Bui
QUANTITIES	G. Zuniga/G. Slocum	R. Odell/C. Udarbe

STATE OF CALIFORNIA DEPARTMENT OF TRANSPORTATION

DIVISION OF STRUCTURES STRUCTURE DESIGN 2

BRIDGE NO. 10-0165
KILOMETER POST 74.945

STRUCTURES FOUNDATION PLAN SHEET (METRIC) (REV.12-1-01)

ORIGINAL SCALE IN MILLIMETERS FOR REDUCED PLANS 0 10 20 30 40 50 60 70 80 90 100

CU 01
EA 262001

DISREGARD PRINTS BEARING EARLIER REVISION DATES → 2/3/05 2/25/09

REVISION DATES (PRELIMINARY STAGE ONLY)

SHEET 22 OF 88

FILE => 10-0165_gefp09.dgn

USERNAME => s114640 DATE PLOTTED => 28-JAN-2012 TIME PLOTTED => 08:38

DIST	COUNTY	ROUTE	KILOMETER POST TOTAL PROJECT	SHEET No	TOTAL SHEETS
01	Men	101	R69.4/R78.9	762	939

Caltrans Metric

REGISTERED CIVIL ENGINEER 9-15-11 DATE

1-23-12
PLANS APPROVAL DATE

REGISTERED PROFESSIONAL ENGINEER M. Friedheim No. 57968 Exp. 6-30-12 CIVIL STATE OF CALIFORNIA

The State of California or its officers or agents shall not be responsible for the accuracy or completeness of electronic copies of this plan sheet.

Legend:

Indicates bottom of footing elevation.

Note: Not all piles shown.

ALL DIMENSIONS ARE IN METERS UNLESS OTHERWISE SHOWN

WILLITS BYPASS
FLOODWAY VIADUCT
FOUNDATION PLAN NO. 10

PRELIMINARY INVESTIGATION SECTION					
SCALE 1:300	VERT. DATUM NAVD 29	PHOTOGRAMMETRY AS OF:			
	HORZ. DATUM NAD 83 (1991.35)	SURVEYED	BY T. GILLETT 12/04	DRAFTED	BY J.MARTINEZ 02/09
ALIGNMENT TIES DIST TRAVERSE SHEET		FIELD CHECKED	BY	CHECKED	BY J.PALLARES 02/09

	BY	CHECKED
DESIGN	A. Tern	M. Akkari/T. Bui
DETAILS	C. Figuerres	M. Akkari/T. Bui
QUANTITIES	G. Zuniga/G. Slocum	R. Odell/C. Udarbe

STATE OF CALIFORNIA DEPARTMENT OF TRANSPORTATION

DIVISION OF STRUCTURES STRUCTURE DESIGN 2

BRIDGE NO. 10-0165
KILOMETER POST 74.945

CU 01
EA 262001

STRUCTURES FOUNDATION PLAN SHEET (METRIC) (REV.12-1-01)

ORIGINAL SCALE IN MILLIMETERS FOR REDUCED PLANS 0 10 20 30 40 50 60 70 80 90 100

DISREGARD PRINTS BEARING EARLIER REVISION DATES 2/18/05 2/25/09

REVISION DATES (PRELIMINARY STAGE ONLY)

SHEET 23 OF 88

FILE => 10-0165_gefp10.dgn

USERNAME => s114640 DATE PLOTTED => 28-JAN-2012 TIME PLOTTED => 08:38

DIST	COUNTY	ROUTE	KILOMETER POST TOTAL PROJECT	SHEET No	TOTAL SHEETS
01	Men	101	R69.4/R78.9	763	939

REGISTERED CIVIL ENGINEER 9-15-11 DATE

1-23-12
PLANS APPROVAL DATE

REGISTERED PROFESSIONAL ENGINEER M. Friedheim No. 57968 Exp. 06-30-12 CIVIL STATE OF CALIFORNIA

The State of California or its officers or agents shall not be responsible for the accuracy or completeness of electronic copies of this plan sheet.

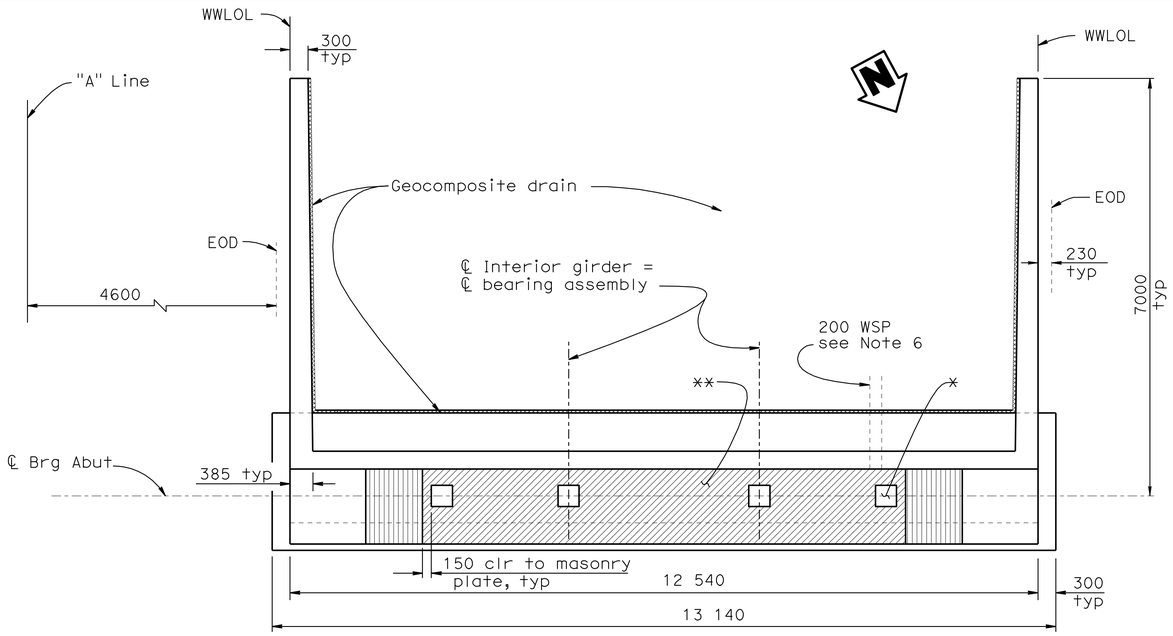

PLAN
1:50

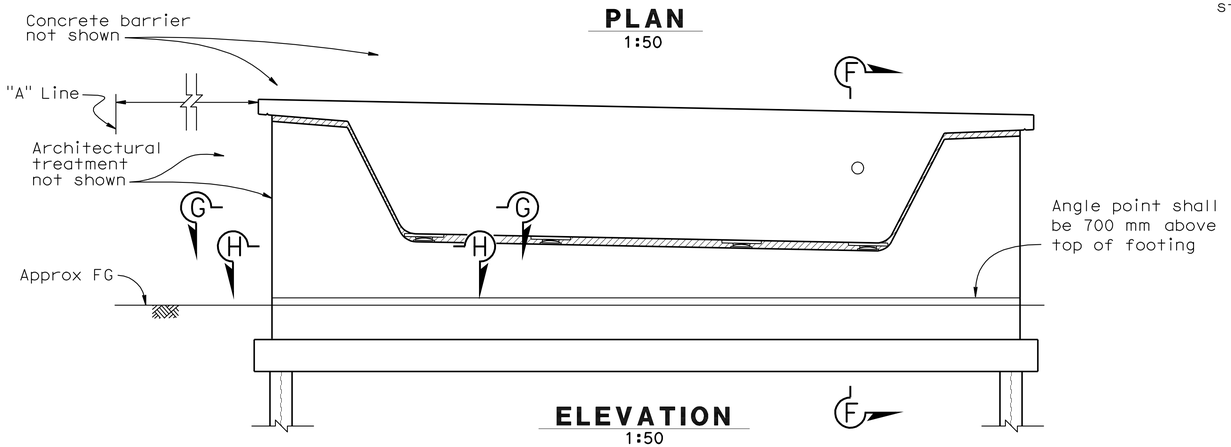

ELEVATION
1:50

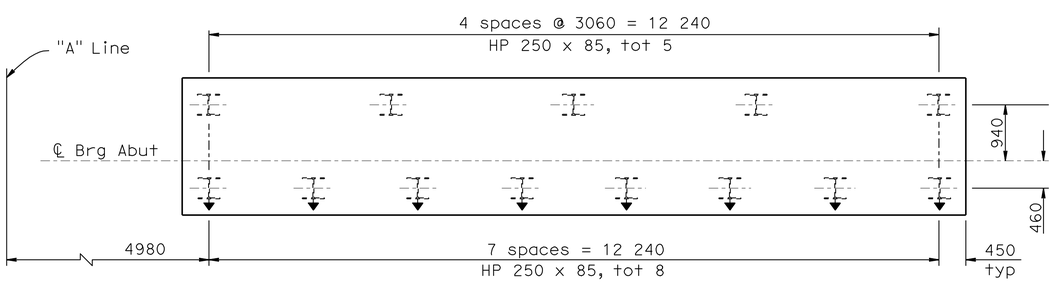

PILE LAYOUT
1:50

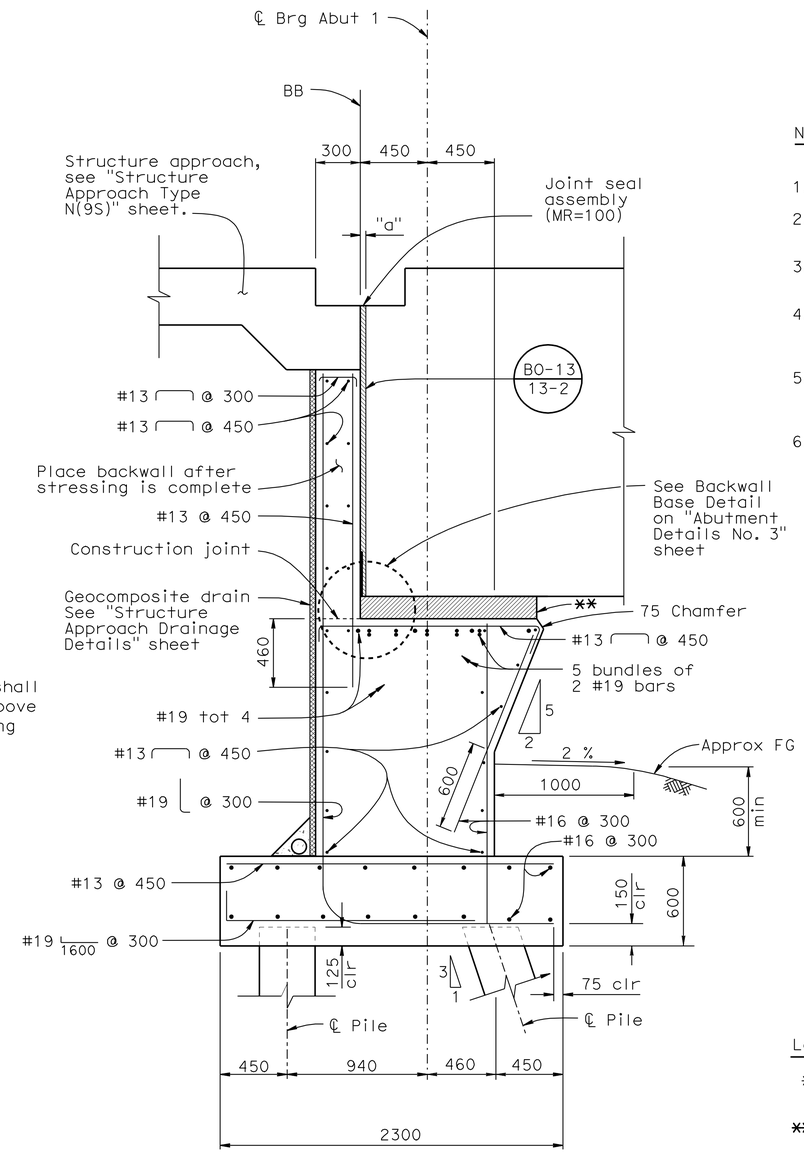

SECTION F-F
1:20

NOTES:

1. For pile data see "Index to Plans" sheet
2. For Sections G-G and H-H see "Abutment Details No. 3" sheet
3. For typical wingwall elevation see "Abutment Details No. 1" sheet
4. For "a" dimension see "Joint Seal Assembly (maximum movement rating = 100mm)" sheet
5. Reinforcement at joint seal assembly may be adjusted as approved by the engineer.
6. For deck drainage details and pipe through the backwall, see "Drainage Details No. 1" sheet.

Legend

* See "PTFE/Spherical Bearing Details" sheet

** Expanded polystyrene same thickness as bearing assembly (BO-13 / 13-1)

Denotes vertical pile

Denotes battered pile

Caltrans Metric

	BY	CHECKED
DESIGN	M. Moore	G. Zuniga
DETAILS	L. Wang	G. Zuniga
QUANTITIES	G. Zungia/G. Slocum	R. Odell/C. Udarbe

STATE OF CALIFORNIA
DEPARTMENT OF TRANSPORTATION

DIVISION OF ENGINEERING SERVICES
STRUCTURE DESIGN
DESIGN BRANCH 2

BRIDGE NO. 10-0165
KILOMETER POST R74.945

WILLITS BYPASS
FLOODWAY VIADUCT
ABUTMENT 1 LAYOUT

ALL DIMENSIONS ARE IN MILLIMETERS UNLESS OTHERWISE SHOWN

ORIGINAL SCALE IN MILLIMETERS FOR REDUCED PLANS 0 10 20 30 40 50 60 70 80 90 100

CU 01
EA 262001

DISREGARD PRINTS BEARING EARLIER REVISION DATES

REVISION DATES: 01-14-07 | 09-14-06 | 10-01-08 | 02-27-09 | | 06-19-08 | 06-26-08 | 07-08-08 | 07-09-08 | 07-18-08

SHEET 24 OF 88

FILE => 10-0165_gfaa11o1.dgn

STRUCTURES DESIGN DETAIL SHEET (METRIC) (REV.03-17-04)

USERNAME => s114640 DATE PLOTTED => 28-JAN-2012 TIME PLOTTED => 08:38

DIST	COUNTY	ROUTE	KILOMETER POST TOTAL PROJECT	SHEET No	TOTAL SHEETS
01	Men	101	R69.4/R78.9	764	939

REGISTERED CIVIL ENGINEER 9-15-11 DATE

1-23-12
PLANS APPROVAL DATE

REGISTERED PROFESSIONAL ENGINEER M. Friedheim No. 57968 Exp. 06-30-12 CIVIL STATE OF CALIFORNIA

The State of California or its officers or agents shall not be responsible for the accuracy or completeness of electronic copies of this plan sheet.

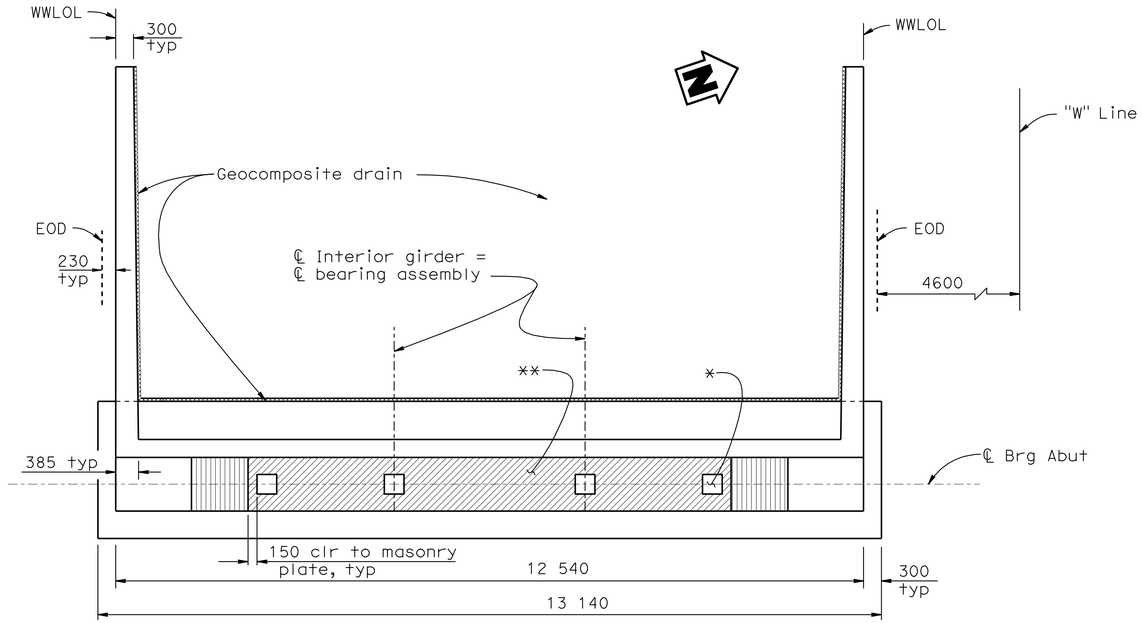

PLAN
1:50

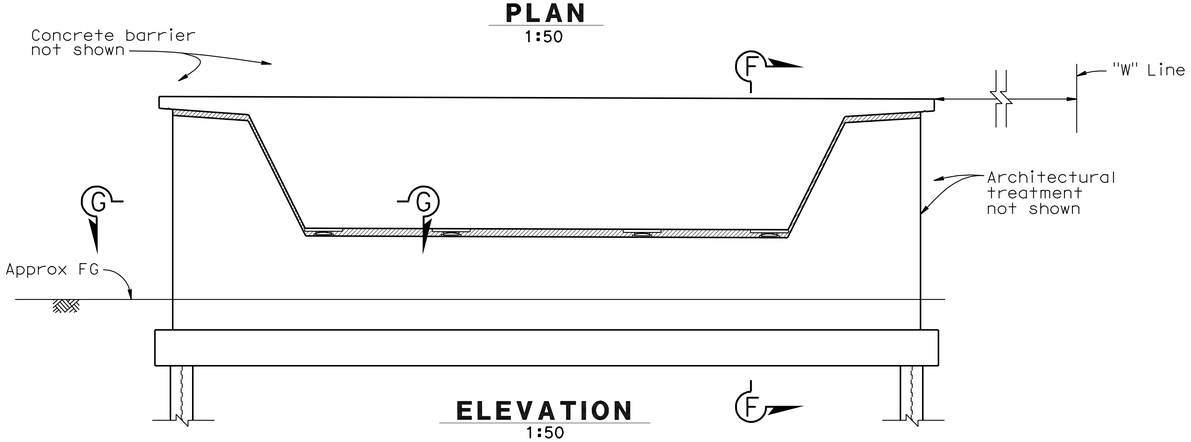

ELEVATION
1:50

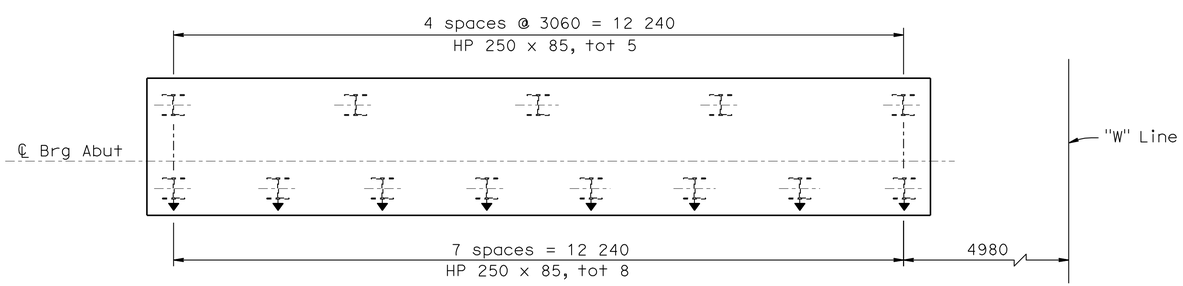

PILE LAYOUT
1:50

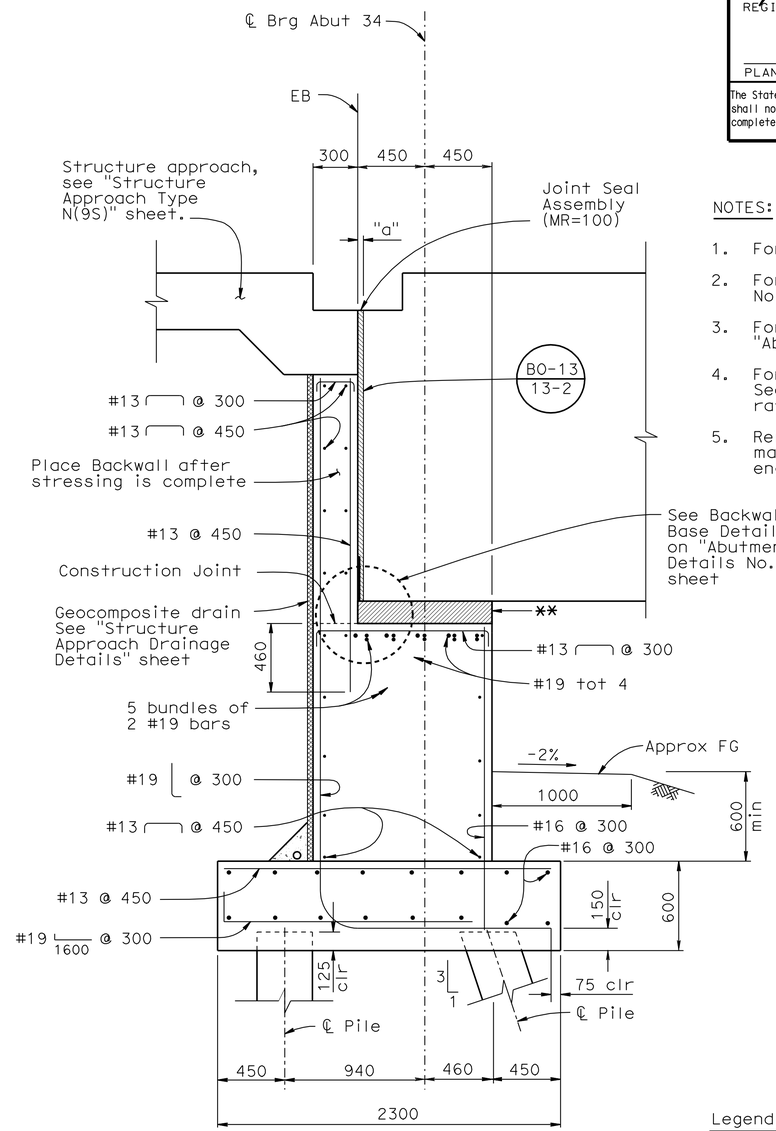

SECTION F-F
1:20

NOTES:

1. For pile data see "Index to Plans" sheet
2. For Section G-G see "Abutment Details No. 3" sheet
3. For typical wingwall elevation see "Abutment Details No. 2" sheet
4. For "a" dimension see "Joint Seal Assembly (maximum movement rating = 100mm)" sheet
5. Reinforcement at joint seal assembly may be adjusted as approved by the engineer.

Legend

* See "PTFE/Spherical Bearing Details" sheet

** Expanded polystyrene same thickness as bearing assembly (B0-13 / 13-1)

Denotes vertical pile

Denotes battered pile

Caltrans Metric

	BY	CHECKED
DESIGN	M. Moore	G. Zuniga
DETAILS	L. Wang	G. Zuniga
QUANTITIES	G. Zungia/G. Slocum	R. Odell/C. Udarbe

STATE OF CALIFORNIA
DEPARTMENT OF TRANSPORTATION

DIVISION OF ENGINEERING SERVICES
STRUCTURE DESIGN
DESIGN BRANCH 2

BRIDGE NO. 10-0165
KILOMETER POST R74.945

WILLITS BYPASS
FLOODWAY VIADUCT
ABUTMENT 34 LAYOUT

ALL DIMENSIONS ARE IN MILLIMETERS UNLESS OTHERWISE SHOWN

ORIGINAL SCALE IN MILLIMETERS FOR REDUCED PLANS 0 10 20 30 40 50 60 70 80 90 100

CU 01
EA 262001

DISREGARD PRINTS BEARING EARLIER REVISION DATES

REVISION DATES: 01-1-07 09-08-08 09-17-08 10-01-08 2-27-09 06-29-08 07-08-08 07-08-08 07-15-08

SHEET 25 OF 88

FILE => 10-0165_gfaa34lol.dgn

STRUCTURES DESIGN DETAIL SHEET (METRIC) (REV.03-17-04)

USERNAME => s114640 DATE PLOTTED => 28-JAN-2012 TIME PLOTTED => 08:38

DIST	COUNTY	ROUTE	KILOMETER POST TOTAL PROJECT	SHEET No	TOTAL SHEETS
01	Men	101	R69.4/R78.9	765	939

REGISTERED CIVIL ENGINEER 9-15-11 DATE

1-23-12
PLANS APPROVAL DATE

REGISTERED PROFESSIONAL ENGINEER M. Friedheim No. 57968 Exp. 06-30-12 CIVIL STATE OF CALIFORNIA

The State of California or its officers or agents shall not be responsible for the accuracy or completeness of electronic copies of this plan sheet.

NOTES:

1. See external shear key reinforcement on "Abutment Details No. 3" sheet

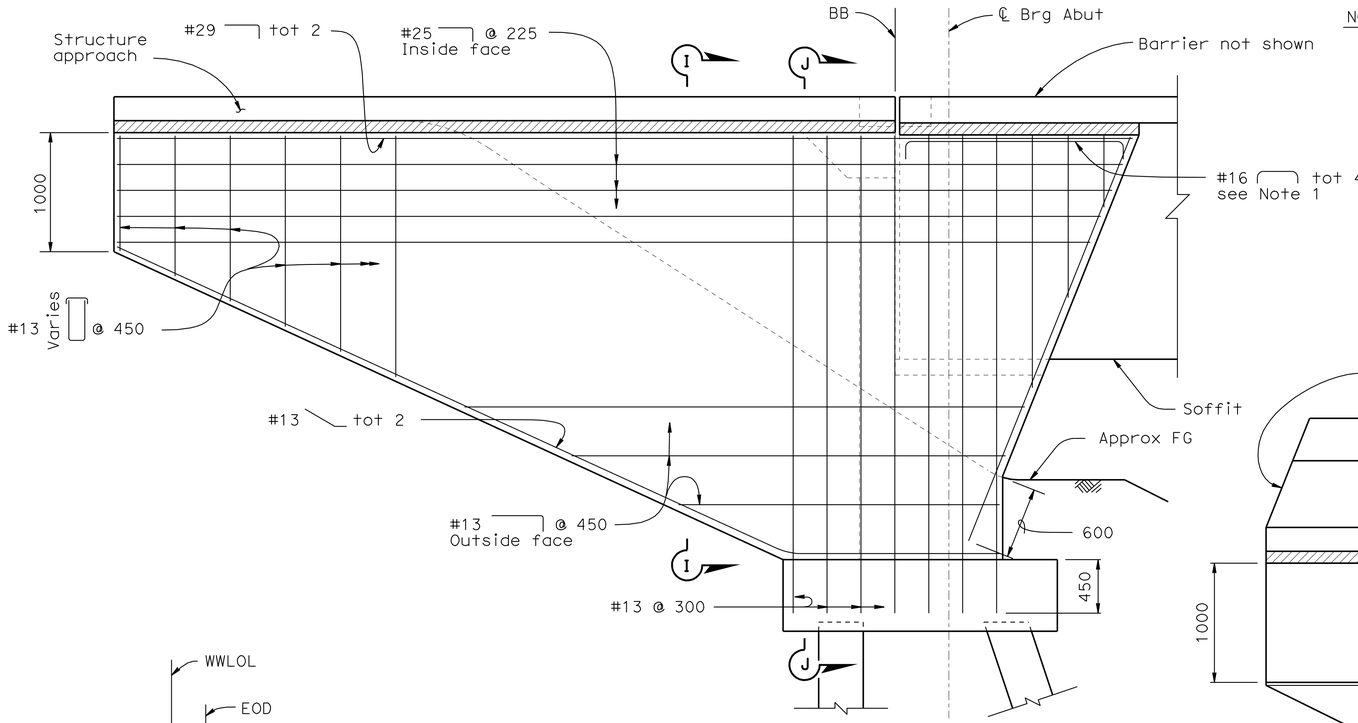

ABUTMENT 1 WINGWALL ELEVATION
1:25

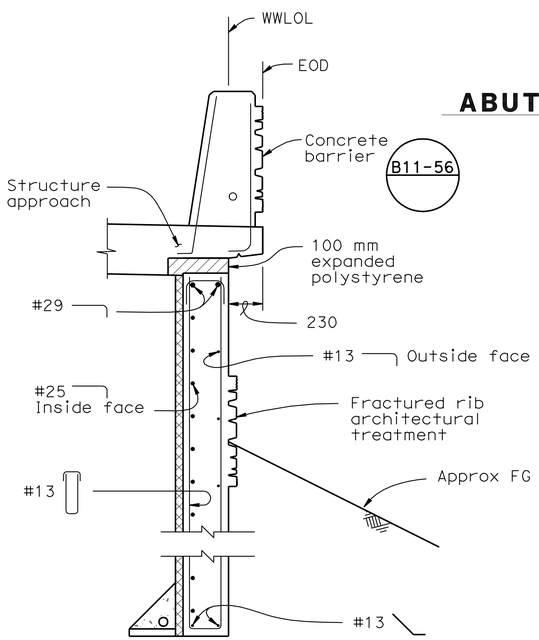

SECTION I-I
1:20

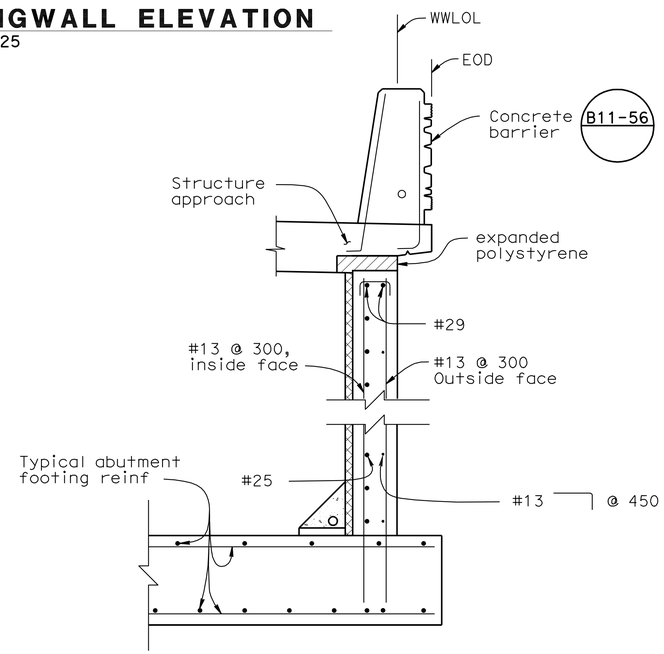

SECTION J-J
1:20

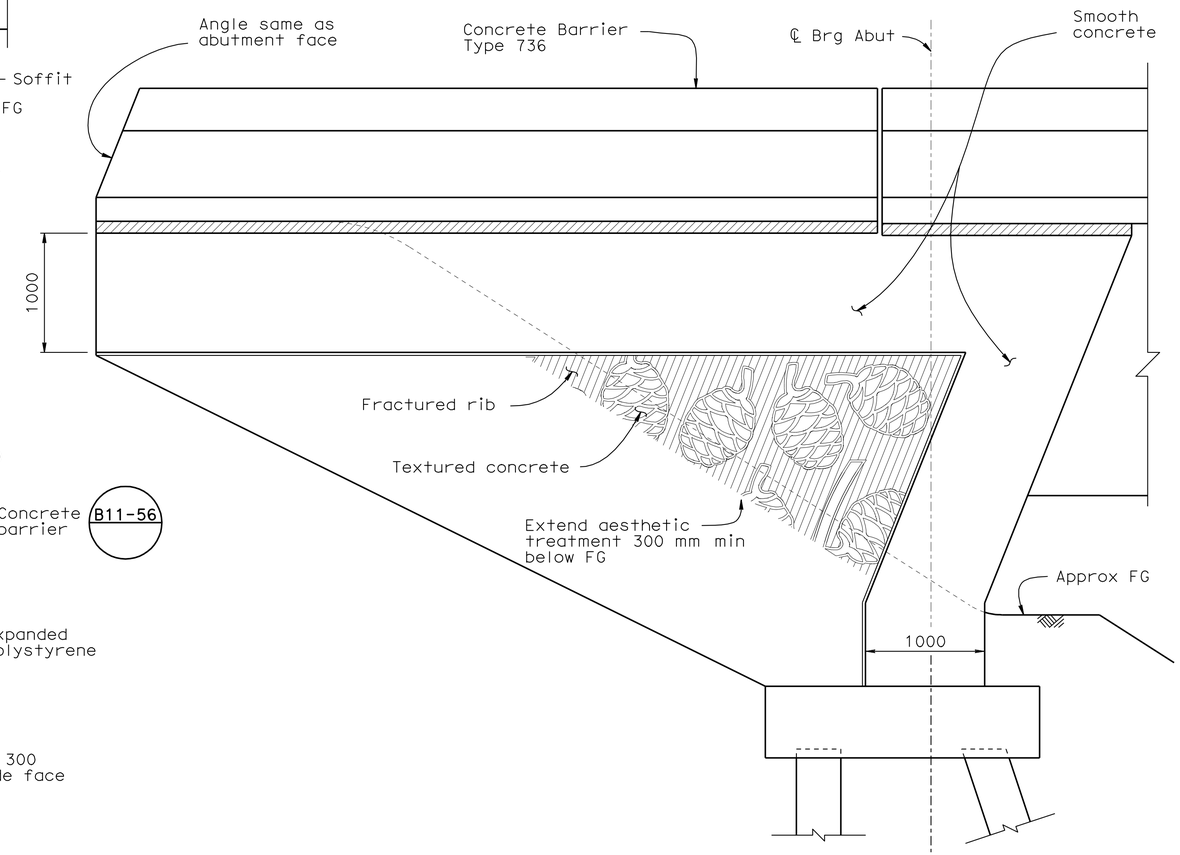

ARCHITECTURAL TREATMENT (ABUTMENT 1)
1:25

Caltrans Metric

	BY	CHECKED
DESIGN	M. Moore	G. Zuniga
DETAILS	L. Wang	G. Zuniga
QUANTITIES	G. Zungia/G. Slocum	R. Odell/C. Udarbe

STATE OF CALIFORNIA
DEPARTMENT OF TRANSPORTATION

DIVISION OF ENGINEERING SERVICES
STRUCTURE DESIGN
DESIGN BRANCH 2

BRIDGE NO. 10-0165
KILOMETER POST R74.945

WILLITS BYPASS
FLOODWAY VIADUCT
ABUTMENT DETAILS NO. 1

ALL DIMENSIONS ARE IN METERS UNLESS OTHERWISE SHOWN

ORIGINAL SCALE IN MILLIMETERS FOR REDUCED PLANS 0 10 20 30 40 50 60 70 80 90 100

CU 01
EA 262001

DISREGARD PRINTS BEARING EARLIER REVISION DATES

REVISION DATES: 01-19-07 04-09-09 06-17-08 06-23-08 07-01-08 09-11-08 10-01-08 3-03-09 3-13-09

SHEET 26 OF 88

FILE => 10-0165_gfabdt01.dgn

STRUCTURES DESIGN DETAIL SHEET (METRIC) (REV.03-17-04)

USERNAME => s124496 DATE PLOTTED => 28-JAN-2012 TIME PLOTTED => 08:37

DIST	COUNTY	ROUTE	KILOMETER POST TOTAL PROJECT	SHEET No	TOTAL SHEETS
01	Men	101	R69.4/R78.9	766	939

REGISTERED CIVIL ENGINEER 9-15-11 DATE

1-23-12
PLANS APPROVAL DATE

REGISTERED PROFESSIONAL ENGINEER M. Friedheim No. 57968 Exp. 06-30-12 CIVIL STATE OF CALIFORNIA

The State of California or its officers or agents shall not be responsible for the accuracy or completeness of electronic copies of this plan sheet.

Notes:

1. For Section I-I and J-J see "Abutment Details No. 1" sheet.
2. For aesthetic details see "Aesthetic Details No. 1" sheet.
3. For "a" dimension see "Joint Seal Assembly (maximum movement rating = 100 mm)" sheet.
4. Stagger with joint seal assembly anchor studs.

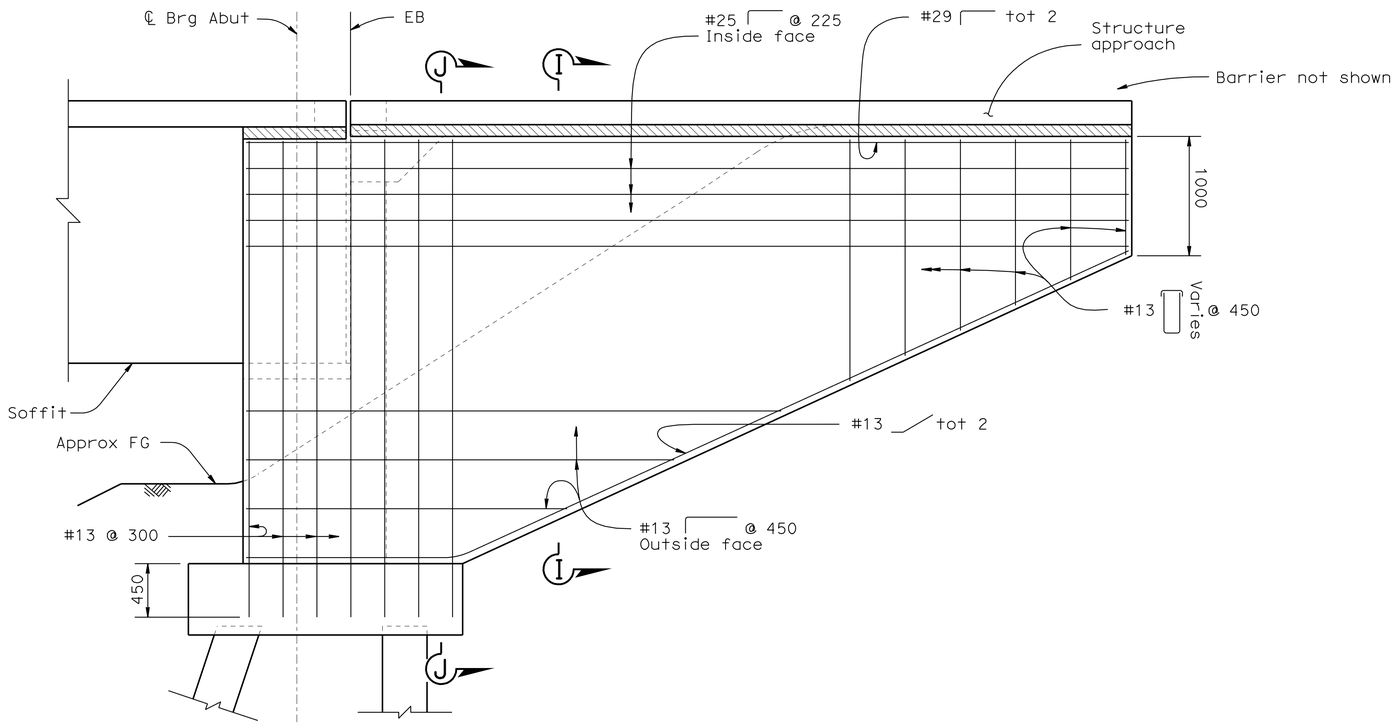

ABUTMENT 34 WINGWALL ELEVATION

1:25

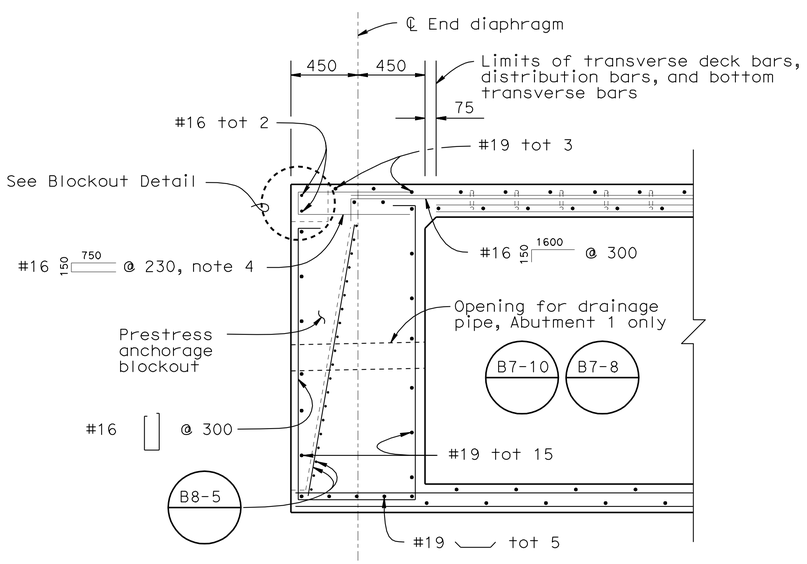

END DIAPHRAGM SECTION

1:20

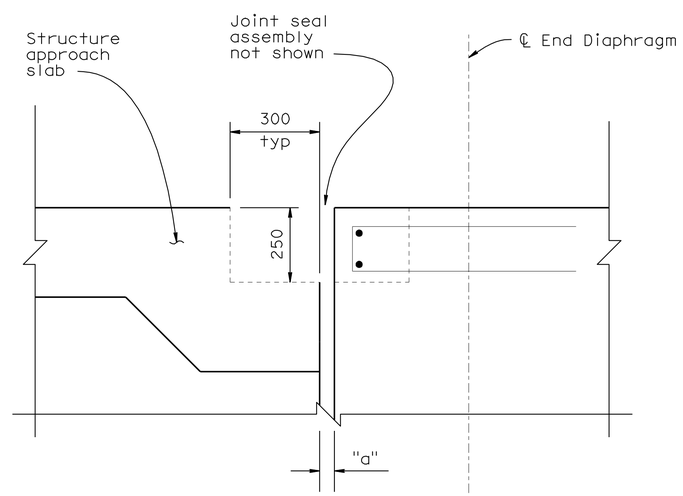

BLOCKOUT DETAIL

1:10

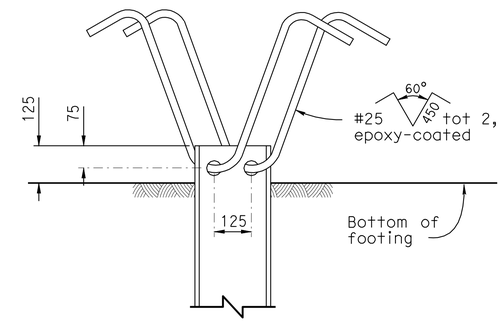

ELEVATION

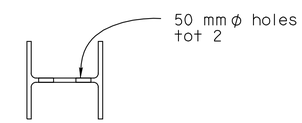

PLAN

STEEL PILE ANCHOR DETAIL

No Scale

Caltrans Metric

	BY	CHECKED
DESIGN	M. Moore	G. Zuniga
DETAILS	L. Wang/J. Yang	G. Zuniga
QUANTITIES	G. Zungia/G. Slocum	R. Odell/C. Udarbe

STATE OF CALIFORNIA DEPARTMENT OF TRANSPORTATION

DIVISION OF ENGINEERING SERVICES STRUCTURE DESIGN

DESIGN BRANCH 2

BRIDGE NO. 10-0165

KILOMETER POST R74.945

WILLITS BYPASS

FLOODWAY VIADUCT

ABUTMENT DETAILS NO. 2

ALL DIMENSIONS ARE IN METERS UNLESS OTHERWISE SHOWN

ORIGINAL SCALE IN MILLIMETERS FOR REDUCED PLANS 0 10 20 30 40 50 60 70 80 90 100

CU 01
EA 262001

DISREGARD PRINTS BEARING EARLIER REVISION DATES

REVISION DATES: 01-19-07 02-05-07 04-5-07 06-14-08 06-23-08 07-01-08 09-14-08 10-01-08 03-05-09 04-1-09

SHEET 27 OF 88

FILE => 10-0165_gfabdt02.dgn

STRUCTURES DESIGN DETAIL SHEET (METRIC) (REV.03-17-04)

USERNAME => s124496 DATE PLOTTED => 28-JAN-2012 TIME PLOTTED => 08:38

DIST	COUNTY	ROUTE	KILOMETER POST TOTAL PROJECT	SHEET No	TOTAL SHEETS
01	Men	101	R69.4/R78.9	767	939

REGISTERED CIVIL ENGINEER 9-15-11 DATE

1-23-12
PLANS APPROVAL DATE

REGISTERED PROFESSIONAL ENGINEER M. Friedheim No. 57968 Exp. 06-30-12 CIVIL STATE OF CALIFORNIA

The State of California or its officers or agents shall not be responsible for the accuracy or completeness of electronic copies of this plan sheet.

Notes:

1. For Spherical Bearing Details, see "PTFE/Spherical Bearing Details" sheet
2. For location of "Section G-G" and "Section H-H" see "Abutment 1 Layout" and "Abutment 34 Layout" sheets
3. For Geocomposite Drain, see "Structure Approach Drainage Details" sheet

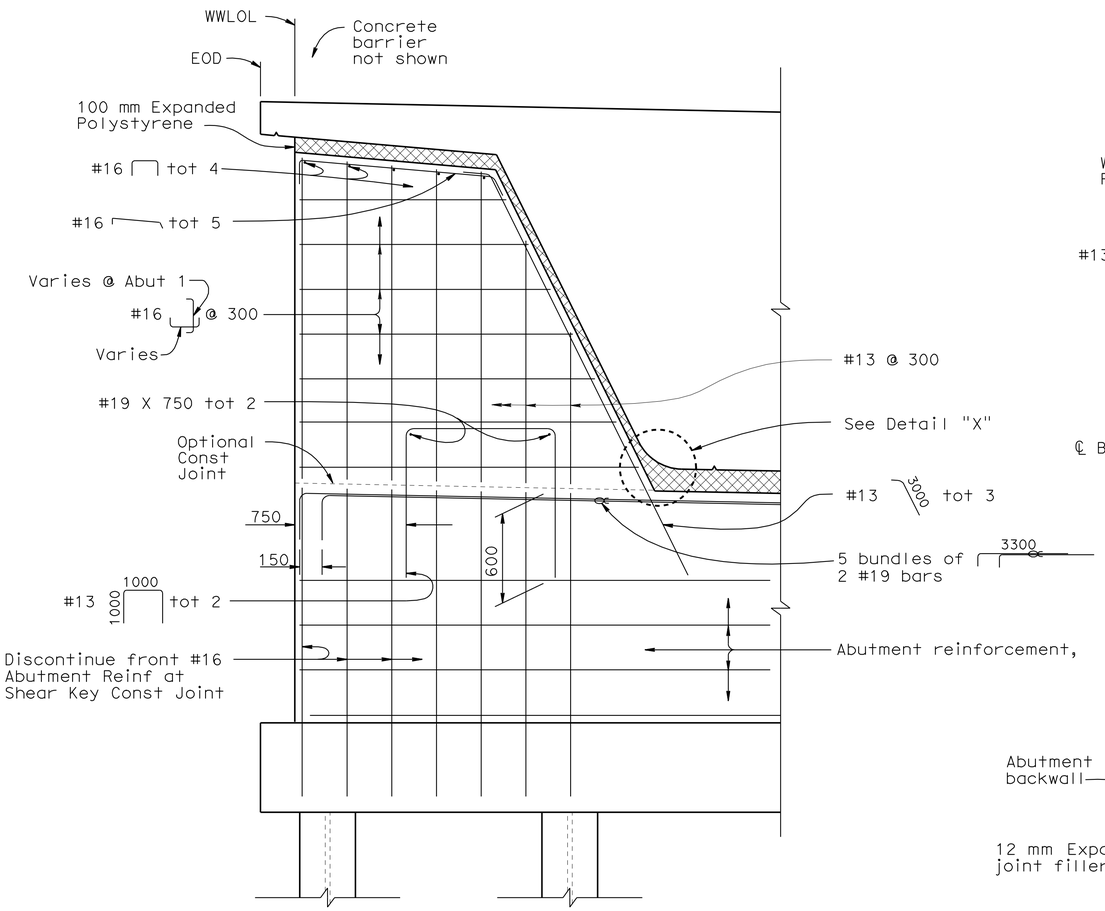

EXTERNAL SHEAR KEY
1:20

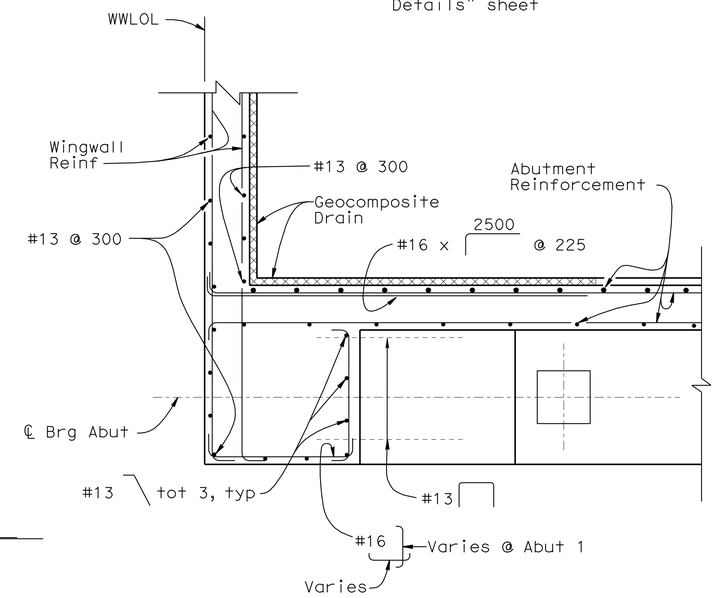

SECTION G-G
1:20

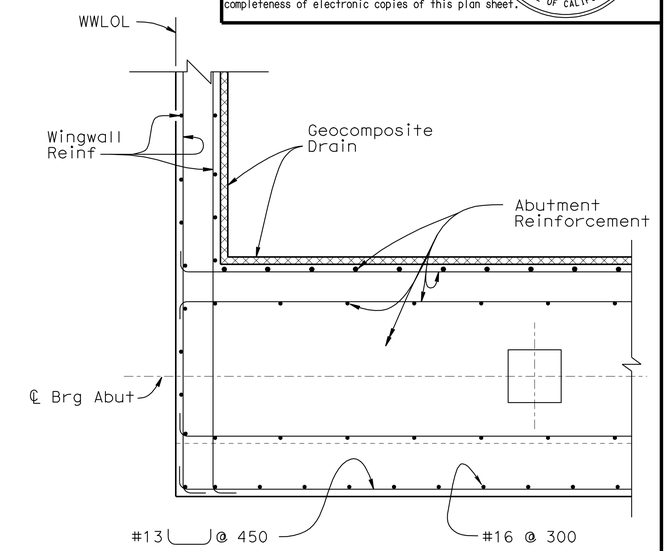

SECTION H-H
1:20

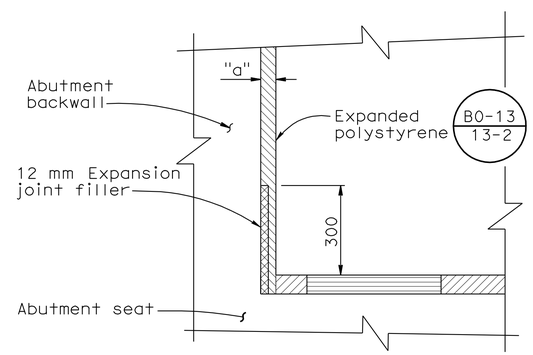

ELEVATION VIEW

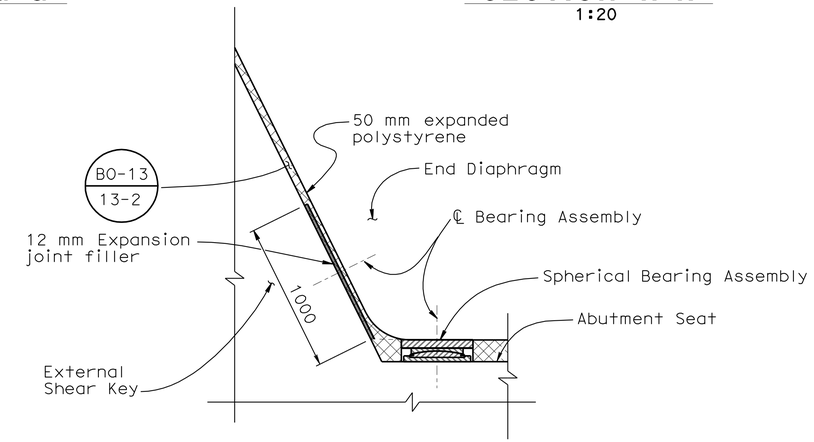

BACKWALL BASE DETAIL
No Scale

DETAIL "X"
1:20

DESIGN	BY M. Moore	CHECKED G. Zuniga	
DETAILS	BY L. Wang	CHECKED G. Zuniga	
QUANTITIES	BY G. Zungia/G. Slocum	CHECKED R. Odell/C. Udarbe	

STATE OF CALIFORNIA
DEPARTMENT OF TRANSPORTATION

DIVISION OF ENGINEERING SERVICES
STRUCTURE DESIGN
DESIGN BRANCH 2

BRIDGE NO. 10-0165
KILOMETER POST R74.945

WILLITS BYPASS
FLOODWAY VIADUCT
ABUTMENT DETAILS NO. 3

ALL DIMENSIONS ARE IN METERS UNLESS OTHERWISE SHOWN

ORIGINAL SCALE IN MILLIMETERS FOR REDUCED PLANS 0 10 20 30 40 50 60 70 80 90 100

CU 01
EA 262001

DISREGARD PRINTS BEARING EARLIER REVISION DATES

REVISION DATES: 01-26-07 02-06-07 06-17-08 06-25-08 07-01-08 07-08-08 09-17-08 10-01-08 03-02-09

SHEET 28 OF 88

FILE => 10-0165_gfabdt03.dgn

STRUCTURES DESIGN DETAIL SHEET (METRIC) (REV.03-17-04)

USERNAME => s124496 DATE PLOTTED => 28-JAN-2012 TIME PLOTTED => 08:38

DIST	COUNTY	ROUTE	KILOMETER POST TOTAL PROJECT	SHEET No	TOTAL SHEETS
01	Men	101	R69.4/R78.9	768	939

REGISTERED CIVIL ENGINEER 9-15-11 DATE

1-23-12
PLANS APPROVAL DATE

REGISTERED PROFESSIONAL ENGINEER M. Friedheim No. 57968 Exp. 6-30-12 CIVIL STATE OF CALIFORNIA

The State of California or its officers or agents shall not be responsible for the accuracy or completeness of electronic copies of this plan sheet.

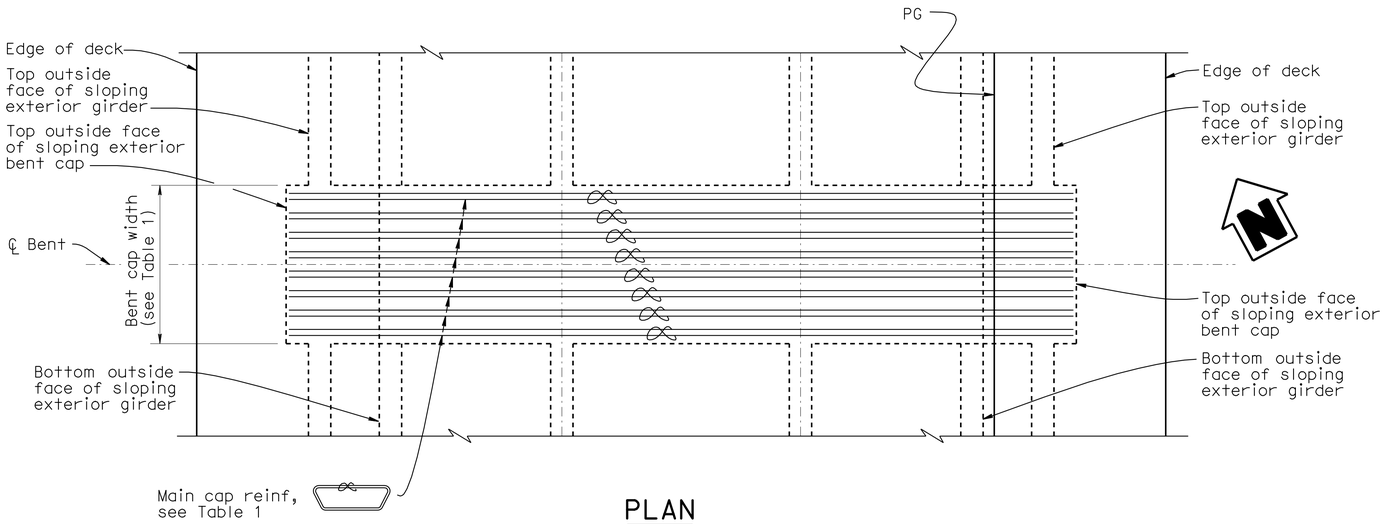

PLAN
1:40

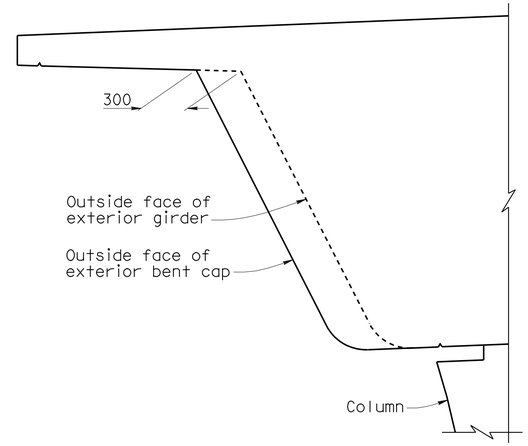

DETAIL X
1: 20

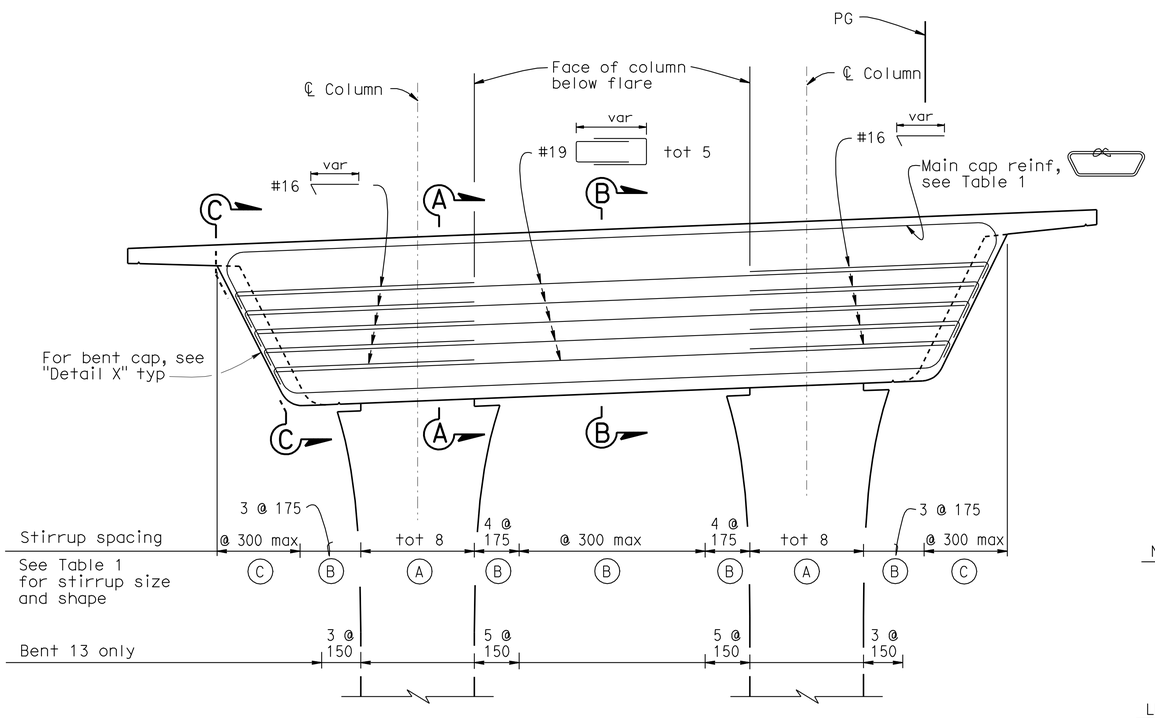

ELEVATION - BENTS 2-17
1:40

TABLE 1					
Bent No.	Bent Cap Width (mm)	Main Cap Reinf	Stirrup (A) size	Stirrup (B) size	Stirrup (C) size
2	2150	#36 tot 16	#19	#19	#19
3	2000	#36 tot 16	#19	#19	#19
4	2300	#36 tot 16	#19	#19	#19
5	2300	#36 tot 16	#19	#19	#19
6	2300	#36 tot 16	#19	#19	#19
7	2300	#36 tot 16	#19	#19	#19
8	2300	#43 tot 16	#22	#22	#22
9	2300	#43 tot 16	#22	#22	#22
10	2150	#36 tot 16	#19	#19	#19
11	2000	#36 tot 16	#19	#19	#19
12	2000	#36 tot 16	#19	#19	#19
13	2150	#43 tot 16	#22	#22	#22
14	2000	#43 tot 16	#22	#22	#22
15	2000	#36 tot 16	#19	#19	#19
16	2000	#36 tot 16	#19	#19	#19
17	2150	#36 tot 16	#19	#19	#19

NOTES:

1. Bent 2 shown, Bents 3-17 similar except as noted.
2. For Sections A-A, B-B and View C-C, see "Bent Details No. 5" sheet.
3. Concrete barrier not shown.
4. Splices for main cap reinforcement shall be service level splices.
5. Stirrup spacing schedule applies to Bents 2-17, except as noted for Bent 13.
6. For Column Aesthetic Details, see "Aesthetic Details" sheets.

LEGEND:

- Indicates bundled bars.

Caltrans Metric

	BY	CHECKED
DESIGN	M. Akkari	K. Selventhiran
DETAILS	E. Montevirgen	K. Selventhiran
QUANTITIES	G. Zuniga/G. Slocum	R. Odell/C. Udarbe

ALL DIMENSIONS ARE IN MILLIMETERS UNLESS OTHERWISE SHOWN

ORIGINAL SCALE IN MILLIMETERS FOR REDUCED PLANS 0 10 20 30 40 50 60 70 80 90 100

STATE OF CALIFORNIA DEPARTMENT OF TRANSPORTATION

DIVISION OF ENGINEERING SERVICES STRUCTURE DESIGN
DESIGN BRANCH 2

CU 01
EA 262001

BRIDGE NO. 10-0165
KILOMETER POST R74.945

WILLITS BYPASS
FLOODWAY VIADUCT
BENT LAYOUT NO. 1

DISREGARD PRINTS BEARING EARLIER REVISION DATES

REVISION DATES: 2-23-07 1-17-08 2-03-08 2-05-08 2-18-08 2-24-08 3-16-09 7-07-09 3-29-11

SHEET 29 OF 88

FILE => 10-0165_ggabntlo01.dgn

STRUCTURES DESIGN DETAIL SHEET (METRIC) (REV.03-17-04)

USERNAME => s124196 DATE PLOTTED => 28-JAN-2012 TIME PLOTTED => 08:38

DIST	COUNTY	ROUTE	KILOMETER POST TOTAL PROJECT	SHEET No	TOTAL SHEETS
01	Men	101	R69.4/R78.9	769	939

REGISTERED CIVIL ENGINEER 9-15-11 DATE

1-23-12
PLANS APPROVAL DATE

REGISTERED PROFESSIONAL ENGINEER M. Friedheim No. 57968 Exp. 6-30-12 CIVIL STATE OF CALIFORNIA

The State of California or its officers or agents shall not be responsible for the accuracy or completeness of electronic copies of this plan sheet.

NOTES:

1. Bent 28 shown, Bents 18, 21-30 similar except as noted.
2. For Sections E-E, F-F and View D-D, see "Bent Details No. 6" sheet.
3. Concrete barrier not shown.
4. Splices for main cap reinforcement shall be service level splices.
5. For Aesthetic Details, see "Aesthetic Details" sheets.
6. For Detail X, see "Bent Layout No. 1" sheets.

LEGEND:

- Indicates bundled bars.
- Falsework foundations may not be placed in this region if the future pond is present at the time of construction

(HBL) - Horizontally Bundled Looped
(VBL) - Vertically Bundled Looped
(HBNL) - Horizontally Bundled Not Looped

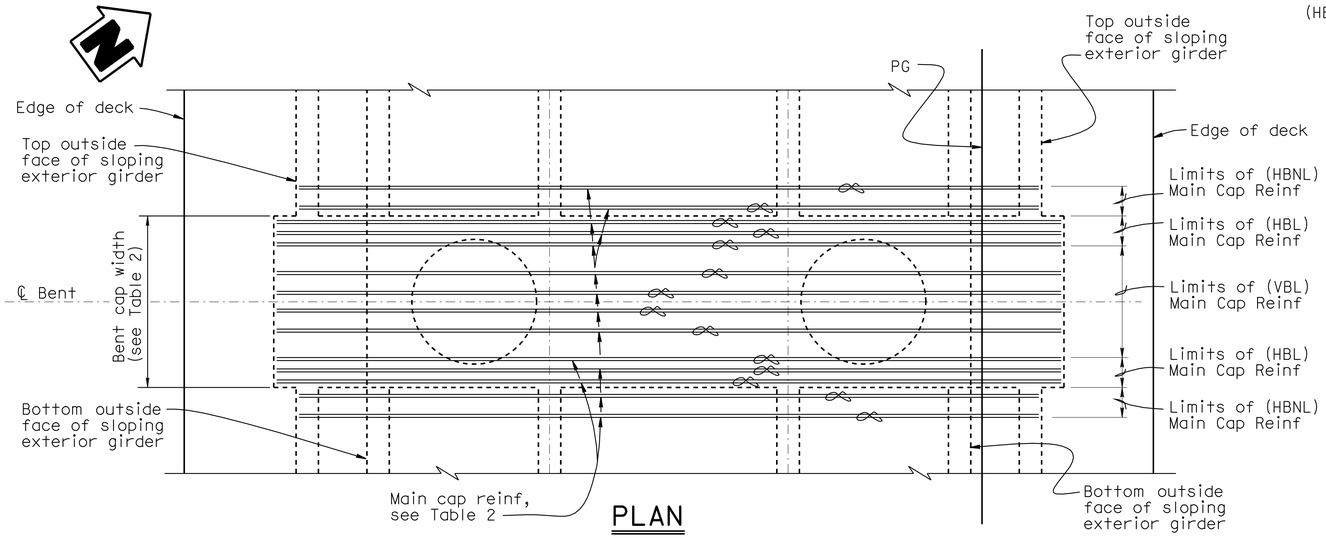

PLAN
1:40

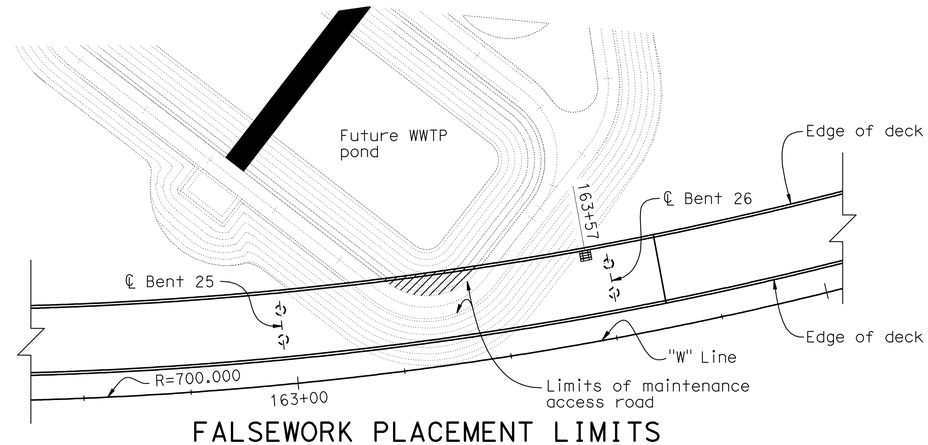

FALSEWORK PLACEMENT LIMITS
No Scale

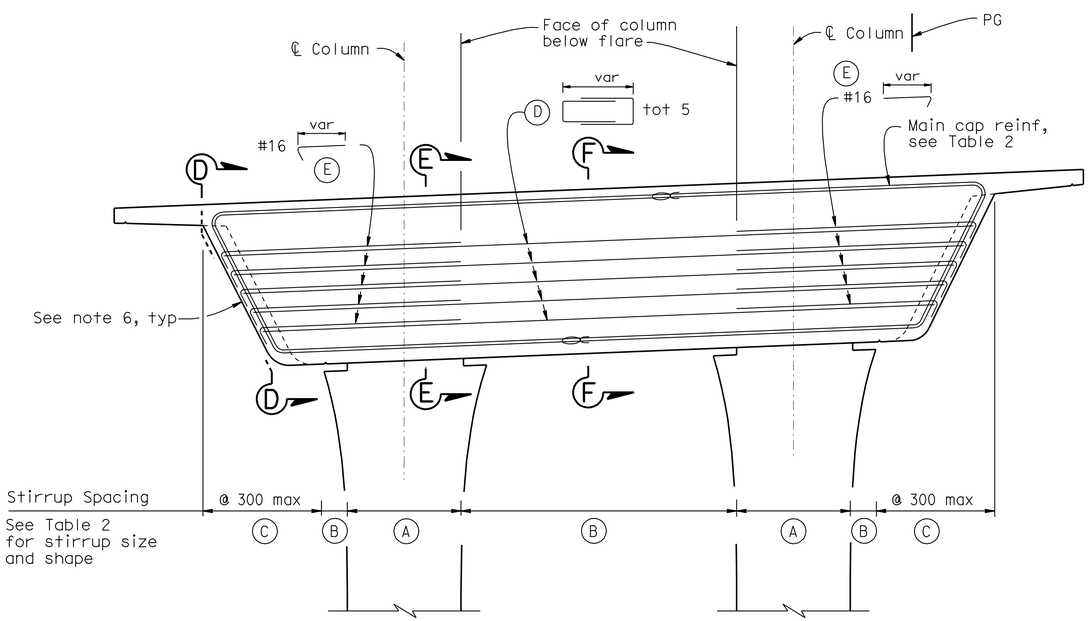

ELEVATION - Bents 18, 21-30
1:40

TABLE 2

Bent No.	Bent Cap Width (mm)	MAIN CAP REINFORCEMENT (VBL)	(HBL)	775, typ (HBNL)	Stirrup (A) size	Stirrup (B) size	Stirrup (C) size	(D) size	(E) total, each side
18	2300	#36 (4 Bundles)	#36 (6 Bundles)	#36 (8 Bundles)	#22 tot 10	#22 @ 150	#22	#19	34
19	See "Bent Layout No. 3" sheet								
20	See "Bent Layout No. 3" sheet								
21	2300	#36 (4 Bundles)	#36 (6 Bundles)	#36 (4 Bundles)	#22 tot 10	#22 @ 125	#22	#19	34
22	2300	#36 (4 Bundles)	#36 (6 Bundles)	#36 (4 Bundles)	#22 tot 8	#22 @ 125	#22	#19	34
23	2550	#43 (5 Bundles)	#43 (4 Bundles)	#43 (12 Bundles)	#22 tot 10	#22 @ 100	#22	#22	44
24	2750	#43 (8 Bundles)	#43 (4 Bundles)	#43 (12 Bundles)	#22 tot 10	#22 @ 125	#22	#25	58
25	2450	#43 (5 Bundles)	#43 (4 Bundles)	#43 (8 Bundles)	#22 tot 10	#22 @ 100	#22	#22	44
26	2450	#43 (5 Bundles)	#43 (4 Bundles)	#43 (8 Bundles)	#22 tot 10	#22 @ 100	#22	#22	44
27	2300	#36 (4 Bundles)	#36 (6 Bundles)	#36 (4 Bundles)	#22 tot 8	#22 @ 150	#22	#19	34
28	2300	#36 (4 Bundles)	#36 (6 Bundles)	#36 (4 Bundles)	#22 tot 8	#22 @ 150	#22	#19	34
29	2150	#36 (4 Bundles)	#36 (6 Bundles)	#36 (4 Bundles)	#22 tot 8	#22 @ 150	#22	#19	34
30	2150	#36 (4 Bundles)	#36 (6 Bundles)	#36 (4 Bundles)	#22 tot 8	#22 @ 150	#22	#19	34
31	See "Bent Layout No. 4" sheet								
32	See "Bent Layout No. 3" sheet								
33	See "Bent Layout No. 3" sheet								

Caltrans Metric

	BY	CHECKED
DESIGN	C. Udarbe	E. Ward
DETAILS	S. Ng	E. Ward
QUANTITIES	G. Zuniga/G. Slocum	R. Odell/C. Udarbe

STATE OF CALIFORNIA
DEPARTMENT OF TRANSPORTATION

DIVISION OF ENGINEERING SERVICES
STRUCTURE DESIGN
DESIGN BRANCH 2

BRIDGE NO. 10-0165
KILOMETER POST R74.945

WILLITS BYPASS
FLOODWAY VIADUCT
BENT LAYOUT NO. 2

ALL DIMENSIONS ARE IN MILLIMETERS UNLESS OTHERWISE SHOWN

ORIGINAL SCALE IN MILLIMETERS FOR REDUCED PLANS 0 10 20 30 40 50 60 70 80 90 100

CU 01
EA 262001

DISREGARD PRINTS BEARING EARLIER REVISION DATES

REVISION DATES: 02-24-11 | 02-24-09 | 03-13-09 | 4-20-09 | 4-27-09 | 4-28-09 | 5-05-09 | 7-07-09 | 12-09-09

SHEET 30 OF 88

FILE => 10-0165_ggabnt1o02.dgn

STRUCTURES DESIGN DETAIL SHEET (METRIC) (REV.03-17-04)

USERNAME => s124436 DATE PLOTTED => 28-JAN-2012 TIME PLOTTED => 08:38

DIST	COUNTY	ROUTE	KILOMETER POST TOTAL PROJECT	SHEET No	TOTAL SHEETS
01	Men	101	R69.4/R78.9	770	939

REGISTERED CIVIL ENGINEER 9-15-11 DATE

1-23-12
PLANS APPROVAL DATE

REGISTERED PROFESSIONAL ENGINEER M. Friedheim No. 57968 Exp. 6-30-12 CIVIL STATE OF CALIFORNIA

The State of California or its officers or agents shall not be responsible for the accuracy or completeness of electronic copies of this plan sheet.

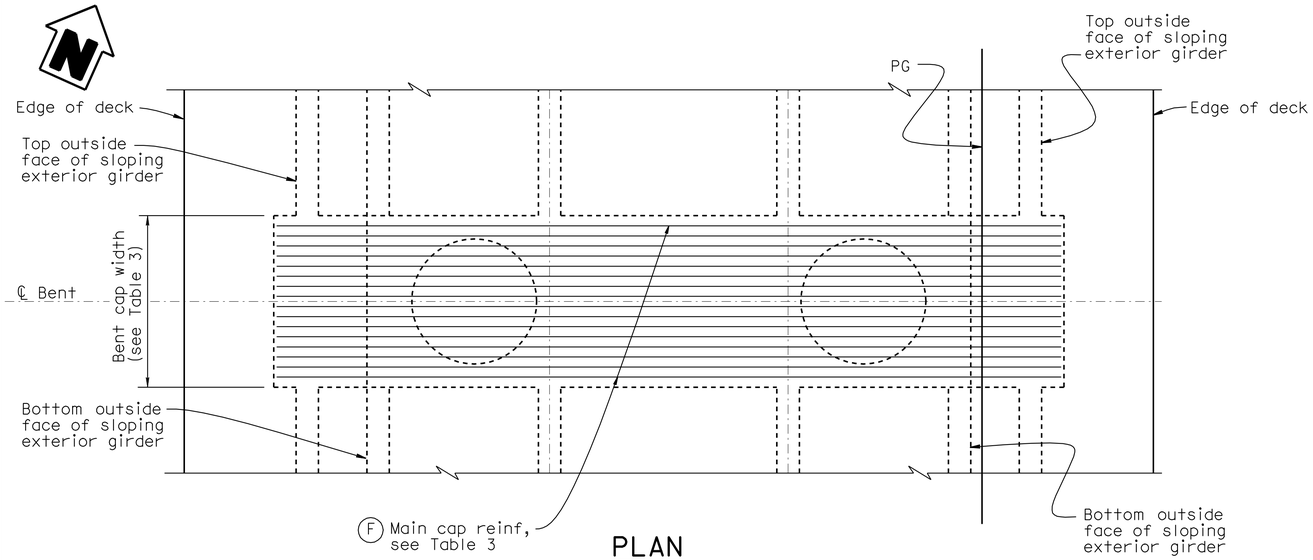

PLAN
1:40

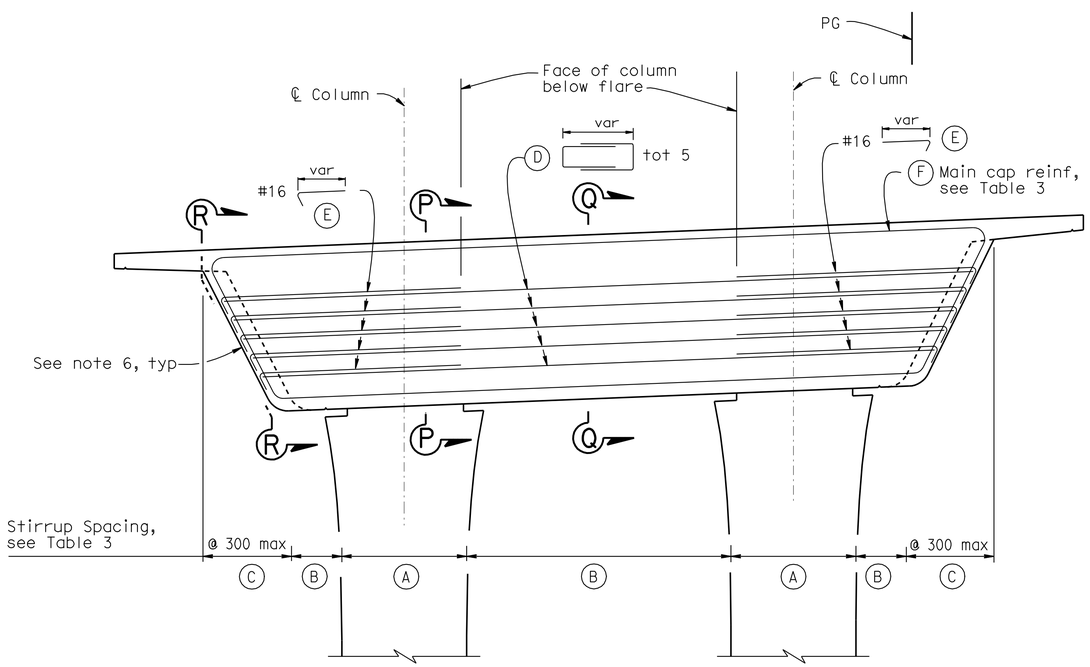

ELEVATION - BENTS 19,20,32,33
1:40

NOTES:

1. Bent 19 shown, other bents similar except as noted.
2. For Sections P-P, Q-Q and View R-R, see "Bent Details No. 7" sheet.
3. Concrete barrier not shown.
4. Splices for main cap reinforcement shall be service level splices.
5. For Column Aesthetic Details, see "Aesthetic Details" sheets.
6. For Detail X, see "Bent Layout No. 1" sheets.

TABLE 3

Bent No.	Bent Cap Width (mm)	MAIN CAP REINFORCEMENT (F)	Stirrup (A) size	Stirrup (B) size	Stirrup (C) var size	(D) size	(E) and total, each side
19	2300	#36 tot 16	#22 tot 8	#22 @ 150	#22	#19	20
20	2300	#36 tot 16	#22 tot 8	#22 @ 150	#22	#19	20
32	2300	#36 tot 20	#22 tot 8	#22 @ 150	#22	#19	20
33	2300	#36 tot 20	#22 tot 8	#22 @ 150	#22	#19	20

Caltrans Metric

	BY	CHECKED
DESIGN	C. Udarbe	E. Ward
DETAILS	S. Ng	E. Ward
QUANTITIES	G. Zuniga/G. Slocum	R. Odell/C. Udarbe

STATE OF CALIFORNIA
DEPARTMENT OF TRANSPORTATION

DIVISION OF ENGINEERING SERVICES
STRUCTURE DESIGN
DESIGN BRANCH 2

BRIDGE NO. 10-0165
KILOMETER POST R74.945

WILLITS BYPASS
FLOODWAY VIADUCT
BENT LAYOUT NO. 3

ALL DIMENSIONS ARE IN MILLIMETERS UNLESS OTHERWISE SHOWN

ORIGINAL SCALE IN MILLIMETERS FOR REDUCED PLANS 0 10 20 30 40 50 60 70 80 90 100

CU 01
EA 262001

DISREGARD PRINTS BEARING EARLIER REVISION DATES

REVISION DATES: 4-23-09 7-07-09 12-09-09 3-29-11

SHEET 31 OF 88

FILE => 10-0165_ggabnt1o03.dgn

STRUCTURES DESIGN DETAIL SHEET (METRIC) (REV.03-17-04)

USERNAME => s124436 DATE PLOTTED => 28-JAN-2012 TIME PLOTTED => 08:33

DIST	COUNTY	ROUTE	KILOMETER POST TOTAL PROJECT	SHEET No	TOTAL SHEETS
01	Men	101	R69.4/R78.9	771	939

REGISTERED CIVIL ENGINEER 9-15-11 DATE

1-23-12
PLANS APPROVAL DATE

REGISTERED PROFESSIONAL ENGINEER M. Friedheim No. 57968 Exp. 6-30-12 CIVIL STATE OF CALIFORNIA

The State of California or its officers or agents shall not be responsible for the accuracy or completeness of electronic copies of this plan sheet.

NOTES:

1. For details and reinf not shown, see "Bent Details No. 8" sheet.
2. Reinforcement may be bent or lowered to clear prestressing ducts. Subject to approval by the Engineer.
3. No lap splices allowed in main cap reinforcement. All splices shall be service level splices.
4. Concrete barrier not shown.
5. For Column Aesthetic Details, see "Aesthetic Details" sheets.
6. For details not shown in View I-I and Section J-J, see Section G-G in "Bent Details No. 8" sheet.
7. Reinforcement may be bundled to facilitate placement.

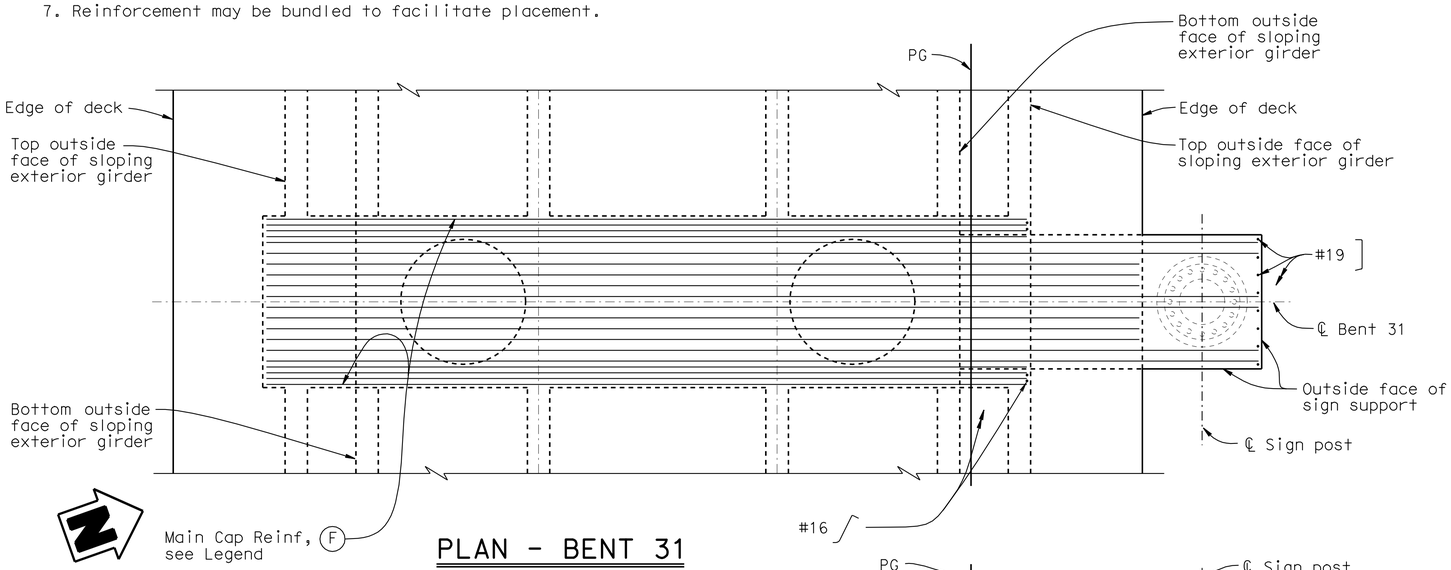

PLAN - BENT 31
1:40

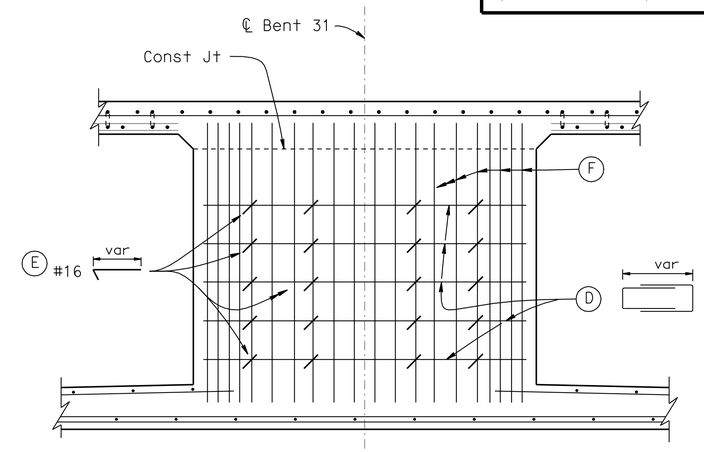

VIEW I-I
1:20

LEGEND:

(A) #22 Stirrup (0.75 x bent cap width)
(B) #22 Stirrup
(C) #22 Stirrup (var)
(D) #22 (var) tot 5
(E) #16 tot 20
(F) #36 Main Cap Reinf tot 20 or or

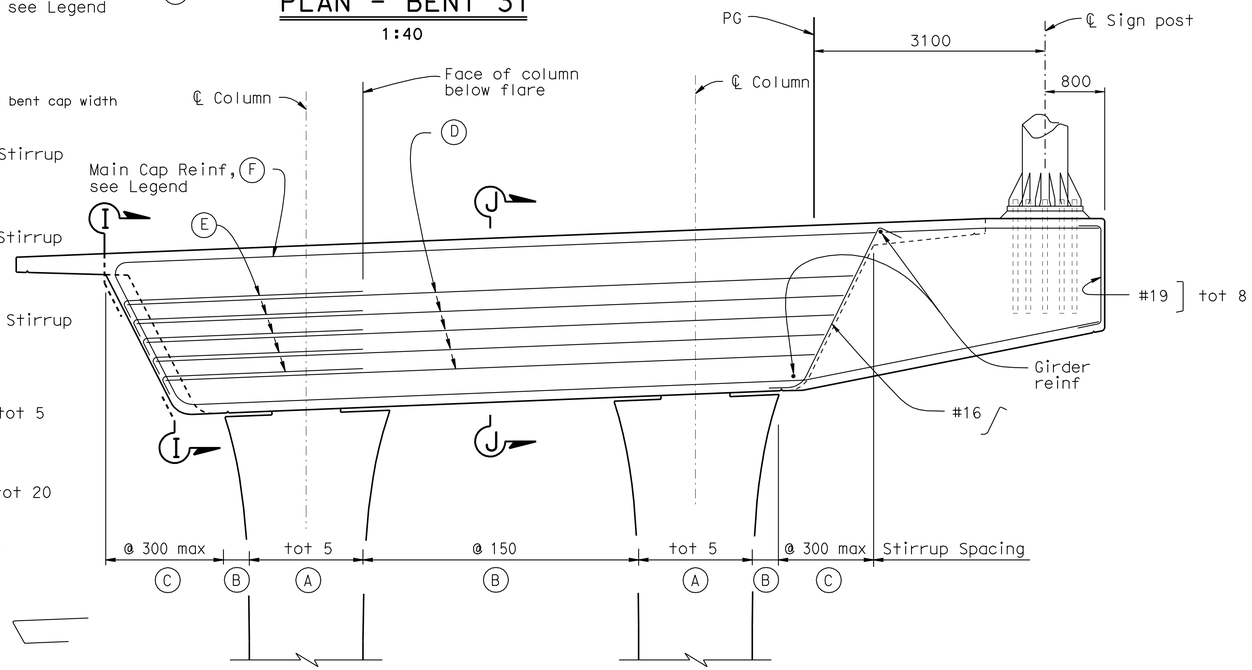

ELEVATION - BENT 31
1:40

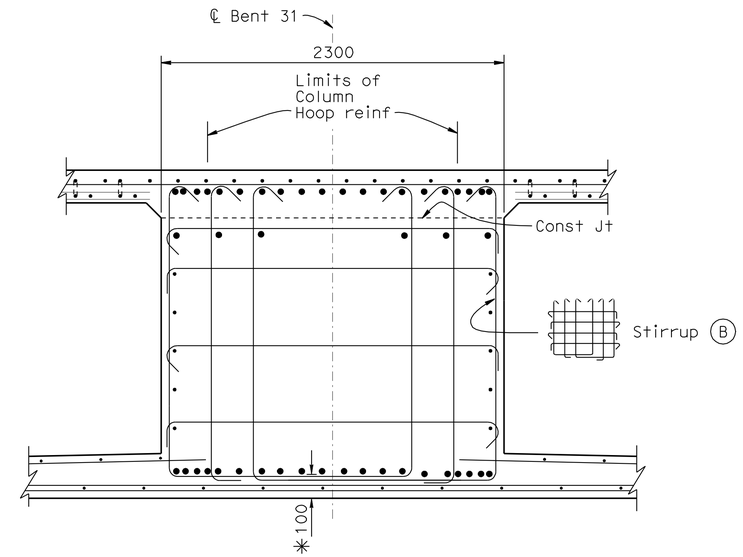

SECTION J-J
1:20
✳ Clearance to main cap reinforcement

Caltrans Metric

	BY	CHECKED
DESIGN	C. Udarbe	E. Ward
DETAILS	S. Ng/J. Yang	E. Ward
QUANTITIES	G. Zuniga/G. Slocum	R. Odell/C. Udarbe

STATE OF CALIFORNIA
DEPARTMENT OF TRANSPORTATION

DIVISION OF ENGINEERING SERVICES
STRUCTURE DESIGN
DESIGN BRANCH 2

BRIDGE NO. 10-0165
KILOMETER POST R74.945

WILLITS BYPASS
FLOODWAY VIADUCT
BENT LAYOUT NO. 4

ALL DIMENSIONS ARE IN MILLIMETERS UNLESS OTHERWISE SHOWN

ORIGINAL SCALE IN MILLIMETERS FOR REDUCED PLANS 0 10 20 30 40 50 60 70 80 90 100

CU 01
EA 262001

DISREGARD PRINTS BEARING EARLIER REVISION DATES

REVISION DATES: 02-29-09 | 03-02-09 | 03-04-09 | 3-16-09 | 4-22-09 | 4-30-09 | 5-05-09 | 7-01-09 | 12-04-09

SHEET 32 OF 88

FILE => 10-0165_ggabntlo04.dgn

STRUCTURES DESIGN DETAIL SHEET (METRIC) (REV.03-17-04)

USERNAME => s124496 DATE PLOTTED => 28-JAN-2012 TIME PLOTTED => 08:39

DIST	COUNTY	ROUTE	KILOMETER POST TOTAL PROJECT	SHEET No	TOTAL SHEETS
01	Men	101	R69.4/R78.9	772	939

REGISTERED CIVIL ENGINEER 9-15-11 DATE

1-23-12
PLANS APPROVAL DATE

REGISTERED PROFESSIONAL ENGINEER M. Friedheim No. 57968 Exp. 6-30-12 CIVIL STATE OF CALIFORNIA

The State of California or its officers or agents shall not be responsible for the accuracy or completeness of electronic copies of this plan sheet.

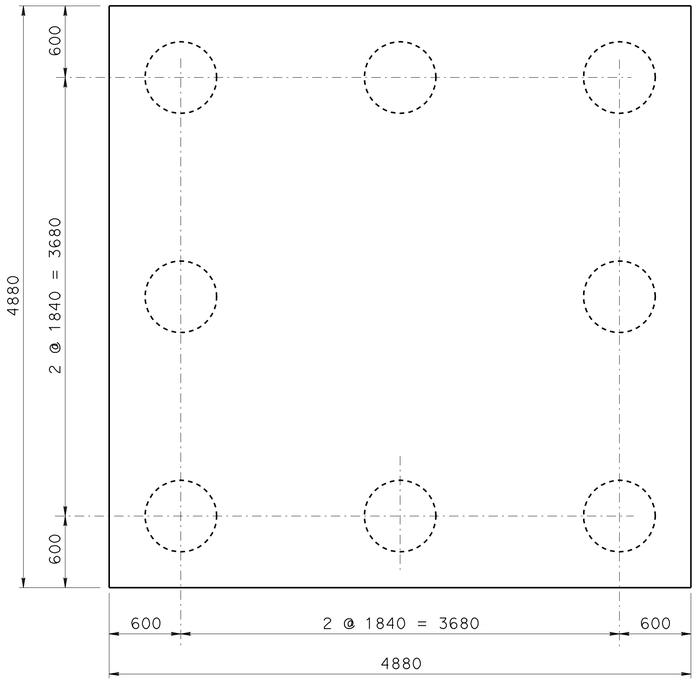

PILE LAYOUT A-A
1:25

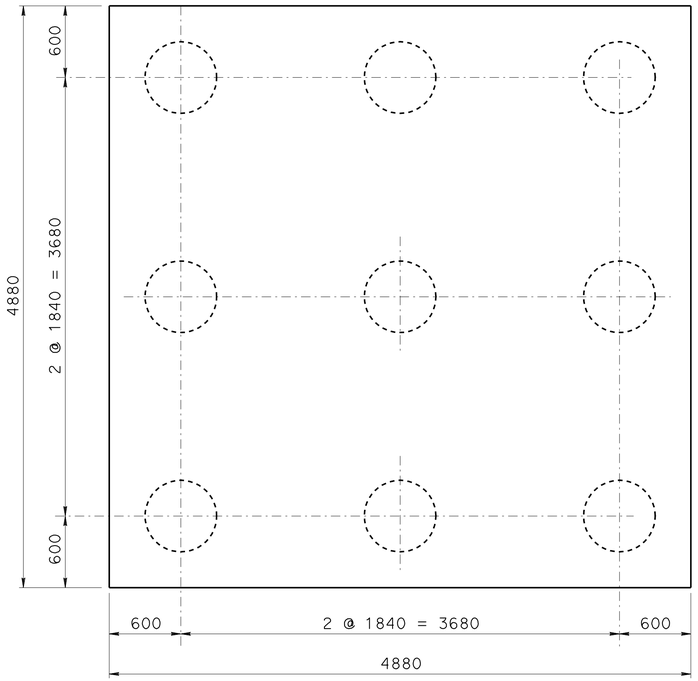

PILE LAYOUT B-B
1:25

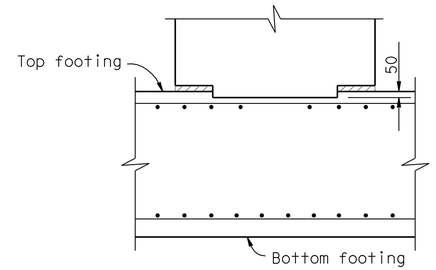

DETAIL X
1:25

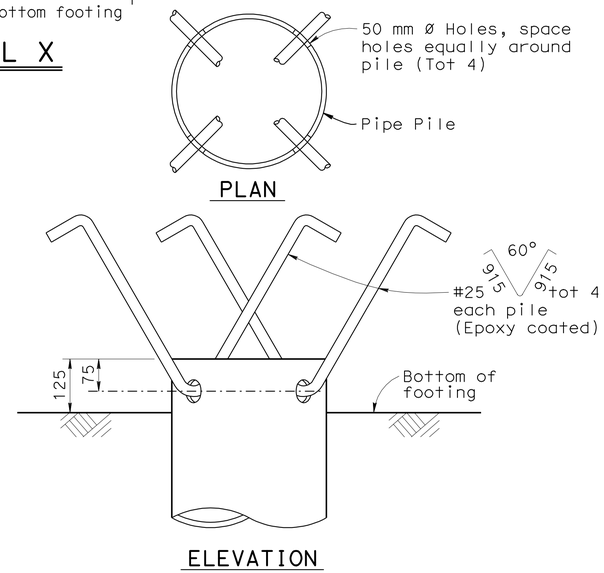

STEEL PIPE PILE ANCHOR DETAIL
No Scale

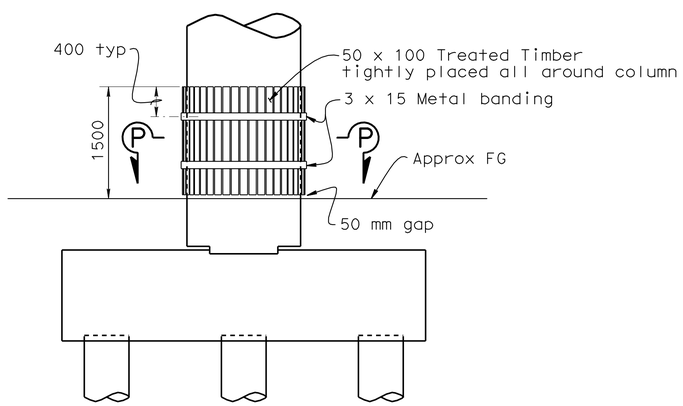

BENTS 2 AND 3 PROTECTION DETAIL
No Scale

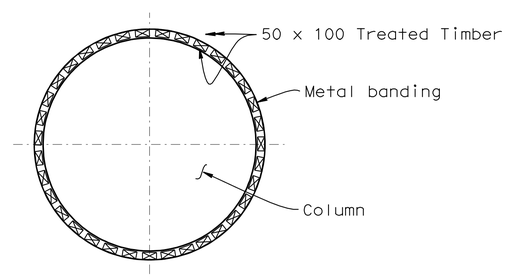

SECTION P-P
No Scale

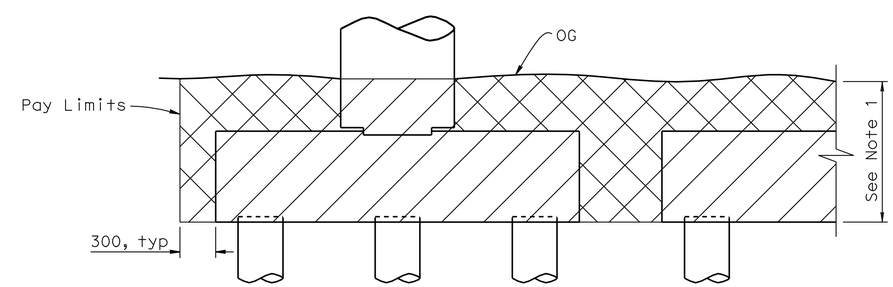

TYPICAL BENT EXCAVATION
No Scale

LEGEND:

Structure Excavation

Structure Backfill

NOTES:

1. Structure Excavation Type D, typical at Bents 4-23, 25-33 Structure Excavation Type DH at Bents 2 and 3.
2. For location of Detail X, see "Bent Details No. 2" sheet.

Caltrans Metric

	BY	CHECKED
DESIGN	A. Tern	T. Bui/M. Akkari
DETAILS	J. Yang	T. Bui/M. Akkari
QUANTITIES	G. Zuniga/G. Slocum	R. Odell/C. Udarbe

STATE OF CALIFORNIA
DEPARTMENT OF TRANSPORTATION

DIVISION OF ENGINEERING SERVICES
STRUCTURE DESIGN
DESIGN BRANCH 2

BRIDGE NO. 10-0165
KILOMETER POST R74.945

WILLITS BYPASS
FLOODWAY VIADUCT
BENT DETAILS NO. 1

ALL DIMENSIONS ARE IN MILLIMETERS UNLESS OTHERWISE SHOWN

ORIGINAL SCALE IN MILLIMETERS FOR REDUCED PLANS 0 10 20 30 40 50 60 70 80 90 100

CU 01
EA 262001

DISREGARD PRINTS BEARING EARLIER REVISION DATES

REVISION DATES: 12-12-08 7-15-09 2-24-09 03-02-09 03-04-09 4-01-09 4-09-09 4-13-09 4-22-09

SHEET 33 OF 88

FILE => 10-0165_ghbd01.dgn

STRUCTURES DESIGN DETAIL SHEET (METRIC) (REV.03-17-04)

USERNAME => s124496 DATE PLOTTED => 28-JAN-2012 TIME PLOTTED => 08:39

DIST	COUNTY	ROUTE	KILOMETER POST TOTAL PROJECT	SHEET No	TOTAL SHEETS
01	Men	101	R69.4/R78.9	773	939

REGISTERED CIVIL ENGINEER 9-15-11 DATE

1-23-12
PLANS APPROVAL DATE

REGISTERED PROFESSIONAL ENGINEER M. Friedheim No. 57968 Exp. 6-30-12 CIVIL STATE OF CALIFORNIA

The State of California or its officers or agents shall not be responsible for the accuracy or completeness of electronic copies of this plan sheet.

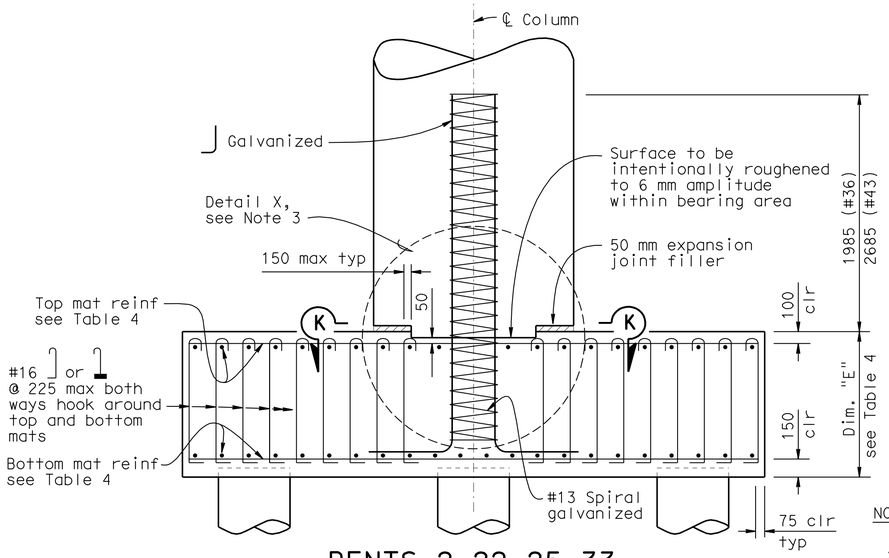

BENTS 2-22,25-33 FOOTING ELEVATION

1:25

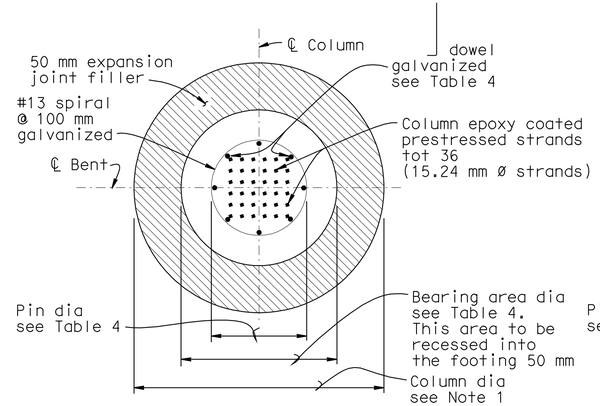

SECTION K_1-K_1

1:20

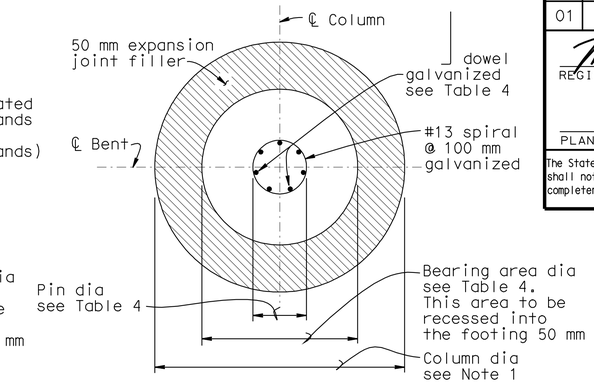

SECTION K-K

1:20

NOTES:

1. For column dia, see "Bent Details No. 3" sheet.
2. For Pile Layout, see "Bent Details No. 1" sheet.
3. For Detail X, see "Bent Details No. 1" sheet.
4. Bent No. 8 shown, all other bents similar.

LEGEND:

Indicates headed reinforcement

* 2 bar bundles

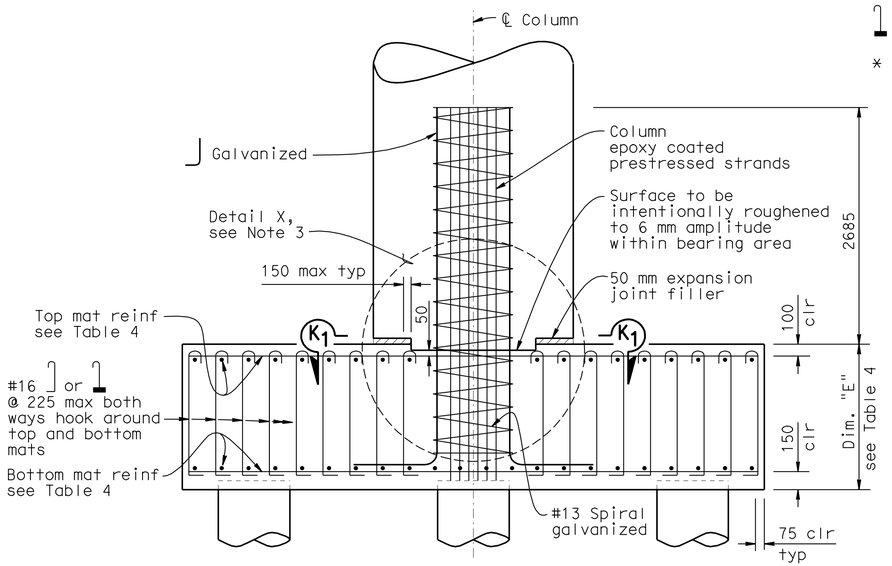

BENTS 23-24 FOOTING ELEVATION

1:25

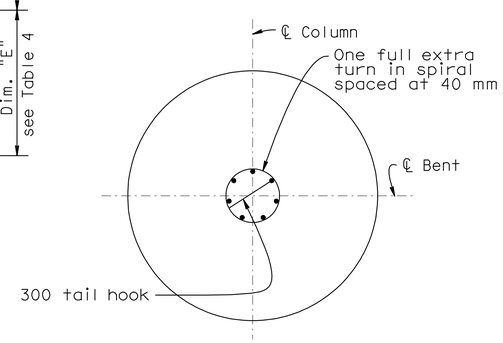

SPIRAL TERMINATION DETAIL

1:20

Note: column reinforcement not shown

TABLE 4

Bent No.	Pile Layout	Footing Depth Dim. "E" (mm)	FOOTING KEY Dowel size	Total	Bearing Area Dia (mm)	Pin Dia (mm)	TOP MAT REINF Bar Size	Total No. Bars Each Way	BOTTOM MAT REINF Bar Size	Total No. Bars Each Way
2	A-A	1220	36	6	915	305	13	20	36	22
3	A-A	1220	36	5	890	255	13	20	36	22
4	A-A	1220	36	6	995	305	13	20	36	22
5	A-A	1220	36	5	970	255	13	20	36	22
6	A-A	1220	36	5	970	255	13	20	36	22
7	A-A	1220	36	5	970	255	13	20	36	22
8	A-A	1220	36	7	1045	360	19	20	36	22
9	A-A	1220	36	7	1045	360	19	20	36	22
10	A-A	1220	36	5	915	255	16	20	36	22
11	A-A	1220	36	5	915	255	13	20	36	22
12	A-A	1220	36	5	890	255	13	20	36	22
13	B-B	1220	36	8	1070	385	19	20	36	22
14	A-A	1220	36	7	995	360	16	20	36	22
15	A-A	1220	36	5	890	255	13	20	36	22
16	A-A	1220	36	5	890	255	13	20	36	22
17	A-A	1220	36	5	940	255	13	20	36	22
18	A-A	1220	43	10 *	1015	305	19	20	36	22
19	A-A	1220	36	6	865	255	13	20	36	22
20	A-A	1220	36	6	890	255	13	20	36	22
21	A-A	1220	36	8	965	330	16	20	36	22
22	A-A	1220	43	7	940	330	13	22	36	22
23	A-A	1375	43	8	1170	610	25	18	36	22
24	B-B	1375	43	8	1065	610	25	18	36	22
25	A-A	1375	43	14 *	1120	430	25	18	36	22
26	A-A	1375	43	14 *	1090	305	22	21	36	22
27	A-A	1220	43	8	965	355	19	20	36	22
28	B-B	1220	43	8	990	355	19	20	32	22
29	B-B	1220	43	7	965	330	19	20	32	22
30	B-B	1220	43	10 *	990	305	19	20	32	22
31	A-A	1220	36	7	940	305	13	20	36	22
32	A-A	1220	36	7	940	305	16	20	32	22
33	A-A	1220	36	7	915	305	13	20	32	22

Caltrans Metric

	BY	CHECKED
DESIGN	A. Tern	M. Akkari/T. Bui
DETAILS	J. Yang	M. Akkari/T. Bui
QUANTITIES	G. Zuniga/G. Slocum	R. Odell/C. Udarbe

STATE OF CALIFORNIA DEPARTMENT OF TRANSPORTATION

DIVISION OF ENGINEERING SERVICES STRUCTURE DESIGN

DESIGN BRANCH 2

BRIDGE NO. 10-0165

KILOMETER POST R74.945

WILLITS BYPASS
FLOODWAY VIADUCT
BENT DETAILS NO. 2

ALL DIMENSIONS ARE IN MILLIMETERS UNLESS OTHERWISE SHOWN

ORIGINAL SCALE IN MILLIMETERS FOR REDUCED PLANS 0 10 20 30 40 50 60 70 80 90 100

CU 01
EA 262001

DISREGARD PRINTS BEARING EARLIER REVISION DATES

REVISION DATES 1-24-09 2-03-09 2-26-09 3-03-09 4-01-09 4-22-09 7-15-09

SHEET 34 OF 88

FILE => 10-0165_ghbd02.dgn

STRUCTURES DESIGN DETAIL SHEET (METRIC) (REV.03-17-04)

USERNAME => s124496 DATE PLOTTED => 28-JAN-2012 TIME PLOTTED => 08:39

DIST	COUNTY	ROUTE	KILOMETER POST TOTAL PROJECT	SHEET No	TOTAL SHEETS
01	Men	101	R69.4/R78.9	774	939

REGISTERED CIVIL ENGINEER 9-15-11 DATE

1-23-12
PLANS APPROVAL DATE

REGISTERED PROFESSIONAL ENGINEER M. Friedheim No. 57968 Exp. 6-30-12 CIVIL STATE OF CALIFORNIA

The State of California or its officers or agents shall not be responsible for the accuracy or completeness of electronic copies of this plan sheet.

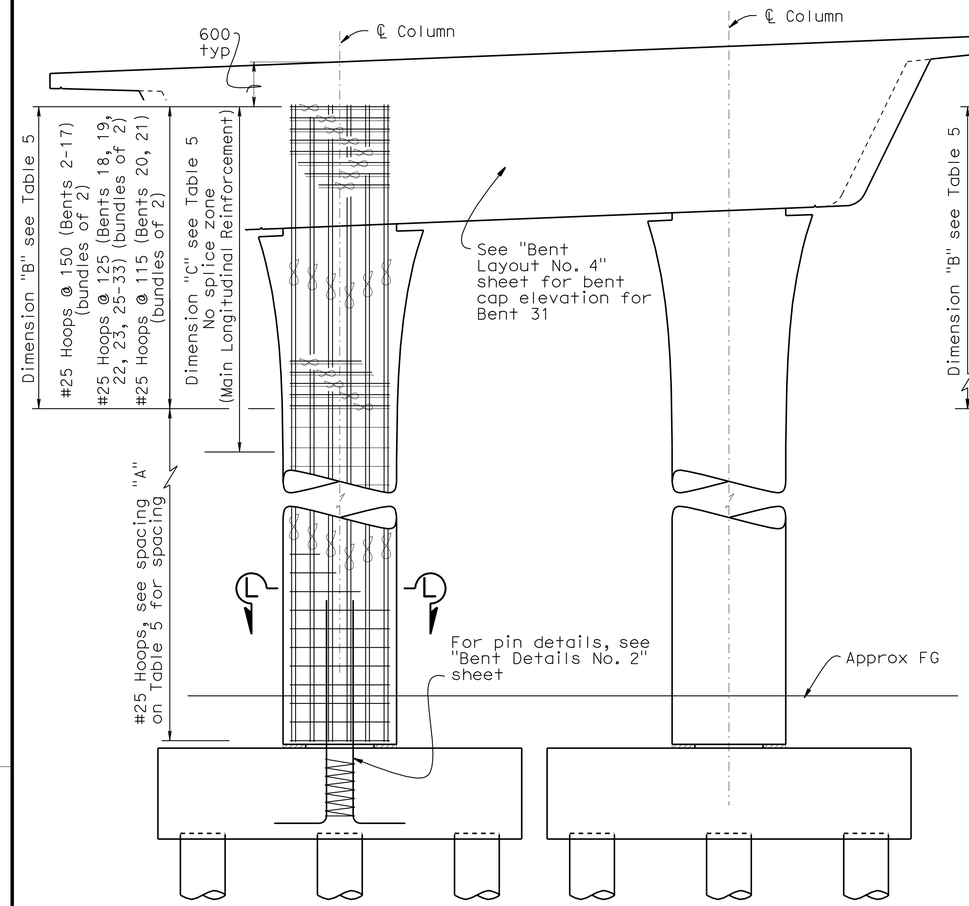

ELEVATION - BENTS 2-23,25-33

1:40

Note: Bents 2-23, 25-33 elevation shown, Bent 31 elevation similar except as noted

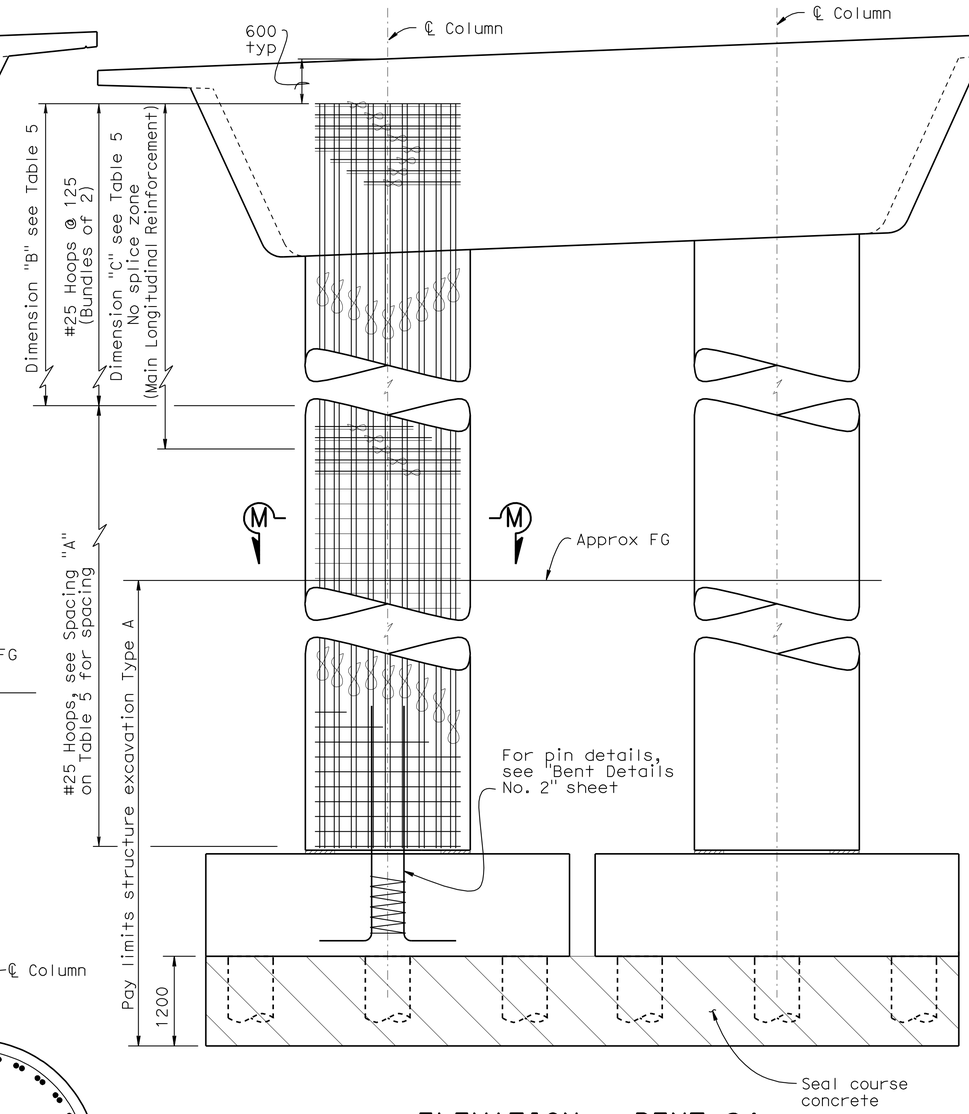

ELEVATION - BENT 24

1:40

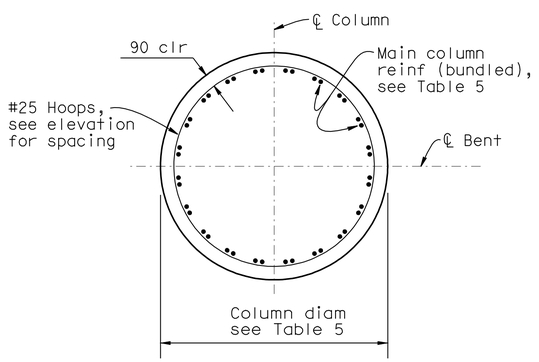

SECTION L-L

1:20

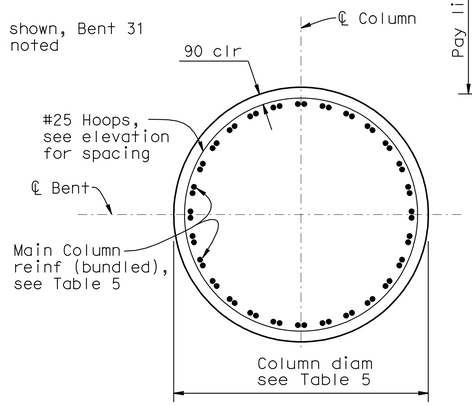

SECTION M-M

1:25

NOTES:

1. All reinforcement splices and hoop fabrication shall conform to ultimate splice requirements
2. For pile layout see, "Bent Details No. 1" sheet
3. For footing reinforcement details, see "Bent Details No. 2" sheet
4. For Bent cap reinforcement details, see "Bent Layout No. 1", "Bent Layout No. 2", "Bent Layout No. 3", and "Bent Layout No. 4" sheets.

LEGEND:

= Indicates bundled reinforcement

TABLE 5

Bent No.	Column Diam (mm)	Main Column Reinf	Spacing "A" (mm)	Dim "B" (mm)	Dim "C" (mm)
2	1524	#36 tot 40	200	4000	4700
3	1372	#36 tot 40	200	4000	4700
4	1676	#36 tot 40	200	4300	5300
5	1676	#36 tot 40	200	4300	5600
6	1676	#36 tot 40	200	4300	5700
7	1676	#36 tot 40	200	4300	5500
8	1676	#43 tot 38	200	4300	5400
9	1676	#43 tot 40	200	4300	5600
10	1524	#36 tot 40	200	4000	5100
11	1372	#36 tot 40	200	4000	4800
12	1372	#36 tot 40	200	4000	4800
13	1524	#43 tot 44	150	4300	5300
14	1372	#43 tot 40	200	4000	4700
15	1372	#36 tot 40	200	4000	4800
16	1372	#36 tot 40	200	4000	5000
17	1524	#36 tot 42	200	4000	5100
18	1676	#36 tot 56	200 (B)	4200	5200
19	1676	#32 tot 42	125	4200	5300
20	1676	#32 tot 42	125	4600	5700
21	1676	#36 tot 56	125	4600	5800
22	1676	#36 tot 56	125	4600	6100
23	1829	#43 tot 54	175 (B)	4800	6500
24	2134	#43 tot 56	125	6100	9800
25	1829	#43 tot 54	200 (B)	4800	6600
26	1829	#43 tot 54	200 (B)	4800	6900
27	1676	#36 tot 56	125	4600	6000
28	1676	#36 tot 56	125	4200	5300
29	1524	#43 tot 40	125	3900	5200
30	1524	#43 tot 40	200 (B)	3900	5200
31	1676	#32 tot 42	125	4200	4900
32	1676	#32 tot 42	125	4200	4500
33	1676	#32 tot 42	125	4200	4800

(B) = Bundles of 2

Caltrans Metric

	BY	CHECKED
DESIGN	M. Akkari/C. Udarbe	K. Seventhiran/E. Ward
DETAILS	E. Montevirgen\J. Yang	K. Seventhiran/E. Ward
QUANTITIES	G. Zuniga/G. Slocum	R. Odell/C. Udarbe

STATE OF CALIFORNIA DEPARTMENT OF TRANSPORTATION

DIVISION OF ENGINEERING SERVICES STRUCTURE DESIGN DESIGN BRANCH 2

BRIDGE NO. 10-0165
KILOMETER POST R74.945

WILLITS BYPASS
FLOODWAY VIADUCT
BENT DETAILS NO. 3

ALL DIMENSIONS ARE IN MILLIMETERS UNLESS OTHERWISE SHOWN

ORIGINAL SCALE IN MILLIMETERS FOR REDUCED PLANS 0 10 20 30 40 50 60 70 80 90 100

CU 01
EA 262001

DISREGARD PRINTS BEARING EARLIER REVISION DATES

REVISION DATES: 12-02-08 7-02-09 4-04-11 2-24-09 2-26-09 3-16-09 4-07-09 4-23-09 4-27-09

SHEET 35 OF 88

FILE => 10-0165_ghbd03.dgn

STRUCTURES DESIGN DETAIL SHEET (METRIC) (REV.03-17-04)

USERNAME => s124496 DATE PLOTTED => 28-JAN-2012 TIME PLOTTED => 08:40

DIST	COUNTY	ROUTE	KILOMETER POST TOTAL PROJECT	SHEET No	TOTAL SHEETS
01	Men	101	R69.4/R78.9	775	939

REGISTERED CIVIL ENGINEER 9-15-11 DATE

1-23-12
PLANS APPROVAL DATE

REGISTERED PROFESSIONAL ENGINEER M. Friedheim No. 57968 Exp. 6-30-12 CIVIL STATE OF CALIFORNIA

The State of California or its officers or agents shall not be responsible for the accuracy or completeness of electronic copies of this plan sheet.

NOTE:

1. Expanded polystyrene to be removed after superstructure is cast in place.

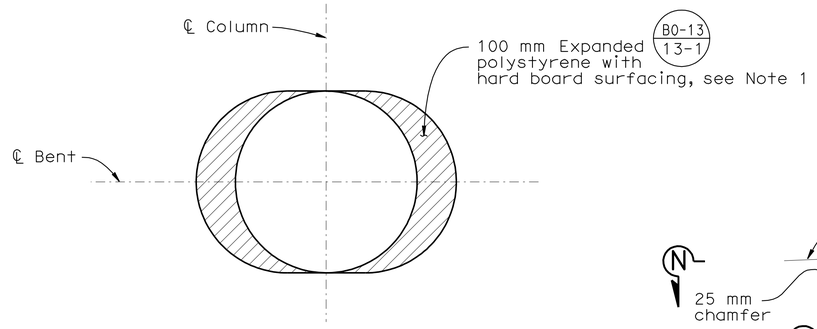

VIEW N-N

No Scale

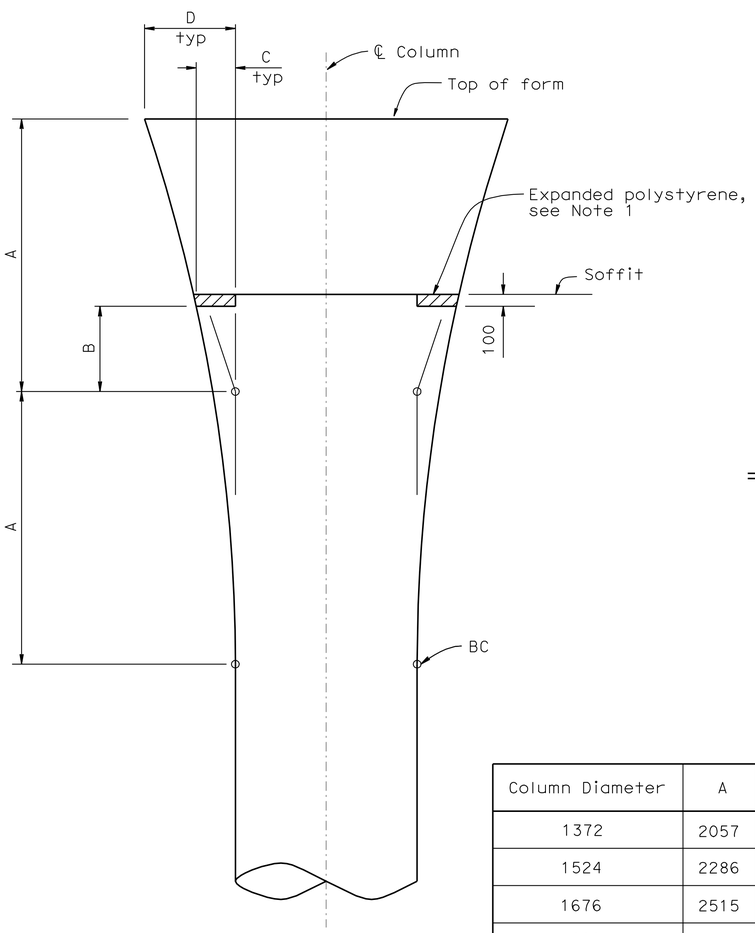

FLARE DETAIL

1:25

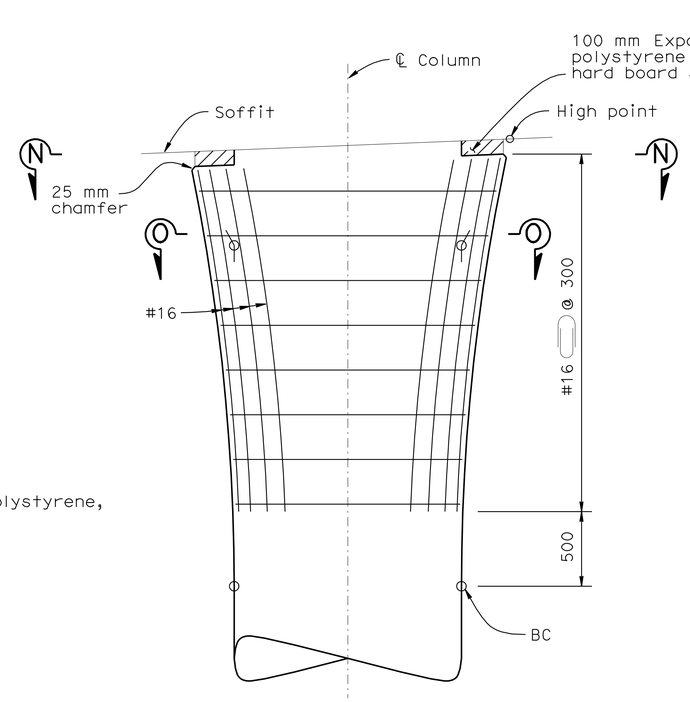

FLARE REINFORCEMENT DETAILS

1:20

Note: All reinforcement not shown

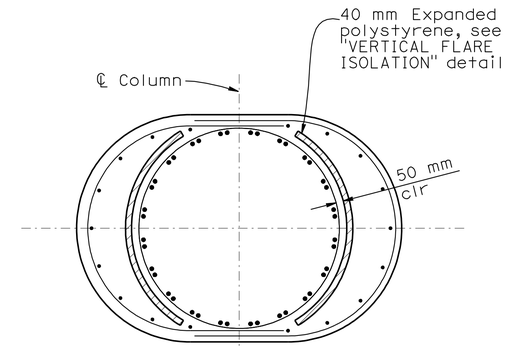

BENTS 4, 9, 10, 11, 17, 18-22 & 31

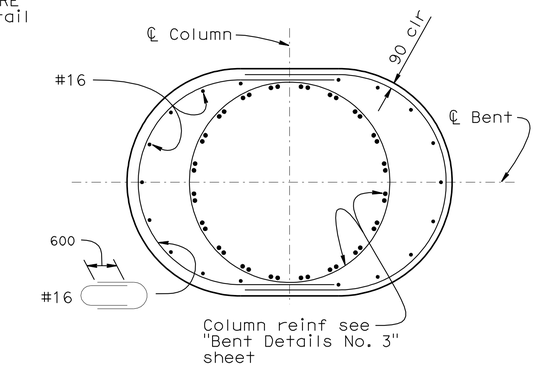

BENTS 2-3, 5-8, 12-16, 23-30 & 32-33

SECTION O-O

1:20

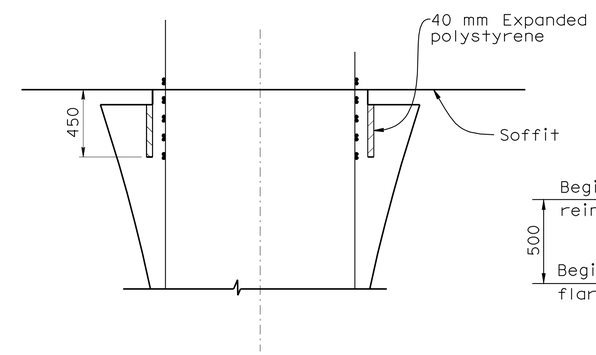

VERTICAL FLARE ISOLATION

1:20

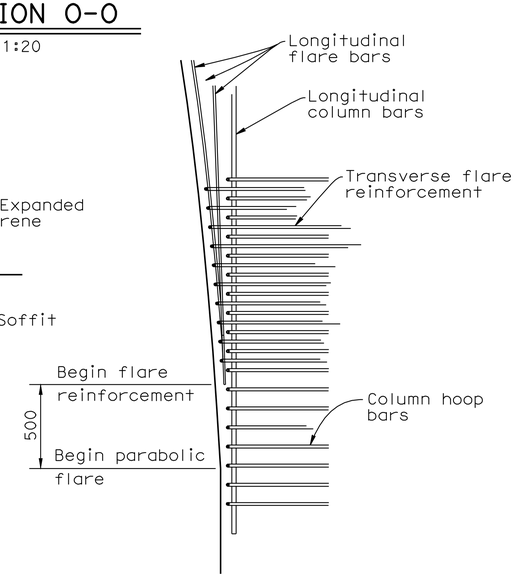

TIE DETAILS

No Scale

Column Diameter	A	B	C	D	Flare Reinf Longit #16 per Column
1372	2057	943	365	686	tot 16
1524	2286	714	328	762	tot 18
1676	2515	485	298	838	tot 20
1829	2743	257	273	914	tot 22

Caltrans Metric

	BY	CHECKED
DESIGN	C. Udarbe	K. Selventhiran/E. Ward
DETAILS	J. Yang	K. Selventhiran/E. Ward
QUANTITIES	G. Zuniga/G. Slocum	R. Odell/C. Udarbe

STATE OF CALIFORNIA DEPARTMENT OF TRANSPORTATION

DIVISION OF ENGINEERING SERVICES STRUCTURE DESIGN DESIGN BRANCH 2

BRIDGE NO. 10-0165

KILOMETER POST R74.945

WILLITS BYPASS

FLOODWAY VIADUCT

BENT DETAILS NO. 4

ALL DIMENSIONS ARE IN MILLIMETERS UNLESS OTHERWISE SHOWN

ORIGINAL SCALE IN MILLIMETERS FOR REDUCED PLANS 0 10 20 30 40 50 60 70 80 90 100

CU 01
EA 262001

DISREGARD PRINTS BEARING EARLIER REVISION DATES

REVISION DATES 2-19-09 2-19-09 3-03-09 7-07-09

SHEET 36 OF 88

FILE => 10-0165_ghbd04.dgn

STRUCTURES DESIGN DETAIL SHEET (METRIC) (REV.03-17-04)

USERNAME => s124496 DATE PLOTTED => 28-JAN-2012 TIME PLOTTED => 08:56

DIST	COUNTY	ROUTE	KILOMETER POST TOTAL PROJECT	SHEET No	TOTAL SHEETS
01	Men	101	R69.4/R78.9	776	939

REGISTERED CIVIL ENGINEER 9-15-11 DATE

1-23-12
PLANS APPROVAL DATE

REGISTERED PROFESSIONAL ENGINEER M. Friedheim No. 57968 Exp. 6-30-12 CIVIL STATE OF CALIFORNIA

The State of California or its officers or agents shall not be responsible for the accuracy or completeness of electronic copies of this plan sheet.

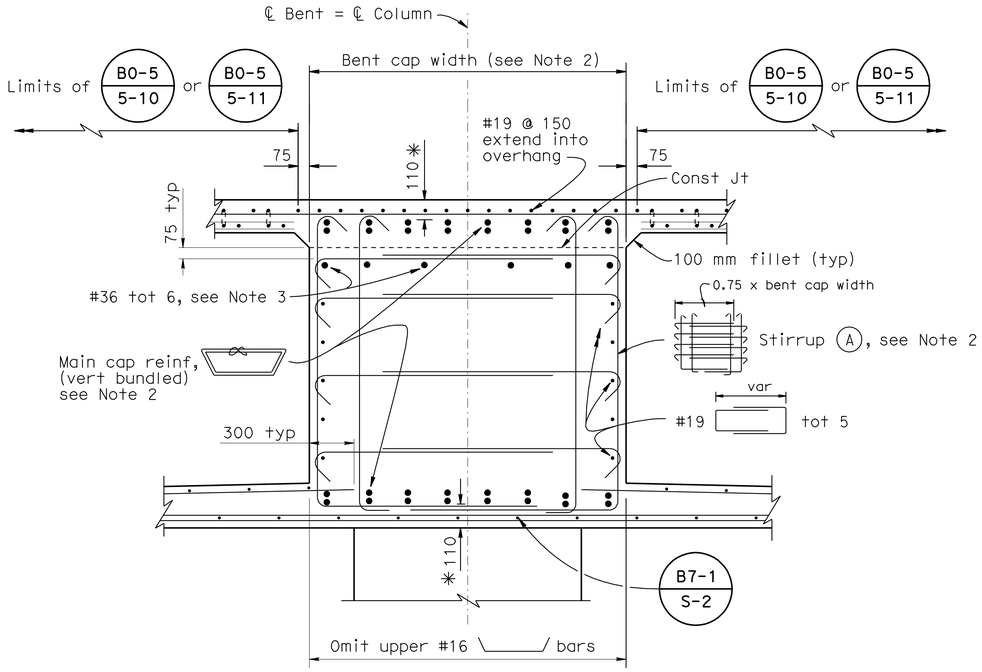

SECTION A-A

1:20

✳ Clearance to main cap reinforcement

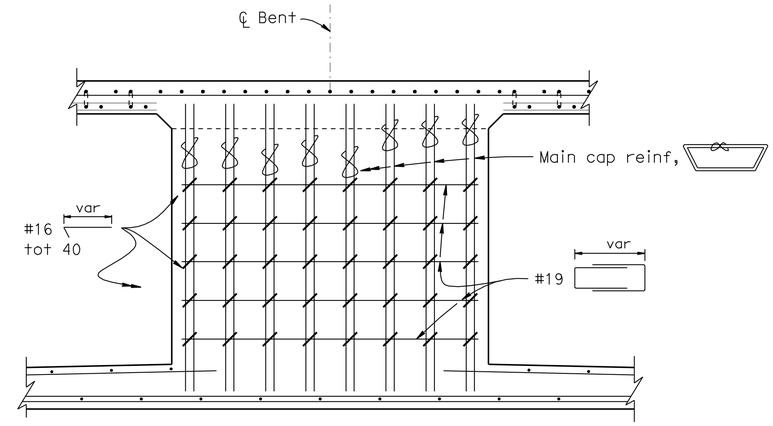

VIEW C-C

1:20

See Section A-A for notes and dimensions not shown

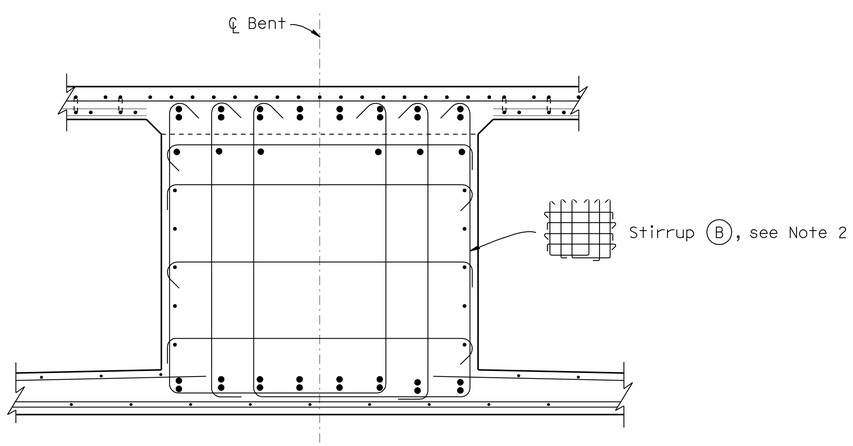

SECTION B-B

1:20

See Section A-A for notes and dimensions not shown

NOTES:

1. For location of Sections A-A, B-B and View C-C, see "Bent Layout No. 1" sheet.
2. For bent cap width, main cap reinf and stirrup bar sizes, see Table 1 on "Bent Layout No. 1" sheet.
3. Reinforcement may be bent or lowered to clear prestressing ducts. Subject to approval by the engineer.
4. No lap splices allowed in main cap reinforcement. All splices shall be service level splices.

LEGEND:

- Indicates bundled bars.

Caltrans Metric

	BY	CHECKED
DESIGN	M. Akkari	K. Selventhiran
DETAILS	E. Montevirgen	K. Selventhiran
QUANTITIES	G. Zuniga/G. Slocum	R. Odell/C. Udarbe

STATE OF CALIFORNIA DEPARTMENT OF TRANSPORTATION

DIVISION OF ENGINEERING SERVICES STRUCTURE DESIGN
DESIGN BRANCH 2

BRIDGE NO. 10-0165
KILOMETER POST R74.945

WILLITS BYPASS
FLOODWAY VIADUCT
BENT DETAILS NO. 5

ALL DIMENSIONS ARE IN MILLIMETERS UNLESS OTHERWISE SHOWN

ORIGINAL SCALE IN MILLIMETERS FOR REDUCED PLANS 0 10 20 30 40 50 60 70 80 90 100

CU 01
EA 262001

DISREGARD PRINTS BEARING EARLIER REVISION DATES

REVISION DATES: 1-16-09 1-12-09 2-05-09 2-10-09 2-18-09 2-28-09 3-12-09 4-30-09 7-07-09

SHEET 37 OF 88

FILE => 10-0165_ghbd05.dgn

STRUCTURES DESIGN DETAIL SHEET (METRIC) (REV.03-17-04)

USERNAME => s124936 DATE PLOTTED => 28-JAN-2012 TIME PLOTTED => 08:53

DIST	COUNTY	ROUTE	KILOMETER POST TOTAL PROJECT	SHEET No	TOTAL SHEETS
01	Men	101	R69.4/R78.9	777	939

REGISTERED CIVIL ENGINEER 9-15-11 DATE

1-23-12
PLANS APPROVAL DATE

REGISTERED PROFESSIONAL ENGINEER M. Friedheim No. 57968 Exp. 6-30-12 CIVIL STATE OF CALIFORNIA

The State of California or its officers or agents shall not be responsible for the accuracy or completeness of electronic copies of this plan sheet.

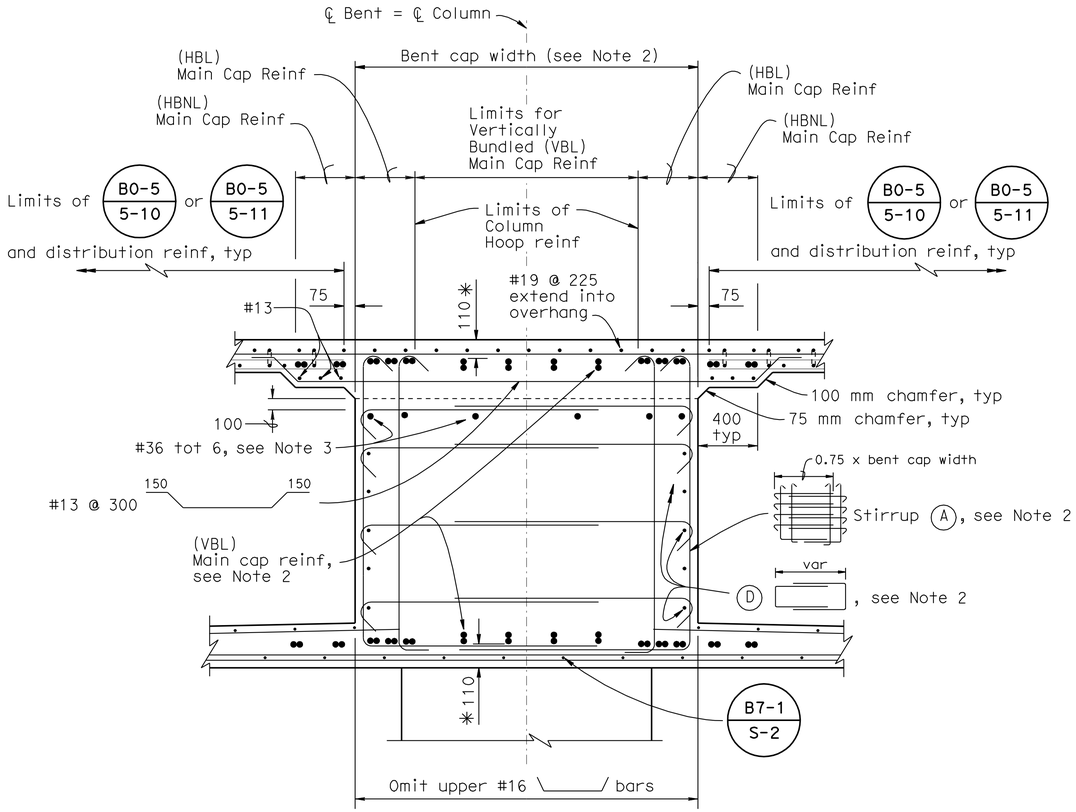

SECTION E-E

1:20

✳ Clearance to main cap reinforcement

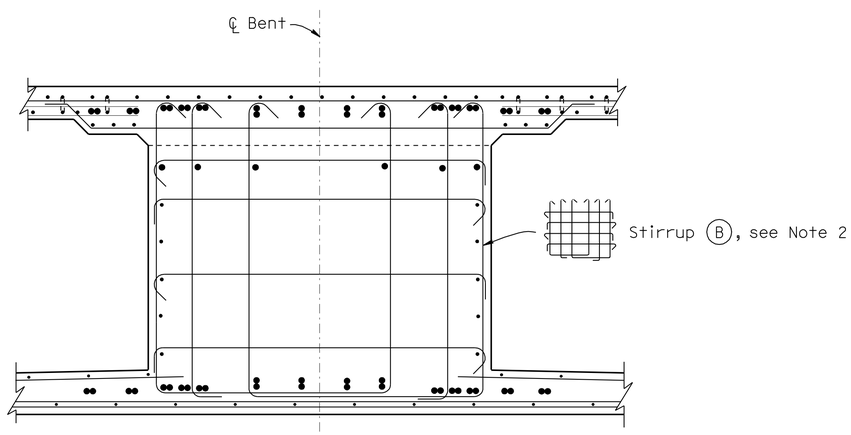

SECTION F-F

1:20

See Section E-E for notes and dimensions not shown

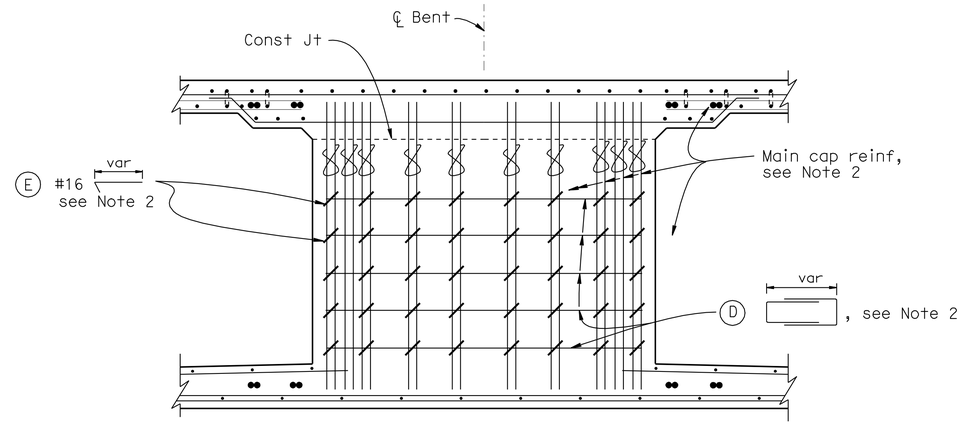

VIEW D-D

1:20

See Section E-E for notes and dimensions not shown

NOTES:

1. For location of Sections E-E, F-F and View D-D, see "Bent Layout No. 2" sheet.
2. For bent cap width, reinf, and bar sizes, see Table 2 on "Bent Layout No. 2" sheet. HBL may be used instead of VBL through the column core if clearance is adequate.
3. Reinforcement may be bent or lowered to clear prestressing ducts. Subject to approval by the Engineer.
4. No lap splices allowed in main cap reinforcement. All splices shall be service level splices.
5. Bent 28 shown, others similar.
6. Adjust tie spacing to ensure even distribution within bent cap.

LEGEND:

- Indicates bundled bars.

(HBL) - Horizontally Bundled Looped

(VBL) - Vertically Bundled Looped

(HBNL) - Horizontally Bundled Not Looped

Caltrans Metric

	BY	CHECKED
DESIGN	C. Udarbe	E. Ward
DETAILS	S. Ng	E. Ward
QUANTITIES	G. Zuniga/G. Slocum	R. Odell/C. Udarbe

STATE OF CALIFORNIA DEPARTMENT OF TRANSPORTATION

DIVISION OF ENGINEERING SERVICES STRUCTURE DESIGN

DESIGN BRANCH 2

BRIDGE NO. 10-0165

KILOMETER POST R74.945

WILLITS BYPASS
FLOODWAY VIADUCT
BENT DETAILS NO. 6

ALL DIMENSIONS ARE IN MILLIMETERS UNLESS OTHERWISE SHOWN

ORIGINAL SCALE IN MILLIMETERS FOR REDUCED PLANS 0 10 20 30 40 50 60 70 80 90 100

CU 01
EA 262001

DISREGARD PRINTS BEARING EARLIER REVISION DATES

REVISION DATES: 02-11-09 2-25-09 3-11-09 4-26-09 5-05-09 7-08-09 12-10-09

SHEET 38 OF 88

FILE => 10-0165_ghbd06.dgn

STRUCTURES DESIGN DETAIL SHEET (METRIC) (REV.03-17-04)

USERNAME => s124496 DATE PLOTTED => 28-JAN-2012 TIME PLOTTED => 08:53

DIST	COUNTY	ROUTE	KILOMETER POST TOTAL PROJECT	SHEET No	TOTAL SHEETS
01	Men	101	R69.4/R78.9	778	939

REGISTERED CIVIL ENGINEER 9-15-11 DATE

1-23-12
PLANS APPROVAL DATE

REGISTERED PROFESSIONAL ENGINEER M. Friedheim No. 57968 Exp. 6-30-12 CIVIL STATE OF CALIFORNIA

The State of California or its officers or agents shall not be responsible for the accuracy or completeness of electronic copies of this plan sheet.

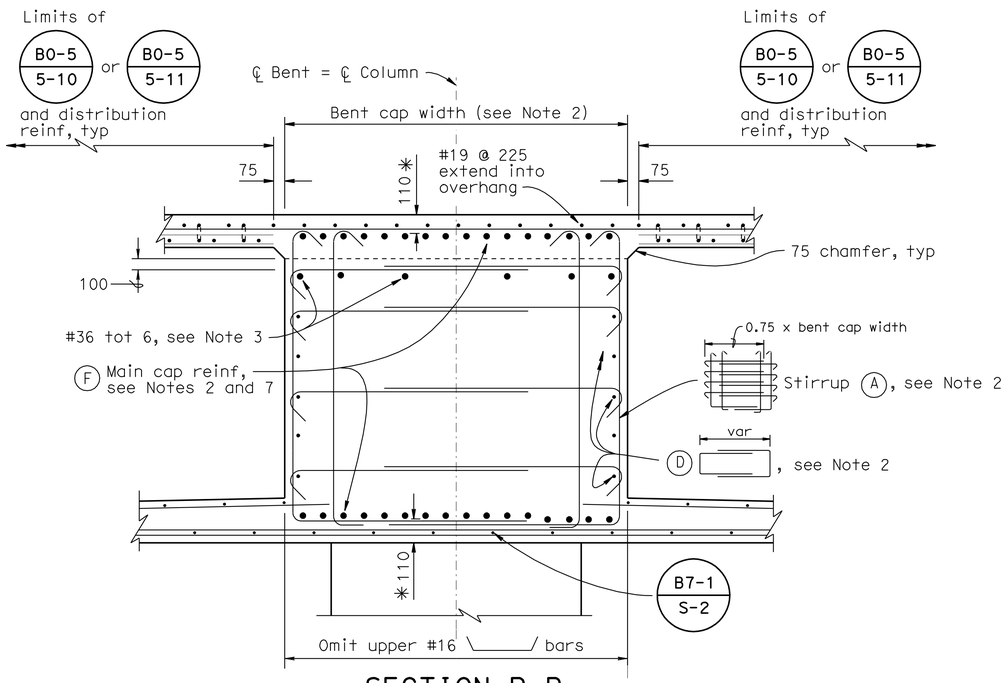

SECTION P-P

1:20

✳ Clearance to main cap reinforcement

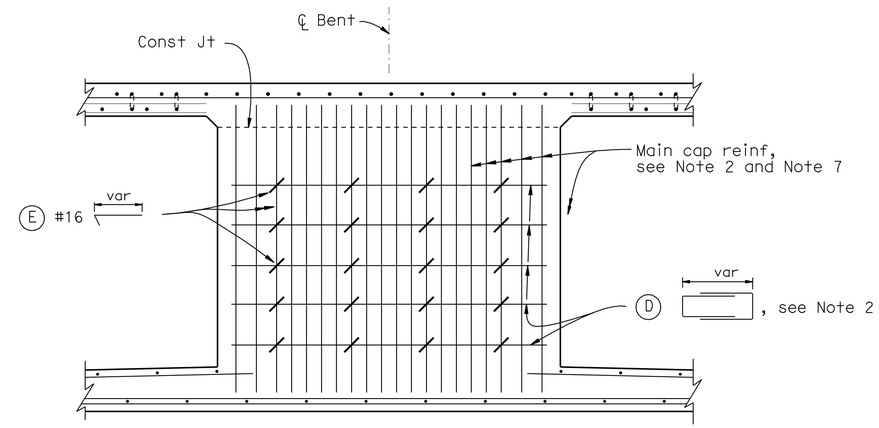

VIEW R-R

1:20

See Section P-P for notes and dimensions not shown

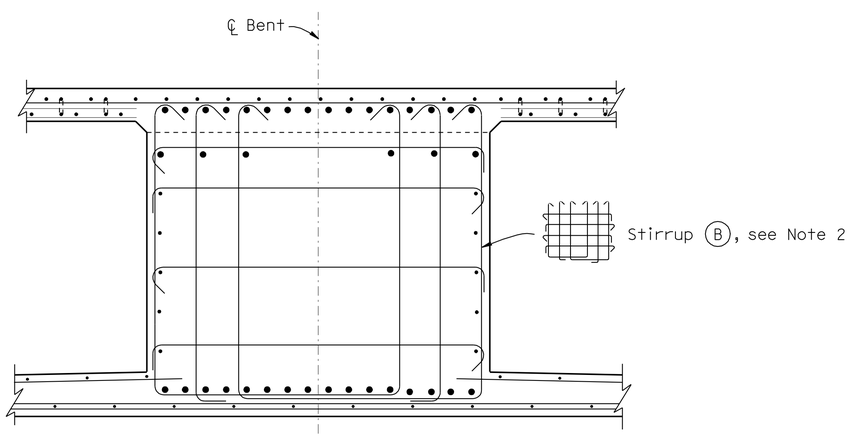

SECTION Q-Q

1:20

See Section P-P for notes and dimensions not shown

NOTES:

1. For location of Sections P-P, Q-Q and View R-R, see "Bent Layout No. 3" sheet.
2. For bent cap width, reinf, and bar sizes, see Table 3 on "Bent Layout No. 3" sheet.
3. Reinforcement may be bent or lowered to clear prestressing ducts. Subject to approval by the Engineer.
4. No lap splices allowed in main cap reinforcement. All splices shall be service level splices.
5. Bent 19 shown, others similar except as noted.
6. Adjust tie spacing to ensure even distribution within bent cap.
7. Reinforcement may be bundled to facilitate placement.

Caltrans Metric

ALL DIMENSIONS ARE IN MILLIMETERS UNLESS OTHERWISE SHOWN

ORIGINAL SCALE IN MILLIMETERS FOR REDUCED PLANS 0 10 20 30 40 50 60 70 80 90 100

	BY	CHECKED
DESIGN	C. Udarbe	E. Ward
DETAILS	S. Ng	E. Ward
QUANTITIES	G. Zuniga/G. Slocum	R. Odell/C. Udarbe

STATE OF CALIFORNIA DEPARTMENT OF TRANSPORTATION

DIVISION OF ENGINEERING SERVICES STRUCTURE DESIGN

DESIGN BRANCH 2

CU 01
EA 262001

BRIDGE NO. 10-0165
KILOMETER POST R74.945

WILLITS BYPASS
FLOODWAY VIADUCT
BENT DETAILS NO. 7

DISREGARD PRINTS BEARING EARLIER REVISION DATES

REVISION DATES: 4-23-09 4-30-09 5-06-09 7-08-09 12-10-09

SHEET 39 OF 88

FILE => 10-0165_ghbd07.dgn

STRUCTURES DESIGN DETAIL SHEET (METRIC) (REV.03-17-04)

USERNAME => s124496 DATE PLOTTED => 28-JAN-2012 TIME PLOTTED => 08:54

DIST	COUNTY	ROUTE	KILOMETER POST TOTAL PROJECT	SHEET No	TOTAL SHEETS
01	Men	101	R69.4/R78.9	779	939

REGISTERED CIVIL ENGINEER 9-15-11 DATE

1-23-12
PLANS APPROVAL DATE

REGISTERED PROFESSIONAL ENGINEER M. Friedheim No. 57968 Exp. 6-30-12 CIVIL STATE OF CALIFORNIA

The State of California or its officers or agents shall not be responsible for the accuracy or completeness of electronic copies of this plan sheet.

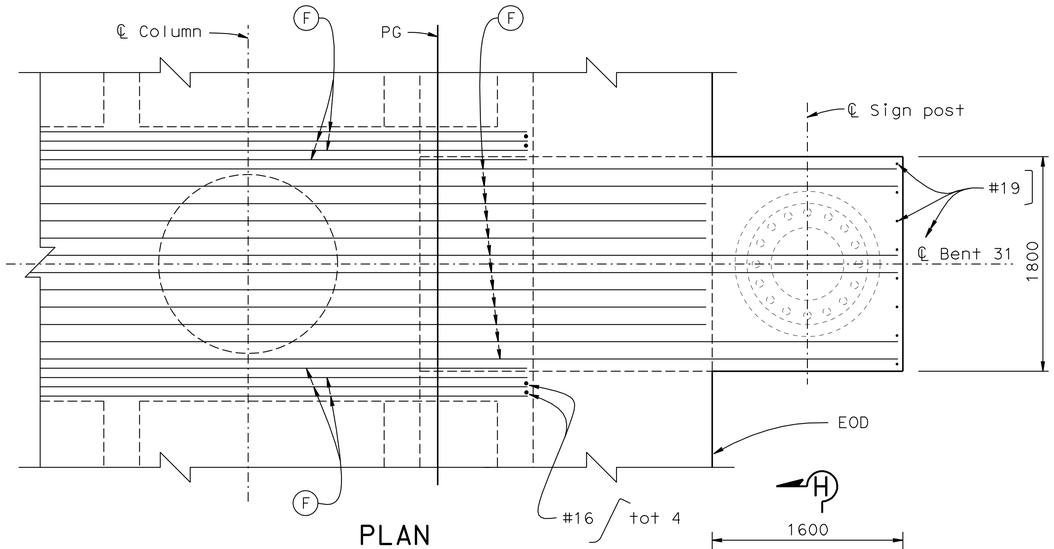

PLAN
1:25

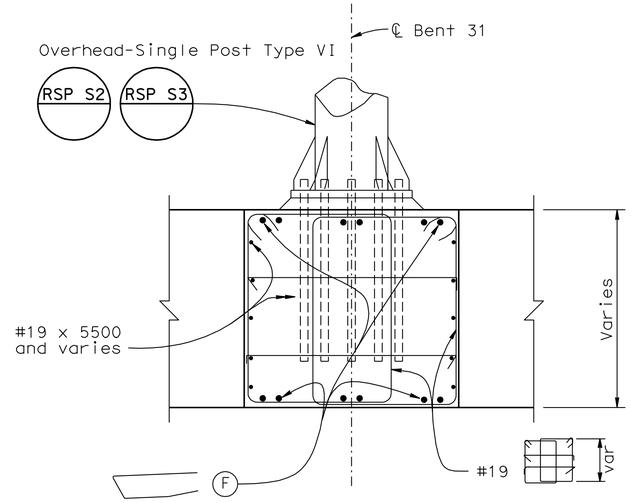

SECTION H-H
1:25

LEGEND:

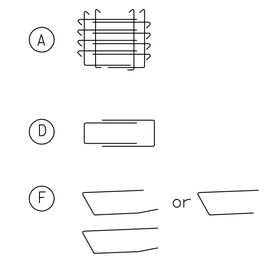

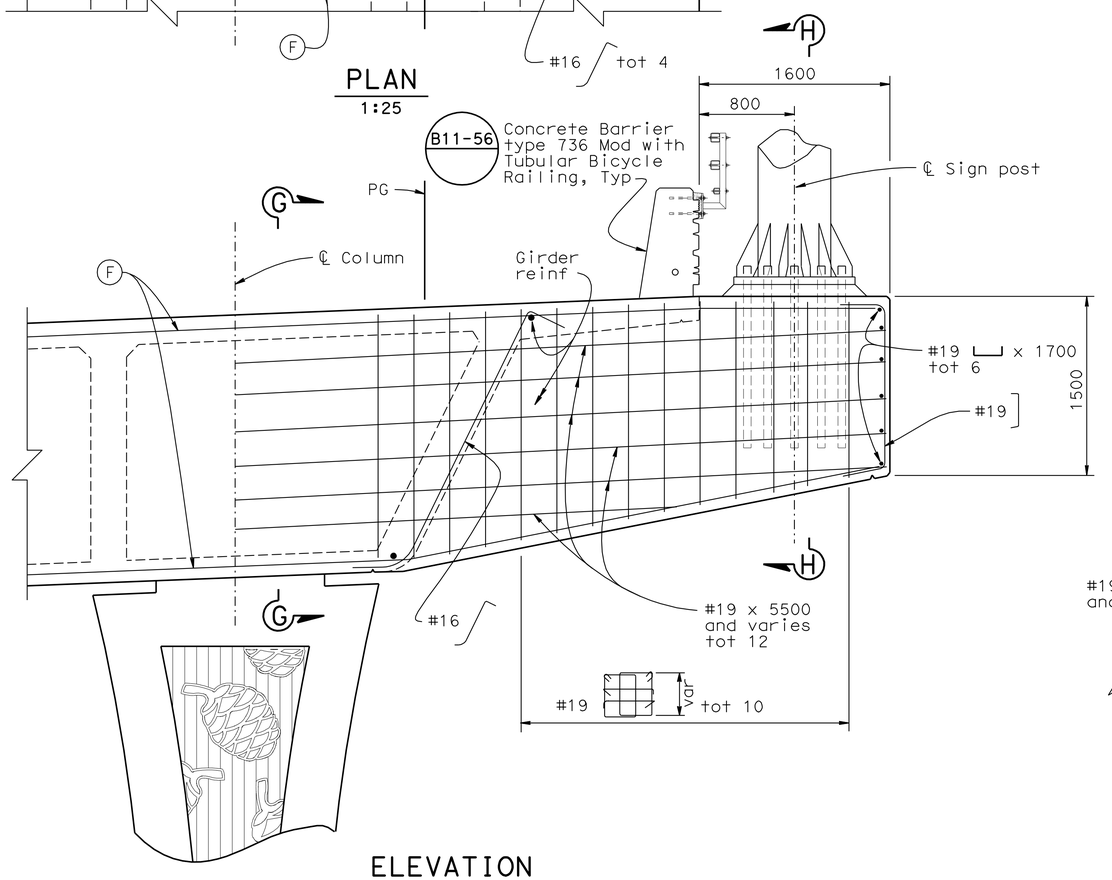

ELEVATION

BENT 31 SIGN SUPPORT DETAILS
1:25

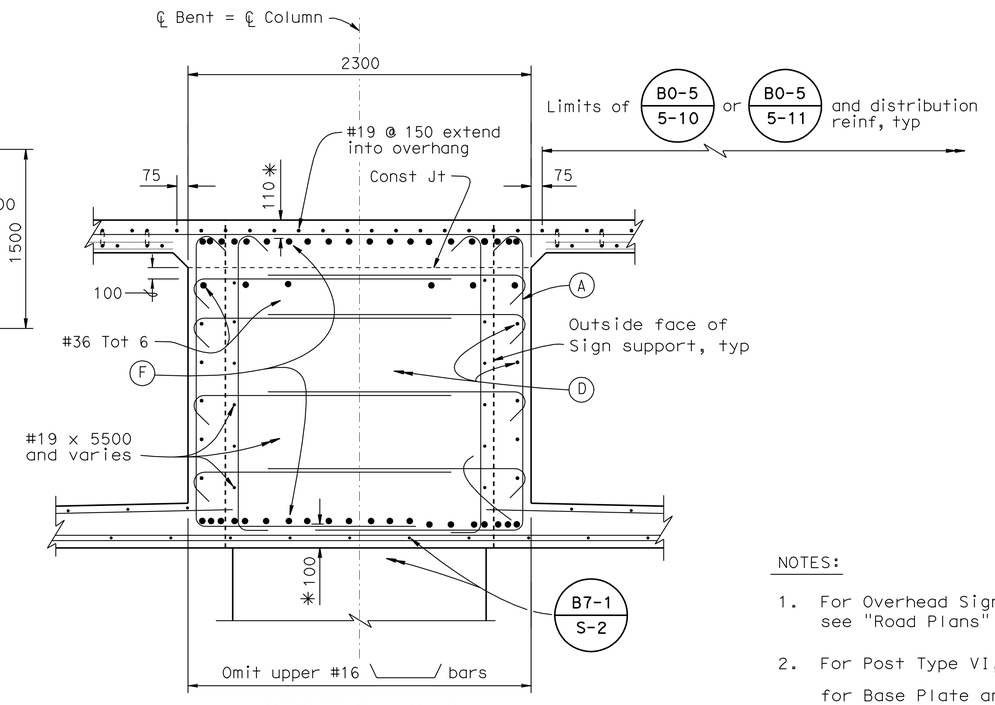

SECTION G-G
1:20
✳ Clearance to main cap reinforcement

NOTES:

1. For Overhead Sign details not shown, see "Road Plans" sheets.
2. For Post Type VI, see RSP S2, for Base Plate and Anchorage Details, see RSP S3.
3. For A, D and F bar reinf notes and dimensions, see "Bent Layout No. 4" sheet.

Caltrans Metric

	BY	CHECKED
DESIGN	N. Nguyen	C. Udarbe
DETAILS	J. Yang/S. Ng	E. Ward
QUANTITIES	G. Zuniga/G. Slocum	R. Odell/C. Udarbe

ALL DIMENSIONS ARE IN MILLIMETERS UNLESS OTHERWISE SHOWN

ORIGINAL SCALE IN MILLIMETERS FOR REDUCED PLANS 0 10 20 30 40 50 60 70 80 90 100

STATE OF CALIFORNIA
DEPARTMENT OF TRANSPORTATION

DIVISION OF ENGINEERING SERVICES
STRUCTURE DESIGN
DESIGN BRANCH 2

CU 01
EA 262001

BRIDGE NO. 10-0165
KILOMETER POST R74.945

DISREGARD PRINTS BEARING EARLIER REVISION DATES

REVISION DATES: 11-26-08 12-10-09 02-24-09 03-02-09 03-05-09 03-12-09 4-23-09 4-30-09 7-08-09

SHEET 40 OF 88

WILLITS BYPASS
FLOODWAY VIADUCT
BENT DETAILS NO. 8

FILE => 10-0165_ghbd08.dgn

STRUCTURES DESIGN DETAIL SHEET (METRIC) (REV.03-17-04)

USERNAME => s124496 DATE PLOTTED => 28-JAN-2012 TIME PLOTTED => 08:54

DIST	COUNTY	ROUTE	KILOMETER POST TOTAL PROJECT	SHEET No	TOTAL SHEETS
01	Men	101	R69.4/R78.9	780	939

REGISTERED CIVIL ENGINEER 9-15-11 DATE

1-23-12
PLANS APPROVAL DATE

REGISTERED PROFESSIONAL ENGINEER M. Friedheim No. 57968 Exp. 6-30-12 CIVIL STATE OF CALIFORNIA

The State of California or its officers or agents shall not be responsible for the accuracy or completeness of electronic copies of this plan sheet.

Notes:

1. Service level splices are required for all #25 bars. Optionally, two times the required lap splice length may be provided.
2. Girder web reinforcing shall be continuous through the bent caps and subject to the "No Splice Zone Detail" on "Typical Section No. 2" sheet.
3. Spans 19 and 27 are to be constructed as a linear variation between "Typical Section No. 1" and "Typical Section No. 2" sheets, see Structure Plans.

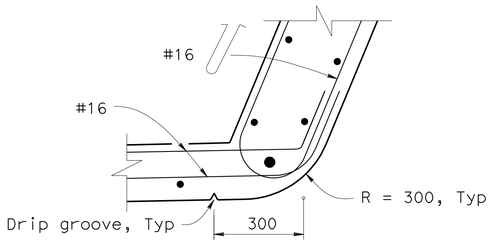

DETAIL X
1:10

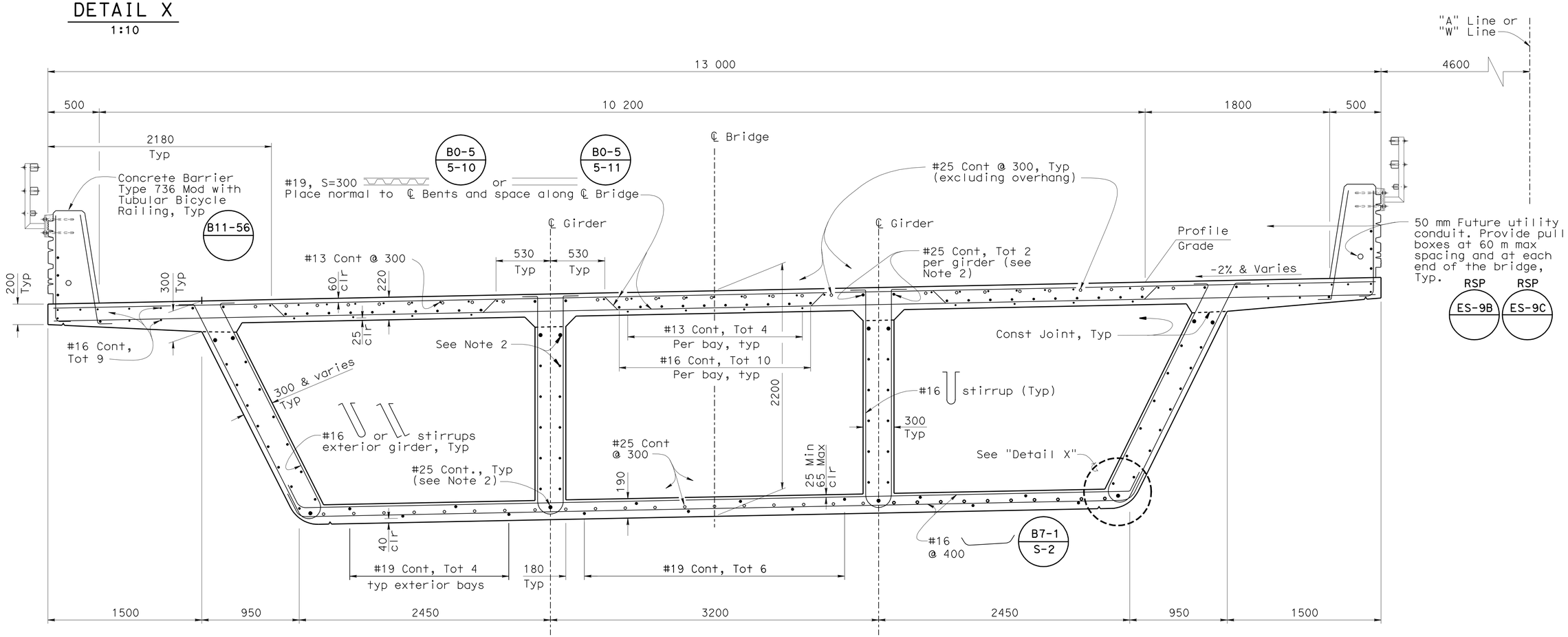

TYPICAL SECTION
B7-1 B8-5
1:20
Spans 1-18, 28-33

DESIGN	BY E. Hall	CHECKED R. Odell	
DETAILS	BY C. Figuerres/S. Ng	CHECKED R. Odell	
QUANTITIES	BY G. Zuniga/G. Slocum	CHECKED R. Odell/C. Udarbe	

STATE OF CALIFORNIA
DEPARTMENT OF TRANSPORTATION

DIVISION OF ENGINEERING SERVICES
STRUCTURE DESIGN
DESIGN BRANCH 2

BRIDGE NO. 10-0165
KILOMETER POST R74.945

WILLITS BYPASS
FLOODWAY VIADUCT
TYPICAL SECTION NO. 1

ALL DIMENSIONS ARE IN MILLIMETERS UNLESS OTHERWISE SHOWN

ORIGINAL SCALE IN MILLIMETERS FOR REDUCED PLANS 0 10 20 30 40 50 60 70 80 90 100

CU 01
EA 262001

DISREGARD PRINTS BEARING EARLIER REVISION DATES

REVISION DATES: 5-08-08 4-20-09 12-21-09 06-13-11 01-16-08 01-25-08 01-27-08 02-20-08 02-25-08 04-04-08

SHEET 41 OF 88

FILE => 10-0165_gmtsd01.dgn

STRUCTURES DESIGN DETAIL SHEET (METRIC) (REV.03-17-04)

USERNAME => s124436 DATE PLOTTED => 28-JAN-2012 TIME PLOTTED => 08:54

DIST	COUNTY	ROUTE	KILOMETER POST TOTAL PROJECT	SHEET No	TOTAL SHEETS
01	Men	101	R69.4/R78.9	781	939

REGISTERED CIVIL ENGINEER 9-15-11 DATE

1-23-12
PLANS APPROVAL DATE

REGISTERED PROFESSIONAL ENGINEER M. Friedheim No. 57968 Exp. 6-30-12 CIVIL STATE OF CALIFORNIA

The State of California or its officers or agents shall not be responsible for the accuracy or completeness of electronic copies of this plan sheet.

Notes:

1. Service level splices are required for all #25 bars. Optionally, two times the required lap splice length may be provided.
2. Girder web reinforcing shall be continuous through the bent caps and subject to the "No Splice Zone Detail".

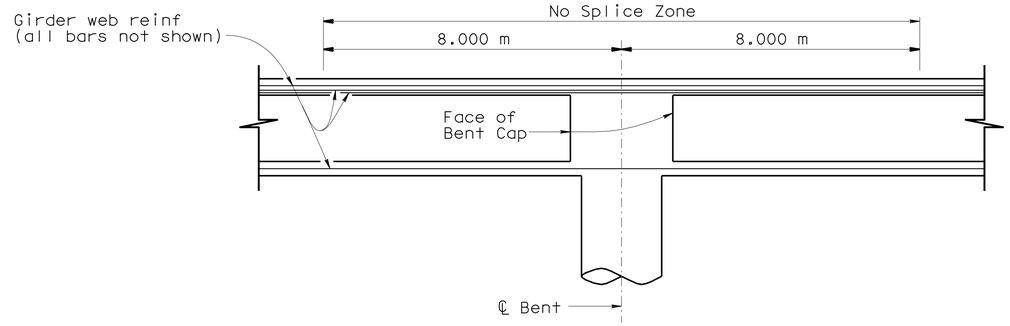

NO SPLICE ZONE DETAIL

No Scale

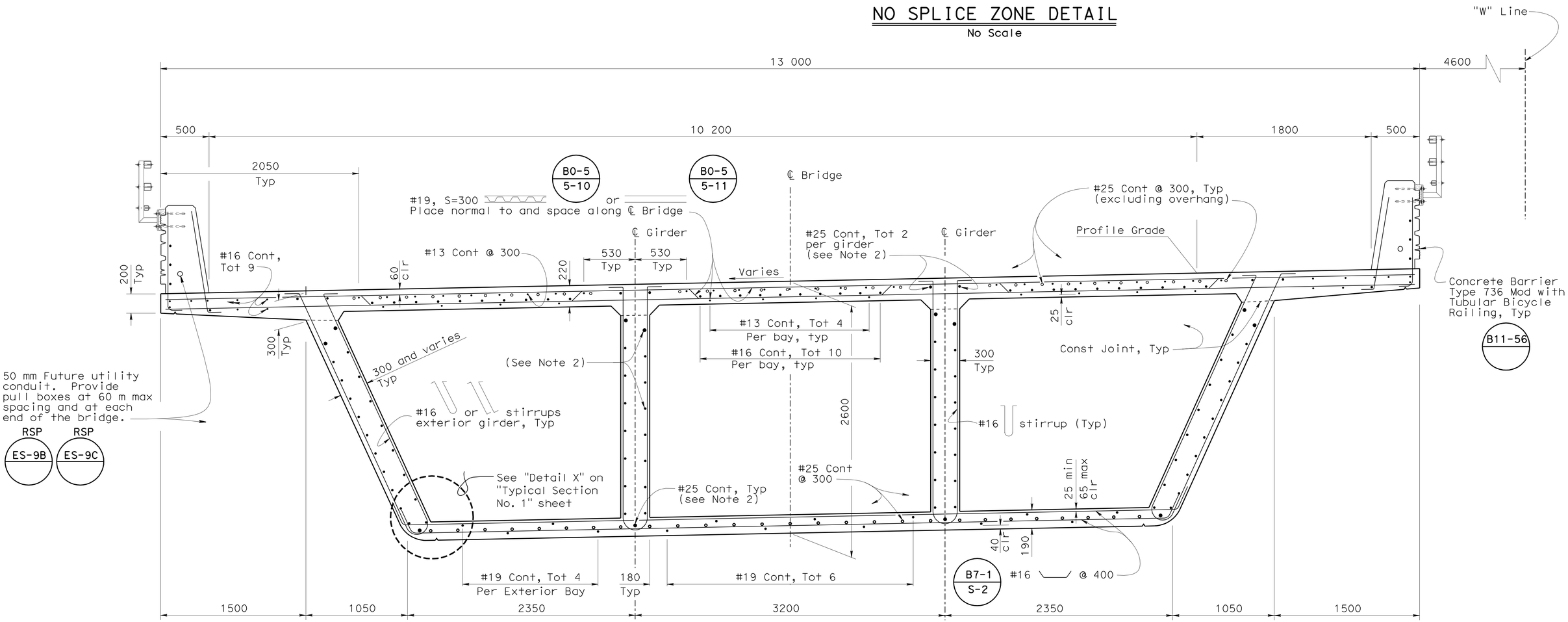

TYPICAL SECTION

1:20

Spans 20-26

B7-1 B8-5

DESIGN	BY R. Odell	CHECKED G. Zuniga	
DETAILS	BY C. Figuerres/S. Ng	CHECKED G. Zuniga	
QUANTITIES	BY G. Zuniga/G. Slocum	CHECKED R. Odell/C. Udarbe	

STATE OF CALIFORNIA
DEPARTMENT OF TRANSPORTATION

DIVISION OF ENGINEERING SERVICES
STRUCTURE DESIGN
DESIGN BRANCH 2

BRIDGE NO. 10-0165
KILOMETER POST R74.945

WILLITS BYPASS
FLOODWAY VIADUCT
TYPICAL SECTION NO. 2

ALL DIMENSIONS ARE IN MILLIMETERS UNLESS OTHERWISE SHOWN

ORIGINAL SCALE IN MILLIMETERS FOR REDUCED PLANS 0 10 20 30 40 50 60 70 80 90 100

CU 01
EA 262001

DISREGARD PRINTS BEARING EARLIER REVISION DATES

REVISION DATES: 8/05/08 4-26-09 7/15/09 12-21-09 06-13-11 1/23/09 1/29/09 2/16/09 2/26/09 4-09-09

SHEET 42 OF 88

FILE => 10-0165_gmts02.dgn

STRUCTURES DESIGN DETAIL SHEET (METRIC) (REV.03-17-04)

USERNAME => s124436 DATE PLOTTED => 28-JAN-2012 TIME PLOTTED => 08:55

DIST	COUNTY	ROUTE	KILOMETER POST TOTAL PROJECT	SHEET No	TOTAL SHEETS
01	Men	101	R69.4/R78.9	782	939

REGISTERED CIVIL ENGINEER 9-15-11 DATE

1-23-12
PLANS APPROVAL DATE

REGISTERED PROFESSIONAL ENGINEER M. Friedheim No. 57968 Exp. 6-30-12 CIVIL STATE OF CALIFORNIA

The State of California or its officers or agents shall not be responsible for the accuracy or completeness of electronic copies of this plan sheet.

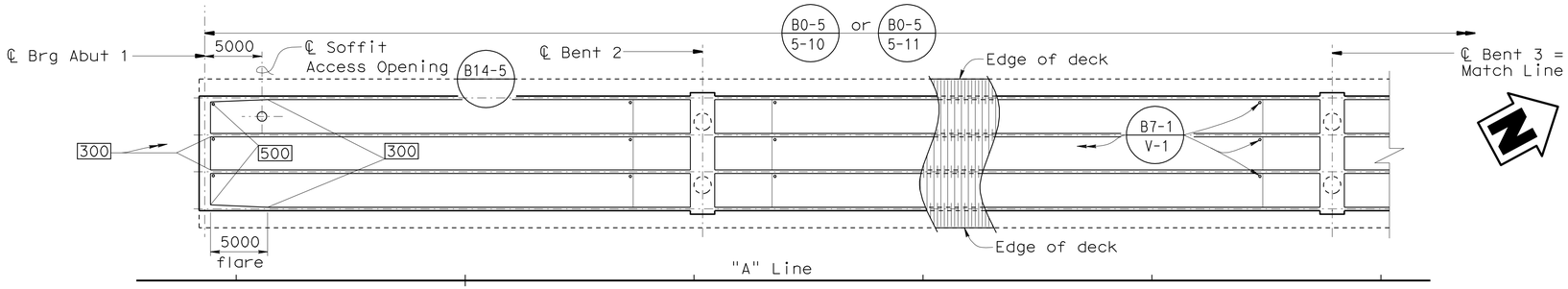

PLAN
1:250

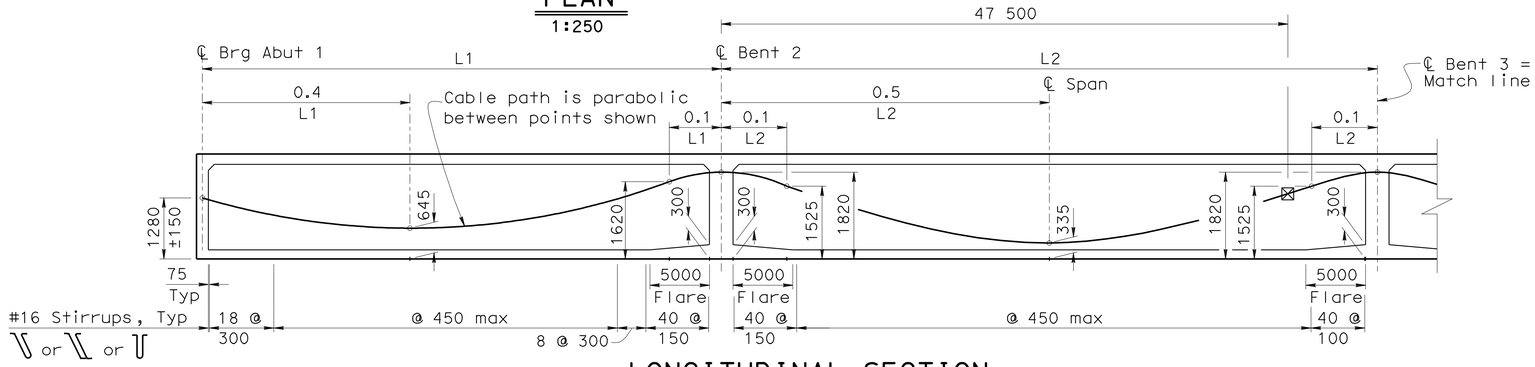

LONGITUDINAL SECTION
No Scale

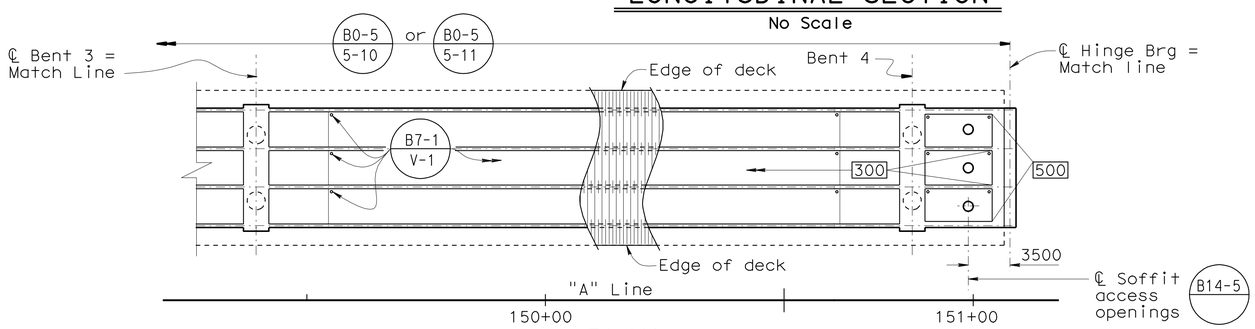

PLAN
1:250

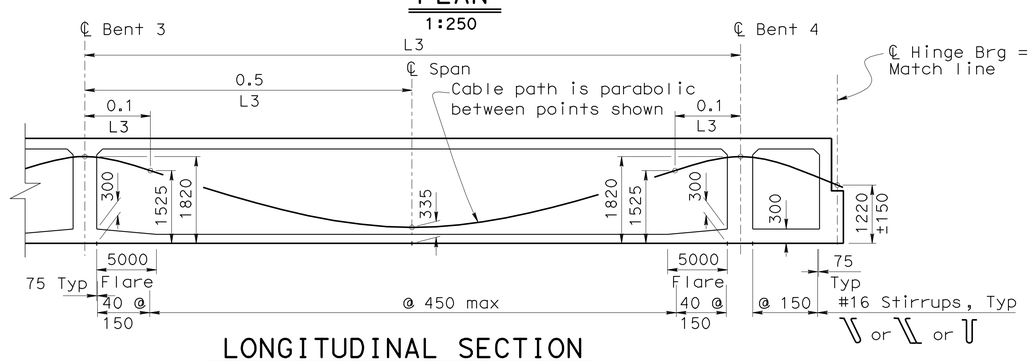

LONGITUDINAL SECTION
No Scale

PRESTRESSING NOTES

FRAME 1

1860 MPa Low Relaxation Strands:

Pjack = 40 000 kN

Anchor Set = 10 mm

Total Number of Girders = 4

Long term losses assumed to be: 172 MPa

Design is based on μ = 0.15 and K = 0.000656/m

Concrete: f'_c = 35 MPa @ 28 days
f'_{ci} = 28 MPa @ time of stressing

Contractor shall submit elongation calculations based on initial stress at
☒ =0.837 times jacking stress

Two end stressing shall be performed.

NOTE:

1. For ℄ Hinge Brg, Match Line, see "Girder Layout No. 2" sheet.

LEGEND:

XXX Indicates girder stem width

☒ Indicates Theoretical point of no movement for two end stressing

DESIGN	BY E. Hall	CHECKED R. Odell	
DETAILS	BY C. Figuerres	CHECKED R. Odell	
QUANTITIES	BY G. Zuniga/G. Slocum	CHECKED R. Odell/C. Udarbe	

STATE OF CALIFORNIA
DEPARTMENT OF TRANSPORTATION

DIVISION OF ENGINEERING SERVICES
STRUCTURE DESIGN
DESIGN BRANCH 2

BRIDGE NO. 10-0165
KILOMETER POST R74.945

WILLITS BYPASS
FLOODWAY VIADUCT
GIRDER LAYOUT NO. 1

ALL DIMENSIONS ARE IN MILLIMETERS UNLESS OTHERWISE SHOWN

ORIGINAL SCALE IN MILLIMETERS FOR REDUCED PLANS 0 10 20 30 40 50 60 70 80 90 100

CU 01
EA 262001

DISREGARD PRINTS BEARING EARLIER REVISION DATES

REVISION DATES: 1-29-07 4-23-07 7-02-08 11-14-08 11-26-08 12-04-08 01-22-09 01-28-09

SHEET 43 OF 88

FILE => 10-0165_gnaglo01.dgn

STRUCTURES DESIGN DETAIL SHEET (METRIC) (REV.03-17-04)

USERNAME => s124496 DATE PLOTTED => 28-JAN-2012 TIME PLOTTED => 08:55

DIST	COUNTY	ROUTE	KILOMETER POST TOTAL PROJECT	SHEET No	TOTAL SHEETS
01	Men	101	R69.4/R78.9	783	939

REGISTERED CIVIL ENGINEER 9-15-11 DATE

1-23-12
PLANS APPROVAL DATE

REGISTERED PROFESSIONAL ENGINEER M. Friedheim No. 57968 Exp. 6-30-12 CIVIL STATE OF CALIFORNIA

The State of California or its officers or agents shall not be responsible for the accuracy or completeness of electronic copies of this plan sheet.

LEGEND:

XXX Indicates girder stem width

⊠ Indicates Theoretical point of no movement for two end stressing

NOTE:

1. For ℄ Hinge Brg, Match Lines, see "Girder Layout No. 1" and "Girder Layout No. 3" sheets.

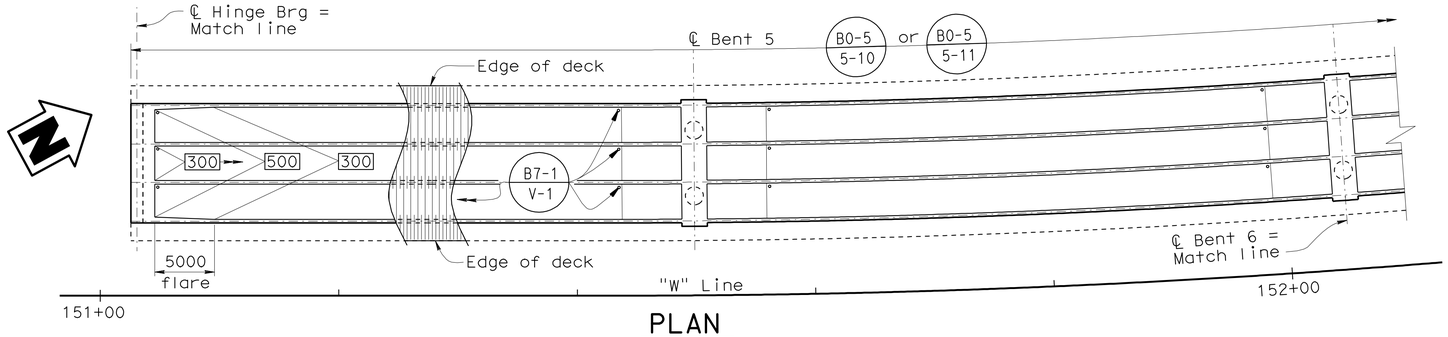

PLAN
1:250

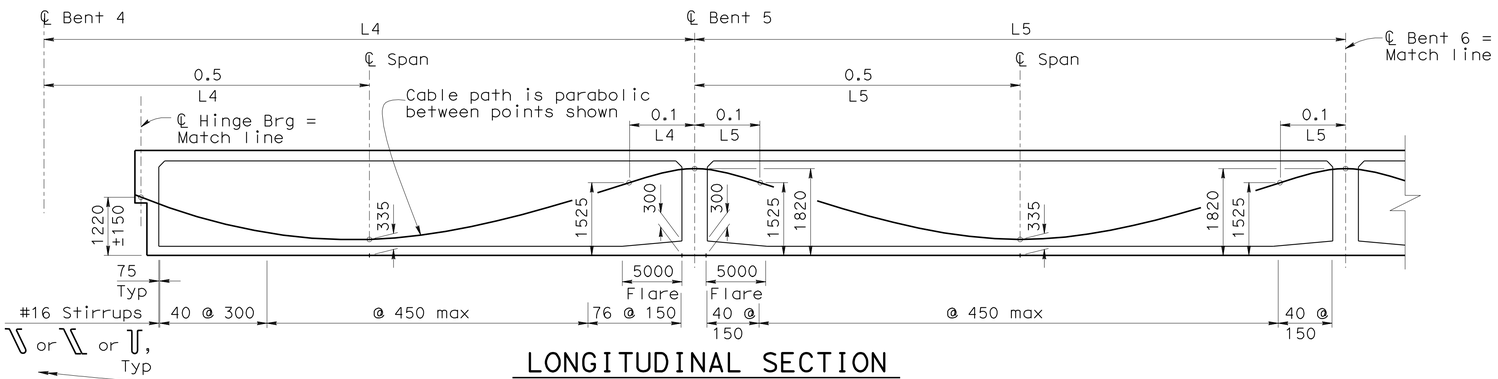

LONGITUDINAL SECTION
No Scale

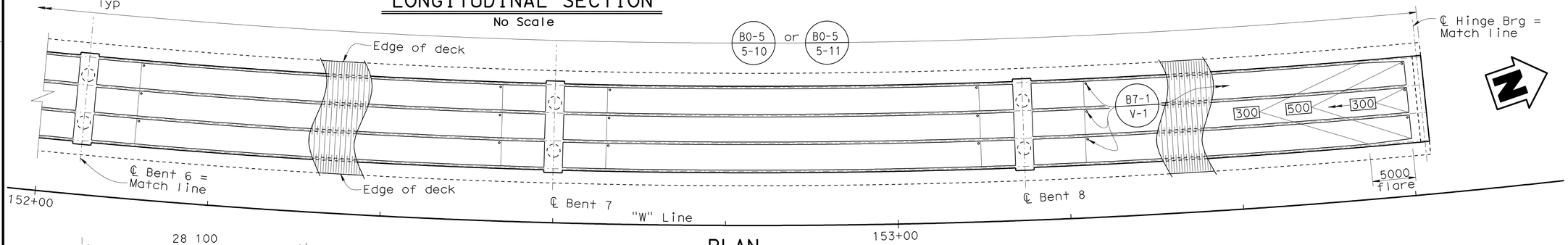

PLAN
1:250

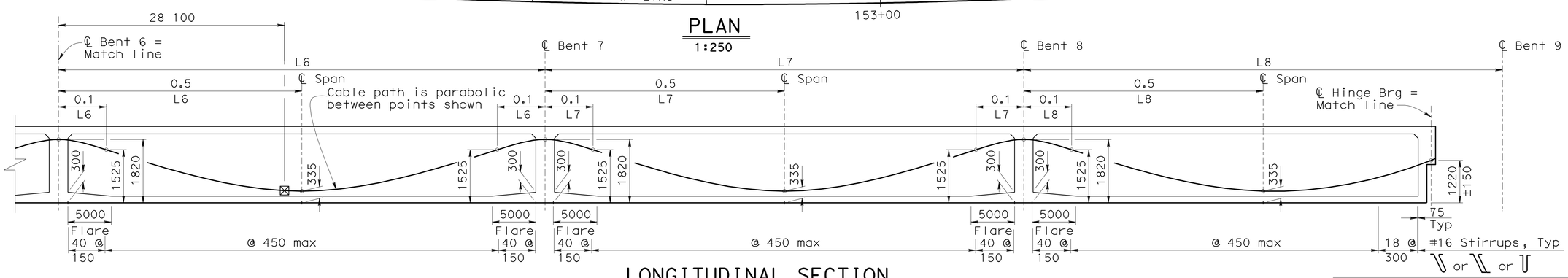

LONGITUDINAL SECTION
No Scale

PRESTRESSING NOTES

FRAME 2

1860 MPa Low Relaxation Strands:

Pjack = 41 100 kN

Anchor Set = 10 mm

Total Number of Girders = 4

Long term losses assumed to be: 172 MPa

Design is based on μ = 0.20 and K = 0.000656/m

Concrete: f'_c = 35 MPa @ 28 days

f'_{ci} = 28 MPa @ time of stressing

Contractor shall submit elongation calculations based on initial stress at

⊠ =0.769 times jacking stress

Two end stressing shall be performed.

Caltrans Metric

DESIGN	BY E. Hall	CHECKED R. Odell	
DETAILS	BY C. Figuerres	CHECKED R. Odell	
QUANTITIES	BY G. Zuniga/G. Slocum	CHECKED R. Odell/C. Udarbe	

STATE OF CALIFORNIA
DEPARTMENT OF TRANSPORTATION

DIVISION OF ENGINEERING SERVICES
STRUCTURE DESIGN
DESIGN BRANCH 2

BRIDGE NO. 10-0165
KILOMETER POST R74.945

WILLITS BYPASS
FLOODWAY VIADUCT
GIRDER LAYOUT NO. 2

ALL DIMENSIONS ARE IN MILLIMETERS UNLESS OTHERWISE SHOWN

ORIGINAL SCALE IN MILLIMETERS FOR REDUCED PLANS 0 10 20 30 40 50 60 70 80 90 100

CU 01
EA 262001

DISREGARD PRINTS BEARING EARLIER REVISION DATES

REVISION DATES: 7-07-08 7-15-08 11-24-08 11-26-08 12-04-08 01-27-09 01-28-09

SHEET 44 OF 88

FILE => 10-0165_gnag1o02.dgn

STRUCTURES DESIGN DETAIL SHEET (METRIC) (REV.03-17-04)

USERNAME => s124496 DATE PLOTTED => 28-JAN-2012 TIME PLOTTED => 08:55

DIST	COUNTY	ROUTE	KILOMETER POST TOTAL PROJECT	SHEET No	TOTAL SHEETS
01	Men	101	R69.4/R78.9	784	939

REGISTERED CIVIL ENGINEER 9-15-11 DATE

1-23-12
PLANS APPROVAL DATE

REGISTERED PROFESSIONAL ENGINEER M. Friedheim No. 57968 Exp. 6-30-12 CIVIL STATE OF CALIFORNIA

The State of California or its officers or agents shall not be responsible for the accuracy or completeness of electronic copies of this plan sheet.

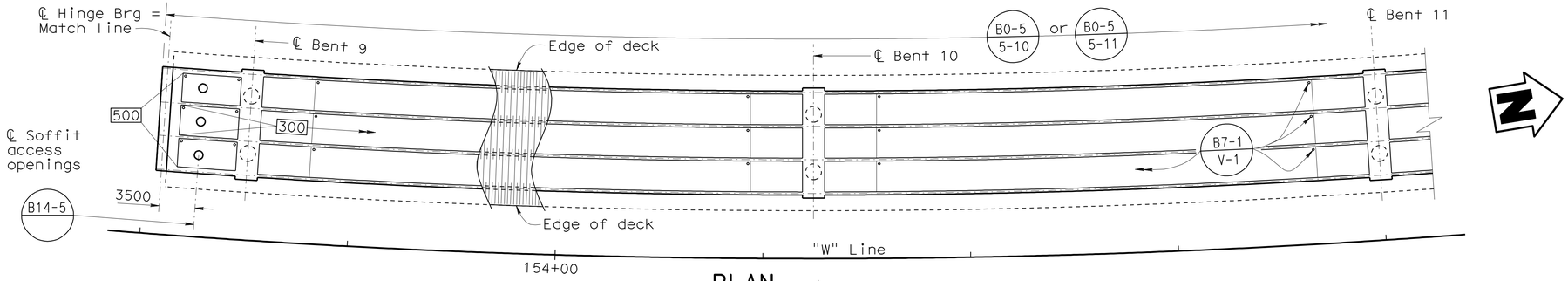

PLAN
1:250

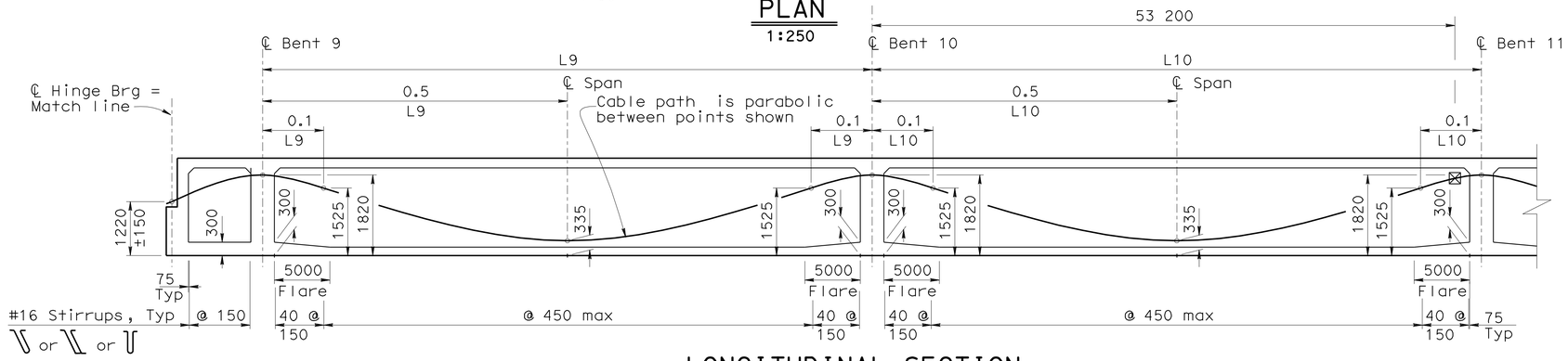

LONGITUDINAL SECTION
No Scale

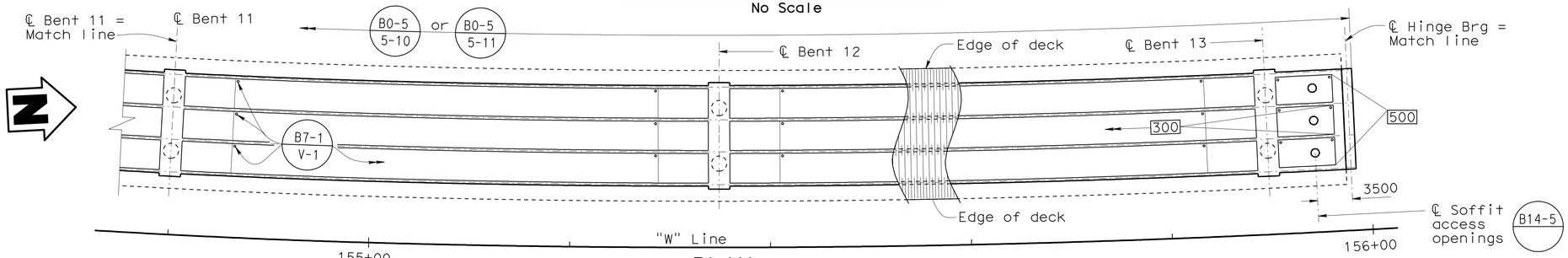

PLAN
1:250

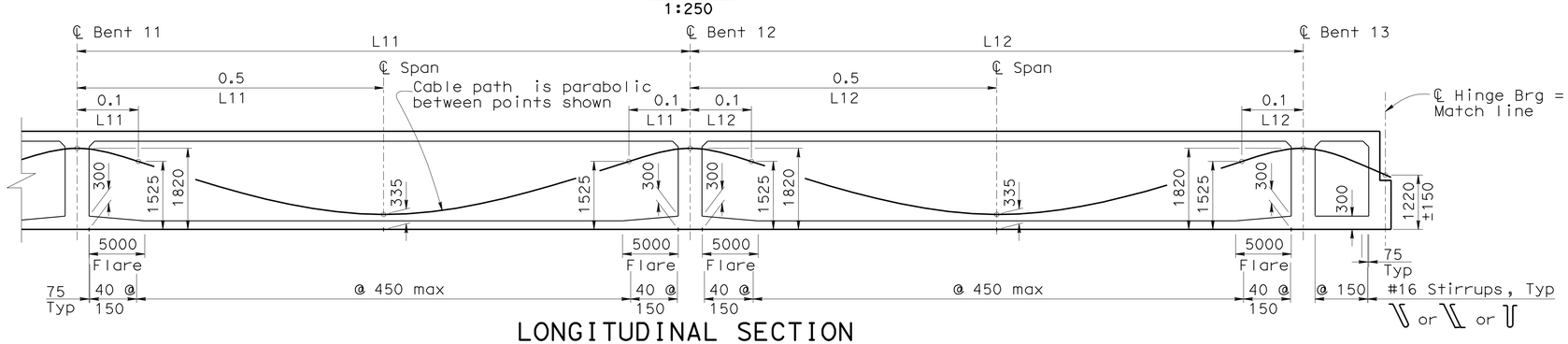

LONGITUDINAL SECTION
No Scale

PRESTRESSING NOTES

FRAME 3

1860 MPa Low Relaxation Strands:

Pjack = 43 300 kN

Anchor Set = 10 mm

Total Number of Girders = 4

Long term losses assumed to be: 172 MPa

Design is based on μ = 0.20 and K = 0.000656/m

Concrete: f'_c = 35 MPa @ 28 days
f'_{ci} = 28 MPa @ time of stressing

Contractor shall submit elongation calculations based on initial stress at
☒ =0.764 times jacking stress

Two end stressing shall be performed.

LEGEND:

XXX Indicates girder stem width

☒ Indicates Theoretical point of no movement for two end stressing

NOTE:

1. For ℄ Hinge Brg, Match Lines, see "Girder Layout No. 2" and "Girder Layout No. 4" sheets.

DESIGN	BY E. Hall	CHECKED R. Odell	
DETAILS	BY C. Figuerres	CHECKED R. Odell	
QUANTITIES	BY G. Zuniga/G. Slocum	CHECKED R. Odell/C. Udarbe	

STATE OF CALIFORNIA
DEPARTMENT OF TRANSPORTATION

DIVISION OF ENGINEERING SERVICES
STRUCTURE DESIGN
DESIGN BRANCH 2

BRIDGE NO. 10-0165
KILOMETER POST R74.945

WILLITS BYPASS
FLOODWAY VIADUCT
GIRDER LAYOUT NO. 3

ALL DIMENSIONS ARE IN MILLIMETERS UNLESS OTHERWISE SHOWN

ORIGINAL SCALE IN MILLIMETERS FOR REDUCED PLANS 0 10 20 30 40 50 60 70 80 90 100

CU 01
EA 262001

DISREGARD PRINTS BEARING EARLIER REVISION DATES

REVISION DATES: 1-29-07 7-27-08 7-15-08 11-24-08 11-26-08 12-04-08 01-22-09 01-28-09

SHEET 45 OF 88

FILE => 10-0165_gnag1o03.dgn

STRUCTURES DESIGN DETAIL SHEET (METRIC) (REV.03-17-04)

USERNAME => s124496 DATE PLOTTED => 28-JAN-2012 TIME PLOTTED => 08:55

DIST	COUNTY	ROUTE	KILOMETER POST TOTAL PROJECT	SHEET No	TOTAL SHEETS
01	Men	101	R69.4/R78.9	785	939

REGISTERED CIVIL ENGINEER 9-15-11 DATE

1-23-12
PLANS APPROVAL DATE

REGISTERED PROFESSIONAL ENGINEER M. Friedheim No. 57968 Exp. 6-30-12 CIVIL STATE OF CALIFORNIA

The State of California or its officers or agents shall not be responsible for the accuracy or completeness of electronic copies of this plan sheet.

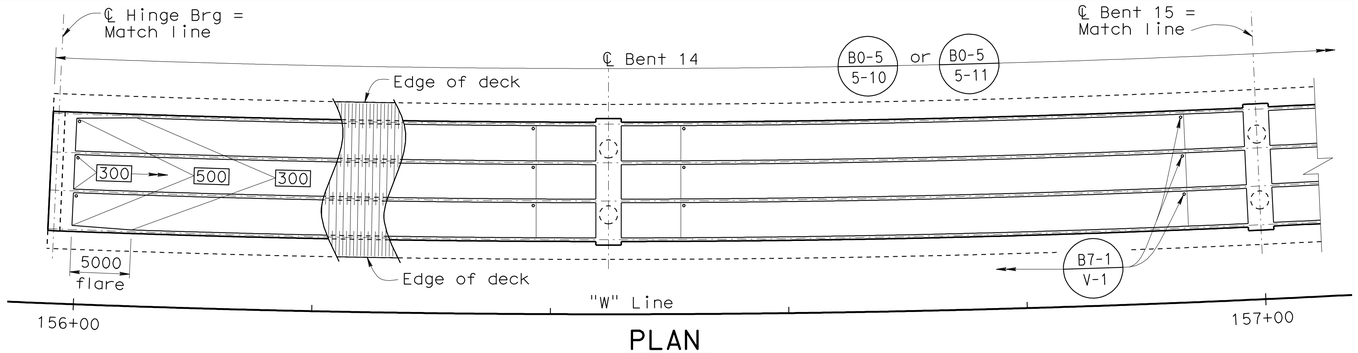

PLAN
1:250

LEGEND:

XXX Indicates girder stem width

⊠ Indicates Theoretical point of no movement for two end stressing

NOTE:

1. For ℄ Hinge Brg, Match Lines, see "Girder Layout No. 3" and "Girder Layout No. 5" sheets.

PRESTRESSING NOTES

FRAME 4

1860 MPa Low Relaxation Strands:

Pjack = 41 600 kN

Anchor Set = 10 mm

Total Number of Girders = 4

Long term losses assumed to be: 172 MPa

Design is based on μ = 0.20 and K = 0.000656/m

Concrete: f'_c = 35 MPa @ 28 days

f'_{ci} = 28 MPa @ time of stressing

Contractor shall submit elongation calculations based on initial stress at ⊠ =0.771 times jacking stress

Two end stressing shall be performed.

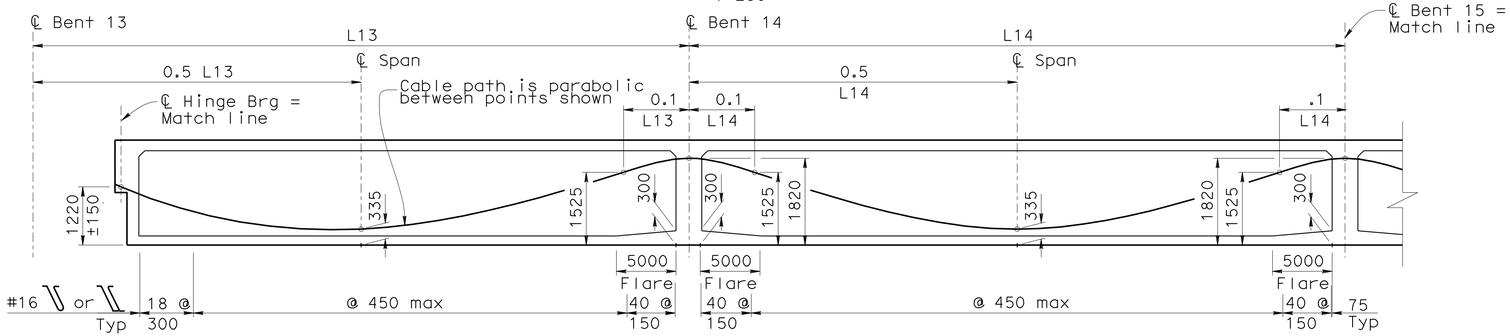

LONGITUDINAL SECTION
No Scale

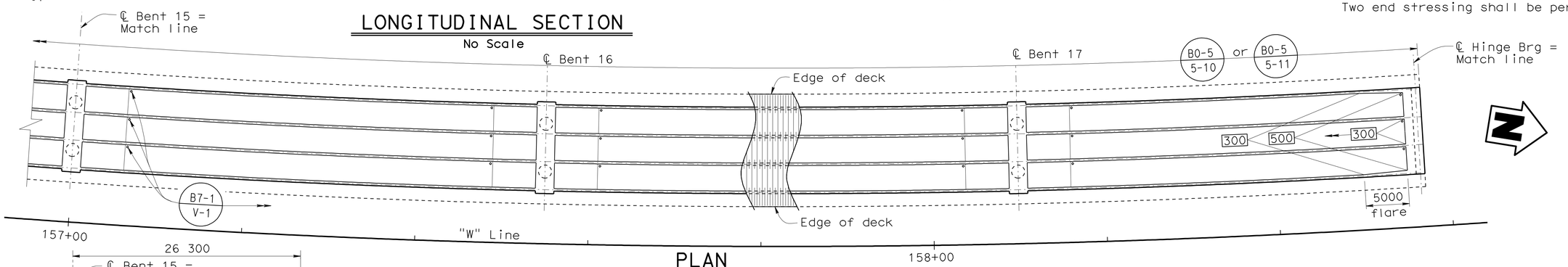

PLAN
1:250

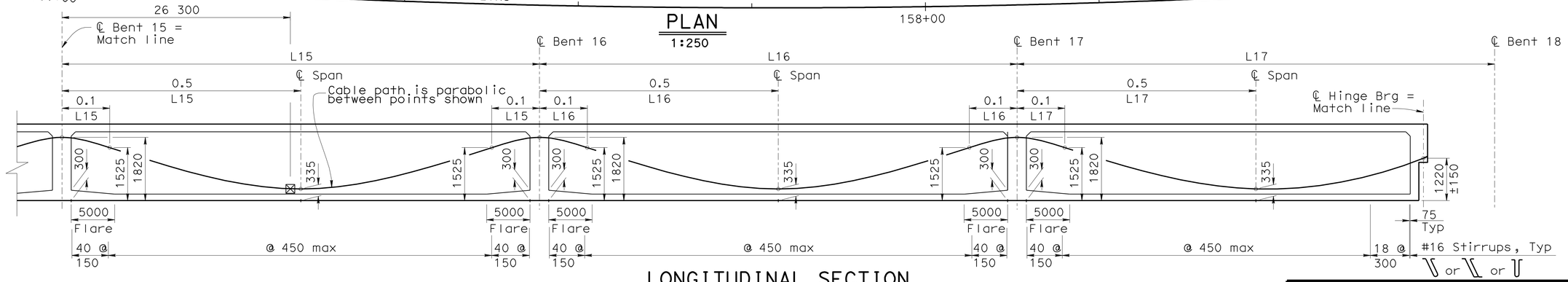

LONGITUDINAL SECTION
No Scale

Caltrans Metric

	BY	CHECKED
DESIGN	E. Hall	R. Odell
DETAILS	C. Figuerres	R. Odell
QUANTITIES	G. Zuniga/G. Slocum	R. Odell/C. Udarbe

STATE OF CALIFORNIA DEPARTMENT OF TRANSPORTATION

DIVISION OF ENGINEERING SERVICES STRUCTURE DESIGN DESIGN BRANCH 2

BRIDGE NO. 10-0165

KILOMETER POST R74.945

WILLITS BYPASS
FLOODWAY VIADUCT
GIRDER LAYOUT NO. 4

ALL DIMENSIONS ARE IN MILLIMETERS UNLESS OTHERWISE SHOWN

ORIGINAL SCALE IN MILLIMETERS FOR REDUCED PLANS 0 10 20 30 40 50 60 70 80 90 100

CU 01
EA 262001

DISREGARD PRINTS BEARING EARLIER REVISION DATES

REVISION DATES: 7-3-08 7-9-08 11-25-08 11-26-08 12-04-08 01-22-09 01-26-09 4-04-11

SHEET 46 OF 88

FILE => 10-0165_gnag1o04.dgn

STRUCTURES DESIGN DETAIL SHEET (METRIC) (REV.03-17-04)

USERNAME => s124196 DATE PLOTTED => 28-JAN-2012 TIME PLOTTED => 08:55

DIST	COUNTY	ROUTE	KILOMETER POST TOTAL PROJECT	SHEET No	TOTAL SHEETS
01	Men	101	R69.4/R78.9	786	939

REGISTERED CIVIL ENGINEER 9-15-11 DATE

1-23-12
PLANS APPROVAL DATE

REGISTERED PROFESSIONAL ENGINEER M. Friedheim No. 57968 Exp. 6-30-12 CIVIL STATE OF CALIFORNIA

The State of California or its officers or agents shall not be responsible for the accuracy or completeness of electronic copies of this plan sheet.

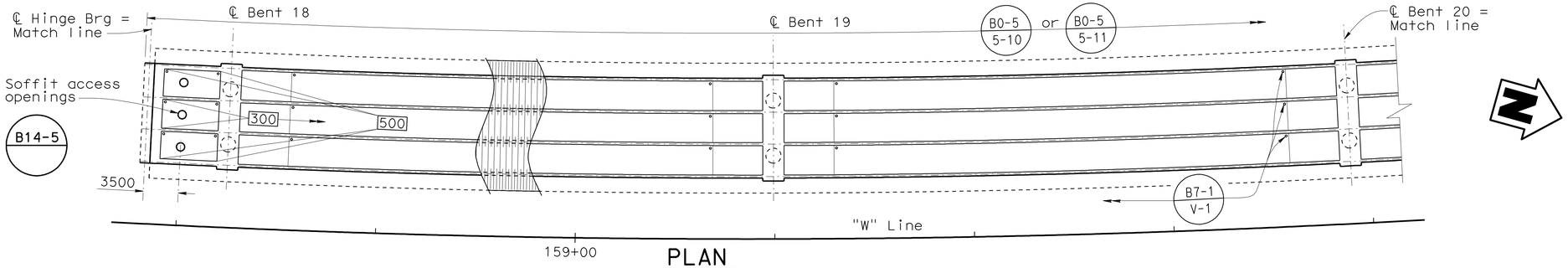

PLAN
1:250

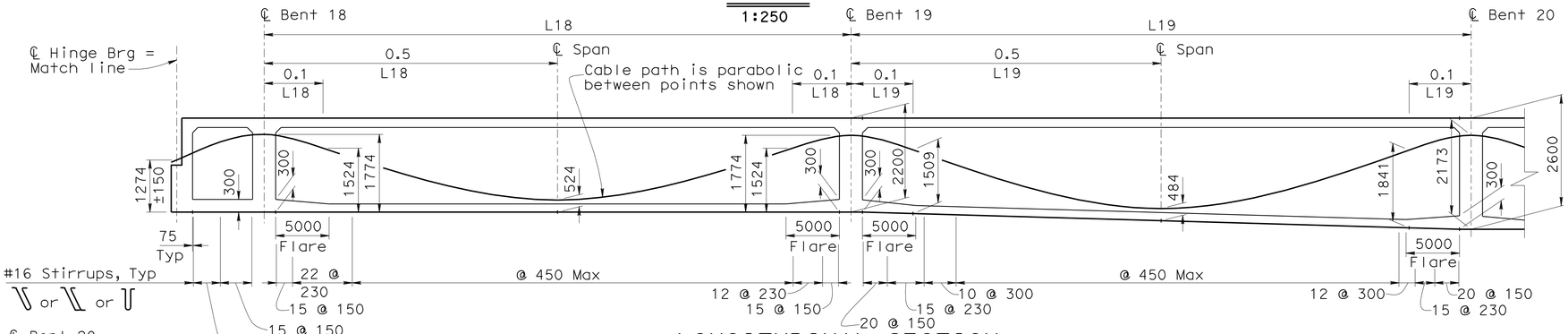

LONGITUDINAL SECTION
No Scale

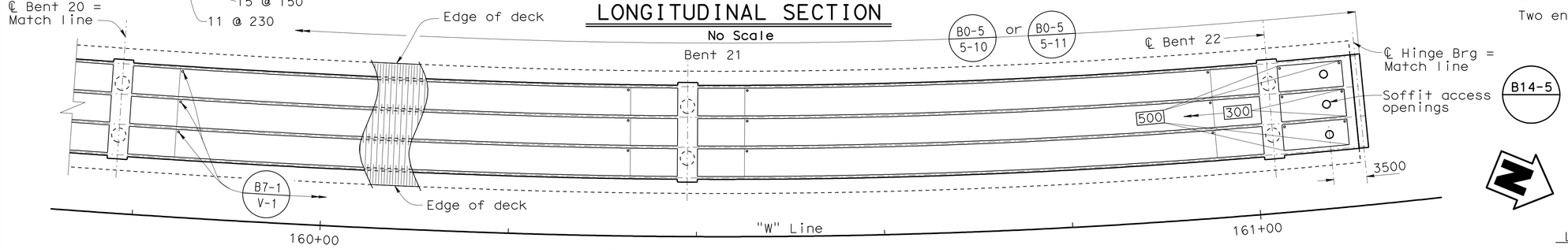

PLAN
1:250

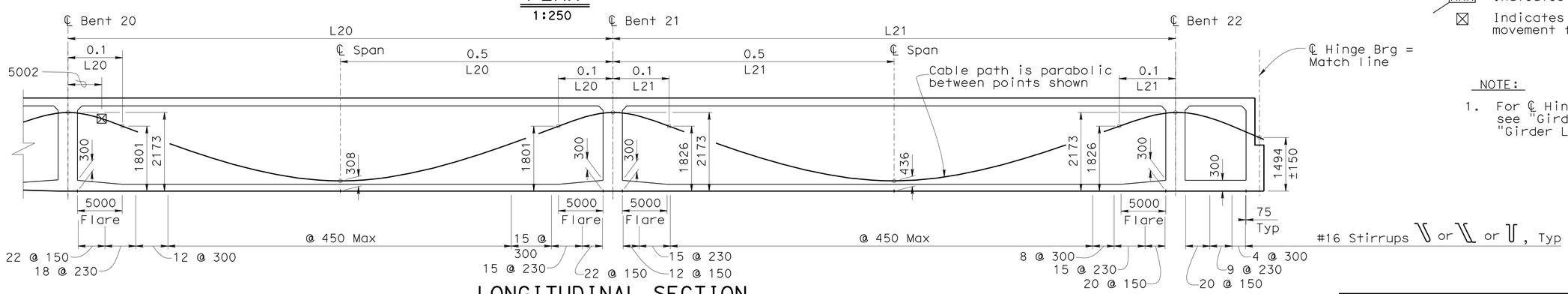

LONGITUDINAL SECTION
No Scale

PRESTRESSING NOTES

FRAME 5

1860 MPa Low Relaxation Strands:

Pjack = 45 350 kN

Anchor Set = 10 mm

Total Number of Girders = 4

Long term losses assumed to be: 172 MPa

Design based on μ = 0.20 and K = 0.000656/m

Concrete: f'_c = 35 MPa @ 28 days

f'_{ci} = 28 MPa @ time of stressing

Contractor shall submit elongation calculations based on initial stress at
☒ = 0.764 times jacking stress

Two end stressing shall be performed.

LEGEND:

XXX Indicates girder stem width

☒ Indicates Theoretical point of no movement for two end stressing

NOTE:

1. For ℄ Hinge Brg, Match Lines, see "Girder Layout No. 4" and "Girder Layout No. 6" sheets.

Caltrans Metric

	BY	CHECKED
DESIGN	R. Odell	G. Zuniga
DETAILS	C. Figuerres/S. Ng	G. Zuniga
QUANTITIES	G. Zuniga/G. Slocum	R. Odell/C. Udarbe

STATE OF CALIFORNIA
DEPARTMENT OF TRANSPORTATION

DIVISION OF ENGINEERING SERVICES
STRUCTURE DESIGN
DESIGN BRANCH 2

BRIDGE NO. 10-0165
KILOMETER POST R74.945

WILLITS BYPASS
FLOODWAY VIADUCT
GIRDER LAYOUT NO. 5

ALL DIMENSIONS ARE IN MILLIMETERS UNLESS OTHERWISE SHOWN

ORIGINAL SCALE IN MILLIMETERS FOR REDUCED PLANS 0 10 20 30 40 50 60 70 80 90 100

CU 01
EA 262001

DISREGARD PRINTS BEARING EARLIER REVISION DATES

REVISION DATES: 4-04-11 | 7-11-08 | 9-03-08 | 12-08-08 | 12-18-08 | 12-22-08 | 01-05-09 | 01-08-09 | 01-29-09

SHEET 47 OF 88

FILE => 10-0165_gnagl005.dgn

STRUCTURES DESIGN DETAIL SHEET (METRIC) (REV.03-17-04)

USERNAME => s114640 DATE PLOTTED => 28-JAN-2012 TIME PLOTTED => 08:52

DIST	COUNTY	ROUTE	KILOMETER POST TOTAL PROJECT	SHEET No	TOTAL SHEETS
01	Men	101	R69.4/R78.9	787	939

REGISTERED CIVIL ENGINEER 9-15-11 DATE

1-23-12
PLANS APPROVAL DATE

REGISTERED PROFESSIONAL ENGINEER M. Friedheim No. 57968 Exp. 6-30-12 CIVIL STATE OF CALIFORNIA

The State of California or its officers or agents shall not be responsible for the accuracy or completeness of electronic copies of this plan sheet.

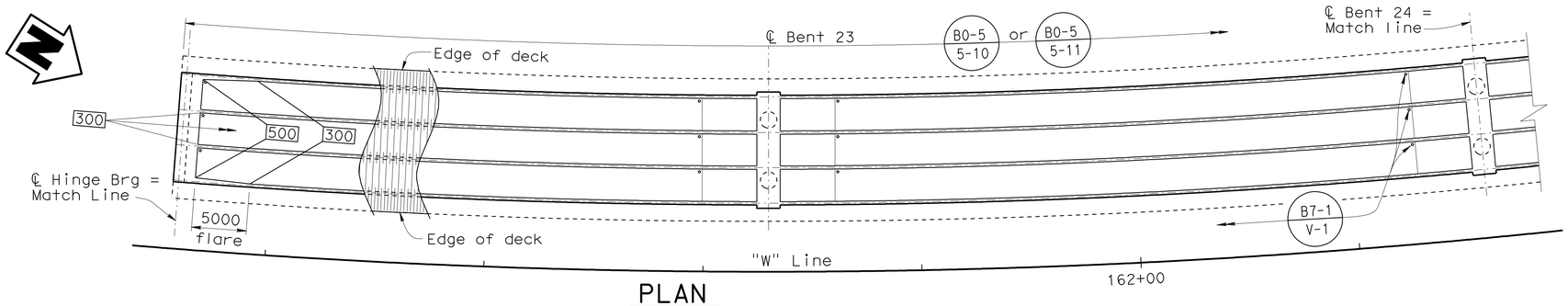

PLAN
1:250

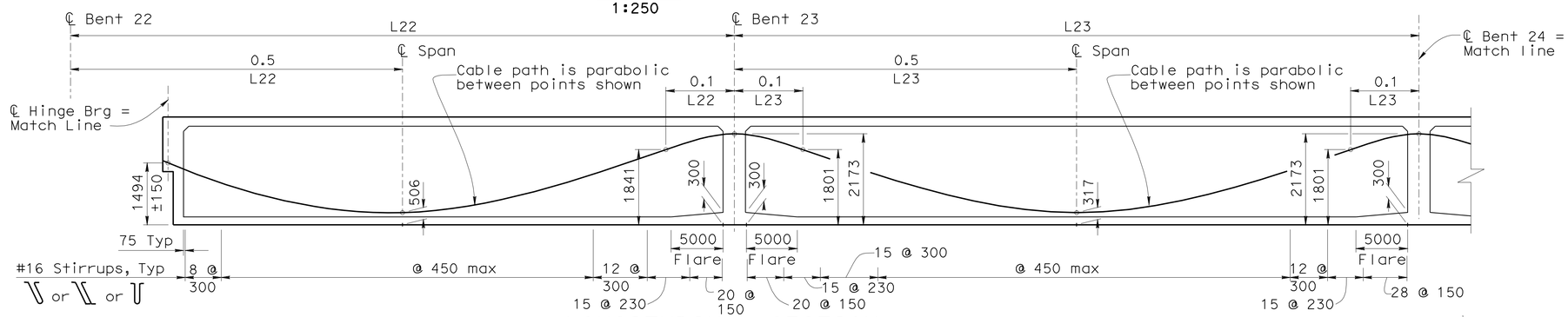

LONGITUDINAL SECTION
No Scale

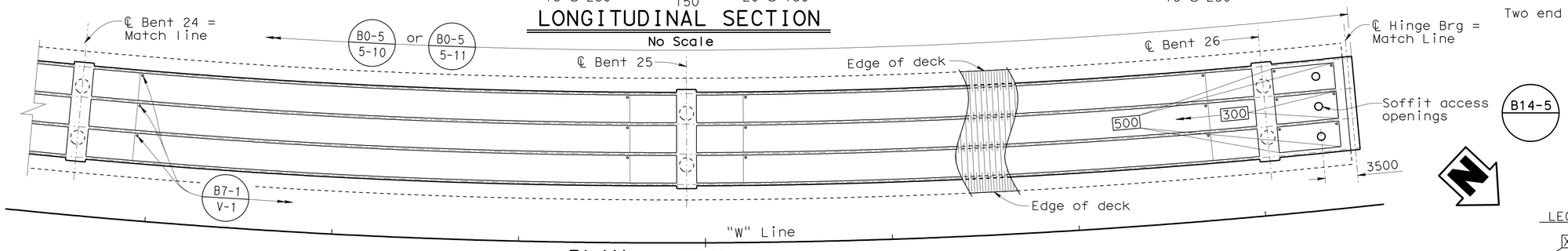

PLAN
1:250

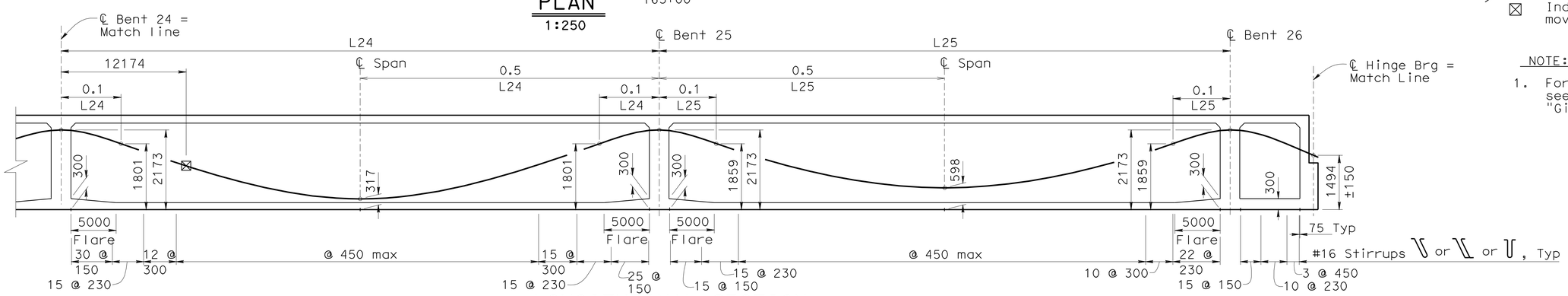

LONGITUDINAL SECTION
No Scale

PRESTRESSING NOTES

FRAME 6

1860 MPa Low Relaxation Strands:

Pjack = 49 200 kN

Anchor Set = 10 mm

Total Number of Girders = 4

Long term losses assumed to be: 172 MPa

Design based on μ = 0.20 and K = 0.000656/m

Concrete: f'c = 35 MPa @ 28 days

f'ci = 28 MPa @ time of stressing

Contractor shall submit elongation calculations based on initial stress at

☒ = 0.776 times jacking stress

Two end stressing shall be performed.

LEGEND:

XXX Indicates girder stem width

☒ Indicates Theoretical point of no movement for two end stressing

NOTE:

1. For ℄ Hinge Brg, Match Lines, see "Girder Layout No. 5" and "Girder Layout No. 7" sheets.

DESIGN	BY R. Odell	CHECKED G. Zuniga	
DETAILS	BY C. Figuerres/S. Ng	CHECKED G. Zuniga	
QUANTITIES	BY G. Zuniga/G. Slocum	CHECKED R. Odell/C. Udarbe	

STATE OF CALIFORNIA
DEPARTMENT OF TRANSPORTATION

DIVISION OF ENGINEERING SERVICES
STRUCTURE DESIGN
DESIGN BRANCH 2

BRIDGE NO. 10-0165
KILOMETER POST R74.945

WILLITS BYPASS
FLOODWAY VIADUCT
GIRDER LAYOUT NO. 6

Caltrans Metric

ALL DIMENSIONS ARE IN MILLIMETERS UNLESS OTHERWISE SHOWN

ORIGINAL SCALE IN MILLIMETERS FOR REDUCED PLANS 0 10 20 30 40 50 60 70 80 90 100

CU 01
EA 262001

DISREGARD PRINTS BEARING EARLIER REVISION DATES

REVISION DATES: 11-2-06 1-29-07 7-11-08 9-03-08 10-22-08 12-09-08 12-18-08 12-22-08 01-06-09 01-29-09

SHEET 48 OF 88

FILE => 10-0165_gnag1o06.dgn

STRUCTURES DESIGN DETAIL SHEET (METRIC) (REV.03-17-04)

USERNAME => s12614 DATE PLOTTED => 18-APR-2012 TIME PLOTTED => 08:53

DIST	COUNTY	ROUTE	KILOMETER POST TOTAL PROJECT	SHEET No	TOTAL SHEETS
01	Men	101	R69.4/R78.9	788	939

REGISTERED CIVIL ENGINEER 9-15-11 DATE

1-23-12
PLANS APPROVAL DATE

REGISTERED PROFESSIONAL ENGINEER M. Friedheim No. 57968 Exp. 6-30-12 CIVIL STATE OF CALIFORNIA

The State of California or its officers or agents shall not be responsible for the accuracy or completeness of electronic copies of this plan sheet.

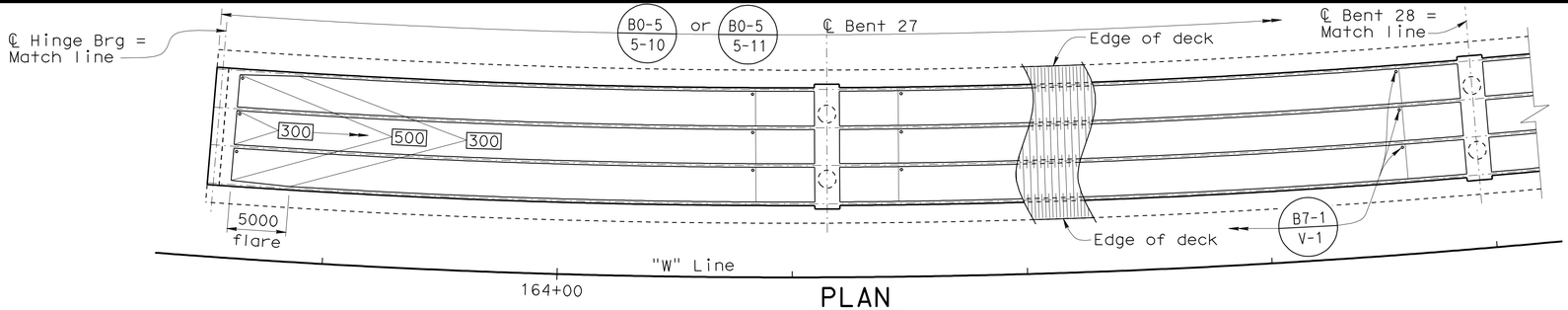

PLAN
1:250

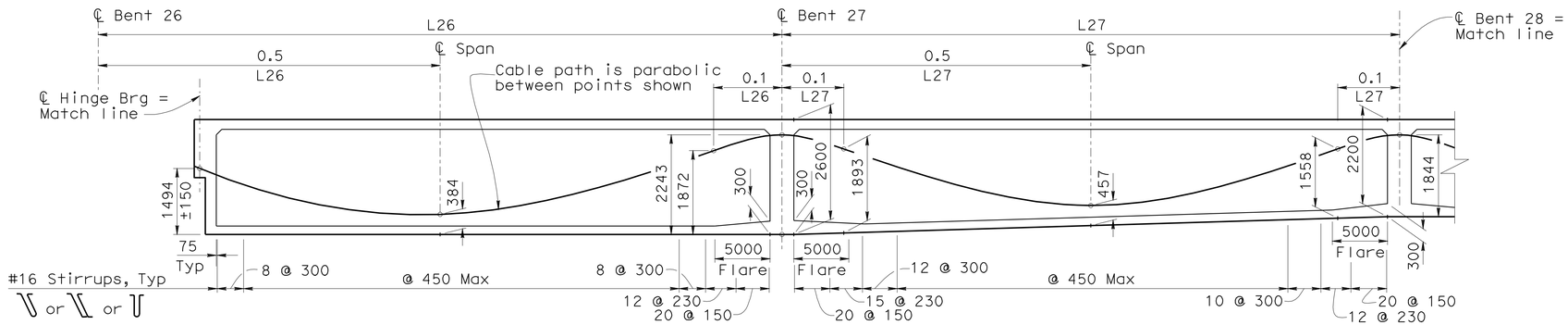

LONGITUDINAL SECTION
No Scale

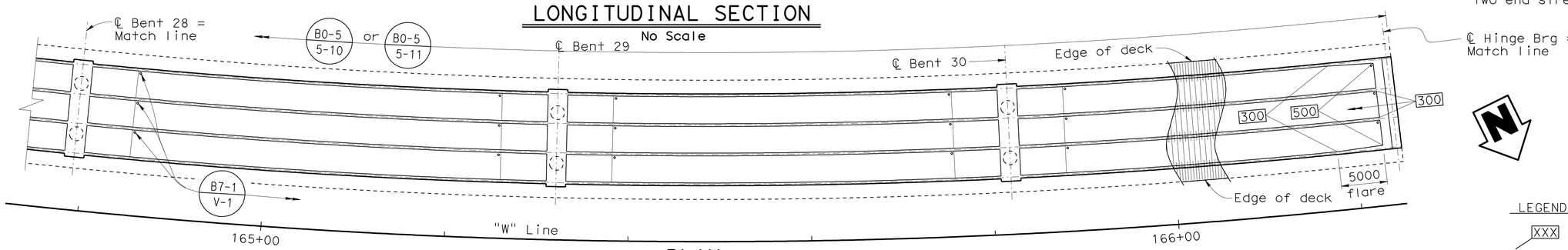

PLAN
1:250

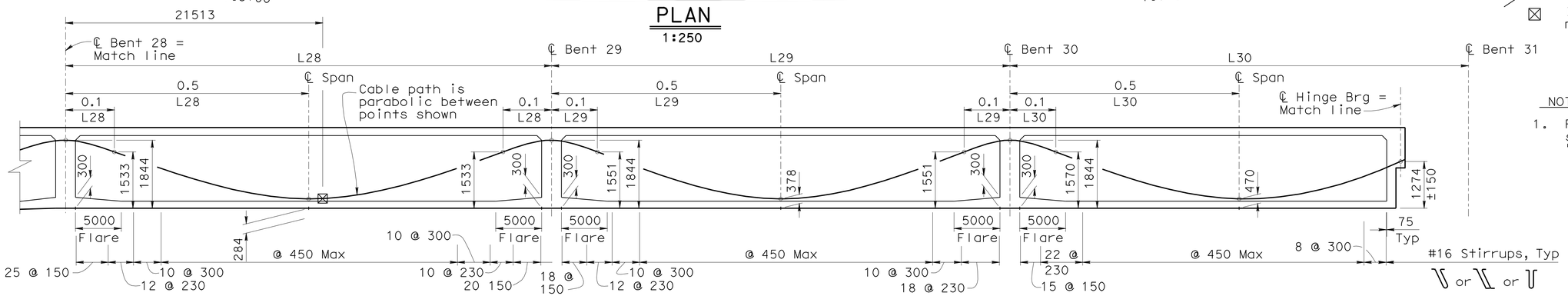

LONGITUDINAL SECTION
No Scale

PRESTRESSING NOTES

FRAME 7

1860 MPa Low Relaxation Strands:

Pjack =37 500 kN

Anchor Set = 10 mm

Total Number of Girders = 4

Long term losses assumed to be: 172 MPa

Design based on μ = 0.20 and K = 0.000656/m

Concrete: f'_c = 35 MPa @ 28 days

f'_{ci} = 28 MPa @ time of stressing

Contractor shall submit elongation calculations based on initial stress at
☒ = 0.759 times jacking stress

Two end stressing shall be performed.

LEGEND:

XXX Indicates girder stem width

☒ Indicates Theoretical point of no movement for two end stressing

NOTE:

1. For ℄ Hinge Brg, Match Lines, see "Girder Layout No. 5" and "Girder Layout No. 7" sheets.

	BY	CHECKED
DESIGN	R. Odell	G. Zuniga
DETAILS	C. Figuerres/S. Ng	G. Zuniga
QUANTITIES	G. Zuniga/G. Slocum	R. Odell/C. Udarbe

STATE OF CALIFORNIA
DEPARTMENT OF TRANSPORTATION

DIVISION OF ENGINEERING SERVICES
STRUCTURE DESIGN
DESIGN BRANCH 2

BRIDGE NO. 10-0165
KILOMETER POST R74.945

WILLITS BYPASS
FLOODWAY VIADUCT
GIRDER LAYOUT NO. 7

Caltrans Metric

ALL DIMENSIONS ARE IN MILLIMETERS UNLESS OTHERWISE SHOWN

ORIGINAL SCALE IN MILLIMETERS FOR REDUCED PLANS 0 10 20 30 40 50 60 70 80 90 100

CU 01
EA 262001

DISREGARD PRINTS BEARING EARLIER REVISION DATES

REVISION DATES: 7-3-08 7-14-08 9-03-08 12-09-08 12-18-08 12-22-08 01-06-09 01-29-09 4-04-11

SHEET 49 OF 88

FILE => 10-0165_gnag1o07.dgn

STRUCTURES DESIGN DETAIL SHEET (METRIC) (REV.03-17-04)

USERNAME => s121614 DATE PLOTTED => 18-APR-2012 TIME PLOTTED => 08:53

DIST	COUNTY	ROUTE	KILOMETER POST TOTAL PROJECT	SHEET No	TOTAL SHEETS
01	Men	101	R69.4/R78.9	789	939

REGISTERED CIVIL ENGINEER 9-15-11 DATE

1-23-12
PLANS APPROVAL DATE

REGISTERED PROFESSIONAL ENGINEER M. Friedheim No. 57968 Exp. 6-30-12 CIVIL STATE OF CALIFORNIA

The State of California or its officers or agents shall not be responsible for the accuracy or completeness of electronic copies of this plan sheet.

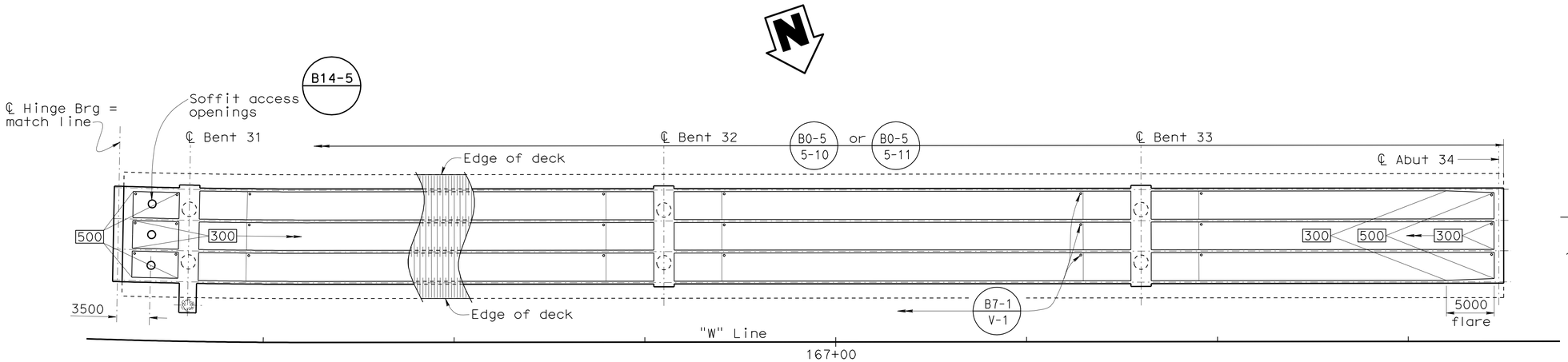

PLAN
1:250

LEGEND:

XXX Indicates girder stem width

⊠ Indicates theoretical point of no movement for two end stressing

NOTE:

1. For ℄ hinge brg match lines, see "Girder Layout No. 7" sheet.

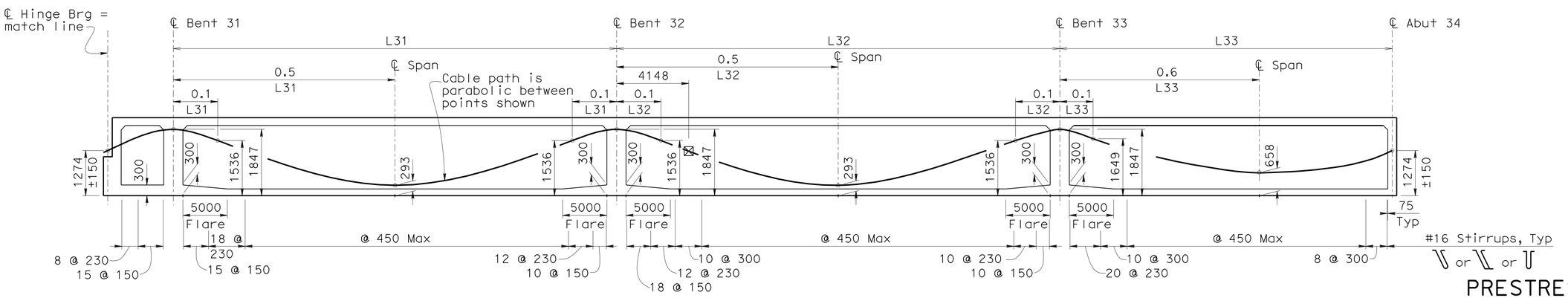

LONGITUDINAL SECTION
No Scale

PRESTRESSING NOTES
FRAME 8

1860 MPa Low Relaxation Strands:

Pjack = 32 200 kN

Anchor Set = 10 mm

Total Number of Girders = 4

Long term losses assumed to be: 172 MPa

Design based on μ = 0.15 and K = 0.000656/m

Concrete: f'_c = 35 MPa @ 28 days

f'_{ci} = 28 MPa @ time of stressing

Contractor shall submit elongation calculations based on initial stress at
⊠ = 0.863 times jacking stress

Two end stressing shall be performed.

WILLITS BYPASS
FLOODWAY VIADUCT
GIRDER LAYOUT NO. 8

Caltrans Metric

	BY	CHECKED
DESIGN	R. Odell	G. Zuniga
DETAILS	C. Figuerres	G. Zuniga
QUANTITIES	G. Zuniga/G. Slocum	R. Odell/C. Udarbe

STATE OF CALIFORNIA
DEPARTMENT OF TRANSPORTATION

DIVISION OF ENGINEERING SERVICES
STRUCTURE DESIGN
DESIGN BRANCH 2

BRIDGE NO. 10-0165
KILOMETER POST R74.945

CU 01
EA 262001

ALL DIMENSIONS ARE IN MILLIMETERS UNLESS OTHERWISE SHOWN

ORIGINAL SCALE IN MILLIMETERS FOR REDUCED PLANS 0 10 20 30 40 50 60 70 80 90 100

DISREGARD PRINTS BEARING EARLIER REVISION DATES

REVISION DATES: 6-2-08 7-14-08 9-03-08 10-28-08 12-18-08 12-18-08 12-22-08 01-06-09 01-28-09 4-04-11

SHEET 50 OF 88

FILE => 10-0165_gnaglo08.dgn

STRUCTURES DESIGN DETAIL SHEET (METRIC) (REV.03-17-04)

USERNAME => s14640 DATE PLOTTED => 28-JAN-2012 TIME PLOTTED => 08:53

DIST	COUNTY	ROUTE	KILOMETER POST TOTAL PROJECT	SHEET No	TOTAL SHEETS
01	Men	101	R69.4/R78.9	790	939

REGISTERED CIVIL ENGINEER 9-15-11 DATE

1-23-12
PLANS APPROVAL DATE

REGISTERED PROFESSIONAL ENGINEER M. Friedheim No. 57968 Exp. 6-30-12 CIVIL STATE OF CALIFORNIA

The State of California or its officers or agents shall not be responsible for the accuracy or completeness of electronic copies of this plan sheet.

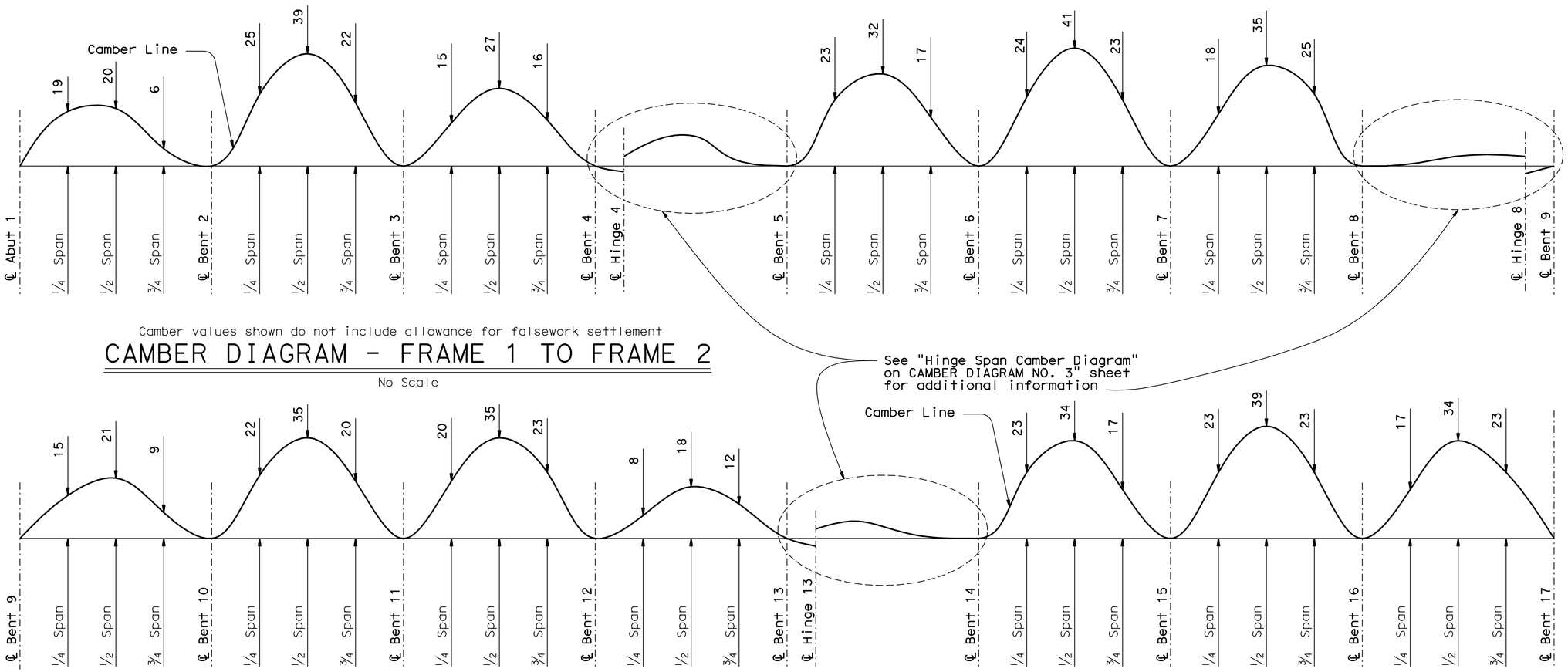

Camber values shown do not include allowance for falsework settlement

CAMBER DIAGRAM - FRAME 1 TO FRAME 2

No Scale

Camber values shown do not include allowance for falsework settlement

CAMBER DIAGRAM - FRAME 3 TO FRAME 4

No Scale

DESIGN	BY E. Hall	CHECKED R. Odell	
DETAILS	BY S. Ng	CHECKED E. Hall	
QUANTITIES	BY G. Zuniga/G. Slocum	CHECKED R. Odell/C. Udarbe	

STATE OF CALIFORNIA
DEPARTMENT OF TRANSPORTATION

DIVISION OF ENGINEERING SERVICES
STRUCTURE DESIGN
DESIGN BRANCH 2

BRIDGE NO. 10-0165
KILOMETER POST R74.945

WILLITS BYPASS
FLOODWAY VIADUCT
CAMBER DIAGRAM NO. 1

ALL DIMENSIONS ARE IN METERS UNLESS OTHERWISE SHOWN

ORIGINAL SCALE IN MILLIMETERS FOR REDUCED PLANS 0 10 20 30 40 50 60 70 80 90 100

CU 01
EA 262001

DISREGARD PRINTS BEARING EARLIER REVISION DATES → 10-17-08 01-13-09 01-22-09

REVISION DATES

SHEET 51 OF 88

FILE => 10-0165_gncam01.dgn

STRUCTURES DESIGN DETAIL SHEET (METRIC) (REV.03-17-04)

USERNAME => s114640 DATE PLOTTED => 28-JAN-2012 TIME PLOTTED => 08:53

DIST	COUNTY	ROUTE	KILOMETER POST TOTAL PROJECT	SHEET No	TOTAL SHEETS
01	Men	101	R69.4/R78.9	791	939

REGISTERED CIVIL ENGINEER 9-15-11 DATE

1-23-12
PLANS APPROVAL DATE

REGISTERED PROFESSIONAL ENGINEER M. Friedheim No. 57968 Exp. 6-30-12 CIVIL STATE OF CALIFORNIA

The State of California or its officers or agents shall not be responsible for the accuracy or completeness of electronic copies of this plan sheet.

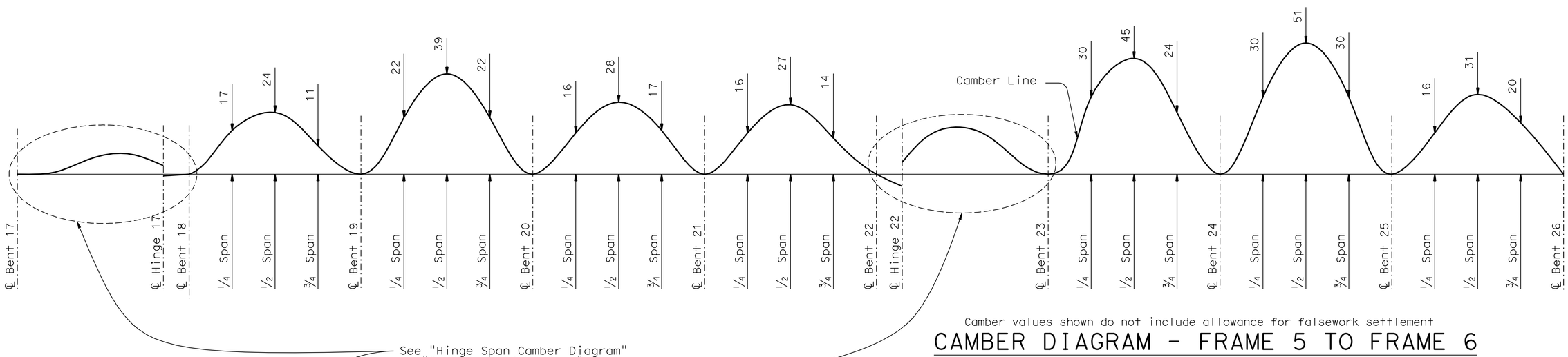

Camber values shown do not include allowance for falsework settlement

CAMBER DIAGRAM - FRAME 5 TO FRAME 6

No Scale

See "Hinge Span Camber Diagram" on "CAMBER DIAGRAM NO. 3" sheet for additional information

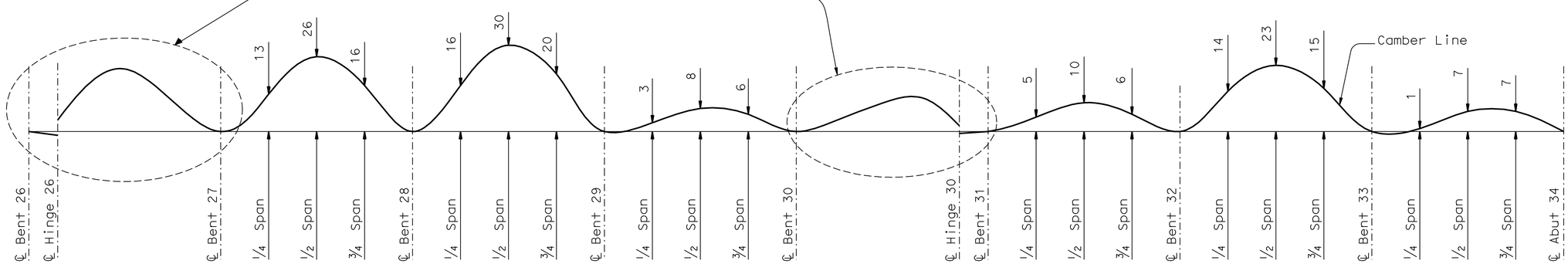

Camber values shown do not include allowance for falsework settlement

CAMBER DIAGRAM - FRAME 7 TO FRAME 8

No Scale

DESIGN	BY R. Odell	CHECKED E. Hall	
DETAILS	BY S. Ng	CHECKED R. Odell	
QUANTITIES	BY G. Zuniga/G. Slocum	CHECKED R. Odell/C. Udarbe	

STATE OF CALIFORNIA
DEPARTMENT OF TRANSPORTATION

DIVISION OF ENGINEERING SERVICES
STRUCTURE DESIGN
DESIGN BRANCH 2

BRIDGE NO. 10-0165
KILOMETER POST R74.945

WILLITS BYPASS
FLOODWAY VIADUCT
CAMBER DIAGRAM NO. 2

Caltrans Metric

ALL DIMENSIONS ARE IN METERS UNLESS OTHERWISE SHOWN

ORIGINAL SCALE IN MILLIMETERS FOR REDUCED PLANS 0 10 20 30 40 50 60 70 80 90 100

CU 01
EA 262001

DISREGARD PRINTS BEARING EARLIER REVISION DATES

REVISION DATES: ~~10-17-08~~ ~~01-13-09~~ 01-22-09

SHEET 52 OF 88

FILE => 10-0165_gncam02.dgn

STRUCTURES DESIGN DETAIL SHEET (METRIC) (REV.03-17-04)

USERNAME => s114640 DATE PLOTTED => 28-JAN-2012 TIME PLOTTED => 08:53

DIST	COUNTY	ROUTE	KILOMETER POST TOTAL PROJECT	SHEET No	TOTAL SHEETS
01	Men	101	R69.4/R78.9	792	939

REGISTERED CIVIL ENGINEER 9-15-11 DATE

1-23-12
PLANS APPROVAL DATE

REGISTERED PROFESSIONAL ENGINEER M. Friedheim No. 57968 Exp. 6-30-12 CIVIL STATE OF CALIFORNIA

The State of California or its officers or agents shall not be responsible for the accuracy or completeness of electronic copies of this plan sheet.

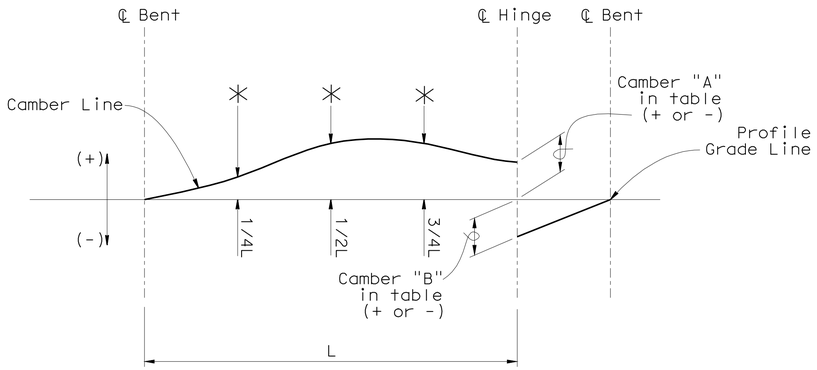

HINGES 8,17 AND 30

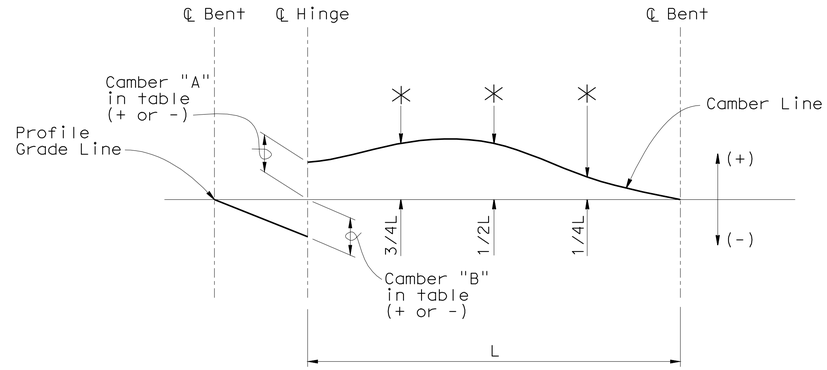

HINGES 4,13,22 AND 26

SUPPORTED HINGE DEAD LOAD + PRESTRESS REACTION ✳

Hinge	Dead Load Reaction (KN)	P/S Reaction (KN)
4	3340	245
8	3340	265
13	3340	265
17	3340	265
22	4182	294
26	4176	218
30	3132	210

✳ Unfactored Loads

HINGE SPAN CAMBER DIAGRAM

No Scale

✳ Long cantilever adjusted camber-See Table for Time Dependent Values.

TIME DEPENDENT CAMBER VALUES

Days ✡	Hinge 4					Hinge 8					Hinge 13					Hinge 17					Hinge 22					Hinge 26					Hinge 30				
	Camber "A"	Camber "B"	Long Cantilever Adjusted Camber			Camber "A"	Camber "B"	Long Cantilever Adjusted Camber			Camber "A"	Camber "B"	Long Cantilever Adjusted Camber			Camber "A"	Camber "B"	Long Cantilever Adjusted Camber			Camber "A"	Camber "B"	Long Cantilever Adjusted Camber			Camber "A"	Camber "B"	Long Cantilever Adjusted Camber			Camber "A"	Camber "B"	Long Cantilever Adjusted Camber		
			@1/4L	@1/2L	@3/4L			@1/4L	@1/2L	@3/4L			@1/4L	@1/2L	@3/4L			@1/4L	@1/2L	@3/4L			@1/4L	@1/2L	@3/4L			@1/4L	@1/2L	@3/4L			@1/4L	@1/2L	@3/4L
30	8	8	3	15	18	2	1	0	9	10	5	4	2	11	13	4	3	1	11	12	14	13	5	21	26	3	2	19	37	32	8	8	4	11	14
60	8	6	3	15	17	2	0	0	9	10	5	3	2	11	12	4	2	1	10	12	13	11	5	21	25	2	0	19	37	32	8	7	4	11	13
90	7	5	3	15	17	1	-1	0	9	9	4	1	1	10	12	3	1	1	10	12	12	9	5	20	24	1	-2	19	37	32	8	6	4	11	13
120	7	4	3	14	17	1	-2	0	9	9	4	1	1	10	12	3	0	1	10	11	12	8	5	20	24	1	-3	19	37	31	8	6	4	11	13
180	7	4	3	14	17	1	-2	0	8	9	4	1	1	10	12	3	0	1	10	11	12	7	5	20	24	1	-3	19	37	31	7	6	4	11	13
240	7	4	3	14	16	1	-3	0	8	9	4	0	1	10	11	3	0	1	10	11	11	7	5	20	24	1	-3	19	37	31	7	5	4	11	13
360	7	3	3	14	16	1	-3	0	8	9	3	0	1	10	11	3	-1	1	10	11	11	7	5	20	24	1	-4	19	37	31	7	5	4	11	13
720	6	3	3	14	16	0	-3	0	8	9	3	-1	1	10	11	2	-1	1	10	11	11	6	4	20	23	1	-4	19	36	31	7	5	4	11	13

✡ Elapsed time in days measured from prestressing short hinge side till closure and load transfer.

Caltrans Metric

ALL DIMENSIONS ARE IN METERS UNLESS OTHERWISE SHOWN

ORIGINAL SCALE IN MILLIMETERS FOR REDUCED PLANS 0 10 20 30 40 50 60 70 80 90 100

	BY	CHECKED
DESIGN	E. Hall/R. Odell	R. Odell/G. Zuniga
DETAILS	S. Ng	R. Odell/G. Zuniga
QUANTITIES	G. Zuniga/G. Slocum	R. Odell/C. Udarbe

STATE OF CALIFORNIA
DEPARTMENT OF TRANSPORTATION

DIVISION OF ENGINEERING SERVICES
STRUCTURE DESIGN
DESIGN BRANCH 2

CU 01
EA 262001

BRIDGE NO. 10-0165
KILOMETER POST R74.945

WILLITS BYPASS
FLOODWAY VIADUCT
CAMBER DIAGRAM NO. 3

DISREGARD PRINTS BEARING EARLIER REVISION DATES

REVISION DATES: 10-11-08 01-06-09 01-07-09 02-04-09 02-10-09

SHEET 53 OF 88

FILE => 10-0165_gncam03.dgn

STRUCTURES DESIGN DETAIL SHEET (METRIC) (REV.03-17-04)

USERNAME => s114640 DATE PLOTTED => 28-JAN-2012 TIME PLOTTED => 08:53

DIST	COUNTY	ROUTE	KILOMETER POST TOTAL PROJECT	SHEET No	TOTAL SHEETS
01	Men	101	R69.4/R78.9	793	939

REGISTERED CIVIL ENGINEER 9-15-11 DATE

1-23-12
PLANS APPROVAL DATE

REGISTERED PROFESSIONAL ENGINEER M. Friedheim No. 57968 Exp. 6-30-12 CIVIL STATE OF CALIFORNIA

The State of California or its officers or agents shall not be responsible for the accuracy or completeness of electronic copies of this plan sheet.

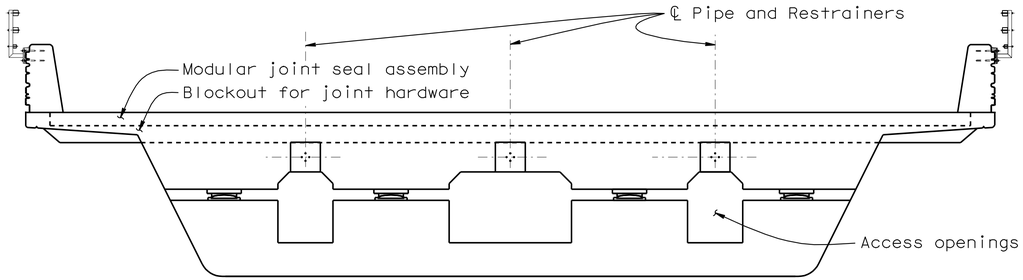

SECTION AT ℄ BEARING

1:40

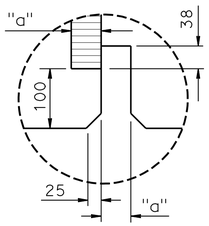

DETAIL A

1:5

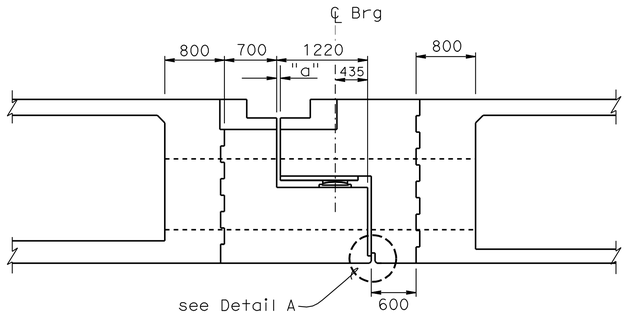

ELEVATION THROUGH BEARING

1:40

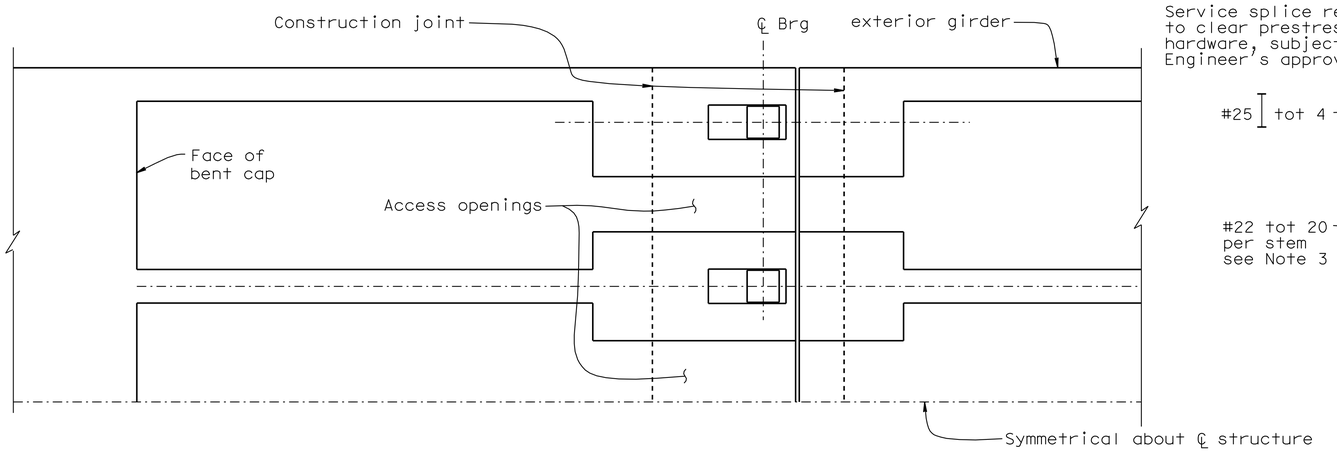

PLAN THROUGH BEARING

1:40

NOTES:

1. Reinforcement shown is per stem and shall be evenly spaced over the width of the seat unless indicated otherwise.
2. Bars may be adjusted to avoid interference with prestress anchorage hardware, subject to Engineer's approval.
3. These bars shall be placed into 4 equally spaced vertical rows. Bars which interfere with prestress operations shall be service spliced and placed after stressing is complete.
4. For Sections A-A, B-B, and C-C, see "Hinge Details No. 3" sheet.
5. Cross slope at hinge is not shown.
6. T-heads for these bars shall be staggered so that the ends are 200 mm clear of each other.
7. Hinges 4, 8, 13, 17, 30 shown, hinges 22 and 26 are similar.
8. For End Diaphragm Reinforcement not shown, see End Diaphragm Detail and Section C-C on "Hinge Details No. 3" sheet.

LEGEND:

⊢⊣, ⊢— = single or double headed bar

✳ = indicates bar is continuous across length of hinge

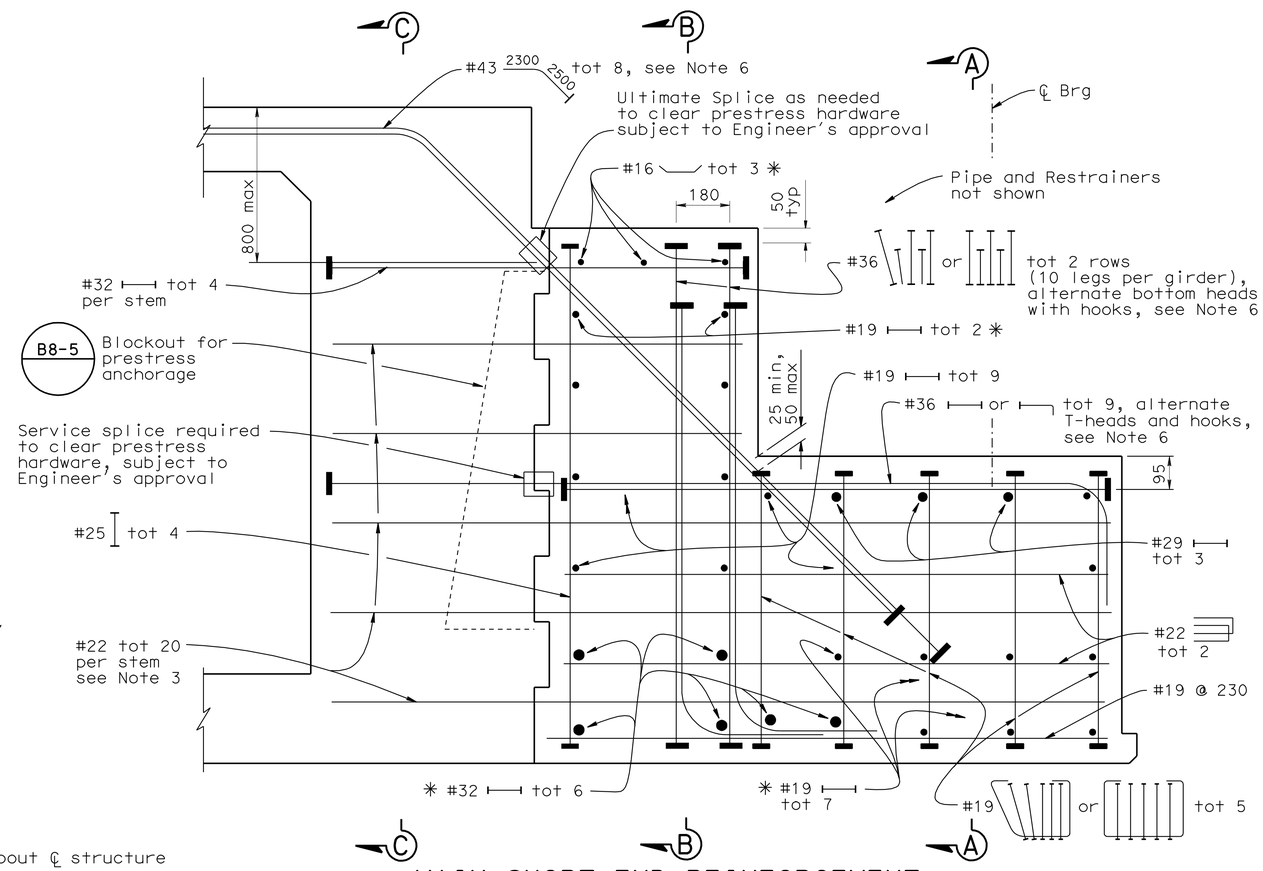

MAIN SHORT END REINFORCEMENT

1:10

DESIGN	BY M. Friedheim	CHECKED G. Slocum	
DETAILS	BY E. Montevirgen	CHECKED G. Slocum	
QUANTITIES	BY G. Zuniga/G. Slocum	CHECKED R. Odell/C. Udarbe	

STATE OF CALIFORNIA
DEPARTMENT OF TRANSPORTATION

DIVISION OF ENGINEERING SERVICES
STRUCTURE DESIGN
DESIGN BRANCH 2

BRIDGE NO. 10-0165
KILOMETER POST R74.945

WILLITS BYPASS
FLOODWAY VIADUCT
HINGE DETAILS NO. 1

ALL DIMENSIONS ARE IN MILLIMETERS UNLESS OTHERWISE SHOWN

ORIGINAL SCALE IN MILLIMETERS FOR REDUCED PLANS 0 10 20 30 40 50 60 70 80 90 100

CU 01
EA 262001

DISREGARD PRINTS BEARING EARLIER REVISION DATES

REVISION DATES: 2-08-07, 8-18-08, 2-12-09, 2-26-09, 3-04-09, 4-09-09

SHEET 54 OF 88

FILE => 10-0165_gnhd01.dgn

STRUCTURES DESIGN DETAIL SHEET (METRIC) (REV.03-17-04)

USERNAME => s121614 DATE PLOTTED => 28-JAN-2012 TIME PLOTTED => 07:44

DIST	COUNTY	ROUTE	KILOMETER POST TOTAL PROJECT	SHEET No	TOTAL SHEETS
01	Men	101	R69.4/R78.9	794	939

REGISTERED CIVIL ENGINEER 9-15-11 DATE

1-23-12
PLANS APPROVAL DATE

REGISTERED PROFESSIONAL ENGINEER M. Friedheim No. 57968 Exp. 6-30-12 CIVIL STATE OF CALIFORNIA

The State of California or its officers or agents shall not be responsible for the accuracy or completeness of electronic copies of this plan sheet.

LEGEND:

⊢⊣, ⊢— = single or double headed bar

✳ = indicates bar is continuous across length of hinge

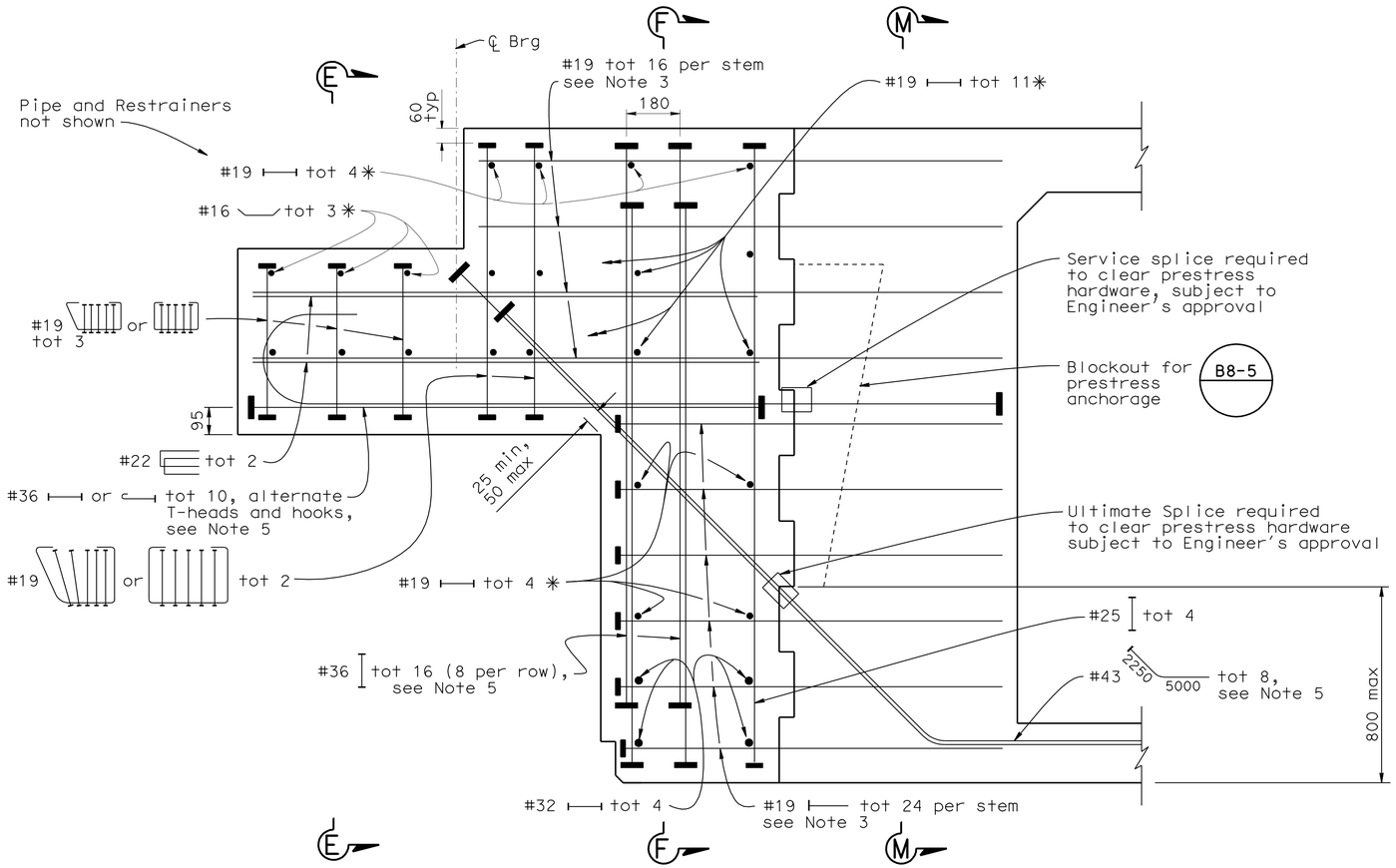

MAIN LONG END REINFORCEMENT

1:10

NOTES:

1. Reinforcement shown is per stem and shall be evenly spaced over the width of the seat unless indicated otherwise.
2. Bars may be adjusted to avoid interference with prestress anchorage hardware, subject to Engineer's approval.
3. These bars shall be placed into 4 equally spaced vertical rows. Bars which interfere with prestress operations shall be service spliced and placed after stressing is complete.
4. For Sections E-E and F-F see "Hinge Details No. 4" sheet.
5. T-heads for these bars shall be staggered so that the ends are 200 mm clear of each other.
6. Hinges 4, 8, 13, 17, 30 shown, hinges 22 and 26 are similar.
7. For End Diaphragm Reinforcement not shown, see End Diaphragm Detail on "Hinge Details No. 3" sheet.

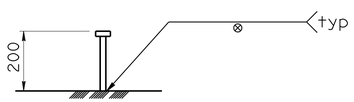

STUD CONNECTOR

No Scale

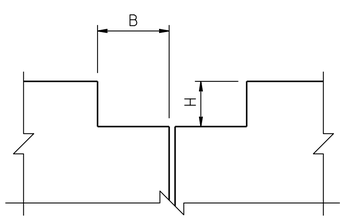

LOCATION	B	H
Hinge 4	600	380
Hinge 8	760	405
Hinge 13	760	405
Hinge 17	760	405
Hinge 22	760	405
Hinge 26	760	405
Hinge 30	600	380

BLOCKOUT DETAIL AT HINGES

No Scale

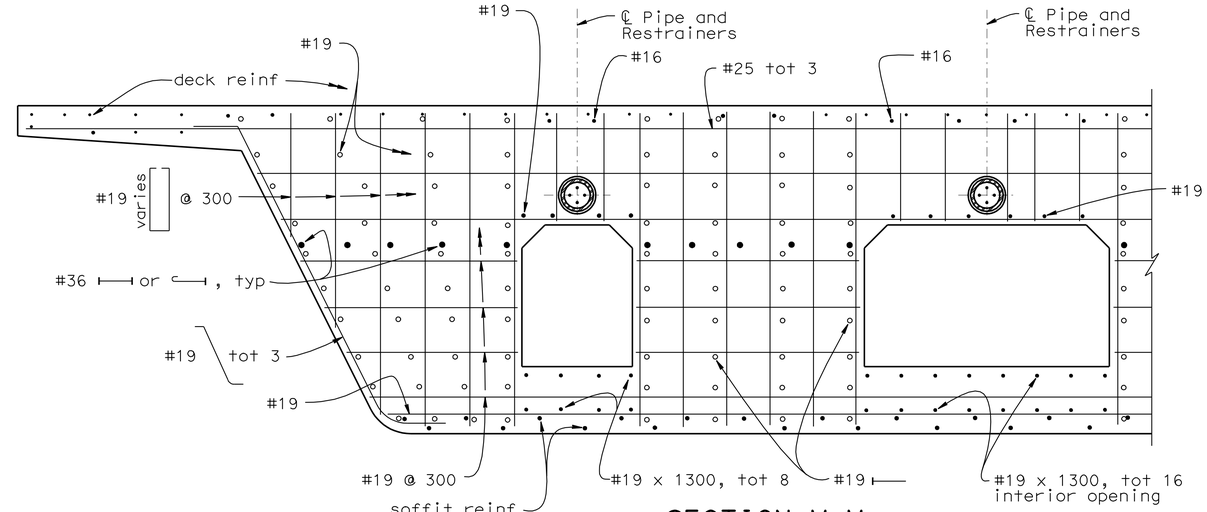

SECTION M-M

1:20

Caltrans Metric

	BY	CHECKED
DESIGN	M. Friedheim	G. Slocum
DETAILS	E. Montevirgen	G. Slocum
QUANTITIES	G. Zuniga/G. Slocum	R. Odell/C. Udarbe

STATE OF CALIFORNIA
DEPARTMENT OF TRANSPORTATION

DIVISION OF ENGINEERING SERVICES
STRUCTURE DESIGN
DESIGN BRANCH 2

BRIDGE NO. 10-0165
KILOMETER POST R74.945

WILLITS BYPASS
FLOODWAY VIADUCT
HINGE DETAILS NO. 2

ALL DIMENSIONS ARE IN MILLIMETERS UNLESS OTHERWISE SHOWN

ORIGINAL SCALE IN MILLIMETERS FOR REDUCED PLANS 0 10 20 30 40 50 60 70 80 90 100

CU 01
EA 262001

DISREGARD PRINTS BEARING EARLIER REVISION DATES

REVISION DATES: 2-08-07, 8-14-08, 9-26-08, 1-26-09, 2-18-09, 3-03-09, 4-09-09, 4-20-09

SHEET 55 OF 88

FILE => 10-0165_gnhd02.dgn

STRUCTURES DESIGN DETAIL SHEET (METRIC) (REV.03-17-04)

USERNAME => s12614 DATE PLOTTED => 28-JAN-2012 TIME PLOTTED => 07:44

DIST	COUNTY	ROUTE	KILOMETER POST TOTAL PROJECT	SHEET No	TOTAL SHEETS
01	Men	101	R69.4/R78.9	795	939

REGISTERED CIVIL ENGINEER 9-15-11 DATE

1-23-12
PLANS APPROVAL DATE

REGISTERED PROFESSIONAL ENGINEER M. Friedheim No. 57968 Exp. 6-30-12 CIVIL STATE OF CALIFORNIA

The State of California or its officers or agents shall not be responsible for the accuracy or completeness of electronic copies of this plan sheet.

NOTES:

1. For location of Sections A-A, B-B, and C-C, see "Hinge Details No. 1" sheet.
2. "D" indicates structure depth in meters.

LEGEND:

⊢⊣, ⊢— = single or double headed bar

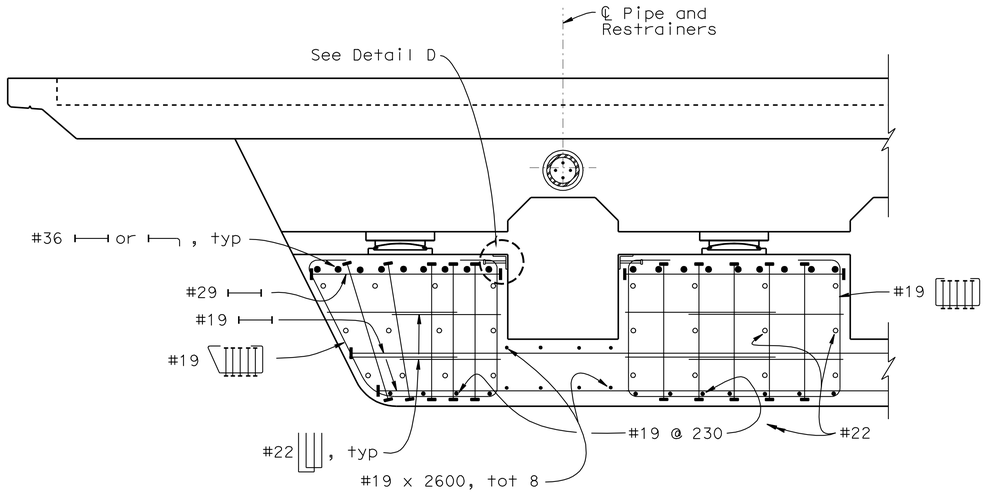

SECTION A-A
1:20

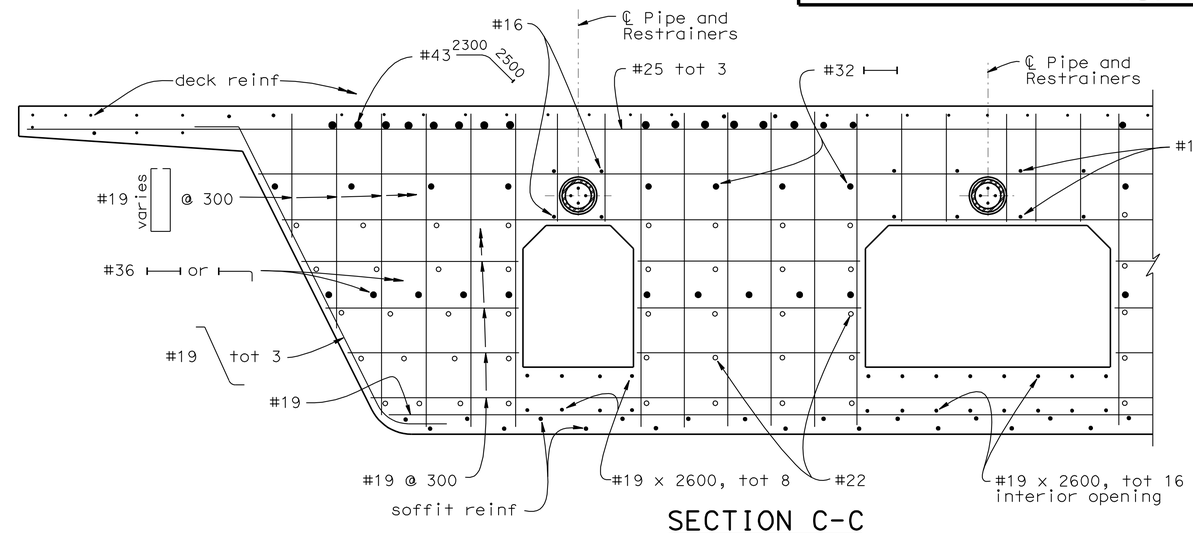

SECTION C-C
1:20

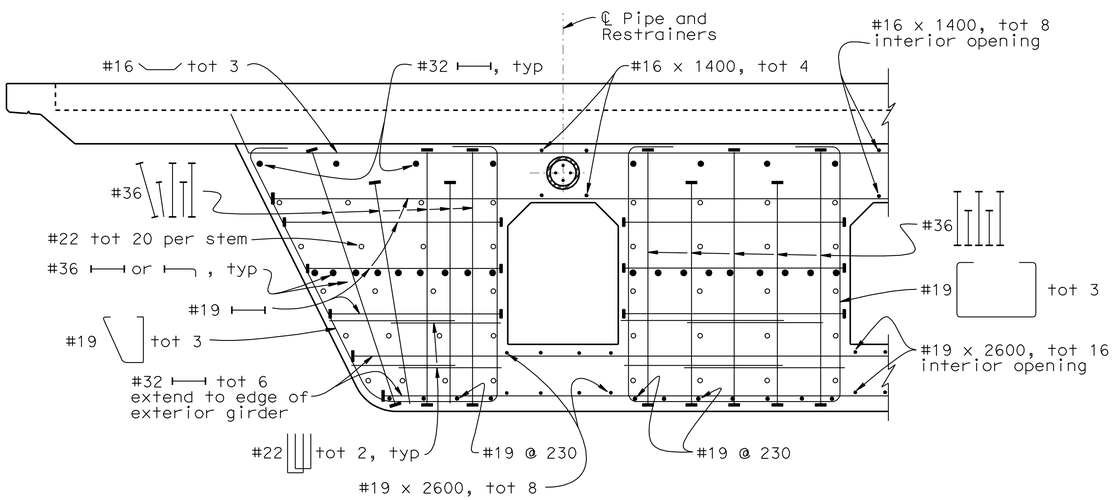

SECTION B-B
1:20

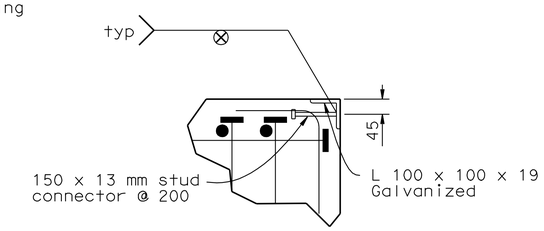

DETAIL D
1:10
Exterior bays only

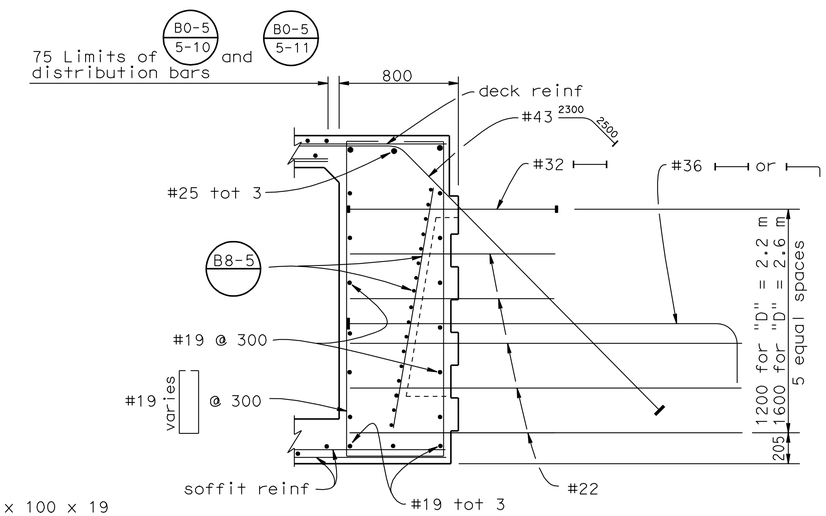

END DIAPHRAGM
1:20
Short end shown, long end similar except for protruding bars
Not all bars shown

Caltrans Metric

	BY	CHECKED
DESIGN	M. Friedheim	G. Slocum
DETAILS	E. Montevirgen	G. Slocum
QUANTITIES	G. Zuniga/G. Slocum	R. Odell/C. Udarbe

STATE OF CALIFORNIA
DEPARTMENT OF TRANSPORTATION

DIVISION OF ENGINEERING SERVICES
STRUCTURE DESIGN
DESIGN BRANCH 2

BRIDGE NO. 10-0165
KILOMETER POST R74.945

WILLITS BYPASS
FLOODWAY VIADUCT
HINGE DETAILS NO. 3

ALL DIMENSIONS ARE IN MILLIMETERS UNLESS OTHERWISE SHOWN

ORIGINAL SCALE IN MILLIMETERS FOR REDUCED PLANS 0 10 20 30 40 50 60 70 80 90 100

CU 01
EA 262001

DISREGARD PRINTS BEARING EARLIER REVISION DATES

REVISION DATES: 2-08-07, 8-14-08, 9-26-08, 10-14-08, 2-13-09, 2-24-09, 3-03-09

SHEET 56 OF 88

FILE => 10-0165_gnhd03.dgn

STRUCTURES DESIGN DETAIL SHEET (METRIC) (REV.03-17-04)

USERNAME => s121614 DATE PLOTTED => 28-JAN-2012 TIME PLOTTED => 07:44

DIST	COUNTY	ROUTE	KILOMETER POST TOTAL PROJECT	SHEET No	TOTAL SHEETS
01	Men	101	R69.4/R78.9	796	939

REGISTERED CIVIL ENGINEER 9-15-11 DATE

1-23-12
PLANS APPROVAL DATE

REGISTERED PROFESSIONAL ENGINEER M. Friedheim No. 57968 Exp. 6-30-12 CIVIL STATE OF CALIFORNIA

The State of California or its officers or agents shall not be responsible for the accuracy or completeness of electronic copies of this plan sheet.

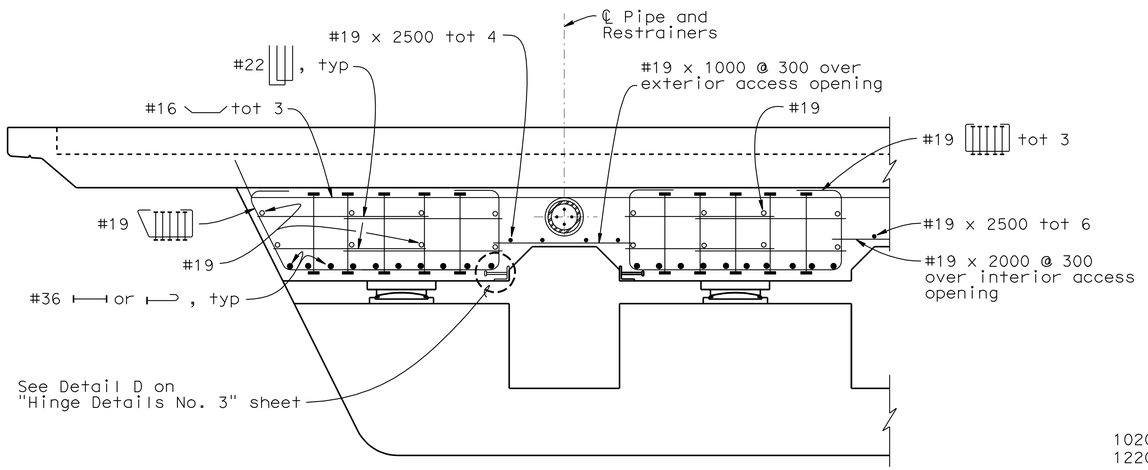

SECTION E-E
1:20

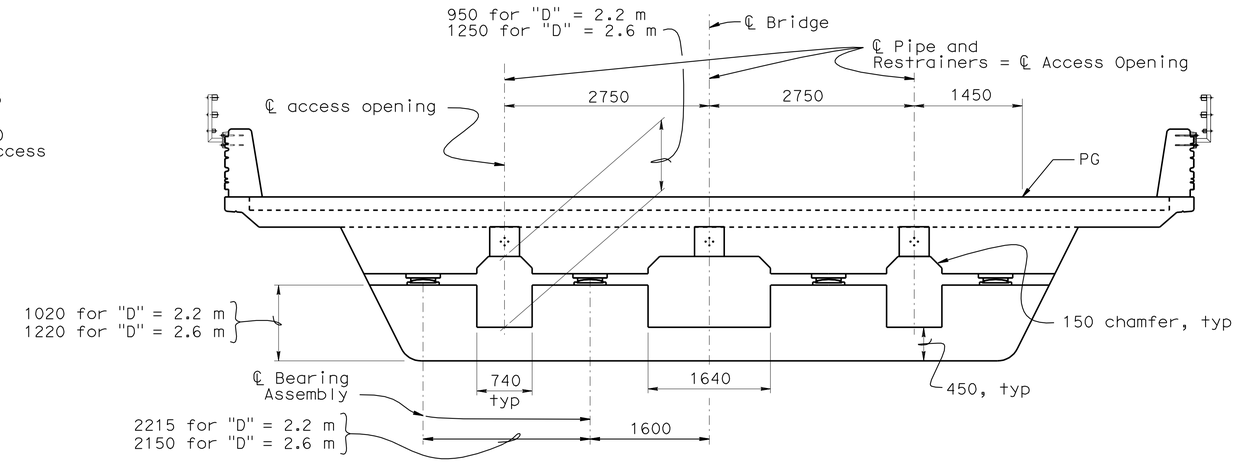

ACCESS OPENING GEOMETRY AND BEARING LAYOUT
1:40

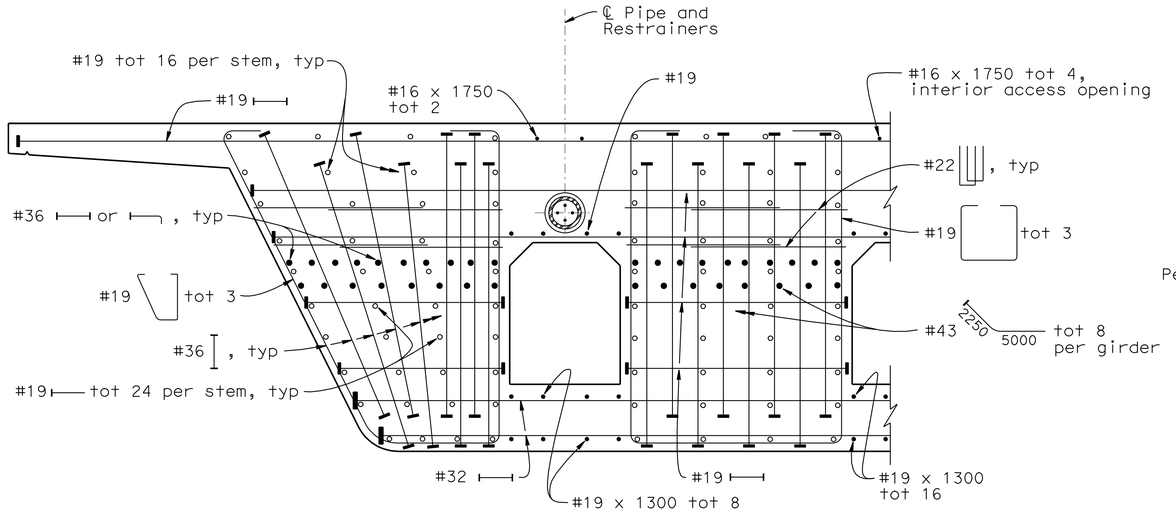

SECTION F-F
1:20

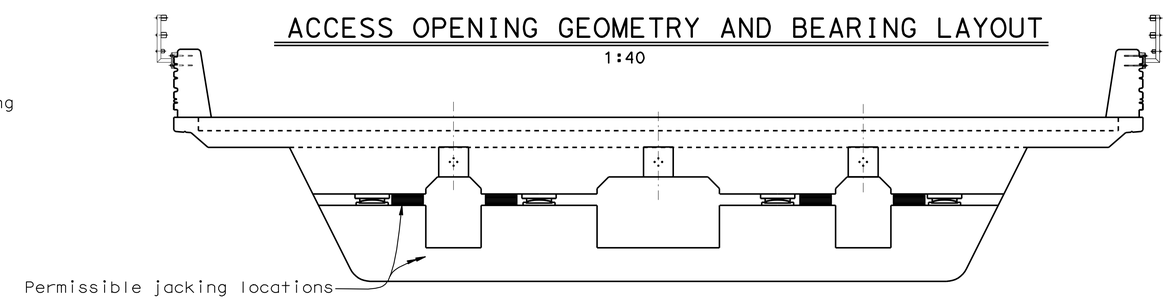

FUTURE JACKING LOCATIONS
1:40

NOTES:

1. Equal force shall be simultaneously applied to all four jacking locations.
2. Maximum of 20mm vertical displacement is allowed during jacking.
3. Inserts in convex plate may be used to remove plate.
4. "D" indicates structure depth in meters.
5. For location of Sections E-E and F-F, see "Hinge details No. 2" sheet.
6. Bearing Layout is symmetrical about ℄ bridge.

LEGEND:

⊢⊣, ⊢⊢ = single or double headed bar

Caltrans Metric

	BY	CHECKED
DESIGN	M. Friedheim	G. Slocum
DETAILS	E. Montevirgen	G. Slocum
QUANTITIES	G. Zuniga/G. Slocum	R. Odell/C. Udarbe

STATE OF CALIFORNIA
DEPARTMENT OF TRANSPORTATION

DIVISION OF ENGINEERING SERVICES
STRUCTURE DESIGN
DESIGN BRANCH 2

BRIDGE NO. 10-0165
KILOMETER POST R74.945

WILLITS BYPASS
FLOODWAY VIADUCT
HINGE DETAILS NO. 4

ALL DIMENSIONS ARE IN MILLIMETERS UNLESS OTHERWISE SHOWN

ORIGINAL SCALE IN MILLIMETERS FOR REDUCED PLANS 0 10 20 30 40 50 60 70 80 90 100

CU 01
EA 262001

DISREGARD PRINTS BEARING EARLIER REVISION DATES

REVISION DATES: 2-08-07, 8-28-08, 9-26-08, 2-24-09, 2-26-09, 3-03-09, 4-20-09

SHEET 57 OF 88

FILE => 10-0165_gnhd04.dgn

STRUCTURES DESIGN DETAIL SHEET (METRIC) (REV.03-17-04)

USERNAME => s12614 DATE PLOTTED => 28-JAN-2012 TIME PLOTTED => 07:44

DIST	COUNTY	ROUTE	KILOMETER POST TOTAL PROJECT	SHEET No	TOTAL SHEETS
01	Men	101	R69.4/R78.9	797	939

REGISTERED CIVIL ENGINEER 9-15-11 DATE

1-23-12
PLANS APPROVAL DATE

REGISTERED PROFESSIONAL ENGINEER M. Friedheim No. 57968 Exp. 6-30-12 CIVIL STATE OF CALIFORNIA

The State of California or its officers or agents shall not be responsible for the accuracy or completeness of electronic copies of this plan sheet.

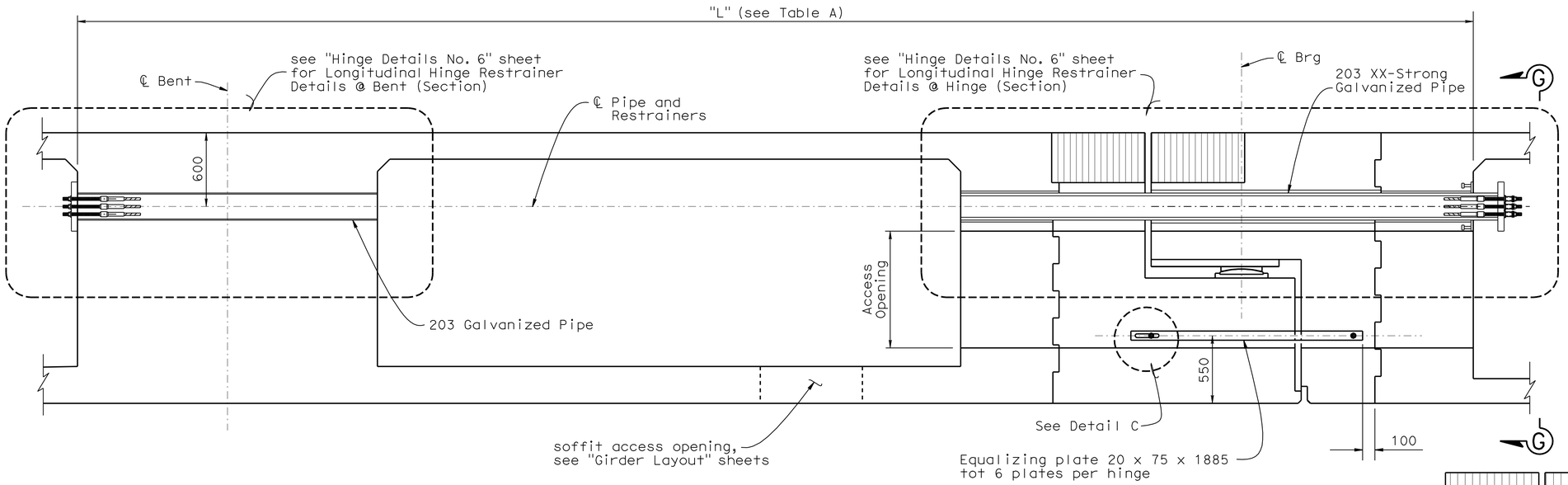

LONGITUDINAL HINGE RESTRAINER AND EQUALIZING PLATE LAYOUT

1:20

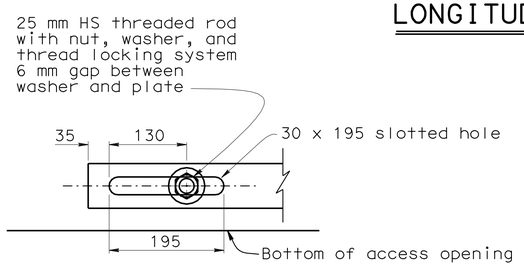

DETAIL C

1:5

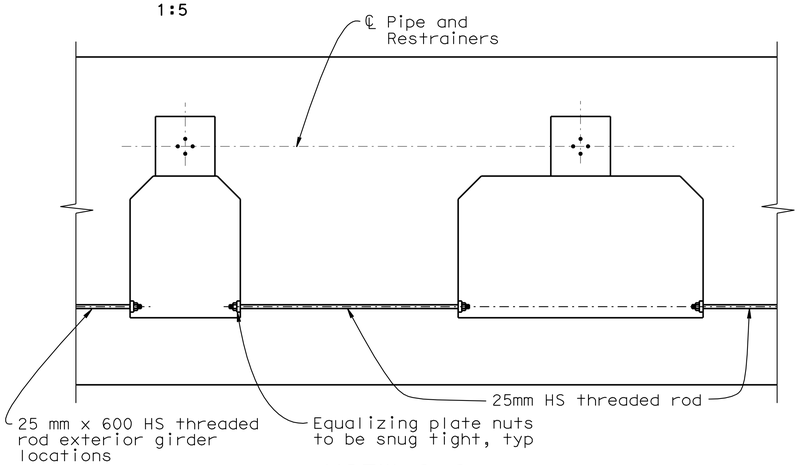

VIEW G-G

1:20

TABLE A

Hinge	Longitudinal Hinge Cable Restrainers	
	No. of Restrainers	Restrainers Length "L" (approx.)
4	12	11 100
8	12	11 100
13	12	11 100
17	12	11 100
22	12	12 300
26	12	12 100
30	12	10 300

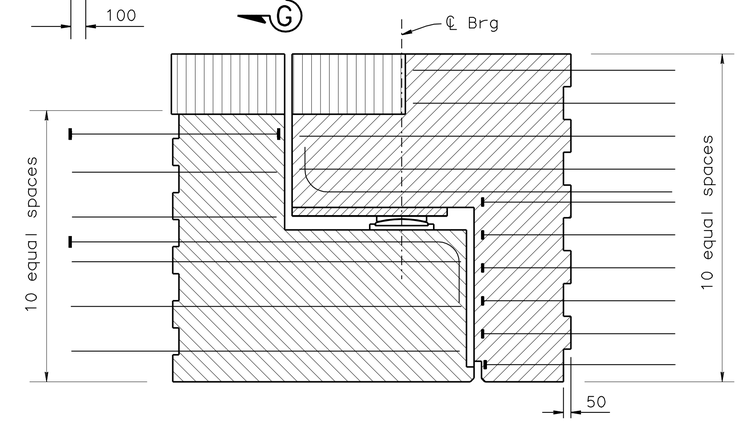

CLOSURE POUR DETAILS

1:20

LEGEND:

- Indicates cast-in-place concrete to be placed after both frames have been prestressed. Concrete to be same strength as cast-in-place prestressed concrete. (stage 1)
- Indicates cast-in-place concrete to be placed after supporting side of hinge is constructed & bearings are properly positioned. This stage to be placed no sooner than 30 days after both frames have been prestressed. Concrete to be same strength as cast-in-place prestressed concrete. Falsework shall remain in place until concrete has attained a strength of at least 25 MPa. (stage 2)
- Indicates blockout & closure pour for joint seal assembly. (stage 3)

Caltrans Metric

	BY	CHECKED
DESIGN	M. Friedheim	G. Slocum
DETAILS	S. Evans/S. Ng	G. Slocum
QUANTITIES	G. Zuniga/G. Slocum	R. Odell/C. Udarbe

STATE OF CALIFORNIA
DEPARTMENT OF TRANSPORTATION

DIVISION OF ENGINEERING SERVICES
STRUCTURE DESIGN
DESIGN BRANCH 2

BRIDGE NO. 10-0165
KILOMETER POST R74.945

WILLITS BYPASS
FLOODWAY VIADUCT
HINGE DETAILS NO. 5

ALL DIMENSIONS ARE IN MILLIMETERS UNLESS OTHERWISE SHOWN

ORIGINAL SCALE IN MILLIMETERS FOR REDUCED PLANS 0 10 20 30 40 50 60 70 80 90 100

CU 01
EA 262001

DISREGARD PRINTS BEARING EARLIER REVISION DATES

REVISION DATES: 2-08-01 8-12-08 2-12-09 2-24-09 2-25-09 4-08-09 4-27-09

SHEET 58 OF 88

FILE => 10-0165_gnhd05.dgn

STRUCTURES DESIGN DETAIL SHEET (METRIC) (REV.03-17-04)

USERNAME => s121614 DATE PLOTTED => 28-JAN-2012 TIME PLOTTED => 07:45

DIST	COUNTY	ROUTE	KILOMETER POST TOTAL PROJECT	SHEET No	TOTAL SHEETS
01	Men	101	R69.4/R78.9	798	939

REGISTERED CIVIL ENGINEER 9-15-11 DATE

1-23-12
PLANS APPROVAL DATE

REGISTERED PROFESSIONAL ENGINEER M. Friedheim No. 57968 Exp. 6-30-12 CIVIL STATE OF CALIFORNIA

The State of California or its officers or agents shall not be responsible for the accuracy or completeness of electronic copies of this plan sheet.

NOTES:

1. For Cable End Anchorage Details, see "Hinge Details No. 7" sheet.
2. Ends of galvanized steel pipe shall be covered or capped to prevent concrete and debris from entering the pipe until hinge concrete is placed.
3. Care shall be taken to align the pipes on each side of the hinge.
4. Except for adjustment end, all ends of pipe must be flush with or slightly recessed from the concrete. The inside edges of the pipes must be smooth to prevent fraying of cables.
5. Deviation in alignment of pipe shall not be more than 6 mm per 1.2 m of length after concrete is placed. Pipe shall be supported at all ends.
6. Contractor should position this pipe inside the box girder bays prior to the deck pour to facilitate placement through the hinge diaphragms.

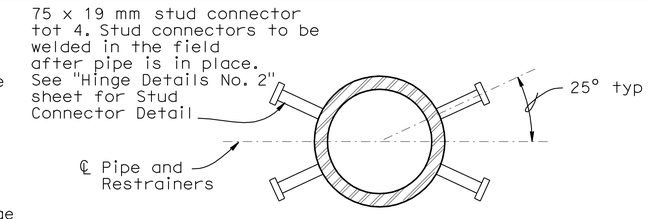

SECTION L-L
1:5

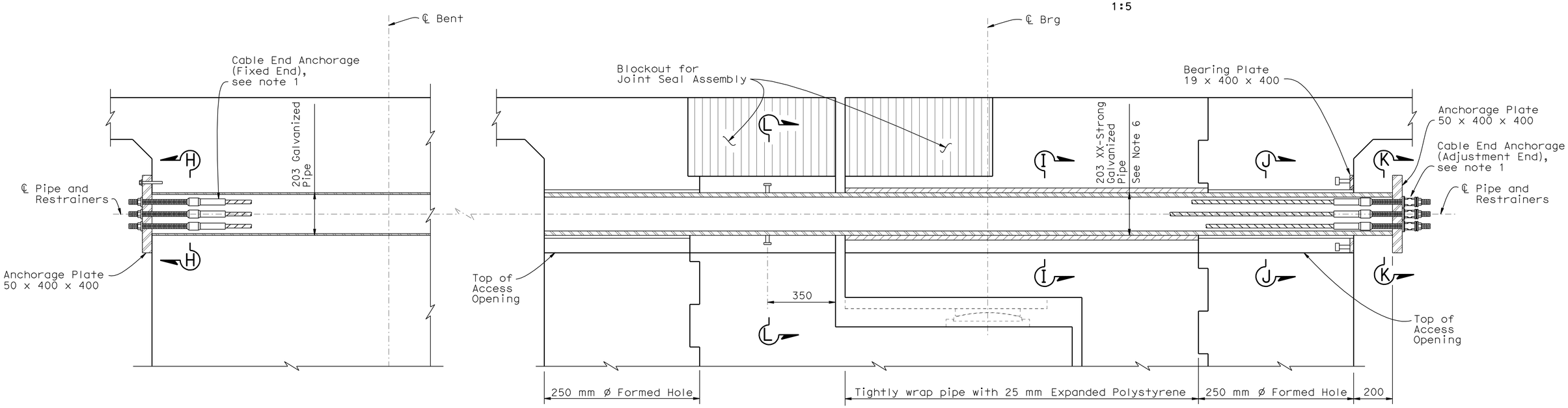

@ BENT (SECTION)

@ HINGE (SECTION)

LONGITUDINAL HINGE RESTRAINER DETAILS
1:10

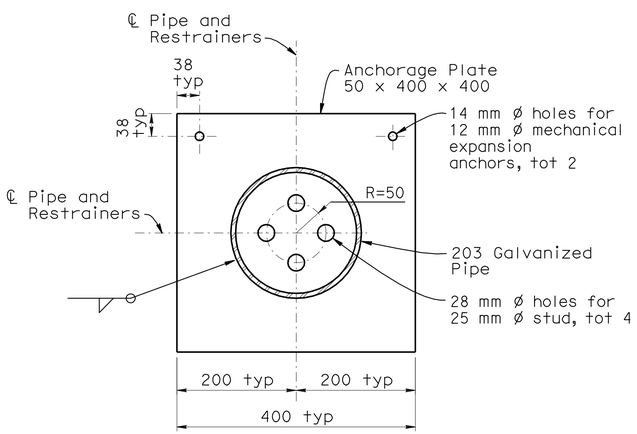

SECTION H-H
1:5

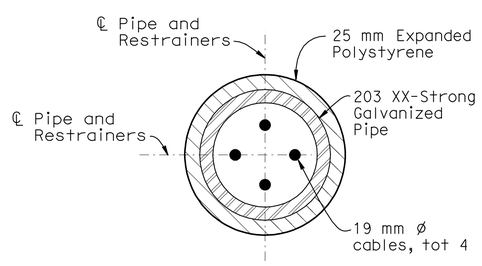

SECTION I-I
1:5

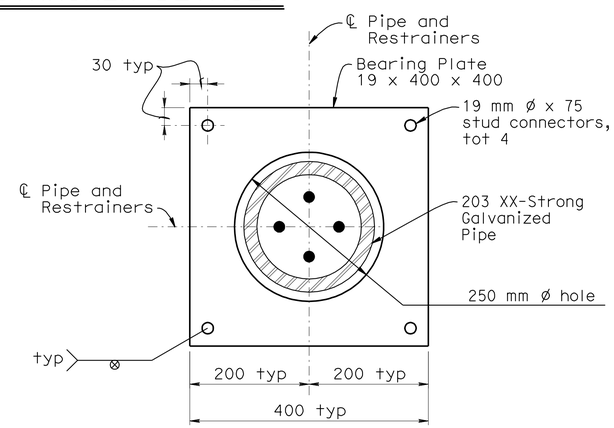

SECTION J-J
1:5

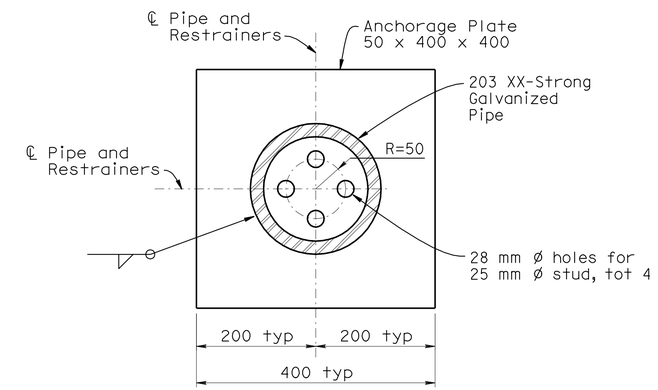

SECTION K-K
1:5

Caltrans Metric

	BY	CHECKED
DESIGN	M. Friedheim	G. Slocum
DETAILS	E. Montevirgen	G. Slocum
QUANTITIES	G. Zuniga/G. Slocum	R. Odell/C. Udarbe

STATE OF CALIFORNIA
DEPARTMENT OF TRANSPORTATION

DIVISION OF ENGINEERING SERVICES
STRUCTURE DESIGN
DESIGN BRANCH 2

BRIDGE NO. 10-0165
KILOMETER POST R74.945

WILLITS BYPASS
FLOODWAY VIADUCT
HINGE DETAILS NO. 6

ALL DIMENSIONS ARE IN MILLIMETERS UNLESS OTHERWISE SHOWN

ORIGINAL SCALE IN MILLIMETERS FOR REDUCED PLANS 0 10 20 30 40 50 60 70 80 90 100

CU 01
EA 262001

DISREGARD PRINTS BEARING EARLIER REVISION DATES

REVISION DATES: 2-11-09 2-26-09 3-03-09 4-21-09

SHEET 59 OF 88

FILE => 10-0165_gnhd06.dgn

STRUCTURES DESIGN DETAIL SHEET (METRIC) (REV.03-17-04)

USERNAME => s12161 4 DATE PLOTTED => 28-JAN-2012 TIME PLOTTED => 07:45

DIST	COUNTY	ROUTE	KILOMETER POST TOTAL PROJECT	SHEET No	TOTAL SHEETS
01	Men	101	R69.4/R78.9	799	939

REGISTERED CIVIL ENGINEER 9-15-11 DATE

1-23-12
PLANS APPROVAL DATE

REGISTERED PROFESSIONAL ENGINEER M. Friedheim No. 57968 Exp. 6-30-12 CIVIL STATE OF CALIFORNIA

The State of California or its officers or agents shall not be responsible for the accuracy or completeness of electronic copies of this plan sheet.

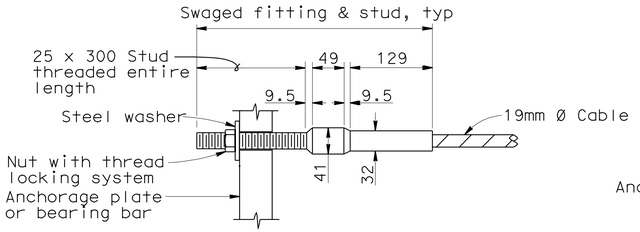

FIXED END (TYPICAL BRACKET ANCHOR)

(Single-end adjustment restrainer units)

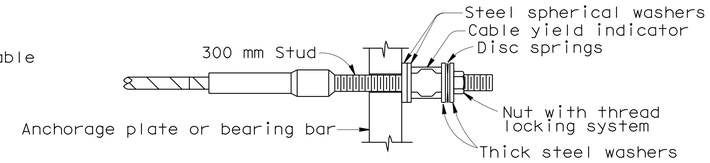

ADJUSTMENT END

CABLE END ANCHORAGE DETAILS

No Scale

Note: For locations of fixed and adjusted ends, see "Hinge Details No. 6" sheet

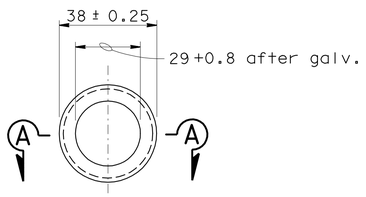

END VIEW

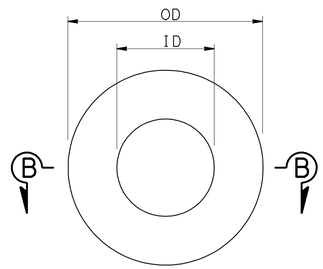

PLAN

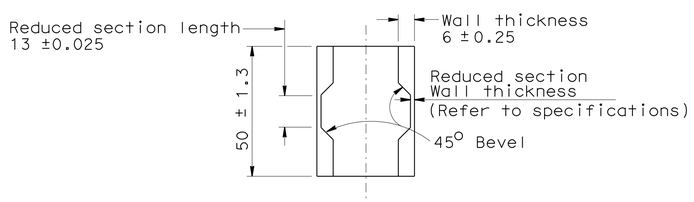

SECTION A-A

CABLE YIELD INDICATOR

No Scale

Note: All dimensions are before galvanizing except as noted

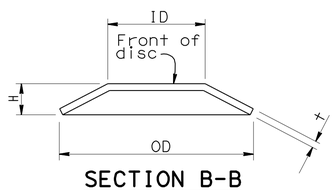

SECTION B-B

(Single spring)

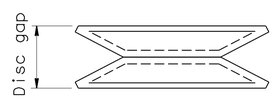

AS INSTALLED ON STUD

DISC SPRING

No Scale

Note: For dimensions not shown, see table

DISC SPRINGS AND WASHERS

	DISC SPRING					STEEL SPHERICAL WASHER			THICK WASHER		
*L(m)	ID	OD	t	H	COLOR CODE	ID	OD	Nom thick.	ID	OD	t**
00.0 - 7.62	25	50	1.6	3.3	WHITE	30	57	13	26	50	6
7.63 - 9.72	25	50	2.1	3.5	RED	30	57	13	26	50	6
9.73 - 11.55	25	50	2.5	3.7	BLUE	30	57	13	26	50	6
11.56 - 13.72	32	64	3.0	4.6	YELLOW	33	64	13	29	50	6

*For limits of length L(m), use effective length of cable, from face-to-face outer surfaces of anchorage plate or bearing bar. Refer to Bridge detail sheets for approximate length required.

**Minimum value

Note: All OD and ID dimensions for washers and disc springs shall meet the dimensional tolerances for harden steel washers, ASTM F436

RESTRAINER UNIT INSTALLATION PROCEDURE

1a. For typical 'girder to opposite girder' or 'bent cap to girder' restrainers with one adjustment end:
Place nut, washer and Thread Locking System on fixed end stud prior to tightening the cable.
The adjustment end shall be at the same end of the cable for all restrainers at a specific hinge or bent.
Install Cable Yield Indicator, spherical washers, disc springs, washers and nut on the adjustment end of restrainers as shown in "Cable End Anchorage Details".
Discs shall be installed front to front as shown in "Disc Spring" detail.
Tighten the nuts on the cable from the Adjustment End of restrainer until the disc springs collapse and there is no disc gap remaining between the discs.

1b. For typical "U" or "V" shaped restrainer units with two adjustment ends:
Install Cable Yield Indicator, spherical washers, disc springs, washers and nuts on both adjustment ends of restrainer as shown in "Cable End Anchorage Details".
Discs shall be installed front to front as shown in "Disc Spring" detail.
The ends of the cable must be adjusted simultaneously.
Tighten the nuts on the cable from the adjustment ends of restrainer until the disc springs collapse and there is no disc gap remaining between the discs on either end of the cable.

2. Place thread locking system on adjustment end(s) after tightening the cable but before backing off the nut(s).
Back off the nut(s) at the adjustable anchorage(s) a distance equal to the maximum additional amount that the hinge is expected to open,relative to existing ambient conditions, as shown on the plans for movement rating.

Caltrans Metric

DESIGN	BY M. Friedheim	CHECKED G. Slocum	
DETAILS	BY E. Montevirgen	CHECKED G. Slocum	
QUANTITIES	BY G. Zuniga/G. Slocum	CHECKED R. Odell/C. Udarbe	

STATE OF CALIFORNIA
DEPARTMENT OF TRANSPORTATION

DIVISION OF ENGINEERING SERVICES
STRUCTURE DESIGN
DESIGN BRANCH 2

BRIDGE NO. 10-0165
KILOMETER POST R74.945

WILLITS BYPASS
FLOODWAY VIADUCT
HINGE DETAILS NO.7

ALL DIMENSIONS ARE IN MILLIMETERS UNLESS OTHERWISE SHOWN

ORIGINAL SCALE IN MILLIMETERS FOR REDUCED PLANS 0 10 20 30 40 50 60 70 80 90 100

CU 01
EA 262001

DISREGARD PRINTS BEARING EARLIER REVISION DATES

REVISION DATES: 2-08-07 2-12-09

SHEET 60 OF 88

FILE => 10-0165_gnhd07.dgn

STRUCTURES DESIGN DETAIL SHEET (METRIC) (REV.03-17-04)

USERNAME => s121614 DATE PLOTTED => 28-JAN-2012 TIME PLOTTED => 07:45

DIST	COUNTY	ROUTE	KILOMETER POST TOTAL PROJECT	SHEET No	TOTAL SHEETS
01	Men	101	R69.4/R78.9	800	939

REGISTERED CIVIL ENGINEER 9-15-11 DATE

1-23-12
PLANS APPROVAL DATE

REGISTERED PROFESSIONAL ENGINEER M. Friedheim No. 57968 Exp. 6-30-12 CIVIL STATE OF CALIFORNIA

The State of California or its officers or agents shall not be responsible for the accuracy or completeness of electronic copies of this plan sheet.

EXPANSION BEARING TABLE

LOCATION	MAXIMUM VERTICAL LOAD (kN)	MINIMUM DEAD LOAD (kN)	DESIGN ROTATION (Degrees)	CONCAVE PLATE						CONVEX PLATE		MASONRY PLATE			SOLE PLATE			ASSEMBLY HEIGHT
				WIDTH / LENGTH	FLAT PTFE AREA (m^2)	DIAMETER	SPHERICAL RADIUS	MINIMUM THICKNESS	MAXIMUM THICKNESS	DIAMETER	MAXIMUM THICKNESS	WIDTH	LENGTH	THICKNESS	WIDTH	LENGTH	THICKNESS	
				L_{cp}	A_{PTFE}	D_m	R_{act}	T_{min}	T_{max}	C_m	H_{act}	W_{mp}	L_{mp}	T_{mp}	W_{sp}	L_{sp}	T_{sp}	A_h
Abut 1	1080	855	2.0	283	0.0523	254	552	19	41	291	38	355	355	25	406	660	51	134
Hinge 4	1390	1135	2.0	308	0.0645	280	607	19	41	320	41	406	406	32	432	1000	57	149
Hinge 8	1390	1135	2.0	308	0.0645	280	607	19	41	320	41	406	406	32	432	1000	57	149
Hinge 13	1400	1135	2.0	308	0.0645	280	607	19	41	320	41	406	406	32	432	1000	51	142
Hinge 17	1390	1045	2.0	308	0.0645	280	607	19	41	320	41	406	406	32	432	1000	57	149
Hinge 22	1615	1255	2.0	334	0.0678	305	662	19	45	350	43	432	432	32	460	1000	57	150
Hinge 26	1560	1255	2.0	334	0.0678	305	662	19	45	350	43	432	432	29	460	1000	57	148
Hinge 30	1230	950	2.0	283	0.0523	254	552	19	41	291	38	381	381	32	406	1000	57	147
Abut 34	940	720	2.0	257	0.0413	230	497	19	38	262	37	330	330	25	381	635	51	132

NOTES:

1. Anchorage method not shown.
2. All units in millimeters unless otherwise noted.
3. All dimensions shown are steel only unless otherwise noted.
4. H_{act} includes stainless steel.
5. A_h includes PTFE, substratum and stainless steel.
6. R_{act} is to sliding surface.
7. The contractor is responsible for providing a support system capable of maintaining the sole plate level during concrete placement.
8. All plate surfaces except for the stainless steel surfaces Shall be cleaned and painted prior to final installation.

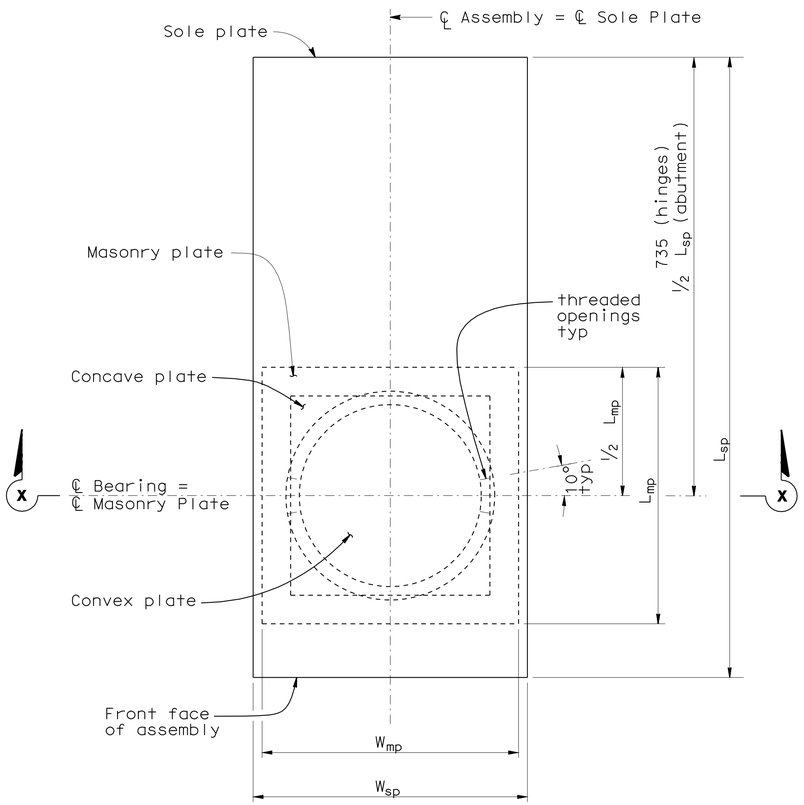

PLAN
1:5

Note: Layout at hinge location shown, layout at abutment similar

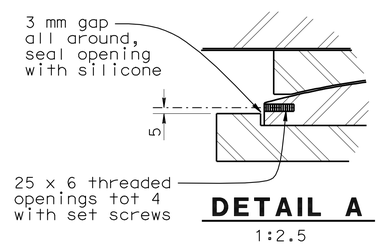

DETAIL A
1:2.5

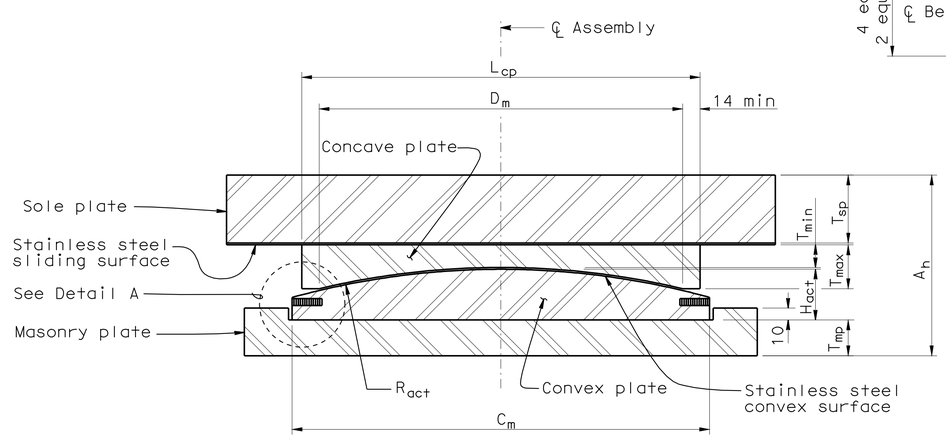

SECTION X-X
1:2.5

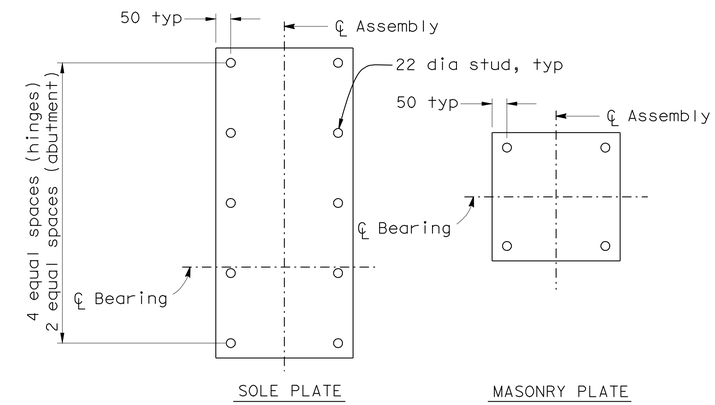

STUD CONNECTOR LAYOUT
1:10

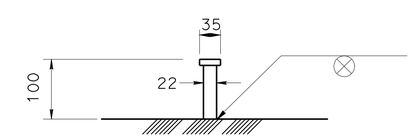

STUD CONNECTOR
No scale

DESIGN	BY M. Friedheim	CHECKED G. Slocum	
DETAILS	BY C. Figuerres/S. Ng	CHECKED G. Slocum	
QUANTITIES	BY G. Zuniga/G. Slocum	CHECKED R. Odell/C. Udarbe	

STATE OF CALIFORNIA DEPARTMENT OF TRANSPORTATION

DIVISION OF ENGINEERING SERVICES STRUCTURE DESIGN
DESIGN BRANCH 2

BRIDGE NO. 10-0165
KILOMETER POST R74.945

WILLITS BYPASS
FLOODWAY VIADUCT
PTFE/SPHERICAL BEARING DETAILS

Caltrans Metric

ALL DIMENSIONS ARE IN MILLIMETERS UNLESS OTHERWISE SHOWN

ORIGINAL SCALE IN MILLIMETERS FOR REDUCED PLANS 0 10 20 30 40 50 60 70 80 90 100

CU 01
EA 262001

DISREGARD PRINTS BEARING EARLIER REVISION DATES

REVISION DATES 1-5-07 1-29-07 4-5-07 8-18-08 2-26-09 4-20-09

SHEET 61 OF 88

FILE => 10-0165_gnnsbd.dgn

STRUCTURES DESIGN DETAIL SHEET (METRIC) (REV.03-17-04)

USERNAME => s121614 DATE PLOTTED => 28-JAN-2012 TIME PLOTTED => 07:45